ORIGINAL

0000175504

RECEIVED
AZ CORP COMMISSION
DOCKET CONTROL

2016 DEC 12 P 3: 20

Transcript Exhibit(s)

Docket #(s): E-00000AAA-16-0370-00173

Arizona Corporation Commission
DOCKETED
DEC 12 2016
DOCKETED BY GB

Exhibit #: STL-22

*Part 2 of 4

EXHIBIT STL-22 – WECC Accepted Path Rating Phase 2 Study Report

Pursuant to the October 24, 2016 Procedural Order, Applicant Southline Transmission, L.L.C. provides the following exhibit.

EXHIBIT
STL-22
ADMITTED

SOUTHLINE
TRANSMISSION PROJECT

Final

WECC Accepted Path Rating
Phase 2 Study Report

March 19 2015

Prepared by:

USE
Utility System Efficiencies, Inc.

TABLE OF CONTENTS

1. EXECUTIVE SUMMARY 7

1.1 Project Description and Summary of Plan of Service 7

1.2 Planned In-Service-Date 10

1.3 Project Milestone Schedule 10

1.4 Study Results Summary 10

1.4.1. Non-Simultaneous Ratings 11

1.4.2. Simultaneous Ratings (East-to-West Project Flows) 11

1.4.3. Simultaneous Relationship between Path 47 MW flow and Southline (West-to-East Project Flow) 12

1.5 Mitigation Plan and Recommended Follow-up Actions 13

1.6 Conclusions 16

2. STUDY OBJECTIVES AND METHODOLOGY 19

2.1 General Study Description 19

2.2 Study Scope and Objectives 19

2.3 Performance Criteria, Reliability Standards and References 19

2.3.1. Additional Local Area Criteria (TEP, SRP, PNM) 20

2.4 Types of Analysis Performed in this Study 21

2.5 Contingencies Applied in this Study 22

2.5.1 Contingencies for Power Flow Analysis and Voltage Stability Studies 22

2.5.2 Transient Stability Contingencies 22

2.5.3 Added Contingencies 22

Saguaro East and West 115 kV Bus Outages 22

Outage of the Luna-Afton # 1 and #2 345 kV Lines 22

3. STUDY OVERVIEW 23

3.1 WECC 10% Path Flow Test 23

3.2 Simultaneous Analyses 23

3.3 Additional Analyses24

3.4 Non-Simultaneous Analysis 24

3.5 Mitigation or Corrective Plans 24

4. POWER FLOW CASE DEVELOPMENT 25

4.1 Seed Case Selection 25

4.2 Foundational Base Case Development 25

PRG Case Updates 25

WECC Phase 2 or Phase 3 Rating Planned Future Transmission Projects 26

Southline Saguaro Update 26

Local Area Load Pattern Updates 26

Modeling of New Generation 27

TEP Voltage and Reactive Power Requirements 28

4.3 Foundational Base Case Approval and Topology 29

4.4 Southline Cases, Series #1-#67 29

Case Series 01 (east-to-west) 30

Case Series 02 (west-to-east) 30

Case Series 16 (west-to-east) 30

Case Series 41 (east-to-west) 30

Case Series 42 (west-to-east) 31

Case Series 56 (west-to-east) 31

Case Series 67 ("Midpoint Spur") (east-to-west) 31

4.5 Mid-Study Case Changes and Additions 31

Dona Ana-Las Cruces 115 kV Line Rating 31

Southern New Mexico Upgrades 31

El Paso Electric 32

El Paso Electric New Mexico Import 345 kV Line De-rates 32

Luna-Macho Springs-Springerville 345 kV Line Susceptance ("B value") 32

Arizona 33

Marana-Marana Tap 115 kV Line Ratings 33

Three Point-Sandario 115kV Line Ratings 33

Saguaro Units 1 & 2 Retirement 33

Four Corner Units 1, 2 & 3 Retirement 33

Saguaro-Casa Grande 230 kV Line 33

Midpoint Spur 34

4.6 Changes in Generation, Interchange, and Load 34

5. 10% PATH FLOW TEST RESULTS 35

5.1 10% Path Flow Test Methodology 35

5.2 Case List 35

5.3 Contingency List 37

5.4 Results 37

5.5 Conclusion 37

6. SIMULTANEOUS ANALYSIS RESULTS (Southline vs. Path 47 MW Flow) 38

6.1 Southline vs. Path 47 MW flow - Power Flow Contingency Results 40

Abel and Dinosaur 230 kV Bus Voltages *40*

Vail2 345 kV Bus Voltage Performance *40*

TEP 138 kV Bus Voltage Performance *41*

Pre and Post-Project Dugas, Morgan, Pinnacle Peak Voltage Performance *41*

High Post-Contingency Voltages at Adams/Apache/Boothill/Mural 115-230 kV Buses *41*

Results for Arizona *45*

Marana-Marana Tap 115 kV Line Loading and TEP's Tie Open Load Shedding Scheme (TOLS) *45*

Three Point-Sandario 115 kV Line Loading and Switching Action *45*

Turquois-Hidalgo 115 kV Line Loading and PNM Responsive Actions *46*

Overload Mitigation: Newman Autotransformer #2 Enhancement *46*

Additional EPE 345 kV Category C Outages and Proposed Mitigation Measures *47*

Overload Mitigation: Diablo-Rio Grande 115 kV Line Short-Term Ratings *50*

Overload Mitigation: Sunset North-Durazno-Ascarate 115 kV Line Reconductoring *50*

Overload Mitigation: The Southern New Mexico 345 kV LAPS *50*

El Paso Electric New Mexico Import 345kV Line De-rates *54*

Post-Transient Analysis of Existing Southline Nomogram Points modeling El Paso Electric De-Rates *54*

Results *54*

Conclusion *55*

Saguaro to Casa Grande APS 230kV line *56*

6.2 Southline vs. Path 47 MW Flow - Voltage Stability Results 58

6.3 Southline vs. Path 47 MW flow - Transient Stability Analysis Results 58

Stability Plots *59*

Worst Case Analysis 59

Modeling Post-Contingency Switching Actions in Transient Analysis 59

Apache SVC Downward Reactive Capability 59

Apache SVC Transient Stability Modeling in GE PSLF 60

Southline Equipment Block Diagram Models & Corresponding dyd files 60

6.4 Southline vs. Path 47 MW Flow - Case Series Nomograms 60

6.4.1. Case Series 01 Nomogram (East-to-West Flows) 60

Case Series 2 62

Case Series 16 64

Case Series 41 67

Case Series 56 69

Case Series 67 70

Overall Simultaneous Case Series 71

Southline Project Flows East-to-West 71

Southline Project West-to-East 72

Tucson-Oracle 115kV Line Re-conductor 73

2nd Marana 230/115kV Bank 73

Southern New Mexico Transmission Upgrades 73

Midpoint Spur 74

7. NON-SIMULTANEOUS ANALYSIS 75

7.1 Non-Simultaneous Rating Methodology 75

7.2 Non-Simultaneous Rating Southline Project Flows East-to-West 75

7.3 Non-Simultaneous Rating Southline Project Flows West-to-East 75

8. SUNZIA 77

10% Path Flow Test Methodology 77

Case List 79

Contingency List 80

Results 80

Conclusion 81

9 APPENDIX PROJECT REVIEW GROUP MEMBERSHIP 82

ATTACHMENTS

ATTACHMENT A	SOUTHLINE CONCEPTUAL ONE-LINE DIAGRAM
ATTACHMENT B	10% PATH FLOW TEST
ATTACHMENT C	PRG-APPROVED SOUTHLINE PHASE 2 STUDY PLAN
ATTACHMENT D	DETAILED STUDY CASE MATRIX
ATTACHMENT E	GRAPHICAL/ELECTRICAL OVERVIEW OF SOUTHLINE
ATTACHMENT F	POST-TRANSIENT CONTINGENCY LIST
ATTACHMENT G	POST-TRANSIENT RESULTS
ATTACHMENT H	2.5% AND 5% VOLTAGE STABILITY TEST RESULTS
ATTACHMENT I	TRANSIENT STABILITY CONTINGENCY LIST
ATTACHMENT J	TRANSIENT STABILITY RESULTS
ATTACHMENT K	TRANSIENT STABILITY PLOTS (Broken-out by case)
ATTACHMENT L	BLOCK DIAGRAM STATIC Var COMPENSATOR
ATTACHMENT M	BLOCK DIAGRAMS FOR SOLAR PROJECT
ATTACHMENT N	BLOCK DIAGRAM STATIC Var COMPENSATOR
ATTACHMENT O	SOUTHLINE RESPONSES TO PRG COMMENTS
ATTACHMENT P	SOUTHLINE 115kV APACHE INTERCONNECTION
ATTACHMENT Q	115kV APACHE INTERCONNECTION WECC 10% PATH FLOW TEST
ATTACHMENT R	SUNZIA - SOUTHLINE 2017 WECC 10% PATH FLOW TEST
ATTACHMENT S	SUNZIA - SOUTHLINE 2017 SENSITIVITY

1. EXECUTIVE SUMMARY

1.1 Project Description and Summary of Plan of Service

Project Description: Southline Transmission, L.L.C. proposes to construct a high-voltage electric transmission line and associated facilities in southern New Mexico and southern Arizona (the Southline Transmission Project, or proposed project). A portion of the proposed project also involves the upgrade of existing Western Area Power Administration (Western) transmission facilities; portions of the proposed project may involve joint ownership with Western.

Figure 1.1: Sketch of Proposed Southline Project Route

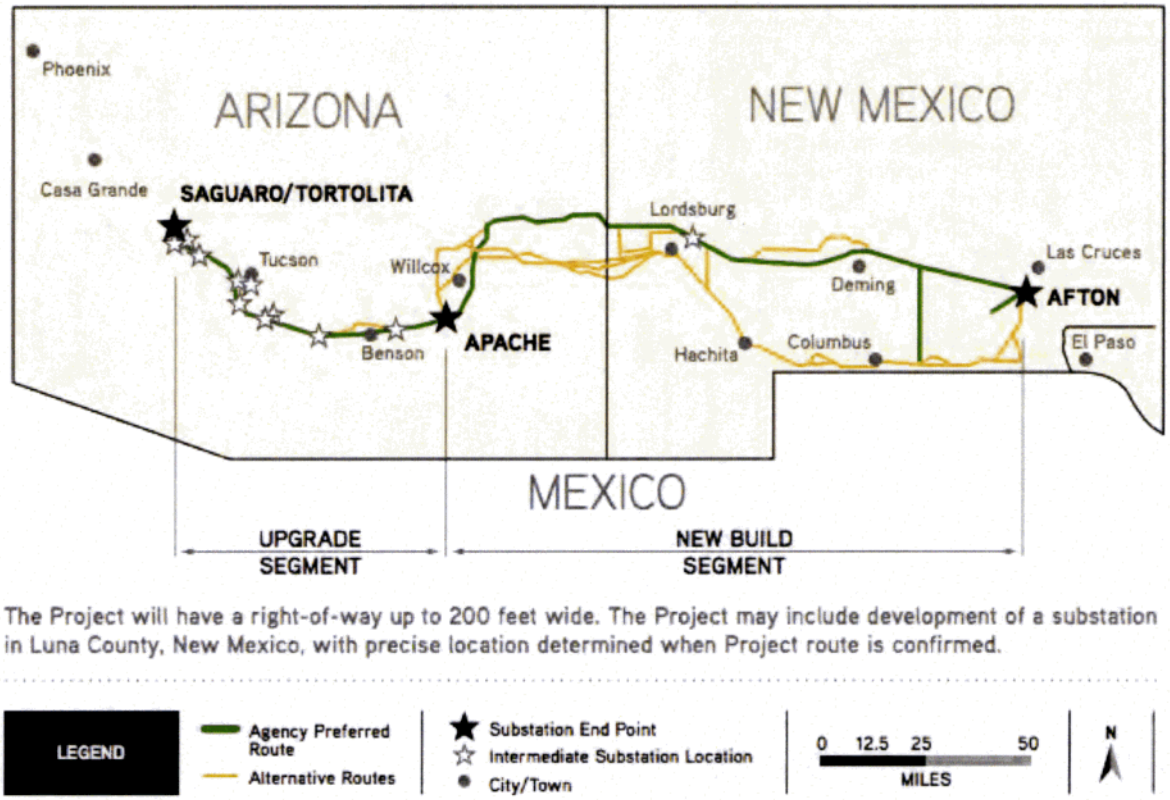

The Project will have a right-of-way up to 200 feet wide. The Project may include development of a substation in Luna County, New Mexico, with precise location determined when Project route is confirmed.

Figure 1.2: Technical Sketch of Proposed Southline Project

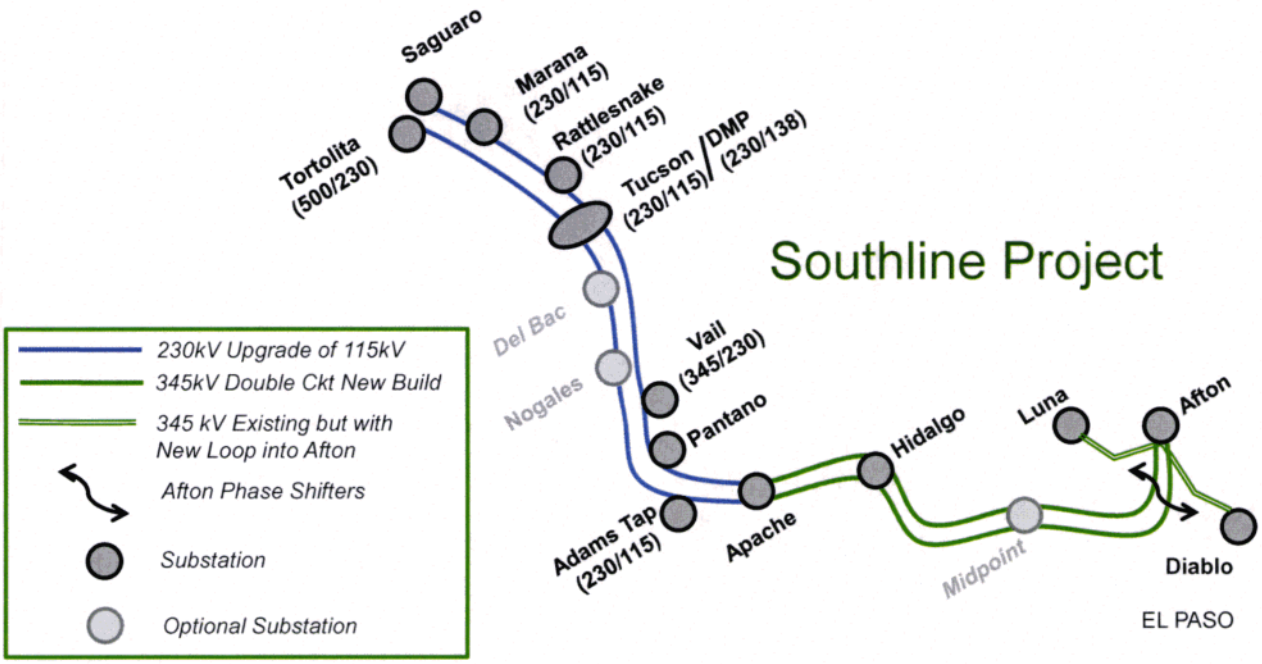

<u>Plan of Service Summary:</u> The plan of service for the proposed project includes a New Build Section (New Build) and an Upgrade Section (Upgrade).

The New Build would involve the construction of approximately 240 miles of new 345-kilovolt (kV) double-circuit electric transmission line in New Mexico and Arizona. The New Build portion of the project would occur between the existing Afton Substation (south of Las Cruces, New Mexico) and the existing Apache Substation (south of Willcox, Arizona).

The Upgrade portion of the project would rebuild and convert from 115 kV to 230 kV, approximately 120 miles of existing Western-owned 115 kV transmission lines and connecting substations located between the existing Apache and Saguaro Substations. The Upgrade would consist of a 230 kV double-circuit tower line emanating from Apache, ultimately connecting one circuit at new 230 kV facilities at Saguaro Substation while connecting the second 230 kV circuit to the existing Tortolita Substation (both of these terminals are located adjacent to the existing Saguaro 115 kV Substation, northwest of Tucson, Arizona).

Table 1.1 provides a more detailed breakdown by substation, of the Southline Transmission Project's proposed Plan-of-Service.

TABLE 1.1 – PROPOSED SOUTHLINE TRANSMISSION FACILITIES	
SUBSTATION(S)	**TRANSMISSION ADDITION OR CHANGE**
Afton	Loop existing Luna-Diablo 345 kV Line into Afton Substation
Afton	Add the necessary station equipment to interconnect the proposed Luna-Diablo loop-in, plus install two 345 kV phase-shifting transformers connecting to the Afton-Midpoint 345 kV #1 and #2 lines.
Midpoint	(Optional.) The proposed Southline Midpoint station layout includes the necessary station equipment to connect/receive both the Afton-Midpoint 345 kV #1 and #2 lines and the Hidalgo-Midpoint 345 kV #1 and #2 lines. (Optional) Midpoint Spur Sensitivity (30 mile line double-circuit 345 kV towerline which could be utilized as a generation collector system for approximately 1000MW of photovoltaic generation)
Afton, Midpoint	Construct as a double-circuit towerline (DCTL), two new 345 kV circuits from the existing Afton substation to the proposed Southline Midpoint substation (approximately 70 miles each), with 50% series compensation and 90% line shunt reactive compensation.
Hidalgo	The proposed Southline Hidalgo facilities would be constructed adjacent to the existing Hidalgo 345 kV substation, with a bus tie interconnecting these two substations. This bus tie would be operated "normally open" until necessary transmission upgrades and WECC studies are completed. Flexibility could be extended to close this tie breaker to assist existing load serving entities under emergency conditions. The Southline Hidalgo substation layout would include the bus tie to the existing Hidalgo substation, plus the necessary equipment to terminate four 345 kV lines (Midpoint-Hidalgo #1 and #2, and the Hidalgo-Apache #1 and #2 345 kV lines).
Midpoint, Hidalgo	Construct as a DCTL, two new 345 kV lines from the proposed Southline Midpoint substation to the proposed Southline Hidalgo substation (approximately 91 miles each), with 50% series compensation and 90% line shunt reactive compensation.
Apache	The proposed Southline Apache 345/230/115 kV facilities would be constructed adjacent to the existing Southwest Transmission Cooperative owned Apache substation. A 115 kV bus tie would be created between the new and existing stations The tie would be serially comprised by the addition of a 230/115kV transformer (rated 280/400 MVA) with 17% impedance in series with a 27 ohm 115kV series reactor (rated at 2200 amps)[1]. The new Southline Apache 345 kV bus would also feature a Static VAR Compensator (SVC), with a dynamic range of -100/+250 MVArs, to aid in transient stability voltage support. The layout of the new Southline Apache substation would include the bus tie to the existing Apache substation, plus the necessary station equipment to connect: the Apache-Hidalgo #1 and #2 345 kV lines, the Apache-Adams Tap and Apache-Pantano 230 kV lines, two 345/230 kV Transformer banks (rated 650 MVA/1150 MVA), and the 345 kV SVC. Existing SWTC Apache 230/115kV transformers would be replaced with higher rated transformers with similar impedance
Hidalgo, Apache	Construct as a DCTL, two new 345 kV circuits from the proposed Southline Hidalgo substation to the proposed Southline Apache facilities (85 miles each), with 50% series compensation and 90% line shunt reactive compensation.
Apache, Tortolita, (+ various)	Construct "Segment 2, Circuit 1": upgrade and rebuild a 230 kV transmission circuit from the proposed Southline Apache 230 kV Substation to Tortolita Substation, interconnecting (at 230 kV) the intermediate substations of Pantano, Vail, and Tucson.
Apache, Saguaro, (+ various)	Construct "Segment 2, Circuit 2": upgrade and rebuild a 230 kV transmission circuit from the proposed Southline Apache 230 kV Substation to Saguaro Substation, interconnecting (at 230 kV) the intermediate substations of Adams Tap, Nogales, Del Bac, Tucson, Rattlesnake, and Marana.
Pantano	Construct the necessary 230 kV station equipment to interconnect the proposed Apache-Pantano 230 kV line and Pantano-Vail 230 kV line.
Vail	Add two 345/230 kV transformers (rated 600/700 MVA each), and the necessary station equipment to interconnect the proposed Pantano-Vail and Vail-Tucson 230 kV lines.
Tucson	Add a single 230/115 kV transformer bank (rated 287/300 MVA), two 230/138kV transformer banks (287/300 MVA) for connections to De Moss Petrie – Tucson, plus the necessary station equipment to interconnect the following proposed 230 kV circuits: Tucson-Tortolita, Tucson-Vail, Tucson-Del Bac and Tucson-Rattlesnake
DMP	The necessary station equipment to interconnect the two Tucson-DMP 230 kV lines.
Tortolita	The necessary station equipment to interconnect the Tucson-Tortolita 230 kV line plus the addition of a single 500/230 kV transformer (rated 598 MVA).
Adams Tap	The necessary station equipment to interconnect the Apache-Adams Tap 230 kV line and the Adams Tap-Nogales 230 kV line plus the addition of a single 230/115 kV transformer bank (rated 287/300 MVA).
Nogales	(Optional.) The necessary station equipment to interconnect, Adams Tap-Nogales 230 kV line, Nogales-Del Bac 230 kV line and a 230/115kV transformer bank (287/300 MVA).
Del Bac	(Optional.) The necessary station equipment to interconnect the Nogales-Del Bac 230 kV line and the Del Bac-Tucson 230 kV line.
Rattlesnake	The necessary station equipment to interconnect the Tucson-Rattlesnake 230 kV line and the Rattlesnake-Marana 230 kV line plus the addition of a single 230/115 kV transformer bank(287/300 MVA).
Marana	The necessary station equipment to interconnect the Rattlesnake-Marana 230 kV line and Marana-Saguaro 230 kV line plus the addition of a single 230/115 kV transformer bank (rated 287/300 MVA).
Saguaro	Add two 230/115 kV transformer banks (rated 420/462 MVA each) separately connected to the Saguaro east and west buses, plus construct the necessary facilities to terminate the Marana-Saguaro 230 kV line.

[1] : Please see Attachment P for information on the revised Apache interconnection.

1.2 Planned In-Service-Date

The Southline Project currently is planned to be in service 2017.
The Accepted Study Plan and results in this report model a 2016 in service date.
Southline will work with the PRG in Phase 3 to construct necessary operating nomograms to bridge the in service date shift. However, an additional sensitivity was performed in the 2017 time frame (Attachment S) which confirms earlier work.

1.3 Project Milestone Schedule

Complete WECC Phase 2 Comprehensive Progress Report -- 2014

Complete NEPA Process Record of Decision -- 2015

Commission and Operation -- 2017

1.4 Study Results Summary

This WECC Phase 2 Rating Study seeks to establish directional ratings for four different cut-planes/interfaces of the Southline Transmission Project. **Figure 1.4** below identifies these four interfaces.

Figure 1.4: Southline Project Rated Interfaces A-D

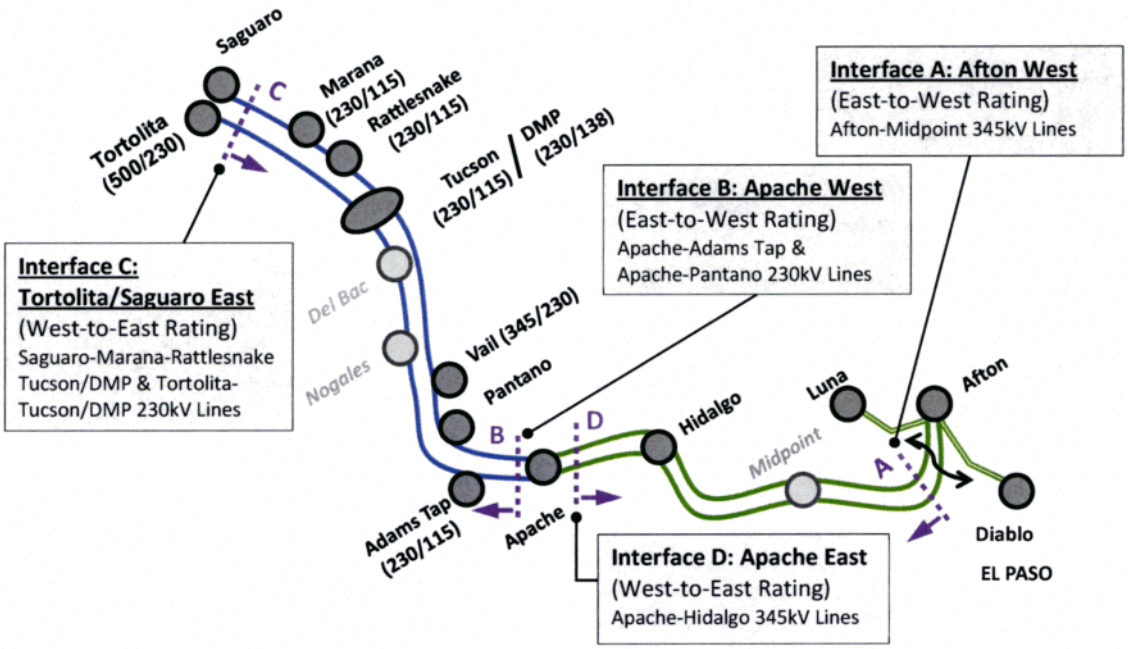

1.4.1. Non-Simultaneous Ratings

Table 1.2 summarizes the directional non-simultaneous ratings determined for the Southline Transmission Project's four interfaces.

TABLE 1.2 – SUMMARY, SOUTHLINE PHASE 2 NON-SIMULTANEOUS RATINGS			
Southline Project Transmission Rating Interface	**Interface Description**	**Phase 2 Accepted Rating**	Phase 1 Planned Rating
Interface A, East-to-West Rating	**"Afton West"**: Afton-Midpoint 345 kV #1 and #2 Lines	**1037 MW**	1038 MW
Interface B, East-to-West Rating	**"Apache West"**: Apache-Adams Tap and Apache-Pantano 230 kV Lines	**1000 MW**	1001 MW
Interface C, West-to-East Rating	**"Tortolita/Saguaro East"**: Saguaro-Marana and Tortolita-Tucson/DMP 230 kV Lines	**430/715[2] MW**	418 MW
Interface D, West-to-East Rating	**"Apache East"**: Apache-Hidalgo 345 kV Lines	**971 MW**	957 MW

1.4.2. Simultaneous Ratings (East-to-West Project Flows)

No simultaneous interaction was observed between the Southline Project's East-to-West Interfaces A and B, versus WECC Path 47 MW flow ("Southern New Mexico Imports or SNMI"). **Table 1.3** summarizes the simultaneous study results for (east-to-west) Interfaces A and B versus Path 47 MW flow. Two scenarios were studied: one with, and one without an addition of a second Marana 230/115 kV transformer.

[2] Higher rating value is associated with Western's potential Tucson-Oracle 115 kV line re-conductor project.

TABLE 1.3 – SIMULTANEOUS SUMMARY PATH 47 FLOW vs. SOUTHLINE (EAST-TO-WEST FLOW)			
CASE SERIES DETAILS	Case Series Number	01	41[3]
	Nomogram Number	01	41
	Nomogram Point	1	1
SIMULTANEOUS PATH UNDER STUDY	**Interface A - Afton West** East-to-West MW Flow/Rating	**1037 MW**	**1037 MW**
	Interface B – Apache West East-to-West MW Flow/Rating	**1000 MW**	**1000 MW**
	WECC Path 47 MW Flow[4] (SNMI)	**1048 MW**	**1048 MW**
SCENARIO	2nd Marana 230/115 kV Transformer		✓
	Bowie Generation (MW output)	350	350

1.4.3. Simultaneous Relationship between Path 47 MW flow and Southline (West-to-East Project Flow)

Study results indicate that a simultaneous relationship exists between the Southline Project's *West-to-East* Interfaces (C and D) and WECC Path 47 MW flow (SNMI). This study has expressed this simultaneous interaction in a series of nomograms, with Interface C limits of 421-758 MW and Interface D limits of 165-971 MW, for Path 47 (SNMI) flows of 275-1048 MW. **Table 1.4** below summarizes these simultaneous studies' results, for various scenarios and applied mitigation measures, while **Table 1.5** describes nomogram relationships.

[3] An additional scenario producing virtually identical results was analyzed by updating case series 41 with the Southline Apache 115kV interconnection. Please reference Attachment P for details relating to case series 41A modeling the Southline Apache 115kV interconnection.

[4] The non-simultaneous rating for WECC Path 47 (approved definition) is 1048 MW, West-to-East.

TABLE 1.4 – SIMULTANEOUS SUMMARY PATH 47 MW FLOW vs. SOUTHLINE (WEST-TO-EAST FLOW)							
CASE SERIES DETAILS	Case Series	02	02	16	16	42[5]	56
	Nomogram	2a	2b	16a	16b	42	56
	Nomogram Point	1	1M	1	1M	1	1
SIMULT. PATH UNDER STUDY	**Interface C - Tortolita/Saguaro East** West-to-East MW Flow	421	435	715	734	431	754
	Interface D - Apache East West-to-East MW Flow	165	436	165	436	179	433
	WECC Path 47 Flow	1048	1048	1048	1048	1048	1048
SCENARIO	Tucson-Oracle 115 kV Reconductor			✓	✓		✓
	2nd Marana 230/115 kV Xfmr.					✓	✓
	Bowie Gen. Output (MW)	350	350	350	350	350	350
MITIGATION	Dona Ana- Picacho 115 kV 13-Ohm Series Reactor		✓		✓		✓
	Additional Newman 345/115 kV Xfmr.		✓		✓		✓
	Southwest Power Pool Export (In MW)		45		45		45

1.5 Mitigation Plan and Recommended Follow-up Actions

Through the course of this Phase 2 Rating study, Southline identified potential mitigation measures and follow-up actions which are either required or recommended to support the Project maximum ratings documented in this report. This section briefly summarizes these mitigation measures and corrective actions. A detailed description of each mitigation can be found in the **Section 6**, "Simultaneous Analysis Results".

To support the maximum Southline Project non-simultaneous and simultaneous ratings summarized in **Tables 1.2**, **1.3**, and **1.4**, Southline proposes (or as identified, requires) the following mitigation measures and follow-up action items:

[5] An additional scenario producing identical results was analyzed by updating case series 42 with the Southline Apache 115kV interconnection. Please reference Attachment P for details relating to case series 42A modeling the Southline Apache 115kV interconnection.

El Paso Electric Company (EPE) and Southern New Mexico (SNM) Mitigation

1. **Southern New Mexico Mitigation**
   To support Southline's maximum west-to-east transfer, Southline requires the implementation of transmission reinforcements referred to as the proposed "Southern New Mexico Mitigation" or the "Southern New Mexico Upgrades". The proposed Southern New Mexico Upgrades consist of the addition of a second Newman 345/115 kV autotransformer and installation of a 13-Ohm series reactor[6] in the Dona Ana-Picacho 115 kV line. Power transfer assumptions from EPE to Southwest Power Pool were also found to help support higher Southline west-to-east transfers[7].

2. **Follow-up Action: PNM Formalization of Turquois-Hidalgo 115 kV Line Responsive Actions**
   PNM presently employs a series of system adjustment actions to mitigate Category C contingency overload concerns for the Turquois-Hidalgo 115 kV Line. Southline recommends that these responsive actions be formalized, if this has not otherwise been done (e.g., either documented in a PNM Operating Procedure, or possibly automated as a Remedial Action Scheme (RAS)).

El Paso Electric Company (EPE) Mitigation

3. **Overload Mitigation: Diablo-Rio Grande 115 kV Line Short-Term Ratings**
   Southline recommends the use of a short-term (30-minute) emergency rating for EPE's Diablo-Rio Grande 115 kV line, to partially mitigate potential N-2 contingency overloads of this line.

4. **Overload Mitigation: Sunset North-Durazno-Ascarate 115 kV Line Reconductoring**
   EPE's reconductoring of the Sunset North-Durazno-Ascarate 115 kV line (proposed by May 2016) is required to mitigate potential N-2 contingency overloads of this circuit. This EPE project is separate from (but complementary to) the Southline Project's plan of service.

5. **Overload Mitigation: Newman 345/115 kV #2 Autotransformer Enhancement**
   To help *maximize* Southline west-to-east transfers, Southline recommends upgrading the size of Newman 345/115 kV autotransformer #2, as well as reconfiguring the Newman 345 kV bus. (Note: Newman Autotransformer #2 is part of the "Southern New Mexico Upgrades", identified earlier in this list of mitigation measures.) Reconfiguration of the Newman 345 kV bus is

[6] It should be noted that the reactor addition, or equivalently performing transmission upgrades, are proposed as mitigation to support Southline's increased west-to-east transfers. These additions do not have and will require Tri-State approval through formal interconnection analysis by Tri-State.

[7]

"An ice storm damaged the Amrad-Eddy 345 KV Line to the extent that part of it must be re-built. Therefore, the Eddy County HVDC terminal and the Amrad-Eddy 345 KV Line are currently out of service. The Amrad-Eddy 345 kV line is expected to be returned to service prior to the in-service date of the Southline Project.

needed to address potential overloads of Newman Autotransformer #2 which result from a Category C (breaker failure) contingency.

6. **Overload Mitigation: The Southern New Mexico 345 kV LAPS**[8]
   Implementation of a new Local Area Protection Scheme (LAPS) is required, to support the Southline maximum ratings documented in this report. The Southern New Mexico LAPS would mitigate the thermal loading impacts from up to three different 345 kV Category C contingencies identified in the EPE area.[9] The Southern New Mexico LAPS would monitor the equipment status at the Luna, Newman, Arroyo, Afton and Picante substations to detect these three initiating 345 kV Category C outages. Depending on system conditions, activation of the LAPS would drop load[10] at a selected subset of EPE substations and potentially invoke as needed, additional actions such as opening the Amrad-Artesia 345 kV line, and/or cross-tripping: the Las Cruces – Salopek 115kV line, Las Cruces – Arroyo 115kV line. A more detailed description of the Southern New Mexico LAPS is provided in **Section 6** of this report.

7. **Restored Ratings for EPE's New Mexico Import 345 kV Lines**
   In May 2013, EPE de-rated seven of its 345 kV lines due to ground clearance concerns. To support the maximum Southline west-to-east transfer capabilities documented in this report (ratings for Interfaces C and D), Southline assumes/requires EPE's restoration of these circuits' original ratings.

Arizona Area Mitigation

8. **Overload Mitigation: Bicknell**
   In the event the existing Bicknell transformer has not been upgraded or replaced at the time Southline goes into service, then mitigation for potential Southline related overloads to the existing SWTC 345/230kV Bicknell transformer bank under High East-to-West Southline flows will be necessary. Southline will mitigate potential overloads by upgrading the existing Bicknell 345/230 kV transformer.

9. **Overload Mitigation: Three Point-Sandario 115 kV Line Loading and Switching Action**
   It is required that Southline, Western, and SWTC work together to mitigate a potential N-2 Southline Project contingency, category "C", overload of the Three Point-Sandario 115 kV line.

[8] It should be noted that the proposed LAPS scheme or one with the same or better level of performance will be employed to manage the N-2 Afton-Luna 345kV #1 & #2 Lines outage. Additionally all proposed LAPS will require approval by El Paso Electric Company (EPE).

[9] These Category C contingencies include: N-2 (breaker failure) outage of the Newman-Arroyo/Afton 345 kV Lines and N-2 (breaker failure) outage of the Newman-Picante/Afton 345 kV Lines. This Phase 2 Rating Study also considered an "N-2" (coincident, common corridor) outage of both Luna-Afton #1 and #2 345 kV Lines; however it is yet unconfirmed whether this outage interpretation is valid.

[10] Additionally, It should be noted that only loads that potentially shed under EPE's existing Undervoltage Load Shedding Scheme (UVLS) are shed with the proposed Southline LAPS for the N-2 outage of the Afton-Luna 345kV Lines.

Mitigation and resulting transmission performance that is acceptable to SWTC will be finalized in Phase 3.

10. **Follow-up Action: Phase 3 Evaluation of Adams/Apache/Boothill/Mural 115-230 kV Voltages**
    In Phase 3 of the Project Rating Process, Southline will perform an additional analysis to evaluate identified N-2 voltage conditions at the Adams/Apache/Boothill/Mural 115-230 kV buses. The results of this evaluation will confirm (and if necessary, refine) the tap settings for the Apache (Southline) 345/230 kV transformers and the capabilities of the Apache (Southline) SVC.

11. **Follow-up Action: Cochise County sensitivity**

    A sensitivity assessing the Cochise County area system in addition with the planned 115kV connection between Southline Apache and SWTC Apache is under discussion with SWTC, Western and Southline. Comprehensive studies analyzing this sensitivity will be conducted in Phase 3 as future Cochise County plans evolve.

1.6 Conclusions

This report documents the Southline Project Phase 2 Rating Study's work efforts. Southline's Phase 2 study work supports the following conclusions for the Southline Project's Accepted Ratings:

1. The Southline Project demonstrates acceptable system performance and meets all NERC Reliability Standards and WECC System Performance Criteria, for the Phase 2 Ratings identified in **Tables 1.2**, **1.3**, and **1.4**. This system performance is based upon the Southline Plan of Service described in **Section 1.1 (Table 1.1)**, as well as required mitigation measures identified in **Section 1.5** and **Section 6** of this report. This Phase 2 Rating Study involved comprehensive post-transient contingency analyses, voltage stability analyses and transient stability analyses. These analyses were performed for a wide range of system conditions and various future system topologies. No adverse impacts to the WECC interconnected or neighboring transmission systems were noted.

2. The WECC 10% Path Flow Test showed a potential simultaneous relationship between Southline and WECC Path 47. No significant simultaneous interactions were observed between Southline and WECC Path 48 (Northern New Mexico), the SunZia Project, or WECC Path 23 (Four Corners 345/230 kV).

3. This Phase 2 Rating Study shows that Southline's *East-to-West* Ratings (Interfaces A and B) are not limited by interactions with WECC Path 47.

4. Southline's *West-to-East* Ratings (Interfaces C and D) <u>do exhibit</u> simultaneous limitations with WECC Path 47 MW flow. These limitations are primarily dictated by the post-transient contingency voltage performance and thermal loading of the surrounding transmission system. These simultaneous limitations have been expressed through a series of Southline-Path 47 MW flow Nomograms, provided in **Section 6** of this report. It should be noted that cases exhibiting Path 47 flow measured at 1048 MW did not surface modeling outages that have defined

traditional limitations associated with voltage as noted in the past. Conversely, the introduction of substantial reactive capability is noted due to Southline's line charging.

5. No voltage stability issues or degradation of reactive margin were observed for the addition of the Southline Project.

6. No transient stability issues were observed for Southline's proposed plan of service within the identified ratings/nomograms. A sensitivity study modeling a potential Midpoint spur with 1000MW of associated generation on the spur required further transient stability analysis. In the sensitivity with all generation located on the radial spur, the system's transient stability performance with maximized Southline east-to-west flows and the Category C (N-2) outage of the Afton-Midpoint #1 and #2 345 kV lines exhibited some transient stability issues whose impacts were mitigated by implementation of a Remedial Action Scheme (RAS) which trips 400MW of Southline Midpoint South generation. This RAS is only needed in the Midpoint Spur sensitivity.

7. Early on in the Southline analysis, no Southline-SunZia simultaneous analyses were performed, due to SunZia's modified plan of service not exhibiting any interaction with Path 47 (see **Section 8** of this report for further discussion). In addition, SunZia indicated at the SunZia 2/13/14 PRG meeting that they do not believe simultaneous Southline-SunZia studies are needed. PRG members suggested Southline complete its Phase 2 report without simultaneous Southline-SunZia studies, and submit the report to the PRG for review and approval. PRG members also suggested Southline and SunZia confirm the lack of interaction by performing a 10% path flow test, but that this confirmation should not delay completion of Southline Phase 2 efforts. Southline has completed two separate 10% Path Flow Tests focusing on Southline and SunZia Paths interaction, which is outlined in Attachment R. Based on the Southline-SunZia 10% Path Flow Tests study results the Southline and SunZia projects do not show an interaction with each other at or above 10% on their respective paths. These results confirm that there is no simultaneous path interaction between Southline and the new proposed SunZia modified plan of service.

   In addition to reviewing potential Southline-SunZia interaction via WECC's 10% Path Flow Tests, Southline added an additional simultaneous WECC Path study scenario. The scenario focused on a comprehensive simultaneous path analysis modeling the SunZia Path at 3000MW and Southline east-to-west flows (1122MW Afton West and 1000MW Apache West). 2017 heavy summer case, used by the SunZia for their recent re-study efforts, was updated with the Southline model. Results of the analysis showed that both paths could be at their maximum output and meet the applicable NERC and WECC reliability criteria. Given that both Paths are fully capable of obtaining their ratings it is believed that there is no simultaneous interaction between the SunZia and Southline Paths. Further details regarding the SunZia – Southline simultaneous analysis can be found in Attachment S.

8. The following is presented to provide the reader added background and perspective on simultaneous Path 47 MW flow/Southline west-to-east flow study methodology. Given that both Path 47 MW flow and Southline lead into the EPE area with limited outflows, generation in EPE was decremented in an effort to simultaneously obtain required Path 47 MW flow and Southline west-to-east imports.

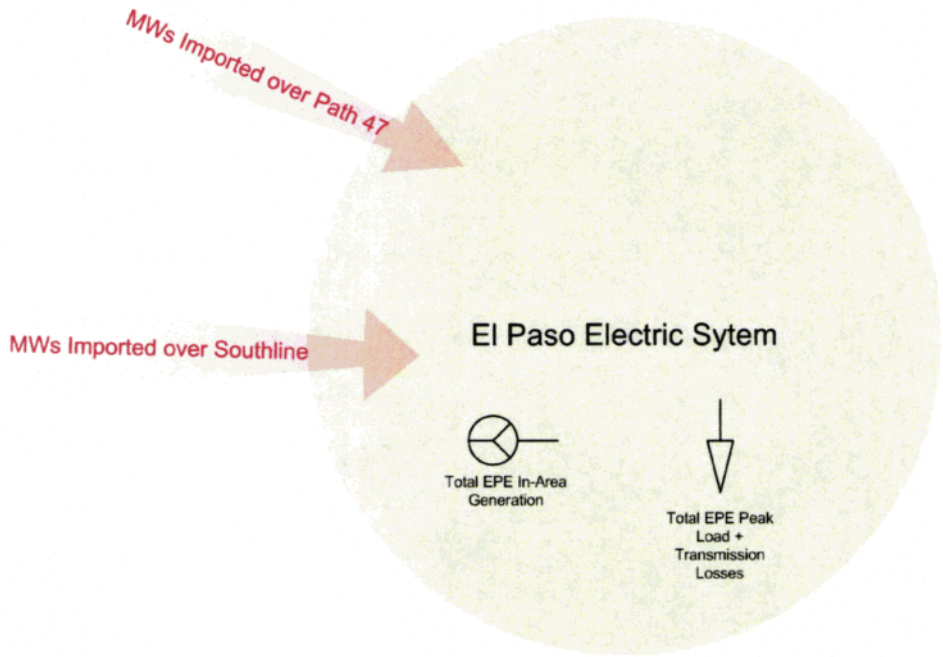

During the study process simultaneous path flows were obtained; however, the reduction in EPE generation resulted in downstream flows at or approaching the emergency ratings on some local EPE area equipment during some contingencies. These limits were tied to the EPE local area and at no time were overloads under contingency conditions on elements that would limit Path 47 or Southline paths; however, the downstream limits do limit combined Path 47 MW flow and Southline power flows into the EPE area. Path 47 MW flow versus Southline west-to-east nomogram relationships were developed referencing the limiting EPE area equipment. These nomograms were constructed with and without mitigation. The nomograms noting mitigation show an increase total in Path 47 MW flow/Southline west-to-east imports.

In review of the study, it should be noted that Path 47 elements are in parallel with Southline; at the Path 47 flow of 1048 MW, a Path 47 limit was not found using the outages that traditionally limit Path 47. Alternatively, the limiting elements into and inside of EPE are in series and downstream of both Southline and Path 47 MW flow, therefore the interaction between the local EPE constraints and Southline is minimal and more tied to the upstream interaction of EPE. This is especially noted when El Paso Electric generation was reduced and EPE import flows were increased in an effort to stress both Path 47 MW flow and Southline imports.

2. STUDY OBJECTIVES AND METHODOLOGY

This section briefly reiterates the study objectives and methodology applied in performing the Southline Phase 2 Rating Study. Further details of the study's methodology can be found in the Project Review Group-approved Study Plan, provided as Attachment C of this report.

2.1 General Study Description

The Southline Project Phase 2 Rating Study involved a thorough and comprehensive technical analysis. The Southline Phase 2 Rating Study Plan, found in Attachment C of this report, outlines in detail the reliability criteria, assumptions and methodology utilized in this Phase 2 study. [11] This study plan was approved by Southline Project Review Group (PRG) January 11, 2013. The following section summarizes the Phase 2 Study Plan and other relevant noteworthy items pertaining to the Phase 2 Study.

2.2 Study Scope and Objectives

The study scope included an evaluation of the Southline Project's transmission system performance using post-transient, voltage stability and transient stability analyses. The study objectives included:

1. Determining the Southline Project's "Accepted Rating" and satisfying the requirements necessary to proceed to Phase 3 of the WECC Project Rating Review Process.
2. Demonstrating an Accepted Rating that is obtained while meeting the North American Electric Reliability Corporation (NERC) Reliability Standards, WECC System Performance Criteria and applicable local reliability criteria required by regional utilities;
3. Identifying the project's simultaneous and non-simultaneous bi-directional transfer capabilities between Southern New Mexico and Southern Arizona (refer to previous **Figure 1.2**, showing Southline's Interfaces A, B, C and D).

2.3 Performance Criteria, Reliability Standards and References

This study evaluated the transmission system's performance for simulations of NERC Category A, B, and C contingencies, for a variety of different cases/conditions. Transmission system performance was measured against the NERC Reliability Standards and WECC System Performance Criteria, summarized below along with links to these reference documents. Further details of the study's reliability standards and criteria can be found in the PRG-approved Southline Phase 2 rating Study Plan, provided as Attachment C of this report.

1. TPL-001-0.1 - System Performance Under Normal (No Contingency) Conditions (Category A); http://www.nerc.com/files/TPL-001-0_1.pdf

[11] Although the Phase 2 Study Plan anticipated studying SunZia's proposed modified Path 47 definition, as a result of subsequent changes to the SunZia plan of service that is no longer appropriate. The SunZia changes are discussed in sections 2.3 and 8.

2. TPL-002-0b - System Performance Following Loss of a Single Bulk Electric System Element (Category B); http://www.nerc.com/files/TPL-002-0b.pdf
3. TPL-003-0a - System Performance Following Loss of Two or More Bulk Electric System Elements (Category C); http://www.nerc.com/files/TPL-003-0a.pdf
4. TPL-004-0 - System Performance Following Extreme BES Events (Category D); http://www.nerc.com/files/TPL-004-0.pdf
5. TPL-001-WECC-RBP-2 System Performance ; http://www.wecc.biz/library/Documentation%20Categorization%20Files/Regional%20Business%20Practices/TPL-001-WECC-RBP-2%201.pdf

2.3.1. Additional Local Area Criteria (TEP, SRP, PNM)

In addition to the NERC and WECC performance measures, the Southline Phase 2 Rating study also recognized the local area reliability criteria used by utilities adjacent to the Southline Project's footprint. These local criteria included specific voltage and reactive power flow requirements for both normal (all-lines-in-service) and emergency (one or more elements out-of-service) conditions. Most notably, the Southline Phase 2 Rating study applied local area reliability criteria for Tucson Electric Power (TEP), Salt River Project (SRP), Public Service New Mexico (PNM), El Paso Electric (EPE), Arizona Public Service (APS), and Tri-State Generation & Transmission Association (TSGT). Additional descriptions of these criteria can be found in the Base Case Development section of this report, as well as Attachment C of the PRG Approved Southline Phase 2 Study Plan.

2.4 Types of Analysis Performed in this Study

This section briefly identifies the types of analysis performed in the Southline Phase 2 Rating Study. Detailed descriptions for the methodology of each of these types of analysis can be found in the PRG-approved Study Plan, provided as Attachment C of this report. All analysis was performed using General Electric's Positive Sequence Load Flow (GEPSLF) program, version V17.0_07.

Power Flow Contingency Analysis (Post-Transient Governor Power Flow)
Contingency analysis was applied to evaluate NERC Category A, B, and C conditions for normal and emergency thermal overloads, high and low voltages, and possible post-contingency voltage deviations. The contingency analysis was performed using post-transient governor power flow techniques; [12] the assumptions and methodology for this type of analysis have been documented in the study plan.

Voltage Stability Studies (2.5% and 5% Reactive Margin Test)
The WECC Voltage Stability Criteria was used to evaluate the system's reactive margin adequacy, for the post-Southline condition. The voltage stability studies were performed using the same post-transient governor power flow methodology as applied in the previously-described power flow contingency analysis. Cases were created with Southline path flows increased to 102.5% and 105% of the maximum achievable Southline transfer capability. For adequate reactive margin, 105% cases are required to converge for Category B contingencies, while 102.5% cases are required to converge for Category C and D contingencies. Contingencies with divergent solutions were examined further for possible modeling issues and/or mitigation.

Transient Stability Studies
Transient stability analysis is a time-based simulation that assesses the performance of the power system during (and shortly following) a contingency. The transient stability studies analyzed the system's stability for 10-20 seconds following selected critical faults and contingencies. The response and performance of the power system (i.e., frequency and voltage swings, damping of oscillations, generators remaining synchronized, etc.) was measured against the NERC Reliability Standards and the WECC Disturbance-Performance Criteria.

[12] "Post-transient" refers to the post-outage timeframe after dynamic power and voltage oscillations have completely damped out, but before operators and slower automated equipment have reacted to adjust system conditions. A "governor" power flow solution resolves post-contingency differences in generation and load by proportionally distributing the mismatch among the remaining non-baseload units throughout the Western Interconnection (as opposed to offsetting this difference via a single system "swing" generator).

2.5 Contingencies Applied in this Study

2.5.1 Contingencies for Power Flow Analysis and Voltage Stability Studies

A comprehensive list of Category B and C contingencies was developed through the Southline PRG process and incorporated into the Southline study plan. Attachment F of this report lists the contingencies applied for the power flow analysis and voltage stability studies.

2.5.2 Transient Stability Contingencies

For transient stability analysis, a list of selected contingencies was developed through the Southline PRG process. Attachment I lists these transient stability contingencies.

2.5.3 Added Contingencies

During the course of the Southline Phase 2 Rating studies, several additional contingencies were realized which had not been included in the original study plan. A subset of these additional outages is described below.

Arizona

Saguaro East and West 115 kV Bus Outages

During Southline's September 6, 2013 PRG meeting, APS and WESTERN noted that an outage of the Saguaro East 115 kV bus could potentially result in power flows in excess of the Saguaro West-Coolidge 115 kV line ratings. Because Southline plans to interconnect to both the Saguaro East and West 115 kV buses, these 115 kV bus outages were added to the Southline list of contingencies. The Saguaro East and West 115 kV bus outages were applied to all preceding and subsequent study cases; no criteria violations were observed.

EPE

Outage of the Luna-Afton # 1 and #2 345 kV Lines

In addition to the existing Luna-Afton #1 345 kV line, Southline's plan of service includes looping the Luna-Diablo 345 kV line into Afton; this configuration would create a second Luna-Afton 345 kV circuit. In January 9, 2014 comments to Southline's sensitivity studies for the 2nd Marana transformer,[13] SunZia inquired whether Southline should evaluate a Category C (coincident, "N-2") outage of both the Luna-Afton #1 and #2 345 kV lines; this outage had not been previously identified in Southline's PRG-approved study plan.

It is not certain whether the coincident outage of both the Luna-Afton #1 and #2 345 kV lines should be considered as a NERC Category C or D. As per the WECC Corridor Separation Criteria (now known as TPL-001-WECC-RBP-2.1): if the separation between the center lines of these two transmission circuits

[13] These particular sensitivity studies for the 2nd Marana transformer modeled Southline flows in the west-to-east direction (Case Series 42 and 56).

is less than 250 feet, then the outage of both circuits could be regarded as a NERC Category C contingency.

There is also some uncertainty regarding whether or how this proposed outage should be applied. The existing Path 47 flow limits (SNMIC) are determined by NERC Category B events ("N-1" single transmission element outages), not by NERC Category C outages. For NERC Category C/multiple-element outages on the 345 kV system, EPE relies on an under-voltage load-shedding (UVLS) relay scheme to mitigate the impact of such contingencies.

However, Southline has applied the Luna-Afton 345 kV double-line outage to all preceding and subsequent study cases. Even if this outage is deemed both applicable and as a Category C, study results show that potential criteria violations can be fully mitigated through a combination of: planned transmission upgrades, transmission equipment re-rates, and application of a Local Area Protection Scheme (LAPS). Please see **Section 6.2.2** of this report for further details on the simulation and results for the double-line outage of the Luna-Afton 345 kV lines.

3. STUDY OVERVIEW

This section briefly outlines the different studies undertaken in performing the Southline Phase 2 Rating Study.

3.1 WECC 10% Path Flow Test

Per WECC policy, Southline performed a WECC 10% Path Flow Test to aid in identifying all affected paths that would pick up an incremental of 10% or more (based on that affected path's rating) for Southline element outages. The results of the 10% Path Flow Test were used as an indicator of WECC Paths to be studied for simultaneous interaction.

The 10% Path Flow Test was performed on 16 different power flow cases used in Southline's Phase 1 Rating study. Flows on all WECC transmission paths were monitored while simulating selected critical Southline outages (identified through Southline's Phase 1 non-simultaneous rating). **Section 6** of this report details the 10% Path Flow Test studies. Study results indicated a simultaneous interaction between the Southline Project's West-to-East Interfaces (C and D) and WECC Path 47 MW flow; other potential path interactions were dismissed from consideration.[14]

3.2 Simultaneous Analyses

Results of the 10% Path Flow Test showed Southline could potentially affect/interact with WECC Path 47; based on these results, the PRG recommended performing the following simultaneous analysis with Southline versus Path 47 (existing definition) MW flow. **Section 6** of this report details these Southline-Path 47 MW flow simultaneous analyses. Additionally, Southline's original Phase 2 Rating

[14] Other candidate paths dismissed from simultaneous consideration included "Path 48 - Northern New Mexico" (no interaction) and "Path 23 - Four Corners 345/500 kV" (marginal interaction). Based on the 10% Path Test results, the Southline PRG determined that simultaneous studies with Paths 48 and 23 were not necessary.

study plan also envisioned performing Southline simultaneous analyses with SunZia's Modified Path 47 definition. Simultaneous Southline-SunZia studies have not been completed for the reasons outlined above in Section 1.6 and as explained in further detail in **Section 8**.

3.3 Additional Analyses

Based on comments received from the Southline PRG, the simultaneous rating studies included added assessments to account for uncertainties and potential planned projects. Southline's simultaneous studies included analyses with and without the following projects:

- Tucson-Oracle 115 kV Line Reconductoring Sensitivity
- Second Marana 230/115 kV Transformer Sensitivity
- Southline Midpoint 345 kV Spur Sensitivity
- Apache 115kV Interconnection Scenario

  At the request of Southwest Transmission Company (SWTC) and Western Area Power Administration (Western), Southline conducted an additional detailed assessment modeling a 115kV normally closed transmission tie between Southline and the existing Apache substation. Based on this assessment, Southline will be pursuing a 115kV interconnection as the forward plan of service. See further details outlined in Attachment P and Attachment Q.

3.4 Non-Simultaneous Analysis

The Non-Simultaneous Analysis determines the maximum capability (in megawatts) that the Southline Project can reliably transfer in the east-to-west and west-to-east directions. Normally, non-simultaneous path ratings are determined independent of concurrent flows on other circuits or paths, with all potentially interacting circuits or paths loaded below the levels at which limitations are observed. However for this Phase 2 Rating study, non-simultaneous ratings for Southline's interfaces have been derived from the maximum values observed in the simultaneous analyses' results, to simplify/optimize the project's performance and to draw upon the large number of simultaneous scenario cases.

3.5 Mitigation or Corrective Plans

During the course of studies, all potential violations of the applied reliability standards and criteria were investigated. For those violations not resolved by better modeling, mitigation measures were identified and developed to enable the Southline Project to achieve its desired ratings. These mitigation measures included transmission system expansions or modifications, remedial action schemes, operating procedures or other alternatives. This Phase 2 Rating study identifies the use of such mitigation measures, where applicable.

4. POWER FLOW CASE DEVELOPMENT

The following sections describe the selection and development of the power flow base cases used in the Southline Phase 2 Rating Study.

4.1 Seed Case Selection

WECC power flow cases were obtained, representing the desired planning horizon. PRG members requested the use of both heavy summer and heavy winter cases for the study of proposed Southline interfaces, as indicated in the following **Table 4.1**.

TABLE 4.1 – Summary of Seed Case Conditions

Southline Interfaces to be Studied		Direction of Southline Project Power Flow	Season of Case to be Studied
A	Afton West	East-to-West	Heavy Summer
B	Apache West		
C	Tortolita/Saguaro East	West-to-East	Heavy Winter
D	Apache East		

As requested by the PRG, two seed cases were selected from WECC's base case library:

- 15hw2a.sav – 2014-15 Heavy Winter Planning Case created in 2010, and
- 15hs2a.sav – 2015 Heavy Summer Planning Case created in 2010.

4.2 Foundational Base Case Development

The identified seed cases were further modified to create the Foundational Base Cases used in the Southline Phase 2 Rating Study. WECC defines the Foundational Base Case to be the first base case developed by the project sponsor that would be ready for the first simultaneous assessment as agreed to by the PRG. The following paragraphs describe the nature and sources of the updates applied in creating the Foundational Base Cases.

PRG Case Updates

Case network topology was reviewed and updated to help ensure correct modeling of existing and planned facilities. Case updates were sought and received from various PRG members, particularly Arizona Public Service (APS), El Paso Electric (EPE), Public Service of New Mexico (PNM), Salt River Project (SRP), Southwest Transmission Cooperative, Inc. (SWTC), Tucson Electric Power (TEP), and the Western Area Power Administration – Desert Southwest Region (WAPA-DSW).

WECC Phase 2 or Phase 3 Rating Planned Future Transmission Projects

Where possible and appropriate, planned future transmission projects with either a WECC Phase 2 or Phase 3 Rating were modeled in the power flow cases. Some Phase 2 and 3 Projects had already been included in the WECC seed cases, while others had not. **Table 4.2** identifies the Projects which were modeled in the Southline cases. In some instances, Phase 2 or 3 Projects were not modeled due to a lack of Project modeling data, the Project's remoteness to the Southline Project, and/or the Project's status in the WECC Path Rating Review Process relative to the Southline Project.

TABLE 4.2 – WECC PHASE 2 AND 3 PROJECTS INCLUDED IN SOUTHLINE CASES

PROJECT	PHASE	PROJECTED IN-SERVICE DATE	COMMENT
TransWest Express Project	2	12/1/2014	New Project
Gateway South Project	2	2011-16	New Project
Gateway West Transmission Project	2	2012	New Project
SWIP North Transmission Project (Midpoint-Robinson Summit 500kV Line)	2	2011	New Project
SWIP-South Transmission Project (Robinson Summit – Harry Allen 500kV Line)	2	1/1/2011	New Project
Sunrise Powerlink Project	3		New project
Populus-Terminal Transmission Project	3		New Project
Path 27 Upgrade (Intermountain DC Line)	3	11/1/2010	Upgrade
EOR 9300 MW Project	3	2011	Simultaneous Rating of new and existing projects
SunZia Southwest Transmission Project (Note: modeled as in-service or as out-of-service depending on alternative)	3	2018	New Project
Colorado River Substation to Devers Project	3	2011	New project
Path 49 Upgrade Project (to 8055 MW)	3	8055 MW by summer 2006.	In-Service but not complete
Midpoint-Summer Lake 500kV Line Rating	3	2010	Upgrade

Southline Saguaro Update

For all cases, modeling of the Southline Transmission Project was updated to include Southline's interconnection to Saguaro via the proposed Southline Saguaro station.

Local Area Load Pattern Updates

Load patterns in the study cases were updated to align with revisions in Southline's expected schedule for completion of the National Environmental Policy Act (NEPA) process. PRG members provided

updated load patterns and topology changes to reflect both 2016 heavy summer and 2016/2017 heavy winter conditions.[15]

Modeling of New Generation

For all cases modeling the Southline Transmission Project, new photovoltaic (PV) solar generation was modeled in the immediate vicinity of the Southline facilities. Generation listed below in **Table 4.3** does not represent specific projects in any utility queue, but represents the potential for generation to site in the utility respective areas, and is assumed to be an amalgamation of multiple plants by several different owners. **Table 4.3** summarizes these new generation projects.

TABLE 4.3 – NEW GENERATION PROJECTS MODELED IN SOUTHLINE VICINITY

#	AREA	IN-SERVICE DATE	LOCATION	BUS NAME	PMAX	FUEL & TYPE
1	EPE	2015	Afton, NM	AFTON[16] (West of PSTs)	1500MW	Solar PV
2	EPE	2015	Luna County, NM	MIDPOINT SOUTH	1000MW	Solar PV
3	SWTC	2015	Apache, AZ	APACHE	500MW	Solar PV
4	TEP	2015	Tortolita, AZ	TORTOLITA	1000MW	Solar PV

In addition, the Foundational Base Case modeled the Bowie Power Station generation project on-line at 350MW.[17] Unless otherwise noted, this representation remained unchanged throughout all the Southline study cases.

While it is not practical nor appropriate to model every planned new generator, other planned/future generation projects were considered for representation in the Southline Phase 2 Rating power flow cases. For the modeling of (other) new generation, the Large Generation Interconnection Queues from several different neighboring entities were reviewed. These organizations included APS, EPE, PNM, TEP, WAPA-DSW, Tri-State Generation and Transmission Association, Inc. (TSGT), and Unisource Energy Services (UNSE). **Table 4.3** lists the potential new generation projects considered for inclusion in the Southline study cases; modeling of these new generation projects was evaluated based on the following criteria:

[15] At its September 14, 2012 PRG meeting, Southline indicated that the project's NEPA schedule had been extended, and requested PRG members to submit for the 2016 timeframe, updated load patterns and any relevant planned projects.

[16] Southline's plan of service includes two new 345 kV phase-shifting transformers (PSTs) at Afton substation. Interconnecting the new generation at Afton west of these PSTs helps facilitate higher simultaneous east-to-west transfers for Southline and Path 47 MW flow. All post-Southline cases model this western interconnection point for the new Afton generation. (Note: interconnection points for the other existing Afton generators were not changed.)

[17] The Bowie Power Station is 1000 MW natural gas-fired generation facility planned near the community of Bowie in Cochise County, southeastern Arizona. Expected in-service date for the Bowie Power Station is approximately December 2018.

- Generation projects located in New Mexico or Arizona and interconnecting to the WECC system/region.
- Generation projects under construction.
- Generation projects greater than 20 MW that have a completed System Impact Study and a completed Facilities Study with their host utility (or alternately, projects that have received regulatory approval) may be represented if needed to achieve the proposed Project ratings.

TEP Voltage and Reactive Power Requirements

In the development of the Southline power flow cases, best efforts were made to adhere to local utilities' criteria and guidelines for normal (pre-contingency) bus voltages and/or megavar (MVAR) flows. In particular, significant detail was applied with respect to voltage conditions within the Tucson Electric Power (TEP) area. The following briefly summarizes the TEP voltage targets and requirements applied to the Southline cases:

- **Normal Voltage Ranges for TEP Buses.** Adhere to specific normal voltage schedules (more restrictive than 1.0-1.05 per unit) at selected and aggregate TEP 138 kV, 345 kV, and 500 kV buses.
- **North East Loop (NELP) Static VAR Compensator (SVC) Bus Voltage and Reactive Output.** The NELP SVC's QGEN output should be in the range of +70 to +130 MVAR, with a bus voltage of 1.023-1.026.[18]
- **Reactive Power Output Requirements for Local Generating Units.** Reactive power requirements for all local TEP generating units should be +/-1 MVAR. [19]
- **Springerville Generating Units Bus Voltage and Reactive Power Output Requirements.** Springerville units #1 and #2 should maintain a terminal bus voltage of .997 pu; QGEN output for Springerville units #3 and #4 was subsequently modified to match MVAR output of units #1 and #2.

[18] The North East Loop Static VAR System (SVS) consists of an SVC (-75 to 200 MVAr) and four 138 kV shunt capacitors (~50 MVAr each); this yields a total SVS capability of -75 to +400 MVAr. However, the normal operating range of the SVS is +70 to +130 MVAR; this normal mode of operation is represented by a synchronous condenser. Additionally per TEP: For planning purposes, the South reactor is to be in-service at all times not just when the SVC is in-service. A review of all Southline cases shows that a limited number of cases (5 out of 51) mistakenly modeled the South reactor out of service. Given this slight modeling discrepancy, Southline recognizes that additional mitigation, such as the addition of 75MVAR shunt capacitor at the South 345kV bus, may be needed. Alternately, it should be noted that the Southline project's inherent natural capacitance significantly improves overall area voltages and Southline believes the cases can easily be tuned to TEP specifications via the many existing transmission reactive devices resident in the case. If required, further clarification and/or review can be completed in Phase 3.

[19] Sundt units #1-3 and DMPCCT unit #1 were modeled with a QGEN output of +/-1 MVAR in Southline cases. Sundt Unit #4 and the Sundt CT show MVAR output beyond the TEP specified reactive power requirements of +/- 1 MVAR. TEP and Southline do not believe this is a significant issue since the cases could be tuned to these specifications due to the many reactive tools noted in the TEP area. Also, it should be noted that the Southline project's inherent natural capacitance significantly improves overall area voltages. These reactive requirements will be monitored in Phase 3 and, if required, further clarification and/or review can be completed at this time.

- **Tortolita 500/138 kV Transformers #1, #2 and #3 Reactive Power Flow Requirements.** Maintain +0-30 MVAR outbound flow across the Tortolita 500/138 kV transformers (flowing from the 138 kV bus to the 500 kV bus).

4.3 Foundational Base Case Approval and Topology

The Foundational Base Case modeled Southline Project flows in the east-to-west direction (Heavy Summer condition). After applying the identified changes, Southline circulated the Foundational Base Case for PRG review; PRG members approved this case on January 11, 2013. This Foundational Base Case was initially used to assess Southline's potential (east-to-west) simultaneous interaction with WECC Path 47. For this first simultaneous analysis, it should be noted that the Foundational Base Case did not include the following elements:

- The SunZia Project was modeled as out-of-service. Likewise, the SunZia Project's Luna 500/345 kV transformer banks were not modeled; as such, the simultaneous analysis referenced the existing definition for WECC Path 47.
- The Tucson-Oracle 115 kV line reconductoring project was not modeled
- The second Marana 230/115 kV transformer bank was not modeled.

4.4 Southline Cases, Series #1-#67

Series of other study cases were created from the Foundational Base Case, to model and test the Southline Project's performance under a variety of different system configurations/conditions. This section summarizes these various assumption permutations and the corresponding series number(s) of the resulting cases.

Combinations of the following major topology assumptions helped establish each unique Case Series:

- WESTERN's reconductoring of the Tucson-Oracle 115 kV transmission line was modeled in- or out-of-service as a topology permutation.
- SWTC requested sensitivities with and without modeling a second Marana 230/115 kV transformer bank (rated 287/300MVA).
- The SunZia Project was modeled in the case, but was statused out-of-service as a topology permutation.

It should be noted that the Case Series' numbering is not necessarily consecutive. Case Series numbers referenced in this report include (but are not necessarily limited to): Series 01, 02, 16, 41, 42, 56, and

67. Please refer to Attachment D of this report to view a detailed matrix identifying each Case Series' content and purpose.[20]

Case Series 01 (east-to-west)
The first series of cases (Series 01) was derived directly from the Foundational Base Case[21] and modeled Southline flows in the east-to-west direction. This Case Series was used to test the potential simultaneous interaction between Southline (east-to-west) and WECC Path 47 MW flow (SNMI).[22] Case Series 01 did not model the Tucson-Oracle 115 kV line reconductoring, the second Marana 230/115 kV transformer, or the SunZia Project.

Case Series 02 (west-to-east)
Case Series 02 was developed for simultaneous analysis of Southline *west-to-east* flows and WECC Path 47. As with Series 01, system topology for Case Series 02 did not include the Tucson-Oracle 115 kV line reconductoring, the second Marana 230/115 kV transformer, or the SunZia Project.

Per feedback from EPE, Case Series 02 also included added sensitivity cases which modeled additional power transfers from EPE to Southwest Power Pool, as well as the "Southern New Mexico Upgrades". The Southern New Mexico Upgrades consist of the addition of a second Newman 345/115 kV autotransformer and the addition of a 13-Ohm series reactor[23] in the Dona Ana-Picacho 115 kV line.[24]

Case Series 16 (west-to-east)
The Series 16 cases were developed for simultaneous analysis of Southline *west-to-east* flows and WECC Path 47. These cases included the Tucson-Oracle 115 kV line reconductoring, but did not include the second Marana 230/115 kV transformer or the SunZia Project. (Like Case Series 02) Case Series 16 also included an added set of sensitivity cases which modeled additional power transfers from EPE to Southwest Power Pool, as well as the "Southern New Mexico Upgrades".

Case Series 41 (east-to-west)
Case Series 41 was constructed from Series 01, representing east-to-west Southline flows. Series 41 Cases included modeling for an added second Marana 230/115 kV transformer bank (rated 287/300 MVA), but did not include the Tucson-Oracle 115 kV line reconductoring or the SunZia Project.

[20] In addition, an extensive matrix of the originally-envisioned cases can be found in Appendix 7, Table H of the Southline Phase 2 Rating Study Plan, provided as Attachment C to this report.

[21] Southline's PRG reviewed the Foundational Base Case subsequently approved this case on January 11, 2013.

[22] This simultaneous analysis was performed with the existing/accepted definition for WECC Path 47, without the addition of the SunZia Project's Luna 500/345 kV transformer banks.

[23] It should be noted that the reactor addition, or equivalently performing transmission upgrades, are proposed as mitigation to support Southline's increased west-to-east transfers. These additions do not have and will require Tri-State approval through formal interconnection analysis by Tri-State.

[24] Note, this study has assumed that the Eddy County HVDC terminal and the Amrad-Eddy 345 kV line will be restored to service prior to the Southline Project's in-service date. In November 2013 the Amrad-Eddy 345 kV line was significantly damaged by an ice storm, placing the Amrad-Eddy 345 kV line and the Eddy County HVDC terminal out of service. The Amrad-Eddy 345 kV line is expected to be returned to service prior to the in-service date of the Southline Project.

Case Series 42 (west-to-east)
Case Series 42 modeled west-to-east Southline flows for simultaneous analysis with WECC Path 47. This Case Series was similar in topology to Series 41: cases included modeling for the second Marana 230/115 kV transformer, but did not include the Tucson-Oracle 115 kV line reconductoring or the SunZia Project. Case Series 42 also included additional sensitivity cases which modeled power transfers from EPE to Southwest Power Pool, as well as the "Southern New Mexico Upgrades".

Case Series 56 (west-to-east)
Case Series 56 modeled west-to-east Southline flows for simultaneous analysis with WECC Path 47. Case Series 56 was derived from earlier Series 16 cases. Series 56 cases included both the Tucson-Oracle 115 kV line reconductoring and a second Marana 230/115 kV transformer, but did not model the SunZia Project as in-service. In addition, Case Series 56 also modeled the "Southern New Mexico Upgrades" and additional power-transfers from EPE to Southwest Power Pool.

Case Series 67 ("Midpoint Spur") (east-to-west)
Case Series 67 was created as a topology sensitivity to model the optional "Midpoint Spur" under Southline east-to-west flow conditions. In April 2012 Southline proposed (and the PRG approved) this additional sensitivity.[25] Case Series 67 was developed from the Series 01 cases; these cases were modified to model the Midpoint Spur, a 30 mile line double-circuit 345 kV towerline connecting Midpoint Substation to approximately 1000MW of Photovoltaic generation. As with Case Series 01, Case Series 67 did not model the Tucson-Oracle 115 kV line reconductoring, the second Marana 230/115 kV transformer, or the SunZia Project.

4.5 Mid-Study Case Changes and Additions

Several additional case changes and additions were determined during the course of the Southline Phase 2 Study. This report section provides details regarding these modeling updates.

Southern New Mexico

Dona Ana-Las Cruces 115 kV Line Rating

On September 17, 2013, Tri-State verified that the Dona Ana-Las Cruces 115 kV line rating should be 769 Amps (normal and emergency) due to a conductor uprate project expected by 4th Quarter 2015.

Southern New Mexico Upgrades

As previously described for Case Series 02, EPE requested an added set of sensitivity cases which modeled additional power-transfers from El Paso to Southwest Power Pool, as well as the "Southern New Mexico Upgrades". The Southern New Mexico Upgrades consist of: 1) installation of a second

[25] Routing and permitting of the Southline Project could result in the need for a double circuit 345 kV spur line (approximately 30 mile long) to connect potential generation sources to the Midpoint 345 kV bus.

Newman 345/115 kV autotransformer, 2) installation of a 13-Ohm series reactor[26] on the Dona Ana-Picacho 115 kV line, and (3) reconfiguration of the Newman 345kV bus to eliminate the stuck breaker outage of Newman 345/115kV autotransformer #1 and Newman-Picante 345kV line. These reinforcements were modeled for Case Series 02 and 16 sensitivity cases, and were also incorporated into all Series 56 cases.

El Paso Electric

El Paso Electric New Mexico Import 345 kV Line De-rates

On May 15, 2013, EPE issued a Material Changes Review (MCR) memorandum to its previously-published 2013-2022 System Expansion Plan; this MCR documented decreased ratings for seven 345 kV lines associated with New Mexico imports. These line de-rates (resulting from ground clearance concerns) are regarded as a temporary condition: EPE has outlined a plan to restore these lines' original ratings, prior to the construction of the Southline Project. As such, the Southline ratings and nomograms recommended in this study remain based upon the original ratings for EPE's 345 kV lines.

As an additional sensitivity study, all cases related to critical nomogram corner points were modified to reflect the EPE 345 kV line de-rates. Performance of these revised cases was then checked for all study contingencies. Results of this sensitivity analysis are documented in **Section 6** of this report.

Luna-Macho Springs-Springerville 345 kV Line Susceptance ("B value")

In July 2013, EPE identified an impedance modeling discrepancy for the Springerville-Macho Springs and Macho Springs-Luna 345 kV lines. For preceding Case Series 01, 02, 16, and 41, the modeled susceptance (B value) for these lines was 1/100th of the appropriate magnitude (modeled respectively as 0.0179 and 0.00217 per unit, instead of 1.79 and 0.217 per unit). This modeling error effectively reduced these line's capacitance by roughly 186MVAr, producing more conservative/pessimistic results for voltage and reactive margin performance.

Studies with Southline Case Series 01, 02, 16 and 41 included these erroneous B-values; however, all limiting nomogram points for these cases were determined by *thermal* constraints, not voltage concerns. Since the corrected B-value would only improve EPE and Southline's voltage performance and would not impact the thermal results, there was no need to correct and re-run Case Series 01, 02, 16 and 41. Corrected B-values for the Springerville-Macho Springs and Macho Springs-Luna 345 kV lines were used in the subsequent Case Series 42, 56 and 67.

[26] It should be noted that the reactor addition, or equivalently performing transmission upgrades, are proposed as mitigation to support Southline's increased west-to-east transfers. These additions do not have and will require Tri-State approval through formal interconnection analysis by Tri-State.

Arizona

Marana-Marana Tap 115 kV Line Ratings

On September 24, 2013 SWTC verified that the normal and emergency ratings for the Marana-Marana Tap 115 kV line should be 159MVA (800 Amps limitation, due to a switch located at Marana Tap). Previous Southline Case Series 01, 02, 16 and 41 had modeled this line's ratings as *99MVA* (497amps) normal and *109MVA* (547amps) emergency. Because the ratings would only improve the thermal results, there was no need to correct and re-run Case Series 01, 02, 16 and 41; however, tabular results for Case Series 16 were updated to reflect the correct ratings and overload percentages. Subsequent Case Series 42, 56, and 67 have been modified to reflect this 159MVA normal and emergency rating.

Three Point-Sandario 115kV Line Ratings

On September 25, 2013 SWTC verified the normal and emergency ratings for the Three Point-Sandario 115 kV line should be 64MVA (321 Amps) and 83MVA (417 Amps), respectively. Previous Southline Case Series 01, 02, 16 and 41 had modeled this line's ratings as *71MVA* (356 Amps) normal and *78MVA* (392 Amps) emergency. Because contingency thermal results would only be improved by the corrected/higher emergency rating, there was no need to correct and re-run Case Series 01, 02, 16 and 41; however, tabular results for Case Series 16 were updated to reflect the correct ratings and overload percentages. Cases 1, 2, 16, and 41 were checked for pre-contingency Three Point-Sandario 115 kV line flows against the new lower normal line rating resulting in no new normal base case overloads. Subsequent Case Series 42, 56, and 67 have been modified to reflect the revised 64/83MVA normal/emergency rating for this line.

Saguaro Units 1 & 2 Retirement

At the September 6, 2013 Southline PRG meeting, APS informed the study group that Saguaro generating units 1 and 2 had been shut down in June of 2013. Preceding results for Case Series 01, 02, 16, and 41 were deemed acceptable with this discrepancy. Subsequent Case Series 42, 56, and 67 modeled Saguaro Units 1 and 2 as retired/off-line, with additional generation increased at Tortolita. [This change slightly increased the east-to-west transfer capability for Southline's Tortolita/Saguaro East interface.]

Four Corner Units 1, 2 & 3 Retirement

On January 6, 2014, APS informed Southline that the Four Corners generating units 1, 2 and 3 had been retired on December 30, 2013. Because these resources are relatively remote (both physically and electrically) from the Southline Project, APS and Southline agreed that results to date for Case Series 01, 02, 16, 41, 42 and 56 were acceptable. Subsequent Case Series 67 has modeled Four Corners units 1-3 as retired/off-line.

Saguaro-Casa Grande 230 kV Line

On January 6, 2014, APS notified Southline that some WECC cases may have mistakenly modeled an extra/second Casa Grande-Saguaro 230 kV line. Southline has confirmed that this extraneous 230 kV line was (only) present in Case Series 02, 16, 42, and 56 (cases modeling west-to-east Southline flows).

Further exploration found that the added line had little effect on Southline's performance or west-to-east transfers (increasing flows by less than 1-3 MW), and that this error's impact could be tuned away with minor changes in generation dispatch. As such, the PRG deemed the results for Case Series 02, 16, 42, and 56 as acceptable, with no need to correct and re-run these cases. To the extent that any additional Case Series were developed, such cases were corrected to reflect only one Saguaro-Casa Grande 230 kV line.

Midpoint Spur

In April 2012 Southline proposed (and the PRG approved) an additional non-simultaneous sensitivity to model an optional "Midpoint Spur" configuration, for Southline east-to-west flow conditions. This sensitivity was driven by possible Southline permitting and routing changes, which could result in the need for an added collector/spur line to access potential generation sources. The Midpoint Spur sensitivity consists of a 30 mile 345 kV double circuit line, connecting Midpoint Substation to approximately 1000MW of Photovoltaic generation located at Midpoint South 345 kV bus. The Midpoint Spur is only modeled in Case Series 67.

4.6 Changes in Generation, Interchange, and Load

Desired transfer levels for Southline's four interfaces were typically achieved through generation dispatch and phase-shifting transformer settings, and adjustments in transmission lines series compensation. Typically, changes in area loads were only applied if requested by the PRG.

Generation dispatch patterns were developed in accordance with the WECC path rating procedures. Efforts were made to keep existing generation within historically dispatched ranges, and to observe absolute dispatch limitations (e.g., avoid dispatching a generating unit if it is due to be retired prior to Southline's in-service date).

Attempts were made to confine the applied generation changes to New Mexico and Arizona.[27] For Afton West and Apache West *east-to-west flows*, generation was typically increased in New Mexico[28] and decreased at the Palo Verde Hub in Arizona. For Tortolita/Saguaro East and Apache East *west-to-east flows*, generation was typically increased west of Southline and decreased in New Mexico[29].

Each resulting case's voltage profile was adjusted as appropriate/directed, by modifying the voltage schedules (and/or status) of area generators, synchronous condensers, capacitors, and Static Var Compensators (SVCs). Unless otherwise noted, synchronous condensers and SVCs were set at the middle of their reactive range for steady-state operation.

[27] For selected cases, redispatch of generating units outside of New Mexico and Arizona may have been required to achieve/maintain desired flows on other existing WECC paths.

[28] Southline generation was increased at Afton substation.

[29] El Paso core-generation was decremented down in an effort to increase Southern New Mexico imports.

5. 10% PATH FLOW TEST RESULTS

The WECC Path Rating Process defines a screening test, to aid in determining which potentially-affected Paths should be evaluated for simultaneous analysis. In this screening analysis, affected paths whose incremental flows change by 10% or more (based on that affected path's rating) for critical Southline element outage(s) are flagged as potential paths to be evaluated for simultaneous impacts.

5.1 10% Path Flow Test Methodology

Southline utilized a post-transient governor power flow contingency analysis in performing the WECC 10% Path Flow Test. Flows on all WECC transmission paths were monitored while simulating selected critical Category B and C Southline Project outages, and all resulting changes in WECC Path flows were measured with respect to each WECC Path's rating.

5.2 Case List

Southline performed the 10% Path Flow Test on 16 different power flow cases used in Southline's Phase 1 Rating study; **Table 5.1** summarizes these base cases.[30] These base cases modeled various directional Project flows and multiple topology permutations (including the Tucson-Oracle 115 kV Reconductoring, Southline Saguaro Station, Bowie Power Station, and the SunZia Project). At the time of the analysis, each case had been updated with the latest PRG review comments.

[30] Southline PRG Members may also download these cases from the Southline Share File site: https://southline.sharefile.com. These cases are posted under the "General Data" section in the folder, "Southline Phase 2 WECC 10% Path Stress Test Cases".

TABLE 5.1– SOUTHLINE PHASE 2 DETAILED 10% PATH TEST CASE MATRIX

#	SAVE CASE NAME	NOMOGRAM NUMBER	NOMOGRAM POINT	PATH FLOW IN MW						PHASE 2 CASE STUDY PURPOSE						CASE MODELING							
				SOUTHLINE PROJECT TORTOLITA/SAGUARO EAST	SOUTHLINE PROJECT APACHE EAST	SOUTHLINE PROJECT AFTON WEST	SOUTHLINE PROJECT APACHE WEST	S. NEW MEXICO PATH 47 (WECC APPROVED PATH DEFINITION)	SUNZIA PROJECT	PRE-PROJECT POST-TRANSIENT CASE	POST-PROJECT POST-TRANSIENT CASE	102.5% VOLTAGE STABILITY TEST CASE	105% VOLTAGE STABILITY TEST CASE	10% PATH FLOW TEST	EPE 345KV LINE DE-RATE THERMAL ANALYSIS	TUCSON-ORACLE RE-CONDUCTOR MODELED	SOUTHERN NEW MEXICO UPGRADES MODELED	EL PASO ELECTRIC LUNA-SPRINGERVILLE B-VALUE UPDATED	SOUTHLINE BASECASE MODELING EPE RATING DE-RATES	SUNZIA PROJECT MODELED IN-SERVICE	SOUTHLINE SAGUARO STATION	BOWIE PROJECT OUTPUT IN MW	2ND MARANA 230/115KV TRANSFORMER
1	00_ew_1039_1000_v01.sav	n/a	n/a	n/a	n/a	1039	1000	n/a			✓			✓								350	
2	00_ew_1039_1000_v01s.sav	n/a	n/a	n/a	n/a	1039	1000	n/a			✓			✓							✓	350	
3	00_we_0428_0971_v02.sav	n/a	n/a	428	971	n/a	n/a	n/a			✓			✓								350	
4	00_we_0428_0971_v02s.sav	n/a	n/a	428	971	n/a	n/a	n/a			✓			✓							✓	350	
5	05_ew_1041_1002_v01.sav	n/a	n/a	n/a	n/a	1041	1002	n/a	1000		✓			✓						✓		350	
6	05_ew_1041_1002_v01s.sav	n/a	n/a	n/a	n/a	1041	1002	n/a	1000		✓			✓						✓	✓	350	
7	06_we_0428_0971_v02.sav	n/a	n/a	428	971	n/a	n/a	n/a	1200		✓			✓						✓		350	
8	06_we_0428_0971_v02s.sav	n/a	n/a	428	971	n/a	n/a	n/a	1200		✓			✓						✓	✓	350	
9	13_ew_1042_1003_v01.sav	n/a	n/a	n/a	n/a	1042	1003	n/a			✓			✓								350	
10	13_ew_1042_1003_v01s.sav	n/a	n/a	n/a	n/a	1042	1003	n/a			✓			✓							✓	350	
11	14_we_0738_0971_v02.sav	n/a	n/a	738	971	n/a	n/a	n/a			✓			✓		✓						350	
12	14_we_0738_0971_v02s.sav	n/a	n/a	738	971	n/a	n/a	n/a			✓			✓		✓					✓	350	
13	19_ew_1038_1000_v01.sav	n/a	n/a	n/a	n/a	1038	1000	n/a	1000		✓			✓		✓				✓		350	
14	19_ew_1038_1000_v01s.sav	n/a	n/a	n/a	n/a	1038	1000	n/a	1000		✓			✓		✓				✓	✓	350	
15	20_we_0428_0971_v02.sav	n/a	n/a	428	971	n/a	n/a	n/a	1200		✓			✓		✓				✓		350	
16	20_we_0428_0971_v02s.sav	n/a	n/a	428	971	n/a	n/a	n/a	1200		✓			✓		✓				✓	✓	350	

5.3 Contingency List

The list of contingencies applied in the 10% Path Flow Test is provided in Attachment F of this report.

5.4 Results

Southline PRG Members may download the WECC 10% Path Flow Test results from the Southline Share File site https://southline.sharefile.com. These results are located under the "General Data" section in the "Southline Phase 2 WECC 10% Path Stress Test Results" folder.

The 10% Path Flow Test showed a direct simultaneous relationship between the Southline Project (bi-directionally) and WECC Path 47 MW flow (SNMI). Many Southline Project outages showed Path 47 flow changes in excess of 10%. Most notably, the NERC Category C (N-2) outage of the Afton-Midpoint #1 and #2 345 kV lines produced a 97.3% change in Path 47 flows.

A minor interaction was observed between Southline and WECC Path 23 ("Four Corners 345/500 kV"). For NERC Category C (N-2) outage of either the Apache-Pantano and Adams Tap-Nogales 230 kV lines or the Apache-Pantano and Apache-Adams Tap 230 kV lines, Path 23 flows changed by 10.1-10.5%, respectively.

WECC Path 48 ("Northern New Mexico") was also considered for possible simultaneous analysis, but the WECC 10% Path Flow Test results showed minor interaction, with flow changes well less than the 10% threshold.

5.5 Conclusion

Results from Southline's 10% Path Flow Test were presented to the PRG at the September 14, 2012 Southline PRG meeting. Based on these results, the PRG recommended performing the following simultaneous analysis:[31]

a) Southline versus WECC Path 47 MW flow (existing definition)

Furthermore, the Southline PRG agreed that simultaneous analyses should not be required for Southline versus Path 23 or Path 48.

[31] Proposed Southline simultaneous analyses of SunZia's Modified Path 47 definition and the SunZia Project itself were not included as Part of this Phase 2 Rating Study. See **Section 8** of this report for further discussion.

6. SIMULTANEOUS ANALYSIS RESULTS (Southline vs. Path 47 MW Flow)

As previously discussed, the Southline Phase 2 Rating Study analyzed potential simultaneous relationships between the Southline Project's four interfaces and the WECC Path 47 (existing definition) MW flow (SNMI). This section first discusses notable findings from these simultaneous studies' power flow contingency analysis, voltage stability analysis, and transient stability analysis. If mitigation measures were required/applied for a particular result or Case Series, these measures are also identified and discussed. The latter part of this section provides nomograms for each simultaneous Case Series; each of these nomograms expresses the simultaneous relationship observed between Southline's directional interfaces and WECC Path 47 MW flow.

Multiple study scenarios and topology permutations were developed for studying Path 47 MW flow and east-to-west and west-to-east Southline flows. For reference, **Table 6.1** summarizes the conditions assumed for each "Case Series" used in the Southline Phase 2 Rating Study. Attachment D of this report provides an extensive detailed matrix identifying the content and purpose for every individual case. Southline PRG members may access and download any of these power flow cases and/or other work data files from the "General Data" section of the Southline Share File site, located at: https://southline.sharefile.com.

TABLE 6.1 – SOUTHLINE PHASE 2 CASE SERIES SUMMARY

CASE SERIES DETAIL						SIMULTANEOUS PATH UNDER STUDY						CASE MODELING			
CASE SERIES	NOMOGRAM	EAST-TO-WEST SOUTHLINE PROJECT FLOWS	WEST-TO-EAST SOUTHLINE PROJECT FLOWS	BOWIE GENERATION (OUTPUT IN MW)	SUNZIA PROJECT OUT OF SERVICE	SOUTHLINE INTERFACE A: AFTON WEST	SOUTHLINE INTERFACE B: APACHE WEST	SOUTHLINE INTERFACE C: TORTOLITA/SAGUARO EAST	SOUTHLINE INTERFACE D: APACHE EAST	SOUTHLINE MIDPOINT W3ST (SENSITIVITY)	WECC PATH 47 (Existing Definition)	TUCSON-ORACLE RE-CONDUCTOR MODELED	2ND MARANA 230/115KV TRANSFORMER	SOUTHERN NEW MEXICO UPGRADES	SOUTHWEST POWER POOL EXPORT
01	1	✓		350	✓	✓	✓				✓				
02	2a		✓	350	✓			✓	✓		✓				
02	2b		✓	350	✓			✓	✓		✓			✓	✓
16	16a		✓	350	✓			✓	✓		✓	✓			
16	16b		✓	350	✓			✓	✓		✓	✓		✓	✓
41	41	✓		350	✓	✓	✓				✓		✓		
42	42		✓	350	✓			✓	✓		✓		✓		
56	56		✓	350	✓			✓	✓		✓	✓	✓	✓	✓
67	67	✓		350	✓		✓			✓	✓				

6.1 Southline vs. Path 47 MW flow - Power Flow Contingency Results

This section discusses the simultaneous analyses' observed power flow contingency results, including any related mitigation measures or identified follow-up action(s).

Attachment F identifies all the contingencies applied in this analysis, while Attachment G provides detailed tabular results.

All applied contingencies were simulated using post-transient governor power flow techniques. The system's post-contingency thermal and voltage performance was compared to the NERC Reliability Standards, WECC System Performance TPL-001-WECC-RBP-2.1 Regional Business Practice, and (as applicable) any local utility reliability criteria. Together with identified mitigation measures, these contingency results demonstrate the Southline Project meets these reliability standards/criteria.

Results for Arizona

Abel and Dinosaur 230 kV Bus Voltages

In Case Series 01 and 41, SRP's Abel and Dinosaur 230 kV buses exhibited normal (all-lines-in-service) voltages of 0.99pu, for both the pre- and post-Southline condition. These values were slightly less than SRP's local criterion which requires 230 kV bus voltages to be within 1.00-1.05pu under normal conditions. Likewise for the Category B N-1 outage of the Dinosaur-Browning #1 230kV line, low emergency voltages of 0.93-0.94 and negative voltage deviations of -5.0 to-6.3% were observed at these same buses, for both pre- and post-Southline cases. (For contingency conditions, SRP's local planning criteria requires 230 kV bus voltages to be within 0.95-1.10pu.) Further review of these voltage concerns revealed a base case modeling discrepancy, where a 24MVAr shunt capacitor had been inadvertently omitted from the Dinosaur 69 kV bus due to the model's equivalenced 69 kV representation. The review also identified an alternate (high side) fixed tap setting for the Browning 500/230 kV transformers, which would have additionally helped resolve these voltage concerns. Because these low normal and contingency voltages were observed in the pre-Project case and were confirmed to be modeling-related, and because these buses are relatively remote from the Southline Project and not significantly worsened by the post-Project condition, SRP and Southline have deemed these results to be acceptable and to have negligible impact on the results of the overall study.

Vail2 345 kV Bus Voltage Performance

For both pre- and post-Southline cases in Series 01 and 41, an N-1 outage of TEP's Vail 345/138 kV transformer resulted in positive voltage deviations (increases) greater than +5.0%[32] at the "VAIL2" 345 kV bus. Further review found that Vail features a line-terminated

[32] It should also be noted that a positive voltage deviation is not a violation of the WECC Regional Business Practice. Only negative voltage deviations are considered violations.

transformer. There is a breaker on the high side of this transformer so the line will remain in service. Since this is a long open-ended line following the transformer outage, it is expected that the open end of the line will have a high voltage. This can be mitigated by the System Operators opening the breakers at Springerville or closing a breaker at Vail so the line terminates into the Vail 345kV bus.

TEP 138 kV Bus Voltage Performance

For all of the Case Series, Southline made best efforts to develop and study power flow base cases which met TEP's local area criteria for voltage and reactive output requirements.[33]

There are instances in the cases where TEP bus voltage criteria many not be met on individual buses; however, all cases met or exceeded TEP 138kV bus average for both pre and post-contingency. The pre-contingency voltage range for TEP 138kV buses was (≥1.0210, ≤1.0235 voltage(p.u.)) and there were no voltage deviation issues identified except as noted and mitigated in this report.

TEP has reviewed the pre- and post-contingency voltage performance of these 138 kV buses, and deemed these voltage conditions to be acceptable.

Pre and Post-Project Dugas, Morgan, Pinnacle Peak Voltage Performance

For all of the Case Series, high post-contingency voltages (up to 1.14pu) were observed at APS's Dugas, Morgan, and Pinnacle Peak 500 kV buses, in both the pre- and post-Southline cases. These high post-contingency voltages were observed for various line outages, including the N-1 Morgan-Dugas 500 kV Line outage, N-1 Morgan-Pinnacle Peak 500 kV Line outage, N-2 outage of the Morgan-Dugas and Yavapai-Westwing 500 kV Lines, N-2 outage of the Morgan-Westwing and Yavapai-Westwing 500 kV Lines, and N-2 outage of the Mazatzal-Pinnacle Peak and Cholla-Preacher Canyon 345 kV Lines. APS and Southline believe these voltage concerns result in part from the models' equivalenced 69 kV representation near these buses. Because these high contingency voltages occur in the pre-Project case and were confirmed to be modeling-related, and because these buses are relatively remote from the Southline Project and are not worsened by the post-Project condition, APS and Southline have deemed these results to be acceptable and to have negligible impact on the results of the overall study.

High Post-Contingency Voltages at Adams/Apache/Boothill/Mural 115-230 kV Buses

For Case Series 01 and 41 post-Southline cases, high post-contingency voltages (approaching 1.12pu) were observed at various 115 kV and 230 kV buses in the vicinity of Apache substation:

- For an N-2 outage of the Apache-Pantano and Adams Tap-Nogales 230 kV lines, high post-contingency voltages were observed at the following buses: Adams 115 kV,

[33] TEP's 138 kV bus voltage average is comprised of the following buses: DMP, DREXEL, E. LOOP, IRVNGTN, NL. EXP (or N. LOOP but not both), NE.LOOP, RBWILMOT, TUCSON, and TWNTYSEC

Adams Tap 115 kV, Adams Tap 230 kV, Apache (Southline) 230kV, Boothill 115 kV, and Mural 115 kV.

- For an N-2 outage of the Apache-Pantano and Apache-Adams Tap 230 kV lines, high post-contingency voltages were observed at the Apache (Southline) 230 kV.

Proposed Mitigation/Follow-up Actions for Arizona Area:

Analysis of these high voltage concerns showed that they can potentially be mitigated through alternate tap settings for the Apache (Southline) 345/230 kV transformers and/or by increasing the Apache (Southline) SVC's downward reactive capability to -150 MVAR (an increase of -50 MVAR).[34] **Graphs 6.1 and 6.2** show the impact of applying these mitigation measures.

Additionally, for the Adams/Boothill/Mural 115 kV voltages, APS recommends that the any subsequent analysis of these buses' voltage performance should include detailed modeling for the loads and shunt devices in this 115 kV subsystem.

Southline and the affected parties have reviewed these buses' post-contingency voltage performance. Additional analysis is proposed for Phase 3 of the Project Rating Process, to verify these voltage conditions and to confirm (and if necessary, refine) the tap settings for the Apache(Southline) 345/230 kV transformers and the capabilities of the Apache(Southline) SVC. For this Phase 2 Rating Study, the affected parties have deemed these voltage conditions as acceptable, with the understanding that Southline will further analyze this performance in Phase 3 and make any necessary modifications to the Southline Plan of Service needed to mitigate any identified problems.

[34] In Southline's original plan of service, the Apache (Southline) 345 kV SVC is planned to have downward reactive capability of -100 MVAR. This SVC is assumed to respond in the post-transient timeframe for applied contingencies.

Graph 6.1: Voltage Mitigation for N-2 Apache-Pantano/Adams Tap-Nogales 230 kV Line Outage

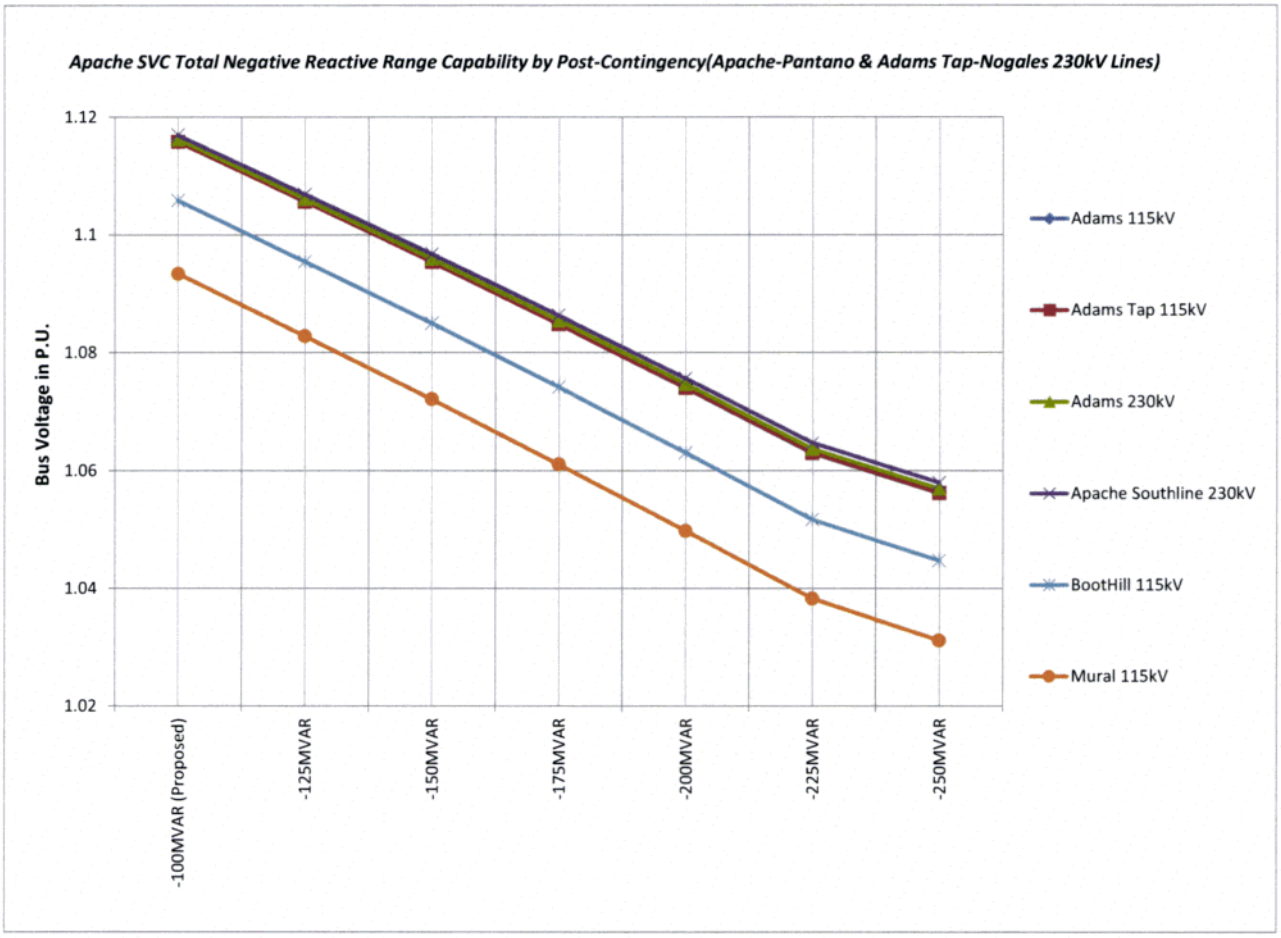

Graph 6.2: Voltage Mitigation for N-2 Apache-Pantano/Apache-Adams Tap 230 kV Line Outage

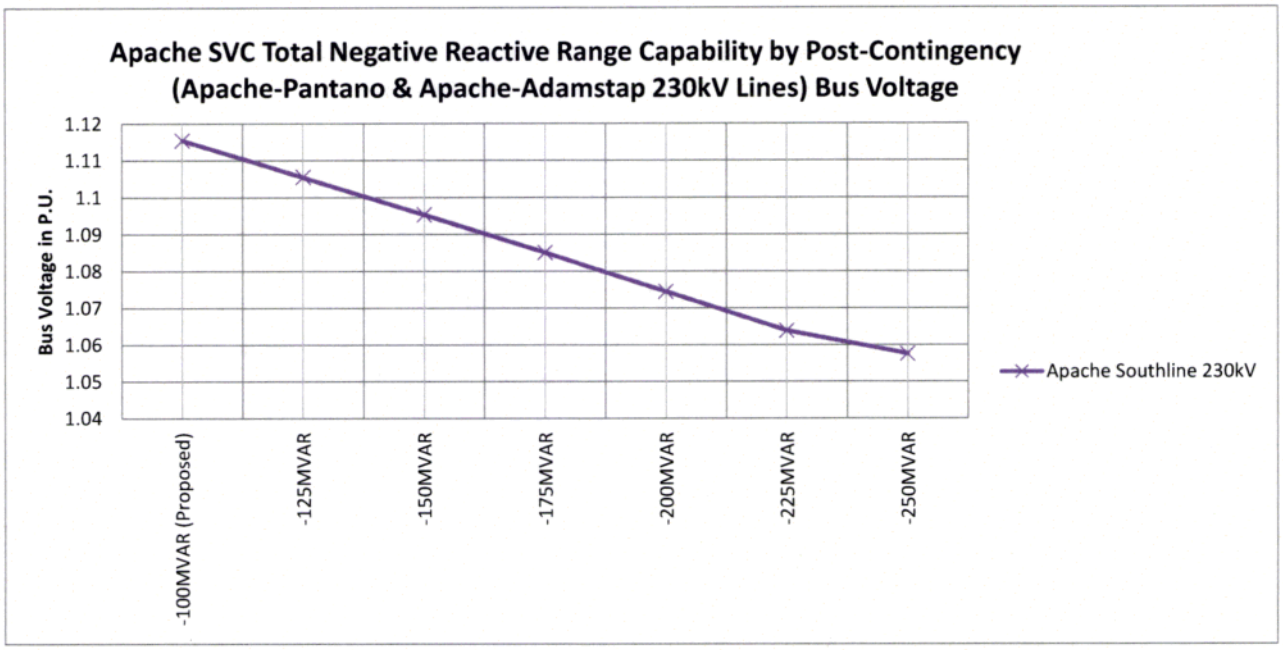
Apache SVC Total Negative Reactive Range Capability by Post-Contingency
(Apache-Pantano & Apache-Adamstap 230kV Lines) Bus Voltage
Bus Voltage in P.U.
1.12
1.11
1.1
1.09
1.08
1.07
1.06
1.05
1.04
-100MVAR (Proposed)
-125MVAR
-150MVAR
-175MVAR
-200MVAR
-225MVAR
-250MVAR
Apache Southline 230kV

Results for Arizona

Marana-Marana Tap 115 kV Line Loading and TEP's Tie Open Load Shedding Scheme (TOLS)

Preliminary review of the Case Series 01 and 41 contingency results showed potential thermal loading concerns for SWTC's Marana-Marana Tap 115 kV line, for several N-2 outages of the Springerville/ Winchester/Vail 345 kV lines.[35] These thermal overload concerns were later resolved with SWTC's update/correction of the emergency rating for the Marana-Marana Tap 115 kV line. (See **Section 4.5** of this report, "Mid-Study Case Changes and Additions".)

Prior to SWTC's correction of the Marana-Marana Tap 115 kV line ratings, Southline studied TEP's existing "Tie Open Load Shedding" (TOLS) scheme as potential mitigation for this N-2 thermal loading concern. TOLS is an existing local area protection scheme which allows shedding up to 40% of TEP's load for large tie-line outages. Southline extensively studied[36] the potential use of TOLs to mitigate the N-2 contingency loadings of the Marana-Marana Tap 115 kV line, and found that this scheme would resolve these overloads (requiring less than 16.9% of TEP's load to be shed). Results from the application of TOLS were presented to the Southline PRG and have also been retained (for informational purposes only) in Case Series 01's and 41's tabular results. Ultimately however, SWTC's revised ratings for the Marana-Marana Tap 115 kV line negated the need to employ TOLS.

Three Point-Sandario 115 kV Line Loading and Switching Action

For Case Series 16 and 56 (modeling west-to-east Southline flows), contingency results show that a Category C/N-2 outage of Western/Southline's Tortolita-Tucson and Rattlesnake-Marana 230 kV lines can potentially overload SWTC's Three Point-Sandario 115 kV line (emergency rating of 416 Amps). For this N-2, Case Series 16 and 56 exhibited emergency loadings up to 104% and 110%, respectively.

Proposed Mitigation/Follow-up Actions:

It is required that Southline, Western, and SWTC work together to mitigate a potential N-2 Southline Project contingency "C" overload of the Three Point-Sandario 115 kV line. Mitigation and resulting transmission performance that is acceptable to SWTC will be finalized in Phase 3.

[35] These Category C/N-2 outages were: Springerville-Greenlee and Springerville-Vail 345 kV Lines; Willow-Winchester and Springerville-Vail 345 kV Lines; and the Winchester-Vail and Springerville-Vail 345 kV Lines.

[36] Southline conducted both post-transient contingency analysis as well as transient stability studies of the TOLS scheme.

Results for Southern New Mexico

Turquois-Hidalgo 115 kV Line Loading and PNM Responsive Actions

For both pre- and post-Project conditions throughout all of Southline's Case Series, potential contingency overloads were observed for PNM's Turquois-Hidalgo 115 kV line (emergency rating of 702 Amps). These thermal overloads were associated with possible N-2/overlapping outages of either the Luna-Afton 345 kV Line and Luna 345/115 kV Transformer, or the Luna-Hidalgo 345 kV Line and Luna 345/115 kV Transformer. PNM presently employs a series of system adjustment actions to mitigate these contingency overload concerns. These responsive actions include curtailing interruptible load at PD Tyrone and Ivanhoe, and/or switching shunt capacitors out-of-service at MD, Silver C, and Mimbres substations. The Southline studies simulated PNM's responsive switching actions and verified that these system adjustments mitigated the identified contingency overloads, for both the pre- and post-Southline cases.

Proposed Mitigation/Follow-up Actions for Southern New Mexico:

Southline recommends that the responsive actions should be formalized (e.g., either documented in a PNM Operating Procedure, or possibly automated as a Remedial Action Scheme (RAS)).

Results for EPE

Overload Mitigation: Newman Autotransformer #2 Enhancement

As noted for Case Series 02, 16, and 56, the Category C (breaker failure) outage of the Newman-Picante 345 kV Line and Newman 345/115 kV autotransformer #1 can potentially overload Newman 345/115 kV autotransformer #2 (loadings up to 136% of its 265MVA emergency rating[37]). It is noted here that Newman 345/115 kV autotransformer #2 is part of the "Southern New Mexico Upgrades". Further examination revealed that this Category C outage results from stuck breaker scenario that simultaneously removes from service, both the Newman-Picante 345 kV line and the existing Newman #1 autotransformer bank.

Southline plans to mitigate the Newman autotransformer #2 overload by reconfiguration of the Newman 345 kV bus and circuit breaker arrangement to eliminate the common breaker outages of the Newman-Picante 345 kV line and either Newman 345/115 kV autotransformer.

[37] Newman autotransformer #1 has a 230MVA normal rating and 265MVA emergency rating, while the new Newman autotransformer #2 would have a 280VA normal rating and a 360MVA emergency rating.

Additional EPE 345 kV Category C Outages and Proposed Mitigation Measures

For various present-day Category C 345 kV outages, El Paso Electric (EPE) relies upon an existing Under Voltage Load-Shedding Scheme (UVLS) to mitigate possible post-contingency low voltage and voltage stability concerns. For all Case Series, contingency results indicate that for the post-Southline condition, the existing EPE UVLS would not adequately address/resolve all identified post-contingency thermal and voltage concerns. (Effectively, voltage support from the Southline Project raises EPE's post-contingency voltages, which under some conditions, inhibits activation of the UVLS.)

Southline reviewed the post-Southline contingency results for all associated case series. The following EPE N-2 outages were critical:

- N-2 Newman-Arroyo and Newman-Afton 345 kV Lines (breaker failure)
- N-2 Newman-Picante and Newman-Afton 345 kV Lines (breaker failure)
- N-2 Luna-Afton #1 and #2 345 kV Lines (coincident, common corridor)

Table 6.2 below identifies the post-Southline cases which exhibited emergency overloads for one or more of these outages, and **Table 6.3** lists the affected transmission elements and the maximum thermal loading observed for those elements.

TABLE 6.2 - POST-SOUTHLINE CASES EXHIBITING UVLS NON-OPERATION AND EMERGENCY OVERLOADS FOR EPE 345KV N-2'S

CASE NAME:	SERIES	AFTON WEST (MW)	APACHE WEST (MW)	TORTOLITA/SAGUARO EAST (MW)	APACHE EAST (MW)	PATH 47 FLOW (MW)	DONA ANA-PICACHO SERIES REACTOR IN-SERVICE	NEWMAN AUTOTRANSFORMER #2 ADDITION	EXPORT TO SOUTHWEST POWER POOL	TUCSON-ORACLE 115KV LINE RECONDUCTOR	2ND MARANA TRANSFORMER	SOUTHLINE APACHE 230/115KV TRANSFORMER AND REACTOR	SPUR MODELED
01_ew_1037_1000_1048_v27.sav	01	1037	1000			1048							
41_ew_1037_1000_1048_v27.sav	41	1037	1000			1048					Yes		
41_ew_1040_1000_1048_v29.sav	41	1040	1000			1048					Yes	Yes	
67_ew_1026_1000_1048_v01.sav	67	1026	1000			1048							Yes
02_we_0430_0971_0275_03.sav	02			430	971	275							
02_we_0421_0165_1048_06.sav	02			421	165	1048							
02_we_0445_0971_0489_01.sav	02			445	971	489	Yes	Yes	Yes				
02_we_0435_0436_1048_01.sav	02			435	436	1048	Yes	Yes	Yes				
16_we_0715_0971_0275_02.sav	16			715	971	275				Yes			
16_we_0715_0165_1048_02.sav	16			715	165	1048				Yes			
16_we_0712_0971_0480_01.sav	16			712	971	480	Yes	Yes	Yes	Yes			
16_we_0734_0436_1048_04.sav	16			734	436	1048	Yes	Yes	Yes	Yes			
42_we_0435_0971_0275_01.sav	42			435	971	275					Yes		
42_we_0431_0179_1048_01.sav	42			431	179	1048					Yes		
42_we_0435_0971_0275_02.sav	42			435	971	275					Yes	Yes	
42_we_0431_0179_1048_03.sav	42			431	179	1048					Yes	Yes	
56_we_0754_0433_1048_01.sav	56			754	433	1048	Yes	Yes	Yes	Yes	Yes		
56_we_0758_0968_0481_03.sav	56			758	968	481	Yes	Yes	Yes	Yes	Yes		

TABLE 6.3 – MAXIMUM CONTINGENCY THERMAL LOADINGS FOR EPE 345KV N-2'S AND UVLS NON-OPERATION								
OVERLOADED COMPONENT	CATEGORY C CONTINGENCY	RATING	PRE-PROJECT LOADING		POST-PROJECT LOADING		DELTA %	Nomogram Number and Point
		AMPS / MVA	AMPS / MVA	% of RATING	AMPS / MVA	% of RATING		
Diablo 345/115kV Transformers	Newman-Arroyo & Newman-Afton 345kV Lines	258.0	185.3	71.8	301.	116.5	44.7	56-1
Diablo-Rio Grande 115kV #1 Line		1964.0	1242.5	63.3	2096	106.8	43.5	2b-1M
Diablo-Rio Grande 115kV #2 Line		1964.0	1247.7	63.5	2105	107.2	43.7	2b-1M
Durazno-Ascarate 115kV Line		800.3	364.4	45.5	820	102.5	57.0	16b-2M
Sunset North-Durazno 115kV line		800.3	411.4	51.4	866	108.3	56.9	16b-2M
Airport Tap-Picacho 115kV line	Luna-Afton #1 and #2 345kV Lines	668	N/A	N/A	787	117.9	N/A	1-1
Arroyo Phase Shifter		400	N/A	N/A	402	100.5	N/A	67-1
Cabillo-Mimbres 115kV Line		236	N/A	N/A	281	119.3	N/A	16a-1
Dona Ana – Las Cruces 115kV Line		457	N/A	N/A	721	157.8	N/A	2a-1
Dona Ana-Picacho 115kV Line		457	N/A	N/A	963	210.7	N/A	42-1
Elephant Butte-Space Tap 115kV Line		241	N/A	N/A	326	135.2	N/A	1-1
Luna-Mimbres 115kV Line		1024	N/A	N/A	1229	120	N/A	41-1
Luna 345/115kV Transformer		224	N/A	N/A	279.5	124.8	N/A	1-1
Mimbres-Airport Tap 115kV Line		668	N/A	N/A	788.8	118.1	N/A	1-1
Picacho-Space Tap 115 Line		241	N/A	N/A	320	132.7	N/A	1-1

The thermal overloads caused by outage of Luna-Afton #1 and #2 345kV lines are the worst of the three EPE 345 kV Category C outages, occur when Path 47 MW flows are high, and are not really dependent on the magnitude or direction of Southline Path flows.

The thermal overloads caused by outage of Newman-Arroyo & Newman-Afton 345kV Lines are more closely coupled to the following system conditions:

- High EPE imports, High Southline West-to-East Flows, Low Path 47 MW Flows, and no supporting Southern New Mexico Upgrades; or
- High EPE imports enhanced by the supporting Southern New Mexico Upgrades. The high EPE imports are driven in part by large power transfers from El Paso to Southwest Power Pool.

The thermal overloads resulting from the outage of the Newman-Picante and Newman-Afton 345 kV lines are associated with the same system conditions as the thermal overloads caused by the outage of the Newman-Arroyo & Newman-Afton 345kV Lines. However, the thermal

overloads caused by the outage of the Newman-Arroyo & Newman-Afton 345kV Lines are more severe.

Proposed Mitigation/Follow-up Actions for EPE Area:

To address the equipment overloads identified in **Table 6.3**, Southline recommends implementing the following combination of mitigation measures: 1) transmission equipment re-rates, 2) planned transmission reinforcements, and 3) development of a Local Area Protection Scheme (LAPS). Each of these mitigation measures is described below.

Overload Mitigation: Diablo-Rio Grande 115 kV Line Short-Term Ratings

At Southline's request, EPE has granted a short-term (30 minute) emergency rating of 2022 Amps for the Diablo-Rio Grande 115 kV #1 and #2 Lines. This line re-rate represents a 3% increase in these lines' existing emergency rating (formerly 1964 Amps). The short-term rating partially addresses these lines' contingency loading for an N-2 outage of the Newman-Arroyo/Afton 345 kV lines. The remaining/full mitigation of these lines' overloads is achieved though the Southern New Mexico LAPS.

Overload Mitigation: Sunset North-Durazno-Ascarate 115 kV Line Reconductoring

As noted for Case Series 02, 16 and 56, an N-2 outage of the Newman-Arroyo/Afton 345 kV lines can potentially load the Sunset North-Durazno-Ascarate 115 kV circuit to 100-108% of its emergency rating (800 Amps). EPE has existing plans to reconductor this 11.3 mile circuit before May 2016, increasing its emergency capacity from 800 Amps to 1099 Amps (a 37% increase).[38] This reinforcement fully mitigates the identified N-2 overload concern.

Overload Mitigation: The Southern New Mexico 345 kV LAPS

Implementation of a new Local Area Protection Scheme (LAPS) is required primarily to support high MW flows on Path 47 (SNMI) and also support high Southern New Mexico Imports. The Southern New Mexico LAPS would mitigate the thermal loading impacts from three different 345 kV Category C contingencies identified in the El Paso area. As previously mentioned, these outages are:

1. Newman-Arroyo and Newman-Afton 345 kV Lines (breaker failure)
2. Newman-Picante and Newman-Afton 345 kV Lines (breaker failure)
3. N-2 Luna-Afton #1 and #2 345 kV Lines[39]

The Southern New Mexico LAPS would monitor the equipment status at the Luna, Newman, Arroyo, Afton and Picante substations to detect these initiating 345 kV Category C outages.

[38] Current plans are to upgrade the Sunset North-Durazno-Ascarate's line conductor from 556 ACSR to 954 ACSR.

[39] As previously discussed, it is yet unconfirmed whether an outage of both Luna-Afton #1 and #2 345 kV Lines should be treated as a Category C (coincident, "N-2") outage or more properly classified as a Category D contingency.

Depending upon El Paso Import flows and system conditions, activation of the LAPS would drop load at a selected subset of EPE substations and potentially invoke as needed, additional actions such as opening the Amrad-Artesia 345 kV line, and/or cross-tripping the Las Cruces – Salopek and Las Cruces – Arroyo 115kV lines. For the Category C Outages #1 and #2 listed above, the responsive actions of the Southern New Mexico LAPS are fairly similar. For Outage #3, the LAPS will invoke additional actions.

Details of the Southern New Mexico LAPS's operation are further described below.

Southern New Mexico LAPS Operation for Outages #1 and #2

This section describes the Southern New Mexico LAPS's operation for mitigating the emergency overloads associated with Outages #1 and #2 listed above. The LAPS would be armed for conditions of high EPE imports. The LAPS would monitor various substation facilities to detect for the initiating outages and measure the individual post-contingency flows across Diablo 345/115 kV autotransformer s #1, #2 and #3. For any Diablo autotransformer emergency overload, the LAPS would invoke the following actions:

1. **Interrupt exports to Southwest Power Pool.** For conditions where El Paso is exporting power to Southwest Power Pool, the LAPS would open the Eddy DC tie, the Amrad-Artesia 345 kV line and associated Amrad-Artesia 345 kV line reactors. This control action reduces through-flows on the EPE system, helps alleviate thermal overloads and improves area voltages.
2. **Local Area Load-Shedding[40].** To further reduce the Diablo autotransformers' contingency loading within their emergency ratings, the LAPS would invoke load shedding at selected EPE substations (a subset of locations also/already employed by EPE's existing UVLS scheme).

For the two identified outages, Southline analyzed the system's contingency performance with and without the Southern New Mexico LAPS. This contingency performance was tested under various levels of Southline flows, Path 47 MW flow (SNMI), and transmission system upgrades. Attachment G provides contingency results including the simulation of the Southern New Mexico LAPS. For all studied conditions, the Southern New Mexico LAPS mitigated the emergency overload concerns.

Voltage stability tests were performed for outages #1 and #2 with the LAPS control actions described above, and the transmission system demonstrated adequate reactive margin (converged solution).

In addition, transient stability runs were performed for outages #1 and #2 with LAPS. The voltage and frequency performance of the system was well damped and met the requirements

[40] The LAPS proposed trips the same quantity of load at a station as the existing UVLS. If sensitive loads have been selected for the LAPS, other EPE loads could be substituted and would effectively provide the same Diablo autotransformer loading mitigation.

of the NERC Reliability Standards and the WECC System Performance TPL-001-WECC-RBP-2.1 Regional Business Practice. No generating units exhibited angular instability.

Southern New Mexico LAPS Operation for Outage #3 (N-2 Luna-Afton 345 kV Lines #1 & #2)

This section describes the Southern New Mexico LAPS's operation for mitigating the thermal overloads associated with contingency #3, an N-2 (coincident, common corridor) outage of the Luna-Afton #1 and #2 345 kV Lines. The LAPS would be armed for high flows across Path 47 and monitor substation facilities at Afton and Luna to detect the N-2 outage of the Luna-Afton 345 kV lines. When triggered, the LAPS would initiate several automatic control actions:

1. **Cross-trip/open the Las Cruces – Salopek 115kV Line and the Las Cruces – Arroyo 115kV Line when the Dona Ana-Picacho 115kV Line is overloaded**. In addition to partially or completely relieving the emergency overload on the Dona Ana-Picacho 115kV Line, this automatic action mitigates emergency loading on the following transmission elements: Luna 345/115kV Transformer as well as the Luna-Mimbres, Mimbres-Caballo Tap, Mimbres-Airport Tap, Airport Tap-Picacho, Elephant Butte-Space Tap, Space Tap-Picacho, and Dona Ana-Las Cruces 115kV Lines.

2. **Interrupt non-firm exports to Southwest Power Pool.** For conditions where El Paso is exporting power to Southwest Power Pool, the LAPS would open the Eddy DC tie, the Amrad-Artesia 345 kV line and associated Amrad-Artesia 345 kV line reactors. This control action reduces through-flows on the EPE system, helps alleviate thermal overloads and improves area voltages.

3. **Local Area Load-Shedding.** Subsequent to tripping the Las Cruces – Salopek and Las Cruces – Arroyo 115kV Lines and interrupting exports to Southwest Power Pool, the Dona Ana-Picacho 115kV Line may continue to be overloaded. To reduce the Dona Ana-Picacho 115kV Line loading further, the LAPS would invoke load shedding at selected EPE substations (a subset of locations already employed by EPE's existing UVLS scheme).

4. **Insert the Luna-Hidalgo 345 kV Line Reactor (at Luna) when high voltages are experienced**. This LAPS action is triggered when the Luna-Afton #1 and #2 345kV Lines are lost and when high post-contingency high voltages are measured at the Luna 345kV bus. This LAPS action mitigates high post-contingency voltages at Luna and the surrounding transmission system.

5. **Switch Shunt Capacitors at Las Cruces**. This LAPS action is triggered by high or low voltages at the Las Cruces station following the tripping of the Las Cruces – Salopek and Las Cruces – Arroyo 115kV Lines and the shedding of local area load. The Las Cruces Shunt Capacitors are switched in-service and/or out-of-services to achieve acceptable post-contingency voltages at Las Cruces while limiting the reactive power flow exported from Las Cruces to Dona Ana via the Las Cruces-Dona Ana 115kV line.

Attachment G provides the power flow contingency results including the simulation of the Southern New Mexico LAPS. For all studied conditions, the Southern New Mexico LAPS mitigated the emergency overload and voltage concerns.

Voltage stability tests were performed for outages #3 with the LAPS control actions described above, and the transmission system demonstrated adequate reactive margin (converged solution).

In addition, transient stability runs were performed for outages #3 with LAPS. The voltage and frequency performance of the system was well damped and met the requirements of the NERC Reliability Standards and the WECC System Performance TPL-001-WECC-RBP-2.1 Regional Business Practice. No generating units exhibited angular instability.

Southern New Mexico LAPS Conclusions

The proposed LAPS mitigates the criteria violations caused by the following outages: Newman-Arroyo and Newman-Afton 345 kV Lines (breaker failure); Newman-Picante and Newman-Afton 345 kV Lines (breaker failure); and N-2 Luna-Afton #1 and #2 345 kV Lines.

The Category C outage of the Luna-Afton #1 and #2 345kV lines with the Southline project in-service is very similar to the Category C3 or C5 outage of Luna-Afton and Luna-Diablo 345kV lines without the Southline project.

Without the Southline project and with Path 47 flows at 1048MW, the outage of Luna-Afton and Luna-Diablo 345kV lines without any mitigation measures will likely cause a reactive margin deficiency and a voltage collapse. Currently, EPE employs the use of their existing undervoltage load shedding scheme (UVLS) to mitigate the problems caused by this outage.

The LAPS is similar to the UVLS since it will also drop load in El Paso. In addition to strategically tripping select lines and controlling designated shunts, the LAPS will drop just enough load to mitigate the thermal overloads. Conversely, the UVLS may trip enough load to alleviate the voltage collapse, but it may trip more (or less) of the required load to alleviate the resulting thermal overloads.

It is also noteworthy to point out that the addition of the Southline project without reliance on a LAPS is inherently more reliable than the transmission system without the Southline project. First, the Southline project provides a selectable alternative to Path 47 with high imports into Southern New Mexico. In lieu of operating Path 47 flow at 1048MW, it will be possible to shift flows from Path 47 to the Southline project via the Afton Phase Shifters while still reliably meeting the demand of Southern New Mexico.

In fact, if enough of the flows are shifted to Southline when EPE is importing power, the reliability concerns relating to an outage of Luna-Afton #1 and #2 345kV lines may cease to exist entirely. Second, the outage of Luna-Afton #1 and #2 345kV lines, with the Southline project in-service and with Path 47 flows at 1048MW, will not cause a voltage collapse. Consequently, EPE would not have to rely on their UVLS for this outage regardless of the Path 47 MW flow or Southline flows.

El Paso Electric New Mexico Import 345kV Line De-rates

On May 15 2013, El Paso Electric (EPE) issued a Material Changes Review (MCR) memorandum to its previously published System Expansion Plan 2013-2022 documenting the de-rate of seven 345kV New Mexico Import lines. The equipment de-rate was triggered by line to ground clearance concerns. El Paso is currently working to correct this situation and has outlined a plan to restore the line's ratings in their MCR memo.

Post-Transient Analysis of Existing Southline Nomogram Points modeling El Paso Electric De-Rates

Given the short-term decrease in EPE transmission line ratings and potential Southline exposure to resulting thermal criteria violation ramifications, Southline thought it would be prudent to perform a post-transient (governor power-flow) analysis comprehensively modeling the EPE line de-rates in all Southline cases defining nomogram points. These updated cases and post-transient results can be downloaded from the Southline Share File site https://southline.sharefile.com under the General Data section in the EPE Line De-rates Post-Transient Review folder. Please note that these cases have the same save case title, but with the addition of an "e"at the end of the file name. The following ratings extracted from Table 11 of the EPE 2013 Material Change Memo were modeled and are shown in **Table 6.4** below.

TABLE 6.4– EL PASO ELECTRIC 2013 TRANSMISSION 345kV LINE RATING CHANGES

345kV TRANSMISSION LINE	RATING(MW)
Newman to Afton	801
Afton to Luna	586
Newman to Arroyo	551
Arroyo to West Mesa	585
Hidalgo to Luna	577
Greenlee to Hidalgo	717

Results

Post-transient runs were completed w/ the EPE de-rates and documented in **Table 6.5**.

TABLE 6.5– POST-TRANSIENT THERMAL RESULTS OF SOUTHLINE NOMOGRAM POINT DEFINING CASES MODELING EL PASO ELECTRIC 2013 RATING 345kV LINE DE-RATES

NOMOGRAM NUMBER	NOMOGRAM POINT	TUCSON-ORACLE RE-CONDUCTOR MODELED	SOUTHERN NEW MEXICO UPGRADES MODELED	EL PASO ELECTRIC LUNA-SPRINGERVILLE B-VALUE UPDATED	SOUTHLINE BASECASE MODELING EPE RATING DE-RATES	CONTINGENCY	MONITORED BRANCH SECTION	MONITORED BRANCH SECTION E RATE (MW)	MONITORED BRANCH SECTION POST-CON MW FLOWS	MONITORED BRANCH SECTION POST-CON FLOW PERCENTAGE OF EMERGENCY RATING
2a	2				02_we_0430_0971_0275_03e.sav	Afton-Diablo #1 345kV Line	Newman-Afton 345kV Line	801	986	120.8
2b	1M				02_we_0435_0436_1048_01e.sav	Afton-Diablo #1 345kV Line	Newman-Afton 345kV Line	801	948	118.3
2b	2M				02_we_0445_0971_0489_01e.sav	Afton-Diablo #1 345kV Line	Newman-Afton 345kV Line	801	958	119.6
16a	2	✓			16_we_0715_0971_0275_02e.sav	Afton-Diablo #1 345kV Line	Newman-Afton 345kV Line	801	981	122.2
16b	1M	✓	✓		16_we_0734_0436_1048_04e.sav	Afton-Diablo #1 345kV Line	Newman-Afton 345kV Line	801	946	117.2
16b	2M	✓	✓		16_we_0712_0971_0480_01e.sav	Afton-Diablo #1 345kV Line	Newman-Afton 345kV Line	801	956	119.3
42	2			✓	42_we_0435_0971_0275_01e.sav	Afton-Diablo #1 345kV Line	Newman-Afton 345kV Line	801	986	123
56	1	✓	✓	✓	56_we_0754_0433_1048_01e.sav	Afton-Diablo #1 345kV Line	Newman-Afton 345kV Line	801	949	118.5
56	2	✓	✓	✓	56_we_0758_0968_0481_03e.sav	Afton-Diablo #1 345kV Line	Newman-Afton 345kV Line	801	957	119.4

Please note that all case contingency scenarios solved. The results in **Table 6.5** have been filtered to show flows in excess of applicable ratings. The results recorded in **Table 6.5**, show that all nomogram (Nomogram 01 and 41) points modeling Southline project flows in the East-to-West direction, were not impacted by the EPE line de-rates. However, some nomogram points modeling Southline project flows in the West-to-East direction showed criteria violations on one de-rated EPE 345kV transmission line. The review of post-transient results show an Afton-Diablo 345kV line outage can result in Newman-Afton 345kV line flows in excess of the applicable emergency rating of 801MW. This condition was noted for Southline Nomograms 02, 16, 42, and 56 and is listed in **Table 6.5**.

Conclusion

EPE's Newman-Afton 345kV line de-rate is due to sag limitations and may be in effect when the Southline project is released for operations at the conclusion of Phase 3. However, EPE is currently working to increase the sag limited line rating of this line to its 100 °C thermal rating and has put a priority on completing this work before the Southline project is in operation. If

the EPE work to increase the rating of the Newman-Afton 345kV line is not completed by the time the Southline project becomes operational, operating nomograms in the west-to-east direction (specifically Southline Nomograms 02, 16, 42, and 56) will be updated if required when performing the seasonal SOL studies for Southline.

Saguaro to Casa Grande APS 230kV line

APS informed Southline on January 6, 2014 that some WECC cases might have an additional 230kV line mistakenly modeled between Saguaro and Casa Grande. Southline checked all post-transient Southline cases modeling defining nomogram points. The additional Saguaro to Casa Grande APS 230kV line was modeled in service in Case Series 02, 16, 42, and 56 modeling project flows in the west-to-east direction; however, this case discrepancy was not found in Southline cases modeling project flows in the east-to-west direction. Southline further analyzed the Saguaro to Casa Grande APS 230kV line discrepancy by briefly reviewing all west-to-east Case Series performance both w/ and w/out the Saguaro to Casa Grande APS 230kV line modeled in-service. This analysis found little effect on Southline performance, w/ the net effect of modeling the Casa Grande APS 230kV line in service being a slightly lower impedance between the Saguaro and the Desert Basin combined cycle plant. This error slightly increases the MWs (1 to 3) injected into Southline at Saguaro. This increase is shown in **Table 6.6** where the slight change in Tortolita/Saguaro flows was cataloged when comparing with the cases with the230kV line in-service and out-of-service. See **Table 6.7** below.

TABLE 6.6– SOUTHLINE WEST-TO-EAST CASE SERIES COMPARISON LISTING TORTOLITA/SAGUARO WEST-TO-EAST MW FLOWS W/ SAGUARO TO CASA GRANDE APS 230KV LINE MODELED IN AND OUT OF SERVICE

BASE CASE	NOMOGRAM	NOMOGRAM POINT	SAGUARO TO CASA GRANDE APS 230KV LINE STATUS		DELTA IN MW
			IN	OUT	
			TORTOLITA/SAGUARO WEST-TO-EAST CUT-PLANE MW FLOW	TORTOLITA/SAGUARO WEST-TO-EAST CUT-PLANE MW FLOW	
02_we_0421_0165_1048_06.sav	2a	1	420.86	419.07	-1.79
02_we_0430_0971_0275_03.sav	2a	2	429.63	427.24	-2.39
02_we_0435_0436_1048_01.sav	2b	1M	434.78	431.96	-2.82
02_we_0445_0971_0489_01.sav	2b	2M	445.24	443.59	-1.65
16_we_0712_0971_0480_01.sav	16b	2M	712.00	709.26	-2.74
16_we_0715_0165_1048_02.sav	16a	1	714.63	711.92	-2.71

TABLE 6.6– SOUTHLINE WEST-TO-EAST CASE SERIES COMPARISON LISTING TORTOLITA/SAGUARO WEST-TO-EAST MW FLOWS W/ SAGUARO TO CASA GRANDE APS 230KV LINE MODELED IN AND OUT OF SERVICE					
BASE CASE	NOMOGRAM	NOMOGRAM POINT	SAGUARO TO CASA GRANDE APS 230KV LINE STATUS		DELTA
16_we_0715_0971_0275_02.sav	16a	2	714.82	712.55	-2.27
16_we_0734_0436_1048_04.sav	16b	1M	734.23	731.53	-2.7
42_we_0431_0179_1048_01.sav	42	1	431.55	428.97	-2.58
42_we_0435_0971_0275_01.sav	42	2	434.75	432.11	-2.64
56_we_0754_0433_1048_01.sav	56	1	754.31	751.37	-2.94
56_we_0758_0968_0481_03.sav	56	2	757.87	754.53	-3.34

Additionally, these same basecases were tested with the most limiting contingency defining each nomogram point for the Tortolita/Saguaro west-to-east cut-plane. The results, found in **Table 6.7** below, note only a slight change in limiting transmission element loading.

TABLE 6.7 – SOUTHLINE WEST-TO-EAST CASE SERIES COMPARISON LISTING POST TORTOLITA-TUCSON & MARANA-SOUTHLINE SAGUARO 230KV LINES CONTINGENCY RESULTS W/ SAGUARO TO CASA GRANDE APS 230KV LINE MODELED IN AND OUT OF SERVICE							
BASE CASE	NOMOGRAM	NOMOGRAM POINT	LOADED COMPONENT	RATING IN AMPS	SAGUARO TO CASA GRANDE APS 230KV LINE STATUS		DELTA
					IN % OF RATING	OUT % OF RATING	
02_we_0421_0165_1048_06.sav	2a	1	Tucson-Oracle 115kV Line	382	99.9	99.49	-0.41
02_we_0430_0971_0275_03.sav	2a	2	Tucson-Oracle 115kV Line	382	99.65	99.02	-0.63
02_we_0435_0436_1048_01.sav	2b	1M	Tucson-Oracle 115kV Line	382	99.54	98.68	-0.86
02_we_0445_0971_0489_01.sav	2b	2M	Tucson-Oracle 115kV Line	382	99.65	99.3	-0.35
16_we_0712_0971_0480_01.sav	16b	2M	Saguaro East-Oracle 115kV Line	602	99.77	99.24	-0.53
16_we_0715_0165_1048_02.sav	16a	1	Saguaro East-Oracle 115kV Line	602	99.58	99.05	-0.53
16_we_0715_0971_0275_02.sav	16a	2	Saguaro East-Oracle 115kV Line	602	99.89	99.55	-0.34
16_we_0734_0436_1048_04.sav	16b	1M	Saguaro East-Oracle 115kV Line	602	100.02	99.49	-0.53
42_we_0431_0179_1048_01.sav	42	1	Tucson-Oracle 115kV Line	382	99.91	99.18	-0.73
42_we_0435_0971_0275_01.sav	42	2	Tucson-Oracle 115kV Line	382	100.05	99.33	-0.72

TABLE 6.7 – SOUTHLINE WEST-TO-EAST CASE SERIES COMPARISON LISTING POST TORTOLITA-TUCSON & MARANA-SOUTHLINE SAGUARO 230KV LINES CONTINGENCY RESULTS W/ SAGUARO TO CASA GRANDE APS 230KV LINE MODELED IN AND OUT OF SERVICE

BASE CASE	MOG	RA	LOADED COMPONENT	RATING IN AMPS	SAGUARO TO CASA GRANDE APS 230KV LINE STATUS		DELTA
56_we_0754_0433_1048_01.sav	56	1	Tucson-Oracle 115kV Line	382	99.25	98.63	-0.62
56_we_0758_0968_0481_03.sav	56	2	Saguaro East-Oracle 115kV Line	602	99.55	98.76	-0.79

It should be noted that this minor loading discrepancy could be tuned away through minor generation pattern changes. As such, the PRG deemed the results for Case Series 02, 16, 42, and 56 as acceptable, with no need to correct and re-run these cases. However, any future case modeling would need to model Saguaro-Casa Grande APS 230kV line as out-of-service or open.

6.2 Southline vs. Path 47 MW Flow - Voltage Stability Results

For the Southline project, the transfers on the planned paths were scaled to 105% of their planned rating in both the Heavy Summer (east-to-west transfers) and Heavy Winter (west-to-east transfers) cases. Margin tests were performed on these cases for both the Category B and C outages. The margin tests performed were more conservative than required for Category C outages. A very small percentage of cases did not solve at 105% of planned path flows under Category C type outages. These cases were then updated w/ planned path flows re-scaled to 102.5% (since the criteria actually only calls for 2.5% reactive margin for Category C outage). The corresponding Category C outage was retested; and the simulations for these updated cases did converge. As a result, the 2.5% and 5% voltage stability test performed indicate there is adequate reactive margin for the Southline project's planned path ratings for the outages studied. The 2.5% and 5% voltage stability test results show that the Project meets the margin requirements set forth in the WECC System Performance TPL-001-WECC-RBP-2.1 Regional Business Practice. Please see Attachment H for detailed results of all Southline Project Voltage Stability Studies (2-1/2% & 5% Test) and see Attachment F for a detailed list of contingencies simulated.

6.3 Southline vs. Path 47 MW flow - Transient Stability Analysis Results

Transient Stability analysis was performed on all nomogram corner points for Case Series 01, 02, 16 , 41, 42 and 56. A detailed list of these contingencies is described in Attachment F of this report. The results of these transient stability studies indicate that Path 47 MW flow and Southline can be stressed to the nomogram corner points that were previously defined in post-transient studies, without limiting interactions (no transient stability criteria violations). The detailed methodology supporting this analysis can be found in Section 5.4.

Case Series 67, models the Midpoint Spur, a 30 mile, 345kV double circuit line with roughly 1000MW of Photovoltaic generation located at the Midpoint South 345kV bus in a heavy summer case with east-to-west flows on Southline. Transient stability simulations noted what appeared to be unacceptable commutation failures of the inverters of the Midpoint South

photovoltaic generation. The modeling of a RAS that tripped some generation showed significant improvement in overall performance. Approximately 400MW of generation tripping via the RAS was required to mitigate the violations caused by a Category C Afton- Midpoint #1 and #2 345kV Line outage. The study results (with RAS modeled) for Case Series 67 indicates no simultaneous interaction between the Southline Path and Path 47 MW flow.

Stability Plots

All Transient Stability plots can be found in Attachment K of this report. Review of all plots indicate the following:

- The flat runs exhibited stable/steady conditions for the transient stability models prior to the application of a disturbance.
- The bump tests (tripping two Palo Verde Units) demonstrated that each transient stability model responded to a known disturbance as expected.
- Each transient stability simulation modeling a disturbance exhibited acceptable/well damped voltage and frequency responses. In addition, all generating units maintained synchronism with each other.

Worst Case Analysis

A worst case analysis was conducted on all outages. The results of this analysis showed that there was no outage that had any NERC or WECC violations. A detailed synopsis of the worst case analysis results can be found in Attachment L.

Modeling Post-Contingency Switching Actions in Transient Analysis

While conducting the post-transient analysis, post-contingency actions, such as element switching or load shedding, were required in some cases to mitigate some criteria violations. Transient simulations of these outages were rerun simulating the additional post-contingency actions. The results of these reruns demonstrated that these contingencies continued to meet all applicable reliability criteria.

Apache SVC Downward Reactive Capability

As was stated in Southline's WECC Phase 1 Comprehensive Progress Report, and was documented in this study, transient simulations of all the Category B disturbances simulated produced satisfactory results meeting the study criteria described above. However, transient simulations of several Category C disturbances simulated produced unacceptable high voltages in and around the Apache 345 kV bus. The Category C disturbances that produced high voltages included:

1. N-2 AFTON-MIDPOINT 345 kV #1 AND #2 LINES
2. N-2 APACHE-PANTANO and ADAMS TAP-NOGALES 230 kV LINES
3. N-2 HIDALGO-APACHE 345 kV #1 AND #2 LINES
4. N-2 MIDPOINT-HIDALGO 345 kV #1 AND #2 LINES

5. N-2 APACHE-PANTANO and APACHE-ADAMS TAP 230 kV LINES

Additionally, post transient analysis showed similar results. In the post-transient Section 7.2.2 of this report, it was noted that Case Series 1 and 41 post-project cases modeling Category C outage of the Apache-Pantano & Adamstap-Nogales 230kV Lines result in high post-contingency voltages at Adams 115kV, Adams Tap 115kV, Adams Tap 230kV, Apache 230kV (Southline) and APS Boothill 115kV bus. Additionally, post-project cases modeling a Category C outage of the Apache-Pantano & Apache-Adamstap 230kV lines, had high post-contingency voltages at the Apache 230kV (Southline) bus.

Further analysis will be conducted to determine the optimal Apache SVC downward reactive capability need to mitigate the high post-contingency voltages.

Apache SVC Transient Stability Modeling in GE PSLF

Southline used the GE SVC model which includes both a switchable reactor and a Static VAr Compensator (SVC) together when modeling the Southline Apache SVC. The reactor is used to bias the SVC and is used to get the desired dynamic capability out of the SVC. It is important to note that as part of the Three Phase Rating Process, it is only necessary to define the attributes of the SVC that is desired. Once the project moves into design and construction, the SVC manufacturer will need to meet the requirements that the Southline project studies indicate are necessary. Southline has discussed the SVC capabilities w/ an SVC manufacturer and has determined that the attributes of the SVC modeled in the these studies can actually be constructed. It is also necessary to point out that the SVC is used to control voltage. To that end, the SVC +/- MVAr capability may need to be increased pending the outcome of additional Phase 3 analysis. Any increases to the reactive capability of the SVC will only help improve voltage control for the Southline Project and the surrounding area.

Southline Equipment Block Diagram Models & Corresponding dyd files

Transient stability model block diagrams for Southline's assumed solar project can be found in Attachment M, while detailed transient stability model Block diagrams for the Southline Apache Static Var Compensator are located in Attachment L. All dynamic data (dyd) can be found in Attachments O and P.

6.4 Southline vs. Path 47 MW Flow - Case Series Nomograms

The following section outlines nomogram relationships for each Case Series studied.

6.4.1. Case Series 01 Nomogram (East-to-West Flows)

Case Series 01 Study Results show that for the Case Series 1 Scenario there is no simultaneous interaction between the Southline Path and Path 47 MW flow. Nomogram 1 flow limits found are attributed to local grid limitations. Southline can simultaneously achieve power-flowing east-to-west at 1037MW across the Southline Afton to Apache rating cut-plane w/ 1000MW across the Southline Apache to Tortolita/Saguaro cut-plane w/ Path 47 flows at 1048MW. The system performance at the simultaneous limit meets all applicable WECC and NERC criteria. Southline's Apache West flow is limited by post-transient performance for the Category C

Pantano-Vail and Adams tap-Nogales 230kV line outage. This outage results in power-flow at 99.6% of the 241MVA Bicknell 345/230kV bank emergency rating. Since the loading of Bicknell transformer is sensitive to Apache generation schedules, this issue will be further analyzed in Phase III study work and will be resolved to satisfy SWTC requirements, including an upgrade of Bicknell 345/230 kV transformer, if necessary. This Apache flow limit also limits the up-stream Afton West flow due to the serial transmission nature of the Afton and Apache cut-plane ratings.

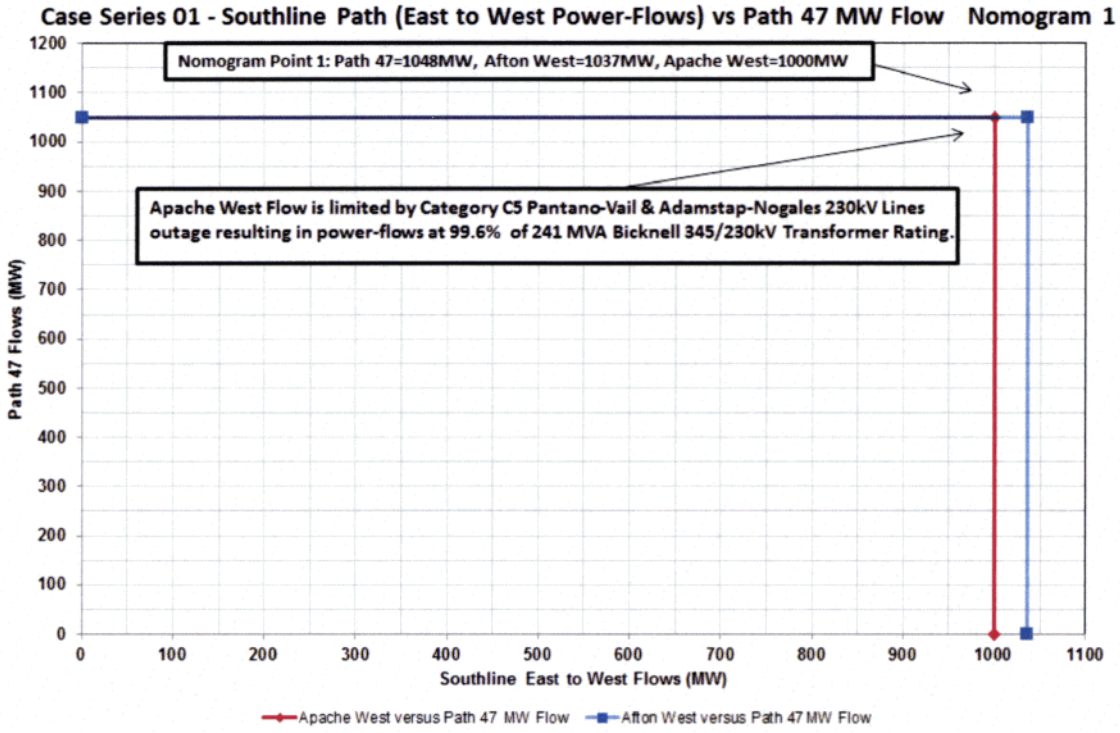

Case Series 2

Case Series 2 Study Results show that there is a simultaneous interaction between the Southline Path and Path 47 MW flow. Results w/out mitigation, w/o Southern New Mexico upgrades, and with power-transfers from El Paso to Southwest Power Pool, show that Southline can simultaneously achieve power-flowing west-to-east of 421MW across the Southline Tortolita/Saguaro to Apache cut-plane and 165MW across the Southline Apache to Afton rating cut-plane w/ Path 47 flow at 1048MW (Nomogram 2a Point 1). Similarly the other Case Series 2 nomogram corner point, Nomogram 2a Point 2, shows that Southline can achieve 430MW across the Southline Tortolita/Saguaro to Apache cut-plane w/ 971MW across the Southline Apache to Afton rating cut-plane w/ Path 47 flow at 275MW. The simultaneous limits achieved meet all WECC and NERC criteria. Review of the Nomogram 2a corner points show that the Tucson-Oracle 115kV line loading due to the loss of the Tortolita-Tucson & Marana-Southline Saguaro 230kV lines outage is the limiting factor for the Southline West-to-East rating interface C (Saguaro-Marana, Tortolita-Tucson/DMP 230kV Lines). Roughly 400MW can be achieved due to the 381amp Tucson-Oracle 115kV line emergency rating[41]. Further review of results, w/ respect to Southline rating interface D (Apache-Hidalgo 345kV lines), shows the El Paso Electric 345/115kV autotransformers to be limiting[42].

[41] Case Series 16 explores the benefits of Westerns proposed Tucson-Oracle 115kV line reconductor project.

[42] Post-contingency Turquois-Hidalgo 115kV flows are high, but not limiting

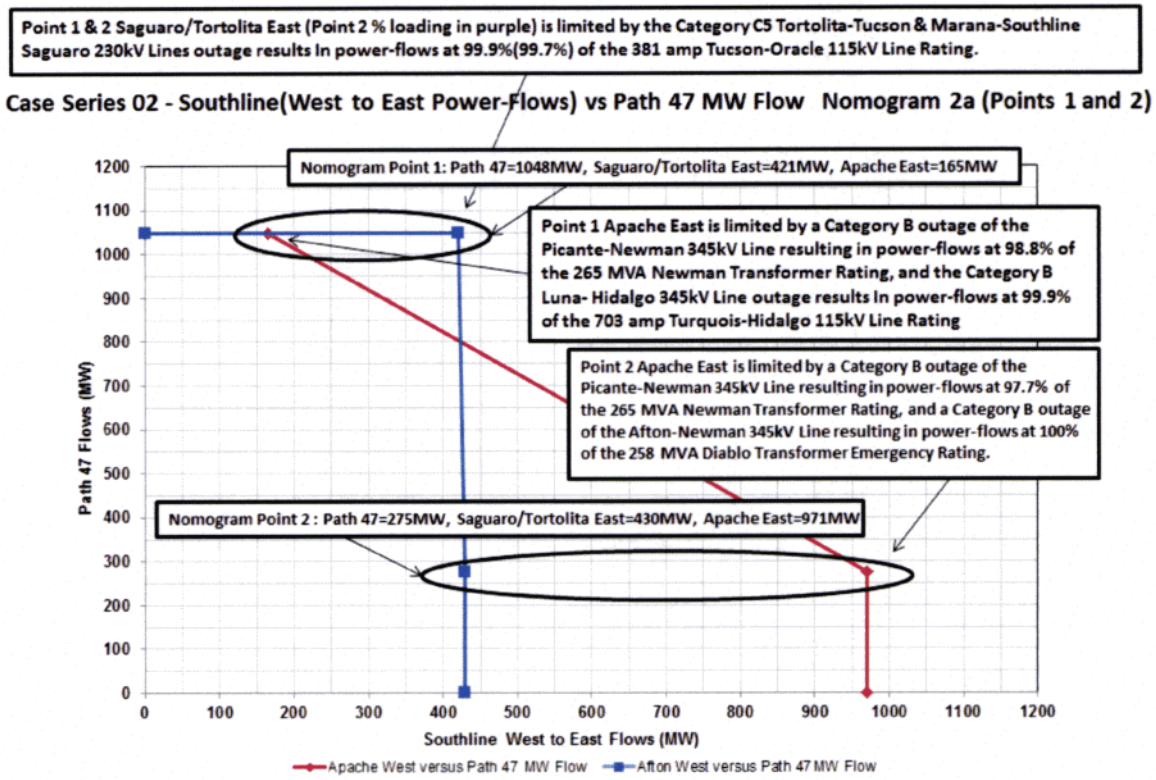

Nomogram 2b encompasses Case Series 02 results modeling mitigation in the form of Southern New Mexico Transmission upgrades and power-transfers from El Paso to Southwest Power Pool. The Southern New Mexico Transmission upgrades include the addition of: Dona Anna – Picacho 115kV 13-Ohm series reactor[43] and additional 345/115kV Newman autotransformer. The mitigation clearly boosts imports into El Paso via Southline West-to-East rating interface D (Apache-Hidalgo 345kV lines) capability. Further review of Case Series 2 results modeling the Southern New Mexico mitigation, Nomogram 2b Point 1M, shows that Southline can simultaneously achieve power-flowing west-to-east at 435MW and 436MW across the Southline Tortolita/Saguaro and Apache cut-planes, respectively w/ Path 47 flow at 1048MW. Similarly the other Case Series 2 nomogram corner point, Nomogram 2b Point 2M, shows that Southline can achieve 445MW across the Southline Tortolita/Saguaro to Apache cut-plane and 971MW across the Southline Apache to Afton rating cut-plane w/ Path 47 (SNMI) flows at 489MW. The simultaneous limit achieved meets all WECC and NERC criteria. Further review of results noted in Nomogram 2b shows the Southline West-to-East rating interface D (Apache-Hidalgo 345kV lines) capability is limited by the post-contingency Diablo 345/115 kV autotransformer flows following the Category B outage of the Afton-Newman 345kV line.

[43] It should be noted that the reactor addition, or equivalently performing transmission upgrades, are proposed as mitigation to support Southline's increased west-to-east transfers. These additions do not have and will require Tri-State approval through formal interconnection analysis by Tri-State.

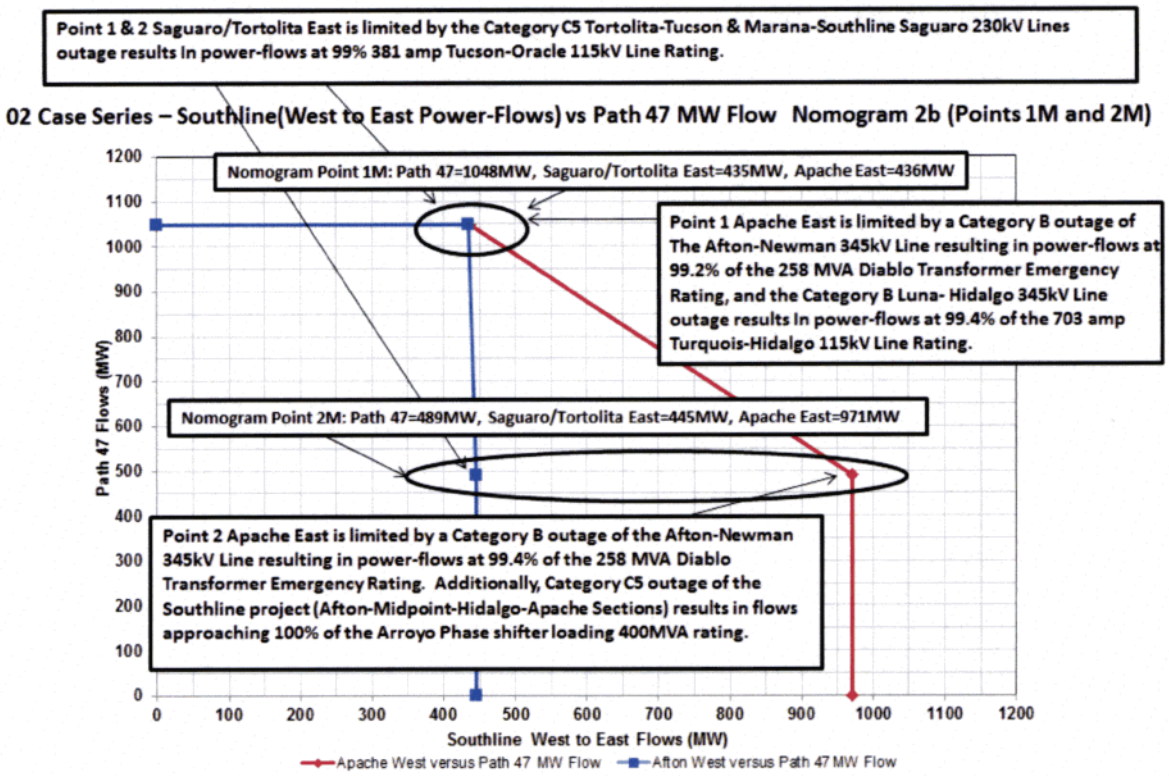

Case Series 16

Case Series 16 performance is very similar to Case Series 2, w/ the exception that Case Series 16 modeling explores the benefits of Western's proposed Tucson-Oracle 115kV line reconductor project. Both Case Series exhibit similar results w/ respect to Southline's West-to-East rating interface D (Apache-Hidalgo 345kV lines) capability; however, Southline West-to-East rating interface C (Saguaro-Marana, Tortolita-Tucson/DMP 230kV Lines) exhibits a significant increase due to Western's proposed Tucson-Oracle 115kV line reconductor project. Close inspection of both Case Series' study results show the project addition shifts post-contingency loading limitations from Tucson-Oracle 115kV line to Oracle-Saguaro East 115kV line resulting in 300MW increase in Southline interface C capability, depending on which nomograms are compared. Review of results verifies Southline can simultaneously achieve power-flowing west-to-east at, Nomogram 16a Point 1, at 715MW across the Southline Tortolita/Saguaro to Apache cut-plane and 165MW across the Southline Apache to Afton rating cut-plane w/ Path 47 flow at 1048MW. Similarly the other Case Series 16 nomogram corner point, Nomogram 16a Point 2, shows that Southline can achieve 715MW across the Southline Tortolita/Saguaro to Apache cut-plane w/ 971MW across the Southline Apache to Afton rating cut-plane w/ Path 47 flow at 275MW. The simultaneous limit achieved meets all WECC and NERC criteria.

Point 1 & 2 Saguaro/Tortolita East (Point 2 % loading in purple) is limited by the Category C5 Tortolita-Tucson & Marana-Southline Saguaro 230kV Lines outage results In power-flows at 99.6%(99.9%) 602 amp Oracle-Saguaro East 115kV Line rating, the Category C5 Tortolita-Tucson & Rattlesnake-Marana 230kV Lines outage results In power-flows at 97.2%(97.6%) 602 amp Oracle-Saguaro East 115kV Line rating.

Case Series 16 - Southline(West to East Power-Flows) vs Path 47 MW Flow Nomogram 16a

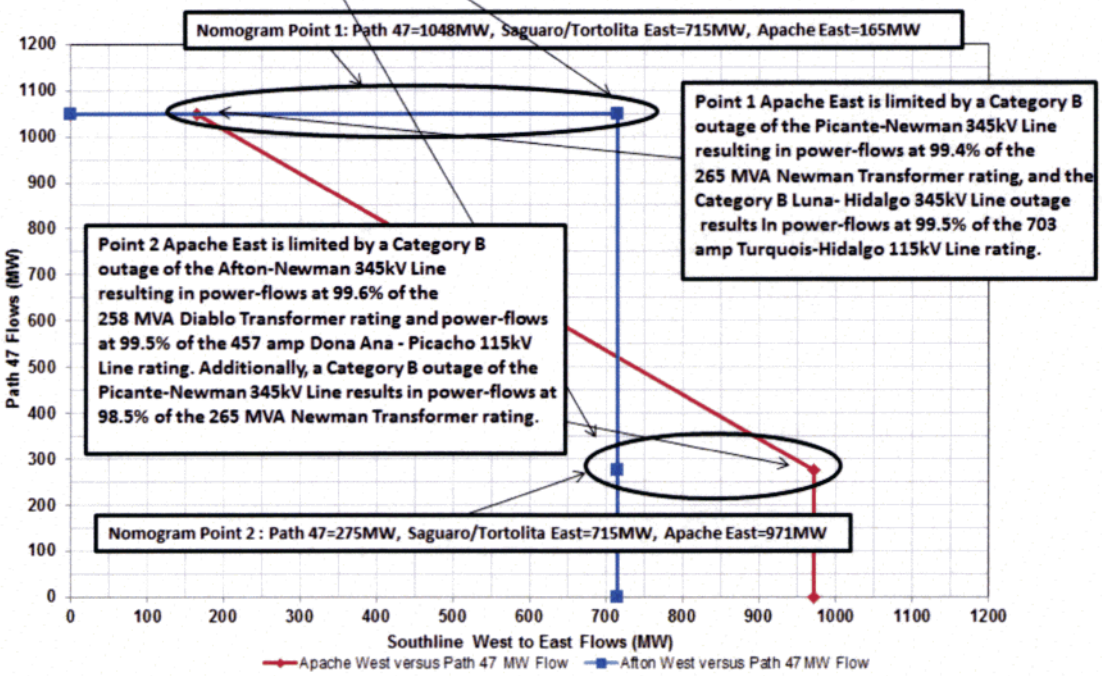

Nomogram 16b constructed from Case Series 16 results modeling mitigation in the form of Southern New Mexico Transmission upgrades and power-transfers from EPE to Southwest Power Pool. The Southern New Mexico Transmission upgrades include the addition of: Dona Anna – Picacho 115kV 13-Ohm series reactor[44] and additional 345/115kV Newman autotransformer. As noted in nomogram 2b, nomogram 16b shows the mitigation clearly boosts imports into El Paso via Southline West-to-East rating interface D (Apache-Hidalgo 345kV lines) capability. Further review of Case Series 2 results modeling the Southern New Mexico mitigation, Nomogram 16b Point 1M, shows that Southline can simultaneously achieve power-flowing west-to-east at 734MW and 436MW across the Southline Tortolita/Saguaro and Apache cut-planes, respectively w/ Path 47 flow at 1048MW. Similarly the other Case Series 16 nomogram corner point, Nomogram 16b Point 2M, shows that Southline can achieve 712MW across the Southline Tortolita/Saguaro to Apache cut-plane and 971MW across the Southline Apache to Afton rating cut-plane w/ Path 47 flows at 480MW. The simultaneous limit achieved meets all WECC and NERC criteria. Further review of results noted in Nomogram 16b shows the Southline West-to-East rating interface D (Apache-Hidalgo 345kV lines) capability is limited by the post-contingency Diablo autotransformer flows following the Category B outage of the Afton-Newman 345kV line.

[44] It should be noted that the reactor addition, or equivalently performing transmission upgrades, are proposed as mitigation to support Southline's increased west-to-east transfers. These additions do not have and will require Tri-State approval through formal interconnection analysis by Tri-State.

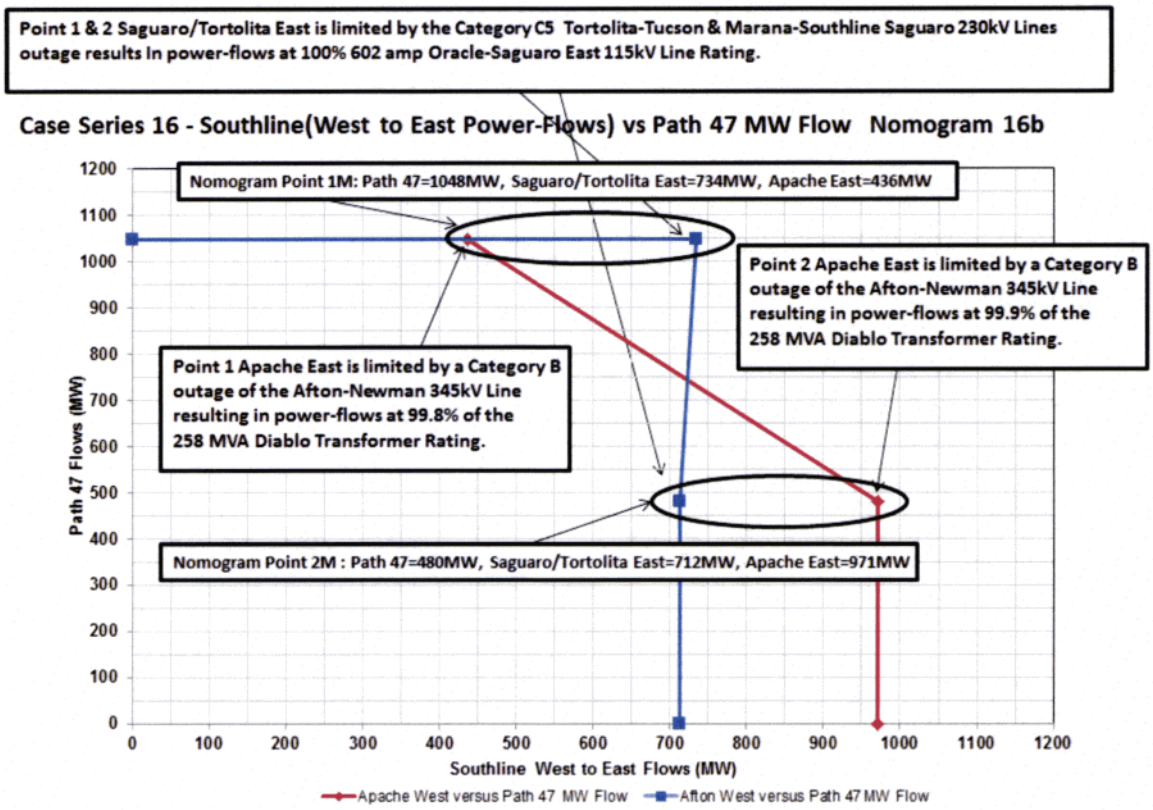

Case Series 41

Case Series 41 Study Results are virtually identical to Case Series 1 study results. Case Series 41 Study Results show that for the Case Series 41 Scenario there is no simultaneous interaction between the Southline Path and Path 47 MW flow. Nomogram 1 flow limits found are attributed to local grid limitations. Southline can simultaneously achieve power-flowing east-to-west at 1037MW across the Southline Afton to Apache rating cut-plane w/ 1000MW across the Southline Apache to Tortolita/Saguaro cut-plane w/ Path 47 flow at 1048MW. The simultaneous limit achieved meets all WECC and NERC criteria. Southline's Apache West flow is most limited by the post-transient Category C Pantano-Vail and Adams tap-Nogales 230kV line outage resulting in power-flow equal to 99.9% of the 241MVA Bicknell 345/230kV bank emergency rating. The sensitivity of Bicknell transformer loading to Apache generation schedules will be further analyzed in Phase III study work. The Bicknell 345/230 kV transformer will be upgraded by Southline, if necessary. This Apache flow limit also limits the up-stream Afton West flow due to the serial transmission nature of Afton and Apache cut-plane rating. The addition of the second 230/115kV Marana bank made no notable change in transmission performance, and it is noted that Southline can achieve the same simultaneous transfer (Southline project flows in the east-to-west direction) w/ or w/out the second Marana bank addition.

Case Series 41 - Southline(East to West Power-Flows) vs Path 47 MW Flow Nomogram 41

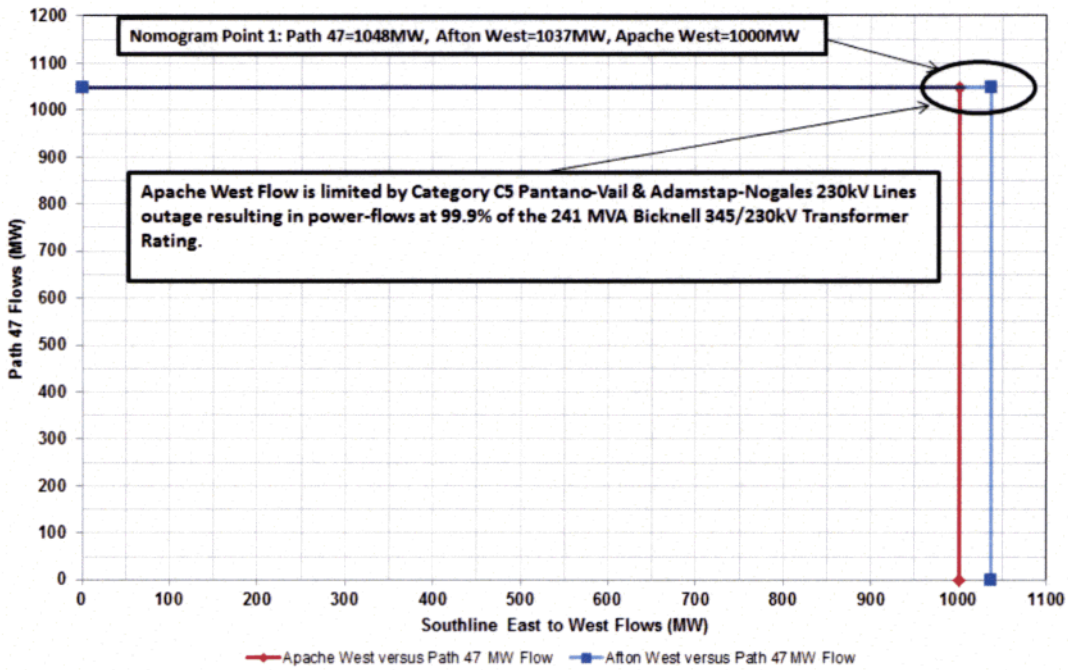

Case Series 42

Case Series 42 models very similar condition as Case Series 02 models, w/ the exception that Case Series 42 does not model any Mitigation. The results are virtually identical to Case Series 2 study results except for minor improvements that are attributed to the modeling of the Saguaro Units 1 & 2 retirement (June 2013) and the increased line capacitance associated w/ updated "B" values for the Luna-Macho Spring-Springerville 345kV line. The simultaneous limits described in Nomogram 42 meet all WECC and NERC criteria. The addition of the second 230/115kV Marana bank made no notable change in transmission performance, and it is noted that Southline can achieve the same simultaneous transfer (Southline project flows in the east-to-west direction) w/ or w/out the second Marana bank addition.

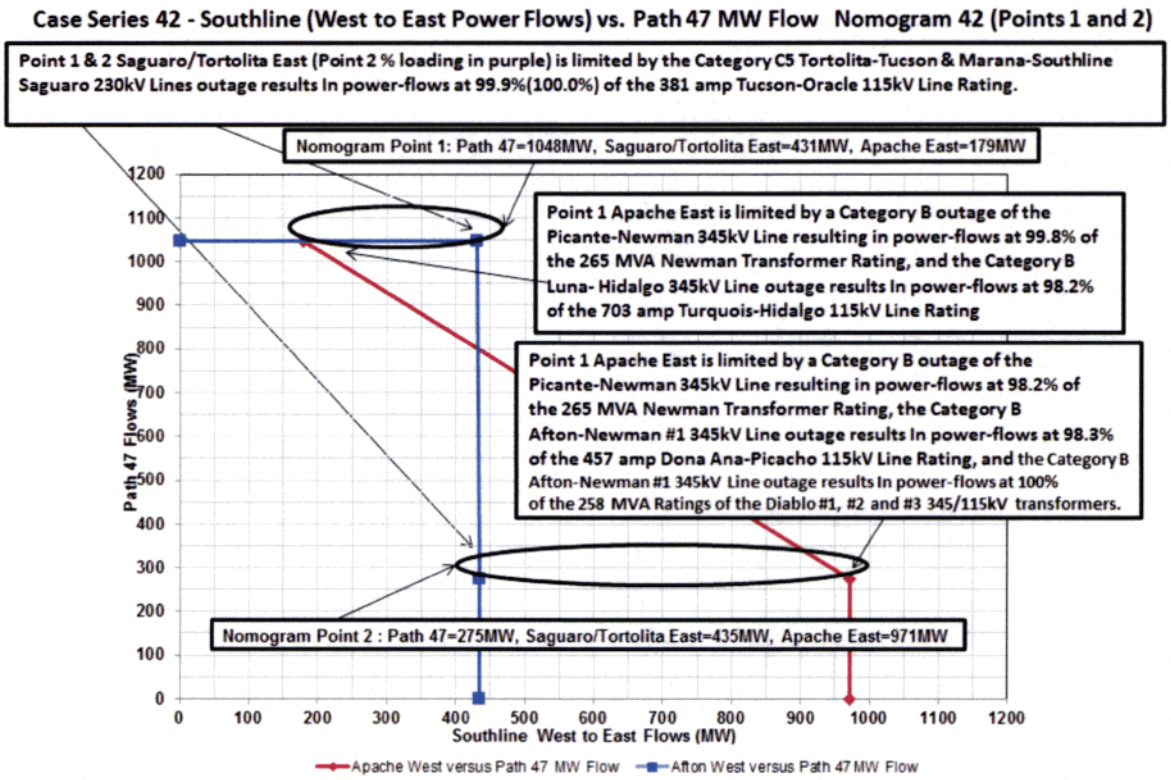

Case Series 56

Case Series 56 models conditions that are very similar to Case Series 16 w/ the exception that Case Series 56 only models Mitigation. The results are virtually identical to Case Series 16 study results except for minor improvements attributed to the modeling of the Saguaro Units 1 & 2 retirement (June 2013) and increased line capacitance associated w/ updated "B" values for the Luna-Macho Spring-Springerville 345kV line. The simultaneous limits described in Nomogram 56 meet all WECC and NERC criteria. The addition of the second 230/115kV Marana bank made no notable change in transmission performance, and it is noted that Southline can achieve the same simultaneous transfer (Southline project flows in the east-to-west direction) w/ or w/out the second Marana bank addition.

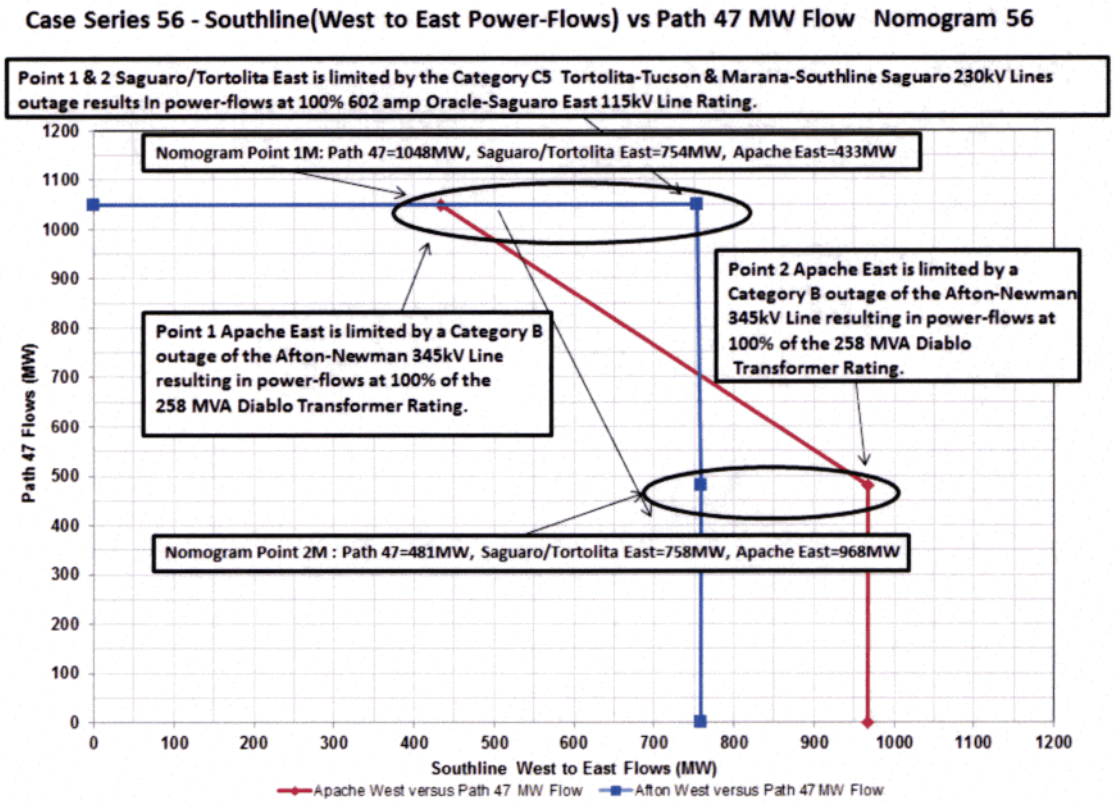

Case Series 67

Case Series 67 is a simultaneous sensitivity modeling the optional Midpoint Spur. Case Series 67 was built from Case Series 1. The changes needed to create case 67 included modeling the Midpoint Spur, a 30 mile line 345kV double circuit line, and shifting roughly 1000MW of assumed Photovoltaic generation from Afton to the Midpoint South 345kV bus. Note that Case Series 67 does not assume any Afton project generation.

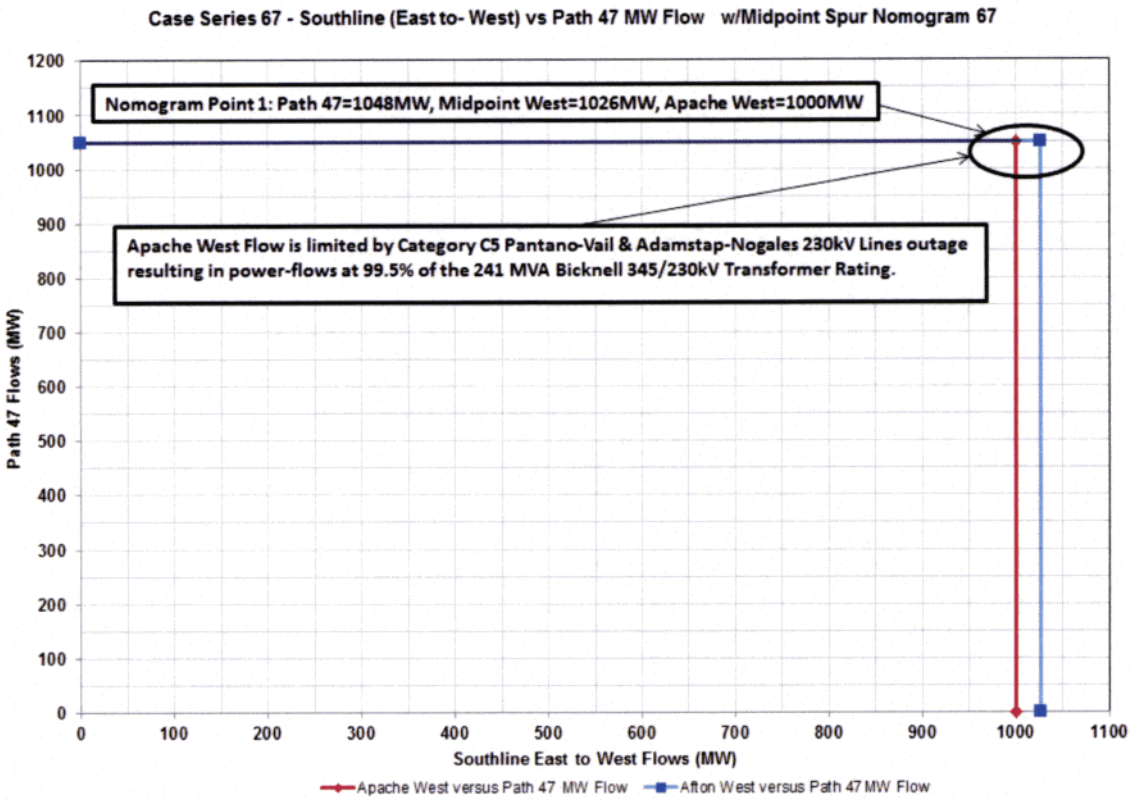

The study results for Case Series 67 are very similar to Case Series 1 or 41. The only difference between the two cases is that Case Series 67 requires RAS to mitigate for a Category C Afton-Midpoint #1 and #2 345kV Line outage. The RAS requires the tripping of 400MW of generation. The study results with this RAS modeled show that for Case Series 67 there are no simultaneous interaction between the Southline Path and Path 47 MW flow. The nomogram 67 flow limits found are attributed to local grid limitations. Southline can simultaneously achieve power-flowing east-to-west of 1026MW across the Southline Midpoint to Apache rating cut-plane with 1000MW across the Southline Apache to Tortolita/Saguaro cut-plane with Path 47 flow at 1048MW. The simultaneous limit achieved meets all WECC and NERC criteria.

Overall Simultaneous Case Series

Table 6.8 and **Table 6.9**, document the simultaneous Case Series study results for Southline Project flows in the east-to-west direction and west-to-east direction, respectively. These tables include details regarding Case Series, nomogram corner point, simultaneous path MW limit(s), and study scenario.

Southline Project Flows East-to-West

Three separate simultaneous case scenarios (01, 41, 41A and 67) were analyzed modeling Southline Project flows in the east-to-west direction. Path 47 MW flow and the Southline paths were reviewed and determined to have no simultaneous interaction. Therefore, for these case

scenarios, the Southline east-to-west path limitations were attributed to local grid limitations. The analysis was conducted modeling the Southline project both with and without a second Marana 230/115kV transformer bank. The addition of a second Marana 230/115 kV transformer bank had no impact on the Southline Project east-to-west transfer capability. Cases modeling the Midpoint Spur 345kV line and generation showed a potential transient stability limitation with generation located at the Midpoint South bus. This limitation is completely mitigated with a generation tripping RAS.

TABLE 6.8– SIMULTANEOUS SUMMARY PATH 47 MW FLOW VS SOUTHLINE (EAST-TO-WEST FLOW)					
CASE SERIES DETAIL	CASE SERIES NUMBER	01	41	41A	67
	NOMOGRAM NUMBER	01	41	41	67
	NOMOGRAM POINT	1	1	1	1
SIMULTANEOUS PATH UNDER STUDY	SOUTHLINE PROJECT AFTON WEST MW FLOW (RATING INTERFACE A)	1037	1037	1040	n/a
	SOUTHLINE PROJECT MIDPOINT WEST MW FLOW	n/a	n/a	n/a	1026
	SOUTHLINE PROJECT APACHE WEST MW FLOW (RATING INTERFACE B)	1000	1000	1000	1000
	WECC Path 47 MW Flow[45] (SNMI)	1048	1048	1048	1048
SCENARIO	2ND MARANA 230/115KV BANK		✓	✓	
	BOWIE GENERATION (OUTPUT IN MW)	350	350	350	350
	MIDPOINT 345KV SPUR				✓
	APACHE 115KV INTERCONNECTION			✓	

Southline Project West-to-East

Five separate simultaneous case scenarios (02, 16, 42, 42A, 56) were analyzed modeling Southline Project flows in the west-to-east direction. Path 47 MW flow and the Southline simultaneous study results show a simultaneous interaction w/ respect to Southline West-to-East rating interface D (Apache-Hidalgo 345kV lines) and no simultaneous interaction between Path 47 MW flow and Southline West-to-East rating interface C (Saguaro-Marana, Tortolita-Tucson/DMP 230kV Lines). Western's Tucson-Oracle 115kV reconductor project results in boosting Southline interface C simultaneous capability by roughly 300MW. Similarly, mitigation in the form of Southern New Mexico Transmission upgrades and power-transfers from EPE to Southwest Power Pool can result in increasing Southline interface D simultaneous capability up to an additional 270MW.

45 The non-simultaneous rating for WECC Path 47 (approved definition) is 1048 MW, West-to-East.

TABLE 6.9 – SIMULTANEOUS SUMMARY PATH 47 MW FLOW vs. SOUTHLINE (WEST-TO-EAST FLOW)							
CASE SERIES DETAILS	Case Series	02	02	16	16	42 And 42A	56
	Nomogram	2a	2b	16a	16b	42	56
	Nomogram Point	1	1M	1	1M	1	1
SIMULT. PATH UNDER STUDY	**Interface C - Tortolita/Saguaro East** West-to-East MW Flow	421	435	715	734	431	754
	Interface D - Apache East West-to-East MW Flow	165	436	165	436	179	433
	WECC Path 47	1048	1048	1048	1048	1048	1048
SCENARIO	Tucson-Oracle 115 kV Reconductor			✓	✓		✓
	2nd Marana 230/115 kV Xfmr.					✓	✓
	Bowie Gen. Output (MW)	350	350	350	350	350	350
MITIGATION	Dona Ana- Picacho 115 kV 13-Ohm Series Reactor		✓		✓		✓
	Additional Newman 345/115 kV Xfmr.		✓		✓		✓
	Southwest Power Pool Export (In MW)		45		45		45

Tucson-Oracle 115kV Line Re-conductor

Western's potential Tucson-Oracle 115kV line re-conductor project improves west-to-east transfer capability w/ respect to Southline's West-to-East rating interface C (Saguaro-Marana, Tortolita-Tucson/DMP 230kV Lines). Nomograms constructed from Case Series 02 and 16 were compared. Case Series 16 models Western's Tucson-Oracle 115kV line reconductor project. Inspection of both Case Series' study results show the project addition shifts post-contingency loading limitations from Tucson-Oracle 115kV line to the Oracle-Saguaro East 115kV line resulting in around a 300MW increase in Southline interface C capability.

2nd Marana 230/115kV Bank

A comparison of Case Series 01 vs 41 and 2 vs 42 and 16 vs 56, show that the addition of the second 230/115kV Marana bank made no notable change in transmission performance, and it is noted that Southline can achieve the same simultaneous transfer (in either direction) w/ or w/out the second Marana bank addition.

Southern New Mexico Transmission Upgrades

Case Series 2, 16 and 56 model mitigation, in the form of Southern New Mexico Transmission upgrades, and power-transfers from EPE to Southwest Power Pool. The Southern New Mexico

Transmission upgrades include the addition of: the Dona Anna – Picacho 115kV 13-Ohm series reactor[46] and an additional 345/115kV Newman autotransformer. Mitigation is required to increase Southline's West-to-East rating interface D (Apache-Hidalgo 345kV lines) capability. Review of results comparing both Case Series 2 and 16 w/ and w/out mitigation shows an increase of 270MW (165MW to 435MW) resulting from the Southern New Mexico Transmission upgrades.

Midpoint Spur

Case Series 67 was created as a topology sensitivity to model the optional "Midpoint Spur" under Southline east-to-west flow conditions. Case Series 67 was developed from the Series 01 cases, modifying the Series 01 cases to model the Midpoint Spur, a 30 mile line double-circuit 345 kV towerline connecting Midpoint Substation to approximately 1000MW of Photovoltaic generation. As with Case Series 01, Case Series 67 did not model the Tucson-Oracle 115 kV line reconductoring, the second Marana 230/115 kV transformer, or the SunZia Project.

Transient stability simulations noted what appeared to be unacceptable commutation failures of the inverters of the Midpoint South photovoltaic generation. The modeling of a RAS that tripped some generation showed significant improvement in overall performance. Approximately 400MW of generation tripping via the RAS was required to mitigate the violations caused by a Category C Afton- Midpoint #1 and #2 345kV Line outage. The study results (with RAS modeled) for Case Series 67 indicates no simultaneous interaction between the Southline Path and Path 47 MW flow.

[46] It should be noted that the reactor addition, or equivalently performing transmission upgrades, are proposed as mitigation to support Southline's increased west-to-east transfers. These additions do not have and will require Tri-State approval through formal interconnection analysis by Tri-State.

7. NON-SIMULTANEOUS ANALYSIS

The following summarizes Phase 2 studies and their relationship to Southline's non-simultaneous bi-directional ratings.

7.1 Non-Simultaneous Rating Methodology

The Non-Simultaneous Analysis determines the maximum capability (in megawatts) that the Southline Project can reliably transfer in the east-to-west and west-to-east directions. Normally, non-simultaneous path ratings are determined independent of concurrent flows on other circuits or paths, with all potentially interacting circuits or paths loaded below the levels at which limitations are observed. However for this Phase 2 Rating study, non-simultaneous ratings for Southline's interfaces have been derived from the maximum values observed in the simultaneous analyses' results, to simplify/optimize the project's performance and to draw upon the large number of simultaneous scenario cases.

7.2 Non-Simultaneous Rating Southline Project Flows East-to-West

Southline's non-simultaneous east-to-west rating is derived from the simultaneous Case Series 1/Nomogram point 1. **Table 7.1** summarizes the study results for (east-to-west) Interfaces A and B. The scenario studied show Interface A limits of 1037 MW and Interface B limits of 1000 MW.

7.3 Non-Simultaneous Rating Southline Project Flows West-to-East

Southline's non-simultaneous west-to-east rating is derived from the simultaneous Case Series 2 and 16/Nomogram points 2a and 16a with Case Series 16a modeling Western's Tucson-Oracle 115kV Re-conductor Project. **Table 7.1** summarizes the study results for (west-to-east) Interfaces C and D. The scenarios studied show Interface C limits of 430-715[47] MW and Interface D limits of 971 MW.

TABLE 7.1– SOUTHLINE PHASE 2 NON-SIMULTANEOUS SUMMARY BROKEN DOWN BY SCENARIO

CASE SERIES DETAIL	CASE SERIES	1	2	16	PHASE 1 CPR RESULTS
	NOMOGRAM	1	2a	16a	
	NOMOGRAM POINT	1	2	2	
SIMULTANEOUS PATH UNDER STUDY	SOUTHLINE PROJECT AFTON WEST MW FLOW (RATING INTERFACE A)	1037	n/a	n/a	1038
	SOUTHLINE PROJECT APACHE WEST MW FLOW (RATING INTERFACE B)	1000	n/a	n/a	1001
	SOUTHLINE PROJECT AFTON EAST MW FLOW (RATING INTERFACE C)	n/a	430	715[31]	418

[47] Higher rating value is associated with Western's potential Tucson-Oracle 115 kV line reconductor project.

	SOUTHLINE PROJECT APACHE EAST MW FLOW (RATING INTERFACE D)	n/a	971	971	957
	SOUTHERN NEW MEXICO PATH 47 (WECC APPROVED PATH DEFINITION) MW FLOW	1048	275	275	n/a
SCENARIO	TUCSON-ORACLE RE-CONDUCTOR MODELED			✓	
	BOWIE GENERATION OUTPUT (IN MW)	350	350	350	

8. SUNZIA

SunZia, a Participating Southline PRG Member with an accepted path rating at the time of Southline's study plan development, requested that Southline studies include the SunZia Project for simultaneous review. SunZia also requested a limited non-simultaneous review modeling Southline, SunZia, and the proposed Bowie Power Station with output of 1,000 megawatts (MW). Although the Southline Study Plan envisioned modeling the SunZia Plan of Service (POS) studied, reviewed, and approved in SunZia's Phase 2 WECC studies as a topology permutation, subsequent changes to the SunZia POS have made that approach inappropriate.

SunZia has changed its plan of service and is currently evaluating the impacts of those changes with its PRG. Given that, it is no longer reasonable for Southline to study the original POS as proposed by SunZia and laid out in the study plan. Also, members of both SunZia and Southline PRGs generally agree that SunZia's revisions should not delay completion of Southline Phase 2 efforts.

Southline made best efforts to complete Phase 2 simultaneous studies given the information known at the time of study. Southline has not included the latest modified SunZia POS in Southline Phase 2 studies since it has not been approved by WECC and is still under review by the SunZia PRG. Southline's Phase 2 Study responsibility does not extend to the analysis of proposed projects which have not completed their own formal comprehensive studies as outlined in the WECC Three-Phase Rating Process.

SunZia stated at the SunZia February 13, 2014, PRG meeting that it does not believe simultaneous Southline-SunZia studies are needed. Additionally, PRG members who are part of both Southline and SunZia PRGs believe the modified SunZia plan of service will not exhibit interaction with either Southline or Path 47 MW flow, and have suggested that Southline should complete its Phase 2 report without simultaneous Southline-SunZia studies and submit the report to the PRG for review and approval. PRG members suggested Southline and SunZia confirm the lack of interaction by performing a 10% path flow test, but that this confirmation should not delay completion of Southline Phase 2 efforts.

Southline completed a 10% Path Flow Test[48] focusing on Southline and SunZia Paths interaction, and as described below that test showed no simultaneous relationship between Southline and the new SunZia POS, or between the new SunZia POS and Path 47 MW flow.

10% Path Flow Test Methodology

The WECC Path Rating Process defines a screening test, to aid in determining which potentially-affected Paths should be evaluated for simultaneous analysis. In this screening analysis, affected paths whose incremental flows change by 10% or more (based on that affected path's rating) for critical Project Sponsor Project element outage(s) are flagged as potential paths to

[48] The Southline-SunZia 10% test should not be confused with Southline's earlier 10% Path Flow Tests conducted at the start of the Phase 2 process.

be evaluated for simultaneous impacts. Southline utilized a post-transient governor power flow contingency analysis in performing the WECC 10% Path Flow Test. Flows were monitored while simulating the most critical Category B and C SunZia and Southline Project outages, and all resulting changes in path flows were measured with respect to each path's rating.

Case List

Southline performed the Southline-SunZia 10% Path Flow Test utilizing Southline case series 01 as the seed case. The SunZia Project new plan of service was overlaid in the seed case with both SunZia and Southline projects modeling east-to-west flows at maximum non-simultaneous levels (3000MW and 1037MW/1000MW[49] for SunZia and Southline, respectively). **Table 8.1** summarizes the characteristics of these three base cases.[50]

TABLE 8.1 – SOUTHLINE 2nd PHASE 2 DETAILED 10% PATH TEST CASE MATRIX	
SAVE CASE NAME	11_ew_1038_1000_2997_v01.sav
PATH NAME	PATH FLOW IN MW
SOUTHLINE PROJECT AFTON WEST	1037.1
SOUTHLINE PROJECT APACHE WEST	1000.1
S. NEW MEXICO PATH 47 (WECC APPROVED PATH DEFINITION)	1041.7
SUNZIA PROJECT	2997

[49] Southline Afton West Path = 1037MW and Southline Apache West Path = 1000MW

[50] Southline PRG Members may also download these cases from the Southline Share File site: https://southline.sharefile.com. These cases are posted under the "General Data" section in the folder, "Southline Phase 2 WECC 10% Path Stress Test Cases".

Contingency List

Table 8.2 lists the contingencies applied in the 10% Path Flow Test.

TABLE 8.2 – OUTAGES MODELED IN 2nd 10% PATH FLOW TEST		
#	CAT	DESCRIPTION
1	B	Sunzia East-Willow #1 500kV Line with RAS(1500MW Gen Dropping)
2	C	Sunzia East-Willow #1 and #2 500kV Line with RAS(3000MW Gen Dropping)
3	C	Afton-Midpoint 345kV #1 And #2 Lines

Results

Southline PRG Members may download the WECC 10% Path Flow Test results from the Southline Share File site https://southline.sharefile.com. These results are located under the "General Data" section in the "Southline-SunZia Phase 2 WECC 10% Path Stress Test Results" folder.

The 10% Path Flow Test showed no simultaneous relationship between Southline and the new SunZia POS, or between the new SunZia POS and Path 47. **Table 8.3** lists 10% Path Flow Test results by path and contingency.

TABLE 8.3 – OUTAGES MODELED IN 10% PATH FLOW TEST				
PATH NAME	Path 47	SunZia	Southline Afton West	Southline Apache West
PATH RATING (in MW)	1048	3000	1037	1000
PRE-CONTINGENCY (in MW)	1041.7	2997	1037.1	1000.1
POST-CONTINGENCY (Path Flows in MW)				
Category C Afton-Midpoint #1 & #2 345kV Lines	1062.5	2997	n/a	n/a
Category B Sunzia East-Willow #1 500kV Line with RAS(1500MW Gen Dropping)	1044.1	n/a	1053.7	1015.5
Category C Sunzia East-Willow #1 and #2 500kV Line with RAS(3000MW Gen Dropping)	1045.6	n/a	1085.9	1045.3
POST-CONTINGENCY (ΔMW Path Flow Change)				
Category C Afton-Midpoint #1 & #2 345kV Lines	20.8	0	n/a	n/a
Category B Sunzia East-Willow #1 500kV Line with RAS(1500MW Gen Dropping)	2.4	n/a	16.6	15.4
Category C Sunzia East-Willow #1 and #2 500kV Line with RAS(3000MW Gen Dropping)	3.9	n/a	48.8	45.2
POST-CONTINGENCY (% Path Rating)				
Category C Afton-Midpoint #1 & #2 345kV Lines	2	0	n/a	n/a
Category B Sunzia East-Willow #1 500kV Line with RAS(1500MW Gen Dropping)	.2	n/a	1.6	1.5
Category C Sunzia East-Willow #1 and #2 500kV Line with RAS(3000MW Gen Dropping)	.4	n/a	4.7	4.5

Conclusion

Based on the Southline-SunZia 10% Path Flow Test study results the Southline and SunZia projects do not show an interaction with each other at or above 10% on their respective paths.

Southline believes these results confirm the PRG participants' assessment that there is no simultaneous path interaction between Southline and the new proposed SunZia plan of service.

Please see Attachment R for results of an additional Southline-SunZia 10% test that was performed to confirm no interaction with a Southline Apache 115kV interconnection.

Please see Attachment S for results of an additional sensitivity modeling Southline and SunZia.

9 APPENDIX PROJECT REVIEW GROUP MEMBERSHIP

On December 23, 2011 Southline Transmission, L.L.C. submitted a WECC Phase 1 Comprehensive Progress Report (CPR) for the Southline Transmission Project (Southline) which was distributed January 9, 2012 to the PCC and TSS committees for review. In the cover letter Southline requested comments on the CPR and also requested expressions of interest in forming a Project Review Group (PRG). As of the response period deadline, Southline received requests from ten entities to participate in, and from numerous entities to act as correspondents in the Southline PRG. Southline Participating PRG members are shown below:

	Affiliation	First	Last	Phone	Email
1	APS	Barrie	Kokanos	602-250-1370	barrie.kokanos@aps.com
2	EPE	David	Gutierrez	915-543-4083	david.gutierrez@epelectric.com
	EPE	David	Tovar	915-543-4355	dav.tovar@epelectric.com
	EPE	Dennis	Malone	915-543-5757	dennis.malone@epelectric.com
3	Ft. Huachuca	Carl	Aufdenkampe	520-533-3411	carl.w.aufdenkampe.civ@us.army.mil
4	PNM	George	Nail	505-241-2574	george.nail@pnm.com
	PNM	Tom	Duane	505-241-4569	thomas.duane@pnm.com
5	Smart Wire Grid	Jerry	Melcher	415 656 7302	melcher@smartwiregrid.com
	Smart Wire Grid	Chifong	Thomas	510-267-4323	Chifong.thomas@smartwiregrid.com
6	Southline	Ty	Larson	808-280-8971	tylarson@useconsulting.com
	Southline	Doug	Patterson	415-787-4209	doug@blackforestpartners.com
7	SRP	Jeff	Loehr	602-236-0972	Jeff.Loehr@srpnet.com
	SRP	Alistair	Rennie	602-236-0966	Alistair.Rennie@srpnet.com
	SRP	Eldin	Dizdarevic	602-236-0960	Eldin.Dizdarevic@srpnet.com
	SRP	Jeni	Mistry	602-236-0960	Jeni.Mistry@srpnet.com
8	SunZia	Tom	Wray	602-808-2004	twray@southwesternpower.com
	SunZia	Jim	Hsu	602-814-9733	jim.hsu@powereng.com
	SunZia	Mark	Etherton	480-897-2015	mark.etherton@powereng.com
9	SWTC	Bruce	Evans	520-586-5336	bevans@swtransco.coop
	SWTC	Boris	Tumarin	520-586-5116	btumarin@ssw.coop
	SWTC	Todd	Lichtas	520-586-5114	tlichtas@ssw.coop
10	TEP	Gary	Trent	520-745-3168	gtrent@tep.com
	TEP	Eva Marie	King	520-745-3113	EKing@tep.com
11	Western	Josh	Johnston	602-605-2634	jjohnston@wapa.gov
	Western	Patrick	Harwood	602-605-2883	Harwood@wapa.gov
	Western	Kaicheng	Chen	720-962-7713	chen@wapa.gov

The following individuals were correspondent Southline PRG members.

Abbas Abed, Ron Belval, Stephanie Benjes, Bill Bojorquez, David Bryan, Jorge Canamar, Cary Deise, Joel Flanagan, Stacey Harris, Bill Kipp, Jeremy Lewis, Peter Mackin, Enrique Marroquin, Andy Rawlins, Todd Rhoades, Lynn Richardson, Rudy Rivas, Jeff Robertus, Keith Schwertfeger, Vince Leung, Chris Pink, Pedro Serrano, Matt Virant

ATTACHMENT A

SOUTHLINE CONCEPTUAL ONE-LINE DIAGRAM

ATTACHMENT B

POWER FLOW PARALLEL PATH SCREENING STUDIES (10% PATH FLOW TEST RESULTS)

Due to the physical size, the 10% Path Flow Test Results are made electronically available to PRG Members via the Southline Share file web site. https://southline.sharefile.com

ATTACHMENT C

SOUTHLINE PRG APPROVED PHASE 2 STUDY PLAN

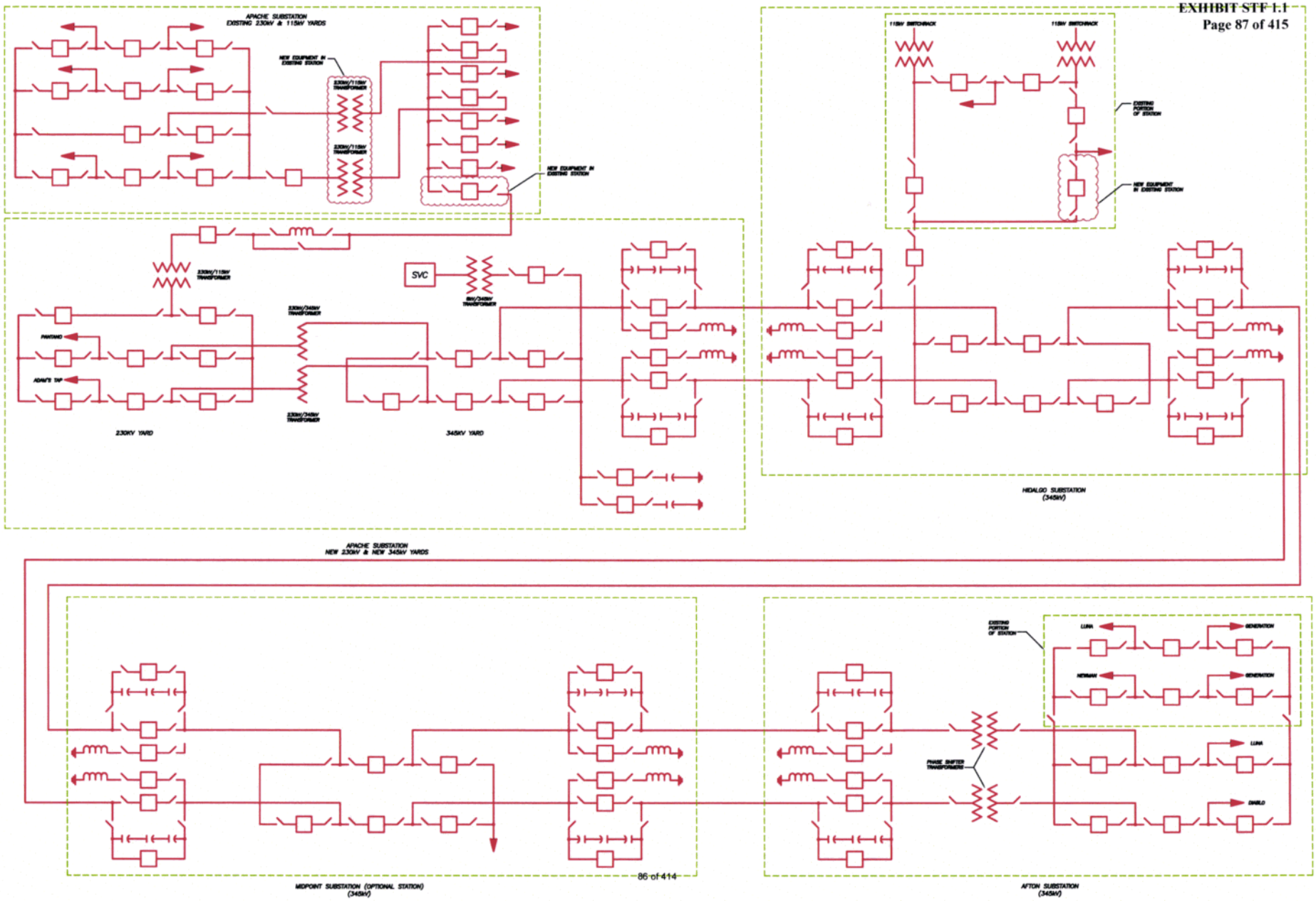
APACHE SUBSTATION
EXISTING 230kV & 115kV YARDS
NEW EQUIPMENT IN EXISTING STATION
230kV/115kV TRANSFORMER
230kV/115kV TRANSFORMER
NEW EQUIPMENT IN EXISTING STATION
230kV/115kV TRANSFORMER
SVC
345kV/230kV TRANSFORMER
230kV/345kV TRANSFORMER
PANTANO
ADAM'S TAP
230kV/345kV TRANSFORMER
230KV YARD
345KV YARD
115kV SWITCHRACK
115kV SWITCHRACK
EXISTING PORTION OF STATION
NEW EQUIPMENT IN EXISTING STATION
HIDALGO SUBSTATION
(345kV)
APACHE SUBSTATION
NEW 230kV & NEW 345kV YARDS
EXISTING PORTION OF STATION
LUNA
GENERATION
NEWMAN
GENERATION
LUNA
PHASE SHIFTER TRANSFORMERS
DIABLO
MIDPOINT SUBSTATION (OPTIONAL STATION)
(345kV)
AFTON SUBSTATION
(345kV)

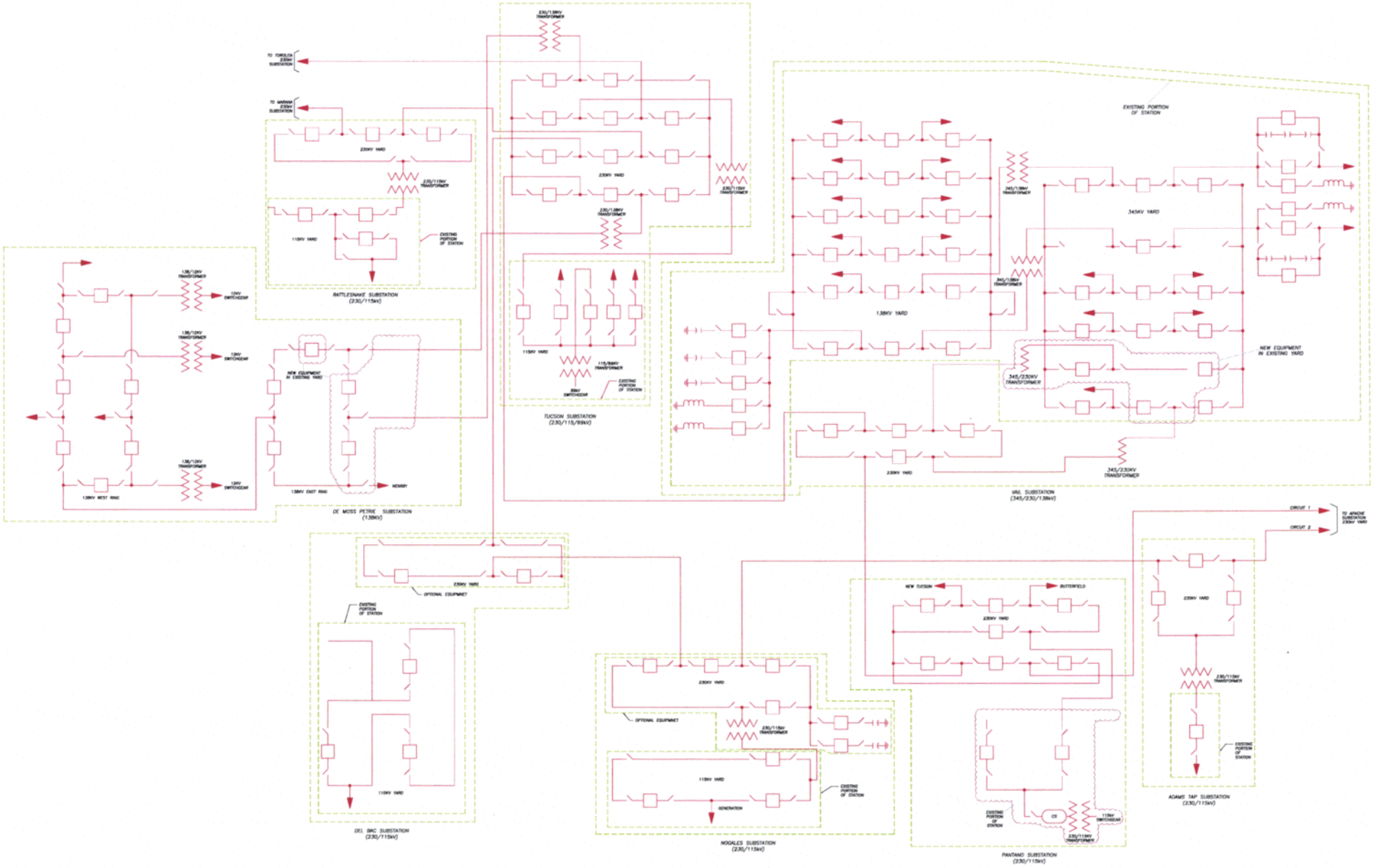
TO TORTOLITA 230kV SUBSTATION
TO MARANA 230kV SUBSTATION
230kV YARD
230/115kV TRANSFORMER
115kV YARD
EXISTING PORTION OF STATION
RATTLESNAKE SUBSTATION (230/115kV)
230/138kV TRANSFORMER
230kV YARD
230/115kV TRANSFORMER
230/138kV TRANSFORMER
115kV YARD
115/69kV TRANSFORMER
69kV SWITCHGEAR
EXISTING PORTION OF STATION
TUCSON SUBSTATION (230/115/69kV)
EXISTING PORTION OF STATION
345/138kV TRANSFORMER
345kV YARD
345/138kV TRANSFORMER
138kV YARD
NEW EQUIPMENT IN EXISTING YARD
345/230kV TRANSFORMER
230kV YARD
345/230kV TRANSFORMER
VAIL SUBSTATION (345/230/138kV)
138/12kV TRANSFORMER
12kV SWITCHGEAR
138/12kV TRANSFORMER
12kV SWITCHGEAR
138/12kV TRANSFORMER
12kV SWITCHGEAR
138kV WEST RING
NEW EQUIPMENT IN EXISTING YARD
138kV EAST RING
NEARBY
DE MOSS PETRIE SUBSTATION (138kV)
CIRCUIT 1
CIRCUIT 2
TO APACHE SUBSTATION 230kV YARD
230kV YARD
OPTIONAL EQUIPMENT
EXISTING PORTION OF STATION
115kV YARD
DEL BAC SUBSTATION (230/115kV)
230kV YARD
OPTIONAL EQUIPMENT
230/115kV TRANSFORMER
115kV YARD
GENERATION
EXISTING PORTION OF STATION
NOGALES SUBSTATION (230/115kV)
NEW TUCSON
BUTTERFIELD
230kV YARD
EXISTING PORTION OF STATION
CB
115kV SWITCHGEAR
230/115kV TRANSFORMER
PANTANO SUBSTATION (230/115kV)
230kV YARD
230/115kV TRANSFORMER
EXISTING PORTION OF STATION
ADAMS TAP SUBSTATION (230/115kV)

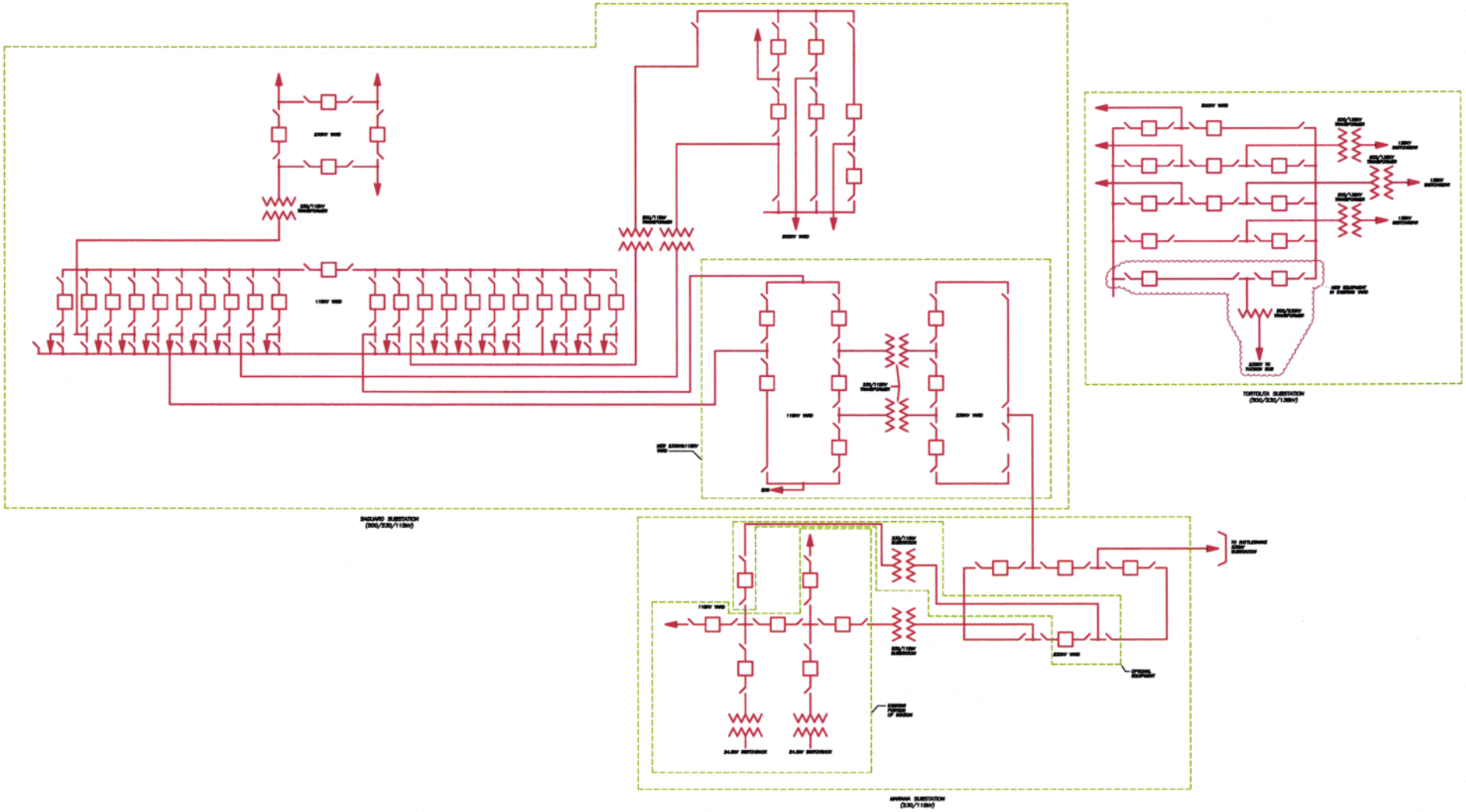

SOUTHLINE
TRANSMISSION PROJECT

FINAL

PHASE 2 ACCEPTED RATING COMPREHENSIVE STUDY PLAN

January 7, 2013

USE
Utility System Efficiencies, Inc.

INTRODUCTION AND PROJECT DESCRIPTION....4
PROPOSED STUDY WORK....5
PERFORMANCE CRITERIA, RELIABILITY STANDARDS AND REFERENCES....6
PLAN OF SERVICE....7
PLANNED IN-SERVICE DATE....15
BASE CASE DEVELOPMENT....15
Foundational Base Case....*21*
STUDY METHODOLOGY....21
Post-Transient Power Flow Studies....*21*
Power Flow Parallel Path Screening Studies....*23*
Voltage Stability Studies (Post-Transient)....*23*
Transient Stability Studies....*24*
Exceptions....*27*
CORRECTIVE PLANS....27
REPORT DEVELOPMENT....27
SCHEDULE....29
APPENDIX 1 – SOUTHLINE PROJECT ILLUSTRATIONS....30
APPENDIX 2 – OUTLINE OF PROJECT COORDINATION & RATING REVIEW PROCESS SEQUENCE....32
APPENDIX 3 – NERC TRANSMISSION PLANNING STANDARDS....33
APPENDIX 4 – WECC DISTURBANCE-PERFORMANCE CRITERIA....35
APPENDIX 5 – PROJECTS IN PHASE 2 AND 3 OF RATING REVIEW PROCESS....37
APPENDIX 6 – POTENTIAL NEW GENERATION PROJECTS FOR INCLUSION IN CASES....38
APPENDIX 7 – CASE DEVELOPMENT MATRIX....39
APPENDIX 8 – POST-TRANSIENT OUTAGES....55
APPENDIX 9 – TRANSIENT STABILITY DISTURBANCES....61
APPENDIX 10 – AREA SPECIFIC VOLTAGE CRITERIA....62
APPENDIX 11 – LIST OF EQUIPMENT MODELED TO MOVE IN POST-CONTINGENCY SOLUTION....64

INTRODUCTION AND PROJECT DESCRIPTION

On March 20, 2012, the WECC TSS Chair issued a letter stating the Southline Transmission Project (Southline) had completed WECC Phase I requirements and had achieved Phase II status in the WECC Project Rating Review Process.

Southline also formed a WECC Phase 2 Project Review Group (PRG) on March 9, 2012 following an open invitation period.

Southline and the PRG, with technical assistance from Utility System Efficiencies, Inc. (USE), developed this Study Plan to guide the Southline Transmission Project through Phase 2 of the Western Electricity Coordinating Council's (WECC) Project Rating Review Process. See Appendix 2 for an outline of WECC's Project Coordination and Rating Review Process Sequence. Southline's main objective for Phase 2 is to determine the "Accepted Rating" and to satisfy the requirements necessary to proceed to Phase 3 of the WECC Project Rating Review Process.

The anticipated in-service date for the Southline Transmission Project is 2016. A summary of the preliminary Plan of Service includes the following segments:

1. The first section is a double circuit 345kV line originating at Afton switching station outside Las Cruces, New Mexico and terminating at Apache switching station in Southeastern Arizona;
2. The second segment is a proposed upgrade of Western Area Power Administration's (Western) existing 115kV line to a 230kV double circuit from Apache to Saguaro and Tortolita.

Depending on final design choices, Southline is seeking the following ratings[1]:

1. Afton East-to-West (E2W) Rating of 1,030 MW;
2. Apache East-to-West (E2W) Rating of 1,000 MW;
3. Saguaro/Tortolita West-to-East (W2E) Rating of 418 MW and a Saguaro/Tortolita West-to-East (W2E) Rating of approximately 1000 MW with the Tucson – Oracle 115kV line re-conductor project;
4. Apache West-to-East (W2E) Rating of 957 MW and an Apache West-to-East (W2E) Rating of approximately 1000 MW with the Tucson – Oracle 115kV line re-conductor project.

The Apache, Luna, Hidalgo, and Afton stations on the new build 345kV section, as well as numerous stations on the upgraded 230kV section are envisioned as potential hubs for one or more future generation projects. Renewable resource additions (such as wind and solar) may potentially interconnect in the vicinity of these stations sometime between 2015 and 2020. See Appendix 1 for an illustration of the project.

The Phase 2 rating study for the Southline Project will be performed in accordance with the WECC Procedures for Project Rating Review. In accordance with Phase 2 of the WECC's procedures for project rating review, the study will be designed to:

1. Confirm the Plan of Service for Southline;
2. Demonstrate the project's conformance with North American Electric Reliability Corporation (NERC) Reliability Standards and WECC System Performance Criteria;
3. Reaffirm the project's Non-simultaneous Transfer Capability if required by the PRG;
4. Determine new Non-simultaneous Transfer Capability if case topologies change subsequent to the acceptance of the Phase 1 Comprehensive Progress Report or if required by the PRG;

[1] An accepted rating objective of 1,000 MW for the Saguaro/Tortolita West-to-East interface will be evaluated when the Western requested Tucson-Oracle 115kV line re-conductor project alternative is modeled. Similarly, an Apache West-to-East accepted rating objective of 1,000 MW will be studied with the Tucson-Oracle 115kV line re-conductor project alternative modeled. Without the Tucson-Oracle 115kV line re-conductor project, the Saguaro/Tortolita West-to-East and Apache West-to-East accepted rating objectives will be 418 MW and 957 MW, respectively.

5. Determine the project's Simultaneous Transfer Capability with applicable existing and planned for WECC paths; and
6. Assess the project's Simultaneous Transfer Capability with select Planned Projects in Phase 2 of the Project Rating Review Process.

Lastly, the Study Plan provides specific details on what will be included in the Phase 2 rating analysis and how the analysis will be conducted.

PROPOSED STUDY WORK

The analyses for the Southline Project will confirm the non-simultaneous transfer capability determined in the Phase 1 studies and identify the simultaneous transfer capability for reliably transferring power in the east-to-west and west-to-east directions. Four separate interfaces will be developed at different locations on the Southline Project. Figure 1 below details each interface. Interfaces A and B will comprise the line sections utilized to analyze power-flows in the east-to-west direction while interfaces C and D will comprise the line sections utilized to analyze power-flows in the west-to-east direction.

Phase 2 studies will be performed to determine the sensitivity impact and simultaneous interaction with the following existing/planned paths:

1. Existing Path 47 - Southern New Mexico (NM1) Imports with Simultaneous and Non-Simultaneous Ratings of 940 MW and 1048 MW, respectively;
2. SunZia's Modified Path 47 - The existing path 47's definition modified with the SunZia Project to include all transmission elements in the existing definition plus the addition of two South/Luna 500/345kV Transformers; and
3. SunZia -- East to West non-simultaneous rating of 3000 MW.

If existing paths under simultaneous study cannot be loaded to their maximum simultaneous levels, a nomogram will be developed. Southline project flows may need to be decreased if reducing Southline project flows is effective in increasing the existing Path's flow. Similarly, the existing path flows may need to be decreased in an effort to maximize Southline project flows.

Parallel path power flow screening studies have been performed to help determine if any additional simultaneous interactions exist between the proposed Southline paths and other existing or planned WECC paths. The screening study tests indicated no interaction between Southline and Path 48 (Northern New Mexico) and marginal interaction between Southline and Path 23 (Four Corners 345/500). In fact, only a select few Southline project contingencies increased Path 23 flows to just 10%. The "Parallel Path 10% Screen test" studies results were presented to the PRG September 14, 2012. The PRG concluded that studies of the simultaneous interaction between the Southline and Path 23 and between the Southline and Path 48 are unnecessary. Consequently, only studies of the simultaneous interaction listed above will be studied.

As noted in Southline Phase 1 studies, Western's Tucson-Oracle 115kV line limited the Saguaro/Tortolita West-to-East interface to 418 MW and helped reduce the Apache West-to-East interface to 957MW. The Tucson-Oracle 115kV line did not limit the flows on the Afton East-to-West or the Apache East-to-West interfaces. Additional simultaneous studies will be performed with the Tucson-Oracle 115kV Line Reconductor Project modeled in the project cases with West-to-East power flows on the Southline project. It is expected that non-simultaneous ratings of 1,000 MW will be achievable on both the Saguaro/Tortolita West-to-East and the Apache West-to-East interfaces.

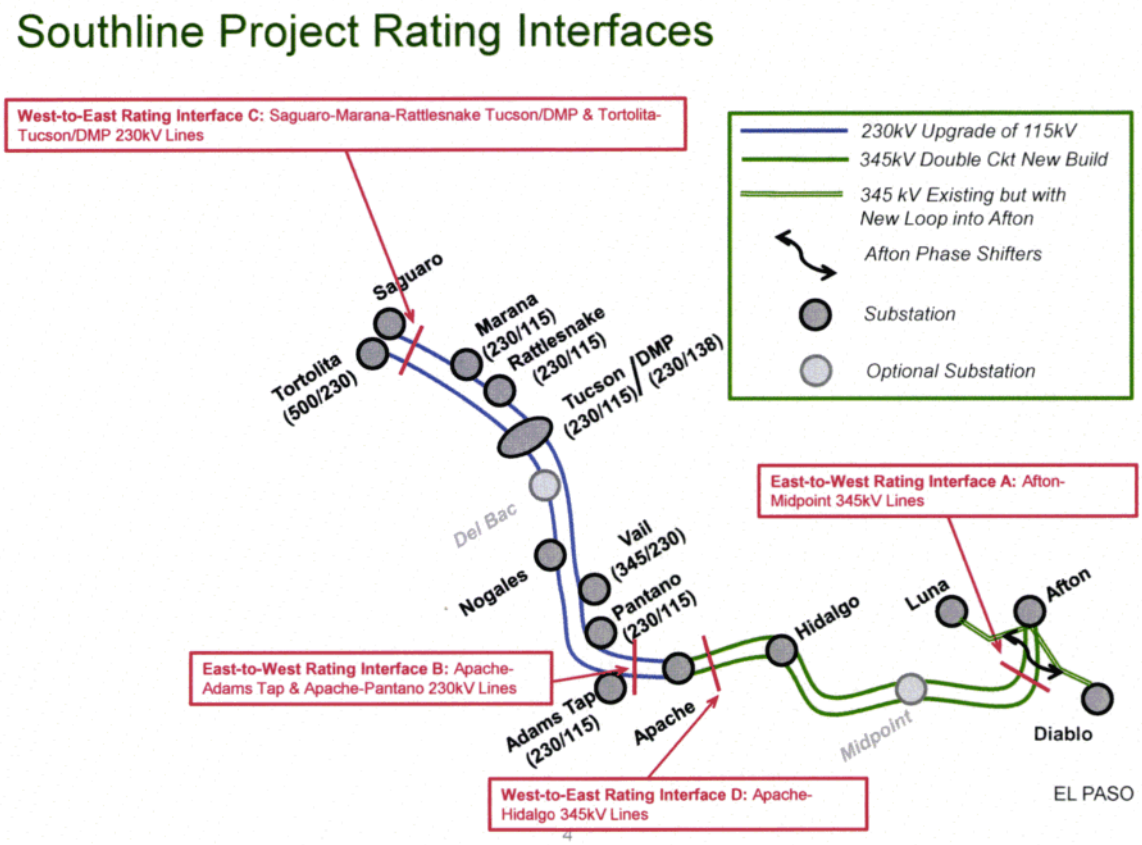

Figure 1: Sketch of proposed Southline project rating interfaces

PERFORMANCE CRITERIA, RELIABILITY STANDARDS AND REFERENCES

This study will determine any thermal overloads and/or voltages outside criteria for the different cases evaluated. This study will be conducted by simulating NERC/WECC Category A, B, C & D contingencies. Performance of the transmission system will be measured against WECC's System Performance Criteria and NERC's Reliability Standards. These documents are referenced below:

1. TPL-001-0.1 - System Performance Under Normal (No Contingency) Conditions (Category A);
2. TPL-002-0b - System Performance Following Loss of a Single Bulk Electric System Element (Category B);
3. TPL-003-0a - System Performance Following Loss of Two or More Bulk Electric System Elements (Category C);
4. TPL-004-0 - System Performance Following Extreme BES Events (Category D); and
5. TPL-001 thru 004-WECC-1-CR - System Performance Criteria.

Links to these reference documents are provided below.

1. http://www.nerc.com/files/TPL-001-0_1.pdf
2. http://www.nerc.com/files/TPL-002-0b.pdf
3. http://www.nerc.com/files/TPL-003-0a.pdf
4. http://www.nerc.com/files/TPL-004-0.pdf

5. http://www.wecc.biz/library/Documentation%20Categorization%20Files/Regional%20Criteria/TPL-001%20through%20004%20-WECC-1-CR%20-%20System%20Performance%20Criteria%20Effective%20April%2018%202008.pdf

Key excerpts of the criteria and reliability standards to be used in this study are given below.

1. WECC System Performance Criteria Table W-1 and Figure W-1 address transient and post-transient voltage and frequency deviations that are allowed on other systems. Table W-1 (WECC's Disturbance-Performance Table of Allowable Effects on Other Systems) and Figure W-1 (Voltage Performance Parameters) are found in Appendix 4.
2. NERC Reliability Standards describe acceptable system performance standards and apply to all systems. Table 1 (Transmission System Standards – Normal and Contingency Conditions) from the NERC Reliability Standards is found in Appendix 3.

PLAN OF SERVICE

The Southline Project is comprised of two (2) transmission segments. These segments include the addition of the Afton-Apache 345 kV double circuit and the upgrade of Western Area Power Administration's existing 115 kV line to a 230 kV double circuit line between Apache and Saguaro/Tortolita. The plan of service for these two transmission segments is described below.

Southline Segment 1: Afton-Apache 345 kV double circuit

Afton Substation

The proposed eastern interface of the Southline Project is the existing Afton substation (owned by El Paso Electric). Modifications made to Afton for the proposed Southline Project include the looping of the existing Luna-Diablo 345 kV Line into Afton Substation.

Under the proposed plan of service, the existing (in-service) Luna-Diablo 345 kV line will be looped into the Afton Station creating a second Luna-Afton 345 kV line and a second Afton-Diablo 345 kV line. Figure 2 below shows estimated circuit distances prior to and subsequent to looping the existing Luna-Diablo 345 kV line into the Afton station.

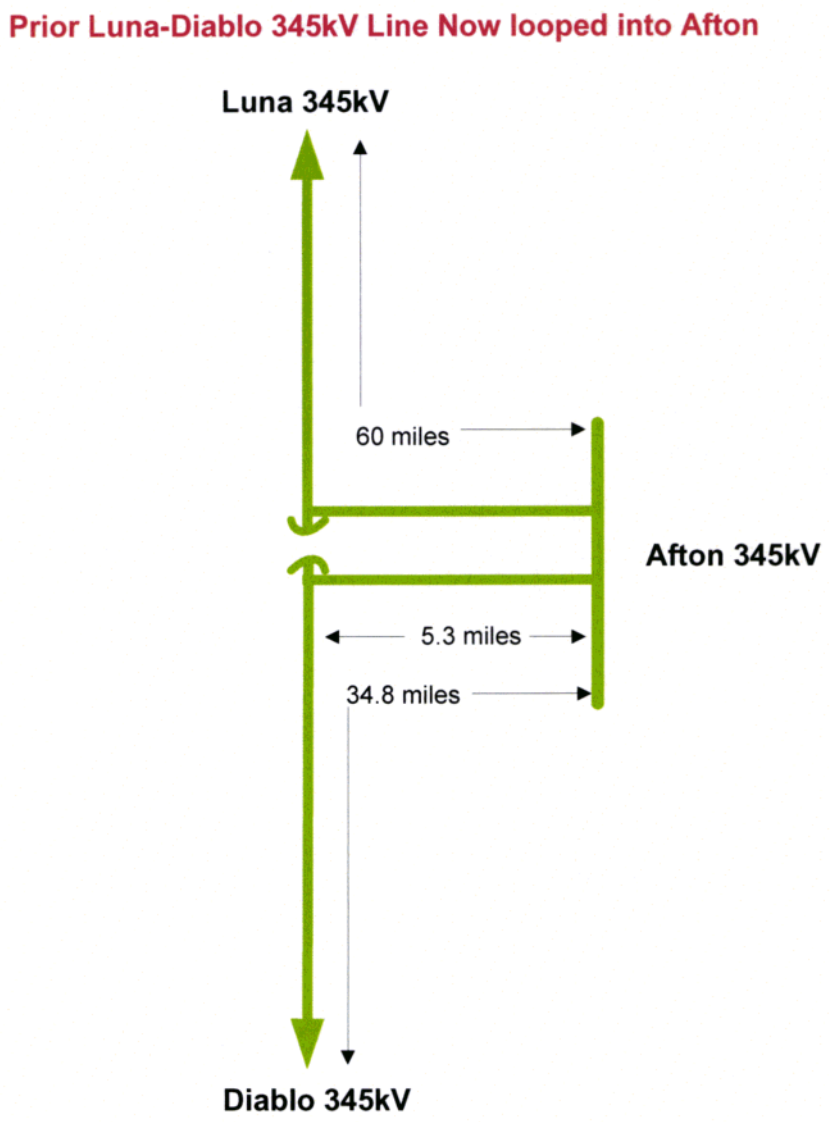

Figure 2: Sketch of proposed Luna-Diablo 345 kV Line looped into Afton

The Luna-Diablo 345 kV line is currently constructed with double-bundled 954 ACSR Corncake conductor. The 5.3 mile line section that completes the loop into the Afton station was assumed to also be double-bundled 954 ACSR. Note that the two new portions running to the station from the existing line will not be located on the same towers.

Afton 345 kV Phase-Shifting Transformers

Under the proposed plan of service, two (2) independent phase-shifting transformers would be installed in parallel at the Afton station. Each phase shifter will have a phase angle shifting capability of +41/-57 degrees, a continuous rating of 530 MVA and short-term (2 hour) emergency rating of 992 MVA. The two phase-shifting transformers will be installed in series with the Afton-Midpoint #1 and #2 345 kV lines as shown in Figure #3 below. The final specifications for the construction of the Afton 345kV phase shifting transformers will be based on the conclusions of this study.

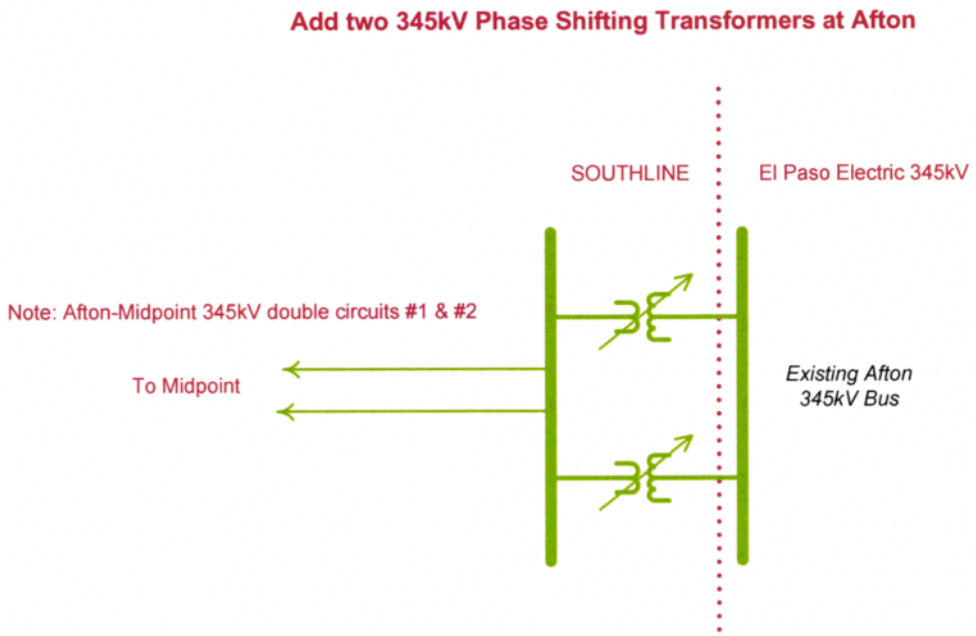

Figure 3: Sketch of Proposed Afton Phase Shifters

Afton-Midpoint 345 kV #1 and #2 Lines

The Southline Project includes construction of two (2) new 345 kV circuits on double circuit towers from the existing Afton substation to the proposed Southline Midpoint substation (approximately 70 miles each). Each new line circuit will have 50% series compensation and 90% line shunt reactive compensation. Each substation (Afton and Midpoint) will house half of the total series line compensation.

Midpoint 345 kV Substation

The layout of the proposed Southline Midpoint station will include the necessary station equipment to tie in the Afton-Midpoint #1 and #2 345 kV lines, Hidalgo (Southline)-Midpoint #1 and #2 345 kV lines, and reactive compensation equipment described above. If the Midpoint Spur option is exercised, the proposed Southline Midpoint station will also include the necessary station equipment to tie the Midpoint-Midpoint South #1 and #2 345 kV lines.

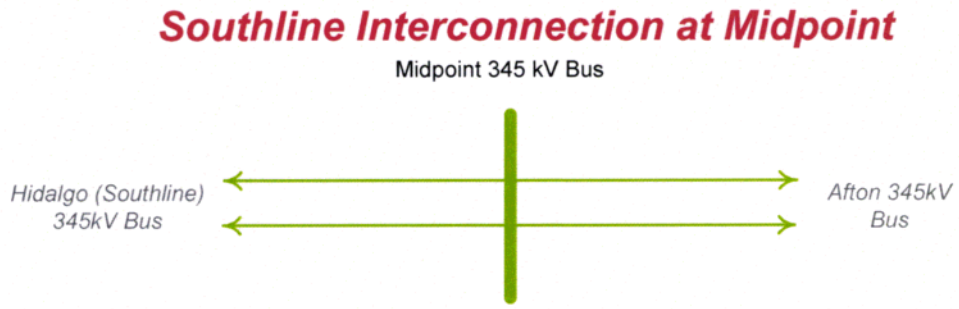

Figure 4: Sketch of Proposed Midpoint Substation

Midpoint-Midpoint South 345kV #1 and #2 Lines (Possible 345 kV Spur)

Possible permitting and routing of the Southline Project could result in the need for an approximately 30 mile long spur line to access potential resources. A Midpoint 345kV substation will be modeled in the vicinity of the existing 345kV lines, with a 30 mile double circuit 345kV spur line to a Midpoint South station modeled to access potential generation sources. Each new line circuit will have 90% line shunt reactive compensation.

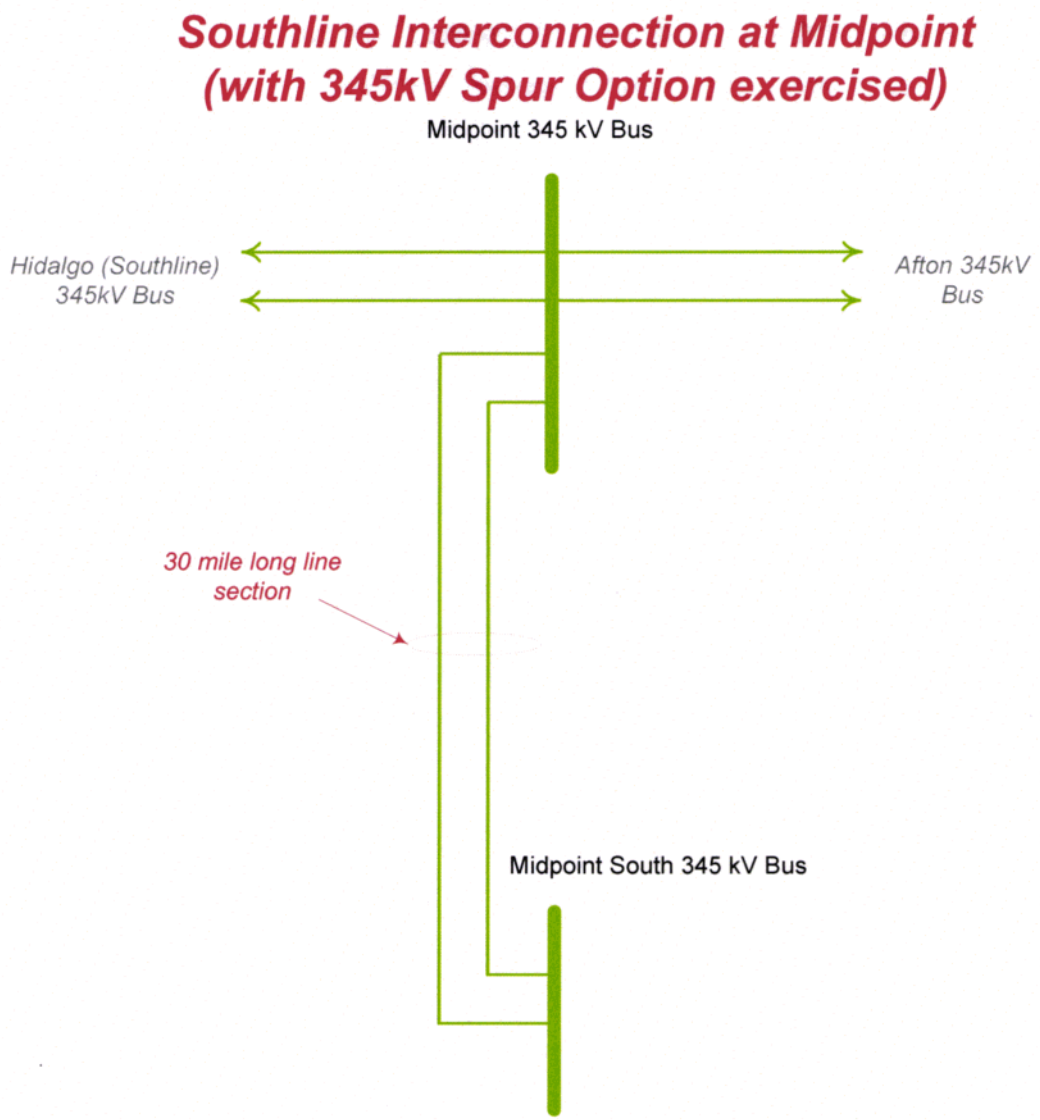

Midpoint-Hidalgo (Southline) 345 kV #1 and #2 Lines

The Southline Project includes construction of two (2) new 345 kV circuits on double circuit towers from the proposed Southline Midpoint substation to the proposed Southline Hidalgo substation located in close proximity to the existing Hidalgo substation (91 miles each) with 50% series compensation and 90% line shunt reactive compensation. Each substation (Midpoint and Hidalgo) will house half the total series line compensation.

Hidalgo (Southline)-Apache (Southline) 345 kV #1 and #2 Lines

The Southline Project includes construction of two (2) new 345 kV circuits on double circuit towers from the proposed Southline Hidalgo substation to the proposed Southline Apache substation located in close proximity to the existing Apache substation (85 miles each) with 50% series compensation and 90% line shunt reactive compensation. Each substation (Hidalgo and Apache) will house half of the total series line compensation.

Hidalgo 345 kV Substation (Southline)

The Southline Hidalgo substation is proposed to be located in close proximity to El Paso Electric's existing Hidalgo substation. A bus tie could be installed between the two stations. The tie breaker would need to be operated opened under normal conditions; however, it could be operated closed (or automatically switched) in emergencies to assist existing load serving entities. Station layout includes the necessary station equipment to tie the new Southline Hidalgo substation to the existing Hidalgo substation and terminate four 345 kV lines (Hidalgo-Midpoint #1 and #2 345 kV lines and Apache-Hidalgo #1 and #2 345 kV lines).

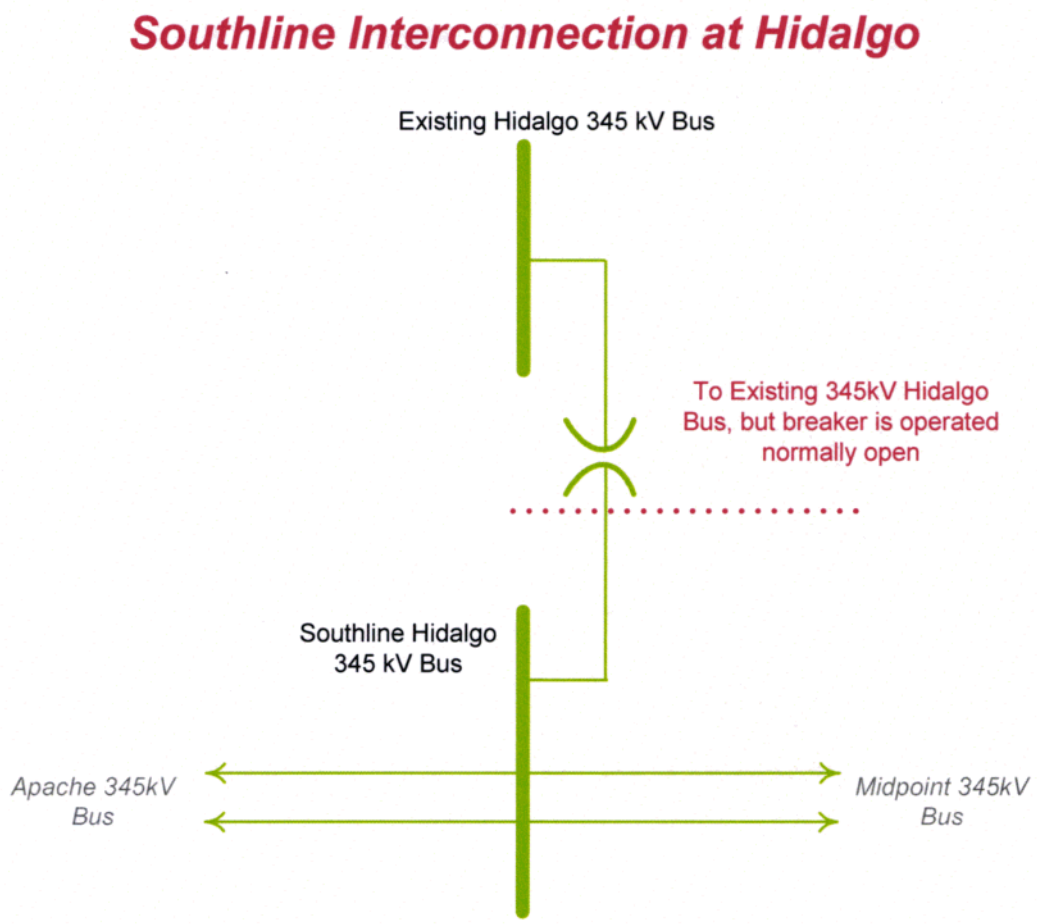

Figure 5: Sketch of Proposed Southline Hidalgo Substation

Apache Substation

The Southline Apache substation is proposed to be constructed in close proximity to the existing Southwest Transmission Cooperative owned Apache substation. A 230 kV bus tie could be installed between the two stations. The tie breaker would need to be operated open under normal conditions; however, it could be operated closed in emergencies to assist existing load serving entities.

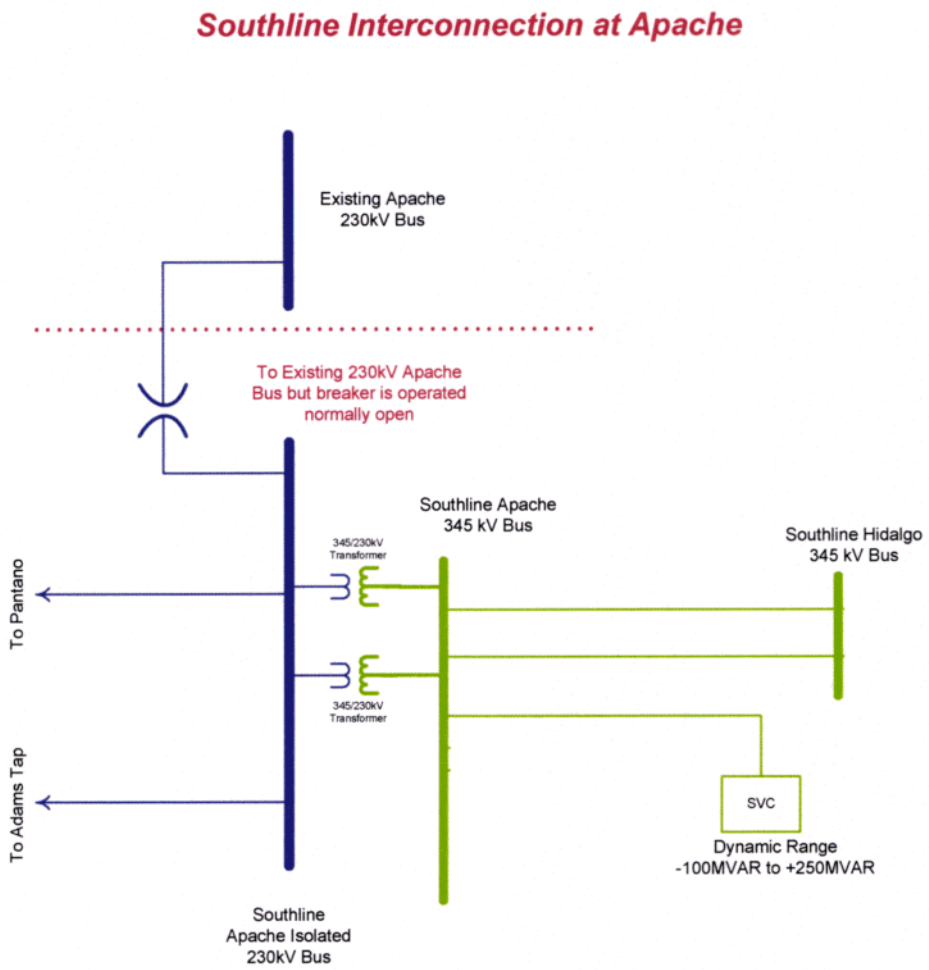

Figure 6: Sketch of Proposed Southline Apache Substation

The station layout includes the necessary station equipment to create a tie between the new Southline Apache substation and the existing Apache substation, terminate the Apache-Hidalgo #1 and #2 345 kV Lines, the Apache-Adams and Apache-Pantano 230 kV Lines, and interconnect two 345/230 kV 650 MVA/1150 MVA Transformer banks. In addition, the Apache Station will have necessary 345 kV bays to tie in the required reactive support described in the next section.

Apache Static VAR Compensator

At the Apache 345 kV bus, an SVC, with a dynamic range of -100 MVArs to +250 MVArs, will be modeled as part of the Phase 2 study to aid in boosting and bucking voltage in the transient time frames. The final specifications for the construction of the SVC will be based on the conclusions of this study.

Southline Segment 2: Apache-Saguaro/Tortolita 230kV Double Circuit

The second segment of the Southline Project, between Apache and Saguaro, will be an upgrade of Western's existing 115 kV line to a 230 kV double-circuit line. Given the many substation interconnections for each upgraded 230 kV circuit, the plan of service for each circuit segment is provided separately.

Apache-Pantano-Vail-Tucson-Tortolita 230 kV Line (Southline Segment 2; Circuit 1)

Segment 2, Circuit 1 will be a new 230 kV line between Southline's facilities near the existing Apache and Tortolita stations with intermediate interconnections at Pantano, Vail, and Tucson stations.

Pantano

The Southline transmission upgrades to Southwest Transmission Cooperative's Pantano substation will include the necessary station equipment to interconnect the Apache-Pantano and Pantano-Vail 230 kV lines to the existing 230kV bus.

Vail

The Southline transmission upgrades to Tucson Electric Power's Vail Substation will include the addition of two 345/230 kV 600/700 MVA transformers and the necessary station equipment to interconnect the Pantano-Vail and Vail-Tucson 230 kV lines.

Tucson

The Southline transmission upgrades to Western Area Power Administration's Tucson Substation will include the necessary station equipment to interconnect the following: Tucson-Tortolita, Tucson-Vail, Tucson-Del Bac, and Tucson-Rattlesnake 230 kV lines; a 230kV line to Tucson Electric Power's DMP substation; and a single 230/115 kV 287/300 MVA transformer bank.

DMP

The Southline transmission upgrades to Tucson Electric Power's DMP Substation will include the necessary station equipment to interconnect the Tucson-DMP 230 kV Line as well as two 230/138kV 525/615 MVA transformers.

Tortolita

The Southline transmission upgrades to Tucson Electric Power's Tortolita Substation will include the necessary station equipment to interconnect the Tucson-Tortolita 230 kV Line as well as a single 500/230 kV 598 MVA transformer.

Apache-Adams--Nogales-Del Bac-Tucson-Rattlesnake Marana-Southline Saguaro 230 kV Line (Segment 2, Circuit 2)

Segment 2, Circuit 2 will be a new 230 kV line between Southline's facilities near the existing Apache and Saguaro stations with intermediate interconnections at the Adams, Nogales, Del Bac, Tucson, Rattlesnake, and Marana stations.

Adams

The Southline transmission upgrades to Western Area Power Administration's Adams substation will include the necessary station equipment to interconnect the Apache-Adams and Adams-Nogales 230 kV lines plus the addition of a single 230/115 kV 287/300 MVA transformer bank.

Nogales

The Southline transmission upgrades at Western Area Power Administration's Nogales Substation include the necessary station equipment to interconnect the Adams-Nogales and Nogales-Del Bac 230 kV line.

Del Bac

Del Bac is an optional station stop for the Southline Project. If it does become a part of the Southline Project, the Southline transmission upgrades at Del Bac Substation would include the necessary station equipment to interconnect the Nogales-Del Bac and Del Bac-Tucson 230 kV lines.

Tucson

See upgrades noted in the circuit one description above.

Rattlesnake

The Southline transmission upgrades at Western Area Power Administration's Rattlesnake Substation will include the necessary station equipment to interconnect the Tucson-Rattlesnake and Rattlesnake-Marana 230 kV lines plus a single 230/115 kV 287/300 MVA transformer bank.

Marana

The Southline transmission upgrades at or near Southwest Transmission Cooperative's Marana Substation will include the necessary station equipment to interconnect the Rattlesnake-Marana and Marana-Western Saguaro 230 kV lines plus a single 230/115 kV 287/300 MVA transformer bank. An additional simultaneous sensitivity will be modeled and run at the request of Southwest Transmission Cooperative modeling the addition of a second Marana 230/115 kV 287/300 MVA transformer bank.

Southline Saguaro

A new Southline Saguaro substation will be constructed near Arizona Public Service's Saguaro station and will include a 230kV bus, 115kV bus, and two 420MVA 230/115kV transformers. Four new transmission lines will terminate at the Southline Saguaro station including:

1. Southline Saguaro-Marana 230kV line,
2. Southline Saguaro-APS Saguaro West 115kV line,
3. Southline Saguaro-APS Saguaro East 115kV line and
4. Southline Saguaro-ED5 115kV line.

The existing ED5-APS Saguaro West 115kV line will be looped into the Southline Saguaro 115kV bus creating the new Southline Saguaro-ED5 and the Southline Saguaro-APS Saguaro West 115kV lines.

The Southline transmission upgrades at Arizona Public Service's Saguaro Substation will include the necessary station equipment to terminate the Southline Saguaro-Saguaro West and the Southline Saguaro-Saguaro East 115kV lines.

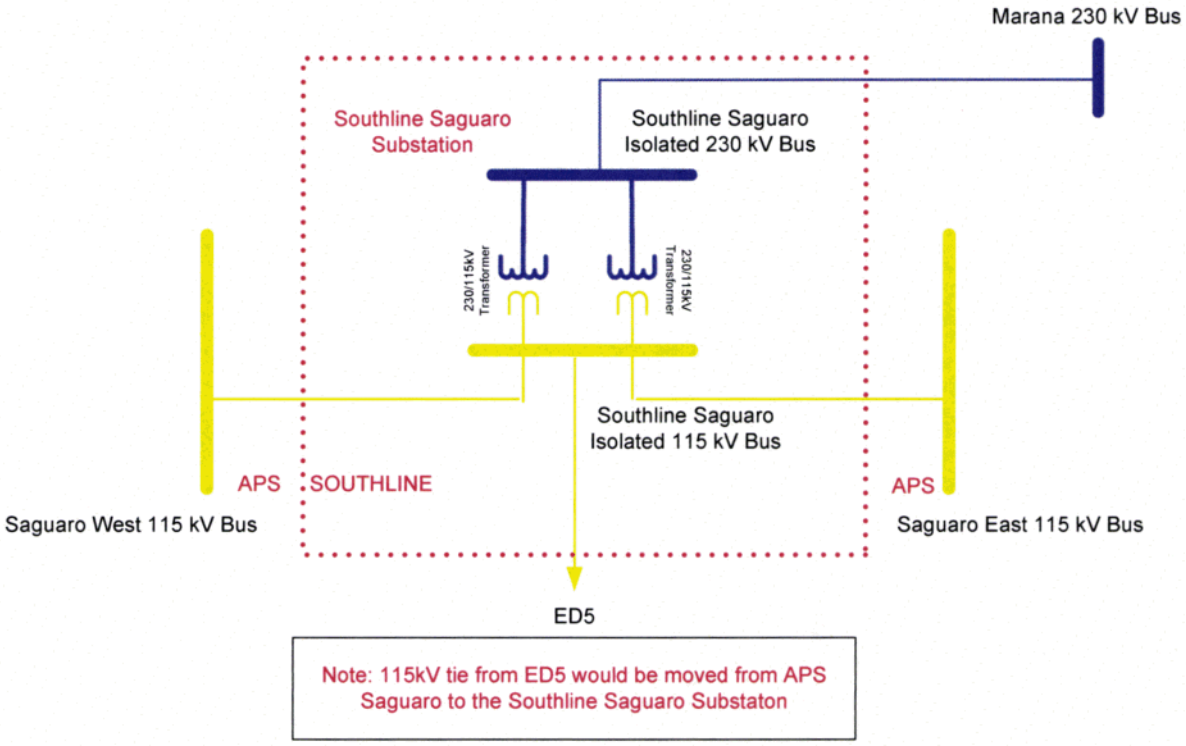

Figure 7: Proposed Saguaro Substation Modifications

PLANNED IN-SERVICE DATE

The Southline Project is planned to be in service 1st Half 2016.

Project Milestone Schedule[2]

1. Complete WECC Phase 2 Comprehensive Progress Report 1st Half 2013
2. Complete Environmental Studies/Permitting/Approval 1st Half 2014
3. Commission and Operation 1st Half 2016

BASE CASE DEVELOPMENT

Power flow cases will be obtained from WECC representing the planning horizon required. PRG members requested the use of both heavy summer and heavy winter cases for the proposed Southline interfaces as indicated in Table AAA below.

[2] Pleases see page 27 for a detailed schedule for Phase 2 study deliverables.

TABLE AAA			
#	Southline Interfaces to be Studied	Direction of Power Flow on Southline Project	Season of Case to be Studied
1	Afton West	East-to-West	Heavy Summer
2	Apache West		
3	Tortolita/Saguaro East	West-to-East	Heavy Winter
4	Apache East		

As requested by the PRG, the two cases that will be selected from WECC's base case library are:

1. 15hw2a.sav – 2014-15 Heavy Winter Planning Case created in 2010, and
2. 15hs2a.sav – 2015 Heavy Summer Planning Case created in 2010.

These WECC cases will be further modified to create the base cases to be used for the Phase 2 studies. The anticipated topology modification's include, but are not limited to, the following:

1. The network topology will be adjusted in the cases to help ensure correct models of existing and planned facilities are included. Case updates will be sought from the PRG members, particularly El Paso Electric (EPE), Public Service of New Mexico (PNM), Arizona Public Service (APS), Tucson Electric Power (TEP), Western Area Power Administration (WAPA), Southwest Transmission Cooperative, Inc. (SWTC) and Salt River Project (SRP).
2. Planned future transmission projects with either a WECC Phase 2 or Phase 3 Rating will be modeled in the power flow cases if applicable. Some of the projects in the WECC Phase 2 or Phase 3 Rating process are modeled in the base cases directly from WECC while others are not. Table E in Appendix 5 includes the proposed projects to be incorporated into the cases while Table F in Appendix 5 identifies the projects to be excluded. Reasons for exclusion include lack of geographical and electrical proximity to the Southline Project and failure of the project to progress in a timely manner through Phase 2 of the Project Rating Review Process. Unless project data is unavailable, the planned future transmission projects meeting the above criteria with either a WECC Phase 2 or Phase 3 Rating will be modeled in the power flow cases. Given the SunZia project's timing and proximity, the Southline project will be studied with and without the SunZia project.
3. Some planned future generation projects will be considered for modeling in the power flow cases. In most cases, it will not be practical or appropriate to model every planned new generator. Several Large Generation Interconnection Queues from different organizations were reviewed for planned future generation projects that may be potentially incorporated into the cases. These organizations include: Salt River Project (SRP), El Paso Electric (EPE), Tri-State Generation and Transmission Association, Inc. (TSGT), Western Area Power Administration, Desert Southwest Region (WALC), Public Service of New Mexico (PNM), Tucson Electric Power (TEP), Unisource Energy (UNSE) and Arizona Public Service (APS). Table G in Appendix 6 provides a list of planned new generation projects for possible inclusion in the cases[3]. Final selection of the planned new generation projects to be represented in the Southline study base case will be based on the following criteria.

    - Generation projects must be located in New Mexico or Arizona and be interconnecting to the Western Interconnect to be represented.
    - Generation projects that are under construction will be represented;
    - Generation projects greater than 20 MW that have a completed System Impact Study and a completed Facilities Study with their hosting utility or that have received regulatory approval may be represented if needed to achieve the proposed Project ratings;

[3] Generation listed in Table G of Appendix 6 may not represent specific projects in any utility queue. It represents the potential for generation to site in the utility respective areas and is assumed to be an amalgamation of multiple plants by several different owners.

4. The SunZia transmission project and the renewable generation interconnecting to the SunZia E station will be modeled in-service or out-of-service as a topology permutation.
5. The reconductoring of the Tucson-Oracle 115kV transmission line by Western Area Power Administration will be modeled in-service or out-of-service as a topology permutation.
6. An additional simultaneous sensitivity will be modeled and run at the request of Southwest Transmission Cooperative modeling a second Marana 230/115 kV 287/300 MVA transformer bank.
7. The Midpoint 345kV spur will only be modeled out-of-service or in-service as a non-simultaneous topology sensitivity.
8. The Bowie generation project will be modeled on-line at 350MW except for cases modeling the Bowie at 1000 MW as a topology permutation. If the existing or Southline paths cannot be loaded to their maximum simultaneous levels, Bowie generation levels may need to be decreased.
9. Expected solar generation interconnecting in around the Southline project will be modeled in all cases that include the Southline transmission upgrades.
10. Re-configuration of the Southline's interconnection to Saguaro via Western's proposed new Southline Saguaro station.
11. Any other pertinent modifications identified by the PRG members that reflect system conditions prior to the in-service date of the Southline project.

From each source WECC cases, a group of eight non-simultaneous cases will be created representing the different topology permutations as indicated in Table AA below:

TABLE AA –NETWORK TOPOLOGIES PERMUTATIONS

Case	Southline Project	SunZia Project	Tucson-Oracle 115kv Line Reconductor Project (Note 1)
1	Out-of-Service	In-Service	w/ Reconductored Line
2			w/o Reconductored Line
3		Out-of-Service	w/ Reconductored Line
4			w/o Reconductored Line
5	In-Service	In-Service	w/ Reconductored Line
6			w/o Reconductored Line
7		Out-of-Service	w/ Reconductored Line
8			w/o Reconductored Line

Note 1 – From studies completed to date, it is known the Tucson-Oracle Reconductor Project increases the Tortolita/Saguaro Interface capability when power is flowing in the West-to-East direction. As a result, the Tucson-Oracle Reconductor Project will only be modeled in cases with West-to-East flows on the Southline project and not cases with East-to-West flows.

The Heavy Summer cases will be utilized to create the cases with East-to-West flow from New Mexico to Arizona. Similarly, the Heavy Winter cases will be utilized to create the cases with West-to-East flow from Arizona to New Mexico.

Unless technically infeasible, cases will be developed for the potential simultaneous interactions identified in Table A below.

Two definitions of Path 47 (Southern New Mexico) will be used in this study plan. The first definition will consist of the existing WECC accepted definition. Second, the definition of Path 47 will be modified to include two SunZia South/Luna 345/115kV transformers. To be prepared for either eventuality, simultaneous interactions between Southline and the existing definition of Path 47 as well as the possible new definition of Path 47 will be studied.

A group of comprehensive "Parallel Path 10% Screen test" studies have been completed. Based on the Parallel Path 10% Screen test protocol, the results showed no interaction between Southline and Path 48 (Northern New Mexico). The results also showed a marginal interaction between Southline and Path 23 (Four Corners 345/500 kV). In fact, only a select few Southline project contingencies increased Path 23 flows to just 10%. The "Parallel Path 10% Screen test" studies results were presented to the PRG. The PRG concluded that simultaneous interaction studies for Southline verses Path 23 or 48 were

unnecessary. Consequently, only studies of the simultaneous interaction between a) Southline and Existing Path 47, b) Southline and Sunzia's Modified Path 47 definition, and c) Southline and SunZia East to West-3000MW will be performed.

The Midpoint 345kV Spur will only be reviewed in cases representing Southline project flows east-to-west direction. For this topology with 1000MW of generation tied to Midpoint South 345kV Substation, only non-simultaneous post-transient studies will be performed.

The Tucson-Oracle 115kV Line Reconductor Project will be modeled in simultaneous analysis as indicated in Table A.

TABLE A – POTENTIAL SIMULTANEOUS INTERACTIONS

#	Southline Flow Direction	Potential Simultaneous Path			SunZia Modeled	Tucson-Oracle 115kV Line Reconductored	2nd Marana 230/115kV Transformer	Bowie Gen (MW)
		#	Description	Import or Export				
1	East to West	47	Southern New Mexico	Import	No	No	No	350
1m	East to West	47	Southern New Mexico	Import	No	No	Yes	350
2	West to East	47	Southern New Mexico	Import	No	No	No	350
2m	West to East	47	Southern New Mexico	Import	No	No	Yes	350
7	East to West	47	Southern New Mexico	Import	Yes	No	No	350
7m	East to West	47	Southern New Mexico	Import	Yes	No	Yes	350
8	West to East	47	Southern New Mexico	Import	Yes	No	No	350
8m	West to East	47	Southern New Mexico	Import	Yes	No	Yes	350
11	East to West	SunZia	SunZia E-S Path	Export	Yes	No	No	350
11m	East to West	SunZia	SunZia E-S Path	Export	Yes	No	Yes	350
12	West to East	SunZia	SunZia E-S Path	Export	Yes	No	No	350
12m	West to East	SunZia	SunZia E-S Path	Export	Yes	No	Yes	350
16	West to East	47	Southern New Mexico	Import	No	Yes	No	350
16m	West to East	47	Southern New Mexico	Import	No	Yes	Yes	350
22	West to East	47	Southern New Mexico	Import	Yes	Yes	No	350
22m	West to East	47	Southern New Mexico	Import	Yes	Yes	Yes	350
26	West to East	SunZia	SunZia E-S Path	Export	Yes	Yes	No	350
26m	West to East	SunZia	SunZia E-S Path	Export	Yes	Yes	Yes	350
37	East to West	47ALT	Sth New Mexico-Note 1	Import	Yes	No	No	350
38	West to East	47ALT	Sth New Mexico-Note 1	Import	Yes	No	No	350
39	West to East	47ALT	Sth New Mexico-Note 1	Import	Yes	Yes	No	350

Notes:

Note 1 – Path 47's definition will potentially be modified as part of the SunZia Project to include all the transmission elements in the existing Path 47 definition plus the addition of two SunZia South/Luna 500/345kV Transformers. This alternative Path 47 definition will be used for the referenced simultaneous interaction studies.

SunZia representatives, who are also members of the PRG, have requested SunZia project generation to be dispatched at 1000 MW in the heavy summer cases and 1200 MW in heavy winter cases. In response to the request, Southline indicated that efforts would be made to dispatch SunZia project generation as requested where possible; however, there are conditions where adhering to the request may not be achievable. These include, but are not limited to, the following:

1. In cases where the SunZia transmission project is not modeled, the requested SunZia generation dispatch is not possible. Example of these studies, where the SunZia transmission project is not modeled, is included simultaneous interactions 1 2 and 16 in Table A above.

2. In the cases developed for the simultaneous interaction between the Southline and the SunZia transmission project, the requested SunZia generation dispatch will not be accommodated. Incrementing or decrementing SunZia generation is the only way to vary the flows on the SunZia Path, and the flows on the SunZia path must be varied for the simultaneous studies. See simultaneous interactions 11, 12 and 26 in Table A.
3. In the case permutations where the SunZia transmission project is modeled and the SunZia path is not a focus of the studies, attempts will be made to adhere to the requested SunZia generation dispatch. For these studies, there are conditions where SunZia generation may be backed down. These conditions include:
    - Conditions where the SunZia generation dispatch is limiting the derived simultaneous limit for Southline, Path 47, or the alternative Path 47. See Simultaneous Interactions 7, 8, 22, 37, 38, and 39 in Table A above, and
    - Conditions where SunZia generation is limiting the derived non-simultaneous limit for Southline.

For each potential simultaneous interaction identified, up to a total of twenty cases could be constructed. Table B provides an accounting of the possible cases to be developed for each simultaneous interaction identified in Table A above. See Table H in Appendix 7 for a full list of the possible cases to be developed.

TABLE B – POSSIBLE CASES TO BE DEVELOPED FOR SIMULTANEOUS INTERACTIONS

#	Southline	Study Activity	Case Count	NOTES
1	In-Service	Power Flow Contingency Analysis	1 <= Count <= 3	If both Southline and the parallel path can be dispatched at their Non-Simultaneous Limit concurrently without any criteria violations, only one case is required. If not, two cases are required.
2		Reactive Margin Test	1 <= Count <= 6	Count is dependent on the number of cases developed for power flow contingency analysis. Category B and C tests will be performed on the case with the 105% interface increase. The 102.5% interface increase case will only be developed if a Category C outage doesn't solve with the 105% interface increase case.
3		Transient Stability Analysis	1 <= Count <= 3	These cases will essentially be the same as the power flow contingency analysis cases except that they will include minor modifications to achieve a stable initialization and flat run.
4	Out-of-Service	Power Flow Contingency Analysis	Count <= 2	Only developed and studied on an as needed basis to determine if a criteria violation is a pre-existing issue or caused by Southline.
5		Reactive Margin Test	Count <= 4	
6		Transient Stability Analysis	Count <= 2	

To help achieve the power flows on the paths to be studied as part of the non-simultaneous and simultaneous analysis, existing generation will be re-dispatched in the cases in accordance with the WECC path rating procedures. Efforts will be made to keep existing generation within historically dispatched ranges; however, alternative generation dispatches may be developed to support target path flows. Absolute generation dispatch limitations will be observed (e.g. a generating unit will not be dispatched online if it is due to be retired prior to 2015).

Attempts will be made to confine generation changes to New Mexico and Arizona. In cases with east-to-west flows on the Afton West and Apache West interfaces, generation will typically be increased in New Mexico and decreased in and around the Palo Verde/Hassayampa area. In cases with west-to-east flows on the Tortolita/Saguaro East and Apache East interfaces, generation will typically be increased west of Southline and decreased in New Mexico. To achieve desired flows on existing paths for simultaneous studies, generating units outside of New Mexico and Arizona may need to be re-dispatched.

Additionally, during the course of developing the Foundational Base Case it was noted that interconnecting Afton generation west of the phase shifter results in higher simultaneous rating performance with regards to Southline and Path 47. All cases modeling the Southline Project with power-flows in the east-to-west direction employ this generation interconnection change. Please see the sketch shown in Figure 8 which graphically depicts these generation interconnection details.

Afton Generation Interconnection Assumption

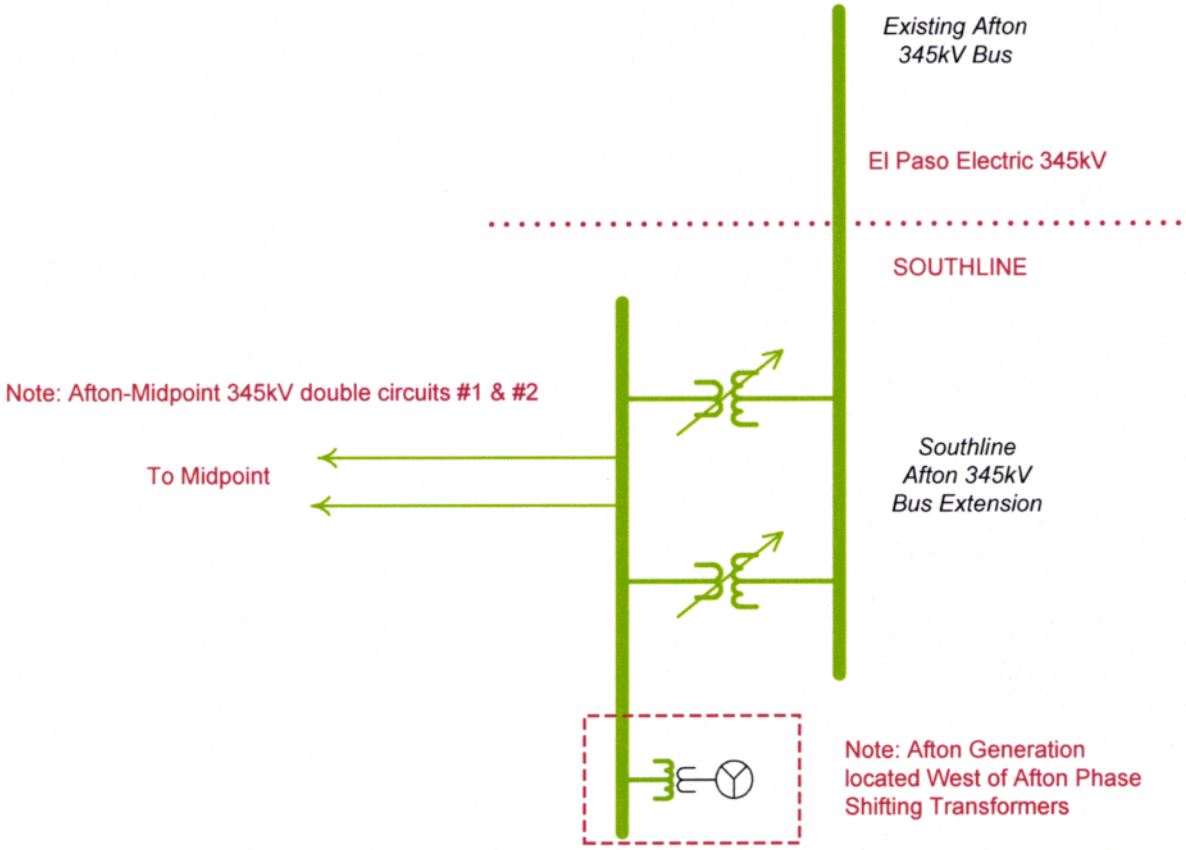

Figure 8: Afton Generation Interconnection Assumptions

Typically, generation dispatch changes will be made prior to any load adjustments. To help achieve the desired flows on the Afton West, Apache West, Tortolita/Saguaro East and Apache East interfaces, load adjustments may be made if requested by the PRG or if all generation dispatch alternatives are exhausted. In general, load adjustments will be kept with the typical range for the year, season, and time period of the original cases obtained from WECC.

In addition to generation dispatch and load changes, phase shifter set point and transmission lines series compensation adjustments will be adjusted to achieve the desired Southline Project transfers. The voltage profile in each case will be reviewed and adjusted where deemed appropriate by adjusting generation voltage schedules, synchronous condenser voltage schedules, capacitors, and static VAr compensators. Synchronous condensers and static VAr compensators will be set at the middle of their reactive range for steady-state operation, unless otherwise noted.

Foundational Base Case

The Foundational Base Case is defined to be the first base case developed by the project sponsor (Southline) that would be ready for the first simultaneous assessment as agreed to by the PRG. Southline will be circulating the Foundational Base Case for review and subsequent agreement by PRG members. Southline's first simultaneous assessment will involve existing Path 47 (Southern New Mexico Imports) with Southline Project flows in the east-to-west direction. This first simultaneous assessment will not include the SunZia Project, nor will it model the Tucson-Oracle 115 kV line reconductor. Additionally, it should also be noted for this first analysis the Path 47 path definition will utilize the accepted WECC Path 47 definition, without the SunZia Project's Luna 500/345 kV transformer banks.

STUDY METHODOLOGY

Post-Transient Power Flow Studies

Post-transient power flow analysis will be used to evaluate the performance of the Southline Project's impacts and benefits on neighboring control areas as well as existing/planned parallel paths. Post-transient power flow analysis under normal and contingency conditions will be conducted with Version 18 of General Electric's (GE) Positive Sequence Load Flow (PSLF) software. The studies will be performed on the cases as described above.

Conditions to be evaluated include:

1. Category A - Normal conditions with all transmission and generation equipment in service,
2. Category B - Single transmission element outages, and
3. Category C - Multiple transmission element outages (typically two)
4. Corridor outages (as requested by PRG).

Under Category A conditions, the following solution techniques will be employed.

1. All transformer tap changer under load (TCUL) equipment will be allowed to regulate voltage (unless utility owners specifies differently).
2. All generators and synchronous condensers will be allowed to regulate voltage.
3. All switched shunt capacitors and reactors will be allowed to regulate voltage (unless utility owners specifies differently).
4. All phase shifters will be allowed to regulate power flow.
5. Area interchange control will be enabled to maintain interchange flows as scheduled.
6. DC converter control will be enabled.

Following a Category B, C and D contingency, true post-transient governor-power flow solution techniques will be utilized. The solution techniques used will include the following.

1. All transformer TCULs will be locked at their pre-contingency tap position unless they would automatically operate in the 0-3 minute time frame. For this study, it will be assumed that no TCULs will operate in the first three minutes following a disturbance (unless utility owners specifies differently. Table L in Appendix 11 lists such equipment.);
2. All switched shunt capacitors and reactors will be locked in the pre-contingency configuration unless they would automatically operate in the 0-3 minute time frame. For this study, it will be assumed that no shunt capacitors or reactors will operate in the first three minutes following a disturbance (unless utility owners specifies differently. Table L in Appendix 11 lists such equipment.);
3. All phase shifters will be locked at the pre-contingency phase angle, unless they would automatically operate in the 0-3 minute time frame. Unless otherwise noted, it will be assumed that no phase shifters will operate in the first three minutes following a disturbance;
4. RAS, SPS or LAPS control actions will be implemented. It is assumed that all RAS ,SPS and LAPS control actions operate in the first few seconds following an outage;
5. All generators with active governors will share any generation deficiency or surplus in proportion to each generator's maximum generating capability. Once a generator reaches its minimum or

maximum output, it will not pick up or reduce output any further. Any remaining generation deficiency or excess will be distributed among the remaining units with active governors.

6. Select generators, StatCons, and SVCs, which automatically control a remote bus voltage, will continue to control this remote bus voltage. Table L in Appendix 11 lists such equipment. All other units will be modified so that they control their own terminal voltage.
7. DC converter control will be enabled.

Reporting of normal and emergency thermal overloads, low voltages, high voltages, and voltage deviations under Category A, B, and C conditions will be limited to conditions where the transmission system is operating outside WECC's System Performance Criteria, NERC's Reliability Standards or the other applicable criteria for the specific area. For reporting purposes, the criteria used for Category C disturbances will also be utilized for Category D disturbances. See the "Performance Criteria, Planning Standards and References" section above.

Unless otherwise noted, reporting of transmission line and transformer loading will be limited to circumstances where a modeled transmission component is loaded at 75% or greater of its appropriate rating (as entered in the power flow database). Normal ratings will be utilized for Category A conditions and emergency ratings will be utilized for Category B, C and D conditions.

Unless otherwise noted, reporting of bus voltages under Category A conditions will be limited to bus voltages greater than (or equal to) 1.05 PU or less than (or equal to) 0.95 PU. Reporting of bus voltages under emergency conditions will be limited to the following:

1. Bus voltages greater than or equal to 1.1 PU following Category B, C, and D contingencies;
2. Bus voltages less than or equal to 0.90 PU following Category B, C, and D contingencies;
3. Bus voltage deviations greater than or equal to 5% following Category B contingencies; and
4. Bus voltage deviations greater than or equal to 10% following Category C and D contingencies.

An exception is the reporting of buses with a base voltage of 500kV. Reporting of 500kV bus voltages under Category A conditions will be limited to bus voltages greater than (or equal to) 1.10 PU or less than (or equal to) 1.00 PU. Reporting of 500kV bus voltages under emergency conditions will be limited to the following:

1. Bus voltages greater than or equal to 1.10 PU following Category B, and C, and D contingencies; and
2. Bus voltages less than or equal to 0.95 PU following Category B, and C, and D contingencies;

Specific additional voltage criteria for Arizona, Nevada, Southern California, and New Mexico are provided in Table K in Appendix 10 and shall supersede the criteria above.

The Category B and C contingencies to be evaluated are defined in the "Contingency Development for Post-Transient Power Flow Studies" section below.

Contingency Development for Post-Transient Power Flow Studies

Except for generation outages and related interconnection equipment, outages of transmission facilities operating at or below 100kV will be excluded from evaluation. In addition, outages of transmission facilities serving radial load from one transmission source will be excluded. These outages will be excluded because the NERC Transmission Planning Standards, TPL-002-0 through TPL-004-0, are applicable only to the loss of Bulk Electric System (BES) elements. NERC's definition for the Bulk Electric System is provided below.

"Bulk Electric System (BES) Definition – As defined by the Regional Reliability Organization, the electrical generation resources, transmission lines, interconnections with neighboring systems, and associated equipment, generally operated at voltages of 100kV or higher. Radial transmission facilities serving only load with one transmission source are generally not included in this definition."

The type of Category B (events resulting in loss of single element) outages to be modeled include generator outages, transmission line outages, and transformer outages. The type of Category C (event or events resulting in the loss of two or more elements) outages to be modeled include bus section outages, breaker failure outages, and multiple circuit tower line outages. Category C outages of single element followed by subsequent manual system readjustment plus the outage of a second transmission element will not be studied. Table I in Appendix 8 comprises an initial set of critical Category B and C contingencies that will be evaluated in the post-transient power-flow analysis. This list will be expanded by the PRG to include the necessary outages (including Category D outages) to provide a more detailed analysis of the Southline project's interrelationship with other paths.

All Special Protection Schemes (SPS), Remedial Action Schemes (RAS) and Local Area Protection Schemes (LAPS) will be modeled for the contingencies (Category B, C or D) that initiate these schemes.

The estimated numbers of contingencies per base case for the power flow studies are provided in Table C below.

TABLE C - ESTIMATED CONTINGENCY COUNT BY CATEGORY AND EQUIPMENT TYPE[4]

#	TRANSMISSION ELEMENT(S)	CAT	ESTIMATED QUANTITIES	NOTES
1	All lines in service.	A	1	
2	Transmission Line.	B	< 1100	In-Service Transmission Lines in Areas 10, 11, and 14 with nominal voltages >= 100kV
3	Transformers.	B	< 300	In-Service Transformers in Areas 10, 11, and 14 with primary and secondary voltages >= 60kV
4	Generators	B	< 275	Online generating units in Areas 10, 11, and 14.
5	Double circuit transmission line on a common tower (DCTL) OR other common mode outages	C	To Be Determined by PRG	
6	Common Corridor Outages	D	To Be Determined by PRG	
Total			To Be Determined by PRG	

Power Flow Parallel Path Screening Studies

Power flow parallel path screening studies were performed to help identify potential simultaneous interactions with the Southline paths. Studies were conducted with PSLF software. Cases used to establish Southline's non-simultaneous ratings will be employed. The most critical outages used to establish the Southline non-simultaneous rating will be modeled, and flows on WECC transmission paths will be monitored. Parallel paths that pick up ten percent or more based on that parallel path's rating will be considered for simultaneous studies. The solution methodology employed for the post-transient studies will also be utilized for the parallel path screening studies.

Voltage Stability Studies (Post-Transient)

Voltage stability studies will be used to evaluate the performance of the Southline Project as well as its impacts to existing/planned WECC paths. The analyses under contingency conditions will be conducted with PSLF software. See Table H in Appendix 7 below for a list of potential cases to be studied. The Voltage Stability Studies will be conducted with the same pre-contingency and post-contingency solution methodology described in the "Post-Transient Power Flow Studies" section above.

Voltage Stability Studies (2-1/2% & 5% Reactive Margin Test)

[4] It should be noted that Phase 2 studies do not include modeling Category D disturbances.

For voltage stability studies, Southline path flows will be scaled up to 102.5% and 105% of the maximum achievable Southline transfer capability. Initially, the 105% path flow cases will be utilized when evaluating Category B, C and D contingencies. Post-contingency cases that converge have adequate reactive margin and meet the WECC Voltage Stability Criteria. Cases that fail to converge following Category B contingencies may not have adequate reactive margin and will be investigated further. If cases fail to converge following one or more Category C or D contingencies, cases modeling a path flow of 102.5% will be utilized to reevaluate the Category C or D contingencies. If the reevaluated outages converge, the cases have adequate reactive margin. If they don't converge, they will be examined further.

Contingency Definitions for Voltage Stability Studies

The contingencies to be evaluated as per the "Contingency Development for Post-Transient Power Flow Studies" section of this Study Plan will also be evaluated as part of the Voltage Stability Analysis. See Table B above for the estimated number contingencies to be studied per base case for the voltage stability studies.

Transient Stability Studies

In addition to the power flow and voltage stability studies previously described, transient stability analysis will be conducted to evaluate the performance of the Southline Project and to determine its impact on existing/planned parallel paths. Transient stability analysis evaluates the performance of the system over approximately 10 to 20 seconds following a system disturbance. For the system to be considered stable, the system should not oscillate excessively and generators should remain synchronized with one another after the simulated disturbance. Performance of the transmission system under transient conditions will be measured against the NERC Reliability Standards and the WECC System Performance Criteria.

All transient stability simulations will be conducted using version 18 of General Electric's PSLF/PSDS/SCSC software. See Table H in Appendix 7 for a list of the base cases to be used in these studies.

An overview of the transient stability studies is described below:

1. Tuning the power flow cases for transient stability analysis as indicated above in the "Base Case Development" section of the Study Plan;
2. Obtaining, modifying and tuning two separate transient stability dynamic data files for the cases as indicated in the "Dynamic Data Files" section below;
3. Creating disturbance files (also known as switch deck files) for each of the transient stability disturbances to be studied as described in the "Disturbance Development for Transient Stability Studies" section below;
4. Performing dynamic simulation runs and producing output "channel" files, which contain the system dynamic response over the timeframe of the simulation, as described in the "Dynamic Simulation" section below;
5. Reviewing the produced "channel" files as described in the "Channel File Processing" section below utilizing the WECC System Performance Criteria and NERC Reliability Standards; and
6. Creating time domain plots of selected system parameters for each simulated contingency.

Dynamic Data Files

Two dynamic data sets will be created: one for the Heavy Summer 2015 series of cases, and one for the Heavy Winter 2015 series of cases. Each dynamic data set will be updated so that all necessary changes associated with the projects added to the power flow cases are incorporated in the dynamic data files. If actual dynamic model data is not available for a future project, generic data appropriate for that type of project will be utilized.

The dynamic data files as well as the base cases will be adjusted so that the dynamic data initializes properly without any errors. Each set of dynamic data will be validated by performing a "flat run" or "no disturbance event" to demonstrate that all dynamic models have initialized to a steady state condition. The dynamic data will be validated further by performing a "bump test" disturbance that includes the

insertion of the 1400MW Chief Joseph braking resistor for 30 cycles. This disturbance will verify that the dynamic model data is acceptable by ensuring that the each model's response to this simulation is well damped.

Disturbance Development for Transient Stability Studies

Within Arizona and New Mexico, disturbances will be created for the different categories of outages per Table 1 of the NERC Reliability Standards. A separate disturbance or switch deck file (*.swt) will be created for each disturbance.

Generally, Category B, C and D disturbances will be created only for transmission elements that are considered part of the Bulk Electric System per NERC's definition. Typically, only 3Ø faults will be modeled since they are almost always worse than Single Line-to-Ground (SLG) faults. If the disturbance simulation using a 3Ø fault produces an unacceptable voltage or frequency response, the equivalent SLG fault disturbance may be modeled if allowed by the NERC Reliability Standards. Fault clearing times and other disturbance control actions (e.g. bypassing of series capacitors, insertion of shunt capacitors, etc.) will be coordinated with the applicable utility. Disturbances will be simulated at 1.0 second within a 20.0 second dynamic simulation.

Due to the time required to perform and post-process a transient stability analysis run, the number of Category B, C and D disturbances should be limited if possible. The following criteria will be utilized to reduce the number of Category B, C and D disturbances.

1. Radial transmission facilities serving only load with one transmission source regardless of the nominal operating voltage will not be studied.
2. Only disturbances of in-service transmission elements will be studied.
3. For transmission line outages, faults will be modeled only on one end of a transmission line.
4. A fault with normal clearing of a transmission element is generally considered more severe than loss of the same element without a fault[5]. Consequently, the simple loss of a transmission element without a fault will not be studied.
5. Faults on transformers will be modeled only on the high voltage side of the transformer.
6. Outages of a generation unit will only be run when the capacity of the generating unit is 100MW or more.
7. For Category B disturbances, if two (or more) identical transmission elements are in parallel, only one disturbance will be simulated.
8. For stations with multiple interconnecting transmission lines and/or transformers, only one transmission element disturbance will be modeled. Disturbances will not be modeled on the other elements interconnected to the station unless warranted or requested by the PRG.
9. A fault including the contingency loss of a transmission element followed by a system readjustment and a second fault with the contingency loss of second transmission element is a type of Category C disturbance that will not be evaluated as part of this study.
10. An internal fault of a breaker or a bus section fault can often result in the same transmission elements being cleared. It will be assumed that studying the internal fault of a breaker will be sufficient to meet the requirements to study a bus section fault. As a result, only one Category C circuit breaker internal fault will be modeled per bus section at a station. Internal faults of bus sectionalizing breakers, internal faults of bus tie breakers and bus section faults will not be studied.
11. A fault on the terminal of a transmission element (transformer, generator, and transmission line or bus section) with delayed clearing (assumed to be a failure of a terminal circuit breaker for the transmission element) can often result in the same transmission elements being cleared as an internal fault of the same terminal circuit breaker. Consequently, it will be assumed that studying the internal fault of a circuit breaker will be sufficient to meet the requirements to study a Category C disturbance including a fault of transmission element with delayed clearing.

[5] The exception to this rule is loss of monopole or bipole DC lines. For these DC line disturbances, the contingency will be simulated without applying a fault to the system.

12. Disturbances will typically not be modeled on distribution or sub-transmission elements with a nominal voltage below 100kV. One exception is the outage of a generation facility that is directly interconnected to the transmission system (with a nominal operating voltage of 100kV or higher) via a generation step-up transformer.

Table J in Appendix 9 comprises an initial set of critical Category B, C and D disturbances that will be evaluated in the transient stability analysis. This list will be expanded by the PRG to include the necessary disturbances to provide a more detailed analysis of the Southline project's interrelationship with other existing/planned paths. The estimated number disturbances per base case for the transient stability studies are provided in Table D below.

TABLE D - ESTIMATED TRANSIENT STABILITY DISTURBANCE COUNT BY CATEGORY

#	DISTURBANCE	CAT	MAXIMUM ESTIMATE QUANTITIES	NOTES
1	3Ø fault on one end of transmission line and contingency loss of the line. Normal clearing.	B	To Be Determined by PRG	Lines selected with nominal voltage >= 100kV & only one line per station modeled with highest power flow.
2	Unless otherwise noted, 3Ø fault on high voltage side of transformer with contingency loss of the transformer. Normal clearing.	B		Transformers selected with primary or secondary nominal voltage >= 100kV
3	Unless otherwise noted, 3Ø fault on high voltage side of generator step-up transformer with contingency loss of the transformer as well as the generator. Normal clearing.	B		For generators with 100MW capacity or greater
4	Unless otherwise noted, 3Ø fault internal to station circuit breaker with bus differential relay clearing or similar protection clearing.	C		Only one breaker failure per bus section at stations.
5	3Ø fault on one end of double circuit transmission line on a common tower (DCTL) or common ROW with normal clearing.	C		
6	Common Corridor Outages	D		

Performance Criteria Specific to Transient Stability Studies

In the transient time frame following a Category B or C disturbance, the WECC System Performance Criteria and NERC Reliability Standards require the following criteria be met.

1. No angular instability shall exist for any generating unit;
2. No generating unit shall trip offline (unless tripped via an SPS, RAS, or other planned action);
3. No load shall be unintentionally tripped offline;
4. The response of the transmission system must exhibit damping; and
5. The transient voltage dips and transient frequency dips must not exceed pre-defined limits.

Category D disturbances will be evaluated for risks and consequences.

Dynamic Simulations

Transient stability analysis is a time-based simulation that assesses the performance of the power system during (and shortly following) a contingency. Transient stability studies will be performed to ensure system stability following critical faults on the system and to ensure that system response is within the criteria established by NERC and WECC. The types of disturbances to be evaluated are defined in the "Disturbance Development for Transient Stability Studies" section above. Transient stability simulations will be performed out to 20 seconds. Simulations may be extended beyond 20 seconds if necessary to adequately evaluate system damping. As indicated above, the disturbance will be applied at 1.0 second into the disturbance simulation. A separate channel file, which records the system response over the

timeframe of the simulation, will be produced for each disturbance simulated. Typical parameters recorded in the channel file include generating unit relative rotor angles, bus voltage magnitudes, bus frequencies, etc.

All simulations will model disturbances that include 3Ø faults instead of SLG faults. Disturbances with 3Ø faults are typically more severe than disturbances with SLG faults. If a transmission system can withstand a 3Ø fault, one can typically conclude than it can also withstand the similar SLG fault. If a potential reliability violation occurs following a 3Ø fault, the dynamic simulation may be run again using a SLG fault (assuming SLG faults are allowed by the NERC Reliability Standards and the WECC System Performance Criteria for the particular category of disturbance being simulated).

Channel File Processing

Each channel file will be reviewed to determine if the system response to the simulated disturbance met the criteria set forth in the NERC Reliability Standards and WECC System Performance Criteria.

First, all generating units will be checked to make sure they remained synchronized with the transmission system. For each potentially unstable generating unit, the unit's relative rotor angle response will be visually examined to validate if the unit became unstable. All the unstable units will be reported.

Second, each channel file will be examined to determine if the power system, following a system disturbance, exhibits an oscillatory response that meets the WECC System Performance Criteria. At a minimum, the system response must exhibit positive or marginal damping following a disturbance. In other words, system oscillations must not be increasing, because these increasing oscillations could cause a local or regional system collapse. Any disturbances exhibiting increasing oscillations on the transmission system will be reported.

Third, each channel file will be examined to determine if the power system's voltage and frequency performance following a disturbance meets the WECC System Performance Criteria or any specific criteria for a local area. All transient voltage dip and transient frequency dip violations will be reported.

Voltage dips and frequency dips following disturbances must not exceed pre-defined limits. These limits are provided in Appendices 3 and 4.

Exceptions

Post transient, reactive margin test, and transient stability studies will be performed on the cases as outlined in this study plan with the following exceptions.

1. For the cases developed representing the alternative definition for Path 47 (e.g. existing definition for Path 47 plus the flows on the two SunZia South/Luna 500/345kV transformers), only post-transient studies will be performed.

CORRECTIVE PLANS

All potential violations of the criteria set forth in the NERC Reliability Standards and WECC System Performance Criteria will be investigated. For those violations that cannot be corrected by better modeling, transmission system expansions or modifications, remedial action schemes, operating procedures or other alternatives will be developed to enable the Southline Project to achieve its desired ratings. The development of any and all corrective plans will be coordinated with Southline Project personnel and the PRG.

REPORT DEVELOPMENT

A Comprehensive Progress Report will be drafted to document the study results. In addition, a discussion of the Southline Project's benefits to and impacts on neighboring systems will be discussed. At a minimum, the report will include the following items:

1. An executive summary of the study results;

2. Power flow study, voltage stability, and transient stability study methodology including related planning standards and application of related criteria;
3. Documentation on the changes made to the WECC power flow base cases including the addition of any new projects, generation dispatch changes, area load modeling revisions, and other significant changes;
4. Documentation of the changes made to the WECC dynamic data files including the addition of new models, power flow base case reconciliation changes, and other significant modifications;
5. Power flow, voltage stability and transient stability results and findings for each case studied;
6. Documentation of the corrective plans for each potential criteria violation;
7. Appendices including, but are not limited to, the following: planning standards, system performance criteria, power flow contingency input file(s), voltage stability switch decks, transient stability switch decks, power flow results, voltage stability results, transient stability plots, transient stability results, load forecast data, transmission project implementation schedule, and details on planned transmission projects added to the original WECC base cases.

The Comprehensive Progress Report will also meet the requirements set forth in WECC's Procedures for Project Rating Review, and WECC's Progress Report Policies and Procedures. Content requirements from WECC's Progress Report Policies and Procedures include the following:

1. A brief physical description of the project, including points of interconnection, equipment capacities and voltages, and expected ratings;
2. The planned operating date;
3. The project status, including where the project is situated in the planning process and a tentative schedule for completion;
4. The facility owner's name(s), a contact person including title or position, address, telephone number and e-mail address that can answer questions and comments or direct them to persons who can provide responses;
5. A one-line and geographic diagram of the project showing points of interconnection, metering points, adjacent path locations and control area boundaries;
6. A block diagram, transfer functions, equations and complete definition of the model or models needed to study the new facility using power flow and transient stability computer programs;
7. A statement describing the transfer capability associated with the project, including the impact on other systems, the impact on existing transfer path ratings, and the compliance with the NERC Reliability Standards and WECC System Performance Criteria;
8. A description of the interconnected system conditions and/or requirements on which the proposed transfer capability rating is based and/or required by the project;
9. Identify operating conditions including flows on key transmission lines and paths, load levels, and generation status that allow the project to operate within the guidelines defined in the NERC Reliability Standards and WECC System Performance Criteria;
10. Identify potential impacts to transmission facilities including non-simultaneous ratings and simultaneous path interactions;
11. A representative list of power flow and stability cases run that demonstrate compliance with NERC Reliability Standards and WECC System Performance Criteria;
12. Representative power flow outage results and stability plots that demonstrate compliance with the NERC Reliability Standards and WECC System Performance Criteria; and
13. A project milestone schedule that covers the current period through initial operation of the project.

SCHEDULE

A tentative schedule for Phase 2 study deliverables is provided below.

1. Study Plan & Foundational Base Case PRG review period (November 2 through January 4, 2013)
2. Study Plan & Foundational Base Case PRG approval January 11, 2013
3. Phase 2 WECC Comprehensive Progress Report – 1st Half 2013

APPENDIX 1 – SOUTHLINE PROJECT ILLUSTRATIONS

Southline Project

- Southline Ties to APS Saguaro will be through a new electrically isolated 230kV bus via two step down 230/115kV Transformer banks tied to existing APS Saguaro East and APS Saguaro West 115kV bus

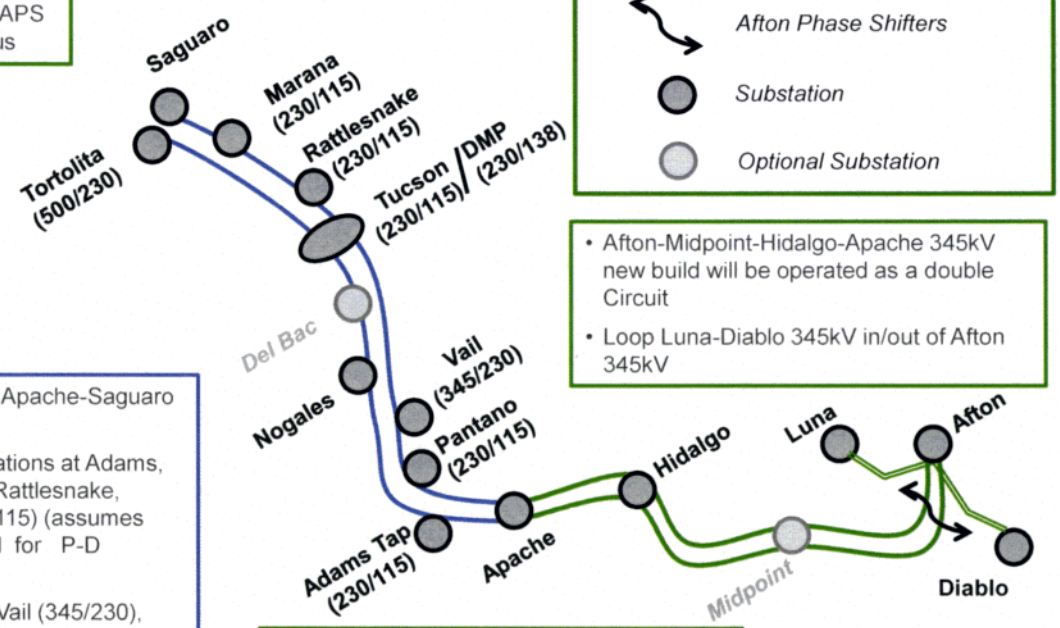

- Afton-Midpoint-Hidalgo-Apache 345kV new build will be operated as a double Circuit
- Loop Luna-Diablo 345kV in/out of Afton 345kV

- Rebuild Western 115kV Apache-Saguaro to 230kV double circuit
- Ckt 1: 230/115kV substations at Adams, Del Bac, Tucson/DMP, Rattlesnake, Marana, Saguaro (230/115) (assumes 115kV paths maintained for P-D system)
- Ckt2: Apache-Pantano-Vail (345/230), Tucson/DMP (230/138), Tortolita (500/230)

- Southline Ties to Existing Apache/Hidalgo Transmission will be operated open

Figure 1

APPENDIX 2 – OUTLINE OF PROJECT COORDINATION & RATING REVIEW PROCESS SEQUENCE

Project Phases	Formation	Studies	Licensing	Construction
Project Coordination Process	Assessment, Project Review			
Rating Review Process	Phase 1 Proposed Rating	Phase 2 Planned Rating		Phase 3 Accepted Rating
Progress Reports	Progress Reports Are Required Throughout the Entire Planning Process			

Notes:

1. "Proposed Rating" – used at the initiation and throughout Phase I of the Project Rating Review Process
2. "Planned Rating" – is the final rating at the conclusion of Phase I of the Project Rating Review Process and used throughout Phase 2 of the Project Rating Review Process
3. "Accepted Rating" – is the final rating at the conclusion of Phase 2 of the Project Rating Review Process and is also the rating that is used when the Project is placed in-service

APPENDIX 3 – NERC TRANSMISSION PLANNING STANDARDS

Table I. Transmission Systems Standards — Normal and Contingency Conditions

Category	Contingencies		System Limits or Impacts				
	Initiating Event(s) and Contingency Element(s)	Elements Out of Service	Thermal Limits	Voltage Limits	System Stable	Loss of Demand or Curtailed Firm Transfers	Cascading[c] Outages
A - No Contingencies	All Facilities in Service	None	Applicable Rating [a] (A/R)	Applicable Rating [a] (A/R)	Yes	No	No
B – Event resulting in the loss of a single element.	Single Line Ground (SLG) or 3-Phase (3Ø) Fault, with Normal Clearing: 1. Generator 2. Transmission Circuit 3. Transformer Loss of an Element without a Fault.	 Single Single Single Single	 A/R A/R A/R A/R	 A/R A/R A/R A/R	 Yes Yes Yes Yes	 No [b] No [b] No [b] No [b]	 No No No No
	Single Pole Block, Normal Clearing [f]: 4. Single Pole (dc) Line	Single	A/R	A/R	Yes	No [b]	No
C – Event(s) resulting in the loss of two or more (multiple) elements.	SLG Fault, with Normal Clearing [f]: 1. Bus Section 2. Breaker (failure or internal fault)	 Multiple Multiple	 A/R A/R	 A/R A/R	 Yes Yes	 Planned/Controlled [d] Planned/Controlled [d]	 No No
	SLG or 3Ø Fault, with Normal Clearing [f], Manual System Adjustments, followed by another SLG or 3Ø Fault, with Normal Clearing [f]: 3. Category B (B1, B2, B3, or B4) contingency, manual system adjustments, followed by another Category B (B1, B2, B3, or B4) contingency	Multiple	A/R	A/R	Yes	Planned/Controlled [d]	No
	Bipolar Block, with Normal Clearing [f]: 4. Bipolar (dc) Line Fault (non 3Ø), with Normal Clearing [f]: 5. Any two circuits of a multiple Circuit towerline [g]	Multiple Multiple	A/R A/R	A/R A/R	Yes Yes	Planned/Controlled [d] Planned/Controlled [d]	No No
	SLG Fault, with Delayed Clearing [f] (stuck breaker or protection system failure): 6. Generator 7. Transmission Circuit 8. Transformer 9. Bus Section	Multiple Multiple	A/R A/R	A/R A/R	Yes Yes	Planned/Controlled [d] Planned/Controlled [d]	No No

D[e] – Extreme event resulting in two or more (multiple) elements removed or cascading out of service	3Ø Fault, with Delayed Clearing[f] (stuck breaker or protection system failure): 1. Generator 2. Transmission Circuit 3. Transformer 4. Bus Section 3Ø Fault, with Normal Clearing[f]: 5. Breaker (failure or internal fault) Other: 6. Loss of towerline with three or more circuits 7. All transmission lines on a common right-of-way 8. Loss of a substation (one voltage level plus transformers) 9. Loss of a switching station (one voltage level plus transformers) 10. Loss of all generating units at a station 11. Loss of a large load or major load center 12. Failure of a fully redundant special protection system (or remedial action scheme) to operate when required 13. Operation, partial operation, or misoperation of a fully redundant special protection system (or remedial action scheme) in response to an event or abnormal system condition for which it was not intended to operate 14. Impact of severe power swings or oscillations from disturbances in another Regional Council.	Evaluate for risks and consequences. • May involve substantial loss of customer demand and generation in a widespread area or areas. • Portions or all of the interconnected systems may or may not achieve a new, stable operating point. • Evaluation of these events may require joint studies with neighboring systems.

Footnotes to Table I.

a) Applicable rating (A/R) refers to the applicable normal and emergency facility thermal rating or system voltage limit as determined and consistently applied by the system or facility owner. Applicable ratings may include emergency ratings applicable for short durations as required to permit operating steps necessary to maintain system control. All ratings must be established consistent with applicable NERC Planning Standards addressing facility ratings.

b) Planned or controlled interruption of electric supply to radial customers or some local network customers, connected to or supplied by the faulted element or by the affected area, may occur in certain areas without impacting the overall security of the interconnected transmission systems. To prepare for the next contingency, system adjustments are permitted, including curtailments of contracted firm (non-recallable reserved) electric power transfers.

c) Cascading is the uncontrolled successive loss of system elements triggered by an incident at any location. Cascading results in widespread service interruption which cannot be restrained from sequentially spreading beyond an area predetermined by appropriate studies.

d) Depending on system design and expected system impacts, the controlled interruption of electric supply to customers (load shedding), the planned removal from service of certain generators, and/or the curtailment of contracted firm (non-recallable reserved) electric power transfers may be necessary to maintain the overall security of the interconnected transmission systems.

e) A number of extreme contingencies that are listed under Category D and judged to be critical by the transmission planning entity(ies) will be selected for evaluation. It is not expected that all possible facility outages under each listed contingency of Category D will be evaluated.

f) Normal clearing is when the protection system operates as designed and the fault is cleared in the time normally expected with proper functioning of the installed protection systems. Delayed clearing of a fault is due to failure of any protection system component such as a relay, circuit breaker, or current transformer (CT), and not because of an intentional design delay.

g) System assessments may exclude these events where multiple circuit towers are used over short distances (e.g., station entrance, river crossings) in accordance with Regional exemption criteria

APPENDIX 4 – WECC DISTURBANCE-PERFORMANCE CRITERIA

WECC DISTURBANCE-PERFORMANCE TABLE OF ALLOWABLE EFFECTS ON OTHER SYSTEMS

NERC and WECC Categories	Outage Frequency Associated with the Performance Category (outage/year)	Transient Voltage Dip Standard	Minimum Transient Frequency Standard	Post Transient Voltage Deviation Standard (See Note 3)
A	Not Applicable	Nothing in addition to NERC		
B	≥ 0.33	Not to exceed 25% at load buses or 30% at non-load buses. Not to exceed 20% for more than 20 cycles at load buses.	Not below 59.6 Hz for 6 cycles or more at a load bus.	Not to exceed 5% at any bus.
C	0.033 – 0.33	Not to exceed 30% at any bus. Not to exceed 20% for more than 40 cycles at load buses.	Not below 59.0 Hz for 6 cycles or more at a load bus.	Not to exceed 10% at any bus.
D	<0.033	Nothing in addition to NERC		

Table W-1

Notes:

1. The WECC Disturbance-Performance Table applies equally to either a system with all elements in service, or a system with one element removed and the system adjusted.
2. As an example in applying the WECC Disturbance-Performance Table, a Category B disturbance in one system shall not cause a transient voltage dip in another system that is greater than 20% for more than 20 cycles at load buses, or exceed 25% at load buses or 30% at non-load buses at any time other than during the fault.
3. If it can be demonstrated that post transient voltage deviations that are less than the values in the table will result in voltage instability, the system in which the disturbance originated and the affected system(s) shall cooperate in mutually resolving the problem.
4. Refer to Figure W-1 for voltage performance parameters.
5. Load buses include generating unit auxiliary loads.
6. To reach the frequency categories shown in the WECC Disturbance-Performance Table for Category C disturbances, some planned and controlled islanding may occur. Under-frequency load shedding is expected to arrest this frequency decline and assure continued operation within the resulting islands.
7. For simulation test cases, the interconnected transmission system steady state loading conditions prior to a disturbance shall be appropriate to the case. Disturbances shall be simulated at locations on the system that result in maximum stress on other systems. Relay action, fault clearing time, and reclosing practice shall be represented in simulations according to the planning and operation of the actual or planned systems. When simulating post transient conditions, actions are limited to automatic devices and no manual action is to be assumed.

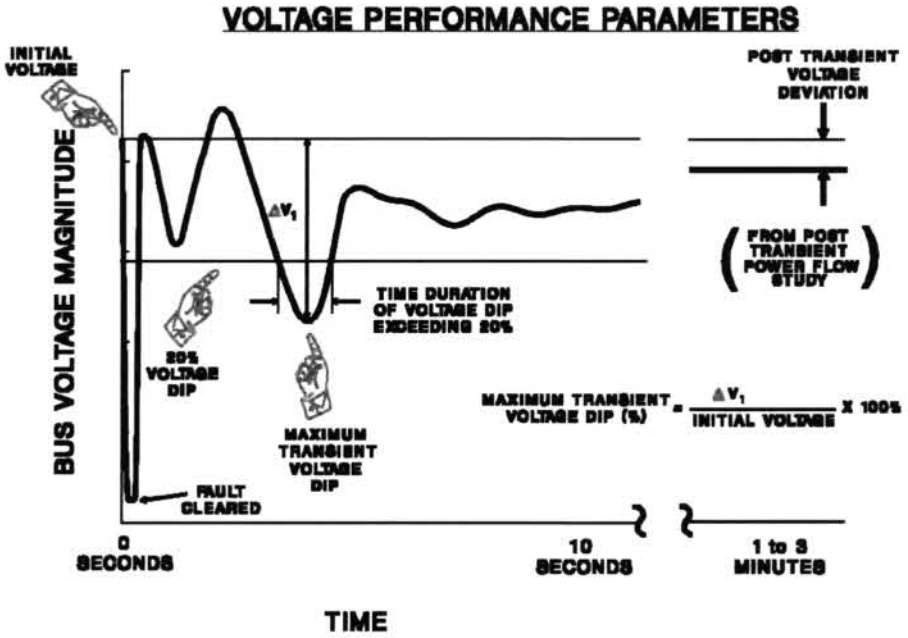

Figure W-1

APPENDIX 5 – PROJECTS IN PHASE 2 AND 3 OF RATING REVIEW PROCESS

TABLE E – WECC PHASE 2 AND 3 PROJECTS TO BE INCLUDED IN CASES			
PROJECT	**PHASE**	**PROJECTED IN-SERVICE DATE**	**COMMENT**
TransWest Express Project	2	12/1/2014	New Project
Gateway South Project	2	2011-16	New Project
Gateway West Transmission Project	2	2012	New Project
SWIP North Transmission Project	2	2011	New Project
Great Basin Transmission Project (Robinson Summit – Harry Allen 500kV Line)	2	1/1/2011	New Project
Sunrise Powerlink Project	3		New project
Populus-Terminal Transmission Project	3		New Project
Path 27 Upgrade (Intermountain DC Line)	3	11/1/2010	Upgrade
EOR 9300 MW Project	3	2011	Simultaneous Rating of New and existing projects
SunZia Southwest Transmission Project (modeled in-service and out-of-service depending on alternative)	3	2016	New Project
Colorado River Substation to Devers Project	3	2011	New project
Path 49 Upgrade Project (to 8055 MW)	3	8055 MW by summer 2006.	In-Service but Not Complete
Midpoint-Summer Lake 500kV Line Rating	3	2010	Upgrade

TABLE F – WECC PHASE 2 AND 3 PROJECTS NOT TO BE INCLUDED IN CASES			
PROJECT	**PHASE**	**PROJECTED IN-SERVICE DATE**	**COMMENT**
EOR 10500 MW Project	3	?	Simultaneous Rating of New and existing projects
Cascade Crossing Transmission Project	2	4/1/2015	New Project
Walla Walla-McNary Transmission Project	2	12/1/2012	New Project
Path 45 Uprate Project	2	?	Uprate
Devils Gap Interconnection to CNC 500kV Line	2	2015	New Project
Northern Lights Project	2	2015	New Project
Hemingway to Boardman Transmission Project	2	2012	New Project
Canada-Northern California Transmission Project (CNC Project)	2	2015	New Project
Mountain States 500kV Transmission Intertie (MSTI)	2	2013	New Project
Sea Breeze Pacific Juan de Fuca Project	2	2012	New Project
TOT 4A/4B Transmission Path Rerate	3		Uprate

APPENDIX 6 – POTENTIAL NEW GENERATION PROJECTS FOR INCLUSION IN CASES

TABLE G[6] – LIST OF POTENTIAL NEW GENERATION PROJECTS FOR INCLUSION IN CASES						
#	UTILITY	IN-SERVICE	LOCATION	BUS NAME	PMAX	FUEL & TYPE
1	EPE	2015	Afton, NM	AFTON	1500MW	Solar PV
2	EPE	2015	Luna County, NM	MIDPOINT SOUTH	1000MW	Solar PV
3	SWTC	2015	Apache, AZ	APACHE	500MW	Solar PV
4	TEP	2015	Tortolita, AZ	TORTOLITA	1000MW	Solar PV

[6] Generation listed in Table G of Appendix 6 does not represent specific projects in any utility queue, but represents the potential for generation to site in the utility respective areas, and is assumed to be an amalgamation of multiple plants by several different owners.

APPENDIX 7 – CASE DEVELOPMENT MATRIX

	TABLE H - CASE DEVELOPMENT MATRIX															
			SOUTHLINE PATHS				PARALLEL PATH									
CASE NUMERIC IDENTIFIER	CASE/FILE NAME	SOURCE CASE	AFTON WEST FLOW (MW)	APACHE WEST FLOW (MW)	SAGUARO / TORTOLITA EAST FLOW (MW)	APACHE EAST FLOW (MW)	PATH NUMBER	PATH FLOW (MW)	10% PATH STRESS TEST	POST TRANSIENT STUDIES	REACTIVE MARGIN TEST	TRANSIENT STABILITY	SUNZIA IN SERVICE	TUCSON-ORACLE 115KV LINE RECONDUCTORED	SECOND MARANA 230/115KV TRANSFORMER BANK	BOWIE GENERATION (MW)
	SOUTHLINE E2W & W2E NON-SIMULTANEOUS CASES WITHOUT SUNZIA & WITHOUT TUCSON-ORACLE 115KV LINE RECONDUCTOR															
0.01	00_ew_tttt_vvvv_vzz	15hs2a	NSL	NSL					x				no	no		350
0.005	005_ew_tttt_vvvv_vzz (NOTE 14)	15hs2a	NSL	NSL						x			no	no		350
0.02	00_we_tttt_vvvv_vzz	15hw2a			NSL	NSL			x				no	no		350
	SOUTHLINE E2W VS. PATH 47 (SOUTHERN NEW MEXICO) CASES WITHOUT SUNZIA & WITHOUT TUCSON-ORACLE 115KV LINE RECONDUCTOR															
1.04	01_ew_tttt_vvvv_yyyy_vzz	15hs2a	NSL	NSL			47	SL Note 13		x			no	no		350
1.05	01_ew_tttt_vvvv_yyyy_vzz	15hs2a	102.5% x NSL	102.5% x NSL			47	102.5% x SL			x		no	no		350
1.06	01_ew_tttt_vvvv_yyyy_vzz	15hs2a	105.0% x NSL	105.0% x NSL			47	105.0% x SL			x		no	no		350
1.07	01_ew_tttt_vvvv_yyyy_vzz	15hs2a	SL	SL			47	NSL		x			no	no		350
1.08	01_ew_tttt_vvvv_yyyy_vzz	15hs2a	102.5% x SL	102.5% x SL			47	102.5% x NSL			x		no	no		350
1.09	01_ew_tttt_vvvv_yyyy_vzz	15hs2a	105.0% x SL	105.0% x SL			47	105.0% x NSL			x		no	no		350
1.10	01_ew_tttt_vvvv_yyyy_vzz_ts	15hs2a	NSL	NSL			47	NSL				x	no	no		350
1.11	01_ew_tttt_vvvv_yyyy_vzz_ts	15hs2a	NSL	NSL			47	SL				x	no	no		350
1.12	01_ew_tttt_vvvv_yyyy_vzz_ts	15hs2a	SL	SL			47	NSL				x	no	no		350
1.13	01_ew_tttt_vvvv_yyyy_vzz	15hs2a	OOS	OOS			47	NSL		x			no	no		350
1.14	01_ew_tttt_vvvv_yyyy_vzz	15hs2a	OOS	OOS			47	102.5% x NSL			x		no	no		350
1.15	01_ew_tttt_vvvv_yyyy_vzz	15hs2a	OOS	OOS			47	105.0% x NSL			x		no	no		350
1.16	01_ew_tttt_vvvv_yyyy_vzz_ts	15hs2a	OOS	OOS			47	NSL				x	no	no		350
1.17	01_ew_tttt_vvvv_yyyy_vzz	15hs2a	OOS	OOS			47	SL		x			no	no		350
1.18	01_ew_tttt_vvvv_yyyy_vzz	15hs2a	OOS	OOS			47	102.5% x SL			x		no	no		350
1.19	01_ew_tttt_vvvv_yyyy_vzz	15hs2a	OOS	OOS			47	105.0% x SL			x		no	no		350
1.20	01_ew_tttt_vvvv_yyyy_vzz_ts	15hs2a	OOS	OOS			47	SL				x	no	no		350
	SOUTHLINE W2E VS. PATH 47 (SOUTHERN NEW MEXICO) CASES WITHOUT SUNZIA & WITHOUT TUCSON-ORACLE 115KV LINE RECONDUCTOR															
2.04	02_we_tttt_vvvv_yyyy_vzz	15hw2a			NSL	NSL	47	SL		x			no	no		350
2.05	02_we_tttt_vvvv_yyyy_vzz	15hw2a			102.5% x NSL	102.5% x NSL	47	102.5% x SL			x		no	no		350

	TABLE H - CASE DEVELOPMENT MATRIX															
			SOUTHLINE PATHS				PARALLEL PATH									
CASE NUMERIC IDENTIFIER	CASE/FILE NAME	SOURCE CASE	AFTON WEST FLOW (MW)	APACHE WEST FLOW (MW)	SAGUARO / TORTOLITA EAST FLOW (MW)	APACHE EAST FLOW (MW)	PATH NUMBER	PATH FLOW (MW)	10% PATH STRESS TEST	POST TRANSIENT STUDIES	REACTIVE MARGIN TEST	TRANSIENT STABILITY	SUNZIA IN SERVICE	TUCSON-ORACLE 115KV LINE RECONDUCTORED	SECOND MARANA 230/115KV TRANSFORMER BANK	BOWIE GENERATION (MW)
2.06	02_we_tttt_vvvv_yyyy_vzz	15hw2a			105.0% x NSL	105.0% x NSL	47	105.0% x SL			x		no	no		350
2.07	02_we_tttt_vvvv_yyyy_vzz	15hw2a			SL	SL	47	NSL		x			no	no		350
2.08	02_we_tttt_vvvv_yyyy_vzz	15hw2a			102.5% x SL	102.5% x SL	47	102.5% x NSL			x		no	no		350
2.09	02_we_tttt_vvvv_yyyy_vzz	15hw2a			105.0% x SL	105.0% x SL	47	105.0% x NSL			x		no	no		350
2.10	02_we_tttt_vvvv_yyyy_vzz_ts	15hw2a			NSL	NSL	47	NSL				x	no	no		350
2.11	02_we_tttt_vvvv_yyyy_vzz_ts	15hw2a			NSL	NSL	47	SL				x	no	no		350
2.12	02_we_tttt_vvvv_yyyy_vzz_ts	15hw2a			SL	SL	47	NSL				x	no	no		350
2.13	02_we_tttt_vvvv_yyyy_vzz	15hw2a			OOS	OOS	47	NSL		x			no	no		350
2.14	02_we_tttt_vvvv_yyyy_vzz	15hw2a			OOS	OOS	47	102.5% x NSL			x		no	no		350
2.15	02_we_tttt_vvvv_yyyy_vzz	15hw2a			OOS	OOS	47	105.0% x NSL			x		no	no		350
2.16	02_we_tttt_vvvv_yyyy_vzz_ts	15hw2a			OOS	OOS	47	NSL				x	no	no		350
2.17	02_we_tttt_vvvv_yyyy_vzz	15hw2a			OOS	OOS	47	SL		x			no	no		350
2.18	02_we_tttt_vvvv_yyyy_vzz	15hw2a			OOS	OOS	47	102.5% x SL			x		no	no		350
2.19	02_we_tttt_vvvv_yyyy_vzz	15hw2a			OOS	OOS	47	105.0% x SL			x		no	no		350
2.20	02_we_tttt_vvvv_yyyy_vzz_ts	15hw2a			OOS	OOS	47	SL				x	no	no		350
	SOUTHLINE E2W NON-SIMULTANEOUS CASES WITH SUNZIA & WITHOUT TUCSON-ORACLE 115KV LINE RECONDUCTOR															
5.005	05_ew_tttt_vvvv_vzz	15hs2a	>=NSL (Note 11)	>=NSL (Note 11)					x				yes	no		350
5.01	05_ew_tttt_vvvv_vzz	15hs2a	NSL	NSL						x			yes	no		350
5.02	05_ew_tttt_vvvv_yyyy_vzz	15hs2a	102.5% x NSL	102.5% x NSL							x		yes	no		350
5.03	05_ew_tttt_vvvv_yyyy_vzz	15hs2a	105.0% x NSL	105.0% x NSL							x		yes	no		350
5.04	05_ew_tttt_vvvv_yyyy_vzz_ts	15hs2a	NSL	NSL								x	yes	no		350
5.05	05_ew_tttt_vvvv_yyyy_vzz	15hs2a	OOS	OOS						x			yes	no		350
5.06	05_ew_tttt_vvvv_yyyy_vzz_ts	15hs2a	OOS	OOS								x	yes	no		350
	SOUTHLINE W2E NON-SIMULTANEOUS CASES WITH SUNZIA & WITHOUT TUCSON-ORACLE 115KV LINE RECONDUCTOR															
6.005	06_we_tttt_vvvv_vzz	15hw2a			>=NSL (Note 11)	>=NSL (Note 11)			x				yes	no		350
6.01	06_we_tttt_vvvv_vzz	15hw2a			NSL	NSL				x			yes	no		350
6.02	06_we_tttt_vvvv_yyyy_vzz	15hw2a			102.5% x NSL	102.5% x NSL					x		yes	no		350
6.03	06_we_tttt_vvvv_yyyy_vzz	15hw2a			105.0% x NSL	105.0% x NSL					x		yes	no		350
6.04	06_we_tttt_vvvv_yyyy_vzz_ts	15hw2a			NSL	NSL						x	yes	no		350

	TABLE H - CASE DEVELOPMENT MATRIX															
			SOUTHLINE PATHS				PARALLEL PATH									
CASE NUMERIC IDENTIFIER	CASE/FILE NAME	SOURCE CASE	AFTON WEST FLOW (MW)	APACHE WEST FLOW (MW)	SAGUARO / TORTOLITA EAST FLOW (MW)	APACHE EAST FLOW (MW)	PATH NUMBER	PATH FLOW (MW)	10% PATH STRESS TEST	POST TRANSIENT STUDIES	REACTIVE MARGIN TEST	TRANSIENT STABILITY	SUNZIA IN SERVICE	TUCSON-ORACLE 115KV LINE RECONDUCTORED	SECOND MARANA 230/115KV TRANSFORMER BANK	BOWIE GENERATION (MW)
6.05	06_we_tttt_vvvv_yyyy_vzz	15hw2a			OOS	OOS				x			yes	no		350
6.06	06_we_tttt_vvvv_yyyy_vzz_ts	15hw2a			OOS	OOS						x	yes	no		350
	SOUTHLINE E2W VS. PATH 47 (SOUTHERN NEW MEXICO) CASES WITH SUNZIA & WITHOUT TUCSON-ORACLE 115KV LINE RECONDUCTOR															
7.04	07_ew_tttt_vvvv_yyyy_vzz	15hs2a	NSL	NSL			47	SL		x			yes	no		350
7.05	07_ew_tttt_vvvv_yyyy_vzz	15hs2a	102.5% x NSL	102.5% x NSL			47	102.5% x SL			x		yes	no		350
7.06	07_ew_tttt_vvvv_yyyy_vzz	15hs2a	105.0% x NSL	105.0% x NSL			47	105.0% x SL			x		yes	no		350
7.07	07_ew_tttt_vvvv_yyyy_vzz	15hs2a	SL	SL			47	NSL		x			yes	no		350
7.08	07_ew_tttt_vvvv_yyyy_vzz	15hs2a	102.5% x SL	102.5% x SL			47	102.5% x NSL			x		yes	no		350
7.09	07_ew_tttt_vvvv_yyyy_vzz	15hs2a	105.0% x SL	105.0% x SL			47	105.0% x NSL			x		yes	no		350
7.10	07_ew_tttt_vvvv_yyyy_vzz_ts	15hs2a	NSL	NSL			47	NSL				x	yes	no		350
7.11	07_ew_tttt_vvvv_yyyy_vzz_ts	15hs2a	NSL	NSL			47	SL				x	yes	no		350
7.12	07_ew_tttt_vvvv_yyyy_vzz_ts	15hs2a	SL	SL			47	NSL				x	yes	no		350
7.13	07_ew_tttt_vvvv_yyyy_vzz	15hs2a	OOS	OOS			47	NSL		x			yes	no		350
7.14	07_ew_tttt_vvvv_yyyy_vzz	15hs2a	OOS	OOS			47	102.5% x NSL			x		yes	no		350
7.15	07_ew_tttt_vvvv_yyyy_vzz	15hs2a	OOS	OOS			47	105.0% x NSL			x		yes	no		350
7.16	07_ew_tttt_vvvv_yyyy_vzz_ts	15hs2a	OOS	OOS			47	NSL				x	yes	no		350
7.17	07_ew_tttt_vvvv_yyyy_vzz	15hs2a	OOS	OOS			47	SL		x			yes	no		350
7.18	07_ew_tttt_vvvv_yyyy_vzz	15hs2a	OOS	OOS			47	102.5% x SL			x		yes	no		350
7.19	07_ew_tttt_vvvv_yyyy_vzz	15hs2a	OOS	OOS			47	105.0% x SL			x		yes	no		350
7.20	07_ew_tttt_vvvv_yyyy_vzz_ts	15hs2a	OOS	OOS			47	SL				x	yes	no		350
	SOUTHLINE W2E VS. PATH 47 (SOUTHERN NEW MEXICO) CASES WITH SUNZIA & WITHOUT TUCSON-ORACLE 115KV LINE RECONDUCTOR															
8.04	08_we_tttt_vvvv_yyyy_vzz	15hw2a			NSL	NSL	47	SL		x			yes	no		350
8.05	08_we_tttt_vvvv_yyyy_vzz	15hw2a			102.5% x NSL	102.5% x NSL	47	102.5% x SL			x		yes	no		350
8.06	08_we_tttt_vvvv_yyyy_vzz	15hw2a			105.0% x NSL	105.0% x NSL	47	105.0% x SL			x		yes	no		350
8.07	08_we_tttt_vvvv_yyyy_vzz	15hw2a			SL	SL	47	NSL		x			yes	no		350
8.08	08_we_tttt_vvvv_yyyy_vzz	15hw2a			102.5% x SL	102.5% x SL	47	102.5% x NSL			x		yes	no		350
8.09	08_we_tttt_vvvv_yyyy_vzz	15hw2a			105.0% x SL	105.0% x SL	47	105.0% x NSL			x		yes	no		350
8.10	08_we_tttt_vvvv_yyyy_vzz_ts	15hw2a			NSL	NSL	47	NSL				x	yes	no		350
8.11	08_we_tttt_vvvv_yyyy_vzz_ts	15hw2a			NSL	NSL	47	SL				x	yes	no		350

	TABLE H - CASE DEVELOPMENT MATRIX															
			SOUTHLINE PATHS				PARALLEL PATH									
CASE NUMERIC IDENTIFIER	CASE/FILE NAME	SOURCE CASE	AFTON WEST FLOW (MW)	APACHE WEST FLOW (MW)	SAGUARO / TORTOLITA EAST FLOW (MW)	APACHE EAST FLOW (MW)	PATH NUMBER	PATH FLOW (MW)	10% PATH STRESS TEST	POST TRANSIENT STUDIES	REACTIVE MARGIN TEST	TRANSIENT STABILITY	SUNZIA IN SERVICE	TUCSON-ORACLE 115KV LINE RECONDUCTORED	SECOND MARANA 230/115KV TRANSFORMER BANK	BOWIE GENERATION (MW)
8.12	08_we_tttt_vvvv_yyyy_vzz_ts	15hw2a			SL	SL	47	NSL				x	yes	no		350
8.13	08_we_tttt_vvvv_yyyy_vzz	15hw2a			OOS	OOS	47	NSL		x			yes	no		350
8.14	08_we_tttt_vvvv_yyyy_vzz	15hw2a			OOS	OOS	47	102.5% x NSL			x		yes	no		350
8.15	08_we_tttt_vvvv_yyyy_vzz	15hw2a			OOS	OOS	47	105.0% x NSL			x		yes	no		350
8.16	08_we_tttt_vvvv_yyyy_vzz_ts	15hw2a			OOS	OOS	47	NSL				x	yes	no		350
8.17	08_we_tttt_vvvv_yyyy_vzz	15hw2a			OOS	OOS	47	SL		x			yes	no		350
8.18	08_we_tttt_vvvv_yyyy_vzz	15hw2a			OOS	OOS	47	102.5% x SL			x		yes	no		350
8.19	08_we_tttt_vvvv_yyyy_vzz	15hw2a			OOS	OOS	47	105.0% x SL			x		yes	no		350
8.20	08_we_tttt_vvvv_yyyy_vzz_ts	15hw2a			OOS	OOS	47	SL				x	yes	no		350
	SOUTHLINE E2W VS. SUNZIA WITHOUT TUCSON-ORACLE 115KV LINE RECONDUCTOR															
11.04	11_ew_tttt_vvvv_yyyy_vzz	15hs2a	NSL	NSL			SunZia	SL		x			yes	no		350
11.05	11_ew_tttt_vvvv_yyyy_vzz	15hs2a	102.5% x NSL	102.5% x NSL			SunZia	102.5% x SL			x		yes	no		350
11.06	11_ew_tttt_vvvv_yyyy_vzz	15hs2a	105.0% x NSL	105.0% x NSL			SunZia	105.0% x SL			x		yes	no		350
11.07	11_ew_tttt_vvvv_yyyy_vzz	15hs2a	SL	SL			SunZia	NSL		x			yes	no		350
11.08	11_ew_tttt_vvvv_yyyy_vzz	15hs2a	102.5% x SL	102.5% x SL			SunZia	102.5% x NSL			x		yes	no		350
11.09	11_ew_tttt_vvvv_yyyy_vzz	15hs2a	105.0% x SL	105.0% x SL			SunZia	105.0% x NSL			x		yes	no		350
11.10	11_ew_tttt_vvvv_yyyy_vzz_ts	15hs2a	NSL	NSL			SunZia	NSL				x	yes	no		350
11.11	11_ew_tttt_vvvv_yyyy_vzz_ts	15hs2a	NSL	NSL			SunZia	SL				x	yes	no		350
11.12	11_ew_tttt_vvvv_yyyy_vzz_ts	15hs2a	SL	SL			SunZia	NSL				x	yes	no		350
11.13	11_ew_tttt_vvvv_yyyy_vzz	15hs2a	OOS	OOS			SunZia	NSL		x			yes	no		350
11.14	11_ew_tttt_vvvv_yyyy_vzz	15hs2a	OOS	OOS			SunZia	102.5% x NSL			x		yes	no		350
11.15	11_ew_tttt_vvvv_yyyy_vzz	15hs2a	OOS	OOS			SunZia	105.0% x NSL			x		yes	no		350
11.16	11_ew_tttt_vvvv_yyyy_vzz_ts	15hs2a	OOS	OOS			SunZia	NSL				x	yes	no		350
11.17	11_ew_tttt_vvvv_yyyy_vzz	15hs2a	OOS	OOS			SunZia	SL		x			yes	no		350
11.18	11_ew_tttt_vvvv_yyyy_vzz	15hs2a	OOS	OOS			SunZia	102.5% x SL			x		yes	no		350
11.19	11_ew_tttt_vvvv_yyyy_vzz	15hs2a	OOS	OOS			SunZia	105.0% x SL			x		yes	no		350
11.20	11_ew_tttt_vvvv_yyyy_vzz_ts	15hs2a	OOS	OOS			SunZia	SL				x	yes	no		350
	SOUTHLINE W2E VS. SUNZIA WITHOUT TUCSON-ORACLE 115KV LINE RECONDUCTOR															
12.04	12_we_tttt_vvvv_yyyy_vzz	15hw2a			NSL	NSL	SunZia	SL		x			yes	no		350

	TABLE H - CASE DEVELOPMENT MATRIX															
			SOUTHLINE PATHS				PARALLEL PATH									
CASE NUMERIC IDENTIFIER	CASE/FILE NAME	SOURCE CASE	AFTON WEST FLOW (MW)	APACHE WEST FLOW (MW)	SAGUARO / TORTOLITA EAST FLOW (MW)	APACHE EAST FLOW (MW)	PATH NUMBER	PATH FLOW (MW)	10% PATH STRESS TEST	POST TRANSIENT STUDIES	REACTIVE MARGIN TEST	TRANSIENT STABILITY	SUNZIA IN SERVICE	TUCSON-ORACLE 115KV LINE RECONDUCTORED	SECOND MARANA 230/115KV TRANSFORMER BANK	BOWIE GENERATION (MW)
12.05	12_we_tttt_vvvv_yyyy_vzz	15hw2a			102.5% x NSL	102.5% x NSL	SunZia	102.5% x SL			x		yes	no		350
12.06	12_we_tttt_vvvv_yyyy_vzz	15hw2a			105.0% x NSL	105.0% x NSL	SunZia	105.0% x SL			x		yes	no		350
12.07	12_we_tttt_vvvv_yyyy_vzz	15hw2a			SL	SL	SunZia	NSL		x			yes	no		350
12.08	12_we_tttt_vvvv_yyyy_vzz	15hw2a			102.5% x SL	102.5% x SL	SunZia	102.5% x NSL			x		yes	no		350
12.09	12_we_tttt_vvvv_yyyy_vzz	15hw2a			105.0% x SL	105.0% x SL	SunZia	105.0% x NSL			x		yes	no		350
12.10	12_we_tttt_vvvv_yyyy_vzz_ts	15hw2a			NSL	NSL	SunZia	NSL				x	yes	no		350
12.11	12_we_tttt_vvvv_yyyy_vzz_ts	15hw2a			NSL	NSL	SunZia	SL				x	yes	no		350
12.12	12_we_tttt_vvvv_yyyy_vzz_ts	15hw2a			SL	SL	SunZia	NSL				x	yes	no		350
12.13	12_we_tttt_vvvv_yyyy_vzz	15hw2a			OOS	OOS	SunZia	NSL		x			yes	no		350
12.14	12_we_tttt_vvvv_yyyy_vzz	15hw2a			OOS	OOS	SunZia	102.5% x NSL			x		yes	no		350
12.15	12_we_tttt_vvvv_yyyy_vzz	15hw2a			OOS	OOS	SunZia	105.0% x NSL			x		yes	no		350
12.16	12_we_tttt_vvvv_yyyy_vzz_ts	15hw2a			OOS	OOS	SunZia	NSL				x	yes	no		350
12.17	12_we_tttt_vvvv_yyyy_vzz	15hw2a			OOS	OOS	SunZia	SL		x			yes	no		350
12.18	12_we_tttt_vvvv_yyyy_vzz	15hw2a			OOS	OOS	SunZia	102.5% x SL			x		yes	no		350
12.19	12_we_tttt_vvvv_yyyy_vzz	15hw2a			OOS	OOS	SunZia	105.0% x SL			x		yes	no		350
12.20	12_we_tttt_vvvv_yyyy_vzz_ts	15hw2a			OOS	OOS	SunZia	SL				x	yes	no		350
	SOUTHLINE W2E NON-SIMULTANEOUS CASES WITHOUT SUNZIA & WITH TUCSON-ORACLE 115KV LINE RECONDUCTOR															
14.005	14_we_tttt_vvvv_vzz	15hw2a			>=NSL (Note 11)	>=NSL (Note 11)			x				no	yes		350
14.01	14_we_tttt_vvvv_vzz	15hw2a			NSL	NSL				x			no	yes		350
14.02	14_we_tttt_vvvv_yyyy_vzz	15hw2a			102.5% x NSL	102.5% x NSL					x		no	yes		350
14.03	14_we_tttt_vvvv_yyyy_vzz	15hw2a			105.0% x NSL	105.0% x NSL					x		no	yes		350
14.04	14_we_tttt_vvvv_yyyy_vzz_ts	15hw2a			NSL	NSL						x	no	yes		350
14.05	14_we_tttt_vvvv_yyyy_vzz	15hw2a			OOS	OOS				x			no	yes		350
14.06	14_we_tttt_vvvv_yyyy_vzz_ts	15hw2a			OOS	OOS						x	no	yes		350
	SOUTHLINE W2E VS. PATH 47 (SOUTHERN NEW MEXICO) CASES WITHOUT SUNZIA & WITH TUCSON-ORACLE 115KV LINE RECONDUCTOR															
16.04	16_we_tttt_vvvv_yyyy_vzz	15hw2a			NSL	NSL	47	SL		x			no	yes		350
16.05	16_we_tttt_vvvv_yyyy_vzz	15hw2a			102.5% x NSL	102.5% x NSL	47	102.5% x SL			x		no	yes		350
16.06	16_we_tttt_vvvv_yyyy_vzz	15hw2a			105.0% x NSL	105.0% x NSL	47	105.0% x SL			x		no	yes		350
16.07	16_we_tttt_vvvv_yyyy_vzz	15hw2a			SL	SL	47	NSL		x			no	yes		350

	TABLE H - CASE DEVELOPMENT MATRIX															
			SOUTHLINE PATHS				PARALLEL PATH									
CASE NUMERIC IDENTIFIER	CASE/FILE NAME	SOURCE CASE	AFTON WEST FLOW (MW)	APACHE WEST FLOW (MW)	SAGUARO / TORTOLITA EAST FLOW (MW)	APACHE EAST FLOW (MW)	PATH NUMBER	PATH FLOW (MW)	10% PATH STRESS TEST	POST TRANSIENT STUDIES	REACTIVE MARGIN TEST	TRANSIENT STABILITY	SUNZIA IN SERVICE	TUCSON-ORACLE 115KV LINE RECONDUCTORED	SECOND MARANA 230/115KV TRANSFORMER BANK	BOWIE GENERATION (MW)
16.08	16_we_tttt_vvvv_yyyy_vzz	15hw2a			102.5% x SL	102.5% x SL	47	102.5% x NSL			x		no	yes		350
16.09	16_we_tttt_vvvv_yyyy_vzz	15hw2a			105.0% x SL	105.0% x SL	47	105.0% x NSL			x		no	yes		350
16.10	16_we_tttt_vvvv_yyyy_vzz_ts	15hw2a			NSL	NSL	47	NSL				x	no	yes		350
16.11	16_we_tttt_vvvv_yyyy_vzz_ts	15hw2a			NSL	NSL	47	SL				x	no	yes		350
16.12	16_we_tttt_vvvv_yyyy_vzz_ts	15hw2a			SL	SL	47	NSL				x	no	yes		350
16.13	16_we_tttt_vvvv_yyyy_vzz	15hw2a			OOS	OOS	47	NSL		x			no	yes		350
16.14	16_we_tttt_vvvv_yyyy_vzz	15hw2a			OOS	OOS	47	102.5% x NSL			x		no	yes		350
16.15	16_we_tttt_vvvv_yyyy_vzz	15hw2a			OOS	OOS	47	105.0% x NSL			x		no	yes		350
16.16	16_we_tttt_vvvv_yyyy_vzz_ts	15hw2a			OOS	OOS	47	NSL				x	no	yes		350
16.17	16_we_tttt_vvvv_yyyy_vzz	15hw2a			OOS	OOS	47	SL		x			no	yes		350
16.18	16_we_tttt_vvvv_yyyy_vzz	15hw2a			OOS	OOS	47	102.5% x SL			x		no	yes		350
16.19	16_we_tttt_vvvv_yyyy_vzz	15hw2a			OOS	OOS	47	105.0% x SL			x		no	yes		350
16.20	16_we_tttt_vvvv_yyyy_vzz_ts	15hw2a			OOS	OOS	47	SL				x	no	yes		350
	SOUTHLINE W2E NON-SIMULTANEOUS CASES WITH SUNZIA & WITH TUCSON-ORACLE 115KV LINE RECONDUCTOR															
20.005	20_we_tttt_vvvv_vzz	15hw2a			>=NSL (Note 11)	>=NSL (Note 11)			x				yes	yes		350
20.01	20_we_tttt_vvvv_vzz	15hw2a			NSL	NSL				x			yes	yes		350
20.02	20_we_tttt_vvvv_yyyy_vzz	15hw2a			102.5% x NSL	102.5% x NSL					x		yes	yes		350
20.03	20_we_tttt_vvvv_yyyy_vzz	15hw2a			105.0% x NSL	105.0% x NSL					x		yes	yes		350
20.04	20_we_tttt_vvvv_yyyy_vzz_ts	15hw2a			NSL	NSL						x	yes	yes		350
20.05	20_we_tttt_vvvv_yyyy_vzz	15hw2a			OOS	OOS				x			yes	yes		350
20.06	20_we_tttt_vvvv_yyyy_vzz_ts	15hw2a			OOS	OOS						x	yes	yes		350
	SOUTHLINE W2E VS. PATH 47 (SOUTHERN NEW MEXICO) CASES WITH SUNZIA & WITH TUCSON-ORACLE 115KV LINE RECONDUCTOR															
22.04	22_we_tttt_vvvv_yyyy_vzz	15hw2a			NSL	NSL	47	SL		x			yes	yes		350
22.05	22_we_tttt_vvvv_yyyy_vzz	15hw2a			102.5% x NSL	102.5% x NSL	47	102.5% x SL			x		yes	yes		350
22.06	22_we_tttt_vvvv_yyyy_vzz	15hw2a			105.0% x NSL	105.0% x NSL	47	105.0% x SL			x		yes	yes		350
22.07	22_we_tttt_vvvv_yyyy_vzz	15hw2a			SL	SL	47	NSL		x			yes	yes		350
22.08	22_we_tttt_vvvv_yyyy_vzz	15hw2a			102.5% x SL	102.5% x SL	47	102.5% x NSL			x		yes	yes		350
22.09	22_we_tttt_vvvv_yyyy_vzz	15hw2a			105.0% x SL	105.0% x SL	47	105.0% x NSL			x		yes	yes		350
22.10	22_we_tttt_vvvv_yyyy_vzz_ts	15hw2a			NSL	NSL	47	NSL				x	yes	yes		350

	TABLE H - CASE DEVELOPMENT MATRIX															
			SOUTHLINE PATHS				PARALLEL PATH									
CASE NUMERIC IDENTIFIER	CASE/FILE NAME	SOURCE CASE	AFTON WEST FLOW (MW)	APACHE WEST FLOW (MW)	SAGUARO / TORTOLITA EAST FLOW (MW)	APACHE EAST FLOW (MW)	PATH NUMBER	PATH FLOW (MW)	10% PATH STRESS TEST	POST TRANSIENT STUDIES	REACTIVE MARGIN TEST	TRANSIENT STABILITY	SUNZIA IN SERVICE	TUCSON-ORACLE 115KV LINE RECONDUCTORED	SECOND MARANA 230/115KV TRANSFORMER BANK	BOWIE GENERATION (MW)
22.11	22_we_tttt_vvvv_yyyy_vzz_ts	15hw2a			NSL	NSL	47	SL				x	yes	yes		350
22.12	22_we_tttt_vvvv_yyyy_vzz_ts	15hw2a			SL	SL	47	NSL				x	yes	yes		350
22.13	22_we_tttt_vvvv_yyyy_vzz	15hw2a			OOS	OOS	47	NSL		x			yes	yes		350
22.14	22_we_tttt_vvvv_yyyy_vzz	15hw2a			OOS	OOS	47	102.5% x NSL			x		yes	yes		350
22.15	22_we_tttt_vvvv_yyyy_vzz	15hw2a			OOS	OOS	47	105.0% x NSL			x		yes	yes		350
22.16	22_we_tttt_vvvv_yyyy_vzz_ts	15hw2a			OOS	OOS	47	NSL				x	yes	yes		350
22.17	22_we_tttt_vvvv_yyyy_vzz	15hw2a			OOS	OOS	47	SL		x			yes	yes		350
22.18	22_we_tttt_vvvv_yyyy_vzz	15hw2a			OOS	OOS	47	102.5% x SL			x		yes	yes		350
22.19	22_we_tttt_vvvv_yyyy_vzz	15hw2a			OOS	OOS	47	105.0% x SL			x		yes	yes		350
22.20	22_we_tttt_vvvv_yyyy_vzz_ts	15hw2a			OOS	OOS	47	SL				x	yes	yes		350
	SOUTHLINE W2E VS. SUNZIA WITH TUCSON-ORACLE 115KV LINE RECONDUCTOR															
26.04	26_we_tttt_vvvv_yyyy_vzz	15hw2a			NSL	NSL	SunZia	SL		x			yes	yes		350
26.05	26_we_tttt_vvvv_yyyy_vzz	15hw2a			102.5% x NSL	102.5% x NSL	SunZia	102.5% x SL			x		yes	yes		350
26.06	26_we_tttt_vvvv_yyyy_vzz	15hw2a			105.0% x NSL	105.0% x NSL	SunZia	105.0% x SL			x		yes	yes		350
26.07	26_we_tttt_vvvv_yyyy_vzz	15hw2a			SL	SL	SunZia	NSL		x			yes	yes		350
26.08	26_we_tttt_vvvv_yyyy_vzz	15hw2a			102.5% x SL	102.5% x SL	SunZia	102.5% x NSL			x		yes	yes		350
26.09	26_we_tttt_vvvv_yyyy_vzz	15hw2a			105.0% x SL	105.0% x SL	SunZia	105.0% x NSL			x		yes	yes		350
26.10	26_we_tttt_vvvv_yyyy_vzz_ts	15hw2a			NSL	NSL	SunZia	NSL				x	yes	yes		350
26.11	26_we_tttt_vvvv_yyyy_vzz_ts	15hw2a			NSL	NSL	SunZia	SL				x	yes	yes		350
26.12	26_we_tttt_vvvv_yyyy_vzz_ts	15hw2a			SL	SL	SunZia	NSL				x	yes	yes		350
26.13	26_we_tttt_vvvv_yyyy_vzz	15hw2a			OOS	OOS	SunZia	NSL		x			yes	yes		350
26.14	26_we_tttt_vvvv_yyyy_vzz	15hw2a			OOS	OOS	SunZia	102.5% x NSL			x		yes	yes		350
26.15	26_we_tttt_vvvv_yyyy_vzz	15hw2a			OOS	OOS	SunZia	105.0% x NSL			x		yes	yes		350
26.16	26_we_tttt_vvvv_yyyy_vzz_ts	15hw2a			OOS	OOS	SunZia	NSL				x	yes	yes		350
26.17	26_we_tttt_vvvv_yyyy_vzz	15hw2a			OOS	OOS	SunZia	SL		x			yes	yes		350
26.18	26_we_tttt_vvvv_yyyy_vzz	15hw2a			OOS	OOS	SunZia	102.5% x SL			x		yes	yes		350
26.19	26_we_tttt_vvvv_yyyy_vzz	15hw2a			OOS	OOS	SunZia	105.0% x SL			x		yes	yes		350
26.20	26_we_tttt_vvvv_yyyy_vzz_ts	15hw2a			OOS	OOS	SunZia	SL				x	yes	yes		350
	SOUTHLINE E2W NON SIMULTANEOUS CASES WITH SUNZIA & WITHOUT TUCSON-ORACLE 115KV LINE RECONDUCTOR AND BOWIE GENERATION IN-SERVICE AT 1000															

	TABLE H - CASE DEVELOPMENT MATRIX															
			SOUTHLINE PATHS				PARALLEL PATH									
CASE NUMERIC IDENTIFIER	CASE/FILE NAME	SOURCE CASE	AFTON WEST FLOW (MW)	APACHE WEST FLOW (MW)	SAGUARO / TORTOLITA EAST FLOW (MW)	APACHE EAST FLOW (MW)	PATH NUMBER	PATH FLOW (MW)	10% PATH STRESS TEST	POST TRANSIENT STUDIES	REACTIVE MARGIN TEST	TRANSIENT STABILITY	SUNZIA IN SERVICE	TUCSON-ORACLE 115KV LINE RECONDUCTORED	SECOND MARANA 230/115KV TRANSFORMER BANK	BOWIE GENERATION (MW)
27.01	27_ew_tttt_vvvv_yyyy_vzz	15hs2a	OOS	OOS			SunZia	NSL		x			yes	no		1000
27.02	27_ew_tttt_vvvv_yyyy_vzz	15hs2a	OOS	OOS			SunZia	102.5% x NSL			x		yes	no		1000
27.03	27_ew_tttt_vvvv_yyyy_vzz	15hs2a	OOS	OOS			SunZia	105.0% x NSL			x		yes	no		1000
27.04	27_ew_tttt_vvvv_yyyy_vzz_ts	15hs2a	OOS	OOS			SunZia					x	yes	no		1000
27.05	27_ew_tttt_vvvv_yyyy_vzz	15hs2a	NSL	NSL			SunZia	NSL		x			yes	no		1000
27.06	27_ew_tttt_vvvv_yyyy_vzz	15hs2a	NSL	NSL			SunZia	102.5% x NSL			x		yes	no		1000
27.07	27_ew_tttt_vvvv_yyyy_vzz	15hs2a	NSL	NSL			SunZia	105.0% x NSL			x		yes	no		1000
27.08	27_ew_tttt_vvvv_yyyy_vzz_ts	15hs2a	NSL	NSL			SunZia					x	yes	no		1000
	SOUTHLINE W2E NON SIMULTANEOUS CASES WITH SUNZIA & WITHOUT TUCSON-ORACLE 115KV LINE RECONDUCTOR AND BOWIE GENERATION IN-SERVICE AT 1000															
28.01	28_we_tttt_vvvv_yyyy_vzz	15hw2a			OOS	OOS	SunZia	NSL		x			yes	no		1000
28.02	28_we_tttt_vvvv_yyyy_vzz	15hw2a			OOS	OOS	SunZia	102.5% x SL			x		yes	no		1000
28.03	28_we_tttt_vvvv_yyyy_vzz	15hw2a			OOS	OOS	SunZia	105.0% x SL			x		yes	no		1000
28.04	28_we_tttt_vvvv_yyyy_vzz_ts	15hw2a			OOS	OOS	SunZia					x	yes	no		1000
28.05	28_we_tttt_vvvv_yyyy_vzz	15hw2a			NSL	NSL	SunZia	NSL		x			yes	no		1000
28.06	28_we_tttt_vvvv_yyyy_vzz	15hw2a			NSL	NSL	SunZia	102.5% x SL			x		yes	no		1000
28.07	28_we_tttt_vvvv_yyyy_vzz	15hw2a			NSL	NSL	SunZia	105.0% x SL			x		yes	no		1000
28.08	28_we_tttt_vvvv_yyyy_vzz_ts	15hw2a			NSL	NSL	SunZia					x	yes	no		1000
	SOUTHLINE E2W VS. PATH 47 ALT (SOUTHERN NEW MEXICO - REDEFINED ALTERNATE [NOTE 12]) CASES WITH SUNZIA & WITHOUT TUCSON-ORACLE 115KV LINE RECONDUCTOR															
37.04	37_ew_tttt_vvvv_yyyy_vzz	15hs2a	NSL	NSL			47ALT	SL		x			yes	no		350
37.07	37_ew_tttt_vvvv_yyyy_vzz	15hs2a	SL	SL			47ALT	NSL		x			yes	no		350
37.13	37_ew_tttt_vvvv_yyyy_vzz	15hs2a	OOS	OOS			47ALT	NSL		x			yes	no		350
37.17	37_ew_tttt_vvvv_yyyy_vzz	15hs2a	OOS	OOS			47ALT	SL		x			yes	no		350
	SOUTHLINE W2E VS. PATH 47 ALT (SOUTHERN NEW MEXICO - REDEFINED ALTERNATE [NOTE 12]) CASES WITH SUNZIA & WITHOUT TUCSON-ORACLE 115KV LINE RECONDUCTOR															
38.04	38_we_tttt_vvvv_yyyy_vzz	15hw2a			NSL	NSL	47ALT	SL		x			yes	no		350
38.07	38_we_tttt_vvvv_yyyy_vzz	15hw2a			SL	SL	47ALT	NSL		x			yes	no		350
38.13	38_we_tttt_vvvv_yyyy_vzz	15hw2a			OOS	OOS	47ALT	NSL		x			yes	no		350
38.17	38_we_tttt_vvvv_yyyy_vzz	15hw2a			OOS	OOS	47ALT	SL		x			yes	no		350
	SOUTHLINE W2E VS. PATH 47 ALT (SOUTHERN NEW MEXICO - REDEFINED ALTERNATE [NOTE 12]) CASES WITH SUNZIA & WITH TUCSON-ORACLE 115KV LINE RECONDUCTOR															

	TABLE H - CASE DEVELOPMENT MATRIX															
			SOUTHLINE PATHS				PARALLEL PATH									
CASE NUMERIC IDENTIFIER	CASE/FILE NAME	SOURCE CASE	AFTON WEST FLOW (MW)	APACHE WEST FLOW (MW)	SAGUARO / TORTOLITA EAST FLOW (MW)	APACHE EAST FLOW (MW)	PATH NUMBER	PATH FLOW (MW)	10% PATH STRESS TEST	POST TRANSIENT STUDIES	REACTIVE MARGIN TEST	TRANSIENT STABILITY	SUNZIA IN SERVICE	TUCSON-ORACLE 115KV LINE RECONDUCTORED	SECOND MARANA 230/115KV TRANSFORMER BANK	BOWIE GENERATION (MW)
39.04	39_we_tttt_vvvv_yyyy_vzz	15hw2a			NSL	NSL	47ALT	SL		x			yes	yes		350
39.07	39_we_tttt_vvvv_yyyy_vzz	15hw2a			SL	SL	47ALT	NSL		x			yes	yes		350
39.13	39_we_tttt_vvvv_yyyy_vzz	15hw2a			OOS	OOS	47ALT	NSL		x			yes	yes		350
39.17	39_we_tttt_vvvv_yyyy_vzz	15hw2a			OOS	OOS	47ALT	SL		x			yes	yes		350
	SOUTHLINE W2E NON-SIMULTANEOUS CASES WITH SUNZIA, WITH TUCSON-ORACLE 115KV LINE RECONDUCTOR & REDEFINED PATH 47 ALTERNATE (NOTE 12)															
40.01	40_we_tttt_vvvv_vzz	15hw2a			NSL	NSL				x			yes	yes		350
40.05	40_we_tttt_vvvv_yyyy_vzz	15hw2a			OOS	OOS				x			yes	yes		350
	SOUTHLINE E2W & W2E NON-SIMULTANEOUS CASES WITHOUT SUNZIA & WITHOUT TUCSON-ORACLE 115KV LINE RECONDUCTOR															
0.01	00_ew_tttt_vvvv_vzz	15hs2a	NSL	NSL					x				no	no		350
0.005	005_ew_tttt_vvvv_vzz (NOTE 14)	15hs2a	NSL	NSL						x			no	no		350
0.02	00_we_tttt_vvvv_vzz	15hw2a			NSL	NSL			x				no	no		350
	SOUTHLINE E2W VS. PATH 47 (SOUTHERN NEW MEXICO) CASES WITHOUT SUNZIA & WITHOUT TUCSON-ORACLE 115KV LINE RECONDUCTOR & SECOND MARANA 230/115KV TRANSFORMER BANK															
41.04	41_ew_tttt_vvvv_yyyy_vzz	15hs2a	NSL	NSL			47	SL Note 13		x			no	no	yes	350
41.05	41_ew_tttt_vvvv_yyyy_vzz	15hs2a	102.5% x NSL	102.5% x NSL			47	102.5% x SL			x		no	no	yes	350
41.06	41_ew_tttt_vvvv_yyyy_vzz	15hs2a	105.0% x NSL	105.0% x NSL			47	105.0% x SL			x		no	no	yes	350
41.07	41_ew_tttt_vvvv_yyyy_vzz	15hs2a	SL	SL			47	NSL		x			no	no	yes	350
41.08	41_ew_tttt_vvvv_yyyy_vzz	15hs2a	102.5% x SL	102.5% x SL			47	102.5% x NSL			x		no	no	yes	350
41.09	41_ew_tttt_vvvv_yyyy_vzz	15hs2a	105.0% x SL	105.0% x SL			47	105.0% x NSL			x		no	no	yes	350
41.10	41_ew_tttt_vvvv_yyyy_vzz_ts	15hs2a	NSL	NSL			47	NSL				x	no	no	yes	350
41.11	41_ew_tttt_vvvv_yyyy_vzz_ts	15hs2a	NSL	NSL			47	SL				x	no	no	yes	350
41.12	41_ew_tttt_vvvv_yyyy_vzz_ts	15hs2a	SL	SL			47	NSL				x	no	no	yes	350
41.13	41_ew_tttt_vvvv_yyyy_vzz	15hs2a	OOS	OOS			47	NSL		x			no	no		350
41.14	41_ew_tttt_vvvv_yyyy_vzz	15hs2a	OOS	OOS			47	102.5% x NSL			x		no	no		350
41.15	41_ew_tttt_vvvv_yyyy_vzz	15hs2a	OOS	OOS			47	105.0% x NSL			x		no	no		350
41.16	41_ew_tttt_vvvv_yyyy_vzz_ts	15hs2a	OOS	OOS			47	NSL				x	no	no		350
41.17	41_ew_tttt_vvvv_yyyy_vzz	15hs2a	OOS	OOS			47	SL		x			no	no		350
41.18	41_ew_tttt_vvvv_yyyy_vzz	15hs2a	OOS	OOS			47	102.5% x SL			x		no	no		350
41.19	41_ew_tttt_vvvv_yyyy_vzz	15hs2a	OOS	OOS			47	105.0% x SL			x		no	no		350

	TABLE H - CASE DEVELOPMENT MATRIX															
			SOUTHLINE PATHS				PARALLEL PATH									
CASE NUMERIC IDENTIFIER	CASE/FILE NAME	SOURCE CASE	AFTON WEST FLOW (MW)	APACHE WEST FLOW (MW)	SAGUARO / TORTOLITA EAST FLOW (MW)	APACHE EAST FLOW (MW)	PATH NUMBER	PATH FLOW (MW)	10% PATH STRESS TEST	POST TRANSIENT STUDIES	REACTIVE MARGIN TEST	TRANSIENT STABILITY	SUNZIA IN SERVICE	TUCSON-ORACLE 115KV LINE RECONDUCTORED	SECOND MARANA 230/115KV TRANSFORMER BANK	BOWIE GENERATION (MW)
41.20	41_ew_tttt_vvvv_yyyy_vzz_ts	15hs2a	OOS	OOS			47	SL				x	no	no		350
	SOUTHLINE W2E VS. PATH 47 (SOUTHERN NEW MEXICO) CASES WITHOUT SUNZIA & WITHOUT TUCSON-ORACLE 115KV LINE RECONDUCTOR & SECOND MARANA 230/115KV TRANSFORMER BANK															
42.04	42_we_tttt_vvvv_yyyy_vzz	15hw2a			NSL	NSL	47	SL		x			no	no	yes	350
42.05	42_we_tttt_vvvv_yyyy_vzz	15hw2a			102.5% x NSL	102.5% x NSL	47	102.5% x SL			x		no	no	yes	350
42.06	42_we_tttt_vvvv_yyyy_vzz	15hw2a			105.0% x NSL	105.0% x NSL	47	105.0% x SL			x		no	no	yes	350
42.07	42_we_tttt_vvvv_yyyy_vzz	15hw2a			SL	SL	47	NSL		x			no	no	yes	350
42.08	42_we_tttt_vvvv_yyyy_vzz	15hw2a			102.5% x SL	102.5% x SL	47	102.5% x NSL			x		no	no	yes	350
42.09	42_we_tttt_vvvv_yyyy_vzz	15hw2a			105.0% x SL	105.0% x SL	47	105.0% x NSL			x		no	no	yes	350
42.10	42_we_tttt_vvvv_yyyy_vzz_ts	15hw2a			NSL	NSL	47	NSL				x	no	no	yes	350
42.11	42_we_tttt_vvvv_yyyy_vzz_ts	15hw2a			NSL	NSL	47	SL				x	no	no	yes	350
42.12	42_we_tttt_vvvv_yyyy_vzz_ts	15hw2a			SL	SL	47	NSL				x	no	no	yes	350
42.13	42_we_tttt_vvvv_yyyy_vzz	15hw2a			OOS	OOS	47	NSL		x			no	no		350
42.14	42_we_tttt_vvvv_yyyy_vzz	15hw2a			OOS	OOS	47	102.5% x NSL			x		no	no		350
42.15	42_we_tttt_vvvv_yyyy_vzz	15hw2a			OOS	OOS	47	105.0% x NSL			x		no	no		350
42.16	42_we_tttt_vvvv_yyyy_vzz_ts	15hw2a			OOS	OOS	47	NSL				x	no	no		350
42.17	42_we_tttt_vvvv_yyyy_vzz	15hw2a			OOS	OOS	47	SL		x			no	no		350
42.18	42_we_tttt_vvvv_yyyy_vzz	15hw2a			OOS	OOS	47	102.5% x SL			x		no	no		350
42.19	42_we_tttt_vvvv_yyyy_vzz	15hw2a			OOS	OOS	47	105.0% x SL			x		no	no		350
42.20	42_we_tttt_vvvv_yyyy_vzz_ts	15hw2a			OOS	OOS	47	SL				x	no	no		350
	SOUTHLINE E2W NON-SIMULTANEOUS CASES WITH SUNZIA & WITHOUT TUCSON-ORACLE 115KV LINE RECONDUCTOR & SECOND MARANA 230/115KV TRANSFORMER BANK															
45.01	45_ew_tttt_vvvv_vzz	15hs2a	NSL	NSL						x			yes	no	yes	350
45.02	45_ew_tttt_vvvv_yyyy_vzz	15hs2a	102.5% x NSL	102.5% x NSL							x		yes	no	yes	350
45.03	45_ew_tttt_vvvv_yyyy_vzz	15hs2a	105.0% x NSL	105.0% x NSL							x		yes	no	yes	350
45.04	45_ew_tttt_vvvv_yyyy_vzz_ts	15hs2a	NSL	NSL								x	yes	no	yes	350
45.05	45_ew_tttt_vvvv_yyyy_vzz	15hs2a	OOS	OOS						x			yes	no		350
45.06	45_ew_tttt_vvvv_yyyy_vzz_ts	15hs2a	OOS	OOS								x	yes	no		350
	SOUTHLINE W2E NON-SIMULTANEOUS CASES WITH SUNZIA & WITHOUT TUCSON-ORACLE 115KV LINE RECONDUCTOR & SECOND MARANA 230/115KV TRANSFORMER BANK															
46.01	46_we_tttt_vvvv_vzz	15hw2a			NSL	NSL				x			yes	no	yes	350

	TABLE H - CASE DEVELOPMENT MATRIX															
			SOUTHLINE PATHS				PARALLEL PATH									
CASE NUMERIC IDENTIFIER	CASE/FILE NAME	SOURCE CASE	AFTON WEST FLOW (MW)	APACHE WEST FLOW (MW)	SAGUARO / TORTOLITA EAST FLOW (MW)	APACHE EAST FLOW (MW)	PATH NUMBER	PATH FLOW (MW)	10% PATH STRESS TEST	POST TRANSIENT STUDIES	REACTIVE MARGIN TEST	TRANSIENT STABILITY	SUNZIA IN SERVICE	TUCSON-ORACLE 115KV LINE RECONDUCTORED	SECOND MARANA 230/115KV TRANSFORMER BANK	BOWIE GENERATION (MW)
46.02	46_we_tttt_vvvv_yyyy_vzz	15hw2a			102.5% x NSL	102.5% x NSL					x		yes	no	yes	350
46.03	46_we_tttt_vvvv_yyyy_vzz	15hw2a			105.0% x NSL	105.0% x NSL					x		yes	no	yes	350
46.04	46_we_tttt_vvvv_yyyy_vzz_ts	15hw2a			NSL	NSL						x	yes	no	yes	350
46.05	46_we_tttt_vvvv_yyyy_vzz	15hw2a			OOS	OOS				x			yes	no		350
46.06	46_we_tttt_vvvv_yyyy_vzz_ts	15hw2a			OOS	OOS						x	yes	no		350
	SOUTHLINE E2W VS. PATH 47 (SOUTHERN NEW MEXICO) CASES WITH SUNZIA & WITHOUT TUCSON-ORACLE 115KV LINE RECONDUCTOR & SECOND MARANA 230/115KV TRANSFORMER BANK															
47.04	47_ew_tttt_vvvv_yyyy_vzz	15hs2a	NSL	NSL			47	SL		x			yes	no	yes	350
47.05	47_ew_tttt_vvvv_yyyy_vzz	15hs2a	102.5% x NSL	102.5% x NSL			47	102.5% x SL			x		yes	no	yes	350
47.06	47_ew_tttt_vvvv_yyyy_vzz	15hs2a	105.0% x NSL	105.0% x NSL			47	105.0% x SL			x		yes	no	yes	350
47.07	47_ew_tttt_vvvv_yyyy_vzz	15hs2a	SL	SL			47	NSL		x			yes	no	yes	350
47.08	47_ew_tttt_vvvv_yyyy_vzz	15hs2a	102.5% x SL	102.5% x SL			47	102.5% x NSL			x		yes	no	yes	350
47.09	47_ew_tttt_vvvv_yyyy_vzz	15hs2a	105.0% x SL	105.0% x SL			47	105.0% x NSL			x		yes	no	yes	350
47.10	47_ew_tttt_vvvv_yyyy_vzz_ts	15hs2a	NSL	NSL			47	NSL				x	yes	no	yes	350
47.11	47_ew_tttt_vvvv_yyyy_vzz_ts	15hs2a	NSL	NSL			47	SL				x	yes	no	yes	350
47.12	47_ew_tttt_vvvv_yyyy_vzz_ts	15hs2a	SL	SL			47	NSL				x	yes	no	yes	350
47.13	47_ew_tttt_vvvv_yyyy_vzz	15hs2a	OOS	OOS			47	NSL		x			yes	no		350
47.14	47_ew_tttt_vvvv_yyyy_vzz	15hs2a	OOS	OOS			47	102.5% x NSL			x		yes	no		350
47.15	47_ew_tttt_vvvv_yyyy_vzz	15hs2a	OOS	OOS			47	105.0% x NSL			x		yes	no		350
47.16	47_ew_tttt_vvvv_yyyy_vzz_ts	15hs2a	OOS	OOS			47	NSL				x	yes	no		350
47.17	47_ew_tttt_vvvv_yyyy_vzz	15hs2a	OOS	OOS			47	SL		x			yes	no		350
47.18	47_ew_tttt_vvvv_yyyy_vzz	15hs2a	OOS	OOS			47	102.5% x SL			x		yes	no		350
47.19	47_ew_tttt_vvvv_yyyy_vzz	15hs2a	OOS	OOS			47	105.0% x SL			x		yes	no		350
47.20	47_ew_tttt_vvvv_yyyy_vzz_ts	15hs2a	OOS	OOS			47	SL				x	yes	no		350
	SOUTHLINE W2E VS. PATH 47 (SOUTHERN NEW MEXICO) CASES WITH SUNZIA & WITHOUT TUCSON-ORACLE 115KV LINE RECONDUCTOR & SECOND MARANA 230/115KV TRANSFORMER BANK															
48.04	48_we_tttt_vvvv_yyyy_vzz	15hw2a			NSL	NSL	47	SL		x			yes	no	yes	350
48.05	48_we_tttt_vvvv_yyyy_vzz	15hw2a			102.5% x NSL	102.5% x NSL	47	102.5% x SL			x		yes	no	yes	350
48.06	48_we_tttt_vvvv_yyyy_vzz	15hw2a			105.0% x NSL	105.0% x NSL	47	105.0% x SL			x		yes	no	yes	350
48.07	48_we_tttt_vvvv_yyyy_vzz	15hw2a			SL	SL	47	NSL		x			yes	no	yes	350
48.08	48_we_tttt_vvvv_yyyy_vzz	15hw2a			102.5% x SL	102.5% x SL	47	102.5% x NSL			x		yes	no	yes	350

	TABLE H - CASE DEVELOPMENT MATRIX															
			SOUTHLINE PATHS				PARALLEL PATH									
CASE NUMERIC IDENTIFIER	CASE/FILE NAME	SOURCE CASE	AFTON WEST FLOW (MW)	APACHE WEST FLOW (MW)	SAGUARO / TORTOLITA EAST FLOW (MW)	APACHE EAST FLOW (MW)	PATH NUMBER	PATH FLOW (MW)	10% PATH STRESS TEST	POST TRANSIENT STUDIES	REACTIVE MARGIN TEST	TRANSIENT STABILITY	SUNZIA IN SERVICE	TUCSON-ORACLE 115KV LINE RECONDUCTORED	SECOND MARANA 230/115KV TRANSFORMER BANK	BOWIE GENERATION (MW)
48.09	48_we_tttt_vvvv_yyyy_vzz	15hw2a			105.0% x SL	105.0% x SL	47	105.0% x NSL			x		yes	no	yes	350
48.10	48_we_tttt_vvvv_yyyy_vzz_ts	15hw2a			NSL	NSL	47	NSL				x	yes	no	yes	350
48.11	48_we_tttt_vvvv_yyyy_vzz_ts	15hw2a			NSL	NSL	47	SL				x	yes	no	yes	350
48.12	48_we_tttt_vvvv_yyyy_vzz_ts	15hw2a			SL	SL	47	NSL				x	yes	no	yes	350
48.13	48_we_tttt_vvvv_yyyy_vzz	15hw2a			OOS	OOS	47	NSL		x			yes	no		350
48.14	48_we_tttt_vvvv_yyyy_vzz	15hw2a			OOS	OOS	47	102.5% x NSL			x		yes	no		350
48.15	48_we_tttt_vvvv_yyyy_vzz	15hw2a			OOS	OOS	47	105.0% x NSL			x		yes	no		350
48.16	48_we_tttt_vvvv_yyyy_vzz_ts	15hw2a			OOS	OOS	47	NSL				x	yes	no		350
48.17	48_we_tttt_vvvv_yyyy_vzz	15hw2a			OOS	OOS	47	SL		x			yes	no		350
48.18	48_we_tttt_vvvv_yyyy_vzz	15hw2a			OOS	OOS	47	102.5% x SL			x		yes	no		350
48.19	48_we_tttt_vvvv_yyyy_vzz	15hw2a			OOS	OOS	47	105.0% x SL			x		yes	no		350
48.20	48_we_tttt_vvvv_yyyy_vzz_ts	15hw2a			OOS	OOS	47	SL				x	yes	no		350
	SOUTHLINE E2W VS. SUNZIA WITHOUT TUCSON-ORACLE 115KV LINE RECONDUCTOR & SECOND MARANA 230/115KV TRANSFORMER BANK															
49.04	49_ew_tttt_vvvv_yyyy_vzz	15hs2a	NSL	NSL			SunZia	SL		x			yes	no	yes	350
49.05	49_ew_tttt_vvvv_yyyy_vzz	15hs2a	102.5% x NSL	102.5% x NSL			SunZia	102.5% x SL			x		yes	no	yes	350
49.06	49_ew_tttt_vvvv_yyyy_vzz	15hs2a	105.0% x NSL	105.0% x NSL			SunZia	105.0% x SL			x		yes	no	yes	350
49.07	49_ew_tttt_vvvv_yyyy_vzz	15hs2a	SL	SL			SunZia	NSL		x			yes	no	yes	350
49.08	49_ew_tttt_vvvv_yyyy_vzz	15hs2a	102.5% x SL	102.5% x SL			SunZia	102.5% x NSL			x		yes	no	yes	350
49.09	49_ew_tttt_vvvv_yyyy_vzz	15hs2a	105.0% x SL	105.0% x SL			SunZia	105.0% x NSL			x		yes	no	yes	350
49.10	49_ew_tttt_vvvv_yyyy_vzz_ts	15hs2a	NSL	NSL			SunZia	NSL				x	yes	no	yes	350
49.09	49_ew_tttt_vvvv_yyyy_vzz_ts	15hs2a	NSL	NSL			SunZia	SL				x	yes	no	yes	350
49.12	49_ew_tttt_vvvv_yyyy_vzz_ts	15hs2a	SL	SL			SunZia	NSL				x	yes	no	yes	350
49.13	49_ew_tttt_vvvv_yyyy_vzz	15hs2a	OOS	OOS			SunZia	NSL		x			yes	no		350
49.14	49_ew_tttt_vvvv_yyyy_vzz	15hs2a	OOS	OOS			SunZia	102.5% x NSL			x		yes	no		350
49.15	49_ew_tttt_vvvv_yyyy_vzz	15hs2a	OOS	OOS			SunZia	105.0% x NSL			x		yes	no		350
49.16	49_ew_tttt_vvvv_yyyy_vzz_ts	15hs2a	OOS	OOS			SunZia	NSL				x	yes	no		350
49.17	49_ew_tttt_vvvv_yyyy_vzz	15hs2a	OOS	OOS			SunZia	SL		x			yes	no		350
49.18	49_ew_tttt_vvvv_yyyy_vzz	15hs2a	OOS	OOS			SunZia	102.5% x SL			x		yes	no		350
49.19	49_ew_tttt_vvvv_yyyy_vzz	15hs2a	OOS	OOS			SunZia	105.0% x SL			x		yes	no		350

	TABLE H - CASE DEVELOPMENT MATRIX															
			SOUTHLINE PATHS				PARALLEL PATH									
CASE NUMERIC IDENTIFIER	CASE/FILE NAME	SOURCE CASE	AFTON WEST FLOW (MW)	APACHE WEST FLOW (MW)	SAGUARO / TORTOLITA EAST FLOW (MW)	APACHE EAST FLOW (MW)	PATH NUMBER	PATH FLOW (MW)	10% PATH STRESS TEST	POST TRANSIENT STUDIES	REACTIVE MARGIN TEST	TRANSIENT STABILITY	SUNZIA IN SERVICE	TUCSON-ORACLE 115KV LINE RECONDUCTORED	SECOND MARANA 230/115KV TRANSFORMER BANK	BOWIE GENERATION (MW)
49.20	49_ew_tttt_vvvv_yyyy_vzz_ts	15hs2a	OOS	OOS			SunZia	SL				x	yes	no		350
	SOUTHLINE W2E VS. SUNZIA WITHOUT TUCSON-ORACLE 115KV LINE RECONDUCTOR & SECOND MARANA 230/115KV TRANSFORMER BANK															
50.04	50_we_tttt_vvvv_yyyy_vzz	15hw2a			NSL	NSL	SunZia	SL		x			yes	no	yes	350
50.05	50_we_tttt_vvvv_yyyy_vzz	15hw2a			102.5% x NSL	102.5% x NSL	SunZia	102.5% x SL			x		yes	no	yes	350
50.06	50_we_tttt_vvvv_yyyy_vzz	15hw2a			105.0% x NSL	105.0% x NSL	SunZia	105.0% x SL			x		yes	no	yes	350
50.07	50_we_tttt_vvvv_yyyy_vzz	15hw2a			SL	SL	SunZia	NSL		x			yes	no	yes	350
50.08	50_we_tttt_vvvv_yyyy_vzz	15hw2a			102.5% x SL	102.5% x SL	SunZia	102.5% x NSL			x		yes	no	yes	350
50.09	50_we_tttt_vvvv_yyyy_vzz	15hw2a			105.0% x SL	105.0% x SL	SunZia	105.0% x NSL			x		yes	no	yes	350
50.10	50_we_tttt_vvvv_yyyy_vzz_ts	15hw2a			NSL	NSL	SunZia	NSL				x	yes	no	yes	350
50.11	50_we_tttt_vvvv_yyyy_vzz_ts	15hw2a			NSL	NSL	SunZia	SL				x	yes	no	yes	350
50.12	50_we_tttt_vvvv_yyyy_vzz_ts	15hw2a			SL	SL	SunZia	NSL				x	yes	no	yes	350
50.13	50_we_tttt_vvvv_yyyy_vzz	15hw2a			OOS	OOS	SunZia	NSL		x			yes	no		350
50.14	50_we_tttt_vvvv_yyyy_vzz	15hw2a			OOS	OOS	SunZia	102.5% x NSL			x		yes	no		350
50.15	50_we_tttt_vvvv_yyyy_vzz	15hw2a			OOS	OOS	SunZia	105.0% x NSL			x		yes	no		350
50.16	50_we_tttt_vvvv_yyyy_vzz_ts	15hw2a			OOS	OOS	SunZia	NSL				x	yes	no		350
50.17	50_we_tttt_vvvv_yyyy_vzz	15hw2a			OOS	OOS	SunZia	SL		x			yes	no		350
50.18	50_we_tttt_vvvv_yyyy_vzz	15hw2a			OOS	OOS	SunZia	102.5% x SL			x		yes	no		350
50.19	50_we_tttt_vvvv_yyyy_vzz	15hw2a			OOS	OOS	SunZia	105.0% x SL			x		yes	no		350
50.20	50_we_tttt_vvvv_yyyy_vzz_ts	15hw2a			OOS	OOS	SunZia	SL			-	x	yes	no		350
	SOUTHLINE W2E NON-SIMULTANEOUS CASES WITHOUT SUNZIA & WITH TUCSON-ORACLE 115KV LINE RECONDUCTOR & SECOND MARANA 230/115KV TRANSFORMER BANK															
54.01	54_we_tttt_vvvv_vzz	15hw2a			NSL	NSL				x			no	yes	yes	350
54.02	54_we_tttt_vvvv_yyyy_vzz	15hw2a			102.5% x NSL	102.5% x NSL					x		no	yes	yes	350
54.03	54_we_tttt_vvvv_yyyy_vzz	15hw2a			105.0% x NSL	105.0% x NSL					x		no	yes	yes	350
54.04	54_we_tttt_vvvv_yyyy_vzz_ts	15hw2a			NSL	NSL						x	no	yes	yes	350
54.05	54_we_tttt_vvvv_yyyy_vzz	15hw2a			OOS	OOS				x			no	yes		350
54.06	54_we_tttt_vvvv_yyyy_vzz_ts	15hw2a			OOS	OOS						x	no	yes		350
	SOUTHLINE W2E VS. PATH 47 (SOUTHERN NEW MEXICO) CASES WITHOUT SUNZIA & WITH TUCSON-ORACLE 115KV LINE RECONDUCTOR & SECOND MARANA 230/115KV TRANSFORMER BANK															
56.04	56_we_tttt_vvvv_yyyy_vzz	15hw2a			NSL	NSL	47	SL		x			no	yes	yes	350

	TABLE H - CASE DEVELOPMENT MATRIX															
			SOUTHLINE PATHS				PARALLEL PATH									
CASE NUMERIC IDENTIFIER	CASE/FILE NAME	SOURCE CASE	AFTON WEST FLOW (MW)	APACHE WEST FLOW (MW)	SAGUARO / TORTOLITA EAST FLOW (MW)	APACHE EAST FLOW (MW)	PATH NUMBER	PATH FLOW (MW)	10% PATH STRESS TEST	POST TRANSIENT STUDIES	REACTIVE MARGIN TEST	TRANSIENT STABILITY	SUNZIA IN SERVICE	TUCSON-ORACLE 115KV LINE RECONDUCTORED	SECOND MARANA 230/115KV TRANSFORMER BANK	BOWIE GENERATION (MW)
56.05	56_we_tttt_vvvv_yyyy_vzz	15hw2a			102.5% x NSL	102.5% x NSL	47	102.5% x SL			x		no	yes	yes	350
56.06	56_we_tttt_vvvv_yyyy_vzz	15hw2a			105.0% x NSL	105.0% x NSL	47	105.0% x SL			x		no	yes	yes	350
56.07	56_we_tttt_vvvv_yyyy_vzz	15hw2a			SL	SL	47	NSL		x			no	yes	yes	350
56.08	56_we_tttt_vvvv_yyyy_vzz	15hw2a			102.5% x SL	102.5% x SL	47	102.5% x NSL			x		no	yes	yes	350
56.09	56_we_tttt_vvvv_yyyy_vzz	15hw2a			105.0% x SL	105.0% x SL	47	105.0% x NSL			x		no	yes	yes	350
56.10	56_we_tttt_vvvv_yyyy_vzz_ts	15hw2a			NSL	NSL	47	NSL				x	no	yes	yes	350
56.11	56_we_tttt_vvvv_yyyy_vzz_ts	15hw2a			NSL	NSL	47	SL				x	no	yes	yes	350
56.12	56_we_tttt_vvvv_yyyy_vzz_ts	15hw2a			SL	SL	47	NSL				x	no	yes	yes	350
56.13	56_we_tttt_vvvv_yyyy_vzz	15hw2a			OOS	OOS	47	NSL		x			no	yes		350
56.14	56_we_tttt_vvvv_yyyy_vzz	15hw2a			OOS	OOS	47	102.5% x NSL			x		no	yes		350
56.15	56_we_tttt_vvvv_yyyy_vzz	15hw2a			OOS	OOS	47	105.0% x NSL			x		no	yes		350
56.16	56_we_tttt_vvvv_yyyy_vzz_ts	15hw2a			OOS	OOS	47	NSL				x	no	yes		350
56.17	56_we_tttt_vvvv_yyyy_vzz	15hw2a			OOS	OOS	47	SL		x			no	yes		350
56.18	56_we_tttt_vvvv_yyyy_vzz	15hw2a			OOS	OOS	47	102.5% x SL			x		no	yes		350
56.19	56_we_tttt_vvvv_yyyy_vzz	15hw2a			OOS	OOS	47	105.0% x SL			x		no	yes		350
56.20	56_we_tttt_vvvv_yyyy_vzz_ts	15hw2a			OOS	OOS	47	SL				x	no	yes		350
	SOUTHLINE W2E NON-SIMULTANEOUS CASES WITH SUNZIA & WITH TUCSON-ORACLE 115KV LINE RECONDUCTOR & SECOND MARANA 230/115KV TRANSFORMER BANK															
60.01	60_we_tttt_vvvv_vzz	15hw2a			NSL	NSL				x			yes	yes	yes	350
60.02	60_we_tttt_vvvv_yyyy_vzz	15hw2a			102.5% x NSL	102.5% x NSL					x		yes	yes	yes	350
60.03	60_we_tttt_vvvv_yyyy_vzz	15hw2a			105.0% x NSL	105.0% x NSL					x		yes	yes	yes	350
60.04	60_we_tttt_vvvv_yyyy_vzz_ts	15hw2a			NSL	NSL						x	yes	yes	yes	350
60.05	60_we_tttt_vvvv_yyyy_vzz	15hw2a			OOS	OOS				x			yes	yes		350
60.06	60_we_tttt_vvvv_yyyy_vzz_ts	15hw2a			OOS	OOS						x	yes	yes		350
	SOUTHLINE W2E VS. PATH 47 (SOUTHERN NEW MEXICO) CASES WITH SUNZIA & WITH TUCSON-ORACLE 115KV LINE RECONDUCTOR & SECOND MARANA 230/115KV TRANSFORMER BANK															
62.04	62_we_tttt_vvvv_yyyy_vzz	15hw2a			NSL	NSL	47	SL		x			yes	yes	yes	350
62.05	62_we_tttt_vvvv_yyyy_vzz	15hw2a			102.5% x NSL	102.5% x NSL	47	102.5% x SL			x		yes	yes	yes	350
62.06	62_we_tttt_vvvv_yyyy_vzz	15hw2a			105.0% x NSL	105.0% x NSL	47	105.0% x SL			x		yes	yes	yes	350
62.07	62_we_tttt_vvvv_yyyy_vzz	15hw2a			SL	SL	47	NSL		x			yes	yes	yes	350
62.08	62_we_tttt_vvvv_yyyy_vzz	15hw2a			102.5% x SL	102.5% x SL	47	102.5% x NSL			x		yes	yes	yes	350

	TABLE H - CASE DEVELOPMENT MATRIX															
			SOUTHLINE PATHS				PARALLEL PATH									
CASE NUMERIC IDENTIFIER	CASE/FILE NAME	SOURCE CASE	AFTON WEST FLOW (MW)	APACHE WEST FLOW (MW)	SAGUARO / TORTOLITA EAST FLOW (MW)	APACHE EAST FLOW (MW)	PATH NUMBER	PATH FLOW (MW)	10% PATH STRESS TEST	POST TRANSIENT STUDIES	REACTIVE MARGIN TEST	TRANSIENT STABILITY	SUNZIA IN SERVICE	TUCSON-ORACLE 115KV LINE RECONDUCTORED	SECOND MARANA 230/115KV TRANSFORMER BANK	BOWIE GENERATION (MW)
62.09	62_we_tttt_vvvv_yyyy_vzz	15hw2a			105.0% x SL	105.0% x SL	47	105.0% x NSL			x		yes	yes	yes	350
62.10	62_we_tttt_vvvv_yyyy_vzz_ts	15hw2a			NSL	NSL	47	NSL				x	yes	yes	yes	350
62.11	62_we_tttt_vvvv_yyyy_vzz_ts	15hw2a			NSL	NSL	47	SL				x	yes	yes	yes	350
62.12	62_we_tttt_vvvv_yyyy_vzz_ts	15hw2a			SL	SL	47	NSL				x	yes	yes	yes	350
62.13	62_we_tttt_vvvv_yyyy_vzz	15hw2a			OOS	OOS	47	NSL		x			yes	yes		350
62.14	62_we_tttt_vvvv_yyyy_vzz	15hw2a			OOS	OOS	47	102.5% x NSL			x		yes	yes		350
62.15	62_we_tttt_vvvv_yyyy_vzz	15hw2a			OOS	OOS	47	105.0% x NSL			x		yes	yes		350
62.16	62_we_tttt_vvvv_yyyy_vzz_ts	15hw2a			OOS	OOS	47	NSL				x	yes	yes		350
62.17	62_we_tttt_vvvv_yyyy_vzz	15hw2a			OOS	OOS	47	SL		x			yes	yes		350
62.18	62_we_tttt_vvvv_yyyy_vzz	15hw2a			OOS	OOS	47	102.5% x SL			x		yes	yes		350
62.19	62_we_tttt_vvvv_yyyy_vzz	15hw2a			OOS	OOS	47	105.0% x SL			x		yes	yes		350
62.20	62_we_tttt_vvvv_yyyy_vzz_ts	15hw2a			OOS	OOS	47	SL				x	yes	yes		350
	SOUTHLINE W2E VS. SUNZIA WITH TUCSON-ORACLE 115KV LINE RECONDUCTOR & SECOND MARANA 230/115KV TRANSFORMER BANK															
66.04	66_we_tttt_vvvv_yyyy_vzz	15hw2a			NSL	NSL	SunZia	SL		x			yes	yes	yes	350
66.05	66_we_tttt_vvvv_yyyy_vzz	15hw2a			102.5% x NSL	102.5% x NSL	SunZia	102.5% x SL			x		yes	yes	yes	350
66.06	66_we_tttt_vvvv_yyyy_vzz	15hw2a			105.0% x NSL	105.0% x NSL	SunZia	105.0% x SL			x		yes	yes	yes	350
66.07	66_we_tttt_vvvv_yyyy_vzz	15hw2a			SL	SL	SunZia	NSL		x			yes	yes	yes	350
66.08	66_we_tttt_vvvv_yyyy_vzz	15hw2a			102.5% x SL	102.5% x SL	SunZia	102.5% x NSL			x		yes	yes	yes	350
66.09	66_we_tttt_vvvv_yyyy_vzz	15hw2a			105.0% x SL	105.0% x SL	SunZia	105.0% x NSL			x		yes	yes	yes	350
66.10	66_we_tttt_vvvv_yyyy_vzz_ts	15hw2a			NSL	NSL	SunZia	NSL				x	yes	yes	yes	350
66.11	66_we_tttt_vvvv_yyyy_vzz_ts	15hw2a			NSL	NSL	SunZia	SL				x	yes	yes	yes	350
66.12	66_we_tttt_vvvv_yyyy_vzz_ts	15hw2a			SL	SL	SunZia	NSL				x	yes	yes	yes	350
66.13	66_we_tttt_vvvv_yyyy_vzz	15hw2a			OOS	OOS	SunZia	NSL		x			yes	yes		350
66.14	66_we_tttt_vvvv_yyyy_vzz	15hw2a			OOS	OOS	SunZia	102.5% x NSL			x		yes	yes		350
66.15	66_we_tttt_vvvv_yyyy_vzz	15hw2a			OOS	OOS	SunZia	105.0% x NSL			x		yes	yes		350
66.16	66_we_tttt_vvvv_yyyy_vzz_ts	15hw2a			OOS	OOS	SunZia	NSL				x	yes	yes		350
66.17	66_we_tttt_vvvv_yyyy_vzz	15hw2a			OOS	OOS	SunZia	SL		x			yes	yes		350
66.18	66_we_tttt_vvvv_yyyy_vzz	15hw2a			OOS	OOS	SunZia	102.5% x SL			x		yes	yes		350
66.19	66_we_tttt_vvvv_yyyy_vzz	15hw2a			OOS	OOS	SunZia	105.0% x SL			x		yes	yes		350

TABLE H - CASE DEVELOPMENT MATRIX

CASE NUMERIC IDENTIFIER	CASE/FILE NAME	SOURCE CASE	SOUTHLINE PATHS				PARALLEL PATH		10% PATH STRESS TEST	POST TRANSIENT STUDIES	REACTIVE MARGIN TEST	TRANSIENT STABILITY	SUNZIA IN SERVICE	TUCSON-ORACLE 115KV LINE RECONDUCTORED	SECOND MARANA 230/115KV TRANSFORMER BANK	BOWIE GENERATION (MW)
			AFTON WEST FLOW (MW)	APACHE WEST FLOW (MW)	SAGUARO / TORTOLITA EAST FLOW (MW)	APACHE EAST FLOW (MW)	PATH NUMBER	PATH FLOW (MW)								
66.20	66_we_tttt_vvvv_yyyy_vzz_ts	15hw2a			OOS	OOS	SunZia	SL				x	yes	yes		350

Notes

1. "tttt" - Southline Path Flow (Afton West or Saguaro/Tortolita East).
2. "vvvv" - Southline Path Flow (Apache West or Apache East).
3. "yyyy" - Flow on Non-Southline Path (47, SunZia, etc)
4. "zz" - Case Version
5. "w2e" - West-to-East Power Flow on Southline
6. "e2w" - East-to-West Power Flow on Southline
7. "SL" - Simultaneous Limit (MW)
8. "NSL" - Non-Simultaneous Limit (MW)
9. "OOS" - Out of Service
10. "ts" - Transient Stability Case
11. Where indicated, 10% Flow Tests performed on cases with Southline Path flows at greater than or equal to the Non-Simultaneous Limits.
12. Redefined Path 47ALTernative: Limit = 1048, Definition = Existing Path 47 Definition + Flows on the Luna 500/345kV Transformers proposed as part of the SunZia Project.
13. Please note that this case will be known as the Foundational Base Case in which Southline will be seeking review and approval from PRG Members.
14 Midpoint-Midpoint South 345kV Spur

APPENDIX 8 – POST-TRANSIENT OUTAGES

TABLE I – OUTAGES TO BE MODELED FOR CONTINGENCY ANALYSIS		
#	CAT	DESCRIPTION
1	A	All Lines In Service
2	B	Abel-Browning 500kV Line
3	B	Abel-Dinosaur 230kV Line
4	B	Abel-Randolph 230kV Line
5	B	Adams 230/115kV Transformer
6	B	Afton 345/34.5kV Step-Up Transformer #1
7	B	Afton 345/34.5kV Step-Up Transformer #2
8	B	Afton 345/34.5kV Step-Up Transformer #3
9	B	Afton 345kV Phase Shifter 1
10	B	Afton-Diablo 345kV Line
11	B	Afton-Midpoint 345kV Line
12	B	Afton-Newman 345kV Line
13	B	Aguafria-Alexandr 230kV Line
14	B	Aguafria-Westwngw 230kV Line
15	B	Aguafria-Whitetnk 230kV Line
16	B	Anderson-Kyr-New 230kV Line
17	B	Anderson-Orme 230kV Line
18	B	Apache 345/230kV Transformer
19	B	Apache- Butterfield 230kV Line
20	B	Apache-Adams 230kV Line
21	B	Apache-Pantano 230kV Line
22	B	Apache-Red Tail 230kV Line
23	B	Apache-Winchester 230kV Line
24	B	Arroyo-Newman 345kV Line
25	B	Belen-Bernardo 115kV Line
26	B	Bisti-Ambrosia 230kV Line
27	B	Brandow-Kyrene 230kV Line
28	B	Brandow-Papagobt 230kV Line
29	B	Brandow-Ward 230kV Line
30	B	Browning-Kyrene 500kV Line
31	B	Browning-Santan 230kV Line
32	B	Casa Grande 230/115 kV Transformer
33	B	Cholla 500/345kV Transformer
34	B	Cholla-Saguaro 500kV Line
35	B	Coolidge-ED2 115 kV Line
36	B	Coolidge-Signal-ED2 115 kV
37	B	Coolidge-Valley Farms 115 kV Line
38	B	Corbell-Kyrene 230kV Line
39	B	Coronado-Silver King 500kV Line
40	B	Deervaly-Alexandr 230kV Line
41	B	Deervaly-Pinpksrp 230kV Line
42	B	Deervaly-Westwngw 230kV Line
43	B	Delbac-Ngoles 230kV Line

TABLE I – OUTAGES TO BE MODELED FOR CONTINGENCY ANALYSIS		
#	CAT	DESCRIPTION
44	B	Dinosaur-Browning 230kV Line
45	B	ED2-Brady-Picacho-Red Rock-Saguaro 115 kV Line
46	B	ED2-ED4 115 kV Line
47	B	ED4-ED5 115 kV Line
48	B	ED5-Empire 115 kV Line
49	B	Empire-Casa Grande 115 kV Line
50	B	Four Corners - San Juan 345kV Line
51	B	Four Corners - Shiprock 345kV Line
52	B	Four Corners-Moenkopi 500kV Line
53	B	Four Corners-West Mesa 345kV Line
54	B	Greenlee-Hidalgo 345kV Line
55	B	Greenlee-Willow 345kV Line
56	B	Greenlee – Winchester 345 kV Line
57	B	Harcuvar-Harcu Az 230kV Line
58	B	Hassayampa-North Gila #1 500kV Line
59	B	Hidalgo-Apache 345kV Line
60	B	Hidalgo 345/115kV Transformer
61	B	Kyrene-Kyr-New 230kV Line
62	B	Kyrene-Schrader 230kV Line
63	B	Liberty-Lone Butte 230 kV Line
64	B	Liberty-Peacock 345kV Line
65	B	Liberty-Phoenix WAPA 230 kV
66	B	Liberty-Rudd 230kV Line
67	B	Liberty-Westwing 230 kV Line
68	B	Lone Butte-Sundance 230 kV Line
69	B	Lone Butte-Test Track 230 kV Line
70	B	Luna 345/115kV Transformer
71	B	Luna-Afton 345kV Line
72	B	Luna-Diablo 345kV Line
73	B	Luna-Hidalgo 345kV Line
74	B	Luna-Lef 345kV Line
75	B	Marana-Rattle Snake 230kV Line
76	B	Marana-Southline Saguaro 230kV Line
77	B	McKinley – Springerville 345 kV Line #1
78	B	Mead-Perkins 500kV Line
79	B	Midpoint-Hidalgo 345kV Line
80	B	Midpoint-Hidalgo 345kV Line
81	B	Moenkopi-El Dorado 500kV Line
82	B	Morgan-Dugas 500kV Line
83	B	Morgan-Pinnacle Peak 500kV Line
84	B	MSPOI-Luna 345kV Line or Springerville- Luna 345kV Line
85	B	MSPOI-Springer 345kV Line or Springerville-Luna 345kV Line
87	B	New Tucson- Sahuarita 230kV Line
88	B	Newman 345/115kV Transformer
89	B	Nogales-Adams 230kV Line

TABLE I – OUTAGES TO BE MODELED FOR CONTINGENCY ANALYSIS		
#	CAT	DESCRIPTION
89B	B	Nogales-Adams Tap-Apache 115kV Line
90	B	Oracle-Saguaro 115 kV Line
91	B	Orme-Rudd 230kV Line
92	B	Pantano 230/115kV Transformer
93	B	Pantano-New Tucson 230kV Line
94	B	Pantano-Vail 230kV Line
95	B	Papagobt-Kyr-New 230kV Line
96	B	Papagobt-Pinpksrp 230kV Line
97	B	Parker-Eagle Eye-Liberty 230 kV Line
98	B	Parker-Harcuvar-Hassayampa Tap-Liberty 230 kV Line
99	B	Peacock-Mead 345kV Line
100	B	Phoenix WAPA-Lone Butte 230 kV
101	B	Picante-Newman 345kV Line
102	B	Pinal Central-Abel 500kV Line
103	B	Pinal_C-Dbg 230kV Line
104	B	Pinal_C-Randolph 230kV Line
105	B	Pinal West 500/345 kV Transformer #1
106	B	Pinal West – South 345 kV Line
107	B	Pinpksrp-Brandow 230kV Line
108	B	Rattle Snake 230/115kV Transformer
109	B	Rattle Snake-Tucson 230kV Line
110	B	Rogers-Pinnacle Peak 230 kV Line
111	B	Rogers-Rogswapa 230kV Line
112	B	Rogers-Spook Hill-Colldige 230 kV Line
113	B	Rogers-Thundrst 230kV Line
114	B	Rudd-Whitetnk 230kV Line
116	B	Southline Saguaro 230/115kV Transformer #1
117	B	Southline Saguaro 230/115kV Transformer #2
118	B	Southline Saguaro-ED5 115 kV Line
119	B	Saguaro-Tortolita 500kV Line
120	B	San Juan – McKinley 345 kV Line #1
121	B	San Juan - Shiprock 345kV Line
122	B	San Juan-Ojo 345kV Line
123	B	San Juan-Riopuero 345kV Line
124	B	Santan-Corbell 230kV Line
125	B	Santan-Thundrst 230kV Line
126	B	Schrader-Santan 230kV Line
127	B	Silverkg-Goldfeld 230kV Line
128	B	South 345/138 kV Transformer #1
129	B	Springerville – Coronado 345 kV Line w/ Coronado 345/500 kV Transformers #1 & #2
130	B	Springerville – Greenlee 345 kV Line
131	B	Springerville-Vail 345kV Line
132	B	Springerville-Vail 345kV Line w/ SPS Trip of 1,100MW SunZia Generation
133	B	Sundance-Coolidge #1 230 kV Line
134	B	SunZia E-SunZia S #1 500kV Line

TABLE I – OUTAGES TO BE MODELED FOR CONTINGENCY ANALYSIS		
#	CAT	DESCRIPTION
135	B	SunZia E-SunZia S #1 500kV Line w/ SPS Trip of 1,500MW SunZia Generation
136	B	SunZia S-Luna 500/345kV Transformer #1
137	B	SunZia S-Willow #1 500kV Line
138	B	SunZia S-Willow #1 500kV Line w/ SPS Trip of 500MW SunZia Generation
139	B	Test Track-Casa Grande 230 kV Line
140	B	Thundrst-Goldfeld 230kV Line
141	B	Tortolita 500/230kV Transformer
142	B	Tucson 230/115kV Transformer
143	B	Tucson 230/Dmp 138kV Transformer
144	B	Tucson-Delbac 230kV Line
145	B	Tucson-Oracle 115 kV Line
146	B	Tucson-Tortolita 230kV Line
147	B	Tucson-Vail 230kV Line
148	B	Vail 345/230kV Transformer
149	B	Vail – South 345 kV Line
150	B	Valley Farms-Oracle 115 kV Line
151	B	Walsenbury-Gladstone 230kV Line
152	B	West Mesa-Arroyo 345kV Line
153	B	Westwing – Pinal West 345 kV Line w/ Westwing 345/500 kV Transformer
154	B	Westwing-Pinnacle Peak 230 kV Line
155	B	Willow – Winchester 345 kV Line
156	B	Willow 500/345kV Transformer #1
157	B	Willow-Pinal C #1 500kV Line
158	B	Willow-Pinal C #1 500kV Line w/ SPS Trip of 400MW SunZia Generation
159	B	Winchester – Vail 345 kV line
160	B	Yavapai 500/230kV #1 Transformer
161	B	Yavapai-Westwing 500kV Line
161B	B	Saguaro-Marana-Rattle Snake-Tucson 115kV Line
162	B	Southline Saguaro-Saguaro East 115kV Line
163	B	Southline Saguaro-Saguaro West 115kV Line
163B	B	Tucson-Del Bac-Nogales 115kV Line
164	B	Test Track-ED5 230kV Line
165	B	ED5 230/115kV Transformer #1
166	C	Afton-Midpoint 345kV #1 And #2 Lines
167	C	Apache-Pantano & Adams-Nogales 230kV Lines
168	C	Apache-Pantano & Apache-Adams 230kV Lines
169	C	Cholla-Mazatzal And Cholla-Preacher Canyon 345kV Lines
170	C	Coolidge-Signal-ED2 & Coolidge-ED2 115 kV Line
171	C	Coronado-Silver King & Cholla-Saguaro 500kV Lines
172	C	Fourcorners-Cholla 345kV #1 & #2 Lines
173	C	Four Corners Breaker Failure[7]
174	C	Greenlee-Willow & Springerville-Vail 345kV Lines

[7] Outage includes Four Corners-San Juan 345 kV Line & Four Corners 500/345 kV Transformer (Breaker 1136)

TABLE I – OUTAGES TO BE MODELED FOR CONTINGENCY ANALYSIS		
#	CAT	DESCRIPTION
175	C	Greenlee-Willow & Springerville-Vail 345kV Lines w/ SPS Trip of 700MW SunZia Gen
176	C	Greenlee-Willow & Willow-Winchester 345kV Lines
177	C	Hidalgo-Apache 345kV #1 And #2 Lines
178	C	Hidalgo Breaker Failure[8]
179	C	Luna-Afton & Luna-Springerville 345kV Transformer
180	C	Luna-Afton 345kV Line & Luna 345kV/115kV Transformer
181	C	Luna-Hidalgo 345kV & Luna-LEF 345kV Lines
182	C	Luna-Hidalgo 345kV Line & Luna 345kV/115kV Transformer
183	C	Mazatzal-Pinnacle Peak & Cholla-Preacher Canyon 345kV Lines
184	C	Mckinley-Springerville 345kV #1 & #2 Lines
185	C	Midpoint-Hidalgo 345kV #1 And #2 Lines
186	C	Morgan-Dugas & Yavapai-Westwing 500kV Lines
187	C	Morgan-Westwing & Yavapai-Westwing 500kV Lines
188	C	Navajo-Dugas & Yavapai-Westwing 500kV Lines
189	C	Newman-Arroyo & Newman-Afton 345kV Lines
190	C	Newman-Arroyo 345kV Line & Newman 345kV/115kV Transformer
191	C	Newman-Picante & Newman-Afton 345kV Lines
192	C	Newman-Picante 345kV Line & Newman 345kV/115kV Transformer
193	C	Pantano-Vail & Adams-Nogales 230kV Lines
194	C	San Juan-Mckinley 345kV #1 & #2 Lines
195	C	Springerville-Greenlee & Greenlee-Willow 345kV Lines
196	C	Springerville-Greenlee & Springerville-Vail 34kV Lines
197	C	Springerville-Greenlee & Springerville-Vail 34kV Lines w/ SPS Trip of 500MW SunZia Gen
198	C	Sundance-Coolidge #1 & Sundance-Coolidge #2 230 kV Line
199	C	SunZia E-S #1 & #2 500kV Lines
200	C	SunZia E-S #1 & #2 500kV Lines w/ SPS Trip of 3,000MW SunZia Generation
201	C	SunZia S-Willow #1 & #2 500kV Lines
202	C	SunZia S-Willow #1 & #2 500kV Lines w/ SPS Trip of 2,000MW SunZia Generation
203	C	Tortolita-Tucson & Southline Saguaro-Marana 230kV Lines
204	C	Tortolita-Tucson & Rattlesnake-Marana 230kV Lines
205	C	Tortolita-Tucson & Rattlesnake-Tucson 230kV Lines
206	C	Vail-Tucson & Adams-Nogales 230kV Lines
207	C	Vail-Tucson & Del Bac-Nogales 230kV Lines
208	C	West Mesa Breaker Failure[9]
209	C	Willow-Pinal C #1 & #2 500kV Lines
210	C	Willow-Pinal C #1 & #2 500kV Lines w/ SPS Trip of 2,500MW SunZia Generation
211	C	Willow-Winchester & Springerville-Vail 345kV Lines
212	C	Willow-Winchester & Winchester-Vail 345kV Lines
213	C	Winchester-Vail & Springerville-Vail 345kV Lines
214		Common Corridor Outages To be Determined by the PRG
215	C	Springerville – Vail & Greenlee – Winchester 345 kV Lines

[8] Outage includes Luna-Hidalgo 345 kV Line & Hidalgo 345/115 kV Transformer (Breakers 09782 and 03882) Hidalgo-Greenlee 345 kV Line & Hidalgo 345/115 kV Transformer (Breakers 02782 & 04982)
[9] Outage includes West Mesa-Arroyo & West Mesa-Rio Puerco 115 kV Lines (Breaker 14682)

TABLE I – OUTAGES TO BE MODELED FOR CONTINGENCY ANALYSIS		
#	CAT	DESCRIPTION
216	C	Vail-South & Pinal West-South 345kV Lines

APPENDIX 9 – TRANSIENT STABILITY DISTURBANCES

TABLE J – TRANSIENT STABILITY DISTURBANCES

#	CAT	DESCRIPTION
1	B	N-1 Adams 230/115kV Transformer
2	B	N-1 Afton 345kV Phase Shifter 1
3	B	N-1 Afton-Midpoint 345kV Line
4	B	N-1 Apache 345/230kV Transformer
5	B	N-1 Apache-Adams 230kV Line
6	B	N-1 Apache-Pantano 230kV Line
7	B	N-1 Delbac-Nogoles 230kV Line
8	B	N-1 Hidalgo-Apache 345kV Line
9	B	N-1 Marana 230/115kV Transformer
10	B	N-1 Marana-Rattle Snake 230kV Line
11	B	N-1 Midpoint-Hidalgo 345kV Line
12	B	N-1 Nogales-Adams 230kV Line
13	B	N-1 Rattle Snake 230/115kV Transformer
18	B	N-1 Southline Saguaro 230/115kV Transformer #1
19	B	N-1 Southline Saguaro-Marana 230kV Line
20	B	N-1 Tortolita 500/230kV Transformer
21	B	N-1 Tucson 230/115kV Transformer
22	B	N-1 Tucson 230/Dmp 138kV Transformer
23	B	N-1 Tucson-Rattlesnake 230kV Line
24	B	N-1 Tucson-Tortolita 230kV Line
25	B	N-1 Tucson-Vail 230kV Line
26	B	N-1 Tucson-Del Bac 230kV Line
27	B	N-1 Vail 345/230kV Transformer
28	C	N-2 Afton-Midpoint 345kV #1 And #2 Lines
29	C	N-2 Apache-Pantano & Adams-Nogales 230kV Lines
30	C	N-2 Apache-Pantano & Apache-Adams 230kV Lines
31	C	N-2 Hidalgo-Apache 345kV #1 And #2 Lines
32	C	N-2 Midpoint-Hidalgo 345kV #1 And #2 Lines
33	C	N-2 Pantano-Vail & Adams-Nogales 230kV Lines
34	C	N-2 Tortolita-Tucson & Marana-Southline Saguaro 230kV Lines
35	C	N-2 Tortolita-Tucson & Rattlesnake-Marana 230kV Lines
36	C	N-2 Tortolita-Tucson & Rattlesnake-Tucson 230kV Lines
37	C	N-2 Vail-Tucson & Adams-Nogales 230kV Lines
38	C	N-2 Vail-Tucson & Del Bac-Nogales 230kV Lines
39		Common Corridor Outages Determined By the PRG
40	C	Springerville – Vail & Springerville – Greenlee 345 kV Lines
41	C	Springerville – Vail & Greenlee – Willow 345 kV Lines
42	C	Springerville – Vail & Willow – Winchester 345 kV Lines
43	C	Springerville – Vail & Greenlee – Winchester 345 kV Lines
44	C	Springerville – Vail & Winchester – Vail 345 kV Lines

APPENDIX 10 – AREA SPECIFIC VOLTAGE CRITERIA

TABLE K - BUS VOLTAGE LIMITS[10] FOR ARIZONA, NEVADA, AND SOUTHERN CALIFORNIA			
BUS/AREA	PRE-DISTURBANCE VOLT (P.U.)	POST-DISTURBANCE VOLT (P.U.)	ALLOWED DEVIATIONS/OTHER NOTES:
Bus-specific Criteria:			
Adelanto 500kV (LADWP)	≥ 1.025, ≤ 1.10		
Blythe 161kV (WAPA)		≥ 0.91, ≤ 1.10	
Malin 500kV (BPA)	≥ 1.07, ≤ 1.10		[Also applies to adjacent Northwest 500kV busses]
North and South Mead 230kV (WAPA)		≥ 0.95, ≤ 1.10	[Doesn't allow 5% drop]
North Gila 500kV			[High voltage limit = 1.15 for open-ended line outages]
Sylmar 230kV (LADWP)	≥ 0.99, ≤ 1.05	≥ 0.95, ≤ 1.10	
Coyote Creek, Humboldt, Falcon, Gonder, Robinson 345kV (SPP)	≥ 0.971, ≤ 1.03		
N.Valley Rd, Tracy, Valmy, Ft.Sage, Hilltop, Border Town 345kV (SPP)	≥ 0.956, ≤ 1.03		
Gonder-Ft.Churchill 230kV System (SPP)	≥ 0.956, ≤ 1.04		Deviation not to exceed 10% for Category B or C.
Carlin Trend 120-345kV System (SPP)11	≥ 0.95, ≤ 1.04		Deviation not to exceed 7% for Category B outages.
Chiloquin-Mile High-Alturas 69-115-230kV System (Area 40, PACW)			Deviation not to exceed 8% for Category B outages.
Crescent City 69-115kV System (Area 40, PACW)12			Deviations up to 10% may be allowed for Category B. Flag deviations >5% or Post-Project deviation increases of 3% or more.
Round Mt. 230kV (PG&E)	≥ 1.02, ≤ 1.05		
Table Mt. 230kV (PG&E)	≥ 1.02, ≤ 1.05		
Vaca Dixon 230kV	≥ 1.01, ≤ 1.05		
Tesla 230kV	≥ 1.01, ≤ 1.05		
Metcalf 230kV	≥ 1.01, ≤ 1.05		
Los Banos 230kV	≥ 1.01, ≤ 1.05		
Midway 230kV	≥ 1.02, ≤ 1.05		
Prescott (DOE) 230kV	~ 1.02	≥ 0.95, ≤ 1.10	
Saguaro 115kV	~ 1.035		
APS Westwing 230kV (APS)	≥ 1.04, ≤ 1.05	≥ 0.95, ≤ 1.10	
Pinnacle Peak 230kV (APS)	≥ 1.025, ≤ 1.035	≥ 0.95, ≤ 1.10	
Elephant Butte 115kV (US)			≤ 7% (N-1), 10% (N-2)
Blackwater 345kV	≥ 0.95	≥ 0.95, ≤ 1.08	≤ 6% (N-1), 10% (N-2)
Tiaban and Guadalupe 345kV buses (PNM)	≥ 0.95, ≤ 1.10	≥ 0.95, ≤ 1.10	≤ 6% (N-1), 10% (N-2)
Artesia 345kV (EPE)	≥ 0.95, ≤ 1.10	≥ 0.95, ≤ 1.07	≤ 7% (N-1), 10% (N-2)
Arroyo 345kV PST source side (EPE)	≥ 0.95, ≤ 1.08	≥ 0.95, ≤ 1.08	≤ 7% (N-1), 10% (N-2)
Alamo, Sierra Blanca and Van Horn 69kV (EPE)	≥ 0.90, ≤ 1.05	≥ 0.90, ≤ 1.05	No Voltage Deviation Limit
Area/Broad-brush Criteria:			
(10) PNM / LAC 46kV to 115kV (N-1 only)		≥ 0.925, ≤ 1.08 (provided operator	≤ 6% (N-1) Northern New Mexico and

[10] Based on Table distributed to WATS/WECC PRG on 8/28/08; subject to further change.
[11] The Carlin Trend Area is bounded by the Valmy/Falcon/Humboldt 345kV busses.
[12] The Crescent City System is generally tagged as Zone 479, "PAC:CRES", and includes the following busses: BELMONTP, NORTHCST, DELNORT1, and DELNORT2 69kV, and DELNORTE 115kV.

TABLE K - BUS VOLTAGE LIMITS[10] FOR ARIZONA, NEVADA, AND SOUTHERN CALIFORNIA			
BUS/AREA	**PRE-DISTURBANCE VOLT (P.U.)**	**POST-DISTURBANCE VOLT (P.U.)**	**ALLOWED DEVIATIONS/OTHER NOTES:**
		action can reduce from 1.08 to 1.05)	≤ 7% (N-1) Southern New Mexico
(10) PNM 230kV and above (N-1only)		≥ 0.90, ≤ 1.08 (provided operator action can reduce from 1.08 to 1.05)	≤ 6% (N-1) Northern New Mexico and ≤ 7% (N-1) Southern New Mexico
(10) PNM all voltages (N-2 only)		≥ 0.90, ≤ 1.08 (provided operator action can reduce from 1.08 to 1.05)	≤ 10% for 46kV and above
(11) EPE 60kV to 115kV		≥ 0.925, ≤ 1.05	≤ 7% (N-1), 10% (N-2)
(11) EPE 345kV (not including Southline Facilities)		≥ 0.95, ≤ 1.05	≤ 7% (N-1), 10% (N-2)
(10 /11) TSGT all voltages			≤ 7% (N-1), 10% (N-2) in Northeastern New Mexico
			≤ 7% (N-1), 10% (N-2) in Southern New Mexico
			≤ 6% (N-1), 10% (N-2) in All other Buses in PNM
(14) APS / UAMPS 500kV	≥ 1.05, ≤ 1.08		
(14) APS 345kV (not including Southline)	≥ 0.99, ≤ 1.04		
(14) APS 115kV	≥ 1.01, ≤ 1.05		
(14) APS 230kV (not including Southline)	≥ 1.01, ≤ 1.05	≥ 0.95, ≤ 1.10	
(14) APS 69kV Buses on Secondary of 230/69kV or 115/69kV Transformers	≥ 1.03, ≤ 1.04		
(14) TEP 345kV and 500kV (not including Southline)	≥ 1.03, ≤ 1.04		
(14) TEP 138kV	≥ 1.0145, ≤ 1.03 (exceptions allowed)		
(14) TEP 138kV Average[13]	≥ 1.0210, ≤ 1.0235	≥ 0.98, ≤ 1.05	
(14) SRP 230kV (not including Southline)	≥ 1.00, ≤ 1.05	≥ 0.95, ≤ 1.10	
(18) NPC 500kV		≥ 0.976, ≤ 1.10	
(18) NPC 230kV	≥ 0.985, ≤ 1.05		
(24) SCE 500kV	≥ 0.9975, ≤ 1.10	≥ 0.966, ≤ 1.10	
(24) MWD (Zone "254")	≥ 0.9875, ≤ 1.05	≥ 0.95, ≤ 1.10	
(26) LADWP less than 500kV	≥ 1.00, ≤ 1.05	≥ 0.95, ≤ 1.10	
(60) Idaho Power 500kV			[>5% deviation for N-1 allowed if minimum voltage is >0.95]
(60) Idaho Power 345kV	≥ 0.98, ≤ 1.05		

Notes: a. 500kV per unit voltage limits are expressed on a 500kV base (not 525kV).
b. The specific criteria used for Category C outages will also be utilized for Cat D outages. The employment of this criteria for Cat D outages is only for reporting purposes only. It doesn't constitute a system performance criteria violation.

[13] Average Voltage of the following Buses: DMP, DREXEL, E. LOOP, IRVNGTN, NL. EXP (or N. LOOP but not both), NE.LOOP, RBWILMOT, TUCSON, and TWNTYSEC).

APPENDIX 11 – LIST OF EQUIPMENT MODELED TO MOVE IN POST-CONTINGENCY SOLUTION

TABLE L – LIST OF EQUIPMENT MODELED TO MOVE IN POST-CONTINGENCY SOLUTION	
OWNER	**EQUIPMENT**
SWTC	Avra 115kV 9.45MVAR Shunt Capacitor Bank #1
SWTC	Morenci 230kV 50MVAR Shunt Capacitor Bank
SWTC	Three Point 115kV 9.45MVAR Shunt Capacitor Bank
SWTC	Kartchnr 69kV 18MVAR Shunt Capacitor Bank #1
SWTC	Kartchnr 69kV 14.4MVAR Shunt Capacitor Bank #2
SWTC	Sandario 115kV 19.2MVAR Shunt Capacitor Bank #1
SWTC	Sandario 115kV 19.2MVAR Shunt Capacitor Bank #2
SWTC	Butterfield 230kV 14.4MVAR Shunt Capacitor Bank #1
SWTC	Butterfield 230kV 7.2MVAR Shunt Capacitor Bank #2
PNM	Alamogordo Static VAR Compensator
PNM	High Lonesome Wind Ranch Static VAR Compensator
SRP	Andersrs 69kV 46MVAR Shunt Capacitor Bank
SRP	Schrader 69kV 46MVAR Shunt Capacitor Bank
SRP	Brando 69kV 46MVAR Shunt Capacitor Bank #1
SRP	Brando 69kV 46MVAR Shunt Capacitor Bank #2
SRP	Corbelrs 69kV 46MVAR Shunt Capacitor Bank #1
SRP	Corbelrs 69kV 46MVAR Shunt Capacitor Bank #2
SRP	Orme rs 69kV 46MVAR Shunt Capacitor Bank
SRP	Papagobt 69kV 46MVAR Shunt Capacitor Bank #1
SRP	Papagobt 69kV 46MVAR Shunt Capacitor Bank #2
SRP	Rogers 69kV 46MVAR Shunt Capacitor Bank
SRP	Thundrst 69kV 47.5MVAR Shunt Capacitor Bank
SRP	Ward 69kV 46MVAR Shunt Capacitor Bank
SRP	Whitetnk 69kV 46MVAR Shunt Capacitor Bank
SRP	Knox 69kV 46MVAR Shunt Capacitor Bank
SRP	150MVAR Ward 230kV Shunt Capacitor Bank
SRP	150MVAR Kyrene 230kV Shunt Capacitor Bank #1
SRP	150MVAR Kyrene 230kV Shunt Capacitor Bank #2
Southline	Apache 345kV Static VAR Compensator System Including SVC and possible Shunts
TEP	North East Loop -70MVAR TO +130MVAR Static VAR Compensator
TEP	SANRITA S -48MVAR TO +49MVAR Static VAR Compensator

ATTACHMENT D

SOUTHLINE PHASE 2 DETAILED CASE MATRIX

ATTACHMENT D – SOUTHLINE PHASE 2 DETAILED CASE MATRIX

#	SAVE CASE NAME	NOMOGRAM NUMBER	NOMOGRAM POINT	PATH FLOW IN MW						PHASE 2 CASE STUDY PURPOSE						CASE MODELING								
				SOUTHLINE PROJECT SAGUARO/TORTOLITA EAST	SOUTHLINE PROJECT APACHE EAST	SOUTHLINE PROJECT AFTON WEST	SOUTHLINE PROJECT APACHE WEST	S. NEW MEXICO PATH 47 (WECC APPROVED PATH DEFINITION)	SUNZIA PROJECT	PRE-PROJECT POST-TRANSIENT CASE	POST-PROJECT POST-TRANSIENT CASE	102.5% VOLTAGE STABILITY TEST CASE	105% VOLTAGE STABILITY TEST CASE	10% PATH FLOW TEST	EPE 345KV LINE DE-RATE THERMAL ANALYSIS	TUCSON-ORACLE RE-CONDUCTOR MODELED	EL PASO ELECTRIC UPGRADES MODELED	EL PASO ELECTRIC LUNA-SPRINGER B-VALUE UPDATED	SOUTHLINE BASECASE MODELING EPE RATING DE-RATES	SUNZIA PROJECT MODELED IN-SERVICE	APACHE 115KV INTERCONNECTION	SOUTHLINE SAGUARO STATION	BOWIE PROJECT OUTPUT IN MW	2ND MARANA 230/115KV TRANSFORMER
1	00_ew_1039_1000_v01.sav	n/a	n/a	n/a	n/a	1039	1000	n/a			✓			✓									350	
2	00_ew_1039_1000_v01s.sav	n/a	n/a	n/a	n/a	1039	1000	n/a			✓			✓								✓	350	
3	00_we_0428_0971_v02.sav	n/a	n/a	428	971	n/a	n/a	n/a			✓			✓									350	
4	00_we_0428_0971_v02s.sav	n/a	n/a	428	971	n/a	n/a	n/a			✓			✓								✓	350	
5	05_ew_1041_1002_v01.sav	n/a	n/a	n/a	n/a	1041	1002	n/a			✓			✓						1000			350	
6	05_ew_1041_1002_v01s.sav	n/a	n/a	n/a	n/a	1041	1002	n/a			✓			✓						1000		✓	350	
7	06_we_0428_0971_v02.sav	n/a	n/a	428	971	n/a	n/a	n/a			✓			✓						1200			350	
8	06_we_0428_0971_v02s.sav	n/a	n/a	428	971	n/a	n/a	n/a			✓			✓						1200		✓	350	
9	13_ew_1042_1003_v01.sav	n/a	n/a	n/a	n/a	1042	1003	n/a			✓			✓									350	
10	13_ew_1042_1003_v01s.sav	n/a	n/a	n/a	n/a	1042	1003	n/a			✓			✓								✓	350	
11	14_we_0738_0971_v02.sav	n/a	n/a	738	971	n/a	n/a	n/a			✓			✓		✓							350	
12	14_we_0738_0971_v02s.sav	n/a	n/a	738	971	n/a	n/a	n/a			✓			✓		✓						✓	350	
13	19_ew_1038_1000_v01.sav	n/a	n/a	n/a	n/a	1038	1000	n/a			✓			✓		✓				1000			350	
14	19_ew_1038_1000_v01s.sav	n/a	n/a	n/a	n/a	1038	1000	n/a			✓			✓		✓				1000		✓	350	
15	20_we_0428_0971_v02.sav	n/a	n/a	428	971	n/a	n/a	n/a			✓			✓		✓				1200			350	
16	20_we_0428_0971_v02s.sav	n/a	n/a	428	971	n/a	n/a	n/a			✓			✓		✓				1200		✓	350	
17	01_ew_1037_1000_1048_v28_oos.sav	1	1	n/a	n/a	OS	OS	1048	n/a	✓												✓	350	
18	01_ew_1037_1000_1048_v27.sav	1	1	n/a	n/a	1037	1000	1048	n/a		✓											✓	350	
19	01_ew_1065_1026_1075v16.sav	1	1	n/a	n/a	1065	1026	1075	n/a			✓										✓	350	
20	01_ew_1088_1050_1100v16.sav	1	1	n/a	n/a	1088	1050	1100	n/a				✓									✓	350	

ATTACHMENT D – SOUTHLINE PHASE 2 DETAILED CASE MATRIX

#	SAVE CASE NAME	NOMOGRAM NUMBER	NOMOGRAM POINT	PATH FLOW IN MW						PHASE 2 CASE STUDY PURPOSE						CASE MODELING								
				SOUTHLINE PROJECT SAGUARO/TORTOLITA EAST	SOUTHLINE PROJECT APACHE EAST	SOUTHLINE PROJECT AFTON WEST	SOUTHLINE PROJECT APACHE WEST	S. NEW MEXICO PATH 47 (WECC APPROVED PATH DEFINITION)	SUNZIA PROJECT	PRE-PROJECT POST-TRANSIENT CASE	POST-PROJECT POST-TRANSIENT CASE	102.5% VOLTAGE STABILITY TEST CASE	105% VOLTAGE STABILITY TEST CASE	10% PATH FLOW TEST	EPE 345KV LINE DE-RATE THERMAL ANALYSIS	TUCSON-ORACLE RE-CONDUCTOR MODELED	EL PASO ELECTRIC UPGRADES MODELED	EL PASO ELECTRIC LUNA-SPRINGER B-VALUE UPDATED	SOUTHLINE BASECASE MODELING EPE RATING DE-RATES	SUNZIA PROJECT MODELED IN-SERVICE	APACHE 115KV INTERCONNECTION	SOUTHLINE SAGUARO STATION	BOWIE PROJECT OUTPUT IN MW	2ND MARANA 230/115KV TRANSFORMER
21	02_we_0421_0165_1048_06_oos.sav	2a	1	421	165	n/a	n/a	1048	n/a	✓												✓	350	
22	02_we_0421_0165_1048_06.sav	2a	1	421	165	n/a	n/a	1048	n/a		✓											✓	350	
23	02_we_0421_0165_1101_06.sav	2a	1	421	165	n/a	n/a	1100	n/a				✓									✓	350	
24	02_we_0442_0173_1048_06.sav	2a	1	442	173	n/a	n/a	1048	n/a				✓									✓	350	
25	02_we_0430_0971_0275_03_oos.sav	2a	2	430	971	n/a	n/a	275	n/a	✓												✓	350	
26	02_we_0430_0971_0275_03.sav	2a	2	430	971	n/a	n/a	275	n/a		✓											✓	350	
27	02_we_0452_1020_0275_03.sav	2a	2	452	1020	n/a	n/a	275	n/a				✓									✓	350	
28	02_we_0430_0971_0289_03.sav	2a	2	430	971	n/a	n/a	289	n/a				✓									✓	350	
29	02_we_0435_0436_1048_01_oos.sav	2b	1M	n/a	n/a	n/a	n/a	1048	n/a	✓							✓					✓	350	
30	02_we_0435_0436_1048_01.sav	2b	1M	435	436	n/a	n/a	1048	n/a		✓						✓					✓	350	
31	02_we_0435_0436_1101_01.sav	2b	1M	435	438	n/a	n/a	1101	n/a				✓				✓					✓	350	
32	02_we_0457_0458_1048_01.sav	2b	1M	457	458	n/a	n/a	1048	n/a				✓				✓					✓	350	
																						✓	350	
33	02_we_0445_0971_0489_01_oos.sav	2b	2M	n/a	n/a	n/a	n/a	489	n/a	✓							✓					✓	350	
34	02_we_0445_0971_0489_01.sav	2b	2M	445	971	n/a	n/a	489	n/a		✓						✓					✓	350	
35	02_we_0445_0971_0514_01.sav	2b	2M	445	971	n/a	n/a	514	n/a				✓				✓					✓	350	
36	02_we_0468_1020_0489_01.sav	2b	2M	468	1020	n/a	n/a	489	n/a				✓				✓					✓	350	
																						✓	350	
37	16_we_0715_0165_1048_02_oos.sav	16a	1	n/a	n/a	n/a	n/a	1048	n/a	✓						✓						✓	350	
38	16_we_0715_0165_1048_02.sav	16a	1	715	165	n/a	n/a	1048	n/a		✓					✓						✓	350	
39	16_we_0715_0165_1101_02.sav	16a	1	715	165	n/a	n/a	1101	n/a				✓			✓						✓	350	

ATTACHMENT D – SOUTHLINE PHASE 2 DETAILED CASE MATRIX

#	SAVE CASE NAME	NOMOGRAM NUMBER	NOMOGRAM POINT	PATH FLOW IN MW						PHASE 2 CASE STUDY PURPOSE						CASE MODELING								
				SOUTHLINE PROJECT SAGUARO/TORTOLITA EAST	SOUTHLINE PROJECT APACHE EAST	SOUTHLINE PROJECT AFTON WEST	SOUTHLINE PROJECT APACHE WEST	S. NEW MEXICO PATH 47 (WECC APPROVED PATH DEFINITION)	SUNZIA PROJECT	PRE-PROJECT POST-TRANSIENT CASE	POST-PROJECT POST-TRANSIENT CASE	102.5% VOLTAGE STABILITY TEST CASE	105% VOLTAGE STABILITY TEST CASE	10% PATH FLOW TEST	EPE 345KV LINE DE-RATE THERMAL ANALYSIS	TUCSON-ORACLE RE-CONDUCTOR MODELED	EL PASO ELECTRIC UPGRADES MODELED	EL PASO ELECTRIC LUNA-SPRINGER B-VALUE UPDATED	SOUTHLINE BASECASE MODELING EPE RATING DE-RATES	SUNZIA PROJECT MODELED IN-SERVICE	APACHE 115KV INTERCONNECTION	SOUTHLINE SAGUARO STATION	BOWIE PROJECT OUTPUT IN MW	2ND MARANA 230/115KV TRANSFORMER
40	16_we_0751_0173_1048_02.sav	16a	1	751	173	n/a	n/a	1048	n/a				✓			✓						✓	350	
																						✓	350	
41	16_we_0715_0971_0275_02_oos.sav	16a	2	n/a	n/a	n/a	n/a	275	n/a	✓						✓								
42	16_we_0715_0971_0275_02.sav	16a	2	715	971	n/a	n/a	275	n/a		✓					✓						✓	350	
43	16_we_0751_1020_0275_02.sav	16a	2	751	1020	n/a	n/a	275	n/a				✓			✓						✓	350	
44	16_we_0715_0971_0289_02.sav	16a	2	715	971	n/a	n/a	289	n/a				✓			✓						✓	350	
45	16_we_0734_0436_1048_04_oos.sav	16b	1M	n/a	n/a	n/a	n/a	1048	n/a	✓						✓	✓					✓	350	
46	16_we_0734_0436_1048_04.sav	16b	1M	734	436	n/a	n/a	1048	n/a		✓					✓	✓					✓	350	
47	16_we_0734_0436_1101_04.sav	16b	1M	734	436	n/a	n/a	1101	n/a				✓			✓	✓					✓	350	
48	16_we_0771_0458_1048_04.sav	16b	1M	771	458	n/a	n/a	1048	n/a				✓			✓	✓					✓	350	
49	16_we_0712_0971_0480_01_oos.sav	16b	2M	n/a	n/a	n/a	n/a	480	n/a	✓						✓	✓					✓	350	
50	16_we_0712_0971_0480_01.sav	16b	2M	712	971	n/a	n/a	480	n/a		✓					✓	✓					✓	350	
51	16_we_0712_0971_0504_01.sav	16b	2M	712	971	n/a	n/a	504	n/a				✓			✓	✓					✓	350	
52	16_we_0748_1020_0480_01.sav	16b	2M	748	1020	n/a	n/a	480	n/a				✓			✓	✓					✓	350	
53	01_ew_1037_1000_1048_v28_oos.sav	41	1	n/a	n/a	n/a	n/a	1048	n/a	✓												✓	350	
54	41_ew_1037_1000_1048_v27.sav	41	1	n/a	n/a	1037	1000	1048	n/a		✓											✓	350	✓
55	41_ew_1065_1026_1075v16.sav	41	1	n/a	n/a	1065	1026	1075	n/a			✓										✓	350	✓
56	41_ew_1088_1050_1100v16.sav	41	1	n/a	n/a	1088	1050	1100	n/a				✓									✓	350	✓
57	42_we_0431_0179_1048_01_oos.sav	42	1	431	179	n/a	n/a	1048	n/a	✓								✓				✓	350	✓
58	42_we_0431_0179_1048_01.sav	42	1	431	179	n/a	n/a	1048	n/a		✓							✓				✓	350	✓

ATTACHMENT D – SOUTHLINE PHASE 2 DETAILED CASE MATRIX

#	SAVE CASE NAME	NOMOGRAM NUMBER	NOMOGRAM POINT	PATH FLOW IN MW						PHASE 2 CASE STUDY PURPOSE						CASE MODELING								
				SOUTHLINE PROJECT SAGUARO/TORTOLITA EAST	SOUTHLINE PROJECT APACHE EAST	SOUTHLINE PROJECT AFTON WEST	SOUTHLINE PROJECT APACHE WEST	S. NEW MEXICO PATH 47 (WECC APPROVED PATH DEFINITION)	SUNZIA PROJECT	PRE-PROJECT POST-TRANSIENT CASE	POST-PROJECT POST-TRANSIENT CASE	102.5% VOLTAGE STABILITY TEST CASE	105% VOLTAGE STABILITY TEST CASE	10% PATH FLOW TEST	EPE 345KV LINE DE-RATE THERMAL ANALYSIS	TUCSON-ORACLE RE-CONDUCTOR MODELED	EL PASO ELECTRIC UPGRADES MODELED	EL PASO ELECTRIC LUNA-SPRINGER B-VALUE UPDATED	SOUTHLINE BASECASE MODELING EPE RATING DE-RATES	SUNZIA PROJECT MODELED IN-SERVICE	APACHE 115KV INTERCONNECTION	SOUTHLINE SAGUARO STATION	BOWIE PROJECT OUTPUT IN MW	2ND MARANA 230/115KV TRANSFORMER
59	42_we_0431_0179_1101_01.sav	42	1	431	179	n/a	n/a	1101	n/a				✓					✓				✓	350	✓
60	42_we_0453_0188_1048_01.sav	42	1	453	188	n/a	n/a	1048	n/a				✓					✓				✓	350	✓
61	42_we_0435_0971_0275_01_oos.sav	42	2	435	971	n/a	n/a	275	n/a	✓								✓				✓	350	✓
62	42_we_0435_0971_0275_01.sav	42	2	435	971	n/a	n/a	275	n/a		✓							✓				✓	350	✓
63	42_we_0457_1020_0275_01.sav	42	2	457	1020	n/a	n/a	275	n/a				✓					✓				✓	350	✓
64	42_we_0435_0971_0289_01.sav	42	2	435	971	n/a	n/a	289	n/a				✓					✓				✓	350	✓
65	56_we_0754_0433_1048_01_oos.sav	56	1	n/a	n/a	n/a	n/a	1048	n/a	✓						✓		✓				✓	350	✓
66	56_we_0754_0433_1048_01.sav	56	1	754	433	n/a	n/a	1048	n/a		✓					✓		✓				✓	350	✓
67	56_we_0754_0433_1101_01.sav	56	1	754	433	n/a	n/a	1101	n/a				✓			✓		✓				✓	350	✓
68	56_we_0792_0455_1048_01.sav	56	1	792	455	n/a	n/a	1048	n/a				✓			✓		✓				✓	350	✓
69	56_we_0758_0968_0481_02_oos.sav	56	2	n/a	n/a	n/a	n/a	481	n/a	✓						✓		✓				✓	350	✓
70	56_we_0758_0968_0481_03.sav	56	2	758	968	n/a	n/a	481	n/a		✓					✓		✓				✓	350	✓
71	56_we_0758_0968_0494_03.sav	56	2	758	968	n/a	n/a	494	n/a			✓				✓		✓				✓	350	✓
72	56_we_0777_0993_0481_03.sav	56	2	777	993	n/a	n/a	481	n/a			✓				✓		✓				✓	350	✓
73	56_we_0758_0968_0506_03.sav	56	2	758	968	n/a	n/a	506	n/a				✓			✓		✓				✓	350	✓
74	56_we_0796_1017_0481_03.sav	56	2	796	1017	n/a	n/a	481	n/a				✓			✓		✓				✓	350	✓
75	01_ew_1037_1000_1048_v28oose.sav	1	1	n/a	n/a	OS	OS	1048	n/a	✓					✓				✓			✓	350	
76	01_ew_1037_1000_1048_v27e.sav	1	1	n/a	n/a	1037	1000	1048	n/a		✓				✓				✓			✓	350	
77	02_we_0421_0165_1048_06_oose.sav	2a	1	421	165	n/a	n/a	1048	n/a	✓					✓				✓			✓	350	
78	02_we_0421_0165_1048_06e.sav	2a	1	421	165	n/a	n/a	1048	n/a		✓				✓				✓			✓	350	

ATTACHMENT D – SOUTHLINE PHASE 2 DETAILED CASE MATRIX

#	SAVE CASE NAME	NOMOGRAM NUMBER	NOMOGRAM POINT	PATH FLOW IN MW						PHASE 2 CASE STUDY PURPOSE						CASE MODELING								
				SOUTHLINE PROJECT SAGUARO/TORTOLITA EAST	SOUTHLINE PROJECT APACHE EAST	SOUTHLINE PROJECT AFTON WEST	SOUTHLINE PROJECT APACHE WEST	S. NEW MEXICO PATH 47 (WECC APPROVED PATH DEFINITION)	SUNZIA PROJECT	PRE-PROJECT POST-TRANSIENT CASE	POST-PROJECT POST-TRANSIENT CASE	102.5% VOLTAGE STABILITY TEST CASE	105% VOLTAGE STABILITY TEST CASE	10% PATH FLOW TEST	EPE 345KV LINE DE-RATE THERMAL ANALYSIS	TUCSON-ORACLE RE-CONDUCTOR MODELED	EL PASO ELECTRIC UPGRADES MODELED	EL PASO ELECTRIC LUNA-SPRINGER B-VALUE UPDATED	SOUTHLINE BASECASE MODELING EPE RATING DE-RATES	SUNZIA PROJECT MODELED IN-SERVICE	APACHE 115KV INTERCONNECTION	SOUTHLINE SAGUARO STATION	BOWIE PROJECT OUTPUT IN MW	2ND MARANA 230/115KV TRANSFORMER
79	02_we_0430_0971_0275_03_oose.sav	2a	2	430	971	n/a	n/a	275	n/a	✓					✓				✓			✓	350	
80	02_we_0430_0971_0275_03e.sav	2a	2	430	971	n/a	n/a	275	n/a		✓				✓				✓			✓	350	
81	02_we_0435_0436_1048_01_oose.sav	2b	1M	n/a	n/a	n/a	n/a	1048	n/a	✓					✓		✓		✓			✓	350	
82	02_we_0435_0436_1048_01e.sav	2b	1M	435	436	n/a	n/a	1048	n/a		✓				✓		✓		✓			✓	350	
83	02_we_0445_0971_0489_01_oose.sav	2b	2M	n/a	n/a	n/a	n/a	489	n/a	✓					✓		✓		✓			✓	350	
84	02_we_0445_0971_0489_01e.sav	2b	2M	445	971	n/a	n/a	489	n/a		✓				✓		✓		✓			✓	350	
85	16_we_0712_0971_0480_01_oose.sav	16a	2	n/a	n/a	n/a	n/a	275	n/a	✓					✓	✓			✓			✓	350	
86	16_we_0712_0971_0480_01e.sav	16a	2	715	971	n/a	n/a	275	n/a		✓				✓	✓			✓			✓	350	
87	16_we_0715_0165_1048_02_oose.sav	16a	1	n/a	n/a	n/a	n/a	1048	n/a	✓					✓	✓			✓			✓	350	
88	16_we_0715_0165_1048_02e.sav	16a	1	715	165	n/a	n/a	1048	n/a		✓				✓	✓			✓			✓	350	
89	16_we_0715_0971_0275_02_oose.sav	16a	2	n/a	n/a	n/a	n/a	275	n/a	✓					✓	✓			✓			✓	350	
90	16_we_0715_0971_0275_02e.sav	16a	2	715	971	n/a	n/a	275	n/a		✓				✓	✓			✓			✓	350	
91	16_we_0734_0436_1048_04_oose.sav	16b	1M	n/a	n/a	n/a	n/a	1048	n/a	✓					✓	✓	✓		✓			✓	350	
92	16_we_0734_0436_1048_04e.sav	16b	1M	734	436	n/a	n/a	1048	n/a		✓				✓	✓	✓		✓			✓	350	
93	41_ew_1037_1000_1048_v28oose.sav	41	1	n/a	n/a	n/a	n/a	1048	n/a	✓					✓				✓			✓	350	✓
94	41_ew_1037_1000_1048_v27e.sav	41	1	n/a	n/a	1037	1000	1048	n/a		✓				✓				✓			✓	350	✓
95	42_we_0431_0179_1048_01_oose.sav	42	1	431	179	n/a	n/a	1048	n/a	✓					✓			✓	✓			✓	350	✓
96	42_we_0431_0179_1048_01e.sav	42	1	431	179	n/a	n/a	1048	n/a		✓				✓			✓	✓			✓	350	✓
97	42_we_0435_0971_0275_01_oose.sav	42	2	435	971	n/a	n/a	275	n/a	✓					✓			✓	✓			✓	350	✓
98	42_we_0435_0971_0275_01e.sav	42	2	435	971	n/a	n/a	275	n/a		✓				✓			✓	✓			✓	350	✓
99	56_we_0754_0433_1048_01_oose.sav	56	1	n/a	n/a	n/a	n/a	1048	n/a	✓					✓	✓	✓	✓	✓			✓	350	✓
100	56_we_0754_0433_1048_01e.sav	56	1	754	433	n/a	n/a	1048	n/a		✓				✓	✓	✓	✓	✓			✓	350	✓
101	56_we_0758_0968_0481_02_oose.sav	56	2	n/a	n/a	n/a	n/a	481	n/a	✓					✓	✓	✓	✓	✓			✓	350	✓
102	56_we_0758_0968_0481_03e.sav	56	2	758	968	n/a	n/a	481	n/a		✓				✓	✓	✓	✓	✓			✓	350	✓

ATTACHMENT D – SOUTHLINE PHASE 2 DETAILED CASE MATRIX

#	SAVE CASE NAME	NOMOGRAM NUMBER	NOMOGRAM POINT	PATH FLOW IN MW						PHASE 2 CASE STUDY PURPOSE						CASE MODELING								
				SOUTHLINE PROJECT SAGUARO/TORTOLITA EAST	SOUTHLINE PROJECT APACHE EAST	SOUTHLINE PROJECT AFTON WEST	SOUTHLINE PROJECT APACHE WEST	S. NEW MEXICO PATH 47 (WECC APPROVED PATH DEFINITION)	SUNZIA PROJECT	PRE-PROJECT POST-TRANSIENT CASE	POST-PROJECT POST-TRANSIENT CASE	102.5% VOLTAGE STABILITY TEST CASE	105% VOLTAGE STABILITY TEST CASE	10% PATH FLOW TEST	EPE 345KV LINE DE-RATE THERMAL ANALYSIS	TUCSON-ORACLE RE-CONDUCTOR MODELED	EL PASO ELECTRIC UPGRADES MODELED	EL PASO ELECTRIC LUNA-SPRINGER B-VALUE UPDATED	SOUTHLINE BASECASE MODELING EPE RATING DE-RATES	SUNZIA PROJECT MODELED IN-SERVICE	APACHE 115KV INTERCONNECTION	SOUTHLINE SAGUARO STATION	BOWIE PROJECT OUTPUT IN MW	2ND MARANA 230/115KV TRANSFORMER
103	67_ew_1026_1000_1048_v01.sav	67	1	n/a	n/a	1026	1000	1048	n/a		✓							✓				✓	350	
104	67_ew_1026_1000_1048_v01_oos.sav	67	1	n/a	n/a	n/a	n/a	1048	n/a	✓								✓				✓	350	
105	67_ew_1026_1000_1101_v01.sav	67	1	n/a	n/a	1026	1000	1101	n/a				✓					✓				✓	350	
106	67_ew_1079_1050_1048_v01.sav	67	1	n/a	n/a	1079	1050	1048	n/a				✓					✓				✓	350	
107	41A_ew_1040_1000_1048_v29.sav	41A	41A	n/a	n/a	1040	1000	1048	n/a		✓			✓							✓	✓	350	✓
108	41A_ew_1040_1000_1048_v29oos.sav	41A	41A	n/a	n/a	n/a	n/a	1048	n/a	✓											✓	✓	350	✓
109	41A_ew_1092_1050_1048_v29.sav	41A	41A	n/a	n/a	1092	1050	1048	n/a		✓		✓								✓	✓	350	✓
110	41A_ew_1040_1000_1101_v29.sav	41A	41A	n/a	n/a	1040	1000	1101	n/a		✓		✓								✓	✓	350	✓
111	42A_we_0435_0971_0275_02.sav	42A	42A	435	971	n/a	n/a	275	n/a		✓			✓							✓	✓	350	✓
112	42A_we_0435_0971_0275_03_oos.sav	42A	42A	n/a	n/a	n/a	n/a	275	n/a	✓											✓	✓	350	✓
113	42A_we_0431_0179_1048_03.sav	42A	42A	431	179	n/a	n/a	1048	n/a		✓										✓	✓	350	✓
114	42A_we_0431_0179_1048_01_oos.sav	42A	42A	n/a	n/a	n/a	n/a	1048	n/a	✓											✓	✓	350	✓
115	42A_we_0457_1020_0275_01.sav	42A	42A	457	1020	n/a	n/a	275	n/a				✓								✓	✓	350	✓
116	42A_we_0435_0971_0289_01.sav	42A	42A	435	971	n/a	n/a	n/a	n/a				✓								✓	✓	350	✓
117	42A_we_0453_0188_1048_01.sav	42A	42A	453	188	n/a	n/a	n/a	n/a				✓								✓	✓	350	✓
118	42A_we_0431_0179_1101_01.sav	42A	42A	431	179	n/a	n/a	n/a	n/a				✓								✓	✓	350	✓
119	45_ew_1122_1000_3000_v01.sav	45	45	n/a	n/a	1122	1000	n/a	3000		✓			✓						✓	✓	✓	350	✓
120	45_ew_1122_1000_3000_01_oos.sav	45	45	n/a	n/a	n/a	n/a	n/a	3000	✓										✓	✓	✓	350	✓
121	45_ew_1122_1000_3150_01.sav	45	45	n/a	n/a	1122	1000	n/a	3150				✓							✓	✓	✓	350	✓
122	45_ew_1188_1050_3000_02.sav	45	45	n/a	n/a	1188	1050	n/a	3000				✓							✓	✓	✓	350	✓

ATTACHMENT E

GRAPHICAL/ELECTRICAL OVERVIEW OF SOUTHLINE

The Project will have a right-of-way up to 200 feet wide. The Project may include development of a substation in Luna County, New Mexico, with precise location determined when Project route is confirmed.

LEGEND

- Agency Preferred Route
- Alternative Routes
- Substation End Point
- Intermediate Substation Location
- City/Town

0 12.5 25 50 MILES

N

Southern Arizona & New Mexico EHV Transmission System, Southline & Selected Future Utility Sponsored Additions

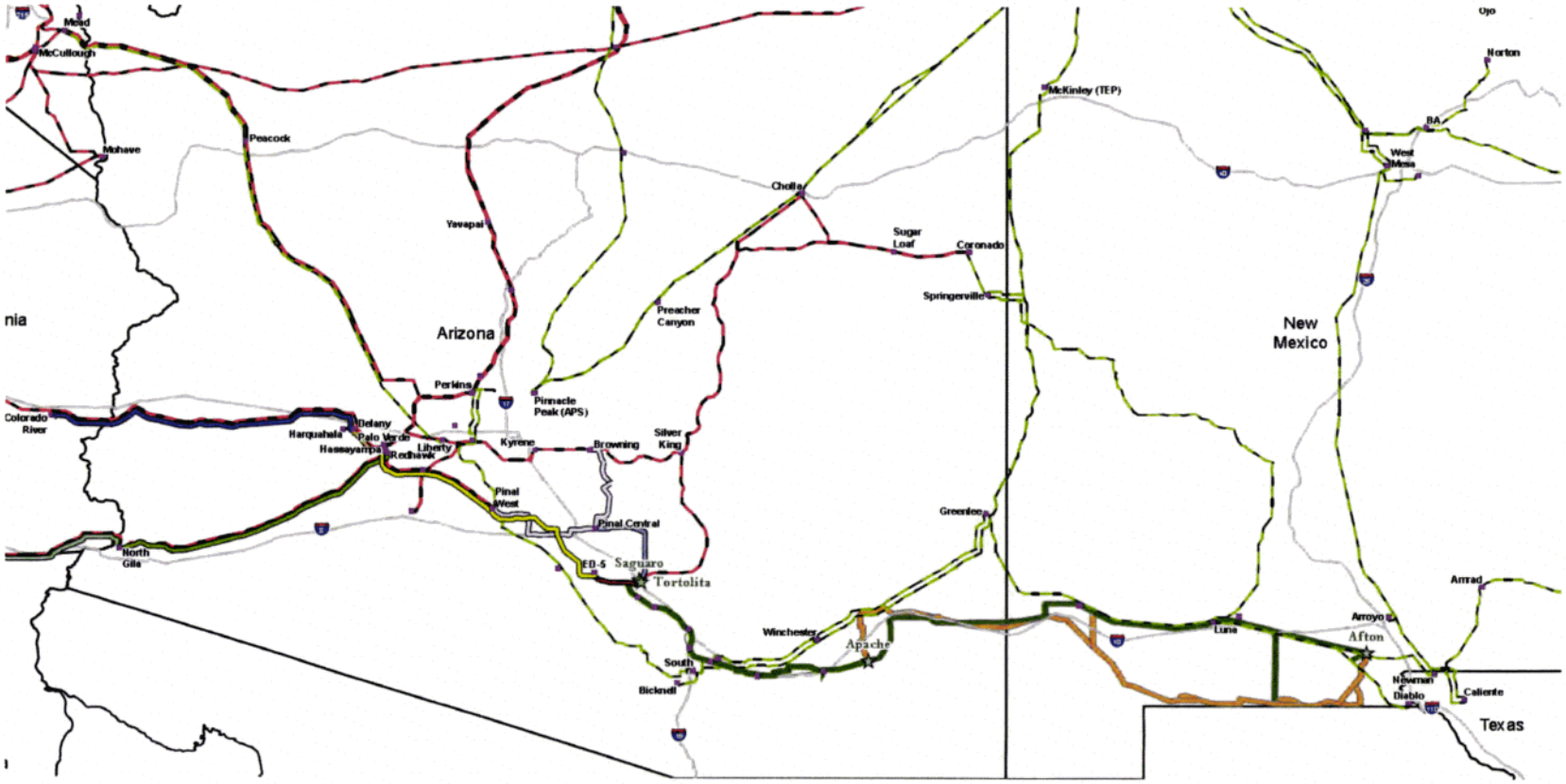

Transmission Network
- Substation
- 345 kV, In Service
- 500 kV, In Service
- DC Line, In Service
- Transmission Endpoints
- Southline Proposed Route
- Southline Alternative Route

Future Additions
- Delaney - Colorado (500kV)
- ED5 - Palo Verde
- ED5-Saguaro
- Hassayampa- North Gila 2 (500kV)
- North Gila - Imperial Valley 2 (500kV)
- Palo Verde- Delaney (500kV)
- Pinal West-Pinal Central-Browning (500kV)
- Tortolita - Pinal Central (500kV)

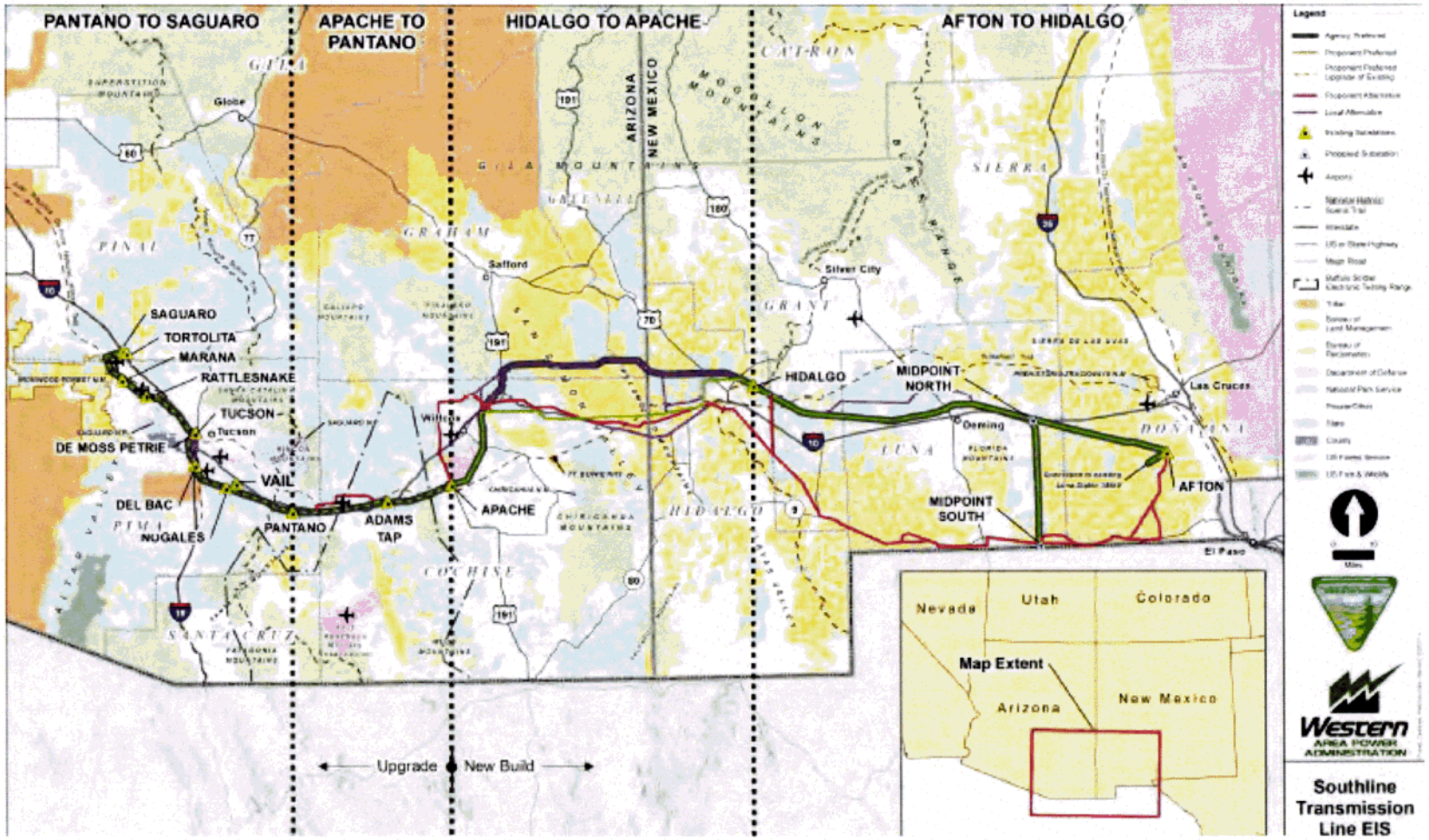
PANTANO TO SAGUARO
APACHE TO PANTANO
HIDALGO TO APACHE
AFTON TO HIDALGO
ARIZONA
NEW MEXICO
SAGUARO
TORTOLITA
MARANA
RATTLESNAKE
TUCSON
DE MOSS PETRIE
VAIL
DEL BAC
NUGALES
PANTANO
ADAMS TAP
APACHE
HIDALGO
MIDPOINT NORTH
MIDPOINT SOUTH
AFTON
Upgrade
New Build
Nevada
Utah
Colorado
Arizona
New Mexico
Map Extent
Legend
Western
AREA POWER ADMINISTRATION
Southline Transmission Line EIS

ATTACHMENT F

SOUTHLINE PHASE 2 STUDY
POST-TRANSIENT CONTINGENCY LIST

ATTACHMENT F – OUTAGES MODELED IN POST-TRANSIENT CONTINGENCY ANALYSIS		
#	CAT	DESCRIPTION
1	A	All Lines In Service
2	B	Abel-Browning 500kV Line
3	B	Abel-Dinosaur 230kV Line
4	B	Abel-Randolph 230kV Line
5	B	Adams 230/115kV Transformer
6	B	Afton 345/34.5kV Step-Up Transformer #1
7	B	Afton 345/34.5kV Step-Up Transformer #2
8	B	Afton 345/34.5kV Step-Up Transformer #3
9	B	Afton 345kV Phase Shifter 1
10	B	Afton-Diablo 345kV Line
11	B	Afton-Midpoint 345kV Line
12	B	Afton-Newman 345kV Line
13	B	Aguafria-Alexandr 230kV Line
14	B	Aguafria-Westwngw 230kV Line
15	B	Aguafria-Whitetnk 230kV Line
16	B	Anderson-Kyr-New 230kV Line
17	B	Anderson-Orme 230kV Line
18	B	Apache 345/230kV Transformer
19	B	Apache- Butterfield 230kV Line
20	B	Apache-Adams 230kV Line
21	B	Apache-Pantano 230kV Line
22	B	Apache-Red Tail 230kV Line
23	B	Apache-Winchester 230kV Line
24	B	Arroyo-Newman 345kV Line
25	B	Belen-Bernardo 115kV Line
26	B	Bisti-Ambrosia 230kV Line
27	B	Brandow-Kyrene 230kV Line
28	B	Brandow-Papagobt 230kV Line
29	B	Brandow-Ward 230kV Line
30	B	Browning-Kyrene 500kV Line
31	B	Browning-Santan 230kV Line
32	B	Casa Grande 230/115 kV Transformer
33	B	Cholla 500/345kV Transformer
34	B	Cholla-Saguaro 500kV Line
35	B	Coolidge-ED2 115 kV Line
36	B	Coolidge-Signal-ED2 115 kV
37	B	Coolidge-Valley Farms 115 kV Line
38	B	Corbell-Kyrene 230kV Line
39	B	Coronado-Silver King 500kV Line
40	B	Deervaly-Alexandr 230kV Line
41	B	Deervaly-Pinpksrp 230kV Line
42	B	Deervaly-Westwngw 230kV Line
43	B	Delbac-Ngoles 230kV Line

ATTACHMENT F – OUTAGES MODELED IN POST-TRANSIENT CONTINGENCY ANALYSIS		
#	CAT	DESCRIPTION
44	B	Dinosaur-Browning 230kV Line
45	B	ED2-Brady-Picacho-Red Rock-Saguaro 115 kV Line
46	B	ED2-ED4 115 kV Line
47	B	ED4-ED5 115 kV Line
48	B	ED5-Empire 115 kV Line
49	B	Empire-Casa Grande 115 kV Line
50	B	Four Corners - San Juan 345kV Line
51	B	Four Corners - Shiprock 345kV Line
52	B	Four Corners-Moenkopi 500kV Line
53	B	Four Corners-West Mesa 345kV Line
54	B	Greenlee-Hidalgo 345kV Line
55	B	Greenlee-Willow 345kV Line
56	B	Greenlee – Winchester 345 kV Line
57	B	Harcuvar-Harcu Az 230kV Line
58	B	Hassayampa-North Gila #1 500kV Line
59	B	Hidalgo-Apache 345kV Line
60	B	Hidalgo 345/115kV Transformer
61	B	Kyrene-Kyr-New 230kV Line
62	B	Kyrene-Schrader 230kV Line
63	B	Liberty-Lone Butte 230 kV Line
64	B	Liberty-Peacock 345kV Line
65	B	Liberty-Phoenix WAPA 230 kV
66	B	Liberty-Rudd 230kV Line
67	B	Liberty-Westwing 230 kV Line
68	B	Lone Butte-Sundance 230 kV Line
69	B	Lone Butte-Test Track 230 kV Line
70	B	Luna 345/115kV Transformer
71	B	Luna-Afton 345kV Line
72	B	Luna-Diablo 345kV Line
73	B	Luna-Hidalgo 345kV Line
74	B	Luna-Lef 345kV Line
75	B	Marana-Rattle Snake 230kV Line
76	B	Marana-Southline Saguaro 230kV Line
77	B	McKinley – Springerville 345 kV Line #1
78	B	Mead-Perkins 500kV Line
79	B	Midpoint-Hidalgo 345kV Line
80	B	Midpoint-Hidalgo 345kV Line
81	B	Moenkopi-El Dorado 500kV Line
82	B	Morgan-Dugas 500kV Line
83	B	Morgan-Pinnacle Peak 500kV Line
84	B	MSPOI-Luna 345kV Line or Springerville- Luna 345kV Line
85	B	MSPOI-Springer 345kV Line or Springerville-Luna 345kV Line
87	B	New Tucson- Sahuarita 230kV Line

ATTACHMENT F – OUTAGES MODELED IN POST-TRANSIENT CONTINGENCY ANALYSIS		
#	CAT	DESCRIPTION
88	B	Newman 345/115kV Transformer
89	B	Nogales-Adams 230kV Line
89B	B	Nogales-Adams Tap-Apache 115kV Line
90	B	Oracle-Saguaro 115 kV Line
91	B	Orme-Rudd 230kV Line
92	B	Pantano 230/115kV Transformer
93	B	Pantano-New Tucson 230kV Line
94	B	Pantano-Vail 230kV Line
95	B	Papagobt-Kyr-New 230kV Line
96	B	Papagobt-Pinpksrp 230kV Line
97	B	Parker-Eagle Eye-Liberty 230 kV Line
98	B	Parker-Harcuvar-Hassayampa Tap-Liberty 230 kV Line
99	B	Peacock-Mead 345kV Line
100	B	Phoenix WAPA-Lone Butte 230 kV
101	B	Picante-Newman 345kV Line
102	B	Pinal Central-Abel 500kV Line
103	B	Pinal_C-Dbg 230kV Line
104	B	Pinal_C-Randolph 230kV Line
105	B	Pinal West 500/345 kV Transformer #1
106	B	Pinal West – South 345 kV Line
107	B	Pinpksrp-Brandow 230kV Line
108	B	Rattle Snake 230/115kV Transformer
109	B	Rattle Snake-Tucson 230kV Line
110	B	Rogers-Pinnacle Peak 230 kV Line
111	B	Rogers-Rogswapa 230kV Line
112	B	Rogers-Spook Hill-Colldige 230 kV Line
113	B	Rogers-Thundrst 230kV Line
114	B	Rudd-Whitetnk 230kV Line
116	B	Southline Saguaro 230/115kV Transformer #1
117	B	Southline Saguaro 230/115kV Transformer #2
118	B	Southline Saguaro-ED5 115 kV Line
119	B	Saguaro-Tortolita 500kV Line
120	B	San Juan – McKinley 345 kV Line #1
121	B	San Juan - Shiprock 345kV Line
122	B	San Juan-Ojo 345kV Line
123	B	San Juan-Riopuero 345kV Line
124	B	Santan-Corbell 230kV Line
125	B	Santan-Thundrst 230kV Line
126	B	Schrader-Santan 230kV Line
127	B	Silverkg-Goldfeld 230kV Line
128	B	South 345/138 kV Transformer #1
129	B	Springerville – Coronado 345 kV Line w/ Coronado 345/500 kV Transformers #1 & #2
130	B	Springerville – Greenlee 345 kV Line

ATTACHMENT F – OUTAGES MODELED IN POST-TRANSIENT CONTINGENCY ANALYSIS		
#	CAT	DESCRIPTION
131	B	Springerville-Vail 345kV Line
132	B	Springerville-Vail 345kV Line w/ SPS Trip of 1,100MW SunZia Generation
133	B	Sundance-Coolidge #1 230 kV Line
134	B	SunZia E-SunZia S #1 500kV Line
135	B	SunZia E-SunZia S #1 500kV Line w/ SPS Trip of 1,500MW SunZia Generation
136	B	SunZia S-Luna 500/345kV Transformer #1
137	B	SunZia S-Willow #1 500kV Line
138	B	SunZia S-Willow #1 500kV Line w/ SPS Trip of 500MW SunZia Generation
139	B	Test Track-Casa Grande 230 kV Line
140	B	Thundrst-Goldfeld 230kV Line
141	B	Tortolita 500/230kV Transformer
142	B	Tucson 230/115kV Transformer
143	B	Tucson 230/Dmp 138kV Transformer
144	B	Tucson-Delbac 230kV Line
145	B	Tucson-Oracle 115 kV Line
146	B	Tucson-Tortolita 230kV Line
147	B	Tucson-Vail 230kV Line
148	B	Vail 345/230kV Transformer
149	B	Vail – South 345 kV Line
150	B	Valley Farms-Oracle 115 kV Line
151	B	Walsenbury-Gladstone 230kV Line
152	B	West Mesa-Arroyo 345kV Line
153	B	Westwing – Pinal West 345 kV Line w/ Westwing 345/500 kV Transformer
154	B	Westwing-Pinnacle Peak 230 kV Line
155	B	Willow – Winchester 345 kV Line
156	B	Willow 500/345kV Transformer #1
157	B	Willow-Pinal C #1 500kV Line
158	B	Willow-Pinal C #1 500kV Line w/ SPS Trip of 400MW SunZia Generation
159	B	Winchester – Vail 345 kV line
160	B	Yavapai 500/230kV #1 Transformer
161	B	Yavapai-Westwing 500kV Line
161B	B	Saguaro-Marana-Rattle Snake-Tucson 115kV Line
162	B	Southline Saguaro-Saguaro East 115kV Line
163	B	Southline Saguaro-Saguaro West 115kV Line
163B	B	Tucson-Del Bac-Nogales 115kV Line
164	B	Test Track-ED5 230kV Line
165	B	ED5 230/115kV Transformer #1
166	C	Afton-Midpoint 345kV #1 And #2 Lines
167	C	Apache-Pantano & Adams-Nogales 230kV Lines
168	C	Apache-Pantano & Apache-Adams 230kV Lines
169	C	Cholla-Mazatzal And Cholla-Preacher Canyon 345kV Lines
170	C	Coolidge-Signal-ED2 & Coolidge-ED2 115 kV Line
171	C	Coronado-Silver King & Cholla-Saguaro 500kV Lines

ATTACHMENT F – OUTAGES MODELED IN POST-TRANSIENT CONTINGENCY ANALYSIS		
#	CAT	DESCRIPTION
172	C	Fourcorners-Cholla 345kV #1 & #2 Lines
173	C	Four Corners Breaker Failure[1]
174	C	Greenlee-Willow & Springerville-Vail 345kV Lines
175	C	Greenlee-Willow & Springerville-Vail 345kV Lines w/ SPS Trip of 700MW SunZia Gen
176	C	Greenlee-Willow & Willow-Winchester 345kV Lines
177	C	Hidalgo-Apache 345kV #1 And #2 Lines
178	C	Hidalgo Breaker Failure[2]
179	C	Luna-Afton & Luna-Springerville 345kV Transformer
180	C	Luna-Afton 345kV Line & Luna 345kV/115kV Transformer
181	C	Luna-Hidalgo 345kV & Luna-LEF 345kV Lines
182	C	Luna-Hidalgo 345kV Line & Luna 345kV/115kV Transformer
183	C	Mazatzal-Pinnacle Peak & Cholla-Preacher Canyon 345kV Lines
184	C	Mckinley-Springerville 345kV #1 & #2 Lines
185	C	Midpoint-Hidalgo 345kV #1 And #2 Lines
186	C	Morgan-Dugas & Yavapai-Westwing 500kV Lines
187	C	Morgan-Westwing & Yavapai-Westwing 500kV Lines
188	C	Navajo-Dugas & Yavapai-Westwing 500kV Lines
189	C	Newman-Arroyo & Newman-Afton 345kV Lines
190	C	Newman-Arroyo 345kV Line & Newman 345kV/115kV Transformer
191	C	Newman-Picante & Newman-Afton 345kV Lines
192	C	Newman-Picante 345kV Line & Newman 345kV/115kV Transformer
193	C	Pantano-Vail & Adams-Nogales 230kV Lines
194	C	San Juan-Mckinley 345kV #1 & #2 Lines
195	C	Springerville-Greenlee & Greenlee-Willow 345kV Lines
196	C	Springerville-Greenlee & Springerville-Vail 34kV Lines
197	C	Springerville-Greenlee & Springerville-Vail 34kV Lines w/ SPS Trip of 500MW SunZia Gen
198	C	Sundance-Coolidge #1 & Sundance-Coolidge #2 230 kV Line
199	C	SunZia E-S #1 & #2 500kV Lines
200	C	SunZia E-S #1 & #2 500kV Lines w/ SPS Trip of 3,000MW SunZia Generation
201	C	SunZia S-Willow #1 & #2 500kV Lines
202	C	SunZia S-Willow #1 & #2 500kV Lines w/ SPS Trip of 2,000MW SunZia Generation
203	C	Tortolita-Tucson & Southline Saguaro-Marana 230kV Lines
204	C	Tortolita-Tucson & Rattlesnake-Marana 230kV Lines
205	C	Tortolita-Tucson & Rattlesnake-Tucson 230kV Lines
206	C	Vail-Tucson & Adams-Nogales 230kV Lines
207	C	Vail-Tucson & Del Bac-Nogales 230kV Lines
208	C	West Mesa Breaker Failure[3]

[1] Outage includes Four Corners-San Juan 345 kV Line & Four Corners 500/345 kV Transformer (Breaker 1136)

[2] Outage includes Luna-Hidalgo 345 kV Line & Hidalgo 345/115 kV Transformer (Breakers 09782 and 03882) Hidalgo-Greenlee 345 kV Line & Hidalgo 345/115 kV Transformer (Breakers 02782 & 04982)

[3] Outage includes West Mesa-Arroyo & West Mesa-Rio Puerco 115 kV Lines (Breaker 14682)

ATTACHMENT F – OUTAGES MODELED IN POST-TRANSIENT CONTINGENCY ANALYSIS		
#	CAT	DESCRIPTION
209	C	Willow-Pinal C #1 & #2 500kV Lines
210	C	Willow-Pinal C #1 & #2 500kV Lines w/ SPS Trip of 2,500MW SunZia Generation
211	C	Willow-Winchester & Springerville-Vail 345kV Lines
212	C	Willow-Winchester & Winchester-Vail 345kV Lines
213	C	Winchester-Vail & Springerville-Vail 345kV Lines
215	C	Springerville – Vail & Greenlee – Winchester 345 kV Lines
216	C	Vail-South & Pinal West-South 345kV Lines
217	B	Saguaro East 115kV Bus Outage
218	B	Saguaro East 115kV Bus Outage

POST-TRANSIENT RESULTS COVER SHEET	
Direction	East-to-West
Case Series Number	1
Simultaneous Path	47
Path 47 Definition --WECC or Alternative	WECC
SunZia in Service	No
Tucson-Oracle Reconductor	No
2nd Marana Bank	No
Bowie Generation Output (MW)	350
West to East Mitigation	No
Dona Ana- Picacho 115kV 13 ohm series reactor	No
Additional Newman 345/115kV Transformer Bank	No
Southwest Power Pool Export	No
Nomogram Number	1
Nomogram Point	1
Southline Afton-West Cut Plane Flows (MW)	1037
Southline Apache-West Cut Plane Flows (MW)	1000
Southline Saguaro/Tortolita-East Cut Plane Flows (MW)	N/A
Southline Apache-East Cut Plane Flows (MW)	N/A
Southline Midpoint West Cut Plane Flows (MW)	N/A
Path 47 Flows (MW)	1048

ATTACHMENT G– POST-TRANSIENT THERMAL RESULTS – CASES = 01_ew_1037_1000_1048_v27.SAV, 01_ew_1037_1000_1048_v28OOS.SAV								
OVERLOADED COMPONENT	CONTINGENCY	RATING	PRE-PROJECT LOADING		POST-PROJECT LOADING		DELTA %	NOTES
		AMPS / MVA	AMPS/ MVA	RATING %	AMPS / MVA	RATING %		
CATEGORY A								
None								
CATEGORY B								
Dona Ana-Picacho 115kV line	Afton-Newman #1 345kV Line	456.86	454.15	99.41	414.51	90.73	-8.68	
Turquois-Hidalgo #1 115kV Line	Luna 345/115 Transformer #1	702.86	698.2	99.34	702.68	99.97	0.64	
	Luna-Hidalgo 345kV Line	702.86	697.32	99.21	663.6	94.41	-4.80	
CATEGORY C								
Arroyo Phase Shifter	Luna-Afton #1 and #2 345kV Lines w/ LAPS	400	N/A	N/A	392.54	98.13	N/A	
Bernardo-Belen 115kV Line	Luna-Afton 345kV Line & Luna 345/115kV Transformer	376.53	327.26	86.91	328.98	87.37	0.46	
	Luna-Afton 345kV Line & Luna 345/115kV Transformer W/ N RAS Option 1	376.53	374.52	99.47	318.55	84.60	-14.87	
	Luna-Afton 345kV Line & Luna 345/115kV Transformer W/ N RAS Option 2	376.53	346.22	91.95	294.93	78.33	-13.62	
Bicknell 345/230kV Transformer	Pantano-Vail & Adamstap-Nogales 230kV Lines	241.00	N/A	N/A	240.03	99.60	N/A	
Marana-Marana Tap 115kV Line	Springerville-Greenlee & Springerville-Vail 345kV Lines	550.24	624.59	113.51	369.46	67.14	-46.37	Rating of line increased to 800A.
	Springerville-Greenlee & Springerville-Vail 345kV Lines w/ TOLS	550.24	549.60	99.88	369.45	67.14	-32.74	TOLS dropped 420MW in Pre-Project Case. Rating of line increased to 800A.
	Willow-Winchester & Springerville-Vail 345kV Lines	550.24	582.58	105.88	339.99	61.79	-44.09	Rating of line increased to 800A.
	Willow-Winchester & Springerville-Vail 345kV Lines w/ TOLS	550.24	547.19	99.45	339.98	61.79	-37.66	TOLS dropped 180MW in Pre-Project Case. Rating of line increased to 800A.
	Winchester-Vail & Springerville-Vail 345kV Lines	550.24	579.46	105.31	339.54	61.71	-43.60	Rating of line increased to 800A.
	Winchester-Vail & Springerville-Vail 345kV Lines w/ TOLS	550.24	548.45	99.68	339.54	61.71	-37.97	TOLS dropped 160MW in Pre-Project Case. Rating of line increased to 800A.
Turquois-Hidalgo #1 115kV Line	Luna-Afton 345kV Line & Luna 345/115kV Transformer	702.86	837.95	119.22	745.55	106.07	-13.15	Existing manual action fully mitigates overload
	Luna-Afton 345kV Line & Luna 345/115kV Transformer W/ N RAS Option 1	702.86	703.47	100.09	624.07	88.79	-11.3	
	Luna-Afton 345kV Line & Luna 345/115kV Transformer W/ N RAS Option 2	702.86	532.93	75.82	455.66	64.83	-10.99	
	Luna-Hidalgo 345kV Line & Luna 345/115kV Transformer	702.86	824.40	117.29	804.89	114.52	-2.78	Existing manual action fully mitigates overload
	Luna-Hidalgo 345kV Line & Luna 345/115kV	702.86	633.87	90.18	613.27	87.25	-2.93	

ATTACHMENT G– POST-TRANSIENT THERMAL RESULTS – CASES = 01_ew_1037_1000_1048_v27.SAV, 01_ew_1037_1000_1048_v28OOS.SAV								
OVERLOADED COMPONENT	CONTINGENCY	RATING	PRE-PROJECT LOADING		POST-PROJECT LOADING		DELTA %	NOTES
		AMPS / MVA	AMPS/ MVA	RATING %	AMPS / MVA	RATING %		
	Transformer W/ N RAS Option 1							
	Luna-Hidalgo 345kV Line & Luna 345/115kV Transformer W/ N RAS Option 2	702.86	623.18	88.66	605.35	86.13	-2.54	
	Luna-Hidalgo 345kV Line & Luna 345/115kV Transformer W/ N RAS Option 3	702.86	622.01	88.50	605.28	86.12	-2.38	
	Luna-Hidalgo 345kV Line & Luna 345/115kV Transformer W/ N RAS Option 4	702.86	619.24	88.10	605.28	86.12	-1.99	

ATTACHMENT G – POST-TRANSIENT VOLTAGE RESULTS – CASES = 01_ew_1037_1000_1048_v27.SAV, 01_ew_1037_1000_1048_v28OOS.SAV

BUS	CONTINGENCY	PRE-PROJECT		PST-PROJECT		DELTA		NOTES
		VOLTAGE (PU)	DEV (%)	VOLTAGE (PU)	DEV (%)	VOLTAGE (PU)	DEV (%)	
CATEGORY A								
Abel 230kV	Basecase	0.99	N/A	0.99	N/A	0.00	N/A	
Arriba 115kV	Basecase	1.06	N/A	1.06	N/A	0.00	N/A	
Arriba Tap 115kV	Basecase	1.06	N/A	1.06	N/A	0.00	N/A	
Bagdad 115kV	Basecase	1.00	N/A	0.99	N/A	0.01	N/A	
Boothill 115kV	Basecase	1.00	N/A	1.01	N/A	-0.01	N/A	
Cholla 345kV	Basecase	1.06	N/A	1.06	N/A	0.00	N/A	
Dinosaur 230kV	Basecase	0.99	N/A	0.99	N/A	0.00	N/A	
Fort Huachuca 138kV	Basecase	1.0034	N/A	1.0052	N/A	-0.0018	N/A	TEP 138kV Average in acceptable range.
Gallina Tap 115kV	Basecase	1.06	N/A	1.06	N/A	0.00	N/A	
Kartchnr 115kV	Basecase	1.05	N/A	1.05	N/A	0.00	N/A	
Mural 115kV	Basecase	0.99	N/A	1.00	N/A	-0.01	N/A	
Ojo 345kV	Basecase	1.04	N/A	1.05	N/A	-0.01	N/A	
Pinnacle Peak East 230kV	Basecase	1.024	N/A	1.022	N/A	0.002	N/A	
Pinnacle Peak North 230kV	Basecase	1.020	N/A	1.019	N/A	0.001	N/A	
Pinnacle Peak West 230kV	Basecase	1.018	N/A	1.016	N/A	0.002	N/A	
Rainsville 115kV	Basecase	1.06	N/A	1.06	N/A	0.00	N/A	
Rainsville Tap	Basecase	1.06	N/A	1.06	N/A	0.00	N/A	
Storrie Lake 115kV	Basecase	1.06	N/A	1.06	N/A	0.00	N/A	
Taos 345kV	Basecase	1.04	N/A	1.05	N/A	-0.01	N/A	
Tortolita 500kV	Basecase	1.06	N/A	1.06	N/A	0.00	N/A	
Vail 138kV	Basecase	1.0311	N/A	1.0328	N/A	-0.0017	N/A	TEP 138kV Average in acceptable range.
Vail2 345kV	Basecase	1.02	N/A	1.03	N/A	-0.01	N/A	
Valencia 115kV	Basecase	1.06	N/A	1.06	N/A	0.00	N/A	
West Wing West 230kV	Basecase	1.03	N/A	1.03	N/A	0.00	N/A	
Westwing 345kV	Basecase	1.01	N/A	1.01	N/A	0.00	N/A	
CATEGORY B								
Abel 230kV	Dinosaur-Browning #1 230kV Line	0.94	-5.0	0.94	-4.9	0.00	-0.1	24MVAR Cap not modeled / Brown Xfmr Tap.
Dinosaur 230kV	Dinosaur-Browning #1 230kV Line	0.93	-6.3	0.93	-6.1	0.00	-0.2	24MVAR Cap not modeled / Brown Xfmr Tap.
Mural 115kV	Apache-Adamstap 115kV Line	0.94	-5.2	N/A	N/A	N/A	N/A	
Vail2 345kV	Vail2 345/138 Transformer #1	1.12	9.6	1.12	8.5	0.00	1.1	
CATEGORY C								
Adams 115kV	Apache-Pantano & Adamstap-Nogales 230kV Lines	N/A	N/A	1.12	8.8	N/A	N/A	Radial System
	Pantano-Vail & Adamstap-Nogales 230kV Lines w/	N/A	N/A	1.12	8.8	N/A	N/A	Radial System

ATTACHMENT G – POST-TRANSIENT VOLTAGE RESULTS – CASES = 01_ew_1037_1000_1048_v27.SAV, 01_ew_1037_1000_1048_v28OOS.SAV								
BUS	CONTINGENCY	PRE-PROJECT		PST-PROJECT		DELTA		NOTES
		VOLTAGE (PU)	DEV (%)	VOLTAGE (PU)	DEV (%)	VOLTAGE (PU)	DEV (%)	
	N RAS							
Adams Tap 115kV	Apache-Pantano & Adamstap-Nogales 230kV Lines	N/A	N/A	1.12	8.8	N/A	N/A	Radial System
	Pantano-Vail & Adamstap-Nogales 230kV Lines w/ N RAS	N/A	N/A	1.12	8.8	N/A	N/A	Radial System
Adams Tap 230kV	Apache-Pantano & Adamstap-Nogales 230kV Lines	N/A	N/A	1.12	8.7	N/A	N/A	
	Pantano-Vail & Adamstap-Nogales 230kV Lines w/ N RAS	N/A	N/A	1.12	8.7	N/A	N/A	
Apache 230kV	Apache-Pantano & Adamstap-Nogales 230kV Lines	N/A	N/A	1.12	7.0	N/A	N/A	
	Apache-Pantano & Apache-Adamstap 230kV Lines	N/A	N/A	1.12	6.8	N/A	N/A	
	Pantano-Vail & Adamstap-Nogales 230kV Lines w/ N RAS	N/A	N/A	1.12	7.0	N/A	N/A	
Boothill 115kV	Apache-Pantano & Adamstap-Nogales 230kV Lines	N/A	N/A	1.11	9.1	N/A	N/A	Radial System
	Pantano-Vail & Adamstap-Nogales 230kV Lines w/ N RAS	N/A	N/A	1.11	9.1	N/A	N/A	Radial System
Dugas 500kV Bus	Morgan-Dugas & Yavapai-Westwing 500kV Lines	1.10	3.2	1.10	3.2	0.00	0.0	
Hidalgo 345kV	Luna-Hidalgo 345kV Line & Luna 345/115kV Transformer W/ N RAS Option 1	1.05	3.2	1.05	3.3	0.00	-0.1	
Mazatzal 345kV	Mazatzal-Pinnacle Peak & Cholla-Preacher Canyon 345kV Lines	1.12	8.8	1.12	9.0	0.00	-0.2	

POST-TRANSIENT RESULTS COVER SHEET	
Direction	West–to-East
Case Series Number	2
Simultaneous Path	47
Path 47 Definition --WECC or Alternative	WECC
SunZia in Service	No
Tucson-Oracle Reconductor	No
2nd Marana Bank	No
Bowie Generation Output (MW)	350
West to East Mitigation	No
Dona Ana- Picacho 115kV 13 ohm series reactor	No
Additional Newman 345/115kV Transformer Bank	No
Southwest Power Pool Export	No
Nomogram Number	2a
Nomogram Point	1
Southline Afton-West Cut Plane Flows (MW)	N/A
Southline Apache-West Cut Plane Flows (MW)	N/A
Southline Saguaro/Tortolita-East Cut Plane Flows (MW)	421
Southline Apache-East Cut Plane Flows (MW)	165
Southline Midpoint West Cut Plane Flows (MW)	N/A
Path 47 Flows (MW)	1048

ATTACHMENT G – POST-TRANSIENT THERMAL RESULTS – CASES = 02_we_0421_0165_1048_06.SAV, 02_we_0421_0165_1048_06_OOS.SAV								
OVERLOADED COMPONENT	CONTINGENCY	RATING	PRE-PROJECT LOADING		POST-PROJECT LOADING		DELTA %	NOTES
		AMPS / MVA	AMPS/ MVA	RATING %	AMPS / MVA	RATING %		
CATEGORY A								
None								
CATEGORY B								
Turquoise-Hidalgo 115V Line	Luna-Hidalgo 345kV Line	702.86	701.51	99.81	702.08	99.89	0.08	
Tucson-Oracle 115kV Line	Sag.East-Marana 115kV Line	381.55	379.41	99.44	N/A	N/A	N/A	
Newman 345/115kV Transformer #1	Picante-Newman #1 345kV Line	265	264.09	99.65	262.41	99.02	-0.63	
CATEGORY C								
Arroyo Phase Shifter	Luna-Afton & Luna-MSPOI 345kV Lines	400.00	420.15	105.04	282.37	70.59	-34.45	Existing mitigation solution
	Luna-Afton #1 & #2 345kV Lines w/ LAPS	400.00	N/A	N/A	398.17	99.54	N/A	Proposed LAPS mitigatiion
Tucson-Oracle 115kV Line	Tortilita-Tucson & Marana-Southline Saguaro 230kV Lines	381.55	N/A	N/A	381.17	99.90	N/A	
Turquoise-Hidalgo 115V Line	Luna-Afton 345kV Line & Luna 345/115kV Transformer	702.86	760.46	108.20	686.80	97.72	-10.48	Existing manual action fully mitigates overload
	Luna-Afton 345kV Line & Luna 345/115kV Transformer W/ N RAS Option 1	702.86	638.35	90.82	569.82	81.07	-9.75	
	Luna-Hidalgo 345kV Line & Luna 345/115kV Transformer	702.86	778.22	110.72	781.30	111.16	0.44	Existing manual action fully mitigates overload
	Luna-Hidalgo 345kV Line & Luna 345/115kV Transformer W/ N RAS Option 1	702.86	586.54	83.45	595.01	84.65	1.21	
	Luna-Hidalgo 345kV Line & Luna 345/115kV Transformer W/ N RAS Option 2	702.86	576.63	82.04	585.40	83.29	1.25	
	Luna-Hidalgo 345kV Line & Luna 345/115kV Transformer W/ N RAS Option 3	702.86	575.67	81.90	584.52	83.16	1.26	
	Luna-Hidalgo 345kV Line & Luna 345/115kV Transformer W/ N RAS Option 4	702.86	573.51	81.60	581.99	82.80	1.21	

ATTACHMENT G – POST-TRANSIENT VOLTAGE RESULTS – CASES = 02_we_0421_0165_1048_06.SAV, 02_we_0421_0165_1048_06_OOS.SAV								
BUS	CONTINGENCY	PRE-PROJECT		PST-PROJECT		DELTA		NOTES
		VOLTAGE (PU)	DEV (%)	VOLTAGE (PU)	DEV (%)	VOLTAGE (PU)	DEV (%)	
CATEGORY A								
LaJara 115kV	Base Case	1.06	N/A	1.03	N/A	0.03	N/A	
Pinnacle Peak 500kV	Base Case	1.09	N/A	1.09	N/A	0.00	N/A	
Dugas 500kV	Base Case	1.09	N/A	1.10	N/A	-0.01	N/A	
Cholla 345kV	Base Case	1.07	N/A	1.07	N/A	0.00	N/A	
Preacher Canyon 345kV	Base Case	1.05	N/A	1.05	N/A	0.00	N/A	
Cholla 230kV	Base Case	1.06	N/A	1.06	N/A	0.00	N/A	
Leupp 230kV	Base Case	1.05	N/A	1.06	N/A	-0.01	N/A	
Prescott 230kV	Base Case	1.045	N/A	1.047	N/A	-0.002	N/A	
Yavapai 230kV	Base Case	1.06	N/A	1.06	N/A	0.00	N/A	
Prescott 115kV	Base Case	1.07	N/A	1.07	N/A	0.00	N/A	
Tortolita 500kV	Base Case	1.07	N/A	1.07	N/A	0.00	N/A	
Vail 138kV	Base Case	1.0324	N/A	1.0320	N/A	0.0004	N/A	TEP 138kV voltages allowed outside criteria. TEP 138kV Average in acceptable range.
Nogales 138kV	Base Case	1.0302	N/A	1.0298	N/A	0.0004	N/A	TEP 138kV voltages allowed outside criteria. TEP 138kV Average in acceptable range.
Canez 138kV	Base Case	1.0146	N/A	1.0144	N/A	0.0002	N/A	TEP 138kV voltages allowed outside criteria. TEP 138kV Average in acceptable range.
Sonoita 138kV	Base Case	1.0139	N/A	1.0137	N/A	0.0002	N/A	TEP 138kV voltages allowed outside criteria. TEP 138kV Average in acceptable range.
CATEGORY B								
Dugas 500kV Bus	Morgan-Dugas #1 500kV Line	1.14	-4.4	1.14	-4.1	0.00	0.3	
Pinnacle Peak 500kV Bus	Morgan-Pnpkaps #1 500kV Line	1.12	-3.5	1.13	-3.7	0.01	-0.2	
CATEGORY C								
Dugas 500kV Bus	Morgan-Dugas & Yavapai-Westwing 500kV Lines	1.14	-4.4	1.14	-4.1	0.00	-0.3	
	Morgan-Westwing & Yavapai-Westwing 500kV Lines	1.13	-2.9	1.13	-2.9	0.00	0.0	
Hidalgo 345kV Bus	Luna-Hidalgo 345kV Line & Luna 345/115kV Transformer W/ N RAS Option 1	1.05	-2.2	1.06	-3.6	-0.01	1.4	No manual action or manual action option #3 or #4 fully mitigates high voltage.
	Luna-Hidalgo 345kV Line & Luna 345/115kV Transformer W/ N RAS Option 2	1.05	-1.4	1.06	-2.8	-0.01	1.4	No manual action or manual action option #3 or #4 fully mitigates high voltage.
Morgan 500kV Bus	Morgan-Westwing & Yavapai-Westwing 500kV Lines	1.12	-4.4	1.12	-4.4	0.00	0.0	
Pinnacle Peak 500kV	Morgan-Westwing & Yavapai-Westwing 500kV Lines	1.12	-3.2	1.12	-3.2	0.00	0.0	

POST-TRANSIENT RESULTS COVER SHEET	
Direction	West–to-East
Case Series Number	2
Simultaneous Path	47
Path 47 Definition --WECC or Alternative	WECC
SunZia in Service	No
Tucson-Oracle Reconductor	No
2nd Marana Bank	No
Bowie Generation Output (MW)	350
West to East Mitigation	
Dona Ana- Picacho 115kV 13 ohm series reactor	No
Additional Newman 345/115kV Transformer Bank	No
Southwest Power Pool Export	No
Nomogram Number	2a
Nomogram Point	2
Southline Afton-West Cut Plane Flows (MW)	N/A
Southline Apache-West Cut Plane Flows (MW)	N/A
Southline Saguaro/Tortolita-East Cut Plane Flows (MW)	430
Southline Apache-East Cut Plane Flows (MW)	971
Southline Midpoint West Cut Plane Flows (MW)	N/A
Path 47 Flows (MW)	275

ATTACHMENT G – POST-TRANSIENT THERMAL RESULTS – CASES = 02_we_0430_0971_0275_03.SAV, 02_we_0430_0971_0275_03_OOS.SAV								
OVERLOADED COMPONENT	CONTINGENCY	RATING	PRE-PROJECT LOADING		POST-PROJECT LOADING		DELTA %	NOTES
		AMPS / MVA	AMPS/ MVA	RATING %	AMPS / MVA	RATING %		
CATEGORY A								
None								
CATEGORY B								
Diablo 345/115kV Transformer #1	Afton-Newman #1 345kV Line	258	91.86	35.6	257.95	99.98	64.38	
Diablo 345/115kV Transformer #2	Afton-Newman #1 345kV Line	258	91.07	35.3	255.76	99.13	63.83	
Diablo 345/115kV Transformer #3	Afton-Newman #1 345kV Line	258	91.1	35.31	255.79	99.14	63.83	
Dona Ana-Picacho 115kV Line	Afton-Newman #1 345kV Line	456.86	181.44	39.72	448.08	98.08	58.36	
Newman 345/115 Transformer #1	Picante-Newman #1 345kV Line	265	35.01	13.21	261.96	98.85	85.64	
CATEGORY C								
Diablo 345/115 Transformer #1	Newman-Arroyo & Newman-Afton 345kV Lines	258	80.57	31.23	268.31	104	72.77	Existing mitigation solution
	Newmn-Arryo & Newmn-Aftn 345kV Lines w/ LAPS	258.00	N/A	N/A	255.06	98.86	N/A	Proposed LAPS mitigatiion
	Newman-Picante & Newman-Afton 345kV Lines	258	93.9	36.39	264.3	102.44	66.05	Existing mitigation solution
	Newmn-Pcnte & Newmn-Aftn 345kV Lines w/ LAPS	258.00	N/A	N/A	255.9	99.19	N/A	Proposed LAPS mitigatiion
Diablo 345/115 Transformer #2	Newman-Arroyo & Newman-Afton 345kV Lines	258	79.88	30.96	266.03	103.11	72.15	Existing mitigation solution
	Newmn-Arryo & Newmn-Aftn 345kV Lines w/ LAPS	258.00	N/A	N/A	252.89	98.02	N/A	Proposed LAPS mitigatiion
	Newman-Picante & Newman-Afton 345kV Lines	258	93.09	36.08	262.05	101.57	65.49	Existing mitigation solution
	Newmn-Pcnte & Newmn-Aftn 345kV Lines w/ LAPS	258.00	N/A	N/A	253.72	98.34	N/A	Proposed LAPS mitigatiion
Diablo 345/115 Transformer #3	Newman-Arroyo & Newman-Afton 345kV Lines	258	79.91	30.97	266.06	103.12	72.15	Existing mitigation solution
	Newmn-Arryo & Newmn-Aftn 345kV Lines w/ LAPS	258.00	N/A	N/A	252.92	98.03	N/A	Proposed LAPS mitigatiion
	Newman-Picante & Newman-Afton 345kV Lines	258	93.12	36.09	262.08	101.58	65.49	Existing mitigation solution
	Newmn-Pcnte & Newmn-Aftn 345kV Lines w/ LAPS	258.00	N/A	N/A	253.75	98.35	N/A	Proposed LAPS mitigatiion
Tucson-Oracle 115kV Line	Tortilita-Tucson & Marana-Southline Saguaro 230kV Lines	381.55	N/A	N/A	380.23	99.65	N/A	
Turquois-Hidalgo #1 115kV Line	Luna-Afton 345kV Line & Luna 345/115kV Transformer	702.86	739.66	105.24	663.86	94.45	-10.78	

ATTACHMENT G – POST-TRANSIENT VOLTAGE RESULTS – CASES = 02_we_0430_0971_0275_03.SAV, 02_we_0430_0971_0275_03_OOS.SAV								
BUS	CONTINGENCY	PRE-PROJECT		PST-PROJECT		DELTA		NOTES
		VOLTAGE (PU)	DEV (%)	VOLTAGE (PU)	DEV (%)	VOLTAGE (PU)	DEV (%)	
CATEGORY A								
Cholla 345kV	Base Case	1.07	N/A	1.07	N/A	0.00	N/A	
Dugas 500kV	Base Case	1.09	N/A	1.09	N/A	0.00	N/A	
LaJara 115kV	Base Case	1.05	N/A	1.06	N/A	-0.01	N/A	
Nogales 138kV	Base Case	1.0314	N/A	1.0299	N/A	0.0015	N/A	
Pinnacle Peak East Bus 230kV	Base Case	1.017	N/A	1.017	N/A	0.00	N/A	
Preacher Canyon 345kV	Base Case	1.05	N/A	1.05	N/A	0.00	N/A	
Prescott 115kV	Base Case	1.07	N/A	1.07	N/A	0.00	N/A	
Prescott 230kV	Base Case	1.045	N/A	1.045	N/A	0.00	N/A	
Tortolita 500kV	Base Case	1.07	N/A	1.07	N/A	0.00	N/A	
Vail 138kV	Base Case	1.0327	N/A	1.0310	N/A	0.0017	N/A	TEP 138kV voltages allowed outside criteria. TEP 138kV Average in acceptable range.
Yavapai 230kV	Base Case	1.06	N/A	1.06	N/A	0.00	N/A	
CATEGORY B								
Dugas 500kV Bus	Morgan-Dugas #1 500kV Line	1.14	4.4	1.14	4.4	0.00	0.0	
Pinnacle Peak 500kV Bus	Morgan-Pnpkaps #1 500kV Line	1.12	3.2	1.12	3.2	0.00	0.0	
CATEGORY C								
Dugas 500kV	Morgan-Dugas & Yavapai-Westwing 500kV Lines	1.14	4.4	1.14	4.4	0.00	0.0	
Morgan 500kV	Morgan-Westwing & Yavapai-Westwing 500kV Lines	1.12	4.3	1.12	4.2	0.00	0.1	
Pinnacle Peak 500kV	Morgan-Westwing & Yavapai-Westwing 500kV Lines	1.12	3.1	1.12	3.1	0.00	0.0	
Dugas 500kV	Morgan-Westwing & Yavapai-Westwing 500kV Lines	1.12	2.8	1.12	2.8	0.00	0.0	

POST-TRANSIENT RESULTS COVER SHEET	
Direction	West–to-East
Case Series Number	2
Simultaneous Path	47
Path 47 Definition --WECC or Alternative	WECC
SunZia in Service	No
Tucson-Oracle Reconductor	No
2nd Marana Bank	No
Bowie Generation Output (MW)	350
West to East Mitigation	Yes
Dona Ana- Picacho 115kV 13 ohm series reactor	Yes
Additional Newman 345/115kV Transformer Bank	Yes
Southwest Power Pool Export	Yes
Nomogram Number	2b
Nomogram Point	1M
Southline Afton-West Cut Plane Flows (MW)	N/A
Southline Apache-West Cut Plane Flows (MW)	N/A
Southline Saguaro/Tortolita-East Cut Plane Flows (MW)	435
Southline Apache-East Cut Plane Flows (MW)	436
Southline Midpoint West Cut Plane Flows (MW)	N/A
Path 47 Flows (MW)	1048

ATTACHMENT G – POST-TRANSIENT THERMAL RESULTS – CASES = 02_WE_0435_0436_1048_01.SAV, 02_WE_0435_0436_1048_01_OOS.SAV								
OVERLOADED COMPONENT	CONTINGENCY	RATING	PRE-PROJECT LOADING		POST-PROJECT LOADING		DELTA %	NOTES
		AMPS / MVA	AMPS/ MVA	RATING %	AMPS / MVA	RATING %		
CATEGORY A								
None								
CATEGORY B								
Diablo 345/115kV Transformer #1	Afton-Newman #1 345kV Line	258	150.13	58.19	255.88	99.18	40.99	
Diablo 345/115kV Transformer #2	Afton-Newman #1 345kV Line	258	148.86	57.7	253.71	98.34	40.64	
Diablo 345/115kV Transformer #3	Afton-Newman #1 345kV Line	258	148.88	57.71	253.73	98.35	40.64	
Newman 345/115kV Transformer #1	Picante-Newman #1 345kV Line	265	264.08	99.65	234.53	88.5	-11.15	
Tucson-Oracle 115kV Line	Sag.East-Marana 115kV Line	381.55	379.34	99.42	N/A	N/A	N/A	
Turquoise-Hidalgo 115V Line	Luna-Hidalgo 345kV Line	702.86	701.51	99.81	698.56	99.39	-0.42	
CATEGORY C								
Arroyo Phase Shifter	Luna-Afton & Luna-MSPOI 345kV Lines	400.00	420.14	105.04	276.81	69.20	-35.83	Existing mitigation solution
	Luna-Afton #1 and #2 345kV Lines w/ LAPS	400.00	N/A	N/A	396.69	99.17	N/A	Proposed LAPS mitigatiion
Diablo 345/115kV Transformer #1	Newman-Arroyo & Newman-Afton 345kV Lines	258.00	184.60	71.55	298.57	115.72	44.18	Existing mitigation solution
	Newmn-Arryo & Newmn-Aftn 345kV Lines w/ LAPS	258.00	N/A	N/A	255	98.84	N/A	Proposed LAPS mitigatiion
	Newman-Picante & Newman-Afton 345kV Lines	258.00	162.34	62.92	266.04	103.12	40.19	Existing mitigation solution
	Newmn-Pcnte & Newmn-Aftn 345kV Lines w/ LAPS	258.00	N/A	N/A	256.46	99.4	N/A	Proposed LAPS mitigatiion
Diablo 345/115kV Transformer #2	Newman-Arroyo & Newman-Afton 345kV Lines	258.00	183.03	70.94	296.03	114.74	43.80	Existing mitigation solution
	Newmn-Arryo & Newmn-Aftn 345kV Lines w/ LAPS	258.00	N/A	N/A	252.83	98.00	N/A	Proposed LAPS mitigatiion
	Newman-Picante & Newman-Afton 345kV Lines	258.00	160.96	62.39	263.78	102.24	39.85	Existing mitigation solution
	Newmn-Pcnte & Newmn-Aftn 345kV Lines w/ LAPS	258.00	N/A	N/A	254.28	98.56	N/A	Proposed LAPS mitigatiion
Diablo 345/115kV Transformer #3	Newman-Arroyo & Newman-Afton 345kV Lines	258.00	183.05	70.95	296.06	114.75	43.80	Existing mitigation solution
	Newmn-Arryo & Newmn-Aftn 345kV Lines w/ LAPS	258.00	N/A	N/A	252.86	98.01	N/A	Proposed LAPS mitigatiion
	Newman-Picante & Newman-Afton 345kV Lines	258.00	160.98	62.40	263.80	102.25	39.85	Existing mitigation solution
	Newmn-Pcnte & Newmn-Aftn 345kV Lines w/ LAPS	258.00	N/A	N/A	254.3	98.57	N/A	Proposed LAPS mitigatiion
Diablo-Rio Grande 115kV #1 Line	Newman-Arroyo & Newman-Afton 345kV Lines	1964.00	1242.50	63.26	2096.59	106.75	43.49	Existing mitigation solution
	Newmn-Arryo & Newmn-Aftn 345kV Lines w/ LAPS	1964.00	N/A	N/A	1707.12	86.92	N/A	Proposed LAPS mitigatiion
Diablo-Rio Grande 115kV #2 Line	Newman-Arroyo & Newman-Afton 345kV Lines	1964.00	1247.75	63.53	2105.47	107.20	43.67	Existing mitigation solution
	Newmn-Arryo & Newmn-Aftn 345kV Lines w/ LAPS	1964.00	N/A	N/A	1714.34	87.29	N/A	Proposed LAPS mitigatiion
Tucson-Oracle 115kV Line	Tortilita-Tucson & Marana-Southline Saguaro 230kV Lines	381.55	N/A	N/A	379.81	99.54	N/A	
Sunset North-Durazno 115kV line	Newman-Arroyo & Newman-Afton 345kV Lines	800.26	617.68	77.19	802.42	100.27	23.08	Future mitigation solution
Turquoise-Hidalgo 115V Line	Luna-Afton 345kV Line & Luna 345/115kV Transformer	702.86	760.45	108.19	700.81	99.71	-8.49	Existing manual action fully mitigates overload
	Luna-Afton 345kV Line & Luna 345/115kV Transformer W/ N RAS Option 1	702.86	638.35	90.82	577.99	82.23	-8.59	
	Luna-Hidalgo 345kV Line & Luna 345/115kV Transformer	702.86	778.21	110.72	786.94	111.96	1.24	Existing manual action fully mitigates overload

ATTACHMENT G – POST-TRANSIENT THERMAL RESULTS – CASES = 02_WE_0435_0436_1048_01.SAV, 02_WE_0435_0436_1048_01_OOS.SAV								
OVERLOADED COMPONENT	CONTINGENCY	RATING	PRE-PROJECT LOADING		POST-PROJECT LOADING		DELTA %	NOTES
		AMPS / MVA	AMPS/ MVA	RATING %	AMPS / MVA	RATING %		
	Luna-Hidalgo 345kV Line & Luna 345/115kV Transformer W/ N RAS Option 1	702.86	586.53	83.45	587.44	83.58	0.13	
	Luna-Hidalgo 345kV Line & Luna 345/115kV Transformer W/ N RAS Option 2	702.86	576.63	82.04	579.46	82.44	0.40	
	Luna-Hidalgo 345kV Line & Luna 345/115kV Transformer W/ N RAS Option 3	702.86	575.67	81.90	579.48	82.45	0.54	
	Luna-Hidalgo 345kV Line & Luna 345/115kV Transformer W/ N RAS Option 4	702.86	573.51	81.60	578.08	82.25	0.65	

ATTACHMENT G – POST-TRANSIENT VOLTAGE RESULTS – CASES = 02_WE_0435_0436_1048_01.SAV, 02_WE_0435_0436_1048_01_OOS.SAV								
BUS	CONTINGENCY	PRE-PROJECT		PST-PROJECT		DELTA		NOTES
		VOLTAGE (PU)	DEV (%)	VOLTAGE (PU)	DEV (%)	VOLTAGE (PU)	DEV (%)	
CATEGORY A								
Asarco 138kV	Base Case	1.0289	N/A	1.0314	N/A	-0.0025	N/A	TEP 138kV Average in acceptable range.
Canez 138kV	Base Case	1.0148	N/A	1.0143	N/A	0.0005	N/A	TEP 138kV Average in acceptable range.
Cholla 230kV	Base Case	1.06	N/A	1.05	N/A	0.01	N/A	
Cholla 345kV	Base Case	1.07	N/A	1.07	N/A	0	N/A	
Dugas 500kV	Base Case	1.09	N/A	1.09	N/A	0	N/A	
LaJara 115kV	Base Case	1.06	N/A	1.03	N/A	0.03	N/A	
Nogales 138kV	Base Case	1.0305	N/A	1.0298	N/A	0.0007	N/A	TEP 138kV Average in acceptable range.
Pinnacle Peak 500kV	Base Case	1.09	N/A	1.09	N/A	0	N/A	
Pinnacle Peak East 230kV	Base Case	1.03	N/A	1.018	N/A	0.012	N/A	
Preacher Canyon 345kV	Base Case	1.05	N/A	1.05	N/A	0	N/A	
Prescott 115kV	Base Case	1.07	N/A	1.07	N/A	0	N/A	
Prescott 230kV	Base Case	1.045	N/A	1.045	N/A	0	N/A	
Sonoita 138kV	Base Case	1.0141	N/A	1.0137	N/A	0.0004	N/A	TEP 138kV Average in acceptable range.
South 138kV	Base Case	1.0304	N/A	1.0329	N/A	-0.0025	N/A	TEP 138kV Average in acceptable range.
Tortolita 500kV	Base Case	1.07	N/A	1.07	N/A	0	N/A	
Vail 138kV	Base Case	1.0328	N/A	1.032	N/A	0.0008	N/A	TEP 138kV Average in acceptable range.
Yavapai 230kV	Base Case	1.06	N/A	1.06	N/A	0	N/A	
CATEGORY B								
Dugas 500kV	Morgan-Dugas #1 500kV Line	1.14	4.4	1.14	4.4	0.00	0.0	
Pinnacle Peak 500kV	Morgan-Pnpkaps #1 500kV Line	1.12	3.5	1.12	3.3	0.00	0.2	
CATEGORY C								

ATTACHMENT G – POST-TRANSIENT VOLTAGE RESULTS – CASES = 02_WE_0435_0436_1048_01.SAV, 02_WE_0435_0436_1048_01_OOS.SAV								
BUS	CONTINGENCY	PRE-PROJECT		PST-PROJECT		DELTA		NOTES
		VOLTAGE (PU)	DEV (%)	VOLTAGE (PU)	DEV (%)	VOLTAGE (PU)	DEV (%)	
Dugas 500kV	Morgan-Dugas & Yavapai-Westwing 500kV Lines	1.14	4.4	1.14	4.3	0.00	0.1	
	Morgan-Westwing & Yavapai-Westwing 500kV Lines	1.13	2.9	1.12	2.7	0.01	0.2	
Hidalgo 345kV	Luna-Hidalgo 345kV Line & Luna 345/115kV Transformer W/ N RAS Option 1	1.05	2.2	1.06	3.2	-0.01	-1.0	No manual action or manual action option #2, #3, or #4 fully mitigates high voltage.
Morgan 500kV	Morgan-Westwing & Yavapai-Westwing 500kV Lines	1.12	4.4	1.11	4.1	0.01	0.3	
Pinnacle Peak 500kV	Morgan-Westwing & Yavapai-Westwing 500kV Lines	1.12	3.2	1.12	3.0	0.00	0.2	

POST-TRANSIENT RESULTS COVER SHEET	
Direction	West–to-East
Case Series Number	2
Simultaneous Path	47
Path 47 Definition --WECC or Alternative	WECC
SunZia in Service	No
Tucson-Oracle Reconductor	No
2nd Marana Bank	No
Bowie Generation Output (MW)	350
West to East Mitigation	Yes
Dona Ana- Picacho 115kV 13 ohm series reactor	Yes
Additional Newman 345/115kV Transformer Bank	Yes
Southwest Power Pool Export	Yes
Nomogram Number	2b
Nomogram Point	2M
Southline Afton-West Cut Plane Flows (MW)	N/A
Southline Apache-West Cut Plane Flows (MW)	N/A
Southline Saguaro/Tortolita-East Cut Plane Flows (MW)	445
Southline Apache-East Cut Plane Flows (MW)	971
Southline Midpoint West Cut Plane Flows (MW)	N/A
Path 47 Flows (MW)	489

ATTACHMENT G – POST-TRANSIENT THERMAL RESULTS – CASES = 02_we_0445_0971_0489_01.SAV, 02_we_0445_0971_0489_01_OOS.SAV								
OVERLOADED COMPONENT	CONTINGENCY	RATING	PRE-PROJECT LOADING		POST-PROJECT LOADING		DELTA %	NOTES
		AMPS / MVA	AMPS/ MVA	RATING %	AMPS / MVA	RATING %		
CATEGORY A								
None								
CATEGORY B								
Diablo 345/115kV Transformer #1	Afton-Newman #1 345kV Line	258	84.03	32.57	256.57	99.44	66.87	
Diablo 345/115kV Transformer #2	Afton-Newman #1 345kV Line	258	83.31	32.29	254.39	98.6	66.31	
Diablo 345/115kV Transformer #3	Afton-Newman #1 345kV Line	258	83.34	32.3	254.41	98.61	66.31	
Las Cruces-Dona Ana 115kV Line	Luna 345/115 Transformer #1	456.86	452.63	99.07	353.12	77.29	-21.78	New Tri-State Rating of 716A
CATEGORY C								
Arroyo Phase Shifter	Afton-Midpoint #1 & #2 345kV Lines	400.00	N/A	N/A	397.39	99.35	N/A	
	Hidalgo-Apache #1 & #2 345kV Lines	400.00	N/A	N/A	400.14	100.03	N/A	
	Midpoint-Hidalgo #1 & #2 345kV Lines	400.00	N/A	N/A	399.07	99.77	N/A	
Diablo 345/115kV Transformer #1	Newman-Arroyo & Newman-Afton 345kV Lines	258.00	97.59	37.83	296.73	115.01	77.19	Existing mitigation solution
	Newmn-Arryo & Newmn-Aftn 345kV Lines w/ LAPS	258.00	N/A	N/A	255.39	98.99	N/A	Proposed LAPS mitigatiion
	Newman-Picante & Newman-Afton 345kV Lines	258.00	91.93	35.63	266.90	103.45	67.82	Existing mitigation solution
	Newmn-Pcnte & Newmn-Aftn 345kV Lines w/ LAPS	258.00	N/A	N/A	250.51	97.1	N/A	Proposed LAPS mitigatiion
Diablo 345/115kV Transformer #2	Newman-Arroyo & Newman-Afton 345kV Lines	258.00	96.76	37.50	294.21	114.04	76.53	Existing mitigation solution
	Newmn-Arryo & Newmn-Aftn 345kV Lines w/ LAPS	258.00	N/A	N/A	253.23	98.15	N/A	Proposed LAPS mitigatiion
	Newman-Picante & Newman-Afton 345kV Lines	258.00	91.14	35.33	264.64	102.57	67.25	Existing mitigation solution
	Newmn-Pcnte & Newmn-Aftn 345kV Lines w/ LAPS	258.00	N/A	N/A	248.38	96.27	N/A	Proposed LAPS mitigatiion
Diablo 345/115kV Transformer #3	Newman-Arroyo & Newman-Afton 345kV Lines	258.00	96.79	37.51	294.24	114.04	76.53	Existing mitigation solution
	Newmn-Arryo & Newmn-Aftn 345kV Lines w/ LAPS	258.00	N/A	N/A	253.25	98.16	N/A	Proposed LAPS mitigatiion
	Newman-Picante & Newman-Afton 345kV Lines	258.00	91.17	35.34	264.66	102.58	67.24	Existing mitigation solution
	Newmn-Pcnte & Newmn-Aftn 345kV Lines w/ LAPS	258.00	N/A	N/A	248.41	96.28	N/A	Proposed LAPS mitigatiion
Diablo-Rio Grande 115kV #1 Line	Newman-Arroyo & Newman-Afton 345kV Lines	1964.00	584.49	29.76	2088.84	106.36	76.60	Existing mitigation solution
	Newmn-Arryo & Newmn-Aftn 345kV Lines w/ LAPS	1964.00	N/A	N/A	1708.76	87	N/A	Proposed LAPS mitigatiion
Diablo-Rio Grande 115kV #2 Line	Newman-Arroyo & Newman-Afton 345kV Lines	1964.00	586.97	29.89	2097.68	106.81	76.92	Existing mitigation solution
	Newmn-Arryo & Newmn-Aftn 345kV Lines w/ LAPS	1964.00	N/A	N/A	1715.99	87.37	N/A	Proposed LAPS mitigatiion
Durazno-Ascarate 115kV Line	Newman-Arroyo & Newman-Afton 345kV Lines	800.26	363.47	45.42	809.92	101.21	55.79	Future mitigation solution
Sunset North-Durazno 115kV line	Newman-Arroyo & Newman-Afton 345kV Lines	800.26	412.57	51.55	858.51	107.28	55.72	Future mitigation solution
Tucson-Oracle 115kV Line	Tortilita-Tucson & Marana-Southline Saguaro 230kV Lines	381.55	N/A	N/A	380.22	99.65	N/A	
Turquoise-Hidalgo 115V Line	Luna-Afton 345kV Line & Luna 345/115kV Transformer	702.86	702.64	99.97	635.27	90.38	-9.58	Existing manual action fully mitigates overload
	Luna-Afton 345kV Line & Luna 345/115kV Transformer W/ N RAS Option 1	702.86	585.41	83.29	516.95	73.55	-9.74	

ATTACHMENT G – POST-TRANSIENT VOLTAGE RESULTS – CASES = 02_we_0445_0971_0489_01.SAV, 02_we_0445_0971_0489_01_OOS.SAV

BUS	CONTINGENCY	PRE-PROJECT		PST-PROJECT		DELTA		NOTES
		VOLTAGE (PU)	DEV (%)	VOLTAGE (PU)	DEV (%)	VOLTAGE (PU)	DEV (%)	
CATEGORY A								
Asarco 138kV	Base Case	1.0264	N/A	1.0314	N/A	-0.0050	N/A	TEP 138kV voltages allowed outside criteria. TEP 138kV Average in acceptable range.
Canez 138kV	Base Case	1.0191	N/A	1.0130	N/A	0.0061	N/A	TEP 138kV voltages allowed outside criteria. TEP 138kV Average in acceptable range.
Cholla 345kV	Base Case	1.07	N/A	1.07	N/A	0.00	N/A	
Dugas 500kV	Base Case	1.09	N/A	1.09	N/A	0.00	N/A	
Kantor 138kV	Base Case	1.0204	N/A	1.0142	N/A	0.0062	N/A	TEP 138kV voltages allowed outside criteria. TEP 138kV Average in acceptable range.
LaJara 115kV	Base Case	1.08	N/A	1.06	N/A	0.02	N/A	
Nogales 138kV	Base Case	1.0314	N/A	1.0277	N/A	0.0037	N/A	TEP 138kV voltages allowed outside criteria. TEP 138kV Average in acceptable range.
Pinnacle Peak East 230kV	Base Case	1.017	N/A	1.017	N/A	0.00	N/A	
Preacher Canyon 345kV	Base Case	1.05	N/A	1.05	N/A	0.00	N/A	
Prescott 115kV	Base Case	1.07	N/A	1.07	N/A	0.00	N/A	
Prescott 230kV	Base Case	1.045	N/A	1.045	N/A	0.000	N/A	
Sonoita 138kV	Base Case	1.0185	N/A	1.0125	N/A	0.0060	N/A	TEP 138kV voltages allowed outside criteria. TEP 138kV Average in acceptable range.
South 138kV	Base Case	1.0279	N/A	1.0329	N/A	-0.0050	N/A	TEP 138kV voltages allowed outside criteria. TEP 138kV Average in acceptable range.
Tortolita 500kV	Base Case	1.07	N/A	1.07	N/A	0.00	N/A	
Tubac 138kV	Base Case	1.0199	N/A	1.0137	N/A	0.0062	N/A	TEP 138kV voltages allowed outside criteria. TEP 138kV Average in acceptable range.
Vail 138kV	Base Case	1.0327	N/A	1.0297	N/A	0.0030	N/A	TEP 138kV voltages allowed outside criteria. TEP 138kV Average in acceptable range.
Valencia 138kV	Base Case	1.0199	N/A	1.0142	N/A	0.0057	N/A	TEP 138kV voltages allowed outside criteria. TEP 138kV Average in acceptable range.
Yavapai 230kV	Base Case	1.06	N/A	1.06	N/A	0.00	N/A	
CATEGORY B								
Dugas 500kV	Morgan-Dugas #1 500kV Line	1.14	4.4	1.14	4.4	0.00	0.0	
Duran 115kV	Fourcorn-West Mesa #1 345kV Line	0.96	-6.1	1.01	-1.7	-0.05	-4.4	Existing mitigation solution
Estancia 115kV	Fourcorn-West Mesa #1 345kV Line	0.96	-6.0	1.01	-1.8	-0.05	-4.2	Existing mitigation solution
High Lonesome Wind 115kV	Fourcorn-West Mesa #1 345kV Line	0.96	-6.0	1.02	-1.7	-0.06	-4.3	Existing mitigation solution
Pinnacle Peak 500kV	Morgan-Pnpkaps #1 500kV Line	1.12	3.2	1.12	3.3	0.00	-0.1	
Torrance 115kV	Fourcorn-West Mesa #1 345kV Line	0.96	-6.1	1.02	-1.7	-0.06	-4.4	Existing mitigation solution
Willad 115kV	Fourcorn-West Mesa #1 345kV Line	0.96	-6.0	1.02	-1.7	-0.06	-4.3	Existing mitigation solution

ATTACHMENT G – POST-TRANSIENT VOLTAGE RESULTS – CASES = 02_we_0445_0971_0489_01.SAV, 02_we_0445_0971_0489_01_OOS.SAV								
BUS	CONTINGENCY	PRE-PROJECT		PST-PROJECT		DELTA		NOTES
		VOLTAGE (PU)	DEV (%)	VOLTAGE (PU)	DEV (%)	VOLTAGE (PU)	DEV (%)	
CATEGORY C								
Diablo 345kV	Newman-Arroyo & Newman-Afton 345kV Lines	1.02	-0.9	0.94	-7.5	0.08	6.6	Existing mitigation solution
	Newmn-Arryo & Newmn-Aftn 345kV Lines w/ LAPS	N/A	N/A	0.98	-3.9	N/A	N/A	
Dugas 500kV	Morgan-Dugas & Yavapai-Westwing 500kV Lines	1.14	4.4	1.14	4.3	0.00	0.1	
Dugas 500kV	Morgan-Westwing & Yavapai-Westwing 500kV Lines	1.12	2.8	1.12	2.7	0.00	0.1	
Morgan 500kV	Morgan-Westwing & Yavapai-Westwing 500kV Lines	1.12	4.3	1.11	4.1	0.01	0.2	
Pinnacle Peak 500kV	Morgan-Westwing & Yavapai-Westwing 500kV Lines	1.12	3.1	1.12	3.0	0.00	0.1	

POST-TRANSIENT RESULTS COVER SHEET	
Direction	West–to-East
Case Series Number	16
Simultaneous Path	47
Path 47 Definition --WECC or Alternative	WECC
SunZia in Service	No
Tucson-Oracle Reconductor	Yes
2nd Marana Bank	No
Bowie Generation Output (MW)	350
West to East Mitigation	No
Dona Ana- Picacho 115kV 13 ohm series reactor	No
Additional Newman 345/115kV Transformer Bank	No
Southwest Power Pool Export	No
Nomogram Number	16a
Nomogram Point	1
Southline Afton-West Cut Plane Flows (MW)	N/A
Southline Apache-West Cut Plane Flows (MW)	N/A
Southline Saguaro/Tortolita-East Cut Plane Flows (MW)	715
Southline Apache-East Cut Plane Flows (MW)	165
Southline Midpoint West Cut Plane Flows (MW)	N/A
Path 47 Flows (MW)	1048

ATTACHMENT G – POST-TRANSIENT THERMAL RESULTS – CASES = 16_we_0715_0165_1048_02.SAV, 16_we_0715_0165_1048_02_OOS.SAV								
OVERLOADED COMPONENT	CONTINGENCY	RATING	PRE-PROJECT LOADING		POST-PROJECT LOADING		DELTA %	NOTES
		AMPS / MVA	AMPS/ MVA	RATING %	AMPS / MVA	RATING %		
CATEGORY A								
None								
CATEGORY B								
Turquois-Hidalgo #1 115kV Line	Luna-Hidalgo 345kV Line	702.86	695.26	98.92	699.08	99.46	0.54	
Tucson-Oracle 115kV Line	Sag.East-Marana 115kV Line	2419.85	380.34	99.68	N/A	N/A	N/A	
Newman 345/115 Transformer #1	Picante-Newman #1 345kV Line	265	264.83	99.94	263.49	99.43	-0.51	
Ojo 345/115kV Transformer	San Juan-Riopuero 345kV Line	180	150.88	83.82	178.54	99.19	15.37	
CATEGORY C								
Arroyo Phase Shifter	Luna-Afton & Luna-MSPOI 345kV Lines	400	423.28	105.82	290.28	72.57	-33.25	
	Luna-Afton #1 and #2 345kV Lines w/ LAPS	400	N/A	N/A	395.57	98.89	N/A	
Marana-Marana Tap 115kV Line	Tortilita-Tucson & Rattlesnake-Marana 230kV Lines	550.24	N/A	N/A	591.62	107.52	N/A	Mitigation to be determined in Phase 3.
	Tortilita-Tucson & Tucson-Rattlesnake 230kV Lines	550.24	N/A	N/A	549.25	99.82	N/A	
Saguaro East-Oracle 115kV Line	Tortilita-Tucson & Marana-Southline Saguaro 230kV Lines	602.45	N/A	N/A	599.92	99.58	N/A	
Three Point-San Dario 115kV Line	Tortilita-Tucson & Rattlesnake-Marana 230kV Lines	396.11	N/A	N/A	427.29	107.87	N/A	Mitigation to be determined in Phase 3.
Turquois-Hidalgo #1 115kV Line	Luna-Afton 345kV Line & Luna 345/115kV Transformer	702.86	753.03	107.14	711.07	101.17	-5.97	Existing manual action fully mitigates overload
	Luna-Afton 345kV Line & Luna 345/115kV Transformer W/ N RAS Option 1	702.86	631.93	89.91	592.3	84.27	-5.64	
	Luna-Hidalgo 345kV Line & Luna 345/115kV Transformer	702.86	771.38	109.75	799.26	113.72	3.97	Existing manual action fully mitigates overload
	Luna-Hidalgo 345kV Line & Luna 345/115kV Transformer W/ N RAS Option 1	702.86	581.07	82.67	609.82	86.76	4.09	
	Luna-Hidalgo 345kV Line & Luna 345/115kV Transformer W/ N RAS Option 2	702.86	570.52	81.17	601	85.51	4.34	
	Luna-Hidalgo 345kV Line & Luna 345/115kV Transformer W/ N RAS Option 3	702.86	569.32	81	600.43	85.43	4.43	
	Luna-Hidalgo 345kV Line & Luna 345/115kV Transformer W/ N RAS Option 4	702.86	566.99	80.67	598.08	85.09	4.42	

ATTACHMENT G – POST-TRANSIENT VOLTAGE RESULTS – CASES = 16_we_0715_0165_1048_02.SAV, 16_we_0715_0165_1048_02_OOS.SAV								
BUS	CONTINGENCY	PRE-PROJECT		PST-PROJECT		DELTA		NOTES
		VOLTAGE (PU)	DEV (%)	VOLTAGE (PU)	DEV (%)	VOLTAGE (PU)	DEV (%)	
CATEGORY A								
Bagdad 115kV	Base case	0.98		1.02		-0.04		
Canez 138kV	Base case	1.0139		1.0100		0.0039		TEP 138kV Average in acceptable range.
Cholla 345kV	Base case	1.07		1.07		0.00		
Dugas 500kV	Base case	1.09		1.09		0.00		
North Gila 230kV	Base case	1.06		1.05		0.01		
Pinnacle Peak 500kV	Base case	1.09		1.08		0.01		
Pinnacle Peak East 230kV	Base case	1.016		1.016		0.000		
Preacher Canyon 345kV	Base case	1.04		1.05		-0.01		
Prescott 115kV	Base case	1.06		1.07		-0.01		
Prescott 230kV	Base case	1.041		1.044		-0.003		
Sonoita 138kV	Base case	1.0133		1.0100		0.0033		TEP 138kV Average in acceptable range.
Tortolita 500kV	Base case	1.07		1.07		0.00		
TS8 230kV	Base case	1.06		1.05		0.01		
Vail 138kV	Base case	1.0312		1.0300		0.0012		TEP 138kV Average in acceptable range.
Yavapai 230kV	Base case	1.06		1.06		0.00		
CATEGORY B								
Various 115kV, 230kV and 345kV	Morgan-Dugas #1 500kV Line	1.01	-1.5	0.95	-7.0	0.06	5.5	High deviation mitigated with existing PNM RAS.
Various 115kV, 230kV and 345kV	San Juan-Riopuero 345kV Line	1.01	-1.5	0.95	-6.6	0.06	5.1	High deviation mitigated with existing PNM RAS.
Dugas 500kV	Morgan-Dugas #1 500kV Line	1.14	4.2	1.14	4.3	0.00	-0.1	
Pinnacle Peak 500kV	Morgan-Pnpkaps #1 500kV Line	1.12	2.9	1.12	3.2	0.00	-0.3	
CATEGORY C								
Dugas 500kV	Morgan-Dugas & Yavapai-Westwing 500kV Lines	1.14	4.1	1.14	4.3	0.00	-0.2	
	Morgan-Westwing & Yavapai-Westwing 500kV Lines	1.12	2.5	1.12	2.8	0.00	-0.3	
Hidalgo 345kV	Luna-Hidalgo 345kV Line & Luna 345/115kV Transformer W/ N RAS Option 1	1.05	1.9	1.06	3.6	-0.01	-1.7	No RAS OR RAS Options 2, 3 or 4 produce acceptable bus voltages.
Morgan 500kV	Morgan-Westwing & Yavapai-Westwing 500kV Lines	1.11	3.9	1.12	4.2	-0.01	-0.3	
Pinnacle Peak 500kV	Morgan-Westwing & Yavapai-Westwing 500kV Lines	1.12	2.8	1.12	3.1	0.00	-0.3	

POST-TRANSIENT RESULTS COVER SHEET	
Direction	West–to-East
Case Series Number	16
Simultaneous Path	47
Path 47 Definition --WECC or Alternative	WECC
SunZia in Service	No
Tucson-Oracle Reconductor	Yes
2nd Marana Bank	No
Bowie Generation Output (MW)	350
West to East Mitigation	No
Dona Ana- Picacho 115kV 13 ohm series reactor	No
Additional Newman 345/115kV Transformer Bank	No
Southwest Power Pool Export	No
Nomogram Number	16a
Nomogram Point	2
Southline Afton-West Cut Plane Flows (MW)	N/A
Southline Apache-West Cut Plane Flows (MW)	N/A
Southline Saguaro/Tortolita-East Cut Plane Flows (MW)	715
Southline Apache-East Cut Plane Flows (MW)	971
Southline Midpoint West Cut Plane Flows (MW)	N/A
Path 47 Flows (MW)	275

ATTACHMENT G – POST-TRANSIENT THERMAL RESULTS – CASES = 16_we_0715_0971_0275_02.SAV, 16_we_0715_0971_0275_02_OOS.SAV								
OVERLOADED COMPONENT	CONTINGENCY	RATING	PRE-PROJECT LOADING		POST-PROJECT LOADING		DELTA %	NOTES
		AMPS / MVA	AMPS/ MVA	RATING %	AMPS / MVA	RATING %		
CATEGORY A								
None								
CATEGORY B								
Dona Ana-Picacho 115kV Line	Afton-Newman #1 345kV Line	456.86	70.92	15.52	454.76	99.54	84.02	
Diablo 345/115 Transformer #1	Afton-Newman #1 345kV Line	258	68.64	26.60	256.81	99.54	72.93	
Diablo 345/115 Transformer #2	Afton-Newman #1 345kV Line	258	68.05	26.38	254.63	98.69	72.32	
Diablo 345/115 Transformer #3	Afton-Newman #1 345kV Line	258	68.08	26.39	254.66	98.70	72.32	
CATEGORY C								
Diablo 345/115 Transformer #1	Newman-Arroyo & Newman-Afton 345kV Lines	258	65.40	25.35	267.27	103.59	78.24	Existing mitigation solution
	Newmn-Arryo & Newmn-Aftn 345kV Lines w/ LAPS	258.00	N/A	N/A	257.15	99.67	N/A	Proposed LAPS mitigatiion
	Newman-Picante & Newman-Afton 345kV Lines	258	72.56	28.13	263.16	102.00	73.88	Existing mitigation solution
	Newmn-Pcnte & Newmn-Aftn 345kV Lines w/ LAPS	258.00	N/A	N/A	257.03	99.62	N/A	Proposed LAPS mitigatiion
Diablo 345/115 Transformer #2	Newman-Arroyo & Newman-Afton 345kV Lines	258	64.84	25.13	265.00	102.71	77.58	Existing mitigation solution
	Newmn-Arryo & Newmn-Aftn 345kV Lines w/ LAPS	258.00	N/A	N/A	254.97	98.83	N/A	Proposed LAPS mitigatiion
	Newman-Picante & Newman-Afton 345kV Lines	258	71.94	27.88	260.93	101.14	73.25	Existing mitigation solution
	Newmn-Pcnte & Newmn-Aftn 345kV Lines w/ LAPS	258.00	N/A	N/A	254.85	98.78	N/A	Proposed LAPS mitigatiion
Diablo 345/115 Transformer #3	Newman-Arroyo & Newman-Afton 345kV Lines	258	64.87	25.14	265.03	102.72	77.58	Existing mitigation solution
	Newmn-Arryo & Newmn-Aftn 345kV Lines w/ LAPS	258.00	N/A	N/A	255	98.84	N/A	Proposed LAPS mitigatiion
	Newman-Picante & Newman-Afton 345kV Lines	258	71.97	27.90	260.96	101.15	73.25	Existing mitigation solution
	Newmn-Pcnte & Newmn-Aftn 345kV Lines w/ LAPS	258.00	N/A	N/A	254.87	98.79	N/A	Proposed LAPS mitigatiion
Marana-Marana Tap 115kV Line	Tortilita-Tucson & Rattlesnake-Marana 230kV Lines	550.24	N/A	N/A	569.69	103.54	N/A	Mitigation to be determined in Phase 3.
Saguaro East-Oracle 115kV Line	Tortilita-Tucson & Marana-Southline Saguaro 230kV Lines	602.45	N/A	N/A	601.79	99.89	N/A	
Three Points-San Dario 115kV Line	Tortilita-Tucson & Rattlesnake-Marana 230kV Lines	396.11	N/A	N/A	404.99	102.24	N/A	Mitigation to be determined in Phase 3.

ATTACHMENT G – POST-TRANSIENT VOLTAGE RESULTS – CASES = 16_we_0715_0971_0275_02.SAV, 16_we_0715_0971_0275_02_OOS.SAV								
BUS	CONTINGENCY	PRE-PROJECT		PST-PROJECT		DELTA		NOTES
		VOLTAGE (PU)	DEV (%)	VOLTAGE (PU)	DEV (%)	VOLTAGE (PU)	DEV (%)	
CATEGORY A								
Cholla 230kV	Base case	1.06	N/A	1.05	N/A	0.01	N/A	
Cholla 345kV	Base case	1.07	N/A	1.07	N/A	0.00	N/A	
Dugas 500kV	Base case	1.09	N/A	1.09	N/A	0.00	N/A	
Nogales 138kV	Base case	1.0320	N/A	1.0300	N/A	0.0020	N/A	TEP 138kV Average in acceptable range.
Pinnacle Peak 500kV	Base case	1.09	N/A	1.08	N/A	0.01	N/A	
Pinnacle Peak East 230kV	Base case	1.020	N/A	1.017	N/A	0.003	N/A	
Preacher Canyon 345kV	Base case	1.05	N/A	1.05	N/A	0.00	N/A	
Prescott 115kV	Base case	1.07	N/A	1.07	N/A	0.00	N/A	
Prescott 230kV	Base case	1.045	N/A	1.044	N/A	0.001	N/A	
South 138kV	Base case	1.0294	N/A	1.0400	N/A	-0.0106	N/A	TEP 138kV Average in acceptable range.
Tortolita 500kV	Base case	1.07	N/A	1.07	N/A	0.00	N/A	
Vail 138kV	Base case	1.0334	N/A	1.0300	N/A	0.0034	N/A	TEP 138kV Average in acceptable range.
Yavapai 230kV	Base case	1.06	N/A	1.06	N/A	0.00	N/A	
CATEGORY B								
Dugas 500kV	Morgan-Dugas #1 500kV Line	1.14	4.3	1.14	4.6	0.00	-0.3	
Pinnacle Peak 500kV	Morgan-Pnpkaps #1 500kV Line	1.15	4.8	1.12	3.5	0.03	1.3	
Afton 345kV	MSPOI345-Luna 345kV Line	1.05	0.6	1.03	0.7	0.02	-0.1	
Afton 115kV	MSPOI345-Luna 345kV Line	1.051	0.6	1.031	0.7	0.02	-0.1	
Newman 345kV	Picante-Newman #1 345kV Line	1.05	0.4	1.01	-1.2	0.04	1.6	
CATEGORY C								
Airport Tap 115kV	Luna-Afton 345kV Line & Luna 345/115kV Transformer W/ N RAS Option 2	1.053	0.9	1.037	0.8	0.016	0.1	Contingency w/o RAS and with RAS Option 2 produce acceptable results.
Dugas 500kV	Morgan-Dugas & Yavapai-Westwing 500kV Lines	1.14	4.2	1.14	4.6	0.00	-0.4	
	Morgan-Westwing & Yavapai-Westwing 500kV Lines	1.13	3.5	1.12	3.0	0.01	0.5	
Morgan 500kV	Morgan-Westwing & Yavapai-Westwing 500kV Lines	1.13	5.2	1.12	4.6	0.01	0.6	
Pinnacle Peak 500kV	Morgan-Westwing & Yavapai-Westwing 500kV Lines	1.13	3.8	1.12	3.3	0.01	0.5	

POST-TRANSIENT RESULTS COVER SHEET	
Direction	West–to-East
Case Series Number	16
Simultaneous Path	47
Path 47 Definition --WECC or Alternative	WECC
SunZia in Service	No
Tucson-Oracle Reconductor	Yes
2nd Marana Bank	No
Bowie Generation Output (MW)	350
West to East Mitigation	Yes
Dona Ana- Picacho 115kV 13 ohm series reactor	Yes
Additional Newman 345/115kV Transformer Bank	Yes
Southwest Power Pool Export	Yes
Nomogram Number	16b
Nomogram Point	1
Southline Afton-West Cut Plane Flows (MW)	N/A
Southline Apache-West Cut Plane Flows (MW)	N/A
Southline Saguaro/Tortolita-East Cut Plane Flows (MW)	734
Southline Apache-East Cut Plane Flows (MW)	436
Southline Midpoint West Cut Plane Flows (MW)	N/A
Path 47 Flows (MW)	1048

ATTACHMENT G – POST-TRANSIENT THERMAL RESULTS – CASES = 16_we_0734_0436_1048_03.SAV, 16_we_0734_0436_1048_03_OOS.SAV								
OVERLOADED COMPONENT	CONTINGENCY	RATING	PRE-PROJECT LOADING		POST-PROJECT LOADING		DELTA %	NOTES
		AMPS / MVA	AMPS/ MVA	RATING %	AMPS / MVA	RATING %		
CATEGORY A								
None								
CATEGORY B								
Diablo 345/115 Transformer #1	Afton-Newman #1 345kV Line	258	151.04	58.54	257.51	99.81	41.27	
Diablo 345/115 Transformer #2	Afton-Newman #1 345kV Line	258	149.76	58.05	255.32	98.96	40.92	
Diablo 345/115 Transformer #3	Afton-Newman #1 345kV Line	258	149.79	58.06	255.35	98.97	40.92	
Newman 345/115 Transformer #1	Picante-Newman #1 345kV Line	265	264.8	99.93	237.11	89.48	-10.45	
CATEGORY C								
Arroyo Phase Shifter	Luna-Afton & Luna-MSPOI 345kV Lines	400	423.69	105.92	282.43	70.61	-35.31	Existing mitigation solution
	Luna-Afton #1 and #2 345kV Lines w/ LAPS	400	N/A	N/A	399.86	99.96	N/A	
Diablo 345/115 Transformer #1	Newman-Arroyo & Newman-Afton 345kV Lines	258	186.06	72.12	300.58	116.5	44.39	Existing mitigation solution
	Newmn-Arryo & Newmn-Aftn 345kV Lines w/ LAPS	258.00	N/A	N/A	257.1	99.65	N/A	Proposed LAPS mitigatiion
	Newman-Picante & Newman-Afton 345kV Lines	258	163.72	63.46	267.55	103.7	40.24	Existing mitigation solution
	Newmn-Pcnte & Newmn-Aftn 345kV Lines w/ LAPS	258.00	N/A	N/A	254.92	98.81	N/A	Proposed LAPS mitigatiion
Diablo 345/115 Transformer #2	Newman-Arroyo & Newman-Afton 345kV Lines	258	184.48	71.5	298.03	115.51	44.01	Existing mitigation solution
	Newmn-Arryo & Newmn-Aftn 345kV Lines w/ LAPS	258.00	N/A	N/A	254.95	98.82	N/A	Proposed LAPS mitigatiion
	Newman-Picante & Newman-Afton 345kV Lines	258	162.33	62.92	265.28	102.82	39.9	Existing mitigation solution
	Newmn-Pcnte & Newmn-Aftn 345kV Lines w/ LAPS	258.00	N/A	N/A	254.82	98.77	N/A	Proposed LAPS mitigatiion
Diablo 345/115 Transformer #3	Newman-Arroyo & Newman-Afton 345kV Lines	258	184.51	71.51	298.05	115.52	44.01	Existing mitigation solution
	Newmn-Arryo & Newmn-Aftn 345kV Lines w/ LAPS	258.00	N/A	N/A	252.66	97.93	N/A	Proposed LAPS mitigatiion
	Newman-Picante & Newman-Afton 345kV Lines	258	162.36	62.93	265.31	102.83	39.9	Existing mitigation solution
	Newmn-Pcnte & Newmn-Aftn 345kV Lines w/ LAPS	258.00	N/A	N/A	252.68	97.94	N/A	Proposed LAPS mitigatiion
Diablo-Rio Grand #1 115kV Line	Newman-Arroyo & Newman-Afton 345kV Lines	1964	1242.33	63.26	2090.13	106.42	43.17	Existing mitigation solution
	Newmn-Arryo & Newmn-Aftn 345kV Lines w/ LAPS	1964	N/A	N/A	1705.18	86.82	N/A	Proposed LAPS mitigatiion
Diablo-Rio Grand #2 115kV Line	Newman-Arroyo & Newman-Afton 345kV Lines	1964	1247.58	63.52	2098.97	106.87	43.35	Existing mitigation solution
	Newmn-Arryo & Newmn-Aftn 345kV Lines w/ LAPS	1964	N/A	N/A	1712.39	87.19	N/A	Proposed LAPS mitigatiion
Marana-Marana Tap 115kV Line	Tortilita-Tucson & Rattlesnake-Marana 230kV Lines	550.24	N/A	N/A	597.2	108.53	N/A	Mitigation to be determined in Phase 3.
	Tortilita-Tucson & Tucson-Rattlesnake 230kV Lines	550.24	N/A	N/A	554.82	100.83	N/A	Mitigation to be determined in Phase 3.
Newman 345/115 Transformer #2	Newman-Picante 345kV Line & Newman 345kV/115kV Transformer	265	N/A	N/A	362.18	136.67	N/A	Existing mitigation solution
Saguaro East-Oracle 115kV Line	Tortilita-Tucson & Marana-Southline Saguaro 230kV Lines	602.45	N/A	N/A	602.6	100.02	N/A	
Sunset North-Durazno 115kV Line	Newman-Arroyo & Newman-Afton 345kV Lines	800.26	607.98	75.97	804.31	100.51	24.53	Future mitigation solution
Three Points-San Dario 115kV Line	Tortilita-Tucson & Rattlesnake-Marana 230kV Lines	396.11	N/A	N/A	433.09	109.34	N/A	Mitigation to be determined in Phase 3.
Turquois-Hidalgo #1 115kV Line	Luna-Afton 345kV Line & Luna 345/115kV	702.86	751.44	106.91	688.02	97.89	-9.02	Existing manual action fully

ATTACHMENT G – POST-TRANSIENT THERMAL RESULTS – CASES = 16_we_0734_0436_1048_03.SAV, 16_we_0734_0436_1048_03_OOS.SAV								
OVERLOADED COMPONENT	CONTINGENCY	RATING	PRE-PROJECT LOADING		POST-PROJECT LOADING		DELTA %	NOTES
		AMPS / MVA	AMPS/ MVA	RATING %	AMPS / MVA	RATING %		
	Transformer							mitigates overload
	Luna-Afton 345kV Line & Luna 345/115kV Transformer W/ N RAS Option 1	702.86	630.36	89.68	565.04	80.39	-9.29	
	Luna-Hidalgo 345kV Line & Luna 345/115kV Transformer	702.86	768.66	109.36	764.2	108.73	-0.63	Existing manual action fully mitigates overload
	Luna-Hidalgo 345kV Line & Luna 345/115kV Transformer W/ N RAS Option 1	702.86	578.49	82.3	565.19	80.41	-1.89	
	Luna-Hidalgo 345kV Line & Luna 345/115kV Transformer W/ N RAS Option 2	702.86	567.9	80.8	557.01	79.25	-1.55	
	Luna-Hidalgo 345kV Line & Luna 345/115kV Transformer W/ N RAS Option 3	702.86	566.69	80.63	557.08	79.26	-1.37	
	Luna-Hidalgo 345kV Line & Luna 345/115kV Transformer W/ N RAS Option 4	702.86	564.41	80.3	556.09	79.12	-1.18	

ATTACHMENT G – POST-TRANSIENT VOLTAGE RESULTS – CASES = 16_we_0734_0436_1048_03.SAV, 16_we_0734_0436_1048_03_OOS.SAV								
BUS	CONTINGENCY	PRE-PROJECT		PST-PROJECT		DELTA		NOTES
		VOLTAGE (PU)	DEV (%)	VOLTAGE (PU)	DEV (%)	VOLTAGE (PU)	DEV (%)	
CATEGORY A								
Canez 138kV	Basecase	1.0141	N/A	1.0100	N/A	0.0041	N/A	TEP 138kV Average in acceptable range.
Cholla 230kV	Basecase	1.06	N/A	1.06	N/A	0.00	N/A	
Cholla 345kV	Basecase	1.07	N/A	1.07	N/A	0.00	N/A	
Dugas 500kV	Basecase	1.09	N/A	1.09	N/A	0.00	N/A	
Leupp 230kV	Basecase	1.05	N/A	1.06	N/A	-0.01	N/A	
North Gila 230kV	Basecase	1.06	N/A	1.05	N/A	0.01	N/A	
Pinnacle Peak 500kV	Basecase	1.09	N/A	1.09	N/A	0.00	N/A	
Pinnacle Peak Central 230kV	Basecase	1.034	N/A	1.036	N/A	-0.002	N/A	
Preacher Canyon 345kV	Basecase	1.05	N/A	1.05	N/A	0.00	N/A	
Prescott 115kV	Basecase	1.07	N/A	1.07	N/A	0.00	N/A	
Prescott 230kV	Basecase	1.045	N/A	1.045	N/A	0.000	N/A	
Sonoita 138kV	Basecase	1.0135	N/A	1.0100	N/A	0.0035	N/A	TEP 138kV Average in acceptable range.
South 138kV	Basecase	1.0290	N/A	1.0400	N/A	-0.0110	N/A	TEP 138kV Average in acceptable range.
Tortolita 500kV	Basecase	1.07	N/A	1.07	N/A	0.00	N/A	
Vail 138kV	Basecase	1.0316	N/A	1.0300	N/A	0.0016	N/A	TEP 138kV Average in acceptable range.
Yavapai 230kV	Basecase	1.06	N/A	1.06	N/A	0.00	N/A	
CATEGORY B								
Dugas 500kV	Morgan-Dugas #1 500kV Line	1.14	4.6	1.14	4.3	0.00	0.3	
Pinnacle Peak 500kV	Morgan-Pnpkaps #1 500kV Line	1.12	3.5	1.13	3.6	-0.01	-0.1	
Amrad 115kV	MSPOI345-Luna 345kV Line	1.042	-0.3	1.052	0.2	-0.010	-0.5	
CATEGORY C								
Dugas 500kV	Morgan-Dugas & Yavapai-Westwing 500kV Lines	1.14	4.5	1.14	4.3	0.00	0.2	
	Morgan-Westwing & Yavapai-Westwing 500kV Lines	1.12	2.8	1.12	2.8	0.00	0.0	
Hidalgo 345kV	Luna-Hidalgo 345kV Line & Luna 345/115kV Transformer W/ N RAS Option 1	1.05	1.9	1.06	3.1	-0.01	-1.2	
Morgan 500kV	Morgan-Westwing & Yavapai-Westwing 500kV Lines	1.12	4.2	1.12	4.3	0.00	-0.1	
Pinnacle Peak 500kV	Morgan-Westwing & Yavapai-Westwing 500kV Lines	1.12	3.0	1.12	3.1	0.00	-0.1	

POST-TRANSIENT RESULTS COVER SHEET	
Direction	West–to-East
Case Series Number	16
Simultaneous Path	47
Path 47 Definition --WECC or Alternative	WECC
SunZia in Service	No
Tucson-Oracle Reconductor	Yes
2nd Marana Bank	No
Bowie Generation Output (MW)	350
West to East Mitigation	Yes
Dona Ana- Picacho 115kV 13 ohm series reactor	Yes
Additional Newman 345/115kV Transformer Bank	Yes
Southwest Power Pool Export	Yes
Nomogram Number	16b
Nomogram Point	2
Southline Afton-West Cut Plane Flows (MW)	N/A
Southline Apache-West Cut Plane Flows (MW)	N/A
Southline Saguaro/Tortolita-East Cut Plane Flows (MW)	712
Southline Apache-East Cut Plane Flows (MW)	971
Southline Midpoint West Cut Plane Flows (MW)	N/A
Path 47 Flows (MW)	480

ATTACHMENT G – POST-TRANSIENT THERMAL RESULTS – CASES = 16_we_0712_0971_0480_01.SAV, 16_we_0712_0971_0480_01_OOS.SAV								
OVERLOADED COMPONENT	CONTINGENCY	RATING	PRE-PROJECT LOADING		POST-PROJECT LOADING		DELTA %	NOTES
		AMPS / MVA	AMPS/ MVA	RATING %	AMPS / MVA	RATING %		
CATEGORY A								
None								
CATEGORY B								
Diablo 345/115 Transformer #1	Afton-Newman #1 345kV Line	258	87.24	33.82	257.72	99.89	66.07	
Diablo 345/115 Transformer #2	Afton-Newman #1 345kV Line	258	86.5	33.53	255.53	99.04	65.51	
Diablo 345/115 Transformer #3	Afton-Newman #1 345kV Line	258	86.53	33.54	255.55	99.05	65.51	
Enron-Mendoza Tap 115kV Line	San Juan-Riopuero 345kV Line	401.63	398.06	99.11	381.81	95.06	-4.04	
Gallup-Enron 115kV Line	San Juan-Riopuero 345kV Line	401.63	398.62	99.25	382.38	95.21	-4.04	
Enron-Mendoza Tap 115kV Line	San Juan-Riopuero 345kV Line W\ E PNM RAS	401.63	395.17	98.39	378.89	94.34	-4.06	
Gallup-Enron 115kV Line	San Juan-Riopuero 345kV Line W\ E PNM RAS	401.63	395.81	98.55	379.53	94.5	-4.05	
CATEGORY C								
Diablo 345/115 Transformer #1	Newman-Arroyo & Newman-Afton 345kV Lines	258	101.15	39.21	297.57	115.34	76.13	Existing mitigation solution
	Newmn-Arryo & Newmn-Aftn 345kV Lines w/ LAPS	258.00	N/A	N/A	255.1	98.87	N/A	Proposed LAPS mitigatiion
	Newman-Picante & Newman-Afton 345kV Lines	258	95.09	36.86	267.8	103.8	66.94	Existing mitigation solution
	Newmn-Pcnte & Newmn-Aftn 345kV Lines w/ LAPS	258.00	N/A	N/A	251.18	97.36	N/A	Proposed LAPS mitigatiion
Diablo 345/115 Transformer #2	Newman-Arroyo & Newman-Afton 345kV Lines	258	100.29	38.87	295.04	114.36	75.49	Existing mitigation solution
	Newmn-Arryo & Newmn-Aftn 345kV Lines w/ LAPS	258.00	N/A	N/A	252.93	98.03	N/A	Proposed LAPS mitigatiion
	Newman-Picante & Newman-Afton 345kV Lines	258	94.28	36.54	265.52	102.92	66.37	Existing mitigation solution
	Newmn-Pcnte & Newmn-Aftn 345kV Lines w/ LAPS	258.00	N/A	N/A	249.05	96.53	N/A	Proposed LAPS mitigatiion
Diablo 345/115 Transformer #3	Newman-Arroyo & Newman-Afton 345kV Lines	258	100.32	38.88	295.07	114.37	75.49	Existing mitigation solution
	Newmn-Arryo & Newmn-Aftn 345kV Lines w/ LAPS	258.00	N/A	N/A	252.96	98.05	N/A	Proposed LAPS mitigatiion
	Newman-Picante & Newman-Afton 345kV Lines	258	94.31	36.55	265.55	102.93	66.37	Existing mitigation solution
	Newmn-Pcnte & Newmn-Aftn 345kV Lines w/ LAPS	258.00	N/A	N/A	249.08	96.54	N/A	Proposed LAPS mitigatiion
Diablo-Rio Grand #1 115kV Line	Newman-Arroyo & Newman-Afton 345kV Lines	1964	606.45	30.88	2091.64	106.5	75.62	Existing mitigation solution
	Newmn-Arryo & Newmn-Aftn 345kV Lines w/ LAPS	1964	N/A	N/A	1694.96	86.3	N/A	Proposed LAPS mitigatiion
Diablo-Rio Grand #2 115kV Line	Newman-Arroyo & Newman-Afton 345kV Lines	1964	609.02	31.01	2100.49	106.95	75.94	Existing mitigation solution
	Newmn-Arryo & Newmn-Aftn 345kV Lines w/ LAPS	1964	N/A	N/A	1702.13	86.67	N/A	Proposed LAPS mitigatiion
Durazno-Ascarate 115kV Line	Newman-Arroyo & Newman-Afton 345kV Lines	800.26	364.4	45.53	820.13	102.48	56.95	Future mitigation solution
Marana Tap-Marana 115kV Line	Tortilita-Tucson & Rattlesnake-Marana 230kV Lines	550.24	N/A	N/A	567.68	103.17	N/A	Mitigation to be determined in Phase 3.
Newman 345/115 Transformer #2	Newman-Picante 345kV Line & Newman 345kV/115kV Transformer	265	N/A	N/A	357.36	134.85	N/A	Existing mitigation solution
Saguaro East-Oracle 115kV Line	Tortilita-Tucson & Marana-Southline Saguaro 230kV Lines	602.45	N/A	N/A	601.08	99.77	N/A	
Sunset North-Durazno 115kV Line	Newman-Arroyo & Newman-Afton 345kV Lines	800.26	411.36	51.4	866.91	108.33	56.92	Future mitigation solution
Three Point-San Dario 115kV Line	Tortilita-Tucson & Rattlesnake-Marana 230kV Lines	396.11	N/A	N/A	403.2	101.79	N/A	Mitigation to be determined in Phase 3.

ATTACHMENT G – POST-TRANSIENT VOLTAGE RESULTS – CASES = 16_we_0712_0971_0480_01.SAV, 16_we_0712_0971_0480_01_OOS.SAV

BUS	CONTINGENCY	PRE-PROJECT		PST-PROJECT		DELTA		NOTES
		VOLTAGE (PU)	DEV (%)	VOLTAGE (PU)	DEV (%)	VOLTAGE (PU)	DEV (%)	
CATEGORY A								
Asarco 138kV	Basecase	1.0273	N/A	1.0300	N/A	-0.0027	N/A	TEP 138kV Average in acceptable range.
Cholla 230kV	Basecase	1.06	N/A	1.06	N/A	0.00	N/A	
Cholla 345kV	Basecase	1.07	N/A	1.07	N/A	0.00	N/A	
Dugas 500kV	Basecase	1.09	N/A	1.09	N/A	0.00	N/A	
LaJara 115kV	Basecase	1.08	N/A	1.08	N/A	0.00	N/A	
Leupp 230kV	Basecase	1.06	N/A	1.06	N/A	0.00	N/A	
Nogales 138kV	Basecase	1.0322	N/A	1.0300	N/A	0.0022	N/A	TEP 138kV Average in acceptable range.
North Gila 230kV	Basecase	1.06	N/A	1.05	N/A	0.01	N/A	
Pinnacle Peak 500kV	Basecase	1.09	N/A	1.09	N/A	0.00	N/A	
Pinnacle Peak East 230kV	Basecase	1.018	N/A	1.019	N/A	-0.001	N/A	
Preacher Canyon 345kV	Basecase	1.05	N/A	1.05	N/A	0.00	N/A	
Prescott 115kV	Basecase	1.07	N/A	1.07	N/A	0.00	N/A	
Prescott 230kV	Basecase	1.045	N/A	1.045	N/A	0.000	N/A	
Sonoita 138kV	Basecase	1.0190	N/A	1.0100	N/A	0.0090	N/A	TEP 138kV Average in acceptable range.
South 138kV	Basecase	1.0288	N/A	1.0400	N/A	-0.0112	N/A	TEP 138kV Average in acceptable range.
Tortolita 500kV	Basecase	1.07	N/A	1.07	N/A	0.00	N/A	
Vail 138kV	Basecase	1.0336	N/A	1.0300	N/A	0.0036	N/A	TEP 138kV Average in acceptable range.
Yavapai 230kV	Basecase	1.06	N/A	1.06	N/A	0.00	N/A	
CATEGORY B								
Various 115, 230 and 345kV buses	San Juan-Riopuero 345kV Line	0.92	-6.8	0.93	-6.4	-0.01	-0.4	High deviations mitigated by existing PNM RAS
Dugas 500kV	Morgan-Dugas #1 500kV Line	1.14	4.2	1.14	4.3	0.00	-0.1	
Pinnacle Peak 500kV	Morgan-Pnpkaps #1 500kV Line	1.12	3.2	1.12	3.3	0.00	-0.1	
CATEGORY C								
Amrad 115kV	Pantano-Vail & Adamstap-Nogales 230kV Lines	N/A	N/A	1.051	0.3	N/A	N/A	
	Pantano-Vail & Apache_SL-Pantano 230kV Lines	N/A	N/A	1.051	0.4	N/A	N/A	
Arroyo 345kV	Newman-Arroyo & Newman-Afton 345kV Lines	1.000	-3.7	0.946	-8.6	0.05	4.9	
	Newmn-Arryo & Newmn-Aftn 345kV Lines w/ LAPS	N/A	N/A	0.997	-3.7	N/A	N/A	Proposed LAPS mitigates low voltage
Diablo 345kV	Newman-Arroyo & Newman-Afton 345kV Lines	1.025	-0.9	0.940	-8.3	0.09	7.4	
	Newmn-Arryo & Newmn-Aftn 345kV Lines w/ LAPS	N/A	N/A	0.987	-3.7	N/A	N/A	Proposed LAPS mitigates low voltage
Dugas 500kV	Morgan-Dugas & Yavapai-Westwing 500kV Lines	1.14	4.2	1.14	4.2	0.00	0.0	
	Morgan-Westwing & Yavapai-Westwing 500kV Lines	1.12	2.7	1.12	2.8	0.00	-0.1	
Morgan 500kV	Morgan-Westwing & Yavapai-Westwing 500kV	1.12	4.1	1.12	4.2	0.00	-0.1	

ATTACHMENT G – POST-TRANSIENT VOLTAGE RESULTS – CASES = 16_we_0712_0971_0480_01.SAV, 16_we_0712_0971_0480_01_OOS.SAV								
BUS	CONTINGENCY	PRE-PROJECT		PST-PROJECT		DELTA		NOTES
		VOLTAGE (PU)	DEV (%)	VOLTAGE (PU)	DEV (%)	VOLTAGE (PU)	DEV (%)	
	Lines							
Pinnacle Peak 500kV	Morgan-Westwing & Yavapai-Westwing 500kV Lines	1.12	3.0	1.12	3.1	0.00	-0.1	

POST-TRANSIENT RESULTS COVER SHEET	
Direction	East-to-West
Case Series Number	41
Simultaneous Path	47
Path 47 Definition --WECC or Alternative	WECC
SunZia in Service	No
Tucson-Oracle Reconductor	No
2nd Marana Bank	Yes
Bowie Generation Output (MW)	350
West to East Mitigation	No
Dona Ana- Picacho 115kV 13 ohm series reactor	No
Additional Newman 345/115kV Transformer Bank	No
Southwest Power Pool Export	No
Nomogram Number	41
Nomogram Point	1
Southline Afton-West Cut Plane Flows (MW)	1037
Southline Apache-West Cut Plane Flows (MW)	1000
Southline Saguaro/Tortolita-East Cut Plane Flows (MW)	N/A
Southline Apache-East Cut Plane Flows (MW)	N/A
Southline Midpoint West Cut Plane Flows (MW)	N/A
Path 47 Flows (MW)	1048

ATTACHMENT G – POST-TRANSIENT THERMAL RESULTS – CASES = 41_ew_1037_1000_1048_v27.SAV, 41_ew_1037_1000_1048_v28OOS.SAV

OVERLOADED COMPONENT	CONTINGENCY	RATING	PRE-PROJECT LOADING		POST-PROJECT LOADING		DELTA %	NOTES
		AMPS / MVA	AMPS/ MVA	RATING %	AMPS / MVA	RATING %		
CATEGORY A								
None								
CATEGORY B								
Dona Ana Picacho 115kV Line	Afton-Newman #1 345kV Line	456.86	454.15	99.41	414.47	90.72	-8.69	
	Luna-Afton #1 345kV Line	456.86	450.57	98.62	308.37	67.5	-31.12	
Newman 345/115 Transformer #1	Picante-Newman #1 345kV Line	265	259.8	98.04	208.52	78.69	-19.35	
Turquois-Hidalgo #1 115kV Line	Luna 345/115 Transformer #1	702.86	698.2	99.34	702.69	99.98	0.64	
	Luna-Hidalgo 345kV Line	702.86	697.32	99.21	663.62	94.42	-4.79	
CATEGORY C								
Arroyo Phase Shifter	Luna-Afton #1 and #2 345kV Lines w/ LAPS	400	N/A	N/A	392.52	98.13	N/A	
Belen-Bernardo 115kV Line	Luna-Afton 345kV Line & Luna 345/115kV Transformer	376.53	327.26	86.91	328.9	87.35	0.44	
	Luna-Afton 345kV Line & Luna 345/115kV Transformer W/ N RAS Option 1	376.53	374.52	99.47	318.46	84.58	-14.89	
	Luna-Afton 345kV Line & Luna 345/115kV Transformer W/ N RAS Option 2	376.53	346.22	91.95	294.85	78.31	-13.64	
Bicknell 345/230kV Transformer	Pantano01 -Vail & Adamstap-Nogales 230kV Lines	241	N/A	N/A	240.64	99.85	N/A	
Marana Tap-Marana 115kV Line	Springerville-Greenlee & Springerville-Vail 345kV Lines	550.24	624.59	113.51	383.74	69.74	-43.77	Rating of line increased to 800A.
	Springerville-Greenlee & Springerville-Vail 345kV Lines w/ TOLS	550.24	549.6	99.88	383.74	69.74	-30.14	TOLS dropped 420MW in Pre-Project Case. Rating of line increased to 800A.
	Willow-Winchester & Springerville-Vail 345kV Lines	550.24	582.58	105.88	352.99	64.15	-41.73	Rating of line increased to 800A.
	Willow-Winchester & Springerville-Vail 345kV Lines w/ TOLS	550.24	547.19	99.45	352.96	64.15	-35.30	TOLS dropped 180MW in Pre-Project Case. Rating of line increased to 800A.
	Winchester-Vail & Springerville-Vail 345kV Lines	550.24	579.46	105.31	352.38	64.04	-41.27	Rating of line increased to 800A.
	Winchester-Vail & Springerville-Vail 345kV Lines w/ TOLS	550.24	548.45	99.68	352.38	64.04	-35.63	TOLS dropped 160MW in Pre-Project Case. Rating of line increased to 800A.
Turquois-Hidalgo #1 115kV Line	Luna-Afton 345kV Line & Luna 345/115kV Transformer	702.86	837.95	119.22	745.58	106.08	-13.14	Existing manual action fully mitigates overload
	Luna-Afton 345kV Line & Luna 345/115kV Transformer W/ N RAS Option 1	702.86	703.47	100.09	624.09	88.79	-11.29	
	Luna-Afton 345kV Line & Luna 345/115kV	702.86	530.40	75.50	455.70	64.80	-10.70	

ATTACHMENT G – POST-TRANSIENT THERMAL RESULTS – CASES = 41_ew_1037_1000_1048_v27.SAV, 41_ew_1037_1000_1048_v28OOS.SAV								
OVERLOADED COMPONENT	CONTINGENCY	RATING	PRE-PROJECT LOADING		POST-PROJECT LOADING		DELTA %	NOTES
		AMPS / MVA	AMPS/ MVA	RATING %	AMPS / MVA	RATING %		
	Transformer W/ N RAS Option 2							
	Luna-Hidalgo 345kV Line & Luna 345/115kV Transformer	702.86	824.4	117.29	804.92	114.52	-2.77	Existing manual action fully mitigates overload
	Luna-Hidalgo 345kV Line & Luna 345/115kV Transformer W/ N RAS Option 1	702.86	633.87	90.18	613.3	87.26	-2.93	
	Luna-Hidalgo 345kV Line & Luna 345/115kV Transformer W/ N RAS Option 2	702.86	623.18	88.66	605.38	86.13	-2.53	
	Luna-Hidalgo 345kV Line & Luna 345/115kV Transformer W/ N RAS Option 3	702.86	622.01	88.5	605.32	86.12	-2.37	
	Luna-Hidalgo 345kV Line & Luna 345/115kV Transformer W/ N RAS Option 4	702.86	619.24	88.1	605.32	86.12	-1.98	

ATTACHMENT G – POST-TRANSIENT VOLTAGE RESULTS – CASES = 41_ew_1037_1000_1048_v27.SAV, 41_ew_1037_1000_1048_v28OOS.SAV

BUS	CONTINGENCY	PRE-PROJECT		PST-PROJECT		DELTA		NOTES
		VOLTAGE (PU)	DEV (%)	VOLTAGE (PU)	DEV (%)	VOLTAGE (PU)	DEV (%)	
CATEGORY A								
Arriba 115kV	Basecase	1.06	N/A	1.06	N/A	0.00	N/A	
Arriba 115kV	Basecase	1.06	N/A	1.06	N/A	0.00	N/A	
Bagdad 115kV	Basecase	1.00	N/A	0.99	N/A	0.01	N/A	
Boothill 115kV	Basecase	1.00	N/A	1.01	N/A	-0.01	N/A	
Cholla 345kV	Basecase	1.06	N/A	1.06	N/A	0.00	N/A	
Dinosaur 230kV	Basecase	0.99	N/A	0.99	N/A	0.00	N/A	
Fort Huachuca 138kV	Basecase	1.0034	N/A	1.0052	N/A	-0.0018	N/A	TEP 138kV Average in acceptable range.
Gallina 115kV	Basecase	1.06	N/A	1.06	N/A	0.00	N/A	
Kartchnr 115kV	Basecase	1.05	N/A	1.05	N/A	0.00	N/A	
Mural 115kV	Basecase	0.99	N/A	1.00	N/A	-0.01	N/A	
N/A	Basecase	0.99	N/A	0.99	N/A	0.00	N/A	
Ojo 345kV	Basecase	1.04	N/A	1.05	N/A	-0.01	N/A	
Pinnacle Peak East 230kV	Basecase	1.024	N/A	1.022	N/A	0.002	N/A	
Pinnacle Peak North 230kV	Basecase	1.020	N/A	1.019	N/A	0.001	N/A	
Pinnacle Peak West 230kV	Basecase	1.018	N/A	1.016	N/A	0.002	N/A	
Rainsville 115kV	Basecase	1.06	N/A	1.06	N/A	0.00	N/A	
Rainsville Tap	Basecase	1.06	N/A	1.06	N/A	0.00	N/A	
Storrie Lake 115kV	Basecase	1.06	N/A	1.06	N/A	0.00	N/A	
Taos 345kV	Basecase	1.04	N/A	1.05	N/A	-0.01	N/A	
Tortolita 500kV	Basecase	1.06	N/A	1.06	N/A	0.00	N/A	
Vail 138kV	Basecase	1.0311	N/A	1.0328	N/A	-0.0017	N/A	TEP 138kV Average in acceptable range.
Vail2 345kV	Basecase	1.02	N/A	1.03	N/A	-0.01	N/A	
Valencia 115kV	Basecase	1.06	N/A	1.06	N/A	0.00	N/A	
West Wing West 230kV	Basecase	1.03	N/A	1.03	N/A	0.00	N/A	
Westwing 345kV	Basecase	1.01	N/A	1.01	N/A	0.00	N/A	
CATEGORY B								
Abel 230kV	Dinosaur-Browning #1 230kV Line	0.94	-5.0	0.94	-4.9	0.00	-0.1	24MVAR Cap not modeled / Brown Xfmr Tap.
Dinosaur 230kV	Dinosaur-Browning #1 230kV Line	0.93	-6.3	0.93	-6.1	0.00	-0.2	24MVAR Cap not modeled / Brown Xfmr Tap.
Mural 115kV	Apache-Adamstap 115kV Line	0.94	-5.2	N/A	N/A	N/A	N/A	Radial System
Vail2 345kV	Vail2 345/138 Transformer #1	1.12	9.6	1.12	8.5	0.00	1.1	
CATEGORY C								
Adams 115kV	Apache-Pantano & Adamstap-Nogales 230kV Lines	N/A	N/A	1.12	8.8	N/A	N/A	Radial system
	Pantano-Vail & Adamstap-Nogales 230kV Lines w/	N/A	N/A	1.12	8.8	N/A	N/A	Radial system

ATTACHMENT G – POST-TRANSIENT VOLTAGE RESULTS – CASES = 41_ew_1037_1000_1048_v27.SAV, 41_ew_1037_1000_1048_v28OOS.SAV								
BUS	CONTINGENCY	PRE-PROJECT		PST-PROJECT		DELTA		NOTES
		VOLTAGE (PU)	DEV (%)	VOLTAGE (PU)	DEV (%)	VOLTAGE (PU)	DEV (%)	
	N RAS							
Adams Tap 115kV	Apache-Pantano & Adamstap-Nogales 230kV Lines	N/A	N/A	1.12	8.8	N/A	N/A	Radial system
	Pantano-Vail & Adamstap-Nogales 230kV Lines w/ N RAS	N/A	N/A	1.12	8.8	N/A	N/A	Radial system
Adams Tap 230kV	Apache-Pantano & Adamstap-Nogales 230kV Lines	N/A	N/A	1.12	8.7	N/A	N/A	
	Pantano-Vail & Adamstap-Nogales 230kV Lines w/ N RAS	N/A	N/A	1.12	8.7	N/A	N/A	
Apache Southline 230kV	Apache-Pantano & Adamstap-Nogales 230kV Lines	N/A	N/A	1.12	7.0	N/A	N/A	
	Apache-Pantano & Apache-Adamstap 230kV Lines	N/A	N/A	1.12	6.8	N/A	N/A	
	Pantano-Vail & Adamstap-Nogales 230kV Lines w/ N RAS	N/A	N/A	1.12	7.0	N/A	N/A	
Boothill 115kV	Apache-Pantano & Adamstap-Nogales 230kV Lines	N/A	N/A	1.11	9.1	N/A	N/A	Radial system
	Pantano-Vail & Adamstap-Nogales 230kV Lines w/ N RAS	N/A	N/A	1.11	9.1	N/A	N/A	Radial system
Dugas 500kV	Morgan-Dugas & Yavapai-Westwing 500kV Lines	1.10	3.2	1.10	3.2	0.00	0.0	
Mazatzal 345kV Bus	Mazatzal-Pinnacle Peak & Cholla-Preacher Canyon 345kV Lines	1.12	8.8	1.12	9.0	0.00	-0.2	

POST-TRANSIENT RESULTS COVER SHEET	
Direction	West–to-East
Case Series Number	42
Simultaneous Path	47
Path 47 Definition --WECC or Alternative	WECC
SunZia in Service	No
Tucson-Oracle Reconductor	No
2nd Marana Bank	Yes
Bowie Generation Output (MW)	350
West to East Mitigation	No
Dona Ana- Picacho 115kV 13 ohm series reactor	No
Additional Newman 345/115kV Transformer Bank	No
Southwest Power Pool Export	No
Nomogram Number	42
Nomogram Point	1
Southline Afton-West Cut Plane Flows (MW)	N/A
Southline Apache-West Cut Plane Flows (MW)	N/A
Southline Saguaro/Tortolita-East Cut Plane Flows (MW)	431
Southline Apache-East Cut Plane Flows (MW)	179
Southline Midpoint West Cut Plane Flows (MW)	N/A
Path 47 Flows (MW)	1048

ATTACHMENT G – POST-TRANSIENT THERMAL RESULTS – CASES = 42_we_0431_0179_1048_01.SAV, 42_we_0431_0179_1048_01_OOS.SAV								
OVERLOADED COMPONENT	CONTINGENCY	RATING	PRE-PROJECT LOADING		POST-PROJECT LOADING		DELTA %	NOTES
		AMPS / MVA	AMPS/ MVA	RATING %	AMPS / MVA	RATING %		
CATEGORY A								
None								
CATEGORY B								
Dona Ana-Picacho 115kV Line	Luna-Afton #1 345kV Line	456.86	455.46	99.69	313.32	68.58	-31.11	
Turquois-Hidalgo #1 115kV Line	Luna-Hidalgo 345kV Line	702.86	699.86	99.57	689.89	98.16	-1.42	
Tucson-Oracle 115kV Line	Sag.East-Marana 115kV Line	381.55	372.66	97.67	N/A	N/A	N/A	
Newman 345/115 Transformer #1	Picante-Newman #1 345kV Line	265	261.07	98.52	264.56	99.83	1.32	
CATEGORY C								
Arroyo Phase Shifter	Luna-Afton & Luna-MSPOI 345kV Lines	400	410.82	102.7	285.92	71.48	-31.22	Existing mitigation solution
	Luna-Afton #1 and #2 345kV Lines w/ LAPS	400	N/A	N/A	396.91	99.23	N/A	
Tucson-Oracle 115kV Line	Tortilita-Tucson & Marana-Southline Saguaro 230kV Lines	381.55	N/A	N/A	381.2	99.91	N/A	
Turquois-Hidalgo #1 115kV Line	Luna-Afton 345kV Line & Luna 345/115kV Transformer	702.86	757.87	107.83	680.11	96.76	-11.06	Existing manual action fully mitigates overload
	Luna-Hidalgo 345kV Line & Luna 345/115kV Transformer	702.86	776.41	110.46	772.27	109.88	-0.59	Existing manual action fully mitigates overload
	Luna-Hidalgo 345kV Line & Luna 345/115kV Transformer W/ N RAS Option 1	702.86	585.54	83.31	586.14	83.39	0.08	
	Luna-Hidalgo 345kV Line & Luna 345/115kV Transformer W/ N RAS Option 2	702.86	574.52	81.74	575.19	81.84	0.1	
	Luna-Hidalgo 345kV Line & Luna 345/115kV Transformer W/ N RAS Option 3	702.86	572.88	81.51	573.76	81.63	0.12	
	Luna-Hidalgo 345kV Line & Luna 345/115kV Transformer W/ N RAS Option 4	702.86	570.29	81.14	570.96	81.23	0.1	

ATTACHMENT G – POST-TRANSIENT VOLTAGE RESULTS – CASES = 42_we_0431_0179_1048_01.SAV, 42_we_0431_0179_1048_01_OOS.SAV								
BUS	CONTINGENCY	PRE-PROJECT		PST-PROJECT		DELTA		NOTES
		VOLTAGE (PU)	DEV (%)	VOLTAGE (PU)	DEV (%)	VOLTAGE (PU)	DEV (%)	
CATEGORY A								
Adams 115kV	Base Case	1.04	N/A	0.99	N/A	0.05	N/A	
Asarco 138kV	Base Case	1.0272	N/A	1.0319	N/A	-0.0047	N/A	TEP 138kV voltages allowed outside criteria. TEP 138kV Average in acceptable range.
Boothill 115kV	Base Case	1.04	N/A	0.99	N/A	0.05	N/A	
Canez 138kV	Base Case	1.0135	N/A	1.0147	N/A	-0.0012	N/A	TEP 138kV voltages allowed outside criteria. TEP 138kV Average in acceptable range.
Cholla 345kV	Base Case	1.07	N/A	1.07	N/A	0.00	N/A	
Dugas 500kV	Base Case	1.09	N/A	1.09	N/A	0.00	N/A	
Mural 115kV	Base Case	1.04	N/A	0.99	N/A	0.05	N/A	
Nogales 138kV	Base Case	1.0285	N/A	1.0303	N/A	-0.0018	N/A	TEP 138kV voltages allowed outside criteria. TEP 138kV Average in acceptable range.
North Gila 230kV	Base Case	1.06	N/A	1.06	N/A	0.00	N/A	
Pinnacle Peak 500kV	Base Case	1.09	N/A	1.08	N/A	0.01	N/A	
Pinnacle Peak East 230kV	Base Case	1.028	N/A	1.017	N/A	0.011	N/A	
Preacher Canyon 345kV	Base Case	1.05	N/A	1.05	N/A	0.00	N/A	
Prescott 115kV	Base Case	1.07	N/A	1.07	N/A	0.00	N/A	
Prescott 230kV	Base Case	1.045	N/A	1.045	N/A	0.00	N/A	
Sonoita 138kV	Base Case	1.0129	N/A	1.014	N/A	-0.0011	N/A	TEP 138kV voltages allowed outside criteria. TEP 138kV Average in acceptable range.
South 138kV	Base Case	1.0287	N/A	1.0334	N/A	-0.0047	N/A	TEP 138kV voltages allowed outside criteria. TEP 138kV Average in acceptable range.
Tortolita 500kV	Base Case	1.07	N/A	1.07	N/A	0.00	N/A	TEP 138kV voltages allowed outside criteria. TEP 138kV Average in acceptable range.
Tubac 138kV	Base Case	1.0142	N/A	1.0154	N/A	-0.0012	N/A	
Vail 138kV	Base Case	1.0306	N/A	1.0325	N/A	-0.0019	N/A	TEP 138kV voltages allowed outside criteria. TEP 138kV Average in acceptable range.
Yavapai 230kV	Base Case	1.06	N/A	1.06	N/A	0.00	N/A	
CATEGORY B								
Dugas 500kV	Morgan-Dugas #1 500kV Line	1.14	4.3	1.14	4.4	0.00	-0.1	
Pinnacle Peak 500kV	Morgan-Pnpkaps #1 500kV Line	1.12	3.3	1.12	3.1	0.00	0.2	
CATEGORY C								
Dugas 500kV	Morgan-Dugas & Yavapai-Westwing 500kV Lines	1.14	4.2	1.14	4.3	0.00	-0.1	
Morgan 500kV	Morgan-Westwing & Yavapai-Westwing 500kV Lines	1.12	4.0	1.11	4.0	0.01	0.0	
Pinnacle Peak 500kV	Morgan-Westwing & Yavapai-Westwing 500kV Lines	1.12	2.9	1.12	2.9	0.00	0.0	

ATTACHMENT G – POST-TRANSIENT VOLTAGE RESULTS – CASES = 42_we_0431_0179_1048_01.SAV, 42_we_0431_0179_1048_01_OOS.SAV								
BUS	CONTINGENCY	PRE-PROJECT		PST-PROJECT		DELTA		NOTES
		VOLTAGE (PU)	DEV (%)	VOLTAGE (PU)	DEV (%)	VOLTAGE (PU)	DEV (%)	
Dugas 500kV	Morgan-Westwing & Yavapai-Westwing 500kV Lines	1.12	2.6	1.12	2.6	0.00	0.0	
Hidalgo 345kV	Luna-Hidalgo 345kV Line & Luna 345/115kV Transformer W/ N RAS Option 1	1.05	1.0	1.06	2.5	-0.01	-1.5	No manual action or manual action option#2, #3 or #4 fully mitigates high voltage.

POST-TRANSIENT RESULTS COVER SHEET	
Direction	West–to-East
Case Series Number	42
Simultaneous Path	47
Path 47 Definition --WECC or Alternative	WECC
SunZia in Service	No
Tucson-Oracle Reconductor	No
2nd Marana Bank	Yes
Bowie Generation Output (MW)	350
West to East Mitigation	No
Dona Ana- Picacho 115kV 13 ohm series reactor	No
Additional Newman 345/115kV Transformer Bank	No
Southwest Power Pool Export	No
Nomogram Number	42
Nomogram Point	2
Southline Afton-West Cut Plane Flows (MW)	N/A
Southline Apache-West Cut Plane Flows (MW)	N/A
Southline Saguaro/Tortolita-East Cut Plane Flows (MW)	435
Southline Apache-East Cut Plane Flows (MW)	971
Southline Midpoint West Cut Plane Flows (MW)	N/A
Path 47 Flows (MW)	275

ATTACHMENT G – POST-TRANSIENT THERMAL RESULTS – CASES = 42_we_0435_0971_0275_01.SAV, 42_we_0435_0971_0275_01_OOS.SAV								
OVERLOADED COMPONENT	CONTINGENCY	RATING	PRE-PROJECT LOADING		POST-PROJECT LOADING		DELTA %	NOTES
		AMPS / MVA	AMPS/ MVA	RATING %	AMPS / MVA	RATING %		
CATEGORY A								
None								
CATEGORY B								
Diablo 345/115kV Transformer #1	Afton-Newman #1 345kV Line	258	92.13	35.71	258.05	100.02	64.31	
Diablo 345/115kV Transformer #2	Afton-Newman #1 345kV Line	258	91.34	35.4	255.85	99.17	63.76	
Diablo 345/115kV Transformer #3	Afton-Newman #1 345kV Line	258	91.37	35.42	255.88	99.18	63.76	
Dona Ana-Picacho 115kV Line	Afton-Newman #1 345kV Line	456.86	181.44	39.72	448.08	98.08	58.36	
Newman 345/115 Transformer #1	Picante-Newman #1 345kV Line	265	35.26	13.3	260.14	98.17	84.86	
CATEGORY C								
Diablo 345/115 Transformer #1	Newman-Arroyo & Newman-Afton 345kV Lines	258	80.8	31.32	268.2	103.95	72.63	Existing mitigation solution
	Newmn-Arryo & Newmn-Aftn 345kV Lines w/ LAPS	258.00	N/A	N/A	255.01	98.84	N/A	Proposed LAPS mitigatiion
	Newman-Picante & Newman-Afton 345kV Lines	258	94.15	36.49	264.31	102.45	65.95	Existing mitigation solution
	Newmn-Pcnte & Newmn-Aftn 345kV Lines w/ LAPS	258.00	N/A	N/A	255.96	99.21	N/A	Proposed LAPS mitigatiion
Diablo 345/115 Transformer #2	Newman-Arroyo & Newman-Afton 345kV Lines	258	80.11	31.05	265.92	103.07	72.02	Existing mitigation solution
	Newmn-Arryo & Newmn-Aftn 345kV Lines w/ LAPS	258.00	N/A	N/A	252.85	98	N/A	Proposed LAPS mitigatiion
	Newman-Picante & Newman-Afton 345kV Lines	258	93.35	36.18	262.07	101.58	65.39	Existing mitigation solution
	Newmn-Pcnte & Newmn-Aftn 345kV Lines w/ LAPS	258.00	N/A	N/A	253.79	98.37	N/A	Proposed LAPS mitigatiion
Diablo 345/115 Transformer #3	Newman-Arroyo & Newman-Afton 345kV Lines	258	80.14	31.06	265.95	103.08	72.02	Existing mitigation solution
	Newmn-Arryo & Newmn-Aftn 345kV Lines w/ LAPS	258.00	N/A	N/A	252.87	98.01	N/A	Proposed LAPS mitigatiion
	Newman-Picante & Newman-Afton 345kV Lines	258	93.38	36.19	262.09	101.59	65.39	Existing mitigation solution
	Newmn-Pcnte & Newmn-Aftn 345kV Lines w/ LAPS	258.00	N/A	N/A	253.82	98.38	N/A	Proposed LAPS mitigatiion
Tucson-Oracle 115kV Line	Tortilita-Tucson & Marana-Southline Saguaro 230kV Lines	381.55	N/A	N/A	381.76	100.05	N/A	
Turquois-Hidalgo #1 115kV Line	Luna-Afton 345kV Line & Luna 345/115kV Transformer	702.86	736.58	104.8	658.98	93.76	-11.04	

ATTACHMENT G – POST-TRANSIENT VOLTAGE RESULTS – CASES = 42_we_0435_0971_0275_01.SAV, 42_we_0435_0971_0275_01_OOS.SAV

BUS	CONTINGENCY	PRE-PROJECT		PST-PROJECT		DELTA		NOTES
		VOLTAGE (PU)	DEV (%)	VOLTAGE (PU)	DEV (%)	VOLTAGE (PU)	DEV (%)	
CATEGORY A								
Asarco 138kV	Base Case	1.0268	N/A	1.0307	N/A	-0.0039	N/A	TEP 138kV voltages allowed outside criteria. TEP 138kV Average in acceptable range.
Cholla 230kV	Base Case	1.06	N/A	1.05	N/A	0.01	N/A	
Cholla 345kV	Base Case	1.07	N/A	1.07	N/A	0.00	N/A	
Dugas 500kV	Base Case	1.09	N/A	1.09	N/A	0.00	N/A	
LaJara 115kV	Base Case	1.08	N/A	1.03	N/A	0.05	N/A	
Nogales 138kV	Base Case	1.032	N/A	1.0301	N/A	0.0019	N/A	TEP 138kV voltages allowed outside criteria. TEP 138kV Average in acceptable range.
North Gila 230kV	Base Case	1.06	N/A	1.06	N/A	0.00	N/A	
Pinnacle Peak 500kV	Base Case	1.09	N/A	1.08	N/A	0.01	N/A	
Pinnacle Peak East 230kV	Base Case	1.017	N/A	1.017	N/A	0.00	N/A	
Preacher Canyon 345kV	Base Case	1.05	N/A	1.05	N/A	0.00	N/A	
Prescott 115kV	Base Case	1.07	N/A	1.07	N/A	0.00	N/A	
Prescott 230kV	Base Case	1.045	N/A	1.045	N/A	0.00	N/A	
South 138kV	Base Case	1.0283	N/A	1.0322	N/A	-0.0039	N/A	TEP 138kV voltages allowed outside criteria. TEP 138kV Average in acceptable range.
Tortolita 500kV	Base Case	1.07	N/A	1.07	N/A	0.00	N/A	
Vail 138kV	Base Case	1.0334	N/A	1.0312	N/A	0.0022	N/A	TEP 138kV voltages allowed outside criteria. TEP 138kV Average in acceptable range.
Yavapai 230kV	Base Case	1.06	N/A	1.06	N/A	0.00	N/A	
CATEGORY B								
Dugas 500kV	Morgan-Dugas #1 500kV Line	1.14	4.3	1.14	4.4	0	-0.1	
Macho Springs 345kV	MSPOI345-Luna 345kV Line	1.08	4.5	1.08	4.6	0	-0.1	
Pinnacle Peak 500kV	Morgan-Pnpkaps #1 500kV Line	1.12	3.1	1.12	3.1	0	0	
Silver King 500kV	Browning-Kyrene #1 500kV Line	1.1	1.7	1.09	1.2	0.01	0.5	
CATEGORY C								
Dugas 500kV	Morgan-Dugas & Yavapai-Westwing 500kV Lines	1.14	4.3	1.14	4.3	0	0	
Dugas 500kV	Morgan-Westwing & Yavapai-Westwing 500kV Lines	1.12	2.6	1.12	2.6	0	0	
Macho Springs 345kV	Luna-Afton & Luna-MSPOI 345kV Lines	1.08	4.5	1.08	4.6	0	-0.1	
Morgan 500kV	Morgan-Westwing & Yavapai-Westwing 500kV Lines	1.11	4	1.11	4	0	0	
Pinnacle Peak 500kV	Morgan-Westwing & Yavapai-Westwing 500kV Lines	1.12	2.9	1.12	2.9	0	0	

POST-TRANSIENT RESULTS COVER SHEET	
Direction	West–to-East
Case Series Number	56
Simultaneous Path	47
Path 47 Definition --WECC or Alternative	WECC
SunZia in Service	No
Tucson-Oracle Reconductor	Yes
2nd Marana Bank	Yes
Bowie Generation Output (MW)	350
West to East Mitigation	Yes
Dona Ana- Picacho 115kV 13 ohm series reactor	Yes
Additional Newman 345/115kV Transformer Bank	Yes
Southwest Power Pool Export	Yes
Nomogram Number	56
Nomogram Point	1
Southline Afton-West Cut Plane Flows (MW)	N/A
Southline Apache-West Cut Plane Flows (MW)	N/A
Southline Saguaro/Tortolita-East Cut Plane Flows (MW)	754
Southline Apache-East Cut Plane Flows (MW)	433
Southline Midpoint West Cut Plane Flows (MW)	N/A
Path 47 Flows (MW)	1048

ATTACHMENT G – POST-TRANSIENT THERMAL RESULTS – CASES = 56_we_0754_0433_1048_01.SAV, 56_we_0754_0433_1048_01_OOS.SAV								
OVERLOADED COMPONENT	CONTINGENCY	RATING	PRE-PROJECT LOADING		POST-PROJECT LOADING		DELTA %	NOTES
		AMPS / MVA	AMPS/ MVA	RATING %	AMPS / MVA	RATING %		
CATEGORY A								
None								
CATEGORY B								
Arroyo Phase Shifter	Greenlee-Hidalgo 345kV Line	400.00	387.35	96.84	279.36	69.84	-27.00	
Diablo 345/115 Transformer #1	Afton-Newman #1 345kV Line	258.00	150.92	58.49	257.99	100.00	41.50	
Diablo 345/115 Transformer #2	Afton-Newman #1 345kV Line	258.00	149.63	58.00	255.8	99.15	41.15	
Diablo 345/115 Transformer #3	Afton-Newman #1 345kV Line	258.00	149.66	58.01	255.83	99.16	41.15	
Newman 345/115 Transformer #1	Picante-Newman #1 345kV Line	265.00	262.16	98.93	235.96	89.04	-9.89	
Tucson-Oracle 115kV Line	Sag.East-Marana 115kV Line	2419.85	370.51	97.11	N/A	N/A	N/A	
Turquois-Hidalgo #1 115kV Line	Luna-Hidalgo 345kV Line	702.86	685.41	97.52	682.37	97.08	-0.43	
CATEGORY C								
Arroyo Phase Shifter	Luna-Afton & Luna-MSPOI 345kV Lines	400.00	425.13	106.28	285.55	71.39	-34.89	Existing mitigation solution
	Luna-Afton #1 and #2 345kV Lines w/ LAPS	400.00	N/A	N/A	393.22	98.3	N/A	
Diablo 345/115 Transformer #1	Newman-Arroyo & Newman-Afton 345kV Lines	258.00	185.35	71.84	300.68	116.54	44.70	Existing mitigation solution
	Newmn-Arryo & Newmn-Aftn 345kV Lines w/ LAPS	258.00	N/A	N/A	257.17	99.68	N/A	Proposed LAPS mitigatiion
	Newman-Picante & Newman-Afton 345kV Lines	258.00	163.45	63.35	268.05	103.90	40.54	Existing mitigation solution
	Newmn-Pcnte & Newmn-Aftn 345kV Lines w/ LAPS	258.00	N/A	N/A	255.27	98.94	N/A	Proposed LAPS mitigatiion
Diablo 345/115 Transformer #2	Newman-Arroyo & Newman-Afton 345kV Lines	258.00	183.77	71.23	298.12	115.55	44.32	Existing mitigation solution
	Newmn-Arryo & Newmn-Aftn 345kV Lines w/ LAPS	258.00	N/A	N/A	254.99	98.83	N/A	Proposed LAPS mitigatiion
	Newman-Picante & Newman-Afton 345kV Lines	258.00	162.06	62.81	265.77	103.01	40.20	Existing mitigation solution
	Newmn-Pcnte & Newmn-Aftn 345kV Lines w/ LAPS	258.00	N/A	N/A	253.1	98.1	N/A	Proposed LAPS mitigatiion
Diablo 345/115 Transformer #3	Newman-Arroyo & Newman-Afton 345kV Lines	258.00	183.80	71.24	298.15	115.56	44.32	Existing mitigation solution
	Newmn-Arryo & Newmn-Aftn 345kV Lines w/ LAPS	258.00	N/A	N/A	255.01	98.84	N/A	Proposed LAPS mitigatiion
	Newman-Picante & Newman-Afton 345kV Lines	258.00	162.09	62.83	265.80	103.02	40.20	Existing mitigation solution
	Newmn-Pcnte & Newmn-Aftn 345kV Lines w/ LAPS	258.00	N/A	N/A	253.13	98.11	N/A	Proposed LAPS mitigatiion
Diablo-Rio Grande #1 115kV Line	Newman-Arroyo & Newman-Afton 345kV Lines	1964.00	1233.49	62.81	2080.08	105.91	43.11	Existing mitigation solution
	Newmn-Arryo & Newmn-Aftn 345kV Lines w/ LAPS	1964.00	N/A	N/A	1698.55	86.48	N/A	Proposed LAPS mitigatiion
Diablo-Rio Grande #2 115kV Line	Newman-Arroyo & Newman-Afton 345kV Lines	1964.00	1238.71	63.07	2088.88	106.36	43.29	Existing mitigation solution
	Newmn-Arryo & Newmn-Aftn 345kV Lines w/ LAPS	1964.00	N/A	N/A	1705.73	86.85	N/A	Proposed LAPS mitigatiion
Newman 345/115 Transformer #2 (Sec-Mid Winding)	Newman-Picante 345kV Line & Newman 345kV/115kV Transformer	265.00	N/A	N/A	360.33	135.97	N/A	Existing mitigation solution
Saguaro East-Oracle 115kV Line	Tortilita-Tucson & Marana-Southline Saguaro 230kV Lines	602.45	N/A	N/A	597.95	99.25	N/A	
Sunset North-Durazno #115kV Line	Newman-Arroyo & Newman-Afton 345kV Lines	800.26	605.87	75.71	801.89	100.20	24.50	
Three Points-San Dario 115kV Line	Tortilita-Tucson & Rattlesnake-Marana 230kV Lines	416.70	N/A	N/A	458.00	109.91	N/A	Mitigation to be determined in Phase 3.
Three Points-San Dario 115kV Line	Tortilita-Tucson & Tucson-Rattlesnake 230kV Lines	416.70	N/A	N/A	411.73	98.81	N/A	
Turquois-Hidalgo #1 115kV Line	Luna-Afton 345kV Line & Luna 345/115kV	702.86	747.80	106.39	704.78	100.27	-6.12	Existing manual action fully

ATTACHMENT G – POST-TRANSIENT THERMAL RESULTS – CASES = 56_we_0754_0433_1048_01.SAV, 56_we_0754_0433_1048_01_OOS.SAV								
OVERLOADED COMPONENT	CONTINGENCY	RATING	PRE-PROJECT LOADING		POST-PROJECT LOADING		DELTA %	NOTES
		AMPS / MVA	AMPS/ MVA	RATING %	AMPS / MVA	RATING %		
	Transformer							mitigates overload
	Luna-Afton 345kV Line & Luna 345/115kV Transformer W/ N RAS Option 1	702.86	626.90	89.19	582.75	82.91	-6.28	
	Luna-Hidalgo 345kV Line & Luna 345/115kV Transformer	702.86	764.72	108.80	785.98	111.83	3.02	Existing manual action fully mitigates overload
	Luna-Hidalgo 345kV Line & Luna 345/115kV Transformer W/ N RAS Option 1	702.86	574.91	81.80	586.79	83.49	1.69	
	Luna-Hidalgo 345kV Line & Luna 345/115kV Transformer W/ N RAS Option 2	702.86	563.11	80.12	577.25	82.13	2.01	
	Luna-Hidalgo 345kV Line & Luna 345/115kV Transformer W/ N RAS Option 3	702.86	561.37	79.87	576.58	82.03	2.16	
	Luna-Hidalgo 345kV Line & Luna 345/115kV Transformer W/ N RAS Option 4	702.86	558.77	79.50	574.77	81.78	2.28	

ATTACHMENT G – POST-TRANSIENT VOLTAGE RESULTS – CASES = 56_we_0754_0433_1048_01.SAV, 56_we_0754_0433_1048_01_OOS.SAV								
BUS	CONTINGENCY	PRE-PROJECT		PST-PROJECT		DELTA		NOTES
		VOLTAGE (PU)	DEV (%)	VOLTAGE (PU)	DEV (%)	VOLTAGE (PU)	DEV (%)	
CATEGORY A								
Asarco 138kV	Base Case	1.0279	N/A	1.0353	N/A	-0.0074	N/A	TEP 138kV Average in acceptable range.
Cholla 230kV	Base Case	1.06	N/A	1.05	N/A	0.01	N/A	
Cholla 345kV	Base Case	1.07	N/A	1.07	N/A	0.00	N/A	
Dugas 500kV	Base Case	1.09	N/A	1.09	N/A	0.00	N/A	
Canez 138kV	Base Case	1.0143	N/A	1.0146	N/A	-0.0003	N/A	TEP 138kV Average in acceptable range.
Sonoita 138kV	Base Case	1.0137	N/A	1.0139	N/A	-0.0002	N/A	TEP 138kV Average in acceptable range.
Nogales 138kV	Base Case	1.0298	N/A	1.0302	N/A	-0.0004	N/A	TEP 138kV Average in acceptable range.
North Gila 230kV	Base Case	1.06	N/A	1.05	N/A	0.01	N/A	
Pinnacle Peak 500kV	Base Case	1.09	N/A	1.08	N/A	0.01	N/A	
Pinnacle Peak East 230kV	Base Case	1.030	N/A	1.016	N/A	0.01	N/A	
Preacher Canyon 345kV	Base Case	1.05	N/A	1.05	N/A	0.00	N/A	
Prescott 115kV	Base Case	1.07	N/A	1.07	N/A	0.00	N/A	
Prescott 230kV	Base Case	1.045	N/A	1.044	N/A	0.00	N/A	
South 138kV	Base Case	1.0294	N/A	1.0368	N/A	-0.0074	N/A	TEP 138kV Average in acceptable range.
Tortolita 500kV	Base Case	1.07	N/A	1.07	N/A	0.00	N/A	
Vail 138kV	Base Case	1.0320	N/A	1.0324	N/A	-0.0004	N/A	TEP 138kV Average in acceptable range.
Yavapai 230kV	Base Case	1.06	N/A	1.06	N/A	0.00	N/A	
Asarco 138kV	Base Case	1.0279	N/A	1.0353	N/A	-0.0074	N/A	
Cholla 230kV	Base Case	1.06	N/A	1.05	N/A	0.01	N/A	
CATEGORY B								
Dugas 500kV Bus	Morgan-Dugas #1 500kV Line	1.14	4.6	1.14	4.4	0.00	0.2	
Pinnacle Peak 500kV Bus	Morgan-Pnpkaps #1 500kV Line	1.12	3.5	1.12	3.2	0.00	0.3	
CATEGORY C								
Dugas 500kV	Morgan-Dugas & Yavapai-Westwing 500kV Lines	1.14	4.5	1.14	4.4	0.00	0.1	
Morgan 500kV	Morgan-Westwing & Yavapai-Westwing 500kV Lines	1.12	4.2	1.11	4.1	0.01	0.1	
Pinnacle Peak 500kV	Morgan-Westwing & Yavapai-Westwing 500kV Lines	1.12	3.0	1.12	3.0	0.00	0.0	
Dugas 500kV	Morgan-Westwing & Yavapai-Westwing 500kV Lines	1.12	2.8	1.12	2.7	0.00	0.1	

POST-TRANSIENT RESULTS COVER SHEET	
Direction	West–to-East
Case Series Number	56
Simultaneous Path	47
Path 47 Definition --WECC or Alternative	WECC
SunZia in Service	No
Tucson-Oracle Reconductor	Yes
2nd Marana Bank	Yes
Bowie Generation Output (MW)	350
West to East Mitigation	Yes
Dona Ana- Picacho 115kV 13 ohm series reactor	Yes
Additional Newman 345/115kV Transformer Bank	Yes
Southwest Power Pool Export	Yes
Nomogram Number	56
Nomogram Point	2
Southline Afton-West Cut Plane Flows (MW)	N/A
Southline Apache-West Cut Plane Flows (MW)	N/A
Southline Saguaro/Tortolita-East Cut Plane Flows (MW)	758
Southline Apache-East Cut Plane Flows (MW)	968
Southline Midpoint West Cut Plane Flows (MW)	N/A
Path 47 Flows (MW)	4818

ATTACHMENT G – POST-TRANSIENT THERMAL RESULTS – CASES = 56_we_0758_0968_0481_03.SAV, 56_we_0758_0968_0481_02_oos.SAV								
OVERLOADED COMPONENT	CONTINGENCY	RATING	PRE-PROJECT LOADING		POST-PROJECT LOADING		DELTA %	NOTES
		AMPS / MVA	AMPS/ MVA	RATING %	AMPS / MVA	RATING %		
CATEGORY A								
None								
CATEGORY B								
Diablo 345/115kV Transformer #1	Afton-Newman #1 345kV Line	258	87.66	33.98	257.94	99.98	66.00	
Diablo 345/115kV Transformer #2	Afton-Newman #1 345kV Line	258	86.91	33.69	255.75	99.13	65.44	
Diablo 345/115kV Transformer #3	Afton-Newman #1 345kV Line	258	86.94	33.7	255.78	99.14	65.44	
CATEGORY C								
Diablo 345/115 Transformer #1	Newman-Arroyo & Newman-Afton 345kV Lines	258.00	101.61	39.38	297.64	115.37	75.98	Existing mitigation solution
	Newmn-Arryo & Newmn-Aftn 345kV Lines w/ LAPS	258.00	N/A	N/A	255.29	98.95	N/A	Proposed LAPS mitigatiion
	Newman-Picante & Newman-Afton 345kV Lines	258.00	95.51	37.02	268.02	103.88	66.87	Existing mitigation solution
	Newmn-Pcnte & Newmn-Aftn 345kV Lines w/ LAPS	258.00	N/A	N/A	251.36	97.43	N/A	Proposed LAPS mitigatiion
Diablo 345/115 Transformer #2	Newman-Arroyo & Newman-Afton 345kV Lines	258.00	100.74	39.05	295.12	114.39	75.34	Existing mitigation solution
	Newmn-Arryo & Newmn-Aftn 345kV Lines w/ LAPS	258.00	N/A	N/A	253.12	98.11	N/A	Proposed LAPS mitigatiion
	Newman-Picante & Newman-Afton 345kV Lines	258.00	94.69	36.70	265.74	103.00	66.30	Existing mitigation solution
	Newmn-Pcnte & Newmn-Aftn 345kV Lines w/ LAPS	258.00	N/A	N/A	249.23	96.6	N/A	Proposed LAPS mitigatiion
Diablo 345/115 Transformer #3	Newman-Arroyo & Newman-Afton 345kV Lines	258.00	100.77	39.06	295.14	114.40	75.34	Existing mitigation solution
	Newmn-Arryo & Newmn-Aftn 345kV Lines w/ LAPS	258.00	N/A	N/A	253.15	98.12	N/A	Proposed LAPS mitigatiion
	Newman-Picante & Newman-Afton 345kV Lines	258.00	94.72	36.71	265.77	103.01	66.30	Existing mitigation solution
	Newmn-Pcnte & Newmn-Aftn 345kV Lines w/ LAPS	258.00	N/A	N/A	249.25	96.61	N/A	Proposed LAPS mitigatiion
Diablo-Rio Grand #1 Line	Newman-Arroyo & Newman-Afton 345kV Lines	1964.00	608.82	31.00	2081.75	106.00	75.00	Existing mitigation solution
	Newmn-Arryo & Newmn-Aftn 345kV Lines w/ LAPS	1964.00	N/A	N/A	1697.62	86.44	N/A	Proposed LAPS mitigatiion
Diablo-Rio Grand #2 Line	Newman-Arroyo & Newman-Afton 345kV Lines	1964.00	611.41	31.13	2090.56	106.44	75.31	Existing mitigation solution
	Newmn-Arryo & Newmn-Aftn 345kV Lines w/ LAPS	1964.00	N/A	N/A	1704.8	86.8	N/A	Proposed LAPS mitigatiion
Durazno-Ascarate #1 115kV line	Newman-Arroyo & Newman-Afton 345kV Lines	800.26	365.19	45.63	816.52	102.03	56.40	Future Future mitigation solution
Saguaro East-Oracle 115kV Line	Tortilita-Tucson & Marana-Southline Saguaro 230kV Lines	602.45	N/A	N/A	599.74	99.55	N/A	Existing mitigation solution
Sunset North-Durazno #1 115kV line	Newman-Arroyo & Newman-Afton 345kV Lines	800.26	412.17	51.50	863.31	107.88	56.37	Future mitigation solution
Three Points-San Dario 115kV Line	Tortilita-Tucson & Rattlesnake-Marana 230kV Lines	416.70	N/A	N/A	444.42	106.65	N/A	Mitigation to be determined in Phase 3.

ATTACHMENT G – POST-TRANSIENT VOLTAGE RESULTS – CASES = 56_we_0758_0968_0481_03.SAV, 56_we_0758_0968_0481_02_oos.SAV								
BUS	CONTINGENCY	PRE-PROJECT		PST-PROJECT		DELTA		NOTES
		VOLTAGE (PU)	DEV (%)	VOLTAGE (PU)	DEV (%)	VOLTAGE (PU)	DEV (%)	
CATEGORY A								
Asarco 138kV	Base Case	1.0281	N/A	1.0359	N/A	-0.0078	N/A	TEP 138kV Average in acceptable range.
Cholla 230kV	Base Case	1.06	N/A	1.06	N/A	0.00	N/A	
Cholla 345kV	Base Case	1.07	N/A	1.07	N/A	0.00	N/A	
Dugas 500kV	Base Case	1.09	N/A	1.09	N/A	0.00	N/A	
LaJara 115kV	Base Case	1.08	N/A	1.08	N/A	0.00	N/A	
Leupp 230kV	Base Case	1.06	N/A	1.05	N/A	0.01	N/A	
Nogales 138kV	Base Case	1.0306	N/A	1.0317	N/A	-0.0011	N/A	TEP 138kV Average in acceptable range.
North Gila 230kV	Base Case	1.06	N/A	1.05	N/A	0.01	N/A	
Pinnacle Peak 500kV	Base Case	1.09	N/A	1.09	N/A	0.00	N/A	
Pinnacle Peak East 230kV	Base Case	1.020	N/A	1.031	N/A	-0.011	N/A	
Preacher Canyon 345kV	Base Case	1.05	N/A	1.05	N/A	0.00	N/A	
Prescott 115kV	Base Case	1.07	N/A	1.07	N/A	0.00	N/A	
Prescott 230kV	Base Case	1.046	N/A	1.044	N/A	0.002	N/A	
RB Wilmot 138kV	Base Case	1.0283	N/A	1.0302	N/A	-0.0019	N/A	TEP 138kV Average in acceptable range.
South 138kV	Base Case	1.0296	N/A	1.0374	N/A	-0.0078	N/A	TEP 138kV Average in acceptable range.
Tortolita 500kV	Base Case	1.07	N/A	1.06	N/A	0.01	N/A	
Vail 138kV	Base Case	1.0317	N/A	1.0341	N/A	-0.0024	N/A	TEP 138kV Average in acceptable range.
Yavapai 230kV	Base Case	1.06	N/A	1.06	N/A	0.00	N/A	
CATEGORY B								
Various Buses in Northern New Mexico	San Juan-Riopuero 345kV Line	0.92	-6.8	0.93	-6.4	-0.01	-0.4	High Voltage Deviation mitigated by Existing PNM RAS
Macho Springs 345kV	MSPOI345-Luna 345kV Line	1.06	1.7	1.05	2.0	0.01	-0.3	
Dugas 500kV	Morgan-Dugas #1 500kV Line	1.14	4.2	1.14	4.3	0.0	-0.1	
Pinnacle Peak 500kV	Morgan-Pnpkaps #1 500kV Line	1.12	3.2	1.13	4.0	-0.01	-0.8	
CATEGORY C								
Macho Springs 345kV Bus	Luna-Afton & Luna-MSPOI 345kV Lines	1.06	1.7	1.05	2.0	0.01	-0.3	
Dugas 500kV Bus	Morgan-Dugas & Yavapai-Westwing 500kV Lines	1.14	4.2	1.14	4.3	0.00	-0.1	
Morgan 500kV Bus	Morgan-Westwing & Yavapai-Westwing 500kV Lines	1.12	4.1	1.12	4.7	0.00	-0.6	

ATTACHMENT G – POST-TRANSIENT VOLTAGE RESULTS – CASES = 56_we_0758_0968_0481_03.SAV, 56_we_0758_0968_0481_02_oos.SAV								
BUS	CONTINGENCY	PRE-PROJECT		PST-PROJECT		DELTA		NOTES
		VOLTAGE (PU)	DEV (%)	VOLTAGE (PU)	DEV (%)	VOLTAGE (PU)	DEV (%)	
Pinnacle Peak 500kV Bus	Morgan-Westwing & Yavapai-Westwing 500kV Lines	1.12	3	1.12	3.4	0.00	-0.4	
Dugas 500kV Bus	Morgan-Westwing & Yavapai-Westwing 500kV Lines	1.12	2.7	1.13	3.1	-0.01	-0.4	

POST-TRANSIENT RESULTS COVER SHEET	
Direction	East-to-West
Case Series Number	67
Simultaneous Path	47
Path 47 Definition --WECC or Alternative	WECC
SunZia in Service	No
Tucson-Oracle Reconductor	No
2nd Marana Bank	No
Bowie Generation Output (MW)	350
West to East Mitigation	No
Dona Ana- Picacho 115kV 13 ohm series reactor	No
Additional Newman 345/115kV Transformer Bank	No
Southwest Power Pool Export	No
Nomogram Number	67
Nomogram Point	1 (Only 1)
Southline Afton-West Cut Plane Flows (MW)	N/A
Southline Apache-West Cut Plane Flows (MW)	1000
Southline Saguaro/Tortolita-East Cut Plane Flows (MW)	N/A
Southline Apache-East Cut Plane Flows (MW)	N/A
Southline Midpoint West Cut Plane Flows (MW)	1026
Path 47 Flows (MW)	4800

ATTACHMENT G – POST-TRANSIENT THERMAL RESULTS – CASES = 67_ew_1026_1000_1048_01.SAV, 67_ew_1026_1000_1048_01_oos.SAV								
OVERLOADED COMPONENT	CONTINGENCY	RATING	PRE-PROJECT LOADING		POST-PROJECT LOADING		DELTA %	NOTES
		AMPS / MVA	AMPS/ MVA	RATING %	AMPS / MVA	RATING %		
CATEGORY A								
None								
CATEGORY B								
Turquois-Hidalgo #1 115kV Line	Luna 345/115 Transformer #1	702.86	700.63	99.68	693.94	98.73	-0.95	
	Luna-Hidalgo 345kV Line	702.86	696.53	99.1	637.65	90.72	-8.38	
CATEGORY C								
Arroyo Phase Shifter	Luna-Afton #1 and #2 345kV Lines w/ LAPS	400	N/A	N/A	397.65	99.41	N/A	
Bicknell 345/230kV Transformer	Pantano-Vail & Adamstap-Nogales 230kV Lines	241	N/A	N/A	239.73	99.47	N/A	
Three Points-San Dario 115kV Line	Pantano-Vail & Adamstap-Nogales 230kV Lines	416.7	N/A	N/A	167.4	40.2	N/A	
Turquois-Hidalgo #1 115kV Line	Luna-Afton 345kV Line & Luna 345/115kV Transformer	702.86	828.69	117.9	734.13	104.45	-13.45	Existing manual action fully mitigates overload
	Luna-Afton 345kV Line & Luna 345/115kV Transformer W/ N RAS Option 1	702.86	705.62	100.39	613.54	87.29	-13.1	
	Luna-Afton 345kV Line & Luna 345/115kV Transformer W/ N RAS Option 2	702.86	536.25	76.29	447.09	63.61	-12.69	
	Luna-Hidalgo 345kV Line & Luna 345/115kV Transformer	702.86	827.65	117.75	786.18	111.85	-5.9	Existing manual action fully mitigates overload
	Luna-Hidalgo 345kV Line & Luna 345/115kV Transformer W/ N RAS Option 1	702.86	638.25	90.81	596	84.8	-6.01	
	Luna-Hidalgo 345kV Line & Luna 345/115kV Transformer W/ N RAS Option 2	702.86	626.52	89.14	586.89	83.5	-5.64	
	Luna-Hidalgo 345kV Line & Luna 345/115kV Transformer W/ N RAS Option 3	702.86	624.9	88.91	586.4	83.43	-5.48	
	Luna-Hidalgo 345kV Line & Luna 345/115kV Transformer W/ N RAS Option 4	702.86	621.73	88.46	586.4	83.43	-5.03	

ATTACHMENT G – POST-TRANSIENT VOLTAGE RESULTS – CASES = 67_ew_1026_1000_1048_01.SAV, 67_ew_1026_1000_1048_01_oos.SAV								
BUS	CONTINGENCY	PRE-PROJECT		PST-PROJECT		DELTA		NOTES
		VOLTAGE (PU)	DEV (%)	VOLTAGE (PU)	DEV (%)	VOLTAGE (PU)	DEV (%)	
CATEGORY A								
Arriba 115kV	Base Case	1.06	N/A	1.06	N/A	0	N/A	
Arriba 115kV	Base Case	1.06	N/A	1.06	N/A	0	N/A	
Asarco 138kV	Base Case	1.0339	N/A	1.032	N/A	0.0019	N/A	TEP 138kV Average in acceptable range
Bagdad 115kV	Base Case	1	N/A	1	N/A	0	N/A	
Boothill 115kV	Base Case	1	N/A	1.01	N/A	-0.01	N/A	
Cholla 345kV	Base Case	1.06	N/A	1.06	N/A	0	N/A	
Fort Huachuca 138kV	Base Case	1.0048	N/A	1.0063	N/A	-0.0015	N/A	TEP 138kV Average in acceptable range
Gallina 115kV	Base Case	1.06	N/A	1.06	N/A	0	N/A	
Mural 115kV	Base Case	0.99	N/A	0.99	N/A	0	N/A	
Pinnacle Peak East 230kV	Base Case	1.024	N/A	1.024	N/A	0	N/A	
Pinnacle Peak North 230kV	Base Case	1.02	N/A	1.02	N/A	0	N/A	
Pinnacle Peak West 230kV	Base Case	1.018	N/A	1.018	N/A	0	N/A	
Rainsvill 115kV	Base Case	1.055	N/A	1.056	N/A	-0.001	N/A	
South 138kV	Base Case	1.0354	N/A	1.0335	N/A	0.0019	N/A	TEP 138kV Average in acceptable range
Storrie Lake 115kV	Base Case	1.06	N/A	1.06	N/A	0	N/A	
Tortolita 500kV	Base Case	1.06	N/A	1.06	N/A	0	N/A	TEP 138kV Average in acceptable range
Vail 138kV	Base Case	1.0324	N/A	1.0338	N/A	-0.0014	N/A	TEP 138kV Average in acceptable range
Valencia 115kV	Base Case	1.06	N/A	1.06	N/A	0	N/A	
West Wing West 230kV	Base Case	1.03	N/A	1.03	N/A	0	N/A	
Westwing 345kV	Base Case	1.01	N/A	1.01	N/A	0	N/A	TEP 138kV Average in acceptable range
CATEGORY B								
Abel 230kV	Dinosaur-Browning #1 230kV Line	0.95	-5.2	0.95	-5.0	0.00	-0.2	
Adams 115kV	Apache-Adamstap 115kV Line	0.96	-5.5	N/A	N/A	N/A	N/A	
Adams Tap 115kV	Apache-Adamstap 115kV Line	0.96	-5.5	N/A	N/A	N/A	N/A	
Boothill 115kV	Apache-Adamstap 115kV Line	0.94	-5.8	N/A	N/A	N/A	N/A	
Dinosaur 230kV	Dinosaur-Browning #1 230kV Line	0.94	-6.4	0.95	-6.3	-0.01	-0.1	
Dugas 500kV	Morgan-Dugas #1 500kV Line	1.10	3.2	1.10	3.2	0.00	0.0	
Macho Springs 345kV	MSPOI345-Luna 345kV Line	1.07	4.5	1.07	5.1	0.00	-0.6	
Mural 115kV	Apache-Adamstap 115kV Line	0.93	-6.0	N/A	N/A	N/A	N/A	
CATEGORY C								
Fort Huachuca	Winchester-Vail & Springerville-Vail 345kV Lines	0.97	-3.6	0.98	-2.6	-0.01	-1.0	

ATTACHMENT G – POST-TRANSIENT VOLTAGE RESULTS – CASES = 67_ew_1026_1000_1048_01.SAV, 67_ew_1026_1000_1048_01_oos.SAV								
BUS	CONTINGENCY	PRE-PROJECT		PST-PROJECT		DELTA		NOTES
		VOLTAGE (PU)	DEV (%)	VOLTAGE (PU)	DEV (%)	VOLTAGE (PU)	DEV (%)	
138kV								
Macho Springs 345kV	Luna-Afton & Luna-MSPOI 345kV Lines	1.07	4.5	1.08	5.1	-0.01	-0.6	
Mazatzal 345kV	Mazatzal-Pinnacle Peak & Cholla-Preacher Canyon 345kV Lines	1.12	8.6	1.12	8.8	0.00	-0.2	
Hidalgo 345kV	Luna-Hidalgo 345kV Line & Luna 345/115kV Transformer	1.03	0.1	1.04	0.3	-0.01	-0.2	Manual Action Required given thermal results.
	Luna-Hidalgo 345kV Line & Luna 345/115kV Transformer W/ N RAS Option 1	1.06	2.6	1.06	2.7	0.00	-0.1	Acceptable from thermal loading standpoint; however, Option 2, 3, or 4 required to mitigate high voltage.
	Luna-Hidalgo 345kV Line & Luna 345/115kV Transformer W/ N RAS Option 2	1.05	1.7	1.05	1.9	0.00	-0.2	
	Luna-Hidalgo 345kV Line & Luna 345/115kV Transformer W/ N RAS Option 3	1.04	1.3	1.05	1.4	-0.01	-0.1	
	Luna-Hidalgo 345kV Line & Luna 345/115kV Transformer W/ N RAS Option 4	1.04	1.0	1.05	1.4	-0.01	-0.4	

VOLTAGE STABILITY TEST RESULTS COVER SHEET	
Direction	East-to-West
Case Series Number	1
Simultaneous Path	47
Path 47 Definition --WECC or Alternative	WECC
SunZia in Service	No
Tucson-Oracle Reconductor	No
2nd Marana Bank	No
Bowie Generation Output (MW)	350
West to East Mitigation	No
Dona Ana- Picacho 115kV 13 ohm series reactor	No
Additional Newman 345/115kV Transformer Bank	No
Southwest Power Pool Export	No
Nomogram Number	1
Nomogram Point	1
Southline Afton-West Cut Plane Flows (MW)	1037
Southline Apache-West Cut Plane Flows (MW)	1000
Southline Saguaro/Tortolita-East Cut Plane Flows (MW)	N/A
Southline Apache-East Cut Plane Flows (MW)	N/A
Southline Midpoint West Cut Plane Flows (MW)	N/A
Path 47 Flows (MW)	1048

ATTACHMENT H - VOLTAGE STABILITY TEST - CASES = 01_ew_1088_1050_1100v16.SAV, 01_ew_1065_1026_1075v16.SAV													
	AFTON WEST PATH				APACHE EAST PATH				PATH 47 MW FLOWS				OUTAGE SOLUTION STATUS ACHIEVED WITH INCREASED PATH FLOW
CONTINGENCY DESCRIPTION	BASE CASE PATH FLOW (MW)	TEST CASE PATH FLOW (MW)	105.0% TEST (Y/N)	102.5% TEST (Y/N)	BASE CASE PATH FLOW (MW)	TEST CASE PATH FLOW (MW)	105.0% TEST (Y/N)	102.5% TEST (Y/N)	BASE CASE PATH FLOW (MW)	TEST CASE PATH FLOW (MW)	105.0% TEST (Y/N)	102.5% TEST (Y/N)	
VOLTAGE STABILITY TEST CASE 1 = 01_ew_1088_1050_1100v16.SAV													
Base Case Conditions	1030	1088	Y	N	1000	1050	Y	N	1048	1100	Y	N	Solved
All Category B Outages Unless Otherwise Noted	1030	1088	Y	N	1000	1050	Y	N	1048	1100	Y	N	All Solved
All Category C Outages Unless Otherwise Noted	1030	1088	Y	N	1000	1050	Y	N	1048	1100	Y	N	**See Note 1**
VOLTAGE STABILITY TEST CASE 2 = 01_ew_1065_1026_1075v16.SAV													
Willow-Winchester & Springerville-Vail 345kV Lines	1030	1065	N	Y	1000	1026	N	Y	1048	1075	N	Y	Solved
Willow-Winchester & Springerville-Vail 345kV Lines & TOLS	1030	1065	N	Y	1000	1026	N	Y	1048	1075	N	Y	Solved
Willow-Winchester & Springerville-Vail 345kV Lines & Bowie Trip	1030	1065	N	Y	1000	1026	N	Y	1048	1075	N	Y	Solved
Springerville-Greenlee & Springerville-Vail 345kV Lines & Bowie Trip	1030	1065	N	Y	1000	1026	N	Y	1048	1075	N	Y	Solved
Note 1 – All the Category C outages solved with the Path flows increase by 5% except for 4 Category C outages. These 4 Category C outages were re-tested with Path flows increased by 2.5%, and they solved.													

VOLTAGE STABILITY TEST RESULTS COVER SHEET	
Direction	West–to-East
Case Series Number	2
Simultaneous Path	47
Path 47 Definition --WECC or Alternative	WECC
SunZia in Service	No
Tucson-Oracle Reconductor	No
2nd Marana Bank	No
Bowie Generation Output (MW)	350
West to East Mitigation	No
Dona Ana- Picacho 115kV 13 ohm series reactor	No
Additional Newman 345/115kV Transformer Bank	No
Southwest Power Pool Export	No
Nomogram Number	2a
Nomogram Point	1
Southline Afton-West Cut Plane Flows (MW)	N/A
Southline Apache-West Cut Plane Flows (MW)	N/A
Southline Saguaro/Tortolita-East Cut Plane Flows (MW)	421
Southline Apache-East Cut Plane Flows (MW)	165
Southline Midpoint West Cut Plane Flows (MW)	N/A
Path 47 Flows (MW)	1048

ATTACHMENT H - VOLTAGE STABILITY TEST - CASES = 02_we_0421_0165_1101_06.SAV, 02_we_0442_0173_1048_06.SAV													
	SAGUARO/TORT EAST PATH				APACHE EAST PATH				PATH 47 MW FLOWS				OUTAGE SOLUTION STATUS ACHIEVED WITH INCREASED PATH FLOW
CONTINGENCY DESCRIPTION	BASE CASE PATH FLOW (MW)	TEST CASE PATH FLOW (MW)	105.0% TEST (Y/N)	102.5% TEST (Y/N)	BASE CASE PATH FLOW (MW)	TEST CASE PATH FLOW (MW)	105.0% TEST (Y/N)	102.5% TEST (Y/N)	BASE CASE PATH FLOW (MW)	TEST CASE PATH FLOW (MW)	105.0% TEST (Y/N)	102.5% TEST (Y/N)	
VOLTAGE STABILITY TEST CASE 1 = 02_we_0421_0165_1101_06.SAV													
Base Case Conditions	421	421	N	N	165	165	N	N	1048	1101	Y	N	Solved
All Category B Outages Unless Otherwise Noted	421	421	N	N	165	165	N	N	1048	1101	Y	N	All Solved
All Category C Outages Unless Otherwise Noted	421	421	N	N	165	165	N	N	1048	1101	Y	N	All Solved
VOLTAGE STABILITY TEST CASE 1 = 02_we_0442_0173_1048_06.SAV													
Base Case Conditions	421	442	Y	N	165	173	Y	N	1048	1048	N	N	Solved
All Category B Outages Unless Otherwise Noted	421	442	Y	N	165	173	Y	N	1048	1048	N	N	All Solved
All Category C Outages Unless Otherwise Noted	421	442	Y	N	165	173	Y	N	1048	1048	N	N	All Solved

VOLTAGE STABILITY TEST RESULTS COVER SHEET	
Direction	West–to-East
Case Series Number	2
Simultaneous Path	47
Path 47 Definition --WECC or Alternative	WECC
SunZia in Service	No
Tucson-Oracle Reconductor	No
2nd Marana Bank	No
Bowie Generation Output (MW)	350
West to East Mitigation	
Dona Ana- Picacho 115kV 13 ohm series reactor	No
Additional Newman 345/115kV Transformer Bank	No
Southwest Power Pool Export	No
Nomogram Number	2a
Nomogram Point	2
Southline Afton-West Cut Plane Flows (MW)	N/A
Southline Apache-West Cut Plane Flows (MW)	N/A
Southline Saguaro/Tortolita-East Cut Plane Flows (MW)	430
Southline Apache-East Cut Plane Flows (MW)	971
Southline Midpoint West Cut Plane Flows (MW)	N/A
Path 47 Flows (MW)	275

ATTACHMENT H - VOLTAGE STABILITY TEST - CASES = 02_we_0430_0971_0289_03.SAV, 02_we_0452_1020_0275_03.SAV													
	SAGUARO/TORT EAST PATH				APACHE EAST PATH				PATH 47 MW FLOWS				OUTAGE SOLUTION STATUS ACHIEVED WITH INCREASED PATH FLOW
CONTINGENCY DESCRIPTION	BASE CASE PATH FLOW (MW)	TEST CASE PATH FLOW (MW)	105.0% TEST (Y/N)	102.5% TEST (Y/N)	BASE CASE PATH FLOW (MW)	TEST CASE PATH FLOW (MW)	105.0% TEST (Y/N)	102.5% TEST (Y/N)	BASE CASE PATH FLOW (MW)	TEST CASE PATH FLOW (MW)	105.0% TEST (Y/N)	102.5% TEST (Y/N)	
VOLTAGE STABILITY TEST CASE 1 = 02_we_0430_0971_0289_03.SAV													
Base Case Conditions	430	430	N	N	971	971	N	N	275	289	Y	N	Solved
All Category B Outages Unless Otherwise Noted	430	430	N	N	971	971	N	N	275	289	Y	N	All Solved
All Category C Outages Unless Otherwise Noted	430	430	N	N	971	971	N	N	275	289	Y	N	All Solved
VOLTAGE STABILITY TEST CASE 1 = 02_we_0452_1020_0275_03.SAV													
Base Case Conditions	430	452	Y	N	971	1020	Y	N	275	275	N	N	Solved
All Category B Outages Unless Otherwise Noted	430	452	Y	N	971	1020	Y	N	275	275	N	N	All Solved
All Category C Outages Unless Otherwise Noted	430	452	Y	N	971	1020	Y	N	275	275	N	N	All Solved

VOLTAGE STABILITY TEST RESULTS COVER SHEET	
Direction	West–to-East
Case Series Number	2
Simultaneous Path	47
Path 47 Definition --WECC or Alternative	WECC
SunZia in Service	No
Tucson-Oracle Reconductor	No
2nd Marana Bank	No
Bowie Generation Output (MW)	350
West to East Mitigation	Yes
Dona Ana- Picacho 115kV 13 ohm series reactor	Yes
Additional Newman 345/115kV Transformer Bank	Yes
Southwest Power Pool Export	Yes
Nomogram Number	2b
Nomogram Point	1M
Southline Afton-West Cut Plane Flows (MW)	N/A
Southline Apache-West Cut Plane Flows (MW)	N/A
Southline Saguaro/Tortolita-East Cut Plane Flows (MW)	435
Southline Apache-East Cut Plane Flows (MW)	436
Southline Midpoint West Cut Plane Flows (MW)	N/A
Path 47 Flows (MW)	1048

ATTACHMENT H - VOLTAGE STABILITY TEST - CASES = 02_WE_0435_0436_1101_01.SAV, 02_WE_0457_0458_1048_01.SAV													
CONTINGENCY DESCRIPTION	SAGUARO/TORT EAST PATH				APACHE EAST PATH				PATH 47 MW FLOWS				OUTAGE SOLUTION STATUS ACHIEVED WITH INCREASED PATH FLOW
	BASE CASE PATH FLOW (MW)	TEST CASE PATH FLOW (MW)	105.0% TEST (Y/N)	102.5% TEST (Y/N)	BASE CASE PATH FLOW (MW)	TEST CASE PATH FLOW (MW)	105.0% TEST (Y/N)	102.5% TEST (Y/N)	BASE CASE PATH FLOW (MW)	TEST CASE PATH FLOW (MW)	105.0% TEST (Y/N)	102.5% TEST (Y/N)	
VOLTAGE STABILITY TEST CASE 1 = 02_WE_0435_0436_1101_01.SAV													
Base Case Conditions	435	435	N	N	436	436	N	N	1048	1101	Y	N	Solved
All Category B Outages Unless Otherwise Noted	435	435	N	N	436	436	N	N	1048	1101	Y	N	All Solved
All Category C Outages Unless Otherwise Noted	435	435	N	N	436	436	N	N	1048	1101	Y	N	All Solved
VOLTAGE STABILITY TEST CASE 1 = 02_WE_0457_0458_1048_01.SAV													
Base Case Conditions	435	458	Y	N	436	458	Y	N	1048	1048	N	N	Solved
All Category B Outages Unless Otherwise Noted	435	458	Y	N	436	458	Y	N	1048	1048	N	N	All Solved
All Category C Outages Unless Otherwise Noted	435	458	Y	N	436	458	Y	N	1048	1048	N	N	All Solved

VOLTAGE STABILITY TEST RESULTS COVER SHEET	
Direction	West–to-East
Case Series Number	2
Simultaneous Path	47
Path 47 Definition --WECC or Alternative	WECC
SunZia in Service	No
Tucson-Oracle Reconductor	No
2nd Marana Bank	No
Bowie Generation Output (MW)	350
West to East Mitigation	Yes
Dona Ana- Picacho 115kV 13 ohm series reactor	Yes
Additional Newman 345/115kV Transformer Bank	Yes
Southwest Power Pool Export	Yes
Nomogram Number	2b
Nomogram Point	2M
Southline Afton-West Cut Plane Flows (MW)	N/A
Southline Apache-West Cut Plane Flows (MW)	N/A
Southline Saguaro/Tortolita-East Cut Plane Flows (MW)	445
Southline Apache-East Cut Plane Flows (MW)	971
Southline Midpoint West Cut Plane Flows (MW)	N/A
Path 47 Flows (MW)	489

ATTACHMENT H - VOLTAGE STABILITY TEST - CASES = 02_we_0445_0971_0514_01.SAV, 02_we_0468_1020_0489_01.SAV													
	SAGUARO/TORT EAST PATH				APACHE EAST PATH				PATH 47 MW FLOWS				OUTAGE SOLUTION STATUS ACHIEVED WITH INCREASED PATH FLOW
CONTINGENCY DESCRIPTION	BASE CASE PATH FLOW (MW)	TEST CASE PATH FLOW (MW)	105.0% TEST (Y/N)	102.5% TEST (Y/N)	BASE CASE PATH FLOW (MW)	TEST CASE PATH FLOW (MW)	105.0% TEST (Y/N)	102.5% TEST (Y/N)	BASE CASE PATH FLOW (MW)	TEST CASE PATH FLOW (MW)	105.0% TEST (Y/N)	102.5% TEST (Y/N)	
VOLTAGE STABILITY TEST CASE 1 = 02_we_0445_0971_0514_01.SAV													
Base Case Conditions	445	445	N	N	971	971	N	N	489	514	Y	N	Solved
All Category B Outages Unless Otherwise Noted	445	445	N	N	971	971	N	N	489	514	Y	N	All Solved
All Category C Outages Unless Otherwise Noted	445	445	N	N	971	971	N	N	489	514	Y	N	All Solved
VOLTAGE STABILITY TEST CASE 1 = 02_we_0468_1020_0489_01.SAV													
Base Case Conditions	445	468	Y	N	971	1020	Y	N	489	1048	N	N	Solved
All Category B Outages Unless Otherwise Noted	445	468	Y	N	971	1020	Y	N	489	1048	N	N	All Solved
All Category C Outages Unless Otherwise Noted	445	468	Y	N	971	1020	Y	N	489	1048	N	N	All Solved

VOLTAGE STABILITY TEST RESULTS COVER SHEET	
Direction	West–to-East
Case Series Number	16
Simultaneous Path	47
Path 47 Definition --WECC or Alternative	WECC
SunZia in Service	No
Tucson-Oracle Reconductor	Yes
2nd Marana Bank	No
Bowie Generation Output (MW)	350
West to East Mitigation	No
Dona Ana- Picacho 115kV 13 ohm series reactor	No
Additional Newman 345/115kV Transformer Bank	No
Southwest Power PoolExport	No
Nomogram Number	16a
Nomogram Point	1
Southline Afton-West Cut Plane Flows (MW)	N/A
Southline Apache-West Cut Plane Flows (MW)	N/A
Southline Saguaro/Tortolita-East Cut Plane Flows (MW)	715
Southline Apache-East Cut Plane Flows (MW)	165
Southline Midpoint West Cut Plane Flows (MW)	N/A
Path 47 Flows (MW)	1048

ATTACHMENT H - VOLTAGE STABILITY TEST - CASES = 16_we_0715_0165_1101_02.sav, 16_we_0751_0173_1048_02.sav													
	SAGUARO/TORT EAST PATH				APACHE EAST PATH				PATH 47 MW FLOWS				OUTAGE SOLUTION STATUS ACHIEVED WITH INCREASED PATH FLOW
CONTINGENCY DESCRIPTION	BASE CASE PATH FLOW (MW)	TEST CASE PATH FLOW (MW)	105.0% TEST (Y/N)	102.5% TEST (Y/N)	BASE CASE PATH FLOW (MW)	TEST CASE PATH FLOW (MW)	105.0% TEST (Y/N)	102.5% TEST (Y/N)	BASE CASE PATH FLOW (MW)	TEST CASE PATH FLOW (MW)	105.0% TEST (Y/N)	102.5% TEST (Y/N)	
VOLTAGE STABILITY TEST CASE 1 = 16_we_0734_0436_1101_04.sav													
Base Case Conditions	715	715	N	N	165	165	N	N	1048	1101	Y	N	Solved
All Category B Outages Unless Otherwise Noted	715	715	N	N	165	165	N	N	1048	1101	Y	N	All Solved
All Category C Outages Unless Otherwise Noted	715	715	N	N	165	165	N	N	1048	1101	Y	N	All Solved
VOLTAGE STABILITY TEST CASE 1 = 16_we_0771_0458_1048_04.sav													
Base Case Conditions	715	751	Y	N	165	173	Y	N	1048	1048	N	N	Solved
All Category B Outages Unless Otherwise Noted	715	751	Y	N	165	173	Y	N	1048	1048	N	N	All Solved
All Category C Outages Unless Otherwise Noted	715	751	Y	N	165	173	Y	N	1048	1048	N	N	All Solved

VOLTAGE STABILITY TEST RESULTS COVER SHEET	
Direction	West–to-East
Case Series Number	16
Simultaneous Path	47
Path 47 Definition --WECC or Alternative	WECC
SunZia in Service	No
Tucson-Oracle Reconductor	Yes
2nd Marana Bank	No
Bowie Generation Output (MW)	350
West to East Mitigation	No
Dona Ana- Picacho 115kV 13 ohm series reactor	No
Additional Newman 345/115kV Transformer Bank	No
Southwest Power Pool Export	No
Nomogram Number	16a
Nomogram Point	2
Southline Afton-West Cut Plane Flows (MW)	N/A
Southline Apache-West Cut Plane Flows (MW)	N/A
Southline Saguaro/Tortolita-East Cut Plane Flows (MW)	715
Southline Apache-East Cut Plane Flows (MW)	971
Southline Midpoint West Cut Plane Flows (MW)	N/A
Path 47 Flows (MW)	275

ATTACHMENT H - VOLTAGE STABILITY TEST - CASES = 16_we_0715_0971_0289_02.sav, 16_we_0751_1020_0275_02.sav													
	SAGUARO/TORT EAST PATH				APACHE EAST PATH				PATH 47 MW FLOWS				OUTAGE SOLUTION STATUS ACHIEVED WITH INCREASED PATH FLOW
CONTINGENCY DESCRIPTION	BASE CASE PATH FLOW (MW)	TEST CASE PATH FLOW (MW)	105.0% TEST (Y/N)	102.5% TEST (Y/N)	BASE CASE PATH FLOW (MW)	TEST CASE PATH FLOW (MW)	105.0% TEST (Y/N)	102.5% TEST (Y/N)	BASE CASE PATH FLOW (MW)	TEST CASE PATH FLOW (MW)	105.0% TEST (Y/N)	102.5% TEST (Y/N)	
VOLTAGE STABILITY TEST CASE 1 = 16_we_0715_0971_0289_02.sav													
Base Case Conditions	715	715	N	N	971	971	N	N	275	289	Y	N	Solved
All Category B Outages Unless Otherwise Noted	715	715	N	N	971	971	N	N	275	289	Y	N	All Solved
All Category C Outages Unless Otherwise Noted	715	715	N	N	971	971	N	N	275	289	Y	N	All Solved
VOLTAGE STABILITY TEST CASE 1 = 16_we_0751_1020_0275_02.sav													
Base Case Conditions	715	751	Y	N	971	1020	Y	N	275	275	N	N	Solved
All Category B Outages Unless Otherwise Noted	715	751	Y	N	971	1020	Y	N	275	275	N	N	All Solved
All Category C Outages Unless Otherwise Noted	715	751	Y	N	971	1020	Y	N	275	275	N	N	All Solved

VOLTAGE STABILITY TEST RESULTS COVER SHEET	
Direction	West–to-East
Case Series Number	16
Simultaneous Path	47
Path 47 Definition --WECC or Alternative	WECC
SunZia in Service	No
Tucson-Oracle Reconductor	Yes
2nd Marana Bank	No
Bowie Generation Output (MW)	350
West to East Mitigation	Yes
Dona Ana- Picacho 115kV 13 ohm series reactor	Yes
Additional Newman 345/115kV Transformer Bank	Yes
Southwest Power Pool Export	Yes
Nomogram Number	16b
Nomogram Point	1
Southline Afton-West Cut Plane Flows (MW)	N/A
Southline Apache-West Cut Plane Flows (MW)	N/A
Southline Saguaro/Tortolita-East Cut Plane Flows (MW)	734
Southline Apache-East Cut Plane Flows (MW)	436
Southline Midpoint West Cut Plane Flows (MW)	N/A
Path 47 Flows (MW)	1048

ATTACHMENT H - VOLTAGE STABILITY TEST - CASES = 16_we_0734_0436_1101_04.sav, 16_we_0771_0458_1048_04.sav													
	SAGUARO/TORT EAST PATH				APACHE EAST PATH				PATH 47 MW FLOWS				OUTAGE SOLUTION STATUS ACHIEVED WITH INCREASED PATH FLOW
CONTINGENCY DESCRIPTION	BASE CASE PATH FLOW (MW)	TEST CASE PATH FLOW (MW)	105.0% TEST (Y/N)	102.5% TEST (Y/N)	BASE CASE PATH FLOW (MW)	TEST CASE PATH FLOW (MW)	105.0% TEST (Y/N)	102.5% TEST (Y/N)	BASE CASE PATH FLOW (MW)	TEST CASE PATH FLOW (MW)	105.0% TEST (Y/N)	102.5% TEST (Y/N)	
VOLTAGE STABILITY TEST CASE 1 = 16_we_0734_0436_1101_04.sav													
Base Case Conditions	734	734	N	N	436	436	N	N	1048	1101	Y	N	Solved
All Category B Outages Unless Otherwise Noted	734	734	N	N	436	436	N	N	1048	1101	Y	N	All Solved
All Category C Outages Unless Otherwise Noted	734	734	N	N	436	436	N	N	1048	1101	Y	N	All Solved
VOLTAGE STABILITY TEST CASE 1 = 16_we_0771_0458_1048_04.sav													
Base Case Conditions	734	771	Y	N	436	458	Y	N	1048	1048	N	N	Solved
All Category B Outages Unless Otherwise Noted	734	771	Y	N	436	458	Y	N	1048	1048	N	N	All Solved
All Category C Outages Unless Otherwise Noted	734	771	Y	N	436	458	Y	N	1048	1048	N	N	All Solved

VOLTAGE STABILITY TEST RESULTS COVER SHEET	
Direction	West–to-East
Case Series Number	16
Simultaneous Path	47
Path 47 Definition --WECC or Alternative	WECC
SunZia in Service	No
Tucson-Oracle Reconductor	Yes
2nd Marana Bank	No
Bowie Generation Output (MW)	350
West to East Mitigation	Yes
Dona Ana- Picacho 115kV 13 ohm series reactor	Yes
Additional Newman 345/115kV Transformer Bank	Yes
Southwest Power Pool Export	Yes
Nomogram Number	16b
Nomogram Point	2
Southline Afton-West Cut Plane Flows (MW)	N/A
Southline Apache-West Cut Plane Flows (MW)	N/A
Southline Saguaro/Tortolita-East Cut Plane Flows (MW)	712
Southline Apache-East Cut Plane Flows (MW)	971
Southline Midpoint West Cut Plane Flows (MW)	N/A
Path 47 Flows (MW)	480

ATTACHMENT H - VOLTAGE STABILITY TEST - CASES = 16_we_0712_0971_0504_01.sav, 16_we_0748_1020_0480_01.sav													
	SAGUARO/TORT EAST PATH				APACHE EAST PATH				PATH 47 MW FLOWS				OUTAGE SOLUTION STATUS ACHIEVED WITH INCREASED PATH FLOW
CONTINGENCY DESCRIPTION	BASE CASE PATH FLOW (MW)	TEST CASE PATH FLOW (MW)	105.0% TEST (Y/N)	102.5% TEST (Y/N)	BASE CASE PATH FLOW (MW)	TEST CASE PATH FLOW (MW)	105.0% TEST (Y/N)	102.5% TEST (Y/N)	BASE CASE PATH FLOW (MW)	TEST CASE PATH FLOW (MW)	105.0% TEST (Y/N)	102.5% TEST (Y/N)	
VOLTAGE STABILITY TEST CASE 1 = 16_we_0712_0971_0504_01.sav													
Base Case Conditions	712	712	N	N	971	971	N	N	480	504	Y	N	Solved
All Category B Outages Unless Otherwise Noted	712	712	N	N	971	971	N	N	480	504	Y	N	All Solved
All Category C Outages Unless Otherwise Noted	712	712	N	N	971	971	N	N	480	504	Y	N	All Solved
VOLTAGE STABILITY TEST CASE 1 = 16_we_0748_1020_0480_01.sav													
Base Case Conditions	712	748	Y	N	971	1020	Y	N	480	480	N	N	Solved
All Category B Outages Unless Otherwise Noted	712	748	Y	N	971	1020	Y	N	480	480	N	N	All Solved
All Category C Outages Unless Otherwise Noted	712	748	Y	N	971	1020	Y	N	480	480	N	N	All Solved

VOLTAGE STABILITY TEST RESULTS COVER SHEET	
Direction	East-to-West
Case Series Number	41
Simultaneous Path	47
Path 47 Definition --WECC or Alternative	WECC
SunZia in Service	No
Tucson-Oracle Reconductor	No
2nd Marana Bank	Yes
Bowie Generation Output (MW)	350
West to East Mitigation	No
Dona Ana- Picacho 115kV 13 ohm series reactor	No
Additional Newman 345/115kV Transformer Bank	No
Southwest Power Pool Export	No
Nomogram Number	41
Nomogram Point	1
Southline Afton-West Cut Plane Flows (MW)	1037
Southline Apache-West Cut Plane Flows (MW)	1000
Southline Saguaro/Tortolita-East Cut Plane Flows (MW)	N/A
Southline Apache-East Cut Plane Flows (MW)	N/A
Southline Midpoint West Cut Plane Flows (MW)	N/A
Path 47 Flows (MW)	1048

ATTACHMENT H - VOLTAGE STABILITY TEST - CASES = 41_ew_1088_1050_1100v16.SAV, 41_ew_1065_1026_1075v16.SAV													
	AFTON WEST PATH				APACHE EAST PATH				PATH 47 MW FLOWS				OUTAGE SOLUTION STATUS ACHIEVED WITH INCREASED PATH FLOW
CONTINGENCY DESCRIPTION	BASE CASE PATH FLOW (MW)	TEST CASE PATH FLOW (MW)	105.0% TEST (Y/N)	102.5% TEST (Y/N)	BASE CASE PATH FLOW (MW)	TEST CASE PATH FLOW (MW)	105.0% TEST (Y/N)	102.5% TEST (Y/N)	BASE CASE PATH FLOW (MW)	TEST CASE PATH FLOW (MW)	105.0% TEST (Y/N)	102.5% TEST (Y/N)	
VOLTAGE STABILITY TEST CASE 1 = 41_ew_1088_1050_1100v16.SAV													
Base Case Conditions	1030	1088	Y	N	1000	1050	Y	N	1048	1100	Y	N	Solved
All Category B Outages Unless Otherwise Noted	1030	1088	Y	N	1000	1050	Y	N	1048	1100	Y	N	All Solved
All Category C Outages Unless Otherwise Noted	1030	1088	Y	N	1000	1050	Y	N	1048	1100	Y	N	**See Note 1**
VOLTAGE STABILITY TEST CASE 2 = 41_ew_1065_1026_1075v16.SAV													
Willow-Winchester & Springerville-Vail 345kV Lines	1030	1065	N	Y	1000	1026	N	Y	1048	1075	N	Y	Solved
Willow-Winchester & Springerville-Vail 345kV Lines & TOLS	1030	1065	N	Y	1000	1026	N	Y	1048	1075	N	Y	Solved
Willow-Winchester & Springerville-Vail 345kV Lines & Bowie Trip	1030	1065	N	Y	1000	1026	N	Y	1048	1075	N	Y	Solved
Springerville-Greenlee & Springerville-Vail 345kV Lines & Bowie Trip	1030	1065	N	Y	1000	1026	N	Y	1048	1075	N	Y	Solved
Note 1 – All the Category C outages solved with the Path flows increase by 5% except for 4 Category C outages. These 4 Category C outages were re-tested with Path flows increased by 2.5%, and they solved.													

VOLTAGE STABILITY TEST RESULTS COVER SHEET	
Direction	West–to-East
Case Series Number	42
Simultaneous Path	47
Path 47 Definition --WECC or Alternative	WECC
SunZia in Service	No
Tucson-Oracle Reconductor	No
2nd Marana Bank	Yes
Bowie Generation Output (MW)	350
West to East Mitigation	No
Dona Ana- Picacho 115kV 13 ohm series reactor	No
Additional Newman 345/115kV Transformer Bank	No
Southwest Power PoolExport	No
Nomogram Number	42
Nomogram Point	1
Southline Afton-West Cut Plane Flows (MW)	N/A
Southline Apache-West Cut Plane Flows (MW)	N/A
Southline Saguaro/Tortolita-East Cut Plane Flows (MW)	431
Southline Apache-East Cut Plane Flows (MW)	179
Southline Midpoint West Cut Plane Flows (MW)	N/A
Path 47 Flows (MW)	1048

ATTACHMENT H - VOLTAGE STABILITY TEST - CASES = 42_we_0431_0179_1101_01.SAV, 42_we_0453_0188_1048_01.SAV													
CONTINGENCY DESCRIPTION	SAGUARO/TORT EAST PATH				APACHE EAST PATH				PATH 47 MW FLOWS				OUTAGE SOLUTION STATUS ACHIEVED WITH INCREASED PATH FLOW
	BASE CASE PATH FLOW (MW)	TEST CASE PATH FLOW (MW)	105.0% TEST (Y/N)	102.5% TEST (Y/N)	BASE CASE PATH FLOW (MW)	TEST CASE PATH FLOW (MW)	105.0% TEST (Y/N)	102.5% TEST (Y/N)	BASE CASE PATH FLOW (MW)	TEST CASE PATH FLOW (MW)	105.0% TEST (Y/N)	102.5% TEST (Y/N)	
VOLTAGE STABILITY TEST CASE 1 = 02_we_0421_0165_1101_06.SAV													
Base Case Conditions	431	431	N	N	179	179	N	N	1048	1101	Y	N	Solved
All Category B Outages Unless Otherwise Noted	431	431	N	N	179	179	N	N	1048	1101	Y	N	All Solved
All Category C Outages Unless Otherwise Noted	431	431	N	N	179	179	N	N	1048	1101	Y	N	All Solved
VOLTAGE STABILITY TEST CASE 1 = 02_we_0442_0173_1048_06.SAV													
Base Case Conditions	431	453	Y	N	179	188	Y	N	1048	1048	N	N	Solved
All Category B Outages Unless Otherwise Noted	431	453	Y	N	179	188	Y	N	1048	1048	N	N	All Solved
All Category C Outages Unless Otherwise Noted	431	453	Y	N	179	188	Y	N	1048	1048	N	N	All Solved

VOLTAGE STABILITY TEST RESULTS COVER SHEET	
Direction	West–to-East
Case Series Number	42
Simultaneous Path	47
Path 47 Definition --WECC or Alternative	WECC
SunZia in Service	No
Tucson-Oracle Reconductor	No
2nd Marana Bank	Yes
Bowie Generation Output (MW)	350
West to East Mitigation	No
Dona Ana- Picacho 115kV 13 ohm series reactor	No
Additional Newman 345/115kV Transformer Bank	No
Southwest Power Pool Export	No
Nomogram Number	42
Nomogram Point	2
Southline Afton-West Cut Plane Flows (MW)	N/A
Southline Apache-West Cut Plane Flows (MW)	N/A
Southline Saguaro/Tortolita-East Cut Plane Flows (MW)	435
Southline Apache-East Cut Plane Flows (MW)	971
Southline Midpoint West Cut Plane Flows (MW)	N/A
Path 47 Flows (MW)	275

ATTACHMENT H - VOLTAGE STABILITY TEST - CASES = 02_we_0430_0971_0289_03.SAV, 02_we_0452_1020_0275_03.SAV													
	SAGUARO/TORT EAST PATH				APACHE EAST PATH				PATH 47 MW FLOWS				OUTAGE SOLUTION STATUS ACHIEVED WITH INCREASED PATH FLOW
CONTINGENCY DESCRIPTION	BASE CASE PATH FLOW (MW)	TEST CASE PATH FLOW (MW)	105.0% TEST (Y/N)	102.5% TEST (Y/N)	BASE CASE PATH FLOW (MW)	TEST CASE PATH FLOW (MW)	105.0% TEST (Y/N)	102.5% TEST (Y/N)	BASE CASE PATH FLOW (MW)	TEST CASE PATH FLOW (MW)	105.0% TEST (Y/N)	102.5% TEST (Y/N)	
VOLTAGE STABILITY TEST CASE 1 = 42_we_0457_1020_0275_01.SAV													
Base Case Conditions	435	457	N	N	971	1020	N	N	275	289	Y	N	Solved
All Category B Outages Unless Otherwise Noted	435	457	N	N	971	1020	N	N	275	289	Y	N	All Solved
All Category C Outages Unless Otherwise Noted	435	457	N	N	971	1020	N	N	275	289	Y	N	All Solved
VOLTAGE STABILITY TEST CASE 1 = 42_we_0435_0971_0289_01.SAV													
Base Case Conditions	435	435	Y	N	971	971	Y	N	275	289	N	N	Solved
All Category B Outages Unless Otherwise Noted	435	435	Y	N	971	971	Y	N	275	289	N	N	All Solved
All Category C Outages Unless Otherwise Noted	435	435	Y	N	971	971	Y	N	275	289	N	N	All Solved

VOLTAGE STABILITY TEST RESULTS COVER SHEET	
Direction	West–to-East
Case Series Number	56
Simultaneous Path	47
Path 47 Definition --WECC or Alternative	WECC
SunZia in Service	No
Tucson-Oracle Reconductor	Yes
2nd Marana Bank	Yes
Bowie Generation Output (MW)	350
West to East Mitigation	Yes
Dona Ana- Picacho 115kV 13 ohm series reactor	Yes
Additional Newman 345/115kV Transformer Bank	Yes
Southwest Power Pool Export	Yes
Nomogram Number	56
Nomogram Point	1
Southline Afton-West Cut Plane Flows (MW)	N/A
Southline Apache-West Cut Plane Flows (MW)	N/A
Southline Saguaro/Tortolita-East Cut Plane Flows (MW)	754
Southline Apache-East Cut Plane Flows (MW)	433
Southline Midpoint West Cut Plane Flows (MW)	N/A
Path 47 Flows (MW)	1048

ATTACHMENT H - VOLTAGE STABILITY TEST - CASES = 56_we_0754_0433_1101_01.sav, 56_we_0792_0455_1048_01.sav													
	SAGUARO/TORT EAST PATH				APACHE EAST PATH				PATH 47 MW FLOWS				OUTAGE SOLUTION STATUS ACHIEVED WITH INCREASED PATH FLOW
CONTINGENCY DESCRIPTION	BASE CASE PATH FLOW (MW)	TEST CASE PATH FLOW (MW)	105.0% TEST (Y/N)	102.5% TEST (Y/N)	BASE CASE PATH FLOW (MW)	TEST CASE PATH FLOW (MW)	105.0% TEST (Y/N)	102.5% TEST (Y/N)	BASE CASE PATH FLOW (MW)	TEST CASE PATH FLOW (MW)	105.0% TEST (Y/N)	102.5% TEST (Y/N)	
VOLTAGE STABILITY TEST CASE 1 = 56_we_0754_0433_1101_01.sav													
Base Case Conditions	754	754	N	N	433	433	N	N	1048	1101	Y	N	Solved
All Category B Outages Unless Otherwise Noted	754	754	N	N	433	433	N	N	1048	1101	Y	N	All Solved
All Category C Outages Unless Otherwise Noted	754	754	N	N	433	433	N	N	1048	1101	Y	N	All Solved
VOLTAGE STABILITY TEST CASE 1 = 56_we_0792_0455_1048_01.sa													
Base Case Conditions	754	792	Y	N	433	455	Y	N	1048	1048	N	N	Solved
All Category B Outages Unless Otherwise Noted	754	792	Y	N	433	455	Y	N	1048	1048	N	N	All Solved
All Category C Outages Unless Otherwise Noted	754	792	Y	N	433	455	Y	N	1048	1048	N	N	All Solved

VOLTAGE STABILITY TEST RESULTS COVER SHEET	
Direction	West–to-East
Case Series Number	56
Simultaneous Path	47
Path 47 Definition --WECC or Alternative	WECC
SunZia in Service	No
Tucson-Oracle Reconductor	Yes
2nd Marana Bank	Yes
Bowie Generation Output (MW)	350
West to East Mitigation	Yes
Dona Ana- Picacho 115kV 13 ohm series reactor	Yes
Additional Newman 345/115kV Transformer Bank	Yes
Southwest Power Pool Export	Yes
Nomogram Number	56
Nomogram Point	2
Southline Afton-West Cut Plane Flows (MW)	N/A
Southline Apache-West Cut Plane Flows (MW)	N/A
Southline Saguaro/Tortolita-East Cut Plane Flows (MW)	758
Southline Apache-East Cut Plane Flows (MW)	968
Southline Midpoint West Cut Plane Flows (MW)	N/A
Path 47 Flows (MW)	4818

ATTACHMENT H - VOLTAGE STABILITY TEST - CASES = 56_we_0758_0968_0506_03.SAV, 56_we_0796_1017_0481_03.SAV, 56_we_0758_0968_0494_03.SAV, 56_we_0777_0993_0481_03.SAV													
	SAGUARO/TORT EAST PATH				APACHE EAST PATH				PATH 47 MW FLOWS				OUTAGE SOLUTION STATUS ACHIEVED WITH INCREASED PATH FLOW
CONTINGENCY DESCRIPTION	BASE CASE PATH FLOW (MW)	TEST CASE PATH FLOW (MW)	105.0% TEST (Y/N)	102.5% TEST (Y/N)	BASE CASE PATH FLOW (MW)	TEST CASE PATH FLOW (MW)	105.0% TEST (Y/N)	102.5% TEST (Y/N)	BASE CASE PATH FLOW (MW)	TEST CASE PATH FLOW (MW)	105.0% TEST (Y/N)	102.5% TEST (Y/N)	
VOLTAGE STABILITY TEST CASE 1 = 56_we_0758_0968_0506_03.SAV													
Base Case Conditions	758	758	N	N	968	968	N	N	481	506	Y	N	Solved
All Category B Outages Unless Otherwise Noted	758	758	N	N	968	968	N	N	481	506	Y	N	All Solved
All Category C Outages Unless Otherwise Noted	758	758	N	N	968	968	N	N	481	506	Y	N	See Note 1
VOLTAGE STABILITY TEST CASE 2 = 56_we_0796_1017_0481_03.SAV													
Base Case Conditions	758	796	Y	N	968	1017	Y	N	481	481	N	N	Solved
All Category B Outages Unless Otherwise Noted	758	796	Y	N	968	1017	Y	N	481	481	N	N	All Solved
All Category C Outages Unless Otherwise Noted	758	796	Y	N	968	1017	Y	N	481	481	N	N	All Solved
VOLTAGE STABILITY TEST CASE 3 = 56_we_0758_0968_0494_03.SAV													
Newman-Arroyo & Newman-Afton 345kV Lines Outage	758	758	N	N	968	968	N	N	481	494	N	Y	Solved
VOLTAGE STABILITY TEST CASE 4 = 56_we_0777_0993_0481_03.SAV													
Newman-Arroyo & Newman-Afton 345kV Lines Outage	758	777	N	Y	968	993	N	Y	481	481	N	N	Solved

Note 1 – All the Category C outages solved except for the outage of the Newman-Arroyo & Newman-Afton 345kV Lines. Created two 102.5% test case. Re-tested the outage of the Newman-Arroyo & Newman-Afton 345kV Lines with the 102.5% cases, and the outages solved.

VOLTAGE STABILITY TEST RESULTS COVER SHEET	
Direction	East-to-West
Case Series Number	1
Simultaneous Path	47
Path 47 Definition --WECC or Alternative	WECC
SunZia in Service	No
Tucson-Oracle Reconductor	No
2nd Marana Bank	No
Bowie Generation Output (MW)	350
West to East Mitigation	No
Dona Ana- Picacho 115kV 13 ohm series reactor	No
Additional Newman 345/115kV Transformer Bank	No
Southwest Power Pool Export	No
Nomogram Number	67
Nomogram Point	1
Southline Afton-West Cut Plane Flows (MW)	N/A
Southline Apache-West Cut Plane Flows (MW)	1000
Southline Saguaro/Tortolita-East Cut Plane Flows (MW)	N/A
Southline Apache-East Cut Plane Flows (MW)	N/A
Southline Midpoint West Cut Plane Flows (MW)	1026
Path 47 Flows (MW)	1048

ATTACHMENT H - VOLTAGE STABILITY TEST - CASES = 67_EW_1026_1000_1101_V01.SAV, 67_EW_1079_1050_1048_V01.SAV													
CONTINGENCY DESCRIPTION	SOUTHLINE MIDPOINT WEST PATH				APACHE WEST PATH				PATH 47 MW FLOWS				OUTAGE SOLUTION STATUS ACHIEVED WITH INCREASED PATH FLOW
	BASE CASE PATH FLOW (MW)	TEST CASE PATH FLOW (MW)	105.0% TEST (Y/N)	102.5% TEST (Y/N)	BASE CASE PATH FLOW (MW)	TEST CASE PATH FLOW (MW)	105.0% TEST (Y/N)	102.5% TEST (Y/N)	BASE CASE PATH FLOW (MW)	TEST CASE PATH FLOW (MW)	105.0% TEST (Y/N)	102.5% TEST (Y/N)	
VOLTAGE STABILITY TEST CASE 1 = 67_ew_1026_1000_1101_v01.sav													
Base Case Conditions	1026	1026	N	N	1000	1000	N	N	1048	1101	Y	N	Solved
All Category B Outages Unless Otherwise Noted	1026	1026	N	N	1000	1000	N	N	1048	1101	Y	N	All Solved
All Category C Outages Unless Otherwise Noted	1026	1026	N	N	1000	1000	N	N	1048	1101	Y	N	All Solved
VOLTAGE STABILITY TEST CASE 1 = 67_ew_1079_1050_1048_v01.sav													
Base Case Conditions	1026	1079	Y	N	1000	1050	Y	N	1048	1048	N	N	Solved
All Category B Outages Unless Otherwise Noted	1026	1079	Y	N	1000	1050	Y	N	1048	1048	N	N	All Solved
All Category C Outages Unless Otherwise Noted	1026	1079	Y	N	1000	1050	Y	N	1048	1048	N	N	All Solved

ATTACHMENT I

SOUTHLINE PHASE 2 STUDY
TRANSIENT CONTINGENCY LIST

ATTACHMENT I – TRANSIENT STABILITY DISTURBANCES		
#	CAT	DESCRIPTION
1	B	N-1 Adams 230/115kV Transformer
2	B	N-1 Afton 345kV Phase Shifter 1
3	B	N-1 Afton-Midpoint 345kV Line
4	B	N-1 Apache 345/230kV Transformer
5	B	N-1 Apache-Adams 230kV Line
6	B	N-1 Apache-Pantano 230kV Line
7	B	N-1 Delbac-Nogoles 230kV Line
8	B	N-1 Hidalgo-Apache 345kV Line
9	B	N-1 Marana 230/115kV Transformer
10	B	N-1 Marana-Rattle Snake 230kV Line
11	B	N-1 Midpoint-Hidalgo 345kV Line
12	B	N-1 Nogales-Adams 230kV Line
13	B	N-1 Rattle Snake 230/115kV Transformer
18	B	N-1 Southline Saguaro 230/115kV Transformer #1
19	B	N-1 Southline Saguaro-Marana 230kV Line
20	B	N-1 Tortolita 500/230kV Transformer
21	B	N-1 Tucson 230/115kV Transformer
22	B	N-1 Tucson 230/Dmp 138kV Transformer
23	B	N-1 Tucson-Rattlesnake 230kV Line
24	B	N-1 Tucson-Tortolita 230kV Line
25	B	N-1 Tucson-Vail 230kV Line
26	B	N-1 Tucson-Del Bac 230kV Line
27	B	N-1 Vail 345/230kV Transformer
28	C	N-2 Afton-Midpoint 345kV #1 And #2 Lines
29	C	N-2 Apache-Pantano & Adams-Nogales 230kV Lines
30	C	N-2 Apache-Pantano & Apache-Adams 230kV Lines
31	C	N-2 Hidalgo-Apache 345kV #1 And #2 Lines
32	C	N-2 Midpoint-Hidalgo 345kV #1 And #2 Lines
33	C	N-2 Pantano-Vail & Adams-Nogales 230kV Lines
34	C	N-2 Tortolita-Tucson & Marana-Southline Saguaro 230kV Lines
35	C	N-2 Tortolita-Tucson & Rattlesnake-Marana 230kV Lines
36	C	N-2 Tortolita-Tucson & Rattlesnake-Tucson 230kV Lines
37	C	N-2 Vail-Tucson & Adams-Nogales 230kV Lines
38	C	N-2 Vail-Tucson & Del Bac-Nogales 230kV Lines
40	C	Springerville – Vail & Springerville – Greenlee 345 kV Lines
41	C	Springerville – Vail & Greenlee – Willow 345 kV Lines
42	C	Springerville – Vail & Willow – Winchester 345 kV Lines
43	C	Springerville – Vail & Greenlee – Winchester 345 kV Lines
44	C	Springerville – Vail & Winchester – Vail 345 kV Lines

TRANSIENT STABILITY RESULTS COVER SHEET	
Direction	East-to-West
Case Series Number	1
Simultaneous Path	47
Path 47 Definition --WECC or Alternative	WECC
SunZia in Service	No
Tucson-Oracle Reconductor	No
2nd Marana Bank	No
Bowie Generation Output (MW)	350
West to East Mitigation	No
Dona Ana- Picacho 115kV 13 ohm series reactor	No
Additional Newman 345/115kV Transformer Bank	No
Southwest Power Pool Export	No
Nomogram Number	1
Nomogram Point	1
Southline Afton-West Cut Plane Flows (MW)	1037
Southline Apache-West Cut Plane Flows (MW)	1000
Southline Saguaro/Tortolita-East Cut Plane Flows (MW)	N/A
Southline Apache-East Cut Plane Flows (MW)	N/A
Southline Midpoint West Cut Plane Flows (MW)	N/A
Path 47 Flows (MW)	1048

ATTACHMENT J –TRANSIENT STABILITY RESULTS – CASE = 01_ew_1037_1000_1048_v27_t.SAV						
OUTAGE	STABLE (Y/N)	CREATES AN ISLAND (Y/N)	ANGLE VIOLATION MACHINES OUT OF STEP (Y/N)	WORST CONDITION ANALYSIS VOLTAGE VIOLATION (Y/N)	WORST CONDITION ANALYSIS FREQUENCY VIOLATION (Y/N)	NOTES
CATEGORY A						
No Disturbance	Y	N	N	N	N	
CATEGORY B						
Bump Test - Trip of Palo Verde	Y	N	Y	N	N	Forced trip of Pale Verde
Adams 230/115kV Transformer	Y	Y	N	N	N	Radial system. Adams, Mural, Boothill 115kV isolated w/ outage
Afton 345kV Phase Shifter 1	Y	N	N	N	N	
Afton-Midpoint 345kV Line	Y	N	N	N	N	
Apache 345/230kV Transformer	Y	N	N	N	N	
Apache-Adams 230kV Line	Y	N	N	N	N	
Apache-Pantano 230kV Line	Y	N	N	N	N	
Delbac-Nogoles 230kV Line	Y	N	N	N	N	
Hidalgo-Apache 345kV Line	Y	N	N	N	N	
Marana 230/115kV Transformer	Y	N	N	N	N	
Marana-Rattle Snake 230kV Line	Y	N	N	N	N	
Midpoint-Hidalgo 345kV Line	Y	N	N	N	N	
Nogales-Adams 230kV Line	Y	N	N	N	N	
Rattle Snake 230/115kV Transformer	Y	Y	N	N	N	Radial system. Blackmtn, Brawley , Rattlsnk, Sandario, Sanxaver, Snydhill, Twinpeak 115kV isoladed w/ outage
Southline Saguaro 230/115kV Transformer #1	Y	N	N	N	N	
Southline Saguaro-Marana 230kV Line	Y	N	N	N	N	
Tortolita 500/230kV Transformer	Y	N	N	N	N	
Tucson 230/115kV Transformer	Y	N	N	N	N	
Tucson 230/DMP 138kV Transformer	Y	N	N	N	N	
Tucson 230/DMP 138kV Transformers #1 and #2	Y	N	N	N	N	
Tucson-Del Bac 230kV Line	Y	N	N	N	N	
Tucson-Rattlesnake 230kV Line	Y	N	N	N	N	
Tucson-Tortolita 230kV Line	Y	N	N	N	N	
Tucson-Vail 230kV Line	Y	N	N	N	N	
Vail 345/230kV Transformer	Y	N	N	N	N	
CATEGORY C						
Adams Tap-Apache SL & Adams Tap-Nogales 230kV Lines	Y	Y	N	N	N	Radial system. Adams, Mural, Boothill 115kV isolated w/ outage
Afton-Midpoint 345kV #1 And #2 Lines	Y	N	N	N	N	
Apache-Pantano & Adams-Nogales 230kV Lines	Y	N	N	N	N	
Apache-Pantano & Apache-Adams 230kV Lines	Y	N	N	N	N	
Hidalgo-Apache 345kV #1 And #2 Lines	Y	N	N	N	N	
Luna-Afton #1 and #2 345kV Lines w/ LAPS	Y	N	N	N	N	LAPS performed the following: tripped Dona Ana-Picacho 115kV

ATTACHMENT J –TRANSIENT STABILITY RESULTS – CASE = 01_ew_1037_1000_1048_v27_t.SAV

OUTAGE	STABLE (Y/N)	CREATES AN ISLAND (Y/N)	ANGLE VIOLATION MACHINES OUT OF STEP (Y/N)	WORST CONDITION ANALYSIS VOLTAGE VIOLATION (Y/N)	WORST CONDITION ANALYSIS FREQUENCY VIOLATION (Y/N)	NOTES
						line; dropped load at Americas, Copper, Sparks, Lane and Scottsdale1; and tripped Rio Boss shunt capacitor.
Luna-Afton & Luna 345/115kV Transformer	Y	N	N	N	N	
Luna-Afton & Luna 345/115kV Transformer - RAS Opt 1	Y	Y	N	N	N	Phelps Dodge (Pdtyrone 115kV) isolated w/ existing manual action
Luna-Afton & Luna 345/115kV Transformer - RAS Opt 2	Y	Y	N	N	N	Phelps Dodge (Pdtyrone and Ivanhoe 115kV) isolated w/ existing manual action
Luna-Hidalgo & Luna 345/115kV Transformer	Y	N	N	N	N	
Luna-Hidalgo & Luna 345/115kV Transformer - RAS Opt 1	Y	Y	N	N	N	Phelps Dodge (Ivanhoe 115kV) isolated w/ existing manual action
Luna-Hidalgo & Luna 345/115kV Transformer - RAS Opt 2	Y	Y	N	N	N	Phelps Dodge (Ivanhoe 115kV) isolated w/ existing manual action
Luna-Hidalgo & Luna 345/115kV Transformer - RAS Opt 3	Y	Y	N	N	N	Phelps Dodge (Ivanhoe 115kV) isolated w/ existing manual action
Midpoint-Hidalgo 345kV #1 And #2 Lines	Y	N	N	N	N	
Newman-Arroyo & Newman-Afton 345kV Lines w/ LAPS	Y	N	N	N	N	LAPS didn't perform any remedial actions
Newman-Picante & Newman-Afton 345kV Lines w/ LAPS	Y	N	N	N	N	LAPS didn't perform any remedial actions
Nogales-Del Bac & Adams Tap-Nogales 230kV Lines	Y	Y	N	N	N	Nogales 230kV isolated w/ outage
Pantano-Vail & Adams-Nogales 230kV Lines	Y	N	N	N	N	
Pantano-Vail & Pantano-Apache SL 230kV Lines	Y	N	N	N	N	
Rattlesnake-Tucson & Marana-Rattlesnake 230kV Lines	Y	Y	N	N	N	Radial system. Blackmtn, Brawley , Rattlsnk, Sandario, Sanxaver, Snydhill, Twinpeak 115kV isoladed w/ outage
Rattlesnake-Tucson & Vail-Tucson 230kV Lines	Y	N	N	N	N	
Saguaro SL-Marana & Marana-Rattlesnake 230kV Lines	Y	N	N	N	N	
Springerville-Vail & Greenlee-Willow 345 kV Lines	Y	N	N	N	N	
Springerville-Vail & Springerville-Greenlee 345 kV Lines	Y	N	N	N	N	
Springerville-Vail & Willow-Winchester 345 kV Lines	Y	N	N	N	N	
Springerville-Vail & Winchester-Vail 345 kV Lines	Y	N	N	N	N	
Sthln Sag-Sag East & Sthln Sag-Sag West 115kV lines	Y	N	N	N	N	
Tortolita-Tucson & Del Bac-Tucson 230kV Lines	Y	N	N	N	N	
Tortolita-Tucson & Marana-Southline Saguaro 230kV Lines	Y	N	N	N	N	
Tortolita-Tucson & Rattlesnake-Marana 230kV Lines	Y	N	N	N	N	
Tortolita-Tucson & Rattlesnake-Tucson 230kV Lines	Y	N	N	N	N	
Vail-Tucson & Adams-Nogales 230kV Lines	Y	N	N	N	N	
Vail-Tucson & Del Bac-Nogales 230kV Lines	Y	N	N	N	N	
Vail-Tucson & Vail-Pantano 230kV Lines	Y	N	N	N	N	

ATTACHMENT J –TRANSIENT STABILITY RESULTS – CASE = 01_ew_1037_1000_1048_v28oos_t.SAV, 01_ew_1037_1000_1048_v28T_oos420.SAV, 01_ew_1037_1000_1048_v28T_oos421.SAV, 01_ew_1037_1000_1048_v28T_oos422.SAV

OUTAGE	STABLE (Y/N)	CREATES AN ISLAND (Y/N)	ANGLE VIOLATION MACHINES OUT OF STEP (Y/N)	WORST CONDITION ANALYSIS VOLTAGE VIOLATION (Y/N)	WORST CONDITION ANALYSIS FREQUENCY VIOLATION (Y/N)	NOTES
CATEGORY A						
No Disturbance	Y	N	N	N	N	
CATEGORY B						
Bump Test - Trip of Palo Verde	Y	N	Y	N	N	Forced trip of Pale Verde
CATEGORY C						
Luna-Hidalgo & Luna 345/115kV Transformer	Y	N	N	N	N	
Luna-Hidalgo & Luna 345/115kV Transformer - RAS Opt 1	Y	Y	N	N	N	Phelps Dodge (Ivanhoe 115kV) isolated w/ existing manual action
Luna-Hidalgo & Luna 345/115kV Transformer - RAS Opt 2	Y	Y	N	N	N	Phelps Dodge (Ivanhoe 115kV) isolated w/ existing manual action
Luna-Hidalgo & Luna 345/115kV Transformer - RAS Opt 3	Y	Y	N	N	N	Phelps Dodge (Ivanhoe 115kV) isolated w/ existing manual action
Luna-Hidalgo & Luna 345/115kV Transformer - RAS Opt 4	Y	Y	N	N	N	Phelps Dodge (Ivanhoe 115kV) isolated w/ existing manual action
Springerville-Vail & Greenlee-Willow 345 kV Lines	Y	N	N	N	N	
Springerville-Vail & Springerville-Greenlee 345 kV Lines	Y	N	N	N	N	
Springerville-Vail & Willow-Winchester 345 kV Lines	Y	N	N	N	N	
Springerville-Vail & Winchester-Vail 345 kV Lines	Y	N	N	N	N	
CATEGORY C – DISTURBANCES WITH TOLS LOAD SHEDDING						
Springerville-Vail & Springerville-Greenlee 345 kV Lines with TOLS Load Shedding	N	N	N	N	N	Modeled with case 01_ew_1037_1000_1048_v28T_oos420.SAV
Springerville-Vail & Winchester-Vail 345 kV Lines with TOLS Load Shedding	N	N	N	N	N	Modeled with case 01_ew_1037_1000_1048_v28T_oos421.SAV
Springerville-Vail & Willow-Winchester 345 kV Lines with TOLS Load Shedding	N	N	N	N	N	Modeled with case 01_ew_1037_1000_1048_v28T_oos422.SAV

TRANSIENT STABILITY RESULTS COVER SHEET	
Direction	West–to-East
Case Series Number	2
Simultaneous Path	47
Path 47 Definition --WECC or Alternative	WECC
SunZia in Service	No
Tucson-Oracle Reconductor	No
2nd Marana Bank	No
Bowie Generation Output (MW)	350
West to East Mitigation	No
Dona Ana- Picacho 115kV 13 ohm series reactor	No
Additional Newman 345/115kV Transformer Bank	No
Southwest Power Pool Export	No
Nomogram Number	2a
Nomogram Point	1
Southline Afton-West Cut Plane Flows (MW)	N/A
Southline Apache-West Cut Plane Flows (MW)	N/A
Southline Saguaro/Tortolita-East Cut Plane Flows (MW)	421
Southline Apache-East Cut Plane Flows (MW)	165
Southline Midpoint West Cut Plane Flows (MW)	N/A
Path 47 Flows (MW)	1048

ATTACHMENT J –TRANSIENT STABILITY RESULTS – CASE = 02_we_0421_0165_1048_06TS.SAV						
OUTAGE	STABLE (Y/N)	CREATES AN ISLAND (Y/N)	ANGLE VIOLATION MACHINES OUT OF STEP (Y/N)	WORST CONDITION ANALYSIS VOLTAGE VIOLATION (Y/N)	WORST CONDITION ANALYSIS FREQUENCY VIOLATION (Y/N)	NOTES
CATEGORY A						
No Disturbance	Y	N	N	N	N	
CATEGORY B						
Bump Test - Trip of Palo Verde	Y	N	Y	N	N	Forced trip of Pale Verde
Adams 230/115kV Transformer	Y	Y	N	N	N	Radial system. Adams, Mural, Boothill 115kV isolated w/ outage
Afton 345kV Phase Shifter 1	Y	N	N	N	N	
Afton-Midpoint 345kV Line	Y	N	N	N	N	
Apache 345/230kV Transformer	Y	N	N	N	N	
Apache-Adams 230kV Line	Y	N	N	N	N	
Apache-Pantano 230kV Line	Y	N	N	N	N	
Delbac-Nogoles 230kV Line	Y	N	N	N	N	
Hidalgo-Apache 345kV Line	Y	N	N	N	N	
Marana 230/115kV Transformer	Y	N	N	N	N	
Marana-Rattle Snake 230kV Line	Y	N	N	N	N	
Midpoint-Hidalgo 345kV Line	Y	N	N	N	N	
Nogales-Adams 230kV Line	Y	N	N	N	N	
Rattle Snake 230/115kV Transformer	Y	Y	N	N	N	Radial system. Blackmtn, Brawley , Rattlsnk, Sandario, Sanxaver, Snydhill, Twinpeak 115kV isoladed w/ outage
Southline Saguaro 230/115kV Transformer #1	Y	N	N	N	N	
Southline Saguaro-Marana 230kV Line	Y	N	N	N	N	
Tortolita 500/230kV Transformer	Y	N	N	N	N	
Tucson 230/115kV Transformer	Y	N	N	N	N	
Tucson 230/DMP 138kV Transformer	Y	N	N	N	N	
Tucson 230/DMP 138kV Transformers #1 and #2	Y	N	N	N	N	
Tucson-Del Bac 230kV Line	Y	N	N	N	N	
Tucson-Rattlesnake 230kV Line	Y	N	N	N	N	
Tucson-Tortolita 230kV Line	Y	N	N	N	N	
Tucson-Vail 230kV Line	Y	N	N	N	N	
Vail 345/230kV Transformer	Y	N	N	N	N	
CATEGORY C						
Adams Tap-Apache SL & Adams Tap-Nogales 230kV Lines	Y	Y	N	N	N	Radial system. Adams, Mural, Boothill 115kV isolated w/ outage
Afton-Midpoint 345kV #1 And #2 Lines	Y	N	N	N	N	
Apache-Pantano & Adams-Nogales 230kV Lines	Y	N	N	N	N	
Apache-Pantano & Apache-Adams 230kV Lines	Y	N	N	N	N	
Hidalgo-Apache 345kV #1 And #2 Lines	Y	N	N	N	N	
Luna-Afton #1 and #2 345kV Lines w/ LAPS	Y	N	N	N	N	LAPS tripped Dona Ana-Picacho 115kV line; dropped load at Americas,

ATTACHMENT J –TRANSIENT STABILITY RESULTS – CASE = 02_we_0421_0165_1048_06TS.SAV

OUTAGE	STABLE (Y/N)	CREATES AN ISLAND (Y/N)	ANGLE VIOLATION MACHINES OUT OF STEP (Y/N)	WORST CONDITION ANALYSIS VOLTAGE VIOLATION (Y/N)	WORST CONDITION ANALYSIS FREQUENCY VIOLATION (Y/N)	NOTES
						Copper, Sparks, Ft. Blis, Horizon, Lane, Scottsdale1, and Wrangler1; and inserted Hidalgo line reactor on the Hidalgo-Greenlee 345kV line.
Luna-Afton & Luna 345/115kV Transformer	Y	N	N	N	N	
Luna-Afton & Luna 345/115kV Transformer - RAS Opt 1	Y	Y	N	N	N	Phelps Dodge (Pdtyrone 115kV) isolated w/ existing manual action
Luna-Afton & Luna 345/115kV Transformer - RAS Opt 2	Y	Y	N	N	N	Phlps Ddge (Pdtyrne and Ivanhoe 115kV) isolated w/ existing manual action
Luna-Hidalgo & Luna 345/115kV Transformer	Y	N	N	N	N	
Luna-Hidalgo & Luna 345/115kV Transformer - RAS Opt 1	Y	Y	N	N	N	Phelps Dodge (Ivanhoe 115kV) isolated w/ existing manual action
Luna-Hidalgo & Luna 345/115kV Transformer - RAS Opt 2	Y	Y	N	N	N	Phelps Dodge (Ivanhoe 115kV) isolated w/ existing manual action
Luna-Hidalgo & Luna 345/115kV Transformer - RAS Opt 3	Y	Y	N	N	N	Phelps Dodge (Ivanhoe 115kV) isolated w/ existing manual action
Luna-Hidalgo & Luna 345/115kV Transformer - RAS Opt 4	Y	Y	N	N	N	Phelps Dodge (Ivanhoe 115kV) isolated w/ existing manual action
Midpoint-Hidalgo 345kV #1 And #2 Lines	Y	N	N	N	N	
Newman-Arroyo & Newman-Afton 345kV Lines w/ LAPS	Y	N	N	N	N	LAPS didn't perform any remedial actions
Newman-Picante & Newman-Afton 345kV Lines w/ LAPS	Y	N	N	N	N	LAPS didn't perform any remedial actions
Nogales-Del Bac & Adams Tap-Nogales 230kV Lines	Y	Y	N	N	N	Nogales 230kV isolated w/ outage
Pantano-Vail & Adams-Nogales 230kV Lines	Y	N	N	N	N	
Pantano-Vail & Pantano-Apache SL 230kV Lines	Y	N	N	N	N	
Rattlesnake-Tucson & Marana-Rattlesnake 230kV Lines	Y	Y	N	N	N	Radial system. Blackmtn, Brawley , Rattlsnk, Sandario, Sanxaver, Snydhill, Twinpeak 115kV isoladed w/ outage
Rattlesnake-Tucson & Vail-Tucson 230kV Lines	Y	N	N	N	N	
Saguaro SL-Marana & Marana-Rattlesnake 230kV Lines	Y	N	N	N	N	
Springerville-Vail & Greenlee-Willow 345 kV Lines	Y	N	N	N	N	
Springerville-Vail & Springerville-Greenlee 345 kV Lines	Y	N	N	N	N	
Springerville-Vail & Willow-Winchester 345 kV Lines	Y	N	N	N	N	
Springerville-Vail & Winchester-Vail 345 kV Lines	Y	N	N	N	N	
Sthln Sag-Sag East & Sthln Sag-Sag West 115kV lines	Y	N	N	N	N	
Tortolita-Tucson & Del Bac-Tucson 230kV Lines	Y	N	N	N	N	
Tortolita-Tucson & Marana-Southline Saguaro 230kV Lines	Y	N	N	N	N	
Tortolita-Tucson & Rattlesnake-Marana 230kV Lines	Y	N	N	N	N	
Tortolita-Tucson & Rattlesnake-Tucson 230kV Lines	Y	N	N	N	N	
Vail-Tucson & Adams-Nogales 230kV Lines	Y	N	N	N	N	
Vail-Tucson & Del Bac-Nogales 230kV Lines	Y	N	N	N	N	
Vail-Tucson & Vail-Pantano 230kV Lines	Y	N	N	N	N	

ATTACHMENT J –TRANSIENT STABILITY RESULTS – CASE = 02_we_0421_0165_1048_06_OOSTS.SAV						
OUTAGE	STABLE (Y/N)	CREATES AN ISLAND (Y/N)	ANGLE VIOLATION MACHINES OUT OF STEP (Y/N)	WORST CONDITION ANALYSIS VOLTAGE VIOLATION (Y/N)	WORST CONDITION ANALYSIS FREQUENCY VIOLATION (Y/N)	NOTES
CATEGORY A						
No Disturbance	Y	N	N	N	N	
CATEGORY B						
Bump Test - Trip of Palo Verde	Y	N	Y	N	N	Forced trip of Pale Verde
CATEGORY C						
Luna-Hidalgo & Luna 345/115kV Transformer	Y	N	N	N	N	
Luna-Hidalgo & Luna 345/115kV Transformer - RAS Opt 1	Y	Y	N	N	N	Phelps Dodge (Ivanhoe 115kV) isolated w/ existing manual action
Luna-Hidalgo & Luna 345/115kV Transformer - RAS Opt 2	Y	Y	N	N	N	Phelps Dodge (Ivanhoe 115kV) isolated w/ existing manual action
Luna-Hidalgo & Luna 345/115kV Transformer - RAS Opt 3	Y	Y	N	N	N	Phelps Dodge (Ivanhoe 115kV) isolated w/ existing manual action
Luna-Hidalgo & Luna 345/115kV Transformer - RAS Opt 4	Y	Y	N	N	N	Phelps Dodge (Ivanhoe 115kV) isolated w/ existing manual action
Springerville-Vail & Greenlee-Willow 345 kV Lines	Y	N	N	N	N	
Springerville-Vail & Springerville-Greenlee 345 kV Lines	Y	N	N	N	N	
Springerville-Vail & Willow-Winchester 345 kV Lines	Y	N	N	N	N	
Springerville-Vail & Winchester-Vail 345 kV Lines	Y	N	N	N	N	

TRANSIENT STABILITY RESULTS COVER SHEET	
Direction	West–to-East
Case Series Number	2
Simultaneous Path	47
Path 47 Definition --WECC or Alternative	WECC
SunZia in Service	No
Tucson-Oracle Reconductor	No
2nd Marana Bank	No
Bowie Generation Output (MW)	350
West to East Mitigation	
Dona Ana- Picacho 115kV 13 ohm series reactor	No
Additional Newman 345/115kV Transformer Bank	No
Southwest Power Pool Export	No
Nomogram Number	2a
Nomogram Point	2
Southline Afton-West Cut Plane Flows (MW)	N/A
Southline Apache-West Cut Plane Flows (MW)	N/A
Southline Saguaro/Tortolita-East Cut Plane Flows (MW)	430
Southline Apache-East Cut Plane Flows (MW)	971
Southline Midpoint West Cut Plane Flows (MW)	N/A
Path 47 Flows (MW)	275

ATTACHMENT J –TRANSIENT STABILITY RESULTS – CASE = 02_we_0430_0971_0275_03TS.SAV						
OUTAGE	STABLE (Y/N)	CREATES AN ISLAND (Y/N)	ANGLE VIOLATION MACHINES OUT OF STEP (Y/N)	WORST CONDITION ANALYSIS VOLTAGE VIOLATION (Y/N)	WORST CONDITION ANALYSIS FREQUENCY VIOLATION (Y/N)	NOTES
CATEGORY A						
No Disturbance	Y	N	N	N	N	
CATEGORY B						
Bump Test - Trip of Palo Verde	Y	N	Y	N	N	Forced trip of Pale Verde
Adams 230/115kV Transformer	Y	Y	N	N	N	Radial system. Adams, Mural, Boothill 115kV isolated w/ outage
Afton 345kV Phase Shifter 1	Y	N	N	N	N	
Afton-Midpoint 345kV Line	Y	N	N	N	N	
Apache 345/230kV Transformer	Y	N	N	N	N	
Apache-Adams 230kV Line	Y	N	N	N	N	
Apache-Pantano 230kV Line	Y	N	N	N	N	
Delbac-Nogoles 230kV Line	Y	N	N	N	N	
Hidalgo-Apache 345kV Line	Y	N	N	N	N	
Marana 230/115kV Transformer	Y	N	N	N	N	
Marana-Rattle Snake 230kV Line	Y	N	N	N	N	
Midpoint-Hidalgo 345kV Line	Y	N	N	N	N	
Nogales-Adams 230kV Line	Y	N	N	N	N	
Rattle Snake 230/115kV Transformer	Y	Y	N	N	N	Radial system. Blackmtn, Brawley , Rattlsnk, Sandario, Sanxaver, Snydhill, Twinpeak 115kV isoladed w/ outage
Southline Saguaro 230/115kV Transformer #1	Y	N	N	N	N	
Southline Saguaro-Marana 230kV Line	Y	N	N	N	N	
Tortolita 500/230kV Transformer	Y	N	N	N	N	
Tucson 230/115kV Transformer	Y	N	N	N	N	
Tucson 230/DMP 138kV Transformer	Y	N	N	N	N	
Tucson 230/DMP 138kV Transformers #1 and #2	Y	N	N	N	N	
Tucson-Del Bac 230kV Line	Y	N	N	N	N	
Tucson-Rattlesnake 230kV Line	Y	N	N	N	N	
Tucson-Tortolita 230kV Line	Y	N	N	N	N	
Tucson-Vail 230kV Line	Y	N	N	N	N	
Vail 345/230kV Transformer	Y	N	N	N	N	
CATEGORY C						
Adams Tap-Apache SL & Adams Tap-Nogales 230kV Lines	Y	Y	N	N	N	Radial system. Adams, Mural, Boothill 115kV isolated w/ outage
Afton-Midpoint 345kV #1 And #2 Lines	Y	N	N	N	N	
Apache-Pantano & Adams-Nogales 230kV Lines	Y	N	N	N	N	
Apache-Pantano & Apache-Adams 230kV Lines	Y	N	N	N	N	
Hidalgo-Apache 345kV #1 And #2 Lines	Y	N	N	N	N	
Luna-Afton #1 and #2 345kV Lines w/ LAPS	Y	N	N	N	N	LAPS didn't perform any remedial actions

ATTACHMENT J –TRANSIENT STABILITY RESULTS – CASE = 02_we_0430_0971_0275_03TS.SAV						
OUTAGE	STABLE (Y/N)	CREATES AN ISLAND (Y/N)	ANGLE VIOLATION MACHINES OUT OF STEP (Y/N)	WORST CONDITION ANALYSIS VOLTAGE VIOLATION (Y/N)	WORST CONDITION ANALYSIS FREQUENCY VIOLATION (Y/N)	NOTES
Luna-Afton & Luna 345/115kV Transformer	Y	N	N	N	N	
Luna-Afton & Luna 345/115kV Transformer - RAS Opt 1	Y	Y	N	N	N	Phelps Dodge (Pdtyrone 115kV) isolated w/ existing manual action
Luna-Afton & Luna 345/115kV Transformer - RAS Opt 2	Y	Y	N	N	N	Phelps Dodge (Pdtyrone and Ivanhoe 115kV) isolated w/ existing manual action
Luna-Hidalgo & Luna 345/115kV Transformer	Y	N	N	N	N	
Luna-Hidalgo & Luna 345/115kV Transformer - RAS Opt 1	Y	Y	N	N	N	Phelps Dodge (Ivanhoe 115kV) isolated w/ existing manual action
Luna-Hidalgo & Luna 345/115kV Transformer - RAS Opt 2	Y	Y	N	N	N	Phelps Dodge (Ivanhoe 115kV) isolated w/ existing manual action
Luna-Hidalgo & Luna 345/115kV Transformer - RAS Opt 3	Y	Y	N	N	N	Phelps Dodge (Ivanhoe 115kV) isolated w/ existing manual action
Luna-Hidalgo & Luna 345/115kV Transformer - RAS Opt 4	Y	Y	N	N	N	Phelps Dodge (Ivanhoe 115kV) isolated w/ existing manual action
Midpoint-Hidalgo 345kV #1 And #2 Lines	Y	N	N	N	N	
Newman-Arroyo & Newman-Afton 345kV Lines w/ LAPS	Y	N	N	N	N	LAPS performed the following: dropped load at Americas, Sparks, Lane, and Scottsdale1.
Newman-Picante & Newman-Afton 345kV Lines w/ LAPS	Y	N	N	N	N	LAPS dropped load at Americas, Sparks, and Scottsdale1.
Nogales-Del Bac & Adams Tap-Nogales 230kV Lines	Y	Y	N	N	N	Nogales 230kV bus isolated w/ outage
Pantano-Vail & Adams-Nogales 230kV Lines	Y	N	N	N	N	
Pantano-Vail & Pantano-Apache SL 230kV Lines	Y	N	N	N	N	
Rattlesnake-Tucson & Marana-Rattlesnake 230kV Lines	Y	Y	N	N	N	Radial system. Blackmtn, Brawley , Rattlsnk, Sandario, Sanxaver, Snydhill, Twinpeak 115kV isoladed w/ outage
Rattlesnake-Tucson & Vail-Tucson 230kV Lines	Y	N	N	N	N	
Saguaro SL-Marana & Marana-Rattlesnake 230kV Lines	Y	N	N	N	N	
Springerville-Vail & Greenlee-Willow 345 kV Lines	Y	N	N	N	N	
Springerville-Vail & Springerville-Greenlee 345 kV Lines	Y	N	N	N	N	
Springerville-Vail & Willow-Winchester 345 kV Lines	Y	N	N	N	N	
Springerville-Vail & Winchester-Vail 345 kV Lines	Y	N	N	N	N	
Sthln Sag-Sag East & Sthln Sag-Sag West 115kV lines	Y	N	N	N	N	
Tortolita-Tucson & Del Bac-Tucson 230kV Lines	Y	N	N	N	N	
Tortolita-Tucson & Marana-Southline Saguaro 230kV Lines	Y	N	N	N	N	
Tortolita-Tucson & Rattlesnake-Marana 230kV Lines	Y	N	N	N	N	
Tortolita-Tucson & Rattlesnake-Tucson 230kV Lines	Y	N	N	N	N	
Vail-Tucson & Adams-Nogales 230kV Lines	Y	N	N	N	N	
Vail-Tucson & Del Bac-Nogales 230kV Lines	Y	N	N	N	N	
Vail-Tucson & Vail-Pantano 230kV Lines	Y	N	N	N	N	

ATTACHMENT J –TRANSIENT STABILITY RESULTS – CASE = 02_we_0430_0971_0275_03_OOSTS.SAV						
OUTAGE	STABLE (Y/N)	CREATES AN ISLAND (Y/N)	ANGLE VIOLATION MACHINES OUT OF STEP (Y/N)	WORST CONDITION ANALYSIS VOLTAGE VIOLATION (Y/N)	WORST CONDITION ANALYSIS FREQUENCY VIOLATION (Y/N)	NOTES
CATEGORY A						
No Disturbance	Y	N	N	N	N	
CATEGORY B						
Bump Test - Trip of Palo Verde	Y	N	Y	N	N	Forced trip of Pale Verde
CATEGORY C						
Luna-Hidalgo & Luna 345/115kV Transformer	Y	N	N	N	N	
Luna-Hidalgo & Luna 345/115kV Transformer - RAS Opt 1	Y	Y	N	N	N	Phelps Dodge (Ivanhoe 115kV) isolated w/ existing manual action
Luna-Hidalgo & Luna 345/115kV Transformer - RAS Opt 2	Y	Y	N	N	N	Phelps Dodge (Ivanhoe 115kV) isolated w/ existing manual action
Luna-Hidalgo & Luna 345/115kV Transformer - RAS Opt 3	Y	Y	N	N	N	Phelps Dodge (Ivanhoe 115kV) isolated w/ existing manual action
Luna-Hidalgo & Luna 345/115kV Transformer - RAS Opt 4	Y	Y	N	N	N	Phelps Dodge (Ivanhoe 115kV) isolated w/ existing manual action
Springerville-Vail & Greenlee-Willow 345 kV Lines	Y	N	N	N	N	
Springerville-Vail & Springerville-Greenlee 345 kV Lines	Y	N	N	N	N	
Springerville-Vail & Willow-Winchester 345 kV Lines	Y	N	N	N	N	
Springerville-Vail & Winchester-Vail 345 kV Lines	Y	N	N	N	N	

TRANSIENT STABILITY RESULTS COVER SHEET	
Direction	West–to-East
Case Series Number	2
Simultaneous Path	47
Path 47 Definition --WECC or Alternative	WECC
SunZia in Service	No
Tucson-Oracle Reconductor	No
2nd Marana Bank	No
Bowie Generation Output (MW)	350
West to East Mitigation	Yes
Dona Ana- Picacho 115kV 13 ohm series reactor	Yes
Additional Newman 345/115kV Transformer Bank	Yes
Southwest Power Pool Export	Yes
Nomogram Number	2b
Nomogram Point	1M
Southline Afton-West Cut Plane Flows (MW)	N/A
Southline Apache-West Cut Plane Flows (MW)	N/A
Southline Saguaro/Tortolita-East Cut Plane Flows (MW)	435
Southline Apache-East Cut Plane Flows (MW)	436
Southline Midpoint West Cut Plane Flows (MW)	N/A
Path 47 Flows (MW)	1048

ATTACHMENT J –TRANSIENT STABILITY RESULTS – CASE = 02_WE_0435_0436_1048_01TS.SAV						
OUTAGE	STABLE (Y/N)	CREATES AN ISLAND (Y/N)	ANGLE VIOLATION MACHINES OUT OF STEP (Y/N)	WORST CONDITION ANALYSIS VOLTAGE VIOLATION (Y/N)	WORST CONDITION ANALYSIS FREQUENCE VIOLATION (Y/N)	NOTES
CATEGORY A						
No Disturbance	Y	N	N	N	N	
CATEGORY B						
Bump Test - Trip of Palo Verde	Y	N	Y	N	N	Forced trip of Pale Verde
Adams 230/115kV Transformer	Y	Y	N	N	N	Radial system. Adams, Mural, Boothill 115kV isolated w/ outage
Afton 345kV Phase Shifter 1	Y	N	N	N	N	
Afton-Midpoint 345kV Line	Y	N	N	N	N	
Apache 345/230kV Transformer	Y	N	N	N	N	
Apache-Adams 230kV Line	Y	N	N	N	N	
Apache-Pantano 230kV Line	Y	N	N	N	N	
Delbac-Nogoles 230kV Line	Y	N	N	N	N	
Hidalgo-Apache 345kV Line	Y	N	N	N	N	
Marana 230/115kV Transformer	Y	N	N	N	N	
Marana-Rattle Snake 230kV Line	Y	N	N	N	N	
Midpoint-Hidalgo 345kV Line	Y	N	N	N	N	
Nogales-Adams 230kV Line	Y	N	N	N	N	
Rattle Snake 230/115kV Transformer	Y	Y	N	N	N	Radial system. Blackmtn, Brawley , Rattlsnk, Sandario, Sanxaver, Snydhill, Twinpeak 115kV isoladed w/ outage
Southline Saguaro 230/115kV Transformer #1	Y	N	N	N	N	
Southline Saguaro-Marana 230kV Line	Y	N	N	N	N	
Tortolita 500/230kV Transformer	Y	N	N	N	N	
Tucson 230/115kV Transformer	Y	N	N	N	N	
Tucson 230/DMP 138kV Transformer	Y	N	N	N	N	
Tucson 230/DMP 138kV Transformers #1 and #2	Y	N	N	N	N	
Tucson-Del Bac 230kV Line	Y	N	N	N	N	
Tucson-Rattlesnake 230kV Line	Y	N	N	N	N	
Tucson-Tortolita 230kV Line	Y	N	N	N	N	
Tucson-Vail 230kV Line	Y	N	N	N	N	
Vail 345/230kV Transformer	Y	N	N	N	N	
CATEGORY C						
Adams Tap-Apache SL & Adams Tap-Nogales 230kV Lines	Y	Y	N	N	N	Radial system. Adams, Mural, Boothill 115kV isolated w/ outage
Afton-Midpoint 345kV #1 And #2 Lines	Y	N	N	N	N	
Apache-Pantano & Adams-Nogales 230kV Lines	Y	N	N	N	N	
Apache-Pantano & Apache-Adams 230kV Lines	Y	N	N	N	N	
Hidalgo-Apache 345kV #1 And #2 Lines	Y	N	N	N	N	
Luna-Afton #1 and #2 345kV Lines w/ LAPS	Y	N	N	N	N	LAPS performed the following: tripped Dona Ana-Picacho 115kV

ATTACHMENT J –TRANSIENT STABILITY RESULTS – CASE = 02_WE_0435_0436_1048_01TS.SAV						
OUTAGE	STABLE (Y/N)	CREATES AN ISLAND (Y/N)	ANGLE VIOLATION MACHINES OUT OF STEP (Y/N)	WORST CONDITION ANALYSIS VOLTAGE VIOLATION (Y/N)	WORST CONDITION ANALYSIS FREQUENCE VIOLATION (Y/N)	NOTES
						line; cut exports to Eddy County; dropped load at Americas, Sparks, Lane, and Scottsdale1; and inserted Luna line reactor on the Luna-Hidalgo 345kV line.
Luna-Afton & Luna 345/115kV Transformer	Y	N	N	N	N	
Luna-Afton & Luna 345/115kV Transformer - RAS Opt 1	Y	Y	N	N	N	Phelps Dodge (Pdtyrone 115kV) isolated w/ existing manual action
Luna-Afton & Luna 345/115kV Transformer - RAS Opt 2	Y	Y	N	N	N	Phelps Dodge (Pdtyrone and Ivanhoe 115kV) isolated w/ existing manual action
Luna-Hidalgo & Luna 345/115kV Transformer	Y	N	N	N	N	
Luna-Hidalgo & Luna 345/115kV Transformer - RAS Opt 1	Y	Y	N	N	N	Phelps Dodge (Ivanhoe 115kV) isolated w/ existing manual action
Luna-Hidalgo & Luna 345/115kV Transformer - RAS Opt 2	Y	Y	N	N	N	Phelps Dodge (Ivanhoe 115kV) isolated w/ existing manual action
Luna-Hidalgo & Luna 345/115kV Transformer - RAS Opt 3	Y	Y	N	N	N	Phelps Dodge (Ivanhoe 115kV) isolated w/ existing manual action
Luna-Hidalgo & Luna 345/115kV Transformer - RAS Opt 4	Y	Y	N	N	N	Phelps Dodge (Ivanhoe 115kV) isolated w/ existing manual action
Midpoint-Hidalgo 345kV #1 And #2 Lines	Y	N	N	N	N	
Newman-Arroyo & Newman-Afton 345kV Lines w/ LAPS	Y	N	N	N	N	LAPS performed the following: cut exports to Eddy County; dropped load at Americas, Copper, Sparks, Ft. Blis, Horizon, Lane, Scottsdale1, and Wrangler1; and inserted Luna line reactor on the Luna-Hidalgo 345kV line.
Newman-Picante & Newman-Afton 345kV Lines w/ LAPS	Y	N	N	N	N	LAPS cut exports to Eddy County.
Nogales-Del Bac & Adams Tap-Nogales 230kV Lines	Y	Y	N	N	N	Nogales 230kV bus isolated w/ outage
Pantano-Vail & Adams-Nogales 230kV Lines	Y	N	N	N	N	
Pantano-Vail & Pantano-Apache SL 230kV Lines	Y	N	N	N	N	
Rattlesnake-Tucson & Marana-Rattlesnake 230kV Lines	Y	Y	N	N	N	Radial system. Blackmtn, Brawley , Rattlsnk, Sandario, Sanxaver, Snydhill, Twinpeak 115kV isoladed w/ outage
Rattlesnake-Tucson & Vail-Tucson 230kV Lines	Y	N	N	N	N	
Saguaro SL-Marana & Marana-Rattlesnake 230kV Lines	Y	N	N	N	N	
Springerville-Vail & Greenlee-Willow 345 kV Lines	Y	N	N	N	N	
Springerville-Vail & Springerville-Greenlee 345 kV Lines	Y	N	N	N	N	
Springerville-Vail & Willow-Winchester 345 kV Lines	Y	N	N	N	N	
Springerville-Vail & Winchester-Vail 345 kV Lines	Y	N	N	N	N	
Sthln Sag-Sag East & Sthln Sag-Sag West 115kV lines	Y	N	N	N	N	
Tortolita-Tucson & Del Bac-Tucson 230kV Lines	Y	N	N	N	N	
Tortolita-Tucson & Marana-Southline Saguaro 230kV Lines	Y	N	N	N	N	
Tortolita-Tucson & Rattlesnake-Marana 230kV Lines	Y	N	N	N	N	
Tortolita-Tucson & Rattlesnake-Tucson 230kV Lines	Y	N	N	N	N	
Vail-Tucson & Adams-Nogales 230kV Lines	Y	N	N	N	N	
Vail-Tucson & Del Bac-Nogales 230kV Lines	Y	N	N	N	N	

ATTACHMENT J –TRANSIENT STABILITY RESULTS – CASE = 02_WE_0435_0436_1048_01TS.SAV						
OUTAGE	STABLE (Y/N)	CREATES AN ISLAND (Y/N)	ANGLE VIOLATION MACHINES OUT OF STEP (Y/N)	WORST CONDITION ANALYSIS VOLTAGE VIOLATION (Y/N)	WORST CONDITION ANALYSIS FREQUENCE VIOLATION (Y/N)	NOTES
Vail-Tucson & Vail-Pantano 230kV Lines	Y	N	N	N	N	

ATTACHMENT J –TRANSIENT STABILITY RESULTS – CASE = 02_WE_0435_0436_1048_01OOSTS.SAV						
OUTAGE	STABLE (Y/N)	CREATES AN ISLAND (Y/N)	ANGLE VIOLATION MACHINES OUT OF STEP (Y/N)	WORST CONDITION ANALYSIS VOLTAGE VIOLATION (Y/N)	WORST CONDITION ANALYSIS FREQUENCE VIOLATION (Y/N)	NOTES
CATEGORY A						
No Disturbance	Y	N	N	N	N	
CATEGORY B						
Bump Test - Trip of Palo Verde	Y	N	Y	N	N	Forced trip of Pale Verde
CATEGORY C						
Luna-Hidalgo & Luna 345/115kV Transformer	Y	N	N	N	N	
Luna-Hidalgo & Luna 345/115kV Transformer - RAS Opt 1	Y	Y	N	N	N	Phelps Dodge (Ivanhoe 115kV) isolated w/ existing manual action
Luna-Hidalgo & Luna 345/115kV Transformer - RAS Opt 2	Y	Y	N	N	N	Phelps Dodge (Ivanhoe 115kV) isolated w/ existing manual action
Luna-Hidalgo & Luna 345/115kV Transformer - RAS Opt 3	Y	Y	N	N	N	Phelps Dodge (Ivanhoe 115kV) isolated w/ existing manual action
Luna-Hidalgo & Luna 345/115kV Transformer - RAS Opt 4	Y	Y	N	N	N	Phelps Dodge (Ivanhoe 115kV) isolated w/ existing manual action
Springerville-Vail & Greenlee-Willow 345 kV Lines	Y	N	N	N	N	
Springerville-Vail & Springerville-Greenlee 345 kV Lines	Y	N	N	N	N	
Springerville-Vail & Willow-Winchester 345 kV Lines	Y	N	N	N	N	
Springerville-Vail & Winchester-Vail 345 kV Lines	Y	N	N	N	N	

TRANSIENT STABILITY RESULTS COVER SHEET	
Direction	West–to-East
Case Series Number	2
Simultaneous Path	47
Path 47 Definition --WECC or Alternative	WECC
SunZia in Service	No
Tucson-Oracle Reconductor	No
2nd Marana Bank	No
Bowie Generation Output (MW)	350
West to East Mitigation	Yes
Dona Ana- Picacho 115kV 13 ohm series reactor	Yes
Additional Newman 345/115kV Transformer Bank	Yes
Southwest Power Pool Export	Yes
Nomogram Number	2b
Nomogram Point	2M
Southline Afton-West Cut Plane Flows (MW)	N/A
Southline Apache-West Cut Plane Flows (MW)	N/A
Southline Saguaro/Tortolita-East Cut Plane Flows (MW)	445
Southline Apache-East Cut Plane Flows (MW)	971
Southline Midpoint West Cut Plane Flows (MW)	N/A
Path 47 Flows (MW)	489

ATTACHMENT J –TRANSIENT STABILITY RESULTS – CASE = 02_we_0445_0971_0489_01TS.SAV						
OUTAGE	STABLE (Y/N)	CREATES AN ISLAND (Y/N)	ANGLE VIOLATION MACHINES OUT OF STEP (Y/N)	WORST CONDITION ANALYSIS VOLTAGE VIOLATION (Y/N)	WORST CONDITION ANALYSIS FREQUENCY VIOLATION (Y/N)	NOTES
CATEGORY A						
No Disturbance	Y	N	N	N	N	
CATEGORY B						
Bump Test - Trip of Palo Verde	Y	N	Y	N	N	Forced trip of Pale Verde
Adams 230/115kV Transformer	Y	Y	N	N	N	Radial system. Adams, Mural, Boothill 115kV isolated w/ outage
Afton 345kV Phase Shifter 1	Y	N	N	N	N	
Afton-Midpoint 345kV Line	Y	N	N	N	N	
Apache 345/230kV Transformer	Y	N	N	N	N	
Apache-Adams 230kV Line	Y	N	N	N	N	
Apache-Pantano 230kV Line	Y	N	N	N	N	
Delbac-Nogoles 230kV Line	Y	N	N	N	N	
Hidalgo-Apache 345kV Line	Y	N	N	N	N	
Marana 230/115kV Transformer	Y	N	N	N	N	
Marana-Rattle Snake 230kV Line	Y	N	N	N	N	
Midpoint-Hidalgo 345kV Line	Y	N	N	N	N	
Nogales-Adams 230kV Line	Y	N	N	N	N	
Rattle Snake 230/115kV Transformer	Y	Y	N	N	N	Radial system. Blackmtn, Brawley , Rattlsnk, Sandario, Sanxaver, Snydhill, Twinpeak 115kV isoladed w/ outage
Southline Saguaro 230/115kV Transformer #1	Y	N	N	N	N	
Southline Saguaro-Marana 230kV Line	Y	N	N	N	N	
Tortolita 500/230kV Transformer	Y	N	N	N	N	
Tucson 230/115kV Transformer	Y	N	N	N	N	
Tucson 230/DMP 138kV Transformer	Y	N	N	N	N	
Tucson 230/DMP 138kV Transformers #1 and #2	Y	N	N	N	N	
Tucson-Del Bac 230kV Line	Y	N	N	N	N	
Tucson-Rattlesnake 230kV Line	Y	N	N	N	N	
Tucson-Tortolita 230kV Line	Y	N	N	N	N	
Tucson-Vail 230kV Line	Y	N	N	N	N	
Vail 345/230kV Transformer	Y	N	N	N	N	
CATEGORY C						
Adams Tap-Apache SL & Adams Tap-Nogales 230kV Lines	Y	Y	N	N	N	Radial system. Adams, Mural, Boothill 115kV isolated w/ outage
Afton-Midpoint 345kV #1 And #2 Lines	Y	N	N	N	N	
Apache-Pantano & Adams-Nogales 230kV Lines	Y	N	N	N	N	
Apache-Pantano & Apache-Adams 230kV Lines	Y	N	N	N	N	
Hidalgo-Apache 345kV #1 And #2 Lines	Y	N	N	N	N	
Luna-Afton #1 and #2 345kV Lines w/ LAPS	Y	N	N	N	N	LAPS did'nt perform any remedial action

ATTACHMENT J –TRANSIENT STABILITY RESULTS – CASE = 02_we_0445_0971_0489_01TS.SAV

OUTAGE	STABLE (Y/N)	CREATES AN ISLAND (Y/N)	ANGLE VIOLATION MACHINES OUT OF STEP (Y/N)	WORST CONDITION ANALYSIS VOLTAGE VIOLATION (Y/N)	WORST CONDITION ANALYSIS FREQUENCY VIOLATION (Y/N)	NOTES
Luna-Afton & Luna 345/115kV Transformer	Y	N	N	N	N	
Luna-Afton & Luna 345/115kV Transformer - RAS Opt 1	Y	Y	N	N	N	Phelps Dodge (Pdtyrone 115kV) isolated w/ existing manual action
Luna-Afton & Luna 345/115kV Transformer - RAS Opt 2	Y	Y	N	N	N	Phlps Ddge (Pdtyrn & Ivnho 115kV) isolated w/ exstng manual action
Luna-Hidalgo & Luna 345/115kV Transformer	Y	N	N	N	N	
Luna-Hidalgo & Luna 345/115kV Transformer - RAS Opt 1	Y	Y	N	N	N	Phelps Dodge (Ivanhoe 115kV) isolated w/ existing manual action
Luna-Hidalgo & Luna 345/115kV Transformer - RAS Opt 2	Y	Y	N	N	N	Phelps Dodge (Ivanhoe 115kV) isolated w/ existing manual action
Luna-Hidalgo & Luna 345/115kV Transformer - RAS Opt 3	Y	Y	N	N	N	Phelps Dodge (Ivanhoe 115kV) isolated w/ existing manual action
Luna-Hidalgo & Luna 345/115kV Transformer - RAS Opt 4	Y	Y	N	N	N	Phelps Dodge (Ivanhoe 115kV) isolated w/ existing manual action
Midpoint-Hidalgo 345kV #1 And #2 Lines	Y	N	N	N	N	
Newman-Arroyo & Newman-Afton 345kV Lines w/ LAPS	Y	N	N	N	N	LAPS performed the following: cut exports to Eddy County; dropped load at Americas, Copper, Sparks, Lane, Scottsdale1, and Wrangler1; and inserted Luna line reactor on the Luna-Hidalgo 345kV line.
Newman-Picante & Newman-Afton 345kV Lines w/ LAPS	Y	N	N	N	N	LAPS cut exports to Eddy County.
Nogales-Del Bac & Adams Tap-Nogales 230kV Lines	Y	Y	N	N	N	Nogales 230kV bus isolated w/ outage
Pantano-Vail & Adams-Nogales 230kV Lines	Y	N	N	N	N	
Pantano-Vail & Pantano-Apache SL 230kV Lines	Y	N	N	N	N	
Rattlesnake-Tucson & Marana-Rattlesnake 230kV Lines	Y	Y	N	N	N	Radial system. Blackmtn, Brawley , Rattlsnk, Sandario, Sanxaver, Snydhill, Twinpeak 115kV isoladed w/ outage
Rattlesnake-Tucson & Vail-Tucson 230kV Lines	Y	N	N	N	N	
Saguaro SL-Marana & Marana-Rattlesnake 230kV Lines	Y	N	N	N	N	
Springerville-Vail & Greenlee-Willow 345 kV Lines	Y	N	N	N	N	
Springerville-Vail & Springerville-Greenlee 345 kV Lines	Y	N	N	N	N	
Springerville-Vail & Willow-Winchester 345 kV Lines	Y	N	N	N	N	
Springerville-Vail & Winchester-Vail 345 kV Lines	Y	N	N	N	N	
Sthln Sag-Sag East & Sthln Sag-Sag West 115kV lines	Y	N	N	N	N	
Tortolita-Tucson & Del Bac-Tucson 230kV Lines	Y	N	N	N	N	
Tortolita-Tucson & Marana-Southline Saguaro 230kV Lines	Y	N	N	N	N	
Tortolita-Tucson & Rattlesnake-Marana 230kV Lines	Y	N	N	N	N	
Tortolita-Tucson & Rattlesnake-Tucson 230kV Lines	Y	N	N	N	N	
Vail-Tucson & Adams-Nogales 230kV Lines	Y	N	N	N	N	
Vail-Tucson & Del Bac-Nogales 230kV Lines	Y	N	N	N	N	
Vail-Tucson & Vail-Pantano 230kV Lines	Y	N	N	N	N	

ATTACHMENT J –TRANSIENT STABILITY RESULTS – CASE = 02_we_0445_0971_0489_01_OOSTS.SAV						
OUTAGE	STABLE (Y/N)	CREATES AN ISLAND (Y/N)	ANGLE VIOLATION MACHINES OUT OF STEP (Y/N)	WORST CONDITION ANALYSIS VOLTAGE VIOLATION (Y/N)	WORST CONDITION ANALYSIS FREQUENCY VIOLATION (Y/N)	NOTES
CATEGORY A						
No Disturbance	Y	N	N	N	N	
CATEGORY B						
Bump Test - Trip of Palo Verde	Y	N	Y	N	N	Forced trip of Pale Verde
CATEGORY C						
Luna-Hidalgo & Luna 345/115kV Transformer	Y	N	N	N	N	
Luna-Hidalgo & Luna 345/115kV Transformer - RAS Opt 1	Y	Y	N	N	N	Phelps Dodge (Ivanhoe 115kV) isolated w/ existing manual action
Luna-Hidalgo & Luna 345/115kV Transformer - RAS Opt 2	Y	Y	N	N	N	Phelps Dodge (Ivanhoe 115kV) isolated w/ existing manual action
Luna-Hidalgo & Luna 345/115kV Transformer - RAS Opt 3	Y	Y	N	N	N	Phelps Dodge (Ivanhoe 115kV) isolated w/ existing manual action
Luna-Hidalgo & Luna 345/115kV Transformer - RAS Opt 4	Y	Y	N	N	N	Phelps Dodge (Ivanhoe 115kV) isolated w/ existing manual action
Springerville-Vail & Greenlee-Willow 345 kV Lines	Y	N	N	N	N	
Springerville-Vail & Springerville-Greenlee 345 kV Lines	Y	N	N	N	N	
Springerville-Vail & Willow-Winchester 345 kV Lines	Y	N	N	N	N	
Springerville-Vail & Winchester-Vail 345 kV Lines	Y	N	N	N	N	

TRANSIENT STABILITY RESULTS COVER SHEET	
Direction	West–to-East
Case Series Number	16
Simultaneous Path	47
Path 47 Definition --WECC or Alternative	WECC
SunZia in Service	No
Tucson-Oracle Reconductor	Yes
2nd Marana Bank	No
Bowie Generation Output (MW)	350
West to East Mitigation	No
Dona Ana- Picacho 115kV 13 ohm series reactor	No
Additional Newman 345/115kV Transformer Bank	No
Southwest Power Pool Export	No
Nomogram Number	16a
Nomogram Point	1
Southline Afton-West Cut Plane Flows (MW)	N/A
Southline Apache-West Cut Plane Flows (MW)	N/A
Southline Saguaro/Tortolita-East Cut Plane Flows (MW)	715
Southline Apache-East Cut Plane Flows (MW)	165
Southline Midpoint West Cut Plane Flows (MW)	N/A
Path 47 Flows (MW)	1048

ATTACHMENT J –TRANSIENT STABILITY RESULTS – CASE = 16_we_0715_0165_1048_02TS.SAV						
OUTAGE	STABLE (Y/N)	CREATES AN ISLAND (Y/N)	ANGLE VIOLATION MACHINES OUT OF STEP (Y/N)	WORST CONDITION ANALYSIS VOLTAGE VIOLATION (Y/N)	WORST CONDITION ANALYSIS FREQUENCY VIOLATION (Y/N)	NOTES
CATEGORY A						
No Disturbance	Y	N	N	N	N	
CATEGORY B						
Bump Test - Trip of Palo Verde	Y	N	Y	N	N	Forced trip of Pale Verde
Adams 230/115kV Transformer	Y	Y	N	N	N	Radial system. Adams, Mural, Boothill 115kV isolated w/ outage
Afton 345kV Phase Shifter 1	Y	N	N	N	N	
Afton-Midpoint 345kV Line	Y	N	N	N	N	
Apache 345/230kV Transformer	Y	N	N	N	N	
Apache-Adams 230kV Line	Y	N	N	N	N	
Apache-Pantano 230kV Line	Y	N	N	N	N	
Delbac-Nogoles 230kV Line	Y	N	N	N	N	
Hidalgo-Apache 345kV Line	Y	N	N	N	N	
Marana 230/115kV Transformer	Y	N	N	N	N	
Marana-Rattle Snake 230kV Line	Y	N	N	N	N	
Midpoint-Hidalgo 345kV Line	Y	N	N	N	N	
Nogales-Adams 230kV Line	Y	N	N	N	N	
Rattle Snake 230/115kV Transformer	Y	Y	N	N	N	Radial system. Blackmtn, Brawley , Rattlsnk, Sandario, Sanxaver, Snydhill, Twinpeak 115kV isoladed w/ outage
Southline Saguaro 230/115kV Transformer #1	Y	N	N	N	N	
Southline Saguaro-Marana 230kV Line	Y	N	N	N	N	
Tortolita 500/230kV Transformer	Y	N	N	N	N	
Tucson 230/115kV Transformer	Y	N	N	N	N	
Tucson 230/DMP 138kV Transformer	Y	N	N	N	N	
Tucson 230/DMP 138kV Transformers #1 and #2	Y	N	N	N	N	
Tucson-Del Bac 230kV Line	Y	N	N	N	N	
Tucson-Rattlesnake 230kV Line	Y	N	N	N	N	
Tucson-Tortolita 230kV Line	Y	N	N	N	N	
Tucson-Vail 230kV Line	Y	N	N	N	N	
Vail 345/230kV Transformer	Y	N	N	N	N	
CATEGORY C						
Adams Tap-Apache SL & Adams Tap-Nogales 230kV Lines	Y	Y	N	N	N	Radial system. Adams, Mural, Boothill 115kV isolated w/ outage
Afton-Midpoint 345kV #1 And #2 Lines	Y	N	N	N	N	
Apache-Pantano & Adams-Nogales 230kV Lines	Y	N	N	N	N	
Apache-Pantano & Apache-Adams 230kV Lines	Y	N	N	N	N	
Hidalgo-Apache 345kV #1 And #2 Lines	Y	N	N	N	N	
Luna-Afton #1 and #2 345kV Lines w/ LAPS	Y	N	N	N	N	LAPS performed the following: tripped Dona Ana-Picacho 115kV

ATTACHMENT J –TRANSIENT STABILITY RESULTS – CASE = 16_we_0715_0165_1048_02TS.SAV

OUTAGE	STABLE (Y/N)	CREATES AN ISLAND (Y/N)	ANGLE VIOLATION MACHINES OUT OF STEP (Y/N)	WORST CONDITION ANALYSIS VOLTAGE VIOLATION (Y/N)	WORST CONDITION ANALYSIS FREQUENCY VIOLATION (Y/N)	NOTES
						line; dropped load at Americas, Copper, Sparks, Ft. Blis, Horizon, Lane, Scottsdale1, Shearman and Wrangler1..
Luna-Afton & Luna 345/115kV Transformer	Y	N	N	N	N	
Luna-Afton & Luna 345/115kV Transformer - RAS Opt 1	Y	Y	N	N	N	Phelps Dodge (Pdtyrone 115kV) isolated w/ existing manual action
Luna-Afton & Luna 345/115kV Transformer - RAS Opt 2	Y	Y	N	N	N	Phelps Ddge (Pdtyrne and Ivanhoe 115kV) isolated w/ existing manual action
Luna-Hidalgo & Luna 345/115kV Transformer	Y	N	N	N	N	
Luna-Hidalgo & Luna 345/115kV Transformer - RAS Opt 1	Y	Y	N	N	N	Phelps Dodge (Ivanhoe 115kV) isolated w/ existing manual action
Luna-Hidalgo & Luna 345/115kV Transformer - RAS Opt 2	Y	Y	N	N	N	Phelps Dodge (Ivanhoe 115kV) isolated w/ existing manual action
Luna-Hidalgo & Luna 345/115kV Transformer - RAS Opt 3	Y	Y	N	N	N	Phelps Dodge (Ivanhoe 115kV) isolated w/ existing manual action
Luna-Hidalgo & Luna 345/115kV Transformer - RAS Opt 4	Y	Y	N	N	N	Phelps Dodge (Ivanhoe 115kV) isolated w/ existing manual action
Midpoint-Hidalgo 345kV #1 And #2 Lines	Y	N	N	N	N	
Newman-Arroyo & Newman-Afton 345kV Lines w/ LAPS	Y	N	N	N	N	LAPS didn't perform any remedial actions.
Newman-Picante & Newman-Afton 345kV Lines w/ LAPS	Y	N	N	N	N	LAPS didn't perform any remedial actions.
Nogales-Del Bac & Adams Tap-Nogales 230kV Lines	Y	Y	N	N	N	Nogales 230kV isolated w/ outage
Pantano-Vail & Adams-Nogales 230kV Lines	Y	N	N	N	N	
Pantano-Vail & Pantano-Apache SL 230kV Lines	Y	N	N	N	N	
Rattlesnake-Tucson & Marana-Rattlesnake 230kV Lines	Y	Y	N	N	N	Radial system. Blackmtn, Brawley , Rattlsnk, Sandario, Sanxaver, Snydhill, Twinpeak 115kV isoladed w/ outage
Rattlesnake-Tucson & Vail-Tucson 230kV Lines	Y	N	N	N	N	
Saguaro SL-Marana & Marana-Rattlesnake 230kV Lines	Y	N	N	N	N	
Springerville-Vail & Greenlee-Willow 345 kV Lines	Y	N	N	N	N	
Springerville-Vail & Springerville-Greenlee 345 kV Lines	Y	N	N	N	N	
Springerville-Vail & Willow-Winchester 345 kV Lines	Y	N	N	N	N	
Springerville-Vail & Winchester-Vail 345 kV Lines	Y	N	N	N	N	
Sthln Sag-Sag East & Sthln Sag-Sag West 115kV lines	Y	N	N	N	N	
Tortolita-Tucson & Del Bac-Tucson 230kV Lines	Y	N	N	N	N	
Tortolita-Tucson & Marana-Southline Saguaro 230kV Lines	Y	N	N	N	N	
Tortolita-Tucson & Rattlesnake-Marana 230kV Lines	Y	N	N	N	N	
Tortolita-Tucson & Rattlesnake-Tucson 230kV Lines	Y	N	N	N	N	
Vail-Tucson & Adams-Nogales 230kV Lines	Y	N	N	N	N	
Vail-Tucson & Del Bac-Nogales 230kV Lines	Y	N	N	N	N	
Vail-Tucson & Vail-Pantano 230kV Lines	Y	N	N	N	N	

ATTACHMENT J –TRANSIENT STABILITY RESULTS – CASE = 16_we_0715_0165_1048_02_OOSTS.SAV						
OUTAGE	STABLE (Y/N)	CREATES AN ISLAND (Y/N)	ANGLE VIOLATION MACHINES OUT OF STEP (Y/N)	WORST CONDITION ANALYSIS VOLTAGE VIOLATION (Y/N)	WORST CONDITION ANALYSIS FREQUENCY VIOLATION (Y/N)	NOTES
CATEGORY A						
No Disturbance	Y	N	N	N	N	
CATEGORY B						
Bump Test - Trip of Palo Verde	Y	N	Y	N	N	Forced trip of Pale Verde
CATEGORY C						
Luna-Hidalgo & Luna 345/115kV Transformer	Y	N	N	N	N	
Luna-Hidalgo & Luna 345/115kV Transformer - RAS Opt 1	Y	Y	N	N	N	Phelps Dodge (Ivanhoe 115kV) isolated w/ existing manual action
Luna-Hidalgo & Luna 345/115kV Transformer - RAS Opt 2	Y	Y	N	N	N	Phelps Dodge (Ivanhoe 115kV) isolated w/ existing manual action
Luna-Hidalgo & Luna 345/115kV Transformer - RAS Opt 3	Y	Y	N	N	N	Phelps Dodge (Ivanhoe 115kV) isolated w/ existing manual action
Luna-Hidalgo & Luna 345/115kV Transformer - RAS Opt 4	Y	Y	N	N	N	Phelps Dodge (Ivanhoe 115kV) isolated w/ existing manual action
Springerville-Vail & Greenlee-Willow 345 kV Lines	Y	N	N	N	N	
Springerville-Vail & Springerville-Greenlee 345 kV Lines	Y	N	N	N	N	
Springerville-Vail & Willow-Winchester 345 kV Lines	Y	N	N	N	N	
Springerville-Vail & Winchester-Vail 345 kV Lines	Y	N	N	N	N	

TRANSIENT STABILITY RESULTS COVER SHEET	
Direction	West–to-East
Case Series Number	16
Simultaneous Path	47
Path 47 Definition --WECC or Alternative	WECC
SunZia in Service	No
Tucson-Oracle Reconductor	Yes
2nd Marana Bank	No
Bowie Generation Output (MW)	350
West to East Mitigation	No
Dona Ana- Picacho 115kV 13 ohm series reactor	No
Additional Newman 345/115kV Transformer Bank	No
Southwest Power Pool Export	No
Nomogram Number	16a
Nomogram Point	2
Southline Afton-West Cut Plane Flows (MW)	N/A
Southline Apache-West Cut Plane Flows (MW)	N/A
Southline Saguaro/Tortolita-East Cut Plane Flows (MW)	715
Southline Apache-East Cut Plane Flows (MW)	971
Southline Midpoint West Cut Plane Flows (MW)	N/A
Path 47 Flows (MW)	275

ATTACHMENT J –TRANSIENT STABILITY RESULTS – CASE = 16_we_0715_0971_0275_02TS.SAV						
OUTAGE	STABLE (Y/N)	CREATES AN ISLAND (Y/N)	ANGLE VIOLATION MACHINES OUT OF STEP (Y/N)	WORST CONDITION ANALYSIS VOLTAGE VIOLATION (Y/N)	WORST CONDITION ANALYSIS FREQUENCY VIOLATION (Y/N)	NOTES
CATEGORY A						
No Disturbance	Y	N	N	N	N	
CATEGORY B						
Bump Test - Trip of Palo Verde	Y	N	Y	N	N	Forced trip of Pale Verde
Adams 230/115kV Transformer	Y	Y	N	N	N	Radial system. Adams, Mural, Boothill 115kV isolated w/ outage
Afton 345kV Phase Shifter 1	Y	N	N	N	N	
Afton-Midpoint 345kV Line	Y	N	N	N	N	
Apache 345/230kV Transformer	Y	N	N	N	N	
Apache-Adams 230kV Line	Y	N	N	N	N	
Apache-Pantano 230kV Line	Y	N	N	N	N	
Delbac-Nogoles 230kV Line	Y	N	N	N	N	
Hidalgo-Apache 345kV Line	Y	N	N	N	N	
Marana 230/115kV Transformer	Y	N	N	N	N	
Marana-Rattle Snake 230kV Line	Y	N	N	N	N	
Midpoint-Hidalgo 345kV Line	Y	N	N	N	N	
Nogales-Adams 230kV Line	Y	N	N	N	N	
Rattle Snake 230/115kV Transformer	Y	Y	N	N	N	Radial system. Blackmtn, Brawley , Rattlsnk, Sandario, Sanxaver, Snydhill, Twinpeak 115kV isoladed w/ outage
Southline Saguaro 230/115kV Transformer #1	Y	N	N	N	N	
Southline Saguaro-Marana 230kV Line	Y	N	N	N	N	
Tortolita 500/230kV Transformer	Y	N	N	N	N	
Tucson 230/115kV Transformer	Y	N	N	N	N	
Tucson 230/DMP 138kV Transformer	Y	N	N	N	N	
Tucson 230/DMP 138kV Transformers #1 and #2	Y	N	N	N	N	
Tucson-Del Bac 230kV Line	Y	N	N	N	N	
Tucson-Rattlesnake 230kV Line	Y	N	N	N	N	
Tucson-Tortolita 230kV Line	Y	N	N	N	N	
Tucson-Vail 230kV Line	Y	N	N	N	N	
Vail 345/230kV Transformer	Y	N	N	N	N	
CATEGORY C						
Adams Tap-Apache SL & Adams Tap-Nogales 230kV Lines	Y	Y	N	N	N	Radial system. Adams, Mural, Boothill 115kV isolated w/ outage
Afton-Midpoint 345kV #1 And #2 Lines	Y	N	N	N	N	
Apache-Pantano & Adams-Nogales 230kV Lines	Y	N	N	N	N	
Apache-Pantano & Apache-Adams 230kV Lines	Y	N	N	N	N	
Hidalgo-Apache 345kV #1 And #2 Lines	Y	N	N	N	N	
Luna-Afton #1 and #2 345kV Lines w/ LAPS	Y	N	N	N	N	LAPS didn't perform any remedial actions

ATTACHMENT J –TRANSIENT STABILITY RESULTS – CASE = 16_we_0715_0971_0275_02TS.SAV

OUTAGE	STABLE (Y/N)	CREATES AN ISLAND (Y/N)	ANGLE VIOLATION MACHINES OUT OF STEP (Y/N)	WORST CONDITION ANALYSIS VOLTAGE VIOLATION (Y/N)	WORST CONDITION ANALYSIS FREQUENCY VIOLATION (Y/N)	NOTES
Luna-Afton & Luna 345/115kV Transformer	Y	N	N	N	N	
Luna-Afton & Luna 345/115kV Transformer - RAS Opt 1	Y	Y	N	N	N	Phelps Dodge (Pdtyrone 115kV) isolated w/ existing manual action
Luna-Afton & Luna 345/115kV Transformer - RAS Opt 2	Y	Y	N	N	N	Phelps Dodge (Pdtyrone and Ivanhoe 115kV) isolated w/ existing manual action
Luna-Hidalgo & Luna 345/115kV Transformer	Y	N	N	N	N	
Luna-Hidalgo & Luna 345/115kV Transformer - RAS Opt 1	Y	Y	N	N	N	Phelps Dodge (Ivanhoe 115kV) isolated w/ existing manual action
Luna-Hidalgo & Luna 345/115kV Transformer - RAS Opt 2	Y	Y	N	N	N	Phelps Dodge (Ivanhoe 115kV) isolated w/ existing manual action
Luna-Hidalgo & Luna 345/115kV Transformer - RAS Opt 3	Y	Y	N	N	N	Phelps Dodge (Ivanhoe 115kV) isolated w/ existing manual action
Luna-Hidalgo & Luna 345/115kV Transformer - RAS Opt 4	Y	Y	N	N	N	Phelps Dodge (Ivanhoe 115kV) isolated w/ existing manual action
Midpoint-Hidalgo 345kV #1 And #2 Lines	Y	N	N	N	N	
Newman-Arroyo & Newman-Afton 345kV Lines w/ LAPS	Y	N	N	N	N	LAPS dropped load at Americas, Sparks, and Scottsdale1.
Newman-Picante & Newman-Afton 345kV Lines w/ LAPS	Y	N	N	N	N	LAPS dropped load at Americas and Scottsdale1.
Nogales-Del Bac & Adams Tap-Nogales 230kV Lines	Y	Y	N	N	N	Nogales 230kV isolated w/ outage
Pantano-Vail & Adams-Nogales 230kV Lines	Y	N	N	N	N	
Pantano-Vail & Pantano-Apache SL 230kV Lines	Y	N	N	N	N	
Rattlesnake-Tucson & Marana-Rattlesnake 230kV Lines	Y	Y	N	N	N	Radial system. Blackmtn, Brawley , Rattlsnk, Sandario, Sanxaver, Snydhill, Twinpeak 115kV isoladed w/ outage
Rattlesnake-Tucson & Vail-Tucson 230kV Lines	Y	N	N	N	N	
Saguaro SL-Marana & Marana-Rattlesnake 230kV Lines	Y	N	N	N	N	
Springerville-Vail & Greenlee-Willow 345 kV Lines	Y	N	N	N	N	
Springerville-Vail & Springerville-Greenlee 345 kV Lines	Y	N	N	N	N	
Springerville-Vail & Willow-Winchester 345 kV Lines	Y	N	N	N	N	
Springerville-Vail & Winchester-Vail 345 kV Lines	Y	N	N	N	N	
Sthln Sag-Sag East & Sthln Sag-Sag West 115kV lines	Y	N	N	N	N	
Tortolita-Tucson & Del Bac-Tucson 230kV Lines	Y	N	N	N	N	
Tortolita-Tucson & Marana-Southline Saguaro 230kV Lines	Y	N	N	N	N	
Tortolita-Tucson & Rattlesnake-Marana 230kV Lines	Y	N	N	N	N	
Tortolita-Tucson & Rattlesnake-Tucson 230kV Lines	Y	N	N	N	N	
Vail-Tucson & Adams-Nogales 230kV Lines	Y	N	N	N	N	
Vail-Tucson & Del Bac-Nogales 230kV Lines	Y	N	N	N	N	
Vail-Tucson & Vail-Pantano 230kV Lines	Y	N	N	N	N	

ATTACHMENT J –TRANSIENT STABILITY RESULTS – CASE = 16_we_0715_0971_0275_02_OOSTS.SAV						
OUTAGE	STABLE (Y/N)	CREATES AN ISLAND (Y/N)	ANGLE VIOLATION MACHINES OUT OF STEP (Y/N)	WORST CONDITION ANALYSIS VOLTAGE VIOLATION (Y/N)	WORST CONDITION ANALYSIS FREQUENCY VIOLATION (Y/N)	NOTES
CATEGORY A						
No Disturbance	Y	N	N	N	N	
CATEGORY B						
Bump Test - Trip of Palo Verde	Y	N	Y	N	N	Forced trip of Pale Verde
CATEGORY C						
Luna-Hidalgo & Luna 345/115kV Transformer	Y	N	N	N	N	
Luna-Hidalgo & Luna 345/115kV Transformer - RAS Opt 1	Y	Y	N	N	N	Phelps Dodge (Ivanhoe 115kV) isolated w/ existing manual action
Luna-Hidalgo & Luna 345/115kV Transformer - RAS Opt 2	Y	Y	N	N	N	Phelps Dodge (Ivanhoe 115kV) isolated w/ existing manual action
Luna-Hidalgo & Luna 345/115kV Transformer - RAS Opt 3	Y	Y	N	N	N	Phelps Dodge (Ivanhoe 115kV) isolated w/ existing manual action
Luna-Hidalgo & Luna 345/115kV Transformer - RAS Opt 4	Y	Y	N	N	N	Phelps Dodge (Ivanhoe 115kV) isolated w/ existing manual action
Springerville-Vail & Greenlee-Willow 345 kV Lines	Y	N	N	N	N	
Springerville-Vail & Springerville-Greenlee 345 kV Lines	Y	N	N	N	N	
Springerville-Vail & Willow-Winchester 345 kV Lines	Y	N	N	N	N	
Springerville-Vail & Winchester-Vail 345 kV Lines	Y	N	N	N	N	

TRANSIENT STABILITY RESULTS COVER SHEET	
Direction	West–to-East
Case Series Number	16
Simultaneous Path	47
Path 47 Definition --WECC or Alternative	WECC
SunZia in Service	No
Tucson-Oracle Reconductor	Yes
2nd Marana Bank	No
Bowie Generation Output (MW)	350
West to East Mitigation	Yes
Dona Ana- Picacho 115kV 13 ohm series reactor	Yes
Additional Newman 345/115kV Transformer Bank	Yes
Southwest Power Pool Export	Yes
Nomogram Number	16b
Nomogram Point	1
Southline Afton-West Cut Plane Flows (MW)	N/A
Southline Apache-West Cut Plane Flows (MW)	N/A
Southline Saguaro/Tortolita-East Cut Plane Flows (MW)	734
Southline Apache-East Cut Plane Flows (MW)	436
Southline Midpoint West Cut Plane Flows (MW)	N/A
Path 47 Flows (MW)	1048

ATTACHMENT J –TRANSIENT STABILITY RESULTS – CASE = 16_we_0734_0436_1048_04TS.SAV						
OUTAGE	STABLE (Y/N)	CREATES AN ISLAND (Y/N)	ANGLE VIOLATION MACHINES OUT OF STEP (Y/N)	WORST CONDITION ANALYSIS VOLTAGE VIOLATION (Y/N)	WORST CONDITION ANALYSIS FREQUENCY VIOLATION (Y/N)	NOTES
CATEGORY A						
No Disturbance	Y	N	N	N	N	
CATEGORY B						
Bump Test - Trip of Palo Verde	Y	N	Y	N	N	Forced trip of Pale Verde
Adams 230/115kV Transformer	Y	Y	N	N	N	Radial system. Adams, Mural, Boothill 115kV isolated w/ outage
Afton 345kV Phase Shifter 1	Y	N	N	N	N	
Afton-Midpoint 345kV Line	Y	N	N	N	N	
Apache 345/230kV Transformer	Y	N	N	N	N	
Apache-Adams 230kV Line	Y	N	N	N	N	
Apache-Pantano 230kV Line	Y	N	N	N	N	
Delbac-Nogoles 230kV Line	Y	N	N	N	N	
Hidalgo-Apache 345kV Line	Y	N	N	N	N	
Marana 230/115kV Transformer	Y	N	N	N	N	
Marana-Rattle Snake 230kV Line	Y	N	N	N	N	
Midpoint-Hidalgo 345kV Line	Y	N	N	N	N	
Nogales-Adams 230kV Line	Y	N	N	N	N	
Rattle Snake 230/115kV Transformer	Y	Y	N	N	N	Radial system. Blackmtn, Brawley , Rattlsnk, Sandario, Sanxaver, Snydhill, Twinpeak 115kV isoladed w/ outage
Southline Saguaro 230/115kV Transformer #1	Y	N	N	N	N	
Southline Saguaro-Marana 230kV Line	Y	N	N	N	N	
Tortolita 500/230kV Transformer	Y	N	N	N	N	
Tucson 230/115kV Transformer	Y	N	N	N	N	
Tucson 230/DMP 138kV Transformer	Y	N	N	N	N	
Tucson 230/DMP 138kV Transformers #1 and #2	Y	N	N	N	N	
Tucson-Del Bac 230kV Line	Y	N	N	N	N	
Tucson-Rattlesnake 230kV Line	Y	N	N	N	N	
Tucson-Tortolita 230kV Line	Y	N	N	N	N	
Tucson-Vail 230kV Line	Y	N	N	N	N	
Vail 345/230kV Transformer	Y	N	N	N	N	
CATEGORY C						
Adams Tap-Apache SL & Adams Tap-Nogales 230kV Lines	Y	Y	N	N	N	Radial system. Adams, Mural, Boothill 115kV isolated w/ outage
Afton-Midpoint 345kV #1 And #2 Lines	Y	N	N	N	N	
Apache-Pantano & Adams-Nogales 230kV Lines	Y	N	N	N	N	
Apache-Pantano & Apache-Adams 230kV Lines	Y	N	N	N	N	
Hidalgo-Apache 345kV #1 And #2 Lines	Y	N	N	N	N	
Luna-Afton #1 and #2 345kV Lines w/ LAPS	Y	N	N	N	N	LAPS performed the following: tripped Dona Ana-Picacho 115kV

ATTACHMENT J –TRANSIENT STABILITY RESULTS – CASE = 16_we_0734_0436_1048_04TS.SAV						
OUTAGE	STABLE (Y/N)	CREATES AN ISLAND (Y/N)	ANGLE VIOLATION MACHINES OUT OF STEP (Y/N)	WORST CONDITION ANALYSIS VOLTAGE VIOLATION (Y/N)	WORST CONDITION ANALYSIS FREQUENCY VIOLATION (Y/N)	NOTES
						line; cut exports to Eddy County; dropped load at Americas, Copper, Sparks, Lane, Scottsdale1, and Wrangler1.
Luna-Afton & Luna 345/115kV Transformer	Y	N	N	N	N	
Luna-Afton & Luna 345/115kV Transformer - RAS Opt 1	Y	Y	N	N	N	Phelps Dodge (Pdtyrone 115kV) isolated w/ existing manual action
Luna-Afton & Luna 345/115kV Transformer - RAS Opt 2	Y	Y	N	N	N	Phelps Dodge (Pdtyrone and Ivanhoe 115kV) isolated w/ existing manual action
Luna-Hidalgo & Luna 345/115kV Transformer	Y	N	N	N	N	
Luna-Hidalgo & Luna 345/115kV Transformer - RAS Opt 1	Y	Y	N	N	N	Phelps Dodge (Ivanhoe 115kV) isolated w/ existing manual action
Luna-Hidalgo & Luna 345/115kV Transformer - RAS Opt 2	Y	Y	N	N	N	Phelps Dodge (Ivanhoe 115kV) isolated w/ existing manual action
Luna-Hidalgo & Luna 345/115kV Transformer - RAS Opt 3	Y	Y	N	N	N	Phelps Dodge (Ivanhoe 115kV) isolated w/ existing manual action
Luna-Hidalgo & Luna 345/115kV Transformer - RAS Opt 4	Y	Y	N	N	N	Phelps Dodge (Ivanhoe 115kV) isolated w/ existing manual action
Midpoint-Hidalgo 345kV #1 And #2 Lines	Y	N	N	N	N	
Newman-Arroyo & Newman-Afton 345kV Lines w/ LAPS	Y	N	N	N	N	LAPS performed the following: cut exports to Eddy County; dropped load at Americas, Copper, Sparks, Ft. Blis, Horizon, Lane, Scottsdale1, and Wrangler1.
Newman-Picante & Newman-Afton 345kV Lines w/ LAPS	Y	N	N	N	N	LAPS cut exports to Eddy County and dropped load at Americas.
Nogales-Del Bac & Adams Tap-Nogales 230kV Lines	Y	Y	N	N	N	Nogales 230kV isolated w/ outage
Pantano-Vail & Adams-Nogales 230kV Lines	Y	N	N	N	N	
Pantano-Vail & Pantano-Apache SL 230kV Lines	Y	N	N	N	N	
Rattlesnake-Tucson & Marana-Rattlesnake 230kV Lines	Y	Y	N	N	N	Radial system. Blackmtn, Brawley , Rattlsnk, Sandario, Sanxaver, Snydhill, Twinpeak 115kV isoladed w/ outage
Rattlesnake-Tucson & Vail-Tucson 230kV Lines	Y	N	N	N	N	
Saguaro SL-Marana & Marana-Rattlesnake 230kV Lines	Y	N	N	N	N	
Springerville-Vail & Greenlee-Willow 345 kV Lines	Y	N	N	N	N	
Springerville-Vail & Springerville-Greenlee 345 kV Lines	Y	N	N	N	N	
Springerville-Vail & Willow-Winchester 345 kV Lines	Y	N	N	N	N	
Springerville-Vail & Winchester-Vail 345 kV Lines	Y	N	N	N	N	
Sthln Sag-Sag East & Sthln Sag-Sag West 115kV lines	Y	N	N	N	N	
Tortolita-Tucson & Del Bac-Tucson 230kV Lines	Y	N	N	N	N	
Tortolita-Tucson & Marana-Southline Saguaro 230kV Lines	Y	N	N	N	N	
Tortolita-Tucson & Rattlesnake-Marana 230kV Lines	Y	N	N	N	N	
Tortolita-Tucson & Rattlesnake-Tucson 230kV Lines	Y	N	N	N	N	
Vail-Tucson & Adams-Nogales 230kV Lines	Y	N	N	N	N	
Vail-Tucson & Del Bac-Nogales 230kV Lines	Y	N	N	N	N	
Vail-Tucson & Vail-Pantano 230kV Lines	Y	N	N	N	N	

ATTACHMENT J –TRANSIENT STABILITY RESULTS – CASE = 16_we_0734_0436_1048_03_OOSTS.SAV						
OUTAGE	STABLE (Y/N)	CREATES AN ISLAND (Y/N)	ANGLE VIOLATION MACHINES OUT OF STEP (Y/N)	WORST CONDITION ANALYSIS VOLTAGE VIOLATION (Y/N)	WORST CONDITION ANALYSIS FREQUENCY VIOLATION (Y/N)	NOTES
CATEGORY A						
No Disturbance	Y	N	N	N	N	
CATEGORY B						
Bump Test - Trip of Palo Verde	Y	N	Y	N	N	Forced trip of Pale Verde
CATEGORY C						
Luna-Hidalgo & Luna 345/115kV Transformer	Y	N	N	N	N	
Luna-Hidalgo & Luna 345/115kV Transformer - RAS Opt 1	Y	Y	N	N	N	Phelps Dodge (Ivanhoe 115kV) isolated w/ existing manual action
Luna-Hidalgo & Luna 345/115kV Transformer - RAS Opt 2	Y	Y	N	N	N	Phelps Dodge (Ivanhoe 115kV) isolated w/ existing manual action
Luna-Hidalgo & Luna 345/115kV Transformer - RAS Opt 3	Y	Y	N	N	N	Phelps Dodge (Ivanhoe 115kV) isolated w/ existing manual action
Luna-Hidalgo & Luna 345/115kV Transformer - RAS Opt 4	Y	Y	N	N	N	Phelps Dodge (Ivanhoe 115kV) isolated w/ existing manual action
Springerville-Vail & Greenlee-Willow 345 kV Lines	Y	N	N	N	N	
Springerville-Vail & Springerville-Greenlee 345 kV Lines	Y	N	N	N	N	
Springerville-Vail & Willow-Winchester 345 kV Lines	Y	N	N	N	N	
Springerville-Vail & Winchester-Vail 345 kV Lines	Y	N	N	N	N	

TRANSIENT STABILITY RESULTS COVER SHEET	
Direction	West–to-East
Case Series Number	16
Simultaneous Path	47
Path 47 Definition --WECC or Alternative	WECC
SunZia in Service	No
Tucson-Oracle Reconductor	Yes
2nd Marana Bank	No
Bowie Generation Output (MW)	350
West to East Mitigation	Yes
Dona Ana- Picacho 115kV 13 ohm series reactor	Yes
Additional Newman 345/115kV Transformer Bank	Yes
Southwest Power Pool Export	Yes
Nomogram Number	16b
Nomogram Point	2
Southline Afton-West Cut Plane Flows (MW)	N/A
Southline Apache-West Cut Plane Flows (MW)	N/A
Southline Saguaro/Tortolita-East Cut Plane Flows (MW)	712
Southline Apache-East Cut Plane Flows (MW)	971
Southline Midpoint West Cut Plane Flows (MW)	N/A
Path 47 Flows (MW)	480

ATTACHMENT J –TRANSIENT STABILITY RESULTS – CASE = 16_we_0712_0971_0480_01TS.SAV						
OUTAGE	STABLE (Y/N)	CREATES AN ISLAND (Y/N)	ANGLE VIOLATION MACHINES OUT OF STEP (Y/N)	WORST CONDITION ANALYSIS VOLTAGE VIOLATION (Y/N)	WORST CONDITION ANALYSIS FREQUENCY VIOLATION (Y/N)	NOTES
CATEGORY A						
No Disturbance	Y	N	N	N	N	
CATEGORY B						
Bump Test - Trip of Palo Verde	Y	N	Y	N	N	Forced trip of Pale Verde
Adams 230/115kV Transformer	Y	Y	N	N	N	Radial system. Adams, Mural, Boothill 115kV isolated w/ outage
Afton 345kV Phase Shifter 1	Y	N	N	N	N	
Afton-Midpoint 345kV Line	Y	N	N	N	N	
Apache 345/230kV Transformer	Y	N	N	N	N	
Apache-Adams 230kV Line	Y	N	N	N	N	
Apache-Pantano 230kV Line	Y	N	N	N	N	
Delbac-Nogoles 230kV Line	Y	N	N	N	N	
Hidalgo-Apache 345kV Line	Y	N	N	N	N	
Marana 230/115kV Transformer	Y	N	N	N	N	
Marana-Rattle Snake 230kV Line	Y	N	N	N	N	
Midpoint-Hidalgo 345kV Line	Y	N	N	N	N	
Nogales-Adams 230kV Line	Y	N	N	N	N	
Rattle Snake 230/115kV Transformer	Y	Y	N	N	N	Radial system. Blackmtn, Brawley , Rattlsnk, Sandario, Sanxaver, Snydhill, Twinpeak 115kV isoladed w/ outage
Southline Saguaro 230/115kV Transformer #1	Y	N	N	N	N	
Southline Saguaro-Marana 230kV Line	Y	N	N	N	N	
Tortolita 500/230kV Transformer	Y	N	N	N	N	
Tucson 230/115kV Transformer	Y	N	N	N	N	
Tucson 230/DMP 138kV Transformer	Y	N	N	N	N	
Tucson 230/DMP 138kV Transformers #1 and #2	Y	N	N	N	N	
Tucson-Del Bac 230kV Line	Y	N	N	N	N	
Tucson-Rattlesnake 230kV Line	Y	N	N	N	N	
Tucson-Tortolita 230kV Line	Y	N	N	N	N	
Tucson-Vail 230kV Line	Y	N	N	N	N	
Vail 345/230kV Transformer	Y	N	N	N	N	
CATEGORY C						
Adams Tap-Apache SL & Adams Tap-Nogales 230kV Lines	Y	Y	N	N	N	Radial system. Adams, Mural, Boothill 115kV isolated w/ outage
Afton-Midpoint 345kV #1 And #2 Lines	Y	N	N	N	N	
Apache-Pantano & Adams-Nogales 230kV Lines	Y	N	N	N	N	
Apache-Pantano & Apache-Adams 230kV Lines	Y	N	N	N	N	
Hidalgo-Apache 345kV #1 And #2 Lines	Y	N	N	N	N	
Luna-Afton #1 and #2 345kV Lines w/ LAPS	Y	N	N	N	N	LAPS didn't perform any remedial actions

ATTACHMENT J –TRANSIENT STABILITY RESULTS – CASE = 16_we_0712_0971_0480_01TS.SAV						
OUTAGE	STABLE (Y/N)	CREATES AN ISLAND (Y/N)	ANGLE VIOLATION MACHINES OUT OF STEP (Y/N)	WORST CONDITION ANALYSIS VOLTAGE VIOLATION (Y/N)	WORST CONDITION ANALYSIS FREQUENCY VIOLATION (Y/N)	NOTES
Luna-Afton & Luna 345/115kV Transformer	Y	N	N	N	N	
Luna-Afton & Luna 345/115kV Transformer - RAS Opt 1	Y	Y	N	N	N	Phelps Dodge (Pdtyrone 115kV) isolated w/ existing manual action
Luna-Afton & Luna 345/115kV Transformer - RAS Opt 2	Y	Y	N	N	N	Phelps Dodge (Pdtyrone and Ivanhoe 115kV) isolated w/ existing manual action
Luna-Hidalgo & Luna 345/115kV Transformer	Y	N	N	N	N	
Luna-Hidalgo & Luna 345/115kV Transformer - RAS Opt 1	Y	Y	N	N	N	Phelps Dodge (Ivanhoe 115kV) isolated w/ existing manual action
Luna-Hidalgo & Luna 345/115kV Transformer - RAS Opt 2	Y	Y	N	N	N	Phelps Dodge (Ivanhoe 115kV) isolated w/ existing manual action
Luna-Hidalgo & Luna 345/115kV Transformer - RAS Opt 3	Y	Y	N	N	N	Phelps Dodge (Ivanhoe 115kV) isolated w/ existing manual action
Luna-Hidalgo & Luna 345/115kV Transformer - RAS Opt 4	Y	Y	N	N	N	Phelps Dodge (Ivanhoe 115kV) isolated w/ existing manual action
Midpoint-Hidalgo 345kV #1 And #2 Lines	Y	N	N	N	N	
Newman-Arroyo & Newman-Afton 345kV Lines w/ LAPS	Y	N	N	N	N	LAPS performed the following: cut exports to Eddy County; dropped load at Americas, Copper, Sparks, Lane, Scottsdale1, and Wrangler1.
Newman-Picante & Newman-Afton 345kV Lines w/ LAPS	Y	N	N	N	N	LAPS cut exports to Eddy County.
Nogales-Del Bac & Adams Tap-Nogales 230kV Lines	Y	Y	N	N	N	Nogales 230kV isolated w/ outage
Pantano-Vail & Adams-Nogales 230kV Lines	Y	N	N	N	N	
Pantano-Vail & Pantano-Apache SL 230kV Lines	Y	N	N	N	N	
Rattlesnake-Tucson & Marana-Rattlesnake 230kV Lines	Y	Y	N	N	N	Radial system. Blackmtn, Brawley , Rattlsnk, Sandario, Sanxaver, Snydhill, Twinpeak 115kV isoladed w/ outage
Rattlesnake-Tucson & Vail-Tucson 230kV Lines	Y	N	N	N	N	
Saguaro SL-Marana & Marana-Rattlesnake 230kV Lines	Y	N	N	N	N	
Springerville-Vail & Greenlee-Willow 345 kV Lines	Y	N	N	N	N	
Springerville-Vail & Springerville-Greenlee 345 kV Lines	Y	N	N	N	N	
Springerville-Vail & Willow-Winchester 345 kV Lines	Y	N	N	N	N	
Springerville-Vail & Winchester-Vail 345 kV Lines	Y	N	N	N	N	
Sthln Sag-Sag East & Sthln Sag-Sag West 115kV lines	Y	N	N	N	N	
Tortolita-Tucson & Del Bac-Tucson 230kV Lines	Y	N	N	N	N	
Tortolita-Tucson & Marana-Southline Saguaro 230kV Lines	Y	N	N	N	N	
Tortolita-Tucson & Rattlesnake-Marana 230kV Lines	Y	N	N	N	N	
Tortolita-Tucson & Rattlesnake-Tucson 230kV Lines	Y	N	N	N	N	
Vail-Tucson & Adams-Nogales 230kV Lines	Y	N	N	N	N	
Vail-Tucson & Del Bac-Nogales 230kV Lines	Y	N	N	N	N	
Vail-Tucson & Vail-Pantano 230kV Lines	Y	N	N	N	N	

ATTACHMENT J –TRANSIENT STABILITY RESULTS – CASE = 16_we_0712_0971_0480_01_OOSTS.SAV						
OUTAGE	STABLE (Y/N)	CREATES AN ISLAND (Y/N)	ANGLE VIOLATION MACHINES OUT OF STEP (Y/N)	WORST CONDITION ANALYSIS VOLTAGE VIOLATION (Y/N)	WORST CONDITION ANALYSIS FREQUENCY VIOLATION (Y/N)	NOTES
CATEGORY A						
No Disturbance	Y	N	N	N	N	
CATEGORY B						
Bump Test - Trip of Palo Verde	Y	N	Y	N	N	Forced trip of Pale Verde
CATEGORY C						
Luna-Hidalgo & Luna 345/115kV Transformer	Y	N	N	N	N	
Luna-Hidalgo & Luna 345/115kV Transformer - RAS Opt 1	Y	Y	N	N	N	Phelps Dodge (Ivanhoe 115kV) isolated w/ existing manual action
Luna-Hidalgo & Luna 345/115kV Transformer - RAS Opt 2	Y	Y	N	N	N	Phelps Dodge (Ivanhoe 115kV) isolated w/ existing manual action
Luna-Hidalgo & Luna 345/115kV Transformer - RAS Opt 3	Y	Y	N	N	N	Phelps Dodge (Ivanhoe 115kV) isolated w/ existing manual action
Luna-Hidalgo & Luna 345/115kV Transformer - RAS Opt 4	Y	Y	N	N	N	Phelps Dodge (Ivanhoe 115kV) isolated w/ existing manual action
Springerville-Vail & Greenlee-Willow 345 kV Lines	Y	N	N	N	N	
Springerville-Vail & Springerville-Greenlee 345 kV Lines	Y	N	N	N	N	
Springerville-Vail & Willow-Winchester 345 kV Lines	Y	N	N	N	N	
Springerville-Vail & Winchester-Vail 345 kV Lines	Y	N	N	N	N	

TRANSIENT STABILITY RESULTS COVER SHEET	
Direction	East-to-West
Case Series Number	41
Simultaneous Path	47
Path 47 Definition --WECC or Alternative	WECC
SunZia in Service	No
Tucson-Oracle Reconductor	No
2nd Marana Bank	Yes
Bowie Generation Output (MW)	350
West to East Mitigation	No
Dona Ana- Picacho 115kV 13 ohm series reactor	No
Additional Newman 345/115kV Transformer Bank	No
Southwest Power Pool Export	No
Nomogram Number	41
Nomogram Point	1
Southline Afton-West Cut Plane Flows (MW)	1037
Southline Apache-West Cut Plane Flows (MW)	1000
Southline Saguaro/Tortolita-East Cut Plane Flows (MW)	N/A
Southline Apache-East Cut Plane Flows (MW)	N/A
Southline Midpoint West Cut Plane Flows (MW)	N/A
Path 47 Flows (MW)	1048

ATTACHMENT J –TRANSIENT STABILITY RESULTS – CASE = 41_ew_1037_1000_1048_v27_t.SAV						
OUTAGE	STABLE (Y/N)	CREATES AN ISLAND (Y/N)	ANGLE VIOLATION MACHINES OUT OF STEP (Y/N)	WORST CONDITION ANALYSIS VOLTAGE VIOLATION (Y/N)	WORST CONDITION ANALYSIS FREQUENCY VIOLATION (Y/N)	NOTES
CATEGORY A						
No Disturbance	Y	N	N	N	N	
CATEGORY B						
Bump Test - Trip of Palo Verde	Y	N	Y	N	N	Forced trip of Pale Verde
Adams 230/115kV Transformer	Y	Y	N	N	N	Radial system. Adams, Mural, Boothill 115kV isolated w/ outage
Afton 345kV Phase Shifter 1	Y	N	N	N	N	
Afton-Midpoint 345kV Line	Y	N	N	N	N	
Apache 345/230kV Transformer	Y	N	N	N	N	
Apache-Adams 230kV Line	Y	N	N	N	N	
Apache-Pantano 230kV Line	Y	N	N	N	N	
Delbac-Nogoles 230kV Line	Y	N	N	N	N	
Hidalgo-Apache 345kV Line	Y	N	N	N	N	
Marana 230/115kV Transformer	Y	N	N	N	N	
Marana-Rattle Snake 230kV Line	Y	N	N	N	N	
Midpoint-Hidalgo 345kV Line	Y	N	N	N	N	
Nogales-Adams 230kV Line	Y	N	N	N	N	
Rattle Snake 230/115kV Transformer	Y	Y	N	N	N	Radial system. Blackmtn, Brawley , Rattlsnk, Sandario, Sanxaver, Snydhill, Twinpeak 115kV isoladed w/ outage
Southline Saguaro 230/115kV Transformer #1	Y	N	N	N	N	
Southline Saguaro-Marana 230kV Line	Y	N	N	N	N	
Tortolita 500/230kV Transformer	Y	N	N	N	N	
Tucson 230/115kV Transformer	Y	N	N	N	N	
Tucson 230/DMP 138kV Transformer	Y	N	N	N	N	
Tucson 230/DMP 138kV Transformers #1 and #2	Y	N	N	N	N	
Tucson-Del Bac 230kV Line	Y	N	N	N	N	
Tucson-Rattlesnake 230kV Line	Y	N	N	N	N	
Tucson-Tortolita 230kV Line	Y	N	N	N	N	
Tucson-Vail 230kV Line	Y	N	N	N	N	
Vail 345/230kV Transformer	Y	N	N	N	N	
CATEGORY C						
Adams Tap-Apache SL & Adams Tap-Nogales 230kV Lines	Y	Y	N	N	N	Radial system. Adams, Mural, Boothill 115kV isolated w/ outage
Afton-Midpoint 345kV #1 And #2 Lines	Y	N	N	N	N	
Apache-Pantano & Adams-Nogales 230kV Lines	Y	N	N	N	N	
Apache-Pantano & Apache-Adams 230kV Lines	Y	N	N	N	N	
Hidalgo-Apache 345kV #1 And #2 Lines	Y	N	N	N	N	
Luna-Afton #1 and #2 345kV Lines w/ LAPS	Y	N	N	N	N	LAPS performed the following: tripped Dona Ana-Picacho 115kV

ATTACHMENT J –TRANSIENT STABILITY RESULTS – CASE = 41_ew_1037_1000_1048_v27_t.SAV

OUTAGE	STABLE (Y/N)	CREATES AN ISLAND (Y/N)	ANGLE VIOLATION MACHINES OUT OF STEP (Y/N)	WORST CONDITION ANALYSIS VOLTAGE VIOLATION (Y/N)	WORST CONDITION ANALYSIS FREQUENCY VIOLATION (Y/N)	NOTES
						line; dropped load at Americas, Copper, Sparks, Lane, and Scottsdale1; and tripped Rio Boss shunt capacitor.
Luna-Afton & Luna 345/115kV Transformer	Y	N	N	N	N	
Luna-Afton & Luna 345/115kV Transformer - RAS Opt 1	Y	Y	N	N	N	Phelps Dodge (Pdtyrone 115kV) isolated w/ existing manual action
Luna-Afton & Luna 345/115kV Transformer - RAS Opt 2	Y	Y	N	N	N	Phelps Dodge (Pdtyrone and Ivanhoe 115kV) isolated w/ existing manual action
Luna-Hidalgo & Luna 345/115kV Transformer	Y	N	N	N	N	
Luna-Hidalgo & Luna 345/115kV Transformer - RAS Opt 1	Y	Y	N	N	N	Phelps Dodge (Ivanhoe 115kV) isolated w/ existing manual action
Luna-Hidalgo & Luna 345/115kV Transformer - RAS Opt 2	Y	Y	N	N	N	Phelps Dodge (Ivanhoe 115kV) isolated w/ existing manual action
Luna-Hidalgo & Luna 345/115kV Transformer - RAS Opt 3	Y	Y	N	N	N	Phelps Dodge (Ivanhoe 115kV) isolated w/ existing manual action
Midpoint-Hidalgo 345kV #1 And #2 Lines	Y	N	N	N	N	
Newman-Arroyo & Newman-Afton 345kV Lines w/ LAPS	Y	N	N	N	N	LAPS didn't perform any remedial actions.
Newman-Picante & Newman-Afton 345kV Lines w/ LAPS	Y	N	N	N	N	LAPS didn't perform any remedial actions.
Nogales-Del Bac & Adams Tap-Nogales 230kV Lines	Y	Y	N	N	N	Nogales 230kV isolated w/ outage
Pantano-Vail & Adams-Nogales 230kV Lines	Y	N	N	N	N	
Pantano-Vail & Pantano-Apache SL 230kV Lines	Y	N	N	N	N	
Rattlesnake-Tucson & Marana-Rattlesnake 230kV Lines	Y	Y	N	N	N	Radial system. Blackmtn, Brawley , Rattlsnk, Sandario, Sanxaver, Snydhill, Twinpeak 115kV isoladed w/ outage
Rattlesnake-Tucson & Vail-Tucson 230kV Lines	Y	N	N	N	N	
Saguaro SL-Marana & Marana-Rattlesnake 230kV Lines	Y	N	N	N	N	
Springerville-Vail & Greenlee-Willow 345 kV Lines	Y	N	N	N	N	
Springerville-Vail & Springerville-Greenlee 345 kV Lines	Y	N	N	N	N	
Springerville-Vail & Willow-Winchester 345 kV Lines	Y	N	N	N	N	
Springerville-Vail & Winchester-Vail 345 kV Lines	Y	N	N	N	N	
Sthln Sag-Sag East & Sthln Sag-Sag West 115kV lines	Y	N	N	N	N	
Tortolita-Tucson & Del Bac-Tucson 230kV Lines	Y	N	N	N	N	
Tortolita-Tucson & Marana-Southline Saguaro 230kV Lines	Y	N	N	N	N	
Tortolita-Tucson & Rattlesnake-Marana 230kV Lines	Y	N	N	N	N	
Tortolita-Tucson & Rattlesnake-Tucson 230kV Lines	Y	N	N	N	N	
Vail-Tucson & Adams-Nogales 230kV Lines	Y	N	N	N	N	
Vail-Tucson & Del Bac-Nogales 230kV Lines	Y	N	N	N	N	
Vail-Tucson & Vail-Pantano 230kV Lines	Y	N	N	N	N	

ATTACHMENT J –TRANSIENT STABILITY RESULTS – CASE = (NOTE 1) 01_ew_1037_1000_1048_v28oos_t.SAV, 01_ew_1037_1000_1048_v28T_oos420.SAV, 01_ew_1037_1000_1048_v28T_oos421.SAV, 01_ew_1037_1000_1048_v28T_oos422.SAV

OUTAGE	STABLE (Y/N)	CREATES AN ISLAND (Y/N)	ANGLE VIOLATION MACHINES OUT OF STEP (Y/N)	WORST CONDITION ANALYSIS VOLTAGE VIOLATION (Y/N)	WORST CONDITION ANALYSIS FREQUENCY VIOLATION (Y/N)	NOTES
CATEGORY A						
No Disturbance	Y	N	N	N	N	
CATEGORY B						
Bump Test - Trip of Palo Verde	Y	N	Y	N	N	Forced trip of Pale Verde
CATEGORY C						
Luna-Hidalgo & Luna 345/115kV Transformer	Y	N	N	N	N	
Luna-Hidalgo & Luna 345/115kV Transformer - RAS Opt 1	Y	Y	N	N	N	Phelps Dodge (Ivanhoe 115kV) isolated w/ existing manual action
Luna-Hidalgo & Luna 345/115kV Transformer - RAS Opt 2	Y	Y	N	N	N	Phelps Dodge (Ivanhoe 115kV) isolated w/ existing manual action
Luna-Hidalgo & Luna 345/115kV Transformer - RAS Opt 3	Y	Y	N	N	N	Phelps Dodge (Ivanhoe 115kV) isolated w/ existing manual action
Luna-Hidalgo & Luna 345/115kV Transformer - RAS Opt 4	Y	Y	N	N	N	Phelps Dodge (Ivanhoe 115kV) isolated w/ existing manual action
Springerville-Vail & Greenlee-Willow 345 kV Lines	Y	N	N	N	N	
Springerville-Vail & Springerville-Greenlee 345 kV Lines	Y	N	N	N	N	
Springerville-Vail & Willow-Winchester 345 kV Lines	Y	N	N	N	N	
Springerville-Vail & Winchester-Vail 345 kV Lines	Y	N	N	N	N	
CATEGORY C – DISTURBANCES WITH TOLS LOAD SHEDDING						
Springerville-Vail & Springerville-Greenlee 345 kV Lines with TOLS Load Shedding	N	N	N	N	N	Modeled with case 01_ew_1037_1000_1048_v28T_oos420.SAV
Springerville-Vail & Winchester-Vail 345 kV Lines with TOLS Load Shedding	N	N	N	N	N	Modeled with case 01_ew_1037_1000_1048_v28T_oos421.SAV
Springerville-Vail & Willow-Winchester 345 kV Lines with TOLS Load Shedding	N	N	N	N	N	Modeled with case 01_ew_1037_1000_1048_v28T_oos422.SAV

Note 1 – The Out-Of-Service cases for series 41 and series 1 are identical; therefore, the series 1 cases were used to determine the Out-Of-Service results for series 41.

TRANSIENT STABILITY RESULTS COVER SHEET	
Direction	West–to-East
Case Series Number	42
Simultaneous Path	47
Path 47 Definition --WECC or Alternative	WECC
SunZia in Service	No
Tucson-Oracle Reconductor	No
2nd Marana Bank	Yes
Bowie Generation Output (MW)	350
West to East Mitigation	No
Dona Ana- Picacho 115kV 13 ohm series reactor	No
Additional Newman 345/115kV Transformer Bank	No
Southwest Power Pool Export	No
Nomogram Number	42
Nomogram Point	1
Southline Afton-West Cut Plane Flows (MW)	N/A
Southline Apache-West Cut Plane Flows (MW)	N/A
Southline Saguaro/Tortolita-East Cut Plane Flows (MW)	431
Southline Apache-East Cut Plane Flows (MW)	179
Southline Midpoint West Cut Plane Flows (MW)	N/A
Path 47 Flows (MW)	1048

ATTACHMENT J –TRANSIENT STABILITY RESULTS – CASE = 42_we_0431_0179_1048_01TS.SAV						
OUTAGE	STABLE (Y/N)	CREATES AN ISLAND (Y/N)	ANGLE VIOLATION MACHINES OUT OF STEP (Y/N)	WORST CONDITION ANALYSIS VOLTAGE VIOLATION (Y/N)	WORST CONDITION ANALYSIS FREQUENCY VIOLATION (Y/N)	NOTES
CATEGORY A						
No Disturbance	Y	N	N	N	N	
CATEGORY B						
Bump Test - Trip of Palo Verde	Y	N	Y	N	N	Forced trip of Pale Verde
Adams 230/115kV Transformer	Y	Y	N	N	N	Radial system. Adams, Mural, Boothill 115kV isolated w/ outage
Afton 345kV Phase Shifter 1	Y	N	N	N	N	
Afton-Midpoint 345kV Line	Y	N	N	N	N	
Apache 345/230kV Transformer	Y	N	N	N	N	
Apache-Adams 230kV Line	Y	N	N	N	N	
Apache-Pantano 230kV Line	Y	N	N	N	N	
Delbac-Nogoles 230kV Line	Y	N	N	N	N	
Hidalgo-Apache 345kV Line	Y	N	N	N	N	
Marana 230/115kV Transformer	Y	N	N	N	N	
Marana-Rattle Snake 230kV Line	Y	N	N	N	N	
Midpoint-Hidalgo 345kV Line	Y	N	N	N	N	
Nogales-Adams 230kV Line	Y	N	N	N	N	
Rattle Snake 230/115kV Transformer	Y	Y	N	N	N	Radial system. Blackmtn, Brawley , Rattlsnk, Sandario, Sanxaver, Snydhill, Twinpeak 115kV isoladed w/ outage
Southline Saguaro 230/115kV Transformer #1	Y	N	N	N	N	
Southline Saguaro-Marana 230kV Line	Y	N	N	N	N	
Tortolita 500/230kV Transformer	Y	N	N	N	N	
Tucson 230/115kV Transformer	Y	N	N	N	N	
Tucson 230/DMP 138kV Transformer	Y	N	N	N	N	
Tucson 230/DMP 138kV Transformers #1 and #2	Y	N	N	N	N	
Tucson-Del Bac 230kV Line	Y	N	N	N	N	
Tucson-Rattlesnake 230kV Line	Y	N	N	N	N	
Tucson-Tortolita 230kV Line	Y	N	N	N	N	
Tucson-Vail 230kV Line	Y	N	N	N	N	
Vail 345/230kV Transformer	Y	N	N	N	N	
CATEGORY C						
Adams Tap-Apache SL & Adams Tap-Nogales 230kV Lines	Y	Y	N	N	N	Radial system. Adams, Mural, Boothill 115kV isolated w/ outage
Afton-Midpoint 345kV #1 And #2 Lines	Y	N	N	N	N	
Apache-Pantano & Adams-Nogales 230kV Lines	Y	N	N	N	N	
Apache-Pantano & Apache-Adams 230kV Lines	Y	N	N	N	N	
Hidalgo-Apache 345kV #1 And #2 Lines	Y	N	N	N	N	
Luna-Afton #1 and #2 345kV Lines w/ LAPS	Y	N	N	N	N	LAPS performed the following: tripped Dona Ana-Picacho 115kV

ATTACHMENT J –TRANSIENT STABILITY RESULTS – CASE = 42_we_0431_0179_1048_01TS.SAV

OUTAGE	STABLE (Y/N)	CREATES AN ISLAND (Y/N)	ANGLE VIOLATION MACHINES OUT OF STEP (Y/N)	WORST CONDITION ANALYSIS VOLTAGE VIOLATION (Y/N)	WORST CONDITION ANALYSIS FREQUENCY VIOLATION (Y/N)	NOTES
						line; dropped load at Americas, Copper, Sparks, Ft. Blis, Horizon, Lane, Scottsdale1, Shearman and Wrangler1; inserted Luna line reactor on the Luna-Hidalgo 345kV line; and inserted Hidalgo line reactor on the Hidalgo-Greenlee 345kV line.
Luna-Afton & Luna 345/115kV Transformer	Y	N	N	N	N	
Luna-Afton & Luna 345/115kV Transformer - RAS Opt 1	Y	Y	N	N	N	Phelps Dodge (Pdtyrone 115kV) isolated w/ existing manual action
Luna-Afton & Luna 345/115kV Transformer - RAS Opt 2	Y	Y	N	N	N	Phelps Dodge (Pdtyrone and Ivanhoe 115kV) isolated w/ existing manual action
Luna-Hidalgo & Luna 345/115kV Transformer	Y	N	N	N	N	
Luna-Hidalgo & Luna 345/115kV Transformer - RAS Opt 1	Y	Y	N	N	N	Phelps Dodge (Ivanhoe 115kV) isolated w/ existing manual action
Luna-Hidalgo & Luna 345/115kV Transformer - RAS Opt 2	Y	Y	N	N	N	Phelps Dodge (Ivanhoe 115kV) isolated w/ existing manual action
Luna-Hidalgo & Luna 345/115kV Transformer - RAS Opt 3	Y	Y	N	N	N	Phelps Dodge (Ivanhoe 115kV) isolated w/ existing manual action
Luna-Hidalgo & Luna 345/115kV Transformer - RAS Opt 4	Y	Y	N	N	N	Phelps Dodge (Ivanhoe 115kV) isolated w/ existing manual action
Midpoint-Hidalgo 345kV #1 And #2 Lines	Y	N	N	N	N	
Newman-Arroyo & Newman-Afton 345kV Lines w/ LAPS	Y	N	N	N	N	LAPS didn't perform any remedial actions.
Newman-Picante & Newman-Afton 345kV Lines w/ LAPS	Y	N	N	N	N	LAPS didn't perform any remedial actions.
Nogales-Del Bac & Adams Tap-Nogales 230kV Lines	Y	Y	N	N	N	Nogales 230kV isolated w/ outage
Pantano-Vail & Adams-Nogales 230kV Lines	Y	N	N	N	N	
Pantano-Vail & Pantano-Apache SL 230kV Lines	Y	N	N	N	N	
Rattlesnake-Tucson & Marana-Rattlesnake 230kV Lines	Y	Y	N	N	N	Radial system. Blackmtn, Brawley , Rattlsnk, Sandario, Sanxaver, Snydhill, Twinpeak 115kV isoladed w/ outage
Rattlesnake-Tucson & Vail-Tucson 230kV Lines	Y	N	N	N	N	
Saguaro SL-Marana & Marana-Rattlesnake 230kV Lines	Y	N	N	N	N	
Springerville-Vail & Greenlee-Willow 345 kV Lines	Y	N	N	N	N	
Springerville-Vail & Springerville-Greenlee 345 kV Lines	Y	N	N	N	N	
Springerville-Vail & Willow-Winchester 345 kV Lines	Y	N	N	N	N	
Springerville-Vail & Winchester-Vail 345 kV Lines	Y	N	N	N	N	
Sthln Sag-Sag East & Sthln Sag-Sag West 115kV lines	Y	N	N	N	N	
Tortolita-Tucson & Del Bac-Tucson 230kV Lines	Y	N	N	N	N	
Tortolita-Tucson & Marana-Southline Saguaro 230kV Lines	Y	N	N	N	N	
Tortolita-Tucson & Rattlesnake-Marana 230kV Lines	Y	N	N	N	N	
Tortolita-Tucson & Rattlesnake-Tucson 230kV Lines	Y	N	N	N	N	
Vail-Tucson & Adams-Nogales 230kV Lines	Y	N	N	N	N	
Vail-Tucson & Del Bac-Nogales 230kV Lines	Y	N	N	N	N	
Vail-Tucson & Vail-Pantano 230kV Lines	Y	N	N	N	N	
Saguaro West 115kV Bus	Y	Y	Y	N	N	Generating unit Saguaro CT 2 tripped with bus outage. Saguaro West

ATTACHMENT J –TRANSIENT STABILITY RESULTS – CASE = 42_we_0431_0179_1048_01TS.SAV						
OUTAGE	STABLE (Y/N)	CREATES AN ISLAND (Y/N)	ANGLE VIOLATION MACHINES OUT OF STEP (Y/N)	WORST CONDITION ANALYSIS VOLTAGE VIOLATION (Y/N)	WORST CONDITION ANALYSIS FREQUENCY VIOLATION (Y/N)	NOTES
						115kV, Saguaro 4 100kV Midpoint, Saguaro 2 15.5kV, and Saguaro CT 2 13.80kV buses isolated with outage.
Saguaro East 115kV Bus	Y	Y	Y	N	N	Generating unit Saguaro CT 1 and 3 tripped with bus outage. Saguaro East 115kV, Saguaro 10 100kV Midpoint, Saguaro 7 100kV Midpoint, Saguaro 1 15.5kV, Saguaro CT 1 13.80kV, and Saguaro CT 3 13.80kV buses isolated with outage.

ATTACHMENT J –TRANSIENT STABILITY RESULTS – CASE = 42_we_0431_0179_1048_01_OOSTS.SAV						
OUTAGE	STABLE (Y/N)	CREATES AN ISLAND (Y/N)	ANGLE VIOLATION MACHINES OUT OF STEP (Y/N)	WORST CONDITION ANALYSIS VOLTAGE VIOLATION (Y/N)	WORST CONDITION ANALYSIS FREQUENCY VIOLATION (Y/N)	NOTES
CATEGORY A						
No Disturbance	Y	N	N	N	N	
CATEGORY B						
Bump Test - Trip of Palo Verde	Y	N	Y	N	N	Forced trip of Pale Verde
CATEGORY C						
Luna-Hidalgo & Luna 345/115kV Transformer	Y	N	N	N	N	
Luna-Hidalgo & Luna 345/115kV Transformer - RAS Opt 1	Y	Y	N	N	N	Phelps Dodge (Ivanhoe 115kV) isolated w/ existing manual action
Luna-Hidalgo & Luna 345/115kV Transformer - RAS Opt 2	Y	Y	N	N	N	Phelps Dodge (Ivanhoe 115kV) isolated w/ existing manual action
Luna-Hidalgo & Luna 345/115kV Transformer - RAS Opt 3	Y	Y	N	N	N	Phelps Dodge (Ivanhoe 115kV) isolated w/ existing manual action
Luna-Hidalgo & Luna 345/115kV Transformer - RAS Opt 4	Y	Y	N	N	N	Phelps Dodge (Ivanhoe 115kV) isolated w/ existing manual action
Springerville-Vail & Greenlee-Willow 345 kV Lines	Y	N	N	N	N	
Springerville-Vail & Springerville-Greenlee 345 kV Lines	Y	N	N	N	N	
Springerville-Vail & Willow-Winchester 345 kV Lines	Y	N	N	N	N	
Springerville-Vail & Winchester-Vail 345 kV Lines	Y	N	N	N	N	
Saguaro West 115kV Bus	Y	Y	Y	N	N	Generating unit Saguaro CT 2 tripped with bus outage. Saguaro West 115kV, Saguaro 4 100kV Midpoint, Saguaro 2 15.5kV, and Saguaro CT 2 13.80kV buses isolated with outage.
Saguaro East 115kV Bus	Y	Y	Y	N	N	Generating unit Saguaro CT 1 and 3 tripped with bus outage. Saguaro East 115kV, Saguaro 10 100kV Midpoint, Saguaro 7 100kV Midpoint, Saguaro 1 15.5kV, and Saguaro CT 1 13.80kV buses isolated with outage.

TRANSIENT STABILITY RESULTS COVER SHEET	
Direction	West–to-East
Case Series Number	42
Simultaneous Path	47
Path 47 Definition --WECC or Alternative	WECC
SunZia in Service	No
Tucson-Oracle Reconductor	No
2nd Marana Bank	Yes
Bowie Generation Output (MW)	350
West to East Mitigation	No
Dona Ana- Picacho 115kV 13 ohm series reactor	No
Additional Newman 345/115kV Transformer Bank	No
Southwest Power Pool Export	No
Nomogram Number	42
Nomogram Point	2
Southline Afton-West Cut Plane Flows (MW)	N/A
Southline Apache-West Cut Plane Flows (MW)	N/A
Southline Saguaro/Tortolita-East Cut Plane Flows (MW)	435
Southline Apache-East Cut Plane Flows (MW)	971
Southline Midpoint West Cut Plane Flows (MW)	N/A
Path 47 Flows (MW)	275

ATTACHMENT J –TRANSIENT STABILITY RESULTS – CASE = 42_we_0435_0971_0275_01TS.SAV						
OUTAGE	STABLE (Y/N)	CREATES AN ISLAND (Y/N)	ANGLE VIOLATION MACHINES OUT OF STEP (Y/N)	WORST CONDITION ANALYSIS VOLTAGE VIOLATION (Y/N)	WORST CONDITION ANALYSIS FREQUENCY VIOLATION (Y/N)	NOTES
CATEGORY A						
No Disturbance	Y	N	N	N	N	
CATEGORY B						
Bump Test - Trip of Palo Verde	Y	N	Y	N	N	Forced trip of Pale Verde
Adams 230/115kV Transformer	Y	Y	N	N	N	Radial system. Adams, Mural, Boothill 115kV isolated w/ outage
Afton 345kV Phase Shifter 1	Y	N	N	N	N	
Afton-Midpoint 345kV Line	Y	N	N	N	N	
Apache 345/230kV Transformer	Y	N	N	N	N	
Apache-Adams 230kV Line	Y	N	N	N	N	
Apache-Pantano 230kV Line	Y	N	N	N	N	
Delbac-Nogoles 230kV Line	Y	N	N	N	N	
Hidalgo-Apache 345kV Line	Y	N	N	N	N	
Marana 230/115kV Transformer	Y	N	N	N	N	
Marana-Rattle Snake 230kV Line	Y	N	N	N	N	
Midpoint-Hidalgo 345kV Line	Y	N	N	N	N	
Nogales-Adams 230kV Line	Y	N	N	N	N	
Rattle Snake 230/115kV Transformer	Y	Y	N	N	N	Radial system. Blackmtn, Brawley , Rattlsnk, Sandario, Sanxaver, Snydhill, Twinpeak 115kV isoladed w/ outage
Southline Saguaro 230/115kV Transformer #1	Y	N	N	N	N	
Southline Saguaro-Marana 230kV Line	Y	N	N	N	N	
Tortolita 500/230kV Transformer	Y	N	N	N	N	
Tucson 230/115kV Transformer	Y	N	N	N	N	
Tucson 230/DMP 138kV Transformer	Y	N	N	N	N	
Tucson 230/DMP 138kV Transformers #1 and #2	Y	N	N	N	N	
Tucson-Del Bac 230kV Line	Y	N	N	N	N	
Tucson-Rattlesnake 230kV Line	Y	N	N	N	N	
Tucson-Tortolita 230kV Line	Y	N	N	N	N	
Tucson-Vail 230kV Line	Y	N	N	N	N	
Vail 345/230kV Transformer	Y	N	N	N	N	
CATEGORY C						
Adams Tap-Apache SL & Adams Tap-Nogales 230kV Lines	Y	Y	N	N	N	Radial system. Adams, Mural, Boothill 115kV isolated w/ outage
Afton-Midpoint 345kV #1 And #2 Lines	Y	N	N	N	N	
Apache-Pantano & Adams-Nogales 230kV Lines	Y	N	N	N	N	
Apache-Pantano & Apache-Adams 230kV Lines	Y	N	N	N	N	
Hidalgo-Apache 345kV #1 And #2 Lines	Y	N	N	N	N	
Luna-Afton #1 and #2 345kV Lines w/ LAPS	Y	N	N	N	N	LAPS didn't perform any remedial actions

ATTACHMENT J –TRANSIENT STABILITY RESULTS – CASE = 42_we_0435_0971_0275_01TS.SAV

OUTAGE	STABLE (Y/N)	CREATES AN ISLAND (Y/N)	ANGLE VIOLATION MACHINES OUT OF STEP (Y/N)	WORST CONDITION ANALYSIS VOLTAGE VIOLATION (Y/N)	WORST CONDITION ANALYSIS FREQUENCY VIOLATION (Y/N)	NOTES
Luna-Afton & Luna 345/115kV Transformer	Y	N	N	N	N	
Luna-Afton & Luna 345/115kV Transformer - RAS Opt 1	Y	Y	N	N	N	Phelps Dodge (Pdtyrone 115kV) isolated w/ existing manual action
Luna-Afton & Luna 345/115kV Transformer - RAS Opt 2	Y	Y	N	N	N	Phelps Dodge (Pdtyrone and Ivanhoe 115kV) isolated w/ existing manual action
Luna-Hidalgo & Luna 345/115kV Transformer	Y	N	N	N	N	
Luna-Hidalgo & Luna 345/115kV Transformer - RAS Opt 1	Y	Y	N	N	N	Phelps Dodge (Ivanhoe 115kV) isolated w/ existing manual action
Luna-Hidalgo & Luna 345/115kV Transformer - RAS Opt 2	Y	Y	N	N	N	Phelps Dodge (Ivanhoe 115kV) isolated w/ existing manual action
Luna-Hidalgo & Luna 345/115kV Transformer - RAS Opt 3	Y	Y	N	N	N	Phelps Dodge (Ivanhoe 115kV) isolated w/ existing manual action
Luna-Hidalgo & Luna 345/115kV Transformer - RAS Opt 4	Y	Y	N	N	N	Phelps Dodge (Ivanhoe 115kV) isolated w/ existing manual action
Midpoint-Hidalgo 345kV #1 And #2 Lines	Y	N	N	N	N	
Newman-Arroyo & Newman-Afton 345kV Lines w/ LAPS	Y	N	N	N	N	LAPS dropped load at Americas, Sparks, Lane, and Scottsdale1.
Newman-Picante & Newman-Afton 345kV Lines w/ LAPS	Y	N	N	N	N	LAPS dropped load at Americas, Sparks, Lane, and Scottsdale1.
Nogales-Del Bac & Adams Tap-Nogales 230kV Lines	Y	Y	N	N	N	Nogales 230kV bus isolated w/ outage
Pantano-Vail & Adams-Nogales 230kV Lines	Y	N	N	N	N	
Pantano-Vail & Pantano-Apache SL 230kV Lines	Y	N	N	N	N	
Rattlesnake-Tucson & Marana-Rattlesnake 230kV Lines	Y	Y	N	N	N	Radial system. Blackmtn, Brawley , Rattlsnk, Sandario, Sanxaver, Snydhill, Twinpeak 115kV isoladed w/ outage
Rattlesnake-Tucson & Vail-Tucson 230kV Lines	Y	N	N	N	N	
Saguaro SL-Marana & Marana-Rattlesnake 230kV Lines	Y	N	N	N	N	
Springerville-Vail & Greenlee-Willow 345 kV Lines	Y	N	N	N	N	
Springerville-Vail & Springerville-Greenlee 345 kV Lines	Y	N	N	N	N	
Springerville-Vail & Willow-Winchester 345 kV Lines	Y	N	N	N	N	
Springerville-Vail & Winchester-Vail 345 kV Lines	Y	N	N	N	N	
Sthln Sag-Sag East & Sthln Sag-Sag West 115kV lines	Y	N	N	N	N	
Tortolita-Tucson & Del Bac-Tucson 230kV Lines	Y	N	N	N	N	
Tortolita-Tucson & Marana-Southline Saguaro 230kV Lines	Y	N	N	N	N	
Tortolita-Tucson & Rattlesnake-Marana 230kV Lines	Y	N	N	N	N	
Tortolita-Tucson & Rattlesnake-Tucson 230kV Lines	Y	N	N	N	N	
Vail-Tucson & Adams-Nogales 230kV Lines	Y	N	N	N	N	
Vail-Tucson & Del Bac-Nogales 230kV Lines	Y	N	N	N	N	
Vail-Tucson & Vail-Pantano 230kV Lines	Y	N	N	N	N	
Saguaro West 115kV Bus	Y	Y	Y	N	N	Generating unit Saguaro CT 2 tripped with bus outage. Saguaro West 115kV, Saguaro 4 100kV Midpoint, Saguaro 2 15.5kV, and Saguaro CT 2 13.80kV buses isolated with outage.
Saguaro East 115kV Bus	Y	Y	Y	N	N	Generating unit Saguaro CT 1 and 3 tripped with bus outage. Saguaro East 115kV, Saguaro 10 100kV Midpoint, Saguaro 7 100kV

ATTACHMENT J –TRANSIENT STABILITY RESULTS – CASE = 42_we_0435_0971_0275_01TS.SAV						
OUTAGE	STABLE (Y/N)	CREATES AN ISLAND (Y/N)	ANGLE VIOLATION MACHINES OUT OF STEP (Y/N)	WORST CONDITION ANALYSIS VOLTAGE VIOLATION (Y/N)	WORST CONDITION ANALYSIS FREQUENCY VIOLATION (Y/N)	NOTES
						Midpoint, Saguaro 1 15.5kV, Saguaro CT 1 13.80kV, and Saguaro CT 3 13.80kV buses isolated with outage.

ATTACHMENT J –TRANSIENT STABILITY RESULTS – CASE = 42_we_0435_0971_0275_01_OOSTS.SAV						
OUTAGE	STABLE (Y/N)	CREATES AN ISLAND (Y/N)	ANGLE VIOLATION MACHINES OUT OF STEP (Y/N)	WORST CONDITION ANALYSIS VOLTAGE VIOLATION (Y/N)	WORST CONDITION ANALYSIS FREQUENCY VIOLATION (Y/N)	NOTES
CATEGORY A						
No Disturbance	Y	N	N	N	N	
CATEGORY B						
Bump Test - Trip of Palo Verde	Y	N	Y	N	N	Forced trip of Pale Verde
CATEGORY C						
Luna-Hidalgo & Luna 345/115kV Transformer	Y	N	N	N	N	
Luna-Hidalgo & Luna 345/115kV Transformer - RAS Opt 1	Y	Y	N	N	N	Phelps Dodge (Ivanhoe 115kV) isolated w/ existing manual action
Luna-Hidalgo & Luna 345/115kV Transformer - RAS Opt 2	Y	Y	N	N	N	Phelps Dodge (Ivanhoe 115kV) isolated w/ existing manual action
Luna-Hidalgo & Luna 345/115kV Transformer - RAS Opt 3	Y	Y	N	N	N	Phelps Dodge (Ivanhoe 115kV) isolated w/ existing manual action
Luna-Hidalgo & Luna 345/115kV Transformer - RAS Opt 4	Y	Y	N	N	N	Phelps Dodge (Ivanhoe 115kV) isolated w/ existing manual action
Springerville-Vail & Greenlee-Willow 345 kV Lines	Y	N	N	N	N	
Springerville-Vail & Springerville-Greenlee 345 kV Lines	Y	N	N	N	N	
Springerville-Vail & Willow-Winchester 345 kV Lines	Y	N	N	N	N	
Springerville-Vail & Winchester-Vail 345 kV Lines	Y	N	N	N	N	
Saguaro West 115kV Bus	Y	Y	Y	N	N	Generating unit Saguaro CT 2 tripped with bus outage. Saguaro West 115kV, Saguaro 4 100kV Midpoint, Saguaro 2 15.5kV, and Saguaro CT 2 13.80kV buses isolated with outage.
Saguaro East 115kV Bus	Y	Y	Y	N	N	Generating unit Saguaro CT 1 and 3 tripped with bus outage. Saguaro East 115kV, Saguaro 10 100kV Midpoint, Saguaro 7 100kV Midpoint, Saguaro 1 15.5kV, and Saguaro CT 1 13.80kV buses isolated with outage.

TRANSIENT STABILITY RESULTS COVER SHEET	
Direction	West–to-East
Case Series Number	56
Simultaneous Path	47
Path 47 Definition --WECC or Alternative	WECC
SunZia in Service	No
Tucson-Oracle Reconductor	Yes
2nd Marana Bank	Yes
Bowie Generation Output (MW)	350
West to East Mitigation	Yes
Dona Ana- Picacho 115kV 13 ohm series reactor	Yes
Additional Newman 345/115kV Transformer Bank	Yes
Southwest Power Pool Export	Yes
Nomogram Number	56
Nomogram Point	1
Southline Afton-West Cut Plane Flows (MW)	N/A
Southline Apache-West Cut Plane Flows (MW)	N/A
Southline Saguaro/Tortolita-East Cut Plane Flows (MW)	754
Southline Apache-East Cut Plane Flows (MW)	433
Southline Midpoint West Cut Plane Flows (MW)	N/A
Path 47 Flows (MW)	1048

ATTACHMENT J –TRANSIENT STABILITY RESULTS – CASE = 56_we_0754_0433_1048_01TS.SAV						
OUTAGE	STABLE (Y/N)	CREATES AN ISLAND (Y/N)	ANGLE VIOLATION MACHINES OUT OF STEP (Y/N)	WORST CONDITION ANALYSIS VOLTAGE VIOLATION (Y/N)	WORST CONDITION ANALYSIS FREQUENCY VIOLATION (Y/N)	NOTES
CATEGORY A						
No Disturbance	Y	N	N	N	N	
CATEGORY B						
Bump Test - Trip of Palo Verde	Y	N	Y	N	N	Forced trip of Pale Verde
Adams 230/115kV Transformer	Y	Y	N	N	N	Radial system. Adams, Mural, Boothill 115kV isolated w/ outage
Afton 345kV Phase Shifter 1	Y	N	N	N	N	
Afton-Midpoint 345kV Line	Y	N	N	N	N	
Apache 345/230kV Transformer	Y	N	N	N	N	
Apache-Adams 230kV Line	Y	N	N	N	N	
Apache-Pantano 230kV Line	Y	N	N	N	N	
Delbac-Nogoles 230kV Line	Y	N	N	N	N	
Hidalgo-Apache 345kV Line	Y	N	N	N	N	
Marana 230/115kV Transformer	Y	N	N	N	N	
Marana-Rattle Snake 230kV Line	Y	N	N	N	N	
Midpoint-Hidalgo 345kV Line	Y	N	N	N	N	
Nogales-Adams 230kV Line	Y	N	N	N	N	
Rattle Snake 230/115kV Transformer	Y	Y	N	N	N	Radial system. Blackmtn, Brawley , Rattlsnk, Sandario, Sanxaver, Snydhill, Twinpeak 115kV isoladed w/ outage
Southline Saguaro 230/115kV Transformer #1	Y	N	N	N	N	
Southline Saguaro-Marana 230kV Line	Y	N	N	N	N	
Tortolita 500/230kV Transformer	Y	N	N	N	N	
Tucson 230/115kV Transformer	Y	N	N	N	N	
Tucson 230/DMP 138kV Transformer	Y	N	N	N	N	
Tucson 230/DMP 138kV Transformers #1 and #2	Y	N	N	N	N	
Tucson-Del Bac 230kV Line	Y	N	N	N	N	
Tucson-Rattlesnake 230kV Line	Y	N	N	N	N	
Tucson-Tortolita 230kV Line	Y	N	N	N	N	
Tucson-Vail 230kV Line	Y	N	N	N	N	
Vail 345/230kV Transformer	Y	N	N	N	N	
CATEGORY C						
Adams Tap-Apache SL & Adams Tap-Nogales 230kV Lines	Y	Y	N	N	N	Radial system. Adams, Mural, Boothill 115kV isolated w/ outage
Afton-Midpoint 345kV #1 And #2 Lines	Y	N	N	N	N	
Apache-Pantano & Adams-Nogales 230kV Lines	Y	N	N	N	N	
Apache-Pantano & Apache-Adams 230kV Lines	Y	N	N	N	N	
Hidalgo-Apache 345kV #1 And #2 Lines	Y	N	N	N	N	
Luna-Afton #1 and #2 345kV Lines w/ LAPS	Y	N	N	N	N	LAPS performed the following: tripped Dona Ana-Picacho 115kV

ATTACHMENT J –TRANSIENT STABILITY RESULTS – CASE = 56_we_0754_0433_1048_01TS.SAV

OUTAGE	STABLE (Y/N)	CREATES AN ISLAND (Y/N)	ANGLE VIOLATION MACHINES OUT OF STEP (Y/N)	WORST CONDITION ANALYSIS VOLTAGE VIOLATION (Y/N)	WORST CONDITION ANALYSIS FREQUENCY VIOLATION (Y/N)	NOTES
						line; cut exports to Eddy County; dropped load at Americas, Copper, Sparks, Horizon, Lane, Scottsdale1, and Wrangler1; and inserted Luna line reactor on the Luna-Hidalgo 345kV line.
Luna-Afton & Luna 345/115kV Transformer	Y	N	N	N	N	
Luna-Afton & Luna 345/115kV Transformer - RAS Opt 1	Y	Y	N	N	N	Phelps Dodge (Pdtyrone 115kV) isolated w/ existing manual action
Luna-Afton & Luna 345/115kV Transformer - RAS Opt 2	Y	Y	N	N	N	Phelps Dodge (Pdtyrone and Ivanhoe 115kV) isolated w/ existing manual action
Luna-Hidalgo & Luna 345/115kV Transformer	Y	N	N	N	N	
Luna-Hidalgo & Luna 345/115kV Transformer - RAS Opt 1	Y	Y	N	N	N	Phelps Dodge (Ivanhoe 115kV) isolated w/ existing manual action
Luna-Hidalgo & Luna 345/115kV Transformer - RAS Opt 2	Y	Y	N	N	N	Phelps Dodge (Ivanhoe 115kV) isolated w/ existing manual action
Luna-Hidalgo & Luna 345/115kV Transformer - RAS Opt 3	Y	Y	N	N	N	Phelps Dodge (Ivanhoe 115kV) isolated w/ existing manual action
Luna-Hidalgo & Luna 345/115kV Transformer - RAS Opt 4	Y	Y	N	N	N	Phelps Dodge (Ivanhoe 115kV) isolated w/ existing manual action
Midpoint-Hidalgo 345kV #1 And #2 Lines	Y	N	N	N	N	
Newman-Arroyo & Newman-Afton 345kV Lines w/ LAPS	Y	N	N	N	N	LAPS performed the following: cut exports to Eddy County; dropped load at Americas, Copper, Sparks, Ft. Blis, Horizon, Lane, Scottsdale1, and Wrangler1.
Newman-Picante & Newman-Afton 345kV Lines w/ LAPS	Y	N	N	N	N	LAPS cut exports to Eddy County and dropped load at Americas..
Nogales-Del Bac & Adams Tap-Nogales 230kV Lines	Y	Y	N	N	N	Nogales 230kV isolated w/ outage
Pantano-Vail & Adams-Nogales 230kV Lines	Y	N	N	N	N	
Pantano-Vail & Pantano-Apache SL 230kV Lines	Y	N	N	N	N	
Rattlesnake-Tucson & Marana-Rattlesnake 230kV Lines	Y	Y	N	N	N	Radial system. Blackmtn, Brawley , Rattlsnk, Sandario, Sanxaver, Snydhill, Twinpeak 115kV isoladed w/ outage
Rattlesnake-Tucson & Vail-Tucson 230kV Lines	Y	N	N	N	N	
Saguaro SL-Marana & Marana-Rattlesnake 230kV Lines	Y	N	N	N	N	
Springerville-Vail & Greenlee-Willow 345 kV Lines	Y	N	N	N	N	
Springerville-Vail & Springerville-Greenlee 345 kV Lines	Y	N	N	N	N	
Springerville-Vail & Willow-Winchester 345 kV Lines	Y	N	N	N	N	
Springerville-Vail & Winchester-Vail 345 kV Lines	Y	N	N	N	N	
Sthln Sag-Sag East & Sthln Sag-Sag West 115kV lines	Y	N	N	N	N	
Tortolita-Tucson & Del Bac-Tucson 230kV Lines	Y	N	N	N	N	
Tortolita-Tucson & Marana-Southline Saguaro 230kV Lines	Y	N	N	N	N	
Tortolita-Tucson & Rattlesnake-Marana 230kV Lines	Y	N	N	N	N	
Tortolita-Tucson & Rattlesnake-Tucson 230kV Lines	Y	N	N	N	N	
Vail-Tucson & Adams-Nogales 230kV Lines	Y	N	N	N	N	
Vail-Tucson & Del Bac-Nogales 230kV Lines	Y	N	N	N	N	
Vail-Tucson & Vail-Pantano 230kV Lines	Y	N	N	N	N	

ATTACHMENT J –TRANSIENT STABILITY RESULTS – CASE = 56_we_0754_0433_1048_01TS.SAV						
OUTAGE	STABLE (Y/N)	CREATES AN ISLAND (Y/N)	ANGLE VIOLATION MACHINES OUT OF STEP (Y/N)	WORST CONDITION ANALYSIS VOLTAGE VIOLATION (Y/N)	WORST CONDITION ANALYSIS FREQUENCY VIOLATION (Y/N)	NOTES
Saguaro West 115kV Bus	Y	Y	Y	N	N	Generating unit Saguaro CT 2 tripped with bus outage. Saguaro West 115kV, Saguaro 4 100kV Midpoint, Saguaro 2 15.5kV, and Saguaro CT 2 13.80kV buses isolated with outage.
Saguaro East 115kV Bus	Y	Y	Y	N	N	Generating unit Saguaro CT 1 and 3 tripped with bus outage. Saguaro East 115kV, Saguaro 10 100kV Midpoint, Saguaro 7 100kV Midpoint, Saguaro 1 15.5kV, Saguaro CT 1 13.80kV, and Saguaro CT 3 13.80kV buses isolated with outage.

ATTACHMENT J –TRANSIENT STABILITY RESULTS – CASE = 56_we_0754_0433_1048_01_OOSTS.SAV						
OUTAGE	STABLE (Y/N)	CREATES AN ISLAND (Y/N)	ANGLE VIOLATION MACHINES OUT OF STEP (Y/N)	WORST CONDITION ANALYSIS VOLTAGE VIOLATION (Y/N)	WORST CONDITION ANALYSIS FREQUENCY VIOLATION (Y/N)	NOTES
CATEGORY A						
No Disturbance	Y	N	N	N	N	
CATEGORY B						
Bump Test - Trip of Palo Verde	Y	N	Y	N	N	Forced trip of Pale Verde
CATEGORY C						
Luna-Hidalgo & Luna 345/115kV Transformer	Y	N	N	N	N	
Luna-Hidalgo & Luna 345/115kV Transformer - RAS Opt 1	Y	Y	N	N	N	Phelps Dodge (Ivanhoe 115kV) isolated w/ existing manual action
Luna-Hidalgo & Luna 345/115kV Transformer - RAS Opt 2	Y	Y	N	N	N	Phelps Dodge (Ivanhoe 115kV) isolated w/ existing manual action
Luna-Hidalgo & Luna 345/115kV Transformer - RAS Opt 3	Y	Y	N	N	N	Phelps Dodge (Ivanhoe 115kV) isolated w/ existing manual action
Luna-Hidalgo & Luna 345/115kV Transformer - RAS Opt 4	Y	Y	N	N	N	Phelps Dodge (Ivanhoe 115kV) isolated w/ existing manual action
Springerville-Vail & Greenlee-Willow 345 kV Lines	Y	N	N	N	N	
Springerville-Vail & Springerville-Greenlee 345 kV Lines	Y	N	N	N	N	
Springerville-Vail & Willow-Winchester 345 kV Lines	Y	N	N	N	N	
Springerville-Vail & Winchester-Vail 345 kV Lines	Y	N	N	N	N	
Saguaro West 115kV Bus	Y	Y	Y	N	N	Generating unit Saguaro CT 2 tripped with bus outage. Saguaro West 115kV, Saguaro 4 100kV Midpoint, Saguaro 2 15.5kV, and Saguaro CT 2 13.80kV buses isolated with outage.
Saguaro East 115kV Bus	Y	Y	Y	N	N	Generating unit Saguaro CT 1 and 3 tripped with bus outage. Saguaro East 115kV, Saguaro 10 100kV Midpoint, Saguaro 7 100kV Midpoint, Saguaro 1 15.5kV, Saguaro CT 1 13.80kV, and Saguaro CT 3 13.80kV buses isolated with outage.

TRANSIENT STABILITY RESULTS COVER SHEET	
Direction	West–to-East
Case Series Number	56
Simultaneous Path	47
Path 47 Definition --WECC or Alternative	WECC
SunZia in Service	No
Tucson-Oracle Reconductor	Yes
2nd Marana Bank	Yes
Bowie Generation Output (MW)	350
West to East Mitigation	Yes
Dona Ana- Picacho 115kV 13 ohm series reactor	Yes
Additional Newman 345/115kV Transformer Bank	Yes
Southwest Power Pool Export	Yes
Nomogram Number	56
Nomogram Point	2
Southline Afton-West Cut Plane Flows (MW)	N/A
Southline Apache-West Cut Plane Flows (MW)	N/A
Southline Saguaro/Tortolita-East Cut Plane Flows (MW)	758
Southline Apache-East Cut Plane Flows (MW)	968
Southline Midpoint West Cut Plane Flows (MW)	N/A
Path 47 Flows (MW)	481

ATTACHMENT J –TRANSIENT STABILITY RESULTS – CASE = 56_WE_0758_0968_0481_03TS.SAV						
OUTAGE	STABLE (Y/N)	CREATES AN ISLAND (Y/N)	ANGLE VIOLATION MACHINES OUT OF STEP (Y/N)	WORST CONDITION ANALYSIS VOLTAGE VIOLATION (Y/N)	WORST CONDITION ANALYSIS FREQUENCY VIOLATION (Y/N)	NOTES
CATEGORY A						
No Disturbance	Y	N	N	N	N	
CATEGORY B						
Bump Test - Trip of Palo Verde	Y	N	Y	N	N	Forced trip of Pale Verde
Adams 230/115kV Transformer	Y	Y	N	N	N	Radial system. Adams, Mural, Boothill 115kV isolated w/ outage
Afton 345kV Phase Shifter 1	Y	N	N	N	N	
Afton-Midpoint 345kV Line	Y	N	N	N	N	
Apache 345/230kV Transformer	Y	N	N	N	N	
Apache-Adams 230kV Line	Y	N	N	N	N	
Apache-Pantano 230kV Line	Y	N	N	N	N	
Delbac-Nogoles 230kV Line	Y	N	N	N	N	
Hidalgo-Apache 345kV Line	Y	N	N	N	N	
Marana 230/115kV Transformer	Y	N	N	N	N	
Marana-Rattle Snake 230kV Line	Y	N	N	N	N	
Midpoint-Hidalgo 345kV Line	Y	N	N	N	N	
Nogales-Adams 230kV Line	Y	N	N	N	N	
Rattle Snake 230/115kV Transformer	Y	Y	N	N	N	Radial system. Blackmtn, Brawley , Rattlsnk, Sandario, Sanxaver, Snydhill, Twinpeak 115kV isoladed w/ outage
Southline Saguaro 230/115kV Transformer #1	Y	N	N	N	N	
Southline Saguaro-Marana 230kV Line	Y	N	N	N	N	
Tortolita 500/230kV Transformer	Y	N	N	N	N	
Tucson 230/115kV Transformer	Y	N	N	N	N	
Tucson 230/DMP 138kV Transformer	Y	N	N	N	N	
Tucson 230/DMP 138kV Transformers #1 and #2	Y	N	N	N	N	
Tucson-Del Bac 230kV Line	Y	N	N	N	N	
Tucson-Rattlesnake 230kV Line	Y	N	N	N	N	
Tucson-Tortolita 230kV Line	Y	N	N	N	N	
Tucson-Vail 230kV Line	Y	N	N	N	N	
Vail 345/230kV Transformer	Y	N	N	N	N	
CATEGORY C						
Adams Tap-Apache SL & Adams Tap-Nogales 230kV Lines	Y	Y	N	N	N	Radial system. Adams, Mural, Boothill 115kV isolated w/ outage
Afton-Midpoint 345kV #1 And #2 Lines	Y	N	N	N	N	
Apache-Pantano & Adams-Nogales 230kV Lines	Y	N	N	N	N	
Apache-Pantano & Apache-Adams 230kV Lines	Y	N	N	N	N	
Hidalgo-Apache 345kV #1 And #2 Lines	Y	N	N	N	N	
Luna-Afton #1 and #2 345kV Lines w/ LAPS	Y	N	N	N	N	LAPS didn't take any remedial actions.

ATTACHMENT J –TRANSIENT STABILITY RESULTS – CASE = 56_WE_0758_0968_0481_03TS.SAV						
OUTAGE	STABLE (Y/N)	CREATES AN ISLAND (Y/N)	ANGLE VIOLATION MACHINES OUT OF STEP (Y/N)	WORST CONDITION ANALYSIS VOLTAGE VIOLATION (Y/N)	WORST CONDITION ANALYSIS FREQUENCY VIOLATION (Y/N)	NOTES
Luna-Afton & Luna 345/115kV Transformer	Y	N	N	N	N	
Luna-Afton & Luna 345/115kV Transformer - RAS Opt 1	Y	Y	N	N	N	Phelps Dodge (Pdtyrone 115kV) isolated w/ existing manual action
Luna-Afton & Luna 345/115kV Transformer - RAS Opt 2	Y	Y	N	N	N	Phelps Dodge (Pdtyrone and Ivanhoe 115kV) isolated w/ existing manual action
Luna-Hidalgo & Luna 345/115kV Transformer	Y	N	N	N	N	
Luna-Hidalgo & Luna 345/115kV Transformer - RAS Opt 1	Y	Y	N	N	N	Phelps Dodge (Ivanhoe 115kV) isolated w/ existing manual action
Luna-Hidalgo & Luna 345/115kV Transformer - RAS Opt 2	Y	Y	N	N	N	Phelps Dodge (Ivanhoe 115kV) isolated w/ existing manual action
Luna-Hidalgo & Luna 345/115kV Transformer - RAS Opt 3	Y	Y	N	N	N	Phelps Dodge (Ivanhoe 115kV) isolated w/ existing manual action
Luna-Hidalgo & Luna 345/115kV Transformer - RAS Opt 4	Y	Y	N	N	N	Phelps Dodge (Ivanhoe 115kV) isolated w/ existing manual action
Midpoint-Hidalgo 345kV #1 And #2 Lines	Y	N	N	N	N	
Newman-Arroyo & Newman-Afton 345kV Lines w/ LAPS	Y	N	N	N	N	LAPS performed the following: cut exports to Eddy County; dropped load at Americas, Copper, Sparks, Lane, Scottsdale1, and Wrangler1.
Newman-Picante & Newman-Afton 345kV Lines w/ LAPS	Y	N	N	N	N	LAPS cut exports to Eddy County.
Nogales-Del Bac & Adams Tap-Nogales 230kV Lines	Y	Y	N	N	N	Nogales 230kV isolated w/ outage
Pantano-Vail & Adams-Nogales 230kV Lines	Y	N	N	N	N	
Pantano-Vail & Pantano-Apache SL 230kV Lines	Y	N	N	N	N	
Rattlesnake-Tucson & Marana-Rattlesnake 230kV Lines	Y	Y	N	N	N	Radial system. Blackmtn, Brawley , Rattlsnk, Sandario, Sanxaver, Snydhill, Twinpeak 115kV isoladed w/ outage
Rattlesnake-Tucson & Vail-Tucson 230kV Lines	Y	N	N	N	N	
Saguaro SL-Marana & Marana-Rattlesnake 230kV Lines	Y	N	N	N	N	
Springerville-Vail & Greenlee-Willow 345 kV Lines	Y	N	N	N	N	
Springerville-Vail & Springerville-Greenlee 345 kV Lines	Y	N	N	N	N	
Springerville-Vail & Willow-Winchester 345 kV Lines	Y	N	N	N	N	
Springerville-Vail & Winchester-Vail 345 kV Lines	Y	N	N	N	N	
Sthln Sag-Sag East & Sthln Sag-Sag West 115kV lines	Y	N	N	N	N	
Tortolita-Tucson & Del Bac-Tucson 230kV Lines	Y	N	N	N	N	
Tortolita-Tucson & Marana-Southline Saguaro 230kV Lines	Y	N	N	N	N	
Tortolita-Tucson & Rattlesnake-Marana 230kV Lines	Y	N	N	N	N	
Tortolita-Tucson & Rattlesnake-Tucson 230kV Lines	Y	N	N	N	N	
Vail-Tucson & Adams-Nogales 230kV Lines	Y	N	N	N	N	
Vail-Tucson & Del Bac-Nogales 230kV Lines	Y	N	N	N	N	
Vail-Tucson & Vail-Pantano 230kV Lines	Y	N	N	N	N	
Saguaro West 115kV Bus	Y	Y	Y	N	N	Generating unit Saguaro CT 2 tripped with bus outage. Saguaro West 115kV, Saguaro 4 100kV Midpoint, Saguaro 2 15.5kV, and Saguaro CT 2 13.80kV buses isolated with outage.
Saguaro East 115kV Bus	Y	Y	Y	N	N	Generating unit Saguaro CT 1 and 3 tripped with bus outage.

ATTACHMENT J –TRANSIENT STABILITY RESULTS – CASE = 56_WE_0758_0968_0481_03TS.SAV						
OUTAGE	STABLE (Y/N)	CREATES AN ISLAND (Y/N)	ANGLE VIOLATION MACHINES OUT OF STEP (Y/N)	WORST CONDITION ANALYSIS VOLTAGE VIOLATION (Y/N)	WORST CONDITION ANALYSIS FREQUENCY VIOLATION (Y/N)	NOTES
						Saguaro East 115kV, Saguaro 10 100kV Midpoint, Saguaro 7 100kV Midpoint, Saguaro 1 15.5kV, Saguaro CT 1 13.80kV, and Saguaro CT 3 13.80kV buses isolated with outage.

ATTACHMENT J –TRANSIENT STABILITY RESULTS – CASE = 56_WE_0758_0968_0481_02_OOSTS.SAV						
OUTAGE	STABLE (Y/N)	CREATES AN ISLAND (Y/N)	ANGLE VIOLATION MACHINES OUT OF STEP (Y/N)	WORST CONDITION ANALYSIS VOLTAGE VIOLATION (Y/N)	WORST CONDITION ANALYSIS FREQUENCY VIOLATION (Y/N)	NOTES
CATEGORY A						
No Disturbance	Y	N	N	N	N	
CATEGORY B						
Bump Test - Trip of Palo Verde	Y	N	Y	N	N	Forced trip of Pale Verde
CATEGORY C						
Luna-Hidalgo & Luna 345/115kV Transformer	Y	N	N	N	N	
Luna-Hidalgo & Luna 345/115kV Transformer - RAS Opt 1	Y	Y	N	N	N	Phelps Dodge (Ivanhoe 115kV) isolated w/ existing manual action
Luna-Hidalgo & Luna 345/115kV Transformer - RAS Opt 2	Y	Y	N	N	N	Phelps Dodge (Ivanhoe 115kV) isolated w/ existing manual action
Luna-Hidalgo & Luna 345/115kV Transformer - RAS Opt 3	Y	Y	N	N	N	Phelps Dodge (Ivanhoe 115kV) isolated w/ existing manual action
Luna-Hidalgo & Luna 345/115kV Transformer - RAS Opt 4	Y	Y	N	N	N	Phelps Dodge (Ivanhoe 115kV) isolated w/ existing manual action
Springerville-Vail & Greenlee-Willow 345 kV Lines	Y	N	N	N	N	
Springerville-Vail & Springerville-Greenlee 345 kV Lines	Y	N	N	N	N	
Springerville-Vail & Willow-Winchester 345 kV Lines	Y	N	N	N	N	
Springerville-Vail & Winchester-Vail 345 kV Lines	Y	N	N	N	N	
Saguaro West 115kV Bus	Y	Y	Y	N	N	Generating unit Saguaro CT 2 tripped with bus outage. Saguaro West 115kV, Saguaro 4 100kV Midpoint, Saguaro 2 15.5kV, and Saguaro CT 2 13.80kV buses isolated with outage.
Saguaro East 115kV Bus	Y	Y	Y	N	N	Generating unit Saguaro CT 1 and 3 tripped with bus outage. Saguaro East 115kV, Saguaro 10 100kV Midpoint, Saguaro 7 100kV Midpoint, Saguaro 1 15.5kV, Saguaro CT 1 13.80kV, and Saguaro CT 3 13.80kV buses isolated with outage.

TRANSIENT STABILITY RESULTS COVER SHEET	
Direction	East-to-West
Case Series Number	67
Simultaneous Path	47
Path 47 Definition --WECC or Alternative	WECC
SunZia in Service	No
Tucson-Oracle Reconductor	No
2nd Marana Bank	No
Bowie Generation Output (MW)	350
West to East Mitigation	No
Dona Ana- Picacho 115kV 13 ohm series reactor	No
Additional Newman 345/115kV Transformer Bank	No
Southwest Power Pool Export	No
Nomogram Number	67
Nomogram Point	1
Southline Afton-West Cut Plane Flows (MW)	N/A
Southline Apache-West Cut Plane Flows (MW)	1000
Southline Saguaro/Tortolita-East Cut Plane Flows (MW)	N/A
Southline Apache-East Cut Plane Flows (MW)	N/A
Southline Midpoint West Cut Plane Flows (MW)	1026
Path 47 Flows (MW)	1048

ATTACHMENT J –TRANSIENT STABILITY RESULTS – CASE = 67_EW_1026_1000_1048_V01TS.SAV						
OUTAGE	STABLE (Y/N)	CREATES AN ISLAND (Y/N)	ANGLE VIOLATION MACHINES OUT OF STEP (Y/N)	WORST CONDITION ANALYSIS VOLTAGE VIOLATION (Y/N)	WORST CONDITION ANALYSIS FREQUENCY VIOLATION (Y/N)	NOTES
CATEGORY A						
No Disturbance	Y	N	N	N	N	
CATEGORY B						
Bump Test - Trip of Palo Verde	Y	N	Y	N	N	Forced trip of Pale Verde
Adams 230/115kV Transformer	Y	Y	N	N	N	Radial system. Adams, Mural, Boothill 115kV isolated w/ outage
Afton 345kV Phase Shifter 1	Y	N	N	N	N	
Afton-Midpoint 345kV Line	Y	N	N	N	N	
Apache 345/230kV Transformer	Y	N	N	N	N	
Apache-Adams 230kV Line	Y	N	N	N	N	
Apache-Pantano 230kV Line	Y	N	N	N	N	
Delbac-Nogoles 230kV Line	Y	N	N	N	N	
Hidalgo-Apache 345kV Line	Y	N	N	N	N	
Marana 230/115kV Transformer	Y	N	N	N	N	
Marana-Rattle Snake 230kV Line	Y	N	N	N	N	
Midpoint-Hidalgo 345kV Line	Y	N	N	N	N	
Nogales-Adams 230kV Line	Y	N	N	N	N	
Rattle Snake 230/115kV Transformer	Y	Y	N	N	N	Radial system. Blackmtn, Brawley , Rattlsnk, Sandario, Sanxaver, Snydhill, Twinpeak 115kV isoladed w/ outage
Southline Saguaro 230/115kV Transformer #1	Y	N	N	N	N	
Southline Saguaro-Marana 230kV Line	Y	N	N	N	N	
Tortolita 500/230kV Transformer	Y	N	N	N	N	
Tucson 230/115kV Transformer	Y	N	N	N	N	
Tucson 230/DMP 138kV Transformer	Y	N	N	N	N	
Tucson 230/DMP 138kV Transformers #1 and #2	Y	N	N	N	N	
Tucson-Del Bac 230kV Line	Y	N	N	N	N	
Tucson-Rattlesnake 230kV Line	Y	N	N	N	N	
Tucson-Tortolita 230kV Line	Y	N	N	N	N	
Tucson-Vail 230kV Line	Y	N	N	N	N	
Vail 345/230kV Transformer	Y	N	N	N	N	
CATEGORY C						
Adams Tap-Apache SL & Adams Tap-Nogales 230kV Lines	Y	Y	N	N	N	Radial system. Adams, Mural, Boothill 115kV isolated w/ outage
Afton-Midpoint 345kV #1 And #2 Lines	Y	N	N	Y	N	Hash pattern response.at Southline Midpoint, Southline Hidalgo, and Southline Apache 345kV, Apache 230kV, Mural 115kV, and Boothill 115kV buses, etc.
Afton-Midpoint 345kV #1 And #2 Lines w/ RAS	Y	N	N	N	N	RAS trip of 400MW of Southline Generation interconnected on

ATTACHMENT J –TRANSIENT STABILITY RESULTS – CASE = 67_EW_1026_1000_1048_V01TS.SAV						
OUTAGE	STABLE (Y/N)	CREATES AN ISLAND (Y/N)	ANGLE VIOLATION MACHINES OUT OF STEP (Y/N)	WORST CONDITION ANALYSIS VOLTAGE VIOLATION (Y/N)	WORST CONDITION ANALYSIS FREQUENCY VIOLATION (Y/N)	NOTES
						Midpoint Spur mitigates instability.
Apache-Pantano & Adams-Nogales 230kV Lines	Y	N	N	N	N	
Apache-Pantano & Apache-Adams 230kV Lines	Y	N	N	N	N	
Hidalgo-Apache 345kV #1 And #2 Lines	Y	N	N	N	N	
Luna-Afton #1 and #2 345kV Lines w/ LAPS	Y	N	N	N	N	LAPS performed the following: tripped Dona Ana-Picacho 115kV line; dropped load at Americas, Copper, Sparks, Ft. Blis, Horizon, Lane, Scottsdale1, and Wrangler1; and tripped shunt capacitors at Wrangler and Rio Boss.
Luna-Afton & Luna 345/115kV Transformer	Y	N	N	N	N	
Luna-Afton & Luna 345/115kV Transformer - RAS Opt 1	Y	Y	N	N	N	Phelps Dodge (Pdtyrone 115kV) isolated w/ existing manual action
Luna-Afton & Luna 345/115kV Transformer - RAS Opt 2	Y	Y	N	N	N	Phelps Dodge (Pdtyrone and Ivanhoe 115kV) isolated w/ existing manual action
Luna-Hidalgo & Luna 345/115kV Transformer	Y	N	N	N	N	
Luna-Hidalgo & Luna 345/115kV Transformer - RAS Opt 1	Y	Y	N	N	N	Phelps Dodge (Ivanhoe 115kV) isolated w/ existing manual action
Luna-Hidalgo & Luna 345/115kV Transformer - RAS Opt 2	Y	Y	N	N	N	Phelps Dodge (Ivanhoe 115kV) isolated w/ existing manual action
Luna-Hidalgo & Luna 345/115kV Transformer - RAS Opt 3	Y	Y	N	N	N	Phelps Dodge (Ivanhoe 115kV) isolated w/ existing manual action
Luna-Hidalgo & Luna 345/115kV Transformer - RAS Opt 4	Y	Y	N	N	N	Phelps Dodge (Ivanhoe 115kV) isolated w/ existing manual action
Midpoint-Hidalgo 345kV #1 And #2 Lines	Y	N	N	N	N	
Newman-Arroyo & Newman-Afton 345kV Lines w/ LAPS	Y	N	N	N	N	LAPS didn't take any remedial actions.
Newman-Picante & Newman-Afton 345kV Lines w/ LAPS	Y	N	N	N	N	LAPS didn't take any remedial actions.
Nogales-Del Bac & Adams Tap-Nogales 230kV Lines	Y	Y	N	N	N	Nogales 230kV isolated w/ outage
Pantano-Vail & Adams-Nogales 230kV Lines	Y	N	N	N	N	
Pantano-Vail & Pantano-Apache SL 230kV Lines	Y	N	N	N	N	
Rattlesnake-Tucson & Marana-Rattlesnake 230kV Lines	Y	Y	N	N	N	Radial system. Blackmtn, Brawley , Rattlsnk, Sandario, Sanxaver, Snydhill, Twinpeak 115kV isoladed w/ outage
Rattlesnake-Tucson & Vail-Tucson 230kV Lines	Y	N	N	N	N	
Saguaro SL-Marana & Marana-Rattlesnake 230kV Lines	Y	N	N	N	N	
Springerville-Vail & Greenlee-Willow 345 kV Lines	Y	N	N	N	N	
Springerville-Vail & Springerville-Greenlee 345 kV Lines	Y	N	N	N	N	
Springerville-Vail & Willow-Winchester 345 kV Lines	Y	N	N	N	N	
Springerville-Vail & Winchester-Vail 345 kV Lines	Y	N	N	N	N	
Sthln Sag-Sag East & Sthln Sag-Sag West 115kV lines	Y	N	N	N	N	
Tortolita-Tucson & Del Bac-Tucson 230kV Lines	Y	N	N	N	N	
Tortolita-Tucson & Marana-Southline Saguaro 230kV Lines	Y	N	N	N	N	
Tortolita-Tucson & Rattlesnake-Marana 230kV Lines	Y	N	N	N	N	

ATTACHMENT J –TRANSIENT STABILITY RESULTS – CASE = 67_EW_1026_1000_1048_V01TS.SAV						
OUTAGE	STABLE (Y/N)	CREATES AN ISLAND (Y/N)	ANGLE VIOLATION MACHINES OUT OF STEP (Y/N)	WORST CONDITION ANALYSIS VOLTAGE VIOLATION (Y/N)	WORST CONDITION ANALYSIS FREQUENCY VIOLATION (Y/N)	NOTES
Tortolita-Tucson & Rattlesnake-Tucson 230kV Lines	Y	N	N	N	N	
Vail-Tucson & Adams-Nogales 230kV Lines	Y	N	N	N	N	
Vail-Tucson & Del Bac-Nogales 230kV Lines	Y	N	N	N	N	
Vail-Tucson & Vail-Pantano 230kV Lines	Y	N	N	N	N	
Saguaro West 115kV Bus	Y	Y	Y	N	N	Generating unit Saguaro CT 2 tripped with bus outage. Saguaro West 115kV, Saguaro 4 100kV Midpoint, Saguaro 2 15.5kV, and Saguaro CT 2 13.80kV buses isolated with outage.
Saguaro East 115kV Bus	Y	Y	Y	N	N	Generating unit Saguaro CT 1 and 3 tripped with bus outage. Saguaro East 115kV, Saguaro 10 100kV Midpoint, Saguaro 7 100kV Midpoint, Saguaro 1 15.5kV, Saguaro CT 1 13.80kV, and Saguaro CT 3 13.80kV buses isolated with outage.

ATTACHMENT J –TRANSIENT STABILITY RESULTS – CASE = 67_EW_1026_1000_1048_V01_OOSTS						
OUTAGE	STABLE (Y/N)	CREATES AN ISLAND (Y/N)	ANGLE VIOLATION MACHINES OUT OF STEP (Y/N)	WORST CONDITION ANALYSIS VOLTAGE VIOLATION (Y/N)	WORST CONDITION ANALYSIS FREQUENCY VIOLATION (Y/N)	NOTES
CATEGORY A						
No Disturbance	Y	N	N	N	N	
CATEGORY B						
Bump Test - Trip of Palo Verde	Y	N	Y	N	N	Forced trip of Pale Verde
CATEGORY C						
Luna-Hidalgo & Luna 345/115kV Transformer	Y	N	N	N	N	
Luna-Hidalgo & Luna 345/115kV Transformer - RAS Opt 1	Y	Y	N	N	N	Phelps Dodge (Ivanhoe 115kV) isolated w/ existing manual action
Luna-Hidalgo & Luna 345/115kV Transformer - RAS Opt 2	Y	Y	N	N	N	Phelps Dodge (Ivanhoe 115kV) isolated w/ existing manual action
Luna-Hidalgo & Luna 345/115kV Transformer - RAS Opt 3	Y	Y	N	N	N	Phelps Dodge (Ivanhoe 115kV) isolated w/ existing manual action
Luna-Hidalgo & Luna 345/115kV Transformer - RAS Opt 4	Y	Y	N	N	N	Phelps Dodge (Ivanhoe 115kV) isolated w/ existing manual action
Springerville-Vail & Greenlee-Willow 345 kV Lines	Y	N	N	N	N	
Springerville-Vail & Springerville-Greenlee 345 kV Lines	Y	N	N	N	N	
Springerville-Vail & Willow-Winchester 345 kV Lines	Y	N	N	N	N	
Springerville-Vail & Winchester-Vail 345 kV Lines	Y	N	N	N	N	
Saguaro West 115kV Bus	Y	Y	Y	N	N	Generating unit Saguaro CT 2 tripped with bus outage. Saguaro West 115kV, Saguaro 4 100kV Midpoint, Saguaro 2 15.5kV, and Saguaro CT 2 13.80kV buses isolated with outage.
Saguaro East 115kV Bus	Y	Y	Y	N	N	Generating unit Saguaro CT 1 and 3 tripped with bus outage. Saguaro East 115kV, Saguaro 10 100kV Midpoint, Saguaro 7 100kV Midpoint, Saguaro 1 15.5kV, Saguaro CT 1 13.80kV, and Saguaro CT 3 13.80kV buses isolated with outage.

ATTACHMENT K

TRANSIENT STABILITY PLOTS

(House on Southline ShareFile site due to document size)

ATTACHMENT L

BLOCK DIAGRAM STATIC VAR COMPENSATOR

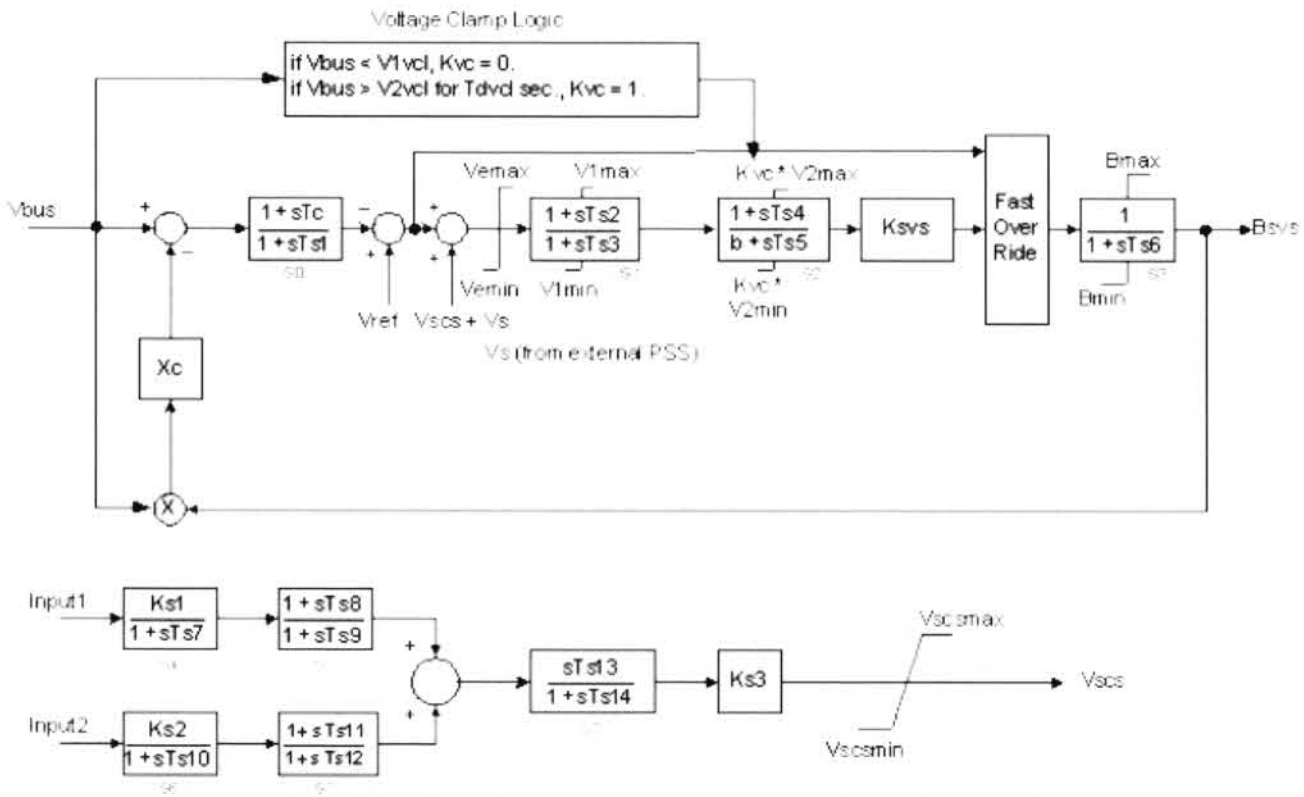

STATIC VAR COMPENSATOR MODEL BLOCK DIAGRAM

STATIC VAR COMPENSATOR MODEL PARAMETERS

svcwsc	
Model Parameter	**Value**
mva	100
ts1	0.052
vemax	0.5
vemin	-0.5
ts2	0.2
ts3	0.06
ts4	0
ts5	0
ksvs	200
ksd	0
bmax	2.5
bpmax	2.5
bpmin	-1
bmin	-1
ts6	0.063
dv	0.5
v1max	99
v1min	-99
v2max	99
v2min	-99
xc	0
tc	0
dv2	99
bshunt	0
tdelay	99
bias	0
j1	0
k1	-1
k2	-1
j2	0
ks1	0
ts7	1
ts8	0
ts9	1
ts13	0
ts14	1
ks3	0
vscsmax	1
ks2	0
ts10	1
ts11	0
ts12	1
b	1
v1vcl	0.3
v2vcl	0.3
tdvcl	0.1

ATTACHMENT M

BLOCK DIAGRAMS FOR SOLAR PROJECT

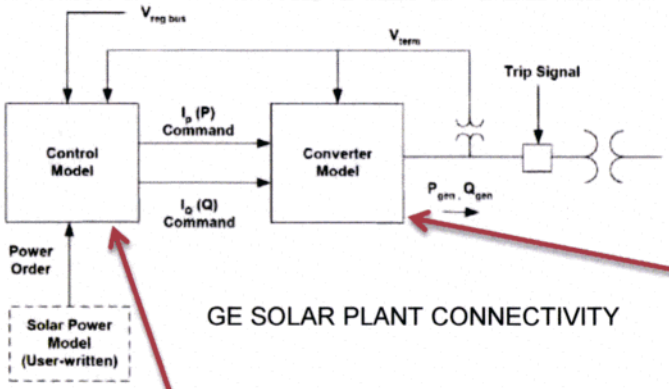

GE SOLAR PLANT CONNECTIVITY

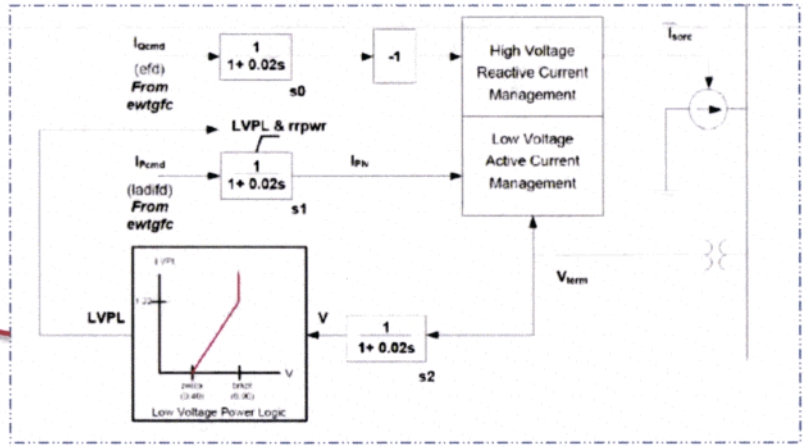

CONVERTER MODEL, gewtg

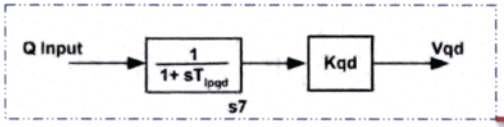

DROOP FUNCTION MODEL

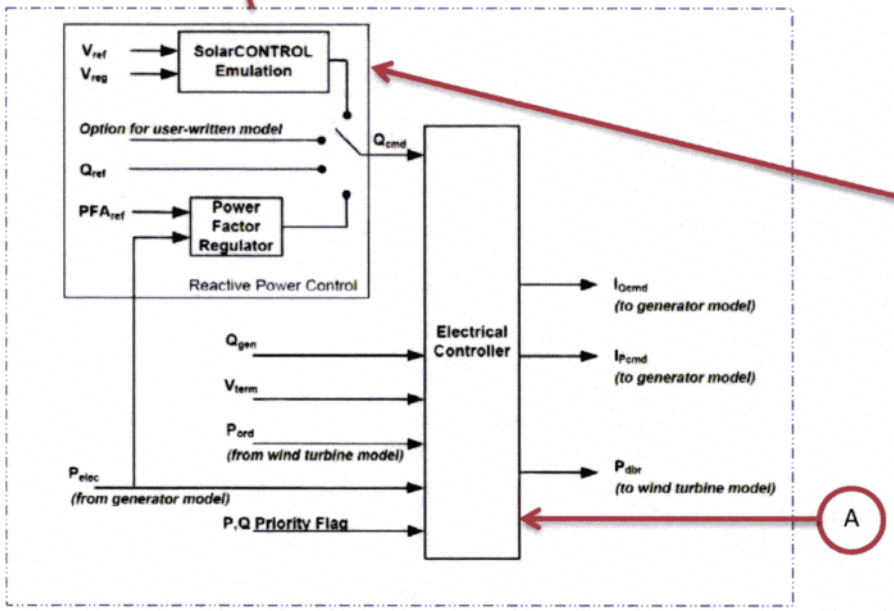

OVERALL REACTIVE POWER AND ELECTRICAL CONTROL MODEL, ewtgfc

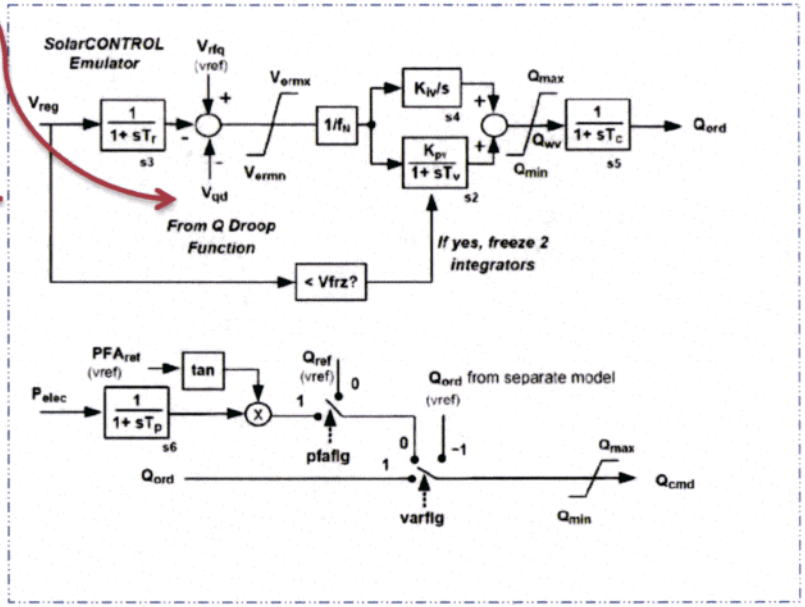

REACTIVE CONTROL MODEL

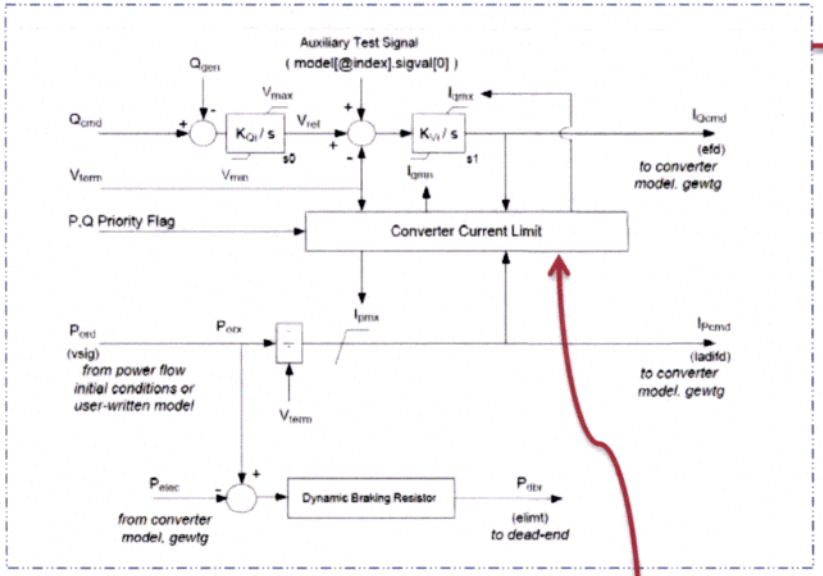

ELECTRICAL CONTROL MODEL

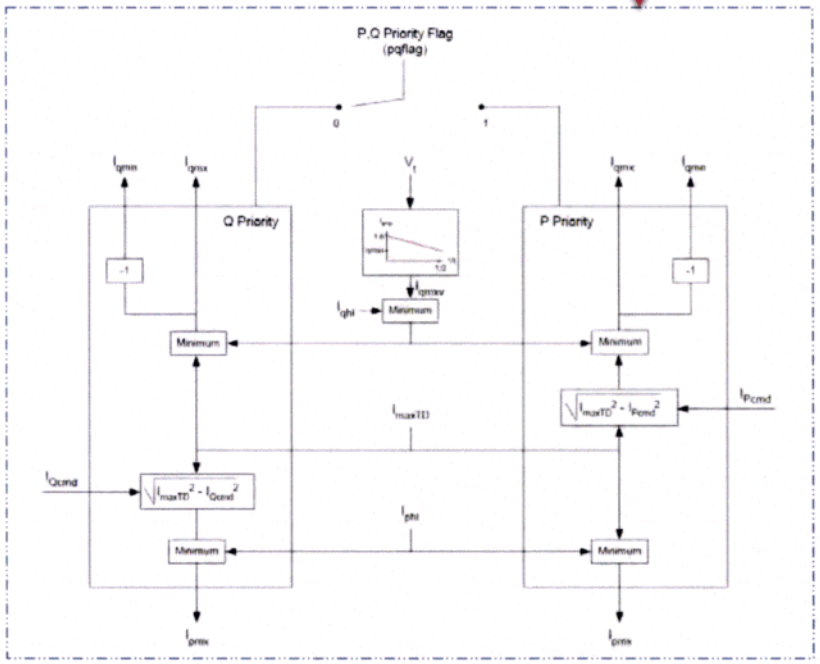

CONVERTER CURRENT LIMIT MODEL

A

SOLAR PROJECT MODEL PARAMETERS, TYPICAL

gewtg	
Model Parameter	**Value**
mva	130.00
lpp	0.80
dvtrp1	-0.25
dvtrp2	-0.50
dvtrp3	-0.70
dvtrp4	-0.85
dvtrp5	0.10
dvtrp6	0.15
dttrp1	1.90
dttrp2	1.20
dttrp3	0.70
dttrp4	0.20
dttrp5	1.00
dttrp6	0.10
fcflg	1.00
rrpwr	10.00
brkpt	0.90
zerox	0.40

ewtgfc	
Model Parameter	**Value**
varflg	1
Kqi	0.1
Kvi	120
Vmax	1.1
Vmin	0.9
Qmax	0.14106736
Qmin	-0.14106736
Tr	0.02
Tc	0.15
Kpv	18
Kiv	5
pfaflg	0
fn	1
Tv	0.05
Tpwr	0.05
Iphl	1.24
Iqhl	1.25
Pqflag	0
Kdbr	0
Ebst	0
Xc	0
Kqd	0.04
Tlpqd	5
Xqd	0
Vermn	-0.1
Vermx	0.1
Vfrz	0.7

ATTACHMENT N

BLOCK DIAGRAM STATIC VAR COMPENSATOR

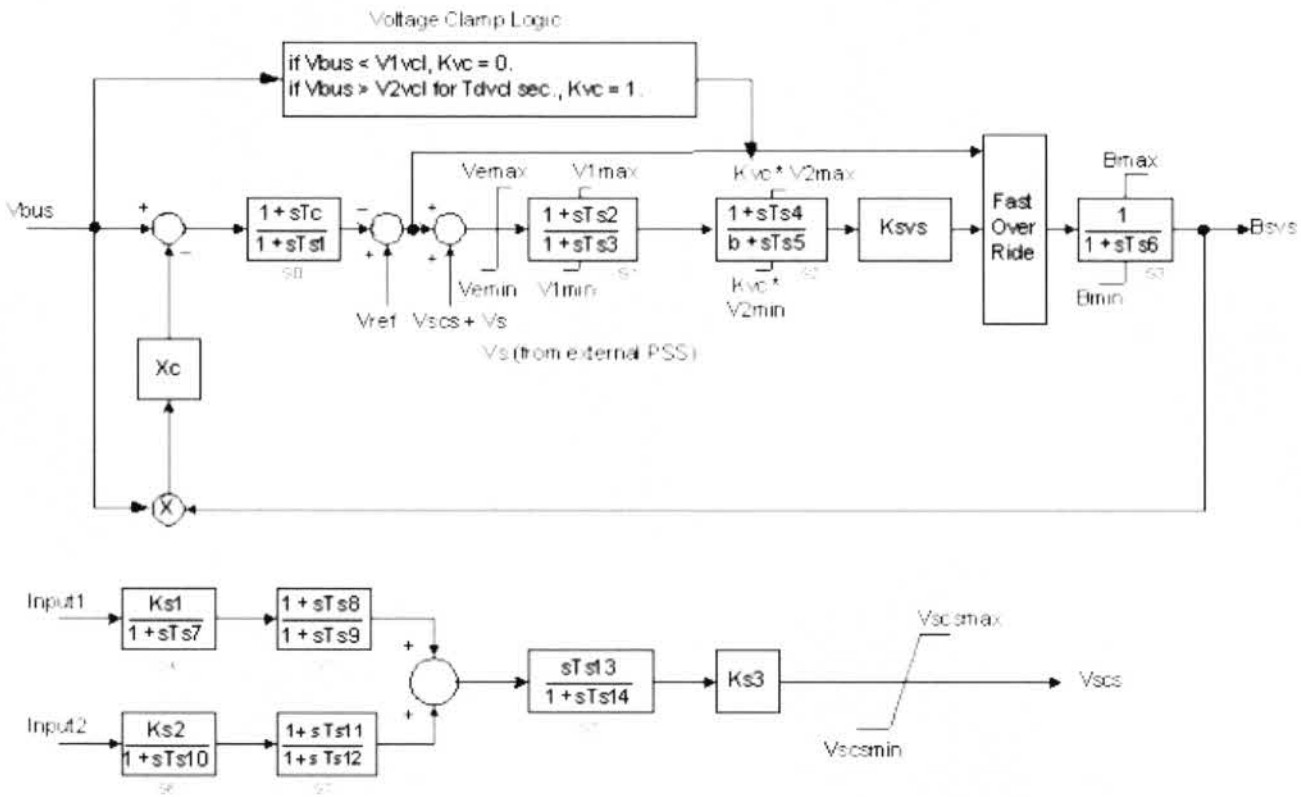

STATIC VAR COMPENSATOR MODEL BLOCK DIAGRAM

STATIC VAR COMPENSATOR MODEL PARAMETERS

svcwsc	
Model Parameter	**Value**
mva	100
ts1	0.052
vemax	0.5
vemin	-0.5
ts2	0.2
ts3	0.06
ts4	0
ts5	0
ksvs	200
ksd	0
bmax	2.5
bpmax	2.5
bpmin	-1
bmin	-1
ts6	0.063
dv	0.5
v1max	99
v1min	-99
v2max	99
v2min	-99
xc	0
tc	0
dv2	99
bshunt	0
tdelay	99
bias	0
j1	0
k1	-1
k2	-1
j2	0
ks1	0
ts7	1
ts8	0
ts9	1
ts13	0
ts14	1
ks3	0
vscsmax	1
ks2	0
ts10	1
ts11	0
ts12	1
b	1
v1vcl	0.3
v2vcl	0.3
tdvcl	0.1

ATTACHMENT O

SOUTHLINE RESPONSES TO PRG COMMENTS

SunZia Comments

SunZia April 18, 2014 comments in black text

Southline response in green text

In general, we believe the Report is comprehensive and somewhat overly detailed for some of the pre-existing conditions; however we expect that the owners of the facilities have discussed these in detail with Southline and the results contained in the Report have been confirmed with the respective owners (facilities or path operators).

The N-2 of the double-circuit portions of the Southline Project should be more prominent in the Report as a Category C outage (and associated generation tripping), and should include discussion related to the potential for corridor outages where the proposed project parallels existing and planned facilities, including SunZia.

The Report should also be restructured to first discuss the confirmation of the non-simultaneous ratings, then the 10% Flow Test, followed by the simultaneous analysis.

Southline believes the report structure is appropriate and follows the PRG approved Phase 2 study plan.

We also concur with the overall conclusion that no interaction exists between Southline and SunZia's modified plan of service ("POS"), however if there are changes or modifications to the Southline POS and ties that are discussed as "normally open" in the Report are anticipated to be operated as closed, we believe that opportunities for interaction between the projects exist.

Specific comments:

Section 1 Executive Summary:

Section 1.1 Project Description: Please clarify the proposed project's resource delivery objectives and the expected benefits that the proposed project can provide to the southwest utilities, e.g. solar resources were modeled for the East to West stressing of the New Build Segment.

Generation assumptions are outlined in Table 4.3 of page 28 of the Final Southline Phase 2 Report.

Table 1.1 Proposed Facilities: includes normally open ties to existing facilities at Hidalgo and Apache that were not included in the analysis. Suggest noting that these were not required or noted impacts for the non-simultaneous or simultaneous analysis. We believe that a transformation at Pantano is required as well to interconnect to the existing system, please confirm. Please also include a discussion in the table related to the "optional" ties at Nogales and Del Bac.

The plan of service is clearly defined and outlined in both the PRG approved Phase 2 study plan and the Final Southline Phase 2 Report. At the request of Southwest Transmission Company (SWTC) and Western Area Power Administration (Western), Southline conducted an additional assessment modeling a 115kV transmission tie, between Southline and the existing Apache substation. Further details regarding this study can be found in Attachment P of the Final Southline Report. Based on this assessment, Southline is pursuing a direct 115kV Apache interconnection as the forward plan of service.

Section 1.2 Project Planned In-Service Date: The planned in-service date of 2016 seems aggressive given the significant amount of upgrades required for the Upgrade Segment of the proposed project.

The Southline Project currently is planned to be in service 2017.

The Accepted Study Plan and results in this report model a 2016 in service date. Southline will work with the PRG in Phase 3 to construct necessary operating nomograms to bridge the in-service date shift. However, an additional sensitivity was performed in the 2017 time frame (Attachment S) which confirms earlier work. The case(s) used to study the SunZia - Southline simultaneous interaction model year 2017 transmission, generation, and summer peak-loads. The study cases originated from WECC as 2017HS base case that was reviewed by SunZia Re-Study PRG for the SunZia's revised plan of service re-study. The results of the analysis show no issues or criteria violations resulting from the later 2017 year model.

Section 1.3 Project Milestone Schedule: Please provide additional detail on Southline's milestones starting with when conceptual planning started to the last milestone of "commission and operation" in 2016. We suggest additional details on Southline's estimated timeframes for completing the additional steps in the WECC rating process, federal and state permitting, ROW acquisition, final engineering design and construction.

Relevant milestone details are included for the WECC analysis on page 9 of the Final Southline Phase 2 Report.

Section 1.4 Study Results Summary: The summaries of various non-simultaneous Southline path ratings were determined. However, no specific limiting conditions were described and identified such as power flow thermal limit (limiting element, outage), stability limit or post-transient voltage limits etc. The same comment applies to the simultaneous Path 47 vs. various Southline nomograms. Section 1.4.2 should include a discussion of no simultaneous interactions with other WECC paths or SunZia. This is mentioned in 1.6. Suggest also calling out Path 54 as no interaction was identified.

Southline cases were tuned to optimize project flows and meet all WECC and NERC Criteria as described in the approved Southline Study Plan. Section 1.5 of the Final Southline Phase 2 Report lists detailed information where mitigation, such as network upgrade(s), is required for specific project flows, and Section 6.4 relates this information to each Case Series Nomogram.

Section 1.5 Mitigation Plan: This section describes 11 mitigation plans and follow-up actions. However, there were no discussions on the coordination or relationships with the specific path limiting conditions.

Case series are identified for each mitigation and noted in the Final Southline Phase 2 Report. Section 6.4 relates mitigation to each Case Series Nomogram.

Section 1.6 Conclusions: The conclusions stated that this Phase 2 Rating Study involved comprehensive post-transient contingency analyses, voltage stability analyses and transient stability analyses. However, Southline has not included power flow analysis to meet all NERC Reliability Standards and WECC System Performance Criteria, for a Phase 2 Rating. It should be recognized that the objective of power flow analysis is to determine thermal loading and voltage performance during a steady-state condition. The analysis of these phenomena cannot be substituted with post-transient analysis that is primarily focusing on the voltage instability conditions up to 3 minutes. The study objectives, assumptions and methodologies are also different between the two analytical tools.

Southline disagrees. It is not accurate to reference thermal flows via a limited power-flow analysis allowing the area swing to pick up all the slack in the area of study. By contrast and early on, in the Phase 2 PRG process, Southline asked if the PRG would support a very comprehensive analysis using Post-transient governor power-flow in place of the limited power-flow. The PRG supported this and subsequently approved the Phase 2 Study Plan. Southline has followed the study plan.

Section 2 Study Objectives and Methodology:

Section 2.1 General Study Description: This section should add a brief description of the study assumptions including what the power flow base cases were based on and what the load and generation dispatch were used for each path's transfer. For example, it will be different if generation (including fictitious resources) and load dispatch are within and beyond the interface cut-plane. We understand that details may be included in a study plan, but it should be briefly mentioned and highlighted here.

See Study Methodology section on page 20 of the PRG approved Phase 2 Study Plan and Section 2, Study Objectives and Methodology on page 20 of the Final Southline Phase 2 Report.

Section 2.2 Study Scope and Objectives: The study scope should include an evaluation of the Southline Project's interconnected transmission thermal and voltage performance using power flow analysis.

See Southline's response to SunZia question on section 1.6.

Section 2.4 Types of Analysis Performed in this Study: The same comments as provided above apply here. We do not approve of Southline using the Post- transient

Governor Power Flow Run for Power Flow Contingency Analysis.

See Southline's response to SunZia question on section 1.6.

Section 3 Study Overview:

Section 3.1 WECC 10% Path Flow Test: This section should add a highlight of study results including what assumptions and base cases were used.

Sufficient detail is provided in sections: 3, 5, Attachment Q and R of the Final Phase 2 Study Report.

Section 3.4 Non-Simultaneous Analysis: This section is confusing between a non-simultaneous and a simultaneous analysis. A further clarification on the difference in Southline system requirements and the associated achievable power transfer levels as determined between the non-simultaneous and simultaneous study should be discussed. A summary table may be worth adding.

Section 7 of the Final Phase 2 Study Report provides significant details regarding the analysis.

Section 3.5 Mitigation or Corrective Plans: A summary list of the mitigation measures for each Southline path should be brought up front in the Executive Summary section.

Please see Section 1.5 of the Final Phase 2 Study Report.

Sections 3 and 5 could be merged together. Repeated discussions may cause some confusion.

Thank you for your comment. We believe the report structure is appropriate.

Section 4 Power Flow Case Development:

Section 4.2 Foundational Base Case Development: Table 4.3 has a list of new generation projects modeled in Southline vicinity. It will be more informative to provide specific dispatch conditions associated with the Southline line path transfers.

See Southline's response to SunZia question in 2.1 section.

Section 4.6 Changes in Generation, Interchanges, and Load: The same comment applies here. Please provide each of the specific load and generation dispatches associated with the Southline path transfer.

See section of 4 of the Final Phase 2 Study Report for details. For further details, consult cases used to perform the analysis is located on the Southline sharefile site.

Section 5 10% Path Flow Test Results:

Section 5.1 10% Path Flow Test Methodology: The purpose of this test is to determine what will be the potential affected paths due to the simultaneous path interaction effects. In general, WECC guidelines require a simple test based on the worst critical single contingency outage case that established the non-simultaneous path rating.

Section 5.2 Case List and Contingency List: The procedures and scope of this work were not necessary. A number of contingency outage runs should be performed in the simultaneous individual path study but not in a 10% path test.

Southline performed a comprehensive and complete 10% path test.

There is some confusion between Section 6 Simultaneous Analysis and Section 7 Non-simultaneous Analysis. The non-simultaneous analysis should be discussed before a discussion section on a simultaneous analysis. The reason is that the non-simultaneous analysis should be used to determine the achievable rating and the POS requirements. The requirements for subsequent operating procedures or nomograms can be determined from the simultaneous analysis. Section 5 (10% Flow Test) should follow the section of non-simultaneous confirmation of the respective ratings of the proposed project.

Thank you for your comment. The report presentation is appropriate.

Section 6 (Re-numbered as Section 5?) Non-Simultaneous Analysis Results (should put this ahead of the Simultaneous Analysis):

The discussions should follow the Southline major path categories (Defined as Paths Interfaces A, B, C &D etc.). Each category should be discussed separately.

Thank you for your comment. The report presentation is appropriate.

The specific limiting conditions (power flow thermal, dynamic stability or post- transient voltage) which determine the achievable power transfer levels should be discussed and identified in each path category.

Thank you for your comment. The report presentation is appropriate.

Table 7.1 was very confusing to show "Simultaneous Path under Study."

Thank you for your comment. The report presentation is appropriate

Section 7 Simultaneous Analysis Results (should put this after the 10% Flow Test section):

All the previous comments from Section 6 apply to Simultaneous Analysis Result section. In addition with the following:

The limiting term and condition should be referred to each of the Southline path category but not by different case scenario.

Thank you for your comment. The report presentation is appropriate

Study results indicated that there is a large number of system fixes required. The proposed mitigations (nomograms to overcome either thermal or voltage), system enhancements (upgrade) and followed up actions should be correlated to each of the Southline paths.

Thank you for your comment. The report presentation is appropriate.

Section 8 SunZia

It should be pointed out that no interaction was discovered since the Southline Project assumed their path ratings were limited to local area transfers (load and generation dispatch is within the path interface cut-plane but not beyond) and no interconnections to SunZia or outside of the local region. The interaction effects could be experienced if the Southline Project extended its power transfer to Palo Verde Hub as both SunZia and Southline projects may use the same common transmission network to some extent. We would also call out the specific removal of the 500/345kV transformation at the Luna substation as the minor modification to the SunZia POS.

December 9, 2014 APS Comments Regarding Path 23

Given the revised Southline 115kV Apache Interconnection, Southline and APS discussed the new interconnection in relation to possible Path 23 interactions. The following documents those discussions and the conclusion that no interaction is evident between Southline and Path 23.

Background (Southline Apache 115kV Interconnection & Preliminary 10% Test Results)

At the request of SWTC and Western, Southline conducted an additional comprehensive assessment modeling a 115kV transmission tie between Southline and the existing Apache substation. Based on the results of the assessment Southline is now pursuing a direct 115kV Apache interconnection as the forward plan of service.

Given the revised Southline 115kV Apache Interconnection, Southline conducted an additional WECC 10% Path Flow Test to check for any new possible simultaneous WECC Path interactions.

The Southline 115kV Apache Interconnection WECC 10% Path Flow Test was conducted by modeling the Southline Category "C" contingency of the Afton-Midpoint #1 & #2 345kV Lines via post transient governor power flow analysis. The analysis was conducted with cases modeling Southline power-flows in both east to-west and west-to-east directions. Case series 41A and 42A (simultaneous cases modeling Southline vs. Path 47 flows) were updated to include the Apache 115kV tie (to be operated normally closed). Additional transmission projects such as the Tucson-Oracle Re conductor and Southern New Mexico Upgrades (13 ohm series Dona Ana Picacho 115kV line reactor and the Newman 345/115kV autotransformer additions were not modeled in this detailed scenario.

Results are consistent with prior 10% results, showing a simultaneous relationship with Path 47(101.7% - -94.4%), and a potential slight pick-up on Path 23(10.8% - 10.9%). No other WECC Paths showed flows over 10%.

Path 23 vs Southline Project Thermal Analysis

At the request of APS, Southline completed a preliminary thermal analysis of both Path 23 and Southline via post-transient governor power-flow. The following denotes thermal analysis study details, results and conclusion.

<u>Cases Used and Notable Modification</u>

Two existing study cases, previously developed and utilized for Southline studies modeling Southline project flows in both directions (east-to-west and west-to-east), were updated with the Apache 230/115kV transformer and 27 ohm Apache 115kV series reactor. Additional transmission projects such as the Tucson-Oracle Re-conductor and Southern New Mexico Upgrades (13 ohm series Dona Ana Picacho 115kV line reactor and the Newman 345/115kV autotransformer additions were not modeled in this detailed scenario. Table 1 below identifies the cases utilized as well as key case attributes.

Table 1 Post-Transient Key Case Attributes (Flows in MW)

#	Case	Heavy Winter (HW) or Heavy Summer (HS)	Southline Project Modeled In-service	Tortolita / Saguaro East	Apache East	Afton West	Apache West	Path 23 MW	Direction
1	41_ew_1028_1000_1000_14.sav	HS	Yes	N/A	N/A	1029	1000	1001	Westbound
2	42_we_0435_0971_1000_02.sav	HW	Yes	435.2	971	N/A	N/A	-998.6	Eastbound

Scenario Studied

Heavily stressed scenarios were developed in an effort to determine if a Path 23-Southline simultaneous path interaction exists. Each scenario was constructed to best stress both Paths simultaneously by loading both Path 23 and Southline at or near their non-simultaneous levels. Scenario 1 models both the Path 23 and the Southline paths exporting power out of the local area. Alternately Scenario 2 models Path 23 and the Southline paths importing power to the local area.

Scenario 1 case, 41_ew_1028_1000_1000_14.sav, models Path 23 at 1000MW flowing westbound, while the Southline Path models heavy east-to-west flows, 1029MW at Afton west and 1000MW at Apache west. Scenario 2 case, 42_we_0435_0971_1000_02.sav, models Path 23 at 1000MW flowing eastbound, while the Southline Path models heavy west-to-east flows, 435MW at Tortolita/Saguaro and 971MW at Apache East.

Augmented Contingency List

In addition to the contingencies listed in the PRG approved Southline Study Plan, the following additional contingencies taken from Path 23 studies were added and studied via post-transient governor power-flow analysis.

1. Palo Verde-Colorado River 500kV Line
2. Cholla-Preacher Canyon 345kV Line
3. Cholla-Mazatzal 345kV Line
4. Fourcorners-Cholla 345kV #2 Line
5. Cholla-Sugarloaf 500kV Line
6. Coronado-Sugarloaf 500kV Line
7. Four Corners 500/345 kV Transformer 1
8. Four Corners Unit #5
9. Four Corners Unit #4
10. Cholla Unit #4

11. Coronado Unit #1
12. Springerville Unit #4
13. Four Corners-Moenkopi 500kV Line & Four Corners Unit #5
14. Four Corners-Moenkopi & Moenkopi-CEDARMT 500 kV Lines
15. Four Corners-Moenkopi 500kV LINE & Four Corners 500/345kV XFRMR
16. Cholla-Sugarloaf 500kV Line & Cholla 500/345kV Xfrmr #1
17. Pin Peak West 230kV bus
18. Pin Peak Center 230kV bus
19. Pin Peak East 230kV bus
20. Pinical Peak-Mazatzal 345kV Line & Pinical Peak #7 & #14 Xfrmr
21. Pinical Peak-Preacher Canyon 345kV Line & Pinical Peak #4 & #14 Xfrmr

Thermal Results

The contingencies were then applied to both case scenarios 1 and 2, with thermal results filtered for Path 23 and Southline relevance. Thermal results are listed in the following Tables 1 and 2. The results show power-flows at or below respective equipment normal and emergency ratings, and they do not show a simultaneous link between Path 23 and Southline.

Table 1 Secnario 1 ***Post-Transient Case 41_ew_1028_1000_1000_14.sav Thermal Results***

NERC	NO	CONTINGENCY DESCRIPTION	MONITORED BRANCH SECTION	AREA	ZONE	OWNR	N RATE	E RATE	UNIT	% LOADING
A	100	Base Case - Normal Conditions	FOURCORN 500/345 Xfrmr Bank	14	141	2	1025	1350	MVA	98.13
A	100	Base Case - Normal Conditions	FOURCORN 500/345 Xfrmr Bank	14	141	2	1025	1350	MVA	98.9
C5	309	Coronado-Silver King & Cholla-Saguaro 500kV Lines	FOURCORN 500/345 Xfrmr Bank	14	141	2	1025	1350	MVA	99.1
C5	311	Fourcorners-Cholla 345kV #1 & #2 Lines	FOURCORN 500/345 Xfrmr Bank	14	141	2	1025	1350	MVA	97.81
C5	312	Greenlee-Copper Verde & Greenlee-Hidalgo 345kV Lines	GREEN-SW 345/230kV Xfrmr Bank	14	171	3	193	241	MVA	98.62
C5	306	Apache-Pantano & Apache-Adamstap 230kV Lines	WINCHSTR-VAIL 345kV Line	14	160	79	1547.97	1857.56	Amps	99.19

Table 2 Secnario 2			*Post-Transient Case 42_we_0435_0971_1000_02.sav Thermal Results*								
NERC	*NO*	*CONTINGENCY DESCRIPTION*	*MONITORED BRANCH SECTION*	*AREA*	*ZONE*	*OWNR*	*N RATE*	*E RATE*	*UNIT*	*% LOADING*
A	100	Pre-Contingency	FOURCORN 500/345 Xfrmr Bank	14	141	2	1025	1350	MVA	100.68
C5	336	Newman-Arroyo & Newman-Afton 345kV Lines	DIABLO 115/345kV Xfrmr Bank #2	11	110	125	224	258	MVA	99.07
C5	336	Newman-Arroyo & Newman-Afton 345kV Lines	DIABLO 115/345kV Xfrmr Bank #3	11	110	125	224	258	MVA	99.08
C5	336	Newman-Arroyo & Newman-Afton 345kV Lines	DIABLO 115/345kV Xfrmr Bank #1	11	110	125	224	258	MVA	99.92
C5	391	Tortilita-Tucson & Marana-Southline Saguaro 2	TUCSON-ORACLE 115kV Line	14	191	4	382	382	Amps	100.37

Conclusion

A review of the thermal analysis results, modeling both Path 23 and Southline Project at or very close to their non-simultaneous limits does not show a simultaneous relationship.

The analysis does show, for cases modeling Path 23 with heavy westbound power-flows (1000MW), that a Category "C" outage of both Coronado-Silver King & Cholla-Saguaro 500kV Lines results in loading the Four Corners 500/345kV transformer Bank to very near its 1350MVA emergency rating (99.1%). Additionally for reference, it was noted that the same scenario case, modeling high Path 23 westbound flows, shows same Four Corners 500/345kV transformer Bank loaded to 97.8% of its emergency rating for the Category "C" outage of both Four Corners-Cholla 345kV Lines.

SunZia December 23, 2014 comments in black text.

Southline response in green text

To: Southline Project WECC Phase 2 Study Project Review Group (PRG).

The Final Southline WECC Phase 2 Study Report (12-12-14) ("Final Report") has been received and is under review, including its comparison with the previous Draft Southline WECC Phase 2 Study Report (3-31-14) ("Draft Report").

Our records indicate that no other PRG members provided any shared comments on this Draft Report to the entire Southline PRG. However it appears that in fact several changes have occurred over the past nine months.

We note that a new, heretofore undisclosed, normally-closed interconnection at Apache Substation appears in this Final Report. This new interconnection consists of a 230 kV/115 kV transformer, reactor, breaker arrangement, etc. In addition to this Apache interconnection, new studies that had been requested by Arizona Public Service Company for Path 23 have been included in this revised report, that have not been reviewed by the PRG.

To assist in better understanding the conclusions reached in this Final Report, the following information is requested to be provided by email or posted at Southline's FTP site:

1. Power flow, transient stability and post-transient voltage stability studies on Path 23, not provided previously;

As detailed in Attachment O, following discussions with the Path owner, a cursory thermal assessment was performed to determine if there is a simultaneous interaction between Path 23 and Southline. Review of results showed no interaction, and confirmed findings of earlier WECC Path Studies. Relevant study details can be found in Attachment O.

2. All revised power flow cases, power flow maps and transient stability plots associated with the Final Study, not provided previously; and,

Please see the following Southline PRG Sharefile sub-folders: Case Series 41A & 42A Apache 115kV Tie Work Files, Case Series 45 SUNZIA - SOUTHLINE 2017 Work Files, and Path 23-Southline under Phase 2 Final Report folder for cases. Post-transient, voltage stability and transient stability tables and plots are housed in report attachments O, P and S.

3. A Word® file version of the Final Report and Appendices to provide a method of submitting comments on the documents provided.

Please see posted on the PRG Sharefile site under the Phase 2 Final Report folder a Word version copy of the Final Report. Due to size, the Appendices have been included as pdf files.

The Final Report was provided in such a way that the comment period overlays the Christmas and New Year holiday periods. Due to holiday absences by PRG members who would otherwise review this report, we request that the deadline for receiving comments on the Final Report be extended through February 13, 2015.

Finally, the email below that accompanied distribution of the Final Report sets forth an approval process of the Final Report by the Southline Project that consists of (1) receipt of PRG comments, (2), addition of amendments, if any, to the Final Report by Southline and (3) submission of the amended Final Report to the WECC PCC for approval of Phase 3 status.

We believe that the Southline PRG should have the opportunity to review and discuss any changes made to the Final Report to ensure all PRG concerns and issues have been appropriately addressed. We prefer a formal voting process among the Southline PRG to clearly indicate acceptance of the Final Report, prior to its transmission to the WECC PCC.

We believe the proposed thirty day Phase 2 Final Report review period ending January 12, 2015 following a multiple month review of the Draft Report is reasonable.

We will, however, incorporate and address comments received by January 12, 2015 and circulate to the PRG for a vote prior to transmitting the final report to the WECC PCC.

SunZia January 7, 2015 comments in black text.

Southline response in green text

We need additional information for the following study items:

1) For Simultaneous Path 23 Interaction Impact Study

Please provide the power flow base case data file for the Case 41_ew_1028_1000_1000_09.sav and some clarifications on the base case assumptions used to complete simultaneous Path 23 interaction impact study. Referenced to Table 1 Scenario 1 on Page 344, I could not find the Case 41_ew_1028_1000_1000_09.sav used in the Southline east to west transfer study, but I was able to obtain a similar Case 41_ew_1028_1000_1000_14.sav from the Southline general data share file.

Case 41_ew_1028_1000_1000_14.sav which was posted previously on the sharefile and which you reviewed is the correct case file name for the preliminary Path 23-Southline thermal analysis described in Attachment O. References to other east to west case file names in Attachment O will be corrected. Thank you for bringing this necessary edit to our attention.

We have the following concerns and issues regarding inconsistency of the following power flow base case solution assumptions (See the attached case):

Southline performed this cursory Path 23 simultaneous thermal analysis upon a direct request from APS and at the end of the Phase 2 study work, after noting a marginal qualification for the 10% Path-Flow Test (Path 23 pick-up of 10.8% - 10.9%). As such, the analysis was largely intended to be informational/exploratory in nature, and occurred outside of scope of the approved Phase 2 Rating study plan. The analysis modeled both paths at or near their non-simultaneous levels, and applied a thermal contingency study using post-transient governor power flow techniques. The analysis yielded thermal results similar to prior WECC Path 23 studies, and did not identify any new limiting contingencies constraining the two Paths.

The following answers relate to the case "41_ew_1028_1000_1000_14.sav" used in the Path 23/Southline thermal analysis.

- Area interchange control was turned off.

You are correct that the case was saved during its construction with the area interchange control option statused off (typically such cases would be saved with this solution option "on", allowing each Area's swing bus to maintain that Area's balance of load, generation and interchange). However, because post-transient governor power flow techniques were applied in this analysis, the Area interchange schedules and area swing busses are disregarded, with any post-contingency imbalance in demand and resources being distributed across numerous generators throughout WECC based upon these generators' baseload flag settings and available capacity. In fact, disabling the GE area interchange solution option is one of the first actions undertaken by the post-transient governor power flow program; as such, the solution setting for area interchange control will not impact these results.

- No Arizona swing machine (Navajo 3 was off-line).

In the referenced case, Navajo Unit #3 is modeled off-line and Palo Verde Unit #3 was utilized as the system swing bus generator for this case. For the reasons previously stated, the selection of an Area swing bus generator is not necessary when performing post-transient governor power flow analysis and will not impact the study results.

- All three Navajo generators were shutdown.

In the referenced case, all three Navajo generating units were statused off-line to aid in stressing Path 23. Southline believes the selected dispatch falls within WECC's allowances of flexibility and latitude for stressing both paths to at or near their non-simultaneous levels as stated in the Path Rating Process, especially considering that this analysis was 1) exploratory in nature, and 2) focused on potential thermal impacts for facilities relatively remote to Navajo's location.

- Improper use of PALOVRD3 which is a base load generation for the system swing machine in the sensitivity area of study. Why we need to replace system swing machine PTSB 7 , which has been normally used in the power flow studies?

Please see the response to your comment *"Area interchange control was turned off."* In addition, please note that the post-transient power flow routine redispatches the system swing to bring it within a scheduled dispatch band during the solution. Therefore, the change in generation at Palo Verde #3 will be very minor and will have no significant impact on the Path 23 simultaneous sensitivity results.

However, in Table 2 Scenario 2 on Page 345, I found the Case 42_we_0435_0971_1000_02.sav that used in Southline west to east transfer study which is consistent to all other studies and detected no such problems as shown in the above.

Again, the identified differences in the cases' selected swing bus generator or area interchange control option will not affect the study results.

2) For Southline 115kV Apache Interconnection Study

Please provide the power flow base case data file for the Case 41A and 42A series base cases which were updated with the modeling of Apache 230/115kV transformer and 27ohm Apache 115kV series reactor.

These cases were posted on the Southline sharefile site on 12/11/14. Please look in the Case Series 41A & 42A Apache 115kV Tie Work Files Folder, which is a subfolder of the Phase 2 Final Report Folder.

Referenced to Table P1 on Page 347, please expand the contents to include a comparison of summary of thermal loading results before and after the system upgrades based on the worst N-1 and N-2 contingencies.

Details regarding pre and post-project, and pre and post-contingency loading can be found in the Post-Transient Results section of the report (starting on page 352). Post-contingency loading on the upgraded Apache transformers will be the same as previous results given that

the new transformers' impedances will match existing banks' impedances (when both transformer bank impedances are measured in ohms).

TEP January 12, 2015 comments in black text.

Southline response in green text.

Page 27 – UNSE is UniSource Energy Services not Unisource Energy

Thank you, the updated final report includes this clarification.

- Page 28 – Reactive power requirements for all local units is to be +/- 1 MVAR for all units not just those identified in the 3rd bullet. I believe these were only the units dispatched in the case.

Thank you for this clarification. The updated final report includes this updated language. Additionally, Southline notes that the modeling of Sundt Unit #4 and the Sundt CT show MVAR output beyond the TEP specified reactive power requirements of +/- 1 MVAR. TEP and Southline do not believe this is a significant issue since the cases could be tuned to these specifications due to the many reactive tools noted in the TEP area. Also, it should be noted that the Southline project's inherent natural capacitance significantly improves overall area voltages. These reactive requirements will be monitored in Phase 3 and, if required, further clarification and/or review can be completed at this time.

- Page 28, footnote 18 – For planning purposes, the South reactor is to be in-service at all times not just when the SVC is in-service.

Thank you for this clarification. The updated final report includes this updated language. Southline understands that the South reactor (Pinal West-South 345kV Line) should be modeled in-service for planning purposes. A review of all Southline cases shows that a limited number of cases (5 out of 51) mistakenly modeled the South reactor out of service. Given this slight modeling discrepancy, Southline recognizes that additional mitigation, such as the addition of 75MVAR shunt capacitor at the South 345kV bus, may be needed. Alternately, it should be noted that the Southline project's inherent natural capacitance significantly improves overall area voltages and Southline believes the cases can easily be tuned to TEP specifications via the many existing transmission reactive devices resident in the case. If required, further clarification and/or review can be completed in Phase 3.

- Page 40-41 – Vail2 bus is not to be isolated as part of the Vail 345/138 T2 outage. There is a breaker on the high side of this transformer so the line will remain in service. Since this is a long open-ended line following the transformer outage, it is expected that the open end of the line will have a high voltage. This can be mitigated by the System Operators opening the breakers at Springerville or closing a breaker at Vail so the line terminates into the Vail 345kV bus.

Thank you for this clarification. The updated final report includes this updated language.

- Page 41 – Is the paragraph "TEP 138kV Bus Voltage Performance" trying to state that the individual bus voltages do not meet the 138kV average bus voltage criteria for the buses listed in footnote 32?

There are instances in the cases where TEP bus voltage criteria many not be met on individual buses; however, all cases met or exceeded TEP 138kV bus average for both pre and post-contingency. The pre-

contingency voltage range for TEP 138kV buses was (≥1.0210, ≤1.0235 voltage(p.u.)) and there were no voltage deviation issues identified except as noted and mitigated in this report.

Throughout the document there are references to developing local area protection schemes (LAPS). A LAPS is a subset of a Remedial Action Scheme (RAS). In our case, the TEPS TOLS is classified as a LAPS but any new RAS will need to get classified through the RASRS. The RASRS will classify each RAS as a Wide-Area Protection Scheme (WAPS), LAPS or Safety Net. Since any proposed RAS has not undergone the RASRS review, I believe the more general term RAS should be used for the new schemes. The existing schemes can continue to be labeled as specified by the owner.

Thank you for this clarification. The updated final report includes this update where applicable.

ATTACHMENT P

SOUTHLINE 115kV APACHE INTERCONNECTION
Case Series 41A & 42A

November 26, 2014

GENERAL

At the request of Southwest Transmission Company (SWTC) and Western Area Power Administration (Western), Southline conducted an additional assessment modeling a 115kV transmission tie between Southline and the existing Apache substation. Based on this assessment, Southline is pursuing a direct 115kV Apache interconnection as the forward plan of service, as described below.

This detailed study involved modeling contingencies noted in the study plan via a comprehensive analysis (post-transient governor power-flow, voltage stability and transient stability). The analyses were conducted with cases modeling Southline power-flows in both east-to-west and west-to-east directions. Case series 41A and 42A (simultaneous cases modeling Southline vs. Path 47 Flows) were updated to include the Apache 115kV tie (to be operated normally closed). Additional transmission projects such as the Tucson-Oracle Re-conductor and Southern New Mexico Upgrades (13 ohm series Dona Ana-Picacho 115kV line reactor and the Newman 345/115kV autotransformer additions were not modeled in this detailed scenario. This attachment documents notable changes in overall transmission performance and offers recommended transmission system upgrades that fully mitigate impacts triggered by Southline.

Results of this analysis show that, with the identified mitigation and upgrades, Southline is capable of achieving the same planned simultaneous rating that was determined in prior case series not modeling the 115kV Apache interconnection. The upgrades include the replacement of existing SWTC transformers (Apache 230/115kV #1 and #2 transformers).

DESCRIPTION OF APACHE 115kV INTERCONNECTION

The existing Southline Apache station design is updated to include an additional 230/115kV transformer with 17% impedance in series with a 27 ohm 115kV series reactor (rated at 2510 amps). The new Southline Apache transformer's normal and emergency ratings are 280 MVA and 440 MVA, respectively. Southline has thus eliminated its original plan of leaving the 230kV Apache tie normally open (See Sketch 1).

Southline Interconnection at Apache

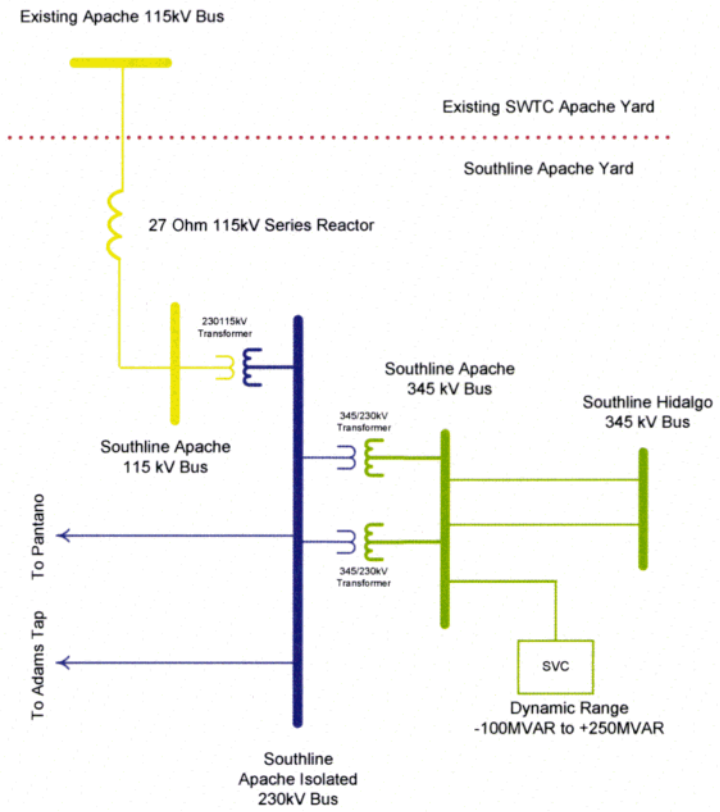

Sketch 1

CASES USED, AND NOTABLE MODIFICATIONS

Six existing study cases, previously developed and utilized for Southline studies with Southline project flows in both directions (east-to-west and west-to-east), were updated with the Apache 230/115kV transformer and 27 ohm Apache 115kV series reactor. Additional transmission projects such as the Tucson-Oracle Re-conductor and Southern New Mexico Upgrades (13 ohm series Dona Ana-Picacho 115kV line reactor and the Newman 345/115kV autotransformer additions were not modeled in this detailed scenario. **Table P1** below identifies the cases utilized as well as key case attributes.

Table P1 Post-Transient Key Case Attributes

#	Case	Heavy Winter (HW) or Heavy Summer (HS)	Southline Project Modeled In-service	Tortolita / Saguaro East	Apache East	Afton West	Apache West	Path 47 Flows
1	41A_ew_1040_1000_1048_v29.sav	HS	Yes	N/A	N/A	1040	1000	1048
2	41A_ew_1040_1000_1048_v29oos.sav	HS	No	N/A	N/A	N/A	N/A	1048
3	42A_we_0435_0971_0275_02.sav	HW	Yes	435	971	N/A	N/A	275
4	42A_we_0435_0971_0275_03_oos.sav	HW	No	N/A	N/A	N/A	N/A	275
5	42A_we_0431_0179_1048_03.sav	HW	Yes	431	179	N/A	N/A	1048

6	42A_we_0431_0179_1048_01_oos.sav	HW	No	N/A	N/A	N/A	N/A	1048

Table P2 list six cases constructed out of the post-transient cases and used to conduct the corresponding voltage stability analysis.

Table P2 Voltage Stability Case Attributes

#	Case	Heavy Winter (HW) or Heavy Summer (HS)	Southline Project Modeled In-service	Tortolita / Saguaro East	Apache East	Afton West	Apache West	Path 47 Flows
1	41A_ew_1092_1050_1048_v29.sav	HS	Yes	N/A	N/A	1092	1050	1048
2	41A_ew_1040_1000_1101_v29.sav	HS	Yes	N/A	N/A	1040	1000	1101
3	42A_we_0457_1020_0275_01.sav	HW	Yes	457	1020	N/A	N/A	275
4	42A_we_0435_0971_0289_01.sav	HW	Yes	435	971	N/A	N/A	289
5	42A_we_0453_0188_1048_01.sav	HW	Yes	453	188	N/A	N/A	1048
6	42A_we_0431_0179_1101_01.sav	HW	Yes	431	179	N/A	N/A	1101

Table P3 list six cases constructed out of the post-transient cases that were used to conduct the corresponding transient stability analysis.

Table P3 Transient Stability Case Attributes

#	Case	Heavy Winter (HW) or Heavy Summer (HS)	Southline Project Modeled In-service	Tortolita / Saguaro East	Apache East	Afton West	Apache West	Path 47
1	41A_ew_1040_1000_1048_v29ts.sav	HS	Yes	N/A	N/A	1040	1000	1048
2	41A_ew_1040_1000_1048_v29oosts.sav	HS	No	N/A	N/A	N/A	N/A	1048
3	42A_we_0435_0971_0275_02ts.sav	HW	Yes	435	971	N/A	N/A	275
4	42A_we_0435_0971_0275_03_oosts.sav	HW	No	N/A	N/A	N/A	N/A	275
5	42A_we_0431_0179_1048_03ts.sav	HW	Yes	431	179	N/A	N/A	1048
6	42A_we_0431_0179_1048_01_oosts.sav	HW	No	N/A	N/A	N/A	N/A	1048

STUDY CRITERIA & CONTINGENCIES

The transmission system was evaluated under the same criteria and standard contingencies specified in the Southline Phase 2 Study Plan. Additional Category B transmission line and transformer contingencies were evaluated at the Apache Station, given the Apache 115kV interconnection.

The post-transient, voltage stability, and transient results documenting the Southline thermal, voltage, and transient impacts and/or benefits were reported in this analysis.

STUDY RESULTS

Initial study results with the new Southline Apache 230/115kV transformer and without the series reactor indicated the existing Apache 230/115kV transformers #1 and #2 experienced normal overloads. A high impedance Southline Apache transformer and a separate series 115kV reactor are required to mitigate the normal overloads on the existing Apache transformers.

With the improved topology for the Apache 115kV interconnection, west-to-east analysis resulted in no notable change in performance when compared to results without 115kV Apache interconnection. Conversely, the east-to-west analysis resulted in two category B and three category C outages with

post-contingency power-flows in excess of the existing Apache 230/115kV transformer banks ratings. The applicable outages include:

1. Category B: Apache 230/115kV Transformer #1 or #2
2. Category C: Apache-Pantano & Adamstap-Nogales 230kV Lines
3. Category C: Apache-Pantano & Apache-Adamstap 230kV Lines
4. Category C: Pantano-Vail & Apache_SL-Pantano 230kV Lines

Both the voltage stability tests and transient stability runs performed met or exceeded WECC and NERC criteria.

MITIGATION

An initial mitigation solution was explored for post-contingency RAS tripping of the proposed Southline Apache 230/115kV transformer bank. However, this RAS solution was not found to be acceptable to SWTC, and Southline worked with SWTC and Western to identify an alternative acceptable solution. Southline will work with SWTC and Western to upgrade both existing SWTC Apache 230/115kV transformers. The upgraded Apache 230/115kV transformers would be rated higher than the existing transformers but with the same impedance characteristics.

CONCLUSION

Results of this analysis show that, with the identified mitigation and upgrades, Southline is capable of achieving the same planned simultaneous rating that was determined in prior case series not modeling the 115kV Apache interconnection.

Southline Apache 115kV interconnection is now considered the forward Southline project plan-of-service.

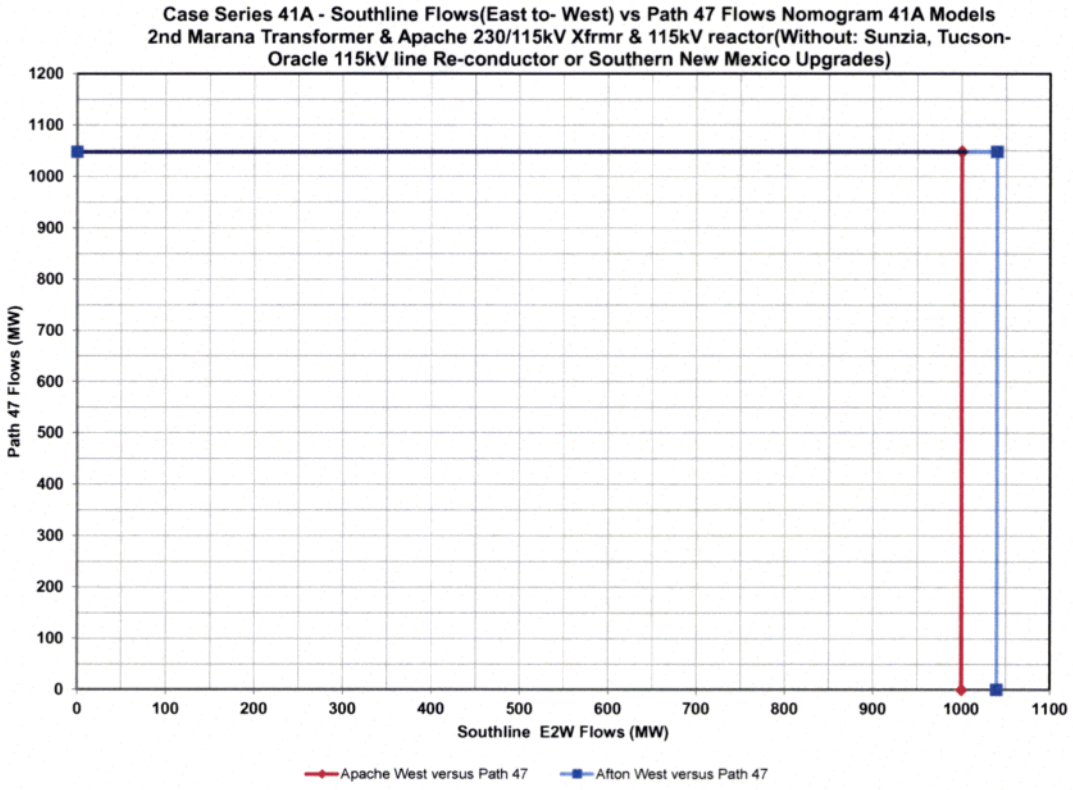
Case Series 41A - Southline Flows(East to- West) vs Path 47 Flows Nomogram 41A Models
2nd Marana Transformer & Apache 230/115kV Xfrmr & 115kV reactor(Without: Sunzia, Tucson-Oracle 115kV line Re-conductor or Southern New Mexico Upgrades)
Path 47 Flows (MW)
1200
1100
1000
900
800
700
600
500
400
300
200
100
0
0
100
200
300
400
500
600
700
800
900
1000
1100
Southline E2W Flows (MW)
Apache West versus Path 47
Afton West versus Path 47

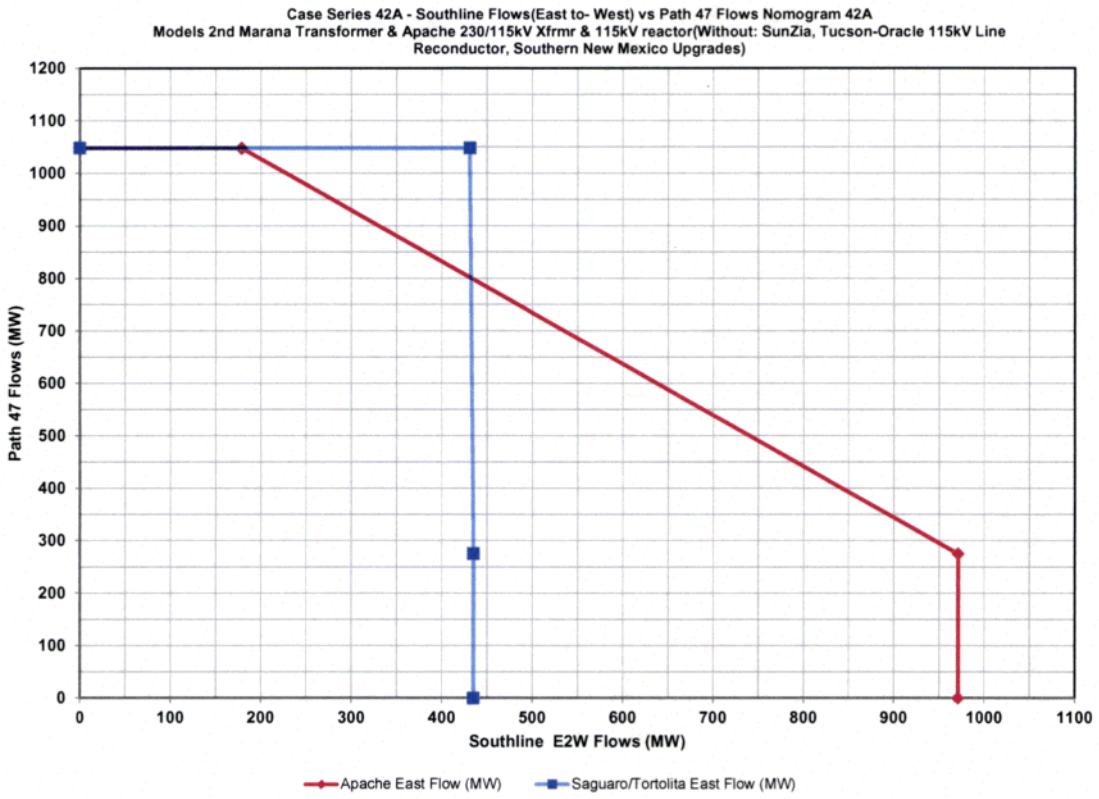
Case Series 42A - Southline Flows(East to- West) vs Path 47 Flows Nomogram 42A
Models 2nd Marana Transformer & Apache 230/115kV Xfrmr & 115kV reactor(Without: SunZia, Tucson-Oracle 115kV Line Reconductor, Southern New Mexico Upgrades)
Path 47 Flows (MW)
1200
1100
1000
900
800
700
600
500
400
300
200
100
0
0
100
200
300
400
500
600
700
800
900
1000
1100
Southline E2W Flows (MW)
Apache East Flow (MW)
Saguaro/Tortolita East Flow (MW)

POST-TRANSIENT RESULTS COVER SHEET	
Direction	East-to-West
Case Series Number	41A (w/ Apache 230/115kV Transformer)
Simultaneous Path	47
Path 47 Definition --WECC or Alternative	WECC
SunZia in Service	No
Tucson-Oracle Reconductor	No
2nd Marana Bank	Yes
Bowie Generation Output (MW)	350
West to East Mitigation	No
Dona Ana- Picacho 115kV 13 ohm series reactor	No
Additional Newman 345/115kV Transformer Bank	No
Southwest Power Pool Export	No
Nomogram Number	41A
Nomogram Point	1
Southline Afton-West Cut Plane Flows (MW)	1040
Southline Apache-West Cut Plane Flows (MW)	1000
Southline Saguaro/Tortolita-East Cut Plane Flows (MW)	N/A
Southline Apache-East Cut Plane Flows (MW)	N/A
Southline Midpoint West Cut Plane Flows (MW)	N/A
Path 47 Flows (MW)	1048

TABLE X – POST-TRANSIENT THERMAL RESULTS – CASES = 41A_EW_1040_1000_1048_V29.SAV, 41A_EW_1040_1000_1048_V29OOS.SAV								
OVERLOADED COMPONENT	CONTINGENCY	RATING	PRE-PROJECT LOADING		POST-PROJECT LOADING		DELTA %	NOTES
		AMPS / MVA	AMPS/ MVA	RATING %	AMPS / MVA	RATING %		
CATEGORY A								
None								
CATEGORY B								
Apache 230/115kV Transformer #1	Apache_SL-Pantano #1 230kV Line	112	N/A	N/A	120.4	107.5	N/A	Upgraded Transformers mitigates overload
Apache 230/115kV Transformer #2	Apache_SL-Pantano #1 230kV Line	112	N/A	N/A	118.22	105.56	N/A	Upgraded Transformers mitigates overload
Newman 345/115 Transformer #1	Picante-Newman #1 345kV Line	265	259.1	97.77	210.01	79.25	-18.52	
Turquois-Hidalgo #1 115kV Line	Luna 345/115 Transformer #1	702.86	703.09	100.03	697.33	99.21	-0.82	
	Luna-Hidalgo 345kV Line	702.86	701.91	99.86	640.12	91.07	-8.79	
CATEGORY C								
Airport-Picacho 115kV Line	Luna-Afton #1 and #2 345kV Lines	667.72	N/A	N/A	743.93	111.41	N/A	LAPS mitigates overload
	Luna-Afton #1 and #2 345kV Lines w/ LAPS	667.72	N/A	N/A	194.2	29.08	N/A	
Apache 230/115kV Transformer #1	Apache-Pantano & Adamstap-Nogales 230kV Lines	112	N/A	N/A	179.35	160.13	N/A	Upgraded Transformers mitigates overload
	Apache-Pantano & Apache-Adamstap 230kV Lines	112	N/A	N/A	182.96	163.36	N/A	Upgraded Transformers mitigates overload
	Pantano-Vail & Apache_SL-Pantano 230kV Lines	112	N/A	N/A	120.94	107.98	N/A	Upgraded Transformers mitigates overload
Apache 230/115kV Transformer #2	Apache-Pantano & Adamstap-Nogales 230kV Lines	112	N/A	N/A	176.11	157.24	N/A	Upgraded Transformers mitigates overload
	Apache-Pantano & Apache-Adamstap 230kV Lines	112	N/A	N/A	179.65	160.41	N/A	Upgraded Transformers mitigates overload
	Pantano-Vail & Apache_SL-Pantano 230kV Lines	112	N/A	N/A	118.75	106.03	N/A	Upgraded Transformers mitigates overload
Arroyo Phase Shifter	Luna-Afton #1 and #2 345kV Lines	400	N/A	N/A	387.66	96.92	N/A	
	Luna-Afton #1 and #2 345kV Lines w/ LAPS	400	N/A	N/A	395.52	98.88	N/A	
Dona Ana-Picacho 115kV Line	Luna-Afton #1 and #2 345kV Lines	456.86	N/A	N/A	876.9	191.94	N/A	LAPS mitigates overload
	Luna-Afton #1 and #2 345kV Lines w/ LAPS	456.86	N/A	N/A	0.00	0.00	N/A	
El Butte-Space Tap 115kV Line	Luna-Afton #1 and #2 345kV Lines	240.98	N/A	N/A	297.4	123.41	N/A	LAPS mitigates overload
	Luna-Afton #1 and #2 345kV Lines w/ LAPS	240.98	N/A	N/A	35.9	14.9	N/A	
Lordsberg 115/69kV Transformer #1	Luna-Hidalgo 345kV Line & Luna 345/115kV Transformer	27	26.85	99.46	25.5	94.44	-5.02	
	Luna-Hidalgo 345kV Line & Luna 345/115kV Transformer W/ N RAS Option 1	27	22.8	84.45	21.3	78.89	-5.57	
	Luna-Hidalgo 345kV Line & Luna 345/115kV Transformer W/ N RAS Option 2	27	21.78	80.68	20.41	75.6	-5.09	
	Luna-Hidalgo 345kV Line & Luna 345/115kV	27	21.24	78.68	19.97	73.98	-4.7	

TABLE X – POST-TRANSIENT THERMAL RESULTS – CASES = 41A_EW_1040_1000_1048_V29.SAV, 41A_EW_1040_1000_1048_V29OOS.SAV								
OVERLOADED COMPONENT	CONTINGENCY	RATING	PRE-PROJECT LOADING		POST-PROJECT LOADING		DELTA %	NOTES
		AMPS / MVA	AMPS/ MVA	RATING %	AMPS / MVA	RATING %		
	Transformer W/ N RAS Option 3							
	Luna-Hidalgo 345kV Line & Luna 345/115kV Transformer W/ N RAS Option 4	27	20.99	77.75	19.97	73.98	-3.77	
Luna 345/115kV Transformer	Luna-Afton #1 and #2 345kV Lines	224	N/A	N/A	271.59	121.25	N/A	LAPS mitigates overload
	Luna-Afton #1 and #2 345kV Lines w/ LAPS	224	N/A	N/A	156.6	69.91	N/A	
Luna-Mimbres 115kV Line	Luna-Afton #1 and #2 345kV Lines	1024.17	N/A	N/A	1185.37	115.74	N/A	LAPS mitigates overload
	Luna-Afton #1 and #2 345kV Lines w/ LAPS	1024.17	N/A	N/A	537.5	52.48	N/A	
Mimbres-Airport Tap 115kV Line	Luna-Afton #1 and #2 345kV Lines	667.72	N/A	N/A	745.26	111.61	N/A	LAPS mitigates overload
	Luna-Afton #1 and #2 345kV Lines w/ LAPS	667.72	N/A	N/A	194.2	29.08	N/A	
Mimbres-Caballot 115kV Line	Luna-Afton #1 and #2 345kV Lines	235.96	N/A	N/A	250.02	105.96	N/A	LAPS mitigates overload
	Luna-Afton #1 and #2 345kV Lines w/ LAPS	235.96	N/A	N/A	134	56.79	N/A	
Space Tap-Picacho 115kV Line	Luna-Afton #1 and #2 345kV Lines	240.98	N/A	N/A	291.41	120.92	N/A	LAPS mitigates overload
	Luna-Afton #1 and #2 345kV Lines w/ LAPS	240.98	N/A	N/A	42.9	17.8	N/A	
Turquois-Hidalgo #1 115kV Line	Luna-Afton 345kV Line & Luna 345/115kV Transformer	702.86	832.81	118.49	737.98	105	-13.49	Existing manual action fully mitigates overload
	Luna-Afton 345kV Line & Luna 345/115kV Transformer W/ N RAS Option 1	702.86	709.15	100.9	616.82	87.76	-13.14	
	Luna-Afton 345kV Line & Luna 345/115kV Transformer W/ N RAS Option 2	702.86	538.83	76.66	450.22	64.06	-12.61	
	Luna-Hidalgo 345kV Line & Luna 345/115kV Transformer	702.86	831.23	118.26	788.88	112.24	-6.03	Existing manual action fully mitigates overload
	Luna-Hidalgo 345kV Line & Luna 345/115kV Transformer W/ N RAS Option 1	702.86	641.14	91.22	598.42	85.14	-6.08	
	Luna-Hidalgo 345kV Line & Luna 345/115kV Transformer W/ N RAS Option 2	702.86	630.1	89.65	589.19	83.83	-5.82	
	Luna-Hidalgo 345kV Line & Luna 345/115kV Transformer W/ N RAS Option 3	702.86	628.74	89.45	588.68	83.75	-5.7	
	Luna-Hidalgo 345kV Line & Luna 345/115kV Transformer W/ N RAS Option 4	702.86	625.76	89.03	588.68	83.75	-5.28	

TABLE X – POST-TRANSIENT VOLTAGE RESULTS – CASES = 41A_EW_1040_1000_1048_V29.SAV, 41A_EW_1040_1000_1048_V29OOS.SAV								
BUS	CONTINGENCY	PRE-PROJECT		PST-PROJECT		DELTA		NOTES
		VOLTAGE (PU)	DEV (%)	VOLTAGE (PU)	DEV (%)	VOLTAGE (PU)	DEV (%)	
CATEGORY A								
Bagdad 115kV	Basecase	1.00	N/A	1.00	N/A	0.00	N/A	
Boothill 115kV	Basecase	1.00	N/A	1.00	N/A	0.00	N/A	
Cholla 345kV	Basecase	1.07	N/A	1.06	N/A	0.01	N/A	
Mural 115kV	Basecase	0.99	N/A	0.99	N/A	0.00	N/A	
Pinnacle Peak West Bus 230kV	Basecase	1.024	N/A	1.024	N/A	0.00	N/A	
Tortolita 500kV	Basecase	1.06	N/A	1.06	N/A	0.00	N/A	
West Wing West Bus 230kV	Basecase	1.03	N/A	1.03	N/A	0.00	N/A	
Westwing 345kV	Basecase	1.01	N/A	1.01	N/A	0.00	N/A	
CATEGORY B								
Abel 230kV	Dinosaur-Browning #1 230kV Line	0.95	-5.2	0.96	-4.7	-0.01	-0.5	Brown Xfmr Tap.
Adams 115kV	Apache-Adamstap 115kV Line	0.96	-5.4	N/A	N/A	N/A	N/A	Radial System
Adams Tap 115kV	Apache-Adamstap 115kV Line	0.96	-5.4	N/A	N/A	N/A	N/A	
Boothill 115kV	Apache-Adamstap 115kV Line	0.94	-5.7	N/A	N/A	N/A	N/A	Radial System
Dinosaur 230kV	Dinosaur-Browning #1 230kV Line	0.94	-6.4	0.95	-5.9	-0.01	-0.5	Brown Xfmr Tap.
Macho Springs 345kV	MSPOI345-Luna 345kV Line	1.07	5.1	1.07	5.7	0.00	-0.6	
Mural 115kV	Apache-Adamstap 115kV Line	0.93	-5.9	N/A	N/A	N/A	N/A	Radial System
Nogales 230kV	Apache_SL-Pantano #1 230kV Line	N/A	N/A	0.97	-3.5	N/A	N/A	
Vail2 345kV	Vail2 345/138 Transformer #1	1.13	9.9	1.13	8.8	0.00	1.1	
CATEGORY C								
Hidalgo 345kV	Luna-Hidalgo 345kV Line & Luna 345/115kV Transformer W/ N RAS Option 1	1.06	3.0	1.06	3.0	0.00	0.0	
Macho Springs 345kV	Luna-Afton & Luna-MSPOI 345kV Lines	1.07	5.1	1.07	5.7	0.00	-0.6	
Mazatzal 345kV	Mazatzal-Pinnacle Peak & Cholla-Preacher Canyon 345kV Lines	1.12	8.2	1.12	8.5	0.00	-0.3	

POST-TRANSIENT RESULTS COVER SHEET	
Direction	West–to-East
Case Series Number	42A (w/ Apache 230/115kV Transformer)
Simultaneous Path	47
Path 47 Definition --WECC or Alternative	WECC
SunZia in Service	No
Tucson-Oracle Reconductor	No
2nd Marana Bank	Yes
Bowie Generation Output (MW)	350
West to East Mitigation	No
Dona Ana- Picacho 115kV 13 ohm series reactor	No
Additional Newman 345/115kV Transformer Bank	No
Southwest Power Pool Export	No
Nomogram Number	42A
Nomogram Point	1
Southline Afton-West Cut Plane Flows (MW)	N/A
Southline Apache-West Cut Plane Flows (MW)	N/A
Southline Saguaro/Tortolita-East Cut Plane Flows (MW)	431
Southline Apache-East Cut Plane Flows (MW)	179
Southline Midpoint West Cut Plane Flows (MW)	N/A
Path 47 Flows (MW)	1048

TABLE X – POST-TRANSIENT THERMAL RESULTS – CASES = 42A_we_0431_0179_1048_03.SAV, 42A_we_0431_0179_1048_01_OOS.SAV								
OVERLOADED COMPONENT	CONTINGENCY	RATING	PRE-PROJECT LOADING		POST-PROJECT LOADING		DELTA %	NOTES
		AMPS / MVA	AMPS/ MVA	RATING %	AMPS / MVA	RATING %		
CATEGORY A								
None								
CATEGORY B								
Dona Ana-Picacho 115kV Line	Luna-Afton #1 345kV Line	456.86	455.46	99.69	312.9	68.49	-31.2	
Turquois-Hidalgo #1 115kV Line	Luna-Hidalgo 345kV Line	702.86	699.86	99.57	686.44	97.66	-1.91	
Newman 345/115 Transformer #1	Picante-Newman #1 345kV Line	265	261.07	98.52	265.05	100.02	1.5	
CATEGORY C								
Arroyo Phase Shifter	Luna-Afton & Luna-MSPOI 345kV Lines	400	410.82	102.7	282.92	70.73	-31.97	Existing mitigation solution
	Luna-Afton #1 and #2 345kV Lines w/ LAPS	400	N/A	N/A	396.45	99.11	N/A	
Tucson-Oracle 115kV Line	Tortolita-Tucson & Marana-Southline Saguaro 230kV Lines	381.55	N/A	N/A	381.2	99.91	N/A	
Turquois-Hidalgo #1 115kV Line	Luna-Afton 345kV Line & Luna 345/115kV Transformer	702.86	757.87	107.83	680.75	96.85	-10.97	Existing manual action fully mitigates overload
	Luna-Afton 345kV Line & Luna 345/115kV Transformer W/ N RAS Option 1	702.86	636.6	90.57	564.15	80.26	-10.31	
	Luna-Afton 345kV Line & Luna 345/115kV Transformer W/ N RAS Option 2	702.86	401.2	57.08	463.5	65.94	8.86	
	Luna-Hidalgo 345kV Line & Luna 345/115kV Transformer	702.86	776.41	110.46	770.7	109.65	-0.81	Existing manual action fully mitigates overload
	Luna-Hidalgo 345kV Line & Luna 345/115kV Transformer W/ N RAS Option 1	702.86	585.54	83.31	584.9	83.22	-0.09	
	Luna-Hidalgo 345kV Line & Luna 345/115kV Transformer W/ N RAS Option 2	702.86	574.52	81.74	573.76	81.63	-0.11	
	Luna-Hidalgo 345kV Line & Luna 345/115kV Transformer W/ N RAS Option 3	702.86	572.88	81.51	572.19	81.41	-0.1	
	Luna-Hidalgo 345kV Line & Luna 345/115kV Transformer W/ N RAS Option 4	702.86	570.29	81.14	569.36	81.01	-0.13	

TABLE X – POST-TRANSIENT VOLTAGE RESULTS – CASES = 42A_we_0431_0179_1048_03.SAV, 42A_we_0431_0179_1048_01_OOS.SAV								
BUS	CONTINGENCY	PRE-PROJECT		PST-PROJECT		DELTA		NOTES
		VOLTAGE (PU)	DEV (%)	VOLTAGE (PU)	DEV (%)	VOLTAGE (PU)	DEV (%)	
CATEGORY A								
Asarco 138kV	Base Case	1.0272	N/A	1.0309	N/A	0.0037	N/A	TEP 138kV voltages allowed outside criteria. TEP 138kV Average in acceptable range.
Canez 138kV	Base Case	1.0135	N/A	1.014	N/A	0.0005	N/A	TEP 138kV voltages allowed outside criteria. TEP 138kV Average in acceptable range.
Cholla 345kV	Base Case	1.07	N/A	1.07	N/A	0	N/A	
Dugas 500kV	Base Case	1.09	N/A	1.09	N/A	0	N/A	
North Gila 230kV	Base Case	1.06	N/A	1.06	N/A	0	N/A	
Pinnacle Peak 500kV	Base Case	1.09	N/A	1.08	N/A	-0.01	N/A	
Pinnacle Peak East 230kV	Base Case	1.028	N/A	1.017	N/A	-0.011	N/A	
Preacher Canyon 345kV	Base Case	1.05	N/A	1.05	N/A	0	N/A	
Prescott 115kV	Base Case	1.07	N/A	1.07	N/A	0	N/A	
Prescott 230kV	Base Case	1.045	N/A	1.045	N/A	0	N/A	
Sonoita 138kV	Base Case	1.0129	N/A	1.0134	N/A	0.0005	N/A	TEP 138kV voltages allowed outside criteria. TEP 138kV Average in acceptable range.
South 138kV	Base Case	1.0287	N/A	1.0324	N/A	0.0037	N/A	TEP 138kV voltages allowed outside criteria. TEP 138kV Average in acceptable range.
Tortolita 500kV	Base Case	1.07	N/A	1.07	N/A	0	N/A	TEP 138kV voltages allowed outside criteria. TEP 138kV Average in acceptable range.
Tubac 138kV	Base Case	1.0142	N/A	1.0148	N/A	0.0006	N/A	TEP 138kV voltages allowed outside criteria. TEP 138kV Average in acceptable range.
Vail 138kV	Base Case	1.0306	N/A	1.0315	N/A	0.0009	N/A	TEP 138kV voltages allowed outside criteria. TEP 138kV Average in acceptable range.
Valncia 138kV	Base Case	1.0146	N/A	1.015	N/A	0.0004	N/A	TEP 138kV voltages allowed outside criteria. TEP 138kV Average in acceptable range.
Yavapai 230kV	Base Case	1.06	N/A	1.06	N/A	0	N/A	
CATEGORY B								
Dugas 500kV	Morgan-Dugas #1 500kV Line	1.14	4.3	1.14	4.4	0	-0.1	
Pinnacle Peak 500kV	Morgan-Pnpkaps #1 500kV Line	1.12	3.3	1.12	3.1	0	0.2	
Macho Springs 345kV	MSPOI345-Luna 345kV Line	1.05	1.2	1.05	1.9	0	-0.7	
CATEGORY C								
Dugas 500kV	Morgan-Dugas & Yavapai-Westwing 500kV Lines	1.14	4.2	1.14	4.3	0.00	-0.1	
	Morgan-Westwing & Yavapai-Westwing 500kV Lines	1.12	2.6	1.12	2.6	0.00	0.0	
Hidalgo 345kV	Luna-Hidalgo 345kV Line & Luna 345/115kV Transformer W/ N RAS Option 1	1.05	1.0	1.06	2.5	-0.01	-1.5	No manual action or manual action option#2, #3 or #4 fully mitigates high voltage.
Morgan 500kV	Morgan-Westwing & Yavapai-Westwing 500kV	1.12	4.0	1.11	4.0	0.01	0.0	

TABLE X – POST-TRANSIENT VOLTAGE RESULTS – CASES = 42A_we_0431_0179_1048_03.SAV, 42A_we_0431_0179_1048_01_OOS.SAV								
BUS	CONTINGENCY	PRE-PROJECT		PST-PROJECT		DELTA		NOTES
		VOLTAGE (PU)	DEV (%)	VOLTAGE (PU)	DEV (%)	VOLTAGE (PU)	DEV (%)	
	Lines							
Pinnacle Peak 500kV	Morgan-Westwing & Yavapai-Westwing 500kV Lines	1.12	2.9	1.12	2.9	0.00	0.0	
Rosemont 138kV	Vail-South & Pinal West-South 345kV Lines	0.97	-4.9	0.98	-4.3	-0.01	-0.6	

POST-TRANSIENT RESULTS COVER SHEET	
Direction	West–to-East
Case Series Number	42A (w/ Apache 230/115kV Transformer)
Simultaneous Path	47
Path 47 Definition --WECC or Alternative	WECC
SunZia in Service	No
Tucson-Oracle Reconductor	No
2nd Marana Bank	Yes
Bowie Generation Output (MW)	350
West to East Mitigation	No
Dona Ana- Picacho 115kV 13 ohm series reactor	No
Additional Newman 345/115kV Transformer Bank	No
Southwest Power Pool Export	No
Nomogram Number	42A
Nomogram Point	2
Southline Afton-West Cut Plane Flows (MW)	N/A
Southline Apache-West Cut Plane Flows (MW)	N/A
Southline Saguaro/Tortolita-East Cut Plane Flows (MW)	435
Southline Apache-East Cut Plane Flows (MW)	971
Southline Midpoint West Cut Plane Flows (MW)	N/A
Path 47 Flows (MW)	275

TABLE X – POST-TRANSIENT THERMAL RESULTS – CASES = 42A_we_0435_0971_0275_02.SAV, 42A_we_0435_0971_0275_01_OOS.SAV								
OVERLOADED COMPONENT	CONTINGENCY	RATING	PRE-PROJECT LOADING		POST-PROJECT LOADING		DELTA %	NOTES
		AMPS / MVA	AMPS/ MVA	RATING %	AMPS / MVA	RATING %		
CATEGORY A								
None								
CATEGORY B								
Diablo 345/115kV Transformer #1	Afton-Newman #1 345kV Line	258	92.11	35.7	257.76	99.91	64.21	
Diablo 345/115kV Transformer #2	Afton-Newman #1 345kV Line	258	91.32	35.4	255.57	99.06	63.66	
Diablo 345/115kV Transformer #3	Afton-Newman #1 345kV Line	258	91.35	35.41	255.6	99.07	63.66	
Dona Ana-Picacho 115kV Line	Afton-Newman #1 345kV Line	456.86	188.27	41.21	451.63	98.86	57.64	
Newman 345/115 Transformer #1	Picante-Newman #1 345kV Line	265	35.37	13.35	261.33	98.61	85.27	
CATEGORY C								
Apache 230/115kV Transformer #1	Apache-Pantano & Adamstap-Nogales 230kV Lines	112	N/A	N/A	134.61	120.19	N/A	Upgraded Transformers mitigates overload
	Apache-Pantano & Apache-Adamstap 230kV Lines	112	N/A	N/A	134.58	120.16	N/A	Upgraded Transformers mitigates overload
Apache 230/115kV Transformer #2	Apache-Pantano & Adamstap-Nogales 230kV Lines	112	N/A	N/A	132.18	118.02	N/A	Upgraded Transformers mitigates overload
	Apache-Pantano & Apache-Adamstap 230kV Lines	112	N/A	N/A	132.15	117.99	N/A	Upgraded Transformers mitigates overload
Diablo 345/115 Transformer #1	Newman-Arroyo & Newman-Afton 345kV Lines	258	80.79	31.31	268.18	103.94	72.63	
	Newman-Arroyo & Newman-Afton 345kV Lines w/ LAPS	258	N/A	N/A	254.94	98.81	N/A	Proposed LAPS mitigation
	Newman-Picante & Newman-Afton 345kV Lines	258	94.13	36.49	264.08	102.36	65.87	
	Newman-Picante & Newman-Afton 345kV Lines w/ LAPS	258	N/A	N/A	257.98	99.99	N/A	Proposed LAPS mitigation
Diablo 345/115 Transformer #2	Newman-Arroyo & Newman-Afton 345kV Lines	258	80.1	31.05	265.9	103.06	72.01	
	Newman-Arroyo & Newman-Afton 345kV Lines w/ LAPS	258	N/A	N/A	252.77	97.97	N/A	Proposed LAPS mitigation
	Newman-Picante & Newman-Afton 345kV Lines	258	93.33	36.17	261.84	101.49	65.31	
	Newman-Picante & Newman-Afton 345kV Lines w/ LAPS	258	N/A	N/A	255.79	99.14	N/A	Proposed LAPS mitigation
Diablo 345/115 Transformer #3	Newman-Arroyo & Newman-Afton 345kV Lines	258	80.13	31.06	265.92	103.07	72.01	
	Newman-Arroyo & Newman-Afton 345kV Lines w/ LAPS	258	N/A	N/A	252.8	97.98	N/A	Proposed LAPS mitigation
	Newman-Picante & Newman-Afton 345kV Lines	258	93.36	36.18	261.87	101.5	65.31	
	Newman-Picante & Newman-Afton 345kV Lines w/ LAPS	258	N/A	N/A	255.81	99.15	N/A	Proposed LAPS mitigation
Tucson-Oracle 115kV Line	Tortilita-Tucson & Marana-Southline Saguaro 230kV Lines	381.55	N/A	N/A	380.13	99.63	N/A	
Turquois-Hidalgo #1 115kV Line	Luna-Afton 345kV Line & Luna 345/115kV	702.86	736.66	104.81	657.83	93.59	-11.22	

TABLE X – POST-TRANSIENT THERMAL RESULTS – CASES = 42A_we_0435_0971_0275_02.SAV, 42A_we_0435_0971_0275_01_OOS.SAV								
OVERLOADED COMPONENT	CONTINGENCY	RATING	PRE-PROJECT LOADING		POST-PROJECT LOADING		DELTA %	NOTES
		AMPS / MVA	AMPS/ MVA	RATING %	AMPS / MVA	RATING %		
	Transformer							
	Luna-Afton 345kV Line & Luna 345/115kV Transformer W/ N RAS Option 1	702.86	619.65	88.16	541.63	77.06	-11.1	Existing mitigation solution
	Luna-Afton 345kV Line & Luna 345/115kV Transformer W/ N RAS Option 2	702.86	458	65.16	384.1	54.65	-11.1	Existing mitigation solution

TABLE X – POST-TRANSIENT VOLTAGE RESULTS – CASES = 42A_we_0435_0971_0275_02.SAV, 42A_we_0435_0971_0275_01_OOS.SAV								
BUS	CONTINGENCY	PRE-PROJECT		PST-PROJECT		DELTA		NOTES
		VOLTAGE (PU)	DEV (%)	VOLTAGE (PU)	DEV (%)	VOLTAGE (PU)	DEV (%)	
CATEGORY A								
Cholla 230kV	Base Case	1.06	N/A	1.05	N/A	0.01	N/A	
Cholla 345kV	Base Case	1.07	N/A	1.07	N/A	0	N/A	
Dugas 500kV	Base Case	1.09	N/A	1.09	N/A	0	N/A	
LaJara 115kV	Base Case	1.06	N/A	1.03	N/A	0.03	N/A	
Nogales 138kV	Base Case	1.032	N/A	1.0302	N/A	0.0018	N/A	TEP 138kV voltages allowed outside criteria. TEP 138kV Average in acceptable range.
North Gila 230kV	Base Case	1.06	N/A	1.06	N/A	0	N/A	
Pinnacle Peak 500kV	Base Case	1.09	N/A	1.08	N/A	0.01	N/A	
Pinnacle Peak East 230kV	Base Case	1.017	N/A	1.016	N/A	0.001	N/A	
Preacher Canyon 345kV	Base Case	1.05	N/A	1.05	N/A	0	N/A	
Prescott 115kV	Base Case	1.07	N/A	1.07	N/A	0	N/A	
Prescott 230kV	Base Case	1.045	N/A	1.045	N/A	0	N/A	
South 138kV	Base Case	1.03	N/A	1.0302	N/A	-0.0019	N/A	TEP 138kV voltages allowed outside criteria. TEP 138kV Average in acceptable range.
Tortolita 500kV	Base Case	1.07	N/A	1.07	N/A	0	N/A	TEP 138kV voltages allowed outside criteria. TEP 138kV Average in acceptable range.
Vail 138kV	Base Case	1.0334	N/A	1.0313	N/A	0.0021	N/A	TEP 138kV voltages allowed outside criteria. TEP 138kV Average in acceptable range.
Yavapai 230kV	Base Case	1.06	N/A	1.06	N/A	0	N/A	
Cholla 230kV	Base Case	1.06	N/A	1.05	N/A	0.01	N/A	
Cholla 345kV	Base Case	1.07	N/A	1.07	N/A	0	N/A	
CATEGORY B								
Dugas 500kV	Morgan-Dugas #1 500kV Line	1.14	4.3	1.14	4.4	0	-0.1	
Macho Springs 345kV	MSPOI345-Luna 345kV Line	1.08	4.5	1.08	4.8	0	-0.3	
Pinnacle Peak 500kV	Morgan-Pnpkaps #1 500kV Line	1.12	3.1	1.12	3.1	0	0	
Silver King 500kV	Browning-Kyrene #1 500kV Line	1.10	1.7	1.09	1.2	0.01	0.5	
CATEGORY C								
Dugas 500kV	Morgan-Dugas & Yavapai-Westwing 500kV Lines	1.14	4.3	1.14	4.3	0	0	
	Morgan-Westwing & Yavapai-Westwing 500kV Lines	1.12	2.6	1.12	2.6	0	0	
Macho Springs 345kV	Luna-Afton & Luna-MSPOI 345kV Lines	1.08	4.5	1.08	4.7	0	-0.2	
Morgan 500kV	Morgan-Westwing & Yavapai-Westwing 500kV Lines	1.11	4	1.11	4	0	0	
Pinnacle Peak 500kV	Morgan-Westwing & Yavapai-Westwing 500kV	1.12	2.9	1.12	2.9	0	0	

TABLE X – POST-TRANSIENT VOLTAGE RESULTS – CASES = 42A_we_0435_0971_0275_02.SAV, 42A_we_0435_0971_0275_01_OOS.SAV								
BUS	CONTINGENCY	PRE-PROJECT		PST-PROJECT		DELTA		NOTES
		VOLTAGE (PU)	DEV (%)	VOLTAGE (PU)	DEV (%)	VOLTAGE (PU)	DEV (%)	
	Lines							
Rosemont 138kV Bus	Vail-South & Pinal West-South 345kV Lines	0.97	-4.7	0.97	-5	0	0.3	

VOLTAGE STABILITY TEST RESULTS COVER SHEET	
Direction	East-to-West
Case Series Number	41A (w/ Apache 230/115kV Transformer)
Simultaneous Path	47
Path 47 Definition --WECC or Alternative	WECC
SunZia in Service	No
Tucson-Oracle Reconductor	No
2nd Marana Bank	Yes
Bowie Generation Output (MW)	350
West to East Mitigation	No
Dona Ana- Picacho 115kV 13 ohm series reactor	No
Additional Newman 345/115kV Transformer Bank	No
Southwest Power Pool Export	No
Nomogram Number	41A
Nomogram Point	1
Southline Afton-West Cut Plane Flows (MW)	1040
Southline Apache-West Cut Plane Flows (MW)	1000
Southline Saguaro/Tortolita-East Cut Plane Flows (MW)	N/A
Southline Apache-East Cut Plane Flows (MW)	N/A
Southline Midpoint West Cut Plane Flows (MW)	N/A
Path 47 Flows (MW)	1048

TABLE X - VOLTAGE STABILITY TEST - CASES = 41A_EW_1092_1050_1048_V29.SAV, 41A_EW_1040_1000_1101_V29.SAV													
	AFTON WEST PATH				APACHE EAST PATH				PATH 47				OUTAGE SOLUTION STATUS ACHIEVED WITH INCREASED PATH FLOW
CONTINGENCY DESCRIPTION	BASE CASE PATH FLOW (MW)	TEST CASE PATH FLOW (MW)	105.0% TEST (Y/N)	102.5% TEST (Y/N)	BASE CASE PATH FLOW (MW)	TEST CASE PATH FLOW (MW)	105.0% TEST (Y/N)	102.5% TEST (Y/N)	BASE CASE PATH FLOW (MW)	TEST CASE PATH FLOW (MW)	105.0% TEST (Y/N)	102.5% TEST (Y/N)	
VOLTAGE STABILITY TEST CASE 1 = 41A_EW_1092_1050_1048_V29.SAV													
Base Case Conditions	1040	1092	Y	N	1000	1050	Y	N	1048	1048	N	N	Solved
All Category B Outages Unless Otherwise Noted	1040	1092	Y	N	1000	1050	Y	N	1048	1048	N	N	All Solved
All Category C Outages Unless Otherwise Noted	1040	1092	Y	N	1000	1050	Y	N	1048	1048	N	N	All Solved
VOLTAGE STABILITY TEST CASE 2 = 41A_EW_1040_1000_1101_V29.SAV													
Base Case Conditions	1040	1040	N	N	1000	1000	N	N	1048	1101	Y	N	Solved
All Category B Outages Unless Otherwise Noted	1040	1040	N	N	1000	1000	N	N	1048	1101	Y	N	All Solved
All Category C Outages Unless Otherwise Noted	1040	1040	N	N	1000	1000	N	N	1048	1101	Y	N	All Solved

VOLTAGE STABILITY TEST RESULTS COVER SHEET	
Direction	West–to-East
Case Series Number	42A (w/ Apache 230/115kV Transformer)
Simultaneous Path	47
Path 47 Definition --WECC or Alternative	WECC
SunZia in Service	No
Tucson-Oracle Reconductor	No
2nd Marana Bank	Yes
Bowie Generation Output (MW)	350
West to East Mitigation	No
Dona Ana- Picacho 115kV 13 ohm series reactor	No
Additional Newman 345/115kV Transformer Bank	No
Southwest Power Pool Export	No
Nomogram Number	42A
Nomogram Point	1
Southline Afton-West Cut Plane Flows (MW)	N/A
Southline Apache-West Cut Plane Flows (MW)	N/A
Southline Saguaro/Tortolita-East Cut Plane Flows (MW)	431
Southline Apache-East Cut Plane Flows (MW)	179
Southline Midpoint West Cut Plane Flows (MW)	N/A
Path 47 Flows (MW)	1048

TABLE X - VOLTAGE STABILITY TEST - CASES = 42A_WE_0431_0179_1101_01.SAV, 42A_WE_0453_0188_1048_01.SAV													
	SAGUARO/TORT EAST PATH				APACHE EAST PATH				PATH 47				OUTAGE SOLUTION STATUS ACHIEVED WITH INCREASED PATH FLOW
CONTINGENCY DESCRIPTION	BASE CASE PATH FLOW (MW)	TEST CASE PATH FLOW (MW)	105.0% TEST (Y/N)	102.5% TEST (Y/N)	BASE CASE PATH FLOW (MW)	TEST CASE PATH FLOW (MW)	105.0% TEST (Y/N)	102.5% TEST (Y/N)	BASE CASE PATH FLOW (MW)	TEST CASE PATH FLOW (MW)	105.0% TEST (Y/N)	102.5% TEST (Y/N)	
VOLTAGE STABILITY TEST CASE 1 = 42A_WE_0431_0179_1101_01.SAV													
Base Case Conditions	431	431	N	N	179	179	N	N	1048	1101	Y	N	Solved
All Category B Outages Unless Otherwise Noted	431	431	N	N	179	179	N	N	1048	1101	Y	N	All Solved
All Category C Outages Unless Otherwise Noted	431	431	N	N	179	179	N	N	1048	1101	Y	N	All Solved
VOLTAGE STABILITY TEST CASE 2 = 42A_WE_0453_0188_1048_01.SAV													
Base Case Conditions	431	453	Y	N	179	188	Y	N	1048	1048	N	N	Solved
All Category B Outages Unless Otherwise Noted	431	453	Y	N	179	188	Y	N	1048	1048	N	N	All Solved
All Category C Outages Unless Otherwise Noted	431	453	Y	N	179	188	Y	N	1048	1048	N	N	All Solved

VOLTAGE STABILITY TEST RESULTS COVER SHEET	
Direction	West–to-East
Case Series Number	42A (w/ Apache 230/115kV Transformer)
Simultaneous Path	47
Path 47 Definition --WECC or Alternative	WECC
SunZia in Service	No
Tucson-Oracle Reconductor	No
2nd Marana Bank	Yes
Bowie Generation Output (MW)	350
West to East Mitigation	No
Dona Ana- Picacho 115kV 13 ohm series reactor	No
Additional Newman 345/115kV Transformer Bank	No
Southwest Power Pool Export	No
Nomogram Number	42A
Nomogram Point	2
Southline Afton-West Cut Plane Flows (MW)	N/A
Southline Apache-West Cut Plane Flows (MW)	N/A
Southline Saguaro/Tortolita-East Cut Plane Flows (MW)	435
Southline Apache-East Cut Plane Flows (MW)	971
Southline Midpoint West Cut Plane Flows (MW)	N/A
Path 47 Flows (MW)	275

TABLE X - VOLTAGE STABILITY TEST - CASES = 42A_WE_0435_0971_0289_01.SAV, 42A_WE_0457_1020_0275_01.SAV													
CONTINGENCY DESCRIPTION	SAGUARO/TORT EAST PATH				APACHE EAST PATH				PATH 47				OUTAGE SOLUTION STATUS ACHIEVED WITH INCREASED PATH FLOW
	BASE CASE PATH FLOW (MW)	TEST CASE PATH FLOW (MW)	105.0% TEST (Y/N)	102.5% TEST (Y/N)	BASE CASE PATH FLOW (MW)	TEST CASE PATH FLOW (MW)	105.0% TEST (Y/N)	102.5% TEST (Y/N)	BASE CASE PATH FLOW (MW)	TEST CASE PATH FLOW (MW)	105.0% TEST (Y/N)	102.5% TEST (Y/N)	
VOLTAGE STABILITY TEST CASE 1 = 42A_WE_0457_1020_0275_01.SAV													
Base Case Conditions	435	457	N	N	971	1020	N	N	275	275	Y	N	Solved
All Category B Outages Unless Otherwise Noted	435	457	N	N	971	1020	N	N	275	275	Y	N	All Solved
All Category C Outages Unless Otherwise Noted	435	457	N	N	971	1020	N	N	275	275	Y	N	All Solved
VOLTAGE STABILITY TEST CASE 2 = 42A_WE_0435_0971_0289_01.SAV													
Base Case Conditions	435	435	Y	N	971	971	Y	N	275	289	N	N	Solved
All Category B Outages Unless Otherwise Noted	435	435	Y	N	971	971	Y	N	275	289	N	N	All Solved
All Category C Outages Unless Otherwise Noted	435	435	Y	N	971	971	Y	N	275	289	N	N	All Solved

TRANSIENT STABILITY RESULTS COVER SHEET	
Direction	East–to-West
Case Series Number	41A (w/ Apache 230/115kV Transformer)
Simultaneous Path	47
Path 47 Definition --WECC or Alternative	WECC
SunZia in Service	No
Tucson-Oracle Reconductor	No
2nd Marana Bank	Yes
Bowie Generation Output (MW)	350
West to East Mitigation	No
Dona Ana- Picacho 115kV 13 ohm series reactor	No
Additional Newman 345/115kV Transformer Bank	No
Southwest Power Pool Export	No
Nomogram Number	41A
Nomogram Point	1
Southline Afton-West Cut Plane Flows (MW)	1040
Southline Apache-West Cut Plane Flows (MW)	1000
Southline Saguaro/Tortolita-East Cut Plane Flows (MW)	N/A
Southline Apache-East Cut Plane Flows (MW)	N/A
Southline Midpoint West Cut Plane Flows (MW)	N/A
Path 47 Flows (MW)	1048

TABLE X –TRANSIENT STABILITY RESULTS – CASE = 41A_EW_1040_1000_1048_V29TS.SAV						
OUTAGE	STABLE (Y/N)	CREATES AN ISLAND (Y/N)	ANGLE VIOLATION MACHINES OUT OF STEP (Y/N)	WORST CONDITION ANALYSIS VOLTAGE VIOLATION (Y/N)	WORST CONDITION ANALYSIS FREQUENCY VIOLATION (Y/N)	NOTES
CATEGORY A						
No Disturbance	Y	N	N	N	N	
CATEGORY B						
Bump Test - Trip of Palo Verde	Y	N	Y	N	N	Forced trip of Pale Verde
Adams 230/115kV Transformer	Y	Y	N	N	N	Radial system. Adams, Mural, Boothill 115kV isolated w/ outage
Afton 345kV Phase Shifter 1	Y	N	N	N	N	
Afton-Midpoint 345kV Line	Y	N	N	N	N	
Apache 345/230kV Transformer	Y	N	N	N	N	
Apache-Adams 230kV Line	Y	N	N	N	N	
Apache-Pantano 230kV Line	Y	N	N	N	N	
Delbac-Nogoles 230kV Line	Y	N	N	N	N	
Hidalgo-Apache 345kV Line	Y	N	N	N	N	
Marana 230/115kV Transformer	Y	N	N	N	N	
Marana-Rattle Snake 230kV Line	Y	N	N	N	N	
Midpoint-Hidalgo 345kV Line	Y	N	N	N	N	
Nogales-Adams 230kV Line	Y	N	N	N	N	
Rattle Snake 230/115kV Transformer	Y	Y	N	N	N	Radial system. Blackmtn, Brawley , Rattlsnk, Sandario, Sanxaver, Snydhill, Twinpeak 115kV isolated w/ outage
Southline Saguaro 230/115kV Transformer #1	Y	N	N	N	N	
Southline Saguaro-Marana 230kV Line	Y	N	N	N	N	
Tortolita 500/230kV Transformer	Y	N	N	N	N	
Tucson 230/115kV Transformer	Y	N	N	N	N	
Tucson 230/DMP 138kV Transformer	Y	N	N	N	N	
Tucson 230/DMP 138kV Transformers #1 and #2	Y	N	N	N	N	
Tucson-Del Bac 230kV Line	Y	N	N	N	N	
Tucson-Rattlesnake 230kV Line	Y	N	N	N	N	
Tucson-Tortolita 230kV Line	Y	N	N	N	N	
Tucson-Vail 230kV Line	Y	N	N	N	N	
Vail 345/230kV Transformer	Y	N	N	N	N	
CATEGORY C						
Adams Tap-Apache SL & Adams Tap-Nogales 230kV Lines	Y	Y	N	N	N	Radial system. Adams, Mural, Boothill 115kV isolated w/ outage
Afton-Midpoint 345kV #1 And #2 Lines	Y	N	N	N	N	
Apache-Pantano & Adams-Nogales 230kV Lines	Y	N	N	N	N	
Apache-Pantano & Apache-Adams 230kV Lines	Y	N	N	N	N	
Hidalgo-Apache 345kV #1 And #2 Lines	Y	N	N	N	N	
Luna-Afton #1 and #2 345kV Lines w/o LAPS	Y	N	N	N	N	

TABLE X –TRANSIENT STABILITY RESULTS – CASE = 41A_EW_1040_1000_1048_V29TS.SAV						
OUTAGE	STABLE (Y/N)	CREATES AN ISLAND (Y/N)	ANGLE VIOLATION MACHINES OUT OF STEP (Y/N)	WORST CONDITION ANALYSIS VOLTAGE VIOLATION (Y/N)	WORST CONDITION ANALYSIS FREQUENCY VIOLATION (Y/N)	NOTES
Luna-Afton #1 and #2 345kV Lines w/ LAPS	Y	N	N	N	N	LAPS performed the following: tripped Dona Ana-Picacho 115kV line; dropped load at Americas, Copper, Sparks, Horizon, Lane, Scottsdale1, and Wrangler1; Trip Wrangler 115kV and Rio Boss 69kV bus shunt capacitors
Luna-Afton & Luna 345/115kV Transformer	Y	N	N	N	N	
Luna-Afton & Luna 345/115kV Transformer-RAS Opt 1	Y	Y	N	N	N	Phelps Dodge (Pdtyrone 115kV) isolated w/ existing manual action
Luna-Afton & Luna 345/115kV Transformer-RAS Opt 2	Y	Y	N	N	N	Phelps Dodge (Pdtyrone and Ivanhoe 115kV) isolated w/ existing manual action
Luna-Hidalgo & Luna 345/115kV Transformer	Y	N	N	N	N	
Luna-Hidalgo & Luna 345/115kV Transformer-RAS Opt 1	Y	Y	N	N	N	Phelps Dodge (Ivanhoe 115kV) isolated w/ existing manual action
Luna-Hidalgo & Luna 345/115kV Transformer-RAS Opt 2	Y	Y	N	N	N	Phelps Dodge (Ivanhoe 115kV) isolated w/ existing manual action
Luna-Hidalgo & Luna 345/115kV Transformer-RAS Opt 3	Y	Y	N	N	N	Phelps Dodge (Ivanhoe 115kV) isolated w/ existing manual action
Luna-Hidalgo & Luna 345/115kV Transformer-RAS Opt 4	Y	Y	N	N	N	Phelps Dodge (Ivanhoe 115kV) isolated w/ existing manual action
Midpoint-Hidalgo 345kV #1 And #2 Lines	Y	N	N	N	N	
Newmn-Arroyo & Newman-Afton 345kV Lines w/o LAPS	Y	N	N	N	N	
Newman-Arroyo & Newman-Afton 345kV Lines w/ LAPS	Y	N	N	N	N	LAPS didn't perform any remedial actions.
Newmn-Picante & Newman-Afton 345kV Lines w/o LAPS	Y	N	N	N	N	
Newman-Picante & Newman-Afton 345kV Lines w/ LAPS	Y	N	N	N	N	LAPS didn't perform any remedial actions.
Nogales-Del Bac & Adams Tap-Nogales 230kV Lines	Y	Y	N	N	N	Nogales 230kV isolated w/ outage
Pantano-Vail & Adams-Nogales 230kV Lines	Y	N	N	N	N	
Pantano-Vail & Adams-Nogales 230kV Lines with RAS	Y	N	N	N	N	
Pantano-Vail & Pantano-Apache SL 230kV Lines	Y	N	N	N	N	
Rattlesnake-Tucson & Marana-Rattlesnake 230kV Lines	Y	Y	N	N	N	Radial system. Blackmtn, Brawley , Rattlsnk, Sandario, Sanxaver, Snydhill, Twinpeak 115kV isolated w/ outage
Rattlesnake-Tucson & Vail-Tucson 230kV Lines	Y	N	N	N	N	
Saguaro SL-Marana & Marana-Rattlesnake 230kV Lines	Y	N	N	N	N	
Springerville-Vail & Greenlee-Willow 345 kV Lines	Y	N	N	N	N	
Springerville-Vail & Springerville-Greenlee 345 kV Lines	Y	N	N	N	N	
Springerville-Vail & Willow-Winchester 345 kV Lines	Y	N	N	N	N	
Springerville-Vail & Winchester-Vail 345 kV Lines	Y	N	N	N	N	
Sthln Sag-Sag East & Sthln Sag-Sag West 115kV lines	Y	N	N	N	N	
Tortolita-Tucson & Del Bac-Tucson 230kV Lines	Y	N	N	N	N	
Tortolita-Tucson & Marana-Southline Saguaro 230kV Lines	Y	N	N	N	N	
Tortolita-Tucson & Rattlesnake-Marana 230kV Lines	Y	N	N	N	N	
Tortolita-Tucson & Rattlesnake-Marana 230kV w/ RAS	Y	N	N	N	N	
Tortolita-Tucson & Rattlesnake-Tucson 230kV Lines	Y	N	N	N	N	

TABLE X –TRANSIENT STABILITY RESULTS – CASE = 41A_EW_1040_1000_1048_V29TS.SAV						
OUTAGE	STABLE (Y/N)	CREATES AN ISLAND (Y/N)	ANGLE VIOLATION MACHINES OUT OF STEP (Y/N)	WORST CONDITION ANALYSIS VOLTAGE VIOLATION (Y/N)	WORST CONDITION ANALYSIS FREQUENCY VIOLATION (Y/N)	NOTES
Tortolita-Tucson & Rattlesnake-Tucson 230kV w/RAS	Y	N	N	N	N	
Vail-Tucson & Adams-Nogales 230kV Lines	Y	N	N	N	N	
Vail-Tucson & Del Bac-Nogales 230kV Lines	Y	N	N	N	N	
Vail-Tucson & Vail-Pantano 230kV Lines	Y	N	N	N	N	
Saguaro West 115kV Bus	Y	Y	Y	N	N	Generating unit Saguaro CT 2 tripped with bus outage. Saguaro West 115kV, Saguaro 4 100kV Midpoint, Saguaro 2 15.5kV, and Saguaro CT 2 13.80kV buses isolated with outage.
Saguaro East 115kV Bus	Y	Y	Y	N	N	Generating unit Saguaro CT 1 and 3 tripped with bus outage. Saguaro East 115kV, Saguaro 10 100kV Midpoint, Saguaro 7 100kV Midpoint, Saguaro 1 15.5kV, Saguaro CT 1 13.80kV, and Saguaro CT 3 13.80kV buses isolated with outage.

TABLE X –TRANSIENT STABILITY RESULTS – CASE = 41A_EW_1040_1000_1048_V29OOSTS.SAV						
OUTAGE	STABLE (Y/N)	CREATES AN ISLAND (Y/N)	ANGLE VIOLATION MACHINES OUT OF STEP (Y/N)	WORST CONDITION ANALYSIS VOLTAGE VIOLATION (Y/N)	WORST CONDITION ANALYSIS FREQUENCY VIOLATION (Y/N)	NOTES
CATEGORY A						
No Disturbance	Y	N	N	N	N	
CATEGORY B						
Bump Test - Trip of Palo Verde	Y	N	Y	N	N	Forced trip of Pale Verde
CATEGORY C						
Luna-Hidalgo & Luna 345/115kV Transformer	Y	N	N	N	N	
Luna-Hidalgo & Luna 345/115kV Transformer-RAS Opt 1	Y	Y	N	N	N	Phelps Dodge (Ivanhoe 115kV) isolated w/ existing manual action
Luna-Hidalgo & Luna 345/115kV Transformer-RAS Opt 2	Y	Y	N	N	N	Phelps Dodge (Ivanhoe 115kV) isolated w/ existing manual action
Luna-Hidalgo & Luna 345/115kV Transformer-RAS Opt 3	Y	Y	N	N	N	Phelps Dodge (Ivanhoe 115kV) isolated w/ existing manual action
Luna-Hidalgo & Luna 345/115kV Transformer-RAS Opt 4	Y	Y	N	N	N	Phelps Dodge (Ivanhoe 115kV) isolated w/ existing manual action
Springerville-Vail & Greenlee-Willow 345 kV Lines	Y	N	N	N	N	
Springerville-Vail & Springerville-Greenlee 345 kV Lines	Y	N	N	N	N	
Springerville-Vail & Willow-Winchester 345 kV Lines	Y	N	N	N	N	
Springerville-Vail & Winchester-Vail 345 kV Lines	Y	N	N	N	N	
Saguaro West 115kV Bus	Y	Y	Y	N	N	Generating unit Saguaro CT 2 tripped with bus outage. Saguaro West 115kV, Saguaro 4 100kV Midpoint, Saguaro 2 15.5kV, and Saguaro CT 2 13.80kV buses isolated with outage.
Saguaro East 115kV Bus	Y	Y	Y	N	N	Generating unit Saguaro CT 1 and 3 tripped with bus outage. Saguaro East 115kV, Saguaro 10 100kV Midpoint, Saguaro 7 100kV Midpoint, Saguaro 1 15.5kV, and Saguaro CT 1 13.80kV buses isolated with outage.

TRANSIENT STABILITY RESULTS COVER SHEET	
Direction	West–to-East
Case Series Number	42A (w/ Apache 230/115kV Transformer)
Simultaneous Path	47
Path 47 Definition --WECC or Alternative	WECC
SunZia in Service	No
Tucson-Oracle Reconductor	No
2nd Marana Bank	Yes
Bowie Generation Output (MW)	350
West to East Mitigation	No
Dona Ana- Picacho 115kV 13 ohm series reactor	No
Additional Newman 345/115kV Transformer Bank	No
Southwest Power Pool Export	No
Nomogram Number	42A
Nomogram Point	1
Southline Afton-West Cut Plane Flows (MW)	N/A
Southline Apache-West Cut Plane Flows (MW)	N/A
Southline Saguaro/Tortolita-East Cut Plane Flows (MW)	431
Southline Apache-East Cut Plane Flows (MW)	179
Southline Midpoint West Cut Plane Flows (MW)	N/A
Path 47 Flows (MW)	1048

TABLE X –TRANSIENT STABILITY RESULTS – CASE = 42A_WE_0431_0179_1048_03TS.SAV						
OUTAGE	STABLE (Y/N)	CREATES AN ISLAND (Y/N)	ANGLE VIOLATION MACHINES OUT OF STEP (Y/N)	WORST CONDITION ANALYSIS VOLTAGE VIOLATION (Y/N)	WORST CONDITION ANALYSIS FREQUENCY VIOLATION (Y/N)	NOTES
CATEGORY A						
No Disturbance	Y	N	N	N	N	
CATEGORY B						
Bump Test - Trip of Palo Verde	Y	N	Y	N	N	Forced trip of Pale Verde
Adams 230/115kV Transformer	Y	Y	N	N	N	Radial system. Adams, Mural, Boothill 115kV isolated w/ outage
Afton 345kV Phase Shifter 1	Y	N	N	N	N	
Afton-Midpoint 345kV Line	Y	N	N	N	N	
Apache 345/230kV Transformer	Y	N	N	N	N	
Apache-Adams 230kV Line	Y	N	N	N	N	
Apache-Pantano 230kV Line	Y	N	N	N	N	
Delbac-Nogoles 230kV Line	Y	N	N	N	N	
Hidalgo-Apache 345kV Line	Y	N	N	N	N	
Marana 230/115kV Transformer	Y	N	N	N	N	
Marana-Rattle Snake 230kV Line	Y	N	N	N	N	
Midpoint-Hidalgo 345kV Line	Y	N	N	N	N	
Nogales-Adams 230kV Line	Y	N	N	N	N	
Rattle Snake 230/115kV Transformer	Y	Y	N	N	N	Radial system. Blackmtn, Brawley , Rattlsnk, Sandario, Sanxaver, Snydhill, Twinpeak 115kV isoladed w/ outage
Southline Saguaro 230/115kV Transformer #1	Y	N	N	N	N	
Southline Saguaro-Marana 230kV Line	Y	N	N	N	N	
Tortolita 500/230kV Transformer	Y	N	N	N	N	
Tucson 230/115kV Transformer	Y	N	N	N	N	
Tucson 230/DMP 138kV Transformer	Y	N	N	N	N	
Tucson 230/DMP 138kV Transformers #1 and #2	Y	N	N	N	N	
Tucson-Del Bac 230kV Line	Y	N	N	N	N	
Tucson-Rattlesnake 230kV Line	Y	N	N	N	N	
Tucson-Tortolita 230kV Line	Y	N	N	N	N	
Tucson-Vail 230kV Line	Y	N	N	N	N	
Vail 345/230kV Transformer	Y	N	N	N	N	
CATEGORY C						
Adams Tap-Apache SL & Adams Tap-Nogales 230kV Lines	Y	Y	N	N	N	Radial system. Adams, Mural, Boothill 115kV isolated w/ outage
Afton-Midpoint 345kV #1 And #2 Lines	Y	N	N	N	N	
Apache-Pantano & Adams-Nogales 230kV Lines	Y	N	N	N	N	
Apache-Pantano & Apache-Adams 230kV Lines	Y	N	N	N	N	
Hidalgo-Apache 345kV #1 And #2 Lines	Y	N	N	N	N	
Luna-Afton #1 and #2 345kV Lines w/o LAPS	Y	N	N	N	N	

TABLE X –TRANSIENT STABILITY RESULTS – CASE = 42A_WE_0431_0179_1048_03TS.SAV

OUTAGE	STABLE (Y/N)	CREATES AN ISLAND (Y/N)	ANGLE VIOLATION MACHINES OUT OF STEP (Y/N)	WORST CONDITION ANALYSIS VOLTAGE VIOLATION (Y/N)	WORST CONDITION ANALYSIS FREQUENCY VIOLATION (Y/N)	NOTES
Luna-Afton #1 and #2 345kV Lines w/ LAPS	Y	N	N	N	N	LAPS performed the following: tripped Dona Ana-Picacho 115kV line; dropped load at Americas, Copper, Sparks, Horizon, Lane, Scottsdale1, and Wrangler1; inserted Luna line reactor on the Luna-Hidalgo 345kV line.
Luna-Afton & Luna 345/115kV Transformer	Y	N	N	N	N	
Luna-Afton & Luna 345/115kV Transformer-RAS Opt 1	Y	Y	N	N	N	Phelps Dodge (Pdtyrone 115kV) isolated w/ existing manual action
Luna-Afton & Luna 345/115kV Transformer-RAS Opt 2	Y	Y	N	N	N	Phelps Dodge (Pdtyrone and Ivanhoe 115kV) isolated w/ existing manual action
Luna-Hidalgo & Luna 345/115kV Transformer	Y	N	N	N	N	
Luna-Hidalgo & Luna 345/115kV Transformer-RAS Opt 1	Y	Y	N	N	N	Phelps Dodge (Ivanhoe 115kV) isolated w/ existing manual action
Luna-Hidalgo & Luna 345/115kV Transformer-RAS Opt 2	Y	Y	N	N	N	Phelps Dodge (Ivanhoe 115kV) isolated w/ existing manual action
Luna-Hidalgo & Luna 345/115kV Transformer-RAS Opt 3	Y	Y	N	N	N	Phelps Dodge (Ivanhoe 115kV) isolated w/ existing manual action
Luna-Hidalgo & Luna 345/115kV Transformer-RAS Opt 4	Y	Y	N	N	N	Phelps Dodge (Ivanhoe 115kV) isolated w/ existing manual action
Midpoint-Hidalgo 345kV #1 And #2 Lines	Y	N	N	N	N	
Newmn-Arroyo & Newman-Afton 345kV Lines w/o LAPS	Y	N	N	N	N	
Newman-Arroyo & Newman-Afton 345kV Lines w/ LAPS	Y	N	N	N	N	LAPS didn't perform any remedial actions.
Newmn-Picante & Newman-Afton 345kV Lines w/o LAPS	Y	N	N	N	N	
Newman-Picante & Newman-Afton 345kV Lines w/ LAPS	Y	N	N	N	N	LAPS didn't perform any remedial actions.
Nogales-Del Bac & Adams Tap-Nogales 230kV Lines	Y	Y	N	N	N	Nogales 230kV isolated w/ outage
Pantano-Vail & Adams-Nogales 230kV Lines	Y	N	N	N	N	
Pantano-Vail & Adams-Nogales 230kV Lines with RAS	Y	N	N	N	N	
Pantano-Vail & Pantano-Apache SL 230kV Lines	Y	N	N	N	N	
Rattlesnake-Tucson & Marana-Rattlesnake 230kV Lines	Y	Y	N	N	N	Radial system. Blackmtn, Brawley , Rattlsnk, Sandario, Sanxaver, Snydhill, Twinpeak 115kV isoladed w/ outage
Rattlesnake-Tucson & Vail-Tucson 230kV Lines	Y	N	N	N	N	
Saguaro SL-Marana & Marana-Rattlesnake 230kV Lines	Y	N	N	N	N	
Springerville-Vail & Greenlee-Willow 345 kV Lines	Y	N	N	N	N	
Springerville-Vail & Springerville-Greenlee 345 kV Lines	Y	N	N	N	N	
Springerville-Vail & Willow-Winchester 345 kV Lines	Y	N	N	N	N	
Springerville-Vail & Winchester-Vail 345 kV Lines	Y	N	N	N	N	
Sthln Sag-Sag East & Sthln Sag-Sag West 115kV lines	Y	N	N	N	N	
Tortolita-Tucson & Del Bac-Tucson 230kV Lines	Y	N	N	N	N	
Tortolita-Tucson & Marana-Southline Saguaro 230kV Lines	Y	N	N	N	N	
Tortolita-Tucson & Rattlesnake-Marana 230kV Lines	Y	N	N	N	N	
Tortolita-Tucson & Rattlesnake-Marana 230kV w/ RAS	Y	N	N	N	N	
Tortolita-Tucson & Rattlesnake-Tucson 230kV Lines	Y	N	N	N	N	

TABLE X –TRANSIENT STABILITY RESULTS – CASE = 42A_WE_0431_0179_1048_03TS.SAV						
OUTAGE	STABLE (Y/N)	CREATES AN ISLAND (Y/N)	ANGLE VIOLATION MACHINES OUT OF STEP (Y/N)	WORST CONDITION ANALYSIS VOLTAGE VIOLATION (Y/N)	WORST CONDITION ANALYSIS FREQUENCY VIOLATION (Y/N)	NOTES
Tortolita-Tucson & Rattlesnake-Tucson 230kV w/RAS	Y	N	N	N	N	
Vail-Tucson & Adams-Nogales 230kV Lines	Y	N	N	N	N	
Vail-Tucson & Del Bac-Nogales 230kV Lines	Y	N	N	N	N	
Vail-Tucson & Vail-Pantano 230kV Lines	Y	N	N	N	N	
Saguaro West 115kV Bus	Y	Y	Y	N	N	Generating unit Saguaro CT 2 tripped with bus outage. Saguaro West 115kV, Saguaro 4 100kV Midpoint, Saguaro 2 15.5kV, and Saguaro CT 2 13.80kV buses isolated with outage.
Saguaro East 115kV Bus	Y	Y	Y	N	N	Generating unit Saguaro CT 1 and 3 tripped with bus outage. Saguaro East 115kV, Saguaro 10 100kV Midpoint, Saguaro 7 100kV Midpoint, Saguaro 1 15.5kV, Saguaro CT 1 13.80kV, and Saguaro CT 3 13.80kV buses isolated with outage.

TABLE X –TRANSIENT STABILITY RESULTS – CASE = 42A_we_0431_0179_1048_01_OOSTS.SAV						
OUTAGE	STABLE (Y/N)	CREATES AN ISLAND (Y/N)	ANGLE VIOLATION MACHINES OUT OF STEP (Y/N)	WORST CONDITION ANALYSIS VOLTAGE VIOLATION (Y/N)	WORST CONDITION ANALYSIS FREQUENCY VIOLATION (Y/N)	NOTES
CATEGORY A						
No Disturbance	Y	N	N	N	N	
CATEGORY B						
Bump Test - Trip of Palo Verde	Y	N	Y	N	N	Forced trip of Pale Verde
CATEGORY C						
Luna-Hidalgo & Luna 345/115kV Transformer	Y	N	N	N	N	
Luna-Hidalgo & Luna 345/115kV Transformer-RAS Opt 1	Y	Y	N	N	N	Phelps Dodge (Ivanhoe 115kV) isolated w/ existing manual action
Luna-Hidalgo & Luna 345/115kV Transformer-RAS Opt 2	Y	Y	N	N	N	Phelps Dodge (Ivanhoe 115kV) isolated w/ existing manual action
Luna-Hidalgo & Luna 345/115kV Transformer-RAS Opt 3	Y	Y	N	N	N	Phelps Dodge (Ivanhoe 115kV) isolated w/ existing manual action
Luna-Hidalgo & Luna 345/115kV Transformer-RAS Opt 4	Y	Y	N	N	N	Phelps Dodge (Ivanhoe 115kV) isolated w/ existing manual action
Springerville-Vail & Greenlee-Willow 345 kV Lines	Y	N	N	N	N	
Springerville-Vail & Springerville-Greenlee 345 kV Lines	Y	N	N	N	N	
Springerville-Vail & Willow-Winchester 345 kV Lines	Y	N	N	N	N	
Springerville-Vail & Winchester-Vail 345 kV Lines	Y	N	N	N	N	
Saguaro West 115kV Bus	Y	Y	Y	N	N	Generating unit Saguaro CT 2 tripped with bus outage. Saguaro West 115kV, Saguaro 4 100kV Midpoint, Saguaro 2 15.5kV, and Saguaro CT 2 13.80kV buses isolated with outage.
Saguaro East 115kV Bus	Y	Y	Y	N	N	Generating unit Saguaro CT 1 and 3 tripped with bus outage. Saguaro East 115kV, Saguaro 10 100kV Midpoint, Saguaro 7 100kV Midpoint, Saguaro 1 15.5kV, and Saguaro CT 1 13.80kV buses isolated with outage.

TRANSIENT STABILITY RESULTS COVER SHEET	
Direction	West–to-East
Case Series Number	42A (w/ Apache 230/115kV Transformer)
Simultaneous Path	47
Path 47 Definition --WECC or Alternative	WECC
SunZia in Service	No
Tucson-Oracle Reconductor	No
2nd Marana Bank	Yes
Bowie Generation Output (MW)	350
West to East Mitigation	No
Dona Ana- Picacho 115kV 13 ohm series reactor	No
Additional Newman 345/115kV Transformer Bank	No
Southwest Power Pool Export	No
Nomogram Number	42A
Nomogram Point	2
Southline Afton-West Cut Plane Flows (MW)	N/A
Southline Apache-West Cut Plane Flows (MW)	N/A
Southline Saguaro/Tortolita-East Cut Plane Flows (MW)	435
Southline Apache-East Cut Plane Flows (MW)	971
Southline Midpoint West Cut Plane Flows (MW)	N/A
Path 47 Flows (MW)	275

TABLE X –TRANSIENT STABILITY RESULTS – CASE = 42A_we_0435_0971_0275_02TS.SAV						
OUTAGE	STABLE (Y/N)	CREATES AN ISLAND (Y/N)	ANGLE VIOLATION MACHINES OUT OF STEP (Y/N)	WORST CONDITION ANALYSIS VOLTAGE VIOLATION (Y/N)	WORST CONDITION ANALYSIS FREQUENCY VIOLATION (Y/N)	NOTES
CATEGORY A						
No Disturbance	Y	N	N	N	N	
CATEGORY B						
Bump Test - Trip of Palo Verde	Y	N	Y	N	N	Forced trip of Pale Verde
Adams 230/115kV Transformer	Y	Y	N	N	N	Radial system. Adams, Mural, Boothill 115kV isolated w/ outage
Afton 345kV Phase Shifter 1	Y	N	N	N	N	
Afton-Midpoint 345kV Line	Y	N	N	N	N	
Apache 345/230kV Transformer	Y	N	N	N	N	
Apache-Adams 230kV Line	Y	N	N	N	N	
Apache-Pantano 230kV Line	Y	N	N	N	N	
Delbac-Nogoles 230kV Line	Y	N	N	N	N	
Hidalgo-Apache 345kV Line	Y	N	N	N	N	
Marana 230/115kV Transformer	Y	N	N	N	N	
Marana-Rattle Snake 230kV Line	Y	N	N	N	N	
Midpoint-Hidalgo 345kV Line	Y	N	N	N	N	
Nogales-Adams 230kV Line	Y	N	N	N	N	
Rattle Snake 230/115kV Transformer	Y	Y	N	N	N	Radial system. Blackmtn, Brawley , Rattlsnk, Sandario, Sanxaver, Snydhill, Twinpeak 115kV isoladed w/ outage
Southline Saguaro 230/115kV Transformer #1	Y	N	N	N	N	
Southline Saguaro-Marana 230kV Line	Y	N	N	N	N	
Tortolita 500/230kV Transformer	Y	N	N	N	N	
Tucson 230/115kV Transformer	Y	N	N	N	N	
Tucson 230/DMP 138kV Transformer	Y	N	N	N	N	
Tucson 230/DMP 138kV Transformers #1 and #2	Y	N	N	N	N	
Tucson-Del Bac 230kV Line	Y	N	N	N	N	
Tucson-Rattlesnake 230kV Line	Y	N	N	N	N	
Tucson-Tortolita 230kV Line	Y	N	N	N	N	
Tucson-Vail 230kV Line	Y	N	N	N	N	
Vail 345/230kV Transformer	Y	N	N	N	N	
CATEGORY C						
Adams Tap-Apache SL & Adams Tap-Nogales 230kV Lines	Y	Y	N	N	N	Radial system. Adams, Mural, Boothill 115kV isolated w/ outage
Afton-Midpoint 345kV #1 And #2 Lines	Y	N	N	N	N	
Apache-Pantano & Adams-Nogales 230kV Lines	Y	N	N	N	N	
Apache-Pantano & Apache-Adams 230kV Lines	Y	N	N	N	N	
Hidalgo-Apache 345kV #1 And #2 Lines	Y	N	N	N	N	

TABLE X –TRANSIENT STABILITY RESULTS – CASE = 42A_we_0435_0971_0275_02TS.SAV						
OUTAGE	STABLE (Y/N)	CREATES AN ISLAND (Y/N)	ANGLE VIOLATION MACHINES OUT OF STEP (Y/N)	WORST CONDITION ANALYSIS VOLTAGE VIOLATION (Y/N)	WORST CONDITION ANALYSIS FREQUENCY VIOLATION (Y/N)	NOTES
Luna-Afton #1 and #2 345kV Lines w/o LAPS	Y	N	N	N	N	
Luna-Afton #1 and #2 345kV Lines w/ LAPS	Y	N	N	N	N	LAPS didn't perform any remedial actions
Luna-Afton & Luna 345/115kV Transformer	Y	N	N	N	N	
Luna-Afton & Luna 345/115kV Transformer-RAS Opt 1	Y	Y	N	N	N	Phelps Dodge (Pdtyrone 115kV) isolated w/ existing manual action
Luna-Afton & Luna 345/115kV Transformer-RAS Opt 2	Y	Y	N	N	N	Phelps Dodge (Pdtyrone and Ivanhoe 115kV) isolated w/ existing manual action
Luna-Hidalgo & Luna 345/115kV Transformer	Y	N	N	N	N	
Luna-Hidalgo & Luna 345/115kV Transformer-RAS Opt 1	Y	Y	N	N	N	Phelps Dodge (Ivanhoe 115kV) isolated w/ existing manual action
Luna-Hidalgo & Luna 345/115kV Transformer-RAS Opt 2	Y	Y	N	N	N	Phelps Dodge (Ivanhoe 115kV) isolated w/ existing manual action
Luna-Hidalgo & Luna 345/115kV Transformer-RAS Opt 3	Y	Y	N	N	N	Phelps Dodge (Ivanhoe 115kV) isolated w/ existing manual action
Luna-Hidalgo & Luna 345/115kV Transformer-RAS Opt 4	Y	Y	N	N	N	Phelps Dodge (Ivanhoe 115kV) isolated w/ existing manual action
Midpoint-Hidalgo 345kV #1 And #2 Lines	Y	N	N	N	N	
Newmn-Arroyo & Newman-Afton 345kV Lines w/o LAPS	Y	N	N	N	N	
Newman-Arroyo & Newman-Afton 345kV Lines w/ LAPS	Y	N	N	N	N	LAPS dropped load at Americas, Sparks, Lane, and Scottsdale1.
Newmn-Picante & Newman-Afton 345kV Lines w/o LAPS	Y	N	N	N	N	
Newman-Picante & Newman-Afton 345kV Lines w/ LAPS	Y	N	N	N	N	LAPS dropped load at Americas and Scottsdale1.
Nogales-Del Bac & Adams Tap-Nogales 230kV Lines	Y	Y	N	N	N	Nogales 230kV bus isolated w/ outage
Pantano-Vail & Adams-Nogales 230kV Lines	Y	N	N	N	N	
Pantano-Vail & Adams-Nogales 230kV Lines with RAS	Y	N	N	N	N	
Pantano-Vail & Pantano-Apache SL 230kV Lines	Y	N	N	N	N	
Rattlesnake-Tucson & Marana-Rattlesnake 230kV Lines	Y	Y	N	N	N	Radial system. Blackmtn, Brawley , Rattlsnk, Sandario, Sanxaver, Snydhill, Twinpeak 115kV isoladed w/ outage
Rattlesnake-Tucson & Vail-Tucson 230kV Lines	Y	N	N	N	N	
Saguaro SL-Marana & Marana-Rattlesnake 230kV Lines	Y	N	N	N	N	
Springerville-Vail & Greenlee-Willow 345 kV Lines	Y	N	N	N	N	
Springerville-Vail & Springerville-Greenlee 345 kV Lines	Y	N	N	N	N	
Springerville-Vail & Willow-Winchester 345 kV Lines	Y	N	N	N	N	
Springerville-Vail & Winchester-Vail 345 kV Lines	Y	N	N	N	N	
Sthln Sag-Sag East & Sthln Sag-Sag West 115kV lines	Y	N	N	N	N	
Tortolita-Tucson & Del Bac-Tucson 230kV Lines	Y	N	N	N	N	
Tortolita-Tucson & Marana-Southline Saguaro 230kV Lines	Y	N	N	N	N	
Tortolita-Tucson & Rattlesnake-Marana 230kV Lines	Y	N	N	N	N	
Tortolita-Tucson & Rattlesnake-Marana 230kV w/ RAS	Y	N	N	N	N	
Tortolita-Tucson & Rattlesnake-Tucson 230kV Lines	Y	N	N	N	N	
Tortolita-Tucson & Rattlesnake-Tucson 230kV w/RAS	Y	N	N	N	N	

TABLE X –TRANSIENT STABILITY RESULTS – CASE = 42A_we_0435_0971_0275_02TS.SAV						
OUTAGE	STABLE (Y/N)	CREATES AN ISLAND (Y/N)	ANGLE VIOLATION MACHINES OUT OF STEP (Y/N)	WORST CONDITION ANALYSIS VOLTAGE VIOLATION (Y/N)	WORST CONDITION ANALYSIS FREQUENCY VIOLATION (Y/N)	NOTES
Vail-Tucson & Adams-Nogales 230kV Lines	Y	N	N	N	N	
Vail-Tucson & Del Bac-Nogales 230kV Lines	Y	N	N	N	N	
Vail-Tucson & Vail-Pantano 230kV Lines	Y	N	N	N	N	
Saguaro West 115kV Bus	Y	Y	Y	N	N	Generating unit Saguaro CT 2 tripped with bus outage. Saguaro West 115kV, Saguaro 4 100kV Midpoint, Saguaro 2 15.5kV, and Saguaro CT 2 13.80kV buses isolated with outage.
Saguaro East 115kV Bus	Y	Y	Y	N	N	Generating unit Saguaro CT 1 and 3 tripped with bus outage. Saguaro East 115kV, Saguaro 10 100kV Midpoint, Saguaro 7 100kV Midpoint, Saguaro 1 15.5kV, Saguaro CT 1 13.80kV, and Saguaro CT 3 13.80kV buses isolated with outage.

TABLE X –TRANSIENT STABILITY RESULTS – CASE = 42A_we_0435_0971_0275_03_OOSTS.SAV						
OUTAGE	STABLE (Y/N)	CREATES AN ISLAND (Y/N)	ANGLE VIOLATION MACHINES OUT OF STEP (Y/N)	WORST CONDITION ANALYSIS VOLTAGE VIOLATION (Y/N)	WORST CONDITION ANALYSIS FREQUENCY VIOLATION (Y/N)	NOTES
CATEGORY A						
No Disturbance	Y	N	N	N	N	
CATEGORY B						
Bump Test - Trip of Palo Verde	Y	N	Y	N	N	Forced trip of Pale Verde
CATEGORY C						
Luna-Hidalgo & Luna 345/115kV Transformer	Y	N	N	N	N	
Luna-Hidalgo & Luna 345/115kV Transformer-RAS Opt 1	Y	Y	N	N	N	Phelps Dodge (Ivanhoe 115kV) isolated w/ existing manual action
Luna-Hidalgo & Luna 345/115kV Transformer-RAS Opt 2	Y	Y	N	N	N	Phelps Dodge (Ivanhoe 115kV) isolated w/ existing manual action
Luna-Hidalgo & Luna 345/115kV Transformer-RAS Opt 3	Y	Y	N	N	N	Phelps Dodge (Ivanhoe 115kV) isolated w/ existing manual action
Luna-Hidalgo & Luna 345/115kV Transformer-RAS Opt 4	Y	Y	N	N	N	Phelps Dodge (Ivanhoe 115kV) isolated w/ existing manual action
Springerville-Vail & Greenlee-Willow 345 kV Lines	Y	N	N	N	N	
Springerville-Vail & Springerville-Greenlee 345 kV Lines	Y	N	N	N	N	
Springerville-Vail & Willow-Winchester 345 kV Lines	Y	N	N	N	N	
Springerville-Vail & Winchester-Vail 345 kV Lines	Y	N	N	N	N	
Saguaro West 115kV Bus	Y	Y	Y	N	N	Generating unit Saguaro CT 2 tripped with bus outage. Saguaro West 115kV, Saguaro 4 100kV Midpoint, Saguaro 2 15.5kV, and Saguaro CT 2 13.80kV buses isolated with outage.
Saguaro East 115kV Bus	Y	Y	Y	N	N	Generating unit Saguaro CT 1 and 3 tripped with bus outage. Saguaro East 115kV, Saguaro 10 100kV Midpoint, Saguaro 7 100kV Midpoint, Saguaro 1 15.5kV, and Saguaro CT 1 13.80kV buses isolated with outage.

ATTACHMENT Q

115kV APACHE INTERCONNECTION WECC 10% PATH FLOW TEST

Case Series 41A & 42A

November 24, 2014

GENERAL

At the request of Southwest Transmission Company (SWTC) and Western Area Power Administration (Western), Southline conducted an additional comprehensive assessment modeling a 115kV transmission tie between Southline and the existing Apache substation. Based on this assessment (See attachment P of this report for assessment details), Southline is pursuing a direct 115kV Apache interconnection as the forward plan of service.

Early in the Southline Phase 2 process, Southline performed many 10% Path Flow Tests utilizing Phase 1 base cases under a variety of differing scenarios[1] as a rough indicator or check for potential simultaneous path interaction.

Given the revised Southline 115kV Apache Interconnection, Southline conducted an additional WECC 10% Path Flow Test to check for any new possible simultaneous WECC Path interactions.

The Southline 115kV Apache Interconnection WECC 10% Path Flow Test was conducted by modeling the Southline Category "C" contingency of the Afton-Midpoint #1 & #2 345kV Lines via post-transient governor power-flow analysis. The analysis was conducted with cases modeling Southline power-flows in both east-to-west and west-to-east directions. Case series 41A and 42A (simultaneous cases modeling Southline vs. Path 47 Flows) were updated to include the Apache 115kV tie (to be operated normally closed). Additional transmission projects such as the Tucson-Oracle Re-conductor and Southern New Mexico Upgrades (13 ohm series Dona Ana-Picacho 115kV line reactor and the Newman 345/115kV autotransformer additions were not modeled in this detailed scenario.

[1] Please see of page 24, section 3.1 WECC 10% Path Flow Test of the Final Southline Phase 2 Report for details.

WECC 10% PATH FLOW TEST METHODOLOGY

The WECC Path Rating Process defines a screening test, to aid in determining which potentially-affected Paths should be evaluated for simultaneous analysis. In this screening analysis, affected paths whose incremental flows change by 10% or more (based on that affected path's rating) for critical Project Sponsor Project element outage(s) are flagged as potential paths to be evaluated for simultaneous impacts. Southline utilized a post-transient governor power-flow contingency analysis in performing the WECC 10% Path Flow Test. WECC Path flows were monitored and reported out when measured in excess of 10% change of the respective path rating while simulating the most critical Category "C" Southline Project outage.

CASES USED, AND NOTABLE MODIFICATIONS

Two existing study cases(Case Series 41 and 42), previously developed and utilized for Southline studies with Southline project flows in both directions (east-to-west and west-to-east), were updated with the Apache 230/115kV transformer and 27 ohm Apache 115kV series reactor. Additional transmission projects such as the Tucson-Oracle Re-conductor and Southern New Mexico Upgrades (13 ohm series Dona Ana-Picacho 115kV line reactor and the Newman 345/115kV autotransformer additions were not modeled in this detailed scenario. **Table Q1** below identifies the cases utilized as well as key case attributes of the case utilized in post-transient governor power-flow WECC 10% Path Flow Test.

Table Q1 Post-Transient Key Case Attributes

#	Case	Heavy Winter (HW) or Heavy Summer (HS)	Southline Project Modeled In-service	Tortolita / Saguaro East	Apache East	Afton West	Apache West	Path 47 Flows
1	41A_ew_1040_1000_1048_v29.sav	HS	Yes	N/A	N/A	1040	1000	1048
2	42A_we_0435_0971_0275_02.sav	HW	Yes	435	971	N/A	N/A	275

CONTINGENCY STUDIED

Table Q2 lists contingency applied in the WECC 10% Path Flow Test.

TABLE Q2 - OUTAGES MODELED IN 10% PATH FLOW TEST

CAT	DESCRIPTION
C	Afton-Midpoint 345kV #1 And #2 Lines

STUDY RESULTS

Southline PRG Members may download the WECC 10% Path Flow case from the Southline Share File site https://southline.sharefile.com. The case is located under the "General Data" section in the "115kV Apache Interconnection WECC 10% Path Flow Test" folder.

Table Q3 lists 10% Path Flow Test results by path and contingency for case representing west-to-east Southline Flows. While **Table Q4** lists 10% Path Flow Test results by path and contingency for case representing east-to-west Southline Flows. Results are consistent with prior 10% results, showing a simultaneous relationship with Path 47(101.7% - -94.4%), and a potential slight pick-up on Path 23(10.8% - 10.9%). No other WECC Paths showed flows over 10%.

TABLE Q3 – SOUTHLINE FLOWS EAST-TO-WEST - OUTAGES MODELED IN 10% PATH FLOW TEST

PATH NAME	Path 23	Path 47	Southline Afton West	Southline Apache West
PATH RATING (in MW)	-1000	1048	1037	1000
PRE-CONTINGENCY (flows in MW)	-245.1	1048.3	1040	999.7
POST-CONTINGENCY (Path Flows in MW)			n/a	n/a
Category C Afton-Midpoint #1 & #2 345kV Lines	-135.7	-18	n/a	n/a
POST-CONTINGENCY (ΔMW Path Flow Change)			n/a	n/a
Category C Afton-Midpoint #1 & #2 345kV Lines	-109.3	1066.3	n/a	n/a
POST-CONTINGENCY (% Path Rating)			n/a	n/a
Category C Afton-Midpoint #1 & #2 345kV Lines	-10.9	101.7	n/a	n/a

TABLE Q4 – SOUTHLINE FLOWS WEST-TO-EAST - OUTAGES MODELED IN 10% PATH FLOW TEST

PATH NAME	Path 23	Path 47	Southline Saguaro/Tortolita East	Southline Apache East
PATH RATING (in MW)	-1000	1048	430	971
PRE-CONTINGENCY (flows in MW)	-411	275	435.1	970.9
POST-CONTINGENCY (Path Flows in MW)			n/a	n/a
Category C Afton-Midpoint #1 & #2 345kV Lines	-518.9	1264.4	n/a	n/a
POST-CONTINGENCY (ΔMW Path Flow Change)			n/a	n/a
Category C Afton-Midpoint #1 & #2 345kV Lines	107.9	-989.4	n/a	n/a
POST-CONTINGENCY (% Path Rating)			n/a	n/a
Category C Afton-Midpoint #1 & #2 345kV Lines	10.8	-94.4	n/a	n/a

CONCLUSION

The Southline 115kV Apache Interconnection 10% Path Flow Test results indicate a simultaneous link with Path 47 MW flows, and a potential minor pick-up on Path 23. These results are consistent with original Southline 10% test results, and indicate there are no new interactions that should be investigated.

ATTACHMENT R

SUNZIA - SOUTHLINE 2017 WECC 10% PATH FLOW TEST

Case Series 45

November 21, 2014

GENERAL

Earlier in the Southline Phase 2 process, Southline performed a Southline-SunZia 10% Path Flow Test utilizing Southline case series 01 as the seed case. The SunZia Project new plan of service was overlaid in the seed case with both SunZia and Southline projects modeling east-to-west flows at maximum non-simultaneous levels (3000MW and 1037MW/1000MW[1] for SunZia and Southline, respectively). The conclusion showed that Southline and SunZia projects do not simultaneously interact with each other at or above 10% on their respective paths.

As a further Southline-SunZia simultaneous interaction check, Southline performed an additional simultaneous Southline-SunZia WECC 10% Path Flow Test. The test utilizes a SunZia PRG vetted and approved 2017 heavy summer case (17hs_non-sim_sunzia3000.sav[2]), which models SunZia output at 3000MW. The case was updated with the Southline plan-of-service modeling Southline Afton West and Apache West paths at 1122 MW and 1000 MW, respectively. The Southline model included Southline's revised plan of service for an Apache 115kV interconnection as discussed in Attachment P.

As in the earlier simultaneous Southline-SunZia WECC 10% Path Flow Test, results show significantly less than a 10% pickup for either the Sunzia or Southline Paths under opposing path worst case contingencies. Given the post-contingency path pickup is below 10% it is concluded that there is no simultaneous Southline and SunZia interaction.

[1] Southline Afton West Path = 1037MW and Southline Apache West Path = 1000MW

[2] The WECC 2017 heavy summer case (17hs_non sim_sunzia3000.sav), developed and reviewed by SunZia's PRG for SunZia's recent re-study efforts with SunZia revised plan-of-service.

WECC 10% PATH FLOW TEST METHODOLOGY

The WECC Path Rating Process defines a screening test, to aid in determining which potentially-affected Paths should be evaluated for simultaneous analysis. In this screening analysis, affected paths whose incremental flows change by 10% or more (based on that affected path's rating) for critical Project Sponsor Project element outage(s) are flagged as potential paths to be evaluated for simultaneous impacts. Southline utilized a post-transient governor power flow contingency analysis in performing the WECC 10% Path Flow Test. Flows were monitored while simulating the most critical Category B and C SunZia and Southline Project outages, and all resulting changes in path flows were measured with respect to each path's rating.

CASES USED, AND NOTABLE MODIFICATIONS

A WECC approved heavy summer 2017 year study case (17hs_non-sim_sunzia3000.sav) that was previously reviewed, and developed by the SunZia's PRG for the SunZia re-study effort was used as the Case Series 45 starting seed case for the WECC 10% Path Flow Test. The Southline project was added modeling heavy Southline project east-to-west flows.

The Southline Apache 115kV interconnection described in Attachment P, which includes an Apache 230/115kV transformer and 27 ohm Apache 115kV series reactor, was modeled. Additional transmission projects such as the Tucson-Oracle Re-conductor and Southern New Mexico Upgrades (13 ohm series Donna Ana-Picacho 115kV line reactor and the Newman 345/115kV autotransformer additions) were not modeled. **Table R1** below identifies the key case attributes of the case utilized in post-transient governor power-flow WECC 10% Path Flow Test.

Table R1 - Post-Transient Key Case Attributes

Case	Southline Project Modeled In-service	Afton West	Apache West	SunZia Flows
45_ew_1122_1000_3000_v01.sav	Yes	1122	1000	3000

CONTINGENCIES STUDIED

Table R2 lists contingencies applied in the WECC 10% Path Flow Test.

TABLE R2 - OUTAGES MODELED IN 2nd 10% PATH FLOW TEST

#	CAT	DESCRIPTION
1	B	Sunzia East-Willow #1 500kV Line with RAS(1100MW Gen Dropping)
2	C	Sunzia East-Willow #1 and #2 500kV Line with RAS(3000MW Gen Dropping)
3	C	Afton-Midpoint 345kV #1 And #2 Lines

STUDY RESULTS

Southline PRG Members may download the WECC 10% Path Flow case from the Southline Share File site https://southline.sharefile.com. The case is located under the "General Data" section in the "Southline-SunZia Phase 2 WECC 10% Path Stress Test 2" folder.

The 10% Path Flow Test showed no simultaneous relationship between Southline and SunZia revised plan-of-service. **Table R3** lists 10% Path Flow Test results by path and contingency.

TABLE R3 – OUTAGES MODELED IN 10% PATH FLOW TEST			
PATH NAME	SunZia	Southline Afton West	Southline Apache West
PATH RATING (in MW)	3000	1037	1000
PRE-CONTINGENCY (in MW)	2997.2	1121.5	999.3
POST-CONTINGENCY (Path Flows in MW)			
Category C Afton-Midpoint #1 & #2 345kV Lines	2997.2	n/a	n/a
Category B Sunzia East-Willow #1 500kV Line with RAS(1100MW Gen Dropping)	n/a	1138.6	1013.5
Category C/D Sunzia East-Willow #1 and #2 500kV Line with RAS(3000MW Gen Dropping)	n/a	1168.3	1038.2
POST-CONTINGENCY (ΔMW Path Flow Change)			
Category C Afton-Midpoint #1 & #2 345kV Lines	0	n/a	n/a
Category B Sunzia East-Willow #1 500kV Line with RAS(1100MW Gen Dropping)	n/a	17.1	14.3
Category C/D Sunzia East-Willow #1 and #2 500kV Line with RAS(3000MW Gen Dropping)	n/a	46.8	39
POST-CONTINGENCY (% Path Rating)			
Category C Afton-Midpoint #1 & #2 345kV Lines	0	n/a	n/a
Category B Sunzia East-Willow #1 500kV Line with RAS(1100MW Gen Dropping)	n/a	1.7	1.4
Category C/D Sunzia East-Willow #1 and #2 500kV Line with RAS(3000MW Gen Dropping)	n/a	4.5	3.9

CONCLUSION

Based on both the first and second Southline-SunZia 10% Path Flow Test study results, the Southline and SunZia projects do not show an interaction with each other at or above 10% on their respective paths.

Southline believes these results confirm the PRG participants' assessment that there is no simultaneous path interaction between Southline and the new proposed SunZia plan of service.

ATTACHMENT S

SUNZIA - SOUTHLINE 2017 SENSITIVITY

Case Series 45

November 23, 2014

GENERAL

In addition to checking for potential Southline-SunZia interaction via WECC 10% Path Flow Tests, Southline also conducted an additional simultaneous sensitivity of Southline and SunZia. The sensitivity focused on a comprehensive simultaneous path analysis modeling Southline east-to-west flows and SunZia's revised (September 25, 2014) plan of service. The analysis models SunZia at 3000MW with Southline's Afton West and Apache West paths at 1122 MW and 1000 MW, respectively. A WECC 2017 heavy summer case (17hs_non-sim_sunzia3000.sav), developed and reviewed by SunZia's PRG for SunZia's recent re-study efforts, was updated with the Southline model. The Southline model included Southline's updated plan of service for an Apache 115kV interconnection discussed in Attachment P. Noteworthy points and findings are as follows:

- ✓ Results of the analysis show no simultaneous interaction between Southline and SunZia with both paths at their maximum output. Given that both Paths are fully capable of obtaining their ratings, it is believed that there is no simultaneous interaction between the SunZia and Southline Paths.
- ✓ The case used to study SunZia – Southline simultaneous interaction modeled transmission projects, generation availability and 2017 summer peak-loads. The results show Southline is capable of obtaining its rating in the 2017 time frame.
- ✓ The Case Series 45 analysis models Southline's revised 115kV Apache interconnection. A review of results shows that prior study results are repeatable with no new criteria violations or new mitigation resulting from the Apache 115kV interconnection. The Case Series 45 analysis results further validates and supports prior Case Series 41A results. It should be noted that Southline is pursuing a 115kV Apache interconnection as the forward plan of service. See further details regarding the Apache 115kV interconnection outlined in Attachment P.

The sensitivity analysis modeled contingencies noted in the study plan and included post-transient governor power-flow, voltage stability with flow margin added to both paths under study, and transient stability studies. Case series 45 (simultaneous cases modeling Southline vs. SunZia) were updated to include the Apache 115kV tie (to be operated normally closed). Additional transmission projects such as the Tucson-Oracle Re-conductor and Southern New Mexico Upgrades (13 ohm series Donna Ana-Picacho 115kV line reactor and the Newman 345/115kV autotransformer additions) were not modeled in this scenario.

CASES USED, AND NOTABLE MODIFICATIONS

A WECC approved heavy summer 2017 year study case (17hs_non-sim_sunzia3000.sav) that was previously reviewed, and developed by the SunZia's PRG for the SunZia re-study effort was used as the Case Series 45 starting seed case for this sensitivity. The Southline project was added modeling heavy Southline project east-to-west flows. The Southline Apache 115kV interconnection described in Attachment P, which includes an Apache 230/115kV transformer and 27 ohm Apache 115kV series reactor, was modeled. Additional transmission projects such as the Tucson-Oracle Re-conductor and Southern New Mexico Upgrades (13 ohm series Donna Ana-Picacho 115kV line reactor and the Newman 345/115kV autotransformer additions) were not modeled. **Table S1** below identifies the cases utilized in post-transient governor power-flow as well as the key case attributes.

Table S1 Post-Transient Key Case Attributes

#	Case	Southline Project Modeled In-service	Afton West	Apache West	SunZia Flows
1	45_ew_1122_1000_3000_v01.sav	Yes	1122	1000	3000
2	45_ew_1122_1000_3000_01_oos.sav	No	N/A	N/A	3000

Table S2 list two cases constructed out of the post-transient cases and used to conduct the corresponding voltage stability analysis. Please note that a flow-margin of 5% was added to each path under study.

Table S2 Voltage Stability Case Attributes W/Added Flow Margin 5%

#	Case	Southline Project Modeled In-service	Afton West	Apache West	SunZia Flows
1	45_ew_1122_1000_3150_01.sav	Yes	1122	1000	3150
2	45_ew_1188_1050_3000_02.sav	Yes	1188	1050	3000

Table S3 list two cases constructed out of the post-transient cases that were used to conduct the corresponding transient stability analysis.

Table S3 Transient Stability Case Attributes

#	Case	Southline Project Modeled In-service	Afton West	Apache West	SunZia Flows
1	45_ew_1122_1000_3000_03_ts.sav	Yes	1122	1000	3000
2	45_ew_1122_1000_3000_03_oosts.sav	No	N/A	N/A	3000

STUDY CRITERIA & CONTINGENCIES

The transmission system was evaluated under the same criteria and standard contingencies specified in the Southline Phase 2 Study Plan. Additional Category B transmission line and transformer contingencies were evaluated at the Apache Station, given the Apache 115kV interconnection.

STUDY RESULTS

Preliminary Case Series 45 study results mimic Case Series 41A study results. Existing Apache 230/115kV transformers #1 and #2 experienced flows in excess of their 112MVA emergency ratings for two Category "C" outages modeled in post-contingency post-transient governor power-flows (Post-transient governor power-flow details are noted in **Table S4)**. These outages include:

1. Category C: Apache-Pantano & Adamstap-Nogales 230kV Lines

2. Category C: Apache-Pantano & Apache-Adamstap 230kV Lines

Please see the mitigation section below which discusses these results and mitigation in more detail.

Case Series 45 study results do not demonstrate a simultaneous interaction between the Southline Path and SunZia Path. With respect to Southline, the Nomogram 45 flow limits found are attributed to local area grid limitations. Southline can simultaneously achieve power-flowing east-to-west at 1122MW across the Southline Afton to Apache rating cut-plane w/ 1000MW across the Southline Apache to Tortolita/Saguaro cut-plane with SunZia Path flow at 3000MW. The simultaneous limit achieved meets all WECC and NERC criteria for the areas of study (post-transient governor power-flow, voltage stability and transient analysis.

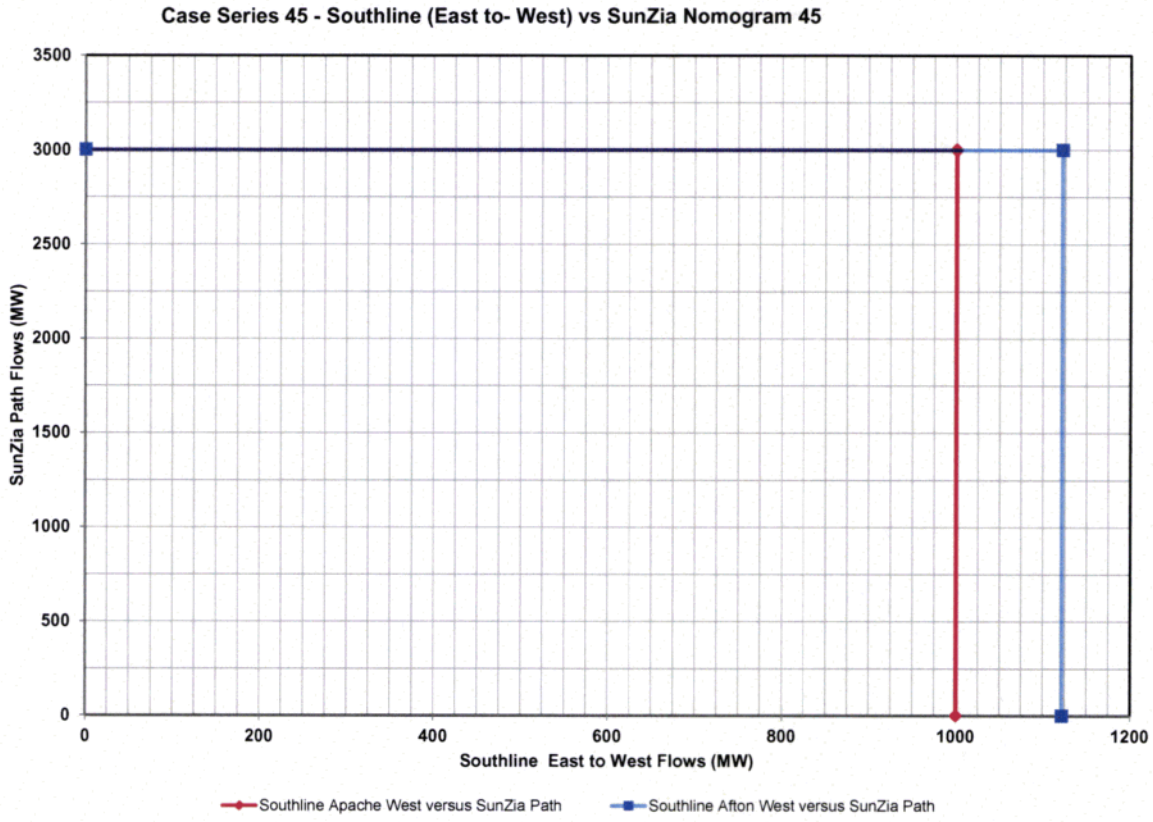

MITIGATION

As was noted in Southline Study Case Series 41A results, an initial mitigation solution was explored for post-contingency RAS tripping of the proposed Southline Apache 230/115kV transformer bank. However, this RAS solution was not found to be acceptable to SWTC, and Southline worked with SWTC and Western to identify an alternative acceptable solution. Southline will work with SWTC and Western to upgrade both existing SWTC Apache 230/115kV transformers. The upgraded Apache 230/115kV transformers would be rated higher than the existing transformers but with the same impedance characteristics

CONCLUSION

The conclusions that can be deduced from the sensitivity analysis are as follows:

1. ***SunZia and Southline study results show no simultaneous interaction*** With the previously identified mitigation and upgrades determined in other Southline study scenarios, Southline is capable of achieving the same planned simultaneous ratings that have been previously determined in prior case series not modeling the SunZia Project. The results of this analysis show no simultaneous interaction between Southline and Sunzia.

2. ***Southline can obtain same rating in 2017*** The case(s) used to study the SunZia - Southline simultaneous interaction model year 2017 transmission, generation, and Summer peak-loads. The study cases originated from WECC as 2017HS base case that was reviewed by SunZia Re-Study PRG for the SunZia's revised plan of service re-study. The results of the analysis show no issues or criteria violations resulting from the later 2017 year model.

3. ***Southline Apache 115 kV Interconnection*** The analysis utilized the updated Apache 115kV interconnection model. The results of the analysis were similar to earlier analysis modeling the Apache 115kV interconnection (Case Series 41A). A review of results shows no new criteria violation and/or resulting new mitigation as a result of the Apache 115kV interconnection. Again it should be noted that Southline will be pursuing an Apache 115kV interconnection as the forward plan of service. See further details regarding the Apache 115kV interconnection outlined in Attachment P.

POST-TRANSIENT RESULTS COVER SHEET	
Direction	East-to-West
Case Series Number	45
Simultaneous Path	Sunzia
Path 47 Definition --WECC or Alternative	WECC
SunZia in Service	Yes
Tucson-Oracle Reconductor	No
2nd Marana Bank	Yes
Bowie Generation Output (MW)	350
West to East Mitigation	No
Dona Ana- Picacho 115kV 13 ohm series reactor	No
Additional Newman 345/115kV Transformer Bank	No
Southwest Power Pool	No
Southline Apache 230/115kV Transformer	Yes
Nomogram Number	45
Nomogram Point	1
Southline Afton-West Cut Plane Flows (MW)	1122
Southline Apache-West Cut Plane Flows (MW)	1000
Southline Saguaro/Tortolita-East Cut Plane Flows (MW)	N/A
Southline Apache-East Cut Plane Flows (MW)	N/A
Southline Midpoint West Cut Plane Flows (MW)	N/A
SunZia Path Flows (MW)	3000

TABLE S4 – POST-TRANSIENT THERMAL RESULTS – CASES = 45_ew_1122_1000_3000_v01.sav, 45_ew_1122_1000_3000_v01_oos.sav								
OVERLOADED COMPONENT	CONTINGENCY	RATING	PRE-PROJECT LOADING		POST-PROJECT LOADING		DELTA %	NOTES
		AMPS / MVA	AMPS/ MVA	RATING %	AMPS / MVA	RATING %		
CATEGORY A								
None								
CATEGORY C								
SWTC Apache 230/115kV Transformer #1	Apache-Pantano & Adamstap-Nogales 230kV Lines	112	N/A	N/A	158.08	141.14	N/A	Upgraded Transformers mitigates overload
	Apache-Pantano & Apache-Adamstap 230kV Lines	112	N/A	N/A	161.11	143.85	N/A	Upgraded Transformers mitigates overload
SWTC Apache 230/115kV Transformer #2	Apache-Pantano & Adamstap-Nogales 230kV Lines	112	N/A	N/A	155.22	138.59	N/A	Upgraded Transformers mitigates overload
	Apache-Pantano & Apache-Adamstap 230kV Lines	112	N/A	N/A	158.2	141.25	N/A	Upgraded Transformers mitigates overload

TABLE S4 – POST-TRANSIENT VOLTAGE RESULTS – CASES = 45_ew_1122_1000_3000_v01.sav, 45_ew_1122_1000_3000_v01_oos.sav								
BUS	CONTINGENCY	PRE-PROJECT		PST-PROJECT		DELTA		NOTES
		VOLTAGE (PU)	DEV (%)	VOLTAGE (PU)	DEV (%)	VOLTAGE (PU)	DEV (%)	
CATEGORY A								
Adams 115kV	Basecase	1.00	N/A	1.00	N/A	0.00	N/A	
Bonney Brook 115kV	Basecase	1.00	N/A	1.00	N/A	0.00	N/A	
Cactus 230kV	Basecase	1.00	N/A	1.01	N/A	-0.01	N/A	
Canez 138kV	Basecase	0.9957	N/A	1.0162	N/A	-0.0205	N/A	
Coconino 230kV	Basecase	0.98	N/A	0.99	N/A	-0.01	N/A	
Dulce 11 115kV	Basecase	1.08	N/A	1.08	N/A	0.00	N/A	
Fort Huachuca 138kV	Basecase	1.0086	N/A	1.0088	N/A	-0.0002	N/A	
Kantor 138kV	Basecase	1.0020	N/A	1.0193	N/A	-0.0173	N/A	
Kartchnr 138kV	Basecase	0.94	N/A	0.94	N/A	0.00	N/A	
Kearny 115kV	Basecase	0.99	N/A	0.99	N/A	0.00	N/A	
Leupp 230kV	Basecase	0.99	N/A	1.01	N/A	-0.02	N/A	
Lone Peak 230kV	Basecase	1.00	N/A	1.01	N/A	-0.01	N/A	
Moenkopi 500kV	Basecase	1.09	N/A	1.09	N/A	0.00	N/A	
Nogales 138kV	Basecase	1.03	N/A	1.04	N/A	-0.01	N/A	
North Gila 230kV	Basecase	1.06	N/A	1.05	N/A	0.01	N/A	
Pinnacle Peak Central 230kV	Basecase	0.990	N/A	0.994	N/A	-0.004	N/A	
Pinnacle Peak East 230kV	Basecase	1.017	N/A	1.020	N/A	-0.003	N/A	
Pinnacle Peak North 230kV	Basecase	1.013	N/A	1.016	N/A	-0.003	N/A	
Pinnacle Peak West 230kV	Basecase	1.014	N/A	1.017	N/A	-0.003	N/A	
Prescott 230kV	Basecase	1.006	N/A	1.016	N/A	-0.010	N/A	
Reach 230kV	Basecase	1.00	N/A	1.00	N/A	0.00	N/A	
Rosemont 138kV	Basecase	0.9985	N/A	1.0064	N/A	-0.0079	N/A	
San Manuel 115kV	Basecase	1.01	N/A	1.00	N/A	0.01	N/A	
Sonoita 138kV	Basecase	0.9937	N/A	1.0151	N/A	-0.0214	N/A	
South 138kV	Basecase	1.03	N/A	1.04	N/A	-0.01	N/A	
Tortolita 500kV	Basecase	1.07	N/A	1.06	N/A	0.01	N/A	
Valncia 138kV	Basecase	0.9897	N/A	1.0129	N/A	-0.0232	N/A	
Verde North 230kV	Basecase	0.99	N/A	1.00	N/A	-0.01	N/A	
Verde South 230kV	Basecase	0.99	N/A	1.00	N/A	-0.01	N/A	
West Wing West 230kV	Basecase	1.03	N/A	1.04	N/A	-0.01	N/A	
Westwing 345kV	Basecase	1.02	N/A	1.01	N/A	0.01	N/A	

TABLE S4 – POST-TRANSIENT VOLTAGE RESULTS – CASES = 45_ew_1122_1000_3000_v01.sav, 45_ew_1122_1000_3000_v01_oos.sav								
BUS	CONTINGENCY	PRE-PROJECT		PST-PROJECT		DELTA		NOTES
		VOLTAGE (PU)	DEV (%)	VOLTAGE (PU)	DEV (%)	VOLTAGE (PU)	DEV (%)	
CATEGORY B								
Red Tail 230kV	Apache-Red Tail #1 230kV Line	0.96	-6.0	0.96	-5.6	0.00	-0.4	
Vail2 345kV	Vail2 345/138 Transformer #1	1.15	10.8	1.15	10.2	0.00	0.6	Bus floating at end of radial line after contingency
CATEGORY C								
Dugas 500kV	Morgan-Dugas & Yavapai-Westwing 500kV Lines	1.11	3.4	1.11	3.3	0.00	0.1	

VOLTAGE STABILITY TEST RESULTS COVER SHEET	
Direction	East-to-West
Case Series Number	45
Simultaneous Path	Sunzia
Path 47 Definition --WECC or Alternative	WECC
SunZia in Service	Yes
Tucson-Oracle Reconductor	No
2nd Marana Bank	Yes
Bowie Generation Output (MW)	350
West to East Mitigation	No
Dona Ana- Picacho 115kV 13 ohm series reactor	No
Additional Newman 345/115kV Transformer Bank	No
Eddy County Export	No
Southline Apache 230/115kV Transformer	Yes
Nomogram Number	45
Nomogram Point	1
Southline Afton-West Cut Plane Flows (MW)	1122
Southline Apache-West Cut Plane Flows (MW)	1000
Southline Saguaro/Tortolita-East Cut Plane Flows (MW)	N/A
Southline Apache-East Cut Plane Flows (MW)	N/A
Southline Midpoint West Cut Plane Flows (MW)	N/A
SunZia Path Flows (MW)	3000

TABLE S5 - VOLTAGE STABILITY TEST - CASES = 45_ew_1122_1000_3150_01.sav, 45_ew_1188_1050_3000_01.sav													
CONTINGENCY DESCRIPTION	AFTON WEST PATH				APACHE WEST PATH				SUNZIA PATH				OUTAGE SOLUTION STATUS ACHIEVED WITH INCREASED PATH FLOW
	BASE CASE PATH FLOW (MW)	TEST CASE PATH FLOW (MW)	105.0% TEST (Y/N)	102.5% TEST (Y/N)	BASE CASE PATH FLOW (MW)	TEST CASE PATH FLOW (MW)	105.0% TEST (Y/N)	102.5% TEST (Y/N)	BASE CASE PATH FLOW (MW)	TEST CASE PATH FLOW (MW)	105.0% TEST (Y/N)	102.5% TEST (Y/N)	
VOLTAGE STABILITY TEST CASE 1 = 45_ew_1122_1000_3150_01.sav													
Base Case Conditions	1122	1122	N	N	1000	1000	N	N	3000	3150	Y	N	Solved
All Category B Outages Unless Otherwise Noted	1122	1122	N	N	1000	1000	N	N	3000	3150	Y	N	All Solved
All Category C Outages Unless Otherwise Noted (See Note 1)	1122	1122	N	N	1000	1000	N	N	3000	3150	Y	N	All Solved
VOLTAGE STABILITY TEST CASE 1 = 45_ew_1188_1050_3000_01.sav													
Base Case Conditions	1122	1188	Y	N	1000	1050	Y	N	3000	3000	N	N	Solved
All Category B Outages Unless Otherwise Noted	1122	1188	Y	N	1000	1050	Y	N	3000	3000	N	N	All Solved
All Category C Outages Unless Otherwise Noted (See Note 1)	1122	1188	Y	N	1000	1050	Y	N	3000	3000	N	N	All Solved
Note 1 – The outage "Willow-Pinal_C #1 & #2 500kV Line" diverged; however, Sunzia is employing a RAS for this outage. With the RAS modeled, the outage solves.													

TRANSIENT STABILITY RESULTS COVER SHEET	
Direction	East-to-West
Case Series Number	45
Simultaneous Path	Sunzia
Path 47 Definition --WECC or Alternative	WECC
SunZia in Service	Yes
Tucson-Oracle Reconductor	No
2nd Marana Bank	Yes
Bowie Generation Output (MW)	350
West to East Mitigation	No
Dona Ana- Picacho 115kV 13 ohm series reactor	No
Additional Newman 345/115kV Transformer Bank	No
Eddy County Export	No
Southline Apache 230/115kV Transformer	Yes
Nomogram Number	45
Nomogram Point	1
Southline Afton-West Cut Plane Flows (MW)	1122
Southline Apache-West Cut Plane Flows (MW)	1000
Southline Saguaro/Tortolita-East Cut Plane Flows (MW)	N/A
Southline Apache-East Cut Plane Flows (MW)	N/A
Southline Midpoint West Cut Plane Flows (MW)	N/A
SunZia Path Flows (MW)	3000

TABLE S6 –TRANSIENT STABILITY RESULTS – CASE = 45_ew_1122_1000_3000_03_ts.sav, 45_ew_1122_1000_3000_04_ts.sav						
OUTAGE	STABLE (Y/N)	CREATES AN ISLAND (Y/N)	ANGLE VIOLATION MACHINES OUT OF STEP (Y/N)	WORST CONDITION ANALYSIS VOLTAGE VIOLATION (Y/N)	WORST CONDITION ANALYSIS FREQUENCY VIOLATION (Y/N)	NOTES
CATEGORY A						
No Disturbance	Y	N	N	N	N	
CATEGORY B						
Bump Test - Trip of Palo Verde	Y	N	Y	N	N	Forced trip of Pale Verde
Adams 230/115kV Transformer	Y	Y	N	N	N	Radial system. Adams, Mural, Boothill 115kV isolated w/ outage
Afton 345kV Phase Shifter 1	Y	N	N	N	N	
Afton-Midpoint 345kV Line	Y	N	N	N	N	
Apache 345/230kV Transformer	Y	N	N	N	N	
Apache-Adams 230kV Line	Y	N	N	N	N	
Apache-Pantano 230kV Line	Y	N	N	N	N	
Delbac-Nogoles 230kV Line	Y	N	N	N	N	
Hidalgo-Apache 345kV Line	Y	N	N	N	N	
Marana 230/115kV Transformer	Y	N	N	N	N	
Marana-Rattle Snake 230kV Line	Y	N	N	N	N	
Midpoint-Hidalgo 345kV Line	Y	N	N	N	N	
Nogales-Adams 230kV Line	Y	N	N	N	N	
Rattle Snake 230/115kV Transformer	Y	Y	N	N	N	Radial system. Blackmtn, Brawley , Rattlsnk, Sandario, Sanxaver, Snydhill, Twinpeak 115kV isoladed w/ outage
Southline Saguaro 230/115kV Transformer #1	Y	N	N	N	N	
Southline Saguaro-Marana 230kV Line	Y	N	N	N	N	
Tortolita 500/230kV Transformer	Y	N	N	N	N (See Note)	Frequency <59.6Hz for 6 cycles or more at Sunzia thermal unit buses. If load connected to bus, this would be a violation.
Tucson 230/115kV Transformer	Y	N	N	N	N	
Tucson 230/DMP 138kV Transformer	Y	N	N	N	N	
Tucson 230/DMP 138kV Transformers #1 and #2	Y	N	N	N	N	
Tucson-Del Bac 230kV Line	Y	N	N	N	N	
Tucson-Rattlesnake 230kV Line	Y	N	N	N	N	
Tucson-Tortolita 230kV Line	Y	N	N	N	N	
Tucson-Vail 230kV Line	Y	N	N	N	N	
Vail 345/230kV Transformer	Y	N	N	N	N	
Pinal C-Abel 500kV Line w/ Sunzia RAS	Y	N	N	N	N (See Note)	Frequency <59.6Hz for 6 cycles or more at SUNZIA E and SUNZISVC 500kV buses as well as all Sunzia 0.6kV, 20kV, and 34.5kV buses. If load connected to any of these buses, this would be a violation.
Sunzia-Willow 500kV Line w/ Sunzia RAS	Y	N	N	N	N	
Pinal C-Willow 500kV Line w/ Sunzia RAS	Y	N	N	N	N (See	Frequency <59.6Hz for 6 cycles or more at SUNZIA E and SUNZISVC

TABLE S6 –TRANSIENT STABILITY RESULTS – CASE = 45_ew_1122_1000_3000_03_ts.sav, 45_ew_1122_1000_3000_04_ts.sav						
OUTAGE	STABLE (Y/N)	CREATES AN ISLAND (Y/N)	ANGLE VIOLATION MACHINES OUT OF STEP (Y/N)	WORST CONDITION ANALYSIS VOLTAGE VIOLATION (Y/N)	WORST CONDITION ANALYSIS FREQUENCY VIOLATION (Y/N)	NOTES
					Note)	500kV buses as well as all Sunzia 0.6kV, 20kV, and 34.5kV buses. If load connected to any of these buses, this would be a violation.
Willow 500/345kV Transformer	Y	N	N	N	N (See Note)	Frequency <59.6Hz for 6 cycles or more at Sunzia thermal unit bus. If load connected to bus, this would be a violation.
CATEGORY C						
Adams Tap-Apache SL & Adams Tap-Nogales 230kV Lines	Y	Y	N	N	N	Radial system. Adams, Mural, Boothill 115kV isolated w/ outage
Afton-Midpoint 345kV #1 And #2 Lines	Y	N	N	N	N	
Apache-Pantano & Adams-Nogales 230kV Lines	Y	N	N	N	N	
Apache-Pantano & Apache-Adams 230kV Lines	Y	N	N	N	N	
Hidalgo-Apache 345kV #1 And #2 Lines	Y	N	N	N	N	
Luna-Afton #1 and #2 345kV Lines w/ LAPS	Y	N	N	N	N	LAPS performed the following: tripped Dona Ana-Picacho 115kV line; dropped load at Americas, Copper, Sparks, Lane and Scottsdale1; and tripped Rio Boss shunt capacitor.
Luna-Afton & Luna 345/115kV Transformer	Y	N	N	N	N	
Luna-Afton & Luna 345/115kV Transformer - RAS Opt 1	Y	Y	N	N	N	Phelps Dodge (Pdtyrone 115kV) isolated w/ existing manual action
Luna-Afton & Luna 345/115kV Transformer - RAS Opt 2	Y	Y	N	N	N	Phelps Dodge (Pdtyrone and Ivanhoe 115kV) isolated w/ existing manual action
Luna-Hidalgo & Luna 345/115kV Transformer	Y	N	N	N	N	
Luna-Hidalgo & Luna 345/115kV Transformer - RAS Opt 1	Y	Y	N	N	N	Phelps Dodge (Ivanhoe 115kV) isolated w/ existing manual action
Luna-Hidalgo & Luna 345/115kV Transformer - RAS Opt 2	Y	Y	N	N	N	Phelps Dodge (Ivanhoe 115kV) isolated w/ existing manual action
Luna-Hidalgo & Luna 345/115kV Transformer - RAS Opt 3	Y	Y	N	N	N	Phelps Dodge (Ivanhoe 115kV) isolated w/ existing manual action
Luna-Hidalgo & Luna 345/115kV Transformer - RAS Opt 4	Y	Y	N	N	N	Phelps Dodge (Ivanhoe 115kV) isolated w/ existing manual action
Midpoint-Hidalgo 345kV #1 And #2 Lines	Y	N	N	N	N	
Newman-Arroyo & Newman-Afton 345kV Lines w/ LAPS	Y	N	N	N	N	LAPS didn't perform any remedial actions
Newman-Picante & Newman-Afton 345kV Lines w/ LAPS	Y	N	N	N	N	LAPS didn't perform any remedial actions
Nogales-Del Bac & Adams Tap-Nogales 230kV Lines	Y	Y	N	N	N	Nogales 230kV isolated w/ outage
Pantano-Vail & Adams-Nogales 230kV Lines	Y	N	N	N	N	
Pantano-Vail & Pantano-Apache SL 230kV Lines	Y	N	N	N	N	
Rattlesnake-Tucson & Marana-Rattlesnake 230kV Lines	Y	Y	N	N	N	Radial system. Blackmtn, Brawley , Rattlsnk, Sandario, Sanxaver, Snydhill, Twinpeak 115kV isoladed w/ outage
Rattlesnake-Tucson & Vail-Tucson 230kV Lines	Y	N	N	N	N	
Saguaro SL-Marana & Marana-Rattlesnake 230kV Lines	Y	N	N	N	N	
Springerville-Vail & Greenlee-Willow 345 kV Lines	Y	N	N	N	N	
Springerville-Vail & Springerville-Greenlee 345 kV Lines	Y	N	N	N	N	
Springerville-Vail & Willow-Winchester 345 kV Lines	Y	N	N	N	N	
Springerville-Vail & Winchester-Vail 345 kV Lines	Y	N	N	N	N	

TABLE S6 –TRANSIENT STABILITY RESULTS – CASE = 45_ew_1122_1000_3000_03_ts.sav, 45_ew_1122_1000_3000_04_ts.sav						
OUTAGE	STABLE (Y/N)	CREATES AN ISLAND (Y/N)	ANGLE VIOLATION MACHINES OUT OF STEP (Y/N)	WORST CONDITION ANALYSIS VOLTAGE VIOLATION (Y/N)	WORST CONDITION ANALYSIS FREQUENCY VIOLATION (Y/N)	NOTES
Sthln Sag-Sag East & Sthln Sag-Sag West 115kV lines	Y	N	N	N	N	
Tortolita-Tucson & Del Bac-Tucson 230kV Lines	Y	N	N	N	N	
Tortolita-Tucson & Marana-Southline Saguaro 230kV Lines	Y	N	N	N	N	
Tortolita-Tucson & Rattlesnake-Marana 230kV Lines	Y	N	N	N	N	
Tortolita-Tucson & Rattlesnake-Tucson 230kV Lines	Y	N	N	N	N	
Vail-Tucson & Adams-Nogales 230kV Lines	Y	N	N	N	N	
Vail-Tucson & Del Bac-Nogales 230kV Lines	Y	N	N	N	N	
Vail-Tucson & Vail-Pantano 230kV Lines	Y	N	N	N	N	
Saguaro East 115kV Bus	Y	N	N	N	N	This actually a Category D. With bus outage generation and aux load at SAG. CT3, SAGUARO1 and SAG. CT3 trips offline (if online pre-contingency).
Saguaro West 115kV Bus	Y	N	N	N	N	This actually a Category D. With bus outage generation and aux load at SAG. CT2 and SAGUARO2 trips offline (if online pre-contingency).
Willow-Pinal C #1 and #2 500kV Lines w/ Sunzia RAS	Y	N	N	N	N	For this outage, RAS must trip the entire Sunzia project including all 500kV lines, transformer and generators.
Sunzia-Willow #1 and #2 500kV Lines w/ Sunzia RAS	Y	N	N	N	N	For this outage, RAS must trip the entire Sunzia project including all 500kV lines, transformer and generators except for the Pinal C-Willow 500kV lines and the Willow 500/345kV transformer.
Luna-Afton #1 and #2 345kV Lines	Y	N	N	N	N	
Luna-Afton #1 and #2 345kV Lines w/ LAPS	Y	N	N	N	N	LAPS trips exports to Southwest Power Pool, a portion of Las Cruces load, Dona Ana –WSTAP, Las Cruces-NMSU, and Las Cruces-Arroyo 115kV lines

TABLE S6 –TRANSIENT STABILITY RESULTS – CASE = 45_ew_1122_1000_3000_03_oosts.SAV						
OUTAGE	STABLE (Y/N)	CREATES AN ISLAND (Y/N)	ANGLE VIOLATION MACHINES OUT OF STEP (Y/N)	WORST CONDITION ANALYSIS VOLTAGE VIOLATION (Y/N)	WORST CONDITION ANALYSIS FREQUENCY VIOLATION (Y/N)	NOTES
CATEGORY A						
No Disturbance	Y	N	N	N	N	
CATEGORY B						
Bump Test - Trip of Palo Verde	Y	N	Y	N	N	Forced trip of Pale Verde
CATEGORY C						
Luna-Hidalgo & Luna 345/115kV Transformer	Y	N	N	N	N	
Luna-Hidalgo & Luna 345/115kV Transformer - RAS Opt 1	Y	Y	N	N	N	Phelps Dodge (Ivanhoe 115kV) isolated w/ existing manual action
Luna-Hidalgo & Luna 345/115kV Transformer - RAS Opt 2	Y	Y	N	N	N	Phelps Dodge (Ivanhoe 115kV) isolated w/ existing manual action
Luna-Hidalgo & Luna 345/115kV Transformer - RAS Opt 3	Y	Y	N	N	N	Phelps Dodge (Ivanhoe 115kV) isolated w/ existing manual action
Luna-Hidalgo & Luna 345/115kV Transformer - RAS Opt 4	Y	Y	N	N	N	Phelps Dodge (Ivanhoe 115kV) isolated w/ existing manual action
Springerville-Vail & Greenlee-Willow 345 kV Lines	Y	N	N	N	N	
Springerville-Vail & Springerville-Greenlee 345 kV Lines	Y	N	N	N	N	
Springerville-Vail & Willow-Winchester 345 kV Lines	Y	N	N	N	N	
Springerville-Vail & Winchester-Vail 345 kV Lines	Y	N	N	N	N	
Pinal C-Abel 500kV Line w/ Sunzia RAS	Y	N	N	N	N (See Note)	Frequency <59.6Hz for 6 cycles or more at SUNZIA E and SUNZISVC 500kV buses as well as all Sunzia 0.6kV, 20kV, and 34.5kV buses. If load connected to any of these buses, this would be a violation.
Sunzia-Willow 500kV Line w/ Sunzia RAS	Y	N	N	N	N	
Pinal C-Willow 500kV Line w/ Sunzia RAS	Y	N	N	N	N (See Note)	Frequency <59.6Hz for 6 cycles or more at SUNZIA E and SUNZISVC 500kV buses as well as all Sunzia 0.6kV, 20kV, and 34.5kV buses. If load connected to any of these buses, this would be a violation.
Willow 500/345kV Transformer	Y	N	N	N	N (See Note)	Frequency <59.6Hz for 6 cycles or more at Sunzia thermal unit bus. If load connected to bus, this would be a violation.
Saguaro East 115kV Bus	Y	N	N	N	N	This actually a Category D. With bus outage, generation and aux load at SAG. CT3, SAGUARO1 and SAG. CT3 trips offline (if online pre-contingency).
Saguaro West 115kV Bus	Y	N	N	N	N	This actually a Category D. With bus outage, generation and aux load at SAG. CT2 and SAGUARO2 trips offline (if online pre-contingency).
Willow-Pinal C #1 and #2 500kV Lines w/ Sunzia RAS	Y	N	N	N	N	For this outage, RAS must trip the entire Sunzia project including all 500kV lines, transformer and generators.
Sunzia-Willow #1 and #2 500kV Lines w/ Sunzia RAS	Y	N	N	N	N	For this outage, RAS must trip the entire Sunzia project including all 500kV lines, transformer and generators except for the Pinal C-Willow 500kV lines and the Willow 500/345kV transformer.