0000170613

ORIGINAL

RECEIVED

Transcript Exhibit(s) 2016 MAY 26 P 3: 37

AZ CORP COMMISSION
DOCKET CONTROL

Docket #(s): W-01445A-15-0277

Arizona Corporation Commission
DOCKETED
MAY 26 2016

DOCKETED BY TCE

Exhibit #: WA 1-5167

Part 9 of 12

For Parts 1-8, see barcodes 0000170605 through 0000170612
For Parts 10-12, see barcodes 0000170614 through 0000170616

Western Group Rate Case

Exhibit FKS-1

5167 Valley Farms

ARIZONA WATER COMPANY
WORK AUTHORIZATION

W.A. NUMBER: 1-5167
P.E. NUMBER:
BUDGET ITEM NO.: B-1
SHEET NO.: 1 of 2

SYSTEM:	PINAL VALLEY	RETENTION REQUIRED:	☑ YES ☐ NO
DIVISION:	CASA GRANDE	WORK TO START BY:	UPON AUTHORIZATION
RESPONSIBLE PERSON:	JAMES WILSON	WORK TO BE FINISHED BY:	WITHIN 60 DAYS
TAX CODE: 2103	2103		

DESCRIPTION OF WORK:

Design and Construct an arsenic removal facility ("ARF") at Valley Farms Well Nos. 1 and 2 in the Pinal Valley water system. The ARF construction will be complete in 2014. Construct in accordance with attached drawings and/or Arizona Water Company specifications.

FACTORS JUSTIFYING WORK:

APPROVED 2014 BUDGET ITEM ($750,000)

The arsenic concentration in Well No. 2 has increased over the Maximum Contaminant Level (MCL) of 10 ppb. Prior to exceeding the MCL of 10 ppb, the Company removed Well No. 2 from service. Lab results show the arsenic concentration in Well Nos. 1 and 2 as high as 4 ppb and 16 ppb, respectively. Company Engineers reviewed possible blending scenarios and determined that compliance with the arsenic MCL through blending does not meet peak system demand requirements of the Valley Farms and Coolidge portion of the Pinal Valley water system. In the event of a pump failure in Well No. 1 blending is not possible. Well No. 2 would need to be shut down to avoid exceeding the arsenic MCL. Production from at least one of these wells is required to maintain safe, reliable, and adequate water service during peak system demand in the Valley Farms and Coolidge portion of the Pinal Valley water system. Company engineers will analyze and select the most cost effective arsenic removal technology and arsenic removal media for the ARF

COST ESTIMATE		AUTHORIZATION	DATE
COST OF WORK:		PREPARED BY: John Knobbe	3-20-2014
MATERIAL	0		
LABOR	1,560	REVIEWED FOR ESMT/ROW VERIFICATION: Charles Briggs	03-20-2014
CONTRACT PORTION	26,980		
OVERHEAD	3,139	REVIEWED BY: James Wilson	3/21/14
TOTAL AUTHORIZED EXPENDITURES CHARGEABLE TO THIS W.A.	$ 31,679		
FUNDS RECEIVED:		APPROVED BY ENGINEERING: Fredrick Schneider	3-23-14
CONTRIBUTIONS RECEIVED	0		
REFUNDABLE ADVANCES RECEIVED	0	APPROVED BY FINANCE: Joseph Harris	3/24/14
TOTAL CONTRIBUTIONS/ADVANCES	0		
NET COMPANY CASH REQUIRED	$ 31,679	AUTHORIZED BY PRESIDENT: William Garfield	3-25-2014

COMMENTS:

RELEASE TO DESIGN ONLY

CONSTRUCTION RELEASE:

RELEASE TO DESIGN
Authorized by:
Date: 3-27-14

2014 BUDGET

AFH

ARIZONA WATER COMPANY

WORK AUTHORIZATION - DETAIL SHEET

W.A. NUMBER: 1-5167
P.E. NUMBER:
BUDGET ITEM NO.: B-1
SHEET NO.: 2 of 2

RETIREMENT PROPERTY UNITS	PLANT PROPERTY ACCOUNT	UNIT DESCRIPTION	QUANTITY	YEAR INSTALLED AND W.A. NUMBER

PROJECT DESCRIPTION:

Construct an arsenic removal facility ("ARF") at Valley Farms Well Nos. 1 and 2 in the Pinal Valley water system.

	DESCRIPTION	PLANT PROP ACCT	QUANTITY	UNIT COST	TOTAL
CONTRACT WORK	Arsenic Removal Technology and Media Alternatives Evaluation	332	1	$ 25,980.00	$ 25,980
	Evaluate reuse of existing pressure filters	332	1	1,000.00	1,000
	SERVICE CONNECTIONS COMPLETE: DOUBLE-LONG	345			
	SERVICE CONNECTIONS COMPLETE: DOUBLE-SHORT	345			
	SERVICE CONNECTIONS COMPLETE: SINGLE-LONG	345			
	SERVICE CONNECTIONS COMPLETE: SINGLE-SHORT	345			
TOTAL CONTRACT WORK					$ 26,980
MATERIALS					
	SERVICE CONNECTIONS: DOUBLE-LONG	345			
	SERVICE CONNECTIONS: DOUBLE-SHORT	345			
	SERVICE CONNECTIONS: SINGLE-LONG	345			
	SERVICE CONNECTIONS: SINGLE-SHORT	345			
	METERS	346			
TOTAL MATERIALS					$ -
LABOR	Engineering Design and Review	332	24	$ 65.00	$ 1,560
	TESTING FEE				
	PERMIT FEE				
	SURVEY FEE				
	FIELD INSPECTION				
	INSTALL SERVICE CONNECTIONS: DOUBLE-LONG	345			
	INSTALL SERVICE CONNECTIONS: DOUBLE-SHORT	345			
	INSTALL SERVICE CONNECTIONS: SINGLE-LONG	345			
	INSTALL SERVICE CONNECTIONS: SINGLE-SHORT	345			
TOTAL LABOR					$ 1,560
SUBTOTAL - CONTRACT WORK, MATERIALS, AND LABOR					$ 28,540
OVERHEAD					3,139
TOTAL	REFUNDABLE PORTION ☐	NON-REFUNDABLE PORTION ☐		COST ESTIMATE	$ 31,679

AFH

SCANNED

ARIZONA WATER COMPANY

3805 N. BLACK CANYON HIGHWAY, PHOENIX, ARIZONA 85015-5351 • P.O. BOX 29006, PHOENIX, AZ 85038-9006
PHONE: (602) 240-6860 • FAX: (602) 240-6874 • TOLL FREE: (800) 533-6023 • www.azwater.com

April 7, 2014

Mr. Mark Gross
Carollo Engineers
4600 E. Washington Street, Suite 500
Phoenix, AZ 85034

Re: Valley Farms Wells No. 1 and 2 ARF Technologies

Dear Mr. Gross:

Enclosed is your copy of the Consulting Agreement for the above referenced project, which has been accepted by Arizona Water Company (the "Company").

If you have any questions, please call me at this office.

Very truly yours,

John P. Knobbe
Lead Designer
engineering@azwater.com

afh
Enclosure

FILE COPY

AGREEMENT FOR CONSULTING SERVICES BETWEEN
ARIZONA WATER COMPANY AND
CAROLLO ENGINEERS, INC

THIS AGREEMENT is made and entered into on this 8TH day of April, 2014, by and between Arizona Water Company, an Arizona corporation, hereinafter referred to as "Company," and Carollo Engineers, ~~an Arizona~~ Delaware corporation hereinafter referred to as "Consultant".

RECITALS

WHEREAS, Company is authorized to and desires to retain Consultant to provide engineering services for Valley Farms Wells Nos. 1 and 2 arsenic removal technology and media alternatives evaluation.

WHEREAS, Consultant is agreeable to providing personnel and facilities necessary to perform the desired services within Company's required time; and

WHEREAS, Company desires to retain Consultant to perform the services in the manner, at the time, and for the compensation set forth herein;

NOW, THEREFORE, Company and Consultant agree as follows:

1. Description of Project

Company and Consultant agree that Project is as described in Exhibit A, hereto, incorporated by reference herein and entitled "Scope of Work," dated February 17, 2014. If, during the course of Project, Company and Consultant agree to changes in Project, such changes shall be effective only after being incorporated in this Agreement by written amendment, signed by representative of Company and Consultant.

2. Scope of Consultant Services

Consultant agrees to perform those services described hereafter. Unless modified in writing by both parties, duties of Consultant shall not be construed to exceed those services specifically set forth herein

a. Basic Services Consultant agrees to perform those services described in the Scope of Work (the "Services"). Any tasks not specifically described in the Scope of Work will be Additional Services.

b. Additional Services Company shall pay Consultant all fees and costs incurred in performing Additional Services provided the services were authorized by Company in writing. Unless otherwise agreed in writing, Additional Services shall be compensated in accordance with Consultant's standard billing rates at the time the Additional Services are performed.

c. Litigation Assistance Unless specifically stated therein, the Scope of Work does not include assistance to support, prepare, document, bring, defend or assist in litigation undertaken or defended by Company. All such services required or requested of the Consultant by Company or any third party (except claims between Company and Consultant) will be reimbursed at Consultant's applicable rates for such litigation services.

3. Responsibilities of Company

In addition to payment for the Services performed under this Agreement, Company shall:

a. Assist and cooperate with Consultant in any manner necessary and within its ability to facilitate Consultant's performance under this Agreement.

b. Designate in writing a person to act as Company's representative with respect to this Agreement. Such person shall have complete authority to transmit instructions, receive information, interpret and define Company's policies, make decisions and execute documents on Company's behalf.

c. Furnish Consultant with all technical data in Company's possession including, but not limited to, maps, surveys, drawings, soils or geotechnical reports and any other information required by or useful to Consultant in performance of the Services under this Agreement.

d. Notify Consultant of any known or potential health or safety hazards existing at or near the project site.

e. Provide access to and/or obtain permission for Consultant to enter upon project related property during normal business hours, whether or not owned by Company, as required to perform and complete the Services.

4. Americans with Disabilities Act

Any other provision of this Agreement to the contrary notwithstanding, unless otherwise specified in the Scope of Services, Company's contractors shall have sole responsibility as between Company and Consultant for compliance with the Americans With Disabilities Act ("ADA") 42 U.S.C. 12101 et. Seq. and the related regulations. Consultant shall provide Company with applicable ADA criteria, which may be required.

5. Authorization and Completion

In signing this Agreement Company grants Consultant specific authorization to proceed with work as described in Scope of Work and under the terms of this Agreement.

6. Compensation

a. Amount. For the Services described in Exhibit A, Company agrees to pay, and Consultant agrees to accept compensation in accordance with Exhibit B, attached hereto and incorporated herein. Where Consultant has provided Company with a breakdown of the total compensation into subtasks, such breakdowns are estimates only. Consultant may reallocate compensation between tasks, provided total compensation is not exceeded without the prior written approval of Company.

b. Payment As long as Consultant has not defaulted under this Agreement, Company shall pay Consultant within thirty (30) days of the date of Consultant's invoices for services performed and reimbursable expenses incurred under this Agreement. If Company has reason to question or contest any portion of any such invoice, amounts questioned or contested shall be identified and notice given to Consultant within thirty (30) days of the date of the invoice. Any portion of any invoice not contested shall be deemed to be accepted and approved for payment and shall be paid to Consultant within thirty (30) days of the date of the invoice. Company agrees to cooperate with Consultant in a mutual effort to resolve promptly any contested portions of Consultant's invoices.

In the event any uncontested portions of any invoice are not paid within thirty (30) days of the date of Consultant's invoice, interest on the unpaid balance shall accrue beginning with the 31st day at the rate of 1.5% per month, and Consultant shall have the right to suspend work per Article XV, Suspension of Work.

7. Responsibility of Consultant

a. Standard of Care Professional Services

Subject to the limitations inherent in the agreed scope of work as to the degree of care, amount of time and expenses to be incurred, and subject to any other limitations contained in this Agreement, Consultant shall perform the Services and any Additional Services in accordance with generally accepted standards and practices customarily utilized by competent engineering firms in effect at the time Services and any Additional Services are rendered. Consultant does not expressly or impliedly warrant or guarantee its Services.

b. Reliance upon Information Provided by Others

If Consultant's performance of services hereunder requires Consultant to rely on information provided by other parties (excepting Consultant's subcontractors), Consultant shall not independently verify the validity, completeness, or accuracy of such information unless otherwise expressly engaged to do so in writing by Company.

c. Consultant's Opinion of Costs

Company acknowledges that construction cost estimates, financial analyses and feasibility projections are subject to many influences including, but not limited to, price of labor and materials, unknown or latent conditions of existing equipment or structures, and time or quality of performance by third parties. Company acknowledges that such influences may not be precisely forecasted and are beyond the control of Consultant and that actual costs incurred may vary substantially from the estimates prepared by Consultant. Consultant does not warrant or guarantee the accuracy of construction or development cost estimates, however, Consultant agrees to exercise its best Professional Judgment in rendering its opinions.

d. Construction Phase Services

1. Consultant's Activities at Construction Site. The presence of Consultant's personnel at a construction site, whether as on-site representative, resident engineer, construction manager, or otherwise, does not make Consultant responsible for those duties that belong to Company and/or construction contractors or others, and does not relieve construction contractors or others of their obligations, duties, and responsibilities, including, but not limited to, construction methods, means, techniques, sequences, and procedures necessary for completing all portions of the construction work in accordance with the contract documents, any health or safety programs and precautions required by such construction work, and any compliance with applicable laws and regulations. Any inspection or observation of the contractor's work is for the purpose of determining that the work is proceeding in conformance with the intent of the project specifications and contract documents. Consultant has no authority to exercise control over any construction contractor in connection with their work or health or safety programs and precautions. Except to protect Consultant's own personnel and except as may be expressly required elsewhere in the Scope of Work, Consultant has no duty to inspect, observe, correct, or report on health or safety deficiencies of the construction contractor.

2. Shop Drawing and Submittal Review If required by Consultant's Scope of Services, Consultant shall review shop drawings or other contractor submittals for general conformance with the intent of the contract documents. Except for services completed under direct contract to Consultant, Consultant shall not be required to verify dimensions, to engineer contractor's shop drawings or submittals, nor to coordinate shop drawings or other submittals with other shop drawings or submittals provided by contractor.

3. Record Drawings Record drawings, if required, will be prepared, in part, on the basis of information compiled and furnished by others, and may not always represent the exact location, type of various components, or exact manner in which the Project was finally constructed. Except for services completed under direct contract to Consultant, Consultant is not responsible for any errors or omissions in the information from others that are incorporated into the record drawings.

e. Scope of Work

1. Before preparing the scope of work, Consultant specifically acknowledges and agrees that it has inspected and familiarized itself with Company's site The Consultant has received, or had the opportunity to inquire about and/or request all relevant information concerning the Scope of Work from Company or any other source Consultant deems necessary. The Scope of Work has been prepared by the Consultant and to the best of its knowledge includes all applicable work required to successfully complete Valley Farms Nos. 1 and 2 arsenic removal technology and media alternatives evaluation.

8. Asbestos/Hazardous Material

Consultant and Consultant's subcontractors shall have no responsibility for the discovery, handling, removal, or disposal of, or exposure of persons to asbestos or hazardous or toxic materials that are present in any form at the Project site. Professional services related to or in any way connected with the investigation, detection, abatement, replacement, use, specification, or removal of products, materials, or processes containing asbestos or hazardous or toxic materials are beyond the scope of this Agreement.

In the event Consultant encounters asbestos or hazardous materials at the jobsite, Consultant may, at its option and without liability for damages, suspend the performance of services on the Project until such time as Company and Consultant mutually agree on an amendment to this Agreement to address the issue, or Company retains another specialist consultant or contractor to identify, classify, abate and/or remove the asbestos and/or hazardous materials.

9. Consultant's Work Product

a. Scope

Consultant's work product which is prepared solely for the purposes of this Agreement, including, but not limited to, drawings, test results, recommendations and technical specifications, whether in hard copy or electronic form, shall become the property of Company when Consultant has been fully compensated as set forth herein. Consultant may keep copies of all work product(s) for its records.

Consultant and Company recognize that Consultant's work product submitted in performance of this Agreement is intended only for the project described in this Agreement. Company's alteration of Consultant's work product or its use by Company for any other purpose shall be at Company's sole risk.

b. Electronic Copies

If requested, solely as an aid and accommodation to Company, Consultant may provide copies of its work product documents in computer-readable media ("electronic

copies", "CADD"). These documents will duplicate the documents provided as work product, but will not bear the signature and professional seals of the registered professionals responsible for the work. Company is cautioned that the accuracy of electronic copies and CADD documents may be compromised by electronic media degradation, errors in format translation, file corruption, printing errors and incompatibilities, operator inexperience and file modification. Consultant will maintain the original copy, which shall serve as the official, archived record of the electronic and CADD documents.

10. Indemnification

a. The Consultant shall indemnify the Company against, and save and hold it harmless from, any and all liability, claims, demands, loss, actions, causes of action, expense, penalties, fines, assessments, damages and costs of every kind and nature for injury to or death of any and all persons, including, without limitation, employees or representatives of the Company or of the Consultant or of any subcontractor, or any other person or persons, and for damage, destruction or loss, consequential or otherwise, to or of any and all property, real or personal, including, without limitation, property of the Company or of the Consultant or of any subcontractor, or of any other person or persons, and the violation of any law, ordinance, rule, regulation, standard, or order resulting from, or in any manner arising out of, or in connection with, the performance of the work under the Contract, howsoever same may be caused, including, without limitation, the Company's active or passive negligence. The Consultant shall also, upon request by the Company, and at no expense to the Company, defend the Company in any and all suits, concerning such injury to or death of any and all persons, and concerning such damage, destruction or loss, consequential or otherwise, to or of any and all property, real or personal, including, without limitation, suits by employees or representatives of the Company or of the Consultant or of any subcontractor, or any other person or persons, or concerning any court or administrative proceeding concerning the violation of any law, ordinance, rule, regulation, standard, or order. Excluded from this paragraph are only those injuries to or deaths of persons and damage, destruction or loss, to or of property arising from the sole negligence or willful misconduct of the Company.

b. Consultant shall indemnify the Company against, and save and hold it harmless from, any and all liability, claims, demands, damages, costs, expenses and attorney's fees, suffered or incurred on account of any breach of any obligation, covenant or other provision of this contract, including without limitation, breach of the indemnity provisions of subsection A of this Section 10.

c. Consultant further agrees to defend, indemnify and hold harmless the Company, its directors, officers, employees, and agents, from and against any and all costs, damages, claims, expenses, violations, notices of violations, penalties, liens, assessments, and liabilities of every kind and nature, foreseeable or unforeseeable, directly or indirectly, arising from any release, removal, generation, use, storage or disposal on, under, around, or from the site of any material, substance, or waste,

hazardous or nonhazardous, including, without limitation, drilling fluids, mud, cuttings and development and test water howsoever same may be caused, including, without limitation, the Company's active or passive negligence.

11. Consultant's Insurance

Consultant shall procure and maintain the following minimum insurance:

a. Commercial general liability insurance, including personal injury liability, blanket contractual liability and broad-form property damage liability coverage. The combined single limit for bodily injury and property damage shall be not less than $1,000,000.

b. Automobile bodily injury and property damage liability insurance covering owned, non-owned, rented, and hired cars. The combined single limit for bodily injury and property damage shall be not less than $1,000,000.

c. Statutory workers' compensation and employer's liability insurance as required by state law.

d. Professional liability insurance. The policy limit shall be not less than $1,000,000.

Consultant shall either require each of its subconsultants to procure and to maintain the insurance specified in this section or insure its subconsultants in the Consultants own policy, in like amounts.

Company shall be named as additional insured on policies a and b above. Upon execution of this Agreement, Consultant will provide a certificate of insurance to Company. Consultant will keep the certificate current at all times while this Agreement is in effect. The Consultant will provide a 30-day written notice in the event the above policies are cancelled.

12. Confidentiality

Consultant agrees it will maintain the confidentiality of all material it receives from Company and will not disclose, distribute, or publish to any third party such information without the prior permission of Company. Notwithstanding the foregoing, Consultant shall have no confidentiality obligation with respect to information that:

a. becomes generally available to the public other than as a result of disclosure by Consultant or its agents or employees;

b. was available to Consultant prior to its disclosure by Company;

c. becomes available to Consultant from a third party who is not, to the knowledge of Consultant, bound to retain such information in confidence.

In the event Consultant is compelled by subpoena, court order, or administrative order to disclose any confidential information, Consultant shall promptly notify Company and shall cooperate with Company prior to disclosure so that Company may take necessary actions to protect such confidential information from disclosure.

13. Subcontracts

Consultant shall be entitled, to the extent determined appropriate by Consultant, to subcontract any portion of the services to be performed under this Agreement.

14. Suspension of Work

Work under this Agreement may be suspended as follows:

a. By Company By written notice to Consultant, Company may suspend all or a portion of the Work under this Agreement if unforeseen circumstances beyond Company's control make normal progress of the Work impracticable.

b. By Consultant By written notice to Company, Consultant may suspend the work if Consultant reasonably determines that working conditions at the Site (outside Consultant's control) are unsafe, or in violation of applicable laws, or in the event Company has not made timely payment in accordance with Article VI, compensation.

15. Termination of Work

a. This Agreement may be terminated by Company as follows: (1) for its convenience on thirty (30) days' notice to Consultant, or (2) for cause, if Consultant materially breaches this Agreement through no fault of Company and Consultant neither cures such material breach nor makes reasonable progress toward cure within fifteen (15) days after Company has given written notice of the alleged breach to Consultant.

b. This Agreement may be terminated by Consultant as follows: (1) for cause, if Company materially breaches this Agreement through no fault of Consultant and Company neither cures such material breach nor makes reasonable progress toward cure within thirty (30) days after Consultant has given written notice of the alleged breach to Company.

c. Payment upon Termination In the event of termination, Consultant shall perform such additional work as is reasonably necessary for the orderly closing of the work. Consultant shall be compensated for all work performed prior to the effective date of termination, plus work required for the orderly closing of the work, including: (1) authorized work performed up to the termination date plus termination expenses, including all labor and expenses, at Consultant's standard billing rates, directly attributable to termination; (2) all efforts necessary to document the work completed or in progress; and (3) any termination reports requested by Company.

16. Assignment

This Agreement is binding on the heirs, successors, and assigns of the parties hereto. Except as otherwise set forth under Article VIII, Assignment of Tasks to Affiliates, this Agreement may not be assigned by Company or Consultant without prior, written consent of the other.

17. No Benefit for Third Parties

The services to be performed by Consultant are intended solely for the benefit of Company, and no benefit is conferred on, nor contractual relationship established with any person or entity not a party to this Agreement. No such person or entity shall be entitled to rely on Consultant's services, opinions, recommendations, plans, or specifications without the express written consent of Consultant. No right to assert a claim against the Consultant, its officers, employees, agents, or consultants shall accrue to the construction Contractor or to any subcontractor, supplier, manufacturer, lender, insurer, surety, or any other third party as a result of this Agreement or the performance or nonperformance of the Consultant's services hereunder.

18. Force Majeure

Consultant and Company shall not be responsible for delays caused by circumstances beyond their reasonable control, including, but not limited to: (1) strikes, lockouts, work slowdowns or stoppages, or accidents; (2) acts of God; (3) failure of Company to furnish timely information or to approve or disapprove Consultant's instruments of service promptly; and (4) faulty performance or nonperformance by Consultant or Company, Company's or Consultant independent consultants or contractors, or governmental agencies. Consultant and Company shall not be liable for damages arising out of any such delay, nor shall the Consultant or Company be deemed to be in breach of this Agreement as a result thereof.

19. Integration

This Agreement represents the entire understanding of Company and Consultant as to those matters contained herein. No prior oral or written understanding shall be of any force or effect with respect to those matters covered herein. This Agreement may not be modified or altered except in writing signed by both parties.

20. Severability

If any part of this Agreement is found unenforceable under applicable laws, such part shall be inoperative, null, and void insofar as it conflicts with said laws, but the remainder of this Agreement shall be in full force and effect.

21. Choice of Law/Jurisdiction

This Agreement shall be administered and interpreted under the laws of the State of Arizona Jurisdiction of litigation arising from the Agreement shall be in The State of Arizona.

22. Attorneys' Fees

In the event any claim, controversy, or legal action arises under this Agreement, the prevailing party shall be entitled to recover from the other party all attorneys' fees, costs, expenses and other fees incurred by the prevailing party.

23. Notice Provisions

Notices concerning this Agreement shall be in writing and sent by certified mail or by courier (such as Federal Express), or by hand-delivery addressed as follows:

To the Company:

Arizona Water Company
3805 North Black Canyon Highway
Phoenix, AZ 85015-5351
Attention: President

or

Arizona Water Company
Post Office Box 29006
Phoenix, AZ 85038-9006
Attention: President

To Consultant:

Carollo Engineers, Inc.
4600 E. Washington Street, Suite 500
Phoenix, AZ 85034
Attention: Mr. Mark Gross

Either party may change its address for purposes of this Section by giving written notice of such change of address to the other party.

24. Authorization

The persons executing this Agreement on behalf of the parties hereto represent and warrant that the parties have all legal authority and authorization necessary to enter into this Agreement, and that such persons have been duly authorized to execute this Agreement on their behalf.

IN WITNESS WHEREOF, each of the parties hereto has caused this instrument to be executed by their respective duly authorized officers as of the date first written above.

CAROLLO ENGINEERS, INC.
an ~~Arizona~~ Delaware corporation

By: M. J. Erwin

Its: Vice President

ARIZONA WATER COMPANY,
an Arizona corporation

By: [illegible]

Its: VP-engineering

AJH

W:\Projects\2014\PV\1-5167 Valley Farms ARF\Agreements\Carollo Consulting Agreement 1-5167 Valley Farms.docx
JPK:AFH 3:08 PM 3/10/14

Exhibit A

carollo
Engineers...Working Wonders With Water®

Arizona Water Company
Scope of Work and Fee
Valley Farms Wells No. 1 and 2 Arsenic Removal Facility
Arsenic Removal Technology and Media Alternatives Evaluation

February 17, 2014

INTRODUCTION

This proposed Scope of Work defines the engineering services which Carollo Engineers, Inc. (Carollo) will provide Arizona Water Company (AWC) for the Valley Farms Wells No. 1 and 2 Arsenic Removal Technology and Media Alternatives Evaluation Study (Study). The services to be provided include an evaluation of potential arsenic removal technology alternatives for the site, and an evaluation of arsenic removal media alternatives.

The Valley Farms water well site (Site) has two wells, Well No. 1 and Well No. 2. The arsenic concentration in Well No. 2 has increased over the Maximum Contaminant Levels (MCL) of 10 micrograms per liter. Prior to exceeding the MCL, AWC removed Well No. 2 from service. AWC then conducted pump tests after the well was removed from service. Lab results indicate that the arsenic concentrations in Wells No. 1 and No. 2 are 4 and 16 micrograms per liter, respectively. Blending the two wells together to produce a maximum of 8 micrograms per liter would reduce the production of Well No. 2 from 250 to 75 gpm.

AWC intends to permit and construct an arsenic removal facility (ARF) at the Valley Farms site (Site). The new ARF will be designed to reduce the arsenic concentrations in the groundwater to less than 7 micrograms per liter. The near-term and long-term range of duty cycles for the wells will be estimated by AWC as part of the Study. The design and alternative evaluation will accommodate future expansion of the ARF for additional flows from future well(s), also to be defined by AWC during the Study.

The goal of this study is to evaluate arsenic removal technology alternatives for the Site, and then identify the most cost effective alternative for implementation that meets regulatory agency and AWC requirements.

Three arsenic removal technology options will be considered for this study:

- Coagulation/Filtration
- Ion Exchange
- Adsorption

Each technology will be evaluated with multiple process trains (i.e. partial flow vs. full flow, single vessel vs. multiple vessels, and series flow vs. parallel flow). The following constraints will be included in the evaluation process for each arsenic removal technology alternative:

- Site space restrictions, new and future equipment spacing and layouts
- Potential limitations on equipment heights
- Potential of blending groundwater for partial stream treatment to reduce treatment equipment footprints and costs
- Disposal costs for residuals streams from the treatment processes for each of the arsenic removal technology alternatives evaluated (disposal of treatment residuals via sewer connection is assumed not viable)
- Well production, AWC system production requirements, well water quality parameters and their impacts on the different removal technologies

In order to select the best available and most cost effective arsenic removal technology, the evaluation process for this study will include, but may not necessarily be limited to the following components:

- Capital construction costs for each alternative
- O&M costs, including waste disposal costs for each alternative
- 20-year life cycle costs for each alternative

Pros and cons of each alternative including, but not limited to:

- Removal technology effectiveness and reliability
- Ease of operations, and the ability of the ARF to be removed from service for weeks or months and then re-started (summertime/wintertime operation)
- Disposal of residuals, regulatory permitting, and potential issues and costs associated with generation and disposal of Resource Conservation and Recovery Act (RCRA) wastes
- Constructability
- Footprint

The Scope of Services for this Study is described below.

SCOPE OF SERVICES

Task Series 100 - Preliminary Evaluation of Alternatives and Results Workshop

Task 110 - Carollo will review water quality data and perform a preliminary evaluation of the arsenic removal technology alternatives noted above. Some additional sampling and analysis of key water quality data parameters may be requested during Task 110 to confirm suitability of treatment technologies and blending strategies, if Carollo determines additional water quality samples are required. For example, pH measurements will be needed for the Valley Farm wells, and confirmation sampling for iron concentrations. In order to determine the best available arsenic removal technology, Carollo will provide AWC a list of the additional water quality samples required in writing prior to the completion of Task 110. Carollo will then perform a preliminary evaluation of the alternatives and present the results at a workshop for AWC's review and input. Prior to the workshop, Carollo will provide an agenda and a draft of the study evaluation results to date.

Assumptions: A project kick-off meeting will be held with AWC and the Carollo project manager and key staff. A project workshop will be held upon completion of the preliminary evaluations to present results.

Exhibit A

AWC inputs: 1) Provide CAD file of Site Plan. 2) Provide historical water quality and operations data. 3) Provide input on preferred ARF technology.

Deliverables: Carollo will provide 1) Workshop handouts and 2) Preliminary evaluation results.

Task Series 200 - Evaluation of Media Systems

The goal of this task is to evaluate potential arsenic removal medias for the technology configurations selected as part of Task 100, and identify the cost effective medias.

Task 210 - As a new installation, it is likely that the media will be procured as part of a system. It is also likely that a supplier will provide the media, contactor vessels, internal piping, face piping, and valves. The controls and instrumentation (e.g., programmable logic controller, pressure transmitter, flow meter, rupture disc, etc.) could also be provided by the vessels and media supplier. Carollo will perform a preliminary evaluation of arsenic media systems currently available on the market. This preliminary list will then be reduced to three media systems based on go/no-go criteria using the site constraints and AWC's preferences (e.g., media systems that use off-site regeneration are not acceptable to AWC). Carollo will perform an evaluation of the three media systems and the evaluation will include the following criteria:

Coagulation/Filtration

Based on AWC's previous experience with coagulation/filtration technology, media selection may not be appropriate at this time and should be addressed during the detailed design process.

Ion Exchange

- Salt, brine, waste volume storage requirements
- Projected regeneration rate based on available water quality data
- Supplier's ability to provide equipment that meets the physical site constraints
- Approximate relative equipment cost, salt delivery and brine disposal cost
- Waste Quality / Disposal requirements
- Expected useful life of IX resin
- Resin cost and availability

Adsorption

- Projected bed volumes for media based on available water quality data
- Supplier's ability to provide equipment that meets the physical site constraints
- Standard treatment performance guarantee with reimbursements/credits when such performance quarantines are not met, i.e., when bed life is less than expected
- Approximate relative equipment cost, media replacement cost, and media disposal cost
- Supplier taking full responsibility for disposed media and indemnifying AWC. AWC currently also has third party contracts for media disposal. Both supplier disposal and AWC contract disposal alternatives, if feasible, will be included as part of the evaluation for this study
- Waste quality/disposal requirements
- Availability of media
- Media storage requirements

- Ease of installation, preparation, and disposal of media
- Chemical/backwash requirements
- Required backwash flow rate/storage volume and other requirements

Carollo will collect this information and then develop a recommendation based on a 20-year life cycle cost comparison. Important system specific features that are not quantified in the costs (e.g., delivery times, indemnification clauses, manufacturer's openness to modifying standard package, etc.) will be noted as separate evaluation factors. Carollo will present the results of this analysis at a workshop with AWC.

Assumptions: None.

AWC inputs: Attend review meeting.

Deliverables: Carollo will present the results of this analysis at a workshop with AWC.

Task Series 300 - Draft and Final Study Technical Memorandum

Task 310 - Upon completion of the preliminary results and the presentation of results at the workshop in Task 110, Carollo will prepare a draft technical memorandum that details the evaluation criteria, costs, and the recommended arsenic removal technology and media proposed for use at the site. The draft technical memorandum will also include conceptual schematic site plans for the recommended arsenic removal technology at the Site. The draft technical memorandum will also incorporate or address comments made by the AWC during the workshop(s). AWC will review and comment on the draft technical memorandum and Carollo will then finalize such memorandum incorporating or addressing the AWC's comments.

AWC inputs: Review and comment on the draft technical memorandum.

Deliverables: Carollo will provide electronic and four (4) hard copies of the draft and final technical memorandum.

Allowance – Review Suitability of Reusing Existing Pressure Vessels for Valley Farms Site

Task Allowance – If directed by AWC, Carollo will review the suitability of reusing AWC's existing pressure vessels from the former Montezuma and Rainbow arsenic removal facility systems, if applicable for the selected treatment technology at Valley Farms. The Montezuma and Rainbow Valley ARFs referenced were taken out of service. The evaluation will include a process evaluation to determine suitability of materials of construction, suitability for retrofitting with applicable inlet/outlet piping if needed, and for compatibility of necessary operating flows and pressures.

AWC inputs: AWC will provide photos and dimensioned cut sheets of the existing proposed filter pressure vessels.

Deliverables: Carollo will provide include the suitability of reusing existing pressure vessels analysis as part of the Task Series 300 Technical Memorandum.

Exhibit A

PROJECT SCHEDULE

The schedule for the project is as follows:

Notice to Proceed (NTP) ..... _____
Complete Data Collection and Preliminary Evaluation ..... three weeks after NTP
Complete Review Workshop ..... four weeks after NTP
Draft Technical Memorandum Submittal ..... five weeks after NTP
Final Technical Memorandum Submittal ..... six weeks after NTP

Carollo's fee for services is included as Exhibit B.

Exhibit B
Valley Farms Wells No. 1 and 2
Arsenic Removal Technology and Media Alternatives Evaluation
Proposal from Carollo Engineers
February 17, 2014

Services

TASK DESCRIPTIONS		Tech. Adv.	Proj. Mgr.	Disc. Eng.	Proj. Eng.	Staff Eng.	Tech	Word Pro.	Total Labor	Total $
	Rate ($)	$225	$190	$165	$130	$95	$110	$80		
Task Series 100 - Preliminary Eval. Of Alts. And Results										
Task 110 - Kickoff Meeting and review water quality data			2	4	4				10	$1,560
Task 120 - Preliminary evaluation - arsenic removal tech. alts.		1	2	24	24				51	$7,685
Task 130 - Technical alternatives evaluation workshop		2	4	8	8				22	$3,570
Task Series 200 - Evaluation of Media Systems										
Task 210 - Evaluation of medias, review workshop		2	4	16	16				38	$5,930
Task Series 300 - Draft and Final Study Tech Memo										
Task 310 - Draft and Final Study Technical Memorandum		1	6	14	12			4	37	$5,555
	Total Hrs	6	18	66	64	0	0	4		
								Sub-Total	158	$24,300
Project Equipment & Computer Expenses (PECE) $10/hr										$1,580
Reproduction										$0
Mileage/Travel										$100
Subconsultants										$0
								Total		**$25,980**

Allowance

TASK DESCRIPTIONS		Tech. Adv.	Proj. Mgr.	Disc. Eng.	Proj. Eng.	Staff Eng.	Tech	Word Pro.	Total Labor	Total $
	Rate ($)	$225	$190	$165	$130	$95	$110	$80		
Allowance										
Evaluate reuse of existing pressure filter vessels			1	4					5	$850
	Total Hrs	0	1	4	0	0	0	0		
								Sub-Total	5	$850
Project Equipment & Computer Expenses (PECE) $10/hr										$50
Reproduction										$0
Mileage/Travel										$100
Subconsultants										$0
								Total		**$1,000**

Architects and Engineers

The following policy language is from Commercial General Liability Coverage Forms

The following are mandatory forms on the policy identified on the Certificate of Insurance:

421-0080 (01 03) COMMERCIAL GENERAL LIABILITY SPECIAL BROADENING ENDORSEMENT

- **Additional Insured by Contract, Agreement or Permit**

Under Section II-Who Is An insured, Paragraph 4.is added as follows:

4. a. Any person or organization with whom you agreed, because of a written contract, written agreement or permit to provide Insurance Is an insured, but only with respect to:

(1) "Your work" for the additional Insured(s) at the location designated in the contract, agreement or permit; or

(2) Premises you own, rent, lease or occupy.

This Insurance applies on a primary basis if that is required by the written contract, written agreement or permit.

b. This provision does not apply:

(1) Unless the written contract *or* written agreement has been executed or permit has been issued prior to the "bodily Injury", "property damage", "personal injury" or "advertising injury".

(2) To any person or organization Included as an Insured by an endorsement Issued by us and made part of this Coverage Part.

(3) To any person or organization included as an insured under item 2 of this endorsement

(4) To any lessor of equipment:

(a) After the equipment lease expires; or

(b) If the "bodily Injury", "property damage", "personal injury" or "advertising Injury" arises out of sole negligence of the lessor.

(5) To any:

(a) Owners or other Interests from whom land has been leased which takes place after the lease for the land expires; or

(b) Managers or lessors of premises if:

(i) The occurrence takes place after you cease to be a tenant in that premises; or

(ii) The "bodily injury", "property damage", "personal injury" or "advertising injury" arises out of structural alterations, new construction or demolition operations performed by or on behalf of the manager or lessor.

- **Aggregate Limit Per location**

(1) Under Section III - Limits of Insurance the General Aggregate Limit applies separately to each of your "locations Owned by or rented to you.

(2) Under Section V – Definitions, definition 23. is added as follows:

23. "Location" means premises involving the same or connecting lots or premises whose connection is interrupted only by a street, roadway, waterway or right-of-way of a railroad.

CG 2503(05 09) DESIGNATED CONSTRUCTION PROJECT(S) GENERAL AGGREGATE LIMIT

- **Aggregate Limit of Insurance (Per Project)**

COMMERCIAL GENERAL LIABILITY COVERAGE PART

SCHEDULE

Designated Construction Projects:
Your projects away from premises owned by or rented to you

A. For all sums which the Insured becomes legally obligated to pay as damages caused by "occurrences" under Section I – Coverage A, and for all medical expanses caused by accidents under Section I – Coverage C, which can be attributed only to ongoing operations at a single designated construction project shown In the Schedule above:

1. A separate Designated Construction Project General Aggregate Limit applies to each designated construction project, and that Limit is equal to the amount of the General Aggregate Limit shown In the Declarations.
2. The Designated Construction Project General Aggregate Limit Is the most we will pay for the sum of all damages under Coverage A, except damages because of "bodily Injury" or "property damage" included In the "products-completed operations hazard", and for medical expenses under Coverage C regardless of the number of:

Includes copyrighted material of Insurance Services Offices, Inc., with its permission

a. Insured's;

b. Claims made or "suits" brought; or

c. Persons or organizations making claims or bringing "suits".

3. Any payments made under Coverage A for damages or under Coverage C for medical expenses shall reduce the Designated Construction Project General Aggregate limit for that designated construction project. Such payments shall not reduce the General Aggregate Limit shown in the Declarations nor shall they reduce any other Designated Construction Project General Aggregate Limit for any other designated construction project shown in the Schedule above.

4. The limits shown in the Declarations for Each Occurrence, Damage to Premises Rented to You and Medical Expense continue to apply. However, instead of being subject to the General Aggregate limit shown in the Declarations, such limits will be subject to the applicable Designated Construction Project General Aggregate Limit.

B. For all sums which the Insured becomes legally obligated to pay as damages caused by "occurrences" under Section **I** - Coverage A, and for all medical expenses caused by accidents under Section **I** – Coverage C, which cannot be attributed only to ongoing operations at a single designated construction project show in the Schedule above:

1. Any payments made under Coverage A for damages or under Coverage C for medical expenses shall reduce the amount available under the General Aggregate limit or the Products-completed Operations Aggregate Limit, whichever Is applicable; and

2. Such payments shall not reduce any Designated Construction Project General Aggregate Limit.

C. When coverage for liability arising out of the "products-completed operations hazard" Is provided, any payments for damages because of "bodily Injury" or "property damage" Included in the products-completed operations hazard" will reduce the Products-completed Operations Aggregate Limit, and not reduce the General Aggregate Limit nor the Designated Construction Project General Aggregate Limit.

D. If the applicable designated construction project has been abandoned, delayed, or abandoned and then restarted, or If the authorized contracting parties deviate from plans, blueprints, designs, specifications or time tables, the project will still be deemed to be the same construction project.

E. The provisions of Section **III** – Limits Of Insurance not otherwise modified by this endorsement shall continue to apply as stipulated.

421-0452 (06 07) OTHER INSURANCE-PRIMARY AND NON-CONTRIBUTORY (ADDITIONAL INSURED)

- **Additional Insured by Contract, Agreement or Permit Amended-Primary & Non-Contributory**

The following is added to Section IV – Commercial General Liability Conditions

4. Other Insurance

a. Additional Insured's

If you agree in a written contract, written agreement or permit that the insurance provided to any person or organization Included as an Additional Insured under Section **II** – Who is An Insured, is primary and non-contributory, the following applies:

If other valid and collectable Insurance is available to the Additional Insured for a loss we cover under Coverages A or B of this Coverage Part, our obligations are limited as follows:

1. Primary Insurance

This Insurance is primary to other Insurance that is available to the Additional Insured which covers the Additional Insured as a Named Insured. We will not seek contribution from any other Insurance available to the Additional Insured except:

I. For the sole negligence of the Additional insured;

II. When the Additional Insured Is an Additional Insured under another primary liability policy; or

III. When 2. below applies.

If this Insurance is primary, our obligations are not affected unless any of the other Insurance Is also primary. Then, we will share with all that other Insurance by the method described in 3. below.

2. Excess Insurance

This Insurance is excess over:

(1) Ally of the other Insurance, whether primary, excess, contingent or on any other basis:

(a) That is fire, Extended Coverage, Builder's Risk, Installation Risk or similar coverage for "your work";

(b) That is Fire insurance for premises rented to the Additional Insured or temporarily occupied by the Additional Insured with permission of the owner;

(c) That is Insurance purchased by the Additional Insured to cover the Additional Insured's liability as a tenant for "property damage" to premises rented to the Additional Insured or temporarily occupied by the Additional with permission of the owner; or

(d) If the loss arises out of the maintenance or use of aircraft, "autos" or watercraft to the extent not subject to Exclusion g. of Section **I** – Coverage A - Bodily Injury And Property Damage Liability.

Includes copyrighted material of Insurance Services Offices, Inc., with its permission

When this insurance is excess, we will have no duty under Coverages A or B to defend the insured against any "suit" if any other insurer has a duty to defend the insured against that "suit". If no other insurer defends, we will undertake to do so, but we will be entitled to the Insured's rights against all those other Insurers.

When this insurance is excess over other Insurance, we will pay only our share of the amount of the loss, if any, that exceeds the sum of:

1) The total amount that all such other insurance would pay for the loss in the absence of this Insurance; and

2) The total of all deductible and self-Insured amounts under all that other Insurance.

We will share the remaining loss, if any, with any other Insurance that is not described in this Excess Insurance provision and was not bought specifically to apply In excess of the Limits of Insurance shown in the Declarations of this Coverage Part.

3. Method Of Sharing

If all of the other Insurance permits contribution by equal shares, we will follow this method also under this approach each Insurer contributes equal amounts until it has paid Its applicable limit of Insurance or none of the loss remains, whichever comes first.

If any of the other Insurance does not permit contribution by equal shares, we will contribute by limits. Under this method, each Insurer's share is based on the ratio of Its applicable limit of Insurance to the total applicable limits of insurance of all insurers.

CG0001 (12 07) COMMERCIAL GENERAL LIABILITY COVERAGE FORM

- **Separation of Insured's**

Except with respect to the Limits of Insurance, and any rights or duties specifically assigned in this Coverage Part to the first Named Insured, this Insurance applies:

a. As if each Named Insured were the only Named Insured; and

b. Separately to each insured against whom claim is made or "suit' is brought.

CG 2404(05 09) WAIVER OF TRANSFER OF RIGHTS OF RECOVERY TO US

- **Waiver of Subrogation**

COMMERCIAL GENERAL LIABILITY COVERAGE PART
PRODUCTS/COMPLETED OPERARTIONS LIABILITY COVERAGE PART

SCHEDULE

Name Of Person Or Organization:
Persons or organizations with whom you have a written contract executed prior to the "bodily Injury" or "property damage," that requires you to waive your rights of recovery

The following is added to Paragraph 8. Transfer Of Rights Of Recovery Against Others To Us of Section IV- Conditions:

We waive any right of recovery we may have against the person or organization shown In the Schedule above because of payments we make for injury or damage arising out of your ongoing operations or "your work" done under a contract with that person or organization and included in the "products-completed operations hazard". This waiver applies only to the person or organization shown in the Schedule above.

Authorized Representative

Name Insured: Carollo Engineers **Policy No.** ZHF8944892-03 **Effective:** 12/31/2013

Additional Insured: Any person or organization with whom the named insured agreed in a written contract to name as additional insured.

This Notice does not form a part of the insurance contract.

No coverage is provided by this Notice, nor can it be construed to replace any provisions of the policy (including its endorsements). If there is any conflict between this Notice and the policy (including its endorsements), the provisions of the policy (including its endorsements) shall prevail.

Includes copyrighted material of Insurance Service Offices, Inc., with its permission

ARIZONA WATER COMPANY
WORK AUTHORIZATION

W.A. NUMBER: 1-5167
P.E. NUMBER:
BUDGET ITEM NO.: B-1
SHEET NO.: 1 of 2

SYSTEM:	PINAL VALLEY	RETENTION REQUIRED:	☑ YES ☐ NO
DIVISION:	CASA GRANDE	WORK TO START BY:	UPON AUTHORIZATION
RESPONSIBLE PERSON:	JAMES WILSON	WORK TO BE FINISHED BY:	WITHIN 180 DAYS
TAX CODE:	2103		

DESCRIPTION OF WORK:

Design, Permit, Construct, and make operational an Arsenic Removal Facility ("ARF") at Valley Farms Well No. 2 in the Pinal Valley water system. Construct in accordance with attached drawings and/or Arizona Water Company specifications.

FACTORS JUSTIFYING WORK:

APPROVED 2014 BUDGET ITEM ($750,000)
The arsenic concentration in Well No. 2 has increased over the Maximum Contaminant Limit (MCL) of 10 ppb. Prior to exceeding the MCL of 10 ppb, the Company removed Well No. 2 from service. Lab results show the arsenic concentration in Well No. 2 as high as 16 ppb. Company Engineers reviewed possible blending scenarios and determined that in the event of a pump failure in Well No. 1, blending is not feasible and Company Operators must shut down Well No. 2 to avoid exceeding the arsenic MCL An ARF is required to reduce arsenic concentrations in Well Nos. 1 and 2 because production from at least one of these wells is required to maintain safe, reliable, and adequate water supply in the Valley Farms and Coolidge portion of the Pinal Valley water system. The ARF will use the best available treatment technology. Through an evaluation of water quality, site sizing constraints, anticipated construction and projected operating costs, Company engineers determined that the new ARF will utilize adsorptive media.

COST ESTIMATE		AUTHORIZATION	DATE
COST OF WORK:		PREPARED BY: Andrew J. Head for James Wilson JW 9/4/14	8-29-14
MATERIAL	0		
LABOR	24,900	REVIEWED FOR ESMTROW VERIFICATION: Charles Briggs CB 09-04-2014	08-29-2014
CONTRACT PORTION	476,430		
OVERHEAD	60,200	REVIEWED BY: Mario Mendez MLM 9/4/14	8/29/14
TOTAL AUTHORIZED EXPENDITURES CHARGEABLE TO THIS W.A.	$ 561,530		
FUNDS RECEIVED:		APPROVED BY ENGINEERING: Fredrick Schneider FS 9-4-14	8-29-2014
CONTRIBUTIONS RECEIVED	0		
REFUNDABLE ADVANCES RECEIVED	0	APPROVED BY FINANCE: Joseph Harris	8/29/14
TOTAL CONTRIBUTIONS/ADVANCES	0		
NET COMPANY CASH REQUIRED	$ 561,530	AUTHORIZED BY PRESIDENT: William M Garfield	9-2-2014

COMMENTS:

2014 Expenditure $562,000
2015 Anticipated Expenditure $660,000
Total Project Cost $1,220,000

CONSTRUCTION RELEASE:

RELEASED TO CONSTRUCTION
Authorized by FRED SCHNEIDER
Date 9/3/2014

AFH

AJH

ARIZONA WATER COMPANY

WORK AUTHORIZATION - DETAIL SHEET

W.A. NUMBER: 1-5167
P.E. NUMBER:
BUDGET ITEM NO.: B-1
SHEET NO. 2 of 2

RETIREMENT PROPERTY UNITS	PLANT PROPERTY ACCOUNT	UNIT DESCRIPTION	QUANTITY	YEAR INSTALLED AND W.A. NUMBER

PROJECT DESCRIPTION

Design, Permit, Construct, and make operational an Arsenic Removal Facility ("ARF") at Valley Farms Well No. 2 in the Pinal Valley water system. Construct in accordance with attached drawings and/or Arizona Water Company specifications.

	DESCRIPTION	PLANT PROP ACCT	QUANTITY	UNIT COST	TOTAL
CONTRACT WORK	Provide & install chlorine injection system incl. containment				
	area, fiberglass building with associated power & controls	332			
	Provide and install on-site piping with related fittings	332	1	60,000.00	60,000
	Provide and install new backwash system including tanks, piping,				
	pumps, and associated power and controls	332	1	60,000.00	60,000
	Building and hydro-pneumatic tank demolition and removal	332	1	22,000.00	22,000
	Provide & install ARF Vessel with media and related fittings	332	1	60,000.00	60,000
	Testing, commissioning and on-site operator training	332			
	ARF alarm programming	332			
	Engineering Design and Permitting	332	1	85,850.00	85,850
	Construction Inspection	332	1	30,000.00	30,000
	Electrical Drawing and submittal review	332	1	25,000.00	25,000
	Contracting Tax	332	1	32,300.00	32,300
	100% Performance and Payment Bond	332	1	15,300.00	15,300
	Arsenic Removal Technology and Media Alternatives Evaluation	332	1	25,980.00	25,980
	Provide and install submersible pump, motor, and related				
	appurtenances for Well No. 2	325	1	60,000.00	60,000
TOTAL CONTRACT WORK					$ 476,430
MATERIALS					
	SERVICE CONNECTIONS: DOUBLE-LONG	345			
	SERVICE CONNECTIONS: DOUBLE-SHORT	345			
	SERVICE CONNECTIONS: SINGLE-LONG	345			
	SERVICE CONNECTIONS: SINGLE-SHORT	345			
	METERS	346			
TOTAL MATERIALS					$ -
LABOR	Design and Submittal review	332	40	$ 55.00	$ 2,200
	Construction Phase Project Management & Inspection	332	30	55.00	1,650
	TESTING FEE				
	PERMIT FEE	332	1	12,800.00	12,800
	SURVEY FEE				
	INSPECTION BY FIELD STAFF	332	150	55.00	8,250
	INSTALL SERVICE CONNECTIONS: DOUBLE-LONG	345			
	INSTALL SERVICE CONNECTIONS: DOUBLE-SHORT	345			
	INSTALL SERVICE CONNECTIONS: SINGLE-LONG	345			
	INSTALL SERVICE CONNECTIONS: SINGLE-SHORT	345			
TOTAL LABOR					$ 24,900
SUBTOTAL - CONTRACT WORK, MATERIALS, AND LABOR					$ 501,330
OVERHEAD					60,200
TOTAL	REFUNDABLE PORTION ☐	NON-REFUNDABLE PORTION ☐		COST ESTIMATE	$ 561,530

AFH

ARIZONA WATER COMPANY
WORK AUTHORIZATION

W.A. NUMBER: 1-5167
P.E. NUMBER:
BUDGET ITEM NO.: B-1
SHEET NO.: 1 of 2

SYSTEM: PINAL VALLEY	RETENTION REQUIRED: ☑ YES ☐ NO
DIVISION: CASA GRANDE	WORK TO START BY: UPON AUTHORIZATION
RESPONSIBLE PERSON: JAMES WILSON	WORK TO BE FINISHED B WITHIN 180 DAYS
TAX CODE: 2103	

DESCRIPTION OF WORK:

Complete construction of the Arsenic Removal Facility ("ARF") at Valley Farms Well No. 2 in the Pinal Valley water system.

FACTORS JUSTIFYING WORK:

APPROVED 2015 BUDGET ITEM ($912,000)
The arsenic concentration in Well No. 2 has increased over the Maximum Contaminant Limit (MCL) of 10 ppb. Prior to exceeding the MCL of 10 ppb, the Company removed Well No. 2 from service. Lab results show the arsenic concentration in Well No. 2 as high as 16 ppb. Company Engineers reviewed possible blending scenarios and determined that in the event of a pump failure in Well No. 1, blending is not feasible and Company Operators must shut down Well No. 2 to avoid exceeding the arsenic MCL. An ARF is required to reduce arsenic concentrations in Well No. 2 because production from at least one of these wells is required to maintain safe, reliable, and adequate water supply in the Valley Farms and Coolidge portion of the Pinal Valley water system. The ARF design utilizes the best available treatment technology. Through an evaluation of water quality, site sizing constraints, anticipated construction and projected operating costs, Company engineers determined that adsorptive media is the best available technology for the ARF. ARF design and permitting was completed and construction started in 2014. Construction completion is scheduled to occur on May 1, 2015.

COST ESTIMATE		AUTHORIZATION	DATE
COST OF WORK:		PREPARED BY: James Wilson JW 2/24/15	2/18/15
MATERIAL	0		
LABOR	21,050	REVIEWED FOR ESMT/ROW VERIFICATION: Charles Briggs CB 02-24-2015	02-18-2015
CONTRACT PORTION	851,095		
OVERHEAD	104,700	REVIEWED BY: Andrew Haas AFH 2-25-15	2-20-15
TOTAL AUTHORIZED EXPENDITURES CHARGEABLE TO THIS W.A.	$ 976,845		
FUNDS RECEIVED:		APPROVED BY ENGINEERING: Fredrick Schneider 2-25-15	2-20-15
CONTRIBUTIONS RECEIVED	0		
REFUNDABLE ADVANCES RECEIVED	0	APPROVED BY FINANCE: Joseph Harris	2/20/15
TOTAL CONTRIBUTIONS/ADVANCES	0		
NET COMPANY CASH REQUIRED	$ 976,845	AUTHORIZED BY PRESIDENT: William Garfield	2-24-15

COMMENTS:

Transfer additional funds required ($64,845) from the following WA's:
$12,000 from 1-5018 (Cottonwood and Peart)
$7,000 from 1-5170 (Cottonwood Lane BPS)
$45,845 from 1-5166 (Coolidge Airport ARF)
2014 Expenditure $272,719
2015 Expenditure $976,845
Total Project Cost $1,249,564

CONSTRUCTION RELEASE:

RELEASED TO CONSTRUCTION
Authorized by FRED SCHNEIDER
Date 2/24/15

2015 RE-RELEASE

AFH

ARIZONA WATER COMPANY

WORK AUTHORIZATION - DETAIL SHEET

W.A. NUMBER: 1-5167
P.E. NUMBER:
BUDGET ITEM NO.: 1-5167
SHEET NO.: 2 of 2

RETIREMENT PROPERTY UNITS	PLANT PROPERTY ACCOUNT	UNIT DESCRIPTION	QUANTITY	YEAR INSTALLED AND W.A. NUMBER

PROJECT DESCRIPTION:

Design, Permit, Construct, and make operational an Arsenic Removal Facility ("ARF") at Valley Farms Well No. 2 in the Pinal Valley water system. Construct in accordance with attached drawings and/or Arizona Water Company specifications.

	DESCRIPTION	PLANT PROP ACCT	QUANTITY	UNIT COST	TOTAL
CONTRACT WORK	Provide & install chlorine injection system incl. containment				
	area, fiberglass building with associated power & controls	332	1	0.00	0
	Provide and install on-site piping with related fittings	332	1	126,947.00	126,947
	Provide and install new backwash system including tanks, piping,				
	pumps, and associated power and controls	332	1	172,050.00	172,050
	Building and hydro-pneumatic tank demolition and removal	332	1	19,520.00	19,520
	Provide & install ARF Vessel with media and related fittings	332	1	558,015.00	558,015
	Testing, commissioning and on-site operator training	332	1	46,500.00	46,500
	ARF alarm programming	332	1	62,569.00	62,569
	Engineering Design and Permitting	332	1	110,475.00	110,475
	Contracting Tax	332	1	74,119.00	74,119
	100% Performance and Payment Bond	332	1	15,300.00	15,300
	Construction Inspection	332	1	36,000.00	36,000
	Fence Repair	332	1	10,000.00	10,000
	Payment for demo, bond and materials release (2014)	332	1	(123,587.00)	(123,587)
	Change Order No. 1 Value Engineering	332	1	(278,331.00)	(278,331)
	Change Order No. 2 Upsize Piping	332	1	21,518.00	21,518
TOTAL CONTRACT WORK					$ 851,095
MATERIALS					
	SERVICE CONNECTIONS: DOUBLE-LONG	345			
	SERVICE CONNECTIONS: DOUBLE-SHORT	345			
	SERVICE CONNECTIONS: SINGLE-LONG	345			
	SERVICE CONNECTIONS: SINGLE-SHORT	345			
	METERS	346			
TOTAL MATERIALS					$ -
LABOR	Design and Submittal review	332	40	$ 55.00	$ 2,200
	Construction Phase Project Management & Inspection	332	30	55.00	1,650
	TESTING FEE				
	PERMIT FEE	332	1	12,800.00	12,800
	SURVEY FEE				
	INSPECTION BY FIELD STAFF	332	80	55.00	4,400
	INSTALL SERVICE CONNECTIONS: DOUBLE-LONG	345			
	INSTALL SERVICE CONNECTIONS: DOUBLE-SHORT	345			
	INSTALL SERVICE CONNECTIONS: SINGLE-LONG	345			
	INSTALL SERVICE CONNECTIONS: SINGLE-SHORT	345			
TOTAL LABOR					$ 21,050
SUBTOTAL - CONTRACT WORK, MATERIALS, AND LABOR					$ 872,145
OVERHEAD					104,700
TOTAL	REFUNDABLE PORTION ☐	NON-REFUNDABLE PORTION ☐		COST ESTIMATE	$ 976,845

AFH

ARIZONA WATER COMPANY
VALLEY FARMS
ARSENIC REMOVAL FACILITY

DECEMBER 2014

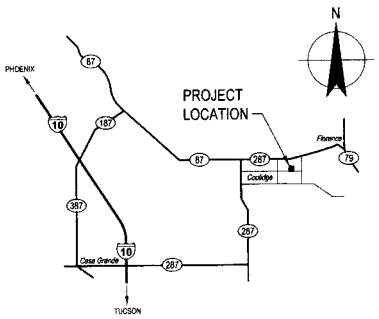

VICINITY MAP
SCALE: NTS

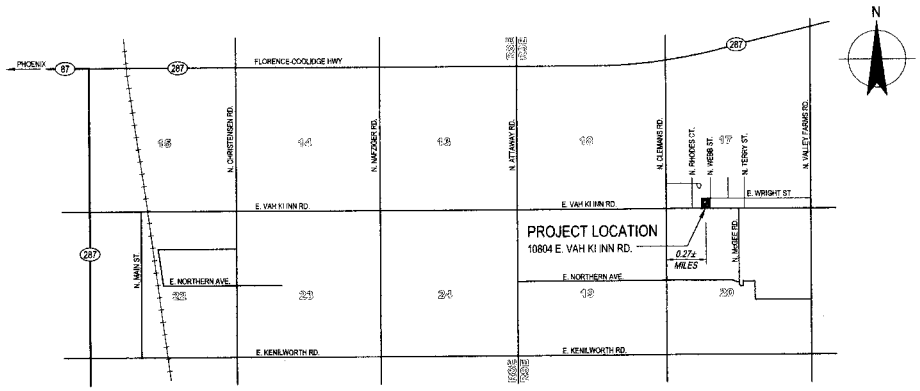

LOCATION MAP
SCALE: NTS

SHEET INDEX

SHT	DWG	DRAWING TITLE
	GENERAL	
1	G1	COVER SHEET
2	G2	NOTES, LEGEND, AND ABBREVIATIONS
3	G3	NOTES
4	G4	PROCESS FLOW DIAGRAM
	CIVIL	
5	C1	DEMOLITION PLAN
6	C2	SITE LAYOUT, GRADING, AND DRAINAGE
	MECHANICAL	
7	M1	MECHANICAL PLAN
8	M2	ARSENIC REMOVAL SYSTEM LAYOUT
9	M3	ADSORBER PLAN, SECTIONS, AND DETAILS
10	M4	BACKWASH / RINSE WATER HOLDING TANK PLAN, SECTIONS, AND DETAILS
11	M5	BYPASS PIPING ASSEMBLY PLAN, SECTIONS, AND DETAILS
12	M6	CHEMICAL DISINFECTION SYSTEM PLAN, SECTIONS, AND DETAILS
13	M7	BACKFLOW PREVENTION ASSEMBLY PLAN, SECTIONS, AND DETAILS
14	M8	STANDARD DETAILS
	ELECTRICAL	
15	E1	ELECTRICAL COVER SHEET
16	E2	ELECTRICAL DEMOLITION PLAN
17	E3	ELECTRICAL SITE PLAN
18	E4	SINGLE LINE DIAGRAM
19	E5	CONDUIT BLOCK DIAGRAM & RECYCLE PUMP SCHEMATIC
20	E6	WELL NO 1 STARTER SECTION MODIFICATIONS
21	E7	WELL NO 2 STARTER SECTION MODIFICATIONS - I
22	E8	WELL NO 2 STARTER SECTION MODIFICATIONS - II
23	E9	RTU SECTION MODIFICATION - I
24	E10	RTU SECTION MODIFICATION - II
25	E11	ELECTRICAL DETAILS

OWNER:

ARIZONA WATER COMPANY
CONTACT: JAMES WILSON
3805 N. BLACK CANYON HWY
PHOENIX, AZ 85036
PH: (602) 240-6860
FAX: (602) 240-6878

ENGINEER:

CIVIL
GHD
CONTACT: BILL ROBERTS
7500 N. 16TH STREET, SUITE 205
PHOENIX, AZ. 85020
PH: (602) 216-7200

ELECTRICAL
DARCOR
CONTACT: DARWIN REYNOLDS
7500 N. 16TH STREET, SUITE 205A
PHOENIX, AZ. 85020
PH: (602) 795-2699

SITE:

PARCEL NO. 202280010
10804 E. VAH KI INN RD.
VALLEY FARMS, AZ. 85191
PID EPOS: 016
PWSID: 11-009
DWR#: 55-616886

BENCHMARK:

NAVD88
BRASS CAP IN HEADWALL, APPROXIMATELY 40' SW OF SE CORNER OF SECTION 17, T5S, R9E
STAMPED "G 253 1948"
ELEV. 1436.58

LEGAL DESCRIPTION: (DKT. 124, PG. 196)

A PARCEL OF LAND SITUATED WITHIN THE SOUTHWEST QUARTER OF SECTION 17, TOWNSHIP 5 SOUTH, RANGE 9 EAST OF THE GILA AND SALT RIVER BASE AND MERIDIAN, PINAL COUNTY, ARIZONA, SAID PARCEL BEING MORE PARTICULARLY DESCRIBED AS FOLLOWS:

BEGINNING AT A POINT ON THE COUNTY ROAD RIGHT OF WAY, WHICH POINT BEARS SOUTH 89° 59' WEST, 1071.18 FEET FROM THE SOUTH QUARTER CORNER OF SAID SECTION 17, SAID QUARTER CORNER BEING MARKED BY A 2 INCH IRON PIPE WITH BRASS CAP; THENCE SOUTH 89° 59' WEST, 175.00 FEET; THENCE NORTH 0° 28' WEST, 222.00 FEET; THENCE NORTH 89° 59' EAST, 175.00 FEET; THENCE SOUTH 0° 28' EAST, 222.00 FEET TO THE POINT OF BEGINNING.

APPROVALS

ARIZONA WATER COMPANY — DATE

ARIZONA DEPARTMENT OF ENVIRONMENTAL QUALITY (ADEQ) — DATE

REVISIONS:

The installation shown is to be installed in accordance with the Arizona Water Company standard specifications on file with the Arizona Department of Environmental Quality

CALL 263-1100 (MARICOPA COUNTY) 1-800-STAKE-IT (OTHER ARIZONA COUNTIES)

GHD
7500 North 16th Street Suite 205, Phoenix Arizona 85020 USA
T 1 602 216 7200 F 1 602 216 7201
E phoenix@ghd.com W www.ghd.com

P.E. No.:
SYSTEM:
LEGAL DESC.: SEC 17 - T5S - R9E
TAX DIST.:
DATE: 12/17/2014
SCALE: N/A
DRAWN BY: AEF
CHECKED BY: FHT

ARIZONA WATER COMPANY
3805 N. BLACK CANYON HWY. POST OFFICE BOX 29006
PHOENIX, ARIZONA 85038-9006
(602) 240-6860

PROJECT DESC.: VALLEY FARMS ARSENIC REMOVAL FACILITY
10804 E. VAH KI INN ROAD - VALLEY FARMS, AZ 85191
PROJECT SHEET DESC.: COVER SHEET

33921 WILLIAM D. ROBERTS III
Expires 3/31/16

DWG. No.: G1

SHEET 1 OF 25

G:\841\11476\CADD\Drawings\CIVIL\841-11476-G01.dwg PLOT: 12/23/2014 5:20:25pm

LEGEND

- CONCRETE COLUMN
- CABLE TV RISER
- POWER POLE
- POWER POLE W/ LIGHT
- STREET LIGHT
- GUY WIRE
- ELECTRIC VAULT
- ELECTRIC BOX
- GAS VALVE
- GAS METER
- GAS MANHOLE
- IRRIGATION PULL BOX
- LANDSCAPE IRRIGATION CONTROL BOX
- POST GUARD
- LAMP POST
- STORM DRAIN MANHOLE
- STORM DRAIN CATCH BASIN GRATE
- SIGN
- MAIL BOX
- BLOW OFF
- AIR RELEASE VALVE
- WATER METER BOX
- WATER MANHOLE
- FIRE HYDRANT
- WATER VALVE
- BACK FLOW PREVENTER
- HOSE BIB
- REDUCER
- SANITARY SEWER MANHOLE
- SANITARY SEWER CLEANOUT
- TELEPHONE MANHOLE
- TELEPHONE RISER OR PEDESTAL
- BACKFLOW PREVENTER
- TRAFFIC PULL BOX OR J-BOX
- TRAFFIC LIGHT POLE
- PK NAIL / MISC. SURVEY MARKER
- BRASS CAP IN HANDHOLE
- BRASS CAP
- CACTUS (UNKNOWN TYPE)
- PINE
- TREE, UNKNOWN SPECIES UNLESS SPECIFIED
- MESQUITE
- SAGUARO
- PALM TREE
- PALO VERDE
- BUSH
- OLEANDER
- FENCE
- BLOCK OR CONCRETE WALL
- WATERLINE WITH PIPE SIZE
- SANITARY SEWER LINE
- GAS LINE
- TELEPHONE LINE
- STORM DRAIN
- CABLE TELEVISION
- RECLAIMED WATER LINE
- UNDERGROUND ELECTRIC
- MONUMENT LINE
- ROW LINE
- PROPERTY LINE
- NEW WATERLINE
- EDGE OF PAVEMENT
- EDGE OF PAVEMENT, CURB, AND GUTTER
- SIDEWALK
- N 1000.00 E 1000.00 — COORDINATES
- CONCRETE PAVERS
- CONCRETE
- FLOW ARROW

DETAIL DESIGNATION

DETAIL DESIGNATIONS USE NUMBERS

ON DRAWING WHERE DETAIL IS TAKEN:

DETAIL DESIGNATION — 1 / M101 — DRAWING NUMBER WHERE SHOWN

ON DRAWING WHERE DETAIL IS SHOWN:

DETAIL DESIGNATION — 1 / M100 — DETAIL — SCALE: 1/4"=1'-0" — DRAWING NUMBER WHERE TAKEN

NOTE: DRAWING NUMBER SHOWN AS " - " IF TAKEN & SHOWN ON SAME SHEET.

SECTION DESIGNATION

SECTION DESIGNATIONS USE LETTERS

ON DRAWING WHERE SECTION IS TAKEN:

SECTION DESIGNATION — A / M101 — DRAWING NUMBER WHERE SHOWN

ON DRAWING WHERE SECTION IS SHOWN:

SECTION DESIGNATION — A / M100 — SECTION — SCALE: 1/4"=1'-0" — DRAWING NUMBER WHERE TAKEN

NOTE: DRAWING NUMBER SHOWN AS " - " IF TAKEN & SHOWN ON SAME SHEET.

STANDARD DETAIL

STANDARD DETAIL DESIGNATIONS USE DISCIPLINE CODE FOLLOWED BY ASSIGNED DETAIL NUMBER

ON DRAWING WHERE STD. DETAIL IS TAKEN:

STD. DETAIL DESIGNATION — M247

ON DRAWING WHERE STD. DETAIL IS SHOWN

STD. DETAIL DESIGNATION — M247 — DETAIL — SCALE : NTS

NOTE: STANDARD DETAILS ARE PLACED LAST IN EACH DISCIPLINE DRAWING SET.

PIPE DESIGNATION

DESIGNATION FOR NEW PIPING:

12" DI W

- NOMINAL PIPE DIAMETER
- PIPE MATERIAL; SEE SPECIFICATIONS FOR EQUIVALENT REPLACEMENT
- FLOW STREAM IDENTIFIER

DESIGNATION FOR EXISTING PIPING (SCREENED):

PIPING SYSTEM DESIGNATIONS FOR EXISTING PIPE INDICATE TYPE OF SERVICE ONLY AND DO NOT IMPLY PIPE MATERIALS USED. — 12" W

DESIGNATION FOR FUTURE PIPING (DASHED): — 12" DI W

FITTINGS

SINGLE LINE / DOUBLE LINE

- FLANGED JOINT
- PLAIN OR GROOVED END MECHANICAL COUPLING
- PUSH ON, MECHANICAL, OR BALL AND SOCKET JOINT
- WELDED JOINT
- SOCKET WELDED JOINT
- SLEEVE TYPE MECHANICAL COUPLING
- RESTRAINED SLEEVE TYPE MECHANICAL COUPLING
- FLANGED COUPLING ADAPTER
- RESTRAINED FLANGED COUPLING ADAPTER
- GROOVED END ADAPTER FLANGE
- UNION
- ELASTOMER AND FABRIC EXPANSION JOINT
- EXPANSION JOINT (SEE SPECS FOR TYPE)
- FLEXIBLE METAL HOSE
- 90° ELBOW
- 90° ELBOW UP
- 90° ELBOW DOWN
- 45° ELBOW
- 45° ELBOW UP
- 45° ELBOW DOWN
- TEE
- TEE UP
- TEE DOWN
- CROSS
- LATERAL
- LATERAL UP
- LATERAL DOWN
- CONCENTRIC REDUCER
- ECCENTRIC REDUCER

FLOW STREAM IDENTIFIERS

BW	BACKWASH
D	DRAIN
NaOCl	SODIUM HYPOCHLORITE
OF	OVERFLOW
PA	PROCESS AIR
PW	POTABLE WATER
REC	RECYLED WATER
RW	RAW WATER
W	WATER

ABBREVIATIONS

ABC	AGGREGATE BASE COURSE
ABN	ABANDONED
AC	ASPHALTIC CONCRETE
ACP	ASBESTOS CEMENT PIPE
AZWC	ARIZONA WATER COMPANY
B/C	BACK OF CURB
B&C	BOX AND COVER
BC	BRASS CAP FLUSH
BCHH	BRASS CAP IN HAND HOLE
BF	BLIND FLANGE
BM	BENCH MARK
BW	BACKWASH WATER
CATV	CABLE TV
CIP	CAST IRON PIPE
CL	CENTER LINE
CONC	CONCRETE
CONT	CONTINUOUS
COP	CITY OF PHOENIX
DE	DRAINAGE EASEMENT
DEF	DEFLECTION
DEG or °	DEGREE
DET or DTL	DETAIL
DI or DIP	DUCTILE IRON PIPE
DIA or Ø	DIAMETER
DP	DIFFERENTIAL PRESSURE
DWG	DRAWING
DWY	DRIVEWAY
EA	EACH
E	ELECTRIC or EASEMENT
EL	ELEVATION
ELL	ELBOW
EOP	EDGE OF PAVEMENT
EXIST	EXISTING
FCD	FLOOD CONTROL DISTRICT
FD or FND	FOUND
FF	FINISH FLOOR
FH	FIRE HYDRANT
FL	FLANGE
FO	FIBER OPTIC
FRW	FORWARD RINSE WATER
G	GAS
HORZ	HORIZONTAL
HP	HIGH POINT
ID	INSIDE DIAMETER
IE	INVERT ELEVATION
INV	INVERT
IRR	IRRIGATION
JNTS	JOINTS
LP	LOW POINT
LT	LEFT
MAT	MATERIAL
MAX	MAXIMUM
MH	MANHOLE
MIN	MINIMUM
MJ	MECHANICAL JOINT
ML or ℄	MONUMENT LINE
N	NORTH
NC	NORMALLY CLOSED
NG	NATURAL GROUND
N/C	NOT IN CONTRACT
NO or #	NUMBER
N/P	NON-PAY ITEM
NTS	NOT TO SCALE
OC	ON CENTER
OD	OUTSIDE DIAMETER
OHE	OVERHEAD ELECTRIC
O&M	OPERATION AND MAINTENANCE
P/C	POINT OF CURVE
PI	PRESSURE INDICATOR
PRC	POINT OF REVERSE CURVATURE
PT	POINT OF TANGENT
PUE	PUBLIC UTILITY EASEMENT
R or RAD	RADIUS
R/D	REDUCER or REDUCING
REQ'D	REQUIRED
RESTR	RESTRAINT
R/W	RIGHT OF WAY
RT	RIGHT
S	SANITARY SEWER
SD	STORM DRAIN
SDE	STORM DRAIN EASEMENT
SE	SEWER LINE EASEMENT
SECT	SECTION
SW	SIDEWALK
SWE	SIDEWALK EASEMENT
SPEC	SPECIFICATION
SQ	SQUARE
SS	STAINLESS STEEL
STD	STANDARD
STS	SEVEN TRENT SYSTEMS
T or TEL	TELEPHONE
T/	TOP OF
TN	TOP OF NUT
TRANS	TRANSMISSION WATER MAIN
T.S.&V.	TAPPING SLEEVE AND VALVE
TYP	TYPICAL
UE	UNDERGROUND ELECTRIC
UG	UNDERGROUND
UNK	UNKNOWN
UNO	UNLESS NOTED OTHERWISE
VCP	VITRIFIED CLAY PIPE
VERT	VERTICAL
W	WATER
WE	WATERLINE EASEMENT
W/	WITH
W/O	WITHOUT

ENGINEER'S NOTES

GENERAL NOTES

1. EXISTING UTILITIES AND OTHER FACILITIES HAVE BEEN PLACED ON THE PLANS FROM FIELD SURVEYS, EXISTING MAPS, AND OTHER PLANS WITHIN THE AREA OF THIS PROJECT. THE CONTRACTOR WILL DETERMINE THE EXACT LOCATION AND/OR ELEVATION OF EXISTING UTILITIES WHICH PERTAIN TO AND AFFECT THE CONSTRUCTION OF THIS PROJECT. THE CONTRACTOR SHALL POTHOLE AS NECESSARY TO DETERMINE THE EXACT LOCATION OF EXISTING UTILITIES. THE CONTRACTOR'S BID SHALL INCLUDE THE RELOCATION OF ANY CONFLICTING EXISTING IMPROVEMENTS.
2. THE CONTRACTOR SHALL CONTACT OTHER APPROPRIATE UTILITIES DIRECTLY IF THEY ARE NOT ON THE BLUE STAKE SYSTEM.
3. ALL EXISTING WATERLINES THAT SERVE THE DISTRIBUTION SYSTEM ARE TO REMAIN IN CONTINUOUS SERVICE UNTIL THE NEW IMPROVEMENTS ARE ACCEPTED BY THE COMPANY.
4. USE EXTREME CAUTION WHEN OPERATING NEAR GAS AND ELECTRIC LINES.
5. THE TEMPORARY REMOVAL, BARRICADING, SUPPORT OR SHUTOFF OF POWER AND/OR GAS LINES OR EQUIPMENT SHALL BE PERFORMED BY THE OWNER OF THE POWER AND/OR GAS LINES OR EQUIPMENT AT THE CONTRACTOR'S EXPENSE. THE CONTRACTOR SHALL INCLUDE AN APPROPRIATE AMOUNT FOR ANY NECESSARY WORK DONE BY THE POWER AND/OR GAS OWNER IN THEIR BID FOR THIS PROJECT.
6. THE CONTRACTOR SHALL SUBMIT TO THE COMPANY FOR REVIEW, COMPLETE INFORMATION INCLUDING SHOP DRAWINGS, SAMPLES, SUBMITTALS ETC. FOR ALL EQUIPMENT AND MATERIALS, INCLUDING BUT NOT LIMITED TO FITTINGS, GASKETS, COUPLINGS, PIPE, PIPE LINING OR COATING, GROUND COVER AND ELECTRICAL IMPROVEMENTS PRIOR TO FURNISHING ANY OF THESE ITEMS. RESUBMIT FOR APPROVAL AS REQUIRED.
7. THE SITE AND ALL SURROUNDING AREAS SHALL BE RESTORED TO THEIR ORIGINAL CONDITION AFTER CONSTRUCTION IS COMPLETED. THE CONTRACTOR SHALL VIDEO THE PROJECT SITE AND ITS PERIMETER TO DOCUMENT EXISTING CONDITIONS.
8. THE CONTRACTOR SHALL PROVIDE START UP, TESTING, TRAINING AND CERTIFICATION SERVICES BY ALL APPLICABLE MANUFACTURER REPRESENTATIVES.
9. PRIOR TO BEGINNING CONSTRUCTION THE CONTRACTOR SHALL VERIFY ALL DIMENSIONS AND THE LOCATION OF ALL UTILITIES IN THE FIELD. ANY CONFLICTS OR DISCREPANCIES SHALL IMMEDIATELY BE BROUGHT TO THE ATTENTION OF THE COMPANY IN WRITING. CONSTRUCTION SHALL NOT PROCEED UNTIL ALL CONFLICTS AND DISCREPANCIES ARE RESOLVED.
10. THE COMPANY WILL NOT BE RESPONSIBLE FOR CONSTRUCTION MEANS, METHODS, TECHNIQUES, SEQUENCES OR PROCEDURES, OR FOR SAFETY PRECAUTIONS OR PROGRAMS UTILIZED IN CONNECTION WITH THE WORK. NOR WILL BE RESPONSIBLE FOR THE CONTRACTOR'S FAILURE TO CARRY OUT THE WORK IN ACCORDANCE WITH THE CONTRACTORS DOCUMENTS.
11. THE CONTRACTOR SHALL PROVIDE ALL CONSTRUCTION STAKING.
12. DURING CONSTRUCTION, THE CONTRACTOR WILL NEATLY MARK UP CONSTRUCTION DRAWINGS TO REFLECT ANY CHANGES MADE IN THE FIELD. IN ADDITION, THE CONTRACTOR'S REGISTERED LAND SURVEYOR WILL LOCATE THE PROPOSED IMPROVEMENTS AS THEY ARE INSTALLED AND MARK UP THE SAME PLAN SET TO INCLUDE THAT INFORMATION. THE CONTRACTOR WILL THEN SUBMIT THE WORKING DRAWINGS AND SURVEY DATA TO THE COMPANY FOR REVIEW AND APPROVAL. THE CONTRACTOR WILL CREATE THE FINAL AS-BUILT DRAWINGS.
13. ANY QUANTITIES PROVIDED ON THESE PLANS ARE APPROXIMATE AND THE CONTRACTOR SHOULD NOT RELY ON THEM TO PREPARE THEIR BID. THE CONTRACTOR'S BID IS A LUMP SUM BID THAT WILL INCLUDE DELIVERY OF A COMPLETE AND FUNCTIONAL PROJECT.
14. THE CONTRACTOR SHALL ANTICIPATE AND SCHEDULE FOR A MINIMUM TWO WEEK SUBMITTAL REVIEW PERIOD BY THE COMPANY DURING WHICH TIME THEY WILL EITHER APPROVE, DISAPPROVE, OR REQUEST MODIFICATIONS. THE LATTER TWO ACTIONS WILL REQUIRE RESUBMITTAL AND A SUBSEQUENT ADDITIONAL REVIEW PERIOD.
15. THE CONTRACTOR SHALL BE RESPONSIBLE FOR THE HIRING A GEOTECHNICAL FIRM TO TEST COMPACTION DURING CONSTRUCTION ACTIVITIES. THE CONTRACTOR SHALL COORDINATE WITH THE GEOTECHNICAL ENGINEER TO ASSURE ALL REQUIRED TESTS ARE TAKEN.
16. THE CONTRACTOR WILL PROVIDE ALL NECESSARY EQUIPMENT REQUIRED FOR ALL TESTS THAT WILL BE PERFORMED DURING CONSTRUCTION INCLUDING BUT NOT LIMITED TO PIPE PRESSURE TESTS AND THE DISINFECTION AND BAC-T TESTING OF PIPING. ALL PIPING SHALL BE DISINFECTED AND PRESSURE TESTED. PRESSURE TESTING SHALL BE IN ACCORDANCE WITH THE COMPANY WATERLINE SPECIFICATIONS.
17. THE CONTRACTOR SHALL SCHEDULE ALL TESTING, FLUSHING, OPERATIONAL AND SHUT DOWN ACTIVITIES WITH THE COMPANY AND PROVIDE ONE WEEK ADVANCE NOTICE. THESE ACTIVITIES SHALL NOT BE PERFORMED WITHOUT A WRITTEN STATEMENT ALLOWING THE SPECIFIC ACTIVITY TO OCCUR WITHOUT THE COMPANY OF THEIR REPRESENTATIVE IN ATTENDANCE.
18. DURING DISINFECTION AND BAC-T TESTING, THE CONTRACTOR SHALL CHLORINATE THE PIPING AND WILL WITNESS THE HIGH AND FLUSHED CHLORINE RESIDUALS. AFTER FLUSHING, THE COMPANY WILL COLLECT AND LAB TEST THE SAMPLES.
19. THE CONTRACTOR SHALL MAINTAIN SECURITY ONSITE DURING CONSTRUCTION.

WATER NOTES

1. ALL UNDERGROUND PIPE SHALL BE D.I.P., CLASS 350, WITH RESTRAINED MECHANICAL OR RESTRAINED PUSH-ON JOINTS. ALL BURIED PIPING SHALL BE POLYWRAPPED. ALL UNDERGROUND PIPE SHALL INCLUDE BLACK POLYWRAP.
2. ALL ABOVE GROUND PIPING SHALL BE D.I.P., CLASS 350 WITH FLANGED JOINTS. ABOVE GROUND PIPING SHALL INCLUDE EPOXY COATING IN ADDITION TO ITS FACTORY COATING. THE EPOXY COATING SHALL BE THERMIC AND AS FOLLOWS:
   - 2.1. SURFACE PREP: PER MANUFACTURER
   - 2.2. PRIMER: SERIES 66 OR N69 HI-BUILD EPOXOLINE ≥ 4.0 DFT.
   - 2.3. INTERMEDIATE: SERIES 66 OR N69 HI-BUILD EPOXOLINE ≥ 5.0 DFT.
   - 2.4. FINISH: SERIES 73, 1047, OR 1057 ENDURA SHIELD
   - 2.5. COLOR: DESERT SANDS
3. ALL ABOVE GROUND GATE VALVES SHALL BE FLANGED WITH NRS AND INCLUDE A HAND WHEEL WITH CHAIN AND LOCK.
4. IN ACCORDANCE WITH AAC R 18-4-119, ALL MATERIALS ADDED AFTER JANUARY 1, 1993 WHICH MAY COME INTO CONTACT WITH CURRENT DRINKING WATER SHALL CONFORM TO NATIONAL SANITATION FOUNDATION STANDARDS 60 & 61.
5. AT THE CLOSE OF EACH WORK DAY, OR WHENEVER THE WORK CEASES FOR ANY REASON, THE END OF ANY OPEN PIPE SHALL BE SECURELY CLOSED WITH AN APPROVED FITTING, UNLESS OTHERWISE PERMITTED IN WRITING BY THE COMPANY.
6. WHERE NEW FITTINGS, VALVES, METERS, RESTRAINTS, ETC. ARE REQUIRED TO BE CONNECTED TO EXISTING PIPING, THE CONTRACTOR SHALL FURNISH AND INSTALL THE NECESSARY COMPONENTS NEEDED TO ACCOMPLISH THE WORK, WHETHER OR NOT SPECIFICALLY INDICATED ON THE DRAWINGS.
7. THE CONTRACTOR SHALL PROVIDE PIPE RESTRAINTS AT ALL FITTINGS AND JOINTS. RESTRAINED JOINTS SHALL BE MEGALUG OR APPROVED EQUAL.
8. THE CONTRACTOR SHALL FURNISH ALL EQUIPMENT AND LABOR REQUIRED TO COMPLETE THE FLUSHING AS REQUIRED BY THESE NOTES. WATER WILL BE PROVIDED BY THE CONTRACTOR. THE CONTRACTOR SHALL MAKE ALL ARRANGEMENTS, TO ESTABLISH A 2.5 FEET PER SECOND (FPS) FLOW VELOCITY IN THE LINE DURING THE FLUSH. FLUSHING SHALL PROCEED UNTIL THE INSTALLED PIPE IS FREE OF DEBRIS.
9. ALL PIPING WILL BE CHLORINATED PER THE COMPANY GUIDELINES AND SPECS. SAMPLES WILL BE TAKEN ON TWO (2) CONSECUTIVE DAYS AND CONFORM TO ADEQ ENGINEERING BULLETIN NO. 8.
10. ALL PIPING SHALL BE PRESSURE TESTED IN ACCORDANCE WITH THE COMPANY SPECIFICATIONS. ALL PIPING INCLUDING SERVICE LINES LESS THAN 1" SHALL BE PRESSURE TESTED PRIOR TO BACKFILL.
11. FITTINGS FOR DUCTILE IRON (DI) PIPING SHALL MEET THE REQUIREMENTS OF ANSI/AWWA C-110 WITH A STANDARD FACTORY COATING OF CEMENT-MORTAR ON ALL INTERIOR SURFACES AND SEAL COATED PER AWWA C-104. FIELD COATING OF DI FITTINGS WILL NOT BE ACCEPTABLE OR ALLOWED. PRESSURE RATING FOR FITTINGS SHALL BE A MINIMUM OF 250 PSI.
12. ALL PVC PIPING AND CONDUIT EXPOSED TO DIRECT SUNLIGHT SHALL BE COATED WITH PAINT HAVING UV PROTECTION CAPABILITIES. PAINT SHALL BE DEVOE WATER BASE (PRIMER ≥ 1.5 DFT, FINISH ≥ 3.0 DFT).
13. THE CONTRACTOR SHALL PROVIDE TAPS FOR ALL FLOW AND PRESSURE SWITCHES INDICATED ON THE ELECTRICAL PLANS
14. ALL NEW IMPROVEMENTS SHALL BE OPERATED TO THE COMPANY SATISFACTION PRIOR TO THE PROJECT'S ACCEPTANCE

EARTHWORK AND STORM DRAIN NOTES

1. THE CONTRACTOR SHALL BE RESPONSIBLE FOR ACQUIRING ALL REQUIRED PERMITS
2. THE CONTRACTOR SHALL PERFORM ALL EARTHWORK REQUIRED TO CONSTRUCT THE PROPOSED FACILITIES AS SHOWN ON THE PLAN
3. CONTRACTOR SHALL BE SOLELY RESPONSIBLE FOR THE REMOVAL OF ALL SPOILS FROM THE CONSTRUCTION SITE IN ACCORDANCE WITH ALL FEDERAL, STATE, COUNTY AND MUNICIPAL REQUIREMENTS.

DUST CONTROL NOTES

1. THE CONTRACTOR SHALL BE RESPONSIBLE FOR DUST ABATEMENT DURING CONSTRUCTION ACTIVITIES AND THE MINIMUM REQUIREMENTS LISTED BELOW. SHOULD THE REQUIREMENTS OUTLINED BELOW CONFLICT WITH AGENCY TERMS, THE MORE STRINGENT DEMANDS SHALL GOVERN AS DETERMINED BY THE COMPANY.
2. THE CONTRACTOR SHALL PREPARE A DUST CONTROL PLAN THAT IS APPROVED BY THE COUNTY, IF REQUIRED, AND CITY. ALL SITE SUPERVISORS AND SUBCONTRACTORS SHALL REVIEW AND INITIAL THE DUST CONTROL PLAN.
3. THE CONTRACTOR SHALL POST SITE RULES FOR DUST CONTROL AND COMPLIANCE WARNING SIGNS.
4. THE CONTRACTOR SHALL DESIGNATE PARKING AND RESTRICTED AREAS.

CONCRETE NOTES

1. ALL CONCRETE AND CONCRETE CURING MATERIALS SHALL BE 3500 PSI UNLESS OTHERWISE NOTED ON THE PLANS.
2. ALL STEEL REINFORCEMENT SHALL MEET BE ASTM A615, GRADE 60.
3. ALL EXPOSED CONCRETE CORNERS SHALL BE 3/4" CHAMFERED.
4. MINIMUM REINFORCING CONCRETE COVER 3" UNLESS OTHERWISE SHOWN.
5. ALL METAL FABRICATIONS EMBEDDED IN CONCRETE, OTHER THAN STAINLESS STEEL, REINFORCING AND ANCHOR BOLTS SHALL BE HOT DIPPED GALVANIZED AFTER FABRICATION IN ACCORDANCE WITH ASTM A123 AND ASTM A386 AS APPLICABLE.
6. 4" OF ABC SHALL BE PLACED UNDER ALL CONCRETE SLABS AND STRUCTURES.

7600 North 16th Street Suite 205, Phoenix Arizona 85020 USA
T 1 602 216 7200 F 1 602 216 7201
E phoenix@ghd.com W www.ghd.com

REFERENCE:

The installation shown is to be installed in accordance with the Arizona Water Company standard specifications on file with the Arizona Department of Environmental Quality

CALL "BLUE STAKES, INC." 263-1100 1-800-STAKE-IT (NORMAL WORKING HOURS)

W.A. No.:	
P.E. No.:	
SYSTEM:	
LEGAL DESC.:	SEC 17 - T5S - R9E
TAX MAP:	
DATE: 12/17/2014	SCALE: NTS
DRAWN BY: AEF	CHECKED BY: FHT

ARIZONA WATER COMPANY
3805 N. BLACK CANYON HIGHWAY - POST OFFICE BOX 29006
PHOENIX, ARIZONA 85038-9006
(602) 240-6860

PROJECT NAME: VALLEY FARMS ARSENIC REMOVAL FACILITY
10804 E. VAN KI INN ROAD - VALLEY FARMS, AZ 85191

PROJECT SHEET DESC: NOTES, LEGEND, AND ABBREVIATIONS

REGISTERED PROFESSIONAL ENGINEER (CIVIL) — CERTIFICATE NO. 35921 — WILLIAM D. ROBERTS — ARIZONA U.S.A. — Expires 3/31/15

DWG. No.: G2

SHEET 2 OF 25

G:\64\114\PE\CADD\Drawings\Civil\64-11476-002.dwg PLOT: 12/23/2014 11:16:37am sfoscato

1. GENERAL

ALL WORK IS TO BE COMPLETED IN A SAFE, WORKMANLIKE MANNER AND IN ACCORDANCE WITH THESE CONSTRUCTION SPECIFICATIONS; ANY DEVIATION THEREFROM MUST BE APPROVED IN WRITING BY THE COMPANY. INSTALLATIONS MUST CONFORM WITH THE REQUIREMENTS OF ALL GOVERNMENTAL REGULATING AGENCIES AND THE COST OF CONFORMING TO SUCH REGULATIONS MUST BE INCLUDED IN THE UNIT BID PRICES.
EXAMPLES OF SUCH REGULATIONS, WITHOUT ATTEMPTING TO BE INCLUSIVE, ARE:

A. SPECIAL COMPACTION AND PAVING FOR STREET CROSSING.
B. SHORING WHEN REQUIRED BECAUSE OF THE TRENCH DEPTH.
C. CLOSING A TRENCH IN THOSE AREAS WHERE NO OPEN TRENCH IS ALLOWED OVERNIGHT.
D. BARRICADING AND TRAFFIC CONTROL AS REQUIRED.

2. TRENCH EXCAVATION

A. THE TRENCH LOCATION IS TO BE DETERMINED BY THE CONSTRUCTION DRAWINGS.
B. FOR 8-INCH OR SMALLER PIPE: THE DEPTH OF THE TRENCH PRIOR TO PIPE LAYING SHALL BE SUCH THAT THE FINISHED PIPELINE SHALL HAVE BETWEEN THIRTY-SIX INCHES (36") AND FORTY-TWO INCHES (42") OF COVER UNLESS OTHERWISE SPECIFIED ON THE CONSTRUCTION DRAWINGS.
C. FOR 12-INCH AND LARGER PIPE: THE DEPTH OF THE TRENCH PRIOR TO PIPE LAYING SHALL BE SUCH THAT THE FINISHED PIPELINE SHALL HAVE BETWEEN FORTY-EIGHT INCHES (48") AND SIXTY INCHES (60") OF COVER UNLESS OTHERWISE SPECIFIED ON THE CONSTRUCTION DRAWINGS.
D. THE WIDTH OF THE TRENCH AT AND BELOW THE LEVEL AT THE TOP OF THE PIPE SHALL BE A MINIMUM OF TWELVE INCHES (12") PLUS THE OUTSIDE DIAMETER OF THE PIPE BARREL AND A MAXIMUM OF TWENTY-FOUR INCHES (24") PLUS THE OUTSIDE DIAMETER OF THE PIPE BARREL.
E. THE BOTTOM OF THE TRENCH SHALL BE ACCURATELY GRADED TO PROVIDE A UNIFORM BEARING FOR EACH LENGTH OF PIPE FOR THE FULL LENGTH OF THE PIPE. IF THE NATIVE MATERIAL ON THE TRENCH BOTTOM CAN BE REASONABLY DUG BY HAND, BELL HOLES SHALL BE DUG FOR THE JOINTS SO THAT THE JOINTS IN NO WAY SUPPORT THE PIPE. WHEN NATIVE MATERIALS SUCH AS ROCK ARE ENCOUNTERED DURING TRENCHING THAT WILL NOT PROVIDE A UNIFORM SUPPORT FOR THE PIPE, THE TRENCH WILL BE OVER-EXCAVATED AN ADDITIONAL SIX INCHES (6") AND SUITABLE BEDDING MATERIAL WILL BE PLACED IN THE TRENCH.
F. BEDDING MATERIAL WILL BE PLACED BY HAND IN FOUR-INCH (4") LIFTS AND COMPACTED TO ENSURE UNIFORM COMPACTION AND TO ELIMINATE ANY VOIDS UNDER THE PIPE. WHEN THE SPACE BETWEEN THE PIPE AND TRENCH BOTTOM VARIES, THIS MUST BE BACKFILLED AND COMPACTED IN FOUR-INCH (4") LIFTS TO THE MID-SECTION OF THE PIPE.
G. WHENEVER THE TRENCH IS OVER-EXCAVATED FOR WHATEVER REASON, THE TRENCH BOTTOM WILL BE BROUGHT UP TO THE CORRECT DEPTH AT THE CONTRACTOR'S EXPENSE USING EITHER METHOD (A) OR (B) AS FOLLOWS:
G.A. A.B.C. MATERIAL SHALL BE USED AND COMPACTED TO A UNIFORM DENSITY OF NOT LESS THAN 80% OF THE MAXIMUM DENSITY AS DETERMINED BY AASHTO T-99 METHOD A AND T-191.
G.B. NATIVE MATERIAL 100% OF WHICH WILL PASS THROUGH A ONE AND ONE-HALF INCH (1½") SCREEN AND AT LEAST 20% OF WHICH WILL PASS THROUGH A NUMBER-8 SCREEN SHALL BE USED AND COMPACTED TO A UNIFORM DENSITY OF NOT LESS THAN 85% OF THE MAXIMUM DENSITY AS DETERMINED BY AASHTO T-99 METHOD A AND T-191.

3. MATERIALS TO BE PROVIDED BY CONTRACTOR

UNLESS OTHERWISE SPECIFIED ON THE CONSTRUCTION DRAWINGS OR IN THE CONTRACT, THE CONTRACTOR WILL SUPPLY ALL OF THE NECESSARY MATERIALS WHICH WILL BECOME A PERMANENT AND INTEGRAL PART OF THE WATER DISTRIBUTION SYSTEM, INCLUDING CONCRETE BLOCKING, ANCHORS, BACKFILL MATERIAL, PAVING MATERIAL AND SUPPLIES USED DURING THE PROSECUTION OF THE WORK. ALL MATERIALS PROVIDED BY THE CONTRACTOR TO CONSTRUCT THE WATER DISTRIBUTION SYSTEM MUST BE NSF STANDARD 61 APPROVED. ALL POTABLE WATER PIPES AND FITTINGS SHALL HAVE NSF-PW SEAL. CONSTRUCTION MATERIALS USED IN THE WATER SYSTEM SHALL BE LEAD FREE AS DEFINED AT AAC R28-4-504 AND R18-1-101. THE CONTRACTOR WILL PROVIDE THE FOLLOWING MATERIALS:

A. FIRE HYDRANTS: MUELLER SUPER CENTURION 250 FIRE HYDRANT, MEETS ANSI/AWWA C502 STANDARD, MODEL NO. A-423, 5¼" MAIN VALVE OPENING, THREE WAY, 6" MECHANICAL JOINT SHOE, 1½" PENTAGON OPERATING NUT, COLOR - YELLOW, DRAIN OPEN, OPEN DIRECTION - LEFT, 4' OR 4'6" BURY DEPENDING ON APPLICATION. FOR PUMPER AND HOSE NOZZLE INFORMATION SEE BELOW.
   (1) 1 - 4" PUMPER NOZZLE, NST AND 2 - 2½" HOSE NOZZLES, NST. (THESE LOCATIONS ONLY: AJO, CASA GRANDE, COOLIDGE AND SAN MANUEL.)
   (2) 1 - 4½" PUMPER NOZZLE, NST AND 2 - 2½" HOSE NOZZLES, NST. (THESE LOCATIONS ONLY: APACHE JUNCTION, ARIZONA CITY, LAKESIDE, ORACLE, OVERGAARD, PINEWOOD, RIMROCK, SEDONA, SIERRA VISTA, WHITE TANK AND WINKELMAN.)
   (3) 1 - 4½" PUMPER NOZZLE, NST AND 2 - 2½" HOSE NOZZLES, NPT (BISBEE ONLY.)
   (4) 1 - 3" PUMPER NOZZLE GA 6-350 (6 THREADS PER INCH, 3.50 PITCH DIAMETER) AND 2 - 2½" HOSE NOZZLES, NPT (MIAMI ONLY.)
   (5) 1 - 3½" PUMPER NOZZLE GA 6-411 (6 THREADS PER INCH, 4.11 PITCH DIAMETER) AND 2 - 2½" HOSE NOZZLE, NST (SUPERIOR ONLY.)
B. FITTINGS: MANUFACTURED BY TYLER OR UNION. CROSSES, ELBOWS, TEES, CAP, REDUCER, ADAPTER, PLUG, BLIND FLANGE AND TAPPED FLANGE; DUCTILE IRON, CLASS 350, SSB, CAST IRON CEMENT LINED.
   (1) FOSTER ADAPTORS FOR MJ, MADE BY INFACT CORPORATION: AVAILABLE IN SIZE 4" TO 16". PART NO. 4" = 4FA-BC, 6" = 6FA-BC, 8" = 8FA-BC, 10" = 10FA-BC, 12" = 12FA-BC, 16" = 16FA-BC.
C. DETECTOR CHECK VALVE: MUELLER/ HERSEY EDC III, IRON BODY, INCLUDING 5/8" X ¾" TRIM KIT. TRIM KIT PART NO.: 4" = 282080, 6" = 282082, 8" = 282085, 10" = 282496.
D. GATE VALVES: MUELLER RESILIENT WEDGE GATE VALVES, MEETS AWWA C509 SPECIFICATION, 250 PSIG, NON-RISING STEM, PART NO. A-2360 SIZES 4" THROUGH 12"; PART NO. A-2361 SIZES 14" THROUGH 36", LOW ZINC STEMS, EPOXY COATED INSIDE AND OUTSIDE TO MEET THE NSF 61 RATING. THE BONNET AND STUFFING BOX SHALL HAVE 304 STAINLESS STEEL BOLTS/NUTS.
E. TRACER WIRE AND WARNING TAPE:
   (1) TRACER WIRE: SHALL BE DIRECT BURY AWG #14 SOLID COPPER WIRE, COLOR: BLUE.
   (2) WARNING TAPE: REEF INDUSTRIES, STANDARD TERRA TAPE IN 3" WIDTHS. COLOR: BLUE AND IMPRINTED 'ARIZONA WATER COMPANY'.
F. AIR RELEASE VALVE: CRISPIN MODEL AR10 WITH 1" NPT INLET AND 1/2" NPT OUTLET, CAST IRON BODY AND TOP FLANGE: WITH A 5/64" ARIFICE WITH STAINLESS STEEL VALVE SEALING FACES AND BUNA-N RUBBER.
G. PRESSURE RELIEF VALVE: WATTS 174A, MODEL M, 2" INLET, 2" OUTLET, BRONZE BODY, 30LB. TO 150LB. PRESSURE RANGE
H. MEGALUG: MECHANICAL JOINT RESTRAINT MADE OF DUCTILE IRON CONFORMING TO ASTM, 536-80, 250 PSI MADE BY EBAA IRON, INC., SERIES 1100 OR EQUAL.
I. METER BOXES:
   (1) CONCRETE BOX WITH A STEEL REGULAR LID, NUMBER 1: TUCSON SPECIFICATION.
   (2) CONCRETE BOX WITH A STEEL REGULAR LID, NUMBER 2, 3, AND 4: PHOENIX SPECIFICATION.
J. PIPE, COPPER: TYPE K SOFT COPPER IN 60 OR 100-FOOT COILS, PER ASTM B88.
K. PIPE, DUCTILE IRON: DUCTILE IRON PIPE, CEMENT LINED, PUSH-ON, CONFORM TO CURRENT ANSI/AWWA SPECIFICATION A21.51/C151, PRESSURE CLASS 350 (SIZES 4" THROUGH 12"), PRESSURE CLASS 250 (SIZES 14" THROUGH 20"), OR PRESSURE CLASS 200 FOR 24" THROUGH 36" PIPE VENDORS:
   (1) PACIFIC STATES CAST IRON PIPE COMPANY
   (2) GRIFFIN PIPE
   (3) UNITED STATES PIPE AND FOUNDRY COMPANY
   (4) AMERICAN DUCTILE IRON PIPE
   (5) CLOW PIPE (MCWANE, INC.)
L. PIPE, PLASTIC: PLASTIC PIPE, C-900 PVC PER ANSI/AWWA C900, CLASS 150, SIZES 6" THROUGH 12". NSF61 APPROVED. FURNISHED IN LAYING LENGTHS OF 20'. THE BARREL SHALL CONFORM TO THE OUTSIDE DIMENSIONS OF STEEL PIPE (IPS) OR CAST IRON (CI) PIPE EQUIVALENT AND THE WALL THICKNESS OF DIMENSION-RATIO (DR) 18
M. POLYETHYLENE ENCASEMENT (POLYWRAP): FOR ALL PIPELINE AND RELATED FITTINGS INSTALLED, EXCEPT FOR THE COOLIDGE DIVISION. MINIMUM 8 MIL. AND INSTALLED PER AWWA C105/A21.5-93 AND ASTM A-674-89. MANUFACTURED BY THE PACIFIC STATES CAST IRON PIPE COMPANY. THE WRAPPING TAPE SHALL BE MINIMUM 10 MIL. VINYL TAPE. NO DUCT TAPE SHALL BE USED.
N. COUPLING: MUELLER, STRAIGHT THREE PART UNION, TESTED TO MEET ANSI/AWWA C800, H15403, CONDUCTIVE COMPRESSION.
MUELLER, H15428, STRAIGHT COUPLING, CONDUCTIVE COMPRESSION BY MALE IRON PIPE, TESTED TO MEET ANSI/AWWA C800 SPECIFICATION, SIZE: 2".
MUELLER, H15451, STRAIGHT COUPLING, CONDUCTIVE COMPRESSION BY FEMALE IRON PIPE, TESTED TO MEET ANSI/AWWA C800 SPECIFICATION. SIZE: 2".
VIKING JOHNSON BRAND, SOLD BY MUELLER: MAXIFIT STRAIGHT (2"-24"), MAXIFITXTRA STRAIGHT (4"-8") OR MAXISTEP TRANSITION, TESTED TO MEET AWWA/ANSI C.219-91 SPECIFICATIONS - CERTIFIED TO ISO 9001:1994 / SMITH - BLAIR QUANTUM.
O. STOP, ANGLE METER, BALL: MUELLER, VALVE, B24258, CONDUCTIVE COMPRESSION BY METER SWIVEL NUT, TESTED TO MEET ANSI/AWWA C800, SIZE 5/8" X ¾" X ¾" FOR A ¾" SERVICE OR SIZE 1" FOR A 1" SERVICE. MUELLER, VALVE, B24265, FEMALE PIPE THREAD BY METER SWIVEL NUT, TESTED TO MEET ANSI/AWWA C800, SIZE 5/8" X ¾" X ¾" FOR A ¾" SERVICE OR SIZE 1" FOR A 1" SERVICE.
P. STOP, CORP: MUELLER, BALL VALVE, B25008, TAPER THREAD BY CONDUCTIVE COMPRESSION, TESTED TO MEET ANSI/AWWA C800 SPECIFICATION, SIZES: ¾", 1" AND 2". MUELLER, BALL VALVE, B25028, IRON PIPE THREAD BY CONDUCTIVE COMPRESSION, TESTED TO MEET ANSI/AWWA C800 SPECIFICATION. SIZES ¾", 1", AND 2". MUELLER, 300 BALL CURB VALVE, B-25122, TAPER THREAD BY CONDUCTIVE COMPRESSION, TESTED TO MEET ANSI/AWWA C800 SPECIFICATIONS, SIZE: 2". (2" SERVICE)
Q. STOP, CURB, ORISEAL VALVE, H10291, IRON PIPE THREAD BY IRON PIPE THREAD, QUARTER TURN CHECK, BRASS, TESTED TO 300 PSI WORKING PRESSURE, TESTED TO MEET ANSI/AWWA C800 SPECIFICATION, SIZE: 2".
MUELLER, B20283, MUELLER 300 BALL CURB VALVE, FEMALE IRON PIPE BY FEMALE IRON PIPE, QUARTER TURN CHECK, TESTED TO MEET ANSI/AWWA C800 SPECIFICATION, SIZE: 2". (BLOW-OFF E-9-8-1).
R. TAPPING SADDLE: SMITH BLAIR, CAST BRONZE ASTM-B584 85-5-5-5, DOUBLE STRAP, IRON PIPE THREADS, MODELS 321 AND 323 WASHERS ARE SILICON BRONZE, ASTM-B36. GASKETS ARE GRADE 60 BUNA N, OR MUELLER BRONZE DOUBLE STRAP SERVICE SADDLE, BR 2 B SERIES, CAST BRONZE, ASTM-B585, 85-5-5-5, OR H16084, 200 PSIG, MEETS ANSI/AWWA C800.
S. TAPPING SLEEVE: MUELLER H304 STAINLESS STEEL TAPPING SLEEVE, JCM 432 18-8 TYPE 304 STAINLESS STEEL TAPPING SLEEVE, ROMAC "SST" TYPE 304 STAINLESS STEEL TAPPING SLEEVE OR CASCADE-STYLE CST-EX STAINLESS STEEL PRESSURE-RATED TAPPING SLEEVE.
T. TAPPING VALVE: MUELLER RESILIENT WEDGE TAPPING VALVE, CATALOG NUMBER T-2360-16, CLASS 125, SIZES 4" THROUGH 12"; T-2361-16, CLASS 125, SIZES 14" TO 36" ALL WITH TYPE 304 STAINLESS STEEL FASTENERS, BYPASS VALVES ARE REQUIRED ON 18" - 36" VALVES FLANGE BY MECHANICAL JOINT PER ANSI/AWWA C111, IRON WEDGE, NON-RISING STEM. EPOXY COATED INTERIOR/EXTERIOR PER ANSI/AWWA C550 FOR NSF 61 COMPLIANCE. 250 PSI RANGE FOR VALVES 4" TO 12". 150 PSI RANGE FOR VALVES 14" TO 36".
U. U-BRANCH: MUELLER, H15364, 1" MALE IRON PIPE BY ¾" MALE IRON PIPE, TESTED TO MEET ANSI/AWWA C800 SPECIFICATION. SIZE: 1" X ¾" X 13½", STRAIGHT LINE.
V. VALVE BOXES: VALVE BOX WITH COVER, ADJUSTABLE, TYLER 562-A OR EQUAL, MADE OF CAST IRON.
W. VAULTS: UTILITY VAULT COMPANY, CHANDLER, AZ.
   (1) 4484-WA CONCRETE VAULT WITH A 3660 ALUMINUM DOUBLE TORSION DOOR WITH A RECESSED PADLOCK HASP, TWO - 18" X 24" CENTER KNOCKOUTS.
   (2) 575-WA CONCRETE VAULT WITH A 4874 ALUMINUM DOUBLE TORSION DOOR WITH A RECESSED PADLOCK HASP, TWO - 18" X 24" CENTER KNOCK OUTS AND ADJUSTABLE FRAME.
   (3) 612-5X-WA CONCRETE VAULT WITH A 4874 ALUMINUM DOUBLE TORSION DOOR WITH A RECESSED PADLOCK HASP, TWO - 18" X 24" CENTER KNOCKOUTS.
X. VALVE, METER: MUELLER, B24265-1, MUELLER 300 BALL ANGLE METER VALVE, FEMALE IRON PIPE BY METER NUT, QUARTER TURN CHECK, LOCK WING, TESTED TO MEET ANSI/AWWA C800 SPECIFICATION. SIZE: 1"MUELLER, B25170, MUELLER 300 BALL STRAIGHT VALVE, CONDUCTIVE COMPRESSION BY FEMALE IRON PIPE, QUARTER TURN CHECK, LOCK WING, TESTED TO MEET ANSI/AWWA C800 SPECIFICATION. SIZE: 1".
Y. YOKES, METER: RELOCATOR TYPE COPPER METER YOKE WITH HORIZONTAL INLET AND OUTLET AND METER THREAD ENDS, B24118, WITH LOCK WING MUELLER 300 ANGLE BALL VALVE, FULL PORT, SIZES: 1" X 12", 5/8" X ¾" X 7", 5/8 X ¾" X 9". MUELLER, 2" COPPER METER YOKE WITH HORIZONTAL INLET AND OUTLET AND FEMALE IRON PIPE THREADS, B2423-99000, WITH LOCK WING MUELLER 300 BALL ANGLE METER VALVES ON INLET AND OUTLET RISERS. RAISED 1" BY-PASS WITH LOCK WING MUELLER 300 BALL VALVE.
Z. THE CONTRACTOR ALSO WILL BE REQUIRED TO PROVIDE THE FOLLOWING MATERIALS, THE COST OF WHICH WILL BE INCLUDED IN ITS UNIT BID PRICE: ALL MATERIAL AND CONCRETE FOR THRUST BLOCKS, OTHER ANCHORS, REINFORCING STEEL; ALL GRAVEL, CRUSHED STONE, A.B.C., EARTH, SAND OR SCREENED MATERIAL WHICH MAY BE REQUIRED; ALL MATERIAL FOR BRACING AND SHORING TRENCHES AND FOR CONSTRUCTION OF FORMS; ALL BARRICADES AND TRAFFIC CONTROL EQUIPMENT; ALL MATERIAL FOR PAVING REPLACEMENT AND ANY WATER USED FOR COMPACTION OF BACKFILL

4. INSTALLATION OF MATERIALS

A. ALL MATERIALS ARE TO BE INSTALLED IN ACCORDANCE WITH MANUFACTURER'S RECOMMENDATIONS UNLESS OTHERWISE DIRECTED BY THESE SPECIFICATIONS.
B. ALL PIPE, FITTINGS AND VALVES SHALL BE LAID TRUE TO THE LINES, GRADES AND LOCATIONS ESTABLISHED BY THE SPECIFICATIONS AND THE CONSTRUCTION DRAWINGS.
C. THE ENDS AND INSIDE OF THE PIPE SHALL BE THOROUGHLY CLEANED AND INSPECTED FOR DAMAGE. NO DAMAGED MATERIALS SHALL BE INSTALLED IN THE WATER DISTRIBUTION SYSTEM
D. WHENEVER THE WORK CEASES FOR ANY REASON, ALL OPEN PIPELINE ENDS SHALL BE TIGHTLY PLUGGED BY THE CONTRACTOR. PLUGS SHALL BE WATERTIGHT AND APPROVED BY THE COMPANY.
E. CONCRETE THRUST BLOCKS OF THE SIZES REQUIRED BY THE PLANS AND SPECIFICATIONS ARE TO BE PROVIDED AT ALL VALVES, CHANGES IN DIRECTION OR SIZE, OR AT ANY OTHER POINT WHERE AN UNBALANCED THRUST DUE TO WATER PRESSURE WOULD EXIST. THRUST BLOCKS ARE TO BE FORMED TO PREVENT ANY CONCRETE FROM SPILLING OVER OR INTO A JOINT.
F. TRENCH CURVES AS SHOWN ON THE CONSTRUCTION DRAWINGS MAY BE MADE WITHOUT FITTINGS WHEN USING PUSH ON JOINT PIPE UP TO TWELVE INCHES (12") IN DIAMETER, IF THE DEFLECTION OF THE PIPE DOES NOT EXCEED FIVE DEGREES (5°) OR NINETEEN INCHES (19") PER EIGHTEEN-FOOT (18') LENGTH OF PIPE. THE MINIMUM RADIUS OF SUCH CURVES WILL BE TWO HUNDRED FIVE FEET (205').
G. PRIOR TO CONSTRUCTION, THE APPROPRIATE AGENCY(IES) WILL BE NOTIFIED AS REQUIRED BY THE PERMIT(S).
H. IT SHALL BE THE CONTRACTOR'S RESPONSIBILITY TO UNCOVER ALL EXISTING WATER LINES BEING CONNECTED TO, AND TO VERIFY THE LOCATION, DEPTH AND SIZE OF PIPE BEFORE ANY CONSTRUCTION BEGINS.
I. ANY CONSTRUCTION PERFORMED WITHOUT THE KNOWLEDGE OF THE DULY AUTHORIZED REPRESENTATIVE IS LIABLE FOR REMOVAL AND REPLACEMENT AT THE CONTRACTOR'S EXPENSE.
J. ALL FIRE HYDRANTS, FRAMES, COVERS AND VALVE BOXES, ETC. SHALL BE ADJUSTED TO FINISHED GRADE PRIOR TO THE PLACING OF THE ASPHALT CONCRETE SURFACE COURSE BY THE CONTRACTOR (WHERE APPLICABLE)
K. AIR RELEASE VALVES SHALL BE INSTALLED AT WATER SYSTEM HIGH POINTS PER STANDARD DETAIL E-9-8-2.
L. ALL WATER SERVICES SHALL BE SET A MINIMUM OF TWO FEET (2') ON THE CUSTOMER'S PROPERTY, PREFERABLY WITHIN THE P.U.E AND NOT WITHIN RIGHT-OF-WAY.
M. UNLESS OTHERWISE SPECIFIED ON THE CONSTRUCTION DRAWINGS, ALL WATER MAINS SHALL BE INSTALLED FIVE FEET (5') FROM THE PROPERTY LINE INSIDE THE RIGHT-OF-WAY OR EASEMENT.
N. WATER VALVES SHALL BE SPACED NOT MORE THAN FIVE HUNDRED FEET (500') IN COMMERCIAL DISTRICTS AND NOT MORE THAN EIGHT HUNDRED FEET (800') IN OTHER DISTRICTS. VARIATIONS MAY BE REQUIRED FOR TRANSMISSION MAINS OR SPECIAL APPLICATIONS.
O. INSTALLATION OF WATER LINE CASING SHALL BE PER STANDARD SPECIFICATION E-9-24-1.
P. TRACER WIRE AND WARNING TAPE ARE TO BE INSTALLED ON ALL MAINS, TEES, CROSSES, ELLS AND FIRE HYDRANT LATERALS. THEY WILL NOT BE INSTALLED ON SERVICE LINES. THE TRACER WIRE WILL BE INSTALLED ON THE WATER MAIN 45 DEGREES FROM THE VERTICAL CENTERLINE OF THE PIPE AND SHALL BE TAPED TO THE FITTINGS DIRECTLY AND ON THE MAIN EVERY 10 FEET USING A MINIMUM 10 MIL VINYL TAPE. THE TRACER WIRE SHALL BE PLACED BETWEEN THE VALVE RISER AND BOX WITH A MINIMUM OF 12" OF WIRE INSIDE.
Q. THE WARNING TAPE SHALL BE INSTALLED A MINIMUM OF TWO FEET BELOW THE SURFACE, BEING MEASURED FROM FINAL GRADE, DIRECTLY OVER THE CENTER OF THE PIPE. ANY SPLICES IN THE TRACER WIRE SHALL BE JOINED USING WATERPROOF CONNECTORS. ANY SPLICES IN THE WARNING TAPE SHALL BE JOINED USING MINIMUM 10 MIL VINYL TAPE. THE TRACER WIRE SHALL BE TESTED FOR CONTINUITY AFTER BACKFILL AND COMPACTION, BUT BEFORE PAVING. ANY DETECTED DAMAGES TO THE WIRE SHALL BE REPAIRED BEFORE PAVING WILL BE ALLOWED.

5. BACKFILL OF WATER MAIN TRENCHES

A. BACKFILL OF ANY EXCAVATION SHALL CONFORM TO THE REQUIREMENTS OF ANY OF THE GOVERNMENTAL AGENCIES HAVING JURISDICTION OVER THE LOCATION. IF NO GOVERNMENTAL AGENCY HAVING SUCH JURISDICTION SPECIFIES BACKFILL OR COMPACTION REQUIREMENTS, AND NO SPECIAL REQUIREMENTS ARE SHOWN ON THE CONSTRUCTION DRAWINGS, THE PROCEDURE SET FORTH IN THIS SECTION WILL APPLY FOR WATER LINE TRENCHES.
B. THE BEDDING MATERIAL ABOVE THE PIPE AND BACKFILL MATERIAL SHALL BE COMPACTED TO A MINIMUM OF 70% COMPACTION WITHIN A UTILITY EASEMENT AND 80% COMPACTION WITHIN A RIGHT-OF-WAY AS DETERMINED BY AASHTO T-99 METHOD A AND T-191. IF WATER SETTLING IS USED FOR COMPACTION, IT IS THE RESPONSIBILITY OF THE CONTRACTOR TO PREVENT THE PIPE FROM FLOATING
C. THE BEDDING MATERIAL SHALL BE EITHER NATIVE MATERIAL, 100% OF WHICH WILL PASS THROUGH A ONE AND ONE-HALF INCH (1½") SCREEN AND AT LEAST 20% OF WHICH WILL PASS THROUGH A NUMBER-8 SCREEN, OR IMPORTED MATERIAL WHICH CONFORMS TO M.A.G. SPECIFICATIONS FOR A.B.C. OR TYPE-B SELECT MATERIALS. BEDDING MATERIAL SHALL BE USED BELOW AND AROUND THE PIPE AND A MINIMUM OF TWELVE INCHES (12") ABOVE THE PIPE. SHADE AND BEDDING MATERIAL TO BE MECHANICALLY COMPACTED PRIOR TO REMAINDER OF TRENCH BACK-FILL.
D. THE REMAINDER OF THE TRENCH SHALL BE BACKFILLED WITH NATIVE OR IMPORTED MATERIAL WHICH SHALL BE OF SOUND EARTHEN MATERIAL FREE FROM BROKEN CONCRETE, WOOD, BROKEN PAVEMENT, OR OTHER UNSUITABLE SUBSTANCES. EXCEPT AS OTHERWISE SPECIFIED, BACKFILL MAY BE MATERIAL CONTAINING NO PIECES LARGER THAN SIX INCHES (6") IN GREATEST DIMENSION
E. WHERE SETTLEMENT OCCURS, ADDITIONAL BACKFILL MATERIAL SHALL BE PLACED AND COMPACTED AND THE TRENCH SHALL BE BROUGHT TO FINAL GRADE.

6. HYDROSTATIC TESTING OF COMPLETED PIPELINES

A. HYDROSTATIC TESTING OF WATER PIPELINES WILL BE COMPLETED BEFORE THE NEW SYSTEM IS CONNECTED INTO THE EXISTING WATER SYSTEM SO THAT ALL TESTING CAN BE DONE AGAINST ALL NEW MATERIALS.
B. THE COMPLETED SECTION OF WATER PIPELINE TO BE TESTED SHALL BE SLOWLY FILLED WITH WATER WITH CARE BEING TAKEN TO EXPEL ALL AIR FROM THE PIPE. IF NECESSARY, THE PIPE WILL BE TAPPED AT HIGH POINTS TO VENT AIR.
C. THE CONTRACTOR SHALL PROVIDE ALL EQUIPMENT AND LABOR NECESSARY TO ACCOMPLISH THIS TESTING AND THE PRICE SHALL BE INCLUDED IN THE UNIT PRICES. THE CONTRACTOR SHALL NOTIFY THE COMPANY IN ADVANCE OF THE TESTING SO THAT THE COMPANY CAN SCHEDULE A DULY AUTHORIZED REPRESENTATIVE TO BE AT THE SITE DURING TESTING. THE CONTRACTOR, AT ITS OWN EXPENSE, SHALL MAKE ANY NECESSARY REPAIRS TO THE SYSTEM BEING TESTED IN ORDER TO CAUSE THE SECTION BEING TESTED TO MEET THE TEST LIMITS SET BELOW. THE CONTRACTOR MAY REQUEST AUTHORIZATION OF THE COMPANY TO CONNECT THE NEW PIPELINES TO THE EXISTING SYSTEM PRIOR TO COMPLETION OF PRESSURE TESTING WHEN, IN THE COMPANY'S SOLE OPINION AND JUDGMENT, CONDITIONS WARRANT SUCH CONNECTION.
D. THE CONTRACTOR SHALL ASSUME ALL RESPONSIBILITY TO COMPLETE PRESSURE TESTING TO COMPANY'S SPECIFICATIONS AFTER SUCH CONNECTION. INCLUDING, BUT NOT LIMITED TO, ISOLATION OF THE NEW PIPELINES FROM THE EXISTING SYSTEM, IF NECESSARY.
E. CONNECTIONS PRIOR TO COMPLETION OF PRESSURE TESTING SHALL NOT BE MADE UNLESS PRIOR COMPANY AUTHORIZATION HAS BEEN OBTAINED, AND ANY EXTRA EXPENSES RESULTING FROM SUCH CONNECTIONS SHALL BE THE SOLE RESPONSIBILITY OF THE CONTRACTOR.
F. LEAKAGE TESTS WILL BE FOR A PERIOD OF TWO HOURS AT 200± 5 PSI AT THE POINT OF LOWEST ELEVATION; LEAKAGE MAY NOT EXCEED 0.1 GALLONS PER HOUR PER ONE THOUSAND FEET (1,000') OF PIPE PER INCH OF DIAMETER. IF DRY UTILITIES ARE NOT INSTALLED, A SECOND PRESSURE TEST IS REQUIRED.

7. STERILIZATION AND FLUSHING OF COMPLETED WATER PIPELINES

A. STERILIZATION AND FLUSHING WILL CONFORM TO RECOMMENDATIONS OF ARIZONA STATE DEPARTMENT OF HEALTH SERVICES ENGINEERING BULLETIN NUMBER 8, LATEST EDITION, OR ANY FUTURE ARIZONA DEPARTMENT OF ENVIRONMENTAL QUALITY BULLETINS. CONTRACTOR TO FOLLOW ALL CONDITIONS OF ANY DISCHARGE PERMIT.

8 NO OTHER UTILITIES ALLOWED IN OR NEAR WATER PIPELINE TRENCHES

A. NO OTHER UTILITY INSTALLATIONS WILL BE PERMITTED IN THE WATER PIPELINE TRENCH OR WITHIN FIVE FEET (5') OF THE COMPANY'S WATER PIPELINE WHEN RUNNING PARALLEL TO THE WATER PIPELINES

9. PROTECTION OF WATER MAINS NEAR SEWERS

IN ORDER TO PROTECT WATER MAINS FROM CONTAMINATION BY SEWERS, THE INSTALLATION OF THE WATER MAINS MUST CONFORM TO THE FOLLOWING REQUIREMENTS:

A. HORIZONTAL - WHEN WATER LINES AND SEWERS ARE LAID PARALLEL WITH EACH OTHER, THE HORIZONTAL DISTANCE BETWEEN THEM SHALL NOT BE LESS THAN SIX FEET (6') EACH LINE SHALL BE LAID ON UNDISTURBED OR BEDDED MATERIAL IN A SEPARATE TRENCH. WHERE CONDITIONS PREVENT THE MINIMUM HORIZONTAL SEPARATION SET FORTH ABOVE, EXTRA PROTECTION WILL BE REQUIRED. EXTRA PROTECTION SHALL CONSIST OF CONSTRUCTING THE SEWER MAIN WITH MECHANICAL JOINT DUCTILE IRON PIPE OR WITH SLIP-JOINT DUCTILE IRON PIPE IF JOINT RESTRAINT IS PROVIDED, OR ENCASING BOTH THE WATER MAIN AND SEWER MAIN IN CONCRETE SEE DETAIL E-9-30-1 AND E-9-30-2.

THE CONSTRUCTION DRAWINGS SHALL INDICATE THE INSTALLATION REQUIREMENTS. THE DRAWINGS SHOWING THESE EXCEPTIONS SHALL HAVE BEEN APPROVED BY THE APPROPRIATE STATE AND/OR COUNTY HEALTH DEPARTMENT. REFER TO THE DIAGRAM BELOW FOR CLARIFICATION.

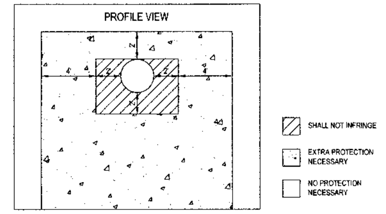

UNDER NO CIRCUMSTANCES WILL THE HORIZONTAL SEPARATION BETWEEN SEWER MAINS AND WATER MAINS BE LESS THAN TWO FEET (2'). ALL DISTANCES ARE TO BE MEASURED FROM THE OUTSIDE OF THE SEWER MAIN TO THE OUTSIDE OF THE WATER MAIN.

B. VERTICAL - WHEN A WATER MAIN IS PARALLEL WITH OR CROSSES A SEWER MAIN WITHIN TWO FEET (2') ABOVE THE SEWER OR GREATER THAN TWO FEET (2') BELOW THE SEWER, EXTRA PROTECTION WILL BE REQUIRED. EXTRA PROTECTION SHALL CONSIST OF CONSTRUCTING THE SEWER MAIN WITH MECHANICAL JOINT DUCTILE IRON PIPE OR WITH SLIP-JOINT DUCTILE IRON PIPE IF JOINT RESTRAINT IS PROVIDED, OR ENCASING BOTH THE WATER MAIN AND SEWER MAIN IN CONCRETE. SEE DETAIL E-9-30-1 AND E-9-30-2.

THE CONSTRUCTION DRAWINGS SHALL INDICATE THE INSTALLATION REQUIREMENTS. THE DRAWINGS SHOWING THESE EXCEPTIONS SHALL HAVE BEEN APPROVED BY THE APPROPRIATE STATE AND/OR COUNTY HEALTH DEPARTMENT.

UNDER NO CIRCUMSTANCES WILL THE VERTICAL SEPARATION OF A SEWER MAIN INSTALLED ABOVE A WATER MAIN BE LESS THAN TWO FEET (2'). ALL DISTANCES ARE TO BE MEASURED FROM THE OUTSIDE OF THE SEWER MAIN TO THE OUTSIDE OF THE WATER MAIN. REFER TO THE DIAGRAM ABOVE FOR CLARIFICATION.

C. WHEN UNUSUAL CONDITIONS SUCH AS, BUT NOT LIMITED TO, HIGHWAY OR BRIDGE CROSSINGS PREVENT THE WATER AND SEWER MAIN SEPARATIONS REQUIRED FROM BEING MET, THE APPROPRIATE STATE AND/OR COUNTY HEALTH DEPARTMENT WILL REVIEW AND MAY APPROVE REQUESTS FOR AUTHORIZATION TO USE ALTERNATE CONSTRUCTION TECHNIQUES, MATERIALS AND JOINTS ON A CASE-BY-CASE BASIS.

D. NO WATER PIPE SHALL PASS THROUGH OR COME INTO CONTACT WITH ANY PART OF A SEWER MANHOLE. THE MINIMUM HORIZONTAL SEPARATION BETWEEN WATER MAINS AND MANHOLES SHALL BE SIX FEET (6'), MEASURED FROM THE CENTER OF THE MANHOLE.

E. THE MINIMUM SEPARATION BETWEEN FORCE MAINS OR PRESSURE SEWERS AND WATER MAINS SHALL BE TWO FEET (2') VERTICALLY AND SIX FEET (6') HORIZONTALLY UNDER ALL CONDITIONS. WHERE A SEWER FORCE MAIN CROSSES ABOVE, OR LESS THAN SIX FEET (6') BELOW, A WATER LINE, THE SEWER MAIN SHALL BE ENCASED IN AT LEAST SIX INCHES (6") OF CONCRETE FOR TEN FEET (10') ON EITHER SIDE OF THE WATER MAIN. REFER TO THE DIAGRAM BELOW FOR CLARIFICATION

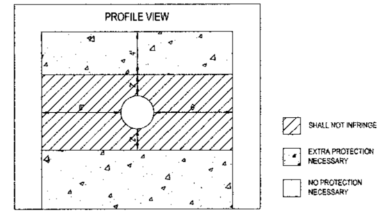

F. SEWER MAINS (GRAVITY, PRESSURE, FORCE) SHALL BE KEPT A MINIMUM OF FIFTY FEET (50') FROM DRINKING WATER WELLS, UNLESS THE FOLLOWING CONDITIONS ARE MET:
   1. WATER MAIN PIPE, PRESSURE TESTED IN PLACE TO 50 PSI WITHOUT EXCESSIVE LEAKAGE, MAY BE USED FOR GRAVITY SEWERS AT DISTANCES GREATER THAN TWENTY FEET (20') FROM DRINKING WATER WELLS.
   2. WATER MAIN PIPE, PRESSURE TESTED IN PLACE TO 150 PSI WITHOUT EXCESSIVE LEAKAGE, MAY BE USED FOR PRESSURE SEWERS AND FORCE MAINS AT DISTANCES GREATER THAN TWENTY FEET (20') FROM DRINKING WATER WELLS
G. NO SEPTIC TANK/DISPOSAL FIELD SYSTEM SHALL BE CONSTRUCTED WITHIN ONE HUNDRED FEET (100') OF A DRINKING WATER WELL.
H. ALL DISTANCES ARE MEASURED PERPENDICULARLY FROM THE OUTSIDE OF THE SEWER MAIN TO THE OUTSIDE OF THE WATER MAIN. THESE SEPARATION REQUIREMENTS DO NOT APPLY TO BUILDING, PLUMBING OR INDIVIDUAL HOUSE SERVICE CONNECTIONS.
I. USE MECHANICAL JOINT DUCTILE IRON PIPE WITH MEGALUG THRUST RESTRAINTS A MINIMUM OF TEN (10') FEET ON EACH SIDE OF A SEWER OR STORM DRAIN CROSSING.

10. COMPACTION

A. WHEN CROSSING EXISTING WATER MAINS A MINIMUM OF 95% COMPACTION IS REQUIRED TO THE BOTTOM OF EXISTING MAINS.
B. ARIZONA WATER COMPANY REQUIRES THAT NO SLURRY BE PERMITTED TO CONTACT EXISTING CEMENT/ASBESTOS OR DUCTILE IRON PIPES, UNLESS AUTHORIZED BY THE COMPANY. SLURRY MAY BE POURED IN THE BOTTOM OF THE SEWER TRENCH STOPPING THREE INCHES (3") BELOW THE EXISTING WATER MAIN. THE BACKFILL USED AROUND THE MAIN SHOULD BE AB IN SUFFICIENT DEPTH TO PREVENT SLURRY FROM CONTACTING EXISTING MAIN.

11. WATER MAIN MATERIAL SPECIFICATION

A. DUCTILE IRON PIPE (PUSH-ON TYPE) MINIMUM CLASS 350, CEMENT LINED AND CONFORM TO AWWA C151
B. ALL MAIN LINE VALVES SHALL CONFORM TO AWWA C500 WITH A MINIMUM WORKING PRESSURE OF 200 PSI.
C. ALL CAST IRON FITTINGS TO BE CEMENT LINED IN ACCORDANCE WITH AWWA C104 AND SHALL CONFORM TO AWWA C110 WITH A MINIMUM WORKING PRESSURE OF 250 PSI. EXCEPT FOR THE COOLIDGE SYSTEM - SEE NOTE 4L.
D. MAXIMUM JOINT DEFLECTION FOR 6" MECHANICAL JOINT DUCTILE IRON PIPE IS SEVEN DEGREES, SEVEN MINUTES (7°, 7') OR TWENTY-SEVEN INCHES (27") PER EIGHTEEN-FOOT (18') LENGTH PIPE, FOR A MAXIMUM CURVE OF ONE HUNDRED FORTY-FIVE FEET (145')
E. MAXIMUM JOINT DEFLECTION FOR 8" AND 12" MECHANICAL JOINT DUCTILE IRON PIPE IS FIVE DEGREES, TWENTY-ONE MINUTES (5° 21') OR TWENTY INCHES (20") PER EIGHTEEN-FOOT (18') LENGTH PIPE, FOR A MAXIMUM CURVE OF ONE HUNDRED NINETY-FIVE FEET (195').
F. MAXIMUM JOINT DEFLECTION FOR 6", 8" AND 12" PUSH-ON JOINT DUCTILE IRON PIPE IS FIVE DEGREES (5°) OR NINETEEN INCHES (19") PER EIGHTEEN-FOOT (18') LENGTH PIPE FOR A MAXIMUM CURVE OF TWO HUNDRED FIVE FEET (205').

REVISIONS:

7800 North 16th Street Suite 205, Phoenix Arizona 85020 USA
T 1 602 216 7200 F 1 602 216 7201
E phxmail@ghd.com W www.ghd.com

The installation shown is to be installed in accordance with the Arizona Water Company standard specifications on file with the Arizona Department of Environmental Quality

CALL TWO WORKING DAYS BEFORE YOU DIG
263-1100
1-800-STAKE-IT
(OUTSIDE MARICOPA COUNTY)

W.A. No.:		P.E. No.:
SYSTEM:		
LEGAL DESC.:	SEC 17 - T5S - R9E	
TAX DIST.:		
DATE:	12/17/2014	SCALE: NTS
DRAWN BY:	AEF	CHECKED BY: FHT

ARIZONA WATER COMPANY
3805 N. BLACK CANYON HWY. POST OFFICE BOX 29006
PHOENIX, ARIZONA 85038-9006
(602) 240-6860

PROJECT DESC.: VALLEY FARMS ARSENIC REMOVAL FACILITY
10804 E. VAH KI INN ROAD - VALLEY FARMS, AZ 85191

PROJECT SHEET DESC.: NOTES

Registered Professional Engineer — CERTIFICATE NO. 35921 — WILLIAM D. ROBERTS — ARIZONA, U.S.A. — Expires 3/31/16

DWG. No.: G3

SHEET 3 OF 25

G:\84\11476\CADD\Drawings\Civil\84-11476-G03.dwg PLOT: 12/23/2014 3:18:47pm

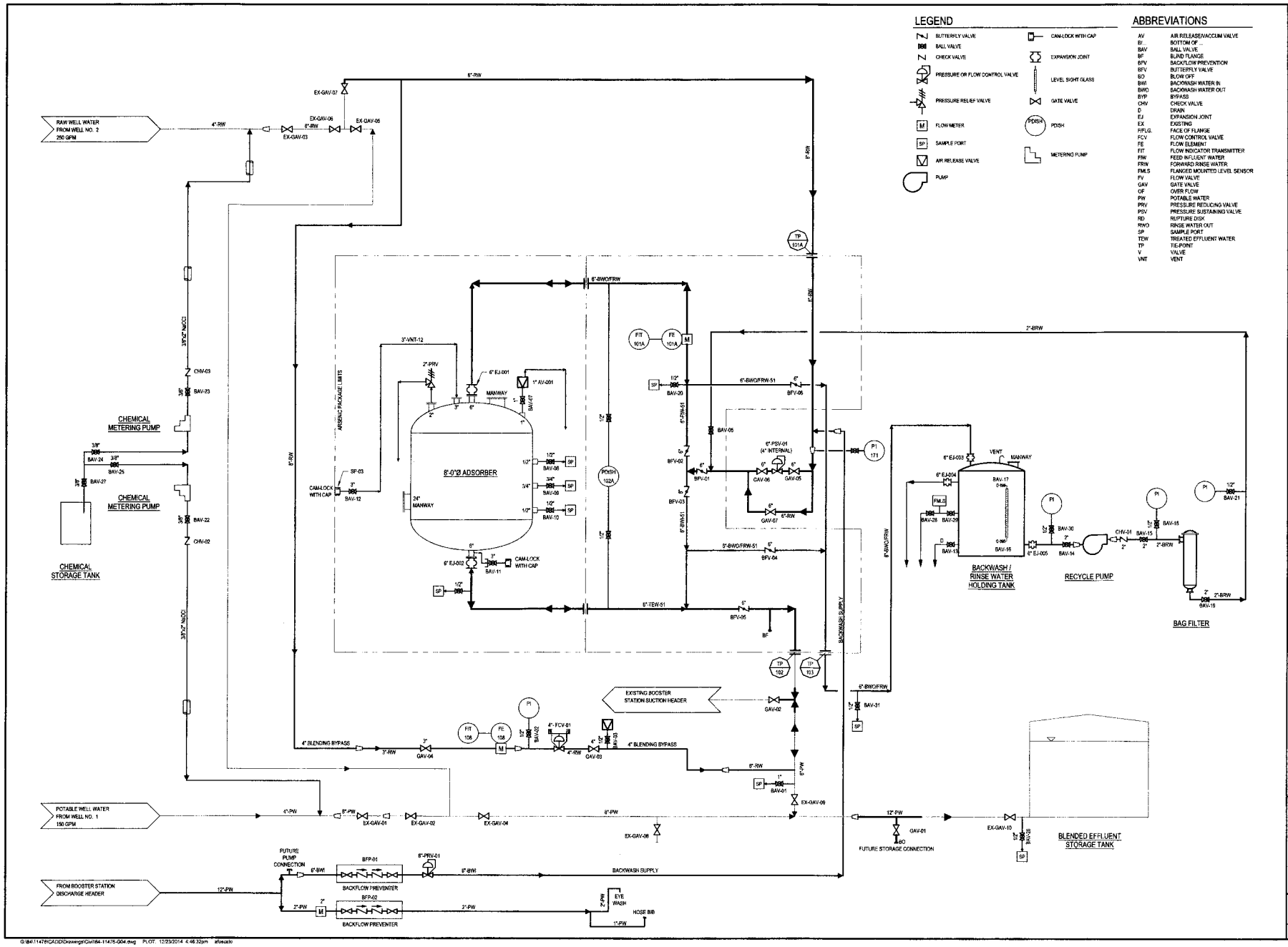

LEGEND

- BUTTERFLY VALVE
- BALL VALVE
- CHECK VALVE
- PRESSURE OR FLOW CONTROL VALVE
- PRESSURE RELIEF VALVE
- FLOW METER
- SAMPLE PORT
- AIR RELEASE VALVE
- PUMP
- CAM-LOCK WITH CAP
- EXPANSION JOINT
- LEVEL SIGHT GLASS
- GATE VALVE
- PDISH
- METERING PUMP

ABBREVIATIONS

AV	AIR RELEASE/VACCUM VALVE
BF	BOTTOM OF
BAV	BALL VALVE
BF	BLIND FLANGE
BFV	BACKFLOW PREVENTION
BFV	BUTTERFLY VALVE
BO	BLOW OFF
BWI	BACKWASH WATER IN
BWO	BACKWASH WATER OUT
BYP	BYPASS
CHV	CHECK VALVE
D	DRAIN
EJ	EXPANSION JOINT
EX	EXISTING
F/FLG.	FACE OF FLANGE
FCV	FLOW CONTROL VALVE
FE	FLOW ELEMENT
FIT	FLOW INDICATOR TRANSMITTER
FIW	FEED INFLUENT WATER
FRW	FORWARD RINSE WATER
FMLS	FLANGED MOUNTED LEVEL SENSOR
FV	FLOW VALVE
GAV	GATE VALVE
OF	OVER FLOW
PW	POTABLE WATER
PRV	PRESSURE REDUCING VALVE
PSV	PRESSURE SUSTAINING VALVE
RD	RUPTURE DISK
RWO	RINSE WATER OUT
SP	SAMPLE PORT
TEW	TREATED EFFLUENT WATER
TP	TIE-POINT
V	VALVE
VNT	VENT

7600 North 16th Street Suite 205 Phoenix Arizona 85020 USA
T 1.602.216.7200 F 1.602.216.7201
E phoenix@gkhd.com W www.gkhd.com

REFERENCE:

This installation shown is to be installed in accordance with the Arizona Water Company standard specifications and with the Arizona Department of Environmental Quality

Dial Before You Dig 263-1100 1-800-STAKE-IT (Dial 811 in Arizona)

W.A. No.:	
P.E. No.:	
SYSTEM:	
LEGAL DESC.:	SEC 17 - T5S - R9E
TAX DIST.:	
DATE:	12/17/2014
SCALE:	NTS
DRAWN BY:	SJS
CHECKED BY:	FHT

ARIZONA WATER COMPANY
3805 N. BLACK CANYON HWY. POST OFFICE BOX 29006
PHOENIX, ARIZONA 85038-9006
(602) 240-6860

PROJECT DESC.: VALLEY FARMS ARSENIC REMOVAL FACILITY
10804 E. VAH KI INN ROAD - VALLEY FARMS, AZ 85191

PROJECT SHEET DESC.: PROCESS FLOW DIAGRAM

CERTIFICATE OF SURVEY — 35921 WILLIAM D. ROBERTS — Expires 3/31/16

DWG. No.: G4

SHEET 4 OF 25

G:\B411478\CADD\Drawings\Civil\64-11478-G04.dwg PLOT: 12/23/2014 4:46:32pm afoscato

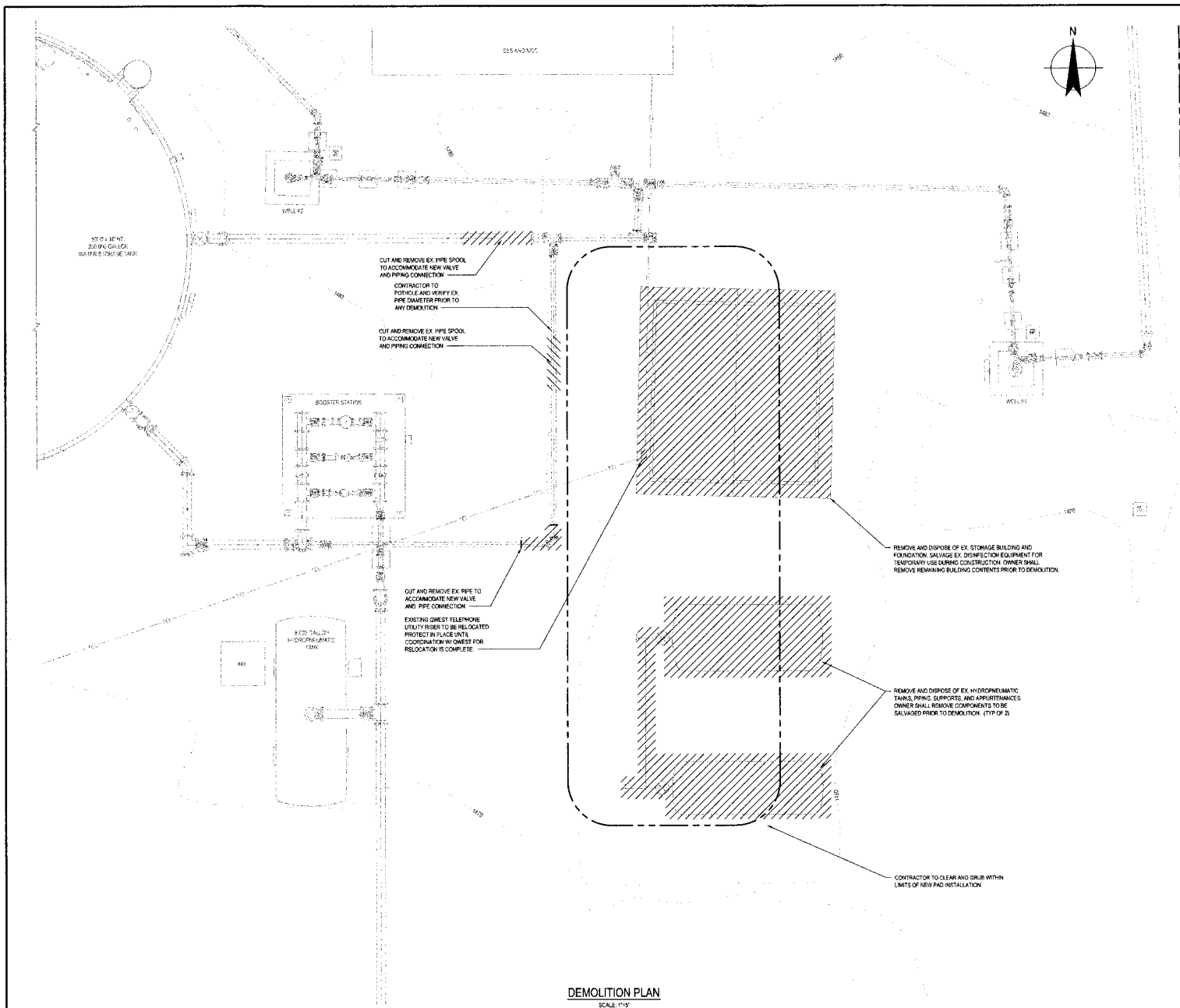

DEMOLITION PLAN

SCALE: 1"=5'

GENERAL NOTES

1. CONTRACTOR SHALL INSTALL SHEETING, SHORING, AND/OR PIPE SUPPORTS TO FACILITATE COMPLETE PROTECTION AND CONTINUAL OPERATION OF EXIST. EQUIPMENT (AS SHOWN OR EXPOSED DURING CONSTRUCTION) WITHIN THE WORK AREA. COORDINATE REPLACEMENT OF ALL DAMAGED OR DISTURBED UTILITIES BY CONTRACTOR OR ACTIVITIES ASSOCIATED WITH THIS PROJECT AS REQUIRED WITH UTILITY OWNER.
2. THE CONTRACTOR SHALL COORDINATE THE DEMOLITION WORK WITH THE COMPANY FOR ANY ITEMS TO BE SALVAGED.
3. CONTRACTOR TO POTHOLE ALL TIE-IN LOCATIONS TO VERIFY EXISTING PIPE SIZE, LOCATION, AND DEPTH. CONTRACTOR SHALL PROVIDE ALL EXTRA FITTINGS, REDUCERS, COUPLINGS, ETC. REQUIRED TO MAKE THE CONNECTION.
4. COORDINATE TIME AND LENGTH OF SERVICE INTERRUPTION PRIOR TO PIPE DEMOLITION WITH THE COMPANY IN WRITING.

0 2.5 5 7.5 10'

SCALE 1"=5' AT ORIGINAL SIZE

REVISIONS:

The installation shown is to be installed in accordance with the Arizona Water Company standard specifications on file with the Arizona Department of Environmental Quality

CALL TWO WORKING DAYS BEFORE YOU DIG
263-1100
1-800-STAKE-IT
(Outside Arizona County)

7600 North 16th Street Suite 205, Phoenix Arizona 85020 USA
T 1 602 216 7200 F 1 602 216 7201
E phoenix@ghd.com W www.ghd.com

W.A. No.:	P.E. No.:
SYSTEM:	
LEGAL DESC.:	SEC 17 - T5S - R9E
TAX DIST.:	
DATE: 12/17/2014	SCALE: 1"=5'
DRAWN BY: AEF	CHECKED BY: FHT

ARIZONA WATER COMPANY
3805 N. BLACK CANYON HWY. POST OFFICE BOX 29006
PHOENIX, ARIZONA 85038-9006
(602) 240-6860

PROJECT DESC.: VALLEY FARMS ARSENIC REMOVAL FACILITY
10804 E. VAH KI INN ROAD - VALLEY FARMS, AZ 85191

PROJECT SHEET DESC.: DEMOLITION PLAN

Registered Professional Engineer
CERTIFICATE NO. 35921
WILLIAM D. ROBERTS
Civil
Expires 3/31/16

DWG. No.: C1

SHEET 5 OF 25

G:\84\11476\CADD\Drawings\Civil\84-11476-C01.dwg PLOT: 12/23/2014 3:23:38pm atoft

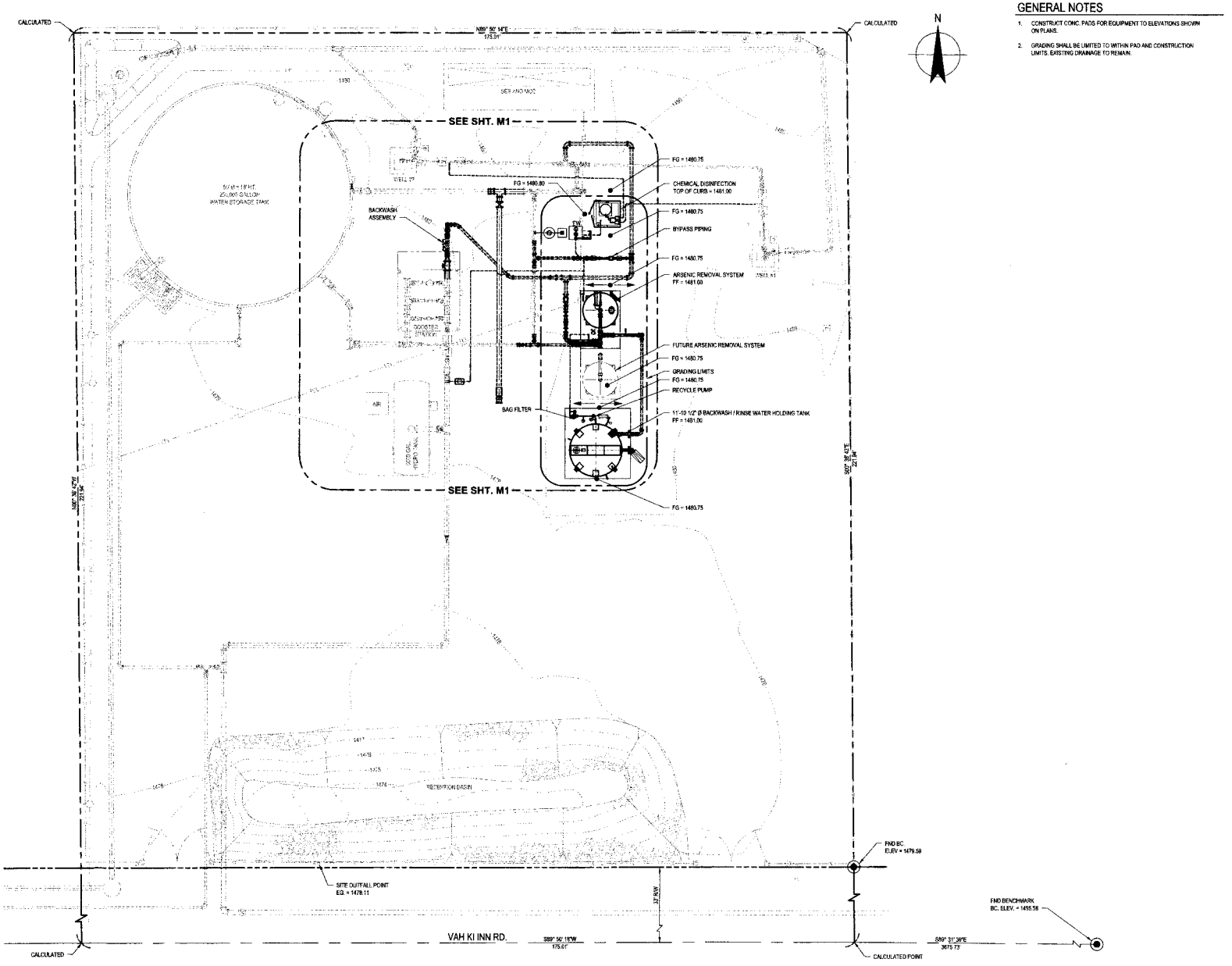

SITE PLAN

SCALE: 1"=10'

GENERAL NOTES

1. CONSTRUCT CONC. PADS FOR EQUIPMENT TO ELEVATIONS SHOWN ON PLANS.
2. GRADING SHALL BE LIMITED TO WITHIN PAD AND CONSTRUCTION LIMITS. EXISTING DRAINAGE TO REMAIN.

0 5 10 15 20'
SCALE 1"=10' AT ORIGINAL SIZE

REVISIONS

The installation shown is to be installed in accordance with the Arizona Water Company standard specifications on file with the Arizona Department of Environmental Quality

FILE NO. 263-1100
DWG. NO. 1480-STA-CE-1
(WORK ORDER NUMBER)

7500 North 16th Street Suite 205, Phoenix Arizona 85020 USA
T 1 602 216 7200 F 1 602 216 7201
E pnoemail@ghd.com W www.ghd.com

P.E. No.:	
SYSTEM:	
LEGAL DESC.:	SEC 17 - T5S - R9E
TAX DIST.:	
DATE: 12/17/2014	SCALE: AS SHOWN
DRAWN BY: AEF	CHECKED BY: FHT

ARIZONA WATER COMPANY
3805 N. BLACK CANYON HWY POST OFFICE BOX 29006
PHOENIX, ARIZONA 85038-9006
(602) 240-6860

PROJECT DESC.: VALLEY FARMS ARSENIC REMOVAL FACILITY
1084 E. VAH KI INN ROAD - VALLEY FARMS, AZ 85191

PROJECT SHEET DESC.: SITE LAYOUT, GRADING AND DRAINAGE

REGISTERED PROFESSIONAL ENGINEER
35921
WILLIAM D. ROBERTS
ARIZONA U.S.A.
Expires 3/31/16

DWG. No.: C2

SHEET 6 OF 25

G:\84111476\CADD\Drawings\Civil\84-11476-C02.dwg PLOT: 12/23/2014 10:06:48am stoff

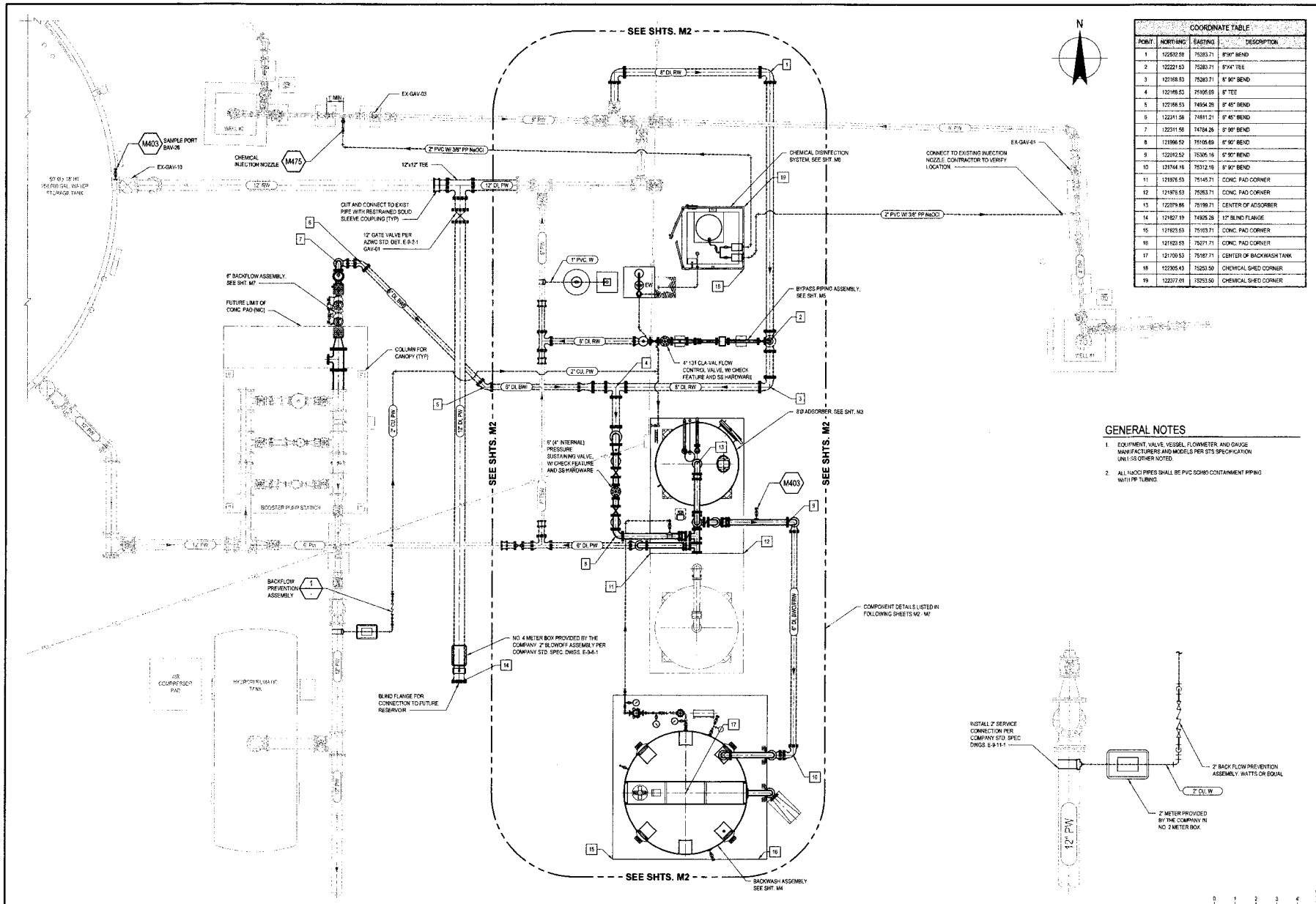

MECHANICAL PLAN

SCALE: 1"=4'

1 DETAIL

SCALE: 1"=2'

COORDINATE TABLE			
POINT	NORTHING	EASTING	DESCRIPTION
1	122532.58	75283.71	8"90° BEND
2	122221.53	75283.71	8"X4" TEE
3	122168.53	75283.71	8" 90° BEND
4	122168.53	75105.69	8" TEE
5	122168.53	74954.28	8" 45° BEND
6	122311.56	74811.21	8" 45° BEND
7	122311.56	74784.26	8" 90° BEND
8	121996.52	75105.69	8" 90° BEND
9	122012.52	75305.16	8" 90° BEND
10	121744.16	75312.16	8" 90° BEND
11	121976.53	75145.71	CONC. PAD CORNER
12	121976.53	75253.71	CONC. PAD CORNER
13	122079.86	75199.71	CENTER OF ADSORBER
14	121827.19	74926.28	12" BLIND FLANGE
15	121623.53	75103.71	CONC. PAD CORNER
16	121623.53	75271.71	CONC. PAD CORNER
17	121700.53	75187.71	CENTER OF BACKWASH TANK
18	122305.43	75253.50	CHEMICAL SHED CORNER
19	122377.01	75253.50	CHEMICAL SHED CORNER

GENERAL NOTES

1. EQUIPMENT, VALVE, VESSEL, FLOWMETER, AND GAUGE MANUFACTURERS AND MODELS PER STS SPECIFICATION UNLESS OTHER NOTED.
2. ALL NaOCl PIPES SHALL BE PVC SCH80 CONTAINMENT PIPING WITH PP TUBING.

REVISIONS:

The installation shown is to be installed in accordance with the Arizona Water Company Water Master Plan and in compliance with the Arizona Department of Environmental Quality

CALL TWO WORKING DAYS BEFORE YOU DIG 263-1100 1-800-STAKE-IT (602) 263-1100 (800) 782-5348

7600 North 16th Street Suite 205, Phoenix Arizona 85020 USA
T 1 602 216 7200 F 1 602 216 7201
E phxmail@ghd.com W www.ghd.com

R.A. No.: | P.E. No.:

SYSTEM:

LEGAL DESC.: SEC 17 - T3S - R8E

MAP DIST.:

DATE: 12/17/2014 | SCALE: AS SHOWN

DRAWN BY: SJS | CHECKED BY: FHT

ARIZONA WATER COMPANY

3805 N. BLACK CANYON HWY. POST OFFICE BOX 29006
PHOENIX, ARIZONA 85038-9006
(602) 240-6860

PROJECT DESC.: VALLEY FARMS ARSENIC REMOVAL FACILITY
1080A E. VAH KI INN ROAD - VALLEY FARMS, AZ 85191

PROJECT SHEET DESC.: MECHANICAL PLAN

CERTIFICATE OF ASSESSMENT ENGINEERING SERVICES 35921 WILLIAM D. ROBERTS III ARIZONA U.S.A.
Expires 3/31/15

DWG. No.: M1

SHEET 7 OF 25

G:\84111476\CADD\Drawings\Civil\84-11476-M01.dwg PLOT: 12/23/2014 3:47:50pm staff

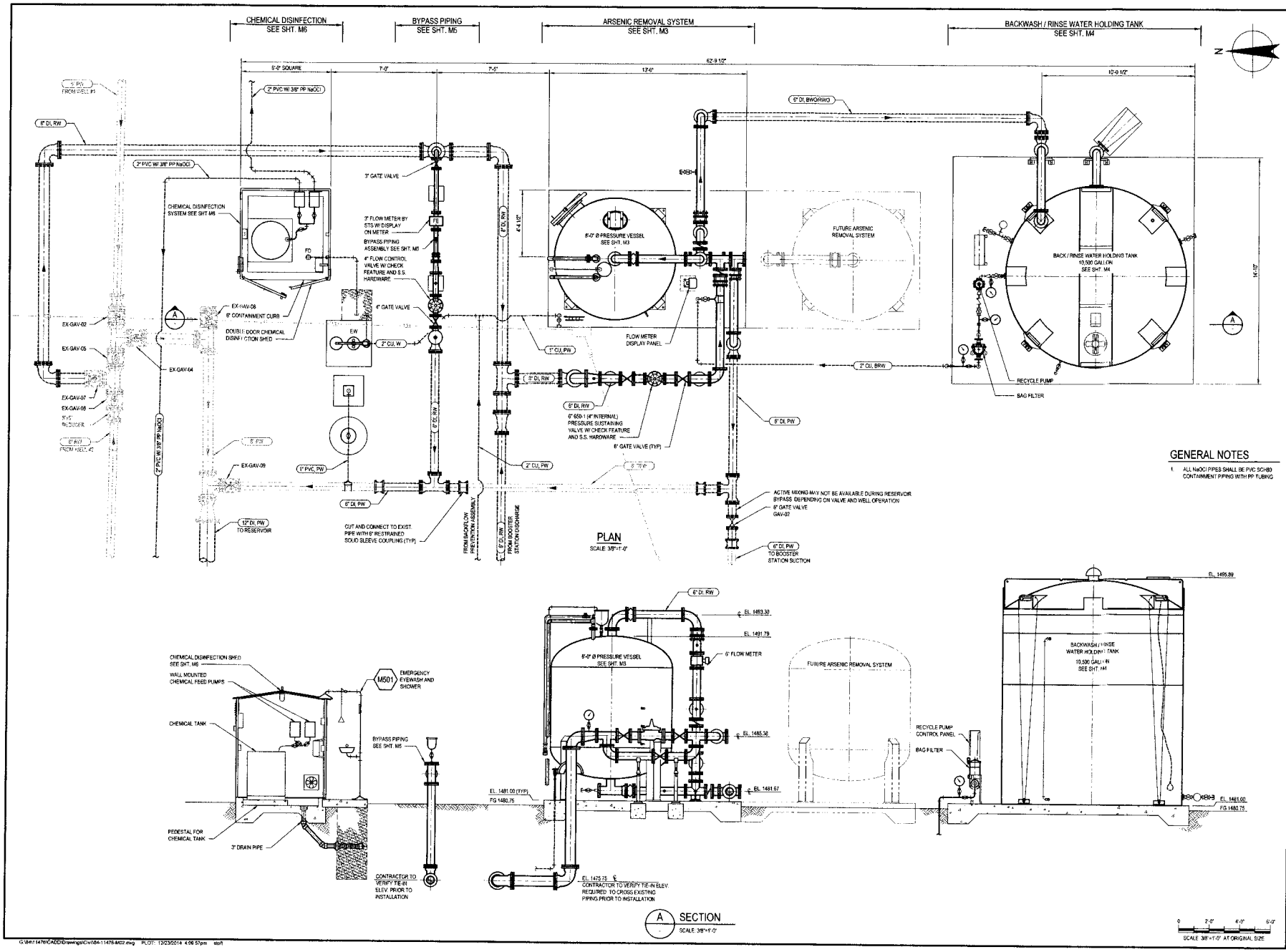

GENERAL NOTES

1. ALL NaOCl PIPES SHALL BE PVC SCH80 CONTAINMENT PIPING WITH PP TUBING

REVISIONS:

7600 North 16th Street Suite 205, Phoenix Arizona 85020 USA
T 1 602 216 7200 F 1 602 216 7201
E phxmail@ghd.com W www.ghd.com

The installation shown is to be installed in accordance with the Arizona Water Company standard specifications on file with the Arizona Department of Environmental Quality

CALL TWO WORKING DAYS BEFORE YOU DIG
263-1100
1-800-STAKE-IT
(ARIZONA WATER COMPANY)

W.O. No.: | P.E. No.:
SYSTEM:
LEGAL DESC.: SEC 17 - T5S - R9E
TAX DIST.:
DATE: 12/17/2014 | SCALE: AS SHOWN
DRAWN BY: SJS | CHECKED BY: FHT

ARIZONA WATER COMPANY
3805 N. BLACK CANYON HWY. POST OFFICE BOX 29006
PHOENIX, ARIZONA 85038-9006
(602) 240-6860

PROJECT DESC.: VALLEY FARMS ARSENIC REMOVAL FACILITY
10804 E. VAH KI INN ROAD - VALLEY FARMS, AZ 85191
PROJECT SHEET DESC.: ARSENIC REMOVAL SYSTEM LAYOUT

35921 WILLIAM D. ROBERTS
Registered Professional Engineer
Certificate No. 35921
Date Signed 12/17/14
ARIZONA, U.S.A.
Expires 3/31/16

DWG. No.: M2

SHEET 8 OF 25

G:\84\11476\CADD\Drawings\Civil\84-11476-M02.dwg PLOT: 12/23/2014 4:06:57pm stoft

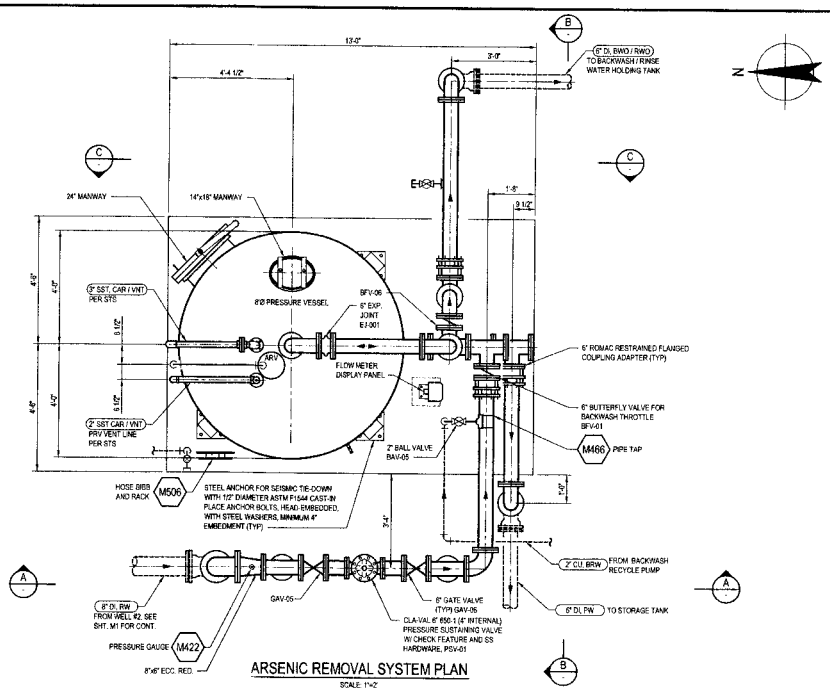

ARSENIC REMOVAL SYSTEM PLAN

SCALE: 1"=2'

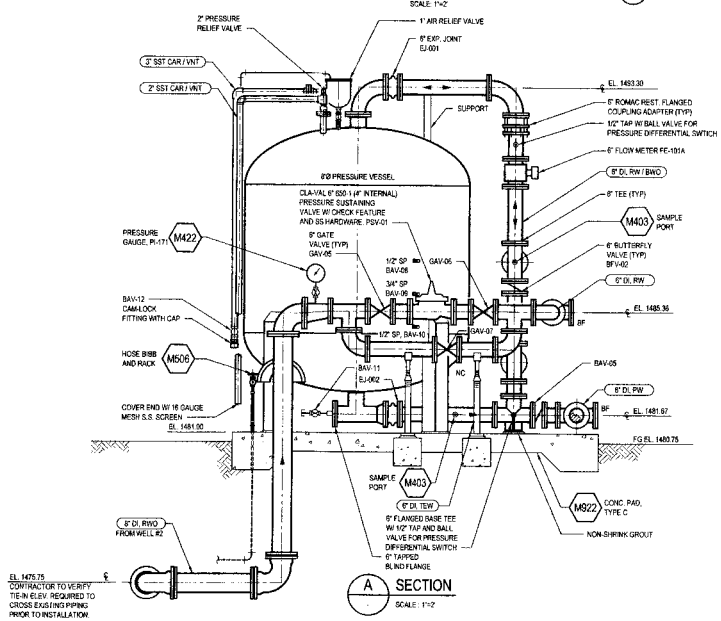

A SECTION

SCALE: 1"=2'

GENERAL NOTES

1. PRVIDE INSULATING COUPLINGS BETWEEN DISSIMILAR METALS.
2. EQUIPMENT, VALVE, VESSEL, FLOWMETER, AND GAUGE MANUFACTURERS AND MODELS PER STS SPECIFICATIONS U N O.
3. ALL ABOVE GROUND PIPING SHALL BE D.I.P., CLASS 350 WITH FLANGED JOINTS ABOVE GROUND PIPING SHALL INCLUDE EPOXY COATING IN ADDITION TO ITS FACTORY COATING. THE EPOXY COATING SHALL BE THEMEC AND AS FOLLOWS:
   - 3.1 SURFACE PREP. PER MANUFACTURER
   - 3.2 PRIMER: SERIES 95 OF N69 HI-BUILD EPOXOLINE ≥ 4.0 DFT.
   - 3.3 INTERMEDIATE: SERIES 66 OR N69 HI-BUILD EPOXOLINE ≥ 5.0 DFT.
   - 3.4 FINISH: SERIES 73, 1047, OR 1057 ENDURA SHIELD.
   - 3.5 COLOR: DESERT SANDS

EQUIPMENT TABLE

PRESSURE SUSTAINING VALVE	
1	QUANTITY
CLA-VAL	MAKE
850-1	MODEL
6" BODY (4" INTERNAL)	SIZE

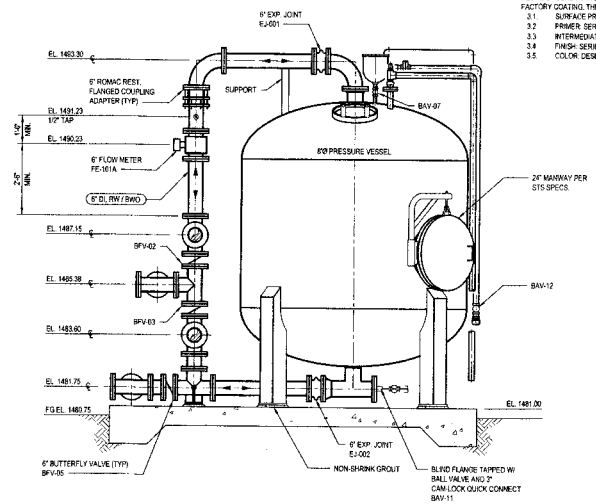

C SECTION

SCALE: 1"=2'

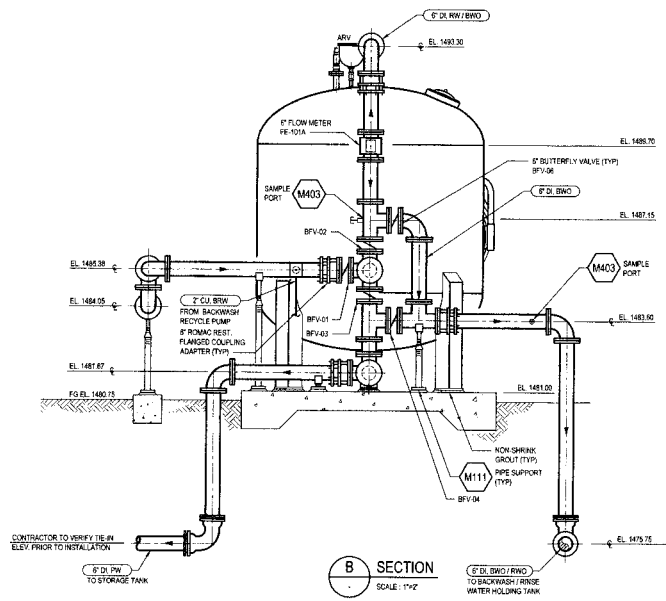

B SECTION

SCALE: 1"=2'

SCALE 1"=2' AT ORIGINAL SIZE

7650 North 16th Street Suite 205, Phoenix Arizona 85020 USA
T 1.602.216.7200 F 1.602.216.7201
E phxmail@ghd.com W www.ghd.com

REVISIONS:

The installation shown is to be installed in accordance with the Arizona Water Company standard specifications on file with the Arizona Department of Environmental Quality

Call Before You Dig 263-1100 1-800-STAKE-IT (www.azbluestake.com)

W.A. No.:	
T.E. No.:	
SYSTEM:	
LEGAL DESC.:	SEC 17 - T5S - R9E
TAX DIST.:	
DATE: 12/17/2014	SCALE: 1/2"=1'-0"
DRAWN BY: SJS	CHECKED BY: PHT

ARIZONA WATER COMPANY

3805 N. BLACK CANYON HWY. POST OFFICE BOX 29006
PHOENIX, ARIZONA 85038-9006
(602) 240-5860

PROJECT DESC.: VALLEY FARMS ARSENIC REMOVAL FACILITY
10804 E. VAH KI INN ROAD - VALLEY FARMS, AZ 85191

PROJECT SHEET DESC.: ADSORBER PLAN, SECTIONS, AND DETAILS

35921 WILLIAM D. ROBERTS
Expires 3/31/15

DWG. No.: M3

SHEET 9 OF 25

G:\64111476\CAD\Drawings\Civil\64-11476-M03.dwg PLOT: 12/23/2014 4:52:04pm stoft

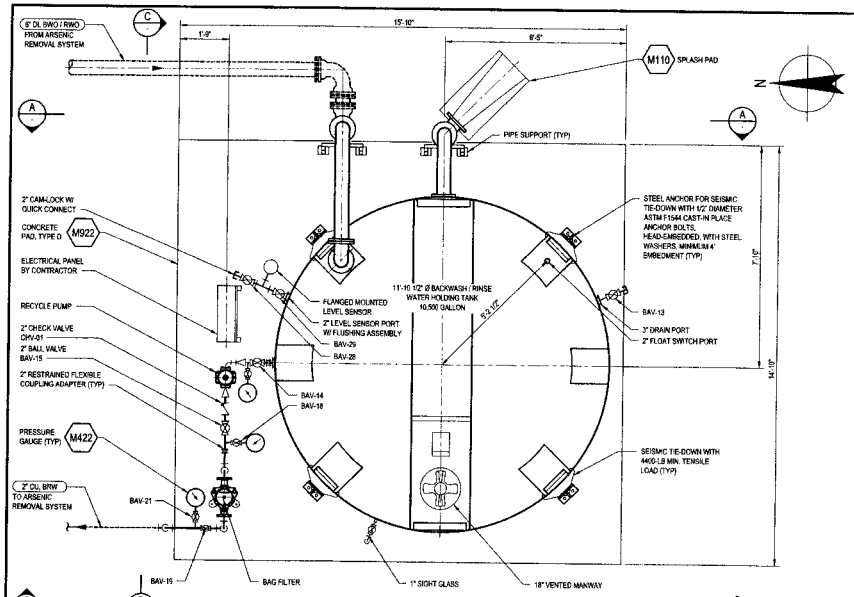

BACKWASH / RINSE WATER HOLDING TANK PLAN

SCALE: 1"=2'

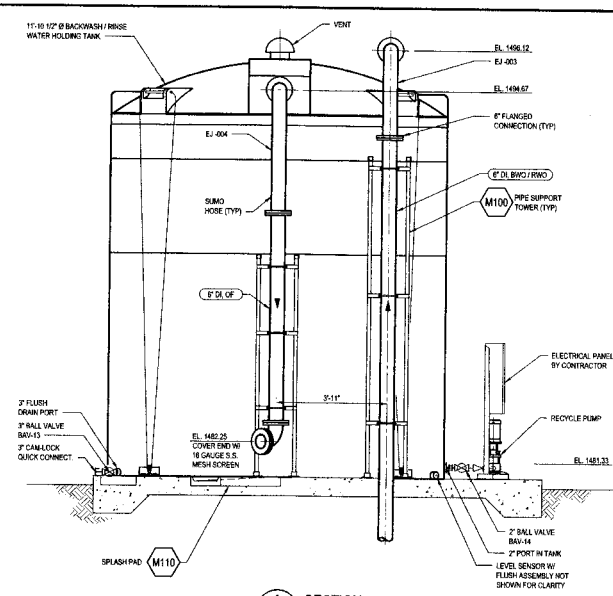

A SECTION

SCALE : 1"=2'

GENERAL NOTES

1. PROVIDE INSULATING COUPLINGS BETWEEN DISSIMILAR METALS.
2. EQUIPMENT, VALVE, VESSEL, FLOWMETER, AND GAUGE MANUFACTURERS AND MODELS PER STS SPECIFICATIONS U.N.O.
3. ALL ABOVE GROUND PIPING SHALL BE D.I.P., CLASS 350 WITH FLANGED JOINTS. ABOVE GROUND PIPING SHALL INCLUDE EPOXY COATING IN ADDITION TO ITS FACTORY COATING. THE EPOXY COATING SHALL BE TNEMEC AND AS FOLLOWS:
   - 3.1. SURFACE PREP: PER MANUFACTURER
   - 3.2. PRIMER: SERIES 69 OF N69 HI-BUILD EPOXOLINE ≥ 4.0 DFT.
   - 3.3. INTERMEDIATE: SERIES 66 OR N69 HI-BUILD EPOXOLINE ≥ 5.0 DFT.
   - 3.4. FINISH: SERIES 73, 1047, OR 1057 ENDURA SHIELD.
   - 3.5. COLOR: DESERT SANDS.

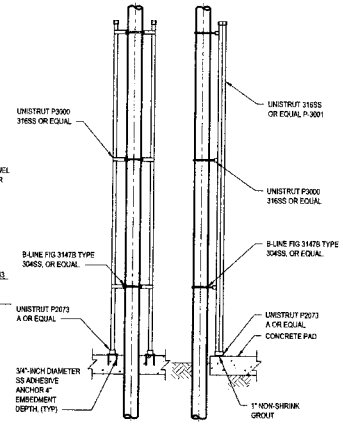

M100 PIPE SUPPORT RACK

SCALE : NTS

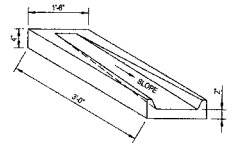

M110 SPLASH PAD

SCALE : NTS

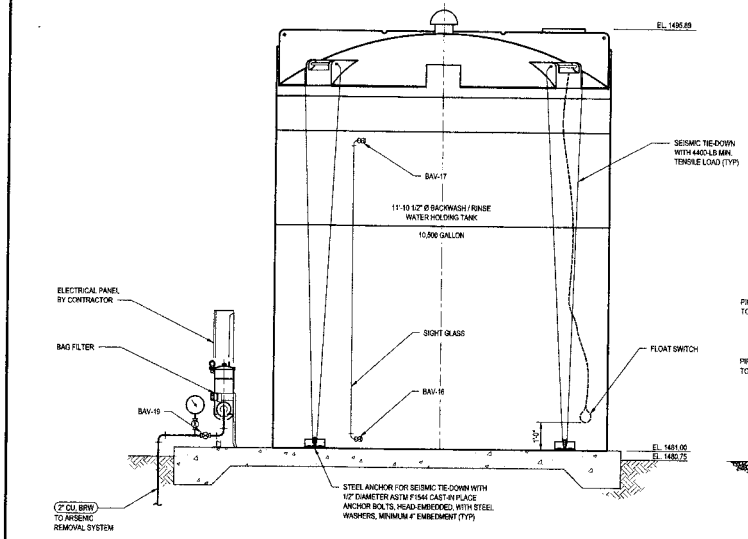

B SECTION

SCALE : 1"=2'

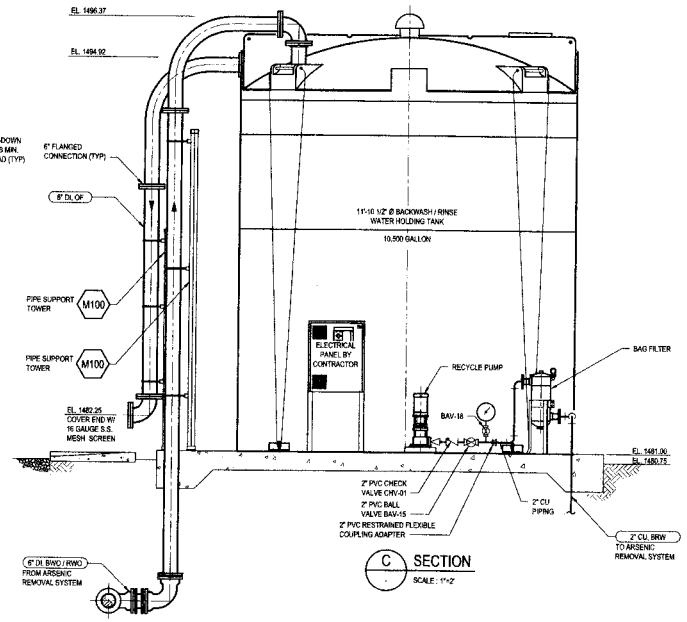

C SECTION

SCALE : 1"=2'

EQUIPMENT TABLE

RECYCLE PUMP	
1	QUANTITY
GRUNDFOS (VERTICAL IN-LINE)	MAKE
CR 5-2	MODEL
25 GPM	FLOW
46'	HEAD
0.75 HP	ENERGY
3,460	SPEED
58 LBS	WEIGHT

BAG FILTER	
1	QUANTITY
FSI	MAKE
CBF	MODEL
P	BAG STYLE
3014	BAG NO.
B	VESSEL MATERIAL
0150	PRESSURE RATING
N	COATING LINING

BAG TYPE	
FSI BRONG-10-929-WE	MODEL
02	INLET SIZE
F	INLET TYPE
02	OUTLET SIZE
F	OUTLET TYPE
02	NOZZLE CONFIG.
A	INTERNAL USE
1	LID OPENING STYLE
N	JACKET TYPE

0 1 2 3 4'

SCALE 1"=2' AT ORIGINAL SIZE

REVISIONS:

7500 North 16th Street Suite 205, Phoenix Arizona 85020 USA
T 1.602.216.7200 F 1.602.216.7201
E phxmail@phd.com W www.phd.com

The installation shown is to be installed in accordance with Arizona Water Company standard specifications and in accordance with the Arizona Department of Environmental Quality

Rev. Dec. 2009 by jwm
Rev. Jan. 2010 by jwm
263-1100
1-800-STAKE IT
(Arizona Blue Stake, Inc.)

W.A. No.:	
P.E. No.:	
SYSTEM:	
LEGAL DESC.:	SEC 17 - T5S - R9E
TAX DIST.:	
DATE:	12/17/2014
SCALE:	AS SHOWN
DRAWN BY:	SJS
CHECKED BY:	FHT

ARIZONA WATER COMPANY
3805 N. BLACK CANYON HWY POST OFFICE BOX 29008
PHOENIX, ARIZONA 85038-9008
(602) 240-8860

PROJECT DESC.: VALLEY FARMS ARSENIC REMOVAL FACILITY
1080 E. LEAH KING ROAD, VALLEY FARMS, AZ 85191

PROJECT SHEET DESC.: BACKWASH / RINSE WATER HOLDING TANK
PLAN, SECTIONS, AND DETAILS

REGISTERED PROFESSIONAL ENGINEER (CIVIL) CERTIFICATE NO. 35921 WILLIAM D. ROBERTS III ARIZONA U.S.A.
Date 12/31/14

DWG. No.: M4

SHEET 10 OF 25

G:\84\11476\CADD\Drawings\Civil\84-11476-M04.dwg PLOT: 12/23/2014 6:38:27pm efloscito

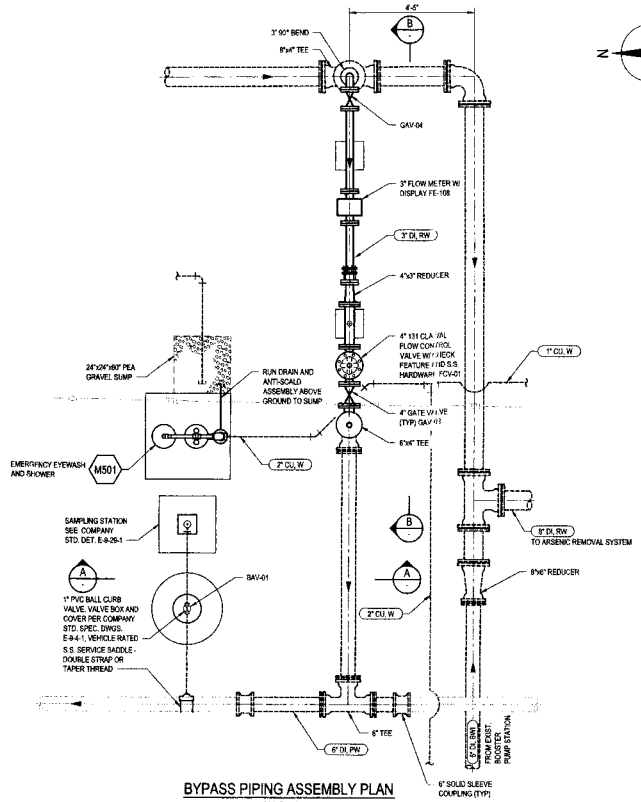

BYPASS PIPING ASSEMBLY PLAN

SCALE: 1/2"=1'-0"

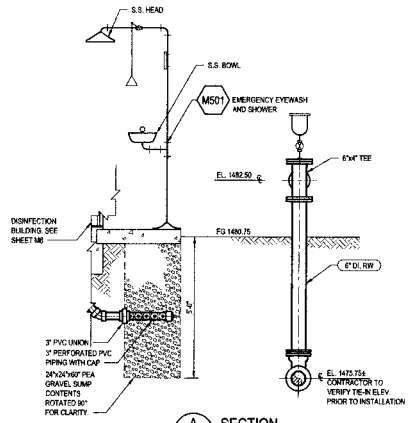

A SECTION

SCALE : 1/2"=1'-0"

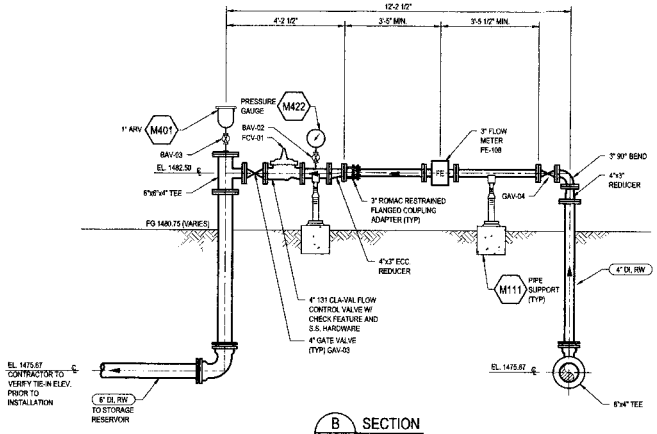

B SECTION

SCALE : 1/2"=1'-0"

SCALE 1/2"=1'-0" AT ORIGINAL SIZE

GENERAL NOTES

1. ALL ABOVE GROUND PIPING SHALL BE D.I.P., CLASS 350 WITH FLANGED JOINTS. ABOVE GROUND PIPING SHALL INCLUDE EPOXY COATING IN ADDITION TO ITS FACTORY COATING. THE EPOXY COATING SHALL BE TNEMEC AND AS FOLLOWS:
   - 1.1 SURFACE PREP: PER MANUFACTURER
   - 1.2 PRIMER: SERIES 66 OR N69 HI-BUILD EPOXOLINE ≥ 4.0 DFT
   - 1.3 INTERMEDIATE: SERIES 66 OR N69 HI-BUILD EPOXOLINE ≥ 5.0 DFT.
   - 1.4 FINISH: SERIES 73, 1047, OR 1057 ENDURA SHIELD.
   - 1.5 COLOR: DESERT SANDS
2. SUPPORT PIPES, VALVES AND APPURTENANCES AS NECESSARY.
3. UNDERGROUND PIPING SHALL HAVE A MINIMUM 3'-0" OF COVER.
4. EQUIPMENT, VALVE, VESSEL, FLOWMETER, AND GAUGE MANUFACTURERS AND MODELS PER STS SPECIFICATIONS OR U.N.O.

EQUIPMENT TABLE

FLOW CONTROL VALVE	
QUANTITY	1
MAKE	CLA-VAL
MODEL	131 BW
SIZE	4"

7890 North 16th Street Suite 205, Phoenix Arizona 85020 USA
T 1.602.216.7200 F 1.602.216.7201
E phxmail@ghd.com W www.ghd.com

REVISIONS:

The installation shown is to be installed in accordance with the Arizona Water Company and the Standards of the Arizona Department of Environmental Quality

CALL BEFORE YOU DIG!
263-1100
1-800-STAKE-IT
(NORMAL WORKING HOURS)

N.A. No.: | P.E. No.:
SYSTEM:
LEGAL DESC.: SEC 17 - T5S - R9E
MAP REF.:
DATE: 12/17/2014 | SCALE: AS SHOWN
DRAWN BY: AEF | CHECKED BY: FHT

ARIZONA WATER COMPANY

3805 N. BLACK CANYON HWY POST OFFICE BOX 29006
PHOENIX, ARIZONA 85038-9006
(602) 240-6860

PROJECT DESC.: VALLEY FARMS ARSENIC REMOVAL FACILITY
10804 E. VAH KI INN ROAD - VALLEY FARMS, AZ 85151

PROJECT SHEET DESC.: BYPASS PIPING ASSEMBLY
PLAN, SECTIONS, AND DETAILS

REGISTERED PROFESSIONAL ENGINEER (CIVIL)
CERTIFICATE NO. 35921
WILLIAM D. ROBERTS
ARIZONA U.S.A.
Expires 3/31/15

DWG. No.: M5

G:\841147\6\CADD\Drawings\Civil\841-11476-M05.dwg PLOT: 12/23/2014 5:57:34pm aforcatb

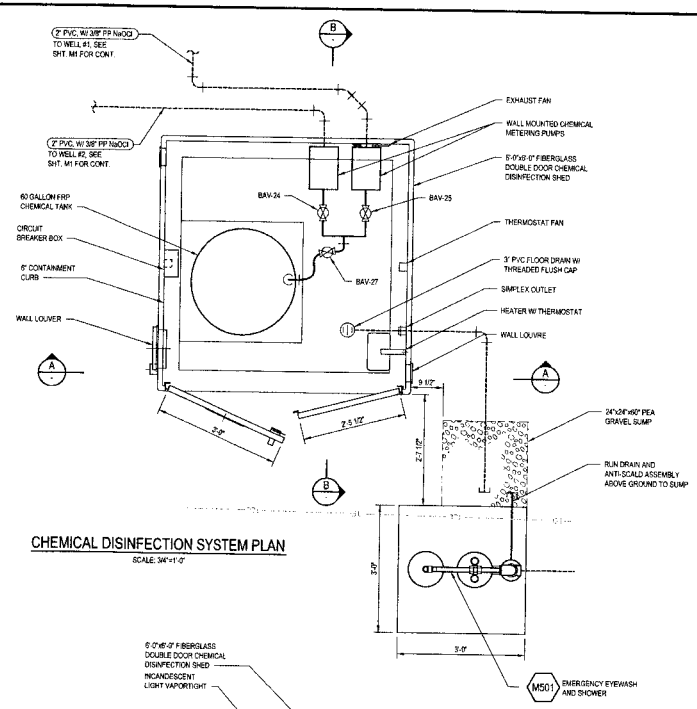

CHEMICAL DISINFECTION SYSTEM PLAN

SCALE: 3/4"=1'-0"

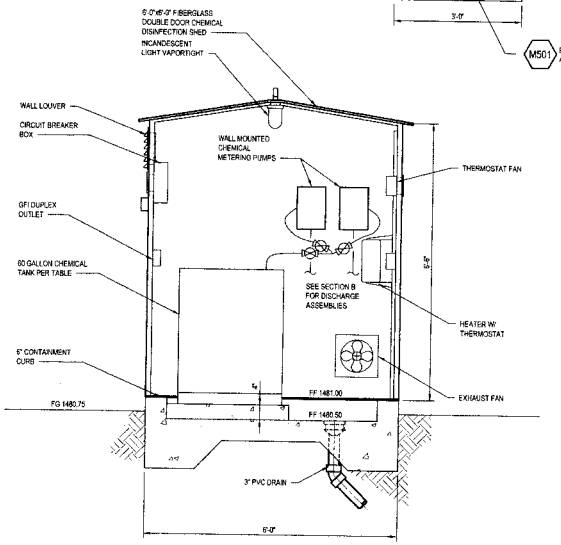

A SECTION

SCALE : 3/4"=1'-0"

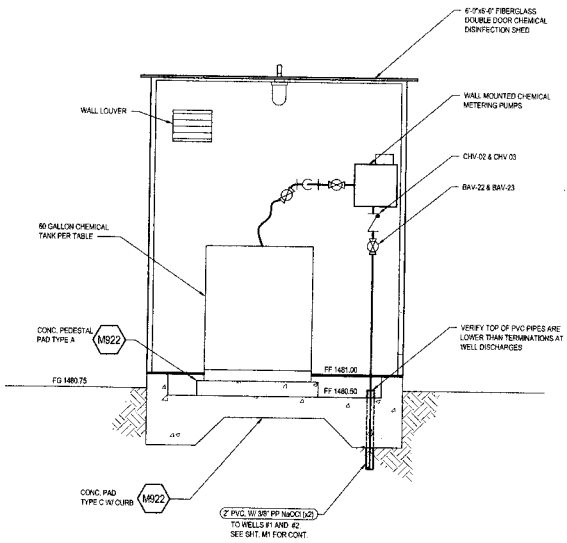

B SECTION

SCALE : 3/4"=1'-0"

0 1'-0" 2'-0" 3'-0" 4'-0"

SCALE 1/2"=1'-0" AT ORIGINAL SIZE

GENERAL NOTES

1. ALL NaOCl PIPES SHALL BE PVC SCH80 CONTAINMENT PIPING WITH PP TUBING

EQUIPMENT TABLE

CHEMICAL SHED	
1	QUANTITY
WARMINSTER FIBERGLASS	MAKE
WFS1006-06-00	MODEL

CHEMICAL METERING PUMPS	
2	QUANTITY
GRUNDFOS	MAKE
DDA 12-10	MODEL
0.0031 TO 3.17 GPH	FLOW
150 PSI	HEAD
9.8 FT	SUCTION LIFT
100-240V 60HZ	POWER
±1%	ACCURACY

CHEMICAL TANK	
1	QUANTITY
POLY PROCESSING CO	MAKE
DOUBLE CONTAINMENT	MODEL
60 GAL	SIZE
XLPE	MATERIAL

REVISIONS:

The installation shown is to be installed in accordance with the Arizona Water Company standard specifications on file with the Arizona Department of Environmental Quality

CALL TWO WORKING DAYS BEFORE YOU DIG
263-1100
1-800-STAKE-IT
(OUTSIDE MARICOPA COUNTY)

7600 North 16th Street Suite 205, Phoenix Arizona 85020 USA
T 1 602 216 7200 F 1 602 216 7201
E phxmail@grid.com W www.grid.com

W.A. No.: | P.E. No.:
SYSTEM:
LEGAL DESC.: SEC 17 - T5S - R9E
TAX DIST.:
DATE: 12/17/2014 | SCALE: AS SHOWN
DRAWN BY: AEF | CHECKED BY: FHT

ARIZONA WATER COMPANY
3805 N. BLACK CANYON HWY. POST OFFICE BOX 29006
PHOENIX, ARIZONA 85038-9006
(602) 240-6860

PROJECT DESC.: VALLEY FARMS ARSENIC REMOVAL FACILITY
10804 E. VAH KI INN ROAD - VALLEY FARMS, AZ 85191

PROJECT SHEET DESC.: CHEMICAL DISINFECTION SYSTEM
PLAN, SECTIONS, AND DETAILS

35921
WILLIAM D. ROBERTS
ARIZONA
Expires 3/31/16

DWG. No.: M6

SHEET 12 OF 25

G:\84\11476\CADD\Drawings\Civil\84-11476-M06.dwg PLOT: 12/23/2014 4:56:04pm stoft

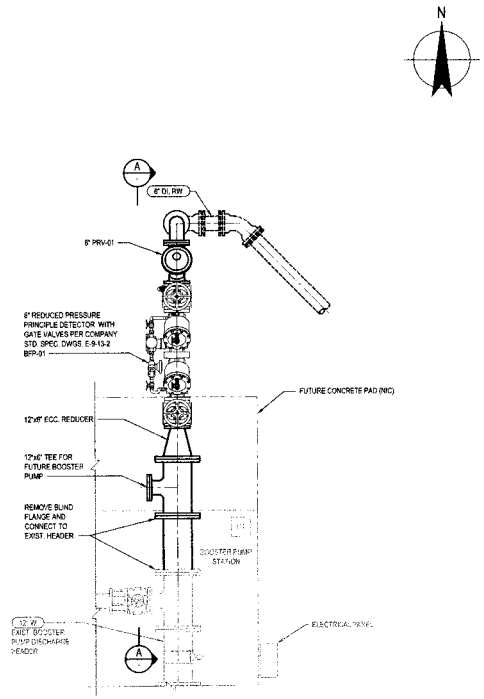

BACKFLOW PREVENTION ASSEMBLY PLAN

SCALE: 1/2"=1'-0"

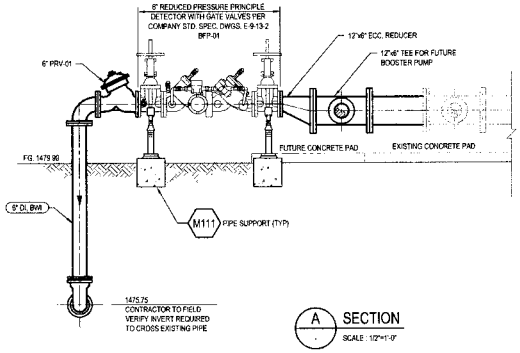

A SECTION

SCALE: 1/2"=1'-0"

EQUIPMENT TABLE

BACKFLOW PREVENTION ASSEMBLY	
1	QUANTITY
FEBCO	MAKE
SERIES 826YD	MODEL
6"	SIZE

PRESSURE REDUCING VALVE	
1	QUANTITY
CLA-VAL	MAKE
90-01	MODEL
6"	SIZE

0 1'-0" 2'-0" 3'-0" 4'-0"

SCALE 1/2"=1'-0" AT ORIGINAL SIZE

REVISIONS:

The installation shown is to be installed in accordance with the Arizona Water Company standard specifications on file with the Arizona Department of Environmental Quality

CALL ARIZONA 811 BLUE STAKE, INC. 263-1100 1-800-STAKE-IT (Arizona Leaders Only)

7600 North 16th Street Suite 205, Phoenix Arizona 85020 USA
T 1 602 216 7200 F 1 602 216 7201
E phxmail@ghd.com W www.ghd.com

W.A. No.: P.E. No.:

SYSTEM:

LEGAL DESC.: SEC 17 - T5S - R9E

TAX DIST.:

DATE: 12/17/2014 SCALE: AS SHOWN

DRAWN BY: SJS CHECKED BY: FHT

ARIZONA WATER COMPANY

3805 N. BLACK CANYON HWY. POST OFFICE BOX 29006
PHOENIX, ARIZONA 85038-9006
(602) 240-6880

PROJECT DESC.: VALLEY FARMS ARSENIC REMOVAL FACILITY
10804 E. VAH KI INN ROAD - VALLEY FARMS, AZ 85191

PROJECT SHEET DESC.: BACKFLOW PREVENTION ASSEMBLY PLAN, SECTION, & DETAILS

Registered Professional Engineer
CERTIFICATE NO. 35921
WILLIAM D. ROBERTS
Expires 3/31/15

DWG. No.: M7

SHEET 13 OF 25

G:\84\11476\CADD\Drawings\Civil\84-11476-M07.dwg PLOT: 12/23/2014 5:13:19pm stoff

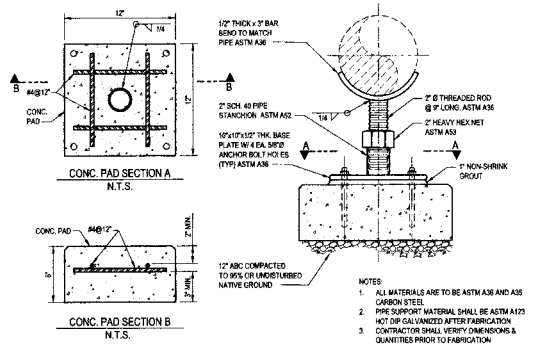

NOTES:
1. ALL MATERIALS ARE TO BE ASTM A36 AND A35 CARBON STEEL
2. PIPE SUPPORT MATERIAL SHALL BE ASTM A123 HOT DIP GALVANIZED AFTER FABRICATION
3. CONTRACTOR SHALL VERIFY DIMENSIONS & QUANTITIES PRIOR TO FABRICATION

M111 PIPE SUPPORT DETAIL
SCALE : NTS

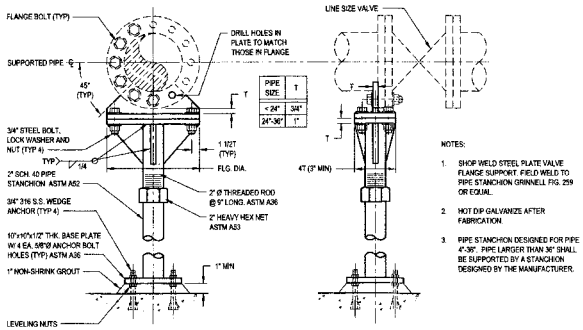

NOTES:
1. SHOP WELD STEEL PLATE VALVE FLANGE SUPPORT. FIELD WELD TO PIPE STANCHION. GRINNELL FIG. 259 OR EQUAL.
2. HOT DIP GALVANIZE AFTER FABRICATION.
3. PIPE STANCHION DESIGNED FOR PIPE 4"-36". PIPE LARGER THAN 36" SHALL BE SUPPORTED BY A STANCHION DESIGNED BY THE MANUFACTURER.

M120 VALVE SUPPORT
SCALE : NTS

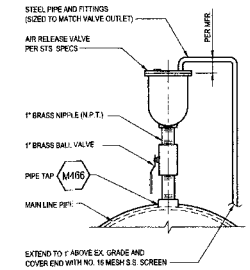

M401 ARV DETAIL
SCALE : NTS

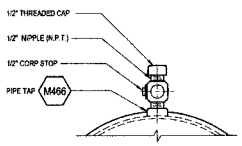

NOTES:
1. LOCATE SAMPLE PORT ON THE SIDE OF PIPE AND DRAIN PORT ON THE BOTTOM OF PIPE UNLESS OTHERWISE SHOWN ON PLANS.
2. ALL SAMPLE TAP HARDWARE SHALL BE S.S. DRAINS MAY INCLUDE BRASS.

M403 SAMPLE AND DRAIN PORT
SCALE : NTS

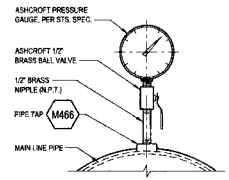

NOTES:
1. MAX. INDICATING RANGE ON SCALE SHALL NOT EXCEED 2X OF NORMAL MAX OPERATION PRESSURE.
2. PROVIDE 1/2" INLINE PULSATION DAMPENER (SNUBBER) TO STABILIZE GAUGE READINGS.
3. PRESSURE GAUGE SHALL INCLUDE:
   a. SILICONE OIL FILLED.
   b. ALL WETTED COMPONENTS SHALL BE STAINLESS STEEL.
   c. INCLUDE MICRO-ADJUSTMENT SCREW.

M422 PRESSURE GAUGE DETAIL
SCALE : NTS

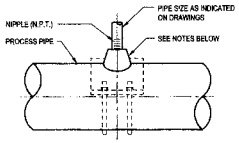

NOTES:
1. FOR STEEL, GALVANIZED STEEL, AND PVC 2 1/2" AND SMALLER USE A BUSHING IN A TEE.
2. FOR DUCTILE IRON, ALL SIZES, USE SERVICE SADDLE.
3. FOR NEW STEEL AND STAINLESS STEEL PIPES 3" AND LARGER, AND PRESSURE VESSELS, USE THREAD-O-LET.
4. FOR EXISTING PVC, STEEL, AND STAINLESS STEEL PIPES 3" AND LARGER, USE SERVICE SADDLE.

M466 PIPE TAP
SCALE : NTS

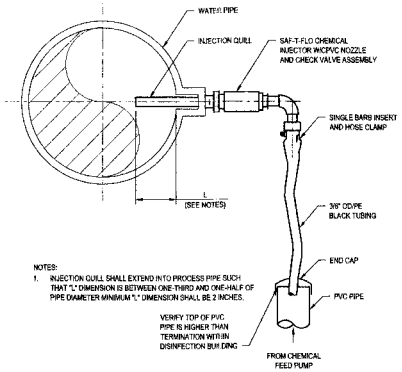

NOTES:
1. INJECTION QUILL SHALL EXTEND INTO PROCESS PIPE SUCH THAT "L" DIMENSION IS BETWEEN ONE-THIRD AND ONE-HALF OF PIPE DIAMETER MINIMUM "L" DIMENSION SHALL BE 2 INCHES.

M475 CHEMICAL INJECTION NOZZLE
SCALE : NTS

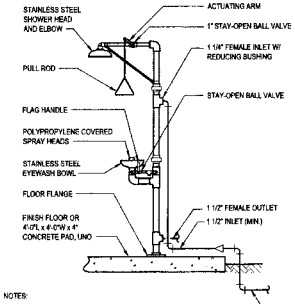

NOTES:
1. EYEWASH SHALL BE EQUIPPED WITH ANTI-SCALD FEATURE.
2. INSULATE ALL PIPING AND FITTINGS.
3. APPLY UV PROTECTIVE COATING TO ALL EXPOSED PLASTIC PIPING PER COATING MANUFACTURER'S RECOMMENDATIONS.

M501 EMERGENCY EYEWASH AND SHOWER
SCALE : NTS

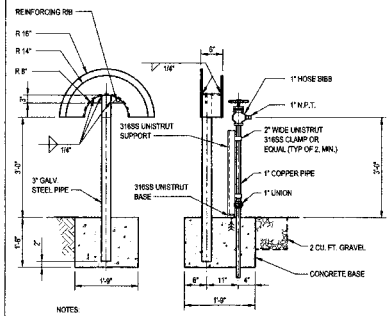

NOTES:
1. CONSTRUCT RACK OF 3/16" STEEL PLATE, ROUND ALL EDGES SMOOTH.
2. HOT DIP GALVANIZE RACK AFTER FABRICATION PER ASTM A-153.

M506 POST MOUNTED HOSE RACK AND BIBB
SCALE : NTS

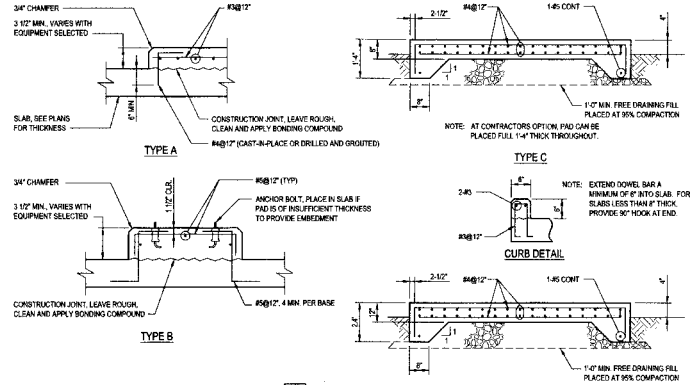

M922 EQUIPMENT PAD
SCALE : NTS

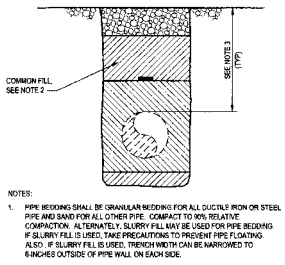

NOTES:
1. PIPE BEDDING SHALL BE GRANULAR BEDDING FOR ALL DUCTILE IRON OR STEEL PIPE AND SAND FOR ALL OTHER PIPE. COMPACT TO 90% RELATIVE COMPACTION. ALTERNATELY, SLURRY FILL MAY BE USED FOR PIPE BEDDING. IF SLURRY FILL IS USED, TAKE PRECAUTIONS TO PREVENT PIPE FLOATING. ALSO, IF SLURRY FILL IS USED, TRENCH WIDTH CAN BE NARROWED TO 6-INCHES OUTSIDE OF PIPE WALL ON EACH SIDE.
2. COMPACT ALL TRENCH BACKFILL (COMMON FILL AND SELECT FILL) TO 90% COMPACTION MORE THAN 2-FEET BELOW GRADE; 95% COMPACTION LESS THAN 2-FEET BELOW GRADE.
3. UNLESS NOTIFIED OTHERWISE, PROVIDE MINIMUM 36" OF COVER OVER ALL BURIED PIPELINES UP TO 12" AND 48" OF COVER OVER ALL BURIED PIPELINES 12" AND UP.

M950 TYPICAL TRENCH
SCALE : NTS

REVISIONS:

The installation shown is to be installed in accordance with the Southwest Gas Company standard specifications on file with the Arizona Department of Environmental Quality

7600 North 16th Street Suite 205 Phoenix Arizona 85020 USA
T 1.602.216.7200 F 1.602.216.7201
E pmurray@gmc.com W www.gmd.com

CALL 2 BEFORE YOU DIG
602-263-1100
1-800-782-5348 (OUTSIDE METRO PHOENIX AREA)

R.A. No.:
P.E. No.:
SYSTEM:
LEGAL DESC.: SEC 17 - T5S - R9E
TAX DIST.:
DATE: 12/17/2014
SCALE: AS SHOWN
DRAWN BY: SJS
CHECKED BY: PHT

ARIZONA WATER COMPANY
3805 N. BLACK CANYON HWY. POST OFFICE BOX 29006
PHOENIX, ARIZONA 85038-9006
(602) 240-6860

PROJECT DESC.: VALLEY FARMS ARSENIC REMOVAL FACILITY
10804 E. VAH KI INN ROAD - VALLEY FARMS, AZ 85191

PROJECT SHEET DESC.: STANDARD DETAILS

35921 WILLIAM D. ROBERTS
Expires 3/31/16

DWG. No.: M8

SHEET 14 OF 25

G:\84\11476\CADD\Drawings\Civil\M8-11476-M08.dwg PLOT: 12/23/2014 6:30:24pm afocsato

ELECTRICAL SPECIFICATIONS

1.00 GENERAL ELECTRICAL REQUIREMENTS

A. THE COMPLETED INSTALLATION SHALL CONFORM TO ALL APPLICABLE FEDERAL, STATE AND LOCAL CODE ORDINANCES AND REGULATIONS. CONTRACTOR SHALL OBTAIN NECESSARY PERMITS AND INSPECTIONS REQUIRED BY THE GOVERNING AUTHORITIES. ALL WORK SHALL BE DONE IN A NEAT, WORKMANLIKE, FINISHED AND SAFE MANNER, ACCORDING TO THE LATEST PUBLISHED N.E.C.A STANDARDS OF INSTALLATION, UNDER COMPETENT SUPERVISION. INSTALL GROUNDING AS REQUIRED BY THE NATIONAL ELECTRIC CODE (2011).

B. VISIT THE SITE IN ORDER TO BECOME FAMILIAR WITH EXISTING CONDITIONS AND ALL OTHER FACTORS THAT MAY AFFECT THE EXECUTION OF THIS WORK.

C. LABOR, MATERIALS, APPARATUS, AND APPLIANCES ESSENTIAL TO THE COMPLETE FUNCTIONING OF SYSTEMS DESCRIBED AND INDICATED HEREIN, OR WHICH MAY BE REASONABLY IMPLIED AS ESSENTIAL, WHETHER MENTIONED IN THE CONTRACT DOCUMENTS OR NOT, SHALL BE FURNISHED AND INSTALLED BY THE CONTRACTOR. IN CASE OF DOUBT AS TO THE WORK INTENDED, OR IN THE EVENT OF NEED FOR EXPLANATION THEREOF, CONTRACTOR SHALL REFER TO THE ENGINEER FOR SUPPLEMENTAL INSTRUCTIONS.

D. ALL ELECTRICAL EQUIPMENT SHALL BE CAPABLE OF OPERATING SUCCESSFULLY AT FULL-RATED LOAD, WITHOUT FAILURE, AT AN AMBIENT AIR TEMPERATURE OF 50°C, AND SPECIFICALLY RATED FOR AN ALTITUDE OF 1500 FEET. WHERE THESE CRITERIA CANNOT BE MET, ANCILLARY EQUIPMENT AND/OR SPECIAL DERATING FACTORS AS APPROVED BY THE ENGINEER SHALL BE UTILIZED.

E. ALL MATERIALS SHALL BE NEW AND OF THE BEST QUALITY, MANUFACTURED IN ACCORDANCE WITH NEMA, ANSI, U.L. OR OTHER APPLICABLE STANDARDS. THE USE OF MANUFACTURER'S NAMES, MODELS AND NUMBERS IS INTENDED TO ESTABLISH STYLE, QUALITY, APPEARANCE, USEFULNESS AND PRICE.

F. PROTECT ALL ELECTRICAL MATERIAL AND EQUIPMENT INSTALLED UNDER THIS CONTRACT AGAINST DAMAGE BY OTHER TRADES, WEATHER CONDITIONS OR ANY OTHER CAUSES. EQUIPMENT FOUND DAMAGED OR IN OTHER THAN NEW CONDITION WILL BE REJECTED AS DEFECTIVE.

G. LEAVE THE SITE CLEAN, REMOVE ALL DEBRIS, EMPTY CARTONS, TOOLS, CONDUIT, WIRE SCRAPS AND ALL MISCELLANEOUS SPARE EQUIPMENT AND MATERIALS USED IN THE WORK DURING CONSTRUCTION. ALL COMPONENTS SHALL BE FREE OF DUST, GRIT AND FOREIGN MATERIALS, LEFT AS NEW BEFORE FINAL ACCEPTANCE OF WORK.

H. THE CONTRACTOR SHALL PERFORM ALL NECESSARY SAW CUTTING, CORE DRILLING, EXCAVATING, REMOVAL, SHORING, BACKFILLING AND ETC. REQUIRED FOR THE PROPER LAYING OF CONDUITS WHETHER INSIDE OR OUTSIDE OF THE BUILDING(S) AND STRUCTURE(S). THE CONTRACTOR SHALL REPAIR AND PATCH WHERE DEMOLITION HAS TAKEN PLACE IN A MANNER TO MATCH EXISTING ORIGINAL STRUCTURE.

I. CONTRACTOR SHALL COORDINATE WITH ALL OTHER TRADES TO AVOID CONFLICTS AND INTERFERENCES. NO EXTRA COMPENSATION WILL BE ALLOWED FOR CHANGES MADE NECESSARY DUE TO INTERFERENCE BETWEEN WORK OF VARIOUS TRADES.

J. REFER TO OTHER PLANS FOR EXACT LOCATION OF EQUIPMENT AND STRUCTURAL FEATURES.

K. TYPICAL DETAILS APPLY IN ALL CASES WHETHER SPECIFICALLY REFERRED TO OR NOT.

L. THESE CONTRACT DOCUMENTS ARE SUBJECT TO THE INTERPRETATION OF THE DESIGN ENGINEER. ALL QUESTIONS REGARDING THESE CONTRACT DOCUMENTS SHALL BE BROUGHT TO THE ENGINEER. ANYONE WHO TAKES UPON THEMSELF THE INTERPRETATION OF THESE CONTRACT DOCUMENTS OR MAKES REVISIONS TO THE SAME WITHOUT CONFERRING WITH THE DESIGN ENGINEER SHALL BE RESPONSIBLE FOR THE CONSEQUENCES THEREOF.

M. USE EXTREME CAUTION WHILE TRENCHING. NUMEROUS UNDERGROUND ELECTRIC DUCTBANKS, WATER PIPELINES, ETC. EXIST.

N. BACKGROUND INFORMATION HAS BEEN PROVIDED BY OTHERS AND MAY NOT REFLECT ACTUAL FIELD CONDITIONS. CONFLICTS DUE TO EXISTING CONDITIONS SHALL BE BROUGHT TO THE ENGINEER'S ATTENTION DURING CONSTRUCTION FOR DIRECTION.

1.01 SUBMITTALS

A. PRODUCT DATA: PROVIDE NAME OF MANUFACTURER, BRAND NAME, AND CATALOG NUMBER OF EACH ITEM. SUBMIT ON ALL EQUIPMENT, AT ONE TIME, WITH ITEMS ARRANGED IN NUMERICAL SEQUENCE CORRESPONDING WITH EACH SPECIFICATION SECTION BELOW. LISTING ITEMS "AS SPECIFIED" WITHOUT BOTH MAKE AND MODEL OR TYPE DESIGNATION IS NOT ACCEPTABLE.

B. SUBMIT MANUFACTURER'S DATA DEMONSTRATING COMPLIANCE WITH THE SPECIFICATIONS HEREIN.

C. SUBMIT MANUFACTURER'S DATA SHOWING PERFORMANCE DATA, PHYSICAL DIMENSIONS, POWER & SIGNAL CONNECTIONS FOR EACH COMPONENT AND EQUIPMENT TO BE FURNISHED. PROVIDE MFR NAME, STYLE, AND COMPLETE MODEL NUMBER.

D. WIRING DIAGRAMS: SUBMIT 11"X17" DETAILED SHOP DRAWINGS INDICATING DIMENSIONS, COMPONENT LAYOUT, LADDER TYPE WIRING DIAGRAMS, NAME PLATE LEGEND AND BILL OF MATERIALS FOR THE NEW MOTOR STARTER. WIRING DIAGRAM SHALL INDICATE NUMBERS FOR EACH WIRE, COIL, TERMINAL POINT AND TERMINAL BLOCK.

E. AFTER MATERIAL OR EQUIPMENT HAS BEEN SUBMITTED AND APPROVED, NO SUBSTITUTIONS WILL BE ALLOWED.

F. IF CONTRACTOR'S SUBMITTAL(S) DEPART FROM THE CONTRACT DOCUMENTS, THE CONTRACTOR SHALL MAKE SPECIFIC MENTION THEREOF IN THE LETTER(S) OF TRANSMITTAL, OTHERWISE REVIEW OF SUCH SUBMITTALS BY THE ENGINEER SHALL NOT CONSTITUTE REVIEW OF SUCH DEPARTURE(S).

1.02 RECORD DRAWINGS

A. UPON COMPLETION OF WORK, CONTRACTOR SHALL FURNISH A COMPLETE SET OF RECORD DRAWINGS WHICH PROPERLY REFLECT FINAL LOCATIONS AND SIZES OF CONDUIT, CONDUCTORS, EQUIPMENT, CONTROLS, ETC., AS ACTUALLY INSTALLED. DIMENSIONS SHALL BE INCLUDED ON THESE DRAWINGS TO LOCATE CONCEALED EQUIPMENT AND UNDERGROUND CONDUIT ROUTING.

1.03 OPERATION AND MAINTENANCE MANUALS

A. CONTRACTOR SHALL PROVIDE OPERATING AND MAINTENANCE MANUALS FOR EQUIPMENT AND MATERIALS FURNISHED UNDER THIS CONTRACT. SUBMIT OPERATING AND MAINTENANCE DATA ELECTRONICALLY FOR REVIEW TWO WEEKS BEFORE FINAL INSPECTION.

B. FURNISH MAINTENANCE INSTRUCTION MANUALS OUTLINING MAINTENANCE PROCEDURES, INCLUDING A TROUBLESHOOTING GUIDE LISTING POSSIBLE BREAKDOWN AND REPAIRS, AND A SIMPLIFIED CONNECTION WIRING DIAGRAM FOR EACH SYSTEM.

C. INCLUDE COPY OF WARRANTIES ON ALL EQUIPMENT, SHOWING DATES OF EXPIRATION. ALL WARRANTIES SHALL BE COMPLETED IN THE OWNER'S NAME.

1.04 WARRANTY

A. THE CONTRACTOR SHALL LEAVE THE ENTIRE INSTALLATION IN COMPLETE WORKING ORDER AND FREE FROM DEFECTS IN MATERIALS, WORKMANSHIP OR FINISH FOR A PERIOD OF 1-YEAR AFTER THE WORK IS ACCEPTED BY THE ENGINEER AND OWNER.

2.0 ELECTRICAL PRODUCTS

2.01 RACEWAYS

A. ALL UNDERGROUND CONDUIT TO BE SCHEDULE 40 PVC, MINIMUM SIZE 3/4". ALL CONDUIT EXPOSED TO BE GRS, UNLESS OTHERWISE INDICATED MINIMUM SIZE 3/4"

B. CONDUIT SHALL BE BURIED MINIMUM OF 24-INCHES BELOW FINISHED GRADE TO TOP OF CONDUIT(S). CONDUIT SWEEPS AND CONDUIT LEAVING THE EARTH MUST BE PVC COATED GALVANIZED RIGID STEEL CONDUIT OR GRS WRAPPED WITH 20-MIL RUBBER TAPE HALF-LAPPED TO A THICKNESS OF 40-MILS.

C. PROVIDE EACH PVC CONDUIT WITH A BELL END WHERE ENTERING UNDERGROUND JUNCTION BOXES

D. AFTER UNDERGROUND DUCT IS IN PLACE, NOTIFY THE ENGINEER PRIOR TO BACKFILL OR CONCRETE POUR FOR INSPECTION.

E. INSTALL LIQUID-TIGHT FLEXIBLE METAL CONDUIT WHERE INDICATED OR AT MOTORS AND EQUIPMENT WHICH ARE SUBJECT TO VIBRATION OR REQUIRE MOVEMENT FOR MAINTENANCE PURPOSES. LIMIT FLEXIBLE CONDUIT LENGTH TO 3-FEET MAXIMUM.

F. CONDULET/CONDUIT BODY COVERS SHALL BE SECURED WITH MACHINE SCREWS THREADED ONTO THE CONDUIT BODY.

2.02 WIRES AND CABLES (600V OR LESS)

A. ALL CIRCUIT CONDUCTORS SHALL BE "XHHW-2" STRANDED COPPER. MINIMUM CONDUCTOR SIZE FOR POWER TO BE #12 AWG WITH #12 GND. MINIMUM CONDUCTOR SIZE FOR DISCRETE SIGNALS TO BE #14 AWG WITH #14 GND.

B. ANALOG SIGNAL CABLES SHALL CONSIST OF #16 AWG TWISTED SHIELDED PAIR (TSP) COPPER CONDUCTORS WITH 600V INSULATION RATED FOR WET LOCATIONS.

C. SPLICES ARE NOT ALLOWED EXCEPT WHERE NOTED OR APPROVED BY THE ENGINEER.

D. ALL CONDUCTORS SHALL CONTAIN A WIRE MARKER AT EACH END IDENTIFYING BRANCH CIRCUIT NUMBER OR DESIGNATION INDICATED ON APPROVED WIRING DIAGRAM. WIRE MARKERS SHALL BE RAYCHEM MODEL SHRINKMARK OR EQUAL. WIRE MARKERS SHALL BE PLACED AS NEAR AS POSSIBLE TO THE END OF THE WIRE. ORIENT WIRE MARKER SUCH THAT THE WRITING CAN BE READ WITHOUT TURNING OR TWISTING THE WIRE.

2.03 ELECTRICAL EQUIPMENT

A. ALL ELECTRICAL EQUIPMENT SHALL BE FURNISHED WITH NEMA RATED ENCLOSURES AS INDICATED.

B. ALL ELECTRICAL SAFETY SWITCHES, DISTRIBUTION, AND CONTROL EQUIPMENT SHALL BE RATED FOR HEAVY DUTY SERVICE.

C. INSTALL LAMICOID NAMEPLATE ON ALL ELECTRICAL EQUIPMENT THAT CLEARLY IDENTIFIES THE LOAD BEING SERVED. FASTEN NAMEPLATE WITH STAINLESS STEEL SELF-TAPPING SCREWS. NAMEPLATE COLORS AND TEXT SIZES SHALL MATCH EXISTING

2.04 GROUNDING

A. CONTACT SURFACES SHALL BE THOROUGHLY CLEANED AND PAINT SCRAPED TO BARE METAL BEFORE CONNECTIONS ARE MADE TO INSURE GOOD METAL-TO-METAL CONTACT

2.05 CONTROL DEVICES

A. OPERATOR CONTROL DEVICES AND PILOT LIGHTS SHALL BE HEAVY-DUTY, OILTIGHT, 30mm. PILOT LIGHTS SHALL BE PUSH-TO-TEST TYPE WITH LENS COLOR AS INDICATED ON THE DRAWINGS.

B. TERMINAL BLOCKS SHALL BE FURNISHED AND INSTALLED FOR ALL FIELD-WIRING CONNECTIONS. TERMINAL BLOCKS SHALL BE RATED 30A AT 600VAC AND MOUNT ON A STANDARD 35MM DIN RAIL.

C. CONTROL AND TIMING RELAYS SHALL BE OF THE PLUG-IN STYLE WITH 120VAC, 10A CONTACTS (DPDT MINIMUM) WITH ON-OFF INDICATOR.

D. ELAPSED TIME METERS SHALL BE NON-RESETTABLE TYPE, SHALL READ TO A MAXIMUM OF 99999.9 HOURS, AND SHALL OPERATE WHEN 120VAC IS APPLIED. METERS SHALL CONTAIN A BEZEL FOR PANEL MOUNTING WITH A NEMA 4 RATING.

2.06 MOTOR CONTROLLERS

A. MOTOR CONTROLLERS SHALL BE OF THE COMBINATION TYPE COMPLETE WITH INTEGRAL DISCONNECT SWITCH OR MAGNETIC-ONLY TYPE CIRCUIT BREAKER (MCP) AS INDICATED ON THE DRAWINGS.

B. MOTOR CONTROLLERS SHALL BE EQUIPPED WITH INDIVIDUAL, ENCAPSULATED, FUSED (PRIMARY AND SECONDARY) CONTROL POWER TRANSFORMERS. CONTROL VOLTAGE SHALL BE 120VAC.

C. OVERLOAD PROTECTION SHALL BE OF THE FULLY PROGRAMMABLE ELECTRONIC TYPE. A PUSHBUTTON SHALL BE PROVIDED TO MANUALLY RESET THE OVERLOAD PROTECTION WITH THE CONTROLLER ENCLOSURE DOOR CLOSED (AUTOMATIC RESET IS NOT ACCEPTABLE).

D. MOTOR CONTROLLERS SHALL HAVE AN EXTERNALLY OPERATED HANDLE TO OPEN THE DISCONNECTING MEANS. THE HANDLE SHALL HAVE THE MEANS TO BE LOCKED IN THE OPEN POSITION

E. MOTOR CONTROLLERS SHALL CONTAIN A SERIALIZED UL 508A LABEL.

F. CONTROL WIRING SHALL BE TYPE MTW WITH RED INSULATION (#12 MINIMUM FOR POWER, #14 MINIMUM FOR CONTROL). WIRING TO DOOR MOUNTED DEVICES SHALL BE WRAPPED IN A PROTECTIVE PLASTIC FLEX. CONTROL WIRING INSTALLED ON ENCLOSURE DOORS SHALL BE SECURED TO DOOR WITH WIRE ANCHORS CEMENTED IN PLACE. EACH CONTROL WIRE SHALL BE CLEARLY IDENTIFIED WITH A SHRINK-ON WIRE MARKER AND WIRE NUMBER DESIGNATION PER APPROVED WIRING DIAGRAMS

G. POWER SUPPLY SHALL BE DIN RAIL MOUNTED AND OF THE SOLID STATE CIRCUITRY TYPE. INPUT VOLTAGE SHALL BE 120V +/- 10% AND OUTPUT VOLTAGE SHALL BE AS INDICATED ON THE DRAWINGS. POWER SUPPLY SHALL BE FULLY RATED WITH EFFICIENCY OF AT LEAST 80% OVER A TEMPERATURE RANGE OF 0-140°F OR APPROPRIATELY OVER-SIZED (SOLA MODEL SDN-P OR EQUAL)

H. DIGITAL NDICATOR FOR THE BACKWASH/RINSE WATER HOLDING TANK LEVEL TRANSMITTER SHALL BE 24VDC , NEMA 4X, 4-DIGIT LCD TYPE DIGITAL DISPLAY CAPABLE OF ACCEPTING A 4-20mA INPUT (PRECISION DIGITAL MODEL PD765, OR EQUAL).

2.07 FIELD INSTRUMENTS

A. FLANGE MOUNTED, GAUGE PRESSURE TYPE, LEVEL TRANSMITTER: ENDRESS + HAUSER MODEL PMC71-A-A-C-1F-4-AF-A-A-A, OR EQUAL. SCALED RANGE OF LEVEL TRANSMITTER SHALL BE 0-15FT. ORIENT LCD DISPLAY OF TRANSMITTER TO FACE NORTH.

B. FLOAT SWITCH: SIEMENS MODEL 9G-EF, OR EQUAL.

C. PRESSURE SWITCH: MERCOID MODEL DSW-7243-153-24E, OR EQUAL. PRESSURE SWITCH RANGE SHALL BE 0-150PSI AND THE SETPOINT SHALL BE INITIALLY SET AT 125PSI.

D. THE CONTRACTOR SHALL FURNISH AND INSTALL ALL MOUNTING HARDWARE AND SUPPORT STRUCTURES NECESSARY FOR PROPER INSTALLATION OF FIELD INSTRUMENTS IN ACCORDANCE WITH MANUFACTURER'S RECOMMENDATIONS. MATERIALS USED SHALL BE STAINLESS STEEL.

E. THE CONTRACTOR SHALL COORDINATE WITH MECHANICAL CONTRACTOR TO VERIFY PROCESS CONNECTION TYPES AND LOCATIONS.

SCHEMATIC & SINGLE LINE DIAGRAM LEGEND

INTERNAL WIRING — FIELD WIRING
TERMINAL BLOCK
PILOT LIGHT (LETTER DENOTES COLOR)
PUSH-TO-TEST PILOT LIGHT (LETTER DENOTES COLOR)
CONTROL RELAY
MOTOR (20 DENOTES MOTOR HORSEPOWER)
PRESSURE SWITCH CLOSES ON RISING PRESSURE
FLOAT SWITCH CLOSES ON RISING LEVEL
NEUTRAL BUS
GROUND BUS
FUSE
EOL — ELECTRONIC OVERLOAD
DIODE
DISCONNECT SWITCH (N.O.)
TERMINAL BLOCK
TERMINAL BLOCK IN FIELD DEVICE OR EXTERNAL EQUIPMENT
CURRENT TRANSFORMER
POWER TRANSFORMER
CIRCUIT BREAKER
NORMALLY OPEN CONTACTS
NORMALLY CLOSED CONTACTS
LIGHTING CONTACTOR OR MOTOR STARTER (NUMBER INDICATES NEMA RATING)
NORMALLY OPEN MOMENTARY-CONTACT PUSHBUTTON
NORMALLY CLOSED MOMENTARY-CONTACT PUSHBUTTON
PUSH-PULL EMERGENCY STOP PUSHBUTTON
3-POSITION SELECTOR SWITCH

PLAN LEGEND

HOMERUN ((1) HOT, (1) NEUTRAL) (#12 MIN)
EXPOSED CONDUIT
UNDERGROUND CONDUIT DUCTBANK
CONDUIT STUBUP
CONDUIT TURNED DOWN
UTILITY CONDUIT DUCTBANK
CONDUIT RUN CONCEALED IN CEILING, FLOOR, OR IN WALLS
EXISTING CONDUIT
GROUNDING ELECTRODE CONDUCTOR
EXISTING OVERHEAD ELECTRIC
EXISTING UNDERGROUND ELECTRIC
FENCE
240V SIMPLEX RECEPTACLE (NUMBER DENOTES CIRCUIT AMPS) — 20
480V SIMPLEX RECEPTACLE (NUMBER DENOTES CIRCUIT AMPS) — 20
120V, 20A SIMPLEX RECEPTACLE
120V, 20A DUPLEX RECEPTACLE
120V, 20A SPST SWITCH
MANUAL MOTOR STARTER
TELEPHONE JACK
JUNCTION BOX
UNDERGROUND JUNCTION BOX
ALARM BEACON
NON-FUSED DISCONNECT SWITCH
FUSED DISCONNECT SWITCH
CIRCUIT BREAKER STYLE DISCONNECT SWITCH
COMBINATION MOTOR STARTER
SOLENOID VALVE (ENERGIZE TO CLOSE)
SOLENOID VALVE (ENERGIZE TO OPEN)
BUTTERFLY VALVE
PLUG VALVE
GATE VALVE
ALARM BEACON
WALL MOUNTED LIGHT
(CXXXX) CONDUIT DESIGNATION
GROUND ROD AND WELL
PANELBOARD
EXHAUST FAN
(LT) LEVEL TRANSMITTER
(PC) PHOTOCELL
(PI) PRESSURE GAUGE
(PS) PRESSURE SWITCH
(PT) PRESSURE TRANSMITTER
(T) THERMOSTAT
(NS) INTRUSION ALARM SWITCH
(LE) LEVEL ELEMENT (ULTRASONIC LEVEL TRANSDUCER)
(H) SIREN/HORN
(ZT) POSITION TRANSMITTER

LUMINAIRE SCHEDULE

	120V	56W-LED		POLE MOUNTED LED LUMINAIRE WITH A FULLY GASKETED EXTRUDED ALUMINUM HOUSING FINISHED WITH A BRONZE THERMOSET POLYESTER POWDER COAT. UL LISTED FOR WET LOCATIONS. TYPE III IES DISTRIBUTION PATTERN. LUMINAIRE TO UNCLUDE PHOTOCELL AND 5 YEAR WARRANTY.	VISIONAIRE LIGHTING (EL2-1-T3-48LC-5-4K-UNV-MAF-BZ-PCR120) COOPER LIGHTING (VTS-B02-LED-E1-T3-BZ-P) PHILLIPS/GARDCO (P21-A1-1-3-55LA-NW-UNIV-BRP-PCB-SPA-1-2)

ABBREVIATIONS

A/C	AIR CONDITIONING	MBJ	MAIN BONDING JUMPER
AI	ANALOG INPUT	MCB	MAIN CIRCUIT BREAKER
AFF	ABOVE FINISHED FLOOR	MFR	MANUFACTURER
AFG	ABOVE FINISHED GRADE	MIN	MINIMUM
AO	ANALOG OUTPUT	MLO	MAIN LUG ONLY
APS	ARIZONA PUBLIC SERVICE	MTS	MANUAL TRANSFER SWITCH
BLDG	BUILDING	NTS	NOT TO SCALE
BOC	BACK OF CURB	PCP	PUMP CONTROL PANEL
BPS	BOOSTER PUMP STATION	PIT	PRESSURE INDICATING TRANSMITTER
C	CONDUIT	PQM	POWER QUALITY METER
CB	CIRCUIT BREAKER	PR	PAIR
CKT	CIRCUIT	PRESS	PRESSURE
CL2	CHLORINE	RCP	REINFORCED CONCRETE PIPE
CMU	CONCRETE MASONRY UNIT	REQ'TS	REQUIREMENTS
COM	COMMON	RO	REVERSE OSMOSIS
CPT	CONTROL POWER TRANSFORMER	ROW	RIGHT OF WAY
Cu	COPPER	RTU	REMOTE TERMINAL UNIT
DI	DISCRETE INPUT	S/W	SIDE WALK
DISC	DISCONNECT	S/S	START/STOP
DIST	DISTRIBUTION	SES	SERVICE ENTRANCE SECTION
DO	DISCRETE OUTPUT	SPC	SPARE CONDUIT
DPDT	DOUBLE-POLE DOUBLE-THROW	SPD	SURGE PROTECTIVE DEVICE
DWG	DRAWING	STT	SHIELDED TWISTED TRIAD
(E)	EXISTING	SW	SWITCH
ELEC	ELECTRICAL	TEL	TELEPHONE CONDUIT
EMT	ELECTRICAL METALLIC TUBING	TSP	TWISTED SHIELDED PAIR
ENCL	ENCLOSURE	TST	TWISTED SHIELDED TRIAD
FIT	FLOW INDICATING TRANSMITTER	TTB	TELEPHONE TERMINAL BLOCK
FS	FUSE	TYP	TYPICAL
GEC	GROUNDING ELECTRODE CONDUCTOR	UE	UNDERGROUND ELECTRIC
GFCI	GROUND FAULT CIRCUIT INTERRUPTER	UV	ULTRAVIOLET
GND	GROUND	VLV	VALVE
GRS	GALVANIZED RIGID STEEL	VFD	VARIABLE FREQUENCY DRIVE
INST	INSTRUMENT	WDT	WASTE DURATION TIMER
IMC	INTERMEDIATE METAL CONDUIT	W-I-U	WHILE-IN-USE
J-BOX	JUNCTION BOX	WP	WEATHERPROOF
LCC	LIGHTING CONTROL CABINET	WTP	WATER TREATMENT PLANT
LFMC	LIQUIDTIGHT FLEXIBLE METAL CONDUIT	XFMR	TRANSFORMER
LIT	LEVEL INDICATING TRANSMITTER		

VICINITY MAP

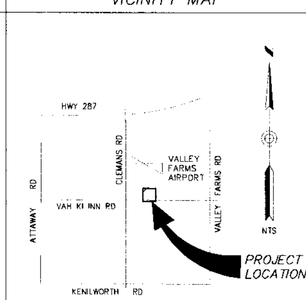

DARCOR ELECTRICAL CONSULTING ENGINEERS
7600 N. 16TH ST. SUITE 205-A PHOENIX, AZ 85020
Ph: (602) 795-2699
WWW.DARCORINC.COM

Registered Professional Engineer (Electrical) Certificate No. 53839 JORGE GERARDO 12/23/14 ARIZONA, U.S.A. Expires 9/30/15

The installation shown is to be installed in accordance with the Arizona Water Company standard specifications on file with the Arizona Department of Environmental Quality

263-1100
1-800-STAKE-IT

7600 North 16th Street Suite 205, Phoenix Arizona 85020 USA
T 1 602 216 7200 F 1 602 216 7201
E phxmail@ghd.com W www.ghd.com

ARIZONA WATER COMPANY
3805 N. BLACK CANYON HWY. POST OFFICE BOX 29006
PHOENIX, ARIZONA 85038-9006
(602) 240-6860

SEC 17 - T5S - R9E
DATE 12/23/2014 SCALE NONE
DRAWN BY DRG CHECKED BY JLG

VALLEY FARMS ARSENIC REMOVAL FACILITY
16601 E. VAH KI INN ROAD - COOLIDGE, AZ 85128

ELECTRICAL COVER SHEET

E1

SHEET 15 OF 25

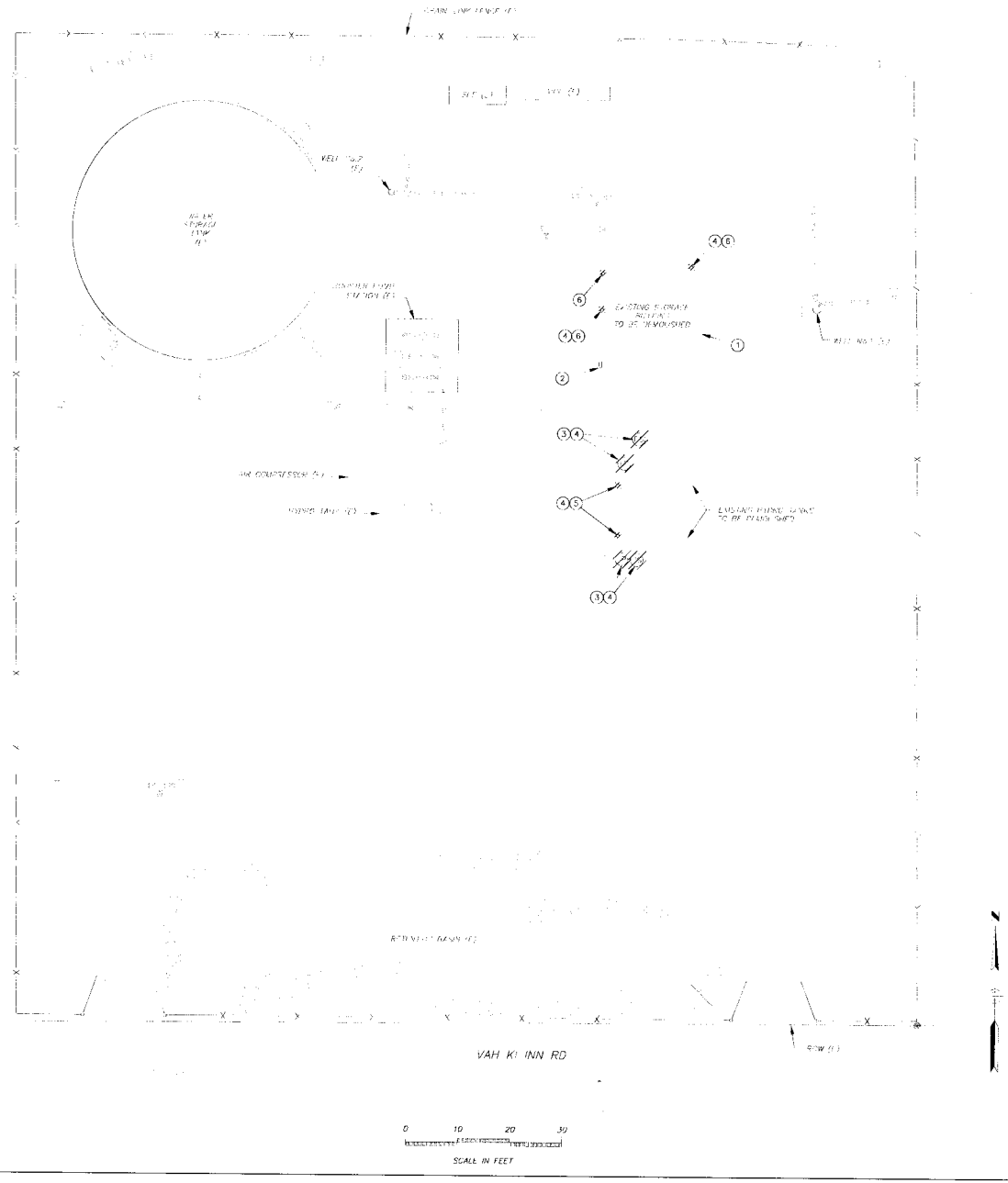

GENERAL DEMOLITION NOTES

1. DISCONNECT AND REMOVE CONDUCTORS AS INDICATED. DEMOLITION OF CONDUITS INCLUDES REMOVAL AND DISPOSAL OF EXISTING EXPOSED CONDUITS.
2. ALL REMOVED MATERIAL NOT BEING SALVAGED BY OWNER SHALL BECOME THE PROPERTY OF THE CONTRACTOR FOR REMOVAL AND DISPOSAL.
3. ALL DEMOLISHED AND REMOVED MATERIAL SHALL BE HAULED OFF SITE AND DISPOSED OF AT AN APPROVED LANDFILL OR OTHER APPROVED LOCATION.
4. THE CONTRACTOR SHALL PERFORM ALL WORK ON THIS PROJECT WHILE THE EXISTING FACILITIES AND SURROUNDING UTILITIES ARE OPERATING. ALL CONNECTIONS OF NEW WORK TO EXISTING FACILITIES SHALL BE PERFORMED IN A MANNER TO MINIMIZE DOWN TIMES, OPERATIONAL UPSETS AND AS SPECIFIED AND SHOWN ON THESE SHEETS.

KEY NOTES

1. DISCONNECT AND REMOVE EXISTING CONDUCTORS AND TELEPHONE CABLE INSIDE BUILDING BACK TO SOURCE. DISCONNECT AND REMOVE ALL LIGHTS, SWITCHES, RECEPTACLES, THERMOSTATS, DISCONNECTS, BOXES AND EXPOSED CONDUIT.
2. EXISTING TELEPHONE TERMINAL BOX TO BE RELOCATED. REFER TO DRAWING E3 FOR ADDITIONAL INFORMATION.
3. DISCONNECT AND REMOVE EXISTING HYDRO TANK PRESSURE SWITCH, LEVEL PROBE AND PROBE HOLDER.
4. DISCONNECT AND REMOVE CONDUCTORS BACK TO SOURCE.
5. DISCONNECT AND REMOVE ALL EXPOSED AND UNDERGROUND CONDUIT BACK TO SOURCE.
6. DISCONNECT AND REMOVE ALL EXPOSED CONDUIT TO THE EXISTING STORAGE BUILDING. CUT UNDERGROUND CONDUIT 6" BELOW GRADE AND ABANDON IN PLACE.

DARCOR
ELECTRICAL CONSULTING ENGINEERS
7800 N. 16TH ST.
SUITE 205-A
PHOENIX, AZ 85020
Ph: (602) 795-2699
WWW.DARCORINC.COM

GHD
7600 North 16th Street Suite 205, Phoenix Arizona 85020 USA
T 1 602 216 7200 F 1 602 216 7201
E phxmail@ghd.com W www.ghd.com

The installation shown is to be installed in accordance with the Arizona Water Company standard specifications on file with the Arizona Department of Environmental Quality

263-1100
1-800-STAKE-IT

SEC 17 - T5S - R9E

DATE	12/23/2014
SCALE	NONE
DRAWN BY	DRG
CHECKED BY	JLG

ARIZONA WATER COMPANY
3805 N. BLACK CANYON HWY. POST OFFICE BOX 29006
PHOENIX, ARIZONA 85038-9008
(602) 240-6860

VALLEY FARMS ARSENIC REMOVAL FACILITY
16601 E. VAH KI INN ROAD - COOLIDGE, AZ 85128

ELECTRICAL DEMOLITION PLAN

53839
JORGE
GERARDO
12/23/14
ARIZONA, U.S.A.

E2

SHEET 16 OF 25

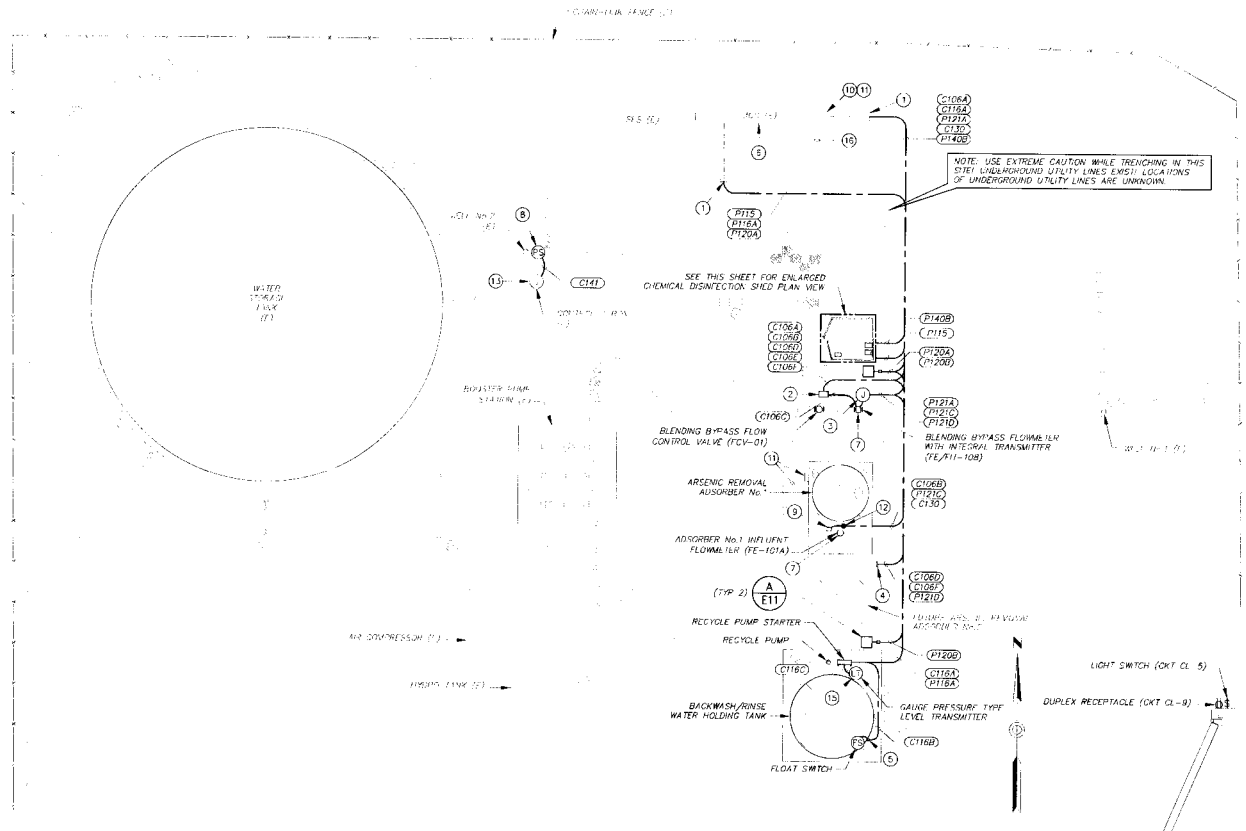

ELECTRICAL SITE PLAN

0 8 16 24

SCALE IN FEET

GENERAL NOTES

A. SEE SINGLE LINE DIAGRAM ON DRAWING E4 AND CONDUIT BLOCK DIAGRAM ON DRAWING E5 FOR CONDUIT AND CONDUCTOR REQUIREMENTS.

B. ALL EXPOSED CONDUIT SHALL BE SUPPORTED AS SPECIFIED OR PER NEC; WHICHEVER IS THE MORE STRINGENT REQUIREMENT.

C. THE CONTRACTOR SHALL PERFORM ALL WORK ON THIS PROJECT WHILE THE EXISTING FACILITIES AND SURROUNDING UTILITIES ARE OPERATING. ALL CONNECTIONS OF NEW WORK TO EXISTING FACILITIES SHALL BE PERFORMED IN A MANNER TO MINIMIZE DOWN TIMES, OPERATIONAL UPSETS AND AS SPECIFIED AND SHOWN ON THESE SHEETS.

KEY NOTES

1. DIG DOWN, LOCATE AND EXTEND EXISTING CONDUITS AS INDICATED.
2. INSTALL 4"x4"x12" NEMA 3R WIREWAY AND BLENDING BYPASS VALVE CONTROLLER ON A 1-5/8" GALVANIZED STEEL STRUT MOUNTING STAND PER DETAIL "C" ON DRAWING E11. EXTEND CONDUIT C116B TO BLENDING BYPASS FLOW CONTROL VALVE.
3. INSTALL 10"x8"x4" NEMA 3R JUNCTION BOX ON A 1 5/8" GALVANIZED STEEL STRUT MOUNTING STAND PER DETAIL "B" ON DRAWING E11. EXTEND CONDUIT P121B TO BLENDING BYPASS FLOW TRANSMITTER (FIT-108).
4. STUB OUT AND CAP SPARE CONDUITS C106D, P121D & C110 FOR FUTURE ADSORBER No.2.
5. STUB-UP CONDUIT C116B AT BASE OF TANK AND EXTEND TO FLOAT SWITCH (LOCATED ON TOP OF THE TANK.
6. REFER TO ELEVATION ON DRAWING E4 FOR MODIFICATIONS.
7. INSTALL 5/8" X 10' COPPER CLAD GROUND ROD WITH #6 COPPER CONDUCTOR TO EACH FLOWMETER GROUNDING RING. EXOTHERMIC WELD GROUND CONDUCTOR TO GROUND ROD.
8. INSTALL PRESSURE SWITCH AND PRESSURE GAUGE ON WELL No.2 DISCHARGE PIPING PER DETAIL "F" ON DRAWING E11.
9. INSTALL ADSORBER No.1 INFLUENT FLOW TRANSMITTER (FIT-101A) ON 8" GALVANIZED STEEL CHANNEL MOUNTING STAND PER DETAIL "E" ON DRAWING E11. STUBUP CONDUITS C106B, P121C, C106D & C106H AND EXTEND TO FIT-101A.
10. RELOCATED TELEPHONE TERMINAL CABINET.
11. CONTRACTOR SHALL COORDINATE WITH QWEST FOR THE RELOCATION OF THE EXISTING TELEPHONE TERMINAL CABINET AND EXISTING TELEPHONE SERVICE LINE.
12. STUBUP CONDUITS C130, C106G & C106H AND EXTEND TO ADSORBER No.1 DIFFERENTIAL PRESSURE SWITCH (PDISH-102A) AND ADSORBER No.1 INFLUENT FLOWMETER (FE-101A), RESPECTIVELY. UTILIZE A 1-5/8" GALVANIZED STEEL STRUT MOUNTING STAND TO SUPPORT EXPOSED CONDUITS TO PDISH-102A & FE-101A AS NECESSARY.
13. EXTEND 2-#14, #14 GND FROM EXISTING WELL No.2 STARTER SECTION OF THE MCC TO WELL No.2 PRESSURE SWITCH VIA EXISTING 1"C.
14. INSTALL 120V, 20A, DUPLEX RECEPTACLE IN PVC "TD" TYPE BOX AT 48"AFF. EACH RECEPTACLE SHALL BE FOR A CHEMICAL METERING PUMP AND SHALL BE CONTROLLED PER DRAWINGS E6 & E8.
15. INSTALL (FLVF) TRANSMITTER TO FLANGE NEAR BOTTOM OF BACKWASH/RINSE WATER HOLDING TANK.
16. DISCONNECT AND REMOVE EXISTING CAT 5 CABLE BETWEEN EXISTING TELEPHONE TERMINAL CABINET AND EXISTING AUTODIALER IN RTU SECTION OF THE MCC.

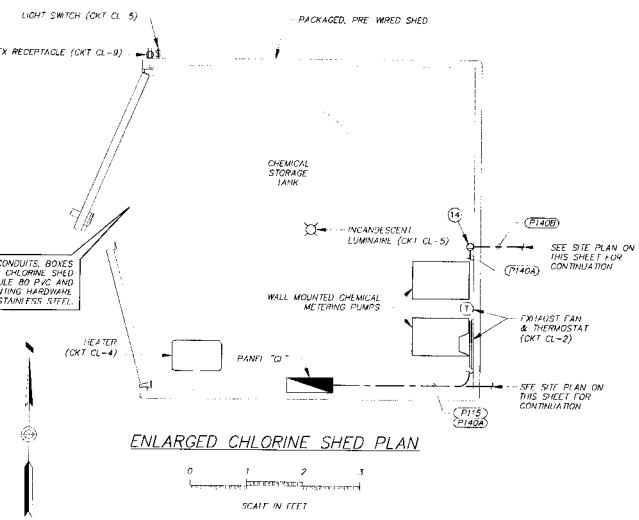

ENLARGED CHLORINE SHED PLAN

0 1 2 3

SCALE IN FEET

DARCOR ELECTRICAL CONSULTING ENGINEERS
7600 N. 16TH ST. SUITE 205-A PHOENIX, AZ 85020 Ph: (602) 795-2699 WWW.DARCORINC.COM

7600 North 16th Street Suite 205, Phoenix Arizona 85020 USA
T 1 602 216 7200 F 1 602 216 7201
E phxmail@ghd.com W www.ghd.com

The installation shown is to be installed in accordance with the latest Arizona Water Company standard specifications on file with the Arizona Department of Environmental Quality

263-1100
1-800-STAKE IT

SEC 17 - T5S - R9E

DATE 12/23/2014	SCALE NONE
DRAWN BY DRG	DESIGNED BY JLG

ARIZONA WATER COMPANY
3805 N. BLACK CANYON HWY POST OFFICE BOX 29006
PHOENIX, ARIZONA 85038-9006
(602) 240-6860

VALLEY FARMS ARSENIC REMOVAL FACILITY
16601 E. VAH KI INN ROAD COOLIDGE, AZ 85128

ELECTRICAL SITE PLAN

E3

SHEET 17 OF 25

PANEL:	LP	VOLTAGE:	120/208V, 1 ϕ	MAINS:	60A	BUS AMPS:	100
TYPE:	BOLTON OR EQUAL	MOUNTING:	SURFACE			MIN. AIR:	10,000

VA LOAD

CIRCUIT DESCRIPTION	BKR	CKT	ϕA	ϕB	CKT	BKR	CIRCUIT DESCRIPTION
MAIN CIRCUIT BREAKER	60	1	900	1360	2	15	CHEM DISINFECTION SHED DEVICES
		3			4	15	CHEM DISINFECTION SHED HEATER
X CHEM DISINFECTION SHED LIGHT	15	5	180		6	20	CHEM SIDESTREAM PUMP No.1 XX
SPARE	15	7		265	8	20	CHEM SIDESTREAM PUMP No.2
CHEM DISINFECTION SHED RECEPT	15	9	180		10		
		11			12		
		13			14		
		15			16		
CONNECTED VA PER PHASE			1085	1705	NOTES:		
CONNECTED AMPS PER PHASE			9.0	14.2	"X" DENOTES CONTINUOUS LIGHTING LOAD		
+25% LARGEST MOTOR VA			51	0	"XX" DENOTES LARGEST MOTOR LOAD		
+25% CONTINUOUS LIGHTING LOAD VA			25	0			
DEMAND VA PER PHASE			1161	1765			
TOTAL AMPS PER PHASE			9.7	14.7	(PANELBOARD FURNISHED WITH CLEAR SHIELD)		

GENERAL NOTE

A. REFER TO CONDUIT BLOCK DIAGRAM ON DRAWING E5 FOR ADDITIONAL CONDUIT & CONDUCTOR REQUIREMENTS.

KEY NOTES

1. INSTALL NEW 15A/3P CIRCUIT BREAKER IN RETROFIT BUCKET.
2. MOUNT EXISTING ACRYLIC PANEL INSIDE RTU SECTION USING A HOFFMAN MODEL ANADFK PANEL MOUNTING KIT SUCH THAT EXISTING CONTROL DEVICES ARE LOCATED BEHIND ACRYLIC PANEL.
3. REPLACE EXISTING 20A/1P CIRCUIT BREAKERS WITH A 60A/2P CIRCUIT BREAKER (SQUARE D 009260). RELABEL EXISTING PANEL SCHEDULE ACCORDINGLY.
4. UTILIZE EXISTING 20A/1P CIRCUIT BREAKER AND RELABEL PANEL SCHEDULE ACCORDINGLY.
5. REFER TO DRAWING's E7 & E8 FOR MODIFICATIONS REQUIRED IN EXISTING WELL PUMP No.2 STARTER SECTION.
6. REFER TO DRAWING's E9 & E10 FOR MODIFICATIONS REQUIRED IN EXISTING RTU SECTION.
7. REFER TO DRAWING E6 FOR MODIFICATIONS REQUIRED IN EXISTING WELL PUMP No.1 STARTER SECTION.
8. SEE PANEL SCHEDULE ON THIS SHEET FOR REQUIRED MODIFICATIONS
9. UTILIZE EXISTING CIRCUIT FOR POLE MOUNTED AREA LIGHTING.

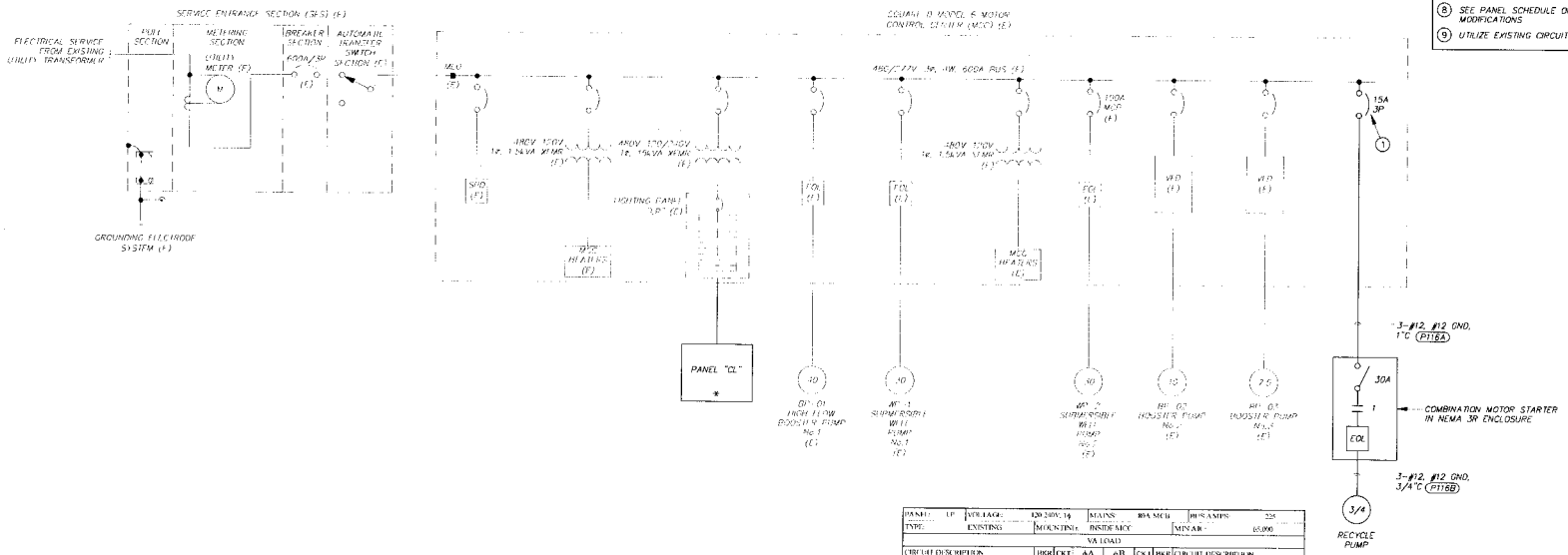

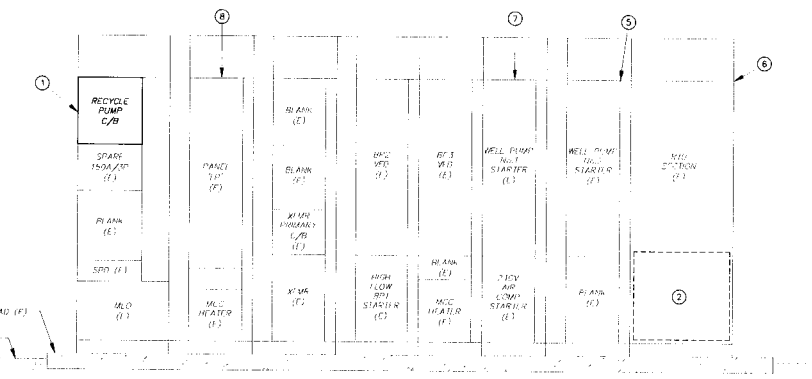

EXISTING MCC ELEVATION
NTS

PANEL:	LP	VOLTAGE:	120/208V, 1ϕ	MAINS:	100A MCB	BUS AMPS:	225
TYPE:	EXISTING	MOUNTING:	INSIDE MCC			MIN AIR:	65,000

VA LOAD

CIRCUIT DESCRIPTION	BKR	CKT	ϕA	ϕB	CKT	BKR	CIRCUIT DESCRIPTION
RTU RETURN A CONDT	30	1	240		2	20	AREA LIGHTS X
RTU PANEL	20	3		900	4	20	YARD RECEPTS
SPARE	20	5		360	6	20	SPARE
SPARE	20	7		180	8	20	BPS FLOW METER (RTU HB)
		9		360	10		
CHLORINE ANALYZER RCPT #1	20	11		180	12	20	HYDRO TANK AIR COMP (2HP)
		13		1410	14		
BPS SHADE CANOPY LTG	20	15	270		16	20	SPARE
		17	0		18		
BPS FLOOD LTG	20	19		270	20	20	CHLORINE ANALYZER RCPT #2
		21	180	180	22		
X BLENDING BYPASS FLOWMETER	20	23	520		24	20	ELECT SHADE CANOPY LTG
X ABSORBER BUNKER FLOWMETER	20	25		780	26	20	ELECT SHADE CANOPY FLOOD LTG
		27		1270	28		
SPARE	20	29			30	20	SPARE
SPARE	20	31			32	20	SPARE
SPARE	20	33			34	20	SPARE
SPARE	20	35			36	20	SPARE
SPARE	20	37			38	20	SPARE
SPARE	20	39			40	20	SPARE
SPARE	20	41			42	20	SPARE
X CHEMICAL DISINFECTION SHED PANEL "CL"	60	43	1705	1705	44	20	SPARE
		45			46		
CONNECTED VA PER PHASE			4185	4085	NOTES:		
CONNECTED AMPS PER PHASE			34.9	40.9	"X" DENOTES CONTINUOUS LIGHTING LOAD		
+25% CONTINUOUS LIGHTING LOAD VA			50	0			
DEMAND VA PER PHASE			4235	4085			
TOTAL AMPS PER PHASE			35.3	40.9	TEXT IN BOLD ITALIC DENOTES NEW CIRCUIT		

EXISTING 480V, 3 ϕ LOAD CALCULATIONS

EXISTING LOADS	KVA	H.P.	AMPS
SPD LINE	0	--	0.0
MCC HEATERS	3	--	3.4
WELL PUMP No.1	--	20	20.0
WELL PUMP No.2	--	30	20.0
LIGHTING PANEL TRANSFORMER	15	--	21.3
BOOSTER PUMP No.1	--	40	52.0
BOOSTER PUMP No.2	--	30	41.0
BOOSTER PUMP No.3	--	25	41.0
ADDITIONAL LOAD	KVA	H.P.	AMPS
RECYCLE PUMP	--	0.75	1.6
		SUBTOTAL	195.3
		+25% OF LARGEST MOTOR (40HP)	13.0
		MINIMUM SERVICE SIZE	208.3
		EXISTING SERVICE SIZE	600A

* DENOTES EQUIPMENT FURNISHED AS PART OF PACKAGED SYSTEMS

DARCOR ELECTRICAL CONSULTING ENGINEERS
7600 N. 16TH ST. SUITE 205-A PHOENIX, AZ 85020
Ph: (602) 795-2690 WWW.DARCORINC.COM

GHD
7600 North 16th Street Suite 205 | Phoenix Arizona 85020 USA
T 1 602.216.7200 F 1 602.216.7201
E phxmail@ghd.com W www.ghd.com

The installation shown is to be installed in accordance with the Arizona Water Company Water Quality Protection Plan on file with the Arizona Department of Environmental Quality.

Call Before You Dig 263-1100 1-800-STAKE-IT (Arizona Only)

SCALE	NONE
DATE	12/23/2014
DRAWN BY	DRG
PROJECT MGR.	JLG

ARIZONA WATER COMPANY
3805 N. BLACK CANYON HWY. POST OFFICE BOX 29006
PHOENIX, ARIZONA 85038-9006
(602) 240-6860

VALLEY FARMS ARSENIC REMOVAL FACILITY
16601 E. VAH KI INN ROAD - COOLIDGE, AZ 85128

SINGLE LINE DIAGRAM

SARGE GERARDO 12/23/14 ARIZONA, U.S.A. Expires 9/30/15

DWG. No. E4

SHEET 18 OF 25

KEY NOTE

1. EXISTING CONDUIT TO BE EXTENDED.

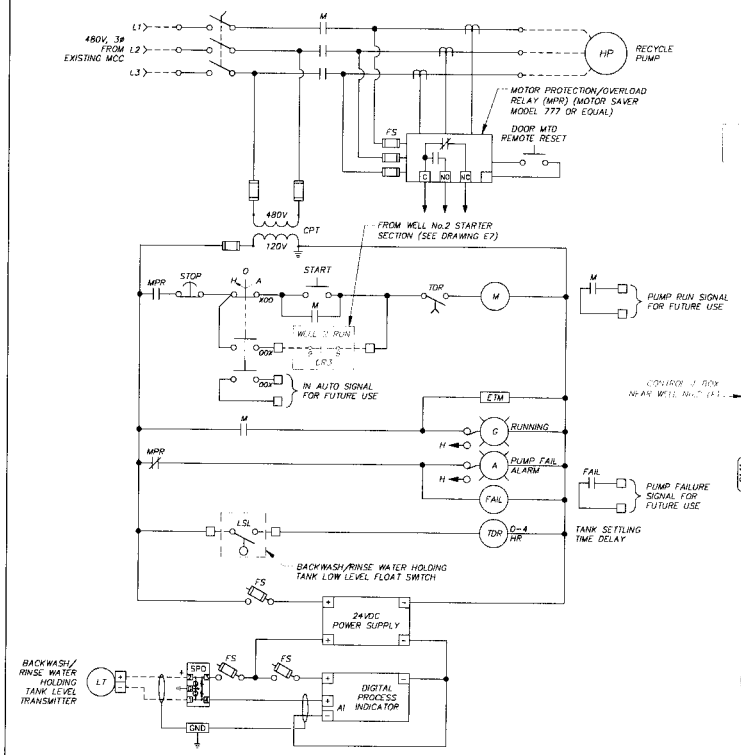

RECYCLE PUMP MOTOR CONTROL SCHEMATIC

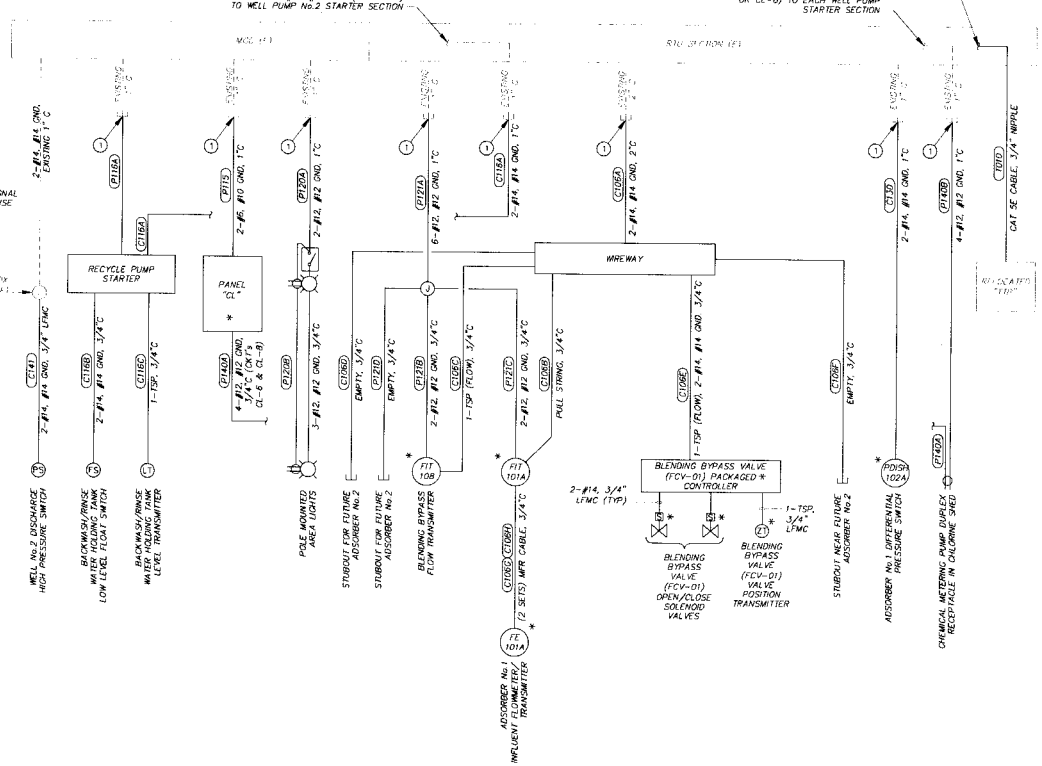

NOTE: REFER TO SINGLE LINE DIAGRAM ON DRAWING E4 FOR ADDITIONAL CONDUIT & CONDUCTOR REQUIREMENTS.

CONDUIT BLOCK DIGRAM

* DENOTES EQUIPMENT FURNISHED AS PART OF PACKAGED SYSTEMS

NOTE: EXISTING CONDUIT INFORMATION DERIVED FROM RECORD DRAWINGS PREPARED BY HEIDEMAN ASSOCIATES, INC. ON 12/18/13. DARCOR & ASSOCIATES, INC TAKES NO RESPONSIBILITY OR LIABILITY FOR ERRORS OR ACCURACY OF THE RECORD DRAWINGS.

DARCOR ELECTRICAL CONSULTING ENGINEERS
7600 N. 15TH ST. SUITE 205-A PHOENIX, AZ 85020
Ph: (602) 795-2899 WWW.DARCORINC.COM

7600 North 15th Street Suite 205, Phoenix Arizona 85020 USA
T 1 602 216 7200 F 1 602 216 7201
E phoenix@ghd.com W www.ghd.com

The installation shown is to be installed in accordance with the latest Arizona Water Company standard specifications on file with the Arizona Department of Environmental Quality

263-1100
1-800-STAKE-IT

ARIZONA WATER COMPANY
3805 N. BLACK CANYON HWY POST OFFICE BOX 29006
PHOENIX, ARIZONA 85038-9006
(602) 240-6860

PROJECT TITLE: VALLEY FARMS ARSENIC REMOVAL FACILITY, 16601 E. VAN HI WINE ROAD, COOLIDGE, AZ 85128

PROJECT DETAIL TITLE: CONDUIT BLOCK DIAGRAM & RECYCLE PUMP SCHEMATIC

SEC 17 - T5S - R9E
DATE 12/23/2014
SCALE NONE
DRAWN BY DRG
CHECKED BY JLG

53839 JORGE GERARDO 12/23/14 REGISTERED PROFESSIONAL ENGINEER ARIZONA U.S.A. Expires 6/30/15

DWG. NO. E5

SHEET 19 OF 25

Saved: December 23, 2014 File: 1-N013-E5 Swg Starter_Upgrade

RECORD DRAWING

THIS DRAWING MUST BE FIELD VERIFIED BEFORE USE
DRAWING NOT TO SCALE UNLESS SCALE BAR IS PRESENT

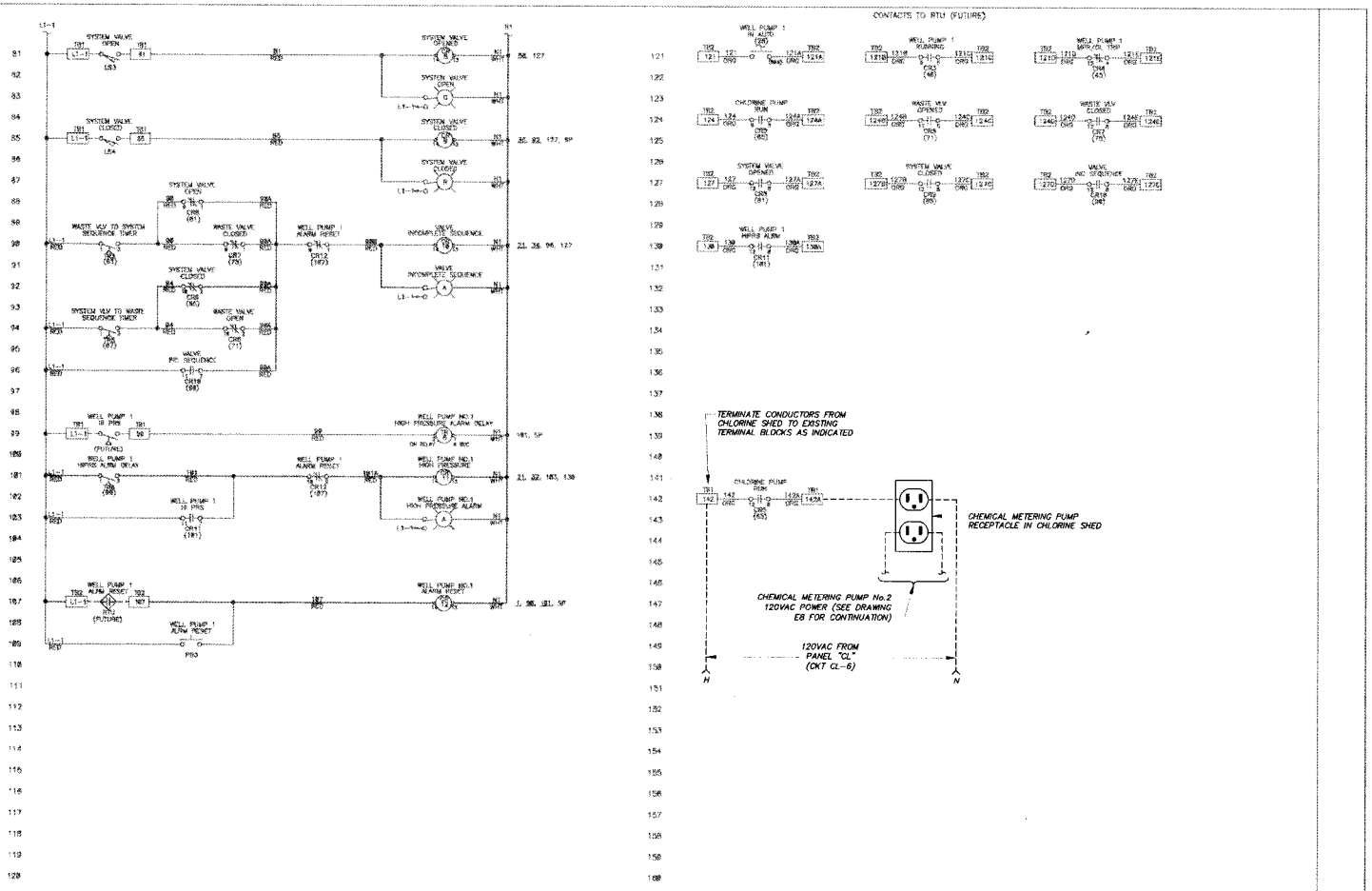

RDC ELECTRICAL	RDC ELECTRIC CORP. 3411 SOUTH 44TH STREET PHOENIX, ARIZONA 85040 PHONE: (602) 437-0790 FAX: (480) 829-7350 www.rdc-electrical.com	REVISIONS: NO. / DATE / BY / CKD / REMARKS	DESIGNED BY: SV; DRAWN BY: P.W.SHIELDS; CHECKED BY: SV
ARIZONA WATER COMPANY: VALLEY FARMS WELL & TANK SITE, COOLIDGE, ARIZONA	BOOSTER PUMP STATION: MOTOR CONTROL CENTER WELL PUMP NO.1 CONTROL SCHEMATIC	COPYRIGHT © 2013; RDC PROJECT NO. 2828; DATE: [illegible]; SHEET 14 OF 21; CAD FILE: 14-MCC-WP1_Sch	

NOTE: THIS WIRING DIAGRAM PREPARED BY RDC ON 11/11/13 HAS BEEN PROVIDED FOR INFORMATION ONLY. DARCOR & ASSOCIATES, INC. TAKES NO RESPONSIBILITY OR LIABILITY FOR ACCURACY OF THE WIRING DIAGRAMS INDICATED ON THIS SHEET.

DARCOR ELECTRICAL CONSULTING ENGINEERS
7600 N. 16TH ST. SUITE 205-A PHOENIX, AZ 85020
Ph: (602) 795-2699 WWW.DARCORINC.COM

7600 North 16th Street Suite 205, Phoenix Arizona 85020 USA
T 1 602 216 7200 F 1 602 216 7201
E pnormile@ghd.com W www.ghd.com

The installation shown is to be installed in accordance with the Arizona Water Company water quality standards and the rules of the Arizona Department of Environmental Quality

263-1100
1-800-STAKE-IT
(ARIZONA ONLY)

SCALE:	NONE
DATE:	12/23/2014
DRAWN BY:	JLG
CHECKED BY:	DRG

ARIZONA WATER COMPANY
3805 N. BLACK CANYON HWY. POST OFFICE BOX 29006
PHOENIX, ARIZONA 85038-9006
(602) 240-6860

VALLEY FARMS ARSENIC REMOVAL FACILITY
16601 E. VAH KI INN ROAD - COOLIDGE, AZ 85128

WELL No.1 STARTER SECTION MODIFICATIONS

DRAWING NO. E6

SHEET 20 OF 25

Saved: December 22, 2014 File: 1-2013-E6 Wpg Drafter: Jorge Ilm

RECORD DRAWING

THIS DRAWING MUST BE FIELD VERIFIED BEFORE USE
DRAWING NOT TO SCALE UNLESS SCALE BAR IS PRESENT

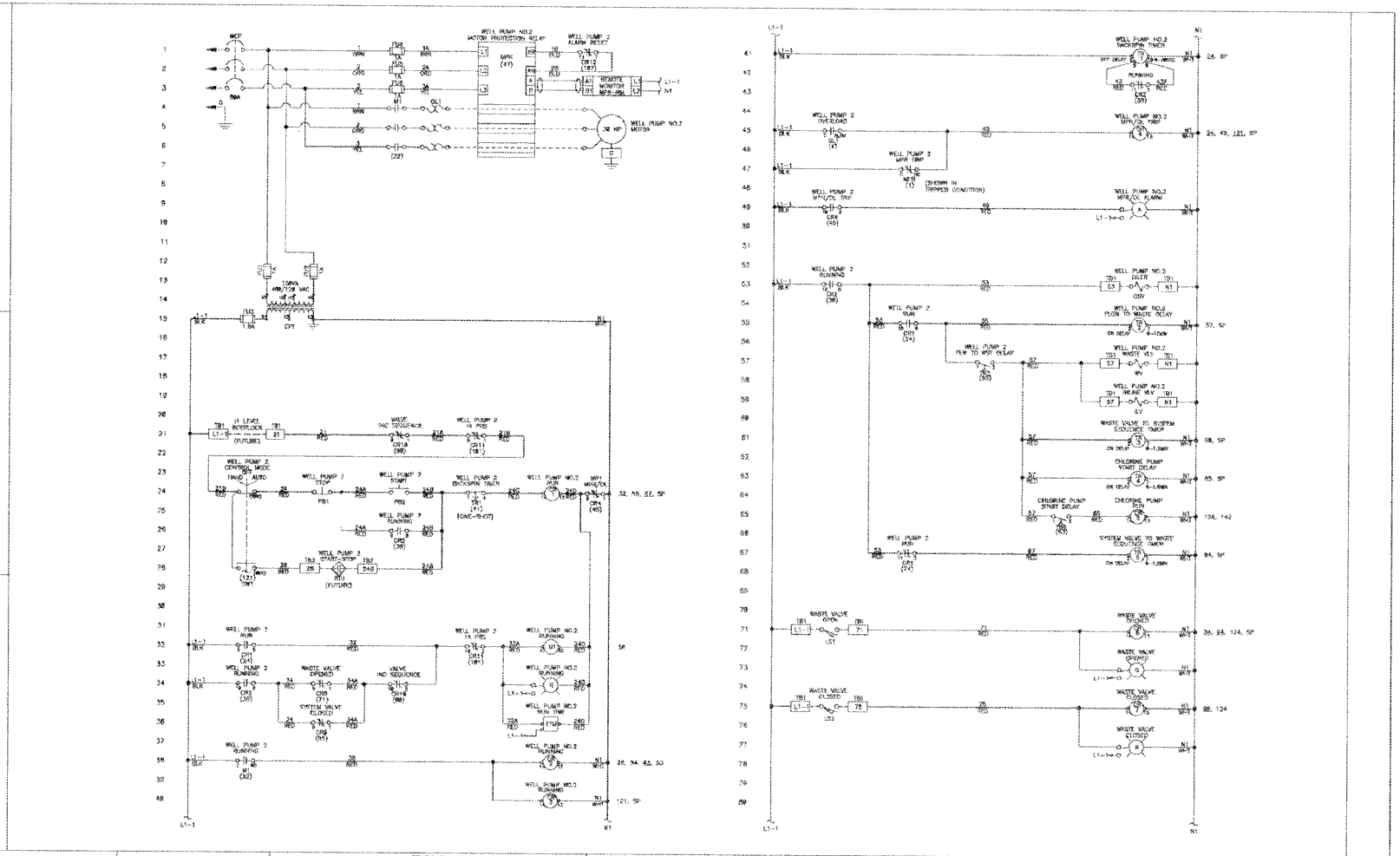

RDC ELECTRICAL

RDC ELECTRIC CORP.
3411 SOUTH 44TH STREET
PHOENIX, ARIZONA 85040
PHONE: (602) 437-0760
FAX: (480) 829-7350
www.rdc-electrical.com

REVISIONS

NO.	DATE	BY	CKD	REMARKS

DESIGNED BY: SV
DRAWN BY: P.W.SHIELDS
CHECKED BY: SV

ARIZONA WATER COMPANY
VALLEY FARMS
WELL & TANK SITE
COOLIDGE, ARIZONA

BOOSTER PUMP STATION
MOTOR CONTROL CENTER
WELL PUMP NO.2
CONTROL SCHEMATIC

COPYRIGHT © 2013
RDC PROJECT NO. 2828
DATE: [illegible]
SHEET 17 OF 21
CAD FILE: 17-MCC-WP2_Sch

NOTE: THIS WIRING DIAGRAM PREPARED BY RDC ON 11/11/13 HAS BEEN PROVIDED FOR INFORMATION ONLY. DARCOR & ASSOCIATES, INC TAKES NO RESPONSIBILITY OR LIABILITY FOR ACCURACY OF THE WIRING DIAGRAMS INDICATED ON THIS SHEET.

DARCOR
ELECTRICAL CONSULTING ENGINEERS
7600 N. 16TH ST.
SUITE 205-A
PHOENIX, AZ 85020
Ph: (602) 795-2699
WWW.DARCORINC.COM

7600 North 16th Street Suite 205, Phoenix Arizona 85020 USA
T 1 602 216 7200 F 1 602 216 7201
E phxmail@gnd.com W www.gnd.com

The installation shown is to be installed in accordance with the Arizona Water Company standard specifications on file with the Arizona Department of Environmental Quality

263-1100
1-800-STAKE-IT

SEC 17 - TSS - R9E	
DATE 12/23/2014	SCALE NONE
DRAWN BY DRG	CHECKED BY JLG

ARIZONA WATER COMPANY
3805 N. BLACK CANYON HWY. POST OFFICE BOX 29006
PHOENIX, ARIZONA 85038-9006
(602) 240-6860

VALLEY FARMS ARSENIC REMOVAL FACILITY
16601 E. VAN KLINN ROAD - COOLIDGE, AZ 85128

WELL No.2 STARTER SECTION MODIFICATIONS - I

53839
JORGE GERARDO
12/23/14
ARIZONA, U.S.A.
Expires 9/30/15

E7

SHEET 21 OF 25

RECORD DRAWING

THIS DRAWING MUST BE FIELD VERIFIED BEFORE USE
DRAWING NOT TO SCALE UNLESS SCALE BAR IS PRESENT

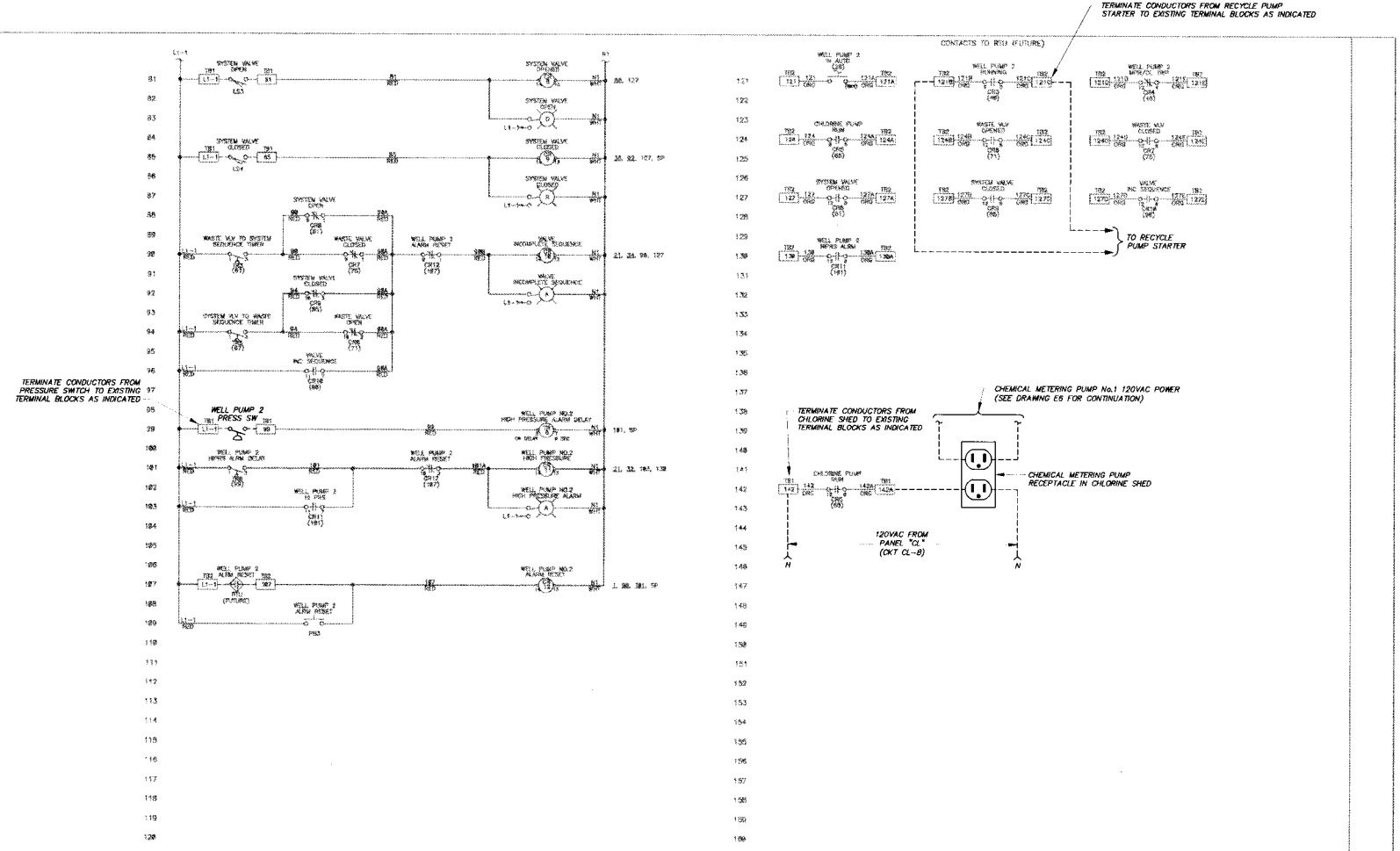

NOTE: THIS WIRING DIAGRAM PREPARED BY RDC ON 11/11/13 HAS BEEN PROVIDED FOR INFORMATION ONLY. DARCOR & ASSOCIATES, INC TAKES NO RESPONSIBILITY OR LIABILITY FOR ACCURACY OF THE WIRING DIAGRAMS INDICATED ON THIS SHEET.

RDC ELECTRICAL

RDC ELECTRIC CORP.
3411 SOUTH 44TH STREET
PHOENIX, ARIZONA 85040
PHONE (602) 437-0780
FAX (480) 829-7350
www.rdc-electrical.com

REVISIONS				
NO	DATE	BY	CKD	REMARKS

DESIGNED BY: SV
DRAWN BY: P.W.SHIELDS
CHECKED BY: SV

ARIZONA WATER COMPANY
VALLEY FARMS
WELL & TANK SITE
COOLIDGE, ARIZONA

BOOSTER PUMP STATION
MOTOR CONTROL CENTER
WELL PUMP NO.2
CONTROL SCHEMATIC

COPYRIGHT © 2013
RDC PROJECT NO. 2826
DATE: 11/11/2013
SHEET 18 OF 21
CAD FILE: 18-WCC-WP2_Sch

DARCOR
ELECTRICAL CONSULTING ENGINEERS
7600 N. 16TH ST.
SUITE 205-A
PHOENIX, AZ 85020
Ph: (602) 795-2699
WWW.DARCORINC.COM

ARIZONA WATER COMPANY
3805 N. BLACK CANYON HWY POST OFFICE BOX 29006
PHOENIX, ARIZONA 85038-9006
(602) 240-6860

PROJECT TITLE: VALLEY FARMS ARSENIC REMOVAL FACILITY
16601 E. VAH KI INN ROAD COOLIDGE, AZ 85128
PROJECT SHEET TITLE: WELL No.2 STARTER SECTION MODIFICATIONS - II

REV. NO.	DATE	REVISION
	9/25/14	

PROJECT MGR: SEC 17 - T5S - R9E
DATE: 12/23/2014
SCALE: NONE
DRAWN BY: DRG
REVIEWED BY: JLG

7600 North 16th Street Suite 205, Phoenix Arizona 85020 USA
T 1 602.216.7200 F 1 602.216.7201
E pmail@ghd.com W www.ghd.com

The installation shown is to be installed in accordance with Arizona Water Company standard specifications on file with the Arizona Department of Environmental Quality

263-1100
1-800-STAKE-IT

53839
JORGE
GERARDO
12/23/14
REGISTERED PROFESSIONAL ENGINEER
ARIZONA, U.S.A.
Expires 9/30/15

DWG. NO. E8
SHEET 22 OF 25

Saved: December 22, 2014 File: 1-0035-F3.dwg Unit: Inches/Min

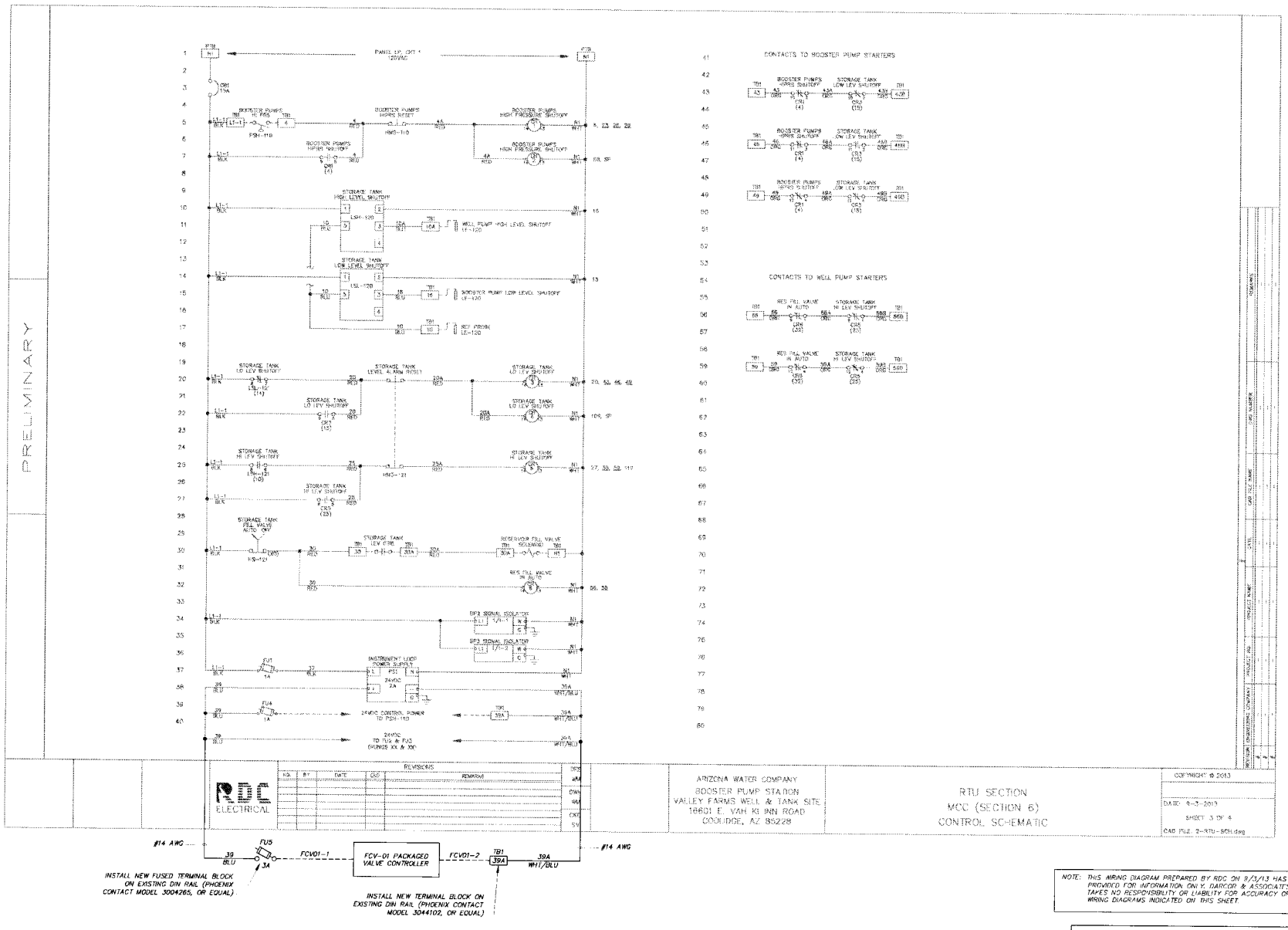

NOTE: THIS WIRING DIAGRAM PREPARED BY RDC ON 9/3/13 HAS BEEN PROVIDED FOR INFORMATION ONLY. DARCOR & ASSOCIATES, INC TAKES NO RESPONSIBILITY OR LIABILITY FOR ACCURACY OF THE WIRING DIAGRAMS INDICATED ON THIS SHEET.

DARCOR ELECTRICAL CONSULTING ENGINEERS
7600 N. 16TH ST.
SUITE 205-A
PHOENIX, AZ 85020
Ph: (602) 795-2699
WWW.DARCORINC.COM

ARIZONA WATER COMPANY
3805 N. BLACK CANYON HWY.
POST OFFICE BOX 29006
PHOENIX, ARIZONA 85038-9006
(602) 240-6860

VALLEY FARMS ARSENIC REMOVAL FACILITY
16601 E. VAH KI INN ROAD - COOLIDGE, AZ 85128
RTU SECTION MODIFICATIONS - I

The installation shown is to be installed in accordance with the Arizona Water Company standard specifications on file with the Arizona Department of Environmental Quality

SEC 17 - T5S - R9E
12/23/2014
DRG
NONE
JLG

263-1100
1-800-STAKE-IT

GHD
7600 North 16th Street Suite 205, Phoenix Arizona 85020 USA
T 1 602 216 7200 F 1 602 216 7201
E phxmail@ghd.com W www.ghd.com

5.18.39
JORGE GERARDO
12/23/14
ARIZONA, U.S.A.
Expires 9/30/15

E9

SHEET 23 OF 25

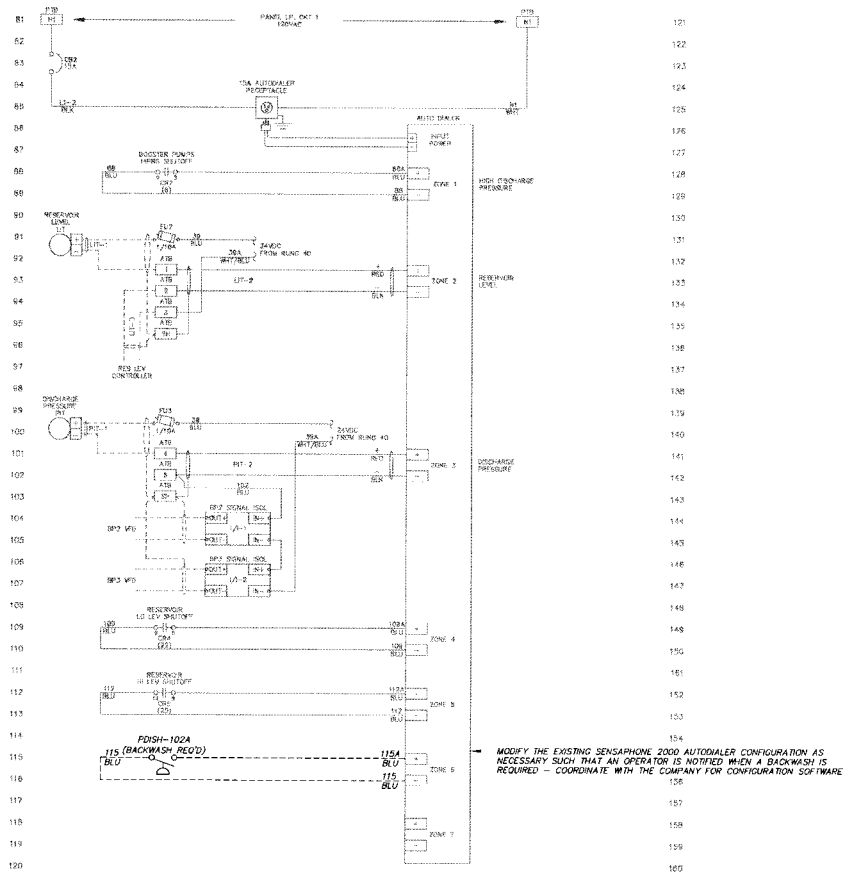

PRELIMINARY

RDC ELECTRICAL

REVISIONS				
NO.	BY	DATE	CKD	REMARKS

DES RM
DWN WM
CKD SV

ARIZONA WATER COMPANY
BOOSTER PUMP STATION
VALLEY FARMS WELL & TANK SITE
16601 E. VAH KI INN ROAD
COOLIDGE, AZ 85228

RTU
CONTROL SCHEMATIC

COPYRIGHT © 2013

DATE:
SHEET 4 OF 4
CAD FILE: 4-RTU-Sch

NOTE: THIS WIRING DIAGRAM PREPARED BY RDC ON 9/3/13 HAS BEEN PROVIDED FOR INFORMATION ONLY. DARCOR & ASSOCIATES, INC TAKES NO RESPONSIBILITY OR LIABILITY FOR ACCURACY OF THE WIRING DIAGRAMS INDICATED ON THIS SHEET.

DARCOR
ELECTRICAL CONSULTING ENGINEERS
7600 N. 16TH ST.
SUITE 205-A
PHOENIX, AZ 85020
Ph: (602) 795-2699
WWW.DARCORINC.COM

7600 North 16th Street Suite 205, Phoenix Arizona 85020 USA
T 1 602 216 7200 F 1 602 216 7201
E phxmail@ghd.com W www.ghd.com

The installation shown is to be installed in accordance with the Arizona Water Company standard specifications on file with the Arizona Department of Environmental Quality

SEC 17 - T5S - R9E

12/23/2014 | NONE | DRG | JLG

263-1100
1-800-STAKE-IT

ARIZONA WATER COMPANY

3805 N. BLACK CANYON HWY. POST OFFICE BOX 29006
PHOENIX, ARIZONA 85038-9006
(602) 240-6860

VALLEY FARMS ARSENIC REMOVAL FACILITY
16601 E. VAH KI INN ROAD - COOLIDGE, AZ 85128

RTU SECTION MODIFICATIONS - II

53839
JORGE GERARDO
12/23/14
ARIZONA, U.S.A.
Expires 9/30/15

E10

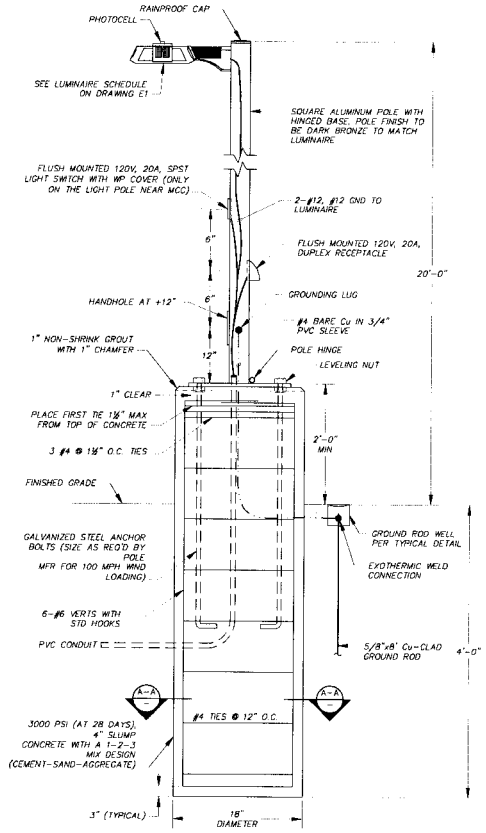

A / E3 AREA LIGHT DETAIL
NTS

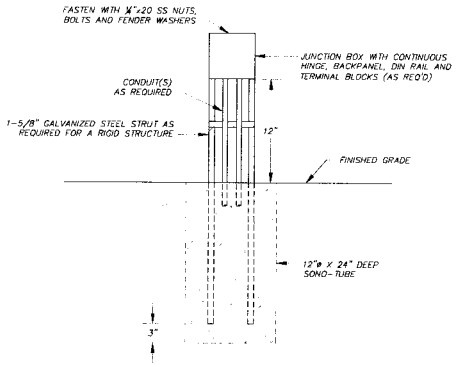

B / E3 ABOVE GROUND JUNCTION BOX WITH FOUNDATION MOUNTING DETAIL
NTS

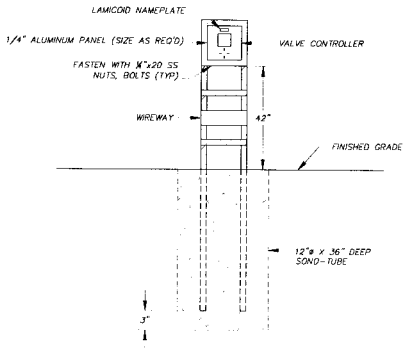

NOTE: CONDUITS NOT SHOWN FOR CLARITY.

C / E3 VALVE CONTROLLER MOUNTING DETAIL
NTS

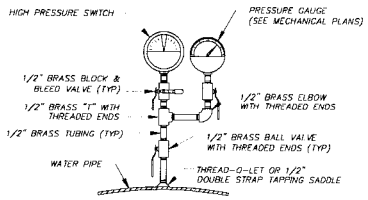

F / E3 PRESSURE SWITCH & PRESSURE GAUGE MOUNTING DETAIL
NTS

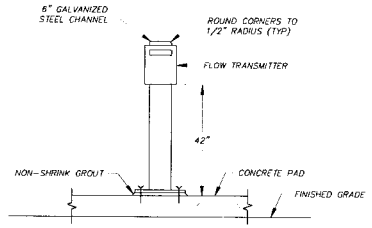

NOTE: CONDUITS NOT SHOWN FOR CLARITY.

E / E3 FLOW TRANSMITTER MOUNTING DETAIL
NTS

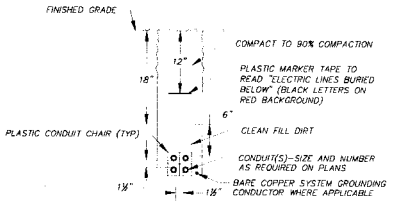

NOTES:

1. ALL DIMENSIONS INDICATED ABOVE ARE MINIMUM.
2. SPARE CONDUITS MUST BE LOCATED ON TOP OF DUCTBANKS.
3. THIS DETAIL APPLIES IN ALL CASES WHETHER SPECIFICALLY REFERRED TO OR NOT.
4. THIS DETAIL DOES NOT APPLY TO UTILITY DUCTBANKS.

UDB / TYP TYPICAL UNDERGROUND CONDUIT DUCTBANK DETAIL
NTS

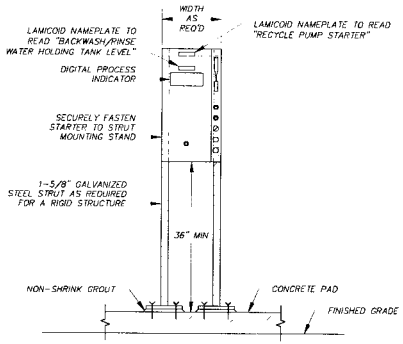

NOTE: CONDUITS NOT SHOWN FOR CLARITY.

D / E3 RECYCLE PUMP STARTER MOUNTING DETAIL
NTS

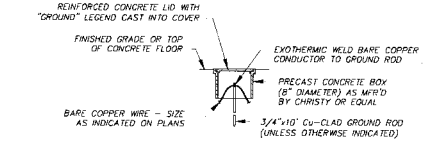

GRW / TYP TYPICAL GROUND ROD AND WELL DETAIL
NTS

DARCOR ELECTRICAL CONSULTING ENGINEERS
7600 N. 16TH ST. SUITE 205-A PHOENIX, AZ 85020
Ph: (602) 795-2699 WWW.DARCORINC.COM

ARIZONA WATER COMPANY
3805 N. BLACK CANYON HWY. POST OFFICE BOX 29006
PHOENIX, ARIZONA 85038-9006
(602) 240-6860

VALLEY FARMS ARSENIC REMOVAL FACILITY
16601 E. VAH KI INN ROAD - COOLIDGE, AZ 85128

ELECTRICAL DETAILS

PROJECT NO. | SCALE: NONE | DATE: 12/23/2014 | DRAWN BY: DRG | CHECKED BY: JLG

SECTION: SEC 17 - T5S - R9E

SYSTEM | PLAN | SHEET

This installation shown is to be installed in accordance with the Arizona Water Company Specifications and Standards and with the Arizona Department of Environmental Quality

Call Before You Dig 263-1100 1-800-STAKE-IT (ARIZONA ONLY)

GRAHAM CONSULTANTS, LTD.
7500 North 16th Street Suite 205, Phoenix Arizona 85020 USA
T 1 602 216 7200 F 1 602 216 7201
E phxmail@gnd.com W www.gnd.com

REGISTERED PROFESSIONAL ENGINEER 53859 JORGE GERARDO DIAZ 12/23/14 ARIZONA, U.S.A. Expires 6/30/15

E11

SHEET 25 OF 25

50-05 December 22, 2014 File: H:\Jobs\11 dwg Drafter generic

ARIZONA DEPARTMENT OF ENVIRONMENTAL QUALITY
CERTIFICATE OF APPROVAL TO CONSTRUCT
WATER FACILITIES

ADEQ File No: 20140293	**LTF No:** 61519
System Name: Az Water Pinal Valley	**System Number:** 11-009
Project Owner: Arizona Water Comapany	
Address: P O Box 29006, Phoenix , AZ 85038	
Project Location: Valley Farms	**County :** Pinal
Description: INSTALLATION OF AN ARSENIC REMOVAL SYSTEM WITH ASSOCIATED BLENDING PLAN, BOOSTER PUMPS AND RELATED APPURTENANCES AND PIPING.	

Approval to construct the above-described facilities as represented in the approved documents on file with the Arizona Department of Environmental Quality is hereby given subject to provisions 1 through 4 continued on page 1 through 1

1. This project must be constructed in accordance with all applicable laws, including Title 49, Chapter 2, Article 9 of the Arizona Revised Statutes and Title 18, Chapter 5, Article 5 of the Arizona Administrative Code.

2. Upon completion of construction, the engineer shall fill out the Engineer's Certificate of Completion and forward it to the Central Regional Office located in Phoenix. If all requirements have been completed, that unit will issue a Certificate of Approval of Construction. R18-5-507(B), Ariz. Admin.Code. At the project owner's request, the Department **may** conduct the final inspection required pursuant to R18-5-507(B); such a request must be made in writing in accordance with the time requirements of R18-5-507(C), Ariz. Admin. Code.

3. This certificate will be void if construction has not started within one year after the Certificate of Approval to Construct is issued, there is a halt in construction of more than one year, or construction is not completed within three years of the approval date. Upon receipt of a written request for an extension of time, the Department may grant an extension of time; an extension of time must be in writing. R18-5-505(E), Ariz. Admin. Code.

4. Operation of a newly constructed facility shall not begin until a Certificate of Approval of Construction has been issued by the Department. R18-5-507(A), Ariz. Admin. Code.

Reviewed by: RDR

By: _____ 1/12/15
David Burchard — Date
Water Quality Division

cc: File No : 20140293
Regional Office: Central
Owner: Arizona Water Comapany
County Health Department: Pinal
Engineer: Ghd, Inc
Planning and Zoning/Az Corp. Commission
Engineering Review Database - Etr021

ARIZONA WATER COMPANY

3805 N. BLACK CANYON HIGHWAY, PHOENIX, ARIZONA 85015-5351 • P.O. BOX 29006, PHOENIX, AZ 85038-9006
PHONE: (602) 240-6860 • FAX: (602) 240-6874 • TOLL FREE: (800) 533-6023 • www.azwater.com

October 28, 2014

Mr. Martin Weber
Weber Water Resources, LLC
16825 S. Weber Drive
Chandler, AZ 85226

Re: Valley Farms Well No. 2

PROJECT: Pump & Motor Replacement	
SYSTEM: Pinal Valley	
CONTRACT NO.:	
P.E. NO.:	W.A. NO.:

Dear Mr. Weber:

Enclosed is your copy of the Proposal/Contract for the above-referenced project, which has been accepted by Arizona Water Company (the "Company"). The project shall be constructed in accordance with the Company's *General Conditions of Contract, the Specifications and the Drawings* which were included with the Company's previously provided Proposal/Contract, copies of which are being provided again and attached herewith.

Also enclosed are two copies of the Commencement Notice for the above-referenced project. Please sign one of the copies and return it to my attention retaining the other for your records.

As provided in paragraph 4 of the Company's Proposal/Contract executed by the Company on October 28, 2014, Weber Water Resources, LLC acknowledged that one hundred percent (100%) Performance and Payment Bonds are required and must be provided to the Company prior to the commencement of work. In addition, as provided in paragraph 44 of the Company's General Conditions of Contract, the 100% Performance and Payment Bonds must be provided within ten (10) calendar days of the date of the Commencement Notice. Failure to provide an acceptable 100% Performance and Payment Bond does not limit the Company's

ability to terminate the Proposal/Contract or seek restitution for damages that the Company may have or will incur.

Prior to the start of construction, please call Ray Murrieta, Division Manager at 520-836-8785 to schedule a pre-construction meeting. In addition, please provide the required Performance and Payment Bonds to the Company promptly so that the contracted work can be completed within the contract's timeline.

If you have any questions, please call me at this office.

Very truly yours,

Andrew J. Haas, P. E.
Chief Engineer
ahaas@azwater.com

afh
Enclosure

ARIZONA WATER COMPANY

Pinal Valley - Casa Grande
220 E. 2nd Street

PROPOSAL/CONTRACT

CONTRACTOR: WEBER WATER RESOUCES, LLC	SYSTEM: PINAL VALLEY
ADDRESS: 16825 S. WEBER DRIVE	W.A. No(s):
CITY ST ZIP: CHANDLER, AZ 85226	BID DUE DATE: October 16, 2014

CONTRACTOR SUBMITS this PROPOSAL/CONTRACT to ARIZONA WATER COMPANY, an Arizona corporation (the "Company"), to perform the work and complete the project described on Page 2 (the "Project"), as an independent prime contractor.

1. Contractor certifies that it has a complete copy of, and has read, understands and accepts, the Company's General Conditions of Contract, and the Company's Construction Specifications and Standard Specification Drawings, (the "Specifications"), all of which are attached hereto. Contractor has examined the specific plans and related construction drawings for the Project (the "Drawings"), copies of which are also attached hereto. The General Conditions of Contract, Specifications and Drawings are incorporated into this Proposal/Contract. Contractor affirms that all work and materials to be furnished or purchased for the Project will be in strict conformance with the General Conditions of Contract, Specifications and Drawings.
2. Contractor represents and warrants that it has satisfied and complied with the provisions of Section 6, Contractor Understands Work and Working Conditions, of the General Conditions of Contract prior to submitting this Proposal/Contract.
3. Contractor represents that this Proposal/Contract is fair and honest in all respects, is submitted in good faith and is not submitted in collusion with any other company, entity or person.
4. Contractor acknowledges that one hundred percent (100%) Performance and Payment Bonds are required and must be provided to the Company prior to the commencement of work.
5. Prior to the commencement of work, Contractor will submit to the Company a list of all materials to be used in the Project. The materials list will include the manufacturer, part number, price and quantity included in this Proposal/Contract.
6. Contractor will furnish all labor, tools, equipment and materials required to complete the Project according to the General Conditions of Contract, Specifications and Drawings. No materials purchased by Contractor to be incorporated into the Project are subject to tax at the time of purchase and Contractor will not charge the Company for any such tax. Contractor will pay the applicable transaction privilege tax (the "Contracting Tax") on the Project after Contractor receives payment of the final Project invoice from the Company. The cost of materials incorporated into the Project which are exempt by Arizona Revised State Statues ("A.R.S.") from the Contracting Tax, for example, pipes or valves having a diameter of four (4) inches or larger, including equipment, fittings and any other related part that is used in operating the pipes or valves (A.R.S. §42-5061 B.6.), will not be included in the total cost of the labor and materials upon which the Contracting Tax is computed. Contractor retains full liability and obligation to pay the Contracting Tax and will defend and indemnify the Company against any demand or obligation to pay the Contracting Tax.
7. Contractor will maintain detailed accounting records of all materials purchased and incorporated into the Project. Such records will include all supporting original vendor invoices for all materials purchased. Following completion of the Project, Contractor will submit an itemized accounting to the Company which will include all supporting original vendor invoices and satisfactory evidence of payment thereof. The Company will not pay Contractor for materials not actually incorporated into the Project, and the disposition of such materials will remain Contractor's responsibility.
8. The Estimated Total Cost of the Project, shown on Page 2, is based on estimated labor and material quantities to be furnished. It includes an estimate of the Contracting Tax and the cost of the required Performance and Payment Bonds. Contractor will not cancel, modify or withdraw this Proposal/Contract during a ninety-day (90) period commencing on the Bid Due Date. The Company may accept this Proposal/Contract by signing and mailing, or otherwise delivering, a copy hereof to Contractor during such ninety-day (90) period. If the Company does not accept this Proposal/Contract during such ninety-day (90) period, Contractor may cancel this Proposal/Contract by giving written notice of cancellation to the Company.
9. Prior to the commencement of work, Contractor will provide the Company with a detailed construction schedule, in either Gantt or CPM form, identifying all tasks to be performed from the date of the written Commencement Notice through completion of the Project, including testing, training of Company Personnel and final Project invoicing. Contractor will provide the Company with a copy of such construction schedule documenting the progress of work on the Project at least monthly.
10. Contractor will not commence work on the Project until the Company gives Contractor a written Commencement Notice. Contractor will complete the Project within 30 calendar days after the Commencement Notice is issued.
11. Following the Company's written notice of satisfactory completion of the Project, and upon receipt of the final Project invoice from Contractor, the Company shall pay Contractor the actual total cost of the Project, which will be calculated as shown on Page 2, except that actual labor and material quantities installed/constructed will be substituted for the estimated labor and materials quantities and the Contracting Tax will be recalculated based on such actual labor and materials quantities.
12. The amount of applicable liquidated damages for Contractor's failure to deliver or perform within the time limit shown in Paragraph 10 may be deducted from the Company's payment of the final Project invoice. This provision shall not limit the Company's ability to terminate this Proposal/Contract for Contractor's unsatisfactory performance or failure to perform as provided in the General Conditions of Contract, Specifications or Drawings, or in this Proposal/Contract.

SPECIAL CONDITIONS:

CONTRACTOR	PROPOSAL/CONTRACT ACCEPTED:
WEBER WATER RESOUCES, LLC	*ARIZONA WATER COMPANY*
By:	By:
Print Name: MARTIN WEBER	Print Name: Fredrick K. Schneider, PE
Title: CEO	Title: Vice President - Engineering
Date: 10/16/14	Date: 10-28-2014

AFH

Weber Proposal Contract Valley Farms #2 | 10/3/2014

VF-2

AJH

01/20/09 | FKS | E-3-11-5/6

ARIZONA WATER COMPANY

Pinal Valley - Casa Grande
220 E. 2nd Street
Casa Grande, AZ 85122 PH: 520-836-8785

PROPOSAL/CONTRACT

CONTRACTOR: WEBER WATER RESOURCES, LLC	SYSTEM: PINAL VALLEY
AZ CONTRACTOR LICENSE NO: CLASSIFICATION:	W.A. No(s):
ADDRESS: 16825 S. WEBER DRIVE	BID DUE DATE: October 16, 2014
CITY ST ZIP CHANDLER, AZ 85226	BID BOND REQUIRED ☑ Yes ☐ No

DESCRIPTION OF PROJECT: Install submersible pump and motor, column, check valves and submersible cable at Valley Farms Well No. 2.

1-2. MATERIALS EXEMPT FROM CONTRACTING TAX (per Paragraph 6)	QUANTITY	UNIT PRICE LABOR	UNIT PRICE MATERIALS		TOTAL COST LABOR		TOTAL COST MATERIALS
				1		2	
3. Total Labor to Install Exempt Materials (add the amounts in column 1)				3			
4. Total Exempt Materials (add the amounts in column 2)						4	

5-6. NON-EXEMPT MATERIALS	QUANTITY	LABOR	MATERIALS	LABOR	MATERIALS
Provide and install 50 HP, 480V, 3ph, 3600 rpm, submersible motor	1		6138.00		6138.00
Provide and install Goulds 6CHC 7-stage submersible bowl assembly	1	3000.00	2643.00	3000.00	2643.00
Provide and install #4 flat jacketed 3-wire w/ ground submersible cable	500 ft				1957.00
Provide and install Flomatic 80DI series check valves with knockout plug	2				793.00
Provide and install 4" x 20' steel taper thread column pipe	25				737.00
Provide and install 3/4-inch solvent weld PVC air line	500 ft				169.00
Provide and install 1/4-inch stainless steel air line with gauge and valve	500 ft				1338.00
Provide and install all miscellaneous materials (buckles, bandits, tape, etc.)	lot				350.00
Video well with downward and side scan; log and provide 2 DVD copies	1			350.00	
Brush and bail well using cable tool (price only)	40 hr.				
Acid wash (with corrosion inhibitor) and swab (price only)	40 hr.				
7. Total Labor to Install Non-Exempt Materials (add the amounts in column 5)				7 3850.00	
8. Total Non-Exempt Materials (add the amounts in column 6)					8 20,763.00
9. Subtotal A (add lines 3, 7 and 8)					9 24,613.00
10. Contracting Tax Base (multiply the amount on line 9 by 0.65)				10 15,998.45	
11. Applicable Contracting Tax Rate				11 9.7%	
12. Contracting Tax (multiply the amount on line 10 by line 11)					12 1551.85
13. Subtotal B (add lines 4, 9 and 12)					13 26,164.85
14. 100% Performance and Payment Bonds Cost					14 336.00
15. Estimated Total Cost (add lines 13 and 14)					15 26,500.85

NOTE: The Estimated Total Cost includes all labor and materials for backfill, pavement replacement, chip seal, and traffic control necessary for the Project.

ARIZONA WATER COMPANY

COMMENCEMENT NOTICE

CONTRACTOR:

Mr. Martin Weber
Weber Water Resources, LLC
16825 S. Weber Drive
Chandler, AZ 85226

DATE: 10/29/14
DIVISION: PINAL VALLEY
SYSTEM: CASA GRANDE
W.A.:

THIS IS YOUR NOTICE TO PROCEED WITH THE FOLLOWING PROJECT(S):

DESCRIPTION OF WORK:

Install submersible pump and motor, column, check valves and submersible cable at Valley Farms Well No. 2.

PERFORMANCE AND PAYMENT BONDS REQUIRED: [X] Yes [ ] No

TOTAL DAYS ALLOWED: 40

COMPLETION DATE: 12/8/14

Prior to the start of construction, please call Ray Murrieta, Division Manager at 520-836-8785 to schedule a pre-construction meeting.

ARIZONA WATER COMPANY
Company

By
Title Vice President - Engineering

WEBER WATER RESOURCES, LLC
Contractor *(type name)*

By
Title

AFH

AFH
W:\PROJECTS\2014\PV\1-5167 VALLEY FARMS ARF\AGREEMENTS\CONTRACTS\VALLEY FARMS WELL NO. 2\E-3-18-2 WEBER COMMENCEMENT NOTICE 1-5167 VALLEY FARMS WELL NO. 2.DOCX 1/15/09 | FKS:afh | E-3-18-

ARIZONA WATER COMPANY

SPECIFICATIONS

GENERAL CONDITIONS OF CONTRACT: E-4-1

CONSTRUCTION SPECIFICATIONS: E-8-1

STANDARD SPECIFICATION DRAWINGS: E-9-1

AJH
10-29-14

2007 EDITION WITH **2010** REVISIONS;
2012 GENERAL CONDITIONS OF CONTRACT

A copy of this entire Spec Book was sent out with Weber Water Resources Proposal package for Valley Farms Well #2 on 10/29/14

ARIZONA WATER COMPANY

3805 N. BLACK CANYON HIGHWAY, PHOENIX, ARIZONA 85015-5351 • P.O. BOX 29006, PHOENIX, AZ 85038-9006
PHONE: (602) 240-6860 • FAX: (602) 240-6874 • TOLL FREE: (800) 533-6023 • www.azwater.com

September 4, 2014

Mr. Archie Lopez
Felix Construction Company
1326 W. Industrial Drive
Coolidge, AZ 85128

Re: Valley Farms Arsenic Removal Facility

PROJECT: Valley Farms ARF	
SYSTEM: Pinal Valley	
CONTRACT NO.:	
P.E. NO.:	W.A. NO.: 1-5167

Dear Mr. Lopez:

Enclosed is your copy of the Proposal/Contract for the above-referenced project, which has been accepted by Arizona Water Company (the "Company"). The project shall be constructed in accordance with the Company's *General Conditions of Contract, the Specifications and the Drawings* which were included with the Company's previously provided Proposal/Contract, copies of which are being provided again and attached herewith.

Also enclosed are two copies of the Commencement Notice for the above-referenced project. Please sign one of the copies and return it to my attention retaining the other for your records.

As provided in paragraph 4 of the Company's Proposal/Contract executed by the Company on September 4, 2014 Felix Construction Company acknowledged that one hundred percent (100%) Performance and Payment Bonds are required and must be provided to the Company prior to the commencement of work. In addition, as provided in paragraph 44 of the Company's General Conditions of Contract, the 100% Performance and Payment Bonds must be provided within ten (10) calendar days of the date of the Commencement Notice. Failure to provide an acceptable 100% Performance and Payment Bond does not limit the Company's

ability to terminate the Proposal/Contract or seek restitution for damages that the Company may have or will incur.

Prior to the start of construction, please call Ray Murrieta, Division Manager at 520-836-8785 to schedule a pre-construction meeting. Prior to the pre-construction meeting, the Contractor must provide proof of insurance of no less than the minimum amounts provided in paragraph 5 of the Company's General Conditions of Contract. Failure to provide acceptable proof of insurance does not limit the Company's ability to terminate the Proposal/Contract or seek restitution for damages that the Company may have or will incur. In addition, please provide the required Performance and Payment Bonds to the Company promptly so that the contracted work can be completed within the contract's timeline.

If you have any questions, please call me at this office.

Very truly yours,

James T. Wilson, P. E.
Senior Engineer
engineering@azwater.com

afh
Enclosure

ARIZONA WATER COMPANY

Pinal Valley - Casa Grande Division
220 E. 2nd Street

PROPOSAL/CONTRACT

CONTRACTOR: FELIX CONSTRUCTION COMPANY	SYSTEM: PINAL VALLEY
ADDRESS: 1326 W. INDUSTRIAL DRIVE	W A No(s): 1-5167
CITY ST ZIP: COOLIDGE, AZ 85128	BID DUE DATE: July 23, 2014

CONTRACTOR SUBMITS this PROPOSAL/CONTRACT to ARIZONA WATER COMPANY, an Arizona corporation (the "Company"), to perform the work and complete the project described on Page 2 (the "Project"), as an independent prime contractor.

1 Contractor certifies that it has a complete copy of, and has read, understands and accepts, the Company's General Conditions of Contract, and the Company's Construction Specifications and Standard Specification Drawings, (the "Specifications"), all of which are attached hereto. Contractor has examined the specific plans and related construction drawings for the Project (the "Drawings"), copies of which are also attached hereto. The General Conditions of Contract, Specifications and Drawings are incorporated into this Proposal/Contract. Contractor affirms that all work and materials to be furnished or purchased for the Project will be in strict conformance with the General Conditions of Contract, Specifications and Drawings.

2 Contractor represents and warrants that it has satisfied and complied with the provisions of Section 6, Contractor Understands Work and Working Conditions, of the General Conditions of Contract prior to submitting this Proposal/Contract.

3 Contractor represents that this Proposal/Contract is fair and honest in all respects, is submitted in good faith and is not submitted in collusion with any other company, entity or person

4 Contractor acknowledges that one hundred percent (100%) Performance and Payment Bonds are required and must be provided to the Company prior to the commencement of work

5 Prior to the commencement of work, Contractor will submit to the Company a list of all materials to be used in the Project. The materials list will include the manufacturer, part number, price and quantity included in this Proposal/Contract.

6 Contractor will furnish all labor, tools, equipment and materials required to complete the Project according to the General Conditions of Contract, Specifications and Drawings. No materials purchased by Contractor to be incorporated into the Project are subject to tax at the time of purchase and Contractor will not charge the Company for any such tax. Contractor will pay the applicable transaction privilege tax (the "Contracting Tax") on the Project after Contractor receives payment of the final Project invoice from the Company. The cost of materials incorporated into the Project which are exempt by Arizona Revised State Statues ("A R.S.") from the Contracting Tax, for example, pipes or valves having a diameter of four (4) inches or larger, including equipment, fittings and any other related part that is used in operating the pipes or valves (A R.S. §42-5061 B.6.), will not be included in the total cost of the labor and materials upon which the Contracting Tax is computed. Contractor retains full liability and obligation to pay the Contracting Tax and will defend and indemnify the Company against any demand or obligation to pay the Contracting Tax.

7 Contractor will maintain detailed accounting records of all materials purchased and incorporated into the Project. Such records will include all supporting original vendor invoices for all materials purchased. Following completion of the Project, Contractor will submit an itemized accounting to the Company which will include all supporting original vendor invoices and satisfactory evidence of payment thereof. The Company will not pay Contractor for materials not actually incorporated into the Project, and the disposition of such materials will remain Contractor's responsibility.

8 The Estimated Total Cost of the Project, shown on Page 2, is based on estimated labor and material quantities to be furnished. It includes an estimate of the Contracting Tax and the cost of the required Performance and Payment Bonds. Contractor will not cancel, modify or withdraw this Proposal/Contract during a ninety-day (90) period commencing on the Bid Due Date. The Company may accept this Proposal/Contract by signing and mailing, or otherwise delivering, a copy hereof to Contractor during such ninety-day (90) period. If the Company does not accept this Proposal/Contract during such ninety-day (90) period, Contractor may cancel this Proposal/Contract by giving written notice of cancellation to the Company.

9 Prior to the commencement of work, Contractor will provide the Company with a detailed construction schedule, in either Gantt or CPM form, identifying all tasks to be performed from the date of the written Commencement Notice through completion of the Project, including testing, training of Company Personnel and final Project invoicing. Contractor will provide the Company with a copy of such construction schedule documenting the progress of work on the Project at least monthly.

10. Contractor will not commence work on the Project until the Company gives Contractor a written Commencement Notice. Contractor will complete the Project within 187 calendar days after the Commencement Notice is issued.

11. Following the Company's written notice of satisfactory completion of the Project, and upon receipt of the final Project invoice from Contractor, the Company shall pay Contractor the actual total cost of the Project, which will be calculated as shown on Page 2, except that actual labor and material quantities installed/constructed will be substituted for the estimated labor and materials quantities and the Contracting Tax will be recalculated based on such actual labor and materials quantities.

12. The amount of applicable liquidated damages for Contractor's failure to deliver or perform within the time limit shown in Paragraph 10 may be deducted from the Company's payment of the final Project invoice. This provision shall not limit the Company's ability to terminate this Proposal/Contract for Contractor's unsatisfactory performance or failure to perform as provided in the General Conditions of Contract, Specifications or Drawings, or in this Proposal/Contract.

SPECIAL CONDITIONS:

See attached Request for Proposal and Technical Specifications, dated June 18, 2014.
Mandatory Pre-Bid Meeting, June 24, 2014, at 9:00 am at Valley Farms Well Nos. 1 and 2 Site.
Company will allow three (3) progress payments and one (1) final payment.

CONTRACTOR	PROPOSAL/CONTRACT ACCEPTED: ARIZONA WATER COMPANY
By: Archie D. Lopez	By: Fredrick K. Schneider
Print Name: Archie Lopez	Print Name: Fredrick K. Schneider, PE
Title: President	Title: Vice President - Engineering
Date: 07/23/2014	Date: 9-4-2014

am

AJH

ARIZONA WATER COMPANY

Pinal Valley - Casa Grande Division
220 E. 2nd Street
Casa Grande, AZ 85122 PH: 520-836-8785

PROPOSAL/CONTRACT

CONTRACTOR: FELIX cONSTRUCTION COMPANY	SYSTEM: PINAL VALLEY
AZ CONTRACTOR LICENSE NO: 070935 CLASSIFICATION: A	W.A. No(s): 1-5167
ADDRESS: 1326 W. INDUSTRIAL DRIVE	BID DUE DATE: July 23, 2014
CITY ST ZIP COOLIDGE, AZ 85128	BID BOND REQUIRED ☑ Yes ☐ No

DESCRIPTION OF PROJECT: Design and construct Arsenic Removal Facility at Valley Farms Well Nos. 1 and 2 in Pinal Valley water system.

1-2. MATERIALS EXEMPT FROM CONTRACTING TAX (per Paragraph 6)	QUANTITY	UNIT PRICE LABOR	UNIT PRICE MATERIALS		TOTAL COST LABOR		TOTAL COST MATERIALS
Provide and install on-site piping with related fittings		$19,467.00	$36,325.00		$19,467.00		$36,325.00
				1		2	
3. Total Labor to Install Exempt Materials (add the amounts in column 1)				3	$19,467.00		
4. Total Exempt Materials (add the amounts in column 2)						4	$36,325.00

5-6. NON-EXEMPT MATERIALS	QUANTITY	LABOR	MATERIALS		LABOR		MATERIALS
Provide and install chemical injection system including tanks, containment area and shade canopy with associated power and controls	Lot	$0.00	$0.00		$0.00		$0.00
Provide and install on-site piping with related fittings	Lot	$18,855.00	$52,300.00		$18,855.00		$52,300.00
Provide and install new backwash system including tanks, piping, pumps, and associated power and controls	Lot	$13,850.00	$156,200.00		$13,850.00		$156,200.00
Building and hydro-pneumatic tank demolition and removal	Lot	$8,320.00	$13,200.00		$8,320.00		$13,200.00
Provide and install ARF Vessel(s) with media and related appurtenances	Lot	$18,735.00	$539,280.00	5	$18,735.00	6	$539,280.00
Testing, commissioning and on-site operator training	Lot	$9,200.00	$37,300.00		$9,200.00		$37,300.00
Integrate ARF and Valley Farms site into Casa Grande SCADA system	Lot	$0.00	$62,569.00		$0.00		$62,569.00
Engineering design and permitting	Lot	$ 0.00	$ 110,475.00		$ 0.00		$ 110,475.00
7. Total Labor to Install Non-Exempt Materials (add the amounts in column 5)				7	$68,960.00		
8. Total Non-Exempt Materials (add the amounts in column 6)						8	$971,324.00
9. Subtotal A (add lines 3, 7 and 8)						9	$1,059,751.00
10. Contracting Tax Base (multiply the amount on line 9 by 0.65)				10	$688,838.15		
11. Applicable Contracting Tax Rate				11	10.76%		
12. Contracting Tax (multiply the amount on line 10 by line 11)						12	$74,118.98
13. Subtotal B (add lines 4, 9 and 12)						13	$1,170,194.98
14. 100% Performance and Payment Bonds Cost						14	$15,300.00
15. Estimated Total Cost (add lines 13 and 14)						15	$1,185,494.98

NOTE: The Estimated Total Cost includes all labor and materials for backfill, pavement replacement, chip seal, and traffic control necessary for the Project.

ARIZONA WATER COMPANY

COMMENCEMENT NOTICE

CONTRACTOR:

Mr. Archie Lopez
Felix Construction Company
1326 W. Industrial Drive
Coolidge, AZ 85128

DATE: 9/4/14
DIVISION: CASA GRANDE
SYSTEM: PINAL VALLEY
W.A.: 1-5167

THIS IS YOUR NOTICE TO PROCEED WITH THE FOLLOWING PROJECT(S):

DESCRIPTION OF WORK:

Design and construct Arsenic Removal Facility at Valley Farms ARF in Pinal Valley water system.

PERFORMANCE AND PAYMENT BONDS REQUIRED: [X] Yes [ ] No

TOTAL DAYS ALLOWED: 239

COMPLETION DATE: 5/1/15

Prior to the start of construction, please call Ray Murrieta, Division Manager at 520-836-8785 to schedule a pre-construction meeting.

Prior to the pre-construction meeting, the Contractor must provide proof of insurance of no less than the minimum amounts provided in paragraph 5 of the Company's General Conditions of Contract. Failure to provide acceptable proof of insurance does not limit the Company's ability to terminate the Proposal/Contract or seek restitution for damages that the Company may have or will incur.

The total days allowed and completion date reflects the additional days authorized by Change Order No. 1.

ARIZONA WATER COMPANY	***FELIX CONSTRUCTION COMPANY***
Company	Contractor *(type name)*
By	By
Title Vice President - Engineering	Title

AFH

AJH

W:\PROJECTS\2014\PV\1-5167 VALLEY FARMS ARF\AGREEMENTS\CONTRACTS\E-3-18-2 FELIX CONST COMMENCEMENT 1-5167 VALLEY FARMS ARF 1 & 2.DOCX

1/15/09 | FKS:afh | E-3-18-2

ARIZONA WATER COMPANY

Arsenic Removal Facility – Technical Specifications
June 18, 2014

1. SCOPE OF WORK

A. General: The intent of these Technical Specifications is to provide general descriptions and establish minimum requirements for the major components and appurtenances of the ARF. It is the Contractor's responsibility to provide a complete, fully functional, and reliable ARF which complies with Treatment Performance Requirements and specifications set forth herein.

B. Design: The Contractor shall design, or arrange for the design of the Arsenic Removal Facility ("ARF") by a professional engineer registered in the State of Arizona with documented experience in designing Arsenic Removal Facilities. The Contractor is responsible for civil, mechanical, electrical, and all other components of the project. The Contractor is responsible for all permits and governmental approvals for the ARF including, but not limited to: Approval to Construct ("ATC"), Approval of Construction ("AOC") and an approval of the proposed blend plan from the Arizona Department of Environmental Quality ("ADEQ"), building permit, special use permit, and conditional use permit. Contractor is responsible for any design reports required to obtain an ATC, AOC and approved blend plan. The Contractor shall design the ARF to provide treatment of water to meet the Treatment Performance Requirements of Section 3.

C. Equipment Supply: The Contractor shall supply a complete ARF including, but not limited to, vessels, media, piping, valves, meters, controls, related appurtenances, electrical equipment, chemicals, start-up/commissioning, and O&M Manual. Contractor shall paint all external components of the ARF in accordance with regulatory agency requirements and must be approved by the Company in writing. All equipment installed must be NSF Certified or compliant for drinking water. Contractor shall submit a certified bill of materials from the original manufacturer to Company for approval for any materials without NSF certification.

D. Attachment "A" lists the adsorptive medias approved for use in the design, permitting, construction, and operation of the ARF.

E. Construction: The Contractor must provide all civil, mechanical, electrical and all other contractors necessary to provide a complete, fully functional ARF. Contractor shall complete construction and ensure ADEQ issues an AOC by November 28th, 2014. Contractor shall coordinate the demolition and removal of the existing building and 2 hydro-pneumatic tanks shown on site layout. Upon completion of construction, Contractor shall return the site to its original condition. Contractor shall coordinate construction staging locations and acquire the required approvals to use such locations. Contractor shall ensure that all ARF components are located on Company property after delivery and during construction. Contractor is responsible for capturing and disposing of all wastewater generated during construction and for

obtaining proper approvals to do so. Contractor shall not discharge any water, backwash water, wastewater, or any other discharge onto or off the site without written approval from the Company and the governing regulatory agencies. The allowed working hours are 8am-5pm Monday-Friday; Company will consider exemptions on a case by case basis and must be approved in writing.

F. All chemical and materials that contact potable water shall conform to National Sanitation Foundation Standards 60 and 61.

H. Media Change-out Agreement: Contractor shall be responsible for replacing the treatment media for a period of 5 years per Attachment "E". Contractor shall provide a media performance guarantee per Attachment "E".

2. SUBMITTALS

A. Contractor shall submit the following items to Company for approval:

i. Detailed engineering design reports for ARF and blend plan for submittal to regulatory agencies.

ii. Drawings and specifications for all items and equipment. Include all dimensions, weights, parts, construction details, and materials required to demonstrate compliance with these specifications.

iii. Scaled piped drawings in both plan and section. The drawings shall show size of all piping, valves, and appurtenances.

iv. List of chemicals used in the treatment process and the quantity, concentration, and storage requirements for each.

v. Performance specifications for all equipment.

vi A media performance guarantee per Attachment "E".

vii. Complete electrical instrumentation control schematics, wiring diagrams, load calculations and terminal strip information. Contractor shall provide factory pre-wired panels only.

viii. Process flow schematic of the proposed facility.

ix. Detailed design criteria including chemical dosages, hydraulic loading rates, empty bed contact times, backwashing rates and frequencies, pressure drops, type of media, adsorptive media performance guarantee, media volumes, backwash volumes, and other related process information. Contractor shall provide the maximum pressure drop through the ARF throughout the full life-cycle of media. Contractor shall provide calculations verifying the design of the ARF to demonstrate that

the ARF shall comply with the Treatment Performance Requirements set forth in Section 3.

x. Written procedures detailing the ARF start-up, shutdown, backwash, operation, control, and monitoring.

xi. A list of any and all parameters, ratings, or other characteristics where the proposed ARF equipment deviates from the requirements set forth in these Specifications. Any and all such deviations must be approved in writing by the Company.

xii. Site plan and piping drawings including ancillary facilities.

xiii. List of recommended spare parts for an operating period of 3 years. The list shall describe each part; include the manufacturer's part number, the quantity recommended, and the unit price of the part. Company may purchase from Contractor all, some, or none of the recommended spare parts at the Company's option.

xiii. Field Acceptance Test Report including the results of all field tests conducted on the ARF within two weeks of completion of each test required.

xiv. Operation and Maintenance Manual must be submitted two weeks prior to start-up.

3. TREATMENT PERFORMANCE REQUIREMENTS

A. General

The ARF shall reduce the effluent arsenic level to less than or equal to seven (7) micrograms per liter throughout the full life-cycle of all media. The ARF shall maintain or improve the quality of the treated water as it relates to other chemical constituents. Contractor shall submit, in writing, all changes to treated water quality and their respective impact on the water distribution system for Company approval during design. Contractor shall fully mitigate negative impacts to water quality or the distribution system in the ARF design.

B. Hydraulic Design Criteria

Design flow capacities, system pressures, and other hydraulic information are provided in Attachment "B"

C. Water Quality Data

Pertinent water quality data for Valley Farms Wells No. 1 and 2 ("Wells") is provided in Attachment "C"

D. Existing Site Plans

Existing site plans are provided in Attachment "D"

E. Special Site Conditions

i. Valley Farms Wells No. 1 and 2 (APN: 202-29-001): The Valley Farms ARF shall combine flows from Valley Farms Wells No. 1 and 2. Both Wells are located at the Valley Farms well site. Currently, Valley Farms Wells No. 1 and 2 are called to run by on-site tank level controls. Valley Farms Wells No. 1 and 2 are routinely alternated as the lead well. The Contractor shall maintain this operational plan. The Contractor shall design the Valley Farms ARF Site to run under three operating scenarios: (1) flow from Valley Farms Well No. 1 shall bypass the ARF when it is set as the lead well and it is the only well running; (2) the ARF shall treat a partial flow from Valley Farms Well No. 2 only, when the Valley Farms Well No. 2 is set as the lead well; and (3) the Valley Farms ARF Site shall blend flow from Valley Farms Wells No. 1 and 2 and shall treat a portion of the blended flow through the ARF. Contractor shall design the ARF bypass with operator adjustable bypass flow rate set points for each scenario. Contractor shall use CLA-Val control valves to control Flow rate through the bypass line and ARF. Contractor shall demolish existing chlorination storage building and construct new liquid chlorination station in accordance with Section 4.A.5.

4. GENERAL FACILITY COMPONENT REQUIREMENTS

A. Description

i. The Contractor shall design the ARF described herein to remove arsenic from groundwater, accommodating all water quality parameters provided in Attachment "C". Any analysis of water quality parameters that may affect performance of the ARF, life-cycle of any media, or waste produced are the responsibility of the Contractor or its Engineer. Effluent from the ARF shall flow into the on-site 250,000 gallon water storage tank. Contractor shall install a chlorine analyzer to ensure effluent contains a minimum free chlorine residual of 1.0 milligrams per liter at the Entry Point to the Distribution System.

ii. The ARF shall consist of treatment vessels containing one of the approved adsorptive medias in Attachment "A" for removal of arsenic to the concentrations specified in Section 2. The Contractor shall provide all necessary controls, piping, and all other appurtenances which may be required.

iii. Raw water flow through the ARF will range from 125 gpm to 400 gpm.

iv. Contractor shall design the ARF so that the media is backwashed in place without removal. A manual operation of the backwash procedure is required. The Contractor shall design the on-site piping to utilize the distribution system as the

backwash water source. An on-site backwash tank shall capture all backwash water. Sufficient time is required for any fines in the backwash water to adequately settle. A backwash re-injection pump shall transfer water from the backwash tank and blend with the raw well water on the influent side of the ARF for treatment. Level controls in the backwash tank shall control the operation of the backwash re-injection pump but at no time shall the backwash water re-injection rate exceed 10 percent treated water flow rate. Backwash re-injection pump shall only operate when a well is operating and water is being treated.

v. If included in the design of the ARF treatment process, Contractor shall provide pH adjustment upstream and/or downstream of the ARF as required to meet the Treatment Performance Requirements and to readjust the effluent water quality to match historical pH levels. Contractor shall install one pH analyzer for each pH adjustment system. In the event pH adjustment is required, Contractor shall provide a chemical injection system for each chemical required. Contractor shall install each such chemical injection on a concrete pad with a containment curb and shade canopy. The chemical dosing pumps shall be a Grundfos DDA 12-10 series dosing pump. All chemical storage tanks shall include a level indicator, manufactured by Poly Processing Company, be double-walled for 100% secondary containment and be located inside the concrete containment curb. Dosing pump and chemical storage tank shall be founded on elevated concrete pedestals within the containment curb. Contractor shall determine the type of chemical utilized and submit to Company for approval. All chemicals used must conform to NSF 60 standards.

vi. The Contractor shall integrate the ARF into the Pinal Valley SCADA system. Water production and pH data and alarms shall be sent to the Casa Grande office. Contractor shall sub-contract and coordinate all SCADA programming with Delta Systems Engineering.

5. FILTER SIZING DESIGN

A. General

The ARF at Valley Farms Wells No. 1 and 2 shall treat water produced from the wells satisfying the Media Flux Rate and Empty Bed Contact Time requirements described in Sections 5.C and 5.D, respectively. The Contractor shall design the ARF to transfer, from partially treated flow to fully treated flow as the adsorptive media becomes exhausted.

B. Blend Plan

i. Contractor shall submit a blend plan for approval by Company and ADEQ. Contractor shall also submit a detailed engineering design report of the blend plan for approval by Company and ADEQ.

C. Media Flux Rate

i. The Contractor shall design the flux rate of water across the media beds shall not exceed 6 gpm/per square foot during normal service conditions based on the well design flow rates in Attachment "B".

ii. The Contractor shall design the size of filter vessel(s) and controls to conform to the manufacturer's minimum recommended flux rate during all operating conditions but shall not exceed the maximum design flux rate in Section 5.C.1.

iii. The Contractor shall design the size of filter vessel(s) as to not exceed the manufacturer's maximum recommended flux rate during any operating condition, including during backwash water re-injection as described in Section 4.A.4. The flux rate shall not exceed the design flux rate in Section 5.C.1.

D. Empty Bed Contact Time

i. The Contractor shall design the Empty Bed Contact Time ("EBCT") at a minimum of 3.5 minutes for the flow listed in Section 3.F.1. during all operating conditions, including during backwash water reinjection as described in Section 4.A.4, unless the media or equipment manufacturers recommend more stringent requirements.

6. TREATMENT FACILITY COMPONENTS

A. Filter Vessel(s)

i. Carbon steel ASME and National Code stamped pressure vessels.

ii. The Contractor shall line the Filter vessels with Carboline 4500S (30-40 mil) epoxy coating meeting the Company's Coating Specifications: O-12-2 (Attachment "F") and approved in writing by the Company.

iii. Capable of, and designed to, operate at the respective design pressures listed in Attachment "B".

iv. Manual backwash with manual butterfly valves for all service, backwash, and rinse cycles.

v. Stainless steel sample ports for operator monitoring of raw water, treated water from each vessel and blended water sample location.

vi. Media sample port for obtaining media sample for testing.

vi. Magnetic flow/totalizer meters on each vessel for measuring individual instantaneous gallons per minute and total gallons through the system in service and in backwash cycles.

viii. All piping and fittings including laterals internal to the filter vessels shall be Type 304 or higher grade stainless steel. Contractor shall provide isolation kits at dissimilar metal connections and address any dissimilar metal concerns within the vessel.

ix. Internal laterals shall be sized appropriately to distribute flow uniformly across the cross sectional area of the filter vessels during treatment and backwashing. Treatment vessels, internal laterals, and ground support bed design must be approved, in writing, by the adsorptive media manufacturer, filter vessel manufacturer, and the Company.

x. Internal laterals shall be sized appropriately for proper operation with all of the approved adsorptive medias in Attachment "A".

xi. The adsorptive media manufacturer must state, in writing, if gravel under bed is required. Gravel under bed design must be approved, in writing, by the adsorptive media manufacturer, filter vessel manufacturer, and the Company.

xii. 12" x 18" Access manway on the side and inspection hatch on the top.

xiii. Filter vessels must be permanently attached to an engineered concrete slab.

B. External Piping

i. External connections shall consist of flanged pipe connections or flanged coupling adaptors (raw water inlet, finished water outlet, backwash feed inlet, and backwash waste outlet).

a. Manufacturers:

1) Dresser, Inc. Style 128-w.
2) Romac Industries, Inc. Style FCA501 or Style FC400.
3) Smith-Blair, Inc. Series 913.

ii. All external piping 3 inch and larger shall be ductile iron pipe ("DIP") and must conform to the Company's Construction Specifications: E-8-1 and Standard Specification Drawings: E-9-1.

iii. All external piping smaller than 3 inch shall be seamless copper conforming to ASTM B88.

a. Buried potable water lines shall be Type K, soft or hard temper.

b. Exposed potable water lines shall be Type L, hard drawn.

c. All fittings shall be compression type per the Company's Construction Specification: E-8-1 and Standard Specification Drawings: E-9-1.

d. All pipe, fittings, and appurtenances shall conform to the Company's Construction Specifications: E-8-1 and Standard Specification Drawings: E-9-1, unless otherwise specified. Contractor shall inform Company in writing of any conflict in specifications, and Company will determine the prevailing specification.

iv. Stainless Steel Pipe

Above ground pipe on pipe and valve tree adjacent to the filter vessels may be Type 304L stainless steel in accordance with ASTM A 240 or higher grade.

a. Fittings

1) Material shall be in accordance with ASTM A 240 stainless steel, grade to match the pipe,
2) Fittings shall be manufactured in accordance with ASTM A 774 for piping 3-inches in nominal diameter and greater, and in accordance with ASTM A 403, Class WP for piping less than 3-inches in diameter.
3) Wall thickness shall be in accordance with ASME B36.19 and ASME B16.11.

b) Joints

1) Joints at valves and pipe appurtenances shall be flanged.
2) All other joints shall be flanged or welded. Piping less than 4-inches in diameter shall have single butt-welded joints. Piping 4-inches through 12-inches in diameter shall have double butt-welded joints.

v. All external above ground pipe and fittings shall be painted with Tnemec or approved equal. The approved color will be determined by the County, City and/or the Company.

C. Valves and Appurtenances

i. Manual Butterfly Valves

a. Manually actuated butterfly valves with hand wheels shall be installed aboveground on the pipe and valve tree for the control of flows for backwash, rinse, and normal treatment operations.

b. Manufacturers:

1) Mueller.
2) Dezurik.
3) Pratt

ii. Pressure Switch High

a. High pressure cut-off switches shall be installed between the well discharge heads and the inlet of the ARF

b. Manufacturers:

1) Mercoid

D. Flow Meters

i. One per filter vessel. Flow meters shall be supplied with remote mounted transmitters.

ii. General

a. Type: Magnetic flow meter conforming to NSF 61

b. Materials:

1) Main Body: PVC sensor body or stainless steel
2) Electronics Housing: Powder coated aluminum
3) Electrodes: Hastelloy electrodes

iii. Flow rate display indication in gpm and totalized flow in gallons

iv. Accuracy: +/-0.5% of flow rate or better

v. End Connection: Flanged

vi. Manufacturer:

a. Endress + Hauser – Promag 53W.

E. Valves, meters, and appurtenances shall be provided as required to complete the work. Valves and appurtenances shall be in accordance with the Company's Construction Specifications: E-8-1 and Standard Specification Drawings: E-9-1, unless otherwise specified.

F. High Density Polyethylene (HDPE) Backwash Tank

i. General

a. Tanks shall be rotationally molded, one-piece seamless construction, cylindrical in cross-section and vertical in axis.

b. Tanks shall fully conform to ASTM D 1998-04.

c. All tank fitting attachments shall be provided with flexible couplings or other provisions to allow for movement without rupture or separation of connections. Flexible couplings shall allow minimum 4 percent deflection in all directions. All connections larger than 2-inches shall be supported independently from the tank to prevent weight transfer to the tank flange.

d. Tanks shall include an Endress-Hauser level transmitter displaying water level on an LCD screen

e. Tanks shall be clearly marked with manufacturer, date of manufacture, and serial number.

f. All opening cut edges shall be trimmed smooth.

g. Uncoated or exposed carbon steel appurtenances, fasteners, or anchorage will not be accepted.

h. Provide anchor bolts sized by the manufacturer. Installed on engineered concrete slab or other anchoring point approved by the Company.

i. Minimum required wall thickness for the cylinder must be sufficient to support its own weight in an upright position without any external support.

j. The top head must be integrally molded with the cylinder straight shell.

k. The bottom head must be integrally molded with the cylinder straight shell.

l. Tanks shall have a sloped floor and side molded outlet to provide complete drainage of the tank.

m. Tanks shall have a minimum of three (3) lifting lugs integrally molded in the cylinder straight shell. Lifting lugs shall be Type 316 stainless steel.

n. Provide a minimum of four (4) tie-down lugs integrally molded into the top head. Tie-down lugs shall be designed to allow tank retention in wind and seismic loading without damage to the tank.

o. Manway: 18-inch threaded polyethylene, vented and easily accessible.

p. Concrete tank pad shall be level and smooth to the tolerances recommended by the tank manufacturer.

q. Each tank must be vented for the material, flow, and withdrawal rates expected.

ii. Design Loads

a) Resistance of both wind and seismic loads shall be provided for both tank full and tank empty conditions.

b) Contractor shall be fully responsible for design and provision of adequate anchorage system for the service conditions.

c) Design must be approved in writing by the tank manufacturer.

d) Anchorage systems requiring tank penetrations are not acceptable.

e) All anchorage systems shall be galvanized carbon steel unless otherwise specified.

iii. Materials

a) Tanks shall be virgin polyethylene resin as compounded and certified by the manufacturer.

b) Resin shall contain a minimum of a UV 8 stabilizer as compounded by the resin manufacturer.

iv. Fittings

a) Threaded bulkhead fittings shall not be allowed for connections greater than 2 inches in diameter.

b) Bolted double 150 lb. flange fittings shall be constructed with two (2) 150 lb. flanges and two (2) 150 lb. flange gaskets, and the correct number and size of all-thread bolts for the flange specified by the flange manufacturer.

G. Chemical Tubing and Conduit

i. General

a. For liquid chemical service, provide tubing compatible with chemicals used in the treatment process. Install tubing in electrical conduit for ease of installation/replacement, as well as non-pressure rated secondary containment. Tubing manufacturer shall confirm chemical compatibility of tubing with chemical system being served. Tubing shall be UV resistant.

ii. Provide tubing adequately sized for the flow and pressure requirements of this application with the minimum following dimensions and pressure rating:

a. Outside diameter: 3/8 inch.

b. Inside diameter: ¼ inch.

c. Pressure Rating at 70° Fahrenheit: 200 psi.

iii. Conduit for chemical tubing shall be PVC electrical conduit with sweeps instead of elbows. Conduit size shall be 2 inch for tubing with outside diameter of 3/8 inch through 5/8 inch. Conduit size shall be 3 inch for tubing with outside diameter of ¾ inch through 1 inch.

iv. Provide all necessary fittings clamps, and adapters for connection of tubing at the chemical metering pump outlet, chemical feed point, and any other connections. Provide barbed or compression-style fittings, specifically designed for use with the tubing being provided, and compatible with the service (both with the fluid being carried in pipe and pressure rating). Fittings shall be located so that they are accessible at all times. No fittings shall be located in the carrier pipe. All connections shall be constructed per tubing manufacturer's recommendations to provide a connection which is equal to or greater than tubing pressure rating. All parts or fittings in contact with the fluid in the tubing shall be compatible with the chemical being carried.

H. Freeze Protection

i. All components of the ARF and appurtenances shall be protected from freezing. This section is meant to provide general descriptions and establish minimum requirements of the freeze protection required as part of the construction of the ARF. Passive freeze protection must be used including but not limited to pipe insulation on exposed components.

ii. Insulation.

a. All outdoor piping, valves, fittings, tubing 2-inches and smaller, gauges, air release valves, and all other appurtenances, shall be insulated based on a design ambient temperature of 20° Fahrenheit.

b. The insulation shall be protected with aluminum or stainless steel metal jacketing with a minimum thickness of 0.016 inch (0.4 mm) with moisture barrier, secured in accordance with the jacket manufacturer's recommendations. Joints shall be applied so they will shed water and shall be sealed completely.

c. Valves and fittings shall be insulated and jacketed with preformed fitting covers matching outer jacketing used on straight pipe sections, with all joints weather sealed.

d. All piping shall be supported in such a manner that neither the insulation nor the moisture barrier is compromised by the hanger/pipe support or the effects of the hanger/pipe support. In all cases, hanger spacing shall be such that the circumferential joint may be made outside the hanger/pipe support.

e. Metal jacket must be painted. The approved color will be determined by the County, City and/or the Company.

I. Chemical Pumps

i. Chemical pumps shall be Grundfos DDA (model No. FC-PV/T/C-F-311004BQ) compatible for use with Sodium Hypochlorite, H_2SO_4, HCL, FeCL and any other chemical used.

7. ELECTRICAL

A. General

i. All electrical components shall comply with the Company's EI&C Design Guidelines Technical Specification, enclosed with this RFP.

ii. Design and programming services shall be provided by Delta Engineering

B. SCADA

i. Contractor shall provide and install a complete and functional SCADA system with alarms, displays and controls in substantial conformance with SCADA controls at the Company's existing treatment, well and pump stations.

ii. Contractor shall integrate the Valley Farms Site into the existing Pinal Valley SCADA system via GE I-net II radio or SixNet cellular network.

iii. Contractor shall provide and install SCADA controls utilizing Modicon M-340 programmable logic controllers with 20% available spare I/O.

iv. All analog values shall be historized at the Casa Grande master SCADA computer (Master Computer).

v. Runtime and totalized flow values will have current day, previous day, current week, previous week, current month, and previous month values calculated and displayed locally and at the Master Computer.

vi. All alarms shall be sent to the Master Computer for operator notification via Win911.

C. Equipment Monitoring

i. Contractor shall provide and install one (1) Schneider Electric 10.5" OIT for onsite SCADA monitoring and control.

ii. The Contractor shall provide the necessary programming and to monitor and control the following equipment and processes:

a. Two well pumps including all phase voltage, current, and power readings from the existing Motor Saver 777 Ethernet base power quality meter. Local/remote, auto/manual, run/stopped, alarm, fail-to-run, and start/stop count. Two (2) Cla-Vals per well. Well discharge flow meters

b. Three (3) high service pumps (2 with VFD controls) including all phase voltage, current, and power readings from the existing Motor Saver 777 Ethernet base power quality meter. Local/remote, auto/manual, run/stopped, alarm, fail-to-run, and start/stop count.

c. Booster pump station discharge pressure and flow.

d. ARF influent flow meter, bypass flow meter, backwash flow meter, bypass flow control valve with operator adjustable set points for each well operational scenario, influent pressure, and effluent chlorine and pH levels.

e. Backwash/recycle tank level, and recycle pump run/stopped, alarm, fail-to-run (display only).

f. NaOCL chemical injection pump operator adjustable effluent chlorine set point, run/stopped, alarm, fail-to-run (display only).

g. H2SO4 chemical injection pump operator adjustable pH set point, run/stopped, alarm, fail-to-run (display only).

h. NaOCl tank level indication.

i. H2SO4 tank level indication.

j. Water storage reservoir level and Cla-Val open/closed status with user programmable tank level set points for open/close operation.

k. Hydro pneumatic tank air compressor pump status, run/stopped (display only).

l. Hydropneumatic tank pressure (display only)

m. ARF influent flow meter (display only)

n. ARF bypass meter (display only)

Attachment "A"

Approved Adsorptive Medias

Media Requirements

Adsorptive media shall be discardable as solid waste in a RCRA subtitle D (non-hazardous) landfill when saturated and pass all TCLP tests.

Adsorptive media shall be a durable, attrition resistant media suitable for backwashing and removal of Arsenic.

Approved Manufacturers:

1. Severn Trent Bayoxide E-33 Granular Ferric Oxide (GFO) adsorption media

Attachment "B"

Hydraulic Design Criteria

Valley Farms Well No. 1 and 2 ARF

Design Capacity: 400 gpm plus (max 10%) recycled water

Minimum Design Pressure, Static: 100 psi

Minimum EBCT: 3.5 minutes

Maximum Flux Rate: 6 gpm/sq. ft.

Valley Farms Well No. 1

Design Flow: 150 gpm

Valley Farms Well No. 1

Design Flow: 250 gpm

Attachment "C"

Water Quality Data

Valley Farms Well Nos. 1 and 2 Site - Arizona		
Analyte	**Concentration**	
	Well No. 1	Well No. 2
Arsenic III+V	3.5 ppb	14.5 ppb
Iron	<0.05 mg/L	<0.05 mg/L
pH	7.7	8 - 8.2
Calcium Hardness	245 mg/L	45 mg/L
Total Alkalinity	108 mg/L	100 mg/L
Sulfate	119 mg/L	65 mg/L
Calcium	98 mg/L	16 mg/L
Chromium	<0.005 mg/L	<0.1 mg/L
Magnesium	11 mg/L	1.5 mg/L
Uranium	8.9 ppb	-- ppb
Cadmium	<0.0001 mg/L	<0.0005 mg/L
Manganese	<0.02 mg/L	<0.02 mg/L
Lead	<0.001 mg/L	<0.02 mg/L
Total Suspended Solids	2 mg/L	--
Selenium	0.0068 mg/L	0.009 mg/L
Sulfide	<0.04 mg/L	<0.04 mg/L
Turbidity (NTU)	<1 mg/L	--
Silica, Total	28.9 mg/L	34 mg/L
Total Phosphorus	<0.01 mg/L	<0.05 mg/L
Vanadium	0.007 mg/L	0.016 mg/L

Attachment "D"

Existing Site Plan

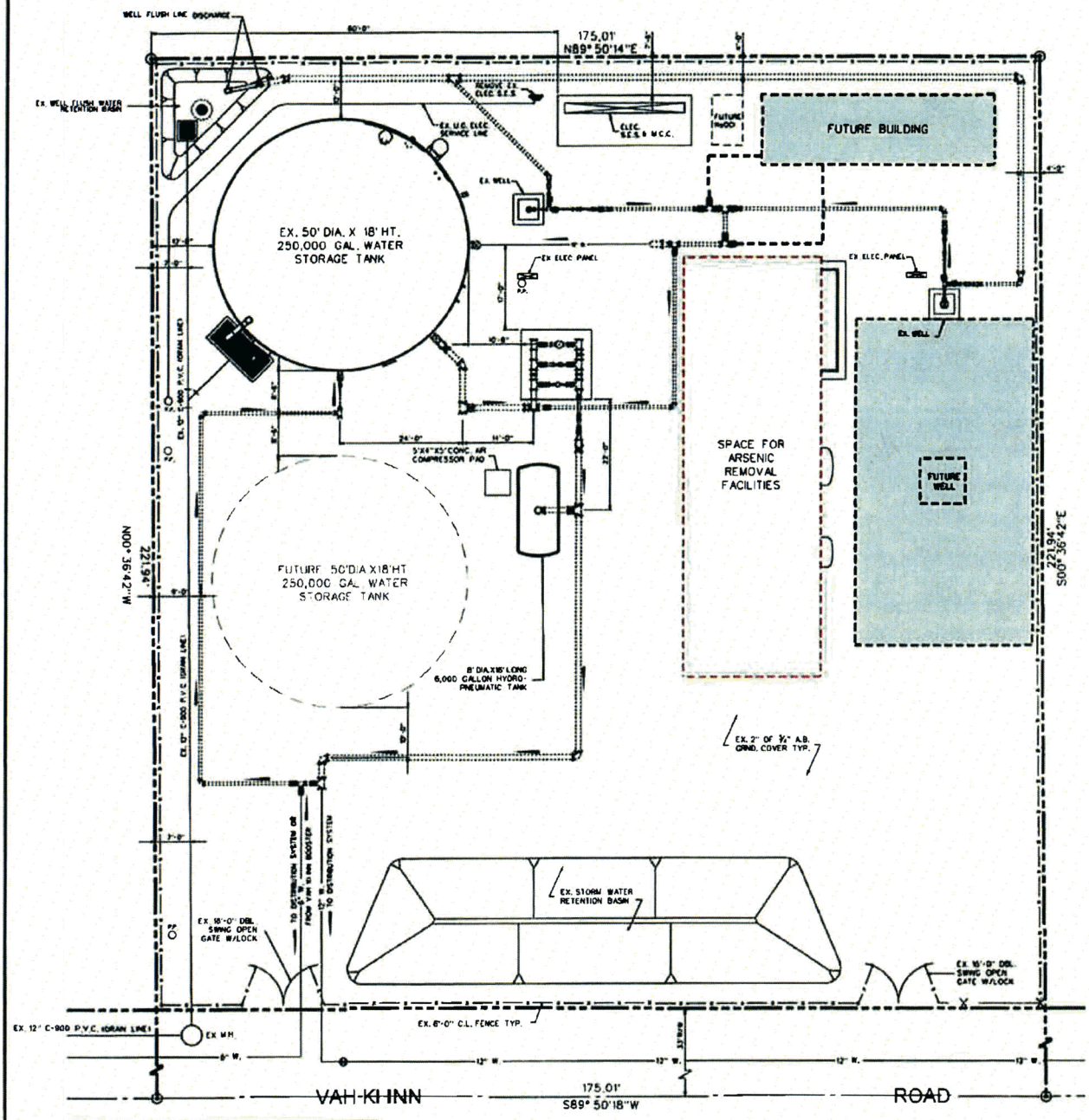

VICINITY MAP
N.T.S.

ARIZONA WATER COMPANY

PROPERTY LOCATION DRAWING

Property Location:	SW 1/4 SEC.17 T. 5S., R.9.E.		
Street Address:	16601 E. VAH KI INN ROAD - COOLIDGE, AZ 85228		
Project:	VALLEY FARMS ARF		
Date: 5/20/2014	Scale: 1"=30'-0"	Drawn By: MC	

Attachment "E"

Media Change Out Contract

ARIZONA WATER COMPANY

Pinal Valley - Casa Grande Division
220 E. 2nd Street

PROPOSAL/CONTRACT

CONTRACTOR:	SYSTEM: PINAL VALLEY
ADDRESS: DRAFT	W.A. No(s): 1-5167
CITY ST ZIP:	BID DUE DATE:

_____, an Arizona corporation, ("CONTRACTOR") SUBMITS this PROPOSAL/CONTRACT to ARIZONA WATER COMPANY, an Arizona corporation (the "Company"), to perform the work as specifically described in Attachment "A" hereto, which by this reference is incorporated herein ("Work") as an independent prime contractor.

1a. Contractor certifies that it has a complete copy of, and has read, understands and accepts, the Company's General Conditions of Contract, and the Company's Construction Specifications and Standard Specification Drawings, (the "Specifications"), all of which are attached hereto as Attachment "B". The General Conditions of Contract and Specifications are incorporated into this Proposal/Contract. Contractor affirms that all work and materials to be furnished or purchased for the Project will be in strict conformance with the General Conditions of Contract, Specifications and Drawings.

1b Section 2 and 36 in General Conditions of Contract are modified as provided in Attachment "A", and Section 41 of the General Conditions of Contract is replaced in its entirety by paragraph 4C of Attachment "A". In all other respects the General Conditions of Contract remain in full force and effect.

2. Contractor represents and warrants that it has satisfied and complied with the provisions of Section 6, Contractor Understands Work and Working Conditions, of the General Conditions of Contract prior to submitting this Proposal/Contract.

3. Contractor represents that this Proposal/Contract is fair and honest in all respects, is submitted in good faith and is not submitted in collusion with any other company, entity or person.

4. Contractor acknowledges that one hundred percent (100%) Performance and Payment Bonds are required and must be provided to the Company prior to the commencement of work.

5. Prior to the commencement of Work, Contractor will submit to the Company a list of all materials to be used in the Project. The materials list will include the manufacturer, part number, price and quantity included in this Proposal/Contract.

6. Contractor will furnish all labor, tools, equipment and materials required to complete the Work according to this Proposal/Contract and the General Conditions of Contract and Specifications. No materials purchased by Contractor to be incorporated into the Project are subject to tax at the time of purchase and Contractor will not charge the Company for any such tax. Contractor will pay the applicable transaction privilege tax (the "Contracting Tax") on the Work after Contractor receives payment of the final invoice from the Company. The cost of materials incorporated into the Work which are exempt by Arizona Revised State Statues ("A.R.S.") from the Contracting Tax, for example, pipes or valves having a diameter of four (4) inches or larger, including equipment, fittings and any other related part that is used in operating the pipes or valves (A.R.S. §42-5061 B.6.), will not be included in the total cost of the labor and materials upon which the Contracting Tax is computed. Contractor retains full liability and obligation to pay the Contracting Tax and will defend and indemnify the Company against any demand or obligation to pay the Contracting Tax.

7. Contractor will maintain detailed accounting records of all materials purchased and incorporated into the Work. Such records will include all supporting original vendor invoices for all materials purchased. Following completion of the Work, Contractor will submit an itemized accounting to the Company which will include all supporting original vendor invoices and satisfactory evidence of payment thereof. The Company will not pay Contractor for materials not actually incorporated into the Work, and the disposition of such materials will remain Contractor's responsibility.

8. The Estimated Total Cost of the Work, shown on Page 2, is based on estimated labor and material quantities to be furnished. It includes an estimate of the Contracting Tax and the cost of the required Performance and Payment Bonds. Contractor will not cancel, modify or withdraw this Proposal/Contract during a ninety-day (90) period commencing on the Bid Due Date. The Company may accept this Proposal/Contract by signing and mailing, or otherwise delivering, a copy hereof to Contractor during such ninety-day (90) period. If the Company does not accept this Proposal/Contract during such ninety-day (90) period, Contractor may cancel this Proposal/Contract by giving written notice of cancellation to the Company.

9. Prior to the commencement of the Work, Contractor will provide the Company with a detailed construction schedule, in either Gantt or CPM form, identifying all tasks to be performed from the date of the written Commencement Notice through completion of the Work, including testing, training of Company Personnel and the final Project invoice.

10. Contractor will not commence the Work until the Company gives Contractor a written Commencement Notice. Contractor will complete the Work within the time specified in Section 5 of Attachment A.

11. Following the Company's written notice of satisfactory completion of the Work, and upon receipt of the final invoice from Contractor, the Company shall pay Contractor the actual total cost of the Work, which will be calculated as shown on Page 2, except that actual labor and material quantities installed/constructed will be substituted for the estimated labor and materials quantities and the Contracting Tax will be recalculated based on such actual labor and materials quantities.

12. The Company may deduct from the Company's payment of the final invoice the amount of applicable liquidated damages if Contractor does not deliver or perform within the time limit shown in Paragraph 10. This provision shall not limit the Company's ability to terminate this Proposal/Contract for Contractor's unsatisfactory performance or failure to perform as provided in the General Conditions of Contract, Specifications or Drawings, or in this Proposal/Contract.

13. This Proposal/Contract shall continue until _____, unless terminated earlier as provided in paragraph 14, (the "Term").

14. The Company, at its option, may terminate this Proposal/Contract at any time prior to the end of the Term upon thirty (30) days notice to Contractor.

SPECIAL CONDITIONS:

CONTRACTOR DRAFT	PROPOSAL/CONTRACT ACCEPTED: *ARIZONA WATER COMPANY*
By:	By:
Print Name:	Print Name: Fredrick K. Schneider, PE
Title:	Title: Vice President - Engineering
Date:	Date:

AFH

ARIZONA WATER COMPANY

Pinal Valley - Casa Grande Division
220 E. 2nd Street
Casa Grande, AZ 85122 PH: 520-836-8785

PROPOSAL/CONTRACT

CONTRACTOR:	SYSTEM: PINAL VALLEY
AZ CONTRACTOR LICENSE NO: CLASSIFICATION:	W.A. No(s):
ADDRESS:	BID DUE DATE:
CITY ST ZIP	BID BOND REQUIRED ☑ Yes ☐ No

DRAFT

DESCRIPTION OF PROJECT: Remove and replace used media from Valley Farms Well Nos. 1 and 2 Arsenic Removal Facility.

1-2. MATERIALS EXEMPT FROM CONTRACTING TAX (per Paragraph 6)	QUANTITY	UNIT PRICE LABOR	UNIT PRICE MATERIALS		TOTAL COST LABOR		TOTAL COST MATERIALS
Media Change-Out per Attachment "A"	1			1		2	
3. Total Labor to Install Exempt Materials (add the amounts in column 1)				3			
4. Total Exempt Materials (add the amounts in column 2)						4	

5-6. NON-EXEMPT MATERIALS	QUANTITY	LABOR	MATERIALS		LABOR		MATERIALS
				5		6	
7. Total Labor to Install Non-Exempt Materials (add the amounts in column 5)				7			
8. Total Non-Exempt Materials (add the amounts in column 6)						8	
9. Subtotal A (add lines 3, 7 and 8)						9	
10. Contracting Tax Base (multiply the amount on line 9 by 0.65)				10			
11. Applicable Contracting Tax Rate				11			
12. Contracting Tax (multiply the amount on line 10 by line 11)						12	
13. Subtotal B (add lines 4, 9 and 12)						13	
14. 100% Performance and Payment Bonds Cost						14	
15. Estimated Total Cost (add lines 13 and 14)						15	

NOTE: The Estimated Total Cost includes all labor and materials for backfill, pavement replacement, chip seal, and traffic control necessary for the Project.

ATTACHMENT A DRAFT

The Company's Valley Farms Well Nos. 1 and 2 (the "Wells") are equipped with an adsorption media treatment system (the "Facilities") used to reduce the concentration of arsenic (the "Contaminant") to ensure that the water from the Wells complies with applicable Safe Drinking Water Standards.

1. Site.

The Facilities are located at 16601 E. Vah Ki Inn Road, Coolidge, AZ 85128 ("Site").

2. Removal and Replacement of Used Media.

As more specifically set forth below, Contractor will provide all equipment, material and labor necessary and appropriate to remove and replace the used media in the Facilities ("Media Change-Out"). Used media may contain arsenic and other substances.

2.1 Characterization and Classification of Used Media.

Contractor shall obtain from the Site a representative sample of the used media. Contractor will obtain a laboratory analysis of the used media using a method of analysis approved by the United States Environmental Protection Agency or State of Arizona. Such analysis must be performed by an Arizona Department of Health Services certified laboratory. Contractor will use the laboratory results to complete all characterization, classification and documentation required by all regulatory agencies. Characterization, classification and documentation shall be conducted in accordance with all federal, state, and local requirements. Contractor will provide, or arrange for its laboratory to provide copies of the test results to Company within three (3) days of Contractor's receipt of such test results. Company will provide the following information to Contractor at the time of Media Change-Out:

A. Flow totalizer readings at the time of initial media installation or previous Media Change-Out.

B. Flow totalizer reading at time the Facilities are removed from service for current Media Change-Out.

C. Most recent laboratory test results for the Contaminant.

2.2 Removal of Used Media from the Vessels.

Contractor will make the necessary arrangements to remove the used media. Contractor will use a vacuum extractor to remove all used media from the vessels and thoroughly clean out the backwash tanks. Contractor will remove all residual media from the vessel by spraying residual media off the sides of the vessel and interior of the backwash tank with a hose. Contractor shall handle and dispose of all water used at the Site during the removal of the used media, in compliance with all applicable laws and regulations. No water will be discharged onto or from the Site. After each vessel and backwash tank is cleaned, Contractor will notify

DRAFT

Company that the vessels and backwash tanks are clean and ready for inspection. Contractor will clean up any spilled media and restore the Site to its original condition.

2.3 Packaging, Transportation and Disposal of Used Media.

Contractor will remove, package, transport and dispose of the used media from the Site in compliance with all applicable federal, state and local laws, regulations and standards. Contractor will transport and dispose of used media in a disposal facility that is expressly authorized to receive such used media. Contractor will provide waste manifests and all other waste documentation required under all laws applicable to the used media to Company within thirty (30) days of the date the used media is removed from the Site or with Contractor's Approval to Bill, whichever is earlier. No payments will be made to Contractor before Company receives all required documentation.

2.4 Inspection of the Vessels.

Contractor will inspect the interior of each vessel, distribution laterals and nozzles of the empty vessels upon each Media Change-Out at no additional cost to Company. Contractor will enter each vessel and visually inspect the interior of the vessel, including the distribution laterals and nozzles, after removing the used media from the vessel per Section 2.2. Contractor must comply with all applicable confined space entry requirements established by the Occupational Safety and Health Administration or other governing agencies with jurisdiction over Contractor's work. Contractor will identify any corrosion, accumulation of scale or other buildup that may be present inside the vessels or backwash tanks during its inspection. If Contractor finds any clogged or obstructed distribution laterals or nozzles, Contractor will immediately notify Company. The Company will be present or available by telephone during the inspection. Company may choose to repair or replace internal components prior to the replacement of the media. Company will separately negotiate the price and terms of such repairs or replacements of distribution laterals, nozzles or coating, if any, directly with Contractor or others. Within fifteen (15) days after the Media Change-Out is completed, Contractor will submit a written report to Company for each inspection completed. Contractor will not charge Company for any stand-by costs incurred while Company completes the repairs or replacements.

Contractor will supply all tools, labor, and equipment necessary to inspect the vessels and backwash tank at its own cost. Contractor is responsible for determining the details of vessel entry and access at the Site prior to commencement of the Work. Contractor must properly reinstall any part(s) removed to gain entry or access to the vessels after completing its inspection and restore the vessels to working order.

2.5 Replacement of Used Media.

After Contractor removes used media and the vessels are determined to be in good condition or after repairs have been completed, Contractor will load new media into the vessels.

Contractor will load new Severn Trent Bayoxide®E33 media into each empty vessel in accordance with all applicable manufacturer recommendations, specifications and

DRAFT

warranty requirements. Contractor will provide any necessary hoses, pumping equipment and piping for water needed to load or rinse any new media. Contractor must take all necessary precautions to prevent spills of used media, liquid, or new media.

2.6 Disinfection and Coliform Testing.

After completing the inspection and all necessary repairs, Contractor shall notify Company when vessels are ready for disinfection. Contractor will disinfect all vessels to comply with the Company's requirements. Contractor must document and verify adequate disinfection of all media and vessels. Contractor shall place the Facilities back in service after authorized by Company.

3. Water Quality.

After Contractor completes a Media Change-Out, Contractor will return Facilities to full operation and all water produced by the Facilities must comply with the Water Quality Specification in Exhibit A. Contractor further warrants and guarantees that its performance under this Proposal/Contract will at all times comply with the terms and provisions of the Media Performance Guarantee described below.

4. Modifications to the General Conditions of Contract.

4.1 Section 2, "Bonds", is modified as follows:

Contractor shall furnish Company with a performance bond and a material payment bond in the amount of $200,000 in a form and from a surety acceptable to Company.

4.2 Section 36, "Working Hours", is modified to include the following:

Work shall only be performed between the hours of 8 a.m. and 4 p.m., Monday through Friday, unless otherwise authorized by the Company in writing.

4.3 In addition to all implied or expressed warranties and guarantees, whether set forth in the General Conditions of Contract or otherwise:

Contractor also provides a Media Performance Guarantee (defined below), which guarantees that the adsorptive media ("Media") it provides and loads into the Facilities will remove arsenic to a concentration less than or equal to 7 micrograms per liter to comply with the Water Quality Specification in Exhibit A. Contractor further guarantees that Media shall continue to remove arsenic to comply with the Water Quality Specification for a minimum volume of water treated of not less than _____ gallons ("Media Performance Guarantee"). In the event that the Media does not treat the minimum volume of water before a Media Change-Out is required, Contractor will provide a prorated savings ("Discount") on the future purchases and installations of Media for use in the Facilities for the Term. At its sole discretion, Company may require Contractor to pay Discount in cash in lieu of future Media purchases. In the event that Contractor proposes a new, improved, or different Media that would have a performance benefit to Company over the present Media, Contractor will offer such new, improved, or different Media at an equal Discount, if accepted by Company.

Design Parameters for Media Performance Guarantee: DRAFT

A. Company's Valley Farms Well Nos. 1 and 2 supplying the Facilities

B. Total Flow – 400 gpm

C. Treatment Requirement – Treated water arsenic concentration less than or equal to 7 micrograms per liter.

D. Configuration – Vessel(s) in parallel

E. Pretreatment – Chlorination with liquid sodium hypochlorite ("NaOCl")

F. _____ __-ft. diameter vessel with ___ cubic feet of Media

Wells	Total Media Volume, cubic feet	Media Change-Out Fee	Media Type	Media Performance Guarantee, Gallons
Valley Farms Well Nos. 1 and 2		$_____	Bayoxide E-33	

G. Company and Contractor agree that the raw water quality set forth below is representative of the water being treated in the Facility. This water quality is the basis for the media Performance Guarantee. Variances greater than ten percent (10%) above these values (or +0.3 pH units) may result in recalculation of the Media Performance Guarantee. In such event, Company and Contractor will meet and confer and mutually agree to such recalculated Media Performance Guarantee. Contractor bears the responsibility to demonstrate the impacts to the Media Performance Guarantee.

Valley Farms Well Nos. 1 and 2 Site - Arizona		
Analyte	Concentration	
	Well No. 1	Well No. 2
Arsenic III+V	3.5 ppb	14.5 ppb
Iron	<0.05 mg/L	<0.05 mg/L
pH	7.7	8 - 8.2
Calcium Hardness	245 mg/L	45 mg/L
Total Alkalinity	108 mg/L	100 mg/L
Sulfate	119 mg/L	65 mg/L
Calcium	98 mg/L	16 mg/L
Chromium	<0.005 mg/L	<0.1 mg/L
Magnesium	11 mg/L	1.5 mg/L
Uranium	8.9 ppb	-- ppb
Cadmium	<0.0001 mg/L	<0.0005 mg/L
Manganese	<0.02 mg/L	<0.02 mg/L
Lead	<0.001 mg/L	<0.02 mg/L
Total Suspended Solids	2 mg/L	--
Selenium	0.0068 mg/L	0.009 mg/L
Sulfide	<0.04 mg/L	<0.04 mg/L
Turbidity (NTU)	<1 mg/L	--
Silica, Total	28.9 mg/L	34 mg/L
Total Phosphorus	<0.01 mg/L	<0.05 mg/L
Vanadium	0.007 mg/L	0.016 mg/L

If the treated water arsenic concentration from the treatment vessels exceeds 9 micrograms per liter before the media treats _____ gallons, Contractor will replace the Total Media Volume stated above at the current Media Change-Out Fee less the Discount, as set forth by the following formula:

Discount equals Media Change-Out Fee multiplied by
[(Media Performance Guarantee (gallons) minus
Actual gallons of water treated) divided by
Media Performance Guarantee (gallons)]

Example of Discount Calculation

Media Change-Out Fee = $77,925.00
Media Performance Guarantee = 67,200,000 gallons
Actual quantity of water treated = 60,000,000 gallons
Discount = $77,925.00 x [(67,200,000 - 60,000,000)/ 67,200,000]
Discount = $8,349.11

If Contractor replaces any Media pursuant to this Media Performance Guarantee or otherwise, such replacement Media will also be guaranteed under the Media Performance Guarantee throughout the Term. Contractor will credit or deduct the full amount of the Discount provided by the Media Performance Guarantee from the final invoice.

5. Time for Performance.

Contractor will perform its obligations under this Agreement in a diligent, lawful, prompt, timely, and professional manner. Company will monitor the water quality of water produced from the Facilities and will notify Contractor when a Media Change-Out is required.

DRAFT

Company will notify Contractor when a Media Change-Out is required. Contractor will provide Company with a written schedule for Media Change-Out within five (5) business days of receipt of Company's notice. Contractor will coordinate the Media Change-Out by contacting Company's Division Manager at the following address:

Arizona Water Company
220 East 2nd Street
Casa Grande, AZ 85122
Attn: Manager
Phone: 520-836-8785
Fax: 520-836-2850

Contractor must complete any Media Change-Out within fifteen (15) days of receipt of notice to perform a Media Change-Out, but no later than two (2) days after starting any Media Change-Out.

EXHIBIT A

Arizona Water Company
Arsenic Removal Facility

DRAFT

Valley Farms Well Nos. 1 and 2

Water Quality Specifications

Arizona Water Company Well	Treated Water Arsenic Concentration
Valley Farms Well Nos. 1 and 2	Less than or equal to 7 micrograms per liter

Attachment "F"

Arizona Water Company Tank Coating Specifications O-12-2

ARIZONA WATER COMPANY

O-12-2

WATER STORAGE TANK COATING SPECIFICATIONS

DEFINITIONS

A. *Company* — The words "Company" or "Arizona Water Company" mean Arizona Water Company and, where applicable, any division of Arizona Water Company, whose principal place of business is located at 3805 North Black Canyon Highway, Phoenix, Arizona 85015-5351 (Post Office Box 29006, Phoenix, Arizona 85038-9006).

B. *Company's Authorized Representative* The words "Company's Authorized Representative" mean any officer of the Company, any Division Manager and/or such other person(s) designated in writing as the "Company's Authorized Representative" by the President or any Vice President of the Company.

C. *Contractor* — The word "Contractor" means either an individual or other entity contracted with to provide the services detailed in the Contract and as specified herein.

D. *Contract* — The word "Contract" means the written document titled "Contract" when such document has been signed by an officer or other authorized representative of both the Contractor and the Company.

E. *General Conditions of Contract* — The words "General Conditions of Contract" refer to the Company's Operating Order O-12-3 in the Company's Operating Memorandums.

F. *Independent Coating Inspector* — The words "Independent Coating Inspector" mean any Certified NACE III inspector hired by the Company to inspect coatings on water storage tanks.

1. GENERAL

These specifications identify the material and workmanship necessary to produce a quality coating system. All work shall be completed in a safe, workmanlike manner in strict accordance with:

(a) Product manufacturer's instructions

(b) General Conditions of Contract for Tank Coating (0-12-3)

(c) American Water Works Association Standard AWWA C652

(d) Applicable sections of ANSI/AWWA D102-97, "Standard for Coating Steel Water Storage Tanks"

(e) ANSI/AWWA D101-53 (R86), "Standard for Inspecting and Repairing Steel Water Tanks, Standpipes, Reservoirs, and Elevated Tanks, for Water Storage"

(f) ANSI/NSF Std. 61, Section 5, "Protective (Barrier) Materials"

(g) SSPC-SP1 – Solvent Cleaning
SSPC-SP2 – Hand Tool Cleaning
SSPC-SP3 – Power Tool Cleaning
SSPC-SP5 – White Metal Blast Cleaning
SSPC-SP6 – Commercial Blast Cleaning
SSPC-SP7 – Brush-off Blast Cleaning
SSPC-SP10 – Near White Metal Blast Cleaning
SSPC-SP11 – Power Tool Cleaning to Bare Metal
SSPC-SP12 – Hydroblasting

(h) SSPC PA2 – Dry Paint Thickness with Magnetic Gauges

(i) SSPC-Guide 7 – Guide for the Disposal of Lead-Contaminated Surface Debris

2. QUALITY OF PAINT

The protective coatings identified in these specifications are set up as standards of quality. The standard "or equal" clause shall apply.

No substitution shall be considered unless the Company's Authorized Representative has received a written request for approval at least ten (10) days prior to the date for receipt of bids. Each such request must include: (a) the name of the specified material for which a substitution is being requested; (b) the name and number of the proposed substitution material; (c) a complete description of the proposed substitute, including performance and test data; and (d) any other information necessary for an evaluation. The burden of proof of the merit of the proposed substitute is upon the Contractor. Approval or disapproval of the proposed substitution rests solely with the Company's authorized representative and his decision shall be final.

Protective coatings for interior wet applications must be listed by NSF International as approved for potable water contact according to ANSI/NSF Std. 61, Section 5, "Protective (Barrier) Materials."

The Contractor shall be responsible for assuring that all materials are delivered to the job site in the original sealed and labeled containers of the protective coating manufacturer. All material on the job shall be subject to inspection by the Company's Authorized Representative.

The Company's Authorized Representative shall select colors not previously specified.

3. SPECIAL PROVISIONS

The Contractor shall be responsible for completing the removal of all remaining water, sediment, rust, etc. that is required prior to surface preparation. All preliminary preparation work will be at the Contractor's expense.

The Contractor shall:

(a) Protect aluminum gauge boards and nametags during sandblasting and painting procedures.

(b) Protect copper lines, light fixtures, valve threads, and electrical boxes.

(c) Replace all manhole bolts with cadmium-plated bolts if the Contractor opens a manhole.

(d) Replace all gaskets.

The Contractor shall **NOT**:

(a) Paint concrete unless otherwise specified.

(b) Allow the use of silica sand for surface preparation.

The Contractor shall only mix FULL kits of approved coating. No partial kits will be saved or mixed at a later time.

4. MATERIALS TO BE PROVIDED AND PROCEDURES TO BE FOLLOWED BY THE CONTRACTOR

Unless otherwise specified in the contract, the Contractor shall supply all of the necessary materials to complete the work. The Contractor shall provide the following materials and services:

a. TANKS WITH EXISTING COATING SYSTEM: Interior Steel – Conventional Coating System; Surface Preparation: SSPC-SP 10 Near White Metal Blast Cleaning.

All abrasive materials shall be thoroughly removed from the surface of the tank in accordance with SSPC-SP 10 standards prior to coating.

Tnemec Coating

(1) Prime Coat*: Tnemec Series N140-1255 (Beige) Pota Pox Plus**, one (1) coat; spray applied; 5 to 7 mils dry film thickness ("DFT").

(2) Finish Coat: Tnemec Series N140-15BL (Tank White) Pota Pox Plus; one (1) coat; spray applied; 5 to 7 mils DFT.

TOTAL DFT: 10-14 mils DFT.

* Weld Seams: All plate weld seams shall receive an additional brushed coat of Series N140 Pota Pox Plus in color 15BL (Tank White). This application will be made after the full prime coat. Additionally, brush coating shall be applied on all welds, corners, nuts, bolts, edges, or other irregular surfaces.

** Tnemec Series N140 Pota Pox Plus FC (fast cure) may be substituted for Series N140 Pota Pox Plus when conditions warrant. It may be beneficial when curing between 35° F and 56° F is required.

OR

Devoe Coating

(1) Prime Coat*: Devoe Bar-Rust 233H1642 (Buff)**, one (1) coat; spray applied; 5 to 7 mils DFT.

(2) Finish Coat: Devoe Bar-Rust 233 H3501 (White), one (1) coat: spray applied; 5 to 7 mils DFT.

TOTAL DFT: 10 to 14 mils DFT.

* Weld Seam: All plate weld seams shall receive an additional brushed coat of Devoe's Bar-Rust 233H in or 3501 (White) after the full prime coat. Additionally, brush coating shall be applied on all corners, welds, nuts, bolts, edges, or other irregular surfaces.

** Devoe Bar-Rust 233H is a high solids (80%) advanced technology NSF International (National Sanitation Foundation) approved epoxy, which can be applied at steel temperatures down to 0° F (-18° C).

b. TANKS WITH EXISTING COATING SYSTEM: Interior Steel – Alternative Floor Coating System for Badly Pitted Tank Floors. For floors in existing tanks that are highly corroded with severe pitting, the following floor system may be applied after completion of the Series N140 system to the roof and shell, subject to prior approval by the Company's Authorized Representative.

Floor Surface Preparation: SSPC-SP10 Near White Metal Blast Cleaning.

All abrasive materials shall be thoroughly removed from the surface of the tank in accordance with SSPC-SP10 standards prior to coating.

Tnemec Coating

(1) Steel Conditioners: Wet the floor surface and up the wall a few inches with a fine mist of Tnemec Series 260 Tnemec-Bond. Allow to evaporate and apply the topcoat within four (4) hours.

(2) Elastomeric Urethane: After mixing according to the manufacturer's recommendations, pour out and level with trowels or notched squeegees, Tnemec Series 264 Elasto-Shield over the entire floor to DFT of 80 to 100 mils and bring up the wall to where there is a two- to three-inch (2" to 3") overlap on the newly applied epoxy coating system.

TOTAL DFT: 80 to 100 mils DFT.

OR

Devoe Coating

(1) 100% Solids Epoxy Finish Coat: Apply Devoe's Devron 133 100% Solids Epoxy Tank Coating at 80 to 100 mils DFT.

TOTAL DFT: 80 mils minimum DFT.

All welds, corners, nuts, bolts, edges, or other irregular surfaces shall be hand brushed to assure proper coverage.

c. TANKS WITH EXISTING COATING SYSTEM: Exterior Steel; Level 1 Re-coat: For aged epoxy/urethane systems that are in sound shape and where re-coat adhesion is assured, the following overcoat system applies:

Tnemec Coating

(1) Surface preparation: Remove all dust, dirt, grime, and chalk by power washing with a trisodium phosphate/water solution (0.25 lbs. of trisodium phosphate ["TSP"] per gallon of water) with 3,500 PSI pressure at the nozzle. Power rinse with clean water immediately after TSP wash-down to avoid drying of the TSP on the surface.

All rusted, abraded, and exposed steel shall be power tool cleaned to bare metal according to SSPC-SP 11. All loose paint shall be removed with the same power tools. Feather all edges. Existing runs and chips shall be sanded out.

(2) Spot Prime (exposed metal): Tnemec Series 135 Chembuild or Series N140 Pota Pox Plus; one (1) coat; roller, brush, or spray applied, overlapping to the feathered areas; 3 to 5 mils DFT.

(3) Finish Coat: Tnemec Series 73 (spec color) Endura-Shield; one (1) coat; spray applied; 3 to 5 mils DFT.

TOTAL ADDITIONAL DFT: 3 to 5 mils DFT (on top of existing system).

OR

Devoe Coating

(1) Surface preparation: Remove all dust, dirt, grime, and chalk by power washing with Devoe's Devprep 88 with 3500 PSI pressure at the nozzle. Power rinse with clean water immediately after washing to avoid drying of the Devprep 88 on the surface.

All rusted, abraded, and exposed steel shall be power tool cleaned to bare metal according to SSPC-SP 11. All loose paint shall be removed with the same power tools. Feather all edges. Existing runs and chips shall be sanded out.

(2) Spot Prime (exposed metal): Devoe's 233H Bar-Rust one (1) coat; roller, brush, or spray applied, overlapping to the feathered areas; at 3 to 5 mil DFT.

(3) Finish Coat: Devoe's Devthane 378 aliphatic Acrylic Urethane (spec color), one (1) coat; spray applied; 3 to 4 mils DFT.

TOTAL ADDITIONAL DFT: 3 to 5 mils DFT (on top of existing system).

d. TANKS WITH EXISTING COATING SYSTEM: Exterior Steel; Level 2 Re-coat. If complete removal of the existing system is required, the following overcoat system applies:

Surface preparation: SSPC-SP 6 Commercial Abrasive Blast Cleaning.

All abrasive materials shall be thoroughly removed from the surface of the tank in accordance with SSPC-SP 10 standards prior to coating.

Tnemec Coating

(1) Prime Coat: Tnemec Series N140-1255 (Beige) Pota Pox Plus; one (1) coat; spray applied; 4 to 6 mils DFT.

(2) Finish Coat: Tnemec Series 73 (spec color) Endura-Shield III; one (1) coat; spray applied; 3 to 5 mils DFT.

TOTAL DFT: 7 to 11 mils.

OR

Devoe Coating

(1) Prime Coat: Devoe's Bar-Rust 235 Epoxy; one (1) coat; spray applied; 4 to 6 mils DFT.

(2) Finish Coat: Devoe's Devthane 378 aliphatic Acrylic Urethane (spec color); one (1) coat; spray applied; 3 to 5 mils DFT.

TOTAL DFT: 7 to 11 mils DFT.

e. TANKS WITH NEW STEEL: Exterior steel – Surface preparation: SSPC-SP 6 Commercial Abrasive Blast Cleaning.

All abrasive materials shall be thoroughly removed from the surface of the tank in accordance with SSPC-SP 10 standards prior to coating.

Tnemec Coating

(1) Prime Coat: Tnemec Series N140-1255 (Beige) Pota Pox Plus; one (1) coat; spray applied; 4 to 6 mils DFT.

(2) Finish Coat: Tnemec Series 73 (spec color) Endura-Shield III; one (1) coat; spray applied; 3 to 5 mils DFT.

TOTAL DFT: 7 to 11 mils.

OR

Devoe Coating

(1) Prime Coat: Devoe's Bar-Rust 235 Epoxy; one (1) coat; spray applied; 4 to 6 mils DFT.

(2) Finish Coat: Devoe's Devthane 378 aliphatic Acrylic Urethane (spec color); one (1) coat; spray applied; 3 to 5 mils DFT.

TOTAL DFT: 7 to 11 mils DFT.

f. TANKS WITH NEW STEEL: Interior Steel – Conventional Coating System; Surface Preparation: SSPC-SP 10 Near White Metal Blast Cleaning.

All abrasive materials shall be thoroughly removed from the surface of the tank in accordance with SSPC-SP 10 standards prior to coating.

Tnemec Coating

(1) Prime Coat*: Tnemec Series N140-1255 (Beige) Pota Pox Plus**, one (1) coat; spray applied; 5 to 7 mils DFT.

(2) Finish Coat: Tnemec Series 20-WH02 (Tank White) Pota Pox; one (1) coat; spray applied; 5 to 7 mils DFT.

TOTAL DFT: 10 to 14 mils DFT.

* Weld Seams: All plate weld seams shall receive an additional brushed coat of Series N140 Pota Pox Plus in either the color 1255 (Beige) or WH02 (Tank White). This application will be made after the full prime coat. Additionally, brush coating shall be applied on all welds, corners, nuts, bolts, edges, or other irregular surfaces.

** Tnemec series N140 Pota Pox Plus FC (fast cure) may be substituted for Series N140 Pota Pox Plus when conditions warrant. It may be beneficial when curing between 35° F and 56° F is required.

OR

Devoe Coating

(1) Prime Coat*: Devoe Bar-Rust 233H1642 (Buff)**, one (1) coat; spray applied; 5 to 7 mils DFT.

(2) Finish Coat: Devoe Bar-Rust 233 H3501 (White), one (1) coat: spray applied; 5 to 7 mils DFT.

TOTAL DFT: 10 to 14 mils DFT.

* Weld Seam: All plate weld seams shall receive an additional brushed coat of Devoe's Bar-Rust 233H in 3501 (White). The application of the stripe coat will be made after the application of the full prime coat. Additionally, brush coating shall be applied on all corners, welds, nuts, bolts, edges, or other irregular surfaces.

** Devoe Bar-Rust 233H is a high solids (80%) advanced technology NSF International (National Sanitation Foundation) approved epoxy, which can be applied at steel temperatures down to 0° F (-18° C).

5. TANK REPAIRS PRIOR TO TANK COATING/PAINTING

The Contractor is required to notify the Company's Authorized Representative on a timely basis when tank repairs are necessary, and to identify the nature and extent of repairs that are required.

If repairs to the tank are necessary, the Contractor shall be responsible for coordinating all such repairs, and shall request a change order from the Company's Authorized Representative before initiating such repairs as required in the General Conditions of Contract.

All repairs are to be made according to ANSI/AWWA D101-53 (R86), "Standard for Inspection and Repairing Steel Water Tanks, Standpipes, Reservoirs, and Elevated Tanks, for Water Storage."

The Company will not allow the Contractor to alter the structure of the tank.

6. SURFACE PREPARATION – DEBRIS CONTAINMENT AND DISPOSAL

When required by Federal, State, or local regulation, the Contractor shall enclose the entire tank and structure and contain surface preparation debris. Refer to SSPC-Guide 6, "Guide for Containing Debris Generated During Paint Removal Operations."

The Contractor shall dispose of all surface preparation debris according to applicable Federal, State, and local regulations. Refer to SSPC-Guide 7, "Guide for the Disposal of Lead-Contaminated Surface Debris."

Worker protection and environmental protection shall be followed in accordance with the following Federal Regulatory Standards and other applicable Federal, State, or local regulations:

1.	29 CFR 1910 –	OSHA General Industry Standards
2.	29 CFR 1910.134 –	Respiratory Protection
3.	29 CFR 1910.1000 –	Air Contaminants – Permissible Exposure Limits
4.	29 CFR 1910.1020 –	Employee Access to Exposure and Medical Records
5.	29 CFR 1926 –	OSHA Construction Industry Standards
6.	29 CFR 1926.59 –	Hazard Communications
7.	29 CFR 1926.62 –	Lead Exposure in Construction; Interim Final Rule
8.	40 CFR 261 –	Identification and Listing of Hazardous Waste
9.	40 CFR 262 –	Standards Applicable to Generators of Hazardous Waste
10.	40 CFR263 –	Standards Applicable to Transporters of Hazardous Waste
11.	40 CFR 264 –	Standards for Owners and Operators of Hazardous Waste Treatment, Storage, and Disposal Facilities

Cleaning:

Surfaces that have been in contact with chemicals can be assumed to be contaminated. Depending on the type of chemical, it may be necessary to clean the surface before dry blasting and again after blasting in order to remove contaminants that can otherwise cause blistering of the coating system.

Most common methods are:

- Steam Cleaning
- Hot Water/Detergent Washing (Pressure)
- Solvent Washing
- Hydroblasting or Wet Sandblasting
- Prebaking at Very High Temperatures

The first two methods can efficiently remove most soluble and emulsified contaminants. Solvent cleaning is only feasible for small tanks or small areas. Solvent cleaning will not remove water-soluble materials. When detergents are used, a fresh water rinse is necessary to remove traces of the detergent left on the surface.

Hydroblasting will seldom be used for the cleaning of tanks due to the very high pressure involved. Wet sandblasting is possible. It can remove old coatings, water soluble contaminants, and corrosion products simultaneously. It cannot remove oil or grease products.

Before cleaning takes place, the surface must be free from oil, grease, salt deposits, and other foreign material that cannot be removed by abrasive blasting. These contaminants, which differ from mill scale and rust, would otherwise be forced into the profile and interfere with the adhesion and the chemical resistance.

<u>Blasting</u>:

Steel surfaces must be blasted to white metal (SSPC-SP5/SA3) or as near as possible to white metal, but never less than near-white-metal (SSPC-SP10/SA2 ½).

Mill scale, when present on a ferrous surface, is cathodic to the surface, meaning the steel will sacrifice itself to save the mill scale. All mill scale MUST be removed prior to coating application. Although the surface may in fact already have a coating visible, the CONTRACTOR SHALL NOT assume that the previous contractor has removed the mill scale prior to applying the existing coating. All bids will be submitted with the understanding that mill scale MAY be present beneath the existing coating, and that an

SP-10 (near-white) blast will be required prior to any new coating application. NO additional costs, above the bid price, will be submitted to Arizona Water Company for removal of any mill scale that is found on the surface. Arizona Water Company requires that ALL bids reflect this understanding by the CONTRACTOR.

Profile:

The blast anchor profile must average 2 to 3 mils, but preferably 2.5 mils.

Abrasives:

The abrasive media shall be garnet and shall be of sufficient grit size to attain a specified blast anchor profile between 2 to 3 mils DFT.

Pre-Preparation and Operational Testing of Abrasives for Soluble Salts Contamination

Test abrasive media for chloride contamination using test kit as described below, entitled "Test Kit for Measuring Chlorides in Abrasives." The maximum allowable chloride concentration is 7 PPM. Test media immediately prior to use, and in no case more than 24 hours prior to use.

Pre-Preparation Testing of Abrasive Media Shipped in Bulk Containers

For bulk containers 1350kg 3000 pounds or less, test one composite sample from each container. Reject entire container for non-conforming test. For bulk containers over 1350kg 3000 pounds, test one composite sample for each 1350kg 3000 pounds, one sample from each compartment, as appropriate. Reject entire container or compartment for non-conforming test.

Pre-Preparation Testing of Abrasive Media Shipped in Bags (Normal 50-110 lb. Bags)

Maintain palletized grouping as provided from supplier. Test composite sample from one bag of each pallet, but no less than one sample for each 1350kg 3000 pounds of abrasive. Reject entire pallet for non-conforming test. If palletized grouping is not maintained, sample and test one bag for every 450kg 1000 pounds of abrasive. Reject each 450kg 1000 pounds represented by a non-conforming test. If bags are stamped with lot number, test composite samples from each of two bags per lot. Reject entire lot for non-conforming test.

Pre-Application Testing for Soluble Salts Contamination

Test blasted surfaces for chloride contamination using the Test Kit described below, entitled "Test Kit for Measuring Chlorides on Steel Surfaces." Test all surfaces at the rate of three tests for the first 1000 square feet plus one test for each additional 3000 square feet or part thereof. Concentrate testing of bare steel at areas of coating failure to bare steel and areas of corrosion pitting. Perform 30% of tests on bare metal at welds, divided equally between horizontal and vertical welds. One or more readings greater than 5 micrograms per square centimeter of chlorides shall be cause for rejection of surface. Wash all surfaces with Chlor*Rid according to the manufacturer's recommendations, allow to dry and retest until all required test show allowable results. Re-blast tested and cleaned areas to required specifications. Label all test tubes and retain for test verification.

ALLOWABLE SOLUBLE SALTS TEST KITS

Test kit for measuring Chlorides on Steel Surfaces

(Test Kits called Chlor*Test, as manufactured by CHLOR*RID International. Inc. of Chandler, Arizona (www.chlor-rid.com)).

Test kit for measuring Chlorides in Abrasives

(Test Kits called Chlor*Test "A", as manufactured by CHLOR*RID International, Inc. of Chandler, Arizona (www.chlor-rid.com)).

Welds and Edges:

These areas need special attention because they are often the first place where corrosion starts. Weld splatters must be removed by power tool grinding. Welds must be ground to a smooth radius and sharp edges must be rounded to prevent the coating from pulling away.

Dehumidification:

Depending on the ambient conditions, it may be necessary to use dehumidifiers to prevent rustblooming of the blasted steel surface. In all instances the dewpoint must remain at least 5°F or 3°C below the steel temperature.

Although not very often the case with new steel, black spotrusting may occur shortly after blasting. This is a sign that the steel has been infected with sulfates or chlorides, etc., which cannot completely be removed by dry abrasive blasting. In such a case, refer to section B, Old Corroded and/or Previously Coated Steel Surfaces.

Dust Removal:

After the blasted steel surface is approved, abrasive dust must be removed with a vacuum cleaner. The broom is insufficient. Most effective is the combination of blowing and vacuum cleaning in that order. Dust particles left on the surface will interfere with coating adhesion.

7. PREPARATION OF COATING MATERIAL

Storage:

At least 24 hours before coating material will be used, the pail must be placed in an area where the temperature is kept between 50°F and 86°F (10°C - 30°C).

Premixing:

The coating system is a two-component thermosetting material that requires thorough mechanical mixing.

After opening the can of base component, it is necessary to premix the base until no sediment is left on the bottom of the can. A squirrel-cage-type mixer such as the Jiffy mixer is efficient. Care must be taken not to introduce air (foam). After sufficient premixing, the hardener component may be added to the base and mixed immediately.

Mixing Ratio:

Unless otherwise indicated, base and hardener are supplied in the correct ratio: one can of hardener to one can of base. The use of the exact ratio is of prime importance for the chemical resistance of the cured coating film. Therefore, the hardener container must be emptied completely into the base. A very small amount of thinner may be used for cleaning the hardener can. The amount used must be deducted from the overall amount of thinner used for correction of spray viscosity.

Spray Equipment:

Conventional air spray or airless spray may be used to apply coatings. Because airless spray is almost exclusively used, the following information will deal only with this method.

The airless pump must have a pressure ratio of at least 30 to 1, but preferably 45 to 1. A tip size between 0.018" and 0.021" is strongly recommended. A reversible tip is recommended.

All equipment and lines must be absolutely clean to prevent blocking of the tip and to prevent coating contamination.

8. APPLICATION OF PROTECTIVE COATINGS

The Contractor shall apply each coating according to the specifications and the protective coating manufacturer's recommendations.

The Contractor shall apply the coating at the specified thickness. If the specified thickness is not obtained, the Contractor shall apply an additional coating.

The Contractor shall apply all protective coatings in strict accordance with the applicable manufacturer's current printed product data sheet and container label. The Contractor shall not apply protective coatings above or below the minimum/maximum surface temperatures as stated on the product data sheet. The Contractor shall not apply protective coatings to wet or damp surfaces and shall not apply protective coatings in rain, snow, fog, or mist. Surface temperatures must be at least 5° F above the dew point and the Contractor shall delay painting until such condition exists. The Contractor shall complete the painting well in advance of the probable time of day when condensation may occur and/or the surface temperature may be expected to drop below the minimum listed on the applicable product data sheet.

The Contractor shall measure DFT according to current SSPC PA2, "Dry Paint Thickness with Magnetic Gauges."

It is essential that the first coat wet the steel surface perfectly. An addition of up to 10% thinner may be made, but care must be taken to avoid runs or sags. When wet film thickness gauges are used, it must be kept in mind that the steel profile will have an effect on the readings. Thinner ratios can vary from project to project due to application equipment, weather conditions, substrate conditions, etc.

Before starting the actual spray application, it is a good practice to observe the spray pattern on a separate piece of steel or cardboard. Good atomization without fingering, heavy spots, or insufficient flow, etc. must be obtained. If imperfections occur, corrections must be made quickly. Use a somewhat higher pressure or use the next size smaller tip. If this does not correct the problem, add a small amount of thinner.

Dry spray or coarse paint globules at extremes of the spay pattem are unacceptable.

Dry spray or overspray is often caused by spraying at improper angles to the surface. Move the gun parallel with the surface, releasing the trigger of the gun before reversing direction for the next stroke.

Measure the wet film thickness regularly.

The second coat is applied in the same way, and using the same thinning ratio, after sufficient drying time of the previous coat.

Stripe Coating:

As an extra measure for corrosion protection, it is standard practice to apply a stripe coat of the primer with a brush in the welds, edges, and areas that are hard to reach with the spray gun. For that purpose, enough of the mixed primer must be thinned with approximately 25% thinner. The lower viscosity of this mixture will help to penetrate crevices and will prevent an undesirable film build-up. This stripe coating can best be done with a short round-tip bristle brush. Another stripe coat may be applied when the full primer coat has dried sufficiently.

Potlife and Thinning:

No mixed material may be used beyond the potlife. No thinner may be used to increase the potlife. Methyl Ethyl Ketone shall not be used for thinning purposes. Thinners must be that as manufactured by the coating supplier utilized for each specific project.

Drying/Curing Interval:

The ideal temperature of air and steel for the application and drying between coats is between 68°F and 77°F (20°C and 25°C).

Best results are obtained by drying for 16 to 24 hours at 68°F (20°C) between coats. Lower temperatures require longer drying intervals. When hot air blowers are used to bring the steel temperatures higher than 68°F (20°C), it is strongly recommended to let the coating dry for one (1) hour at ambient temperature with sufficient fresh air ventilation before application of heat. It is further recommended that only indirect fire heaters be used for forced air curing in order to prevent intercoat contamination.

Total Dry Film Thickness:

The ideal total DFT is 10 to 12 mils DFT. It is strongly recommended to keep the total milage below 16 mils. Small areas of somewhat higher milage do not have to be a reason for rejection, but must be the exception.

Final Curing:

At 68°F (20°C) the tank lining will cure enough for most services in 7 days minimum. Ventilation is required for the first 24 hours. When not enough time is available to cure at 68°F (20°C), hot air blowers should be used to continuously circulate heated fresh air to maintain a surface temperature of 140°F (60°C).

9. INSPECTION

The inspection during and after the tank lining job can be divided into two different functions:

A. Inspection on a pass/fail basis.
B. The above-mentioned function together with preventive actions during the application.

The following list gives the essential checkpoints for an inspection:

TEST	INSTRUMENTS
Blast Profile	Replica Tape of Comparator
Temperatures	Surface Thermometer
Humidity/Dew Point	Sling Psychrometer or Digital
Thickness of Each Coat	Magnetic Film Thickness Gauge
Pinhole/Sags/Runs/Dryspray/Flow	Holiday Detector and Magnifying Glass
Cure	MEK Rubs (50 rubs)

Preventive Inspection:

Inspection service can be very helpful when attention is paid to all parts of the operation. Although not claimed to be complete, the following list may contribute:

- Type of abrasive and cleanliness of the abrasive
- Cleaning method used before blasting
- Check for salt contamination on the steel surface after blasting
- Dehumidification
- Mixing procedure
- Paint storage and consumption
- Spray pattern
- Wet film thickness
- Ventilation
- Pinhole and holiday detection
- Drying/curing procedures
- Safety procedures

Dry Film Thickness:

One of the most controversial subjects of application and inspection is the measurement and judgment of DFT.

Highly skilled application techniques are required to keep the DFT within specified limits. It must be understood that most tank linings are exposed to severe conditions. In such a case, the idea "the thicker the better" is definitely false.

The coating should be applied in total DFT of 10 to 14 mils in 2 coats of approximately equal thickness.

Five spot measurements must be taken over an area of 100 square feet. Each spot measurement consists of three gauge readings next to one another. The average of three readings is used to calculate the average of the spot readings.

The average of the spot readings has to be in the specified mil thickness range. According to SSPC-PA2, no spot reading lower than 80% of the specified milage is acceptable. Therefore, no spot reading may be lower than 8.0 mils.

In addition, the maximum film thickness also is limited. No spot reading (average of a cluster of three gauge readings) higher than 120% of the specified film thickness is acceptable. 16.8 mils is therefore the maximum allowable film thickness.

Between the three cluster readings which form one spot reading, a higher reading than 16.8 mils is still acceptable as long as this, together with the other two readings, does not average higher than 120% (16.8 mils) of the maximum specified (14) mils.

Where the film thickness is too low, an extra coat must be applied In accordance with procedures established in this guide.

In case of high film thickness, the thick area must be sanded (after sufficient curing) and a very light extra finish coat applied to "renew" the film.

The magnetic film thickness gauges must be calibrated frequently enough to ensure correct readings. The original calibration must take place with shims placed on the blasted surface as described in SSPC-PA2. This method prevents higher thickness readings found than are actually applied, especially with deeper profiles.

10. LITERATURE

Additional literature to be used in conjunction with these guidelines:

A. Steel Structures Painting Manual, Volume 1

In particular, chapters:

2.0 Surface Preparation
2.2 Metallic Abrasives
2.4 Abrasive Air Blast Cleaning
2.6 Hand and Power Tool Cleaning
2.9 Chemical Cleaning
  a. Solvent Wipe
  b. Steam Cleaning
  c. High Pressure – Hot Detergent
5.3 Safety in Paint Application
6.0 Inspection
14.2 The Lining of Tanks

B. Steel Structures Painting Manual, Volume 2

Surface Preparation Standards
Chapter 5, Paint Application Specifications SSPC-PA2
A Guide to Safety in Paint Application SSPC-PA Guide 311

11. CURING, VENTILATION, AND DISINFECTION

The Contractor shall provide adequate ventilation to effectively remove solvent vapors for proper drying of paint on interior surfaces. The Contractor shall be required, upon request from the Company's Authorized Representative or the Independent Coating Inspector, during the pre-construction meeting to provide specific details on its plan to provide adequate curing and ventilation.

A combination of forced and natural ventilation shall be continued after coating application is completed to ensure complete curing and solvent removal. Coating life may be shortened if there is inadequate ventilation during the curing period and residual coating solvent may contribute to taste and odor problems in stored water. Lower temperatures or higher humidity may extend the time that ventilation is necessary. The Contractor shall use forced air ventilation with heating units when applying coatings at low temperatures and higher humidities. The ventilation must be designed in such a way that no solvent vapors remain in corners, etc. The air used must be clean and dry enough to prevent any condensation of moisture on the coated surface. Good ventilation will prevent solvent entrapment in the film.

Following final coat application and final inspection, the Contractor shall not disinfect the tank until the coating system is fully cured and approved by the Independent Coating Inspector. Refer to the applicable product data sheet for dry time/temperature requirements. The Contractor shall disinfect the tank according to the current American Water Works Association Standard AWWA C652, or as instructed by the Company's Authorized Representative. The Contractor, at its expense, shall be responsible for disinfecting the tank immediately before placing the tank in service.

All cathodic protection systems shall be disabled and locked out before initiating tank draining and shall remain disabled until completion of the interior warranty inspection. Once the tank is placed back into service, the lock shall be removed and the cathodic protection system energized.

12. CLEAN UP

The Contractor shall remove from the Company's property and from all public and private property, at its own expense, all temporary structures, rubbish, and waste materials from its operations. In the event the Contractor fails to do so, the Company may remove same at the expense of the Contractor.

Arizona Water Company

VALLEY FARMS WELL NOS. 1 AND 2
ARSENIC REMOVAL FACILITY

16601 E. VAH KI INN ROAD
COOLIDGE, ARIZONA 85128

ADDENDUM No. 1

July 7, 2014

In reference to the Request for Proposal and Technical Specifications for the subject project, please note the following items which address comments and revisions to drawings and specifications noted:

SECTION NO. 1: Questions and Responses

Question 1. Does the interior of the vessels have to be painted?

Resp`onse: Contractor must paint the interior of the arsenic vessels with Carboline 4500S (30-40 mils) epoxy coating in accordance with manufacturer's requirements and not the paint specified in Attachment F.

Question 2. Will the new chlorine analyzer be located after the storage tank or before?

Response: Contractor must install the new chlorine analyzer after the treatment vessels and before the storage tank.

Question 3. When does the one year warranty period begin?

Response: The one year warranty period begins after the Company's final written acceptance of the ARF.

Question 4. Are temporary chlorination facilities required?

Response: Contractor must install temporary facilities to maintain operation of Well Nos. 1 and 2. Before temporary facilities are constructed, Contractor must submit a MOPO to the Company for review and approval.

Question 5. Are there any restrictions on working area?

Response: Contractor must allow the Company continuous access to its facilities and not impinge on well lay down areas.

Question 6. What are the allowed working hours?

Response: The allowed working hours are as specified in the Request for Proposal and Technical Specifications. The Company will consider

exceptions on a case by case basis and require Company approval in advance.

Question 7. What is the ultimate footprint considering future demands?

Response: The new ARF facility design must allow for future expansion of the treatment process. The Company has estimated future flows at 800gpm. Refer to Attachment "D": Existing Site Plan for footprint.

Question 8. What capacity should the chemical storage and chemical spill containment be?

Response: Contractor must design the chemical storage tanks to store a full 30-day supply. Contractor must design and the unlined concrete spill containment area to store a minimum of 10% of the chemical tank capacity and have a minimum of 6-inch tall curbing.

Question 9. Will the contractor be able to start construction prior to the 90%/100% approval from the Company?

Response: If the Contractor starts construction prior to Company's 100% approval and all regulatory approvals, then Contractor is proceeding at his own risk.

Question 10. Is a discharge permit required?

Response: Contractor is responsible for determining what permits are required. As noted in General Conditions of Contract, E-4-1, Item 21, Permits, Fees and Inspections, the contractor is responsible for obtaining any permits required for the completion of the work, including dust control, SWPP, AZPDES for construction water discharge, etc.

Question 11. What is the utilization rate for each well?

Response: The Company shall routinely alternate between the Wells as the lead and lag well. For six months during the low demand season, the lead well is expected to run at any given time. Each well is expected to produce 1 million gallons per month for a total of 12 million gallons for the season. For the remaining six months during the high demand season, both Wells are expected to run concurrently and produce a total of 2.75 million gallons per month for a total of 16.5 million gallons of water for the season. The total production of the Valley Farms site is 28.5 million gallons of water per year.

Question 12. Please define the level of record drawings required. Are these hard copies of the design drawings that are marked by hand, marked up in CAD, or redrawn in CAD. Do they need to be sealed by the Engineer and/or a Surveyor??

Response: Contractor is responsible for providing record drawings re-drawn in CAD, signed and sealed by the registered Engineer.

Question 13. What is the maximum acceptable head loss / well discharge reduction across the proposed treatment system?

Response: The flux rate shall not exceed 6 gpm/per square foot or the manufacturer's requirements, whichever is less. Maximum pipe velocities shall not exceed 5 feet per second. Head loss through the ARF shall not exceed 10 psi.

Question 14. Please verify that life cycle costs will be limited to chemical and media costs and do not need to accommodate labor, equipment replacements, interest, inflation, etc.?

Response: Life cycle costs shall include chemical and media change out costs (labor and materials)

Question 15. What has been the historic chlorine demand of your raw well water?

Response: Approximately 0.5 mg/L

Question 16. What is your preferred chemical for reducing pH?

Response: Sulfuric acid

Question 17. Is Delta required to provide the electrical and controls design in addition to SCADA work?

Response: No

Question 18. What is the arsenic speciation of your raw water?

Response: Arsenic (V) is the prevalent species of Arsenic in the raw water from the Wells. Arsenic (III) concentration levels of the raw water are non-detect.

Question 19. Will the Company provide a certified operator during start-up and commissioning?

Response: Yes

Question 20. In the past the Company has limited the allowed electricians. Will the project have limited allowed electrician, or will it be open to the public?

Response: Electrical contractor must provide 24/7 on-call services.

Question 21. The drawing included in the packet show a space labeled for Future Chlorine system. Is the Contractor required to use this space on this project?

Response: No. All chemical systems shall be located in the space designated for "Arsenic Removal Facilities" on Attachment "D"

Question 22. Parts a), b) and c) of question B.i.a.5 of the Request for Proposal seem to not pertain to the contractor's list of similar projects. These parts seem like they should appear under question B.i.a. Is that correct?

Response: Include B.i.a.5 parts b) and c) with section B.i.a not B.i.a.5. Include B.i.a.5 part a) with B.i.a and B.i.a.5.

Question 23. Are electrical as-builts of the existing system available?

Response: See Attachment "G".

Question 24. Could you send out a sample set of plans that reflect your current design preferences?

Response: See Attachment "H" and "I".

SECTION NO. 2: Request for Proposal Revisions

Proposal Rev 1. The bid due date is revised to July 16, 2014 at 2:00 pm.

SECTION NO. 3: Additional Attachments

Additional Attachment 1. Attachment "G" is the Company's as-built drawings for the Valley Farms Booster Pump Station construction project.

Additional Attachment 2. Attachment "H" is a set record drawings for the Montezuma Haven Well Nos. 2 and 3 Arsenic Removal Facility construction project.

Additional Attachment 3. Attachment "I" is a sample set of sheets detailing the Company's preference for the design of chemical systems.

Archie D. Lopez

Contractor's Signature

Date

Note: A signed copy of this Addendum shall be returned with the Contractor's proposal and/or the Contractor shall acknowledge this Addendum in the space provided on the Proposal.

CONSTRUCT A BOOSTER PUMP STATION AT THE VALLEY FARMS WELL & TANK SITE
16601 E. VAH KI INN ROAD - COOLIDGE, AZ 85228

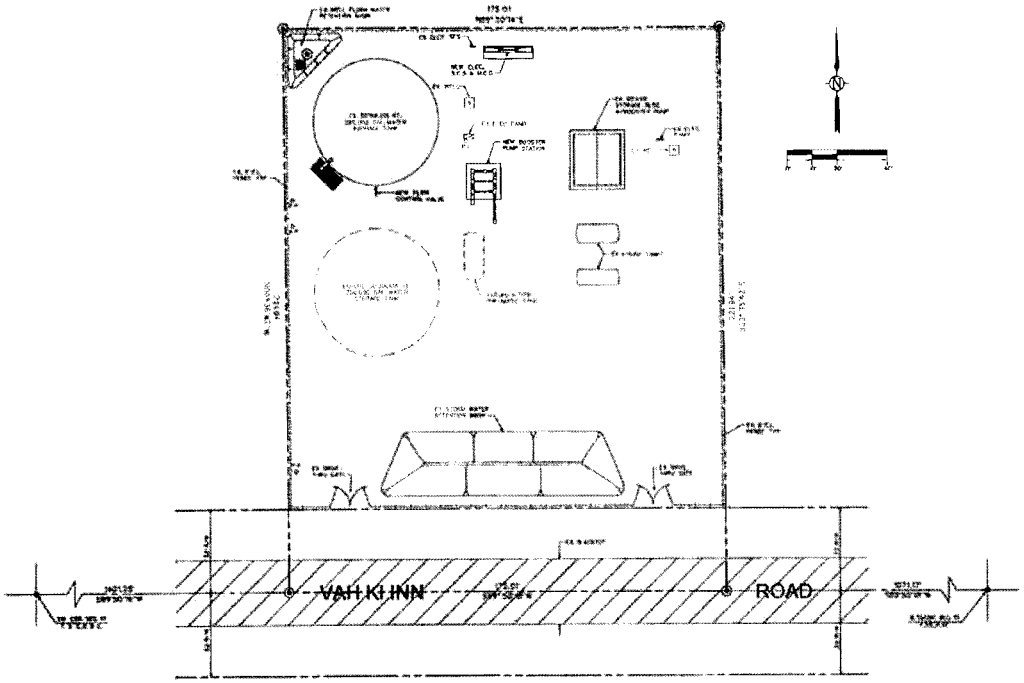

SITE PLAN

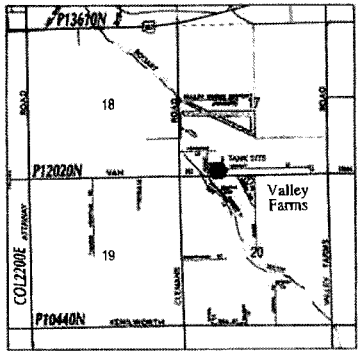

T 5 S R 8 E

VICINITY MAP

OWNER/DEVELOPER/ENGINEER

ARIZONA WATER COMPANY
POST OFFICE BOX 29006
PHOENIX, AZ 85038-9006
VOICE: (602) 240-5861 FAX: (602) 251-7193
CONTACT: MIKE LOGGINS

LEGAL DESCRIPTION (DKT. 124, PG. 198)

A parcel of land situated within the Southeast quarter of Section 11, Township 5 South, Range 8 East of the Gila and Salt River Base and Meridian, Pinal County, Arizona, and particularly described as follows:

Beginning at a point on the Grimsy Road right of way which point bears South 87°58' West, 1071.34 feet from the South quarter corner of said Section, (a said quarter corner being marked by a 2 inch iron pipe with brass cap) Thence South 00°51' East, 174.00 feet; Thence North 01°28' West, 272.00 feet; Thence North 89°58' East, 175.00 feet; Thence South 01°28' East, 272.00 feet to the Point of Beginning.

LEGEND

- PROPERTY CORNER
- RIGHT OF WAY LINE
- PROPERTY LINE
- STREET CENTERLINE (ADJACENT LINE)
- EX. POWER DUCT

SHEET INDEX

	SHT. No.	DWG. No.	DESCRIPTION	PREPARED BY
	1	PV-0042	SITE PLAN	A.W.Co.
A9	2	PV-0042	SITE PIPING PLAN	A.W.Co.
	1.1	PV-0042	SITE PIPING PLAN	A.W.Co.
	3	PV-0042	BOOSTER STATION PLAN & SECTIONS	A.W.Co.
	4	PV-0042	CONSTRUCTION SPECIFICATION NOTES	A.W.Co.
	5	PV-0042	CONSTRUCTION SPECIFICATION DRAWINGS	A.W.Co.
	6	E1	LEGENDS AND SYMBOLS SHEET	HEDDMAN ASSOC.
	7	E2	POWER & CONDUIT ROUTING SITE PLAN	HEDDMAN ASSOC.
	8	E3	GROUNDING SITE PLAN	HEDDMAN ASSOC.
	9	E4	CONDUIT & CABLE SCHEDULES	HEDDMAN ASSOC.
	10	E5	SINGLE LINE DIAGRAM & CALCULATIONS	HEDDMAN ASSOC.
	11	E6	ELECTRICAL EQUIPMENT DETAILS	HEDDMAN ASSOC.
A9	12	E7	CONDUIT PLAN PLAN	HEDDMAN ASSOC.
	13	E8	LUCVIK ELECTRIC CONDUIT LAYOUT	HEDDMAN ASSOC.
	14	E9	LUCVIK ELECTRIC CONDUIT LAYOUT	HEDDMAN ASSOC.
	15	E10	LUCVIK ELECTRIC CONDUIT LAYOUT	HEDDMAN ASSOC.

AS BUILT

FOR WATER ONLY

ARIZONA WATER COMPANY
SOUTH BLACK CANYON HWY. POST OFFICE BOX 29006
PHOENIX, ARIZONA 85038-9006
(623) 240-5861

PROJECT: CONSTRUCT A BOOSTER PUMP STATION AT THE VALLEY FARMS WELL & TANK SITE
16601 E. VAH KI INN ROAD - COOLIDGE, AZ 85228

SITE PLAN

PV-0042

SHEET 1 OF 15

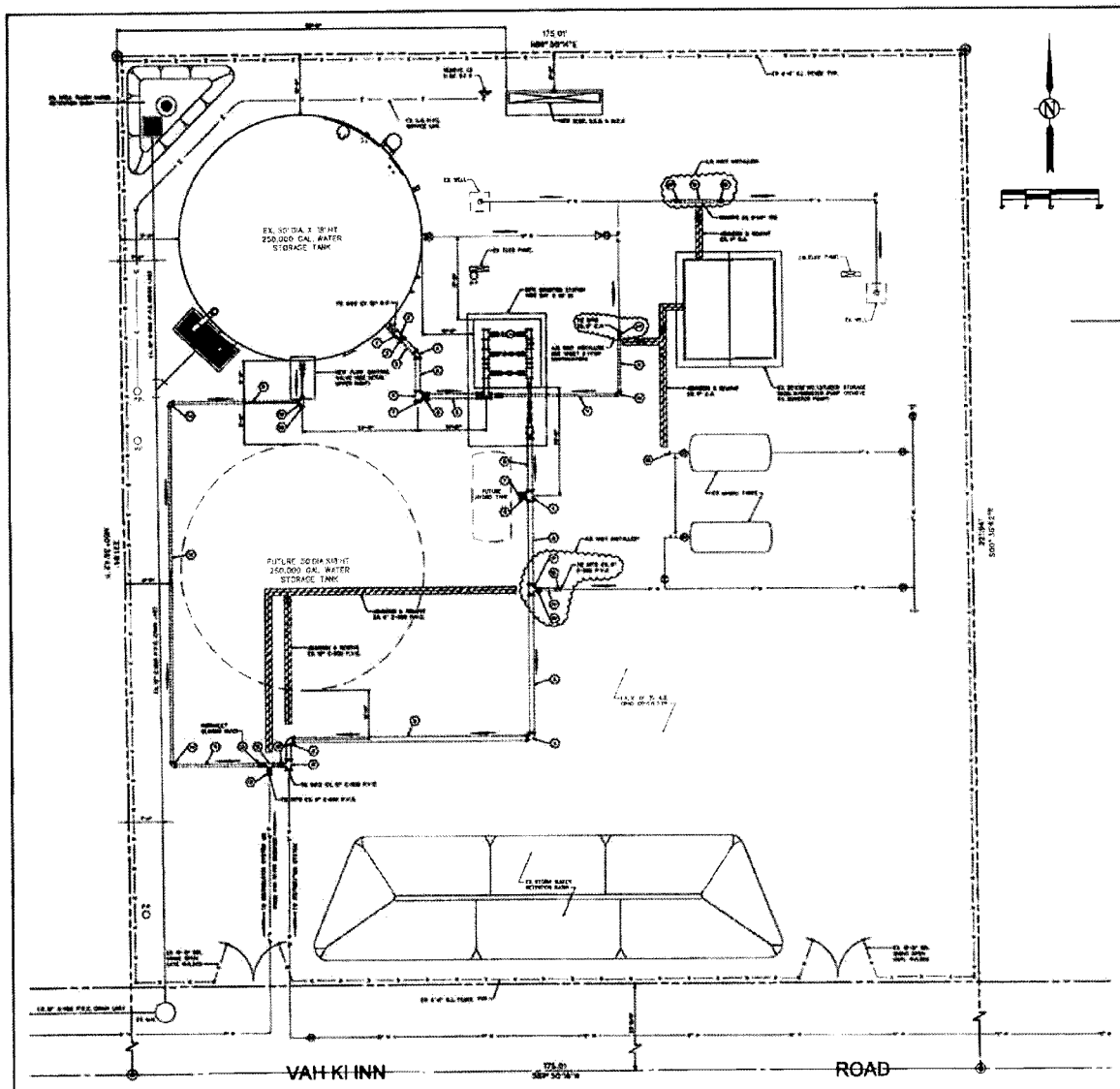

SITE PIPING PLAN

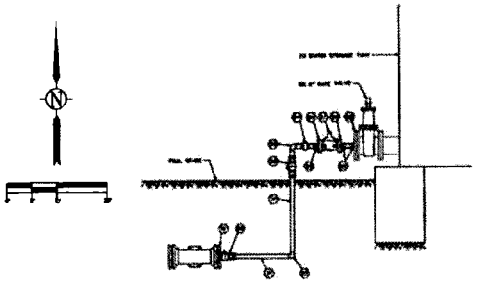

FLOW CONTROL VALVE DETAIL

	FITTING SCHEDULE**	QUANTITY	MANUFACTURER	MODEL NO.
1	[illegible]	1	[illegible]	[illegible]
2	[illegible]	1	[illegible]	[illegible]
3	[illegible]	1	[illegible]	[illegible]
4	[illegible]	1	[illegible]	[illegible]
5	[illegible]	[illegible]	[illegible]	[illegible]
6	[illegible]	1	[illegible]	[illegible]
7	[illegible]	1	[illegible]	[illegible]
8	[illegible]	1	[illegible]	[illegible]
9	[illegible]	[illegible]	[illegible]	[illegible]
10	[illegible]	[illegible]	[illegible]	[illegible]
11	[illegible]	[illegible]	[illegible]	[illegible]
12	[illegible]	1	[illegible]	[illegible]
13	[illegible]	1	[illegible]	[illegible]
14	[illegible]	1	[illegible]	[illegible]
15	[illegible]	1	[illegible]	[illegible]
16	[illegible]	1	[illegible]	[illegible]
17	[illegible]	1	[illegible]	[illegible]
18	[illegible]	1	[illegible]	[illegible]
19	[illegible]	1	[illegible]	[illegible]
20	[illegible]	1	[illegible]	[illegible]
21	[illegible]	1	[illegible]	[illegible]
22	[illegible]	1	[illegible]	[illegible]
23	[illegible]	1	[illegible]	[illegible]
24	[illegible]	1	[illegible]	[illegible]
25	[illegible]	1	[illegible]	[illegible]
26	[illegible]	1	[illegible]	[illegible]
27	[illegible]	1	[illegible]	[illegible]
28	[illegible]	1	[illegible]	[illegible]
29	[illegible]	1	[illegible]	[illegible]
30	[illegible]	1	[illegible]	[illegible]
31	[illegible]	[illegible]	[illegible]	[illegible]
32	[illegible]	1	[illegible]	[illegible]

** [illegible]

SITE PIPING NOTES

1. NEW PIPING SHALL BE DISINFECTED IN ACCORDANCE WITH ADEQ ENGINEERING BULLETIN No. 8 BEFORE BEING PLACED INTO SERVICE.
2. ALL MATERIALS AND PRODUCTS USED IN WATER SYSTEM INCLUDING SURFACE COATINGS & PAINTS, SHALL CONFORM TO NSF STANDARD 61 & CURRENT AWWA D102.
3. CONSTRUCTION MATERIALS USED IN WATER SYSTEM SHALL BE LEAD-FREE AS PER A.A.C. R18-4-604 AND SB6-1-101(43).
4. ALL MECHANICAL JOINT FITTINGS ARE TO HAVE MEGA-LUGS.
5. ALL PIPE SHALL BE INSTALLED WITH JOINT RESTRAINT (e.g. MEGA-LUGS) NO CONCRETE THRUST BLOCKS SHALL BE USED WITHOUT PRIOR APPROVAL FROM THE ENGINEER.
6. POLYWRAP ALL DUCTILE IRON PIPE & FITTING BELOW GRADE.
7. EXCAVATE, REMOVES UNSUITABLE MATERIAL & COMPACT TO 95% @ ±2% LPTS.

LEGEND

- RIGHT-OF-WAY LINE
- PROPERTY LINE
- STREET CENTERLINE/MONUMENT LINE
- EX. WATERLINE
- EX. WATER VALVE
- DIRECTION OF FLOW
- EX. POWER POLE

AS BUILT

FOR WATER ONLY

ARIZONA WATER COMPANY
3836 N. BLACK CANYON HWY. POST OFFICE BOX 29026
PHOENIX, ARIZONA 85038-9026
(623) 340-0860

PROJECT TITLE: CONSTRUCT A BOOSTER PUMP STATION AT THE VALLEY FARMS WELL & TANK SITE
16881 E. VAH KI INN ROAD - COOLIDGE, AZ 85228

PROJECT SHEET TITLE: SITE PIPING PLAN

DATE: 1-15-2014
REVISED:
FINAL VALLEY
SECTION 4, T6S, T7S, R8S, R9E
DATE: 2-4-2013
SCALE: AS SHOWN
DRAWN BY: JPC
CHECKED BY:

PV-0042

SHEET 2 OF 15

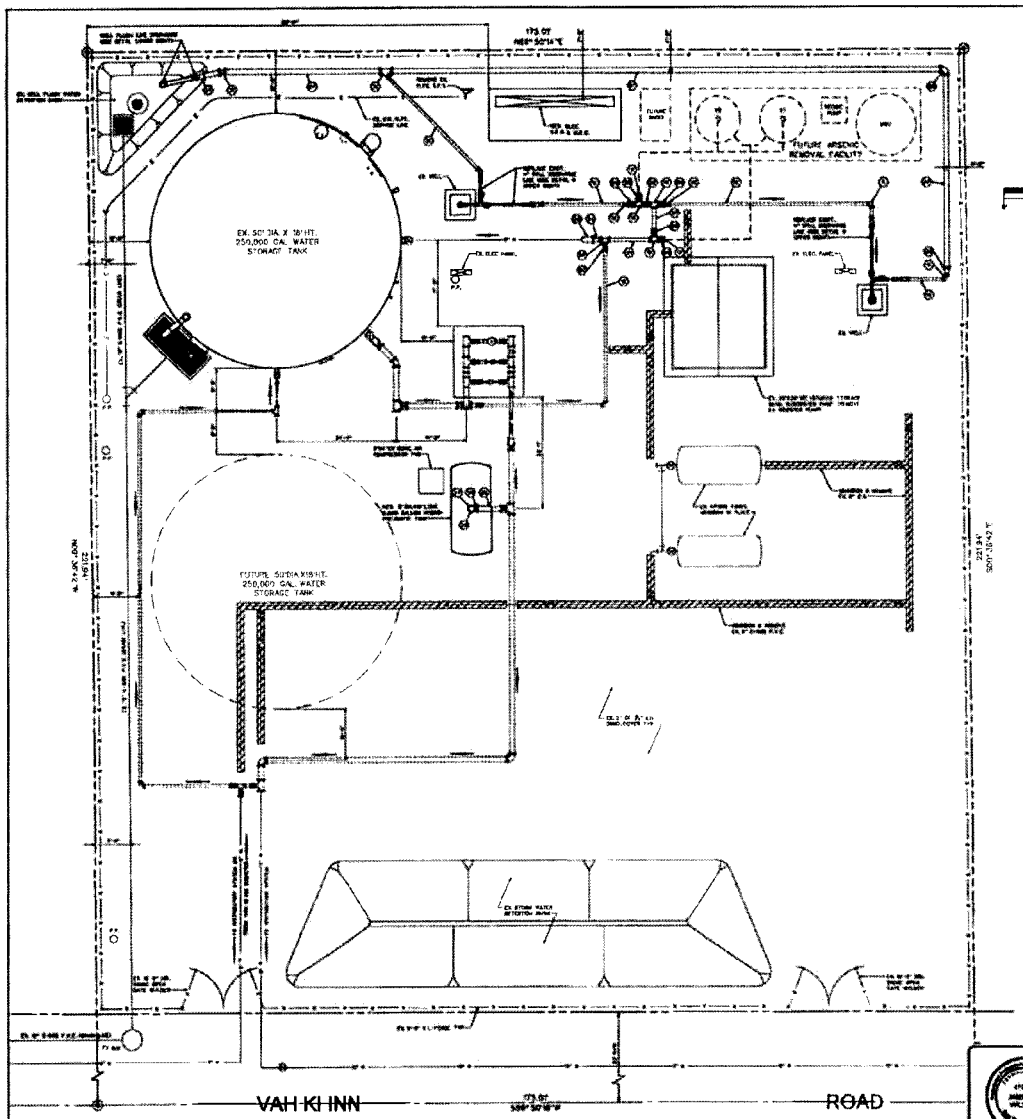

SITE PIPING PLAN

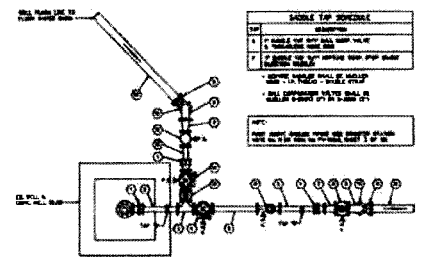

WELL DISCHARGE PIPING

FITTING SCHEDULE			
1	[illegible]	1	[illegible]
2	[illegible]	1	[illegible]
3	[illegible]	1	[illegible]
4	[illegible]	1	[illegible]
5	[illegible]	1	[illegible]
6	[illegible]	1	[illegible]
7	[illegible]	1	[illegible]
8	[illegible]	1	[illegible]
9	[illegible]	1	[illegible]
10	[illegible]	1	[illegible]
11	[illegible]	1	[illegible]
12	[illegible]	1	[illegible]
13	[illegible]	1	[illegible]
14	[illegible]	1	[illegible]
15	[illegible]	1	[illegible]
16	[illegible]	1	[illegible]
17	[illegible]	1	[illegible]
18	[illegible]	1	[illegible]
19	[illegible]	1	[illegible]
20	[illegible]	1	[illegible]
21	[illegible]	1	[illegible]
22	[illegible]	1	[illegible]
23	[illegible]	1	[illegible]
24	[illegible]	1	[illegible]
25	[illegible]	1	[illegible]
26	[illegible]	1	[illegible]
27	[illegible]	1	[illegible]
28	[illegible]	1	[illegible]
29	[illegible]	1	[illegible]
30	[illegible]	1	[illegible]
31	[illegible]	1	[illegible]
32	[illegible]	1	[illegible]
33	[illegible]	1	[illegible]
34	[illegible]	1	[illegible]
35	[illegible]	1	[illegible]
36	[illegible]	1	[illegible]
37	[illegible]	1	[illegible]
38	[illegible]	1	[illegible]
39	[illegible]	1	[illegible]
40	[illegible]	1	[illegible]
41	[illegible]	1	[illegible]

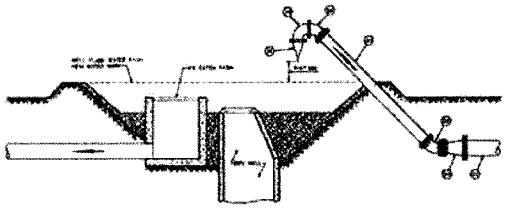

FLUSH LINE DISCHARGE & WELL FLUSH WATER BASIN

SITE PIPING NOTES

1. NEW PIPING SHALL BE DISINFECTED IN ACCORDANCE WITH ADEQ ENGINEERING BULLETIN No. 8 BEFORE BEING PLACED INTO SERVICE.
2. ALL MATERIALS AND PRODUCTS USED IN WATER SYSTEM INCLUDING SURFACE COATINGS & PAINTS, SHALL COMPLY TO NSF STANDARD 61 & COMPLY WITH [illegible]
3. CONSTRUCTION MATERIALS USED IN WATER SYSTEM SHALL BE LEAD-FREE AS PER S.A.E. [illegible] AND [illegible].
4. ALL MECHANICAL JOINT FITTINGS ARE TO HAVE MEGA-LUGS.
5. ALL PIPE SHALL BE INSTALLED WITH JOINT RESTRAINT (i.e. MEGA-LUGS), EXCEPT WHERE NOTED. NO CONCRETE THRUST BLOCKS SHALL BE USED WITHOUT PRIOR APPROVAL FROM THE ENGINEER.
6. POLYWRAP ALL DUCTILE IRON PIPE & FITTING PER [illegible].
7. BACKFILL TRENCHES WITH NATIVE MATERIAL & COMPACT TO 95% @ 10% LIFTS.

AS BUILT

FOR WATER ONLY

ARIZONA WATER COMPANY

3656 N. BLACK CANYON HWY POST OFFICE BOX 29006
PHOENIX, ARIZONA 85038-9006
(602) 240-6860

PROJECT TITLE: CONSTRUCT A BOOSTER PUMP STATION AT THE VALLEY FARMS WELL & TANK SITE
10800 E. VAH KI INN ROAD - COOLIDGE, ARIZONA

SITE PIPING PLAN

PROJECT DATE: 2010

PINAL VALLEY

DESCRIPTION: PINAL SEC 17-7 S & B, G & R C.

DATE: 5-24-2013

SCALE: AS SHOWN

DRAWN BY: JFK

CHECKED BY:

263-1100
1-800-STAKE IT

PV-0042

SHEET 2.1 OF 15

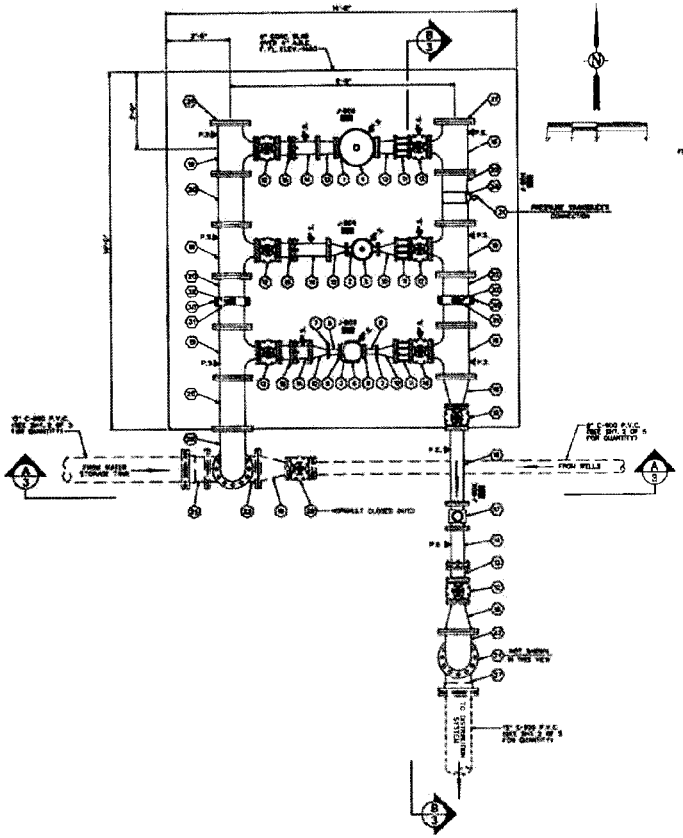

BOOSTER STATION PLAN

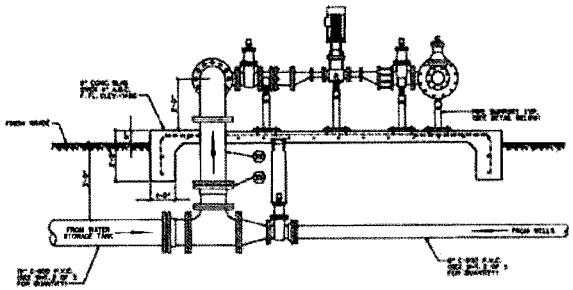

SECTION A-A

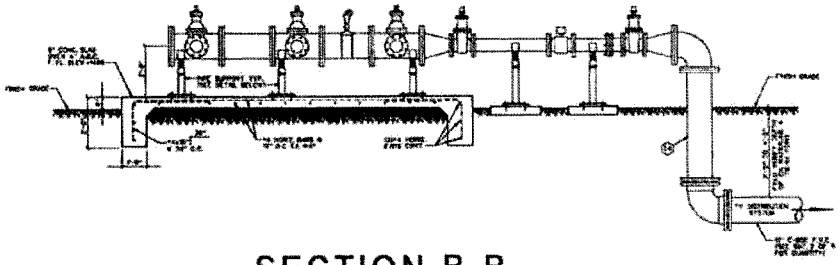

SECTION B-B

BOOSTER STATION NOTES

1. NEW PIPING SHALL BE DISINFECTED IN ACCORDANCE WITH ADEQ ENGINEERING BULLETIN No. 8 BEFORE BEING PLACED INTO SERVICE.
2. ALL MATERIALS AND PRODUCTS USED IN WATER SYSTEM, INCLUDING SURFACE COATINGS & PAINTS, SHALL CONFORM TO NSF STANDARD 61 & CURRENT AWWA D100.
3. CONSTRUCTION MATERIALS USED IN WATER SYSTEM SHALL BE LEAD-FREE AS PER A.A.C. R18-4-504 AND R18-1-101 H.B.
4. ALL MECHANICAL JOINT FITTINGS ARE TO HAVE MEGA-LUGS.
5. POLYWRAP ALL DUCTILE IRON PIPE & FITTING BELOW GRADE.
6. ALL ELEC. [illegible] SHALL BE [illegible] OF [illegible] SYNC. [illegible]
7. USE COOPER B-LINE PIPE SUPPORTS OR EQUAL. LOCATIONS NOTED BY P.S.& OR BOOSTER STATION PLAN VIEW. (SEE PIPE SUPPORT DETAIL BOTTOM LEFT)
8. FOUNDATION: BEAR FOOTING ON UNDISTURBED SOIL OR APPROVED COMPACTED FILL SOIL PRESSURE 1,500 PSF PER IBC 1804.2, CLASS 4 MATERIAL.
9. CONCRETE: A.C.I. MANUAL OF CONCRETE PRACTICE, TYPE II CEMENT, MINIMUM 28 DAY STRENGTH OF 3,000 PSI MECHANICALLY VIBRATE WHEN PLACED, MAXIMUM SLUMP 5".
10. REINFORCING: ASTM A615, GRADE 60 DEFORMED BARS.

CONCRETE COVER TO REINFORCING:

A. CONCRETE AGAINST EARTH ..... 3"
B. OTHER ..... 1½"

LAP SPLICES: 40 BAR DIAMETERS UNLESS OTHERWISE NOTED.

11. ALL ABOVE GROUND PIPING & VALVES SHALL BE PAINTED (EXCEPT METERS & CONTROL VALVES).

PRE-COATING PREPARATION: SSPC-SP6

PRIME COAT: TNEMEC SERIES 135 CHEMBUILD

FINISH COAT: TNEMEC SERIES 73 ENDURA-SHIELD COLOR: FLAT DESERT TAN

* REFER TO TNEMEC PRODUCT DATA SHEETS FOR COATING APPLICATION INFORMATION

O	FITTING SCHEDULE (1)	QUANTITY	SUPPLIED BY	INSTALLED BY
1.	FLOWLESS 3PV7 PUMP W/6.64" IMPELLER	1	A.W.Co	CONTR
2.	FLOWLESS 3PV6A PUMP W/6.00" IMPELLER	1	A.W.Co	CONTR
3.	GRUNDFOS CR90-5 PUMP	1	A.W.Co.	CONTR
4.	FLOWLESS 100HP/2000RPM MOTOR 230-460V/3PH/60P	1	A.W.Co.	CONTR
5.	FLOWLESS 100HP/2000RPM MOTOR 230-460V/3PH/60P	1	A.W.Co.	CONTR
6.	GRUNDFOS 7.5HP/3600RPM MOTOR 230-460V/3PH/60P	1	A.W.Co.	CONTR
7.	8" GLASS 125 COMPANION FLG. D.P. THRD	3	CONTR.	CONTR.
8.	2"NPT 125 PLUG NIPPLE	3	CONTR.	CONTR.
9.	8" GLASS 300 COMPANION FLG. D.P. THRD	2	CONTR.	CONTR.
10.	8"X3" ECC. REDUCER FLG.	4	CONTR.	CONTR.
11.	8" GLA-VAL SERIES 800 SILENT WATER CHECK VALVE	3	CONTR.	CONTR.
12.	8" GATE VALVE FLG.	8	CONTR.	CONTR.
13.	8"X6" ECC. REDUCER FLG.	2	CONTR.	CONTR.
14.	6"X2"-0" D.P. SPOOL FLG.(P.E.) (TRM TO FIT)	4	CONTR.	CONTR.
15.	6" MONAL MONITORS DISTRANCE F.C.A.	4	CONTR.	CONTR.
16.	6"X2"-0" D.P. SPOOL FLG.	1	CONTR.	CONTR.
17.	6" ENDRESS+HAUSER PROMAG 53H MAGNETIC METER	1	A.W.Co.	CONTR.
18.	8"X6" REDUCER FLG.	3	CONTR.	CONTR.
19.	6"90° ELL FLG.	6	CONTR.	CONTR.
20.	6"X2"-0" D.P. SPOOL FLG.	8	CONTR.	CONTR.

O	FITTING SCHEDULE (CONT.) (1)	QUANTITY	SUPPLIED BY (2)	INSTALLED BY
21.	6"O.D.X2" I.P. THRD REDUCING FLG. W/2" PLUG	8	CONTR.	CONTR.
22.	6" TEE FLG.	1	CONTR.	CONTR.
23.	6"90° ELL FLG. (SHORT RADIUS)	1	CONTR.	CONTR.
24.	6"X6"-0" D.P. SPOOL FLG.(P.E.) (TRM TO FIT)	1	CONTR.	CONTR.
25.	6" FLG.X6" M.J. ADAPTER	2	CONTR.	CONTR.
26.	12" 90° DIA. FLG. ELBOW BACKER	1	CONTR.	CONTR.
27.	12" 90° ELL M.J.	1	CONTR.	CONTR.
28.	12"X4"-0" D.P. SPOOL FLG.(P.E.) (TRM TO FIT)	2	CONTR.	CONTR.
29.	6" D.I.X6" M.J. PIPE	1	CONTR.	CONTR.
30.	12"X6" I.P. THRD - DBL. STRAP SADDLE	3	CONTR.	CONTR.
31.	1" BALL CORP STOP D.P.	2	CONTR.	CONTR.
32.	1" CRISPIN MODEL AVAC AIR RELEASE VALVE	2	CONTR.	CONTR.
33.				
34.				

(1) THE SCHEDULE OF FITTINGS & QUANTITIES IS FOR THIS SHEET ONLY

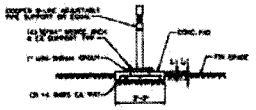

COOPER B-LINE PIPE SUPPORT SCHEDULE		
PIPE SIZE	B-LINE SADDLE PART No.	B-LINE PLATE PART No.
6"	B3092-6	B3088-3
12"	B3093-12	B3088-3

PIPE SUPPORT DETAIL

AS BUILT

FOR WATER ONLY

ARIZONA WATER COMPANY

PHOENIX, ARIZONA 85038-9008

(602) 240-6860

PROJECT TITLE: CONSTRUCT A BOOSTER PUMP STATION AT THE VALLEY FARMS WELL & TANK SITE

19884 E. VIAT IN RIM ROAD - COOLIDGE, AZ 85128

BOOSTER STATION PLAN & SECTIONS

PROJECT NO. 1-5024

DRAWN BY: PAUL VALLEY

CHK'D BY: SW/DK SEC. 17-7S-8E, G.&S.R.B.&M.

DATE: 3-6-2013

SCALE: AS SHOWN

DESIGNED BY: JPK

"AS-BUILT" 263-1100 (HDD-STAGE-I)

Expires 9-30-2014

PV-0042

SHEET 3 OF 15

GENERAL CONDITIONS
CONSTRUCTION OF WATER DISTRIBUTION SYSTEMS
DETAIL 600

DEFINITIONS

A. Company: The words "Company" or "Arizona Water Company" mean Arizona Water Company, and where applicable, any division of Arizona Water Company, whose principal place of business is located at 3805 North Black Canyon Highway, Phoenix, Arizona 85015-5351 (Post Office Box 29006, Phoenix, Arizona 85038-9006).

B. Company's Authorized Representative: The words "Company's Authorized Representative" mean any officer of the Company and any of the Company's Engineers, the District Manager or Superintendent of the Company and/or such other personnel designated in writing as the "Company's Authorized Representative" by the President of any this President of the Company.

C. Contractor: The word "Contractor" means either an individual or other entity contracted to do the work as shown on the Construction Drawings and as specified herein.

D. Construction Drawings: The words "Construction Drawings" mean plans prepared by or on behalf of Arizona Water Company.

E. Contract: The word "Contract" means the written document titled "Construction Contract" when such document has been signed by an officer or other authorized representative of both the Contractor and the Company.

(1) GENERAL

All work is to be completed in a safe, workmanlike manner and in accordance with these Construction Specifications; any deviation therefrom must be approved in writing by the Company.

Installations must conform with the requirements of governmental/regulatory agencies and the cost of conforming to such regulations must be included in the unit bid prices. Compliance of such regulations, without attempting to be inclusive, are:

a. Street construction and paving for street cleaning.
b. Blocking when required because of the trench length.
c. Closing a trench in those areas where no open trench is allowed overnight.
d. Barricading and traffic control as required.

(2) LOCATION AGENCY

Alignment changes as required in the opinion of the Company and/or formulated by the Company to the Contractor and shall be set by the Company of record upon blue-rods and offsets. Under normal circumstances these alignments the pipeline location shall lead 100 mile the significantly removed from property plus finish grades, while providing only when the Construction Drawings show a pipeline depth when than specified in the these Specifications it is the responsibility of the Contractor to preserve at no extra cost.

(3) TRENCH EXCAVATION

The trench location is to be determined by the Construction Drawings.

FOR 8-INCH OR SMALLER PIPE: The depth of the trench prior to pipe laying shall be such that the finished pipeline shall have between forty-six inches (46") and forty-four inches (44") of cover unless otherwise specified on the Construction Drawings.

FOR 10-INCH AND LARGER PIPE: The depth of the trench prior to pipe laying shall be such that the finished pipeline shall have between forty-eight inches (48") and sixty inches (60") of cover unless otherwise specified on the Construction Drawings.

The width of the trench at and below the crown at top of the pipe shall be a minimum of twelve inches (12") plus the outside diameter of the pipe barrel and a maximum of twenty-four inches (24") plus the outside diameter of the pipe barrel.

The bottom of the trench shall be reasonably graded to provide a uniform bearing for each length of pipe for the full length of the pipe. If the native material in the trench bottom can be reasonably deemed by trench foot bearing shall be dug for the joints so that the joints in no way support the pipe. When bedding materials such as rock are encountered during trenching that would provide a uniform support for the pipe, the trench should even excavation an additional six inches (6") and suitable bedding material should be placed in the trench.

Bedding material should be placed by hand in four-inch (4") lifts and compacted to obtain uniform compaction and to minimize any voids under the pipe. Place the space between the pipe and trench bottom, sides, and crown be backfilled and compacted in four-inch (4") lifts to the top center of the pipe.

Whenever the trench is over-excavated for whatever reason, the trench bottom will be brought up to the correct depth at the Contractor's expense using either method (a) or (b) as follows:

a. S.D.S. material/shallow used and compacted to a uniform density of not less than 90% of the maximum density as determined by ASSHTO T-180 method A and T-180.

b. Native material/soil of which fifteen (fifteen) percent and one-half (15-1/2%) passes and at least 30% of which passes through a number 8 screen shall be used and compacted to a uniform density of not less than 90% of the maximum density as determined by ASSHTO T-180 method A and T-180.

(4) MATERIALS TO BE PROVIDED BY CONTRACTOR

Unless otherwise specified on the Construction Drawings or in the Contract, the Contractor shall supply all the necessary materials which will provide a permanent and integrated of the water distribution system, including connection materials, trench/foundation, grading material and repairs used during the prosecution of the work. All materials provided by the Contractor to construct the water distribution system must be NSF Standard 61 approved. Acceptable water pipes and fittings shall have met the used construction materials used in the water system shall be free as defined at ANS 300 S-2004 and 900-1-91 the Contractor will provide the following material:

a. PVC WATER MAIN: Water Pipe Contractor SHALL Fire hydrant, meets AWWA/ANSI C207 Standard, specifies, S-4.03, S-5.01 meet valve opening, three way, 6" Mechanical Joint Stock, 1-1/2" pentagon operating nut, valve a pitot, drain open, open direction - left, 4" or 2-1/2" hose operating on application for design and field service information see below

(1) One - 6" Pumper nozzle, NST and Two - 2-1/2" Hose Nozzles, NST. (These locations only: Sun Cities, Eastlake and San Manuel.)

(2) One - 4-1/2" Pumper Nozzle, NST and Two - 2-1/2" Hose Nozzles, NST. (These locations only: Apache Junction, Where Ship, Lakeside, Strata, Overgrand, Rancho Vistoso, Sedona, Sierra Vista, White Tank and Wickenburg.)

(3) One - 4-1/2" Pumper Nozzle, NST and Two - 2-1/2" Hose Nozzles, NST (Sedona only.)

(4) One - 2" Pumper Nozzle SS 2-1/2 (2 Threads per inch, 2.25 inch diameter) and Two - 2-1/2" Hose Nozzles, NPT (Sedona only.)

(5) One - 2-1/2" Pumper Nozzle SS 2-1/2 (2 threads per inch, 2.5 inch diameter) and Two - 2-1/2" Hose Nozzles NPT (Sedona only.)

c. FITTINGS manufactured by Tyler or Union Foundry, Clamp, Tee, Elbow, Reducer, Adapter, Plug, Blind Flange and Tapped Flange Ductile Iron, Class 350, 350, Cast Iron Cement Lined

(1) Tyler Adapters for MJ made by Mont Corporation Available in size 3" to 30", Part No. 6" - 4FA-MC, 8" - 8FA-MC, 8" - 4FA-MC, 10" - 10FA-MC, 12" - 12FA-MC, 16" - 16FA-MC.

e. METERED SWING VALVE Meter/ Pump 250 S-Iron body, bolting 3/4" - 2 3/4" Tube 3/4, Tube 1/2 Part No. 4" - 2000S, 6" - 2000S, 8" - 2000S, 10" - 2000S, 12" - 2000S.

f. GATE VALVES Gate Resilient Wedge Gate Valves, meets AWWA C509 specifications, 250 psig, non-rising stem, Part No. 4-2000 sizes 4" through 12" - Part No. 6-2000 sizes 14" through 24", two size sizes, easily mated holes and outside to meet the NSF Standard. The bonnet and shaking has stainless steel stainless.

g. TRACER WIRE and WARNING TAPE:

(1) TRACER WIRE: Stainless steel forty AWG #14 solid copper wire, Color: Blue

(2) WARNING TAPE: Blue Industries, Standard Tape (size in 3" Metric, Color: Blue and Imprinted "Arizona Water Company"

h. AIR RELEASE VALVE: Crispin double AWV with 2" NPT inlet and 1/2" NPT outlet, multi-free body and top flanges with a 3/4x4" orifice with stainless steel valve seating flanges and 304SS 40 rubber.

i. PRESSURE RELIEF VALVE: Water Ultra Model 6, 2" Inlet, 2" outlet, Bronze Body, 200s to 400s pressure range.

j. MEMBRANE Reinforced Joint material made of textile fiber conforming to ASTM D38-80, 250 patented by CSAA Fire Inc. surface 1000 or equal.

k. METER BOXES:

(1) Concrete box with a standard-size 24, Number 1 Tuscan specification.

(2) Concrete box with a standard-size 24, Number 2, 3, and 4 Phoenix specification.

l. PVC COUPLER: Type 4 with adapter to 30 or 100-inch coils, per ASTM 1948

m. PVC CONTROL ROD: Ductile Iron Pipe, Cement Lined, Polyvinyl, Aluminum for Buried AWWA/ANSI Specification A21.50/C150, Pressure Class 350 Sizes 4" through 12", Pressure Class 250 Sizes 14" through 24", or Pressure Class 200 for 30" through 36" Standard.

(1) Pacific Station Cast Iron Pipe Company
(2) Griffin Pipe
(3) Ductile Iron Pipe and Fittings Company
(4) American Ductile Iron Pipe
(5) Clow Pipe Manufacturer, Inc.

n. PVC PLASTIC: Plastic pipe, D-1785 PVC per AWWA/ANSI C900, Class 150, sizes 4" through 12". 100% inspected. Furnished in lengths up to 20'. The Contractor shall provide the two outside diameters of standard pipe 100% or equal to an (C) pipe equivalent and the end diameters of diameter-wide 100% 12.

o. POLYETHYLENE ENCASEMENT: Polyethylene for stainless and carbon steel fittings including EXCEPT for Gate Stations. Minimum of 8 Mil, and installed per AWWA C105/A21.5-82 and ASTM D-1777-85 Manufactured by the Pacific Station Cast Iron Company. The wrapping tube shall be minimum 10 mil. thickness. No tape shall be used.

p. COUPLING: Smooth, straight three part union, tested to meet AWWA/ANSI C606 M54-83, embedded compression.

Mueller, H10428, straight coupling, conductive compression to make non-insulated to meet AWWA/ANSI C606 specification, Size 3".

Mueller, H10431, straight coupling, conductive compression to remove iron pipe, tested to meet AWWA/ANSI C606 specification, Size 3".

Viking Johnson brand, note by Mueller should "Straight (12"-24"), Modification, Straight (4"-12") and Straight Transition, tested to meet AWWA/ANSI C606-88-91 specifications - certified to ISO 9001-1987 / SHOH - Shell Quality.

q. STOP, SINGLE METER BOXES: Mueller, conductive compression to meter connection, tested to meet AWWA/ANSI C800, size 3/4" x 1", 3/4" x 3/4" for a 3/4" service or size 1" for a 1" service.

Mueller, H10, B20-2B, Female pipe thread for meter connection, tested to meet AWWA/ANSI C800, size 3/4" x 3/4" x 1", 3/4" x 3/4" for a 3/4" service or size 1" for a 1" service.

r. STOP, COMP: Mueller, ballcorrosion, B25000, taper thread by conductive compression, tested to meet AWWA/ANSI C800 specification, Sizes 3/4", 1", and 1".

Mueller, low-cross, H10030, Fast pipe thread by conductive compression, tested to meet AWWA/ANSI C800 specification, Sizes 3/4", 1", and 1".

Mueller, 250 Ball Curb Valve, B 25008, taper thread by conductive compression, tested to meet AWWA/ANSI C800 specification, size 2", 12" service.

s. STOP, COMP: Ford valve, B25000, iron pipe thread by iron pipe thread, quarter turn stopper, brass, tested to 300 psi-working pressure, tested to meet AWWA/ANSI C800 specification, size 2".

Mueller, B25000, Mueller 300 series valve, female iron pipe by female iron pipe, quarter turn stopper, tested to meet AWWA/ANSI C800 specification, Size 2". Stop-cock Z-6-6-6.

t. TAPPING SADDLE: Smith Blair, Cast Design, AWWA/ANSI 65-5-5-5, double strap, iron pipe threads, Models 331 and 323, tapping are shown brands, ASTM B26 Ductile are grade 60 Sizes 4" or Mueller brands double strap iron-like saddle 66, 2 B saddle, steel brackets, AWWA/ANSI, 65-5-5-5, or AWWA, 300 psig, single AWWA/ANSI C800.

u. TAPPING SLEEVE: Mueller H304 Stainless Steel Tapping Sleeve, H304 400 W 3 Type 304 Stainless Steel Tapping Sleeve, Series "MST" Type 304 Stainless Steel Tapping Sleeve or CAROLINE: Model C317-C3 stainless steel/bronze rubber tapping sleeve.

v. TAPPING VALVE: Mueller Resilient Wedge tapping valve, Catalog Number T-12280-16, Sizes 16", sizes 14" through 12" T-12280-16, Sizes 10", sizes 8" to 30" all-in Type 304 stainless shaft/tapping valves are required on 30" - 36" valves design by manufacturer and AWWA/ANSI C515, non-rising stem Epoxy coated bonnet/solution per AWWA/ANSI C509 for 30" 36 compliance 300 PSI design for valves 4" to 12", 200 PSI design for valves 14" to 36".

w. U-BRANCH: Mueller, H15361, 3" main iron pipe by 3/4" male iron pipe, series to meet AWWA/ANSI C800 specification, Size 3" x 3/4" x 12-1/2", straight line.

x. VALVE BOXES: Valve Box with Cover, adjustable, Tyler 563-A or equal, made of cast iron.

y. VALVE: Utility Vault Company, Chandler, AZ.

(1) 4-6-8-10 generally used with a 3000 aluminum double heavier door with a recessed pullback hasp, two - 30" x 24" center brackets.

(2) 5-7-9-11 generally used with a 1670 aluminum double heavier door with a recessed pullback hasp, two - 30" x 24" center brackets and adjustable frame.

(3) 000-00-0-0-1 generally used with a 5000 aluminum double heavier door with a recessed pullback hasp, two - 30" x 24" center brackets.

z. VALVE, METER: Mueller, H10293-5, Mueller 300 lubricated valve, female iron pipe by meter nut, quarter turn stopper, tested to meet AWWA/ANSI C800 specification, Size 3".

Mueller, H10370, Mueller 300 lubricated valve, conductive compression by female iron pipe, quarter turn stopper, tested to meet AWWA/ANSI C800 specification, Size 3".

aa. METER: Meter connection, meter yoke with horizontal inlet and outlet and meter bonnet, Mueller, B2400, with lock wing Mueller 300 angle ball valves, full port, size 1" x 1", 2-1/2" x 2", 3" x 3", 4" x 4".

Mueller, 3" angular meter yoke with horizontal inlet and outlet and female iron pipe threads, B2400-9B2000, with lock wing Mueller 300 ball angle valves on inlet and outlet stems. Related 3" by-pass with lock wing Mueller 300 ball valves.

The Contractor then will be responsible to provide the following materials, the cost of which will be included in its unit bid price:

Aggregate and concrete for thrust blocks, other anchors, reinforcing steel (if ground, anchors), sand, A.B.C., earth, sand or approved material which may be required for bedding and shading trenches and for construction of horizontal alignments and traffic control equipment or material for spring replacement and any water used for compaction of backfill.

(5) INSTALLATION OF MATERIALS

All materials are to be installed in accordance with manufacturers recommendations unless otherwise directed by these Specifications.

All pipes, fittings and valves should be laid true to the lines, grades and locations established by the Specifications and the Construction Drawings.

The name and marks of the pipe should be thoroughly cleaned and inspected for damage. The damaged material should be removed from the water distribution system. Whenever the work cannot be any reason, damaged pipeline ends shall be highly chalked by the Contractor. Pipe shall be thoroughly and approved by the Company.

Correctly fitted fittings of the sizes required by the plans and specifications are to be provided at all times, changes in direction or size, or at any other point where an adjustment should due to water pressure must exist. Thrust blocks are to be formed to prevent any movement from spilling over or into a joint.

Trench curves as shown on the Construction Drawings may be made using fittings when using such on 30-foot pipe up to bends below 45°F in deviation of the deflection of the pipe from not exceed the designed 30°F of deflection from 45°F per eighteen-foot 18ft length of pipe. The minimum radius of such curves when has compact fast field 1200ft.

Prior to construction, the appropriate approvals when notified as required for the permitted.

It shall be the Contractor's responsibility to assure of shielding water lines being connected to, and to verify the location, depth and size of pipe before any construction begins.

Any construction performed without the knowledge of the duly authorized representatives to date, for inconvenient requirement of the Contractor's expense.

All the hydrants, valves, covers and valve boxes, etc. shall be adjusted to finished grade prior to the placing of the asphalt concrete surface course by the Contractor and the Company.

All blowoff valves shall be installed at water system high points per Standard Detail C-4-5-3/C-4-6-3.

All water services shall be installed at a minimum of two feet (2') on the customer's property, preferably within the P.U.E. and not within right-of-way.

Unless otherwise specified on the construction drawings, all water mains shall be installed five feet (5') from the property line inside the right-of-way or easement.

Water valves shall be installed at least five feet (5') from the property line.

Fire hydrants and blowoff valves shall be installed at a minimum of two feet (2') behind the curb and shall be based on the fittings directly and on the main every 10 feet using a minimum of 45-degree bend. The water line shall be placed between the valve box and box with a minimum of 12" of this main. The working tees shall be installed a minimum of two feet below the surface, being measured from finish grade, directly over the center of the pipe. Any options to the tracer wire should be placed using waterproof connectors. Any options to the warning tape should placed using minimum 12 mil polyethylene. The tracer wire should be installed continuously after installation connection, full testing, locating the detailed damages to the wire should repaired before pouring while the alignment.

(6) DISPOSAL OF WATER MAIN MATERIALS

Disposal of any excavation shall conform to the requirements of any of the governmental/regulatory agencies having jurisdiction over the location if the governmental/regulatory agency having such jurisdiction specifies landfill or transportation and no disposal/transportation are shown on the Construction Drawings, the excavation and fill in this section will apply but under the Contractor.

The building material/soil above the pipe and backfill material should be compacted to a minimum of 90% compaction within a utility easement and 95% compaction within a right-of-way as determined by ASSHTO T-180 method A and T-180. If water settling is used for compaction, it is the responsibility of the Contractor to prevent the pipe from floating.

The building material/soil other native material, 100% of which will pass through a one and one-half inch (1-1/2") screen and at least 30% of which will pass through a number 8 screen, or backfill material/soil conforming to A.D.O. specifications for A.B.C. or type 2 sand material. Building material/soil shall be sand, sand or loam, the pipe and a minimum of twelve inches (12") above the pipe. Shale and building material to be mechanically compacted prior to installation of trench backfill.

The remainder of the trench shall be backfilled with native or imported material which shall be of sound uniform material free from broken concrete, metal, brush, pavement, or other unsuitable substances. Except as otherwise specified, backfill may be material containing no pieces larger than six inches (6") in greatest dimension.

Where pavement removal, additional backfill material/soil shall be placed and compacted and the trench shall be brought to the grade.

(7) HYDROSTATIC TESTING OF COMPLETED PIPELINES

Hydrostatic testing of water distribution lines completed before the new system is permanent into the existing water system. Hydrostatic testing can be done against of new materials.

The completed section of water pipeline to be tested shall be tested slowly filled with water and bring taken to expel air from the pipe if necessary, the pipe will be brought up high enough to expel air.

The Contractor shall provide all equipment and labor necessary to accomplish this testing and the price shall be included in the unit prices. The Contractor shall notify the Company in advance of the testing so that the Company can schedule a duly authorized representative to be on site during testing. The Contractor, at its own expense, shall make and necessary repairs to the system being tested in order to ensure the system being tested to meet the test limits set below. The Contractor may request authorization of the Company to connect the new pipeline to the existing system prior to completion of pressure testing when, in the Company's sole opinion and judgment, conditions warrant such connection.

The Contractor shall assume all responsibility to complete pressure testing to Company's specifications after such connection, including, but not limited to, isolation of the new pipeline from the existing system, if necessary.

Connections prior to completion of pressure testing shall not be made unless prior Company authorization has been obtained, and any water expenses resulting from such connections shall be the responsibility of the Contractor.

Leakage tests either for a period of two hours at 200 + or - 5 psi at the point of lowest elevation leakage may not exceed 30 gallons per hour per one thousand feet (1,000ft) of pipe per inch of diameter. If any utility line not installed, a second pressure test is required.

(8) STERILIZATION AND FLUSHING OF COMPLETED WATER PIPELINES

Sterilization and flushing will conform to recommendations of Arizona State Department of Health Services, Engineering Bulletin Number 8, latest edition, or any future Arizona Department of Environmental Quality bulletin. Contractor to follow all conditions of any discharge permit.

(9) NO WORK ALLOWED WITHIN 10 FEET OF NEAR WATER PIPELINE TRENCHES

No other utility installations will be permitted in the water pipeline trench or within five feet (5') of the Company's water pipeline when running parallel to the water pipeline.

(10) PROTECTION OF WATER MAIN AND NEW SERVICE

In order to protect water mains from contamination by sewers, the installation of the water mains must conform to the following requirements:

a. Horizontal: When water lines and sewers are laid on shelves each other, the horizontal distance between them shall not be less than six feet (6') Each line whether laid on undisturbed or bedded undisturbed a separate trench. Where conditions prevent the minimum horizontal separation set forth above, extra protection will be required. Extra protection shall consist of constructing the sewer main with mechanical joint ductile iron pipe or with standard ductile iron pipe if joint restraint is provided, or encasing both water and sewer main in concrete. See AWWA Standard Detail C-9-2-1 and C-9-2-2.

The Construction Drawings shall include the installation requirements. The drawings showing these exceptions shall have approval by the appropriate state and/or county health department. Refer to the diagram below for clarification.

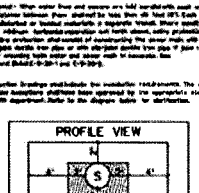

Under no circumstances will the horizontal separation between sewer mains and water mains be less than two feet (2') minimum and to be measured from the outside of the sewer main to the outside of the water main.

b. Vertical: When a water main is parallel with or crosses a sewer main within two feet (2') above the sewer or greater than two feet (2') below the sewer, extra protection will be required. Extra protection shall consist of constructing the sewer main with mechanical joint ductile iron pipe or with standard ductile iron pipe if joint restraint is provided, or encasing both water and sewer main in concrete. See AWWA Standard Detail C-9-2-1 and C-9-2-2.

The Construction Drawings shall include the installation requirements. The drawings showing these exceptions shall have approval by the appropriate state and/or county health department.

Under no circumstances will the vertical separation of a sewer main installed above a water main be less than two feet (2'). All distances are to be measured from the outside of the sewer main to the outside of the water main. Refer to the diagram above for clarification.

c. When unusual conditions such as, but not limited to, highway or bridge crossings prevent the water and sewer main separations required from being met, the appropriate state and/or county approval authorities and may require requests for authorization to use alternate construction techniques, materials and joints on a case-by-case basis.

d. No water pipe and pipe through or joints that contact with any part of a sewer manhole. Any minimum horizontal separation between water mains and manholes shall be four (4') measured from the center of the manhole.

e. The minimum separation between lateral mains or pressure sewers and water mains shall be four (4') horizontally and six feet (6') horizontally under all conditions. Where a sewer force main crosses above, or less than six feet (6') below a water line, the sewer main shall be encased in at least six feet (6') of concrete for two feet (2') on either side of the water main. Refer to the diagram below for clarification.

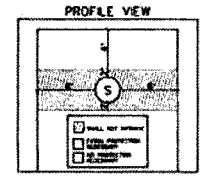

f. Sewer mains typically pressure, forced shall be kept a minimum of two feet (2') from drinking water mains, unless the following conditions are met:

1. Water main pipe pressure tested to pipes to 150 psi without connection leakage, may be used for gravity sewers at distances greater than twenty feet (20') from drinking water mains.

2. Water main pipe pressure tested to pipes to 150 psi without connection leakage, may be used for pressure sewers and force mains at distances greater than twenty feet (20') from drinking water mains.

3. The mains installed/designed field system shall be constructed within one hundred feet (100') of a drinking water well.

4. All distances are measured perpendicularly from the outside of the sewer main to the outside of the water main. These separation requirements do not apply to building plumbing or individual house service connections.

5. The Maximum joint length for one stick with flanging should certainly a minimum of two (20') feet on each side of a sewer or storm drain crossing.

(11) CONNECTION

When crossing existing water mains a minimum of 18" separation is required to the bottom of existing mains.

Arizona Water Company requires that no sewer be permitted to connect existing connection/service or ductile iron pipes, unless authorized by the Company. Sewer work be entered at the bottom of the sewer trench stopping above twelve (12") inches the existing water main. The contractor cannot the main except for 48 in distribution depth to prevent water from connecting during sewer work.

(12) WATER MAIN MATERIAL REQUIREMENTS

Ductile iron pipe shall be lined polyethylene, class 350, cement lined and conform to AWWA C104.

All main the valves shall conform to AWWA C500 with a minimum working pressure of 200 psi.

All steel iron fittings to be cement lined in accordance with AWWA C104 and shall conform to AWWA C110 with a minimum working pressure of 350 psi. Except for the Desiderio System - See note 10.

Minimum joint deflection for 8" mechanical joint ductile iron pipe is seven degrees, except minimum 0°-31 or twenty seven inches (27") per eighteen-foot (18') length pipe, for a maximum curve of one hundred forty-five feet (145').

Minimum joint deflection for 6" and 12" mechanical joint ductile iron pipe is five degrees, twenty one minutes (0°-21) or twenty inches (20") per eighteen-foot (18') length pipe, for a maximum curve of one hundred ninety-five feet (195').

Minimum joint deflection for 6", 8" and 12" push-on joint ductile iron pipe is two degrees (0°) or thirteen inches (13") per eighteen-foot (18') length pipe, for a maximum curve of two hundred and four feet (204').

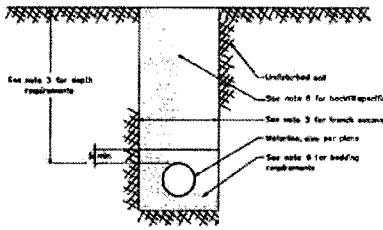

TYPICAL TRENCH DETAIL
Per MAG Detail 601, 601.4.2, 601.4.6

AS BUILT

FOR WATER ONLY

ARIZONA WATER COMPANY
3805 N. BLACK CANYON HWY.
PHOENIX, ARIZONA 85015-5351

POST OFFICE BOX 29006
PHOENIX, ARIZONA 85038-9006
(602) 240-6860

PROJECT TITLE: CONSTRUCT A BOOSTER PUMP STATION AT THE VALLEY FARMS WELL & TANK SITE
1600 S. VAN ELSBURG ROAD, COOLIDGE, AZ 85228
CONSTRUCTION SPECIFICATION NOTES

The Installation contained in this Set Drawings is to be Installed in accordance with the Company's standard specifications on file with the Development Services Department.

Approved: 263-1100
1-800-STAKE-IT
Arizona Blue Stake, Inc.

PROJECT NO.	1-5024
DRAWN BY	FINAL VALLEY
TITLE DETAIL	DETAIL NEED: 1F-7, 2-5, R, 8 E
DATE	2-6-2013
SCALE	AS SHOWN
DRAWN BY	JPK

Expires 6/30/2015

PV-0042

SHEET 4 OF 15

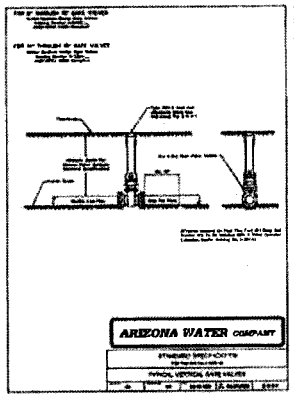

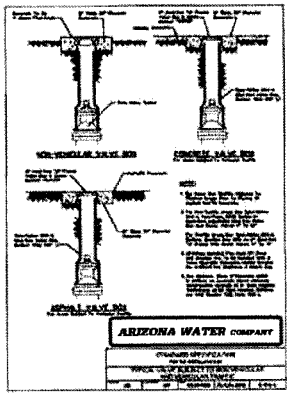

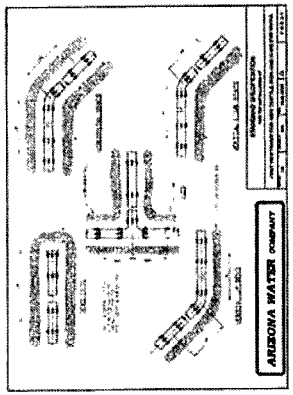

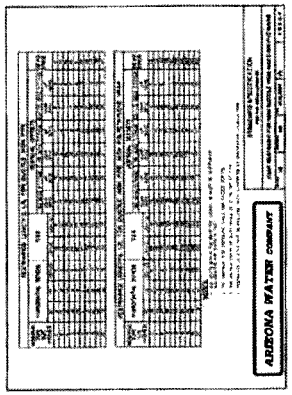

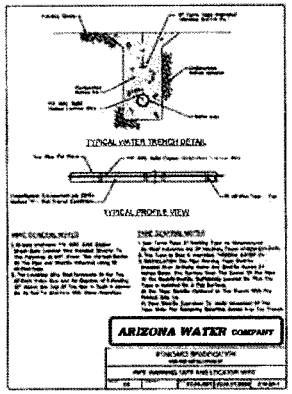

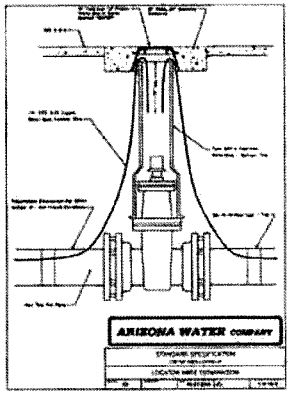

AS BUILT

FOR WATER ONLY

ARIZONA WATER COMPANY

CONSTRUCT A BOOSTER PUMP STATION AT THE VALLEY FARMS WELL & TANK SITE

CONSTRUCTION SPECIFICATION DETAILS

PV-0042

SHEET 5 OF 15

SYMBOLS:

CIRCUIT AND RACEWAYS:

- RACEWAY OR WIRING SYSTEM ABOVE FLOOR LEVEL BELOW CEILING, EXPOSED UON.
- RACEWAY OR WIRING SYSTEM ABOVE FLOOR LEVEL. CONCEALED IN WALL OR ABOVE CEILING UON
- RACEWAY OR WIRING SYSTEM IN OR UNDER FLOOR, OR CONCEALED IN OR BEHIND STRUCTURE OR EQUIPMENT OR CONDUIT ROUTED BELOW GRADE IN CONCRETE ENCASEMENT
- ELECTRICAL DUCTBANK
- EMH — ELECTRICAL MANHOLE
- EPB — ELECTRICAL PULLBOX
- PNL-A-1,3,5 — HOME RUN DESIGNATIONS INDICATE A ONE-LINE DIAGRAM OR PANELBOARD SCHEDULE REFERENCE. EXAMPLE: HOME TO PANELBOARD PNL-A, CIRCUITS 1, 3, AND 5
- RACEWAY OR WIRING SYSTEM TURNED TOWARD THE VIEWER (UP ON PLAN DRAWINGS)
- RACEWAY OR WIRING SYSTEM TURNED AWAY FROM THE VIEWER (DOWN ON PLAN DRAWINGS)
- RACEWAY OR WIRING SYSTEM CHANGE IN ELEVATION OR DISTANCE FROM VIEWER
- CONDUIT STUB AND CAP
- SHH23 — SIGNAL (S), LOW VOLTAGE (L), OR MEDIUM VOLTAGE (M) HANDHOLE (HH) OR MANHOLE (MH) WITH DESIGNATION. EXAMPLE: SIGNAL HANDHOLE NUMBER 23
- JB 2700A — JUNCTION BOX WITH OPTIONAL IDENTIFIER.
- JUNCTION BOX, WALL MOUNTED.
- TB 1035 — TERMINAL BOX WITH OPTIONAL IDENTIFIER. EXAMPLE: TERMINAL BOX #1035

GROUNDING:

- GROUND ROD, 3/4" x 10'-0", COPPERCLAD (UNLESS OTHERWISE NOTED)
- GROUND ROD AND WELL
- LIGHTNING ROD
- GROUND CONNECTION
- —G—G— GROUNDING CONDUCTOR
- —L—L— LIGHTNING CONDUCTOR
- EQUIPMENT GROUND PLATE
- —OHE—OHE— OVERHEAD POWER LINE

DISTRIBUTION EQUIPMENT:

GENERAL: APPROXIMATE SHAPE AND SCALE REPRESENTED WHERE POSSIBLE HOWEVER EXACT SIZE AND NUMBER OF SECTIONS IS ESTIMATED

- FLOOR-STANDING DISTRIBUTION ASSEMBLY, SUCH AS A SWITCHBOARD, TRANSFORMER, OR MOTOR CONTROL CENTER
- MCC 110 OR MCC-M — EQUIPMENT NUMBER (EXAMPLE)
- WALL-MOUNTED DISTRIBUTION ASSEMBLY, SUCH AS PANELBOARD, MOTOR CONTROL CENTER, OR TERMINAL CABINET
- PBD 1200 — EQUIPMENT NUMBER (EXAMPLE)

LUMINARIES

NOTE: LUMINAIRE SHAPES AND SCALE ARE REPRESENTED WHERE POSSIBLE. THE EXAMPLES SHOWN BELOW ARE TYPICAL APPLICATIONS.

- NUMBER OF FIXTURES (SHOWN ONLY WHEN REQUIRED FOR CLARITY)
- FIXTURE TYPE. REFER TO LUMINAIRE SCHEDULE. TYPE APPLIES TO ALL FIXTURE OF THE SAME SHAPE WITHIN A ROOM OR AREA
- MOUNTING: G = GROUND, R = RECESSED, L = POLE, S = SURFACE, P = PENDANT, W = WALL
- MOUNTING HEIGHT, FLOOR TO BOTTOM OF FIXTURE UON. AHAP = AS HIGH AS POSSIBLE
- NUMBER OF LAMPS, IF MORE THAN ONE/LAMP WATTAGE

FLUORESCENT FIXTURES:

- RECESSED OR SURFACE MOUNTED FIXTURE
- SUSPENDED PENDANT MOUNTED FIXTURE
- SURFACE MOUNTED FIXTURE

INCANDESCENT/HID FIXTURES:

- RECESSED, SURFACE OR PENDANT
- WALL MOUNTED
- DIRECTIONAL LIGHT
- POLE-MOUNTED AREA LIGHT. ONE POLE AND TWO FIXTURES SHOWN
- EMERGENCY LIGHTING UNIT, SELF-CONTAINED

EXIT LIGHTS. DARK QUADRANTS INDICATE FACES ILLUMINATED:

- SURFACE ON CEILING
- WALL MOUNTED.
- WITH DIRECTIONAL ARROWS

LIGHTING CONTROL AND CIRCUITING:

- 3a — LIGHTING CIRCUIT IDENTIFIER: INDICATES CIRCUIT NUMBER AND ASSOCIATED SWITCH. FOR EXAMPLE, 3a INDICATES A FIXTURE POWERED FROM CIRCUIT 3 AND SWITCHED BY SWITCH a.
- NL — EMERGENCY LIGHTING FIXTURES, FIXTURES WITH EMERGENCY BALLASTS, AND FIXTURES IDENTIFIED WITH AN "NL" SHALL BE PROVIDED WITH AN UNSWITCHED POWER SOURCE.
- CONTRACTOR SHALL PROVIDE ALL CONDUIT AND CONDUCTORS REQUIRED FOR A COMPLETE AND OPERATING SYSTEM.
- PHOTOELECTRIC CONTROL UNIT

METERING (ANSI/IEEE FUNCTIONS AS SPECIFIED):

POWER MONITOR (PM) POWER QUALITY MONITOR (HARMONIC ANALYSIS) (PQM) MOTOR MONITOR AND PROTECTION RELAY (MPR) FEEDER PROTECTION RELAY (FPR)

CIRCUIT IDENTIFICATION:

Example	Description
EXAMPLE 1: P101-1: 3-2/0, #6G, 2"C	FOR CIRCUIT P101: THREE 2/0 CONDUCTORS, ONE NO. 6 AWG GROUND WIRE IN A 2" CONDUIT
EXAMPLE 2: SES-2: 2[3-1/0, #6G, 1 1/2" C]	FOR SES-2: TWO PARALLEL RUNS OF THREE 1/0 CONDUCTORS, ONE NO. 6 AWG GROUND IN 1 1/2" CONDUIT
EXAMPLE 3: C111: 2-1 PR #16S, 1"C	FOR CONTROL CIRCUIT: TWO SIGNAL CABLES OF #16 AWG TWISTED SHIELDED PAIR IN 1" C.

WIRING DEVICES:

SWITCHES

NOTE: UNLESS OTHERWISE NOTED WIRING DEVICES SHALL BE WALL MOUNTED. FOR MOUNTING HEIGHT SEE SPECS

- SINGLE POLE SWITCH
- GANGED SWITCHES—IN COMMON BOX, WITH COMMON WALL PLATE
- SWITCH SUPERSCRIPT MODIFIER, LOWER CASE LETTER, INDICATES LUMINAIRE CONTROLLED—a,b,c,etc. MAY BE COMBINED WITH CIRCUIT NUMBER. EXAMPLE: 1a, 4b, etc.
- SWITCH SUBSCRIPT MODIFIER, UPPER CASE LETTER OR #
  - 2 = DOUBLE POLE
  - 3 = THREE WAY
  - 4 = FOUR WAY
  - K = KEY OPERATED
  - M = HORSEPOWER RATED MANUAL STARTER
  - MC = MOMENTARY CONTACT, THREE POSITION
  - MS = MANUAL (MOTOR) STARTER OR SWITCH
  - R = RHEOSTAT (DIMMER, SPEED CONTROL)
  - F = FLUSH MOUNTED (DEMOLITION DRAWINGS ONLY)
  - WP = WEATHERPROOF

RECEPTACLES:

- 20 AMP RECEPTACLE: SINGLE STROKE - SINGLE, DOUBLE STROKE - DUPLEX
- RECEPTACLE MODIFIERS:
  - 3 = BRANCH CIRCUIT NUMBER
  - C = CLOCK HANGER
  - GF = GROUND FAULT CIRCUIT INTERRUPTER
  - F = FLUSH MOUNTED (DEMOLITION DRAWINGS ONLY)
  - WP = WEATHERPROOF
- 480V RECEPTACLE

MOTOR AND EQUIPMENT:

- MOTOR
- MOTOR STARTER, INDIVIDUAL—NOT LOCATED IN AN MCC OR SIMILAR GROUP ASSEMBLY
- COMBINATION MOTOR STARTER—NOT LOCATED IN AN MCC OR SIMILAR GROUP ASSEMBLY
- 100A — DISCONNECT, NON-FUSED. 30A, 3 POLE UON. 100A, 3P RATING INDICATED
- FUSED DISCONNECT. CLASS R FUSES UON
- FIELD INSTRUMENT
- FIELD INSTRUMENT MOUNTED ON CONTROL STATION MOUNTING STAND. TYPICAL FOR ALL EQUIPMENT
- CONTROL STATION. CONFIGURATION ACCORDING TO CONTROL DIAGRAMS. REFER TO P&ID FOR HAND STATION EQUIVALENT DEVICES
- HS 1311 — EQUIPMENT DESIGNATOR
- CI-D1 — HAZARDOUS AREA CLASSIFICATION
- CI-D2 — HAZARDOUS AREA CLASSIFICATION
- UNCLASSIFIED — UNCLASSIFIED AREA

ABBREVIATIONS:

NOTES:

1. IN GENERAL, ABBREVIATIONS USED IN ELECTRICAL DRAWINGS ARE IN ACCORDANCE WITH ANSI Y1.1-1972. ABBREVIATIONS ON THIS SHEET ARE IN ADDITION, OR ARE AMENDMENTS TO ANSI Y1.1-1972 AND ABBREVIATIONS DEFINED ON OTHER DRAWINGS. IN CASE OF CONFLICT THESE ABBREVIATIONS SHALL TAKE PRECEDENCE.
2. THE FOLLOWING ABBREVIATIONS ARE NOT TO BE CONFUSED WITH EQUIPMENT NUMBERING PREFIXES LISTED ON GENERAL DRAWINGS OR OTHER CONTRACT DOCUMENTS.

A	AMP(S), AMPERE(S)
AMP	ALTERNATING CURRENT
AC	ABOVE FINISHED FLOOR
AFF	AS HIGH AS POSSIBLE
AHAP	AMPS INTERRUPTING
AIC	CAPACITY, SYMM.
AL	ALUMINUM
ARCH	ARCHITECT(URAL)
ASYM	ASYMMETRICAL
AUTO	AUTOMATIC
AUX	AUXILIARY
AWC	ARIZONA WATER COMPANY
AWG	AMERICAN WIRE GAUGE
BC	BARE COPPER
BLDG	BUILDING
BOT	BOTTOM
C	CONDUCTOR, CONDUIT
CB	CIRCUIT BREAKER
CKT	CIRCUIT
CLG	CEILING
CM	CENTIMETERS
CND	CONDUIT
C.O.	CONDUIT ONLY, SPARE
CONC	CONCRETE
CPT	CONTROL POWER TRANSFORMER
CNTL	CONTROL
CT	CURRENT TRANSFORMER
CU	COPPER
DB	DUCT BANK, DIRECT BURIAL
DC	DIRECT CURRENT, DATA CABLE
DCU	DISTRIBUTED CONTROL UNIT
DET	DETAIL
DIAG	DIAGRAM
DISC	DISCONNECT
DWG	DRAWING
(E)	EXISTING
EA	EACH
EC	EMPTY CONDUIT
ECP	EQUIPMENT CONTROL PANEL
EDB	ELECTRICAL DUCTBANK
EG	ENGINE GENERATOR SET
EL	ELEVATION
ELEC	ELECTRIC(AL)
EMH	ELECTRICAL MANHOLE
EMER	EMERGENCY
ENCL	ENCLOSURE/ENCLOSED
EPB	ELECTRICAL PULLBOX
EQUIP	EQUIPMENT
EX	EXISTING
FDR	FEEDER
FL	FLUORESCENT
FLA	FULL LOAD AMPS
FLEX	FLEXIBLE CONDUIT
F.O.	FAIL OPEN
FO	FIBER OPTIC
FUT	FUTURE
GDR	GROUNDING RESISTOR
GEC	GROUND ELECTRODE CONDUCTOR
GF	GROUND FAULT
GFI	GROUND FAULT INTERRUPTER
GND, G	GROUND
GRS	GALVANIZED RIGID STEEL
H	HIGH
HGT	HEIGHT
HH	HANDHOLE
HID	HIGH INTENSITY DISCHARGE
HP	HORSEPOWER
HPS	HIGH PRESSURE SODIUM
HTR	HEATER
HV	HIGH VOLTAGE
HVAC	HEATING, VENTILATION, AND AIR CONDITIONING
HZ	HERTZ (CYCLES PER SECOND)
ICOM	INTERCOM
ID	INSIDE DIAMETER
IMC	INDIVIDUAL MOTOR CONTROLLER
IMC	INTERMEDIATE METAL CONDUIT
INS	INCANDESCENT
INTLK	INTERLOCK
INST	INSTANTANEOUS
I/O	INPUT/OUTPUT
IPB	INSTRUMENT PULLBOX
JB	JUNCTION BOX
KCMIL	1000 CIRCULAR MIL
KV	KILOVOLT
KVA	KILOVOLT-AMPERE
KVAR	KILOVOLT-AMPERE REACTIVE
KW	KILOWATT
KWH	KILOWATT-HOUR
L	LONG
LCP	LOCAL CONTROL PANEL
LHH	LOW VOLTAGE HANDHOLE
LMH	LOW VOLTAGE MANHOLE
LP	LEGEND PLATE
LT	LONG TIME
LTG	LIGHTING
LV	LOW VOLTAGE
M	METER
MA	MILLIAMPERE
MAX	MAXIMUM
MBS	MANUAL BYPASS SWITCH
MCC	MOTOR CONTROL CENTER
MCP	MOTOR CIRCUIT PROTECTOR
MPC	MINI POWER CENTER
MECH	MECHANICAL
MFR	MANUFACTURE(R)
MH	MANHOLE
MH	METAL HALIDE
MIC	MICROPHONE
MIN	MINIMUM
MIS	MANAGEMENT INFORMATION STATION
MISC	MISCELLANEOUS
MM	MILLIMETER
MMH	MEDIUM VOLTAGE MANHOLE
MOV	MOTOR OPERATED VALVES
MTS	MANUAL TRANSFER SWITCH
MV	MILLIVOLT, MEDIUM VOLTAGE
MVMC	MEDIUM VOLTAGE MOTOR CONTROL
N/A	NOT APPLICABLE
N.C.	NORMALLY CLOSED
NEUT, N	NEUTRAL
NF	NON-FUSED
NIC	NOT IN CONTRACT
N.O.	NORMALLY OPEN
NO	NUMBER
NOM	NOMINAL
NP	NAMEPLATE
NTS	NOT TO SCALE
OC	ON CENTER
OCC	OPERATION CONTROL CENTER
OD	OUTSIDE DIAMETER
OH	OVERHEAD
OIS	OPERATOR INTERFACE STATION
OT	OIL TIGHT
OWS	OPERATOR WORKSTATION
P	POLE, PHASE
PB	PUSH-BUTTON, PULLBOX
PCP	PROCESS CONTROL PANEL
PF	POWER FACTOR
PH	PHASE
PLC	PROGRAMMABLE LOGIC CONTROLLER
PMM	POWER METERING MODULE
PNL	PANEL
PP	POWER PANEL
PP	PAIR
PRI	PRIMARY
PSL	PRESSURE SWITCH-LOW
PT	POTENTIAL TRANSFORMER
PVC	POLYVINYL CHLORIDE
PWR	POWER
QSB	QUARTZ STANDBY
RCPT	RECEPTACLE
REF	REFERENCE
REQD	REQUIRED
RE STL	REINFORCING STEEL
RMS	ROOT MEAN SQUARE
RTD	RESISTANCE TEMPERATURE DETECTOR
RTU	REMOTE TERMINAL UNIT
SA	SURGE ARRESTOR
SCR	SILICON CONTROLLED RECTIFIER
SD	SMOKE DETECTOR
SEC	SECONDARY
SEL	SELECTOR
SHH	SIGNAL HANDHOLE
SPEC	SPECIFICATION
SPKR	SPEAKER
ST	SHORT TIME
SUB	SUBSTATION
SW	SWITCH
SWBD	SWITCHBOARD
SWGR	SWITCHGEAR
SYMM	SYMMETRICAL
SYS	SYSTEM
TB	TERMINAL BOX
TEL	TELEPHONE
TEMP	TEMPERATURE
TFR	TRANSFORMER
TR	TRIAD
TSP	TWISTED SHIELDED PAIR
TTB	TELEPHONE TERMINAL BOX
TV	TELEVISION
TVSS	TRANSIENT VOLTAGE SURGE SUPPRESSER
TYP	TYPICAL
U/G	UNDERGROUND
UON	UNLESS OTHERWISE NOTED
UPS	UNINTERRUPTABLE POWER SUPPLY
V	VOLT
VA	VOLT-AMPERE
VAR	VOLT-AMPERE REACTIVE
VC	VACUUM CONTACTOR
XFMR	TRANSFORMER
XMTR	TRANSMITTER
W	WATT, WIRE, WIDE
W/	WITH
W/O	WITHOUT
WW	WIREWAY
WG	WITH GROUND
WP	WEATHERPROOF
XP	EXPLOSION PROOF
Z	IMPEDANCE

RECORD DRAWINGS

HEIDEMAN ASSOCIATES, INC.

REVISIONS:
1. FOR CONSTRUCTION.
2. RECORD DRAWINGS.

1-5024 | 51830
PINAL VALLEY
5-29-2013 | AS SHOWN
SAJ | MAB

263-1100
800-STAKE-IT

ARIZONA WATER COMPANY
3805 N. BLACK CANYON HWY. POST OFFICE BOX 29006
PHOENIX, ARIZONA 85038-9006
(602) 240-6860

CONSTRUCT A BOOSTER PUMP STATION AT THE VALLEY FARMS WELL & TANK SITE IN COOLIDGE, ARIZONA

E1
SHEET 6 OF 15

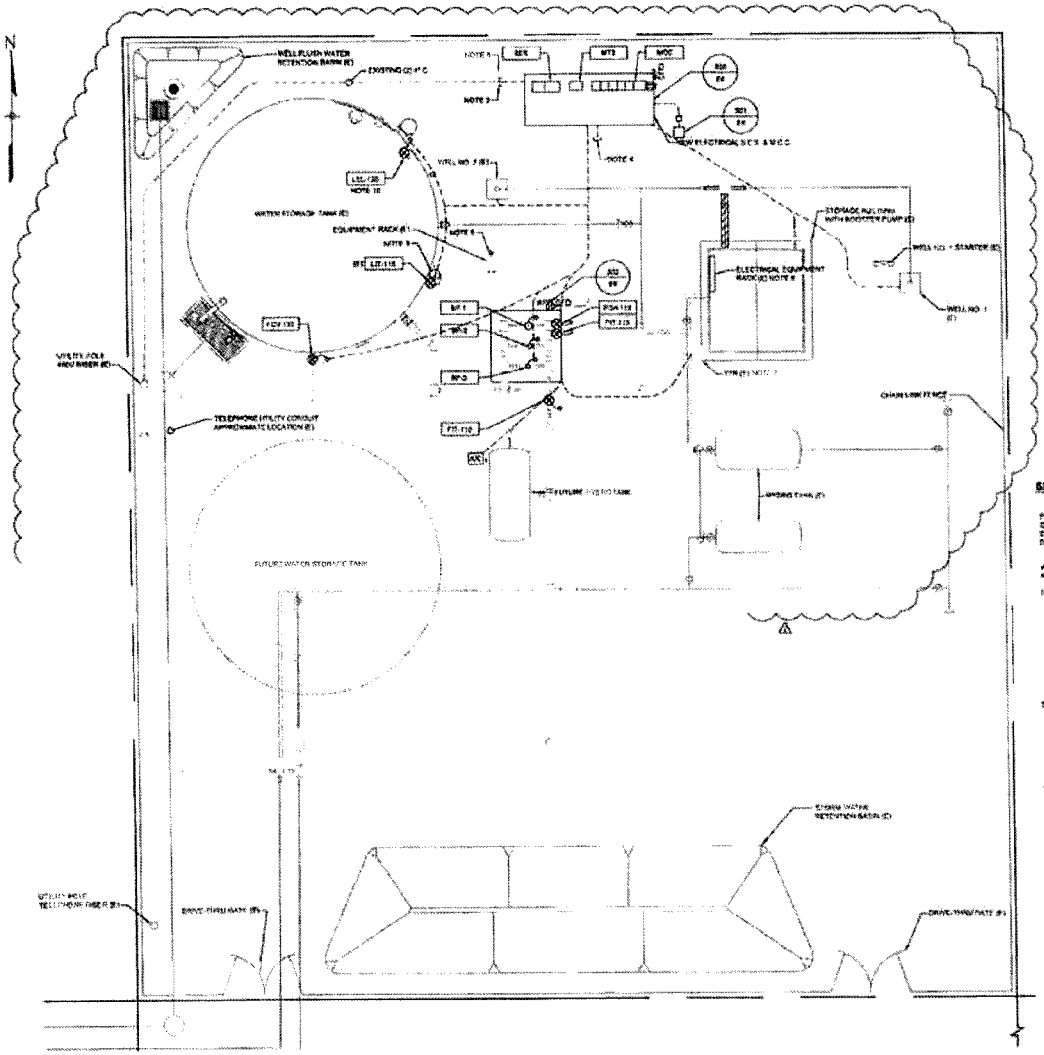

POWER AND CONDUIT ROUTING SITE PLAN

SCALE: 1" = 10'-0"

SHEET NOTES:

1. INSTALL ALL POWER, CONTROL AND INSTRUMENT CABLE IN BELOW GRADE RIGID CONDUIT AS REQUIRED. U.O.N. SEE SHEET E4 FOR CONDUIT BASE CABLE SCHEDULE.
2. INTERCEPT EXISTING 20 4" ABS CONDUIT AND EXTEND TO NEW SES PULL SECTION. COORDINATE WITH APS FOR THE INSTALLATION OF 4" W SERVICE CONDUCTORS. COORDINATE ANY POWER OUTAGES WITH OWNER. SEE SEQUENCE OF CONSTRUCTION FOR MORE DETAIL.
3. CONTINUATION FOUNDATION FOR EQUIPMENT AND LOCATION OF EXISTING EQUIPMENT AND PIPING PRIOR TO INSTALLATION.
4. EXTEND PIPING AND DRAIN, BONDED & SECT BEYOND EDGE OF PAD FOR FUTURE USE.
5. RE-FEED EXISTING ELECTRICAL EQUIPMENT FROM NEW MOTOR CONTROL CENTER. SEE SEQUENCE OF CONSTRUCTION FOR MORE DETAIL.
6. DISCONNECT AND REMOVE EXISTING SES & ASSOCIATED EQUIPMENT.
7. COORDINATE WITH TELEPHONE UTILITY. RELOCATE EXISTING TELEPHONE LINE TO NEW RTU CONTROL SECTION FROM EXISTING TELEPHONE TERMINAL BOX.
8. COORDINATE WITH OWNER. EXISTING SENSAPHONE REMOTE MONITORING SYSTEM TO BE RELOCATED TO NEW RTU CONTROL SECTION. EXISTING WELL AND AIR COMPRESSOR CONTROL SYSTEMS TO REMAIN.
9. SPLICE UP NEW CONTROL CONDUIT ADJACENT TO EXISTING. INSTALL NEW 12" x 10" NEMA 3R JUNCTION BOX WITH HINGED DOOR AND BLANK BACK PANEL FOR USE BY OWNER. RELOCATE EXISTING FLEX CONDUIT FROM SENSAPHONE, PRESSURE TRANSMITTER TO NEW JUNCTION BOX AND RECONNECT EXISTING TSP FROM EXISTING WELL CONTROLLER. CAP A MINIMUM OF 10' EXCESS TSP IN JUNCTION BOX FROM RTU CONTROL SECTION FOR USE BY OWNER. SUPPORT JUNCTION BOX FROM STRUT STAND AS NEEDED.
10. INSTALL NEW WARREN LEVEL PROBE'S ON EXISTING TANK. PROVIDE NEW TAP AND FLANGE AS NEEDED FOR LEVEL PROBE INSTALLATION. SECURE AND SUPPORT CONDUIT AS NEEDED FROM TANK PER NEC REQUIREMENTS.

SES CHANGE OVER SEQUENCE:

THE CONSTRUCTION SEQUENCE PROVIDED BELOW IS A GENERAL OUTLINE OF POTENTIAL STEPS REQUIRED FOR POWER TIE OVER FROM THE EXISTING 200A SERVICE TO THE NEW 400A SERVICE. THE GOAL IS TO COMPLETE CONSTRUCTION OF THE ELECTRICAL EQUIPMENT IN A TIMELY MANNER WHILE MINIMIZING CONSTRUCTION COSTS AND EQUIPMENT DOWN TIME. THIS SEQUENCE IS INTENDED AS A STARTING POINT FOR PLANNING PURPOSES AND SHOULD BE SUPERSEDED IF BETTER MEANS AND METHODS ARE DISCOVERED AND APPROVED BY OWNER.

THE ELECTRICAL CONTRACTOR SHALL SUBMIT A DETAILED MSPD FOR APPROVAL BY OWNER PRIOR TO INCEPTION WORK. THE MSPD WILL INDICATE ALL STEPS THAT ARE REQUIRED TO COMPLETE THE CHANGE OVER, WHICH PARTIES ARE RESPONSIBLE FOR EACH STEP AND A TIMELINE FOR THE COMPLETION OF EACH STEP.

1. PHASE 1 - EQUIPMENT INSTALLATION
   - 1.1 INSTALL CONDUIT P100, STUB OUT AND CAP CONDUIT P100 ADJACENT TO EXISTING 200A SES. ADD IN LINE WITH EXISTING 4" CONDUITS. BACK FILL AROUND CONDUITS FOR LATER EXCAVATION.
   - 1.2 INSTALL REMAINING UNDERGROUND CONDUITS.
   - 1.3 COMPLETE INSTALLATION OF ELECTRICAL EQUIPMENT PAD.
   - 1.4 COMPLETE INSTALLATION OF SES, MTS AND MOC.
   - 1.5 COMPLETE SPECIAL INSPECTIONS FOR SES, MTS AND MOC. EQUIPMENT SHOULD BE READY FOR ENERGIZATION.
2. PHASE 2 - COORDINATION AND STAGING
   - 2.1 COORDINATE WITH OWNER FOR DELIVERY AND SETUP OF PORTABLE STANDBY GENERATOR.
   - 2.1.1 STAGE GENERATOR NEAR EXISTING EQUIPMENT BACK TERMINAL BOX.
   - 2.2 COORDINATE AND SCHEDULE APS FOR CHANGE OVER DATE AND TIMES.
   - 2.3 COORDINATE WITH OWNER FOR CHANGE OVER DATES AND TIMES.
3. PHASE 3 - SERVICE CHANGE OVER
   - 3.1 HAND EXCAVATE AROUND EXISTING SES. LOCATE EXISTING AND NEW 4" CONDUITS.
   - 3.2 OPEN EXISTING 12kV FUSED CUTOUT.
   - 3.3 OPEN EXISTING 200A MAIN BREAKER.
   - 3.4 DISCONNECT AND REMOVE EXISTING FEEDER FROM 200A BREAKER IN SES TO EXISTING EQUIPMENT BACK TERMINAL BOX.
   - 3.5 CONNECT STANDBY GENERATOR TO EXISTING TERMINAL BOX.
   - 3.6 START STANDBY GENERATOR. SITE IS NOW ON TEMPORARY POWER.
   - 3.7 REMOVE EXISTING SES AND FOUNDATION SUPPORT. CAP AND ABANDON EXISTING UNUSED CONDUIT IN PLACE.
   - 3.8 EXTEND AND CONNECT NEW AND EXISTING 4" CONDUITS.
   - 3.9 BACKFILL CONDUIT TRENCH PER DIV. 16 SPECIFICATIONS.
   - 3.10 COORDINATE WITH APS TO INSTALL NEW SERVICE FEEDERS.
   - 3.11 INSPECT AND ENERGIZE NEW SERVICE. ISOLATE TRAY FUSED CUTOUT, CLOSE 200A BREAKER.
   - 3.12 PREP FOR THE INSTALLATION OF CONDUIT P100 CONDUCTORS.
   - 3.13 STOP AND DISCONNECT PORTABLE GENERATOR. (TIME IS CRITICAL)
   - 3.14 PULL INTERSHUNT P100 CONDUCTORS AND TERMINATE.
   - 3.15 "PERFECT" AND TIE IN ALL EXISTING EQUIPMENT.
   - 3.16 ENGINEER COMPLETE.
   - 3.16.1 RE MOBILIZE AS NEEDED.
   - 3.16.2 CONTINUE WITH REMAINING CONSTRUCTION.

RECORD DRAWINGS

THE RECORD DRAWINGS AND OPERATING INFORMATION REFLECTS TO THE OWNER AS INDICATED, TO THE CONTRACTOR BY THE WORKMANSHIP CONTRACTOR, THAT IS BASED ON INFORMATION PROVIDED BY OTHERS. THE CONTRACTOR DOES NOT WARRANT THE ACCURACY OF THE INFORMATION PROVIDED BY OTHERS AND ASSUMES NO RESPONSIBILITY FOR ANY ERRORS OR OMISSIONS IN SUCH INFORMATION.

EXP. 12/31/13

1. FOR CONSTRUCTION.
2. RECORD DRAWINGS.

The original signed and sealed drawings are the property of the Arizona Water Company.

253-11100
1-800-STAKE-IT

FILE NO.	1-5024
DRAWN BY	SJG
SCALE	51630
PROJECT	PINAL VALLEY
DATE	29 2013
SCALE	AS SHOWN
DESIGN BY	MRB

ARIZONA WATER COMPANY
3805 N. BLACK CANYON HWY.
PHOENIX, ARIZONA 85015-5205
(602) 240-6860

PROJECT DESC: CONSTRUCT A WATER STORAGE FACILITY IN THE VALLEY FARMS WELL & TANK SITE IN COOLIDGE, ARIZONA

PROJECT PART NO.:

E2

SHEET 7 OF 15

WEIDEMAN ASSOCIATES, INC.
Consulting Engineers
4132 East Beverly Road
Phoenix, Arizona 85044
Project No. 13026

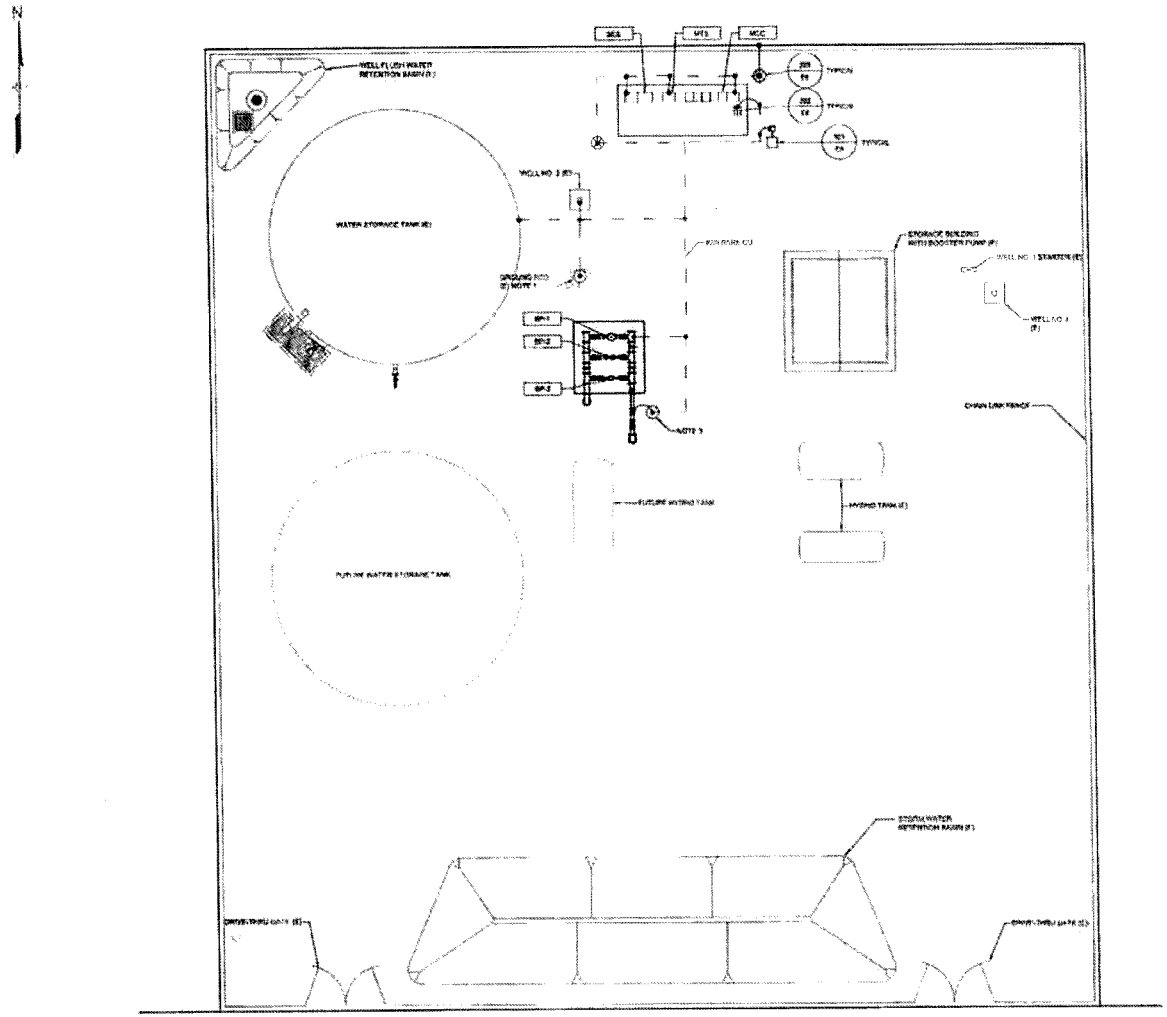

GROUNDING SITE PLAN
SCALE: 1" = 10'-0"

SHEET NOTES:

1. TIE TO EXISTING GROUNDING ELECTRODE SYSTEM
2. GROUND BUILDING PER UTILITY COMPANY REQUIREMENTS
3. INSTALL COPPER CLAD GROUND ROD ADJACENT TO NEW MAGNETIC FLOW METER AND EXTEND IN GROUNDING ELECTRODE CONDUCTOR TO EACH GROUND ROD

HEIDEMAN ASSOCIATES, INC.

RECORD DRAWINGS

1. FOR CONSTRUCTION.
2. RECORD DRAWINGS.

263-1100
800-STAKE-IT

1-5024 | 51830
PINAL VALLEY
5-29-2013 | AS SHOWN
SAJ | MAB

ARIZONA WATER COMPANY
3805 N. BLACK CANYON HWY. POST OFFICE BOX 29006
PHOENIX, ARIZONA 85038-9006
(602) 240-6860

CONSTRUCT A BOOSTER PUMP STATION AT THE VALLEY FARMS WELL & TANK SITE IN COOLIDGE, ARIZONA

E3

SHEET 8 OF 15

MARK	QTY	LIGHT FIXTURE SCHEDULE					
		SYMBOL	DESCRIPTION	MOUNTING	MANUF. & MFR NUMBER	LAMPS	
	[illegible]		[illegible]	[illegible]	[illegible]		[illegible]

LIGHT FIXTURE SCHEDULE

NEW EQUIPMENT LIST				
TAG	DESCRIPTION	SUPPLIED BY	INSTALLED BY	FINAL PHYSICAL TERMINATION BY
[illegible]	[illegible]	CONTRACTOR	CONTRACTOR	CONTRACTOR
[illegible]	[illegible]	CONTRACTOR	CONTRACTOR	CONTRACTOR
[illegible]	[illegible]	CONTRACTOR	CONTRACTOR	CONTRACTOR
[illegible]	[illegible]	[illegible]	OWNER	CONTRACTOR
[illegible]	[illegible]	[illegible]	OWNER	CONTRACTOR
[illegible]	[illegible]	[illegible]	OWNER	CONTRACTOR
[illegible]	[illegible]	[illegible]	OWNER	CONTRACTOR
[illegible]	DIFFERENTIAL PRESSURE DEVICE, WATER/WATER (4 IN MAX)			CONTRACTOR
[illegible]	BOOSTER STATION CONTAINER, PRE FIBER, (WATER/WATER)	[illegible]	CONTRACTOR	CONTRACTOR
[illegible]	BOOSTER STATION DISCHARGE MAGNETIC FLOWMETER, 12IN	[illegible]	OWNER	CONTRACTOR
[illegible]	METERING VAULT FOR MAIN MECHANICAL PRESSURE, ELECTRICAL CONTROLLER (W/MANUAL RESET, [illegible]	CONTRACTOR	CONTRACTOR	CONTRACTOR
[illegible]	CONTAINED TANK DRY OUT MANIFOLD (W/VAL, FRONT SELF-CLEANING RELIEF (W/MANUAL RESET)	CONTRACTOR	CONTRACTOR	CONTRACTOR
[illegible]	[illegible]	[illegible]	[illegible]	CONTRACTOR

SITE EQUIPMENT LIST

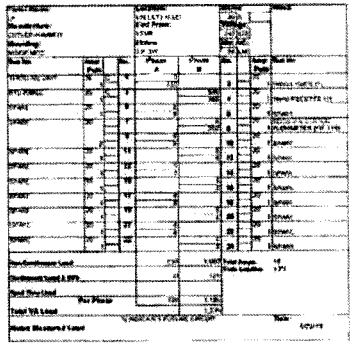

LP PANEL SCHEDULE

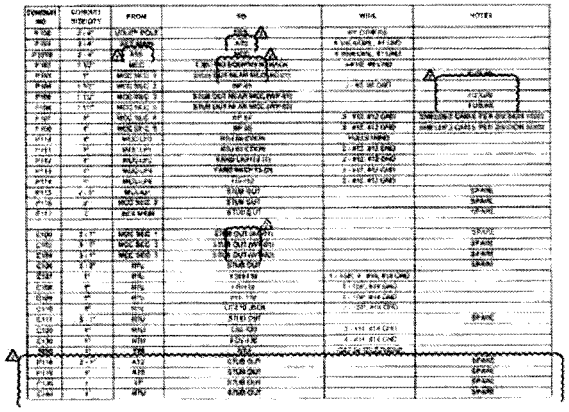

CONDUIT/CIRCUIT SCHEDULE

RECORD DRAWINGS

1. FOR CONSTRUCTION.
2. RECORD DRAWINGS.

263-1100
800-STAKE-IT

1=5024 | 51630
PINAL VALLEY
5-29-2013 | AS SHOWN
SAJ | MAB

ARIZONA WATER COMPANY
POST OFFICE BOX 29006
3805 N. BLACK CANYON HWY.
PHOENIX, ARIZONA 85038-9006
(602) 240-3860

CONSTRUCTION DRAWINGS FOR STORAGE TANK & VALLEY FARMS
WELL & NEW SITE, FLORENCE, ARIZONA

E4

SHEET 9 OF 15

HEIDEMAN ASSOCIATES, INC.

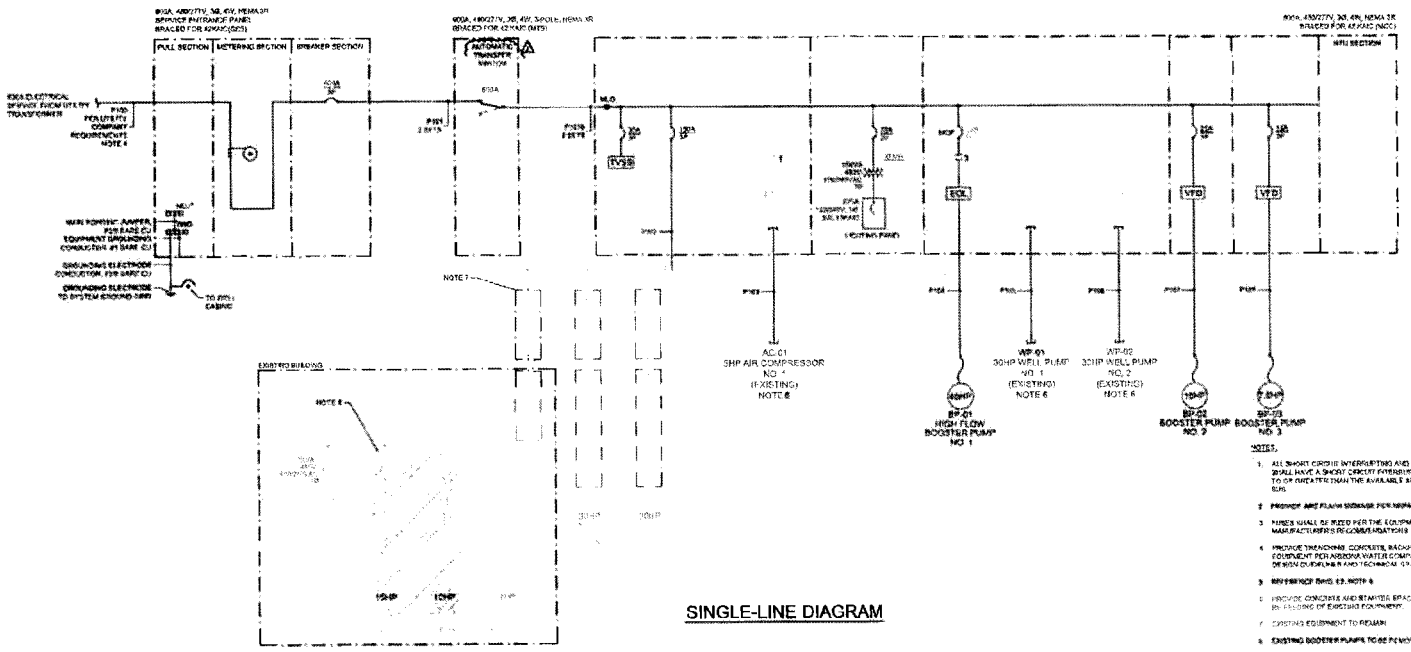

SINGLE-LINE DIAGRAM

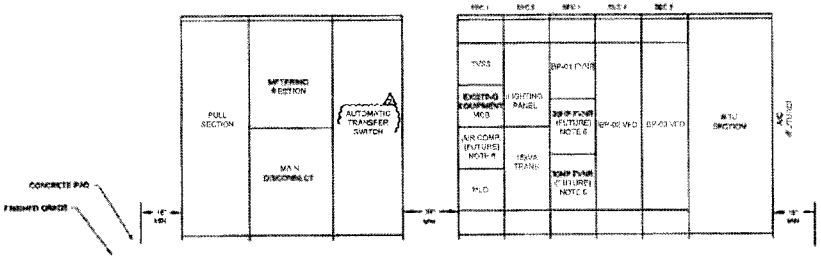

EQUIPMENT ELEVATION (N.T.S.)

EQUIPMENT TAG	DESCRIPTION	KWH	HP	480V FLA
NEW LOADS				
MOTOR LOADS				
AC-01	AIR COMPRESSOR (FUTURE)		5	8
BP-01	HIGH FLOW BOOSTER PUMP NO. 1		40	52
WP-01	WELL PUMP NO. 1 (FUTURE)			
WP-02	WELL PUMP NO. 2 (FUTURE)			
BP-02	BOOSTER PUMP NO. 2		10	14
BP-03	BOOSTER PUMP NO. 3		7.5	11
EXISTING LOADS				
23HP	VFD/ SOFTSTARTER	17		31
EXISTING LOADS				
MOTOR LOADS				
AC-01	AIR COMPRESSOR		5	8
WP-01	WELL PUMP NO. 1		30	45
WP-02	WELL PUMP NO. 2		30	45
NON-MOTOR LOADS				
23HP	VFD/ SOFTSTARTER	3		8
	SUBTOTAL			164
	+ 25% OF LARGEST MOTOR			12
	TOTAL			210
	STANDBY GENERATOR KW RATING			
	480V SERVICE SIZE			800

LOAD CALCULATIONS

RECORD DRAWINGS

ARIZONA WATER COMPANY
3805 N. BLACK CANYON HWY.
POST OFFICE BOX 29006
PHOENIX, ARIZONA 85038-9006
(602) 240-6860

PROJECT NAME: CONSTRUCT A BOOSTER PUMP STATION AT THE VALLEY PARKWAY WELL & TANK SITE IN COOLIDGE, ARIZONA

PROJECT PART NAME: SINGLE LINE DIAGRAM, EQUIPMENT ELEVATION, LOAD CALC

1. FOR CONSTRUCTION.
2. RECORD DRAWINGS.

263-11100
800-STATE-IT

1-5024	51830		
PINAL VALLEY			
5-29-2013	AS SHOWN		
SAJ	RE MAB		

E5

SHEET 10 OF 15

MEIDEMAN ASSOCIATES, INC.

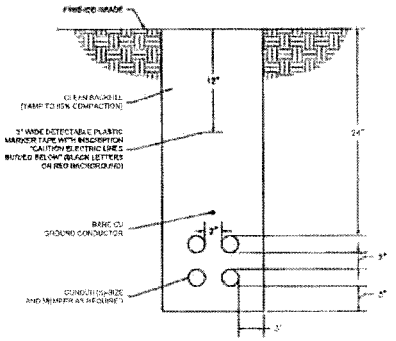

NOTES

- GROUND CONDUCTOR SHALL RUN CONTINUOUSLY THROUGH MANHOLES AND SHALL CONTINUE FROM DUCTBANK INTO SWITCHGEAR OR INLEAY GROUNDING SYSTEM AND SHALL BE BONDED TO EACH ROD METAL CONDUIT. SIZE TO BE #4/0 UNLESS OTHERWISE INDICATED ON PLANS.

ALL DIMENSIONS ARE MINIMUM

111 TYP — DUCTBANK - DIRECT BURIED

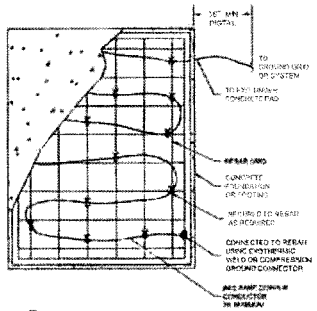

202 TYP — VAULT GROUNDING DETAIL
NOT TO SCALE

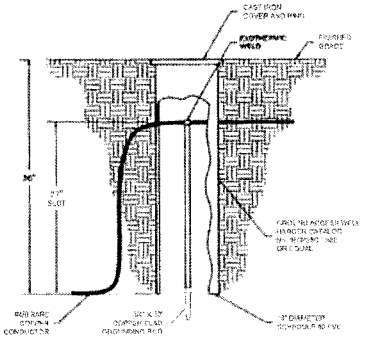

251 TYP — GROUND ROD WITH ACCESS WELL

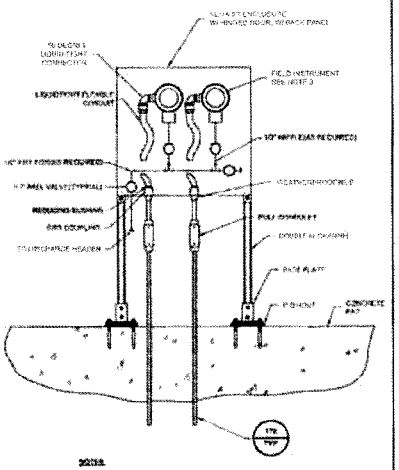

NOTES

1. WHERE CONDUITS ARE INSTALLED IN A CONCRETE SLAB, THE 24" DIMENSION DOES NOT APPLY. CONDUITS SHALL BE INSTALLED BETWEEN REBAR MATS OR UNDER A SINGLE REBAR MAT.
2. IN CORROSIVE AREAS, PVC COATED GRS SHALL BE USED.
3. MOUNT INSTRUMENT AS PER MANUFACTURERS RECOMMENDATIONS.
4. INSULATE WIRING LINES AND TRANSMITTER TO PREVENT FREEZING.
5. PROVIDE UNISTRUT SUPPORTS, OR EQUAL, AT METALLIC INSTRUMENT ENCLOSURE.

357 TYP — INSTRUMENT MAGNETEAR - INDOOR/SEMI-ENCLOSED AREAS
NOT TO SCALE

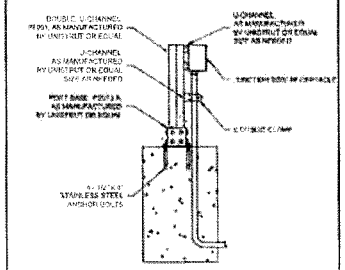

200 TYP — POST MOUNTING DETAIL
NOT TO SCALE

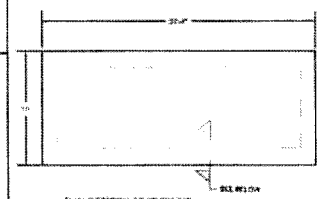

BLANK ELECTRICAL EQUIPMENT PAD

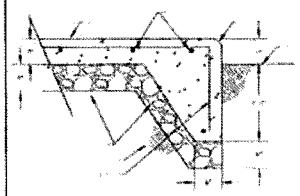

NOTES

1. ADJUST PAD DIMENSION PER ACCEPTED EQUIPMENT SUBMITTALS
2. 95% MAX DRY DENSITY (ASTM D-698) +2% OPTIMUM MOISTURE (CENTER ZONE) SUBGRADE TO 6 1/2" BELOW
3. PROVIDE A MINIMUM OF 18" FROM SIDES AND BACK OF EQUIPMENT TO LOCK OF PAD
4. FOUNDATION: REAR FOOTING ON UNDISTURBED SOIL OR APPROVED ENGINEER FILL. ASSUME ALLOWABLE 1,000 PSF VIA ISC WORK CLASS 2 MATERIAL
5. CONCRETE: A.C.I. MANUAL OF CONCRETE PRACTICE, TYPE II CEMENT, MINIMUM 28 DAY STRENGTH OF 3,000 PSI. MECHANICALLY VIBRATE WHEN PLACED. MAXIMUM SLUMP OF 5"
6. REINFORCING: ASTM A615, GRADE 60 DEFORMED BARS. DETAIL PER LATEST A.C.I. CODE AND DETAILING MANUAL. PLACE REBAR PER C.R.S.I. STANDARDS. CONCRETE COVER 3/4 MINIMUM 3". LAP SPLICES 48 BAR DIAMETERS

306 TYP — OUTDOOR ELECTRICAL EQUIPMENT PAD
NOT TO SCALE

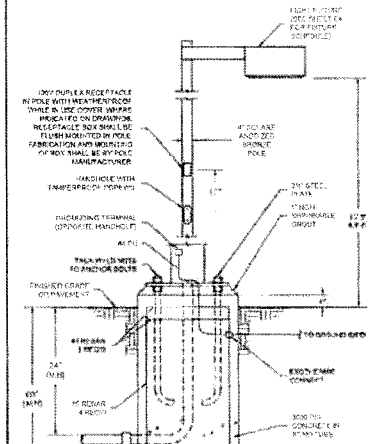

170 TYP — GRS RISER UP DETAIL

307 TYP — LIGHT POLE MOUNTING SHORT BASE
NOT TO SCALE

RECORD DRAWINGS

STATE OF ARIZONA — JAMES A. BURKETT — 32/18/13

DATE 10/13

1. FOR CONSTRUCTION.
2. RECORD DRAWINGS.

263-1100
800-STAKE-IT

1-0024 | 51830 | PINAL VALLEY

2-28-2013 | AS SHOWN | SAJ | MAB

ARIZONA WATER COMPANY
3686 N. BLACK CANYON HWY.
PHOENIX, ARIZONA 85030-9006
(602) 240-6860

CONSTRUCT A BOOSTER PUMP STATION IN THE VALLEY FARMS WELL & TANK SITE IN COOLIDGE, ARIZONA.

HEIDEMAN ASSOCIATES, INC.

E6

SHEET 11 OF 15

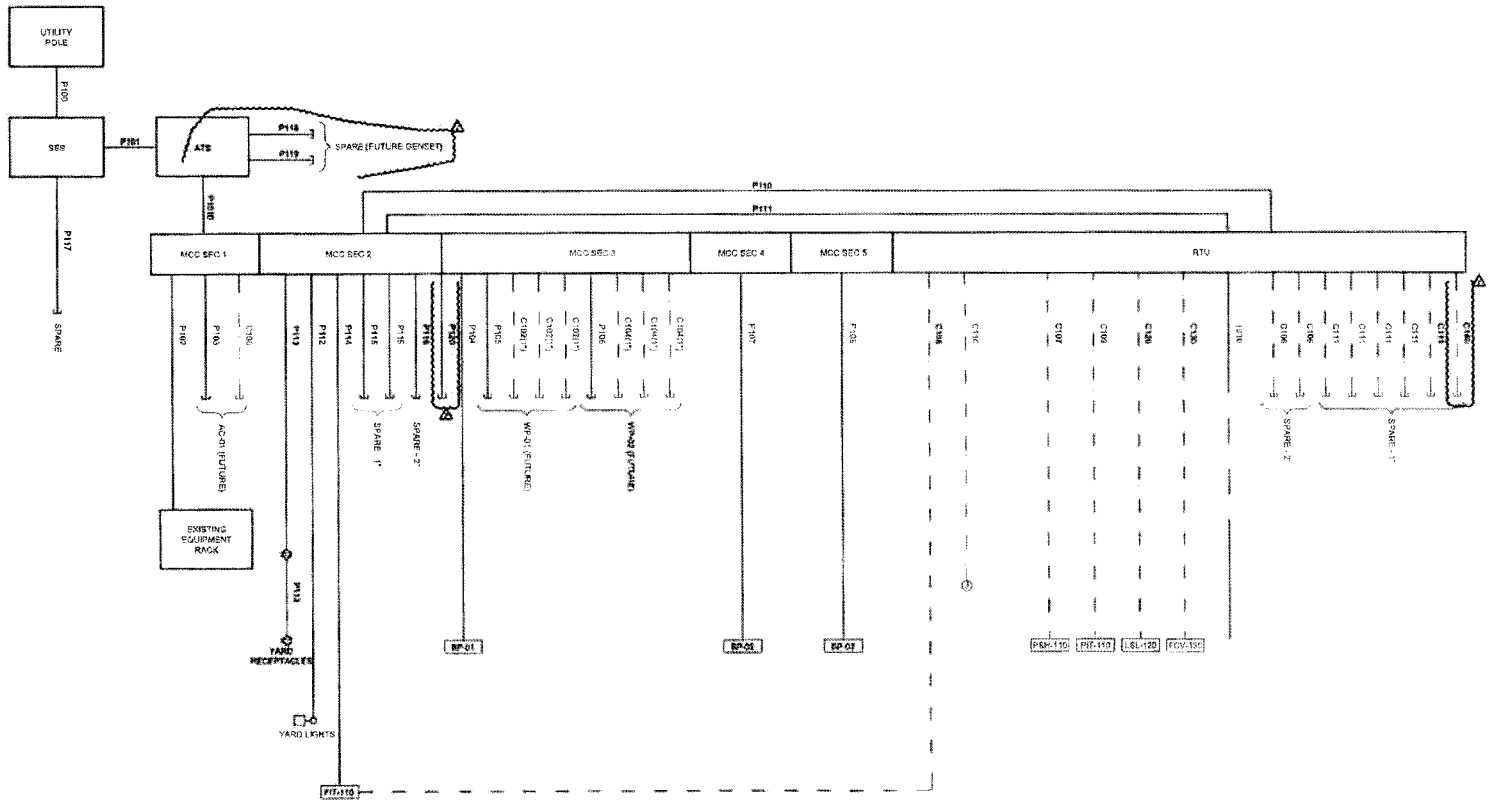

CONDUIT DIAGRAM

POWER CONDUIT
CONTROL CONDUIT
TELEPHONE CONDUIT

RECORD DRAWINGS

HEIDEMAN ASSOCIATES, INC.

1. FOR CONSTRUCTION.
2. RECORD DRAWINGS.

263-1100
800-STAKE-IT

1-5024 | 31830
PINAL VALLEY

5-29-2013 | AS SHOWN
SAJ | MAB

ARIZONA WATER COMPANY
3805 N. BLACK CANYON HWY.
PHOENIX, ARIZONA 85038-9008
(602) 240-6860

CONSTRUCT A BOOSTER PUMP STATION AT THE VALLEY FARMS WELL & TANK SITE IN COOLIDGE, ARIZONA

CONDUIT DIAGRAM

E7

SHEET 12 OF 15

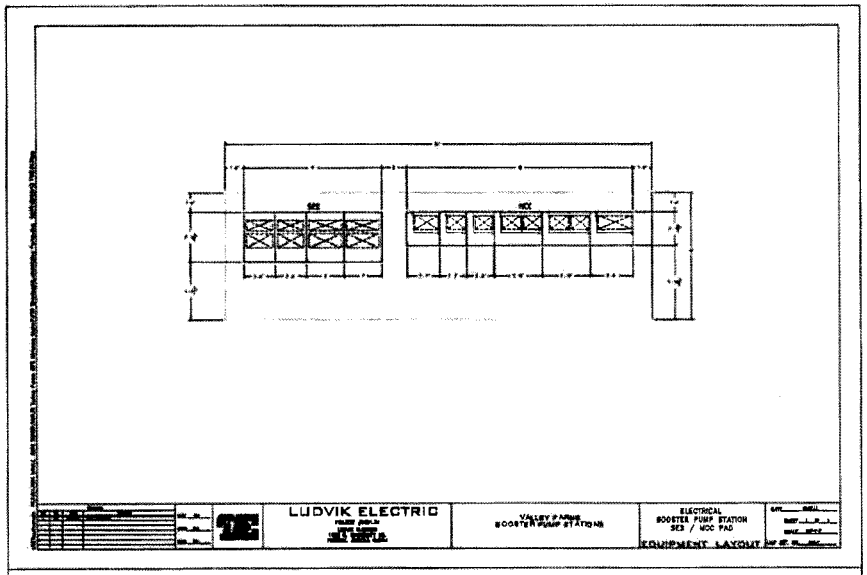

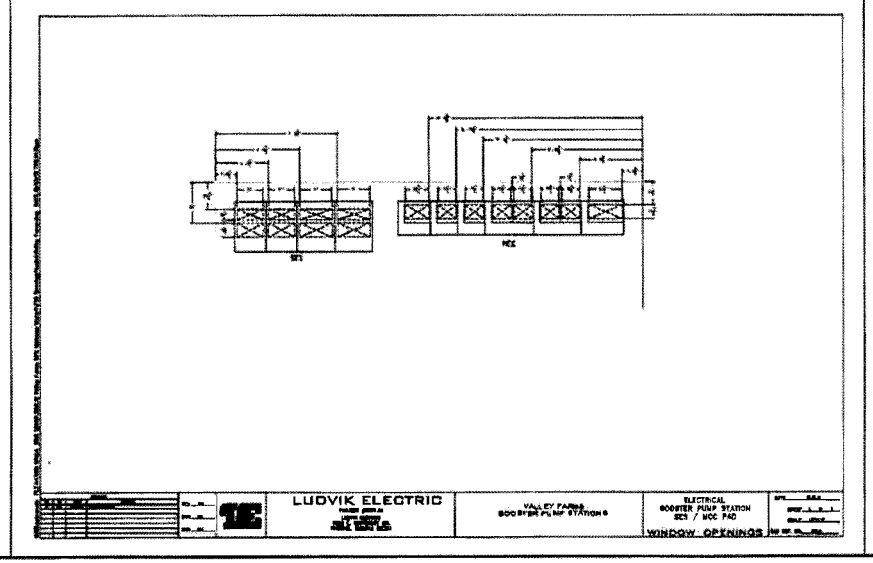

HEIDEMAN ASSOCIATES, INC.

RECORD DRAWINGS

1. FOR CONSTRUCTION.
2. RECORD DRAWINGS.

263-1100
800-STAKE-IT

1-5024 | 61830
PINAL VALLEY

5-29-2013 | AS SHOWN
SAJ | MAB

ARIZONA WATER COMPANY
3805 N. BLACK CANYON HWY.
POST OFFICE BOX 29006
PHOENIX, ARIZONA 85038-9006
(602) 240-6860

CONSTRUCT A BOOSTER PUMP STATION AT THE VALLEY FARMS
WELLS TANK SITE IN COOLIDGE, ARIZONA

E8

SHEET 13 OF 15

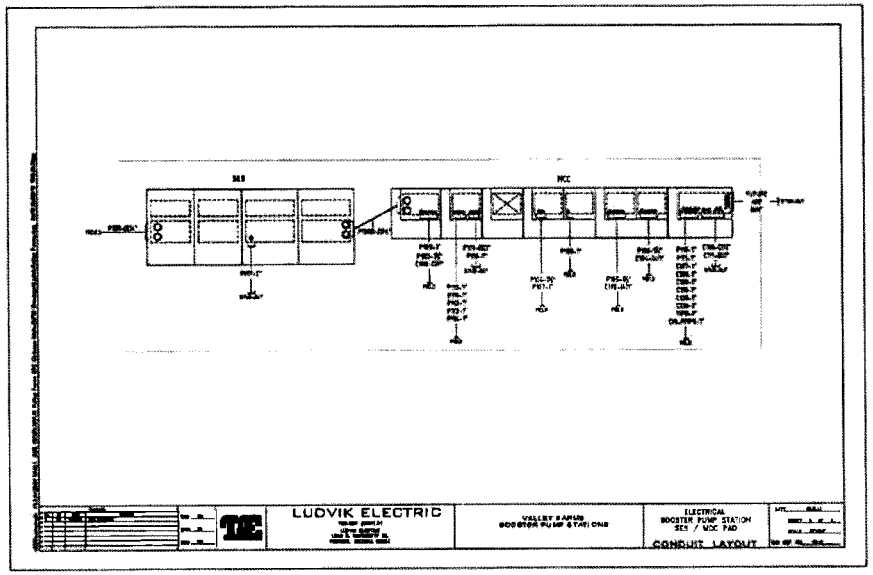

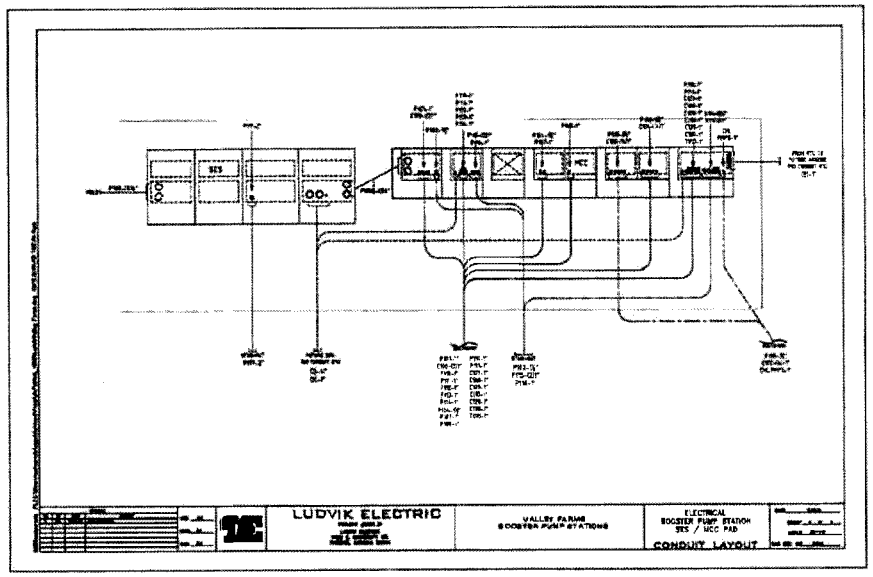

HEIDEMAN ASSOCIATES, INC.

RECORD DRAWINGS

1. FOR CONSTRUCTION.
2. RECORD DRAWINGS.

263-1100
800-STAKE-IT

1-5024 | 51830
PINAL VALLEY
5-29-2013 | AS SHOWN
SAJ | MAB

ARIZONA WATER COMPANY
3805 N. BLACK CANYON HWY. POST OFFICE BOX 29006
PHOENIX, ARIZONA 85038-9006
(602) 240-6860

CONSTRUCT A BOOSTER PUMP STATION AT THE VALLEY FARMS
WELL & TANK SITE IN COOLIDGE, ARIZONA

E9

SHEET 14 OF 15

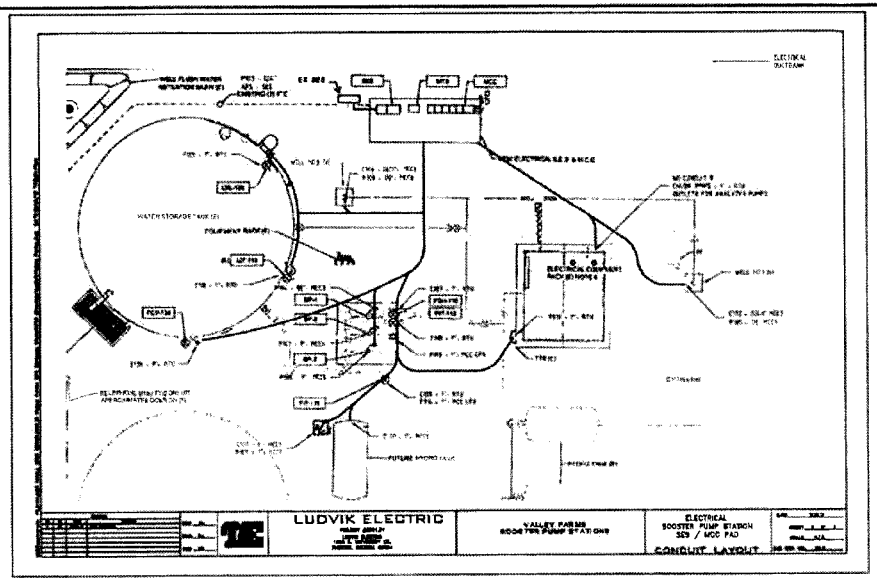

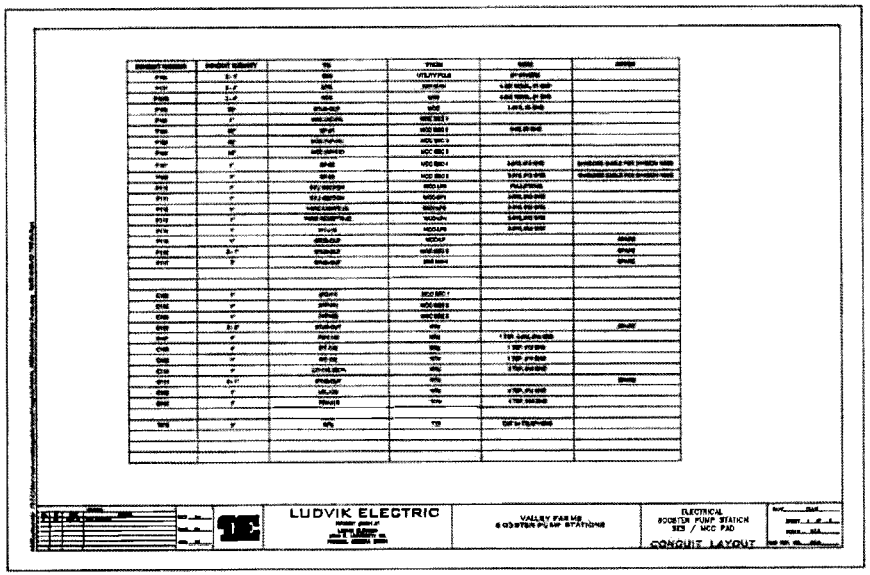

HEIDEMAN ASSOCIATES, INC.

RECORD DRAWINGS

1. FOR CONSTRUCTION.
2. RECORD DRAWINGS.

263-1100
600-STAGE-IT

1-5024 | 51630
PINAL VALLEY
5-29-2013 | AS SHOWN
SAJ | MAB

ARIZONA WATER COMPANY
3805 N. BLACK CANYON HWY.
PHOENIX, ARIZONA 85038-9006
(602) 240-6860

CONSTRUCT A BOOSTER PUMP STATION AT THE VALLEY FARMS WELL & TANK SITE IN COOLIDGE, ARIZONA

E10

SHEET 15 OF 15

Attachment "H"

Montezuma Haven Well Nos. 2 and 3 Arsenic Removal Facility Record Drawings

ARIZONA WATER COMPANY

MONTEZUMA HAVEN WELLS NO. 2 AND NO. 3
ARSENIC REMOVAL FACILITY
4105 EAST GOLDMINE ROAD, LAKE MONTEZUMA, AZ 86335

RECORD DRAWINGS

THESE DRAWINGS REFLECT CHANGES FROM THE ORIGINAL CONTRACT DRAWINGS THAT WERE MADE DURING CONSTRUCTION AND HAVE BEEN PREPARED FROM INFORMATION PROVIDED TO THE ENGINEER BY THE CONSTRUCTION CONTRACTOR(S). THE ENGINEER DOES NOT WARRANT THESE DRAWINGS TO BE COMPLETE AND ACCURATE IN ALL RESPECTS

WATERWORKS ENGINEERS, LLC
BY: BENJAMIN W. LEE — MARCH 2012

AWC PROJECT NO. 1-4874
DECEMBER 2011

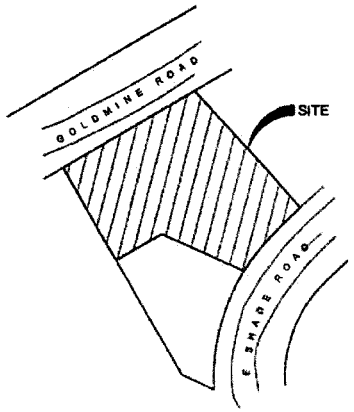

NORTH

PROJECT LOCATION MAP
NTS

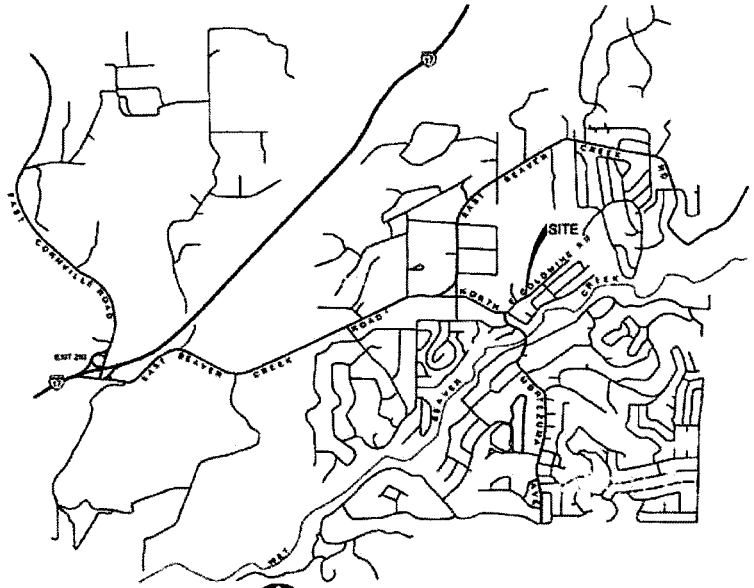

NORTH

VICINITY MAP
NTS

OWNER
ARIZONA WATER COMPANY
3805 N Black Canyon Hwy
Phoenix, AZ 85015

Phone: 602-240-6860
Fax: 602-294-2189

Contact: Andrew Hase

ENGINEER
WATERWORKS ENGINEERS
8840 E Chaparral Road, Suite 280
Scottsdale, AZ 85250

Phone: (480) 881-1742 x112
Fax: (480) 881-1743

Contact: Ben Lee, P.E.

CALL TWO WORKING DAYS BEFORE YOU DIG
602-263-1100
1-800-STAKE-IT
(OUTSIDE MARICOPA COUNTY)

ORIGINALLY SIGNED AND SEALED BY	ORIGINALLY SIGNED AND SEALED BY
ARIZONA REGISTERED PROFESSIONAL ENGINEER (CIVIL)	ARIZONA REGISTERED PROFESSIONAL ENGINEER (CIVIL)
JOHN H. MATTA 30012 ON 12/21/11	BENJAMIN W. LEE 47982 ON 12/21/11

DESIGN AC
DRAWN
CHECKED DB
REVIEWED BL
APPROVED JHM

SGC CONTRACTORS, INC

WATERWORKS ENGINEERS
8840 E Chaparral Road, Suite 280 · Scottsdale, AZ · (480) 881-1742

ARIZONA WATER COMPANY
MONTEZUMA HAVEN WELLS NO. 2 AND NO. 3
ARSENIC REMOVAL FACILITY

GENERAL
COVER SHEET

DATE DECEMBER 2011
PROJECT NUMBER 11-050
DRAWING NUMBER G-001
SHEET - OF -
SCALE: NTS

REUSE OF DOCUMENTS: THIS DOCUMENT AND THE IDEAS AND DESIGNS INCORPORATED HEREIN, AS AN INSTRUMENT OF PROFESSIONAL SERVICE, IS THE PROPERTY OF WATERWORKS ENGINEERS, LLC AND IS NOT TO BE USED, IN WHOLE OR IN PART, FOR ANY OTHER PROJECT WITHOUT THE WRITTEN AUTHORIZATION OF WATERWORKS ENGINEERS, LLC

FILENAME: S:\CAD\Projects\11-050 Sedona DB\Workplans\Drawings\Civil\11050-G001.dgn
PLOT DATE: 26-DEC-2011 PLOT TIME: 16:14:56

DRAWING INDEX

SHEET NUMBER	DRAWING NUMBER	TITLE
	GENERAL	
1	G-001	COVER SHEET
2	G-002	DRAWING INDEX AND NOTES
3	G-003	ABBREVIATIONS
4	G-004	STANDARD DESIGNATIONS
5	G-005	LEGEND
6	G-006	PROCESS FLOW DIAGRAM 1
7	G-007	PROCESS FLOW DIAGRAM 2
	CIVIL	
8	C-100	SITE PLAN
	STRUCTURAL	
9	S-001	NOTES AND ABBREVIATIONS
10	S-301	DETAILS
	MECHANICAL	
11	M-001	ISOMETRIC
12	M-100	SITE PLAN
13	M-101	PARTIAL PLAN 1
14	M-102	PARTIAL PLAN 2
15	M-201	SECTIONS
16	M-301	TYPICAL DETAILS 1
17	M-302	TYPICAL DETAILS 2
	ELECTRICAL	
18	E-101	SPECIFICATIONS AND LEGEND
19	E-102	SES AND MCC SINGLE LINE DIAGRAM
20	E-103	SITE PLAN
21	E-104	EXISTING WELL PUMP #3 SCHEMATIC DIAGRAM REVISIONS
22	E-105	MISCELLANEOUS SCHEMATIC DIAGRAMS
23	E-106	DETAILS

GENERAL NOTES

1. REFERENCES TO MAG STANDARD DETAILS REFER TO THE "UNIFORM STANDARD DETAILS FOR PUBLIC WORKS CONSTRUCTION" SPONSORED AND DISTRIBUTED BY THE MARICOPA ASSOCIATION OF GOVERNMENTS, LATEST VERSION.
2. ALL WORK **UNDER THE PUBLIC WORKS PERMIT SHALL BE DONE IN** ACCORDANCE WITH THE MAG SPECIFICATIONS AND DETAILS, UNLESS OTHERWISE STATED ON PLANS. MINIMUM COVER OVER WATER LINES IS 24" FOR PIPE DIAMETERS 2" AND LESS AND 39" FOR PIPE DIAMETERS LARGER THAN 2".
3. THE ARIZONA WATER COMPANY (AWC) OPERATIONS STAFF SHALL BE NOTIFIED 48 HOURS PRIOR TO STARTING CONSTRUCTION.
4. ACCEPTANCE OF THE COMPLETED IMPROVEMENTS WILL NOT BE GIVEN UNTIL RED LINE DRAWINGS "AS-BUILTS" HAVE BEEN GIVEN TO AND APPROVED BY THE ENGINEER.
5. CONTRACTOR SHALL ENSURE CONSTRUCTION MATERIALS REMAIN ISOLATED FROM THE WATER DISTRIBUTION SYSTEM. ISOLATION VALVES CONNECTING TO THE DISTRIBUTION SYSTEM SHALL BE LOCKED IN CLOSED POSITION BY CONTRACTOR.
6. BACKFILL CONSOLIDATION BY FLOODING OR WATER IS PROHIBITED.
7. NO JOB WILL BE CONSIDERED COMPLETE UNTIL ALL CURB, PAVEMENT AND SIDEWALKS HAVE BEEN SWEPT CLEAN OF ALL DIRT AND DEBRIS AND ALL DISTURBED SURVEY MONUMENTS REPLACED.
8. ALL EXISTING MONUMENTATION SHALL BE PRESERVED.
9. **THE CONTRACTOR WILL UNCOVER ALL EXISTING LINES BEING TIED INTO TO VERIFY THEIR LOCATION, MATERIAL TYPE, AND SIZE PRIOR TO ORDERING FITTINGS. THE CONTRACTOR WILL LOCATE OR HAVE LOCATED ALL EXISTING UNDERGROUND PIPELINES, TELEPHONE AND ELECTRIC CONDUITS, AND STRUCTURES IN ADVANCE OF CONSTRUCTION AND WILL** OBSERVE ALL POSSIBLE PRECAUTIONS TO AVOID DAMAGE TO THE SAME.
10. BACKFILLING SHALL NOT BE STARTED UNTIL LINES ARE INSPECTED BY THE ENGINEER AND AWC INSPECTOR (48 HOURS PRIOR NOTIFICATION MUST BE GIVEN).
11. APPROVAL BY THE ENGINEER INDICATES REVIEW FOR GENERAL CONFORMANCE WITH STANDARDS. THIS APPROVAL SHALL NOT PREVENT AWC FROM REQUIRING CORRECTION OF ERRORS OR OMISSIONS OR VIOLATIONS OF ANY LAW OR ORDINANCE.
12. **EXISTING UTILITIES AND OTHER FACILITIES SHOWN ON PLANS ARE BASED ON INFORMATION OBTAINED FROM FIELD SURVEY, EXISTING MAPS, AS-BUILTS AND OTHER PLANS WITHIN THE AREA OF THIS PROJECT. THE CONTRACTOR SHALL DETERMINE THE EXACT LOCATION AND/OR ELEVATION OF EXISTING UTILITIES WHICH PERTAIN TO AND MAY AFFECT** CONSTRUCTION. NO ADDITIONAL PAYMENT FOR THIS ITEM WILL BE ALLOWED.
13. THE CONTRACTOR SHALL MAINTAIN AN APPROVED SET OF PLANS, WHICH SHALL BE ON THE JOBSITE AT ALL TIMES.
14. THE CONSTRUCTION FOREMAN SHALL BE ON THE JOB SITE AT ALL TIMES WHILE CONSTRUCTION ACTIVITIES ARE IN OPERATION.
15. IT IS THE **CONTRACTOR'S RESPONSIBILITY TO NOTIFY** THE ENGINEER AND AWC BEFORE THE FITTINGS ARE **COVERED SO INDEPENDENT "AS-BUILT"** MEASUREMENTS MAY BE TAKEN. ANY CHANGES TO **THE APPROVED PLANS MUST BE AUTHORIZED** BY THE ENGINEER AND AWC BEFORE THE CHANGE IS MADE IN THE FIELD.
16. CONTRACTOR IS RESPONSIBLE TO FOLLOW ALL APPLICABLE GUIDELINES AND RECOMMENDATIONS SET FORTH BY OSHA.
17. **THE CONTRACTOR WILL PROVIDE ADEQUATE MEANS FOR CLEANING TRUCKS AND/OR OTHER EQUIPMENT OF MUD PRIOR TO ENTERING PUBLIC STREETS. CONTRACTOR SHALL MAINTAIN ROADS IMPACTED BY CONSTRUCTION ACTIVITIES IN A CLEAN AND DUST FREE** CONDITION AT ALL TIMES.
18. **CONTRACTOR TO VERIFY EXISTING UTILITIES WHICH MAY CONFLICT WITH CONTRACTOR'S WORK. ANY EXISTING UTILITY LOCATIONS WHICH MAY BE SHOWN ON THE DRAWINGS ARE APPROXIMATE ONLY AND SHALL BE FIELD VERIFIED. THE CONTRACTOR WILL LOCATE OR HAVE LOCATED ALL EXISTING UNDERGROUND PIPELINES, TELEPHONE AND ELECTRIC CONDUITS, AND STRUCTURES IN ADVANCE OF CONSTRUCTION AND WILL OBSERVE ALL** POSSIBLE PRECAUTIONS TO AVOID DAMAGE TO SAME.
19. THE CONTRACTOR IS REQUIRED TO CALL THE "BLUE STAKE" CENTER PRIOR TO ANY WORK AND SHALL BE RESPONSIBLE TO MAINTAIN CURRENT "BLUE STAKE" MARKINGS THROUGHOUT CONSTRUCTION.
20. CONTRACTOR IS RESPONSIBLE FOR ALL TEMPORARY EROSION CONTROL MEASURES AS REQUIRED BY ALL REGULATORY AGENCIES.
21. CONTRACTOR TO COORDINATE INTERFACE OF EXISTING UTILITIES WITH THE APPROPRIATE UTILITY COMPANIES.
22. PROVIDE SEPARATION BETWEEN UTILITIES PER MAG STANDARD SPECIFICATIONS 619.
23. INSTALL NEW PIPELINES AT UNIFORM SLOPE BETWEEN POINTS FOR WHICH ELEVATIONS ARE GIVEN ON THE DRAWINGS.
24. PIPING ROUTING AND DIMENSIONS, AS SHOWN, DO NOT CONSTITUTE DETAILED LAYOUT DRAWINGS. CONTRACTOR TO DETAIL AND DETERMINE EXACT PIPE LENGTHS, FITTINGS AND JOINTS REQUIRED TO INSTALL PIPELINES IN ACCORDANCE WITH THE ROUTING SHOWN ON THE DRAWINGS.
25. COORDINATE BEGINNING OF PIPELINE AND END OF PIPELINE WITH ADJACENT WORK. IF ADJACENT WORK IS COMPLETE, TIE PIPELINE IN AS REQUIRED.
26. ALL MATERIALS IN CONTACT WITH POTABLE WATER SHALL CONFORM TO NATIONAL SANITATION FOUNDATION STANDARDS 60 AND 61.
27. THE FIELD ENGINEER AND AWC SHALL INSPECT AND APPROVE ALL TRENCHING, BEDDING, PIPE INSTALLATION, BACKFILL AND COMPACTION. FIELD ENGINEER AND AWC SHALL INSPECT AND APPROVE ALL PRESSURE TESTING, DISINFECTIONS AND ALL OPERATIONAL SYSTEMS TESTS BEFORE ACCEPTANCE **BY AWC INTO THE WARRANTY PERIOD. ALL PUNCH LIST ITEMS MUST BE** 100 PERCENT (100%) COMPLETED, AS GENERATED BY AWC AND ENGINEER.
28. CONTRACTOR SHALL ARRANGE FOR ALL INSPECTIONS REQUIRED BY REGULATORY AGENCIES.
29. ALL FRAMES, COVERS, VALVE BOXES SHALL BE ADJUSTED TO FINISHED GRADE PRIOR TO THE COMPLETION OF CONSTRUCTION.
30. PRESSURE & LEAKAGE TESTING SHALL CONFORM TO AWWA STANDARD SPEC. 5.2, HYDROSTATIC TESTING.
31. METERS - MINIMUM FITTING FREE PIPE DIA. UPSTREAM (UP) & DOWNSTREAM (DN) OF METER; PROPELLER - 5 UP & 3DN / MAG - 5UP & 2DN.
32. IDENTIFY ALL ABOVE GROUND PIPING AS PER ADEQ BULLETIN NO. 10 CHAPTER 4 A.1.9. LABEL ALL ABOVE GROUND PIPING WITH DIRECTION **OF FLOW ARROWS**.
33. PAINT ALL ABOVE GROUND PIPING TO MATCH VESSELS / BACKWASH TANKS / ENCLOSURES.
34. CONTRACTOR SHALL CLEAN AND DISINFECT ALL NEWLY CONSTRUCTED AND REPAIRED PIPING AND EQUIPMENT IN ACCORDANCE WITH AWWA C651, C652 AND C653.

ORIGINALLY SIGNED AND SEALED BY
ARIZONA REGISTERED PROFESSIONAL ENGINEER (CIVIL)
BENJAMIN W. LEE
47662
D-4 12/21/11

DESIGN MJG
DRAWN DRV
CHECKED BWL
APPROVED JRM

MAG CONTRACTORS, INC.

WATERWORKS ENGINEERS

ARIZONA WATER COMPANY
VICINITY OF ARIZONA
RANGE 3 EAST
ARSENIC REMOVAL FACILITY

GENERAL
DRAWING INDEX AND NOTES

DATE DECEMBER 2011
PROJECT NUMBER 11-057
DRAWING NUMBER G-002
SHEET - OF -
SCALE 1:0.785857

REUSE OF DOCUMENTS: THIS DOCUMENT, AND THE IDEAS AND DESIGNS INCORPORATED HEREIN, AS AN INSTRUMENT OF PROFESSIONAL SERVICE, IS THE PROPERTY OF WATER WORKS ENGINEERS, LLC AND IS NOT TO BE USED, IN WHOLE OR IN PART, FOR ANY OTHER PROJECT WITHOUT THE WRITTEN AUTHORIZATION OF WATER WORKS ENGINEERS, LLC.

FILENAME: S:\CADD\Projects\11-057 Sedona DB Montezuma\Drawings\Deliverables\11-057\G-002.dgn PLOT DATE: 12/20/11 PLOT TIME: 3:26:54 PM

ABBREVIATIONS

@	AT
AB	ANCHOR BOLT, AGGREGATE BASE
AC	ASPHALTIC CONCRETE
ACI	AMERICAN CONCRETE INSTITUTE
ADD	ADDITIONAL
ADH AB	ADHESIVE ANCHOR BOLT
ADJ	ADJACENT, ADJUSTABLE
AFF	ABOVE FINISH FLOOR
AFG	ABOVE FINISH GRADE
AHP	AIR HIGH PRESSURE
AISC	AMERICAN INSTITUTE OF STEEL CONSTRUCTION
AL, ALUM	ALUMINUM
ALP	AIR LOW PRESSURE
ALTN	ALTERNATE
ANSI	AMERICAN NATIONAL STANDARDS INSTITUTE
APPROX	APPROXIMATE
APVD	APPROVED
ARCH, A	ARCHITECTURAL
ARV	AIR RELEASE VALVE
ASTM	AMERICAN SOCIETY FOR TESTING AND MATERIALS
AUTO	AUTOMATIC
AUX	AUXILIARY
AV	AIR/VACUUM ASSEMBLY
AVE	AVENUE
AWG	AMERICAN WIRE GAGE
AWWA	AMERICAN WATER WORKS ASSOCIATION
B	BORING
BC	BEGIN CURVE
BF	BLIND FLANGE; BOTTOM FACE
BFD	BUTTERFLY VALVE DAMPER
BFV	BUTTERFLY VALVE
BLDG	BUILDING
BLM	BUREAU OF LAND MANAGEMENT
BM	BENCH MARK, BEAM
BO	BLOW OFF
BOO	BOTTOM OF OPENING
BOT	BOTTOM
BRG	BEARING
BV	BALL VALVE
BVC	BEGINNING OF VERTICAL CURVE
BYP	BYPASS
C to C, CC	CENTER TO CENTER
C	CHANNEL (BEAM)
CAA/ARV	COMBINATION AIR ADMISSION/ AIR RELEASE VALVE
CARV	COMBINATION AIR RELEASE VALVE
CATH	CATHODIC PROTECTION
CATV	CABLE TELEVISION
CB	CATCH BASIN
CCP	CONCRETE CYLINDER PIPE
CCS	CENTRAL CONTROL SYSTEM
CFM	CUBIC FEET PER MINUTE
CFS	CUBIC FEET PER SECOND
CHEM	CHEMICAL
CI	CAST IRON
CIGC	CAST IRON GROOVED COUPLING
CIMJ	CAST IRON MECHANICAL JOINT
CIP	CAST IRON PIPE
CIRJ	CAST IRON RESTRAINED JOINT
CISP	CAST IRON SOIL PIPE
CJ	CONSTRUCTION JOINT, CONTRACTION JOINT
CLDIP	CEMENT-LINED DUCTILE IRON PIPE
CLG	CEILING
CLR	CLEAR, CLEARANCE
CLSM	CONTROLLED LOW STRENGTH MATERIAL
CL	CENTERLINE
CML, CSP	CONCRETE MORTAR LINED AND COATED STEEL PIPE
CMLSP	CEMENT MORTAR LINED STEEL PIPE
CMP	CORRUGATED METAL PIPE
CMU	CONCRETE MASONRY UNIT
CO	CLEANOUT
COL	COLUMN
COM	COMMUNICATION
COMB	COMBINED
CONC	CONCRETE
CONN	CONNECTION
CONT	CONTINUOUS, CONTINUATION
COORD	COORDINATE
COP	COPPER
CPLG	COUPLING
CTD	CENTERED
CTR	CENTER
CU FT	CUBIC FOOT
CU IN	CUBIC INCH
CU YD	CUBIC YARD
CULV	CULVERT
CV	CHECK VALVE
°C	CELSIUS
d	PENNY
DBA	DEFORMED BAR ANCHOR
DR	DRAIN
DBL	DOUBLE
DEC	DECANT
DET	DETAIL
DF	DOUGLAS FIR/LARCH
DI	DROP INLET, DUCTILE IRON
DIA	DIAMETER
DIAG	DIAGONAL
DIL	DILUTE
DIM	DIMENSION
DIMJ	DUCTILE IRON MECHANICAL JOINT
DIP	DUCTILE IRON PIPE
DIPPL	DUCTILE IRON PIPE, POLYETHYLENE LINED
DIR	DIRECTION
DIST	DISTANCE
DN	DOWN
do	DITTO
DWG	DRAWING
E	EAST, ELECTRIC, ELECTRICAL
EA	EACH
EC	END CURVE
ECC	ECCENTRIC
EF	EACH FACE, EXHAUST FAN
EFL	EFFLUENT
EJ	EXPANSION JOINT
EL	ELEVATION
ELB, ELL	ELBOW
ELC	ELECTRICAL LOAD CENTER
ELEC	ELECTRIC, ELECTRICAL
ENGR	ENGINEER
EO	EMERGENCY OVERFLOW
EQL SP	EQUALLY SPACED
EQPT	EQUIPMENT
ERW	EFFLUENT REUSE WATER
ESA	ENVIRONMENTALLY SENSITIVE AREA
EVC	END OF VERTICAL CURVE
EW	EACH WAY
EWEF	EACH WAY, EACH FACE
EXC	EXCAVATE
EXP	EXPOSED, EXPANSION
EXP JT	EXPANSION JOINT
EXST	EXISTING
FB	FLAT BAR
FC	FLEXIBLE COUPLING
FCA	FLANGED COUPLING ADAPTER
FCO	FLOOR CLEAN OUT
FD	FLOOR DRAIN
FDA	FLOOR DRAIN W/INTEGRAL TRAP
FDN	FOUNDATION
FES	FLARED END SECTION
FEXT	FIRE EXTINGUISHER
FF	FINISH FLOOR
FG	FINISH GRADE
FHY	FIRE HYDRANT
FIG	FIGURE
FL	FLOOR, FLOW LINE
FLG	FLANGE
FLH	FLAT HEAD
FLL	FLOW LINE
FLTR	FILTER
FNSH	FINISH
FOC	FACE OF CONCRETE
FRP	FIBERGLASS REINFORCED PLASTIC
FT	FOOT OR FEET
FTG	FOOTING
FWD	FORWARD
°F	DEGREE FAHRENHEIT
G	GAS
GA	GAGE
GAL	GALLON
GALV	GALVANIZED
GB	GRADE BREAK
GC	GROOVED COUPLING
GCO	GRADE CLEAN OUT
GCF	GROOVED COUPLING FITTING
GE	GROOVED END
GL	GLASS
GPD	GALLONS PER DAY
GPH	GALLONS PER HOUR
GPM	GALLONS PER MINUTE
GRTG	GRATING
GSP	GALVANIZED STEEL PIPE
GV	GATE VALVE
GVL	GRAVEL
GW	GROUND WATER
HD	HUB DRAIN
HDPE	HIGH DENSITY POLYETHLENE PIPE
HDR	HEADER
HDW	HARDWARE
HGT	HEIGHT
HM	HOLLOW METAL
HORIZ	HORIZONTAL
HP	HORSEPOWER
HR	HANDRAIL
HSS	HOLLOW STRUCTURE STEEL
HV	HOSE VALVE
I&C	INSTRUMENTATION & CONTROL
ID	INSIDE DIAMETER
IF	INSIDE FACE
IN	INCH
INFL	INFLUENT
INSTM	INSTRUMENTATION
INSUL	INSULATE, INSULATION
INV	INVERT
JT	JOINT
KIP	THOUSAND POUNDS
KW	KILOWATT
L	LEFT, ANGLE, LENGTH
LAB	LABORATORY
LAT'L	LATERAL
LB	POUNDS
LB/CU FT	POUNDS PER CUBIC FOOT
LF	LINEAR FEET
LG	LONG
LONG	LONGITUDINAL
LP	LOW POINT
LR	LONG RADIUS
MAX	MAXIMUM
MCC	MOTOR CONTROL CENTER
MCJ	MASONRY CONTROL JOINT
MECH	MECHANICAL
MFR	MANUFACTURER
MGD	MILLION GALLONS PER DAY
MH	MANHOLE
MIN	MINIMUM, MINUTE
MISC	MISCELLANEOUS
MJ	MECHANICAL JOINT
MPH	MILES PER HOUR
MSNRY	MASONRY
MSP	MILL STEEL PIPE, MANUAL OF STANDARD PRACTICE
MTL	MATERIAL
MWS	MAXIMUM WATER SURFACE
N	NORTH
NC	NORMALLY CLOSED
NIC	NOT IN CONTRACT
NO	NUMBER, NUMBERING
NPT	NATIONAL PIPE THREAD
NTS	NOT TO SCALE
OC	ON CENTER
OD	OUTSIDE DIAMETER, OVERFLOW DRAIN
OF	OUTSIDE FACE, OVERFLOW
OFR	OVERFLOW RETURN
OG	ORIGINAL GROUND
OHE	OVERHEAD ELECTRIC
OMRF	ORDINARY MOMENT RESISTING FRAME
O TO O	OUT TO OUT
OPNG	OPENING
OZ	OUNCE
PC	POINT OF CURVE
PE	PLAIN END, POLYETHYLENE AND PERMANENT EASEMENT
PENT	PENETRATION
PI	POINT OF INTERSECTION
PJF	PREMOLDED JOINT FILLER
PL	PLATE, PROPERTY LINE
PLYWD	PLYWOOD
POB	POINT OF BEGINNING
PP, P&P	PLAN AND PROFILE, POWER POLE
PPM	PARTS PER MILLION
PRC	POINT OF REVERSE CURVE
PRCST	PRECAST
PREFAB	PREFABRICATED
PRESS	PRESSURE
PRC	POINT OF REVERSE CURVE
PRI	PRIMARY
PROP	PROPERTY
PSF	POUNDS PER SQUARE FOOT
PS	PUMP STATION
PSI	POUNDS PER SQUARE INCH
PSIG	POUNDS PER SQUARE INCH, GAUGE
PT	POINT OF TANGENCY
PV	PLUG VALVE
PVC	POLYVINYL CHLORIDE PLASTIC
PVCGS	POLYVINYL CHLORIDE PLASTIC-GRAVITY SEWER TYPE
PVCW	POLYVINYL CHLORIDE PLASTIC-WATER DISTRIBUTION SERVICE TYPE
PVMT	PAVEMENT
PVT	PRIVATE
PW	POTABLE WATER
R, RAD	RADIUS
RC	REINFORCED CONCRETE
RCP	REINFORCED CONCRETE PIPE
RD	ROAD, ROOF DRAIN
RDCR	REDUCER
REF	REFER OR REFERENCE
REINF	REINFORCED, REINFORCING, REINFORCE
REQD	REQUIRED
RJ	RESTRAINED JOINT
RLS	RUBBER LINED STEEL
RM	ROOM
RMJ	RESTRAINED MECHANICAL JOINT
RO	ROUGH OPENING
R/R	REMOVE AND REPLACE
RST	REINFORCING STEEL
RTN	RETURN
RV	ROOF VENT
RW	RAW WATER
R/W	RIGHT-OF-WAY
S	I-BEAM, SOUTH, SLOPE
SA	SAMPLE
SAT	SUSPENDED ACOUSTIC TILE
SC	SCUM
SCFH	STANDARD CUBIC FEET PER HOUR
SCFM	STANDARD CUBIC FEET PER MINUTE
SCH	SCHEDULE
SD	STORM DRAIN
SEC	SECONDARY
SECT	SECTION
SH	SHEET
SIM	SIMILAR
SLD	SLUDGE
SLP	SLOPE
SOLN	SOLUTION
SP	SPACE OR SPACES
SPD	SUMP PUMP DRAIN
SPEC	SPECIFICATIONS
SPLY	SUPPLY
SQ	SQUARE
SQ FT	SQUARE FOOT
SQ IN	SQUARE INCH
SS	SANITARY SEWER
SSH	SAFETY SHOWER
SST	STAINLESS STEEL
STA	STATION
STD	STANDARD
STIF	STIFFENER
STL	STEEL, STEEL PIPE
STLS	STEEL PIPE (SPECIAL)
STR	STRAIGHT
STRL	STRUCTURAL
STRUCT	STRUCTURE
SUBFL	SUBFLOOR
SUSP	SUSPEND
SYMM	SYMMETRICAL
T	TANGENT, TELEPHONE LINE
TBG	TUBING
T&B	TOP AND BOTTOM
TC	TOP OF CURB, TOP OF CONCRETE
TCE	TEMPORARY CONSTRUCTION EASEMENT
TDH	TOTAL DYNAMIC HEAD
TECH	TECHNICAL
TEL	TELEPHONE
TEMP	TEMPORARY, TEMPERATURE
TF	TOP FACE
T&G	TONGUE AND GROOVE
THD	THREAD
THK	THICK
TP	TURNING POINT, TEST PIT
TRANS	TRANSITION
TRANSV	TRANSVERSE
TS	TUBE STEEL
TST	TOP OF STEEL
TT	THRUST TIE
TW	TOP OF WALL
TYP	TYPICAL
t, T	THICKNESS
UBC	UNIFORM BUILDING CODE
UD	UNDERDRAIN
UG	UNDERGROUND
UH	UNIT HEATER
UNK	UNKNOWN
V	VENT, VOLT, VALVE
VAC	VACUUM
VAR	VENT ACID RESISTANT
VC	VERTICAL CURVE
VERT	VERTICAL
VPI	VERTICAL POINT OF INTERSECTION
VPS	VENEER PLASTER SYSTEM
VTR	VENT THRU ROOF
W/	WITH
W	WIDE FLANGE (BEAM), WEST, WATER
WC	WATER CLOSET
WD	WOOD
WH	WATER HEATER
WM	WATER METER
WR	WATER RESISTANT
WS	WATER SURFACE, WATER STOP
W SH ST	WEATHERING SHEET STEEL
WSP	WELDED STEEL PIPE
WT	WATER TIGHT
WTR	WATER
WW	WASHWATER
WWF	WELDED WIRE FABRIC
YD	YARD

NOTES:

1. FOR ELECTRICAL AND INSTRUMENTATION ABBREVIATIONS, SEE E-101
2. CONTACT THE ENGINEER FOR ABBREVIATIONS NOT LISTED.
3. THIS IS A STANDARD LEGEND SHEET, THEREFORE, SOME SYMBOLS OR ABBREVIATIONS MAY APPEAR ON THIS SHEET AND MAY NOT BE UTILIZED ON THIS PROJECT

ORIGINALLY SIGNED AND SEALED BY
ARIZONA REGISTERED PROFESSIONAL ENGINEER (CIVIL)
BENJAMIN W. LEE
47652
ON 12/21/11

MGC
MGC CONTRACTORS, INC

WATERWORKS
ENGINEERS

ARIZONA WATER COMPANY
MONTEZUMA HAVEN
WELLS NO. 2 AND NO. 3
ARSENIC REMOVAL FACILITY

GENERAL
ABBREVIATIONS

DATE: DECEMBER 2011
PROJECT NUMBER: 11-037
DRAWING NUMBER: G-003
SHEET - OF -

DISCIPLINE

LETTER	DISCIPLINE
G	GENERAL
D	DEMOLITION
C	CIVIL YARD
A	ARCHITECTURAL
S	STRUCTURAL
M	MECHANICAL
H	HEATING, VENTILATION AND COOLING
P	PLUMBING
E	ELECTRICAL
I	INSTRUMENTATION

DRAWING NUMBERING

DRAWING SERIES	DESCRIPTION
000	GENERAL / OVERALL
100	PLANS
200	SECTIONS
300	DETAILS
400	ELEVATIONS
500	SCHEDULES

DRAWING NUMBER

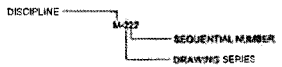

SECTION

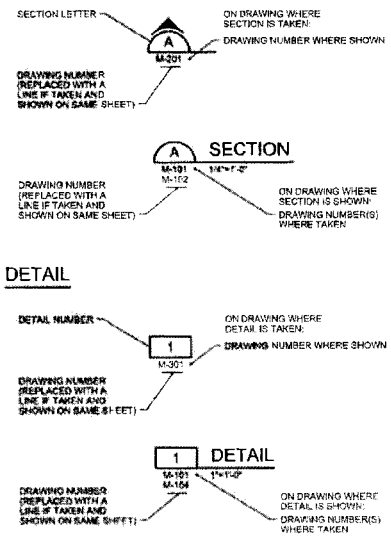

STANDARD VALVE AND OPERATOR

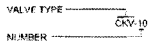

UNIQUE VALVE AND OPERATOR

EQUIPMENT DESIGNATION

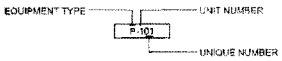

LINE TYPE APPEARANCE

———	BLACK	NEW 'ON' DISCIPLINE
———	LIGHT OR MEDIUM GRAY OR SCREENED	EXISTING 'ON' OR 'OFF' DISCIPLINE
———	DARK GRAY	NEW 'OFF' DISCIPLINE

GENERAL SYMBOLOGY

▨	STRUCTURE OR EQUIPMENT TO BE REMOVED OR DEMOLISHED
XXXX	LINE OF REMOVAL OR DEMOLITION

PROCESS FLOW STREAM IDENTIFIERS

PIPING SYSTEM ABBREVIATION	PIPING SYSTEM DESCRIPTION	PIPING MATERIAL
BW	BACKWASH	DIP
DR	DRAIN	COP
GW	GROUND WATER	DIP
OF	OVERFLOW	DIP
SHC OR NaOCl	SODIUM HYPOCHLORITE	LDPE
REC	RECYCLED WATER	COP
PW	POTABLE WATER	DIP
V	VENT	GALV

EQUIPMENT TYPE IDENTIFIERS

ABBREVIATION	DESCRIPTION
AMV	ADSORPTION MEDIA VESSEL
ARV	AIR RELEASE VALVE
BAV	BALL VALVE
BFV	BUTTERFLY VALVE
CKV	CHECK VALVE
F	FILTER
FE	FLOW ELEMENT
GAV	GATE VALVE
IQ	INJECTION QUIL
LE	LEVEL ELEMENT
RD	RUPTURE DISK
RP	RECYCLE PUMP
T	TANK

ORIGINALLY SIGNED AND SEALED BY
ARIZONA REGISTERED PROFESSIONAL ENGINEER (CIVIL)
BENJAMIN W. LEE
47662
ON 12/21/11

DESIGNED JAC
DRAWN DNV
REVIEWED BWL
APPROVED HM

MGC CONTRACTORS, INC.

WATERWORKS

ARIZONA WATER COMPANY
MONTEZUMA HAVEN WELLS NO. 2 AND NO. 3 ARSENIC REMOVAL FACILITY

GENERAL
STANDARD DESIGNATIONS

DATE DECEMBER 2011
PROJECT NUMBER 11-057
DRAWING NUMBER G-004
SHEET - OF -
SCALE: 1:C 0000187

REUSE OF DOCUMENTS THIS DOCUMENT, AND THE IDEAS AND DESIGNS INCORPORATED HEREIN, AS AN INSTRUMENT OF PROFESSIONAL SERVICE, IS THE PROPERTY OF WATER WORKS ENGINEERS, LLC AND IS NOT TO BE USED, IN WHOLE OR IN PART, FOR ANY OTHER PROJECT WITHOUT THE WRITTEN AUTHORIZATION OF WATER WORKS ENGINEERS, LLC.

FILENAME: S:\CADD\Projects\11-057 Sedona\DN Standards\Drawings\DN-standards(11-057)G-0004.dwg PLOT DATE: 3/5/2012 PLOT TIME: 3:57:30 PM

PIPE AND FITTING SYMBOLS

DOUBLE LINE	SINGLE LINE	
		EXISTING PIPE (SCREENED)
		NEW PIPE
		EXISTING PIPE TO BE ABANDONED
		EXISTING PIPE TO BE REMOVED
		BALL JOINT
		FLANGE COUPLING ADAPTER
		FLEXIBLE COUPLING
		FLEXIBLE COUPLING WITH THRUST TIES
		DISMANTLING JOINT
		STEEL BELLOWS EXPANSION JOINT
		ELASTOMER BELLOWS EXPANSION JOINT
		ELBOW - 90 DEGREE
		ELBOW UP - 90 DEGREE
		ELBOW DOWN - 90 DEGREE
		ELBOW - 45 DEGREE
		ELBOW UP - 45 DEGREE
		ELBOW DOWN - 45 DEGREE
		TEE
		TEE UP
		TEE DOWN
		CROSS
		LATERAL
		LATERAL UP
		LATERAL DOWN
		REDUCER - CONCENTRIC

PIPE AND FITTING SYMBOLS

DOUBLE LINE	SINGLE LINE	
		REDUCER - ECCENTRIC
		UNION
		BLIND FLANGE
		PLUG
		CAP

VALVE SYMBOLS

DOUBLE LINE	SINGLE LINE	
		GATE
K	K	KNIFE GATE
		BUTTERFLY
		GLOBE
		BALL
V	V	VEE BALL
		PLUG OR COCK
	SEAT PORT	ECCENTRIC PLUG WITH REQUIRED SEAT LOCATION
FP	FP	FULL PORT PLUG
		NEEDLE
		DIAPHRAGM
		FULL PORT PLUG
		SWING CHECK
		DOUBLE DISK OR SILENT CHECK
		BALL CHECK
	HB	HOSE VALVE
	X	NON FREEZE HOSE VALVE X=NUMBER IN SPECIFICATIONS
	X	NON FREEZE HOSE VALVE WITH HOSE RACK X=NUMBER IN SPECIFICATIONS
	SA	SAMPLE
		MUD
		PRESSURE RELIEF
		AIR AND OR VACUUM RELEASE
	REGULATED SIDE	PRESSURE CONTROL
		MULTI-PORT VALVE ARROWS INDICATE FLOW PATTERN. SEAT PORTS ARE IMPLIED BY INDICATED FLOW PATTERN. BALL VALVE SHOWN. FOR OTHER VALVE TYPES, APPROPRIATE VALVE SYMBOL SHOWN
		FIRE HYDRANT
		CATHODIC PROTECTION TEST STATION
		CATHODIC PROTECTION ANODE

FLOW METERS

DOUBLE LINE	SINGLE LINE	
		MAGMETER
		PROPELLER METER
		INSERTION METER

PUMPS

	METERING
	DIAPHRAGM
	CENTRIFUGAL
	PERISTALTIC

MIXERS

	STATIC MIXER

ACTUATORS

P	PNUEMATIC
M	MOTORIZED
S	SOLENOID

MISCELLANEOUS PIPING SYMBOLS

	STRAINER
	SIGHT GLASS
	FLEXIBLE (ELASTOMER) PIPE CONNECTION
	GAUGE WITH COCK
	THERMOMETER
	ROTAMETER
A	GALVANIC ANODE
XX	AIR SET XX = SUPPLY PRESSURE - PSIG
PS 26-1-2	TYPICAL INSTRUMENT SYMBOL (SEE I&C LEGEND)
	DRAIN
	DOUBLE CONTAINMENT PIPE
	RUPTURE DISK

INSTRUMENTATION SYMBOLS

SYMBOL	DESCRIPTION
PS	PRESSURE SWITCH
PSH	PRESSURE SWITCH HIGH
PI	PRESSURE INDICATOR
LSL	LOW LEVEL SWITCH
LSLL	LEVEL SWITCH LOW LOW
LSH	LEVEL SWITCH HIGH
LSHH	LEVEL SWITCH HIGH HIGH
DPI	DIFFERENTIAL PRESSURE INDICATOR
FS	FLOW SWITCH
FM	FLOW METER

PIPING DESIGNATION

DOUBLE LINE

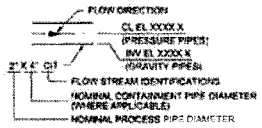

SINGLE LINE

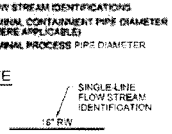

VALVE DESIGNATIONS

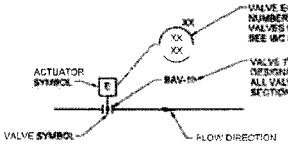

NOTES

1 ELECTRIC VALVE SHOWN, MANUAL VALVE SIMILAR

NOTES

1 ONLY FLANGED END CONNECTIONS ARE SHOWN HERE FOR DOUBLE LINE FITTINGS. FITTINGS WITH OTHER END PATTERNS ARE SHOWN SIMILARLY ON THE CONSTRUCTION DRAWINGS. ALSO SEE PIPING SPECIFICATIONS AND THE PIPING SCHEDULE.

2 SYMBOLS SHOWN HERE FOR SINGLE LINE FITTINGS ARE GENERIC ONLY. REFER TO PIPING SPECIFICATIONS FOR SPECIFIC END CONNECTIONS FOR SINGLE LINE PIPE AND FITTINGS.

ORIGINALLY SIGNED AND SEALED BY

ARIZONA REGISTERED PROFESSIONAL ENGINEER (CIVIL)

BENJAMIN W. LEE
47662
ON 12/21/11

WATERWORKS ENGINEERS

ARIZONA WATER COMPANY
MONTEZUMA HAVEN WELLS NOS. 2 AND 3 ASBESTOS REMOVAL PROJECT

GENERAL

LEGEND

DECEMBER 2011

11-087

G-005

SHEET - OF -

REUSE OF DOCUMENTS: THIS DOCUMENT, AND THE IDEAS AND DESIGNS INCORPORATED HEREIN, AS AN INSTRUMENT OF PROFESSIONAL SERVICE, IS THE PROPERTY OF WATER WORKS ENGINEERS, LLC AND IS NOT TO BE USED, IN WHOLE OR IN PART, FOR ANY OTHER PROJECT WITHOUT THE WRITTEN AUTHORIZATION OF WATER WORKS ENGINEERS, LLC.

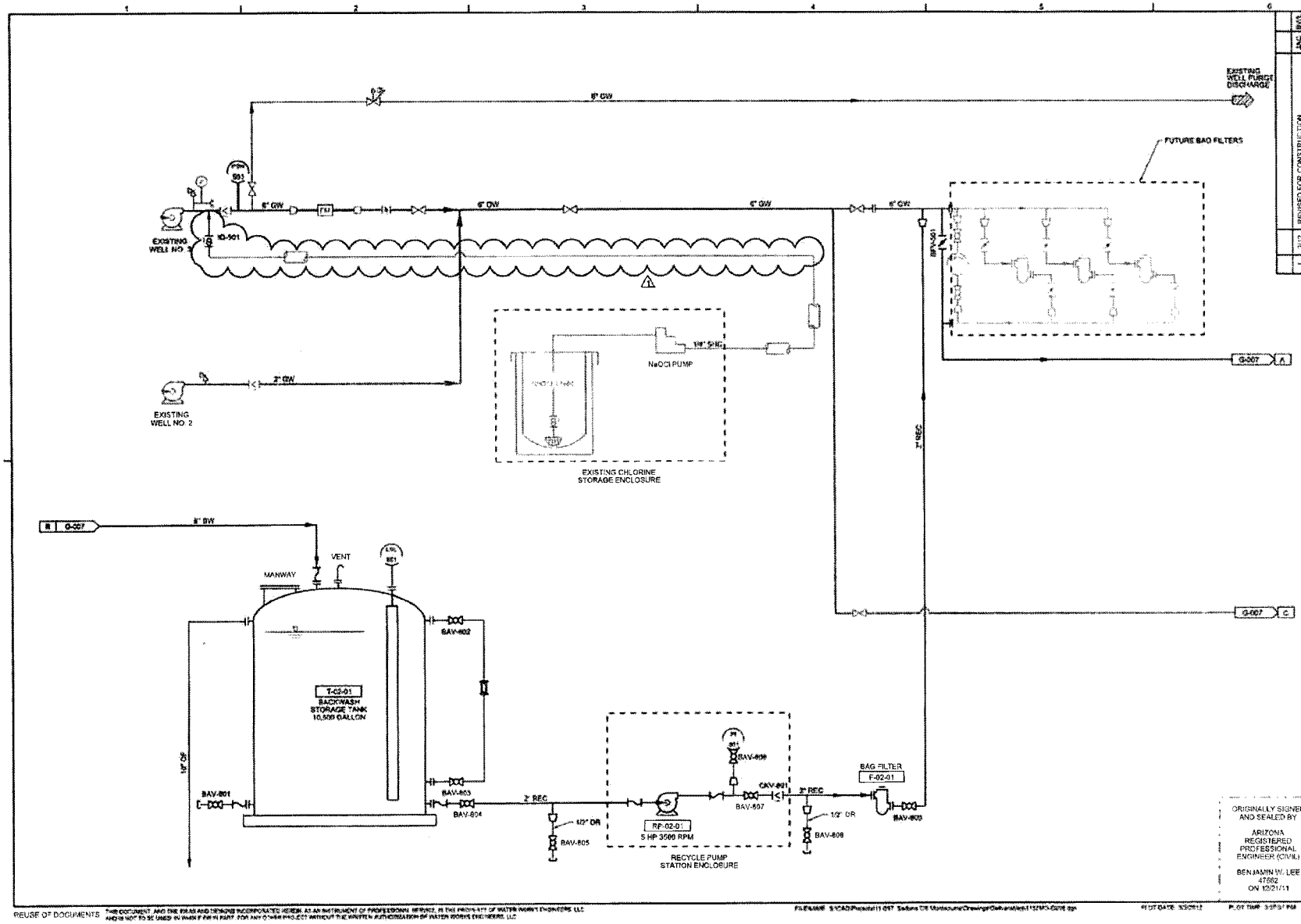

REUSE OF DOCUMENTS: THIS DOCUMENT, AND THE IDEAS AND DESIGNS INCORPORATED HEREIN, AS AN INSTRUMENT OF PROFESSIONAL SERVICE, IS THE PROPERTY OF WATER WORKS ENGINEERS, LLC AND IS NOT TO BE USED IN WHOLE OR IN PART, FOR ANY OTHER PROJECT WITHOUT THE WRITTEN AUTHORIZATION OF WATER WORKS ENGINEERS, LLC.

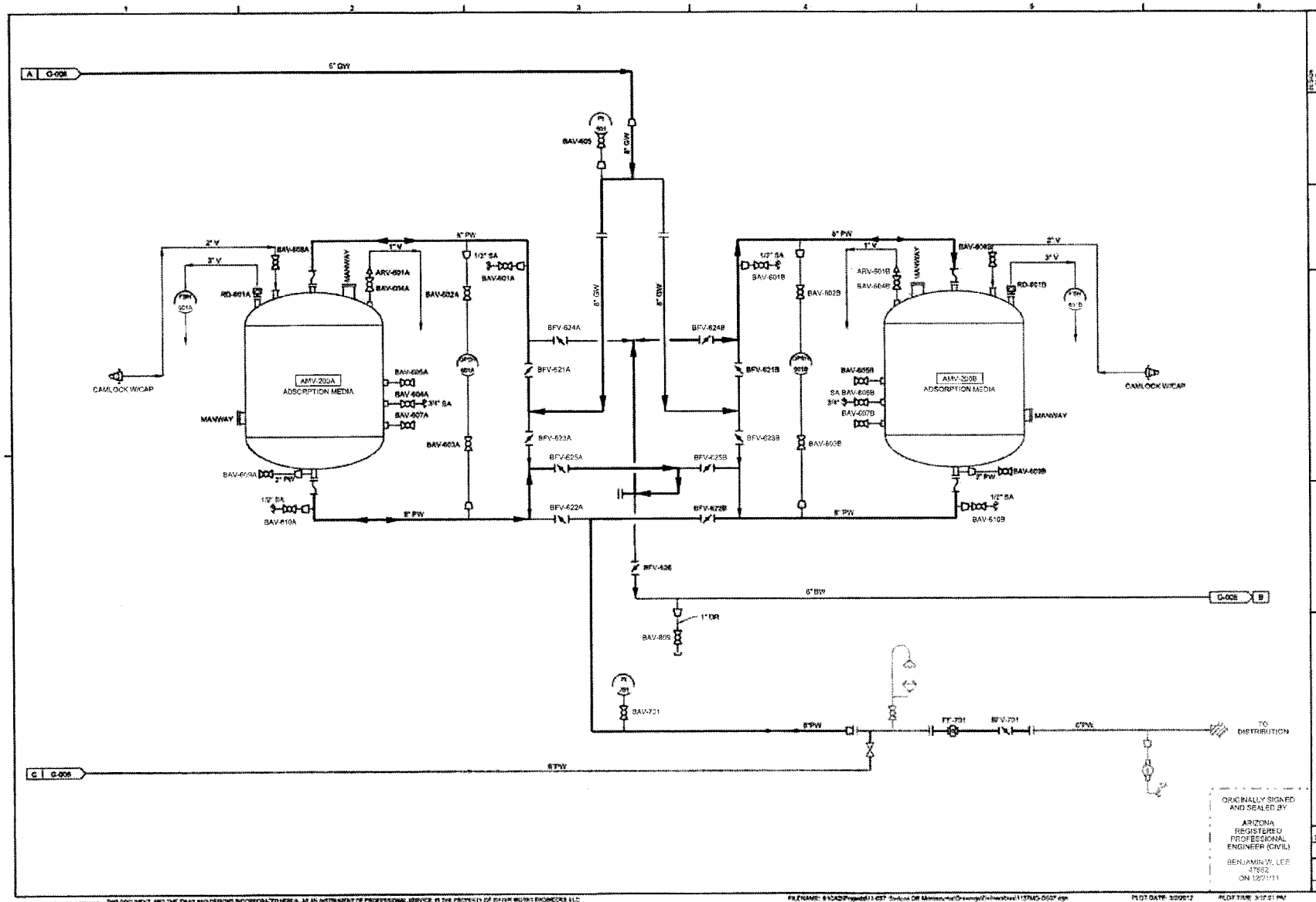

ORIGINALLY SIGNED AND SEALED BY

ARIZONA REGISTERED PROFESSIONAL ENGINEER (CIVIL)

BENJAMIN W. LEE
17662
ON 12/7/11

WGC
WGC CONTRACTORS INC

WATERWORKS
ENGINEERS

ARIZONA WATER COMPANY
MONTEZUMA HAVEN
WELLS NO. 2 AND NO. 3
ARSENIC REMOVAL FACILITY

GENERAL

PROCESS FLOW DIAGRAM 2

DATE
DECEMBER 2011
PROJECT NUMBER
11-057
DRAWING NUMBER
G-007
Sheet 1 - OF -

REUSE OF DOCUMENTS: THIS DOCUMENT, AND THE IDEAS AND DESIGNS INCORPORATED HEREIN, AS AN INSTRUMENT OF PROFESSIONAL SERVICE, IS THE PROPERTY OF WATER WORKS ENGINEERS LLC AND IS NOT TO BE USED, IN WHOLE OR IN PART, FOR ANY OTHER PROJECT WITHOUT THE WRITTEN AUTHORIZATION OF WATER WORKS ENGINEERS, LLC.

FILENAME: 6:\CAD\Projects\11-057 Tortolita DR Mitigation\Drawings\Fabrication\11TMO-0007.dgn PLOT DATE: 3/20/12 PLOT TIME: 3:37:21 PM SCALE: 1 IS 1000

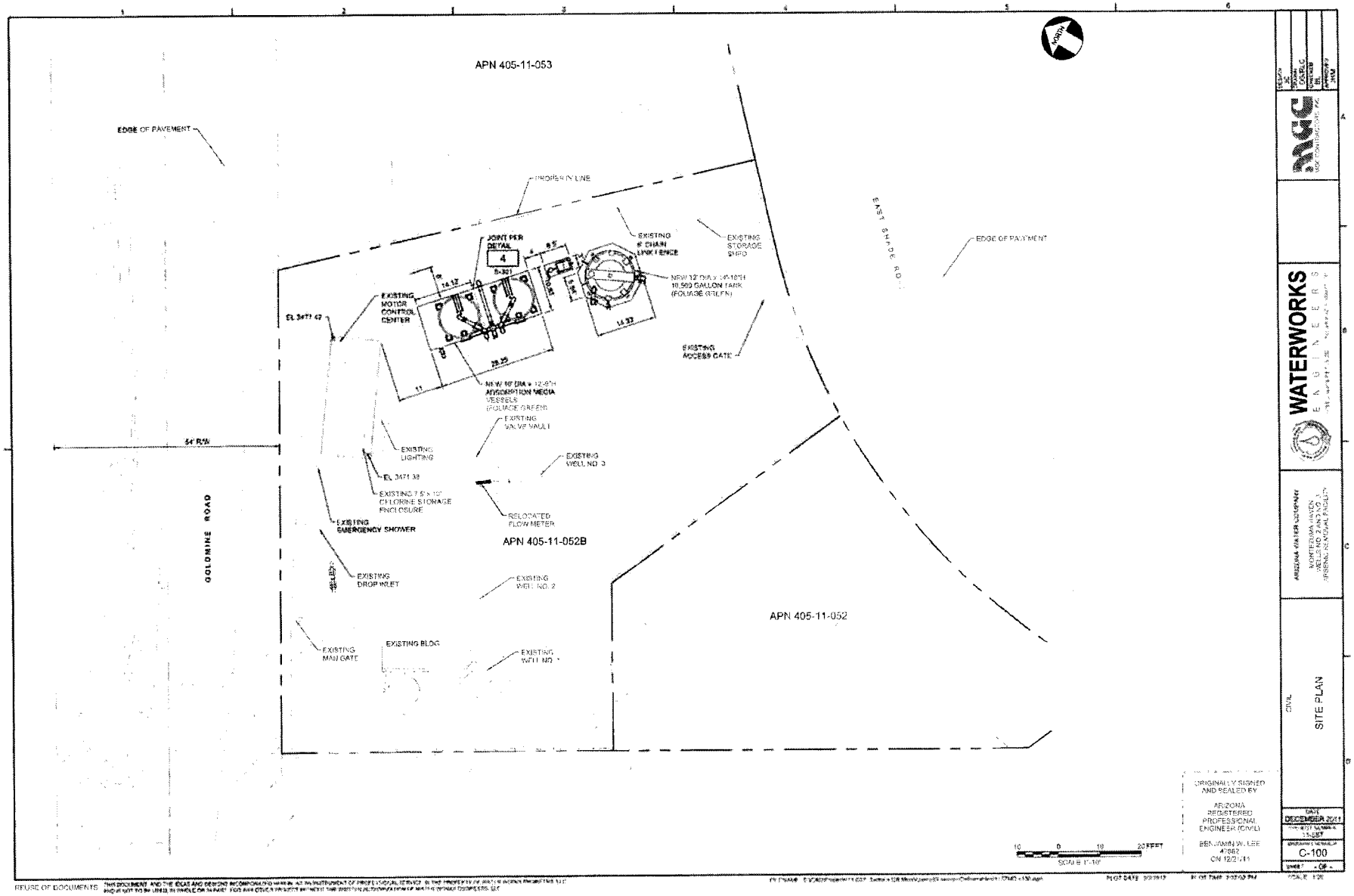

ORIGINALLY SIGNED AND SEALED BY

ARIZONA REGISTERED PROFESSIONAL ENGINEER (CIVIL)

BENJAMIN W. LEE
47862
ON 12/21/11

MGC
MGC CONTRACTORS, INC.

WATERWORKS
ENGINEERS

ARIZONA WATER COMPANY
MONTEZUMA HAVEN
WELLS NO. 2 AND NO. 3
ARSENIC REMOVAL FACILITY

CIVIL

SITE PLAN

DATE
DECEMBER 2011

15-DET

C-100

SHEET - OF -

SCALE 1:20

REUSE OF DOCUMENTS

DESIGN CRITERIA:

1 APPLICABLE CODE: 2006 INTERNATIONAL BUILDING CODE (IBC)

2 REFER TO THE SPECIFICATIONS FOR ADDITIONAL AND SPECIFIC STRUCTURE LOADINGS AND REQUIREMENTS.

GENERAL INFORMATION:

1. ALL CONSTRUCTION SHALL CONFORM TO THE LATEST EDITION OF THE IBC

2 FOR ABBREVIATIONS NOT LISTED, SEE ASME Y14.38 "ABBREVIATIONS AND ACRONYMS" PUBLICATION AS DISTRIBUTED BY THE AMERICAN SOCIETY OF MECHANICAL ENGINEERS (ASME)

3 DESIGN DETAILS ARE INTENDED TO BE TYPICAL AND SHALL APPLY TO ALL SIMILAR SITUATIONS OCCURRING THROUGHOUT THE PROJECT, WHETHER OR NOT THEY ARE KEYED IN EACH LOCATION. CONSULT THE ENGINEER FOR REVIEW PRIOR TO CONSTRUCTION.

4 VERIFY ALL OPENING DIMENSIONS IN WALLS, SLABS, AND DECKS WITH THE ARCHITECTURAL, MECHANICAL, HVAC AND ELECTRICAL DRAWINGS.

5 **FOR NUMBER, TYPE, SIZE ARRANGEMENT, AND/OR LOCATION OF EQUIPMENT PADS** SEE **ARCHITECTURAL, MECHANICAL, ELECTRICAL, HVAC AND PLUMBING DRAWINGS. COORDINATE WITH EQUIPMENT SUPPLIER PRIOR TO PLACING SLABS, WALLS AND FOUNDATIONS. COORDINATE ALL MECHANICAL, ELECTRICAL, AND HVAC PIPING OP**ENINGS WITH MECHANICAL, ELECTRICAL AND HVAC DRAWINGS

6. NO STRUCTURAL MEMBERS SHALL BE CUT FOR PIPES, DUCTS, ETC UNLESS SPECIFICALLY DETAILED OR APPROVED IN WRITING BY THE ENGINEER

7. SPECIAL INSPECTION IS REQUIRED IN ACCORDANCE WITH IBC SECTION 106.4 AND CHAPTER 17 ON THE FOLLOWING PORTIONS OF THE WORKS:
CONCRETE PLACEMENT, REINFORCING STEEL PLACMENT, EMBEDS AND BOLTS INSTALLED IN CONCRETE, POST INSTALLED ADHESIVE ANCHORS.

FOUNDATIONS

1. IN ACCORDANCE WITH THE CITY OF SEDONA THE FOUNDATIONS HAVE BEEN DESIGNED FOR ALLOWABLE BEARING VALUES OF 1,500 PSF.

2. FOOTINGS SHALL EXTEND 1'-6" INTO FIRM, UNDISTURBED, NATURAL SOIL.

3. NO BACKFILL SHALL BE PLACED BEHIND WALLS UNTIL THE CONCRETE HAS ATTAINED 100% OF ITS SPECIFIED COMPRESSIVE STRENGTH

4. THE CONTRACTOR SHALL PROVIDE THE ENGINEER AT LEAST 48 HOURS NOTICE FOLLOWING EXCAVATION FOR FOUNDATIONS AND PRIOR TO THE PLACEMENT OF FORMWORK, REINFORCING STEEL AND CONCRETE

EPOXY ANCHORS

1. EPOXY ANCHORS AND EPOXY DOWELS SHALL BE HILTI HIT-RE 500-SD UNLESS NOTED OTHERWISE. INSTALL ANCHORS IN CONFORMANCE WITH THE MANUFACTURER'S REQUIREMENTS AND ICC REPORT ESR-2322.

2. SPECIAL INSPECTION IS REQUIRED PER IBC SECTION 1704 AND THE REQUIREMENTS OF THE ICC REPORT.

3 THREADED RODS TO BE GALVANIZED ASTM F1554 GRADE 36. REBAR TO BE ASTM A615

4. CONTRACTOR SHALL VERIFY MINIMUM EDGE DISTANCES, SPACING AND THICKNESSES ARE IN ACCORDANCE WITH THE MANUFACTURER'S REQUIREMENTS PRIOR TO INSTALLING ANCHORS.

5 WHEN DRILLING HOLES IN EXISTING CONCRETE, USE CARE AND CAUTION TO AVOID CUTTING OR DAMAGING THE EXISTING REINFORCING BARS. MAINTAIN A REASONABLE CLEARANCE BETWEEN REINFORCEMENT AND THE DRILLED-IN ANCHOR. CORE DRILLED HOLES ARE NOT PROMITTED

6. THE SPECIAL INSPECTOR MUST BE PRESENT ON THE JOB SITE CONTINUOUSLY DURING ANCHOR INSTALLATION TO VERIFY ANCHOR TYPE, ANCHOR DIMENSIONS, HOLE CLEANLINESS, EMBEDMENT DEPTH, CONCRETE TYPE, CONCRETE COMPRESSIVE STRENGTH, DRILL BIT DIAMETER, HOLE DEPTH, EDGE DISTANCE, ANCHOR SPACING, CONCRETE THICKNESS, AND ADHESIVE INJECTION.

CONCRETE:

1. CONCRETE SHALL HAVE A MINIMUM COMPRESSIVE STRENGTH AT 28 DAYS OF 4,000 psi AS SPECIFIED IN SECTION 03300,

2. THE CONTRACTOR SHALL SUBMIT THE CONCRETE MIX DESIGNS TO THE ENGINEER FOR REVIEW PRIOR TO USE.

3 THE CONTRACTOR SHALL NOTIFY THE ENGINEER 48 HOURS PRIOR TO THE PLACEMENT OF CONCRETE.

4 HORIZONTAL CONSTRUCTION JOINTS SHALL BE PREPARED TO EXPOSE CLEAN, SOLIDLY EMBEDDED AGGREGATE OVER THE ENTIRE JOINT INTERFACE

5. PLACEMENT OF PIPES, CONDUITS OR OTHER EMBEDDED ITEMS IN THE CONCRETE SHALL BE IN ACCORDANCE WITH THESE DRAWINGS OR SHALL BE APPROVED BY THE ENGINEER.

6 NO ALUMINUM CONDUIT OR PRODUCTS CONTAINING ALUMINUM OR ANY OTHER MATERIAL INJURIOUS TO CONCRETE SHALL BE EMBEDDED IN THE CONCRETE

7. ALL DIMENSIONS SHOWN FOR LOCATION OF REINFORCING STEEL ARE TO FACE OF BAR AND DENOTE CLEAR COVERAGE. SLABS ON GRADE SHALL HAVE REINFORCING AT MID-DEPTH UNLESS NOTED OTHERWISE.

8. CONCRETE SHALL BE MIXED AND DELIVERED IN ACCORDANCE WITH ASTM C94.

9. THE REQUIREMENTS FOR CONCRETE MIXES, PLACING, TESTING AND CURING ARE CONTAINED IN IBC SECTIONS 1905 - 1906

10. PORTLAND CEMENT SHALL CONFORM TO ASTM C150 TYPE II, AGGREGATE SHALL CONFORM **TO ASTM C33.**

11 CONTINUOUS WATERSTOP AS SPECIFIED SHALL BE INSTALLED IN ALL CONSTRUCTION JOINTS IN WALLS OF WATER HOLING BASINS, CHANNELS, AND BELOW GRADE STRUCTURES EXCEPT WHERE SPECIFICALLY NOTED OTHERWISE

CONCRETE REINFORCING

1. PROVIDE REINFORCING IN ALL SECTIONS OF CONCRETE. AS **REQUIRED BY THE DETAILS ON THE** DRAWINGS OR BY THE SPECIFICATIONS. IF REINFORCEMENT **IS NOT SPECIFIED** IN DRAWINGS OR SPECIFICATIONS, MINIMUM REQUIREMENTS SHALL BE MET AS NOTED BELOW

2 CLEARANCE FOR REINFORCEMENT BARS, UNLESS SHOWN OTHERWISE, SHALL BE: CAST AGAINST EARTH = 3", ALL OTHER CONCRETE SURFACES. #5 BAR OR SMALLER = 1 1/2", #6 BAR OR LARGER = 2".

3 ALL BENDS, UNLESS OTHERWISE SHOWN, SHALL BE 90 DEGREE ACI 318 STANDARD HOOKS

4 PROVIDE A MINIMUM OF TWO VERTICAL DOWELS AT WALL ENDS, CORNERS AND INTERSECTIONS WITH SIZE TO MATCH TYPICAL VERTICAL REINFORCING STEEL SHOWN

5. ALL REINFORCING BENDS AND LAPS, UNLESS OTHERWISE NOTED, SHALL SATISFY THE FOLLOWING MINIMUM REQUIREMENTS;

CONCRETE DESIGN **STRENGTH = 4,000 PSI**		**GRADE 60 REINF STEEL**				
LAP SPLICE LENGTH						
BAR SIZE		#3	#4	#5	#6	#7
SPACING ≥ 6"	**TOP BAR ✱**	24"	32"	40"	48"	70"
	OTHER BAR	19"	25"	31"	37"	54"

✱ TOP BARS SHALL BE DEFINED AS ANY HORIZONTAL BARS PLACED SUCH THAT MORE THAN 12" OF CONCRETE IS CAST IN THE MEMBER BELOW THE BAR IN ANY SINGLE POUR. HORIZONTAL WALL BARS ARE CONSIDERED TOP BARS

STRUCTURAL ABBREVIATIONS

AB	ANCHOR BOLT
ACI	AMERICAN CONCRETE INSTITUTE
ADDL	ADDITIONAL
AFF	ABOVE FINISH FLOOR
AISC	AMERICAN INSTITUTE OF STEEL CONSTRUCTION
AL	ALUMINUM
ALT	ALTERNATE
ANC	ANCHOR
ANSI	AMERICAN NATIONAL STANDARDS INSTITUTE
APVD	APPROVED
ARCH	ARCHITECT, ARCHITECTURAL
BC	BOTTOM CHORD
BLK	BLOCK
BOC	BOTTOM OF CONCRETE
BOS	BOTTOM OF STEEL
BOT	BOTTOM, BOTTOM OF TRENCH
BM	BEAM
BRG	BEARING
BTWN	BETWEEN
C	CAMBER
CC	CENTER TO CENTER
CHKD	CHECKERED
CIP	CAST IN PLACE
CJ	CONSTRUCTION JOINT
CL	CENTERLINE
CLG	CEILING
CLR	CLEARANCE
CO	CLEANOUT
COL	COLUMN
CONC	CONCRETE
CONN	CONNECTION
CONT	CONTINUOUS
CP	COMPLETE PENETRATION
CTR	CENTER
DBA	DEFORMED BAR ANCHOR
DBL	DOUBLE
DIA, Ø	DIAMETER
DWG	DRAWING
EA	EACH
ECS	EPOXY COATED STEEL
EE	EACH END
EF	EACH FACE
EL, ELEV	ELEVATION
EMBED	EMBEDMENT
EN	EDGE NAIL
EQ, EQL SP	EQUALLY SPACED
ES	EACH SIDE
EW	EACH WAY
EXP	EXPANSION
EXIST, (E)	EXISTING
FD	FLOOR DRAIN
FDN	FOUNDATION
FIN	FINISH
FF	FINISHED FLOOR
FLG	FLANGE
FLR	FLOOR
FOB	FACE OF BLOCK
FOC	FACE OF CONCRETE
FOS	FACE OF STUD / STEEL
FP	FULL PENETRATION
FRMG	FRAMING
FRP	FIBER REINFORCED PLASTIC
FS	FAR SIDE
FTG	FOOTING
GA	GAUGE, GAGE
GALV	GALVANIZED
GLB	GLULAM BEAM
GRD	GRADE
GRT	GROUT
GRTG	GRATING
H	HIGH
H.A.S.	HEADED ANCHOR STUD
HCA	HEADED CONCRETE ANCHOR
HD	HOLDOWN
HORIZ	HORIZONTAL
HSB	HIGH STRENGTH BOLT
IF	INSIDE FACE

IN	INCHES
JT	JOINT
L	LOW / ANGLE
LONG	LONGITUDINAL
LLH	LONG LEG HORIZONTAL
LLV	LONG LEG VERTICAL
LSH	LONG SLOTTED HOLE
MFR	MANUFACTURER
MAX	MAXIMUM
MB	MACHINE BOLT
MECH	MECHANICAL
MIN	MINIMUM
MTL	METAL
NDT	NON-DESTRUCTIVE TESTING
NIC	NOT IN CONTRACT
NS	NEAR SIDE
NTS	NOT TO SCALE
OC	ON CENTER
OD	OUTSIDE DIAMETER
OF	OUTSIDE FACE
O/O	OUT TO OUT
OPNG	OPENING
OPP	OPPOSITE
OSH	OVERSIZED HOLE
OWJ	OPEN WEB JOIST
PC	PRECAST
PLCS	PLACES
PJF	PREMOLDED JOINT FILLER
PL	PLATE
PLYWD	PLYWOOD
PP	PARTIAL PENETRATION
PROJ	PROJECTION
PT	PRESSURE TREATED
PVC	POLYVINYL CHLORIDE
REINF	REINFORCE, REINFORCING
REQD	REQUIRED
RTN	RETURN
SHT	SHEET
SIB	STRUCTURAL ISOLATION BREAK
SIM	SIMILAR
SJ	SAWN JOINT
SLV	SHORT LEG VERTICAL
SPCG, SPA	SPACING
SPCS	SPACES
SPECS	SPECIFICATIONS
SQ	SQUARE
SS	STAINLESS STEEL
SSH	SHORT SLOTTED HOLE
STD	STANDARD
STIFF	STIFFENER
STL	STEEL
STSMS	SELF-TAPPING SHEET METAL SCREW
SW	STUD WELD
SYM	SYMMETRICAL
T&B	TOP & BOTTOM
TC	TOP CHORD
TD	TRUSS DIAGONAL
THK	THICK
TN	TOE NAIL
TO	TOP OF
TOC	TOP OF CONCRETE
TOF	TOP OF FOOTING
TOG	TOP OF GRATING
TOS	TOP OF STEEL
TOT	TOTAL
TOW	TOP OF WALL
TRANS	TRANSVERSE
TV	TRUSS VERTICAL
TYP	TYPICAL
UN	UNLESS NOTED
UT	ULTRASONIC TESTING
VERT	VERTICAL
W	WIDE
W/	WITH
W/O	WITH OUT
WP	WORK POINT
WS	WATERSTOP
WWF	WELDED WIRE FABRIC

ORIGINALLY SIGNED AND SEALED BY
ARIZONA REGISTERED PROFESSIONAL ENGINEER (CIVIL)
JEREMY A KELLOGG
51695
ON 12/21/11

MGC CONTRACTORS INC

WATERWORKS ENGINEERS

ARIZONA WATER COMPANY
MONTEZUMA HAVEN WELLS NO. 2 AND NO. 3 ARSENIC REMOVAL FACILITY

STRUCTURAL
NOTES AND ABBREVIATIONS

DATE: DECEMBER 2011
PROJECT NUMBER: 11-057
DRAWING NUMBER: S-001

REUSE OF DOCUMENTS: THIS DOCUMENT, AND THE IDEAS AND DESIGNS INCORPORATED HEREIN, AS AN INSTRUMENT OF PROFESSIONAL SERVICE, IS THE PROPERTY OF WATERWORKS ENGINEERS LLC AND IS NOT TO BE USED, IN WHOLE OR IN PART, FOR ANY OTHER PROJECT WITHOUT THE WRITTEN AUTHORIZATION OF WATERWORKS ENGINEERS LLC.

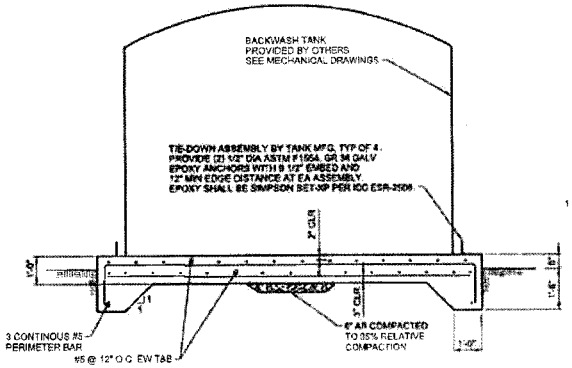

1 BACKWASH TANK SLAB
M-201 NTS

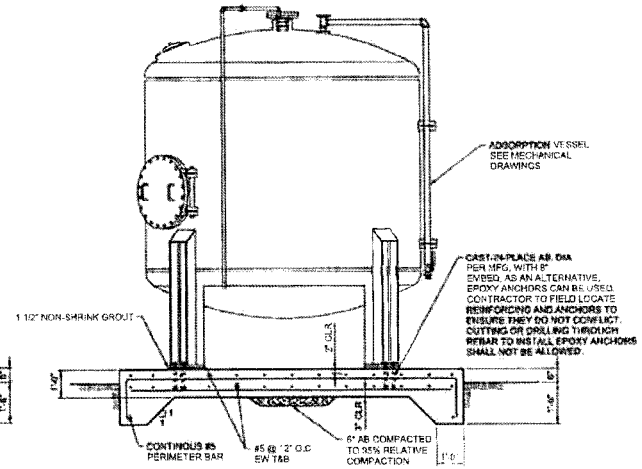

2 ADSORPTION VESSEL SLAB
M-201 NTS

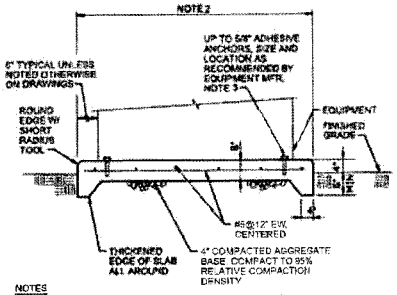

NOTES

1. THE SIZE, NUMBER, TYPE, LOCATION, AND THREAD PROJECTION OF THE ANCHOR BOLTS SHALL BE DETERMINED BY THE EQUIPMENT MANUFACTURER, AND SHALL BE AS APPROVED BY THE ENGINEER. ANCHOR BOLTS SHALL BE HELD IN POSITION WITH A ONE PIECE TEMPLATE, MATCHING THE BASE PLATE. WHILE PAD IS BEING FOURED
2. EQUIPMENT PAD SIZE PER DRAWINGS. WHERE PAD SIZE IS NOT SHOWN, SIZE TO FIT EQUIPMENT.
3. IF ANCHOR BOLTS ARE CALLED OUT FOR ON DRAWINGS, PROVIDE ANCHOR BOLTS PER DTL THIS SHEET IN LIEU OF ADHESIVE ANCHORS.
4. ANCHOR BOLT LOCATION SHALL BE WITH IN 4-INCH OF THE FINAL LOCATION REQUIRED FOR EQUIPMENT MOUNTING OR EQUIPMENT PAD SHALL BE DEMOLISHED AND RE-CONSTRUCTED.
5. EQUIPMENT BASES SHALL BE INSTALLED LEVEL UNLESS SPECIFIED OTHERWISE

3 TYPICAL EQUIPMENT SLAB
TYP NTS

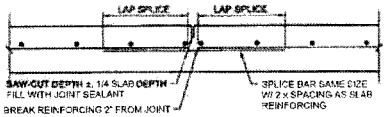

NOTES

1. SAW-CUT SAME DAY AS POUR AS SOON AS SPALLING WILL NOT OCCUR
2. CONTRACTOR SHALL USE STRING LINE OR OTHER POSITIVE MEANS TO PLACE REINFORCING AND LOCATE SAWCUT
3. BREAK REINF AND ADD SPLICE BARS SIMILAR AT DOUBLE MAT

4 SLAB ON GRADE JOINT-TYPE A
M-201 NTS

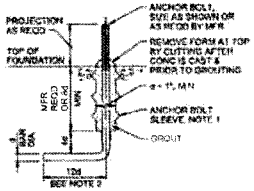

MACHINERY ANCHOR BOLT DETAIL

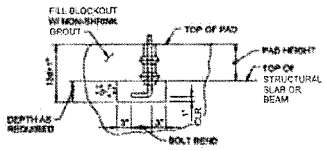

ANCHOR BOLT BLOCKOUT

NOTES

1. ANCHOR BOLT SLEEVE BY THE ANCHOR BOLT SLEEVE COMPANY, SHELTON, CT, OR EQUAL
2. 36 WHERE MANUFACTURER VERIFIES NO BOLT PULLOUT RESISTANCE REQUIRED

ANCHOR BOLT DETAILS
NTS

ORIGINALLY SIGNED
AND SEALED BY

ARIZONA
REGISTERED
PROFESSIONAL
ENGINEER (CIVIL)

JEREMY A KELLOGG
51995
ON 12/21/11

REUSE OF DOCUMENTS: THIS DOCUMENT, AND THE IDEAS AND DESIGNS INCORPORATED HEREIN, AS AN INSTRUMENT OF PROFESSIONAL SERVICE, IS THE PROPERTY OF WATER WORKS ENGINEERS, LLC AND IS NOT TO BE USED, IN WHOLE OR IN PART, FOR ANY OTHER PROJECT WITHOUT THE WRITTEN AUTHORIZATION OF WATER WORKS ENGINEERS, LLC

FILENAME: S:\ACAD\Projects\11-057 Sedona OR Montezuma\Drawings\Deliverables\11-057-S-301.dwg PLOT DATE: 12/20/12 PLOT TIME: 3:07:03 PM

ARIZONA
AZ
DRAWN
CHECKED
CHECKED
SEAL
APPROVED
APPROVED

MGC
MGC CONTRACTORS, INC.

WATERWORKS
ENGINEERS

ARIZONA WATER COMPANY
MONTEZUMA HAVEN
WELLS NO 2 AND NO 3
ARSENIC REMOVAL FACILITY

STRUCTURAL
DETAILS

DATE
DECEMBER 2011
PROJECT NUMBER
11-057
DRAWING NUMBER
S-301
SHEET -OF-
SCALE 1=4

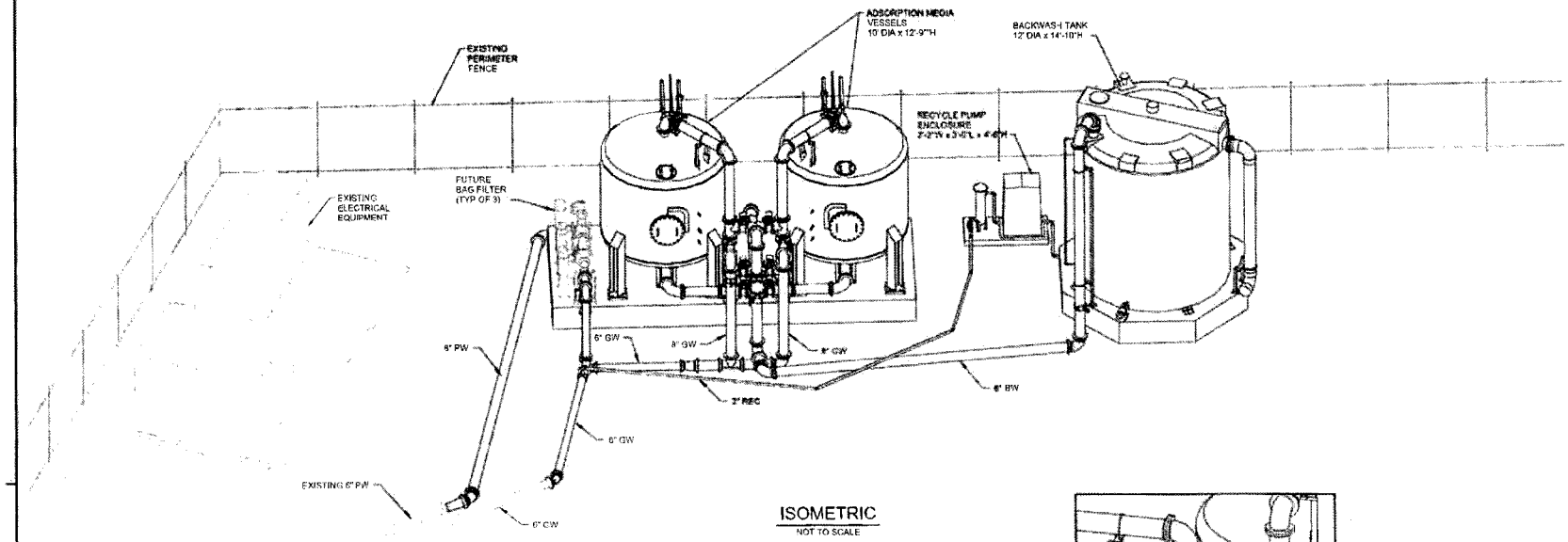

ISOMETRIC
NOT TO SCALE

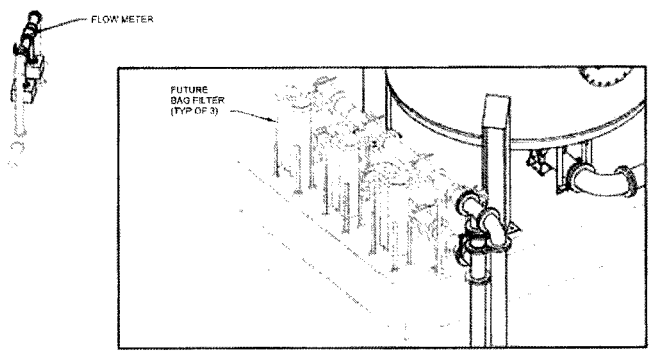

BAG FILTER ISOMETRIC
NOT TO SCALE

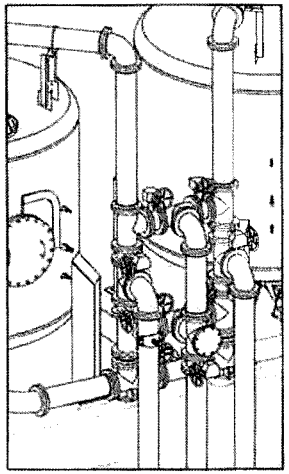

VALVE TREE ISOMETRIC
NOT TO SCALE

ORIGINALLY SIGNED AND SEALED BY
ARIZONA REGISTERED PROFESSIONAL ENGINEER (CIVIL)
BENJAMIN W. LEE
47662
ON 12/21/11

MGC CONTRACTORS, INC.

WATERWORKS ENGINEERS

ARIZONA WATER COMPANY
NEON / LOMA HAVEN
WELL SITE UPGRADES
ARSENIC REMOVAL FACILITY

MECHANICAL
ISOMETRIC

DATE DECEMBER 2011
PROJECT NUMBER 11-057
DRAWING NUMBER M-001
SHEET - OF -

REUSE OF DOCUMENTS: THIS DOCUMENT, AND THE IDEAS AND DESIGNS INCORPORATED HEREIN, AS AN INSTRUMENT OF PROFESSIONAL SERVICE, IS THE PROPERTY OF WATER WORKS ENGINEERS LLC AND IS NOT TO BE USED, IN WHOLE OR IN PART, FOR ANY OTHER PROJECT WITHOUT THE WRITTEN AUTHORIZATION OF WATER WORKS ENGINEERS LLC

FILENAME: ESCADPlanets11-057 Backup DB Microsoft Drawings Saf-w-sides (11-057M0-M001.dgn
PLOT DATE: 3/2/2012 PLOT TIME: 3:57:54 PM SCALE: 1:1

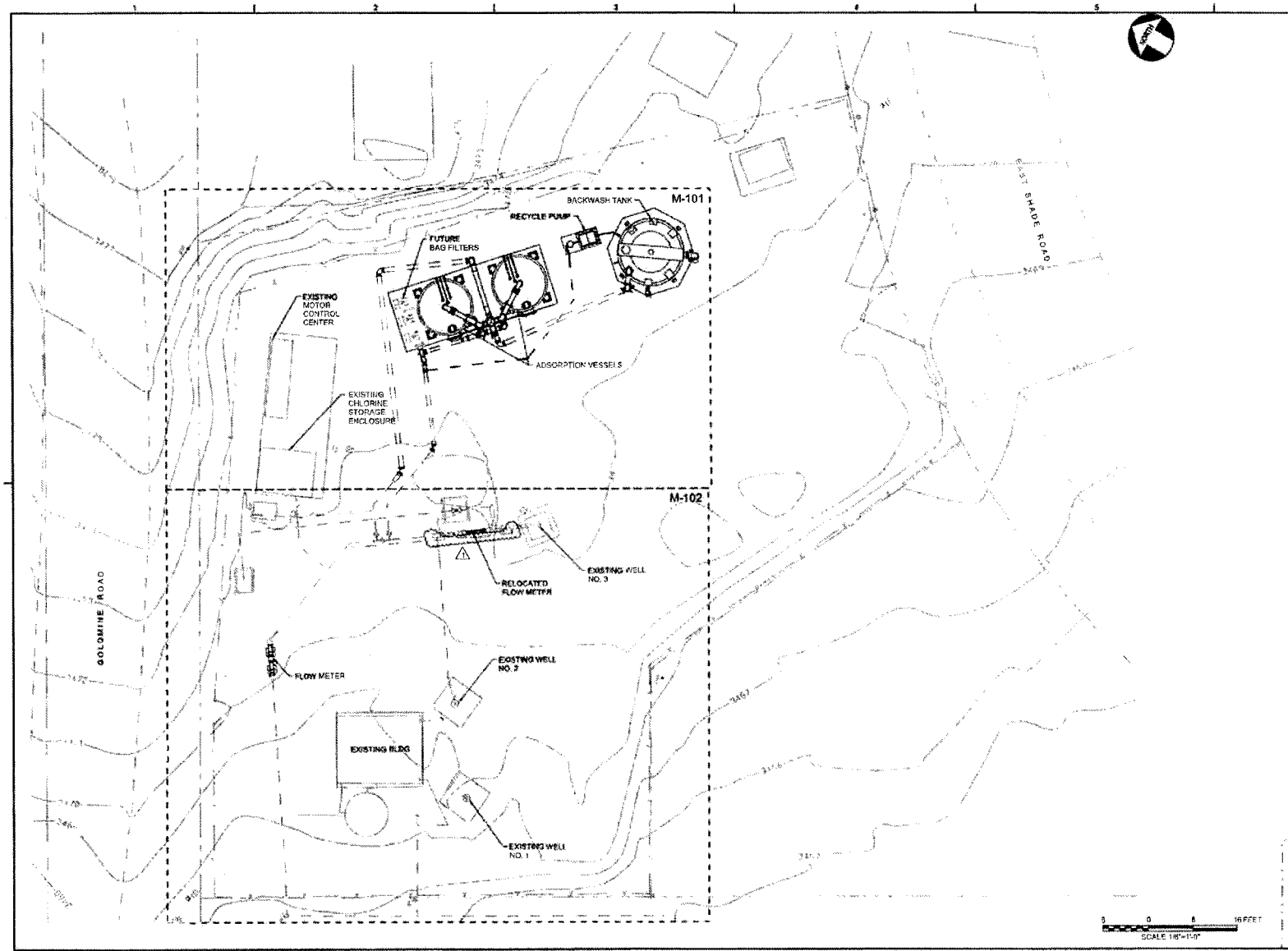

ORIGINALLY SIGNED AND SEALED BY

ARIZONA REGISTERED PROFESSIONAL ENGINEER (CIVIL)

BENJAMIN W. LEE
47862
ON 12/21/11

NO.	DATE	REVISION	BY	APP'D
1	3/12	REVISED FOR CONSTRUCTION	JAC	BWL

MGC CONTRACTORS, INC.

WATERWORKS ENGINEERS

ARIZONA WATER COMPANY
MONTEZUMA HAVEN
WELLS NO. 2 AND NO. 3
ARSENIC REMOVAL FACILITY

MECHANICAL

SITE PLAN

DATE: DECEMBER 2011

PROJECT NUMBER: 11-057

DRAWING NUMBER: M-100

SHEET: - OF -

SCALE: 1:16

REUSE OF DOCUMENTS: THIS DOCUMENT, AND THE IDEAS AND DESIGNS INCORPORATED HEREIN, AS AN INSTRUMENT OF PROFESSIONAL SERVICE, IS THE PROPERTY OF WATER WORKS ENGINEERS LLC AND IS NOT TO BE USED, IN WHOLE OR IN PART, FOR ANY OTHER PROJECT WITHOUT THE WRITTEN AUTHORIZATION OF WATER WORKS ENGINEERS, LLC.

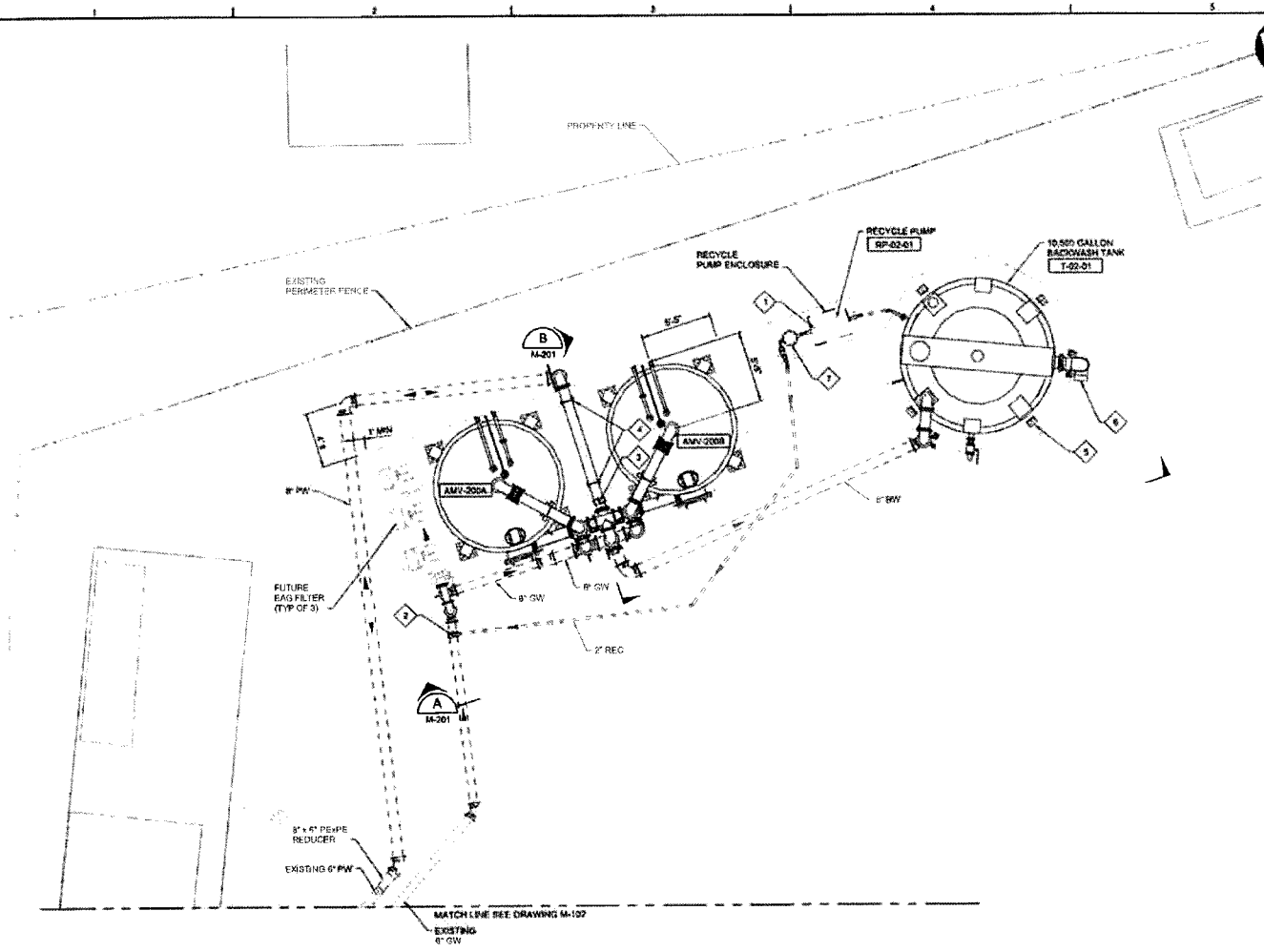

NOTES

1. PIPE SUPPORTS PER DETAIL 9 ON M-301.
2. SERVICE SADDLE CONNECTIONS PER DETAIL 4 ON M-301.
3. PRESSURE GAUGE MOUNTING PER DETAIL 5 ON M-301.
4. PIPE SUPPORT PER DETAIL 12 ON M-302
5. INSTALL TIE DOWNS PER MANUFACTURERS INSTRUCTIONS
6. INSTALL #10 STAINLESS STEEL MESH
7. INSTALL BAG FILTER, FSI FILTERS MODEL BFN11 OR EQUAL, WITH 2" FLANGED INLET/OUTLET, #2 BAG SIZE

4 0 4 8 FEET
SCALE 1/4"=1'-0"

ORIGINALLY SIGNED AND SEALED BY
ARIZONA REGISTERED PROFESSIONAL ENGINEER (CIVIL)
BENJAMIN W. LEE
47662
ON 12/21/11

MGC CONTRACTORS, INC.

WATERWORKS ENGINEERS

ARIZONA WATER COMPANY
MONTEZUMA HAVEN
WELLS NO. 2 AND NO. 3
ARSENIC REMOVAL FACILITY

MECHANICAL
PARTIAL PLAN 1

DATE: DECEMBER 2011
PROJECT NUMBER: 11-057
DRAWING NUMBER: M-101
SHEET - OF -
SCALE: 1:4

REUSE OF DOCUMENTS: THIS DOCUMENT, AND THE IDEAS AND DESIGNS INCORPORATED HEREIN, AS AN INSTRUMENT OF PROFESSIONAL SERVICE, IS THE PROPERTY OF WATER WORKS ENGINEERS LLC AND IS NOT TO BE USED, WITHOUT OR IN PART, FOR ANY OTHER PROJECT WITHOUT THE WRITTEN AUTHORIZATION OF WATER WORKS ENGINEERS, LLC.

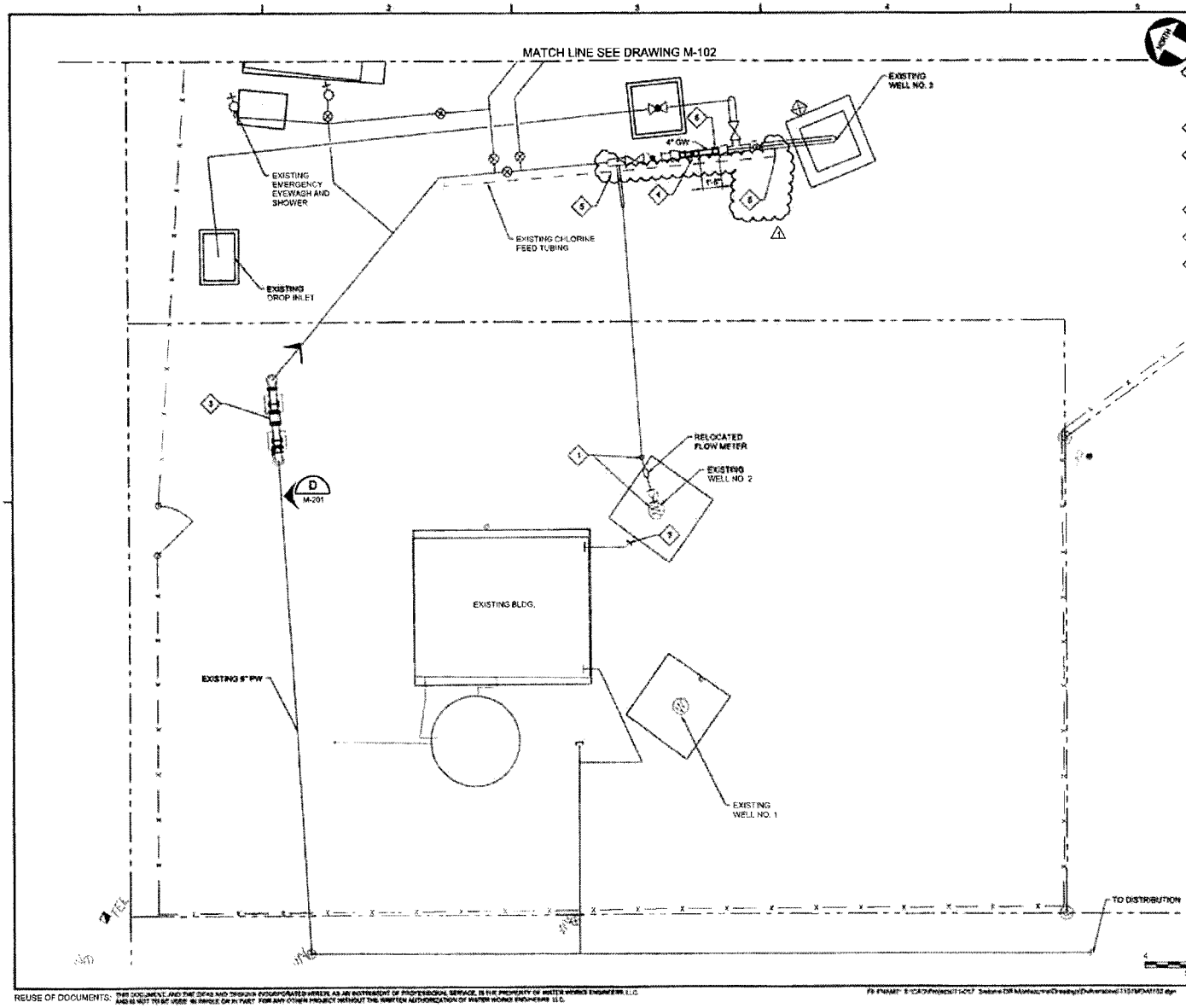

NOTES

1. TURN WELL PUMP COLUMN APPROXIMATELY 90 DEGREES CLOCKWISE. RELOCATE EXISTING CHECK VALVE AND FLOW METER. MAINTAIN FLOW METER STRAIGHT RUNS AND REPLACE 2" GALVANIZED STEEL PIPE AS NECESSARY
2. PIPE SUPPORT SIMILAR TO DETAIL 8 ON M-301
3. REMOVE ABOVEGROUND PIPING AND SALVAGE THE EXISTING FLOW METER. INSTALL THE NEW FLOWMETER AND VALVE PER DETAIL D ON SHEET M-201
4. RELOCATE EXISTING FLOW METER
5. CONNECT EXISTING CHLORINE FEED TUBING TO INJECTION CUILL.
6. INSTALL RFCA

NO.	DATE	REVISION	BY	APVD
1	3/12	REVISED FOR CONSTRUCTION	JAC	BWL

DESIGN JC
DRAWN DS
CHECKED BL
APPROVED JHM

MGC CONTRACTORS, INC.

WATERWORKS ENGINEERS

ARIZONA WATER COMPANY
MONTEZUMA HAVEN WELLS NO. 2 AND NO. 3 ARSENIC REMOVAL FACILITY

MECHANICAL
PARTIAL PLAN 2

ORIGINALLY SIGNED AND SEALED BY
ARIZONA REGISTERED PROFESSIONAL ENGINEER (CIVIL)
BENJAMIN W. LEE
47882
ON 12/21/11

DATE DECEMBER 2011
PROJECT NUMBER 11-057
DRAWING NUMBER M-102
SHEET - OF -

REUSE OF DOCUMENTS: THIS DOCUMENT, AND THE IDEAS AND DESIGNS INCORPORATED HEREIN, AS AN INSTRUMENT OF PROFESSIONAL SERVICE, IS THE PROPERTY OF WATER WORKS ENGINEERS, LLC AND IS NOT TO BE USED, IN WHOLE OR IN PART, FOR ANY OTHER PROJECT WITHOUT THE WRITTEN AUTHORIZATION OF WATER WORKS ENGINEERS, LLC.

PLOT DATE: 3/20/2012 PLOT TIME: 3:51:07 PM SCALE: 1:4

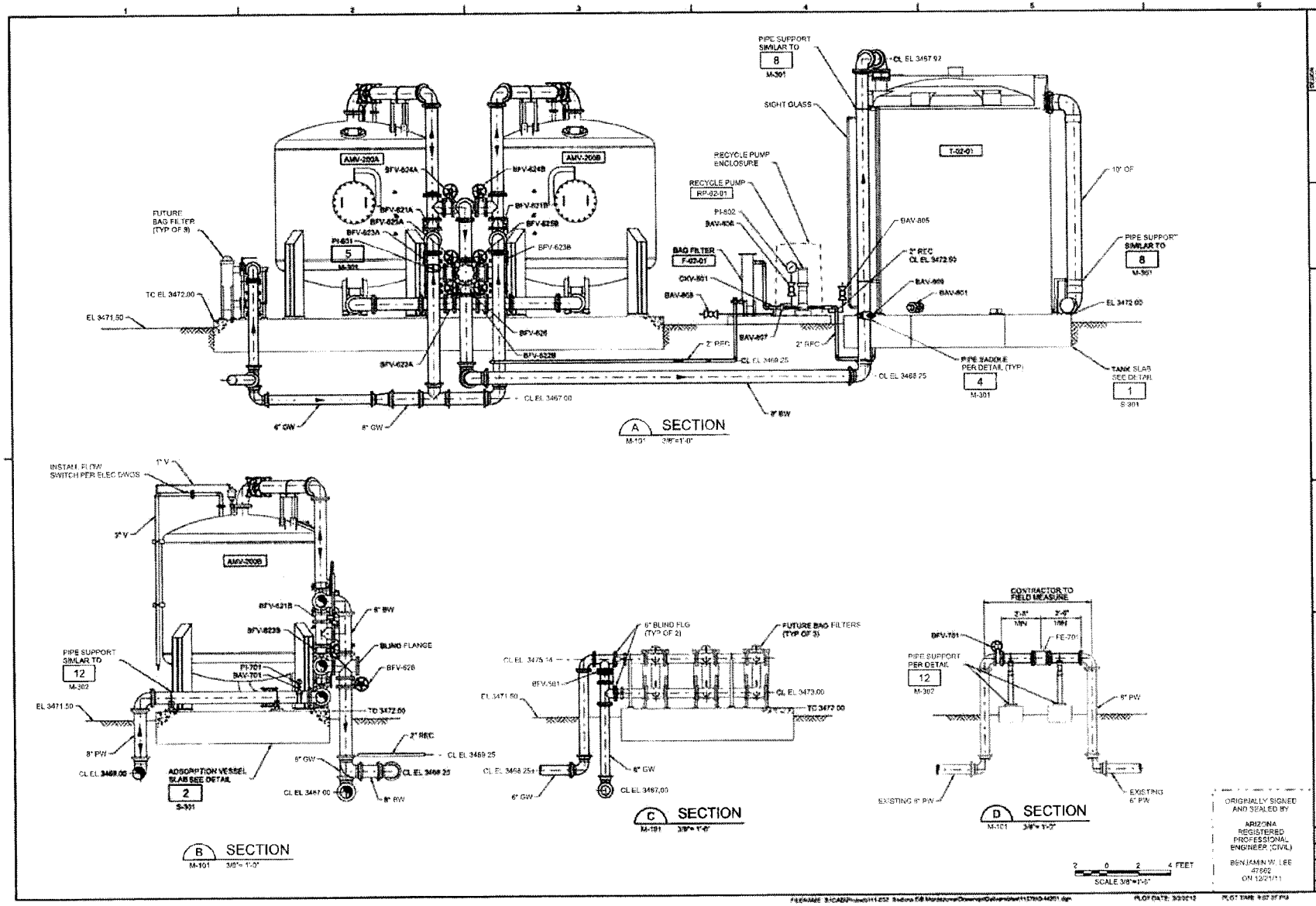
AMV-200A
AMV-200B
BFV-624A
BFV-624B
BFV-621A
BFV-621B
BFV-623A
BFV-623B
BFV-626
BFV-628
FUTURE BAG FILTER (TYP OF 3)
PI-631
5
M-301
TC EL 3472.00
EL 3471.50
6" GW
8" GW
CL EL 3467.00
2" REC
CL EL 3469.25
8" BW
PIPE SUPPORT SIMILAR TO
8
M-301
SIGHT GLASS
CL EL 3467.92
RECYCLE PUMP ENCLOSURE
RECYCLE PUMP
RP-02-01
PI-602
BAV-606
BAG FILTER
F-02-01
CKV-601
BAV-608
BAV-607
T-02-01
BAV-605
2" REC
CL EL 3472.00
BAV-609
BAV-601
CL EL 3468.75
PIPE SADDLE PER DETAIL (TYP)
4
M-301
10" OF
EL 3472.00
TANK SLAB SEE DETAIL
1
S-301
A SECTION
M-101 3/8"=1'-0"
INSTALL FLOW SWITCH PER ELEC DWGS
1" V
2" V
AMV-200B
BFV-621B
BFV-623B
8" BW
BLIND FLANGE
BFV-628
PIPE SUPPORT SIMILAR TO
12
M-302
PI-701
BAV-701
EL 3471.50
TC 3472.00
2" REC
CL EL 3469.25
8" PW
CL EL 3469.00
ADSORPTION VESSEL SLAB SEE DETAIL
2
S-301
6" GW
CL EL 3468.25
CL EL 3467.00
8" BW
B SECTION
M-101 3/8"= 1'-0"
6" BLIND FLG (TYP OF 2)
FUTURE BAG FILTERS (TYP OF 3)
CL EL 3475.14
BFV-501
EL 3471.50
CL EL 3473.00
TC 3473.00
CL EL 3468.25
6" GW
CL EL 3467.00
C SECTION
M-101 3/8"= 1'-0"
CONTRACTOR TO FIELD MEASURE
3'-8" MIN
3'-0" MIN
BFV-701
FE-701
PIPE SUPPORT PER DETAIL
12
M-302
8" PW
EXISTING 8" PW
EXISTING 6" PW
D SECTION
M-101 3/8"= 1'-0"
2 0 2 4 FEET
SCALE 3/8"=1'-0"
ORIGINALLY SIGNED AND SEALED BY
ARIZONA REGISTERED PROFESSIONAL ENGINEER (CIVIL)
BENJAMIN W. LEE
47662
ON 12/21/11
MGC
VGC CONTRACTORS, INC.
WATERWORKS
ENGINEERS
ARIZONA WATER COMPANY
MONTEZUMA HAVEN WELLS NO. 2 AND 10 ARSENIC REMOVAL FACILITY
MECHANICAL
SECTIONS
DATE
DECEMBER 2011
PROJECT NUMBER
11-057
DRAWING NUMBER
M-201
SHEET - OF -
SCALE 1 S.30.3379

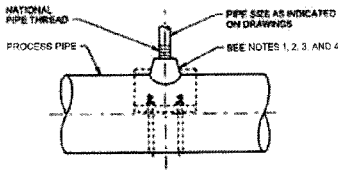

PIPE TAPS

NOTES:

1. FOR STEEL, GALVANIZED STEEL, AND PVC 2 1/2" AND SMALLER USE A BUSHING IN A TEE
2. FOR DUCTILE IRON, ALL SIZES, USE SERVICE SADDLE
3. FOR NEW STEEL AND STAINLESS STEEL PIPES 3" AND LARGER, AND PRESSURE VESSELS, USE THRED-O-LET AS SHOWN
4. FOR EXISTING PVC, STEEL AND STAINLESS STEEL PIPES 3" AND LARGER, USE SERVICE SADDLE

4 PIPE TAPS

M-TYP NTS

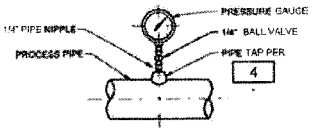

DIRECT INSTALLATION

NOTES:
UNLESS NOTED OTHERWISE ON THE DRAWINGS

1. USE DIRECT INSTALLATION FOR POTABLE WATER, RAW WATER, RECLAIMED WATER PROCESS PIPES AND AIR PIPING
2. USE DIAPHRAGM SEAL INSTALLATION FOR SEWAGE, SLUDGE, CHEMICAL AND ALL PROCESS PIPES THAT ARE NOT WATER OR AIR
3. ALL PIPE NIPPLES TO BE TYPE 304 STAINLESS STEEL

5 PRESSURE GAUGE MOUNTING

M-TYP NTS

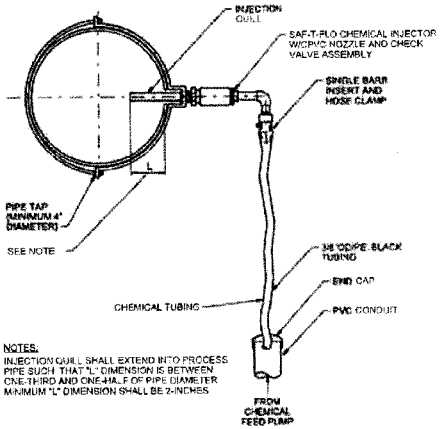

NOTES:
INJECTION QUILL SHALL EXTEND INTO PROCESS PIPE SUCH THAT "L" DIMENSION IS BETWEEN ONE-THIRD AND ONE-HALF OF PIPE DIAMETER
MINIMUM "L" DIMENSION SHALL BE 2-INCHES

7 CHEMICAL INJECTION POINT

M-TYP NTS

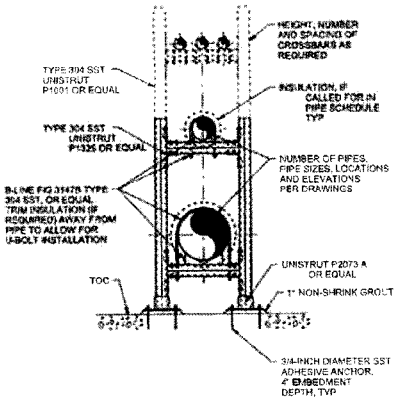

8 FIXED PIPE SUPPORT RACK

M-TYP NTS

NOTE:
USE NEOPRENE SLEEVE ON COPPER AND PVC PIPING AT STRAPS AND BRACKETS

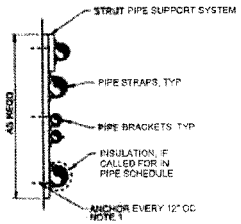

WALL MOUNTED

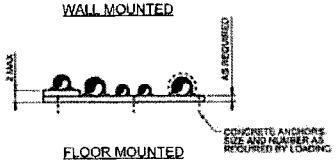

FLOOR MOUNTED

NOTE:
1. ATTACH TO WALL WITH SST ANCHORS, 3/8" DIAMETER MIN, COORDINATED WITH WALL CONSTRUCTION

9 PIPE SUPPORTS

M-TYP NTS

ORIGINALLY SIGNED AND SEALED BY

ARIZONA REGISTERED PROFESSIONAL ENGINEER (CIVIL)

BENJAMIN W. LEE
57662
ON 12/21/11

MECHANICAL

TYPICAL DETAILS 1

DATE DECEMBER 2011
PROJECT NUMBER 11-057
DRAWING NUMBER M-301
SHEET - OF -
SCALE: 1.5 16/667

WATERWORKS ENGINEERS

ARIZONA WATER COMPANY
MONTEZUMA HAVEN UTILITY SYSTEM
ASPEN REMOVAL FACILITY

MGC WATER STRUCTURES, INC

REUSE OF DOCUMENTS: THIS DOCUMENT, AND THE IDEAS AND DESIGNS INCORPORATED HEREIN, AS AN INSTRUMENT OF PROFESSIONAL SERVICE, IS THE PROPERTY OF WATER WORKS ENGINEERS, LLC AND IS NOT TO BE USED, IN WHOLE OR IN PART, FOR ANY OTHER PROJECT WITHOUT THE WRITTEN AUTHORIZATION OF WATER WORKS ENGINEERS, LLC.

PLOT DATE: 3/22/2012 PLOT TIME: 3:17:06 PM

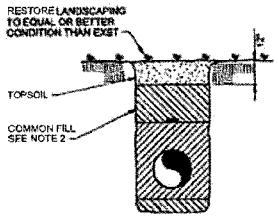

LANDSCAPE AREAS

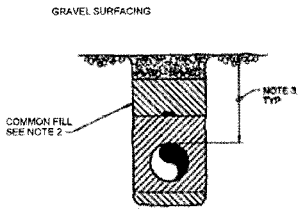

GRAVEL SURFACE AREAS

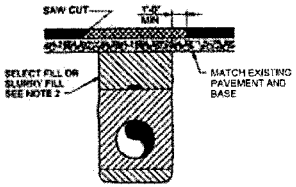

EXISTING PAVED AREA

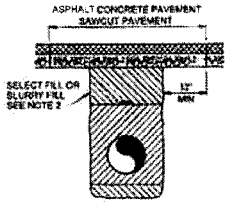

NEW PAVED AREA

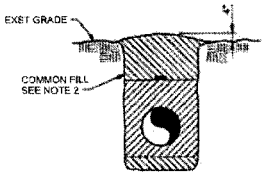

UN-SURFACED AREAS WITHOUT LANDSCAPING

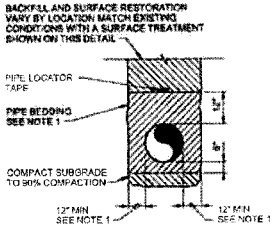

PIPE ZONE

(TYPICAL ALL SECTIONS)

NOTES

1. PIPE BEDDING SHALL BE GRANULAR BEDDING FOR ALL DUCTILE IRON OR STEEL PIPE AND SAND FOR ALL OTHER PIPE. COMPACT TO 90% RELATIVE COMPACTION. ALTERNATELY, SLURRY FILL MAY BE USED FOR PIPE BEDDING. IF SLURRY FILL IS USED, TAKE PRECAUTIONS TO PREVENT PIPE FLOATING. ALSO, IF SLURRY FILL IS USED, TRENCH WIDTH CAN BE NARROWED TO 6-INCHES OUTSIDE OF PIPE WALL ON EACH SIDE.
2. COMPACT ALL TRENCH BACK FILL (COMMON FILL AND SELECT FILL) TO 90% COMPACTION MORE THAN 24-FEET BELOW GRADE. 95% COMPACTION LESS THAN 2-FEET BELOW GRADE.
3. UNLESS NOTIFIED OTHERWISE, PROVIDE MINIMUM 3-FEET OF COVER OVER ALL BURIED PIPELINES.

11 M-TYP TYPICAL TRENCH SECTIONS

NTS

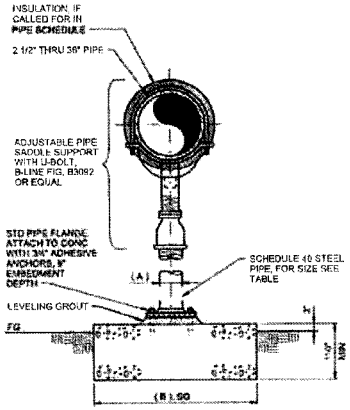

12 M-TYP ADJUSTABLE HEIGHT SADDLE PIPE SUPPORT

NTS

DIMENSION TABLE

PIPE SIZE	(A)	(B)
2-1/2"	2-1/2"	2'-0"
3"	2-1/2"	2'-0"
4"	3"	2'-0"
6"	3"	2'-0"
8"	3"	2'-0"
10"	3"	2'-0"
12"	3"	2'-0"
14"	4"	2'-0"
16"	4"	2'-0"
18"	6"	3'-0"
20"	6"	3'-0"
24"	6"	3'-0"
30"	6"	4'-0"
36"	6"	4'-0"

ORIGINALLY SIGNED AND SEALED BY

ARIZONA REGISTERED PROFESSIONAL ENGINEER (CIVIL)

BENJAMIN W. LEE
47662
ON 12/21/11

MGC CONTRACTORS, INC

WATERWORKS ENGINEERS

ARIZONA WATER COMPANY
MONTEZUMA HAVEN WELLS NO 2 AND NO 3 ARSENIC REMOVAL FACILITY

MECHANICAL

TYPICAL DETAILS 2

DATE DECEMBER 2011
PROJECT NUMBER 11-057
DRAWING NUMBER M-302
SHEET - OF -
SCALE: 1:0 Minus1

REUSE OF DOCUMENTS: THIS DOCUMENT, AND THE IDEAS AND DESIGNS INCORPORATED HEREIN, AS AN INSTRUMENT OF PROFESSIONAL SERVICE, IS THE PROPERTY OF WATER WORKS ENGINEERS, LLC AND IS NOT TO BE USED, IN WHOLE OR IN PART, FOR ANY OTHER PROJECT WITHOUT THE WRITTEN AUTHORIZATION OF WATER WORKS ENGINEERS, LLC.

FILENAME: S:\CAD\Projects\11-057 Sedona DB Membrane\Drawings\Collierville\11-057M-302.dgn PLOT DATE: 3/2/2012 PLOT TIME: 3:37:39 PM

ELECTRICAL SPECIFICATIONS AND GENERAL NOTES

1. PERFORM ALL WORK IN ACCORDANCE WITH THE CURRENTLY ADOPTED ISSUE OF THE NATIONAL ELECTRICAL CODE (NEC), STATE AND LOCAL REGULATIONS, AND OTHER ORDINANCES HAVING JURISDICTION.
2. CONTRACTOR SHALL COORDINATE WITH THE ELECTRIC UTILITY COMPANY TO DETERMINE THE REQUIREMENTS TO PROVIDE THE ELECTRIC SERVICE FOR THE FACILITY.
3. PROVIDE ALL LABOR, MATERIALS AND EQUIPMENT AS SHOWN AND AS REQUIRED FOR THE COMPLETION OF THE WORK.
4. THE LAYOUT OF THE CONTRACT DRAWINGS IS DIAGRAMMATIC. IT IS NOT THE INTENT OF THESE PLANS AND/OR SPECIFICATIONS TO SHOW EVERY DETAIL OF CONSTRUCTION. THE CONTRACTOR SHALL FURNISH AND INSTALL ALL ITEMS FOR A COMPLETE ELECTRICAL SYSTEM AND PROVIDE ALL REQUIREMENTS NECESSARY FOR EQUIPMENT TO BE PLACED IN PROPER WORKING ORDER.
5. CONTRACTOR SHALL VISIT THE JOBSITE PRIOR TO SUBMITTING THEIR BID TO VERIFY ALL EXISTING CONDITIONS, LOCATIONS, DIMENSIONS AND QUANTITIES AS SHOWN AND/OR AS SPECIFIED.
6. EQUIPMENT, MATERIAL, AND WORKMANSHIP SHALL BE GUARANTEED FREE FROM DEFECTS FOR ONE YEAR FROM THE DATE OF ACCEPTANCE.
7. WORK SHALL BE PERFORMED BY A LICENSED COMMERCIAL CONTRACTOR IN A FIRST-CLASS WORKMANLIKE MANNER AND ALL SYSTEMS SHALL BE TESTED IN THE PRESENCE OF THE OWNER TO DEMONSTRATE THAT EQUIPMENT IS WORKING PROPERLY. DEFECTS SHALL BE CORRECTED AT NO COST TO THE OWNER. EQUIPMENT REQUIRING ADJUSTMENTS OR CALIBRATIONS FOR PROPER OPERATION SHALL BE SET BY THE CONTRACTOR AS NECESSARY, SPECIFIED OR DIRECTED BY THE OWNER.
8. ELECTRICAL EQUIPMENT, DEVICES AND MATERIAL SHALL BE NEW, UL LISTED FOR THE INTENDED USE. ALL ELECTRICAL PANELS SHALL BE ASSEMBLED BY A UL 508 CERTIFIED FACILITY AND SHALL BE SO LABELED.
9. ELECTRICAL CONTRACTOR SHALL COORDINATE WITH OTHER TRADES TO DETERMINE ELECTRICAL REQUIREMENTS, SPACES AND ADEQUATE CLEARANCES WITH RESPECT TO OTHER EQUIPMENT IN THE FACILITY, AND PROVIDE ANY RACEWAY, WIRING, OR CONNECTIONS REQUIRED FOR PROPER OPERATION.
10. WIRING DEVICES SHALL BE NEMA WD-1 HEAVY DUTY INDUSTRIAL GRADE HUBBELL, LEVITON OR EQUAL. RECEPTACLES SHALL HAVE NYLON OR POLYCARBONATE FACES AND BE LABELED MEETING FEDERAL SPECIFICATIONS, UNLESS NOTED OTHERWISE. RECEPTACLES SHALL BE 125V, 15A, DUPLEX AND SHALL BE GROUND FAULT TYPE. SWITCHES SHALL BE 20A 120V RATED WITH METAL WATERPROOF IN-USE SWITCH COVER, HUBBELL CWP1CR OR EQUAL.
11. CONDUCTORS SHALL BE STRANDED COPPER WIRE (LIGHTING AND RECEPTACLE CIRCUITS MAY BE SOLID). ALL CONDUCTOR INSULATION SHALL BE TYPE THHN/THWN OR XHHW OR RHHW-2. IDENTIFY EACH CONDUCTOR AT EACH TERMINATION POINT WITH HEAT SHRINK OR PLASTIC SLEEVE TYPE WIRE MARKER PERMANENTLY MACHINE IMPRINTED WITH A UNIQUE COMBINATION OF NUMBERS AND LETTERS.
12. EQUIPMENT LUGS, CONNECTORS AND TERMINATIONS, INCLUDED IN PANELS, SWITCHES, STARTERS, CONTACTORS, AND CIRCUIT BREAKERS SHALL BE SUITABLE FOR USE WITH CONDUCTORS OPERATING AT 75 DEGREES C.
13. ALL CONDUCTORS SHALL BE IN APPROVED RACEWAY. RACEWAYS FOR THE FOLLOWING:
    GALVANIZED RIGID STEEL (GRS): WHERE CONDUIT BENDS UPWARD FROM UNDERGROUND TO ABOVE GROUND, USE GRS ELBOW WITH AN APPROVED PVC TO GRS COUPLER. GRS CONDUIT SHALL EXTEND A MINIMUM OF 24" BELOW GRADE. USE GRS IN ALL AREAS WHERE CONDUIT MAY BE EXPOSED TO PHYSICAL DAMAGE. USE THREADED STEEL FITTINGS. THREADS OF CONDUIT INSTALLED OUTDOORS SHALL BE COATED WITH ZINC RICH PAINT PRIOR TO MAKING UP. PROTECT UNDERGROUND METAL CONDUIT WITH HALF LAPPED 10 MIL PIPEWRAP, SCOTCHWRAP #50 TAPE OR EQUAL.

    INTERMEDIATE METAL CONDUIT (IMC) MAY BE USED IN SIZES 1-1/2" AND LARGER IN LIEU OF RIGID STEEL. FITTINGS AND INSTALATION SHALL BE AS FOR RIGID STEEL.

    POLYVINYL CHLORIDE (PVC) SHEDULE 40 SHALL BE USED BELOW FINISHED GRADE. INSTALL 24 INCHES MINIMUM BELOW FINISHED GRADE SURROUNDED BY 3 INCHES OF SAND OR SELECTED FILL FREE OF ORGANIC MATTER, STICKS, GRAVEL, ROCKS OR OTHER SHARP OBJECTS. EXCEPT THAT UNDER CONCRETE SLABS NO MINIMUM DEPTH IS REQUIRED.

    LIQUIDTIGHT FLEXIBLE METAL CONDUIT: USE TO CONNECT TO EQUIPMENT INSTALLE DOUTDOORS (36 INCES MAX LENGTH). USE STEEL FITTINGS. USE COMPRESSION TYPE CONNECTORS.
14. FITTINGS, BOXES, AND SUPPORTS SHALL BE PROVIDED AS REQUIRED TO PROVIDE A COMPLETE SYSTEM. FS AND FD BOXES SHALL BE GALVANIZED CAST IRON. LARGER BOXES SHALL BE NEMA 3R PAINTED STEEL. USE WATERTIGHT THREADED HUBS FOR ALL CONDUIT CONNECTIONS TO THE TOPS OR SIDES OF ENCLOSURES THAT DO NOT HAVE INTEGRAL THREADED HUBS.
15. PROVIDE PULL BOXES FOR UNDERGROUND ELECTRICAL CONDUITS SUCH THAT NO SINGLE CONDUIT RUN HAS BENDS IN EXCESS OF 360 DEGREES. PULL BOXES SHALL BE PRECAST CONCRETE WITH H-20 HIGHWAY RATING U.N.O. WARNING TAPES WHICH SAY "WARNING--BURIED ELECTRICAL" SHALL BE PLACED IN TRENCHES ABOVE ALL UNDERGROUND ELECTRIC CONDUITS. WARNING TAPE SHALL BE METALLIC TRACEABLE TYPE.
16. FUSES SHALL BE TIME DELAY, CLASS RK-1, BUSS LPS-RK_SP, OR EQUAL. FUSES FOR MOTOR CONTROL CIRCUITS SHALL BE TIME DELAY, BUS FNM OR EQUAL. FUSES FOR CONTROL TRANSFORMER PRIMARY SHALL BE TIME DELAY, CLASS CC, BUS FNQ-R OR EQUAL.
17. DISCONNECT SWITCHES SHALL BE FUSED, 3 POLE WITH CLASS R FUSE CLIPS AND VOLTAGE RATING AS REQUIRED UNLESS OTHERWISE SHOWN. OUTDOOR UNITS SHALL BE WEATHERPROOF. UNITS SHALL BE HEAVY DUTY, HORSEPOWER RATED, AND HAVE MEANS FOR PAD LOCKING IN THE OPEN POSITION. SWITCHES SHALL BE SQUARE D, GE OR EATON/CUTLER HAMMER.
18. DISCONNECT SWITCHES, STARTERS, PANELS AND CONTROLLERS SHALL BE LABELED WITH ENGRAVED PALSTIC LAMINATE NAMEPLATES ATTACHED WITH SCREWS.
19. PROVIDE EQUIPMENT GROUNDING CONDUCTOR IN ALL CONDUITS. SIZE WIRE PER NEC, UNLESS OTHERWISE SHOWN ON THE DRAWINGS.
20. INSULATE ALL ABOVE GRADE PIPING AND TUBING 1" AND SMALLER WITH 3/8" THICK, CLOSED CELL POLYETHYLENE FOAM PIPE INSULATION OF THE APPROPRIATE SIZE TO PROVIDE FREEZE PROTECTION.
21. ALL REQUIRED SYSTEM SHUTDOWNS SHALL BE COORDINATED WITH THE OWNER AT LEAST FOUR DAYS IN ADVANCE OF THE SHUTDOWN.
22. REFER TO ARIZONA WATER COMPANY STANDARD ELECTRICAL SPECIFICATIONS FOR ADDITIONAL REQUIREMENTS. IN CASE OF CONFLICT, AWC SPECIFICATIONS TAKE PRECEDENCE OVER THESE SPECIFICATIONS.

IDENTIFIER SYMBOLS

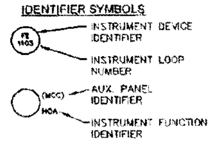

HAND SWITCH FUNCTIONS

HOA - HAND-OFF-AUTO
OCA - OPEN-CLOSE-AUTO
OO - OFF-ON
1,2 - DEVICE SELECT
OCS - OPEN-CLOSE-STOP
MA - MANUAL-AUTO
SFT-BYP - SOFT-BYPASS

EXAMPLES:

HS HOA   HS 1,2

PUSHBUTTON (MOMENTARY CONTACT)

EXAMPLES:

HMS

SINGLE LINE AND CONDUIT DIAGRAM SYMBOLS

- TRANSFORMER
- UTILITY COMPANY METER
- SINGLE PHASE AMMETER WITH 3 PHASE SELECTOR SWITCH AND 3 CURRENT TRANSFORMERS
- SINGLE PHASE TRANSFORMER RATED VOLTMETER WITH PHASE TO PHASE SELECTOR SWITCH (A-B, B-C, C-A) AND 3 SINGLE PHASE POTENTIAL TRANSFORMERS
- JUNCTION BOX OF SAME MATERIAL AS CONDUIT SYSTEM
- WP — SUBSCRIPT INDICATES WEATHER PROOF DEVICE
- EP — SUBSCRIPT INDICATES EXPLOSION PROOF DEVICE.
- DOUBLE THROW SAFETY SWITCH RATING AND POLES PER DRAWINGS.
- SYSTEM GROUND PER DRAWINGS.
- COMBINATION TYPE MOTOR STARTER DISCONNECT
- 30/3 — DISCONNECT SWITCH RATING AND POLES PER DRAWINGS.
- 7.5 HP — MOTOR WITH HP RATING
- 7.5 HP — MOTOR WITH INTEGRAL COMBINATION MOTOR STARTER
- FUSE
- CIRCUIT BREAKER
- 30A SIMPLEX RECEPTACLE 3 POLE 4 WIRE GROUNDING
- DUPLEX RECEPTACLE GFCI HUBBELL #GF 5262
- T — THERMOSTAT
- PC — PHOTOCELL
- FACP — FIRE ALARM CONTROL PANEL
- SD — SMOKE DETECTOR
- FIRE ALARM MANUAL PULL STATION
- FIRE ALARM HORN AND STROBE
- LIGHT SWITCH TOGGLE TYPE. 3 DENOTES 3 WAY; EX DENOTES EXPLOSIONPROOF; WP DENOTES WEATHERPROOF
- C100 — CONDUIT IDENTIFIER
- ABOVE GROUND CONDUIT
- UNDER GROUND CONDUIT

SCHEMATIC DIAGRAM SYMBOLS

- NORMALLY CLOSED CONTACT
- NORMALLY OPEN CONTACT
- RELAY COIL
- 2 WAY SOLENOID VALVE FAIL TO CLOSE
- 3 WAY SOLENOID VALVE FAIL TO EXHAUST
- OFF ON — 2 POSITION MAINTAINED SELECTOR SWITCH
- NORMALLY OPEN MOMENTARY CONTACT PUSHBUTTON
- NORMALLY CLOSED MOMENTARY CONTACT PUSHBUTTON
- 3 POSITION MAINTAINED SELECTOR SWITCH (HAND-OFF-AUTO)
- PILOT LIGHT COLOR PER DRAWINGS
- PUSH TO TEST PILOT LIGHT COLOR PER DRAWINGS (GREEN INDICATED HERE)
- FUSE
- CIRCUIT BREAKER
- THERMAL OVERLOAD SWITCH
- NORMALLY OPEN PRESSURE SWITCH
- NORMALLY CLOSED PRESSURE SWITCH
- NORMALLY OPEN FLOW SWITCH
- NORMALLY CLOSED FLOW SWITCH
- NORMALLY OPEN TEMPERATURE SWITCH
- NORMALLY CLOSED TEMPERATURE SWITCH
- NORMALLY OPEN LEVEL SWITCH
- NORMALLY CLOSED LEVEL SWITCH
- HORN
- RESISTOR
- DIODE
- CONTROL PANEL TERMINAL BLOCK
- TERMINAL BLOCK
- NORMALLY OPEN TIME DELAY CONTACT
- NORMALLY CLOSED TIME DELAY CONTACT
- ⊕ TERMINAL IN CONTROL CABINET

LEGEND

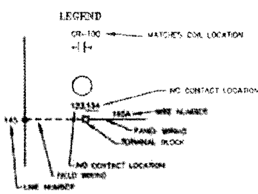

INSTRUMENT & DEVICE LETTERING TABLE

IDENTIFICATION LETTERS

	FIRST LETTER		SUCCEEDING LETTERS		
	MEASURED OR INITIATING VARIABLE	MODIFIER	READOUT OR PASSIVE FUNCTION	OUTPUT FUNCTION	MODIFIER
A	ANALYSIS		ALARM		
B	BURNER, COMBUSTION		USER'S CHOICE	USER'S CHOICE	USER'S CHOICE
C	CONDUCTIVITY			CONTROL	
D	DENSITY (MASS)	DIFFERENTIAL			
E	VOLTAGE		SENSOR (PRIMARY ELEMENT)		
F	FLOW RATE	RATIO (FRACTION)			
G	GAGING		GLASS OR VIEWING DEVICE		
H	HAND				HIGH
I	CURRENT (ELECTRICAL)		INDICATE		
J	POWER	SCAN			
K	TIME OR TIME SCHEDULE	TIME RATE OF CHANGE		CONTROL STATION	
L	LEVEL		LIGHT		LOW
M	MOTOR	MOMENTARY			MIDDLE OR INTERMEDIATE
N	USER'S CHOICE		STATUS	USER'S CHOICE	USER'S CHOICE
O	USER'S CHOICE		ORIFICE RESTRICTION		
P	PRESSURE OR VACUUM		POINT (TEST CONNECTION)		
Q	QUANTITY	INTEGRATE OR TOTALIZE			
R	RADIATION		RECORD		
S	SPEED OR FREQUENCY	SAFETY		SWITCH	
T	TEMPERATURE			TRANSMIT	
U	MULTIVARIABLE		MULTIFUNCTION	MULTIFUNCTION	MULTIFUNCTION
V	VIBRATION			VALVE, DAMPER, LOUVER	
W	WEIGHT OR FORCE		WELL		
X	UNCLASSIFIED		UNCLASSIFIED	UNCLASSIFIED	UNCLASSIFIED
Y	EVENT, STATE OR PRESENCE			RELAY, COMPUTE, CONVERT	
Z	POSITION OR DIMENSION			DRIVER, ACTUATOR, UNCLASSIFIED FINAL CONTROL ELEMENT	

REUSE OF DOCUMENTS: THIS DOCUMENT, AND THE IDEAS AND DESIGNS INCORPORATED HEREIN, AS AN INSTRUMENT OF PROFESSIONAL SERVICE, IS THE PROPERTY OF WATER WORKS ENGINEERS, LLC AND IS NOT TO BE USED, IN WHOLE OR IN PART, FOR ANY OTHER PROJECT WITHOUT THE WRITTEN AUTHORIZATION OF WATER WORKS ENGINEERS, LLC.

DESIGN: D. JENSEN
DRAWN: D. JENSEN
CHECKED: D. JENSEN
APPROVED: JPM

MGC CONTRACTORS INC

Jensen Engineering, LLC
Casa Grande, Arizona

WATERWORKS ENGINEERS

ARIZONA WATER COMPANY

MONTEZUMA HAVEN WELLS NO. 2 AND NO. 3 ARSENIC REMOVAL FACILITY

ELECTRICAL

SPECIFICATIONS AND LEGEND

DATE: DECEMBER 2011
PROJECT NUMBER: 11-057
DRAWING NUMBER: E-101
SHEET

LOAD CALCULATIONS			
LOAD	KVA	HP	AMPS
EXISTING WELL PUMP		75	89
NEW RECYCLE PUMP #1		3	7.6
PANEL A TRANSFORMER	15		31
30% LARGEST MOTOR			24
TOTAL LOAD AT 480VAC 3 PHASE			158.6

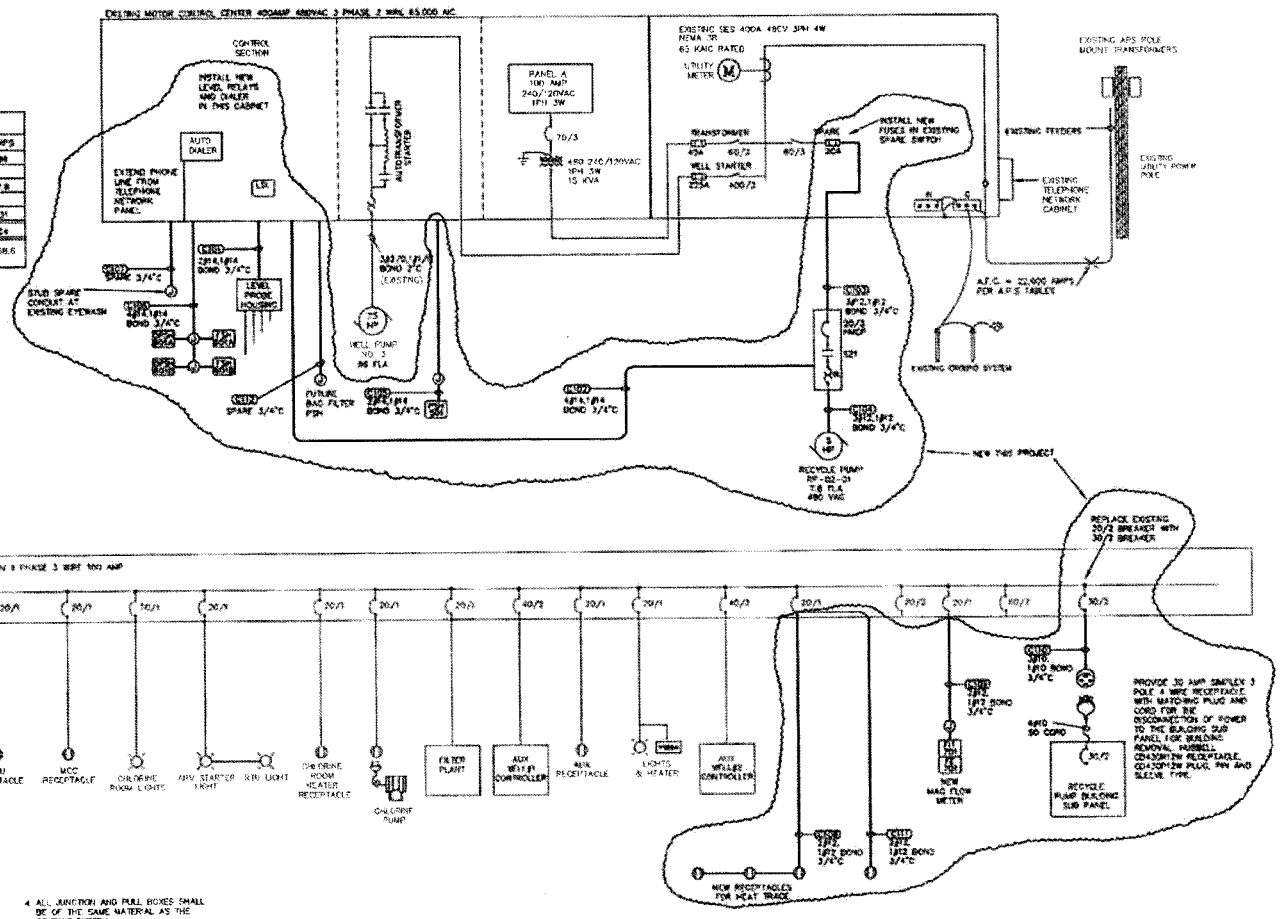

NOTES:

1. THIS FACILITY IS SERVED BY AN EXISTING 480VAC 3 PHASE 4 WIRE ELECTRIC SERVICE FROM ARIZONA PUBLIC SERVICE. EXISTING SERVICE SHALL REMAIN OPERATIONAL AND IN PLACE
2. INSTALL A CODE SIZED GREEN COPPER BOND WIRE IN ALL CONDUITS AS SHOWN
3. ALL CONDUITS RUN OUTDOORS EXPOSED AT THE NEW CHLORINE AREA SHALL BE PVC COATED RIGID STEEL CONDUIT. AT THE MAIN SERVICE ENTRANCE SECTION SHALL BE RIGID STEEL
4. ALL JUNCTION AND PULL BOXES SHALL BE OF THE SAME MATERIAL AS THE CONDUIT SYSTEM.
5. UNDERGROUND CONDUIT SHALL BE SCHEDULE 80 PVC. TRANSITION TO ABOVE GROUND WITH WRAPPED R.G.S OR PVC COATED RGS.
6. ALL CONDUCTORS SHALL BE DUAL RATED THHN/THWN STRANDED COPPER.
7. NEW TELEPHONE SERVICE IS REQUIRED (DATA LINE). CONTRACTOR SHALL CONTACT AND COORDINATE WITH THE LOCAL PROVIDER FOR THE INSTALLATION OF THE NEW SINGLE LINE PHONE SERVICE. CONTRACTOR SHALL PROVIDE ALL CONDUIT AND CABLES AS REQUIRED AND AS DIRECTED BY THE LOCAL TELEPHONE PROVIDER.

REUSE OF DOCUMENTS: THIS DOCUMENT, AND THE IDEAS AND DESIGNS INCORPORATED HEREIN, AS AN INSTRUMENT OF PROFESSIONAL SERVICE, IS THE PROPERTY OF WATER WORKS ENGINEERS, LLC. AND IS NOT TO BE USED, IN WHOLE OR IN PART, FOR ANY OTHER PROJECT WITHOUT THE WRITTEN AUTHORIZATION OF WATER WORKS ENGINEERS, LLC

WATERWORKS ENGINEERS
Water & Wastewater Systems, Suite 280 • Scottsdale, AZ • 480-991-1142
Jensen Engineering, L.L.C.
Cave Creek, Arizona
DYCO CONSTRUCTION, INC.

ARIZONA WATER COMPANY
MONTEZUMA HAVEN WELLS NO. 2 AND NO. 3 ARSENIC REMOVAL FACILITY

ELECTRICAL

SERVICE ENTRANCE SECTION AND MOTOR CONTROL CENTER SINGLE LINE DIAGRAM

DATE: DECEMBER 2011
PROJECT NUMBER: 11-057
DRAWING NUMBER: E-102
SHEET

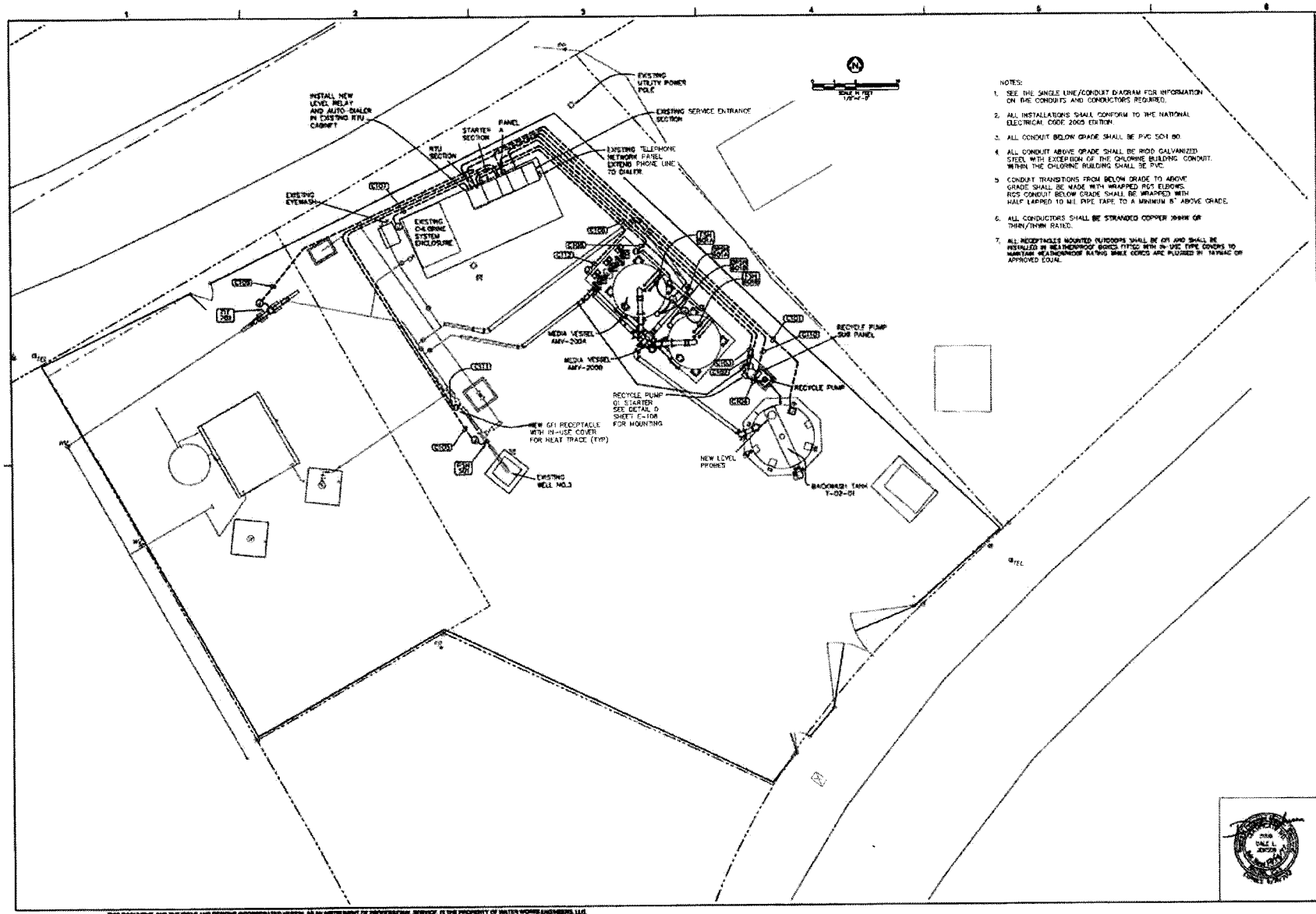

NOTES:

1. SEE THE SINGLE LINE/CONDUIT DIAGRAM FOR INFORMATION ON THE CONDUITS AND CONDUCTORS REQUIRED.
2. ALL INSTALLATIONS SHALL CONFORM TO THE NATIONAL ELECTRICAL CODE 2005 EDITION.
3. ALL CONDUIT BELOW GRADE SHALL BE PVC SCH 80.
4. ALL CONDUIT ABOVE GRADE SHALL BE RIGID GALVANIZED STEEL WITH EXCEPTION OF THE CHLORINE BUILDING CONDUIT. WITHIN THE CHLORINE BUILDING SHALL BE PVC.
5. CONDUIT TRANSITIONS FROM BELOW GRADE TO ABOVE GRADE SHALL BE MADE WITH WRAPPED RGS ELBOWS. RGS CONDUIT BELOW GRADE SHALL BE WRAPPED WITH HALF LAPPED 10 MIL PIPE TAPE TO A MINIMUM 6" ABOVE GRADE.
6. ALL CONDUCTORS SHALL BE STRANDED COPPER XHHW OR THHN/THWN RATED.
7. ALL RECEPTACLES MOUNTED OUTDOORS SHALL BE GFI AND SHALL BE INSTALLED IN WEATHERPROOF BOXES FITTED WITH IN-USE TYPE COVERS TO MAINTAIN WEATHERPROOF RATING WHILE CORDS ARE PLUGGED IN TAYMAC OR APPROVED EQUAL.

DESIGN D. JENSEN
DRAWN D. JENSEN
CHECKED D. JENSEN
APPROVED JNM

RGC RGC CONTRACTORS, INC.

Jensen Engineering, L.L.C. Cave Creek, Arizona

WATERWORKS ENGINEERS

ARIZONA WATER COMPANY
MONTEZUMA HAVEN
WELLS NO. 2 AND NO. 3
ARSENIC REMOVAL FACILITY

ELECTRICAL
SITE PLAN

DATE DECEMBER 2011
PROJECT NUMBER 11-097
DRAWING NUMBER E-103
SHEET

REUSE OF DOCUMENTS: THIS DOCUMENT, AND THE IDEAS AND DESIGNS INCORPORATED HEREIN, AS AN INSTRUMENT OF PROFESSIONAL SERVICE, IS THE PROPERTY OF WATER WORKS ENGINEERS, LLC AND IS NOT TO BE USED, IN WHOLE OR IN PART, FOR ANY OTHER PROJECT WITHOUT THE WRITTEN AUTHORIZATION OF WATER WORKS ENGINEERS, LLC.

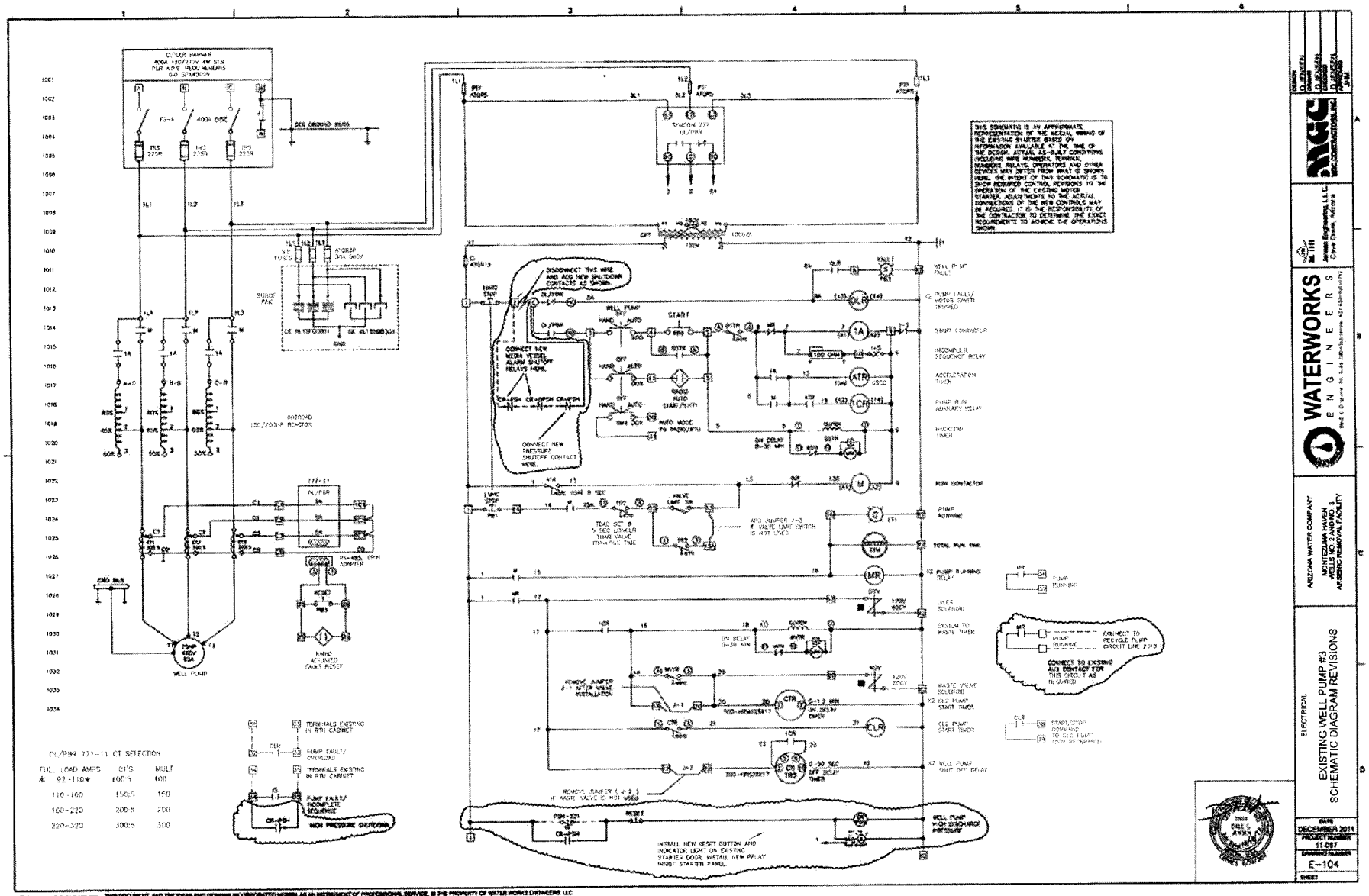

REUSE OF DOCUMENTS: THIS DOCUMENT, AND THE IDEAS AND DESIGNS INCORPORATED HEREIN, AS AN INSTRUMENT OF PROFESSIONAL SERVICE, IS THE PROPERTY OF WATER WORKS ENGINEERS, LLC. AND IS NOT TO BE USED, IN WHOLE OR IN PART, FOR ANY OTHER PROJECT WITHOUT THE WRITTEN AUTHORIZATION OF WATER WORKS ENGINEERS, LLC.

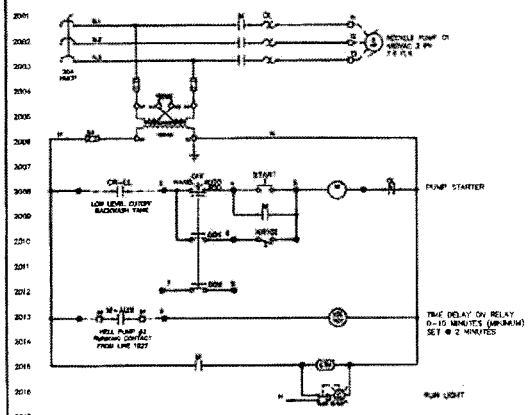

A RECYCLE PUMP SCHEMATIC

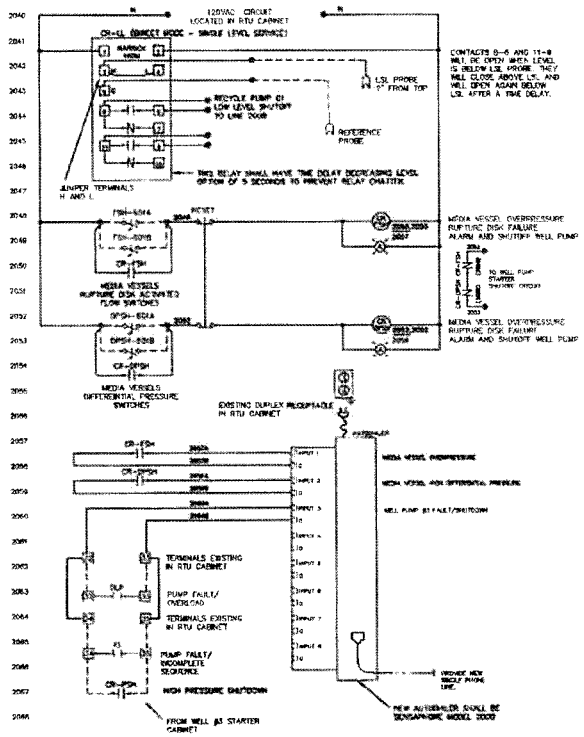

BACKWASH TANK LEVEL
& AUTODIALER

B SCHEMATIC

MOUNT THESE ITEMS INSIDE THE EXISTING
RTU SECTION OF THE MOTOR CONTROL CENTER
PROVIDE NEW TERMINALS AND (ENR) RELAYS.
LEVEL RELAYS SHALL BE WARRICK, MDM

REUSE OF DOCUMENTS: THIS DOCUMENT, AND THE IDEAS AND DESIGNS INCORPORATED HEREIN, AS AN INSTRUMENT OF PROFESSIONAL SERVICE, IS THE PROPERTY OF WATER WORKS ENGINEERS, LLC AND IS NOT TO BE USED, IN WHOLE OR IN PART, FOR ANY OTHER PROJECT WITHOUT THE WRITTEN AUTHORIZATION OF WATER WORKS ENGINEERS, LLC.

DESIGN
DRAWN
CHECKED
D. JENSEN
DATE
CHECKED
DATE
APPROVED
DATE

WWC
WATER WORKS CONSTRUCTION, INC.

Jensen Engineering, L.L.C.
Carve O'Neill, Arizona

WATERWORKS
ENGINEERS

ARIZONA WATER COMPANY
MONTEZUMA HAVEN
WELLS NO. 2 AND NO. 3
ARSENIC REMOVAL FACILITY

ELECTRICAL
MISCELLANEOUS
SCHEMATIC DIAGRAMS

DATE
DECEMBER 2011
PROJECT NUMBER
11-057
DRAWING NUMBER
E-105
SHEET

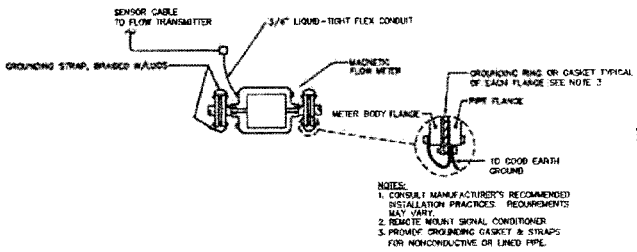

MAGNETIC FLOW METER INSTALLATION

A DETAIL

N.T.S.

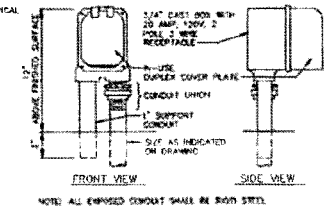

TYPICAL WEATHERPROOF RECEPTACLE

B MOUNTING DETAIL

N.T.S.

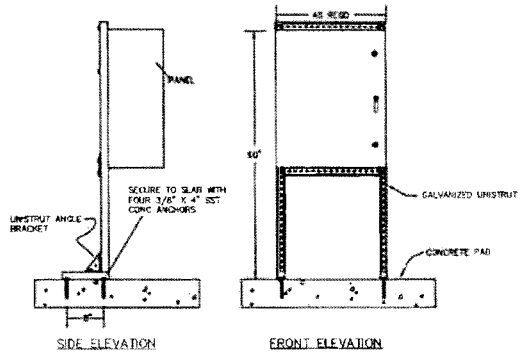

D CONTROL PANEL/STARTER MOUNTING DETAIL

E-103 N.T.S.

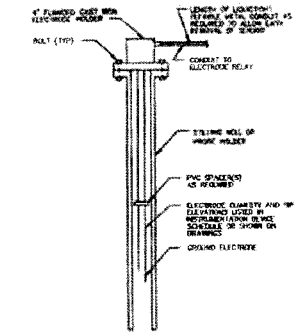

ELECTRODE RELAY TYPE LEVEL SWITCH

C ELECTRODE INSTALLATION DETAIL

N.T.S.

PANEL SCHEDULE

S.D.: A (BOOST)							A.I.C. RATING: 65,000A
VOLTAGE: 120/240							
MOUNTING: MCC							
CIRCUIT DESCRIPTION	BKR	CKT	UNIT	UNIT	CKT	BKR	CIRCUIT DESCRIPTION
AREA LIGHTS	20/1	1	300			20/1	PLAY WELL CONTROL TOUCH
			300		2		
AREA RECEPTACLE	20/1	3		180		20/1	SYU RECEPTACLE
				180	4		
GFIC RECEPTACLE	20/1	5	180			20/1	CHLORINE ROOM LIGHTS
			180		6		
HOW STANDBY/TO LIGHTS	20/1	7		120		20/1	PHONONE ROOM / HEATER RECEP
				120	8		
CHLORINE PUMP RECEPTACLE	20/1	9	1120			20/1	FILTER PUMP
			1120		10		
TUNNEL	40/1	11				20/1	PLAY RECEP CHLAC
					12		
	2	13	0			20/1	LIGHTS AND HEATER
			0		14		
WELL WELL 10 CONTROLLER	40/1	15		2000		20/1	SEAT TRACK RECEPTACLES
				1000	16		
	4	17	2000			20/1	SPARE
					18		
TRANSFER SWITCH	20/1	19					
					20		
SPARE	20/1	21				20/1	RECYCLE PUMP BUILDING #1 SUB PANEL
			1120		22		
	2	23					
				1120	24		
CONNECTED VA PER PHASE			7,120	7,360			
CONNECTED AMPS PER PHASE			59.3	59.7			
50% OF CONTINUOUS & LIGHTING LOAD (MVA)			0.000	0.000			
LARGEST MOTOR (SFA)			0.000	0.000			
CODE VA PER PHASE			7,120	7,360			
CODE AMPS PER PHASE			59.3	59.7			

PANELBOARD A (EXISTING)

E PANEL SCHEDULE

N.T.S.

NOTE:
ITEMS SHOWN AS BOLD ARE NEW THIS PROJECT

WATERWORKS ENGINEERS

Jensen Engineering, L.L.C.

MGC CONSTRUCTION, INC.

ARIZONA WATER COMPANY
MONTEZUMA HAVEN WELLS NO. 2 AND NO. 3
ARBISMO REMOVAL FACILITY

ELECTRICAL
DETAILS

DATE DECEMBER 2011
PROJECT NUMBER 11.067
DRAWING NUMBER E-106

REUSE OF DOCUMENTS: THIS DOCUMENT, AND THE IDEAS AND DESIGNS INCORPORATED HEREIN, AS AN INSTRUMENT OF PROFESSIONAL SERVICE, IS THE PROPERTY OF WATER WORKS ENGINEERS, LLC. AND IS NOT TO BE USED, IN WHOLE OR IN PART, FOR ANY OTHER PROJECT WITHOUT THE WRITTEN AUTHORIZATION OF WATER WORKS ENGINEERS, LLC.

Attachment "I"

Sample Design of Chemical System

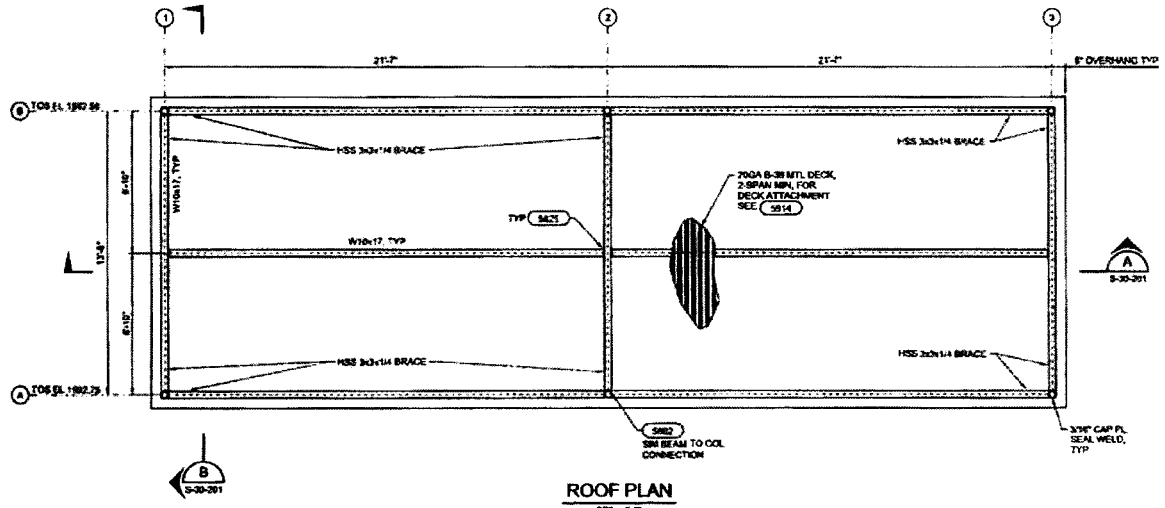

ROOF PLAN

3/8" = 1'-0"

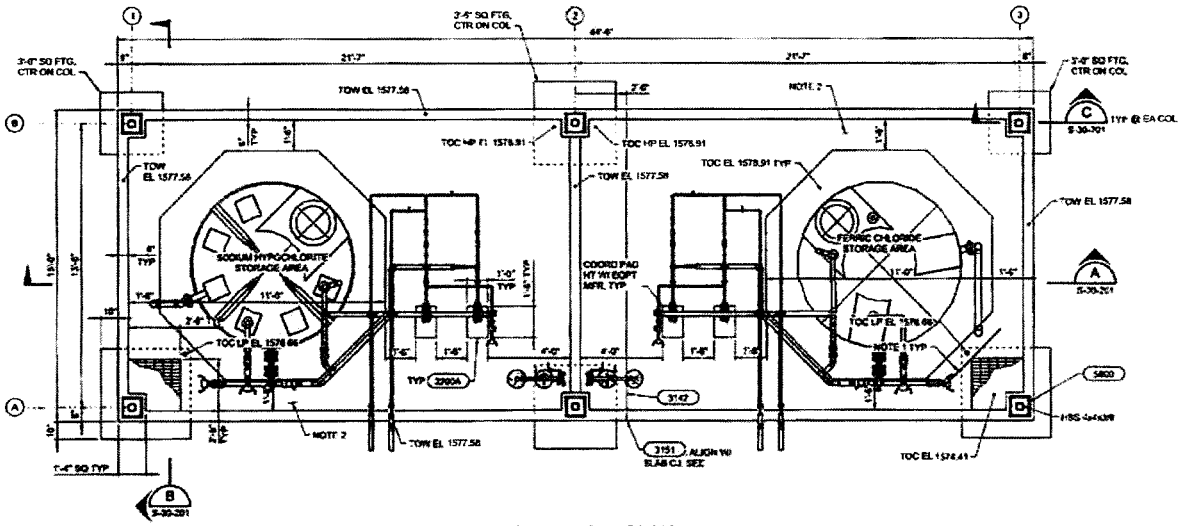

FOUNDATION PLAN

3/8" = 1'-0"

NOTES

1. PROVIDE 35x4'-0" DIAGONAL BAR AT EACH REENTRANT CONCRETE CORNER AT EACH REBAR MAT.
2. APPLY CONCRETE DENSIFIER TO SLAB SURFACE AFTER COMPLETION OF THE SPECIFIED WATER CURE AND INSTALLATION OF CONCRETE CURBS AND PADS.

2 0 2 4 FEET
SCALE 3/8"=1'-0"

VERIFY SCALE

BAR IS ONE INCH ON ORIGINAL DRAWING.
IF NOT ONE INCH ON THIS SHEET, ADJUST SCALES ACCORDINGLY

ARIZONA WATER COMPANY

WATERWORKS ENGINEERS

ARIZONA WATER COMPANY
BASELINE
ARSENIC REMOVAL FACILITY
EXPANSION

STRUCTURAL
CHEMICAL AREA PLANS

DATE MARCH 2014
PROJECT NUMBER 13-047
DRAWING NUMBER S-30-101
SHEET - OF -

REUSE OF DOCUMENTS: THIS DOCUMENT, AND THE IDEAS AND DESIGNS INCORPORATED HEREIN, AS AN INSTRUMENT OF PROFESSIONAL SERVICE, IS THE PROPERTY OF WATER WORKS ENGINEERS, L.L.C. AND IS NOT TO BE USED, IN WHOLE OR IN PART, FOR ANY OTHER PROJECT WITHOUT THE WRITTEN AUTHORIZATION OF WATER WORKS ENGINEERS, L.L.C.

FILENAME: S:\CAD\Projects\13-047 AZ Water Baseline ARF Exp\Drawings\Columbia\13470-S-30-101.dgn
PLOT DATE: 3/11/2014
PLOT TIME: 9:43:21 AM
SCALE: 1:2.00000

NOTES

1. OVER EXCAVATE BELOW ENTIRE STRUCTURE TO A MINIMUM EL 1575.00 EXTEND EXCAVATION HORIZONTALLY FIVE FEET MINIMUM BEYOND STRUCTURE FOOTPRINT. REPLACE W/ SELECT FILL AND AGG BASE.
2. INSTALL SHADE FABRIC AROUND STRUCTURE PERIMETER. ATTACH IN ACCORDANCE WITH THE MANUFACTURER'S RECOMMENDATIONS. HARDWARE SHALL INCLUDE SNAP-LINKS AT THE CURTAIN PERIMETER TO ALLOW REMOVAL. PROVIDE A ROLL-UP ASSEMBLY ALONG GRID LINE A. INSTALL INTERMEDIATE SHADE FABRIC SUPPORTS AS REQUIRED FOR FABRIC.

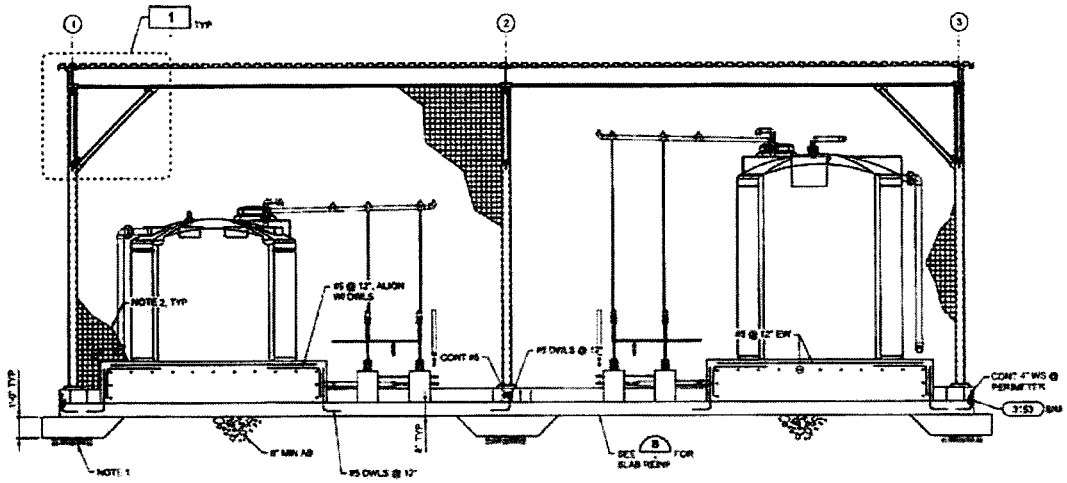

A SECTION
S-30-101 3/8" = 1'-0"

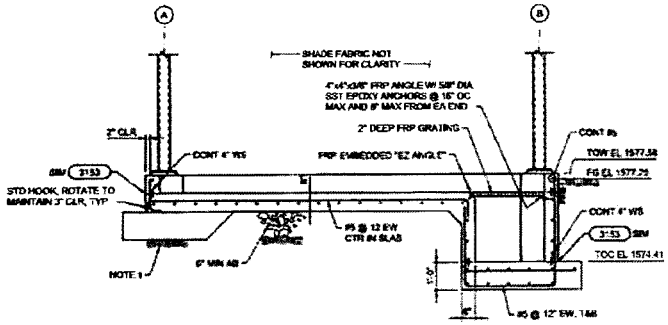

B SECTION
S-30-101 1/2" = 1'-0"

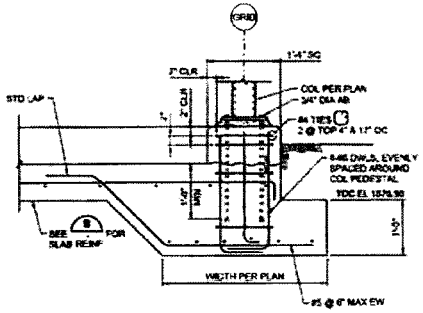

C SECTION
S-30-101 1" = 1'-0"

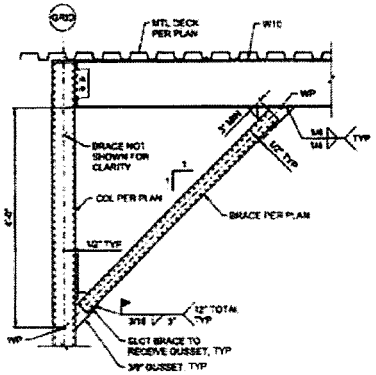

1 DETAIL
1" = 1'-0"

SCALE 1"=1'-0" (1 0 1 2 FEET)
SCALE 1/2"=1'-0" (2 0 2 4 FEET)
SCALE 3/8"=1'-0" (2 0 2 4 FEET)

VERIFY SCALE
BAR IS ONE INCH ON ORIGINAL DRAWING
IF NOT ONE INCH ON THIS SHEET, ADJUST SCALES ACCORDINGLY

ARIZONA WATER COMPANY

WATERWORKS ENGINEERS

ARIZONA WATER COMPANY
BASELINE
ARSENIC REMOVAL FACILITY
EXPANSION

STRUCTURAL
CHEMICAL AREA SECTIONS

DATE MARCH 2014
PROJECT NUMBER 13-047
DRAWING NUMBER S-30-201
SHEET - OF -
SCALE: 1:2.50087

REUSE OF DOCUMENTS: THIS DOCUMENT, AND THE IDEAS AND DESIGNS INCORPORATED HEREIN, AS AN INSTRUMENT OF PROFESSIONAL SERVICE, IS THE PROPERTY OF WATER WORKS ENGINEERS LLC. AND SHALL NOT BE USED, IN WHOLE OR IN PART, FOR ANY OTHER PROJECT WITHOUT THE WRITTEN AUTHORIZATION OF WATER WORKS ENGINEERS LLC.

FILENAME: S:\CAD\Projects\13-047 AZ Water Baseline ARF Fac\Drawings\Delineation\13-047-S-30-201.dgn PLOT DATE: 3/11/2014 PLOT TIME: 9:42:52 AM

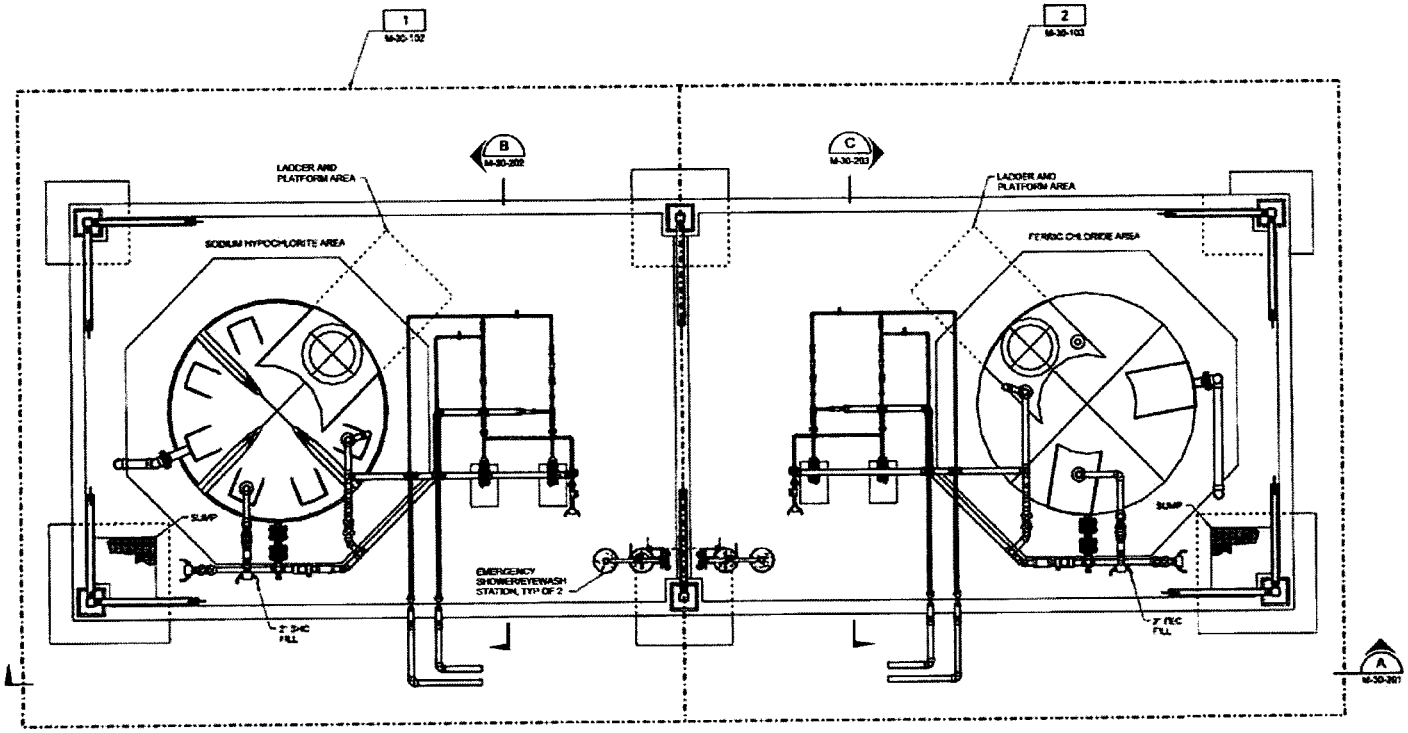

PLAN
1/2" = 1'-0"

SCALE 1/2"=1'-0"

ARIZONA WATER COMPANY

WATERWORKS ENGINEERS

ARIZONA WATER COMPANY
BASELINE
ARSENIC REMOVAL FACILITY
EXPANSION

MECHANICAL

CHEMICAL AREA PLAN

MARCH 2014

PROJECT NUMBER
13-047

DRAWING NUMBER
M-30-101

SHEET 1 OF

SCALE: 1:2

REUSE OF DOCUMENTS:

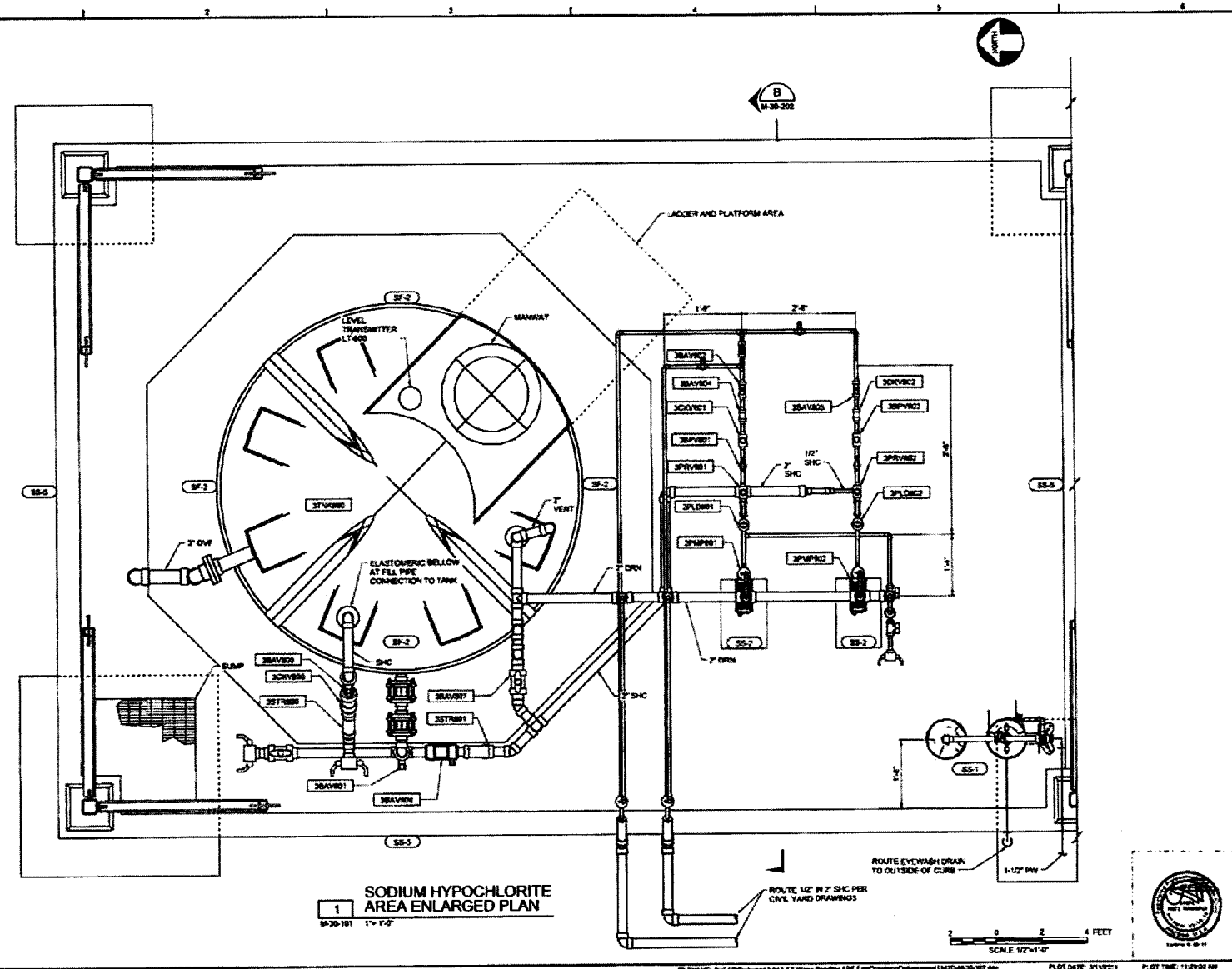

1 SODIUM HYPOCHLORITE AREA ENLARGED PLAN
M-30-101 1"= 1'-0"

VERIFY SCALE

ARIZONA WATER COMPANY

WATERWORKS ENGINEERS

ARIZONA WATER COMPANY
BASELINE
ARSENIC REMOVAL FACILITY
EXPANSION

MECHANICAL

SODIUM HYPOCHLORITE
CHEMICAL AREA
ENLARGED PLAN

DATE MARCH 2014
PROJECT NUMBER 13-047
DRAWING NUMBER M-30-102
SHEET - OF -
SCALE 1:1

REUSE OF DOCUMENTS: THIS DOCUMENT, AND THE IDEAS AND DESIGNS INCORPORATED HEREIN, AS AN INSTRUMENT OF PROFESSIONAL SERVICE, IS THE PROPERTY OF WATER WORKS ENGINEERS, LLC AND IS NOT TO BE USED, IN WHOLE OR IN PART, FOR ANY OTHER PROJECT WITHOUT THE WRITTEN AUTHORIZATION OF WATER WORKS ENGINEERS, LLC

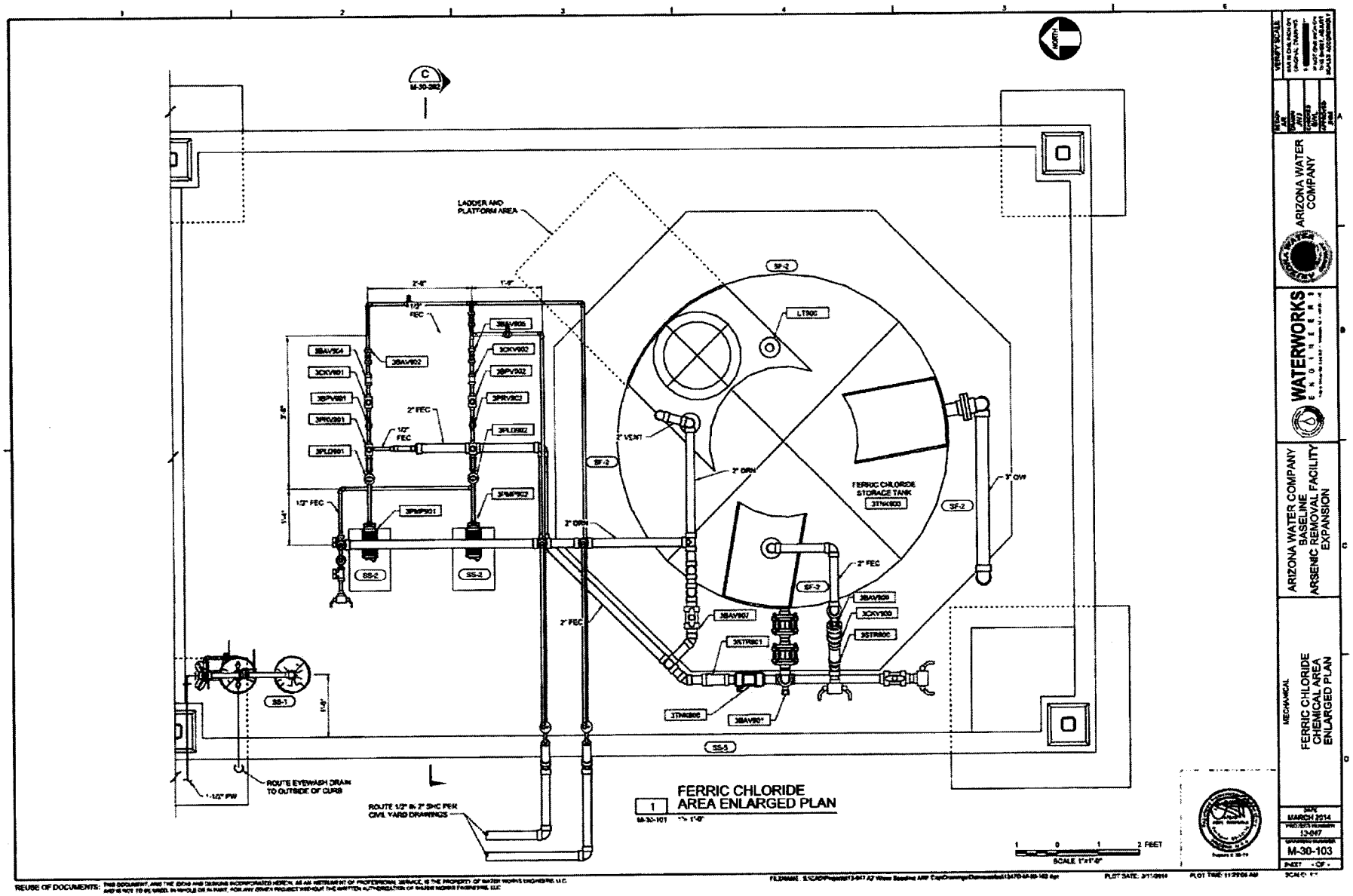

REUSE OF DOCUMENTS: THIS DOCUMENT, AND THE IDEAS AND DESIGNS INCORPORATED HEREIN, AS AN INSTRUMENT OF PROFESSIONAL SERVICE, IS THE PROPERTY OF WATER WORKS ENGINEERING, LLC AND IS NOT TO BE USED, IN WHOLE OR IN PART, FOR ANY OTHER PROJECT WITHOUT THE WRITTEN AUTHORIZATION OF WATER WORKS ENGINEERING, LLC

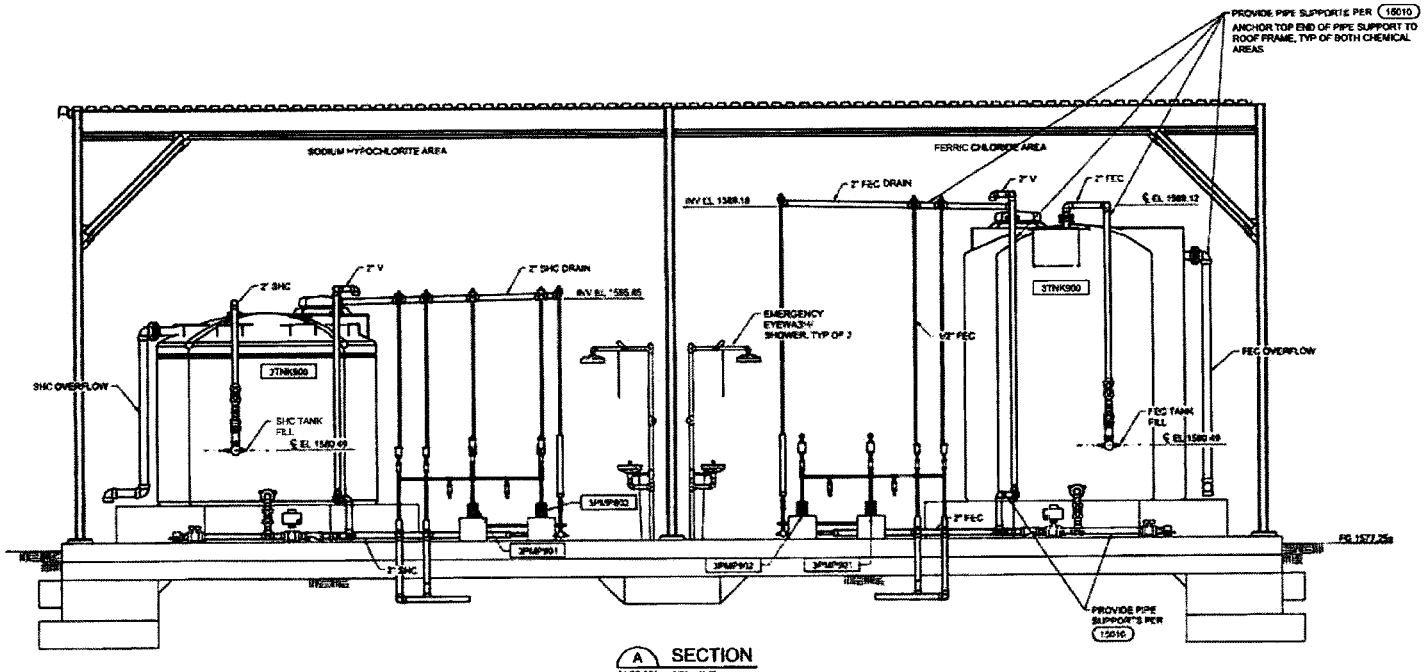

A SECTION
M-30-101 1/2" = 1'-0"

2 0 2 4 FEET
SCALE 1/2"=1'-0"

VERIFY SCALE
BAR IS ONE INCH ON ORIGINAL DRAWING
IF NOT ONE INCH ON THIS SHEET ADJUST SCALES ACCORDINGLY

DESIGN AJL
DRAWN JWJ
CHECKED SWL
APPROVED JHM

ARIZONA WATER COMPANY

WATERWORKS ENGINEERS

ARIZONA WATER COMPANY
BASELINE
ARSENIC REMOVAL FACILITY
EXPANSION

MECHANICAL
CHEMICAL AREA SECTION 1

DATE MARCH 2014
PROJECT NUMBER 13-047
DRAWING NUMBER M-30-201
SHEET - OF -
SCALE: 1/2

REUSE OF DOCUMENTS: THIS DOCUMENT, AND THE IDEAS AND DESIGNS INCORPORATED HEREIN, AS AN INSTRUMENT OF PROFESSIONAL SERVICE, IS THE PROPERTY OF WATER WORKS ENGINEERS, LLC AND IS NOT TO BE USED, IN WHOLE OR IN PART, FOR ANY OTHER PROJECT WITHOUT THE WRITTEN AUTHORIZATION OF WATER WORKS ENGINEERS, LLC

FILENAME: S:\CAD\Projects\13-047 AZ Water Baseline ARD Exp\Drawings\Deliverables\13-047D-M-30-201.dgn
PLOT DATE: 3/11/2014
PLOT TIME: 11:29:06 AM

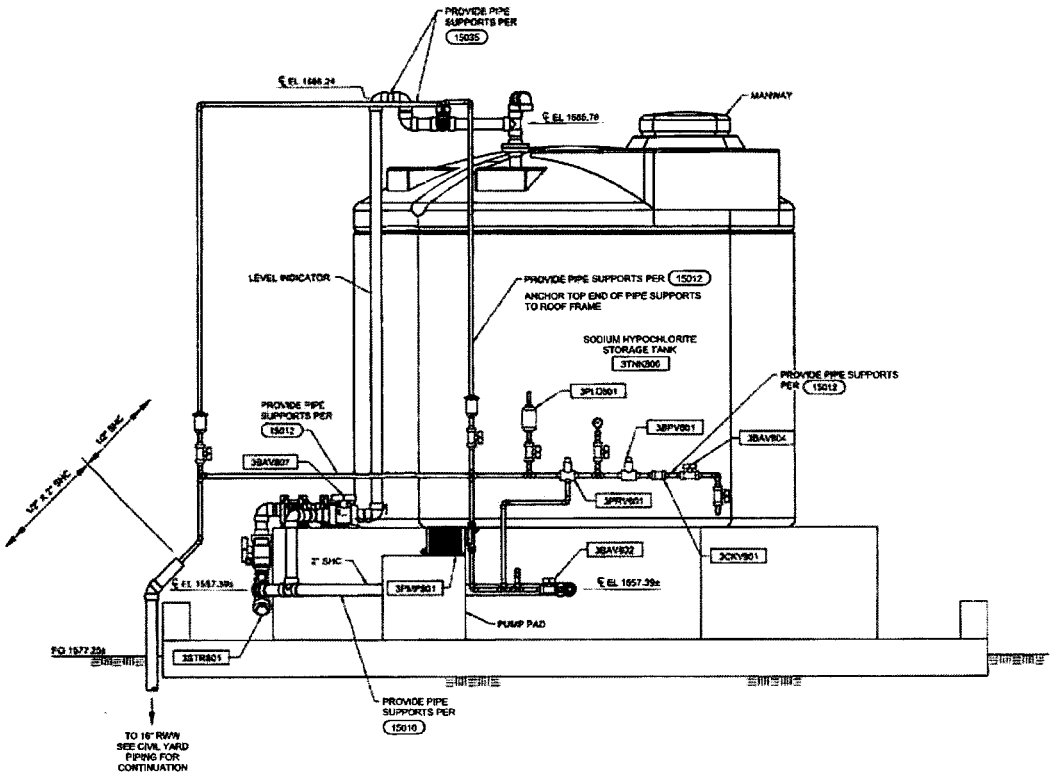

B SECTION
M-30-101 1" = 1'-0"

1 0 1 2 FEET
SCALE 1"=1'-0"

VERIFY SCALE

ARIZONA WATER COMPANY

WATERWORKS ENGINEERS

ARIZONA WATER COMPANY
BASELINE
ARSENIC REMOVAL FACILITY
EXPANSION

MECHANICAL

SODIUM HYPOCHLORITE SECTION

DATE MARCH 2014
PROJECT NUMBER 13-047
DRAWING NUMBER M-30-202
SHEET - OF -

REUSE OF DOCUMENTS: THIS DOCUMENT, AND THE IDEAS AND DESIGNS INCORPORATED HEREIN, AS AN INSTRUMENT OF PROFESSIONAL SERVICE, IS THE PROPERTY OF WATER WORKS ENGINEERS, LLC AND IS NOT TO BE USED IN WHOLE OR IN PART FOR ANY OTHER PROJECT WITHOUT THE WRITTEN AUTHORIZATION OF WATER WORKS ENGINEERS, LLC

FILENAME: S:\CAD\Projects\13-047 AZ Water Baseline AW\Exp\Drawings\Conversion\13-047-M-30-202.dgn PLOT DATE: 3/11/2014 PLOT TIME: 11:29:13 AM SCALE: 1:1

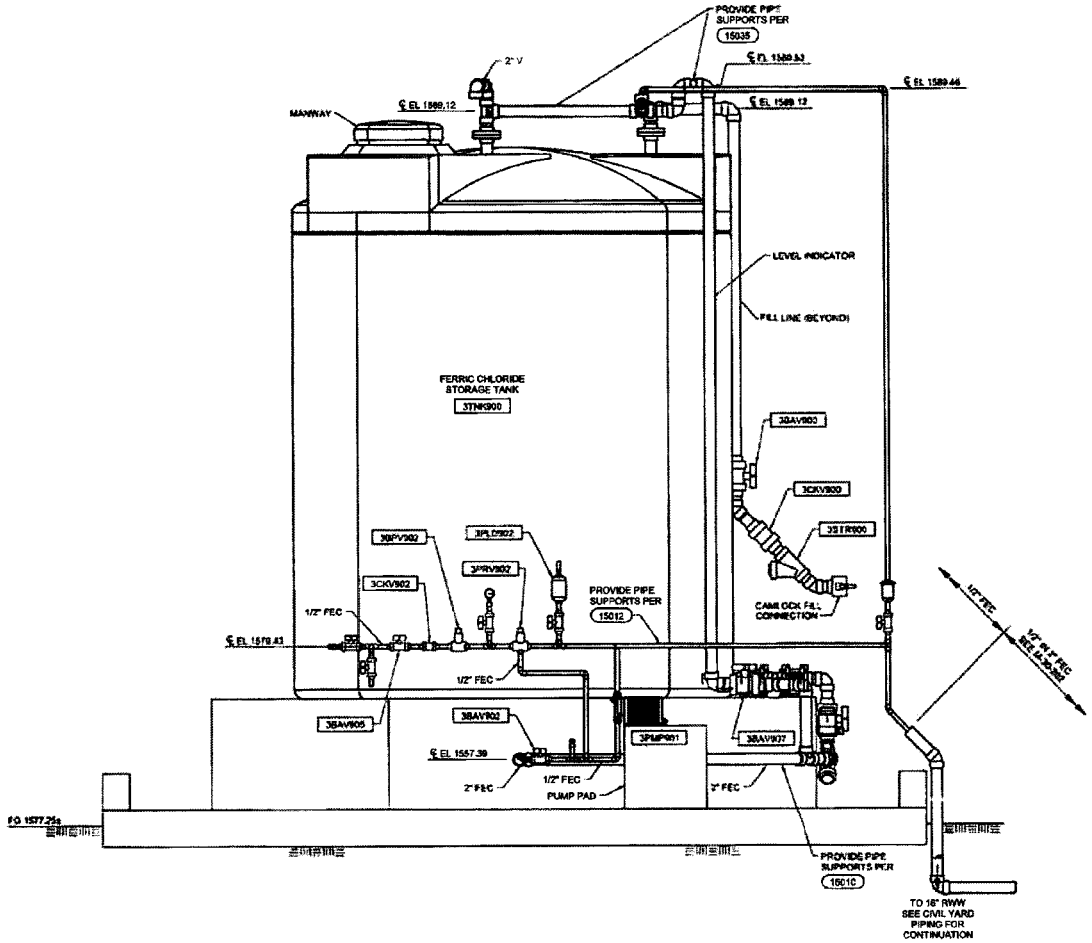

C SECTION
M-30-101 1" = 1'-0"

1 0 1 2 FEET
SCALE 1"=1'-0"

VERIFY SCALE

ARIZONA WATER COMPANY

WATERWORKS ENGINEERS

ARIZONA WATER COMPANY
BASELINE
ARSENIC REMOVAL FACILITY
EXPANSION

MECHANICAL

FERRIC CHLORIDE SECTION

DATE MARCH 2014
PROJECT NUMBER 13-047
DRAWING NUMBER M-30-203
SHEET - OF -

SCALE: 1:1

REUSE OF DOCUMENTS: THIS DOCUMENT, AND THE IDEAS AND DESIGNS INCORPORATED HEREIN AS AN INSTRUMENT OF PROFESSIONAL SERVICE, IS THE PROPERTY OF WATER WORKS ENGINEERS, LLC AND IS NOT TO BE USED, IN WHOLE OR IN PART, FOR ANY OTHER PROJECT WITHOUT THE WRITTEN AUTHORIZATION OF WATER WORKS ENGINEERS, LLC.

FILENAME: S:\CAD\Projects\13-047 AZ Water Baseline AND Exp\Drawings\Deliverables\13470-M-30-203.dgn PLOT DATE: 3/31/2014 PLOT TIME: 11:29:16 AM

Arizona Water Company

VALLEY FARMS WELL NOS. 1 AND 2
ARSENIC REMOVAL FACILITY

16601 E. VAH KI INN ROAD
COOLIDGE, ARIZONA 85128

ADDENDUM No. 2

July 10, 2014

In reference to the Request for Proposal and Technical Specifications for the subject project, please note the following items which address comments and revisions to drawings and specifications noted:

SECTION NO. 1: Questions and Responses

Question 1. Number 11 states that the project will be paid based on actual labor and material quantities installed/constructed. Is this true only if the costs under run the estimate provided? In other words, is the price that we are providing with the proposal a Guaranteed Maximum Price, so if there are overruns in the pricing that is our risk?

Response: The Contractor will provide a Guaranteed Maximum Price per line item on the Contract/Proposal with their proposal. Company shall pay the Contractor the line item price listed in the Proposal/Contract in whole once the scope of the work of the line item is complete.

Question 2. In the proposal schedule of values there is no line item for design costs, which I believe would fall under the tax exempt line items. Is it the expectation that we spread the design costs throughout the items listed or will a separate item for design costs be added?

Response: Contractor will spread the design costs throughout the line items in the Proposal/Contract.

Question 3. In Section ii.b., should full page resumes be provided and if so, should they be provided in that section or as attachments/appendices to the proposal

Response: Yes. Contractor will submit resumes in an appendix.

Question 4. Section vi of the proposal states that the contractor and engineer should list all current projects in the State of Arizona along with pertinent project information. Should this include just the projects that the key team members are working on? Should that be included as an attachment or appendix or just be included as part of Section vi

Response: Contractor will include the most relevant projects the team members have worked on. Contractor will submit this information as part of Section vi.

Question 5. Should we include our completed Contract/Proposal and the Media Contract/Proposal in Section viii of the Proposal or as an attachment/appendix?

Response: Contractor will include the Contract/Proposal for the construction of the ARF and the media change outs in an appendix.

Question 6. The specification exhibit B shows the system pressure is 100 PSI static. Is system running pressure higher than the static? What is the desired pressure rating for the contactor vessels?

Response: The design pressure for the ARF is 100 psi.

Question 7. What is the capacity of the booster pump station at the Valley Farms site?

Response: The distribution system can supply 700 gpm of water for backwash purposes.

Question 8. If the incoming pH is reduced for treatment using the equipment you have outlined, are we only allowed to raise the pH back up based on blended water or can a NaOH system be added to the back end for raising the pH?

Response: Yes, post treatment pH adjustment with NaOH is acceptable.

Archie D. Lopez

Contractor's Signature

Date

Note: A signed copy of this Addendum shall be returned with the Contractor's proposal and/or the Contractor shall acknowledge this Addendum in the space provided on the Proposal.

Arizona Water Company

VALLEY FARMS WELL NOS. 1 AND 2
ARSENIC REMOVAL FACILITY

16601 E. VAH KI INN ROAD
COOLIDGE, ARIZONA 85128

ADDENDUM No. 3

July 14, 2014

Addendum No. 3 corrects the response given to question no. 17 of Addendum No. 1.

In reference to the Request for Proposal and Technical Specifications for the subject project, please note the following items which address comments and revisions to drawings and specifications noted:

Question 1. Is Delta required to provide the electrical and controls design in addition to SCADA work?

Response: Yes.

Archie D. Lopez
Contractor's Signature

Date

Note: A signed copy of this Addendum shall be returned with the Contractor's proposal and/or the Contractor shall acknowledge this Addendum in the space provided on the Proposal.

Arizona Water Company

VALLEY FARMS WELL NOS. 1 AND 2
ARSENIC REMOVAL FACILITY

16601 E. VAH KI INN ROAD
COOLIDGE, ARIZONA 85128

ADDENDUM No. 4

July 16, 2014

Addendum No. 4 clarifies and amends the responses given to question nos. 16 and 17 of Addendum No. 1, question nos. 2, 6 and 8 of Addendum No. 2 and question no. 1 of Addendum No. 3

In reference to the Request for Proposal and Technical Specifications for the subject project, please note the following items which address comments and revisions to drawings and specifications noted:

SECTION NO. 1: Questions and Responses

Question 16 - Addendum No. 1 and Question 1 - Addendum No. 3:

Is Delta required to provide the electrical and controls design in addition to SCADA programming services?

Response: No. Contractor is only required to use Delta for SCADA programming.

Question 17 - Addendum No. 1:

What is your preferred chemical for reducing pH?

Response: 93% Sulfuric acid.

Question 2 - Addendum No 2:

In the Proposal/Contract there is no line item for design costs. Is it the expectation that we spread the design costs throughout the items listed or will a separate item for design costs be added?

Response: Contractor will submit pricing for design under the "Engineering design and permitting" line item on the amended Proposal/Contract attached to this addendum. (Attachment J).

Question 6 - Addendum No 2:

The specification exhibit B shows the system pressure is 100 PSI static. Is system running pressure higher than the static? What is the desired pressure rating for the contactor vessels?

Response: The design pressure for the vessels is 100 psi. All pipe, fittings and related equipment will conform to the Company's Construction Specifications and the Valley Farms Technical Specifications.

Question 8 - Addendum No 2:

If the incoming pH is reduced for treatment using the equipment you have outlined, are we only allowed to raise the pH back up based on blended water or can a NaOH system be added to the back end for raising the pH?

Response: Yes, post treatment pH adjustment with NaOH is acceptable. Contractor must design ARF to use both 25% and 50% concentration NaOH.

SECTION NO. 2: Request for Proposal Revisions

Proposal Rev 1. The bid due date is revised to July 23, 2014 at 2:00 pm.

Archie D. Lopez

Contractor's Signature

7/23/2014

Date

Note: A signed copy of this Addendum shall be returned with the Contractor's proposal and/or the Contractor shall acknowledge this Addendum in the space provided on the Proposal.

Attachment "J"

Amended Proposal Contract

ARIZONA WATER COMPANY

Pinal Valley - Casa Grande Division
220 E. 2nd Street

PROPOSAL/CONTRACT

CONTRACTOR:	SYSTEM: PINAL VALLEY
ADDRESS:	W.A. No(s): 1-5167
CITY ST ZIP:	BID DUE DATE: July 23, 2014

CONTRACTOR SUBMITS this PROPOSAL/CONTRACT to ARIZONA WATER COMPANY, an Arizona corporation (the "Company"), to perform the work and complete the project described on Page 2 (the "Project"), as an independent prime contractor.

1. Contractor certifies that it has a complete copy of, and has read, understands and accepts, the Company's General Conditions of Contract, and the Company's Construction Specifications and Standard Specification Drawings, (the "Specifications"), all of which are attached hereto. Contractor has examined the specific plans and related construction drawings for the Project (the "Drawings"), copies of which are also attached hereto. The General Conditions of Contract, Specifications and Drawings are incorporated into this Proposal/Contract. Contractor affirms that all work and materials to be furnished or purchased for the Project will be in strict conformance with the General Conditions of Contract, Specifications and Drawings.
2. Contractor represents and warrants that it has satisfied and complied with the provisions of Section 6, Contractor Understands Work and Working Conditions, of the General Conditions of Contract prior to submitting this Proposal/Contract.
3. Contractor represents that this Proposal/Contract is fair and honest in all respects, is submitted in good faith and is not submitted in collusion with any other company, entity or person.
4. Contractor acknowledges that one hundred percent (100%) Performance and Payment Bonds are required and must be provided to the Company prior to the commencement of work.
5. Prior to the commencement of work, Contractor will submit to the Company a list of all materials to be used in the Project. The materials list will include the manufacturer, part number, price and quantity included in this Proposal/Contract.
6. Contractor will furnish all labor, tools, equipment and materials required to complete the Project according to the General Conditions of Contract, Specifications and Drawings. No materials purchased by Contractor to be incorporated into the Project are subject to tax at the time of purchase and Contractor will not charge the Company for any such tax. Contractor will pay the applicable transaction privilege tax (the "Contracting Tax") on the Project after Contractor receives payment of the final Project invoice from the Company. The cost of materials incorporated into the Project which are exempt by Arizona Revised State Statues ("A.R.S.") from the Contracting Tax, for example, pipes or valves having a diameter of four (4) inches or larger, including equipment, fittings and any other related part that is used in operating the pipes or valves (A.R.S. §42-5061 B.6.), will not be included in the total cost of the labor and materials upon which the Contracting Tax is computed. Contractor retains full liability and obligation to pay the Contracting Tax and will defend and indemnify the Company against any demand or obligation to pay the Contracting Tax.
7. Contractor will maintain detailed accounting records of all materials purchased and incorporated into the Project. Such records will include all supporting original vendor invoices for all materials purchased. Following completion of the Project, Contractor will submit an itemized accounting to the Company which will include all supporting original vendor invoices and satisfactory evidence of payment thereof. The Company will not pay Contractor for materials not actually incorporated into the Project, and the disposition of such materials will remain Contractor's responsibility.
8. The Estimated Total Cost of the Project, shown on Page 2, is based on estimated labor and material quantities to be furnished. It includes an estimate of the Contracting Tax and the cost of the required Performance and Payment Bonds. Contractor will not cancel, modify or withdraw this Proposal/Contract during a ninety-day (90) period commencing on the Bid Due Date. The Company may accept this Proposal/Contract by signing and mailing, or otherwise delivering, a copy hereof to Contractor during such ninety-day (90) period. If the Company does not accept this Proposal/Contract during such ninety-day (90) period, Contractor may cancel this Proposal/Contract by giving written notice of cancellation to the Company.
9. Prior to the commencement of work, Contractor will provide the Company with a detailed construction schedule, in either Gantt or CPM form, identifying all tasks to be performed from the date of the written Commencement Notice through completion of the Project, including testing, training of Company Personnel and final Project invoicing. Contractor will provide the Company with a copy of such construction schedule documenting the progress of work on the Project at least monthly.
10. Contractor will not commence work on the Project until the Company gives Contractor a written Commencement Notice. Contractor will complete the Project within _____ calendar days after the Commencement Notice is issued.
11. Following the Company's written notice of satisfactory completion of the Project, and upon receipt of the final Project invoice from Contractor, the Company shall pay Contractor the actual total cost of the Project, which will be calculated as shown on Page 2, except that actual labor and material quantities installed/constructed will be substituted for the estimated labor and materials quantities and the Contracting Tax will be recalculated based on such actual labor and materials quantities.
12. The amount of applicable liquidated damages for Contractor's failure to deliver or perform within the time limit shown in Paragraph 10 may be deducted from the Company's payment of the final Project invoice. This provision shall not limit the Company's ability to terminate this Proposal/Contract for Contractor's unsatisfactory performance or failure to perform as provided in the General Conditions of Contract, Specifications or Drawings, or in this Proposal/Contract.

SPECIAL CONDITIONS:

See attached Request for Proposal and Technical Specifications, dated June 18, 2014.
Mandatory Pre-Bid Meeting, June 24, 2014, at 9:00 am at Valley Farms Well Nos. 1 and 2 Site.
Company will allow three (3) progress payments and one (1) final payment.

CONTRACTOR	PROPOSAL/CONTRACT ACCEPTED: *ARIZONA WATER COMPANY*
By:	By:
Print Name:	Print Name: Fredrick K. Schneider, PE
Title:	Title: Vice President - Engineering
Date:	Date:

ARIZONA WATER COMPANY

Pinal Valley - Casa Grande Division
220 E. 2nd Street
Casa Grande, AZ 85122 PH: 520-836-8785

PROPOSAL/CONTRACT

CONTRACTOR:	SYSTEM: PINAL VALLEY
AZ CONTRACTOR LICENSE NO: CLASSIFICATION:	W.A. No(s): 1-5167
ADDRESS:	BID DUE DATE: July 23, 2014
CITY ST ZIP	BID BOND REQUIRED ☑ Yes ☐ No

DESCRIPTION OF PROJECT: Design and construct Arsenic Removal Facility at Valley Farms Well Nos. 1 and 2 in Pinal Valley water system.

1-2. MATERIALS EXEMPT FROM CONTRACTING TAX (per Paragraph 6)	QUANTITY	UNIT PRICE LABOR	UNIT PRICE MATERIALS	TOTAL COST LABOR	TOTAL COST MATERIALS
Provide and install on-site piping with related fittings					
				1	2
3. Total Labor to Install Exempt Materials (add the amounts in column 1)				3	
4. Total Exempt Materials (add the amounts in column 2)					4

5-6. NON-EXEMPT MATERIALS	QUANTITY	LABOR	MATERIALS	LABOR	MATERIALS
Provide and install chemical injection system including tanks, containment area and shade canopy with associated power and controls	Lot				
Provide and install on-site piping with related fittings	Lot				
Provide and install new backwash system including tanks, piping, pumps, and associated power and controls	Lot				
Building and hydro-pneumatic tank demolition and removal	Lot				
Provide and install ARF Vessel(s) with media and related appurtenances	Lot			5	6
Testing, commissioning and on-site operator training	Lot				
Integrate ARF and Valley Farms site into Casa Grande SCADA system	Lot				
Engineering design and permitting	Lot				
7. Total Labor to Install Non-Exempt Materials (add the amounts in column 5)				7	
8. Total Non-Exempt Materials (add the amounts in column 6)					8
9. Subtotal A (add lines 3, 7 and 8)					9
10. Contracting Tax Base (multiply the amount on line 9 by 0.65)				10	
11. Applicable Contracting Tax Rate				11	
12. Contracting Tax (multiply the amount on line 10 by line 11)					12
13. Subtotal B (add lines 4, 9 and 12)					13
14. 100% Performance and Payment Bonds Cost					14
15. Estimated Total Cost (add lines 13 and 14)					15

NOTE: The Estimated Total Cost includes all labor and materials for backfill, pavement replacement, chip seal, and traffic control necessary for the Project.

Arizona Water Company

VALLEY FARMS WELL NOS. 1 AND 2
ARSENIC REMOVAL FACILITY

16601 E. VAH KI INN ROAD
COOLIDGE, ARIZONA 85128

ADDENDUM No. 5

July 21, 2014

Addendum No. 5 clarifies and amends the responses given to question nos. 6, 12 and 22 of Addendum No. 1 and question nos. 1, 3, 4 and 7 of Addendum No. 2

In reference to the Request for Proposal and Technical Specifications for the subject project, please note the following items which address comments and revisions to drawings and specifications noted:

SECTION NO. 1: Questions and Responses

Question 6 - Addendum No. 1:

What are the allowed working hours?

Response: The allowed working hours are as specified in the Request for Proposal and Technical Specifications.

Question 12 - Addendum No. 1:

Please define the level of record drawings required. Are these hard copies of the design drawings that are marked by hand, marked up in CAD, or redrawn in CAD. Do they need to be sealed by the Engineer and/or a Surveyor?

Response: Contractor is responsible for providing record drawings re-drawn in Bentley Microstation v8i, signed and sealed by the registered Engineer.

Question 22 - Addendum No 1:

Please clarify the intent of section 2.B of the Request for Proposal.

Response: Section 2.B of the Request for Proposal is hereby replaced in its entirety with the following:

B. Selection Criteria

The Company shall select the successful bidder based upon a combination of the following criteria weighted as determined by the Company:

i. Relevant Experience and Qualification of the Contractor and Engineer.

a. The Contractor will provide with its proposal submittal the following information to the Company, along with other pertinent information the Contractor may deem necessary, to demonstrate its qualifications to design, permit, and construct the ARF as described in this RFP:

1. Name and address of Contractor.

2. Number of years Contractor has been in business.

3. Information concerning the Contractor's financial capacity and stability to assure the full and timely performance of the Contractor.

4. Number of ARF Contractor has designed, permitted, constructed, and made operational for the removal of arsenic.

5. Name and address of Engineer.

6. Number of years Engineer's key personnel have been registered engineers.

7. Number and description of ARF's the Engineer has designed.

8. List a minimum of three (3) similar projects that Contractor has successfully completed. This list must include at a minimum:

a) Name and address of Engineer.
d) The dates of work.
e) The type of work performed, including the contaminant removed, capacity of water treated and the influent and effluent contaminant levels.
f) The name and telephone number of a contact person or owner of the Facility.

<u>Question 1 - Addendum No 2:</u>

Paragraph 11 of the Proposal/Contract states that the project will be paid based on actual labor and material quantities installed/constructed. Is this true only if the costs under run the estimate provided? In other words, is the price that we are providing with the Proposal/Contract a Guaranteed Maximum Price, so if there are overruns in the pricing that is our risk?

Response: The Contractor will provide a price per line item on the Proposal/Contract. Company shall make payment to Contractor in accordance with Company's GCC's, Section 39. Changes in scope of work and fee are negotiated in accordance with Company's GCC's, Sections 23 and 24.

Question 3 - Addendum No 2:

In Section 2.ii.b. of the Request for Proposal, should full page resumes be provided and if so, should they be provided in that section or as attachments/appendices to the proposal?

Response: Contractor will submit full page resumes in an appendix to his proposal.

Question 4 - Addendum No 2:

Section vi of the proposal states that the contractor and engineer should list all current projects in the State of Arizona along with pertinent project information. Should this include just the projects that the key team members are working on? Should that be included as an attachment or appendix or just be included as part of Section vi?

Response: Contractor will include the most relevant projects the team members have worked on and are currently working on.

Question 7 - Addendum No 2:

Is the booster pump station or the distribution system the source of water supply for backwashing the vessels?

Response: The distribution system is the water source for backwashing the vessels. The distribution system can supply 700 gpm of water for backwash purposes.

Archie D. Lopez

Contractor's Signature

7/23/2014

Date

Note: A signed copy of this Addendum shall be returned with the Contractor's proposal and/or the Contractor shall acknowledge this Addendum in the space provided on the Proposal.

ARIZONA WATER COMPANY

SPECIFICATIONS

GENERAL CONDITIONS OF CONTRACT: E-4-1

CONSTRUCTION SPECIFICATIONS: E-8-1

STANDARD SPECIFICATION DRAWINGS: E-9-1

JW 9/4/14

2007 EDITION WITH **2010** REVISIONS;
2012 GENERAL CONDITIONS OF CONTRACT

A copy of this entire Spec Book was sent out with Felix Construction Proposal package for WA 1-5167 Valley Farms ARF 1&2 on 9/4/14 JW

ARIZONA WATER COMPANY

3805 N. BLACK CANYON HIGHWAY, PHOENIX, ARIZONA 85015-5351 • P.O. BOX 29006, PHOENIX, AZ 85038-9006
PHONE: (602) 240-6860 • FAX: (602) 240-6874 • TOLL FREE: (800) 533-6023 • www.azwater.com

October 14, 2014

Mr. Ben Lee
Waterworks Engineers, LLC
7580 N. Dobson Road, Suite 200
Scottsdale, AZ 85256

Re: Valley Farms Arsenic Removal Facility

Dear Mr. Lee:

Enclosed is your original of the Agreement for Consulting Services for the above referenced project, which has been accepted by Arizona Water Company.

If you have any questions, please call me at this office.

Very truly yours,

Mario L. Mendez, E.I.T.
Engineer
engineering@azwater.com

afh
Enclosure

AGREEMENT FOR CONSULTING SERVICES BETWEEN
ARIZONA WATER COMPANY AND
WATERWORKS ENGINEERS, LLC

THIS AGREEMENT is made and entered into on this 3rd day of November 2014 by and between Arizona Water Company, an Arizona corporation, hereinafter referred to as "Company," and Waterworks Engineers, a limited liability company hereinafter referred to as "Consultant".

RECITALS

WHEREAS, Company is authorized to and desires to retain Consultant to provide engineering design, post design and construction administration services for Construction Administration and Inspection for Valley Farms Wells Arsenic Removal Facility ("Project").

WHEREAS, Consultant is agreeable to providing personnel and facilities necessary to perform the desired services within Company's required time; and

WHEREAS, Company desires to retain Consultant to perform the services in the manner, at the time, and for the compensation set forth herein;

NOW, THEREFORE, Company and Consultant agree as follows:

1. Description of Project

Company and Consultant agree that Project is as described in Exhibit A, hereto, incorporated by reference herein and entitled "Scope of Work," dated October 3, 2014. If, during the course of Project, Company and Consultant agree to changes in Project, such changes shall be effective only after being incorporated in this Agreement by written amendment, signed by representative of Company and Consultant.

2. Scope of Consultant Services

Consultant agrees to perform those services described hereafter. Unless modified in writing by both parties, duties of Consultant shall not be construed to exceed those services specifically set forth herein.

a. Basic Services: Consultant agrees to perform those services described in the Scope of Work (the "Services"). Any tasks not specifically described in the Scope of Work will be Additional Services.

b. Additional Services: Company shall pay Consultant all fees and costs incurred in performing Additional Services provided the services were authorized by Company in writing. Unless otherwise agreed in writing, Additional Services shall be

compensated in accordance with Consultant's standard billing rates at the time the Additional Services are performed.

c. Litigation Assistance: Unless specifically stated therein, the Scope of Work does not include assistance to support, prepare, document, bring, defend or assist in litigation undertaken or defended by Company. All such services required or requested of the Consultant by Company or any third party (except claims between Company and Consultant) will be reimbursed at Consultant's applicable rates for such litigation services.

3. Responsibilities of Company

In addition to payment for the Services performed under this Agreement, Company shall:

a. Assist and cooperate with Consultant in any manner necessary and within its ability to facilitate Consultant's performance under this Agreement.

b. Designate in writing a person to act as Company's representative with respect to this Agreement. Such person shall have complete authority to transmit instructions, receive information, interpret and define Company's policies, make decisions and execute documents on Company's behalf.

c. Furnish Consultant with all technical data in Company's possession including, but not limited to, maps, surveys, drawings, soils or geotechnical reports and any other information required by or useful to Consultant in performance of the Services under this Agreement.

d. Notify Consultant of any known or potential health or safety hazards existing at or near the project site.

e. Provide access to and/or obtain permission for Consultant to enter upon project related property during normal business hours, whether or not owned by Company, as required to perform and complete the Services.

4. Americans with Disabilities Act

Any other provision of this Agreement to the contrary notwithstanding, unless otherwise specified in the Scope of Services, Company's contractors shall have sole responsibility as between Company and Consultant for compliance with the Americans With Disabilities Act ("ADA") 42 U.S.C. 12101 et. Seq. and the related regulations. Consultant shall provide Company with applicable ADA criteria, which may be required.

5. Authorization and Completion

In signing this Agreement Company grants Consultant specific authorization to proceed with work as described in Scope of Work and under the terms of this Agreement.

6. Compensation

a. Amount: For the Services described in Exhibit A, Company agrees to pay, and Consultant agrees to accept compensation in accordance with Exhibit B, attached hereto and incorporated herein. Where Consultant has provided Company with a breakdown of the total compensation into subtasks, such breakdowns are estimates only. Consultant may reallocate compensation between tasks, provided total compensation is not exceeded without the prior written approval of Company.

b. Payment: As long as Consultant has not defaulted under this Agreement, Company shall pay Consultant within thirty (30) days of the date of Consultant's invoices for services performed and reimbursable expenses incurred under this Agreement. If Company has reason to question or contest any portion of any such invoice, amounts questioned or contested shall be identified and notice given to Consultant within thirty (30) days of the date of the invoice. Any portion of any invoice not contested shall be deemed to be accepted and approved for payment and shall be paid to Consultant within thirty (30) days of the date of the invoice. Company agrees to cooperate with Consultant in a mutual effort to resolve promptly any contested portions of Consultant's invoices.

In the event any uncontested portions of any invoice are not paid within thirty (30) days of the date of Consultant's invoice, interest on the unpaid balance shall accrue beginning with the 31st day at the rate of 1.5% per month, and Consultant shall have the right to suspend work per Article XV, Suspension of Work.

7. Responsibility of Consultant

a. Standard of Care Professional Services: Subject to the limitations inherent in the agreed scope of work as to the degree of care, amount of time and expenses to be incurred, and subject to any other limitations contained in this Agreement, Consultant shall perform the Services and any Additional Services in accordance with generally accepted standards and practices customarily utilized by competent engineering firms in effect at the time Services and any Additional Services are rendered. Consultant does not expressly or impliedly warrant or guarantee its Services.

b. Reliance upon Information Provided by Others: If Consultant's performance of services hereunder requires Consultant to rely on information provided by other parties (excepting Consultant's subcontractors), Consultant shall not independently verify the validity, completeness, or accuracy of such information unless otherwise expressly engaged to do so in writing by Company.

c. Consultant's Opinion of Costs: Company acknowledges that construction cost estimates, financial analyses and feasibility projections are subject to many influences including, but not limited to, price of labor and materials, unknown or latent conditions of existing equipment or structures, and time or quality of performance by third parties. Company acknowledges that such influences may not be precisely forecasted and are beyond the control of Consultant and that actual costs incurred may vary substantially from the estimates prepared by Consultant. Consultant does not warrant or guarantee the accuracy of construction or development cost estimates, however, Consultant agrees to exercise its best Professional Judgment in rendering its opinions.

d. Construction Phase Services

i. Consultant's Activities at Construction Site: The presence of Consultant's personnel at a construction site, whether as on-site representative, resident engineer, construction manager, or otherwise, does not make Consultant responsible for those duties that belong to Company and/or construction contractors or others, and does not relieve construction contractors or others of their obligations, duties, and responsibilities, including, but not limited to, construction methods, means, techniques, sequences, and procedures necessary for completing all portions of the construction work in accordance with the contract documents, any health or safety programs and precautions required by such construction work, and any compliance with applicable laws and regulations. Any inspection or observation of the contractor's work is for the purpose of determining that the work is proceeding in conformance with the intent of the project specifications and contract documents. Consultant has no authority to exercise control over any construction contractor in connection with their work or health or safety programs and precautions. Except to protect Consultant's own personnel and except as may be expressly required elsewhere in the Scope of Work, Consultant has no duty to inspect, observe, correct, or report on health or safety deficiencies of the construction contractor.

ii. Shop Drawing and Submittal Review: If required by Consultant's Scope of Services, Consultant shall review shop drawings or other contractor submittals for general conformance with the intent of the contract documents. Except for services completed under direct contract to Consultant, Consultant shall not be required to verify dimensions, to engineer contractor's shop drawings or submittals, nor to coordinate shop drawings or other submittals with other shop drawings or submittals provided by contractor.

iii. Record Drawings: Record drawings, if required, will be prepared, in part, on the basis of information compiled and furnished by others, and may not always represent the exact location, type of various components, or exact manner in which the Project was finally constructed. Except for services completed under direct contract to Consultant, Consultant is not responsible for any errors or omissions in the information from others that are incorporated into the record drawings.

e. Scope of Work: Before preparing the scope of work, Consultant specifically acknowledges and agrees that it has inspected and familiarized itself with Company's site. The Consultant has received, or had the opportunity to inquire about and/or request all relevant information concerning the Scope of Work from Company or any other source Consultant deems necessary. The Scope of Work has been prepared by the Consultant and to the best of its knowledge includes all applicable work required to successfully complete Construction Administration and Inspection for Valley Farms Wells Arsenic Removal Facility

8. Asbestos/Hazardous Material

Consultant and Consultant's subcontractors shall have no responsibility for the discovery, handling, removal, or disposal of, or exposure of persons to asbestos or hazardous or toxic materials that are present in any form at the Project site. Professional services related to or in any way connected with the investigation, detection, abatement, replacement, use, specification, or removal of products, materials, or processes containing asbestos or hazardous or toxic materials are beyond the scope of this Agreement.

In the event Consultant encounters asbestos or hazardous materials at the jobsite, Consultant may, at its option and without liability for damages, suspend the performance of services on the Project until such time as Company and Consultant mutually agree on an amendment to this Agreement to address the issue, or Company retains another specialist consultant or contractor to identify, classify, abate and/or remove the asbestos and/or hazardous materials.

9. Consultant's Work Product

a. Scope: Consultant's work product which is prepared solely for the purposes of this Agreement, including, but not limited to, drawings, test results, recommendations and technical specifications, whether in hard copy or electronic form, shall become the property of Company when Consultant has been fully compensated as set forth herein. Consultant may keep copies of all work product(s) for its records.

Consultant and Company recognize that Consultant's work product submitted in performance of this Agreement is intended only for the project described in this Agreement. Company's alteration of Consultant's work product or its use by Company for any other purpose shall be at Company's sole risk.

b. Electronic Copies: If requested, solely as an aid and accommodation to Company, Consultant may provide copies of its work product documents in computer-readable media ("electronic copies", "CADD"). These documents will duplicate the documents provided as work product, but will not bear the signature and professional seals of the registered professionals responsible for the work. Company is cautioned that the accuracy of electronic copies and CADD documents may be compromised by electronic media degradation, errors in format translation, file corruption, printing errors and incompatibilities, operator inexperience and file modification. Consultant will maintain

the original copy, which shall serve as the official, archived record of the electronic and CADD documents.

10. Indemnification

a. The Consultant shall indemnify the Company against, and save and hold it harmless from, any and all liability, claims, demands, loss, actions, causes of action, expense, penalties, fines, assessments, damages and costs of every kind and nature for injury to or death of any and all persons, including, without limitation, employees or representatives of the Company or of the Consultant or of any subcontractor, or any other person or persons, and for damage, destruction or loss, consequential or otherwise, to or of any and all property, real or personal, including, without limitation, property of the Company or of the Consultant or of any subcontractor, or of any other person or persons, and the violation of any law, ordinance, rule, regulation, standard, or order resulting from, or in any manner arising out of, or in connection with, the performance of the work under the Contract, howsoever same may be caused, including, without limitation, the Company's active or passive negligence. The Consultant shall also, upon request by the Company, and at no expense to the Company, defend the Company in any and all suits, concerning such injury to or death of any and all persons, and concerning such damage, destruction or loss, consequential or otherwise, to or of any and all property, real or personal, including, without limitation, suits by employees or representatives of the Company or of the Consultant or of any subcontractor, or any other person or persons, or concerning any court or administrative proceeding concerning the violation of any law, ordinance, rule, regulation, standard, or order. Excluded from this paragraph are only those injuries to or deaths of persons and damage, destruction or loss, to or of property arising from the sole negligence or willful misconduct of the Company.

b. Consultant shall indemnify the Company against, and save and hold it harmless from, any and all liability, claims, demands, damages, costs, expenses and attorney's fees, suffered or incurred on account of any breach of any obligation, covenant or other provision of this contract, including without limitation, breach of the indemnity provisions of subsection A of this Section 10.

c. Consultant further agrees to defend, indemnify and hold harmless the Company, its directors, officers, employees, and agents, from and against any and all costs, damages, claims, expenses, violations, notices of violations, penalties, liens, assessments, and liabilities of every kind and nature, foreseeable or unforeseeable, directly or indirectly, arising from any release, removal, generation, use, storage or disposal on, under, around, or from the site of any material, substance, or waste, hazardous or nonhazardous, including, without limitation, drilling fluids, mud, cuttings and development and test water howsoever same may be caused, including, without limitation, the Company's active or passive negligence.

11. Consultant's Insurance

Consultant shall procure and maintain the following minimum insurance:

a. Commercial general liability insurance, including personal injury liability, blanket contractual liability and broad-form property damage liability coverage. The combined single limit for bodily injury and property damage shall be not less than $1,000,000.

b. Automobile bodily injury and property damage liability insurance covering owned, non-owned, rented, and hired cars. The combined single limit for bodily injury and property damage shall be not less than $1,000,000.

c. Statutory workers' compensation and employer's liability insurance as required by state law.

d. Professional liability insurance. The policy limit shall be not less than $1,000,000.

Consultant shall either require each of its subconsultants to procure and to maintain the insurance specified in this section or insure its subconsultants in the Consultants own policy, in like amounts.

Company shall be named as additional insured on policies a and b above. Upon execution of this Agreement, Consultant will provide a certificate of insurance to Company. Consultant will keep the certificate current at all times while this Agreement is in effect. The Consultant will provide a 30-day written notice in the event the above policies are cancelled.

12. Confidentiality

Consultant agrees it will maintain the confidentiality of all material it receives from Company and will not disclose, distribute, or publish to any third party such information without the prior permission of Company. Notwithstanding the foregoing, Consultant shall have no confidentiality obligation with respect to information that:

a. becomes generally available to the public other than as a result of disclosure by Consultant or its agents or employees;

b. was available to Consultant prior to its disclosure by Company;

c. becomes available to Consultant from a third party who is not, to the knowledge of Consultant, bound to retain such information in confidence.

In the event Consultant is compelled by subpoena, court order, or administrative order to disclose any confidential information, Consultant shall promptly notify Company

and shall cooperate with Company prior to disclosure so that Company may take necessary actions to protect such confidential information from disclosure.

13. Subcontracts

Consultant shall be entitled, to the extent determined appropriate by Consultant, to subcontract any portion of the services to be performed under this Agreement.

14. Suspension of Work

Work under this Agreement may be suspended as follows:

a. By Company: By written notice to Consultant, Company may suspend all or a portion of the Work under this Agreement if unforeseen circumstances beyond Company's control make normal progress of the Work impracticable.

b. By Consultant: By written notice to Company, Consultant may suspend the work if Consultant reasonably determines that working conditions at the Site (outside Consultant's control) are unsafe, or in violation of applicable laws, or in the event Company has not made timely payment in accordance with Article VI, compensation.

15. Termination of Work

a. This Agreement may be terminated by Company as follows: (1) for its convenience on thirty (30) days' notice to Consultant, or (2) for cause, if Consultant materially breaches this Agreement through no fault of Company and Consultant neither cures such material breach nor makes reasonable progress toward cure within fifteen (15) days after Company has given written notice of the alleged breach to Consultant.

b. This Agreement may be terminated by Consultant as follows: (1) for cause, if Company materially breaches this Agreement through no fault of Consultant and Company neither cures such material breach nor makes reasonable progress toward cure within thirty (30) days after Consultant has given written notice of the alleged breach to Company.

c. Payment upon Termination: In the event of termination, Consultant shall perform such additional work as is reasonably necessary for the orderly closing of the work. Consultant shall be compensated for all work performed prior to the effective date of termination, plus work required for the orderly closing of the work, including: (1) authorized work performed up to the termination date plus termination expenses, including all labor and expenses, at Consultant's standard billing rates, directly attributable to termination; (2) all efforts necessary to document the work completed or in progress; and (3) any termination reports requested by Company.

16. Assignment

This Agreement is binding on the heirs, successors, and assigns of the parties hereto. Except as otherwise set forth under Article VIII, Assignment of Tasks to Affiliates, this Agreement may not be assigned by Company or Consultant without prior, written consent of the other.

17. No Benefit for Third Parties

The services to be performed by Consultant are intended solely for the benefit of Company, and no benefit is conferred on, nor contractual relationship established with any person or entity not a party to this Agreement. No such person or entity shall be entitled to rely on Consultant's services, opinions, recommendations, plans, or specifications without the express written consent of Consultant. No right to assert a claim against the Consultant, its officers, employees, agents, or consultants shall accrue to the construction Contractor or to any subcontractor, supplier, manufacturer, lender, insurer, surety, or any other third party as a result of this Agreement or the performance or nonperformance of the Consultant's services hereunder.

18. Force Majeure

Consultant and Company shall not be responsible for delays caused by circumstances beyond their reasonable control, including, but not limited to: (1) strikes, lockouts, work slowdowns or stoppages, or accidents; (2) acts of God; (3) failure of Company to furnish timely information or to approve or disapprove Consultant's instruments of service promptly; and (4) faulty performance or nonperformance by Consultant or Company, Company's or Consultant independent consultants or contractors, or governmental agencies. Consultant and Company shall not be liable for damages arising out of any such delay, nor shall the Consultant or Company be deemed to be in breach of this Agreement as a result thereof.

19. Integration

This Agreement represents the entire understanding of Company and Consultant as to those matters contained herein. No prior oral or written understanding shall be of any force or effect with respect to those matters covered herein. This Agreement may not be modified or altered except in writing signed by both parties.

20. Severability

If any part of this Agreement is found unenforceable under applicable laws, such part shall be inoperative, null, and void insofar as it conflicts with said laws, but the remainder of this Agreement shall be in full force and effect.

21. Choice of Law/Jurisdiction

This Agreement shall be administered and interpreted under the laws of the State of Arizona Jurisdiction of litigation arising from the Agreement shall be in The State of Arizona.

22. Attorneys' Fees

In the event any claim, controversy, or legal action arises under this Agreement, the prevailing party shall be entitled to recover from the other party all attorneys' fees, costs, expenses and other fees incurred by the prevailing party.

23. Notice Provisions

Notices concerning this Agreement shall be in writing and sent by certified mail or by courier (such as Federal Express), or by hand-delivery addressed as follows:

To the Company:

Arizona Water Company
3805 North Black Canyon Highway
Phoenix, AZ 85015-5351
Attention: President

or

Arizona Water Company
Post Office Box 29006
Phoenix, AZ 85038-9006
Attention: President

To Consultant:

Waterworks Engineers, LLC
7580 N. Dobson Road, Suite 200
Scottsdale, AZ 85256
Attention: President

Either party may change its address for purposes of this Section by giving written notice of such change of address to the other party.

24. Authorization

The persons executing this Agreement on behalf of the parties hereto represent and warrant that the parties have all legal authority and authorization necessary to enter into this Agreement, and that such persons have been duly authorized to execute this Agreement on their behalf.

IN WITNESS WHEREOF, each of the parties hereto has caused this instrument to be executed by their respective duly authorized officers as of the date first written above.

WATERWORKS ENGINEERS,
a limited liability company

By: John Matta

Its: Manager

ARIZONA WATER COMPANY,
an Arizona corporation

By: [illegible]

Its: VP engineering

Exhibit A

Scope of Services

Project: Valley Farms Arsenic Removal Facility
Engineer: Water Works Engineers
Owner: Arizona Water Company
Date: 9/16/2014 (Revised 10/3/2014)

Task Series 500 - Office Engineering & Construction Phase Services

Task 510 - Submittal Reviews
Review up to 20 submittals and coordinate comments with the Company.

Task 520 - RFI Responses
Review and respond to a maximum of 10 RFIs and issue clarifications and coordinate responses with the Company

Task 530 - Start-up Services
Oversee ARF start-up and coordinate start-up with the Company. Start-up operations activities to be completed by the Design/Build with operational support provided by the Company.

Task 540 - Regulatory Compliance
Ensure compliance with regulatory agency permit conditions, stipulations and inspections

Task 550 - As-Built Drawings
Review and verify as-built drawings per Contractor redlines at project close-out. CAD redlines to be provided by the Design/Build team.

Task 560 - O&M Manual Review
Review and provide comments on the arsenic removal plant O&M manual provided by the Design/Build team.

Assumptions:

1) The Company will maintain the administrative files and logs for the project during construction including submittals, correspondence, payment applications, etc.
2) The Company will review all Contractor payment applications.
3) Engineer shall review the submittals for conformance with the design concept of the project and compliance with the information given in the construction documents.
4) The Company's project manager will take the lead on interfacing with Contractor and coordinating or delegating construction related questions.
5) The arsenic removal equipment vendor will provide assistance with plant start-up and commissioning and operator training.
6) The O&M manual prepared by the Design/Build team shall document the function and control of the project elements.

AWC inputs:

1) Review of Design/Build submittal reviews and clarifications.
2) Review of compliance agency submittals.
3) Review and approval of O&M manual.

Deliverables:

1) Submittal comments
2) RFI responses

Task Series 600 - Resident Inspection Services

Task 610 - Field Inspection

Provide on-site field inspection an average of once per week (8 hours) for a period of 20 weeks.

Assumptions:

1) 20 week construction phase duration from the Contractor NTP to the final acceptance of the project.
2) Engineers on-site field inspection shall average eight (8) hours per week.
3) Engineer will perform intermediate and various site inspections such as pipe pressure and disinfection testing. These tests will be coordinated between the Company and the Design/Build Team. The Design/Build team will provide the required inspections to complete the necessary paper work for ADEQ's ECOC and AOC.
4) Under the terms and conditions of the Company's General Conditions of Contract, the Contractor shall arrange and pay for all field and materials testing including but not limited to compaction testing, soils testing and concrete testing. Contractor shall provide these test results to Engineer for review and approval.
5) The Vendor shall arrange and pay for all filter pressure vessel welding and coating inspections and provide inspection results to Engineer.
6) The Company shall arrange and pay for a final filter pressure vessel coating inspection.
7) Engineer shall maintain a construction punch list of deficient work items that are inspected by Engineer and shall communicate the deficient work items to the Contractor and Company on a regular basis.
8) Contractor will coordinate directly with the Company for providing Vendor and manufacturer's training.
9) Post construction warranty services will be coordinated by the Company and the Contractor.

AWC inputs:

1) As noted above.
2) Final filter pressure vessel coating inspection.

Deliverables:

1) Field inspection and special inspection reports such as concrete reinforcement, concrete, structural, filter pressure vessels and others as needed.

Exhibit B

Engineering Fee Estimate: Construction Administration and Inspection
Arizona Water Company Valley Farms Arsenic Removal Facility

Design Tasks	Hours Estimate, hrs										Subtotal		Electrical
	PIC	PM	SPE	PE	SE	Str	Des	Drft	Admin	Total			
	$165	$150	$130	$110	$90	$125	$95	$75	$55				
Task Series 500 – Office Engineering and Construction Phase Services												$ 11,940.00	$ 6,000.00
Task 510 - Submittal Review		1	8	40		4			4	57	$ 6,310.00		
Task 520 - RFI Responses		2		8		2			4	16	$ 1,650.00		
Task 530 - Start-up Services		4		4						8	$ 1,040.00		
Task 540 - Regulatory Compliance		2								2	$ 300.00		
Task 550 - As-Built Drawings				8						8	$ 880.00		
Task 560 - O&M Manual Review				16						16	$ 1,760.00		
Task Series 600 - Resident Inspection Services												$ 20,800.00	$ 1,650.00
Task 610 - Field Inspection			160							160	$ 20,800.00		
Subtotal WaterWorks Services	0	9	168	76	0	6	0	0	8	267		$	**40,390**

LEGEND
PIC: Principal-In-Charge
PM: Project Manager
SPE: Senior Project Engineer
PE: Project Engineer
Str: Structural Engineer
Des: CAD Designer
Drft: CAD Drafter
Admin: Administrative Assistant

ACORD®

CERTIFICATE OF LIABILITY INSURANCE

DATE (MM/DD/YYYY) 10/24/2014

THIS CERTIFICATE IS ISSUED AS A MATTER OF INFORMATION ONLY AND CONFERS NO RIGHTS UPON THE CERTIFICATE HOLDER. THIS CERTIFICATE DOES NOT AFFIRMATIVELY OR NEGATIVELY AMEND, EXTEND OR ALTER THE COVERAGE AFFORDED BY THE POLICIES BELOW. THIS CERTIFICATE OF INSURANCE DOES NOT CONSTITUTE A CONTRACT BETWEEN THE ISSUING INSUR ER(S), AUTHORIZED REPRESENTATIVE OR PRODUCER, AND THE CERTIFICATE HOLDER.

IMPORTANT: If the certificate holder is an ADDITIONAL INSURED, the policy(ies) must be endorsed. If SUBROGATION IS WAIVED, subject to the terms and conditions of the policy, certain policies may require an endorsement. A statement on this certificate does not confer rights to the certificate holder in lieu of such endorsement(s).

PRODUCER
Lockton Companies, LLC
5847 San Felipe, Suite 320
Houston, TX 77057

CONTACT NAME:
PHONE (A/C No.Ext): 888-828-8365 FAX (A/C, No):
E-MAIL ADDRESS:

INSURER(S) AFFORDING COVERAGE	NAIC
INSURER-A: ACE American Insurance Co	22667
INSURER-B:	
INSURER-C:	
INSURER-D:	
INSURER-E:	
INSURER-F:	

INSURED
Insperity, Inc. L/C/F
WATER WORKS ENGINEERS, LLC
19001 Crescent Springs Drive
Kingwood, TX 77339

COVERAGES **CERTIFICATE NUMBER:** **REVISION NUMBER:**

THIS IS TO CERTIFY THAT THE POLICIES OF INSURANCE LISTED BELOW HAVE BEEN ISSUED TO THE INSURED NAMED ABOVE FOR THE POLICY PERIOD INDICATED. NOTWITHSTANDING ANY REQUIREMENT, TERM OR CONDITION OF ANY CONTRACT OR OTHER DOCUMENT WITH RESPECT TO WHICH THIS CERTIFICATE MAY BE ISSUED OR MAY PERTAIN, THE INSURANCE AFFORDED BY THE POLICIES DESCRIBED HEREIN IS SUBJECT TO ALL THE TERMS, EXCLUSIONS AND CONDITIONS OF SUCH POLICIES. LIMITS SHOWN MAY HAVE BEEN REDUCED BY PAID CLAIMS.

INSR LTR	TYPE OF INSURANCE	ADDL INSR	SUBR WVD	POLICY NUMBER	POLICY EFF (MM/DD/YYYY)	POLICY EXP (MM/DD/YYYY)	LIMITS	
	GENERAL LIABILITY						EACH OCCURRENCE	$
	COMMERCIAL GENERAL LIABILITY						DAMAGE TO RENTED PREMISES (Ea occurrence)	$
	CLAIMS MADE / OCCUR						MED EXP (Any one person)	$
							PERSONAL & ADV INJURY	$
							GENERAL AGGREGATE	$
	GEN'L AGGREGATE LIMIT APPLIES PER:						PRODUCTS – COMP/OP AGG	$
	POLICY / PROJECT / LOC						PROFESSIONAL LIABILITY	$
	AUTOMOBILE LIABILITY						COMBINED SINGLE LIMIT (Ea accident)	$
	ANY AUTO						BODILY INJURY (Per Person)	$
	ALL OWNED AUTOS / SCHEDULED AUTOS						BODILY INJURY (Per accident)	$
	HIRED AUTOS / NON-OWNED AUTOS						PROPERTY DAMAGE (Per accident)	$
	UMBRELLA LIAB / OCCUR						EACH OCCURRENCE	$
	EXCESS LIAB / CLAIMS MADE						AGGREGATE	$
	DED / RETENTION $							
A	WORKERS COMPENSATION AND EMPLOYERS' LIABILITY ANY PROPRIETOR/PARTNER/EXECUTIVE Y/N			C48164237	10/01/2014	10/01/2015	X WC STATUTORY LIMITS / OTHER	
	OFFICER/MEMBER EXCLUDED? (MANDATORY IN NH) If yes, describe under	N/A					E.L. EACH ACCIDENT	$ 1,000,000
							E.L. DISEASE – EA EMPLOYEE	$ 1,000,000
	DESCRIPTION OF OPERATIONS below						E.L. DISEASE – POLICY LIMIT	$ 1,000,000

DESCRIPTION OF OPERATIONS/LOCATIONS/VEHICLES (Attach Acord 101, Additional remarks Schedule, if more space is required)

RE: VALLEY FARMS ARSENIC REMOVAL FACILITY

CERTIFICATE HOLDER

ARIZONA WATER COMPANY
3805 N. BLACK CANYON HWY
PHOENIX, AZ 85015

CANCELLATION

SHOULD ANY OF THE ABOVE DESCRIBED POLICIES BE CANCELLED BEFORE THE EXPIRATION DATE THEREOF, NOTICE WILL BE DELIVERED IN ACCORDANCE WITH THE POLICY PROVISIONS

AUTHORIZED REPRESENTATIVE

©1988-2010 ACORD CORPORATION. All Rights Reserved.
The ACORD name and logo are registered marks of ACORD

WATER-N OP ID: B4

CERTIFICATE OF LIABILITY INSURANCE

DATE (MM/DD/YYYY) 10/27/2014

THIS CERTIFICATE IS ISSUED AS A MATTER OF INFORMATION ONLY AND CONFERS NO RIGHTS UPON THE CERTIFICATE HOLDER. THIS CERTIFICATE DOES NOT AFFIRMATIVELY OR NEGATIVELY AMEND, EXTEND OR ALTER THE COVERAGE AFFORDED BY THE POLICIES BELOW. THIS CERTIFICATE OF INSURANCE DOES NOT CONSTITUTE A CONTRACT BETWEEN THE ISSUING INSURER(S), AUTHORIZED REPRESENTATIVE OR PRODUCER, AND THE CERTIFICATE HOLDER.

IMPORTANT: If the certificate holder is an ADDITIONAL INSURED, the policy(ies) must be endorsed. If SUBROGATION IS WAIVED, subject to the terms and conditions of the policy, certain policies may require an endorsement. A statement on this certificate does not confer rights to the certificate holder in lieu of such endorsement(s).

PRODUCER
InterWest Insurance Serv., Inc
License #0B01094
310 Hemsted Dr., Suite 200
Redding, CA 96002-0935
Brian Seamans
Phone: 530-222-1737
Fax: 530-222-3771

CONTACT NAME: Cindy Beymer
PHONE (A/C, No, Ext): 530-722-2614 FAX (A/C, No): 530-722-3559
E-MAIL ADDRESS: cbeymer@iwins.com

INSURER(S) AFFORDING COVERAGE	NAIC #
INSURER A : Golden Eagle Ins Corp	10836
INSURER B : National Union Fire Insurance	32298
INSURER C : Lloyds of London	
INSURER D :	
INSURER E :	
INSURER F :	

INSURED
Water Works Engineers, LLC
7850 N.Dobson Rd., Se 200
Scottsdale, AZ 85260

COVERAGES CERTIFICATE NUMBER: REVISION NUMBER:

THIS IS TO CERTIFY THAT THE POLICIES OF INSURANCE LISTED BELOW HAVE BEEN ISSUED TO THE INSURED NAMED ABOVE FOR THE POLICY PERIOD INDICATED. NOTWITHSTANDING ANY REQUIREMENT, TERM OR CONDITION OF ANY CONTRACT OR OTHER DOCUMENT WITH RESPECT TO WHICH THIS CERTIFICATE MAY BE ISSUED OR MAY PERTAIN, THE INSURANCE AFFORDED BY THE POLICIES DESCRIBED HEREIN IS SUBJECT TO ALL THE TERMS, EXCLUSIONS AND CONDITIONS OF SUCH POLICIES. LIMITS SHOWN MAY HAVE BEEN REDUCED BY PAID CLAIMS.

INSR LTR	TYPE OF INSURANCE	ADDL INSR	SUBR WVD	POLICY NUMBER	POLICY EFF (MM/DD/YYYY)	POLICY EXP (MM/DD/YYYY)	LIMITS	
	GENERAL LIABILITY							
A	X COMMERCIAL GENERAL LIABILITY	X	X	BOP56141750	07/11/2014	07/11/2015	EACH OCCURRENCE	$ 2,000,000
	CLAIMS-MADE X OCCUR						DAMAGE TO RENTED PREMISES (Ea occurrence)	$ 300,000
							MED EXP (Any one person)	$ 5,000
C	X Pollution			B0595EO0843602014	07/11/2014	07/11/2015	PERSONAL & ADV INJURY	$ 2,000,000
	5,000,000						GENERAL AGGREGATE	$ 4,000,000
	GEN'L AGGREGATE LIMIT APPLIES PER:						PRODUCTS - COMP/OP AGG	$ 4,000,000
	POLICY X PRO-JECT LOC							$
	AUTOMOBILE LIABILITY						COMBINED SINGLE LIMIT (Ea accident)	$ 2,000,000
A	ANY AUTO	X	X	BOP56141750	07/11/2014	07/11/2015	BODILY INJURY (Per person)	$
	ALL OWNED AUTOS / SCHEDULED AUTOS						BODILY INJURY (Per accident)	$
	X HIRED AUTOS / X NON-OWNED AUTOS						PROPERTY DAMAGE (Per accident)	$
								$
	UMBRELLA LIAB X OCCUR						EACH OCCURRENCE	$ 8,000,000
B	X EXCESS LIAB CLAIMS-MADE			EBU020703162	07/11/2014	07/11/2015	AGGREGATE	$ 8,000,000
	DED X RETENTION $ 10,000							$
	WORKERS COMPENSATION AND EMPLOYERS' LIABILITY						WC STATU-TORY LIMITS / OTH-ER	
	ANY PROPRIETOR/PARTNER/EXECUTIVE OFFICER/MEMBER EXCLUDED? Y/N (Mandatory in NH) If yes, describe under DESCRIPTION OF OPERATIONS below	N/A					E.L. EACH ACCIDENT	$
							E.L. DISEASE - EA EMPLOYEE	$
							E.L. DISEASE - POLICY LIMIT	$
C	Professional Liab			B0595EO0843602014	07/11/2014	07/11/2015	Per Claim	5,000,000
A	Valuable Papers			BOP56141750	07/11/2014	07/11/2015	VP Limit	25,000

DESCRIPTION OF OPERATIONS / LOCATIONS / VEHICLES (Attach ACORD 101, Additional Remarks Schedule, if more space is required)

Project: Valley Farms Arsenic Removal Facility. As respects General and Auto Liability, Additional Insured status applies as per endorsemet attached.
Professional Liability-Claim Made-Retroactive Date 07/01/05

CERTIFICATE HOLDER

AZW3805

Arizona Water Company
3805 N. Black Canyon Hwy
Phoenix, AZ 85015

CANCELLATION

SHOULD ANY OF THE ABOVE DESCRIBED POLICIES BE CANCELLED BEFORE THE EXPIRATION DATE THEREOF, NOTICE WILL BE DELIVERED IN ACCORDANCE WITH THE POLICY PROVISIONS.

AUTHORIZED REPRESENTATIVE

© 1988-2010 ACORD CORPORATION. All rights reserved.

The ACORD name and logo are registered marks of ACORD

Insured: Water Works Engineers, Inc
Policy #: BOP56141750
Effective: 07/11/14 to 07/11/15

THIS ENDORSEMENT CHANGES THE POLICY. PLEASE READ IT CAREFULLY.

ADDITIONAL INSURED – ENGINEERS, ARCHITECTS OR SURVEYORS

This endorsement modifies insurance provided under the following:

BUSINESSOWNERS COVERAGE FORM

Section II – Liability is amended as follows:

A. The following is added to Paragraph **C. Who Is An Insured:**

3. Any architect, engineer or surveyor engaged by you is also an additional insured but only with respect to liability for "bodily injury", "property damage" or "personal and advertising injury" caused, in whole or in part, by your acts or omissions or the acts or omissions of those acting on your behalf in connection with your premises or in the performance of your ongoing operations.

However:

a. The insurance afforded to such additional insured only applies to the extent permitted by law; and

b. If coverage provided to the additional insured is required by a contract or agreement, the insurance afforded to such additional insured will not be broader than that which you are required by the contract or agreement to provide for such additional insured.

B. With respect to the insurance afforded to these additional insureds, the following is added to Paragraph **D. Liability And Medical Expenses Limits Of Insurance:**

If coverage provided to the additional insured is required by a contract or agreement, the most we will pay on behalf of the additional insured is the amount of insurance:

1. Required by the contract or agreement; or
2. Available under the applicable Limits Of Insurance shown in the Declarations;

whichever is less.

This endorsement shall not increase the applicable Limits Of Insurance shown in the Declarations.

© Insurance Services Office, Inc., 2012

Insured: Water Works Engineers, Inc
Policy #: BOP56141750
Effective: 07/11/14 to 07/11/15

THIS ENDORSEMENT CHANGES THE POLICY. PLEASE READ IT CAREFULLY.

PRIMARY AND NONCONTRIBUTORY – OTHER INSURANCE CONDITION

This endorsement modifies insurance provided under the following:

BUSINESSOWNERS COVERAGE FORM

The following is added to Paragraph **H. Other Insurance** of **Section III – Common Policy Conditions** and supersedes any provision to the contrary:

Primary And Noncontributory Insurance

This insurance is primary to and will not seek contribution from any other insurance available to an additional insured under your policy provided that:

1. The additional insured is a Named Insured under such other insurance; and
2. You have agreed in writing in a contract or agreement that this insurance would be primary and would not seek contribution from any other insurance available to the additional insured.

© Insurance Services Office, Inc., 2012

THIS ENDORSEMENT CHANGES THE POLICY. PLEASE READ IT CAREFULLY.

WAIVER OF TRANSFER OF RIGHTS OF RECOVERY AGAINST OTHERS TO US

This endorsement modifies insurance provided under the following:

BUSINESSOWNERS COVERAGE FORM

SCHEDULE

Name Of Person Or Organization:
Information required to complete this Schedule, if not shown above, will be shown in the Declarations.

Paragraph **K. Transfer Of Rights Of Recovery Against Others To Us** in **Section III – Common Policy Conditions** is amended by the addition of the following:

We waive any right of recovery we may have against the person or organization shown in the Schedule above because of payments we make for injury or damage arising out of your ongoing operations or "your work" done under a contract with that person or organization and included in the "products-completed operations hazard". This waiver applies only to the person or organization shown in the Schedule above.

© ISO Properties, Inc., 2004

ADEQ
Arizona Department of Environmental Quality

ENGINEERING REVIEW SECTION
DATA REQUIRED WITH ECC

INSTRUCTIONS

Please complete the test data and submit this form with the Engineers Certificate of Completion. An Approval of Construction cannot be issued without the data identified below in accordance with Arizona Administrative Code (A.A.C.) R18-5-508(C). Please attach all supplemental information and calculations to this form.

DATA

1.

PRESSURE TEST DATA				
Indicate Segment Tested	Above Pipe	Vessel Pipe		
Pressure and Leakage Test Results (Pass/Fail)	Pass	Pass		
Date Tested	5-11-15	6-1-15		
Time Started	7:00	13:00		
Time Finished	9:00	15:00		
Pipe Diameter	6	6		
Footage Tested	43'6"	25'		
Allowable Leakage	.05	.03		
Leakage Observed	0	0		
Pressure at Test Point	200	90 PSI		
Employee Observing the Test (Please Print Legibly)	Steve O.	Steve O		
Signature of Employee Observing the Test	[signature]	[signature]		

2.

DISINFECTION SAMPLING					
Initial Sampling (Minimum 50 ppm available chlorine)	Date	5-12-15	6-2-15		
	Time	10:00	11:00		
	ppm Cl_2	200	300		
After 24 Hours Detention Time (Minimum 10 ppm free chlorine)	Date	6-13-15	6-3-15		
	Time	10:10	00:00		
	ppm Cl_2	200	25		
After Sufficient Flushing (Water is clear and system Cl_2 residual is measured)	Date	6-13-15	6-3-15		
	Time	13:00	14:00		
	ppm Cl_2	0.8	0.3		
Bacteriological Sampling(s):	Date	5-13-15	6-3-15		
	Time	13:40	14:22		
	Attached (Y/N)	Y	Y		
		Yes/No	Yes/No	Yes/No	Yes/No

3.

Certification

I, STEVE Ontiz, certify that I have inspected the work performed and have found it to be satisfactory and in accordance with Arizona Administrative Code, Arizona Engineering Bulletins, and the approved specifications.

[signature] 6/5/15

Authorized Persons Signature Date

Professional Seal
As per A.A.C. R18-5-507(B)(1)

ADEQ Arizona Department of Environmental Quality

ENGINEERING REVIEW SECTION
DATA REQUIRED WITH ECC

INSTRUCTIONS

Please complete the test data and submit this form with the Engineers Certificate of Completion. An Approval of Construction cannot be issued without the data identified below in accordance with Arizona Administrative Code (A.A.C.) R18-5-508(C). Please attach all supplemental information and calculations to this form.

DATA

1.

PRESSURE TEST DATA	Sec.	Sec.	Sec.	Sec.
Indicate Segment Tested	#4	#3	#1	#2
Pressure and Leakage Test Results (Pass/Fail)	PASS	PASS	PASS	PASS
Date Tested	2-12-15	2-12-15	2-13-15	2-16-15
Time Started	11:30	12:30	13:00	12:30
Time Finished	1:30	2:30	15:00	14:30
Pipe Diameter	6"	6"	6"	12"
Footage Tested	45'	63'	110'	44'
Allowable Leakage	.05	.07	0.13	.10
Leakage Observed	0	0	0	0
Pressure at Test Point	200	200	200	200
Employee Observing the Test (Please Print Legibly)	Stott	Stott	Stott	Stott
Signature of Employee Observing the Test	S.O.	S.O.	S.O.	S.O.

2.

DISINFECTION SAMPLING					
Initial Sampling (Minimum 50 ppm available chlorine)	Date	5-12-15	5-12-15	5-12-15	2-16-15
	Time	10:00	10:20	10:40	14:30
	ppm Cl_2	200 +	200 +	200 +	100
After 24 Hours Detention Time (Minimum 10 ppm free chlorine)	Date	5-13-15	5-13-15	5-13-15	2-17-15
	Time	11:00	11:10	11:15	14:40
	ppm Cl_2	200 +	200 +	200 +	100
After Sufficient Flushing (Water is clear and system Cl_2 residual is measured)	Date	5-13-15	5-13-15	5-13-15	2-18-15
	Time	00:45	00:30	00:55	11:00
	ppm Cl_2	1.2	1.1	1.1	2.1
Bacteriological Sampling(s):	Date	5-13-15	5-13-15	5-13-15	2-18-15
	Time	13:45	13:20	13:15	12:00
	Attached (Y/N)				
		Yes/No	Yes/No	Yes/No	Yes/No

3.

Certification	Professional Seal As per A.A.C. R18-5-507(B)(1)
I, STEVE Ortiz, certify that I have inspected the work performed and have found it to be satisfactory and in accordance with Arizona Administrative Code, Arizona Engineering Bulletins, and the approved specifications.	
Stott — Authorized Persons Signature; 6/5/15 — Date	

LEGEND
Technical Services, Inc.
www.legend-group.com

17631 N. 25th Avenue • Phoenix, AZ 85023
P (602) 324-6100 • F (602) 324-6101

Regina Lynde
Arizona Water Company
3805 N. Black Canyon Hwy
Phoenix, AZ85015

Project: Specials
Project Number: Valley Farms 11-009 5/13/15

Reported:
05/19/15 13:49

Analyte

#1 (Hose Bib) (5051158-01) Drinking Water (Grab) Sampled: 05/13/15 13:15 Received: 05/14/15 08:00

Analyte	Result	PQL	Units	Dilution	Batch	Prepared	Analyzed	Method	Notes
	Legend Technical Services of Arizona, Inc.								
Microbiology									
E. coli	Absent		P/A	1	B5E0390	05/14/15 12:05	05/14/15 12:05	SM 9223B	
Total Coliforms	Absent		P/A	1	B5E0390	05/14/15 12:05	05/14/15 12:05	SM 9223B	

#2 (Sample Port) (5051158-02) Drinking Water (Grab) Sampled: 05/13/15 13:20 Received: 05/14/15 08:00

Analyte	Result	PQL	Units	Dilution	Batch	Prepared	Analyzed	Method	Notes
	Legend Technical Services of Arizona, Inc.								
Microbiology									
E. coli	Absent		P/A	1	B5E0390	05/14/15 12:05	05/14/15 12:05	SM 9223B	
Total Coliforms	Absent		P/A	1	B5E0390	05/14/15 12:05	05/14/15 12:05	SM 9223B	

#3 (4" Line Spigot) (5051158-03) Drinking Water (Grab) Sampled: 05/13/15 13:30 Received: 05/14/15 08:00

Analyte	Result	PQL	Units	Dilution	Batch	Prepared	Analyzed	Method	Notes
	Legend Technical Services of Arizona, Inc.								
Microbiology									
E. coli	Absent		P/A	1	B5E0390	05/14/15 12:05	05/14/15 12:05	SM 9223B	
Total Coliforms	Absent		P/A	1	B5E0390	05/14/15 12:05	05/14/15 12:05	SM 9223B	

#4 (8" Line Spigot) (5051158-04) Drinking Water (Grab) Sampled: 05/13/15 13:40 Received: 05/14/15 08:00

Analyte	Result	PQL	Units	Dilution	Batch	Prepared	Analyzed	Method	Notes
	Legend Technical Services of Arizona, Inc.								
Microbiology									
E. coli	Absent		P/A	1	B5E0390	05/14/15 12:05	05/14/15 12:05	SM 9223B	
Total Coliforms	Absent		P/A	1	B5E0390	05/14/15 12:05	05/14/15 12:05	SM 9223B	

#5 (6" Line Spigot) (5051158-05) Drinking Water (Grab) Sampled: 05/13/15 13:45 Received: 05/14/15 08:00

Analyte	Result	PQL	Units	Dilution	Batch	Prepared	Analyzed	Method	Notes
	Legend Technical Services of Arizona, Inc.								
Microbiology									
E. coli	Absent		P/A	1	B5E0390	05/14/15 12:05	05/14/15 12:05	SM 9223B	
Total Coliforms	Absent		P/A	1	B5E0390	05/14/15 12:05	05/14/15 12:05	SM 9223B	

Legend Technical Services of Arizona, Inc.

Barbara Franks

Client Services Representative

The results in this report apply to the samples analyzed in accordance with the chain of custody document. This analytical report must be reproduced in its entirety.

Phone Number: (602) 324-6100

LEGEND
Technical Services, Inc.
www.legend-group.com

17631 N. 25th Avenue • Phoenix, AZ 85023
P (602) 324-6100 • F (602) 324-6101

Regina Lynde
Arizona Water Company
3805 N. Black Canyon Hwy
Phoenix, AZ85015

Project: Specials
Project Number: V.F. ARF 11-009 2/18/15

Reported:
02/24/15 16:39

Analyte

#1 11-009 (Sec. #2 12" Line) (5021707-01) Drinking Water (Grab) Sampled: 02/18/15 11:50 Received: 02/19/15 08:00

Analyte	Result	PQL	Units	Dilution	Batch	Prepared	Analyzed	Method	Notes
	Legend Technical Services of Arizona, Inc.								
Microbiology									
E. coli	Absent		P/A	1	B5B0544	02/19/15 14:50	02/19/15 14:50	SM 9223B	
Total Coliforms	Absent		P/A	1	B5B0544	02/19/15 14:50	02/19/15 14:50	SM 9223B	

#2 11-009 (Sec. #2 12" Line) (5021707-02) Drinking Water (Grab) Sampled: 02/18/15 11:54 Received: 02/19/15 08:00

Analyte	Result	PQL	Units	Dilution	Batch	Prepared	Analyzed	Method	Notes
	Legend Technical Services of Arizona, Inc.								
Microbiology									
E. coli	Absent		P/A	1	B5B0544	02/19/15 14:50	02/19/15 14:50	SM 9223B	
Total Coliforms	Absent		P/A	1	B5B0544	02/19/15 14:50	02/19/15 14:50	SM 9223B	

ıple Condition Upon Receipt:

Temperature: 2.00 C
All samples were received in acceptable condition unless noted otherwise in the case narrative.

Case Narrative:

Holding Times: All holding times were met unless otherwise qualified.
QA/QC Criteria: All analyses met method requirements unless otherwise qualified.
Accreditations: AZ(PHX)0004, AZ(TUC)OOO4, AIHA#102982, CDC ELITE Member.
Accreditation is applicable only to the test methods specified on each scope of accreditation held by LEGEND.
Comments: There were no problems encountered during the processing of the samples, unless otherwise noted.
All samples were analyzed on a "wet" basis unless designated as "dry weight".

Notes and Definitions

Legend Technical Services of Arizona, Inc.

Barbara Franks

Client Services Representative

The results in this report apply to the samples analyzed in accordance with the chain of custody document. This analytical report must be reproduced in its entirety.

Phone Number: (602) 324-6100

LEGEND
Technical Services, Inc.
www.legend-group.com

17631 N. 25th Avenue • Phoenix, AZ 85023
P (602) 324-6100 • F (602) 324-6101

Regina Lynde
Arizona Water Company
3805 N. Black Canyon Hwy
Phoenix, AZ85015

Project: Specials
Project Number: Well #2 V.F. 11-009 12/22/14

Reported:
12/29/14 14:47

Analyte

Well #2 V.F. (10804 E. Vah Ki Inn Rd.) (4121965-01) Drinking Water (Grab) Sampled: 12/22/14 14:13 Received: 12/23/14 11:15

Analyte	Result	PQL	Units	Dilution	Batch	Prepared	Analyzed	Method	Notes
	Legend Technical Services of Arizona, Inc.								
Microbiology									
E. coli	Absent		P/A	1	B4L0648	12/23/14 13:25	12/23/14 13:25	SM 9223B	
Total Coliforms	Absent		P/A	1	B4L0648	12/23/14 13:25	12/23/14 13:25	SM 9223B	

Sample Condition Upon Receipt:

Temperature: 2.00 C
All samples were received in acceptable condition unless noted otherwise in the case narrative.

Case Narrative:

Holding Times: All holding times were met unless otherwise qualified.
QA/QC Criteria: All analyses met method requirements unless otherwise qualified.
Accreditations: AZ(PHX)0004, AZ(TUC)OOO4, AIHA#102982, CDC ELITE Member.
Accreditation is applicable only to the test methods specified on each scope of accreditation held by LEGEND.
Comments: There were no problems encountered during the processing of the samples, unless otherwise noted.
All samples were analyzed on a "wet" basis unless designated as "dry weight".

Not for compliance as indicated on the chain of custody- BF

Notes and Definitions

Legend Technical Services of Arizona, Inc.

Barbara Franks

Client Services Representative

The results in this report apply to the samples analyzed in accordance with the chain of custody document. This analytical report must be reproduced in its entirety.

Phone Number: (602) 324-6100

ARIZONA WATER COMPANY

PRECONSTRUCTION CONFERENCE OUTLINE

1. Contractors Bid Proposal

   A. Proposal/Contract dated_____
   B. Prior to bidding as well as prior to construction Contractor has walked this project site and understands the nature, scope and requirements of the work to be performed.
   C. Any changes required which the Contractor feels he should be reimbursed over and above the contract price, must be submitted in writing prior to installation.

2. Construction Schedule
   - A. Agree that the project will be completed with in the days called for on the proposal.
   - B. Definition of a day is a calendar day.
   - C. A work day is 8 hours. DAYLIGHT HOURS.
   - D. Stress importance of finishing the job in a timely manner.
   - E. It was agreed that construction will start on UPDATED. SCH BY THURS (COPY ALL PARTIES.) A commencement was signed and given to the contractor.
   - F. Contractor must request in writing for time extensions or any reason. All requests must be submitted to the Casa Grande Office.

3. Inspection
   - A. The Company's inspectors will be: STEVE / DARRIN. POINT OF CONTACT CONTACT ED FOR INSPECTIONS
   - B. Contractor will request inspections a **MINIMUM** of 24 hours in advance
   - C. Inspector **WILL NOT** aid in the neither construction nor offer advice as to how the work should be performed. Inspector will only indicate that the job does or does not meet Arizona Water Company's Specifications. Arizona Water Company personnel are the **ONLY** personnel authorized to turn off an existing valve.

ARIZONA WATER COMPANY

PRECONSTRUCTION CONFERENCE OUTLINE

4. Permits

AZWC

NOT REQUIRED	RECEIVED	REQUIRED	WILL BE RPOVIDED BY ENG. DEPT	DOCUMENT / FORM
✓				~~Maricopa County/ADOT / Railroad Permit~~
✓				~~City of Casa Grande~~ / Coolidge
✓				Pinal County FWD TO FARMER LETTER FROM CO. + KEEP ONSITE.
•				~~Pima County~~
				Other

A. All construction will be subject to State, County, City and any other jurisdictions permits.
B. Permit will be obtained by EUCIA.
C. Contractor must have a copy of permit on the job site at **ALL** times.
D. Traffic control will be required as outlined on the permit and traffic control plan.
E. If compaction tests are required, cost will be paid by 1ST BY CO. . If the test fails to meet the required compaction the contractor will correct the problem and pay for the retest.
F. Construction costs will not be paid or accepted until proof of regulatory agency satisfaction (example) CASA-CURA must have ROW inspector sign off on ROW work. SEND ARCHE CONTACT INFO.
G. Contractor is not to store materials in the right of way. ONSITE.
H. **CONTRACTOR IS NOT TO ENCROACH ON PRIVATE PROPERTY UNDER ANY CIRCUMSTANCES. WITH OUT WRITTEN APPROVAL (i.e.) EASMENT.**
I. Work performed in easements **MUST** remain within the boundaries of the easements.

ARIZONA WATER COMPANY

PRECONSTRUCTION CONFERENCE OUTLINE

5. Staking

Staking will be provided by AWC (BLUE STAKE) CONSTRUCTION - FELIX

A. Contact person_____ and phone:_____

B. Surveyor will be paid by FELIX

6. Utility Conflicts "Blue Stake"

A. The location of utilities shall be the responsibility of the contractor.

B. Contractor shall be responsible for any damage to any utility including Arizona Water Company's.

C. Contractor must exercise extreme caution when digging around utilities.

7. Pressure Test

A. Make sure test is holding before calling inspector.

B. Pressure test shall be performed, after giving 24 hour notice prior to test, per Arizona Water Company's Construction Specifications

E-8-1.

Leakage test will be for a period of (2) two hours at 200 plus or minus 5 PSI at the point of lowest elevation; leakage may not exceed 0.1 Gallons per hour per (1) one thousand feet (1000') of pipe per inch of Diameter.

C. Inspectors will only be available during Arizona Water Company business hours,

D. Arizona Water Company reserves the right to require a second pressure tests after all other utilities are installed.

E. Chlorine solution will be required for disinfection. Only NSF approved containers will be used for disinfection.

8. Payments

F. All invoices **MUST** be itemized.

G. Arizona Water Company will only make payment for items installed based on the contract prices.

H. Counts of items billed for **MUST** be field verified with Arizona Water Company's Inspector and Contractors representative **PRIOR** to submitting an invoice for payment.

I. Change orders must be submitted on a separate invoice.

J. Contractor will require MONTHLY (4 PER CONTRACT) partial payments. ____80% - 20%.

9. Construction Crew

A. Contractor will be using a 3-4 +2 FOR ELECTRICAL/CONC. COATING SUB man crew.

B. Superintendent for the project TIM ROCKHOLT
1. Contact Number 602-390-0139

C. Forman for Project SAME.
1. Contact Number _____

D. Construction crew is expected to behave in a professional manner.

E. Must have an English speaking person with authority on the job site.

10. General Construction

A. All work will be performed as per Arizona Water Company's General Conditions of Contract, Construction Specifications, and Construction Specification Drawings.

B. Water for compaction, dust control, will be purchased by the contractor.
AWC WILL PROVIDE METER ONSITE, FELIX TO PROVIDE RP

C. Clean up is subject to approval of A~~DOT, County, Cit~~y, Arizona Water Company and ~~property owner~~s.

D. All new mains will be filled, tested, and flushed through a jumper meter with an approved reduced pressure backflow preventer water will be provided by Arizona Water Company. 4" meter or larger will be Mandatory for subdivisions that will need fire protection due to construction of homes. Use of fire hydrants will only be allowed for fire protection.

E. Contractor **WILL** comply with all the requirements of his Permit for De Minimus Discharge and plan for Best Management Practices. AND FELIX REQUIRED TO GET DISCHARGE PERMIT

F. Will Contractor be screening or importing bedding and shade material?

11. Regulations

A. Contractor acknowledges that he has in his possession all the permits, licenses, and training necessary for the prosecution of the work, including, but not limited to:

1. Any National Pollution Discharge Elimination Systems (NPDES) Permits required by U.S. Environmental Protection Agency or Arizona Department of Environmental Quality.
2. Best Management Practices Plan for De Minimus Discharges
3. Competent Person for trench safety
4. Competent Person for confined space
5. Competent Person for asbestos abatement

ARIZONA WATER COMPANY

PRECONSTRUCTION CONFERENCE OUTLINE

12. Notes

STEVE/ED/DARIN/JESSE

PROVIDE COPIES OF ALL PLANS/SPECS/CONTRACTS ETC/SHOP DWG.

CAP AND ABANDON EX. LINES IN PLACE. HAUL OFF ALL REMO MATL.

FELIX TO KEEP WORKING REDLINE PLANS ONSITE

GHD WILL INSPECT PRIOR TO BURYING UNDERGROUND FACILITIES.

FELIX TO PROVIDE SAFETY PLAN.

CONF CALL MON 9:00 AM CLEAN DITCH WK DEC 22 FIRST MTG.

GET PUMP CURVE & DRAW DOWN INFO TO GHD.

ARIZONA WATER COMPANY

PRECONSTRUCTION CONFERENCE OUTLINE

DATE: 12/8/14 TIME: 9:00 CONTRACTOR: FELIX DIVISION: PV

W.A. NUMBER 1-5167 JOB DESCRIPTION: VALLEY FARMS ARK

NAME	COMPANY	TITLE	PHONE NUMBERS
STEVE ORTIZ	AZ WATER CO.	SENIOR SERVICEMAN	(520) 705-4247

ARIZONA WATER COMPANY

PRECONSTRUCTION CONFERENCE OUTLINE

NAME	COMPANY	TITLE	PHONE NUMBER
JAMES WILSON	AWC	SR ENGINEER	602-240-6860
Archie Lopez	FCC	PM	602-469-5208
Dan Anderson	FCC	PM	480-266-1728
FREDERICK TACK	GHD	PE	602.826.0504
BILL ROBERTS	GHD	PE	602.723.9565
Mario Mendez	AWC	Engineer	602 240 6860
DARIN BERRY	WATER WORKS LLC	FIELD ENGINEER	480-661-1742
DANA WATTS	FCC	E/I&C DIV MGR	602 390 4727
Ed Radwanski	AW	Contruction Engineer	602-568-8701

_____ will be hereinafter referred to as "Contractor" and Arizona Water Company will be hereinafter referred to as "Company"

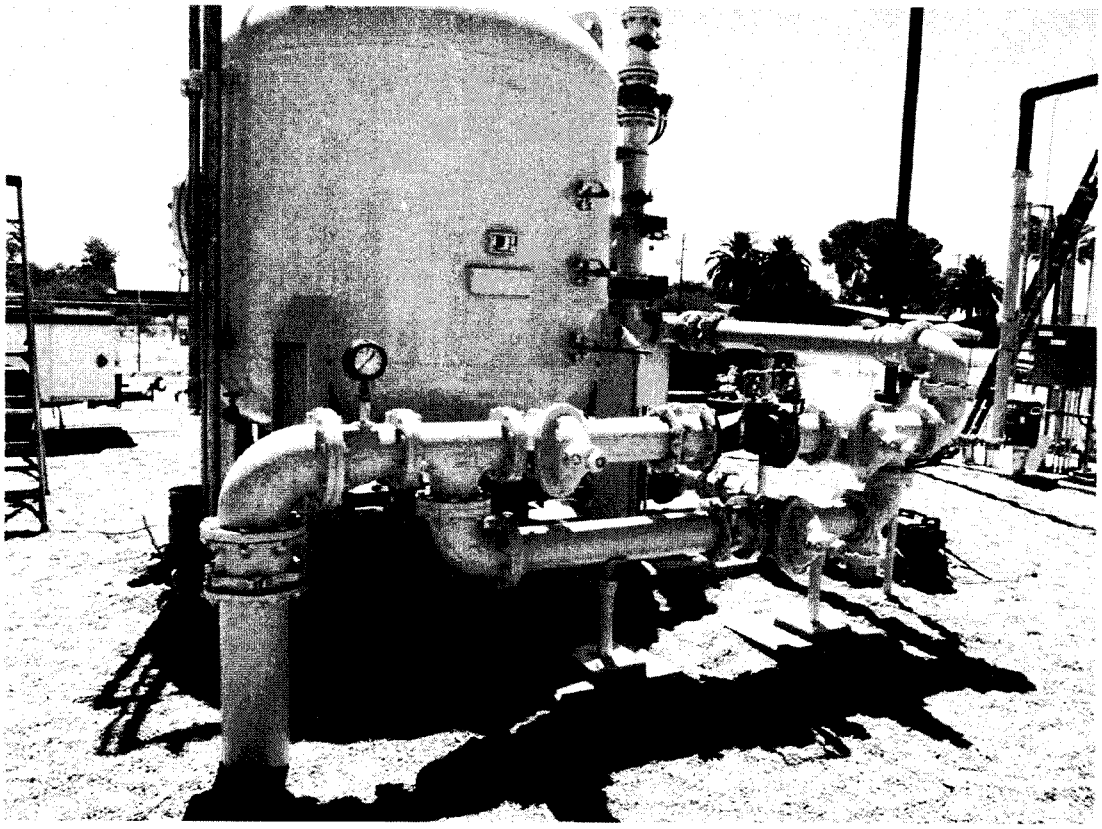

Arizona Water Company

Valley Farms Arsenic Removal Facility
Operation and Maintenance Manual

June 2015

Table of Contents

1. Contact Information 2
   - 1.1 Owner and Managerial Responsibility 2
   - 1.2 Engineer 2
   - 1.3 Contractor 2
2. Introduction 3
   - 2.1 Purpose 3
   - 2.2 Site Information 3
   - 2.3 Regulatory Information 4
   - 2.4 Description of System and Plant 4
   - 2.5 Target Efficiency and Performance 4
   - 2.6 Principle Design Criteria 5
3. Operational Strategies 6
   - Operational Scenario 1 6
   - Operational Scenario 2 6
   - Operational Scenario 3 6
   - 3.1 Disinfection System 6
4. Start-Up Information and Results 7
5. Maintenance Plan 8
   - 5.1 Backwash Operations 8

Figure index

Figure 1 - Project Vicinity Map 3

Appendices

Appendix A – Process Flow Diagram

Appendix B – Blending Plan

Appendix C - Process Description

Appendix D - Media Information

Appendix E - Initial Start-up and Monitoring Form

Appendix F - Component O&M and Information

Appendix G - Mechanical Equipment and Instruments

1. Contact Information

1.1 Owner and Managerial Responsibility

Arizona Water Company

Contact: James Wilson

3805 North Black Canyon Highway, Phoenix, AZ 850378

(602) 240-9565

jwilson@azwater.com

1.2 Engineer

GHD

Contact: Bill Roberts

4747 North 22nd Street, Suite 200, Phoenix, AZ 85016

(602) 723-9565

bill.roberts@ghd.com

GHD

Frederick Tack

4747 North 22nd Street, Suite 200, Phoenix, AZ 85016

(602) 826-0509

frederick.tack@ghd.com

1.3 Contractor

Felix Construction

Contact: Dan Anderson

1326 West Industrial Drive, Coolidge, AZ 85128

(480) 266-1728

daniela@felixconstruction.com

2. Introduction

2.1 Purpose

The purpose of this manual is to provide instructions on the operation and maintenance of the addition of an Arsenic Removal Vessel and blending component to the existing Valley Farms water production and distribution facility. The manual includes regulatory information, the blending plan, the system's monitoring plan, as-builts, start-up information and results, maintenance plans, and information for only the addition of the arsenic removal system, and does not include any operational or maintenance information for the existing water production, storage or distribution system.

2.2 Site Information

The site's address is 10804 East Vah Ki Inn Road in Valley Farms, AZ. It is located along the north side of Vah Ki Inn Road, approximately 0.3 miles east of the intersection of North Clemans Road in Valley Farms, AZ. The site consists of approximately 0.89 acres of land. The project location is depicted in Figure 1 below.

Figure 1 - Project Vicinity Map

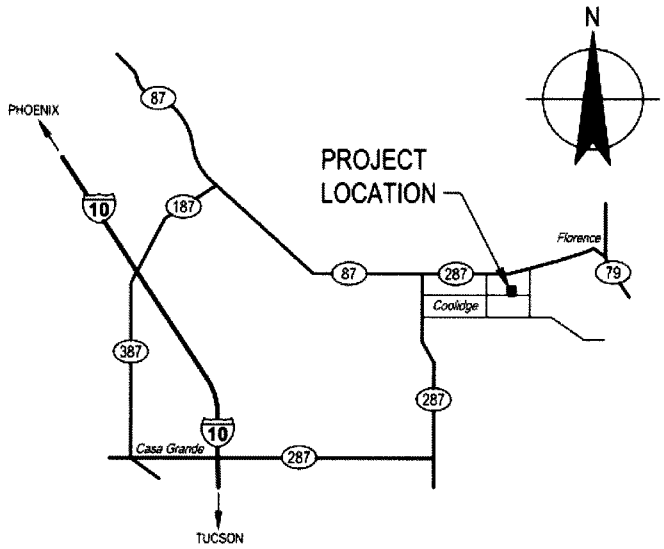

2.2.1 Legal Description

A parcel of land situated within the Southwest Quarter of Section 17, Township 5 South, Range 9 East of the Gila and Salt River Base and Meridian, Pinal County, Arizona, said parcel being more particularly described as follows:

Beginning at a point on the county road right of way, which point bears South 89° 59' West, 1071.18 feet from the South Quarter Corner of said Section 17, said Quarter Corner being marked by a 2 inch iron pipe with brass cap; thence South 89° 59' West, 175.00 feet; thence North 0° 28' West, 222.00 feet; thence North 89° 59' East, 175.00 feet; thence South 0° 28' East, 222.00 feet to the point of beginning.

The Pinal County Assessor No. is 202290010 and the legal description is recorded in Docket #124, page 196 of the Pinal County Recorder's office.

2.3 Regulatory Information

The approving agency for the Valley Farms Arsenic Removal Facility is the Arizona Department of Environmental Quality (ADEQ). In order to ensure that public drinking water systems in Arizona are designed and built to standards that provide safe, potable water to customers, ADEQ conducts a detailed technical review of water system design prior to and after its construction. Projects that undergo this review are awarded an Approval to Construct before construction, and an Approval of Construction after construction. Both of these permits for the Valley Farms Arsenic Removal Facility are included in this manual. Details from these permits include:

- **E F r** 20140293 **TF r** 61519

2.4 Description of System and Plant

The production facility consists of one (1) 250,000 gallon above ground steel storage tank and two (2) groundwater wells.

The distribution system components at the facility include a three (3) pump booster station, one (1) hydropneumatic tank. The booster station is connected to the arsenic removal plant through a backflow prevention device to provide water for backwashing.

A disinfection system provides the ability to disinfect the water produced at both wells.

The arsenic removal portion of the facility includes an 8-foot diameter arsenic pressure vessel which provides the capacity to reduce the arsenic concentration to target levels. Additionally there is a 10,500 gallon backwash tank to collect and store the backwash from the arsenic vessel, which will be recirculated to the head to the arsenic removal vessel for treatment. Additionally there is a blending header capable of blending water from well #2 with water from well #1 as the volume of water treated varies throughout the season.

2.5 Target Efficiency and Performance

The arsenic removal system is design to reduce the arsenic concentration to less than 0.007 mg/L.

Guiding performance criteria including maximum system pressure, maximum Flux rate and maximum velocities in the arsenic removal system are included below:

Table 1 - Target Performance Table

Treatment System Criteria	Target Performance
Maximum Pressure	100 psi
Target arsenic concentration	< 7.0 ppb (0.007 mg/L)
Maximum Flux Rate	6 gallon per minute per square foot (gpm/sf)
Minimum Empty Bed Contact Time	3.5 minutes
Maximum Velocity	6.0 feet per second (fps)

2.6 Principle Design Criteria

The facility includes two wells, Well #1 and Well #2. The quality of the groundwater produced by Well #2 exceeds the compliant arsenic concentration limit of 0.010 mg/L. The ability to blend Well #2 with Well #1 to meet a compliant arsenic level is not possible. Therefore treatment is required to utilize Well #2.

2.6.1 SORB 33© Engineered Arsenic System (EAS)

The 2001 arsenic final rule published in the Federal Register identified Adsorption as one of the Best Available Technologies (BATs) for compliance with the new arsenic MCL. The adsorption treatment technology is provided by Severn Trent Water Purification, Inc. (STWP).

The SORB 33© EAS system uses an adsorption media to removal arsenic from the groundwater. The principle treatment technology is the use of Bayoxide E33 iron oxide media supplied by Severn Trent Services, which is filled in the pressure vessel.

Additional process design description as prepared by the equipment manufacturer is attached in d.

Information about the arsenic removal media as prepared by the media supplier is attached in d.

3. Operational Strategies

The existing wells are to be operated under three (3) different operational scenarios to meet the various seasonal demands of the surrounding distribution system. Those operational scenarios are described below:

Operational Scenario 1

Well # 1 operates alone for 3 months per year and bypasses the proposed treatment system. The flow rate for Scenario 1 is 150 gpm. This flow rate is sent directly to storage and the treatment flowrate is zero (0) gpm.

Operational Scenario 2

Well # 2 operates alone for 3 n [illegible] passing the treatment system and the rem [illegible] tes are

Operational Scenario 3

Well # 1 and Well # 2 are operated together for 6 months per year. During this time, Well No. 1 bypasses the treatment. A portion of flow from Well #2 also is blended and bypasses the treatment. The blended and treated Well #2 flows are discussed in the blending section below.

Each time the arsenic removal media is installed or after backwashing, the arsenic concentrations in its effluent will be low and higher bypass flow rates may be achieved.

Operators should periodically monitor the system's arsenic concentrations.

When blended concentrations approach 7 ppb, the blend ratio is to be adjusted to increase the flowrate through the media. These adjustments will continue over time until no blending occurs to achieve target performance. At that time, the media must be replaced. Severn Trent estimates that the proposed media could remain in service for approximately 8 years.

The process flow for the system is depicted in [illegible] d [illegible]

The blending plan for the system is depicted in [illegible] d [illegible]

Additional process design description as prepared by the equipment manufacturer is attached in [illegible] d [illegible]

3.1 Disinfection System

The disinfection system is a sodium hypochlorite feed system enclosed in a fiberglass containment shed. The sodium hypochlorite is stored in a double-walled XLPE 60 gallon tank, set on an elevated pad inside the containment shed, also set on a containment curb. Two (2) metering pumps are used to disinfect each well. Each metering pump is only operating when their respective well is running.

Stroke speed will be adjusted manually to align their dose with their corresponding well's flow rate.

The disinfection equipment is connected to the existing injection ports at Well #1 and Well #2.

The design features for the disinfection metering pumps for this project are listed in Table 4 below.

When both wells are running, the sodium hypochlorite tank will have to be filled weekly.

4. Start-Up Information and Results

The ADEQ Initial Start-up and Monitoring Form attached as □□□□□d□ **E** should be completed and submitted in accordance with the ADEQ regulatory and reporting requirements.

5. Maintenance Plan

5.1 Backwash Operations

Periodic backwashing or "fluffing" of the media in the pressure vessel is required to prevent the compaction of which may lead to the development of preferential flow channels that cause short circuiting or reduced adsorption.

Another reason for backwashing is to free the media bed of suspended solids that could increase the differential pressure. Suspended material that may accumulate in the media includes:

- Sediments from Well No. 2
- Oxidized iron precipitate from the feed water
- Other suspended materials

Therefore backwash is required and is recommended as follows:

- at frequency of once (1) every three months, or
- when the pressure drop across the media bed exceeds 10 psi

The water stored in the backwash tank will be decanted back to the inlet of the pressure vessel for re-treatment. A recycle pump will convey the backwash water. Additionally a bag filter is provided between the pump and the vessel inlet to prevent any fines or media from returning back to the treatment system.

5.1.1 Backwash and Forward Rinse Cycles

The backwash tank can accommodate a backwash cycle time of 12 minutes at 550 gpm which equals 6,600 gallons.

There will also be a forward rinse that is directed to the backwash tank of 250 gpm for 2 minutes, which equals an additional 500 gallons.

The 10,500 gallon tank provides adequate freeboard and capacity for any variations in operation.

Additional O&M information as provided by the equipment manufacture has been provided in Appendix H.

Appendices

Appendix A – Process Flow Diagram

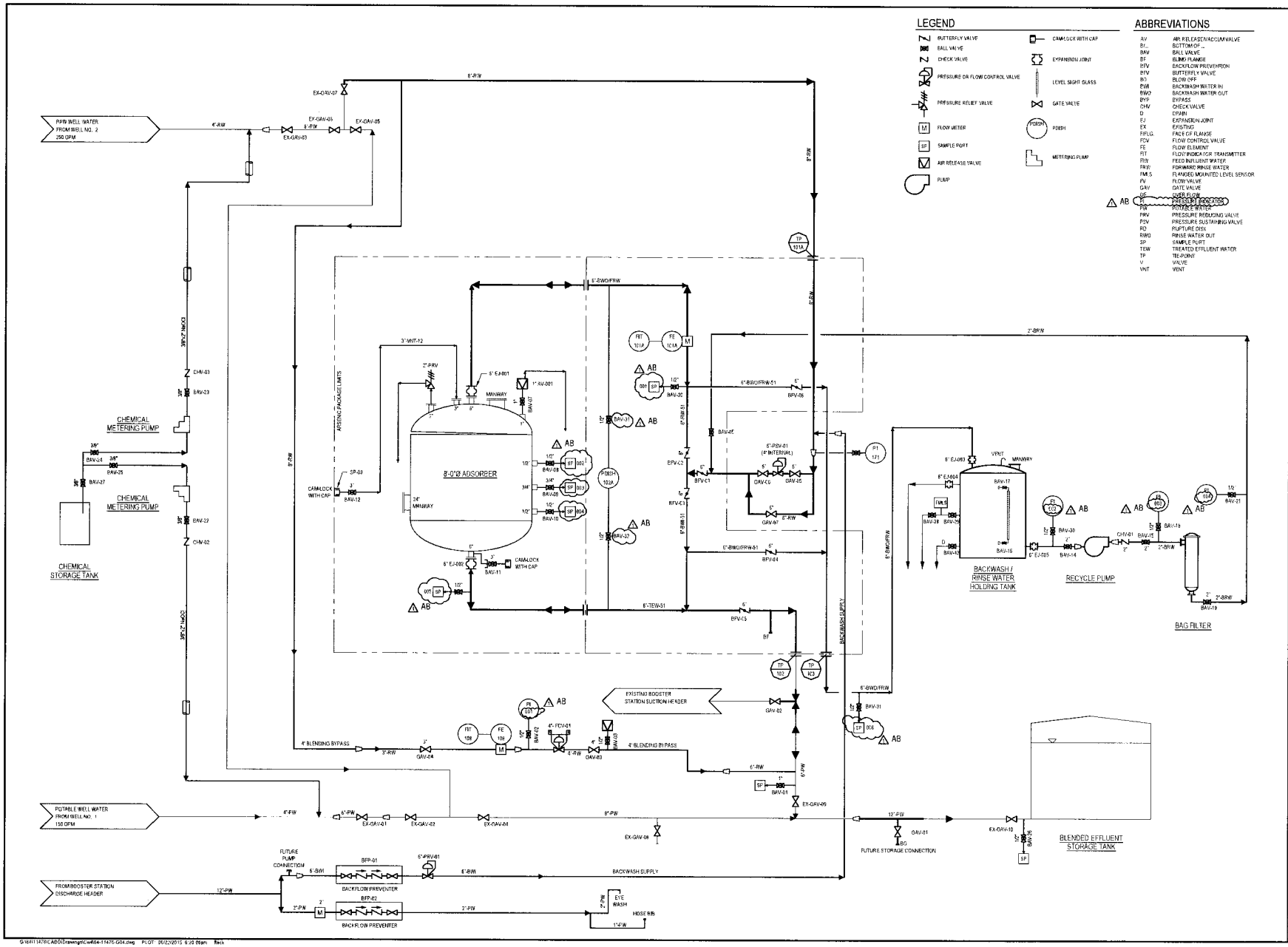

G:\64111476\CAD\Drawings\Cw464-11476-G04.dwg PLOT 06/22/2015 4:20 Brian Beck

ARIZONA WATER COMPANY
3805 N. BLACK CANYON HWY. POST OFFICE BOX 29006
PHOENIX, ARIZONA 85038-9006
(602) 240-6860

VALLEY FARMS ARSENIC REMOVAL FACILITY
10804 E. VAH KI INN ROAD - VALLEY FARMS, AZ 85191

PROCESS FLOW DIAGRAM

PROJECT DISC.
PROJECT SHEET DISC.

REVISIONS
JUNE 2015 AS-BUILTS

This installation shown is to be installed in accordance with the Arizona Water Company Operation and Maintenance Manual and with the Arizona Department of Environmental Quality.

P.E. No.
W.A. No.
SYSTEM
TOPIC DISC. SEC 17 - T5S - R9E
SHT. SHEET
DATE 12/17/2014
SCALE NTS
DRAWN BY SJS
CHECKED BY FHT

7600 North 15th Street Suite 205, Phoenix Arizona 85020 USA
T 1.602.216.7200 F 1.602.216.7201
E pinnacle@pinc.com W www.pinc.com

263-1100
1.602.263.1100
(Dial before digging)

35021
WILLIAM D. ROBERTS
Expires 3/31/16

DWG No. G4
SHEET 4 OF 25

Appendix B – Blending Plan

Scenario 2 Blending								
Effluent Concentration (ppb)	Well 1 Flowrate (gpm)	Well 1 Concentration (ppb)	Well 2 Flowrate (gpm)	Well 2 Concentration (ppb)	Bypass Flowrate (gpm)	Treated Flowrate (gpm)	Total Flowrate (gpm)	Goal Concentration (ppb)
3	0	3.5	250	14.5	87	163	250	7.0
4	0	3.5	250	14.5	71	179	250	7.0
5	0	3.5	250	14.5	53	197	250	7.0
6	0	3.5	250	14.5	29	221	250	7.0
7	0	3.5	250	14.5	0	250	250	7.0

Scenario 3 Blending								
Effluent Concentration (ppb)	Well 1 Flowrate (gpm)	Well 1 Concentration (ppb)	Well 2 Flowrate (gpm)	Well 2 Concentration (ppb)	Bypass Flowrate (gpm)	Treated Flowrate (gpm)	Total Flowrate (gpm)	Goal Concentration (ppb)
3	150	3.5	250	14.5	132	118	400	7.0
4	150	3.5	250	14.5	121	129	400	7.0
5	150	3.5	250	14.5	107	143	400	7.0
6	150	3.5	250	14.5	91	159	400	7.0
7	150	3.5	250	14.5	70	180	400	7.0

Appendix C - Process Description

VALLEY FARMS
ARSENIC REMOVAL FACILITY
SORB 33® ADSORBER SYSTEM

(1) ONE 8'0" DIA. ADSORBER

SEVERN TRENT SERVICES
PROJECT # 22643

SECTION 4 PROCESS DESIGN DESCRIPTION

SEVERN
TRENT
SERVICES

Severn Trent Water Purification, Inc.
SORB 33® As Removal System – Project 22643

□□□□E□□ □E□□□□T□□□

□□□□□F□r□ □W□□□□□□□ □ □r□□□□W□□□r □□□ □□□□

□□□□r□Tr□□□□□r□□□□ Ste. 102, 5415 W. Sligh Avenue, Tampa, FL 33634 USA www.severntrentservices.com

Chapter 1 □T□□□□□T□□

1.1 □r□□□□ □□□ □□□□□□□□□ □□□□r□□□□

The SORB 33® Arsenic Adsorption System is a commercially available product specifically designed for arsenic (chemical symbol – □□) removal for small systems at the wellhead. SORB 33® products are standard packaged systems engineered for arsenic removal. A central component of the integrated SORB 33® system is the Bayoxide® E33 iron-based adsorption media developed and manufactured by Lanxess specifically for the removal of arsenic from drinking water. The granular ferric oxide media exhibits a high capacity for arsenic adsorption and, unlike other iron-based media, is delivered in a dry crystalline form. The E33 media is robust, easy to handle, stored and shipped dry and has NSF 61 approval for use in drinking water.

Water from the source well is pumped through a vessel, called an adsorber, containing the media. As the water passes through the fixed bed of media, the arsenic is reduced to well below 10 micrograms per liter (μ□□) (the US EPA's Maximum Contaminant Level) until the media reaches its capacity. The spent media, which will pass the EPA's TCLP test for toxicity, is then removed and disposed of as non-hazardous waste. Unlike several other arsenic removal technologies, there is no chemical regeneration or flocculation, making the process simple, reliable, and minimizes labor. The media's high capacity for arsenic enables long operating life (typically 6 to 36 months between media change-outs depending on well usage), thus minimizing operational attention requirements.

1.2 □r□□□□ □d□□r□□□□ □□□□ □□r□

□r□□□□ F□r□ □ □ □□□□□□□□□□: Arsenic in ground water is generally found in one of two inorganic valence states – As^{+3} or arsenite, □□□□□□, and As^{+5} or arsenate, □□□□). The more common and stable form is As(V). It exists in two ionic forms depending upon the water's pH. It is present in an oxidizing environment, i.e., where the electromotive force (EMF) or ORP of the water is positive or slightly negative. As(III) exists where the EMF is more negative. It readily oxidizes to Arsenic (V) when exposed to air or to a disinfecting oxidant. As a rule of thumb, Arsenic (III) will be found in waters containing higher levels of iron and/or manganese.

□d□□r□□□□ □□□□□□□□: Severn Trent Services' SORB 33® Arsenic Removal Process is a fixed bed adsorption system using a granular ferric oxide media, or adsorbent, called Bayoxide® E33 for the adsorption of dissolved arsenic onto the solid media. It employs a simple "□□□ □ □ Tr□□□" process that flows pressurized well water through a fixed bed pressure vessel containing the media where arsenic removal occurs.

In the SORB 33 Process, both As(III) and As(V) oxyanions are removed from water via a combination of adsorption or occlusion (adhesion) by reaction with ferric oxide ions. Above pH 7, the primary mechanism is the adsorption of arsenic oxyanions ($HAsO_3$) to the surface hydroxyl groups of ferric oxide hydroxide (FeO-OH) as illustrated here:

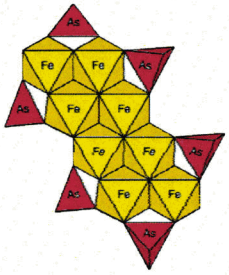

Adsorption is a continuous process conducted at a specific flow, or loading, rate, normally about 7 gpm/ft², downward through the fixed bed adsorber for operating periods of about 1-4 months on-stream duration. In addition to specific flow rate, the other key process parameter is empty bed contact time (**E□□T**). This variable dictates the amount of water contact time within the bed required to effectively complete arsenic adsorption; the typical design value is 3.5 minutes.

The media adsorbs As(V) with rapid kinetics, but will also adsorb As(III) more slowly. Arsenite is nonionic at normal water pH's, and therefore, it will not be adsorbed as an anion. Adsorption kinetics for As(III) are slower than that of As(V), most likely because it is first oxidized by the media to As(V) before it is adsorbed.

1.3 □r□□□□ □d□□r□□□□ □□r□□r□ □□□□

Arsenic removal performance via adsorption is illustrated graphically using a "Breakthrough Curve" such as the one shown below. Performance of an adsorbent is measured by the number of bed volumes of water that can be treated with one bed volume (□□) of media before it exhausts, i.e. can no longer adsorb arsenic efficiently. The adsorption curve below is the predicted performance for Bayoxide E33 media used to treat the water. The projected volume per vessel in the table below represents the concentration at which the treated water's Arsenic level is nearing the MCL of 10 μg/L. This is called the breakthrough point.

Monitoring of SORB 33 performance is done by routine analysis of the treated water. Initially, this can be done on a monthly basis. As the treated water Arsenic level increases, this frequency is increased to semi-monthly so as to be able to schedule media replacement as close to the breakthrough point as possible without exceeding the MCL.

Figure □ is the breakthrough curve for each of the adsorbers. Based upon pilot test results, the media can treat 83.1 million gallons (71,200 BV's).

Bayoxide E33 performance is unlike breakthrough curves for water softening resins or other adsorbents, which breakthrough rapidly to influent levels leaving little time for media change-out. Using Bayoxide E33, arsenic will continue to be adsorbed even after it exceeds the MCL.

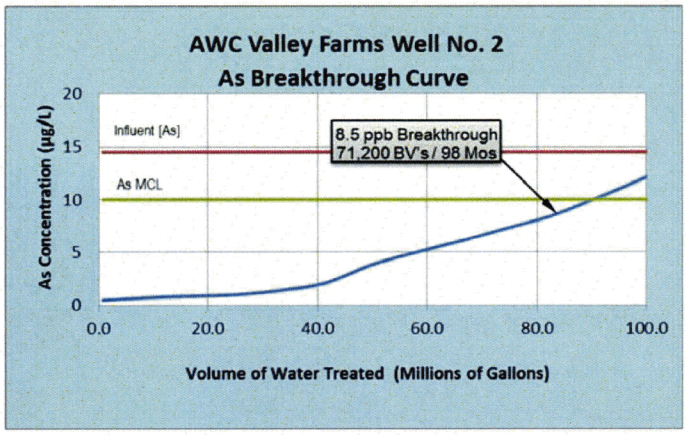

Figure □

1.4 W□□r □□□□□□□ □ □□□□□ □□r□□ □□□r □□□

The constituent's analysis (assays) in the water used to determine the SORB 33 system performance is listed in Table □. Assay values not reported are listed as not available (□□□).

□□□□□ F□r□ □□W□□□ □W□□r □□□□□□□								
pH	□□□		Alkalinity	□□□	ppm	Chromium	□□□	ppb Cr
EMF (ORP)		mV	Chloride	□	ppm Cl^-	Iron	□□	ppb Fe
Water Temp.	□□	°F	Fluoride	□□□	ppm F	Manganese	□□	ppb Mn
Arsenic	□□□□	ppb As	Hardness	□□	ppm	Selenium	□□□	ppb Se
As(III)	□	ppb As	Phosphate	□□□□	ppm PO_4	Tungsten	□□□	ppb W
TTI Dissolved Solids	□□□	ppm	Silica	□□	ppm SiO_2	Uranium	□□□	ppb U
Turbidity	□□□	NTU	Sulfide	□□□	ppb S	Vanadium	□□□□	ppb V

Table □

General system information and system design parameters at minimum treatment flow are shown below in Table □□. Table □□ reflects the system at maximum treatment flow with no bypass. Each of the key variables including system size, media volume, performance, service and backwash rates are listed in this table.

□r□□□□□□□□ □ □ □□□□r□□□□□r□ □□□□□			
Client:	□r□□□□□W□□□r □□□ □□□□	Average Flow:	□□□□ MGD Avg
Name of Site:	Valley Farms - Well 2	Well Capacity:	□□□ gpm
Primary Contact:	Jeff Pals	Treatment Flow:	□□□ gpm
Engineer:	GHD	Op Factor: 2.4 Hrs/Day or □□□	23.8% Bypass

□□□□□□ □□□□□□			
SORB 33® Model No:	EAS-3008	Contact Time (EBCT) & Bed Depth:	6.1 Min / 3.1 ft
Adsorber No & Size:	One 8.0 ft Diameter	Average Treatment Rate:	36,360 gals/Day
System Footprint:	10'L x 10'W x 12'H	Design Flow Rate per Adsorber:	190 gpm
Flow Configuration:	Parallel w/ Bypass	Loading Rate (Specific Velocity):	3.8 gpm/ft^2
Adsorptive Media:	Bayoxide E33 Granules	Estimated Working Capacity:	71,200 BV's
Media Quantity:	4,968 lbs (2.25 MT) 156 cubic ft	Media Cycle Life:	98.6 Months
Backwash Volume:	7,150 gals/vessel	Volume Treated per Cycle:	83.1 million gals
SORB Backwash Rate:	550 gpm	Arsenic Analysis:	□□□□ µg/L As
pH Adjustment:			
Special Features:		Pres:	100 psig

Table □□

Client:	[illegible]	Average Flow:	[illegible] MGD Avg
Name of Site:	Valley Farms - Well 2	Well Capacity:	[illegible] gpm
Primary Contact:	Jeff Pals	Treatment Flow:	[illegible] gpm
Engineer:	GHD	Op Factor: 2.4 Hrs/Day or [illegible]	0.0% Bypass

SORB 33® Model No:	EAS-3008	Contact Time (EBCT) & Bed Depth:	4.7 Min / 3.1 ft
Adsorber No & Size:	One 8.0 ft Diameter	Average Treatment Rate:	36,360 gals/Day
System Footprint:	10'L x 10'W x 12'H	Design Flow Rate per Adsorber:	250 gpm
Flow Configuration:	Parallel w/ Bypass	Loading Rate (Specific Velocity):	5.0 gpm/ft^2
Adsorptive Media:	Bayoxide E33 Granules	Estimated Working Capacity:	71,200 BV's
Media Quantity:	4,968 lbs (2.25 MT) 156 cubic ft	Media Cycle Life:	75.1 Months
Backwash Volume:	7,150 gals/vessel	Volume Treated per Cycle:	83.1 million gals
SORB Backwash Rate:	550 gpm	Arsenic Analysis:	[illegible] µg/L As
pH Adjustment:			
Special Features:		Pres:	100 psig

Table [illegible]

1.5 [illegible]

Safety at a water treatment site is of no less priority than the importance of good operation and maintenance of a plant. The STWP SORB System is designed and constructed with the understanding that safety features are inherent in the physical facilities of the plant. The OSHA standard has been the guideline for the system during design and construction. The operators of the system should also observe it.

Severn Trent recommends the system owners and operators draft Standard Operating procedures (SOP's) to address any routinely performed procedures with safety acknowledgements of the task incorporated. These tasks include valve position changes, backwashing, rinsing, treatment valving, etc.

Chapter 2 □□□□E□□ □□E□□T□□□

The following sections describe each of the water treatment steps with the equipment provided by Severn Trent Water Purification. Other equipment not provided by STWP should be referenced by the other vendors' documentation.

The Valley Farms SORB 33® Arsenic Removal System consists of the following equipment supplied by STWP:

- One 8'-Ø SORB 33® adsorber operated manually

2.1 □d□□r□□□□□ Tr□□□□ □□□

Arsenic removal via adsorption is done by a downward flow of water through a fixed bed of media contained in a pressure vessel. SORB 33® adsorption units are designed to match well pump capacities unless otherwise specified by the client.

Flow meter (FIT-101A) in the feed line totalizes the volume of well water being fed to the vessel. It is important to record the totalizer reading when media is replaced in the vessel, because the media life and performance are determined by the volume of water treated prior to breakthrough. Routine arsenic analysis of treated water samples is used to monitor treatment performance and determine when the media must be replaced.

As water is treated through the adsorbers, the pressure differential ("d□□□□ □" or Δ□), measured by the differential pressure switch (PDIS-102A) and confirmed by pressure instruments (PI-171 & PI-172), will slowly increase across the vessel. The vessel should be taken off-line for media backwashing when its ΔP increases above 10 psi.

Figure □ is a simplified piping & instrumentation flow diagram of the treatment process, based upon the 250 gpm design in Table □.

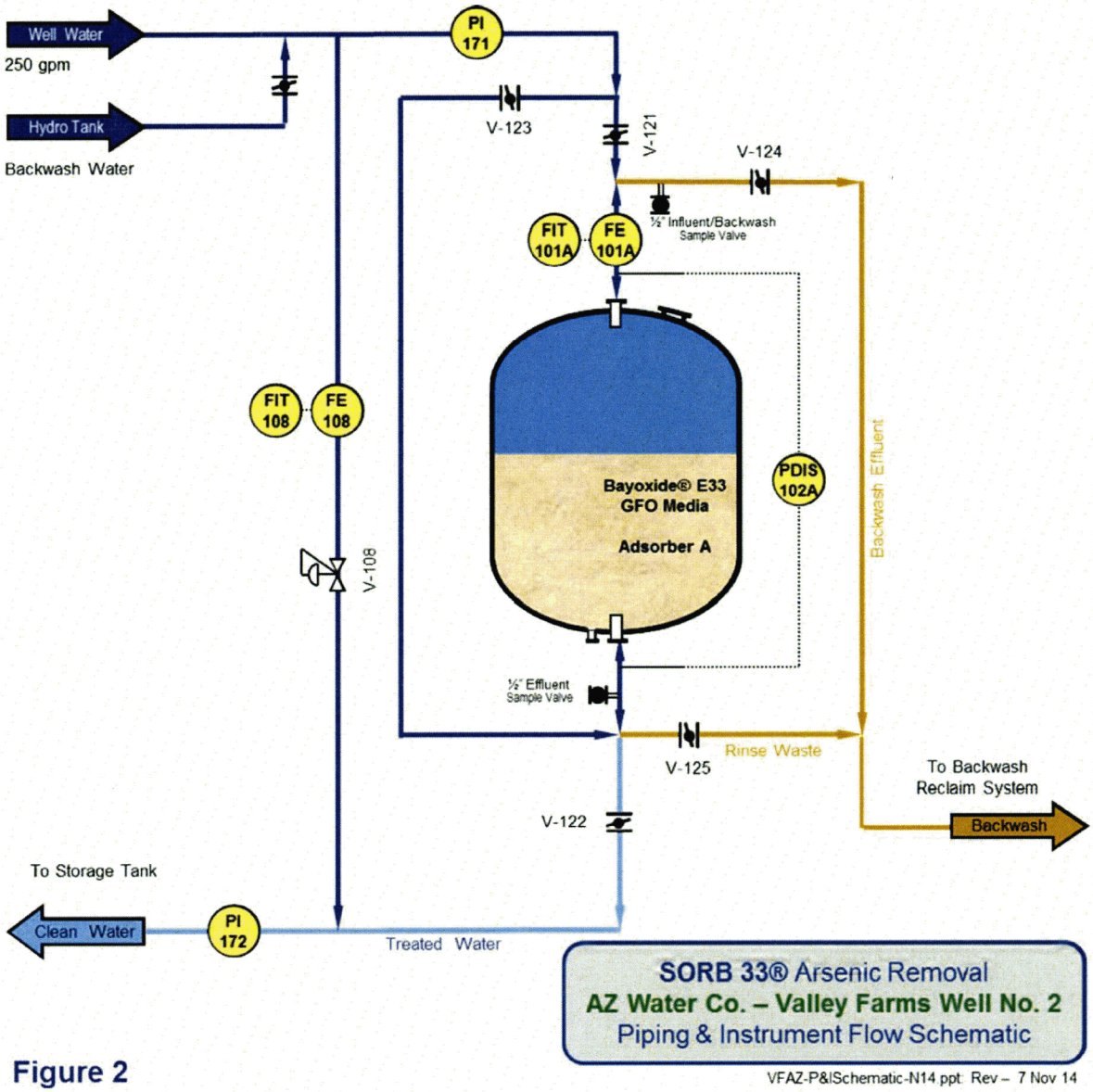

Figure 2

2.2 M□d□□ □□□□□ □□□ □□d □□□□

Adsorber backwash events are initiated by the operator based upon an increasing differential pressure through the vessel. The differential pressure is measured by the difference between the influent and effluent pressure gauges, PI-171 and PI-172. The differential pressure switch will send a signal once a DP of 10 psi has been reached.

Table □ describes the step by step sequence of operations during the adsorption cycle and backwash events. The positions of the valves in each of the service and backwash steps are listed further below in Table □.

[illegible]

Valve & Loop Nos	Step No	[illegible]	[illegible]	Action: [illegible]uto or Manual
V-121A V-122A	[illegible]	[illegible]	Open Raw Water Feed Valve [illegible] and Treated Effluent Water Valve [illegible] to allow service flow to the adsorber	M
V-108			Throttle Bypass Valve [illegible] to control correct amount of treatment bypass	M
FIT-101A			Flowmeter measures adsorber feed flow and totalizes volume treated	[illegible]
V-121A V-122A V-123A V-124A V-108	[illegible]	[illegible]	F[illegible] turn off well. The backwash will be supplied by a hydro tank Open Backwash Water Influent Valve [illegible] and Backwash Waste Effluent Valve [illegible] Close Raw Water Feed Valve [illegible], Treated Effluent Valve [illegible], and Bypass Valve [illegible] Open backwash water supply	M
V-123A V-124A	[illegible]	[illegible]	Throttle backwash water supply valve to control the backwash rate at [illegible] Continue backwash for [illegible]. Sample effluent every 2 min for clarity and to ensure no media is backwashed out of the adsorber.	M
V-121A V-123A V-124A V-125A	[illegible]	[illegible]	F[illegible], close the backwash water supply valve Open RWF Valve [illegible] and Forward Rinse Out Valve [illegible] Close BWI Valve [illegible] and BWE Valve [illegible]	M
V-121A V-125A	[illegible]	F[illegible] [illegible]rd	Throttle the backwash water supply valve to control the rinse rate at [illegible] Continue rinse for [illegible]. Sample effluent for clarity	M
V-121A V-122A V-125A V-108	[illegible]	[illegible]	F[illegible], close the backwash water supply valve Open TEW Valve [illegible] Close RWO Valve [illegible] Open and throttle bypass valve [illegible] Turn on well to begin service	M

Table [illegible]

[illegible]

[illegible]	[illegible]	Service Mode	[illegible] B'wash	Rinse	[illegible] Unit [illegible]	
[illegible]	Adsorber [illegible] Valves					
V-121A	RWW - Raw Water Feed	[illegible]	[illegible]	[illegible]	[illegible]	
V-122A	TEW - Treated Effluent Water	[illegible]	[illegible]	[illegible]	[illegible]	
V-123A	BWI - Backwash Water Influent	[illegible]	[illegible]	[illegible]	[illegible]	
V-124A	BWE - Backwash Waste Effluent	[illegible]	[illegible]	[illegible]	[illegible]	
V-125A	RWO- Forward Rinse Waste	[illegible]	[illegible]	[illegible]	[illegible]	
	Common Valves					
V-108	TBW - Treatment Bypass Water	T	[illegible]	[illegible]	[illegible]	
[illegible]	[illegible] - Open; [illegible] - Close; T - Throttle					

Table [illegible]

2.3 [illegible] M[illegible]r[illegible] [illegible] [illegible]

The SORB 33 System is designed be operated unattended except when backwashes are conducted. The flow rates and pressure differential of the adsorber should be checked on a routine basis.

The treated effluent quality should be visually checked routinely. Also, the adsorber backwash effluents should be checked every time to observe the dirt load in the initial effluent after 2 minutes of backwashing and near the termination of each backwash. The initial samples should be turbid or red with solids. The terminal samples should be light orange in turbidity. The forward rinse effluents from each filter should be checked 1 minute after rinse flow has started. This effluent should be clear.

The following sampling and analysis schedule is recommended. Field test kits are adequate for analyses:

- Treated effluent from the adsorber: As – twice per month
- Feed Water: As – once per month; pH - daily
- Backwash Effluent: Qualitative Solids Level of initial & terminal backwashes, rinse – every event.

2.4 □□□d□□□ □□□□□ □ □□r W□□□□□□□

While the media removes arsenic to non-detect levels (< 2 ppb) for the first 25%-50% of the bed's life, STS uses a conservative effluent concentration of 3 ppb to prevent any chance of exceeding the maximum blend target. As the effluent arsenic increases, the bypass will have to be decreased to meet the blend target of 7 ppb arsenic.

The following schemes to blend treated and untreated well water are dictated by the following treatment scenarios.

W□□□□ □ □□□

$$(Q_{bypass} * C_{bypass}) + (Q_{treated} * C_{treated}) = (Q_{blend} * C_{blend})$$

1. Minimum Treatment Flow for Well 2
    a. 164 gpm treated
    b. 86 gpm bypassed (34%)

2. Maximum Treatment Flow for Well 2
    a. The bypass must be closed once the effluent arsenic concentration meets the target blend concentration (7 ppb in this case)
    b. 250 gpm treated
    c. 0 gpm bypassed (0%)

W□□□□ □ □ □

$$(Q_{bypass} * C_{bypass}) + (Q_{treated} * C_{treated}) + (Q_{well1} * C_{well1}) = (Q_{blend} * C_{blend})$$

3. Minimum Treatment Flow for Well 2 (Well 1 fully bypasses system)
    a. 117 gpm treated
    b. 133 gpm bypassed (53%)

4. Maximum Treatment Flow for Well 2 (Well 1 fully bypasses system)
    a. Despite reaching an effluent arsenic concentration of 7 ppb, some water can still be bypassed due to Well 1's low level of arsenic (3.5 ppb)
    b. 180 gpm treated
    c. 70 gpm bypassed (28%)

Appendix D - Media Information

VALLEY FARMS
ARSENIC REMOVAL FACILITY
SORB 33® ADSORBER SYSTEM

(1) ONE 8'0" DIA. ADSORBER

SEVERN TRENT SERVICES
PROJECT # 22643

SECTION 3 **MEDIA INFORMATION**

A. BAYOXIDE E33™
B. PREPARATION & HANDLING
C. MSDS
D. SPECIFICATIONS
E. NSF CERTIFICATION

VALLEY FARMS
ARSENIC REMOVAL FACILITY
SORB 33® ADSORBER SYSTEM

(1) ONE 8'0" DIA. ADSORBER

SEVERN TRENT SERVICES
PROJECT # 22643

SECTION 3 **MEDIA INFORMATION**

BAYOXIDE E33™

A. PREPARATION & HANDLING

SEVERN TRENT SERVICES

Severn Trent Water Purification, Inc.
SORB 33® As Removal Systems

M□d□ □r□□□r□□□□ □ □□□d□□□ □r□□□d□r□□

□□ ME□□ □T□□□E

1. Until installation, Bayoxide® E33 As media should be stored in original shrink-wrapped bags, in a dry warehouse or covered securely with tarps. Bags should be stored on pallets to keep them off the ground.
2. If media support gravel is to be used, it should also be stored similarly to the E33 media.
3. Any small tears in bags from unloading or delivery should be sealed with duct tape.
4. Damage to bag lifting loops may require rebagging to permit safe handling later.
5. Inspect bags periodically to make sure rodents or insects have not damaged them.

□□ □□E□□□□T□□ F□□ □T□□T□□

1. Have Severn Trent Services review operating manual, backwash sequence, and control design before plant start-up.
2. Flush and disinfect all process piping and vessels. Make sure any fine passages in underdrain components do not become plugged with debris.
3. Backwash water source should be clean potable water containing no chemical other than chlorine. If other chemicals are present, such as pipe corrosion inhibitors, they could adsorb onto the media and shorten its life. Have Severn Trent Services review any proposed chemical additions.
4. Hydrotest all piping and tanks.
5. Test all valves and calibrate control equipment.
6. Test backwashing sequence before adding gravel or media to adsorber vessels.
7. Set backwash water rate at no less than 10 gpm/ft² and no more than 13 gpm/ft² with the upper value preferred for initial backwash. It is very important that flowmeter calibration (mag meters excluded) be verified by an independent method such as rise rate tests inside the empty adsorber vessel (16 to 19.25 inches/minute) or in another tank such as the backwash reclaim tank (rise rate diameter dependent).
8. Backwash water source should be flow-regulated with maximum flow positively limited to prevent too high a rate.
9. Control action should bring backwash flow up from zero flow in a controlled manner, to prevent water hammer to the media or gravel.
10. Control action should also be smooth when starting or stopping regular forward flow to an adsorber, again to prevent water hammer to the media or gravel. Water hammer can crush the media over time.
11. Check stored support gravel for contamination. Discard contaminated gravel. Add support gravel and backwash as required.
12. Leave adsorber vessels 2/3 full of water for media installation.

[illegible] [illegible]T[illegible]

1. All media is to be saturated fully with chlorine prior to being put into service. Media will adsorb approximately 12-15 grams of free chlorine (Cl_2) per cubic foot of media. [illegible]r[illegible] d[illegible] [illegible] [illegible] [illegible] [illegible]d[illegible]r[illegible] [illegible] [illegible] [illegible] [illegible]d[illegible]
   For calculating chlorine, saturation is assumed at 13.0 grams Cl_2 per cubic feet of media
2. NSF approved 12.5% Sodium Hypochlorite should be used to saturate the media and is added directly to the 2/3 full of water vessel.
3. Calculate the concentration of chlorine in ppm required for saturation in the vessel
   a. Volume of media per vessel in cuft. x 1.5 x 7.48 (gal/cuft) = approximated volume of water in the vessel

$$\text{[illegible]M Fr[illegible]} = \frac{\text{cuft (media per vessel) x } 13.0\text{ g/cuft (g Cl2 / cuft media) x } 1000\text{ (mg Cl2 / g Cl2)}}{\text{gal. water per vessel x } 3.78\text{ (gal water / Liter)}}$$

   b. Calculate the required gallons of 12.5% sodium hypochlorite solution to be added <u>per vessel</u>

$$\text{[illegible]} = \frac{\text{calculated ppm of free chlorine} \times \text{gal. water per vessel}}{\text{143,946 (conversion factor)} - \text{calculated ppm of free chlorine}}$$

4. Add the calculated gallons of 12.5% hypochlorite solution directly to the vessel and mix with a shovel or rake. Allow for the solution to mix for 5-10 minutes. Water is ready for the media to be added. All media must be submerged under water after adding.

[illegible] ME[illegible] [illegible]T[illegible]T[illegible]

5. Take care not to damage bag lifting loops with sharp edges from forklifts or from rough handling. Bags with damaged lifting loops either must be rebagged or remain on the original pallet and be installed more slowly under careful supervision by cutting the sides of the bag.
6. Crane straps or cables should be at least 10 feet long to prevent lifting straps from being at sharp angles during lifting. Four lifting cables or straps will be needed, one for each bag lifting loop.
7. As bags are lifted off pallets, sweep off any debris on the bottom of the bags. Small abrasion tears from moving may be sealed with duct tape. If holes are due to animal or insect infestation, the media may be contaminated and should be inspected carefully.
8. Position bag over the top manhole of the adsorber vessel. Untie the elephant trunk that is folded up on the bottom of the bag. A loop of rope may be tied around the trunk to control the flow of media from the bag.
9. Dusk masks should be worn to avoid breathing the non-hazardous media dust.
10. Untie the first trunk seal cord, and extend the trunk into the manhole. Open the second upper trunk seal cord, and allow the media to fall into the water inside the adsorber. A large funnel may be used but may not be necessary if the trunk extends down past the manhole opening.

11. Install the required number of bags of media.
12. Level the media in the vessel with a rake or shovel so that all the media is covered with water. Close and seal the top manhole. Allow to soak at least 3 hrs, preferably overnight, to allow the media to become saturated with chlorine and water.

E[illegible]T[illegible]W[illegible]

1. Set up each adsorber for backwash. Begin backwash water flow, ramping up smoothly from zero to maximum flow over a 2 minute period.
2. Backwash the new media at up to 13 gpm/ft² to remove fines. This process may take 20 minutes or longer the first time. Initial color of the water will be dark red just like the media. Normal sized media will not be discharged if the correct backwash water rate is used.
3. Take samples of dirty backwash water after backwash start at 1, 3, 5, 10, 15, 20, and 25 minute intervals (and perhaps longer) in clear sample bottles or other clear containers to determine that full size media particles are not being discharged, and to determine when the water clarity has improved as much as possible.
4. When two consecutive samples are nearly without color and are similar in appearance, cease backwashing by smoothly ramping backwash water flow down to zero over a 2 minute period.
5. After initial backwash, it is recommended that initial media levels be checked in all of the adsorbers for future reference. The bed surface is leveled and media height is expanded about 7% by backwashing, so future measurements should also be taken after backwashing.

F[illegible]T[illegible]T[illegible]E[illegible]T[illegible]

1. After initial backwash, the adsorber should be run in the forward flow mode at its normal service flowrate with the initial effluent discarded to sewer, ditch or dirty backwash tank for 3 to 5 minutes. This allows effluent turbidity to drop quickly to normal levels, and prevents small particles loosened by backwashing to be discharged to the distribution system. This is also recommended practice for subsequent backwashes as well.
2. Ongoing monitoring should include flow rate, influent and effluent arsenic concentration, differential pressure across the media and amount of water treated (recorded in bed volumes – volume the media bed displaces in an adsorber).
3. High differential pressure across the adsorber can cause the media to be crushed. Backwashes should be scheduled before differential pressure reaches 10 psi or if effluent arsenic begins to rise (evidence of channeling within the media).
4. When the predicted useful life of the media is approaching, check arsenic removal performance more frequently.
5. Normal backwash water rate should be 11 gpm/ft² for 12 minutes, with a forward rinse at service flowrate for 2 minutes. Control should include a smooth 2 minute ramp up from and down to zero flow.

[illegible] T[illegible] W[illegible]

1. If an adsorber is not to be used for a period of time, chlorinated influent with 5-10 ppm free Cl_2 should be run through the adsorber about 15 minutes per week with the effluent discarded to the dirty backwash tank.
2. For extended shutdown, add chlorine to the water on top of the media until a 5 mg/l residual is obtained, then drain water down until 6 inches of water covers the media. Check water for a residual every two months and add chlorine if it is below 0.5 mg/L. Backwash the adsorber before placing back in service.

[illegible] T[illegible] T[illegible] [illegible] E[illegible] T[illegible] [illegible] E[illegible] E

Severn Trent Water Purification (STWP) process engineer should be onsite during media installation, initial backwashing, and plant startup. Follow up plant inspection and consultation with plant operators should be conducted by an STS engineer 2 months after startup, 6 months after startup and then yearly. Startup and inspection services are currently available for $1,250 per day, plus expenses at cost. Typical startup time required, depending on number of adsorber vessels, is one day for media loading, one to two days for initial backwash, and two days for initial operation, plus travel days. A typical inspection visit would require one to two days onsite and two additional days for travel and written report.

[illegible] Proper media storage, backwashing, operating practice, and experienced follow up attention is required to maximize media performance and media life. Changes to these procedures or recommendations could void the media performance warranty. Consult with Severn Trent Services about any deviation from recommended practices.

VALLEY FARMS
ARSENIC REMOVAL FACILITY
SORB 33® ADSORBER SYSTEM

(1) ONE 8'0" DIA. ADSORBER

SEVERN TRENT SERVICES
PROJECT # 22643

SECTION 3 **MEDIA INFORMATION**

BAYOXIDE E33™

B. MSDS

MATERIAL SAFETY DATA SHEET

LANXESS
Energizing Chemistry

LANXESS Corporation
Product Safety & Regulatory Affairs
111 RIDC Park West Drive
Pittsburgh, PA 15275-1112
USA

TRANSPORTATION EMERGENCY

CALL CHEMTREC:	(800) 424-9300
INTERNATIONAL:	(703) 527-3887

NON-TRANSPORTATION

LANXESS Emergency Phone:	(800) 410-3063
LANXESS Information Phone:	(800) LANXESS

1. Product and Company Identification

Product Name:	BAYOXIDE E 33
Material Number:	2653218
Color Index Name:	Pigment Yellow 42
CAS-No.:	20344-49-4
Formula:	FeOOH

2. Hazards Identification

Emergency Overview

Color: Brown **Form:** solid Granules **Odor:** Odorless.
Product poses little or no hazard if spilled. May cause mechanical irritation (abrasion).

Potential Health Effects

Primary Routes of Entry:	Inhalation, Skin Contact, Eye Contact, Ingestion
Medical Conditions Aggravated by Exposure:	Respiratory disorders

HUMAN EFFECTS AND SYMPTOMS OF OVEREXPOSURE

General Effects of Exposure
Acute Effects of Exposure
For Product: BAYOXIDE E 33
No applicable information was found concerning any adverse acute health effects from overexposure to this product.

Chronic Effects of Exposure
For Product: BAYOXIDE E 33
No applicable information was found concerning any adverse chronic health effects from overexposure to this product.

Carcinogenicity:
No Carcinogenic substances as defined by IARC, NTP and/or OSHA

3. Composition/Information on Ingredients

Hazardous Components
This material is not hazardous under the criteria of the Federal OSHA Hazard Communication Standard 29 CFR 1910.1200.

4. First Aid Measures

Eye Contact
In case of contact, flush eyes with plenty of lukewarm water. Get medical attention if irritation develops.

Skin Contact
In case of skin contact, wash affected areas with soap and water.

Inhalation
If inhaled, remove to fresh air. Get medical attention if irritation develops.

Ingestion
If ingested, do not induce vomiting unless directed to do so by medical personnel. Get medical attention.

5. Fire-Fighting Measures

Suitable Extinguishing Media: Material is not combustible. Use extinguishing media suitable for other combustible materials in the area.

Special Fire Fighting Procedures
Firefighters should be equipped with self-contained breathing apparatus to protect against potentially toxic and irritating fumes.

6. Accidental release measures

Spill and Leak Procedures
Spills should be swept up and placed in appropriate containers for disposal. Clean up promptly by scoop or vacuum. Avoid creating dusty conditions.

7. Handling and Storage

Storage Period
Unlimited in tightly closed containers.

Handling/Storage Precautions

Handle in accordance with good industrial hygiene and safety practices. Wash thoroughly after handling. Keep container closed when not in use. Avoid breathing dust.

Further Info on Storage Conditions
Material can be stored safely at ambient temperatures.

8. Exposure Controls / Personal Protection

Country specific exposure limits have not been established or are not applicable

Industrial Hygiene/Ventilation Measures
Under normal conditions of use, special ventilation is not required.

Respiratory Protection
Although no exposure limit has been established for this product, the OSHA PEL for Particulates Not Otherwise Regulated (PNOR) of 15 mg/m3 - total dust, 5 mg/m3 - respirable fraction is recommended. In addition, the ACGIH recommends 3 mg/m3 - respirable particles and 10 mg/m3 - inhalable particles for Particles (insoluble or poorly soluble) Not Otherwise Specified (PNOS)., The following respirator is recommended if airborne concentrations exceed the appropriate standard/guideline., NIOSH approved, air-purifying particulate respirator with N-95 filters.

Eye Protection
safety glasses.

Skin and body protection
No special skin protection requirements during normal handling and use.

Additional Protective Measures
Employees should wash their hands and face before eating, drinking, or using tobacco products. Educate and train employees in the safe use and handling of this product.

9. Physical and chemical properties

Form:	solid
Appearance:	Granules
Color:	Brown
Odor:	Odorless
pH:	4 - 8 @ 50 g/l
Melting Point:	Begins at 1,000 °C (1,832 °F)
Flash Point:	not applicable
Lower Explosion Limit:	Not Established
Upper Explosion Limit:	Not Established
Vapor Pressure:	not applicable
Specific Gravity:	4 - 5 @ 20 °C (68 °F)
Solubility in Water:	Insoluble
Autoignition Temperature:	Not Applicable
Viscosity, Dynamic:	not applicable
Bulk Density:	300 - 1,000 kg/m3

10. Stability and Reactivity

Hazardous Reactions

Hazardous polymerization does not occur.

Stability
Stable

Conditions to avoid
At temperatures greater than 356 F (180 C) the product will be converted to Fe2O3.

11. Toxicological Information

Toxicity Data for BAYOXIDE E 33
Acute Oral Toxicity
LD50: > 5,000 mg/kg (Rat)

Skin Irritation
rabbit, Non-irritating

Eye Irritation
rabbit, Non-irritating

Toxicity Data for C.I. Pigment Yellow 42
Acute Oral Toxicity
LD50: > 5,000 mg/kg (Rat)

Skin Irritation
rabbit, Non-irritating

Eye Irritation
rabbit, Non-irritating

Carcinogenicity
Rat, Male/Female, intraperitoneal, 8 w,
ambiguous

12. Ecological Information

Ecological Data for BAYOXIDE E 33
Acute and Prolonged Toxicity to Fish
LC0: > 1,000 mg/l (Golden orfe (Leuciscus idus))

Toxicity to Microorganisms
NOEC: > 1,000 mg/l, (Pseudomonas putida)

Ecological Data for C.I. Pigment Yellow 42
Acute and Prolonged Toxicity to Fish
EC50: > 1,000 mg/l (Golden orfe (Leuciscus idus), 48 h)

Toxicity to Microorganisms
> 10,000 mg/l, (Pseudomonas putida)

13. Disposal considerations

Waste Disposal Method
Waste disposal should be in accordance with existing federal, state and local environmental control laws.

Empty Container Precautions
Recondition or dispose of empty container in accordance with governmental regulations.

14. Transportation information

Land transport (DOT)
Non-Regulated

Sea transport (IMDG)
Non-Regulated

Air transport (ICAO/IATA)
Non-Regulated

15. Regulatory Information

United States Federal Regulations

OSHA Hazcom Standard Rating: Non-Hazardous

US. Toxic Substances Control Act: Listed on the TSCA Inventory.

US. EPA CERCLA Hazardous Substances (40 CFR 302):
Components
None

SARA Section 311/312 Hazard Categories:
Non-hazardous under Section 311/312

US. EPA Emergency Planning and Community Right-To-Know Act (EPCRA) SARA Title III Section 302 Extremely Hazardous Substance (40 CFR 355, Appendix A):
Components
None

US. EPA Emergency Planning and Community Right-To-Know Act (EPCRA) SARA Title III Section 313 Toxic Chemicals (40 CFR 372.65) - Supplier Notification Required:
Components
None

US. EPA Resource Conservation and Recovery Act (RCRA) Composite List of Hazardous Wastes and Appendix VIII Hazardous Constituents (40 CFR 261):
If discarded in its purchased form, this product would not be a hazardous waste either by listing or by characteristic. However, under RCRA, it is the responsibility of the product user to determine at the time

of disposal, whether a material containing the product or derived from the product should be classified as a hazardous waste. (40 CFR 261.20-24)

State Right-To-Know Information

The following chemicals are specifically listed by individual states; other product specific health and safety data in other sections of the MSDS may also be applicable for state requirements. For details on your regulatory requirements you should contact the appropriate agency in your state.

Potential exposure to the California Proposition 65 chemicals in this product have been determined to be below the No Significant Risk Level (NSRL)., The concentrations reported below in units of parts per million (ppm) or parts per billion (ppb) are maximum values.

Massachusetts, New Jersey or Pennsylvania Right to Know Substance Lists:

Weight %	Components	CAS-No.
1 - 100%	C.I. Pigment Yellow 42	20344-49-4

MA Right to Know Extraordinarily Hazardous Substance List:

Weight %	Components	CAS-No.
25 ppm	Arsenic	7440-38-2
350 ppm	Chromium	7440-47-3
200 ppm	Nickel (Ni)	7440-02-0

California Prop. 65:

To the best of our knowledge, this product does not contain any of the listed chemicals, which the state of California has found to cause cancer, birth defects or other reproductive harm.

16. Other Information

NFPA 704M Rating

Health	1
Flammability	0
Reactivity	0
Other	

0=Insignificant 1=Slight 2=Moderate 3=High 4=Extreme

HMIS Rating

Health	1
Flammability	0
Physical Hazard	0

0=Minimal 1=Slight 2=Moderate 3=Serious 4=Severe
* = Chronic Health Hazard

LANXESS Corporation's method of hazard communication is comprised of Product Labels and Material Safety Data Sheets. HMIS and NFPA ratings are provided by LANXESS Corporation as a customer service.

Contact Person:	Product Safety Department
Telephone:	(800) LANXESS
MSDS Number:	000000004623
Version Date:	04/01/2005
Report Version:	1.1

This information is furnished without warranty, express or implied. This information is believed to be accurate to the best knowledge of LANXESS Corporation. The information in this MSDS relates only to the specific material designated herein. LANXESS Corporation assumes no legal responsibility for use of or reliance upon the information in this MSDS.

VALLEY FARMS
ARSENIC REMOVAL FACILITY
SORB 33® ADSORBER SYSTEM

(1) ONE 8'0" DIA. ADSORBER

SEVERN TRENT SERVICES
PROJECT # 22643

SECTION 3 **MEDIA INFORMATION**

BAYOXIDE E33™

C. SPECIFICATIONS

LANXESS
Energizing Chemistry

Product Information

Bayoxide® E 33

Description

Type	Technical Oxide
Delivery form	Granules
Chemical class	Synthetic iron hydroxide FeOOH
CAS-No.	20344-49-4

Specification

Technical Data	min	max	Test method
Fe_2O_3-Content	70		DIN 55913 (1972)
Bulk Density [g/cm³]	0.4	0.6	DIN ISO 787 part 11 (1995)
Specific Surface Area [m²/g]	120	200	DIN 66131 (1993)
water-soluble content [%]		1.0	as per DIN EN ISO 787 Teil 3 (1995)
Water content (ex works) [%]		20	Test method SSP 27472
Sieve analysis < 0.5 mm [%]		20	Test method K006-00
Sieve analysis > 2.0 mm [%]		5.0	Test method K006-00
Trace elements	**min**	**max**	**Test methods**
Al [mg/kg]		350	Atomic spectroscopy
Ba [mg/kg]		10	Atomic spectroscopy
Co [mg/kg]		100	Atomic spectroscopy
Cr [mg/kg]		250	Atomic spectroscopy
Cu [mg/kg]		100	Atomic spectroscopy
Mn [mg/kg]		3000	Atomic spectroscopy
Ni [mg/kg]		300	Atomic spectroscopy
Pb [mg/kg]		3	Atomic spectroscopy
Zn [mg/kg]		100	Atomic spectroscopy

Informative technical data (guide values)

			Test method
Density [g/ml]	~	3.6	as per DIN EN ISO 787 Teil 10 (1995)

Edition: 2006-09-26
Previous Edition: Not available

LANXESS
Energizing Chemistry

Bayoxide® E 33

Packaging

500-kg-bulk bag

Transport and storage

Protect against weathering. Store in a dry place and avoid extreme fluctuations in temperature.

Avoid crushing the granules.

Special conditions for opened packaging: Close bags after use to prevent the absorption of moisture and contamination.

Restrictions in usage

Interfering ions, the pH of the water and other factors may influence the performance of Bayoxide E 33. The user of the product is responsible for monitoring the quality of the treated water to ensure that it complies with local regulations.

The product must not be used for the treatment of water at a pH below 5 and above 10.

Safety

The product is not classified as dangerous under the relevant EC Directives and corresponding national regulations valid in the individual EU member states. It is not dangerous according to transport regulations.

In countries outside the EU, compliance with the respective national legislation concerning the classification, packaging, labelling and transport of dangerous substances must be ensured.

The safety data sheet should be observed. This contains information on handling, product safety and ecology.

Safety data sheet no.:	411144

Edition: 2006-09-26
Previous Edition: Not available

LANXESS
Energizing Chemistry

Bayoxide® E 33

Disposal of waste product

The spent media is to be disposed of in approved landfills provided local regulations are observed. The media is educted from the adsorber vessel into a purpose built tanker. Operators should confirm that they can meet any local landfill tipping conditions.

For disposal within EC, the appropriate code according to the European Waste Catalogue (EWC) should be used.

This information and our technical advice - whether verbal, in writing or by way of trials - are given in good faith but without warranty, and this also applies where proprietary rights of third parties are involved. Our advice does not release you from the obligation to check its validity and to test our products as to their suitability for the intended processes and uses. The application, use and processing of our products and the products manufactured by you on the basis of our technical advice are beyond our control and, therefore, entirely your own responsibility. Our products are sold in accordance with the current version of our General Conditions of Sale and Delivery

LANXESS Deutschland GmbH
Business Unit
Inorganic Pigments
D-51369 Leverkusen

Edition: 2006-09-26
Previous Edition: Not available

VALLEY FARMS
ARSENIC REMOVAL FACILITY
SORB 33® ADSORBER SYSTEM

(1) ONE 8'0" DIA. ADSORBER

SEVERN TRENT SERVICES
PROJECT # 22643

SECTION 3 **MEDIA INFORMATION**

BAYOXIDE E33™

D. NSF CERTIFICATION

NSF Live safer.

Close wi
return to

NSF Product and Service Listings

These Listings were Last Updated on **Thursday, May 06, 2004** at 4:15 AM Eastern Time. Please contact NSF International to confirm the status of any Listing, report errors, or make suggestions.

Warning: NSF is concerned about fraudulent downloading and manipulation of website text. If you have received this listing in hard copy, always confirm this certification/listing information by going directly to http://www.nsf.org/Certified/PwsComponents/Listings.asp?TradeName=bay& for the latest most accurate information.

□□F□□□□□T□□□□□□ □□
□r□□□□ W□□r □□□□□ □□□ □□□□□□□ □□□□□□ E□□□□

NOTE: Unless otherwise indicated for Materials, Certification is only for the Water Contact Material shown in the Listing. Click here for a list of Abbreviations used in these Listings.

Cert-Link (Click here to visit this Company's Website)

BAYER AG

RHEINUFERSTRASSE 7-9
BUILDING 54
KREFELD, 47812
GERMANY
49 2151 88 3790

Facility : KREFELD, GERMANY

Process Media

Trade Designation	Size	Water Contact Temp	Water Contact Material
Adsorption			
Bayoxide E33[1]	0.5 mm - 2 mm	CLD 23	NA

[1] The Certification of this media is only for applications with minimum flow greater than or equal to 0.025 gpm per pound of media.

NOTE: Certified for water treatment plant applications.
This product has not been evaluated for point of use applications.

Number of matching Manufacturers is 1
Number of matching Products is 1
Processing time was 0 seconds

- Search Listings |
- News Room |
- About NSF |
- Careers |
- NSF Mark |
- Client Log-In

- Privacy Policy |
- Site Map |
- Request Info |
- Contact Us |
- Copyright © 2004 NSF International.

Appendix E - Initial Start-up and Monitoring Form

ADEQ Arizona Department of Environmental Quality

Initial Start-Up Monitoring Form
For Ground Water Systems with Treatment Plants and/or Blending Plans

Please mail completed form and all Field & Lab analyses to:
ADEQ Drinking Water Monitoring and Protection Unit
1110 W. Washington St., Mail Code 5415B-2,

PWS ID Number (5 digits):	AZ04 –	**PWS Name:**	
Contact Person/Title:		**Phone #**	**E-Mail Address:**
Choose One:	☐ Treatment Plant Only	☒ Treatment Plant & Blending Plan	☐ Blending Plan Only
Entry Point to the Distribution System (EPDS) #:		**Contaminant:**	☒ Arsenic ☐ Fluoride ☐ Nitrate ☐ Other:

Samples	MM/DD/YY	Sample Time (24h)	Raw Water Result (mg/L) (Insert well registration numbers below)					Treated Water Result (mg/L)	Finished Blended Water Results (mg/L)	Test Method
			Well # 55-616687	Well # 55-	Well # 55-	Well # 55-	Well # 55-			
Day 1										☐Field ☐Lab
Day 2										☐Field ☐Lab
Day 3										☐Field ☐Lab
Day 4										☐Field ☐Lab
Day 5										☐Field ☐Lab
Week 2										☐Lab
Week 3										☐Lab
Week 4										☐Lab
Month 2										☐Lab
Month 3										☐Lab

If Water System chooses to take Field Tested Water Samples, any of the following Field Test Kits are acceptable: *ITS Arsenic Quick II Test Kit, Pat No. 481303, ITS Fluoride eXact Xtra Micro Strips, Part No. 486611 or Hach Nitrate Color Disc Test Kit Model NI-14.* All Water Samples from week 2 thru Month 3 must be submitted to a Certified Laboratory for analysis. Hard copies of Certified Lab Results must be provided with this form.

I hereby certify that the information listed above is accurate to the best of my knowledge. Furthermore, unless otherwise directed by the State, I understand that quarterly compliance monitoring shall commence for the above noted contaminant after initial monitoring has been completed. This quarterly routine compliance monitoring frequency shall remain in effect for the life of the treatment plant.

Water System Owner/Representative (Print)	Signature	Date

Appendix F - Component O&M and Information

1. Bag Filter
2. Chlorination Shed
3. Chlorine Metering Pumps
4. Float Switch
5. Level Transmitter
6. Pressure Switch
7. Recycle Pump

Arizona Water Company
Valley Farms Arsenic Removal Facility

Pressure Switch

Contractor:
Felix Construction Company
1326 W Industrial Dr
Coolidge, AZ 85142
Ph: (480) 464-0011
Fx: (480) 464-0078
www.felixconstruction.com

Mercoid®

Series DA/DS

Bourdon Tube Pressure Switches

Visible setpoint, adjustable deadband, snap action switch pressure ranges to 5000 psi

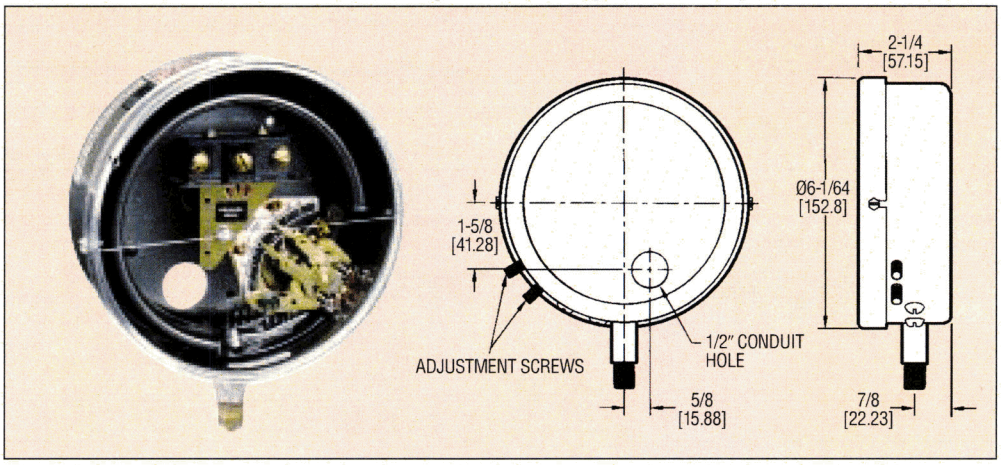

Weather-Proof
Types DAW, DSW, DRW

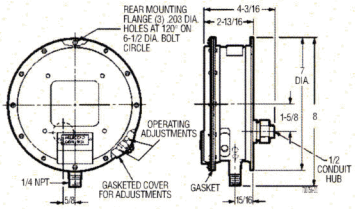

Customers tell us that this is the best pressure switch made. Our most popular, Model DA combines extremely high sensitivity and repeatability with easily adjustable set and reset points through non-interactive external adjustments. Visible calibrated dial for setpoints and on/off indicator to indicate switch actuation are included. Choose either high current snap-switch or hermetically sealed contact mercury switch. The DS Model has a fixed deadband.

FEATURES

- DA Series is equipped with two external adjustments. One sets high pressure operating point, the other sets reset point. Deadband, or the difference between set and reset points is adjustable over the full scale. DS Series has a single external adjustment and fixed deadband.
- Visible calibrated dial, on/off indication.
- SPDT snap-action or sealed mercury switches.
- Minimum deadband obtainable at any point in range.
- Pressure Ranges vacuum to 5000 psig.
- U.L. and C.S.A. listed. Many models FM listed.

PHYSICAL DATA

Max. Temperature: 180°F. For higher temperature media applications, a remote connection or siphon (pigtail) should be used.
Pressure Connection: 1/4" NPT. (1/2" on range 15S).
Housing: pressed steel with transparent cover.
Wiring Connections: 3 screw type.
Wetted Parts: same as Bourdon tube material.
Weight: 4 lb. (std); 6 lb. (wea-proof); 8 lb. (exp-proof).
Max. Press.: Max. adjustment operating range.

Suggested Specification

Pressure switch shall be Mercoid Series DA operated by a (brass) (type 316 stainless steel) (type 403 stainless steel) Bourdon tube actuating a (mercury switch) (snap-switch). Switch shall have deadband fixed or adjustable up to a maximum of 100% of switch range. Switch shall have calibrated dial and one or two pointers indicating set and reset points. Switch shall have visible on/off indication. Setpoints shall be adjustable without removing switch cover or shutting down process.

Explosion-Proof
Types DAH, DRH, DSH

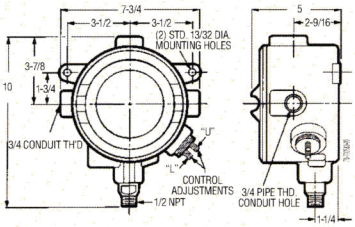

STOCKED MODELS in bold

BOURDON TUBE MATERIAL	ADJUSTABLE OPERATING RANGE (PSIG)	SNAP ACTION SWITCH – SPDT 15A @ 120/240 VAC		SNAP ACTION SWITCH – SPDT 15A @ 120/240 VAC		MERCURY SWITCH – SPDT 4A @ 120V., 2A @ 240V. AC/DC	
		FIXED DEADBAND PSIG	MODEL NUMBER	MINIMUM DEADBAND PSIG	MODEL NUMBER	MINIMUM DEADBAND PSIG	MODEL NUMBER
BRASS	0-30" Hg. Vac.	3" Hg. Vac.	**DS-7231-153-2***	9" Hg. Vac.	**DA-7031-153-2***	2" Hg. Vac.	**DA-31-153-2***
	1/8-15	1.5	DS-7231-153-1	4	DA-7031-153-1	1	**DA-31-153-1**
	1/8-20	1.5	DS-7231-153-3A	4	**DA-7031-153-3A**	1	**DA-31-153-3A**
	1-35	1.5	DS-7231-153-4	5	DA-7031-153-4	1.75	**DA-31-153-4**
	2-60	2	DS-7231-153-5	6	**DA-7031-153-5**	3	**DA-31-153-5**
	5-100	2.5	DS-7231-153-6	9	**DA-7031-153-6**	3.75	**DA-31-153-6**
	5-150	3	**DS-7231-153-7**	16	**DA-7031-153-7**	6	**DA-31-153-7**
	10-200	4	**DS-7231-153-8**	16	**DA-7031-153-8**	8	**DA-31-153-8**
	10-300	5	DS-7231-153-9	25	**DA-7031-153-9**	12	**DA-31-153-9**
403SS	2-60	3	DS-7221-153-5S	9	DA-7021-153-5S	4	**DA-21-153-5S**
	5-100	3.5	DS-7221-153-6S	13	DA-7021-153-6S	6	**DA-21-153-6S**
	10-200	4	DS-7221-153-8S	15	DA-7021-153-8S	8	**DA-21-153-8S**
	10-300	6	DS-7221-153-9S	19	DA-7021-153-9S	14	**DA-21-153-9S**
	25-600	10	DS-7221-153-10S	45	DA-7021-153-10S	25	**DA-21-153-10S**
	100-1500	30	DS-7221-153-12S	130	DA-7021-153-12S	90	**DA-21-153-12S**
	500-5000	200	DS-7221-153-15S*	900	DA-7021-153-15S*	450	DA-21-153-15S*
316SS	10-150	4	DS-7241-153-24E	11	DA-7041-153-24E	6	**DA-41-153-24E**
	10-300	8	DS-7241-153-9E	28	DA-7041-153-9E	18	**DA-41-153-9E**

Additional features available on special order, include other electrical ratings and circuits, lower minimum differentials, special housings, diaphragm seals and manual reset. For severe vibration, a special Delrin Bushed Movement is available.
*Range 2 and 15S not FM approved. Other ranges FM approved. For FM approved models specify DAF or DSF. Example DAF-31-153-1.

STOCKED MODELS in bold High Current Capacity† or Extra Low Deadband Mercury Switches (SPST)†

BOURDON TUBE MATERIAL	ADJUSTABLE OPERATING RANGE (PSIG)	MERCURY SWITCH – SPST – HIGH CURRENT 10A @ 120V., 5A @ 240V. AC/DC			MERCURY SWITCH – SPST – LOW DEADBAND 5A @ 120VAC., 2A @ 240VAC., 2.5A @ 120VDC		
		MINIMUM DEADBAND PSIG	OPEN ON INC. MODEL NUMBER	CLOSE ON INC. MODEL NUMBER	MINIMUM DEADBAND PSIG	OPEN ON INC. MODEL NUMBER	CLOSE ON INC. MODEL NUMBER
BRASS	0-30" Hg. Vac.	2" Hg. Vac.	**DA-31-2-2***	**DA-31-3-2***	1" Hg. Vac.	DA-531-2-2*	DA-531-3-2*
	1/8-15	1	**DA-31-2-1**	**DA-31-3-1**	0.5	**DA-531-2-1**	DA-531-3-1
	1/8-20	1	**DA-31-2-3A**	**DA-31-3-3A**	0.5	**DA-531-2-3A**	DA-531-3-3A
	1-35	1.75	**DA-31-2-4**	**DA-31-3-4**	0.75	DA-531-2-4	DA-531-3-4
	2-60	3	**DA-31-2-5**	**DA-31-3-5**	1.0	**DA-531-2-5**	DA-531-3-5
	5-100	3.75	**DA-31-2-6**	**DA-31-3-6**	2.0	**DA-531-2-6**	DA-531-3-6
	5-150	6	**DA-31-2-7**	**DA-31-3-7**	3.0	**DA-531-2-7**	DA-531-3-7
	10-200	8	**DA-31-2-8**	**DA-31-3-8**	3.5	**DA-531-2-8**	DA-531-3-8
	10-300	14	**DA-31-2-9**	**DA-31-3-9**	6.0	DA-531-2-9	DA-531-3-9
403SS	2-60	4	DA-21-2-5S	DA-21-3-5S	2.5	DA-521-2-5S	DA-521-3-5S
	5-100	6	DA-21-2-6S	DA-21-3-6S	3.0	DA-521-2-6S	DA-521-3-6S
	10-200	8	**DA-21-2-8S**	DA-21-3-8S	4.0	DA-521-2-8S	DA-521-3-8S
	10-300	14	**DA-21-2-9S**	**DA-21-3-9S**	7	DA-521-2-9S	DA-521-3-9S
	25-600	25	**DA-21-2-10S**	DA-21-3-10S	15	**DA-521-2-10S**	DA-521-3-10S
	100-1500	90	DA-21-2-12S	DA-21-3-12S	50	DA-521-2-12S	DA-521-3-12S
	500-5000	450	DA-21-2-15S*	DA-21-3-15S*	200	DA-521-2-15S*	DA-521-3-15S*
316SS	10-150	6	DA-41-2-24E	DA-41-3-24E	3.0	DA-541-2-24E	DA-541-3-24E
	10-300	18	DA-41-2-9E	DA-41-3-9E	5.0	DA-541-2-9E	DA-541-3-9E

†Also available in Weather-proof (DAW-33) or Explosion-proof (DAH-31) Housings.
*Range 2 and 15S not FM approved. Other ranges FM approved. For FM approved models specify DAF or DSF. Example DAF-31-2-1.

STOCKED MODELS in bold Weather-proof Models

Bourdon Tube Material	Adjustable Operating Range (PSIG)	SNAP ACTION SWITCH – SPDT 15A @ 120/240 VAC		SNAP ACTION SWITCH – SPDT 15A @ 120/240 VAC		MERCURY SWITCH – SPDT 4A @ 120V., 2A @ 240V. AC/DC	
		Fixed Deadband PSIG	Model Number	Minimum Deadband PSIG	Model Number	Minimum Deadband PSIG	Model Number
BRASS	0-30" Hg. Vac.	3" Hg. Vac.	DSW-7233-153-2*	9" Hg. Vac.	DAW-7033-153-2*	2" Hg. Vac.	**DAW-33-153-2***
	1/8-15	1.5	DSW-7233-153-1	4	DAW-7033-153-1	1	**DAW-33-153-1**
	1/8-20	1.5	DSW-7233-153-3A	4	**DAW-7033-153-3A**	1	**DAW-33-153-3A**
	1-35	1.5	DSW-7233-153-4	5	DAW-7033-153-4	1.75	**DAW-33-153-4**
	2-60	2	DSW-7233-153-5	6	**DAW-7033-153-5**	3	**DAW-33-153-5**
	5-100	2.5	DSW-7233-153-6	9	**DAW-7033-153-6**	3.75	**DAW-33-153-6**
	5-150	3	DSW-7233-153-7	16	**DAW-7033-153-7**	6	**DAW-33-153-7**
	10-200	4	DSW-7233-153-8	16	DAW-7033-153-8	8	**DAW-33-153-8**
	10-300	5	DSW-7233-153-9	25	DAW-7033-153-9	14	**DAW-33-153-9**
403SS	2-60	3	DSW-7223-153-5S	9	DAW-7023-153-5S	4	DAW-23-153-5S
	5-100	3.5	DSW-7223-153-6S	13	DAW-7023-153-6S	6	**DAW-23-153-6S**
	10-200	4	DSW-7223-153-8S	15	DAW-7023-153-8S	8	DAW-23-153-8S
	10-300	6	DSW-7223-153-9S	19	DAW-7023-153-9S	14	**DAW-23-153-9S**
	25-600	10	DSW-7223-153-10S	45	DAW-7023-153-10S	25	**DAW-23-153-10S**
	100-1500	30	DSW-7223-153-12S	130	DAW-7023-153-12S	90	DAW-23-153-12S
	500-5000	200	DSW-7223-153-15S*	900	DAW-7023-153-15S*	450	DAW-23-153-15S*
316SS	10-150	4	DSW-7243-153-24E	11	**DAW-7043-153-24E**	6	**DAW-43-153-24E**
	10-300	8	DSW-7243-153-9E	28	**DAW-7043-153-9E**	18	**DAW-43-153-9E**

*Range 2 and 15S not FM approved. All other DAW ranges are FM approved.

POPULAR MODELS Explosion-proof Models

BOURDON TUBE MATERIAL	ADJUSTABLE OPERATING RANGE (PSIG)	SNAP ACTION SWITCH – SPDT 15A @ 120/240 VAC		SNAP ACTION SWITCH – SPDT 15A @ 120/240 VAC		MERCURY SWITCH – SPDT 4A @ 120V., 2A @ 240V. AC/DC	
		FIXED DEADBAND PSIG	MODEL NUMBER	MINIMUM DEADBAND PSIG	MODEL NUMBER	MINIMUM DEADBAND PSIG	MODEL NUMBER
BRASS	0-30" Hg. Vac.	3" Hg. Vac.	DSH-7231-153-2*	9" Hg. Vac.	DAH-7031-153-2*	2" Hg. Vac.	DAH-31-153-2*
	1/8-15	1.5	DSH-7231-153-1	4	DAH-7031-153-1	1	DAH-31-153-1
	1/8-20	1.5	DSH-7231-153-3A	4	DAH-7031-153-3A	1	DAH-31-153-3A
	1-35	1.5	DSH-7231-153-4	5	DAH-7031-153-4	1.75	DAH-31-153-4
	2-60	2	DSH-7231-153-5	6	DAH-7031-153-5	3	DAH-31-153-5
	5-100	2.5	DSH-7231-153-6	9	DAH-7031-153-6	3.75	DAH-31-153-6
	5-150	3	DSH-7231-153-7	16	DAH-7031-153-7	6	DAH-31-153-7
	10-200	4	DSH-7231-153-8	16	DAH-7031-153-8	8	DAH-31-153-8
	10-300	5	DSH-7231-153-9	25	DAH-7031-153-9	14	DAH-31-153-9
403SS	2-60	3	DSH-7221-153-5S	9	DAH-7021-153-5S	4	DAH-21-153-5S
	5-100	3.5	DSH-7221-153-6S	13	DAH-7021-153-6S	6	DAH-21-153-6S
	10-200	4	DSH-7221-153-8S	15	DAH-7021-153-8S	8	DAH-21-153-8S
	10-300	6	DSH-7221-153-9S	19	DAH-7021-153-9S	14	DAH-21-153-9S
	25-600	10	DSH-7221-153-10S	45	DAH-7021-153-10S	25	DAH-21-153-10S
	100-1500	30	DSH-7221-153-12S	130	DAH-7021-153-12S	90	DAH-21-153-12S
	500-5000	200	DSH-7221-153-15S*	900	DAH-7021-153-15S*	450	DAH-21-153-15S*
316SS	10-150	4	DSH-7241-153-24E	11	DAH-7041-153-24E	6	DAH-41-153-24E
	10-300	8	DSH-7241-153-9E	28	DAH-7041-153-9E	18	DAH-41-153-9E

*Range 2 and 15S not FM approved. Other ranges FM approved. For FM approved models specify DAHF or DSHF. Example DAHF-31-153-1.

Mercoid® Series DA/DS Bourdon Tube Pressure Switches

Type DA

Adjustable Deadband, Fully Automatic, Double Adjustments

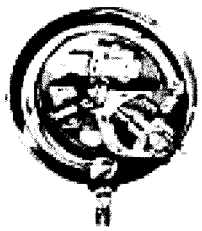

VISIBLE CALIBRATED DIAL

DOUBLE EXTERNAL ADJUSTMENTS

Snap Action Switch

SWITCH INDICATOR

VISIBLE CALIBRATED DIAL

DOUBLE EXTERNAL ADJUSTMENTS

Mercury Switch Contact

Equipped with two external adjustments, one for setting *high* pressure operating point, the other for setting *low* pressure operating point. Deadband, or the difference between high and low setpoints, is adjustable over full scale. Mercoid's most popular operating mode, available on most Series D pressure and temperature controls.

Type DS

Fixed Deadband, Fully Automatic, Single Adjustment

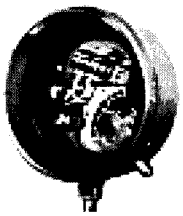

VISIBLE CALIBRATED DIAL

SINGLE EXTERNAL ADJUSTMENT

Snap Action Switch

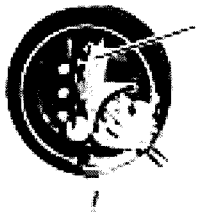

SWITCH INDICATOR

VISIBLE CALIBRATED DIAL

SINGLE EXTERNAL ADJUSTMENT

Mercury Switch Contact

Equipped with single adjustment for setting operating point only. A single pointer on scale sets pressure point at which switch action occurs. Fixed deadband is factory set and cannot be altered in the field. Available on series D-200, D-7200 and D-9200 only.

Type DR

Semi-Automatic, Manual Reset, Single Adjustment

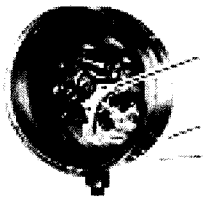

VISIBLE CALIBRATED DIAL

RESET

SINGLE ADJUSTMENT

Manual Reset (–2 or –3 circuits only)

Equipped with a single adjustment for setting operating point to operate the circuit automatically upon a pressure increase or decrease. Pushbutton reset must be operated manually to restore the circuit to original position after automatic operation. Suffix "L," i.e. DR-31-153L denotes control will operate automatically on *increase*; suffix "U" denotes control will operate automatically on *decrease*.

Type DL

Semi-Automatic, Manual Lock Reset, Single Adjustment

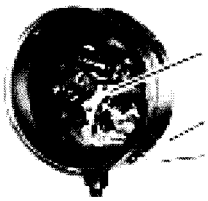

VISIBLE CALIBRATED DIAL

RESET

SINGLE EXTERNAL ADJUSTMENT

Manual Lock Reset (–2 or –3 circuits only)

Equipped with a single adjustment for setting operating point. Control will operate at setpoint only upon a *decrease* in pressure. Manual lock feature permits circuit to be reset and locked in position. Lock remains in effect until pressure rises above control setting. Lock then releases and circuit is held in reset position until further automatic operation upon pressure decrease.

Type D-400, DA-7400

Two-Stage, Fully Automatic, 2 Set Pts.

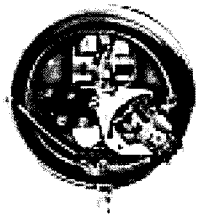

Provides two stage control by actuating one circuit upon a rise or fall in pressure and a second circuit on a further rise or fall. Each setpoint has a fixed deadband.

Mercoid®

Series DA

Bourdon Tube Pressure Switches – General Data and Accessories

FEATURES

External Setpoints
Deadband Adjustable (over 100% of scale) or Fixed
Visible Calibrated Dial, PSI/kg
Visible Operation
On/Off Indication
Repeatability ±1% of full scale
Minimum Deadband Obtainable at any Point in Range
Welded Stainless Steel Bourdon Tubes Provide Reduced Chance of Leakage in Case of Fire
Pressure Ranges to 8000 psig
UL, CSA Listed (most models, features)

PHYSICAL DATA

Max. Temp.: 180°F. For higher media applications, a remote connection or siphon (pigtail) should be used.

Pressure Connection: 1/4″ NPT std. 1/2″ NPT on range 15S, 16S

Wetted Parts: Same as bourdon tube material except range 23K, 24K, 9K.

Weight: 4 lb. std., 6 lb. weatherproof 8 lb. exp. proof

Max. Press.: Max. adjustment operating range. Use of a surge tank, snubber of capillary tubing connection is recommended where pulsation, pressure surge or water hammer may occur.

Suggested Specification

Pressure switch shall be Mercoid Series DA operated by a (brass) (type 316 stainless steel) (type 403 stainless steel) Bourdon tube actuating a (mercury switch) (snap-switch). Switch shall have deadband adjustable up to a maximum of 100% of switch range. Switch shall have calibrated dial and two pointers indicating set and reset points. Switch shall have visible on/off indication. Setpoints shall be adjustable without removing switch cover or shutting down process.

Mounting Flange

For Surface Mounting (Field Installation)

For DA, DAF, DS, DSF, DR, DRF and DL controls only. May be ordered separately for field installation.

Part No. 17-26
(except on 15S, 16S)
Part No. 17-31
(for range 15S, 16S only)

Mounting Bracket

For use with standard NEMA 1 enclosure general purpose controls only: Series DA, DAF, DS, DSF, DR, DRF, DL. Note: *not* adaptable for Range 15S and 16S.

Part No. 33-25

Conduit Hub

For 1/2″ rigid conduit. Mercury switch type controls with standard general purpose NEMA-1 or optional weather-resistant NEMA-3 or NEMA-4 enclosures are suitable for Class 1, Div. 2 applications when ordered with this hub. Available for DA Series.

Part No. 42-413

Remote Connections

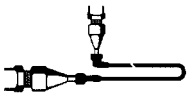

Part No. 49-62HP – 6 ft. copper remote connection, 2500 psig max.

Part No. 49-210 – 12 ft. 316 s.s. connection with 303 s.s. fittings, 3000 psig max.

Breathers & Drains

STANDARD BREATHER

STANDARD DRAIN

For Class I, Groups C, D and Class II, Groups E, F, G (water only). Mercoid s.s. drains are flame-tight, but not watertight which permits water to escape continuously.

Mercoid s.s. breathers include a water shedding cap and provide effective case ventilation.

For Series DAH, DAHF, DRH, DRHF, DSH, DSHF.
Part No. 42-274 – Standard drain.

Part No. 42-276 – Standard breather.

For Series DAE, DRE.
Part No. 42-275 – Drain with 1/4″ connection.
***Part No. 42-276** – Standard breather with 1/2″ connection.
***Part No. 42-279** – Reducer (3/4″ to 1/2″) for breather.

*Breather and reducer must be ordered together.

Pigtail Siphon

1/4″ NPT

Recommended for steam applications 35 psig or higher. For Series D-30, D-530, D-230, D-7030, D-7230 pressure controls. Please specify.

Part No. 42-58 2000 psig max.

Factory Mutual Approved Series D Pressure Switches

FM

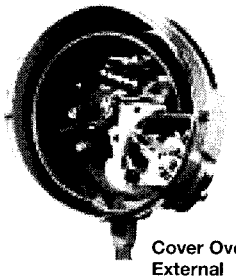

Cover Over External Adjustments

Miscellaneous

Oxygen & Acetylene Service
Spec. 23444

Fungus Proof
Spec. 23720

FM Approval –
DAF, DRF, DSF

DELRIN* Bushed Movement "B"

*Registered Trademark of E.I. DuPont de Nemours & Co.

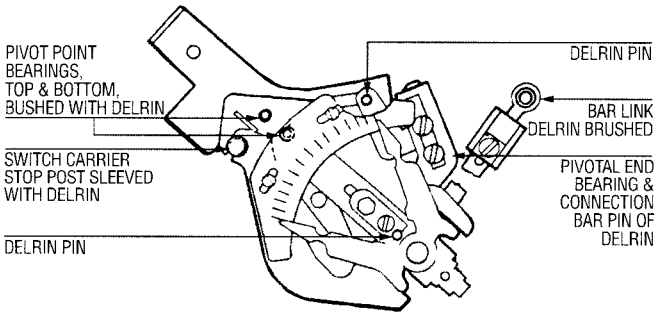

Provides longer service life for Series D pressure and temperature controls. Vibration and pulsation are the prime causes of control wear. Almost all types of vibration will have some effect on the life and continued accuracy of controls.

To offset the wearing of metal surfaces found in bearings and pivot points, the control mechanism is designed to incorporate Delrin bushed movements at each possible wear point. Also for environments where corrosion may be a factor.

Add Letter B After Type and Suffix Nos. Example: DS-221-2B, DA-31-3B, DAH-41-3B.

Dwyer Instruments, Inc. P.O. Box 373/Michigan City, Indiana 46361/Phone 219 879-8000/Fax 219 872-9057 • U.K. Phone (01494)-461707 • Australia Phone (02) 9756-5355

Mercoid®

Series DA

Bourdon Tube Pressure Switches — Control Dimensions

General Purpose

Types DA, DS, DR, DL
Drawing No. 1000B

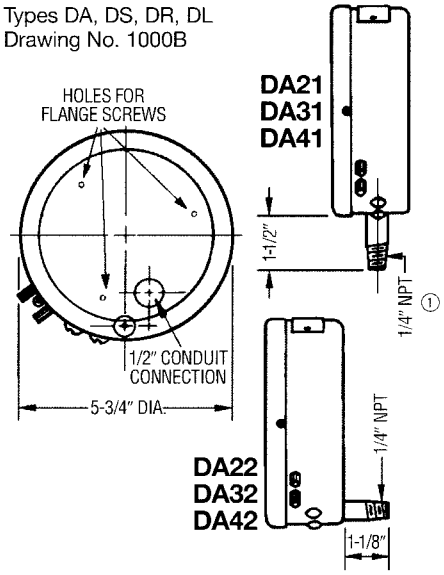

Weather-Proof

Types DAW, DSW, DRW
Drawing No. 1062

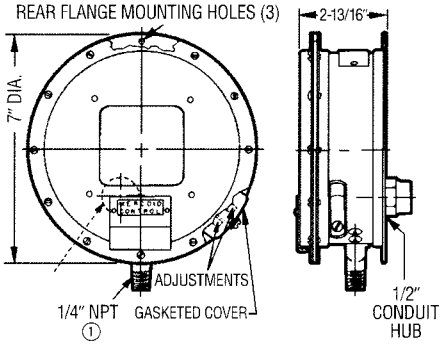

Explosion-Proof

Types DAH, DRH, DSH
Drawing No. 1350

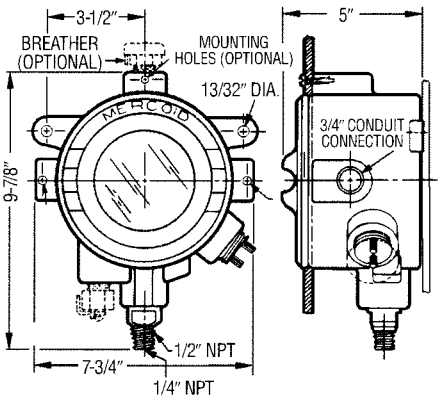

***Consult factory for Cenelec approved DAH models.**

Diaphragm Seal

Types MSAG
Drawing No. 2305

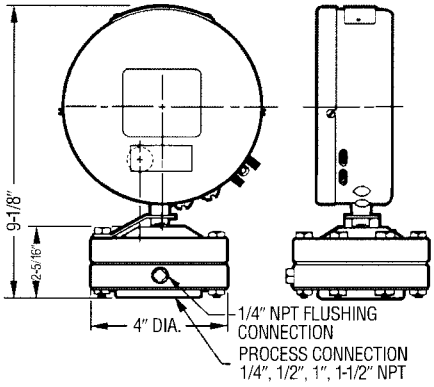

Flange for Surface Mounting

Drawing No. 1000F
PN 17-20(2)

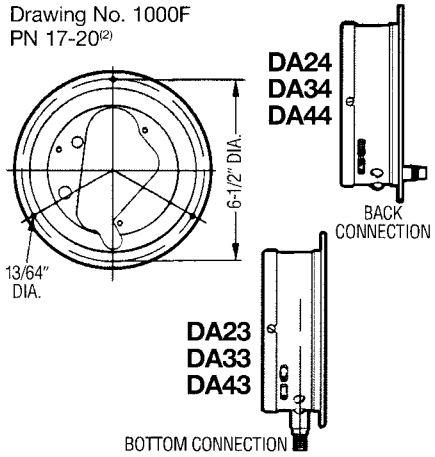

Explosion-Proof

Types DAE, DRE, DSE
Drawing No. 98D

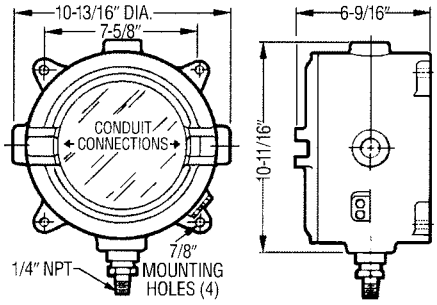

(1.) 1/2" NPT Connection for ranges 15S, 16S

(2.) Use PN 17-31 for ranges 15S, 16S

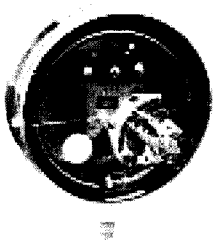

General Purpose

NEMA 1 Enclosure

For indoor use and other general purpose applications under normal atmospheric conditions. Provides protection against dust and light splashing. Heavy gauge plain steel case. Flanged case available. Transparent cover for visible on-off operation. Locking device prevents tampering. Pressure connection, 1/4" NPT. Electrical connection back of case for 1/2" conduit or BX. Shipping wt. 4 lbs. See above for dimensions. *Furnished as standard unless otherwise specified.*

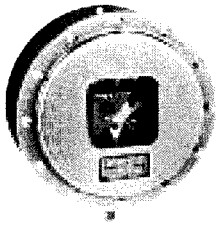

Watertight, Dust-tight/ Type W

NEMA 3S, 4, & 4X Enclosure

For outdoor or indoor applications. Complies with hose test and requirements for watertight, dust-tight, drip-tight weatherproof, weather-resistant, splash-proof, sleet-proof, and moisture-resistant. Flanged, heavy gauge steel case with transparent cover for visible on-off operation. External adjustments protected by cover. Bottom pressure connection. 1/4" NPT. Electrical connection back of case for 1/2" conduit, removable 1/2" hub. Shipping wt. 6 lbs. See above for dimensions. *Optional, add "W" to prefix, i.e. DAW, DRW, DSW, when ordering.*

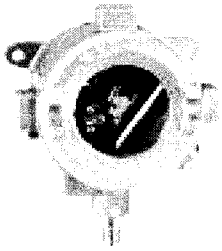

Explosion-Proof Type H

Hazardous Area Enclosure suitable for Class I, Groups C & D, Class II, Groups E, F & G; NEMA 7 & 9 applications. Control mechanism is an integral part of enclosure and cannot be replaced in the field. For surface, panel or pipe mounting. Aluminum case with glass window in cover for visible on-off operation. Bottom pressure connection, 1/2" NPT male × 1/4" NPT female. External adjustments. Available with breather and drain. Shipping wt. 8 lbs. (3.6 kg.). See above for dimensions. Optional housing, to order add "H" to prefix. Example: DAH, DRH, or DSH. Not available on D80 Series.

NOTE: Standard general purpose NEMA 1 and NEMA 4 enclosures are suitable for Class I, Division 2 applications with addition of conduit hub (mercury switch models only).

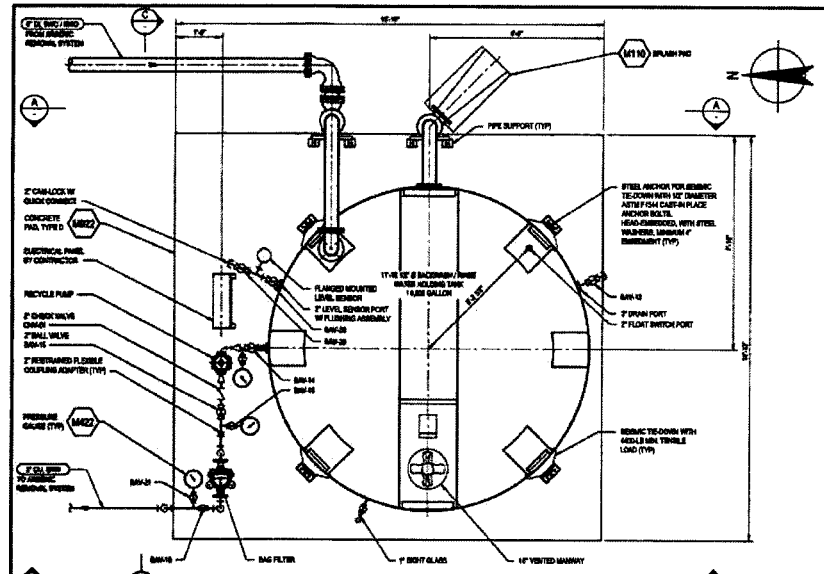

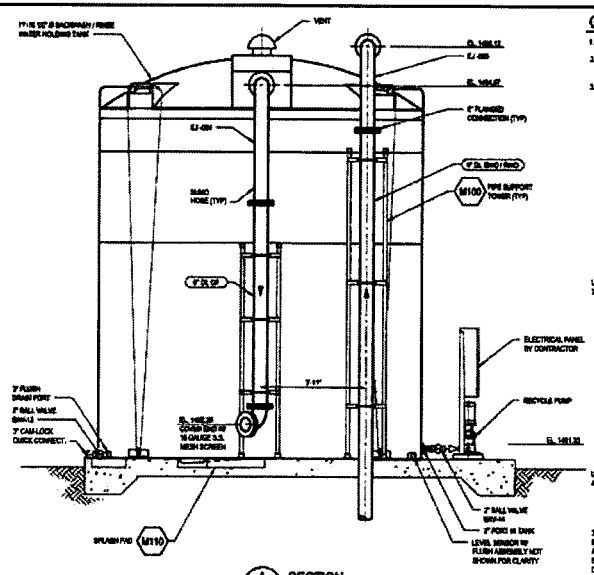

A SECTION
SCALE: 1"=2'

GENERAL NOTES

1. PROVIDE DIELECTRIC COUPLINGS BETWEEN DISSIMILAR METALS.
2. EQUIPMENT, VALVE, VESSEL, FLOWMETER, AND GAUGE MANUFACTURERS AND MODELS PER SITE SPECIFICATIONS U.N.O.
3. ALL ABOVE GROUND PIPING SHALL BE D.I.P., CLASS 350 WITH FLANGED JOINTS. ABOVE GROUND PIPING SHALL INCLUDE EPOXY COATING IN ADDITION TO ITS FACTORY COATING. THE EPOXY COATING SHALL BE THINNED AND AS FOLLOWS:
   - 3.1. SURFACE PREP: PER MANUFACTURER
   - 3.2. PRIMER: SERIES 66 OP N66 HI-BUILD EPOXOLINE 3-4.0 DFT.
   - 3.3. INTERMEDIATE: SERIES 66 OR N66 HI-BUILD EPOXOLINE 3-4.0 DFT.
   - 3.4. FINISH: SERIES 73, 1047, OR 1037 ENDURA SHIELD
   - 3.5. COLOR: DESERT SAND

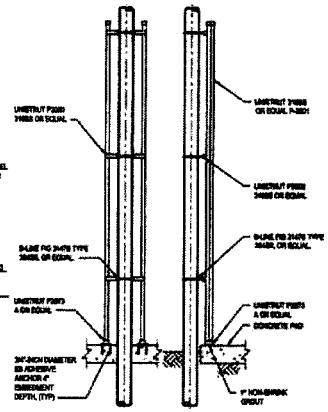

M100 PIPE SUPPORT RACK
SCALE: NTS

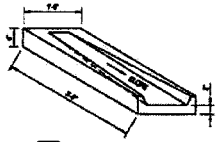

M110 SPLASH PAD
SCALE: NTS

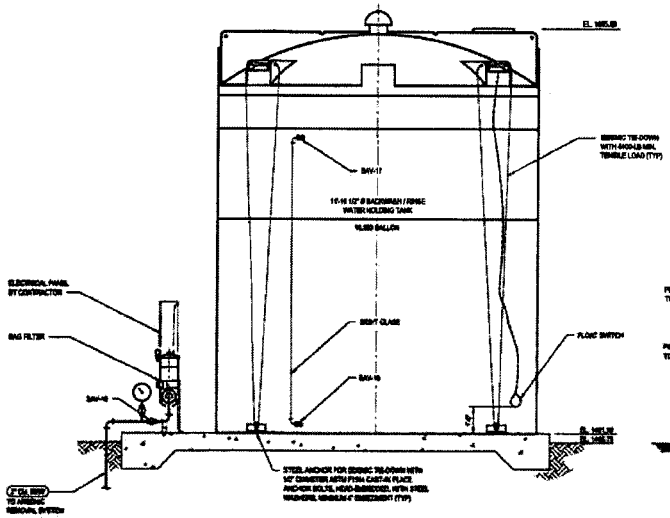

B SECTION
SCALE: 1"=2'

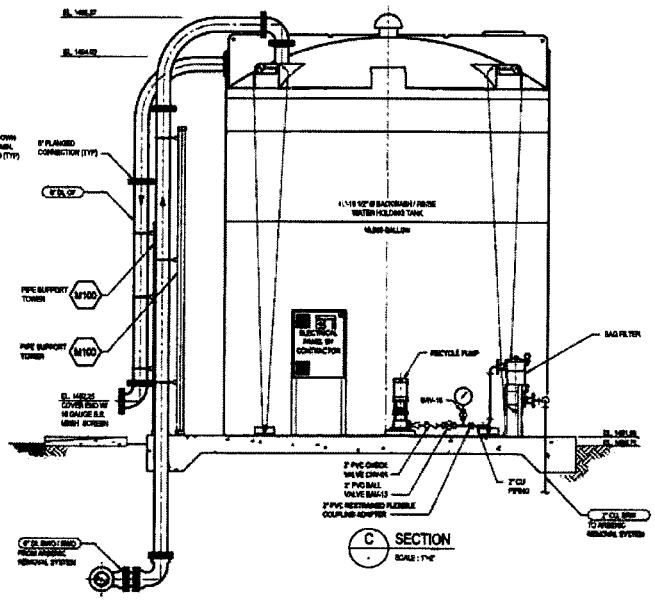

C SECTION
SCALE: 1"=2'

SCALE 1"=2" IS ORIGINAL SIZE

EQUIPMENT TABLE

RECYCLE PUMP	
#	QUANTITY
GRUNDFOS (VERTICAL SALMO)	MAKE
CR 1-12	MODEL
20 GPM	FLOW
40'	HEAD
0.75 HP	ENERGY
1 HP	SPEED
60 LBS	WEIGHT

BAG FILTER	
#	QUANTITY
PB	MAKE
CBF	MODEL
1	BAG SIZE
600	BAG SIZE
0	FLOW
	PRESSURE
0.05	PRESSURE
0.05	PRESSURE
N	MEDIA

BAG TYPE	
PM BRONG-16-600-N6	MODEL
02	BLAST RING
1	BLAST RING
0	CORE TUBE
7	BASKET TYPE
02	NOZZLE COPPER
A	INTERNAL USE
1	LIFTING STYLE
N	JACKET TYPE

GENERAL NOTES

1. PROVIDE DIELECTRIC COUPLINGS BETWEEN DISSIMILAR METALS.
2. EQUIPMENT, VALVE, VESSEL, FLOWMETER, AND GAUGE MANUFACTURERS AND MODELS PER SITE SPECIFICATIONS U.N.O.
3. ALL ABOVE GROUND PIPING SHALL BE D.I.P., CLASS 350 WITH FLANGED JOINTS. ABOVE GROUND PIPING SHALL INCLUDE EPOXY COATING IN ADDITION TO ITS FACTORY COATING. THE EPOXY COATING SHALL BE THINNED AND AS FOLLOWS:
   - 3.1. SURFACE PREP: PER MANUFACTURER
   - 3.2. PRIMER: SERIES 66 OP N66 HI-BUILD EPOXOLINE 3-4.0 DFT.
   - 3.3. INTERMEDIATE: SERIES 66 OR N66 HI-BUILD EPOXOLINE 3-4.0 DFT.
   - 3.4. FINISH: SERIES 73, 1047, OR 1037 ENDURA SHIELD
   - 3.5. COLOR: DESERT SAND

GHD
7500 North 16th Street, Suite 205, Phoenix, Arizona 85020 USA
T: +602 316 7200 F: +602 316 7201
E: phoenix@ghd.com W: www.ghd.com

"CALL BEFORE YOU DIG" 263-1100 1-800-STAKE-IT

This installation drawing is to be installed in compliance with the Arizona Water Company Standard Specifications and Is to be used for Arizona Department of Environmental Quality

DWN. INIT.	BEC 17 - 739 - RSE
SCALE	AS SHOWN
DATE	12/17/2014
DESIGN INI.	FHT
SHEET NO.	8.15

ARIZONA WATER COMPANY
3805 N. BLACK CANYON HWY. POST OFFICE BOX 29006
PHOENIX, ARIZONA 85038-9006
(602) 240-6860

PROJECT TITLE: VALLEY FARMS ARSENIC REMOVAL FACILITY
15804 E. VAN KIRK RD NORTH - VALLEY FARMS, AZ 85191
BACKWASH / RINSE WATER HOLDING TANK
PLAN, SECTIONS, AND DETAILS

PROJECT SHEET NAME:

M4

SHEET 10 OF 25

25GPM @ 46FT TDH

GRUNDFOS

Company name: -
Created by: -
Phone: -
Fax: -
Date: -

CR 5-2 60 Hz

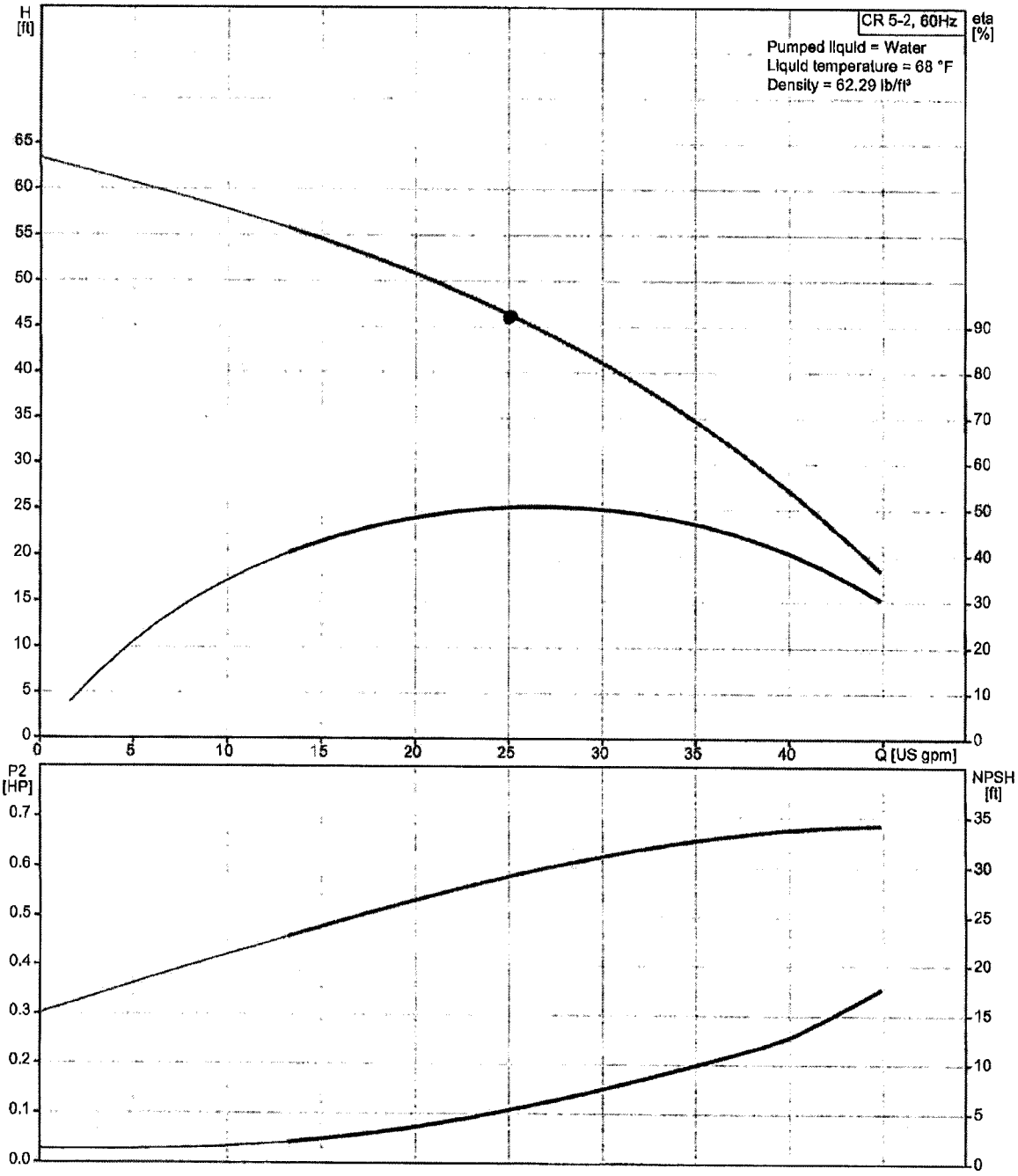

GRUNDFOS

Company name:	-
Created by:	-
Phone:	-
Fax:	-
Date:	-

Description	Value
General information:	
Product name:	CR 5-2 A-B-A-E-HQQE
Position	
Product No.:	
EAN:	
Price:	On request
Technical:	
Speed for pump data:	3464 rpm
Rated flow:	
Rated head:	
Head max:	68.2 ft
Impellers:	2
Shaft seal:	HQQE
Approvals on nameplate:	ANSI/NSF61
Curve tolerance:	ISO 9906:1999 Annex A
Stages:	2
Pump version:	A
Model:	A
Cooling:	TEFC
Materials:	
Pump housing:	Cast iron EN-JL1030 ASTM 25 B
Impeller:	Stainless steel DIN W.-Nr. 1.4301 AISI 304
Material code:	A
Code for rubber:	E
Installation:	
Maximum ambient temperature:	104 °F (122°F w/DE-RATE)
Max pressure at stated temperature:	232 psi / 250 °F 232 psi / -4 °F
Flange standard:	OVAL
Connect code:	B
Pipe connection:	1 1/4" NPT
Flange size for motor:	56C
Liquid:	
Liquid temperature range:	-4 .. 248 °F
Electrical data:	
Motor type:	BALDOR
Number of poles:	2
Rated power - P2:	0.75 HP
Main frequency:	60 Hz
Rated voltage:	1 x 115/208-230 V
Service factor:	1.25
Rated current:	9,60/5,00-4,80 A
Rated speed:	3450 rpm
Enclosure class (IEC 34-5):	54 (Protect. splashing/dust)
Insulation class (IEC 85):	B
Motor protection:	None

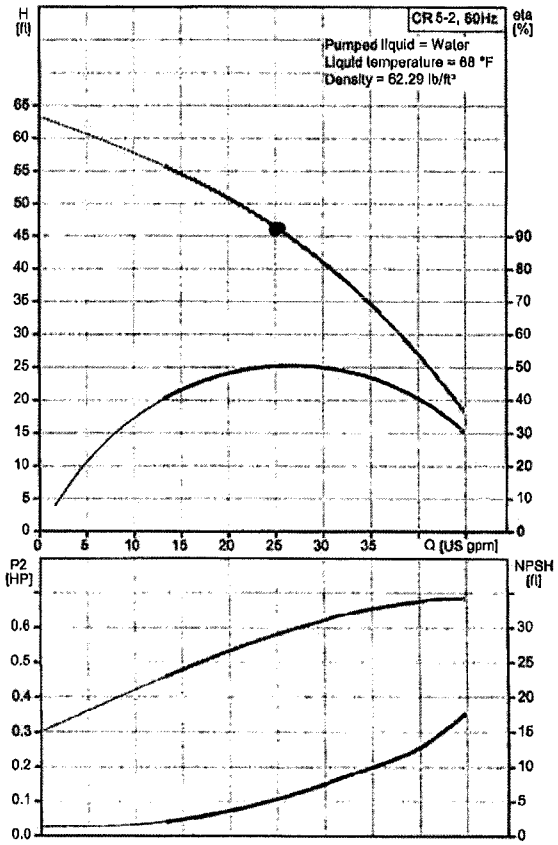

Description	Value
Others:	
Net weight:	55.2 lb
Gross weight:	66.2 lb
Shipping volume:	1.77 ft^3

Electrical data

Mounting designation	NEMA
Insulation class	F & B
Efficiency class*	Energy efficient Premium efficiency - on request for 15 Hp and above
Enclosure class	TEFC - Totally Enclosed Fan Cooled (Grundfos standard) ODP - Open Drip Proof - on request
60 Hz standard voltages	1 x 115/208-230 V 3 x 208-230/460 V 3 x 575 V
Approvals	The motors are rated for: Baldor ML

* 1-10 Hp ML motors are premium efficiency as standard.

Optional motors

The Grundfos standard range of motors covers a wide variety of application demands. However, for special applications or operating conditions, custom-built motor solutions can be provided.

For special applications or operating conditions, Grundfos offers custom-built motors such as:

- explosion proof motors
- motors with anti-condensation heating unit
- low-noise motors
- premium efficiency motors
- motors with thermal protection.

Motor protection

Single-phase Grundfos specified motors up to 7.5 Hp have a built-in thermal overload switch.

Three-phase motors **must** be connected to a motor starter in accordance with local regulations.

Terminal box positions

As standard the terminal box is mounted on the suction side of the pump.

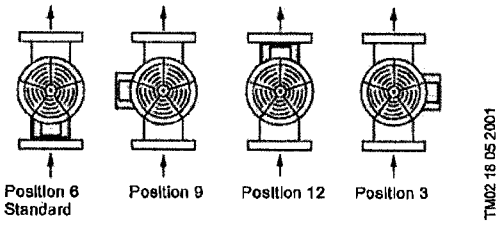

Fig. 3 Terminal box positions

Viscosity

The pumping of liquids with densities or kinematic viscosities higher than those of water will cause a considerable pressure drop, a drop in the hydraulic performance and a rise in the power consumption.

In such situations, the pump should be fitted with a larger motor. If in doubt, contact Grundfos.

Ambient temperature and altitude

If the ambient temperature exceeds the maximum temperature limits of the pump or the pump is installed at an altitude exceeding the altitude values in the chart below, the motor must not be fully loaded due to the risk of overheating.

Overheating may result from excessive ambient temperatures or the low density and consequently low cooling effect of the air at high altitudes. In such cases, it may be necessary to use a motor with a higher rated output (P_2).

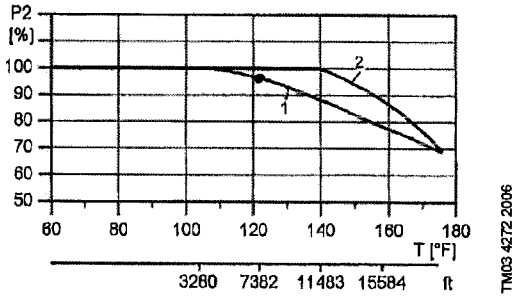

Fig. 4 Relationship between motor output (P_2) and ambient temperature/altitude

Legend

Pos.	Description
1	NEMA energy efficient motors
2	NEMA premium-efficiency motors

Example: From fig. 4 it appears that P_2 must be reduced to 88 % when a pump with a NEMA premium-efficiency ML motor is installed 15,584 ft (4750 m) above sea level. At an ambient temperature of 167 °F (75 °C), P_2 of a standard-efficiency motor must be reduced to 74 % of rated output.

In cases where both the maximum temperature and the maximum altitude are exceeded, the derating factors must be multiplied. Example: 0.89 x 0.89 = 0.79.

MOTOR SUITABLE FOR USE IN 122°F WITH DE-RATE OF 4% PER ABOVE FIG. 4.

.75 HP X .96 = .72 HP (PUMP REQUIRES UNDER 7 HP PER PUMP CURVE)

Operating range of the shaft seal

The operating range of the shaft seal depends on operating pressure, pump type, type of shaft seal and liquid temperature. The following curves apply to clean water and water with anti-freeze liquids. For selecting the right shaft seal, see *Pumped liquids* on page 13.

CR 1s - CR 20

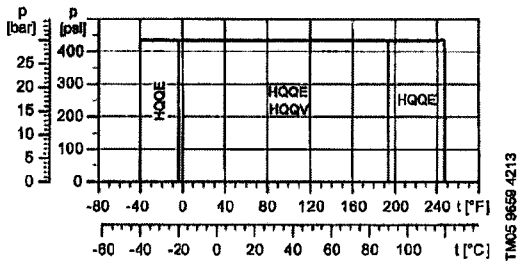

Fig. 5 Operating range of standard shaft seals for CR 1s - CR 20

CR 32 - CR 150 (3.0-60 Hp)

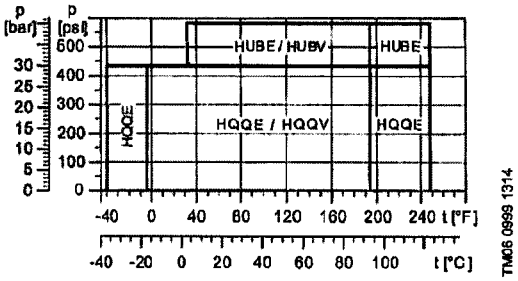

Fig. 6 Operating range of standard shaft seals for CR 32 - CR 150 (3.0-60 Hp)

CR 120 - CR 150 (75-100 Hp)

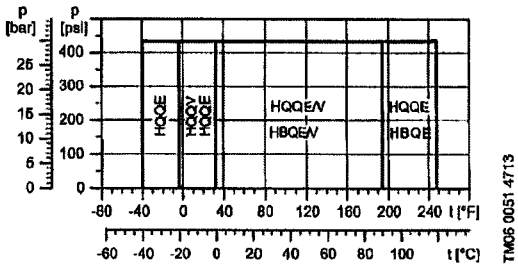

Fig. 7 Operating range of standard shaft seals for CR 120 - CR 150 (75-100 Hp)

Shaft seal	Description	Max. temp. range [°F]
HQQE	O-ring (cartridge) (balanced seal), SIC/SIC, EPDM	-40 °F to +248 °F
HBQE	O-ring (cartridge) (balanced seal), Carbon/SIC, EPDM	+32 °F to +248 °F
HBQV	O-ring (cartridge) (balanced seal), Carbon/SIC, FKM	+32 °F to +194 °F
HQQV	O-ring (cartridge) (balanced seal), SIC/SIC, FKM	-4 °F to +194 °F
HUBE	O-ring (cartridge) (balanced seal), TC/carbon, EPDM	+32 °F to +248 °F
HUBV	O-ring (cartridge) (balanced seal), TC/carbon, FKM	+32 °F to +194 °F

Note: TC= tungsten carbide

See section *Lists of variants - on request* on page 77, in case of extreme temperatures:

- low temperatures down to -40 °F or
- high temperatures up to +356 °F.

GRUNDFOS

Company name: -
Created by: -
Phone: -
Fax: -
Date: -

CR 5-2 60 Hz

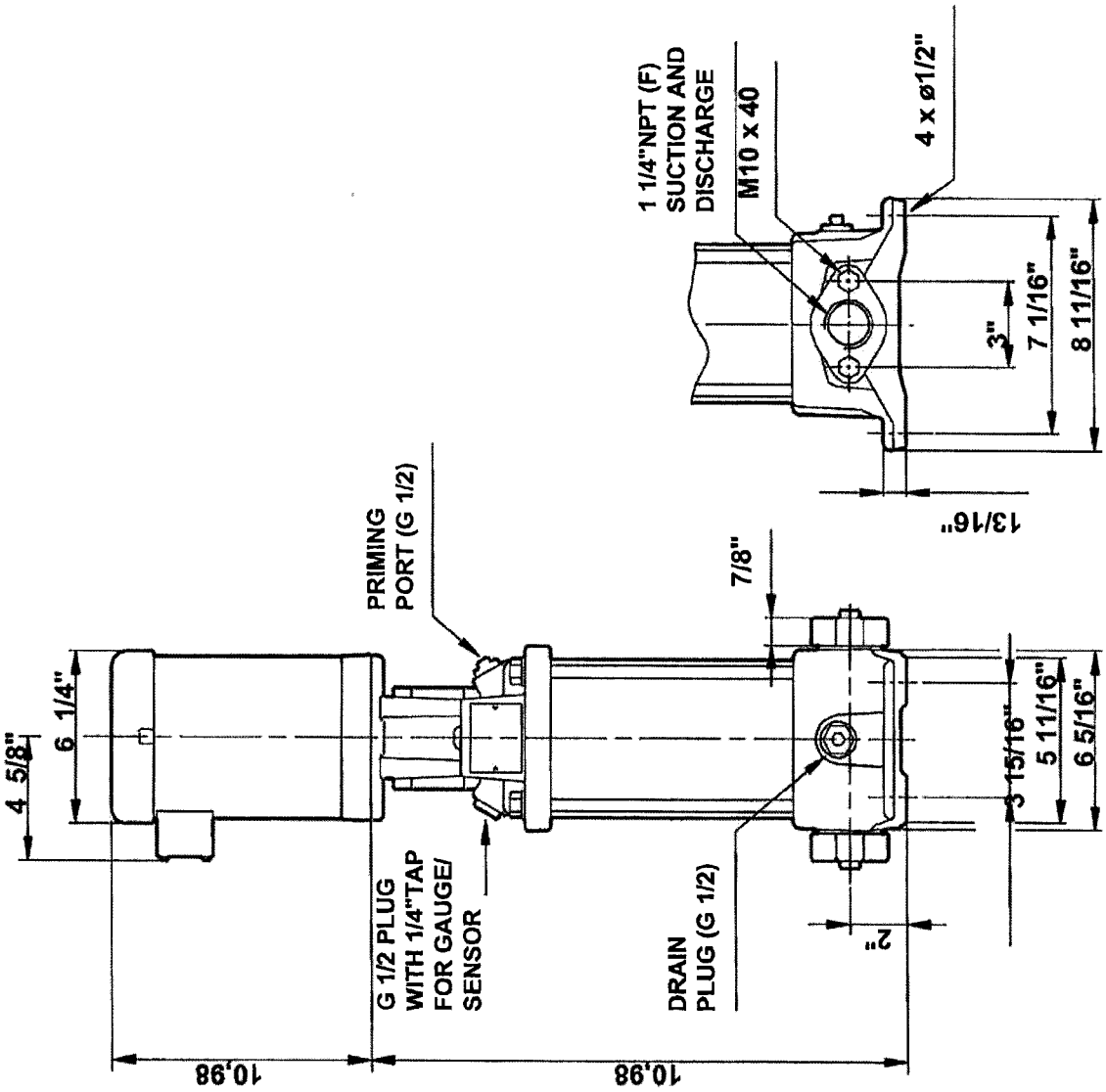

Note! All units are in [mm] unless otherwise stated.
Disclaimer: This simplified dimensional drawing does not show all details.

LIMITED WARRANTY

Products manufactured by GRUNDFOS PUMPS CORPORATION (Grundfos) are warranted to the original user only to be free of defects in material and workmanship for a period of 12 months from date of installation, but not more than 18 months from date of manufacture. Grundfos' liability under this warranty shall be limited to repairing or replacing at Grundfos' option, without charge, F.O.B. Grundfos' factory or authorized service station, any product of Grundfos' manufacture. Grundfos will not be liable for any costs of removal, installation, transportation, or any other charges which may arise in connection with a warranty claim. Products which are sold but not manufactured by Grundfos are subject to the warranty provided by the manufacturer of said products and not by Grundfos' warranty. Grundfos will not be liable for damage or wear to products caused by abnormal operating conditions, accident, abuse, misuse, unauthorized alteration or repair, or if the product was not installed in accordance with Grundfos' printed installation and operating instructions.

To obtain service under this warranty, the defective product must be returned to the distributor or dealer of Grundfos' products from which it was purchased together with proof of purchase and installation date, failure date, and supporting installation data. Unless otherwise provided, the distributor or dealer will contact Grundfos or an authorized service station for instructions. Any defective product to be returned to Grundfos or a service station must be sent freight prepaid; documentation supporting the warranty claim and/or a Return Material Authorization must be included if so instructed.

GRUNDFOS WILL NOT BE LIABLE FOR ANY INCIDENTAL OR CONSEQUENTIAL DAMAGES, LOSSES, OR EXPENSES ARISING FROM INSTALLATION, USE, OR ANY OTHER CAUSES. THERE ARE NO EXPRESS OR IMPLIED WARRANTIES, INCLUDING MERCHANTABILITY OR FITNESS FOR A PARTICULAR PURPOSE, WHICH EXTEND BEYOND THOSE WARRANTIES DESCRIBED OR REFERRED TO ABOVE.

Some jurisdictions do not allow the exclusion or limitation of incidental or consequential damages and some jurisdictions do not allow limit actions on how long implied warranties may last. Therefore, the above limitations or exclusions may not apply to you. This warranty gives you specific legal rights and you may also have other rights which vary from jurisdiction to jurisdiction.

Arizona Water Company
Valley Farms Arsenic Removal Facility

FIELD INSTRUMENT'S
Submittal

Installing Contractor: Felix Construction
Equipment Supplier: Felix Construction

Table of Contents

Section	Description
1	Level Transmitter
2	Float Switch
3	Pressure Switch

Arizona Water Company
Valley Farms Arsenic Removal Facility

Level Transmitter

Contractor:
Felix Construction Company
1326 W Industrial Dr
Coolidge, AZ 85142
Ph: (480) 464-0011
Fx: (480) 464-0078
www.felixconstruction.com

Level | Pressure | Flow | Temperature | Liquid Analysis | Registration | Systems Components | Services | Solutions

Technical Information

Cerabar S PMC71, PMP71, PMP75

Process pressure measurement
Pressure transmitter with ceramic and metal sensors
Overload-resistant and function-monitored; Communication via HART, PROFIBUS PA or FOUNDATION Fieldbus

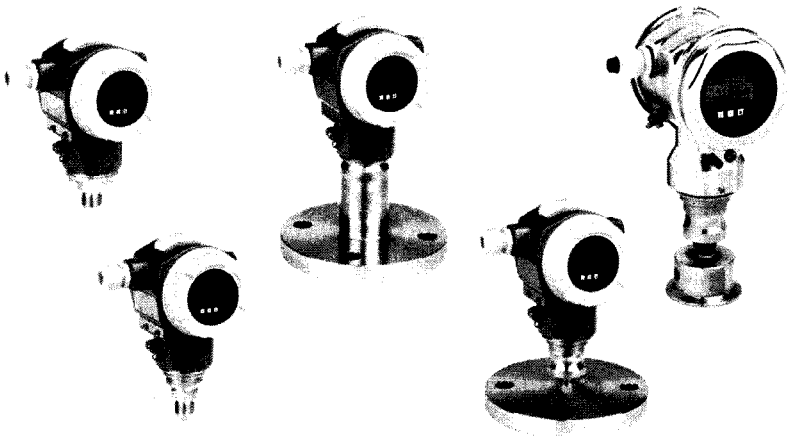

Application

The Cerabar S pressure transmitter is used for the following measuring tasks:

- Absolute pressure and gauge pressure in gases, steams or liquids in all areas of process engineering and process measurement technology
- Level, volume or mass measurement in liquids
- High process temperature
  - without diaphragm seals up to 150°C (302°F)
  - with typical diaphragm seals up to 400°C (752°F)
- High pressure up to 700 bar
- International usage thanks to a wide range of approvals

Your benefits

- Very good reproducibility and long-term stability
- High reference accuracy: up to ±0.075%, as PLATINUM version: ±0.05%
- Turn down 100:1, higher on request
- Used for process pressure monitoring up to SIL3, certified according to IEC 61508 by TÜV SÜD
- HistoROM®/M-DAT memory module
- Function-monitored from the measuring cell to the electronics
- Continuous modularity for differential pressure, hydrostatic and pressure (Deltabar S – Deltapilot S – Cerabar S), e.g.
  - replaceable display
  - universal electronic
- Quick commissioning thanks to quick setup menu
- Easy and safe menu-guided operation on-site, via 4...20 mA with HART, via PROFIBUS PA or via FOUNDATION Fieldbus
- Extensive diagnostic functions
- Device versions in conformity with ASME-BPE

TI383P/00/EN/06.09
No. 71095447

Endress+Hauser
People for Process Automation

Table of contents

Function and system design 4
Device selection 4
Measuring principle 5
Level measurement (level, volume and mass) 6
Communication protocol 6

Input 7
Measured variable 7
Measuring range 7
Explanation of terms 9

Output 10
Output signal 10
Signal range – 4...20 mA HART 10
Signal on alarm 10
Load – 4...20 mA HART 10
Resolution 11
Dynamic behavior current output 11
Dynamic behavior HART 11
Dynamic behavior PROFIBUS PA 12
Dynamic behavior FOUNDATION Fieldbus 12
Damping 12
Data of the FOUNDATION Fieldbus interface 13

Power supply 15
Electrical connection 15
Supply voltage 18
Current consumption 18
Cable entry 18
Cable specification 18
Residual ripple 18
Influence of power supply 18

Performance characteristics – general 19
Reference operating conditions 19
Uncertainty of measurement for small absolute pressure ranges . . 19
Long-term stability 19
Influence of the installation position 19

Performance characteristics – ceramic process isolating diaphragm 20
Reference accuracy – PMC71 20
Total performance – PMC71 20
Total Error - PMC71 20
Warm-up period – PMC71 20
Thermal change of the zero output and the output span – PMC71 21

Performance characteristics – metallic process isolating diaphragm 22
Reference accuracy – PMP71, PMP75 22
Total performance – PMP71 22
Total Error - PMP71 23
Warm-up period – PMP71, PMP75 23
Thermal change of the zero output and the output span – PMP71 and PMP75 23

Operating conditions (installation) 24
General installation instructions 24
Installation instructions for devices without diaphragm seal – PMC71 and PMP71 24
Heat insulation – PMC71 high temperature version and PMP75 . 24
Mounting with temperature isolator 25
Wall and pipe-mounting 25
"Separate housing" version 26
Turn the housing 27
Oxygen applications 27
Silicone-free applications 27
Ultra pure gas applications 27
Applications with hydrogen 28

Operating conditions (environment) 28
Ambient temperature limits 28
Storage temperature range 28
Degree of protection 28
Climate class 28
Vibration resistance 29
Electromagnetic compatibility 29
Overvoltage protection 29

Operating conditions (Process) 30
Process temperature limits 30
Process temperature range, seals 31
Pressure specifications 31

Mechanical construction 32
Housing dimensions T14 32
Housing dimensions T17 32
Process connections PMC71 (with ceramic process isolating diaphragm) 33
Process connections PMP71 (with metallic process isolating diaphragm) 40
PMP75 Basic unit 47
Process connections PMP75 (with metallic process isolating diaphragm) 47
"Separate housing" version 60
Weight 61
Material 61

Human interface 63
Operating elements 63
Operating elements 64
Local operation 65
Remote operation 65
Hard- und Software for on-site and remote operation 66

Planning instructions, diaphragm seal systems 68
Applications 68
Planning instructions 68
Diaphragm seal filling oils 69
Influence of the temperature on the zero point 69
Ambient temperature range 73
Installation instructions 74

Certificates and approvals 75
CE mark 75
Ex approvals 75
Suitability for hygenic processes 75
Marine certificate 75
Functional Safety SIL / IEC 61508 Declaration of conformity (optional) 75
Overspill protection 75
CRN approvals 75
Pressure Equipment Directive (PED) 75
Standards and guidelines 76

Ordering information 77
PMC71 77
PMP71 81
PMP75 85

Additional documentation 89
Field of Activities 89
Technical Information 89
Operating Instructions 89
Brief operating instructions 89
Manual for Functional Safety (SIL) 89
Safety Instructions 90
Installation/Control Drawings 91
Overspill protection 91

Function and system design

Device selection

Cerabar S – Product family	PMC71	PMP71	PMP75
	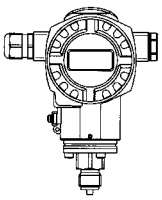 P01-PMC71xxx-16-xx-xx-xx-000	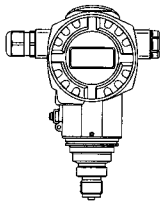 P01-PMP71xxx-16-xx-xx-xx-000	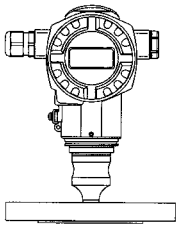 P01-FMP75xxx-16-xx-xx-xx-000
	With capacitive measuring cell and ceramic measuring process isolating diaphragm (Ceraphire®)	**With piezoresistive measuring cell and metallic welded process isolating diaphragm**	**With diaphragm seal**
Field of application	– Gauge pressure and absolute pressure – Level		
Process connections	– Diverse thread – DN 32 – DN 80 – ANSI 1 1/2" – 4" – JIS 50 A – 100 A	– Diverse thread – DN 25 – DN 80 – ANSI 1 1/2" – 4" – JIS 25 A – 100 A – Oval flange adapter – Prepared for diaphragm seal mount	– Wide range of diaphragm seals, → see the following section "Overview of diaphragm seal for PMP 75"
Measuring ranges	from –100/0...100 mbar to –1/0...40 bar	from –100/0...100 mbar to –1/0...700 bar	from –400/0...400 mbar to –1/0...400 bar
OPL [1]	max. 60 bar	max. 1050 bar	max. 600 bar
Process temperature range	–25...+125°C/–20...+150°C [2] (–13...+257°F/–4...+302°F)	–40...+125°C (–40...+257°F)	-70...400°C (-94...+752°F)
Ambient temperature range	–40...+85°C (–40...+185°F)	–40...+85°C (–40...+185°F) [3]	–40...+85°C (–40...+185°F)
Ambient temperature range separate housing	–40 to +60°C (–40 to +140°F)		
Reference accuracy	– Up to ±0.075% of the set span – PLATINUM version: up to ±0.05% of the set span		Up to ±0.075% of the set span
Supply voltage	– For non-hazardous areas: 10.5...45 V DC – Ex ia: 10.5...30 V DC		
Output	4...20 mA with superimposed HART protocol, PROFIBUS PA, FOUNDATION Fieldbus		
Options	– PMP71, PMP75: Gold-Rhodium-coated process isolating diaphragm – PMP71, PMP75: NACE-compliant materials – PMC71, PMP71, PMP75: inspection certificate 3.1 – HistoROM®/M-DAT memory module – Separate housing		
Specialities	– Metal-free measurement with PVDF connection – Cleaning of the transmitter for the use in paint shops	– Oil volume-minimised process connections – gas-tight, elastomer-free	– Wide range of diaphragm seals – For high media temperatures – Oil volume-minimised process connections – Completely welded versions

1) OPL = Over pressure limit; dependent on the lowest-rated element, with regard to pressure, of the selected components

2) High temperature version "T" for feature 100 "Additional option 1" or for feature 110 "Additional option 2"

3) lower temperature on request

Measuring principle

Ceramic process isolating diaphragm used for PMC71 (Ceraphire®)

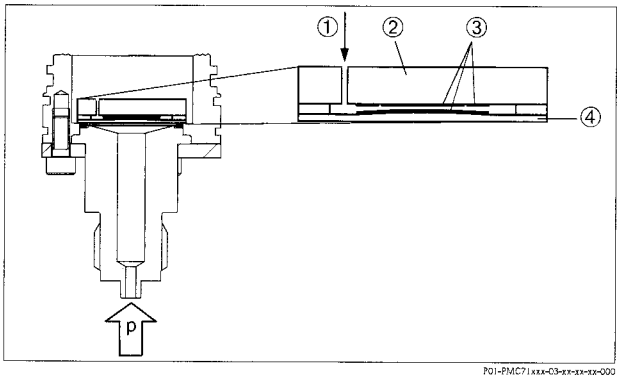

Ceramic sensor

1 *Atmospheric vent (gauge pressure only)*
2 *Ceramic substrate*
3 *Electrodes*
4 *Ceramic process isolating diaphragm*

Metallic process isolating diaphragm used for PMP71 and PMP75

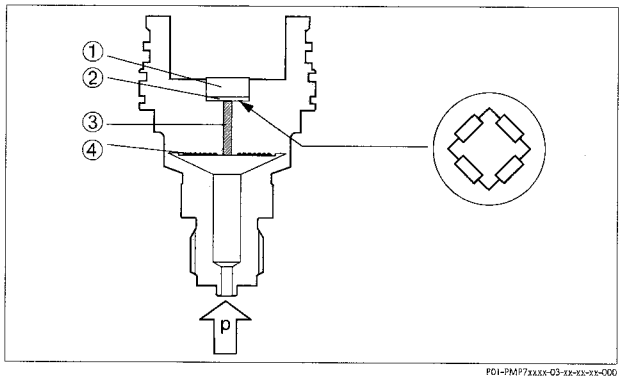

Metal sensor

1 *Measuring element*
2 *Wheatstone bridge*
3 *Channel with fill fluid*
4 *Metal process isolating diaphragm*

Ceramic process isolating diaphragm used for PMC71 (Ceraphire®)

The ceramic sensor is a dry sensor, i.e. the process pressure acts directly on the robust ceramic process isolating diaphragm and deflects it. A pressure-dependent change in capacitance is measured at the electrodes of the ceramic carrier and the process isolating diaphragm. The measuring range is determined by the thickness of the ceramic process isolating diaphragm.

Advantages:
- Guaranteed overload resistance up to 40 times the nominal pressure
- Thanks to highly-pure 99.9% ceramic (Ceraphire®, see also "www.endress.com/ceraphire")
  - extremely high chemical resistance compared to Alloy
  - less relaxation
  - high mechanical stability
- Suitable for vacuums
- Second process barrier (Secondary Containment) for enhanced integrity
- Process temperature up to 150°C (302°F)

Metallic process isolating diaphragm used for PMP71 and PMP75

PMP71

The operating pressure deflects the process isolating diaphragm and a fill fluid transfers the pressure to a resistance measuring bridge (semi-conductor technology). The pressure-dependent change of the bridge output voltage is measured and evaluated.

Advantages:
- Can be used for process pressure up to 700 bar
- High long-term stability
- Guaranteed overload resistance up to 4 times the nominal pressure
- Second process barrier (Secondary Containment) for enhanced integrity
- Significantly less thermal effect compared to diaphragm seal systems

PMP75

The operating pressure acts on the process isolating diaphragm of the diaphragm seal and is transferred to the process isloating diaphragm of the sensor by a diaphragm seal fill fluid. The process isolating diaphragm is deflected and a fill fluid transfers the pressure to a resistance measuring bridge. The pressure-dependent change of the bridge output voltage is measured and evaluated.

Advantages:
- Can be used for process pressure up to 400 bar
- High long-term stability
- Guaranteed overload resistance up to 4 times the nominal pressure
- Second process barrier (Secondary Containment) for enhanced integrity

Level measurement (level, volume and mass)

Design and operation mode

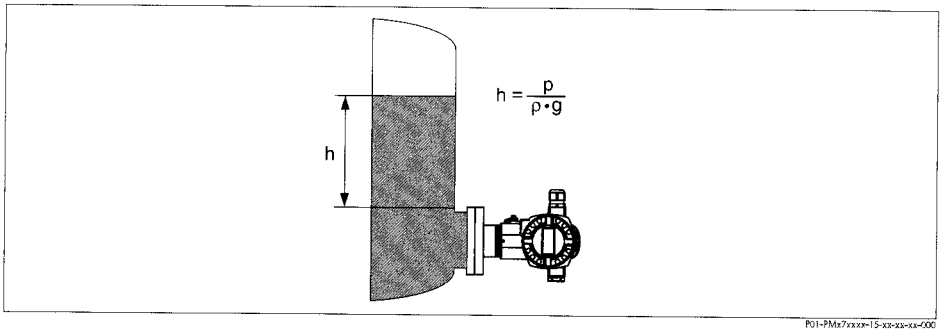

Level measurement with Cerabar S

h *Height (level)*
p *Pressure*
ρ *Density of the medium*
g *Gravitation constant*

Your benefits

- Choice of three level operating modes in the device software
- Volume and mass measurements in any tank shapes by means of a freely programmable characteristic curve
- Choice of diverse level units with automatic unit conversion
- A customised unit can be specified
- Has a wide range of uses, as well
  - in the event of foam formation
  - in tanks with agitators of screen fittings
  - in the event of liquid gases

Communication protocol

- 4...20 mA with HART communication protocol
- PROFIBUS PA
  - The Endress+Hauser devices meet the requirements as per the FISCO model.
  - Due to the low current consumption of 13 mA ± 1 mA
    - up to 7 Cerabar S for Ex ia, CSA IS and FM IS applications
    - up to 27 Cerabar S for all other applications, e.g. in non-hazardous areas, Ex nA, etc.

    can be operated at one bus segment with installation as per FISCO.

  Further information on PROFIBUS PA, such as requirements for bus system components, can be found in the Operating Instructions BA034S "PROFIBUS DP/PA: Guidelines for planning and commissioning" and in the PNO guideline.
- FOUNDATION Fieldbus
  - The Endress+Hauser devices meet the requirements as per the FISCO model.
  - Due to the low current consumption of 15 mA ± 1 mA
    - up to 6 Cerabar S for Ex ia, CSA IS and FM IS applications
    - up to 24 Cerabar S for all other applications, e.g. in non-hazardous areas, Ex nA, etc.

    can be operated at one bus segment with installation as per FISCO.

  Further information on FOUNDATION Fieldbus, such as requirements for bus system components can be found in the Operating Instructions BA013S "FOUNDATION Fieldbus Overview".

Input

Measured variable

Absolute pressure and gauge pressure, from which level (level, volume or mass) is derived

Measuring range

PMC71 – with ceramic process isolating diaphragm (Ceraphire®) for gauge pressure

Nominal value	Measurement limit		Smallest calibratable Span [4]	MWP [1]	OPL [2]	Vacuum resistance	Versions in the order code [3]
	lower (LRL) [bar]	upper (URL) [bar]	[bar]	[bar]	[bar]	[bar_{abs}]	
100 mbar	–0.1	+0.1	0.005	2.7	4	0.7	1C
250 mbar	–0.25	+0.25	0.005	3.3	5	0.5	1E
400 mbar	–0.4	+0.4	0.005	5.3	8	0	1F
1 bar	–1	+1	0.01	6.7	10	0	1H
2 bar	–1	+2	0.02	12	18	0	1K
4 bar	–1	+4	0.04	16.7	25	0	1M
10 bar	–1	+10	0.1	26.7	40	0	1P
40 bar	–1	+40	0.4	40	60	0	1S

PMC71 – with ceramic process isolating diaphragm (Ceraphire®) for absolute pressure

Nominal value	Measurement limit		Smallest calibratable Span [4]	MWP [1]	OPL [2]	Versions in the order code [3]
	lower (LRL) [bar_{abs}]	upper (URL) [bar_{abs}]	[bar]	[bar_{abs}]	[bar_{abs}]	
100 mbar	0	+0.1	0.005	2.7	4	2C
250 mbar	0	+0.25	0.005	3.3	5	2E
400 mbar	0	+0.4	0.005	5.3	8	2F
1 bar	0	+1	0.01	6.7	10	2H
2 bar	0	+2	0.02	12	18	2K
4 bar	0	+4	0.04	16.7	25	2M
10 bar	0	+10	0.1	26.7	40	2P
40 bar	0	+40	0.4	40	60	2S

1) The MWP (maximum working pressure) for the measuring device depends on the weakest element of the components selected with regard to pressure, i.e. the process connection (→ 32 ff) has to taken into consideration in addition to the sensor (→ see Table above). Pay attention to the pressure-temperature dependence also. For the appropriate standards and further information, see → 31, "Pressure specification".
2) OPL: Over Pressure Limit; depends on the weakest link in terms of pressure of the selected components.
3) Versions in the order code → 77 ff, feature 40 "Sensor range; Sensor overload limit (= OPL)"
4) Turn down > 100:1 on request or can be set at the device

PMP71 and PMP75 – with metallic process isolating diaphragm for gauge pressure

Nominal value	Measurement limits		Smallest calibratable Span [5]	MWP [1]	OPL [2]	Vacuum resistance [3]	Versions in the order code [4]
	lower (LRL)	upper (URL)				Silicone oil/ Inert oil	
	[bar]	[bar]	[bar]	[bar_{rel}]	[bar_{rel}]	[bar_{abs}]	
400 mbar	–0.4	+0.4	0.005	4	6	0.01/0.04	1F
1 bar	–1	+1	0.01	6.7	10	0.01/0.04	1H
2 bar	–1	+2	0.02	13.3	20	0.01/0.04	1K
4 bar	–1	+4	0.04	18.7	28	0.01/0.04	1M
10 bar	–1	+10	0.1	26.7	40	0.01/0.04	1P
40 bar	–1	+40	0.4	100	160	0.01/0.04	1S
100 bar	–1	+100	1.0	100	400	0.01/0.04	1U
400 bar	–1	+400	4.0	400	600	0.01/0.04	1W
700 bar [6]	–1	+700	7.0	700	1050	0.01/0.04	1X

PMP71 and PMP75 – with metallic process isolating diaphragm for absolute pressure

Nominal value	Measurement limits		Smallest calibratable Span [5]	MWP [1]	OPL [2]	Vacuum resistance [3]	Versions in the order code [4]
	lower (LRL)	upper (URL)				Silicone oil/ Inert oil	
	[bar_{abs}]	[bar_{abs}]	[bar]	[bar_{abs}]	[bar_{abs}]	[bar_{abs}]	
400 mbar	0	+0.4	0.005	4	6	0.01/0.04	2F
1 bar	0	+1	0.01	6.7	10	0.01/0.04	2H
2 bar	0	+2	0.02	13.3	20	0.01/0.04	2K
4 bar	0	+4	0.04	18.7	28	0.01/0.04	2M
10 bar	0	+10	0.1	26.7	40	0.01/0.04	2P
40 bar	0	+40	0.4	100	160	0.01/0.04	2S
100 bar	0	+100	1.0	100	400	0.01/0.04	2U
400 bar	0	+400	4.0	400	600	0.01/0.04	2W
700 bar [6]	0	+700	7.0	700	1050	0.01/0.04	2X

1) The MWP (maximum working pressure) for the measuring device depends on the weakest element of the components selected with regard to pressure, i.e. the process connection (→ 32 ff) has to taken into consideration in addition to the sensor (→ see Table above). Pay attention to the pressure-temperature dependence also. Pay attention to the pressure-temperature dependence also. For the appropriate standards and further information, → 31, "Pressure specifications".
2) OPL: Over pressure limit (= Sensor overload limit)
3) The vacuum resistance applies to the measuring cell at a reference conditions. The pressure and temperature application limits of the selected filling oil must also be observed for the PMP75. → 69, section "Diaphragm seal filling oils".
4) Versions in the order code → 77 ff, feature 40 "Sensor range; Sensor Overload limit (= OPL)"
5) Turn down > 100:1 on request or can be set at the device
6) PMP71 only, PMP75 on request

Explanation of terms

Explanation of terms: Turn down (TD), set span and on zero based span

Case 1:
- |Lower range value (LRV)| ≤ |Upper range value (URV)|

Example:
- Lower range value (LRV) = 0 bar
- Upper range value (URV) = 0.5 bar
- Nominal value (URL) = 1 bar

Turn down:
- TD = URL / |URV| = 2:1

set span:
- URV – LRV = 0.5 bar
  This span is based on the zero point.

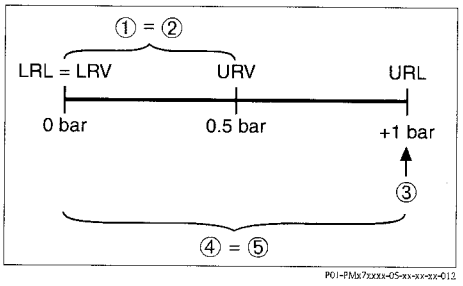

Example: 1 bar measuring cell

Case 2:
- |Lower range value (LRV)| ≤ |Upper range value (URV)|

Example:
- Lower range value (LRV) = 0 bar
- Upper range value (URV) = 0.5 bar
- Nominal value (URL) = 1 bar

Turn down:
- TD = URL / |URV| = 2:1

set span:
- URV – LRV = 0.5 bar
  This span is based on the zero point.

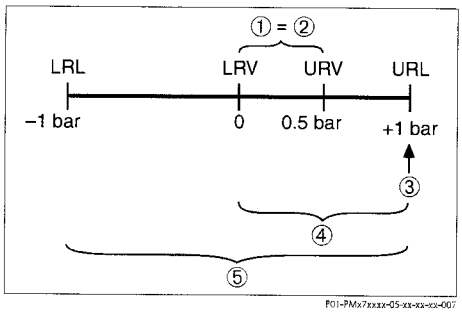

Example: 1 bar measuring cell

Case 3:
- |Lower range value| ≥ |Upper range value|

Example:
- Lower range value (LRV) = –0.6 bar
- Upper range value (URV) = 0 bar
- Nominal value (URL) = 1 bar

Turn down:
- TD = URL / |LRV| = 1.67:1

set span:
- URV – LRV = 0.6 bar
  This span is based on the zero point.

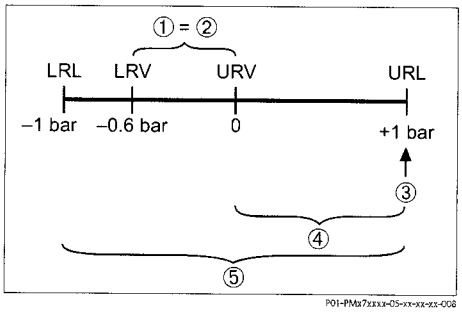

Example: 1 bar measuring cell

1	*Set span*
2	*Zero based span*
3	*Nominal value ≙ Upper range limit (URL)*
4	*Nominal measuring range*
5	*Sensor measuring range*
LRL	*Lower range limit*
URL	*Upper range limit*
LRV	*Lower range value*
URV	*Upper range value*

Output

Output signal

- 4...20 mA with superimposed digital communication protocol HART 5.0, 2-wire
- Digital communication signal PROFIBUS PA (Profile 3.0)
  - signal coding: Manchester Bus Powered (MBP); Manchester II
  - data transmission rate: 31.25 KBit/s, voltage mode
- Digital communication signal FOUNDATION Fieldbus, 2-wire
  - signal coding: Manchester Bus Powered (MBP); Manchester II
  - data transmission rate: 31.25 KBit/s, voltage mode

Signal range – 4...20 mA HART

3.8 mA to 20.5 mA

Signal on alarm

As per NAMUR NE 43

- 4...20 mA HART
  Options:
  - Max. alarm*: can be set from 21...23 mA
  - Keep measured value: last measured value is kept
  - Min. alarm: 3.6 mA
  - * Factory setting: 22 mA
- PROFIBUS PA: can be set in the Analog Input block,
  options: Last Valid Out Value, Fsafe Value (factory setting), Status bad
- FOUNDATION Fieldbus: can be set in the Analog Input Block,
  options: Last good Value, Fail Safe Value (factory setting), Wrong Value

Load – 4...20 mA HART

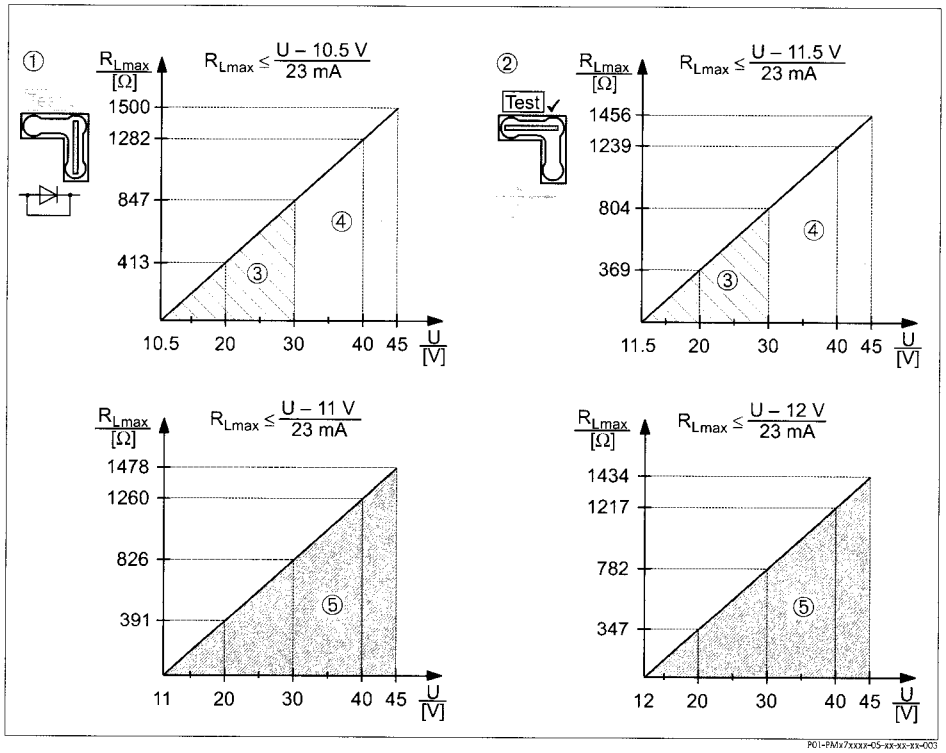

Load diagram, observe the position of the jumper and the explosion protection. (→ 🗎 17, section "Taking 4...20 mA test signal".)

1 Jumper for the 4...20 mA test signal inserted in "Non-test" position
2 Jumper for the 4...20 mA test signal inserted in "Test" position
3 Supply voltage 10.5 (11.5)...30 V DC for 1/2 G, 1 GD, 1/2 GD, FM IS, CSA IS, IECEx ia, NEPSI Ex ia
4 Supply voltage10.5 (11.5)...45 V DC for devices for non-hazardous areas, 1/2 D, 1/3 D, 2 G Ex d, 3 G Ex nA, FM XP, FM DIP, FM NI, CSA XP, CSA Dust-Ex, NEPSI Ex d
5 Supply voltage 11 (12)...45 V DC for PMC71, Ex d[ia], NEPSI Ex d[ia]
R_{Lmax} Maximum load resistance
U Supply voltage

Note!
When operating via a handheld terminal or via PC with an operating program, a minimum communication resistance of 250 Ω must exist within the loop.

Resolution

- Current output: 1 µA
- Display: can be set (factory setting: presentation of the maximum accuracy of the transmitter)

Dynamic behavior current output

Dead time, Time constant (T63)

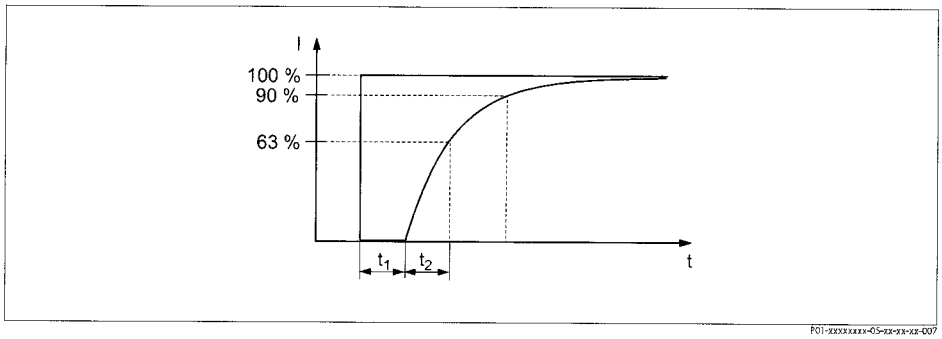

Presentation of the dead time and the time constant

Type	Dead time t_1	Time constant (T63), t_2
PMC71	90 ms	120 ms
PMP71	45 ms	▪ 400 mbar measuring cell: 70 ms ▪ measuring cells ≥ 1 bar: 35 ms
PMP75	PMP71 + influence from the diaphragm seal	

Dynamic behavior HART

Dead time, Time constant (T63)

A typical parametrization for the PLC of 3 to 4 values per second results in the following total dead time:

Type	Dead time t_1	Time constant (T63), t_2
PMC71	90 ms	120 ms
PMP71	45 ms	▪ 400 mbar measuring cell: 70 ms ▪ measuring cells ≥ 1 bar: 35 ms
PMP75	PMP71 + influence from the diaphragm seal	

Reading cycle

- HART commands: on average 3 to 4 per second on average.
  The Cerabar S commands the BURST MODE functionfor cyclic value transmission via the HART communication protocol.

Response time

≤ 250 ms

Cycle time (Update time)

On average 250...330 ms.

Dynamic behavior PROFIBUS PA

Dead time, Time constant (T63)

A typical cyclic parametrization for the PLC of 20 values per second results in the following total dead time:

Type	Dead time t_1	Time constant (T63), t_2
PMC71	340 ms	120 ms
PMP71	295 ms	■ 400 mbar measuring cell: 70 ms ■ measuring cells ≥ 1 bar: 35 ms
PMP75	PMP71 + influence from the diaphragm seal	

Response time

- cyclic: approx. 10 ms per request
- acyclic: < 50 ms

All values are typical values.

Cycle time (Update time)

The cycle time in a bus segment in cyclic data communication depends on the number of devices, on the segment coupler used and on the internal PLC cycle time.

Dynamic behavior FOUNDATION Fieldbus

Dead time, Time constant (T63)

If the macro cycle time (Hostsystem) is set to a typical value of 250 ms, the following total dead time results:

Type	Dead time t_1	Time constant (T63), t_2
PMC71	340 ms	120 ms
PMP71	295 ms	■ 400 mbar measuring cell: 70 ms ■ measuring cells ≥ 1 bar: 35 ms
PMP75	PMP71 + influence from the diaphragm seal	

Reading cycle

- cyclic: up to 5/s, dependent on the number and type of function blocks used in a closed-control loop
- acyclic: 10/s

Response time

- cyclic: < 80 ms
- acyclic: < 40 ms

All values are typical values.

Cycle time (Update time)

250 ms

Damping

A damping affects all outputs (output signal, display).

- Via on-site display, handheld terminal or PC with operating program, continuous from 0...999 s
- Additionally for HART and PROFIBUS PA: via DIP-switch on the electronic insert, switch position "on" = set value and "off"
- Factory setting: 2 s

Data of the FOUNDATION Fieldbus interface

Basic Data

Device Type	1007F (hex)
Device Revision	06 (hex)
DD Revision	01 (hex)
CFF Revision	01 (hex)
ITK Version	5.0
ITK-Certification Driver-No.	IT054600
Link-Master (LAS) cabable	yes
Link Master / Basic Device selectable	yes; Default: Basic Device
Number VCRs	44
Number of Link-Objects in VFD	50

Virtual communication references (VCRs)

Permanent Entries	44
Client VCRs	0
Server VCRs	5
Source VCRs	8
Sink VCRs	0
Subscriber VCRs	12
Publisher VCRs	19

Link Settings

Slot time	4
Min. Inter PDU delay	12
Max. response delay	10

Transducer Blocks

Block	Content	Output values
TRD1 Block	contains all parameters related to the measurement	■ Pressure or level (channel 1) ■ Process temperature (channel 2)
Service Block	contains service information	■ Pressure after damping (channel 3) ■ Pressure drag indicator (channel 4) ■ Counter for max. pressure transgression (channel 5)
Diagnostic Block	contains diagnostic information	Error code via DI channels (channel 0 to 16)
Display Block	contains parameters to configure the local display	no output values

Function Blocks

Block	Content	Number of Function Blocks	Execution time	Functionality
Resource Block	The Resource Block contains all the data that uniquely identifies the field device. It is an electronic version of a nameplate of the device.			enhanced
Analog Input Block 1 Analog Input Block 2	The AI block takes the manufacturer's input data, selected by channel number, and makes it available to other function blocks at its output. Enhancement: digital outputs for process alarms, fail safe mode		45 ms	enhanced
Digital Input Block	This block contains the discrete data of the diagnose block (selectable via a channel number 0 to 16) and provides them for the blocks at the output.		40 ms	standard
Digital Output Block	This block converts the discrete input and thus initiates an action (selectable via a channel number) in the dp flow block or in the service block. Channel 1 resets the counter for max. pressure transgressions..		60 ms	standard
PID Block	The PID block serves as proportional-integral-derivative controller and is used almost universally to do closed-loop-control in the field including cascade and feedforward. Input IN can be indicated on the display. The selection is performed in the display block (DISPLAY_MAIN_LINE_CONTENT).		120 ms	standard
Arithmetic Block	This block is designed to permit simple use of popular measurement math functions. The user does not have to know how to write equations. The math algorithm is selected by name, chosen by the user for the function to be done.		50 ms	standard
Input Selector Block	The input selector block provides selection of up to four inputs and generates an output based on the configured action. This block normally receives its inputs from AI blocks. The block performs maximum, minimum, middle, average and 'first good' signal selection. INPUT IN1 to IN4 can be indicated on the display. The selection is performed in the display block (DISPLAY_MAIN_LINE_CONTENT).		35 ms	standard
Signal Characterizer Block	The signal characterizer block has two sections, each with an output that is a non-linear function of the respective input. The non-linear function is determined by a single look-up table with 21 arbitrary x-y pairs.		30 ms	standard
Integrator Block	The Integrator Function Block integrates a variable as a function of the time or accumulates the counts from a Pulse Input block. The block may be used as a totalizer that counts up until reset or as a batch totalizer that has a setpoint, where the integrated or accumulated value is compared to pre-trip and trip settings, generating discrete signals when these settings are reached.		35 ms	standard
Analog Alarm Block	This block contains all process alarm conditions (working like a comparator) and represents them at the output.		35 ms	standard

Additional Function Block informations:

Instantiate Function Block	YES
Number of instantiate blocks	15

Power supply

Electrical connection

Note!
- When using the measuring device in hazardous areas, installation must comply with the corresponding national standards and regulations and the Safety Instructions or Installation or Control Drawings. → 90 ff, sections "Safety Instructions" and "Installation/Control Drawings".
- Devices with integrated overvoltage protection must be earthed. → 29.
- Protective circuits against reverse polarity, HF influences and overvoltage peaks are installed.

4...20 mA HART

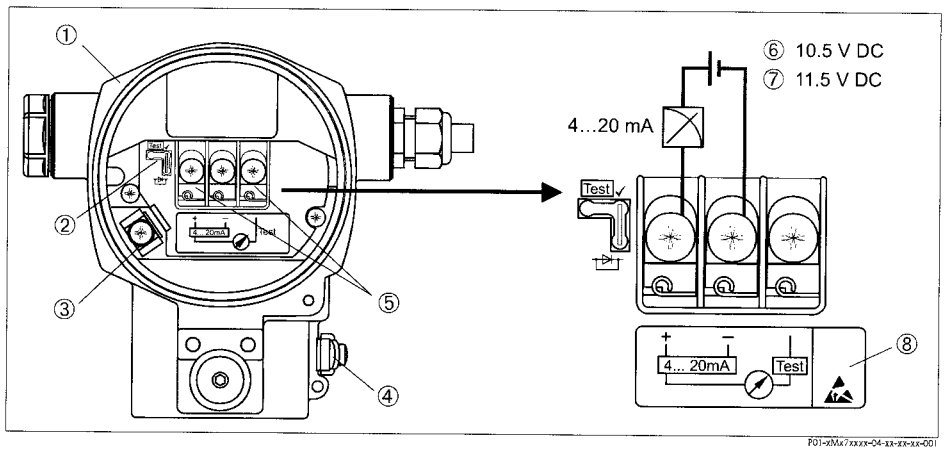

Electrical connection 4...20 mA HART

1 *Housing*
2 *Jumper for 4...20 mA test signal → 17, section "Taking 4...20 mA test signal".*
3 *Internal earth terminal*
4 *External earth terminal*
5 *4...20 mA test signal between plus and test terminal*
6 *Minimum supply voltage 10.5 V DC, if the jumper is inserted in accordance with the illustration.*
7 *Minimum supply voltage 11.5 V DC, if the jumper is inserted in "Test" position.*
8 *Devices with integrated overvoltage protection are labelled OVP (overvoltage protection) here (→ 29).*

PROFIBUS PA

The digital communication signal is transmitted to the bus via a 2-wire connection. The bus also provides the auxiliary energy. For further information on the network structure and grounding and for further bus system components such as bus cables, see the relevant documentation, e.g. Operating Instructions BA034S "Guidelines for planning and commissioning PROFIBUS DP/PA" and the PNO Guideline.

Cable specifications:
- Use a twisted, shielded two-wire cable, preferably cable type A

Note!
For further information on the cable specifications, see Operating Instructions BA034S Guidelines for planning and commissioning PROFIBUS DP/PA", PNO Guideline 2.092 " PROFIBUS PA User and Installation Guideline" and IEC 61158-2 (MBP).

FOUNDATION Fieldbus

The digital communication signal is transmitted to the bus via a 2-wire connection. The bus also provides the auxiliary energy. For further information on the network structure and grounding and for further bus system components such as bus cables, see the relevant documentation, e.g. Operating Instructions BA013S "FOUNDATION Fieldbus Overview" and the FOUNDATION Fieldbus Guideline.

Cable specifications:
- Use a twisted, shielded two-wire cable, preferably cable type A

Note!
For further information on the cable specifications, see Operating Instructions BA013S "FOUNDATION Fieldbus Overview", FOUNDATION Fieldbus Guideline and IEC 61158-2 (MBP).

Devices with Harting plug Han7D

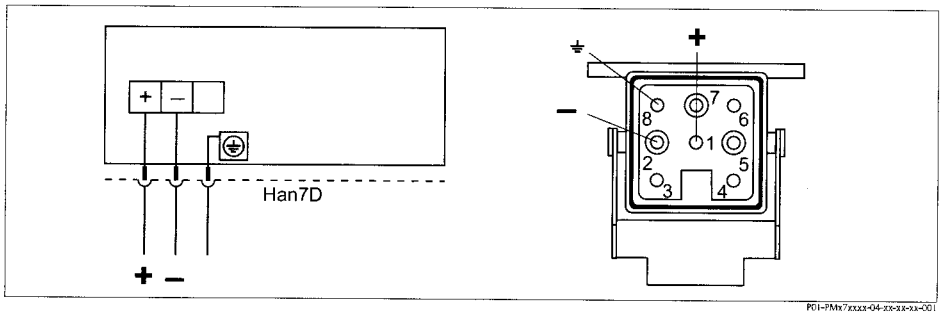

Left: electrical connection for devices with Harting plug Han7D
Right: view of the plug connector at the device

Devices with M12 plug

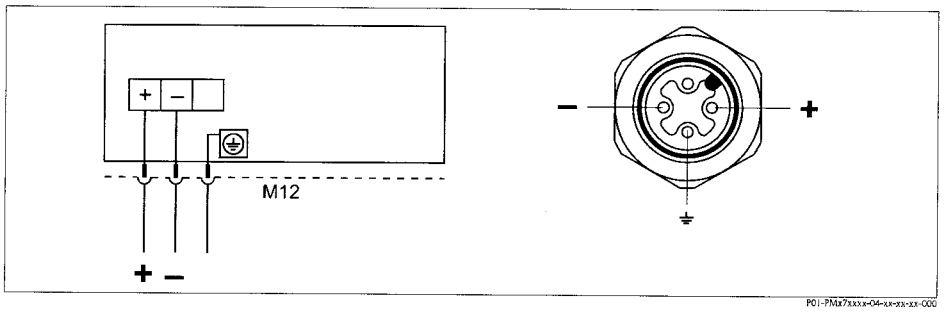

Left: electrical connection for devices with M12 plug
Right: view of the plug at the device

Endress+Hauser offers for devices with M12 plug the following accessories:

Plug-in jack M 12x1, straight
- Material: Body PA; coupling nut CuZn, nickel-plated
- Degree of protection (fully locked): IP67
- Order number: 52006263

Plug-in jack M 12x1, elbowed
- Material: Body PBT/PA; coupling nut GD-Zn, nickel-plated
- Degree of protection (fully locked): IP67
- Order number: 51006327

Cable 4x0.34 mm^2 with M12 socket, elbowed, screw plug, 5 m length
- Material: Body PUR; coupling nut CuSn/Ni; cable PVC
- Degree of protection (fully locked): IP67
- Order number: 52010285

Devices with 7/8" plug

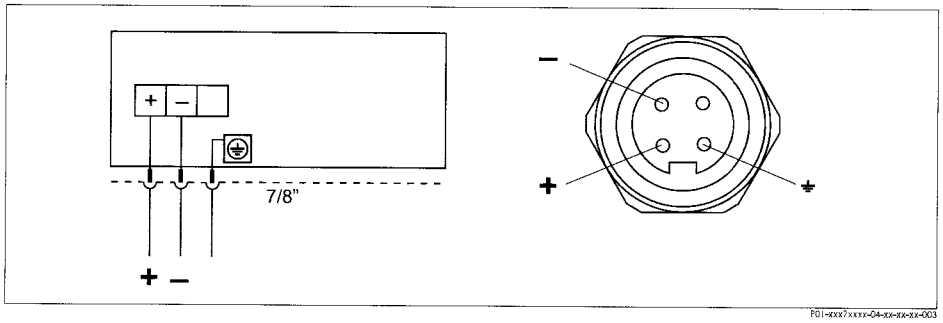

Left: electrical connection for devices with 7/8" plug
Right: view of the plug at the device

Kabel gland

Approval	Typ	Clamping range
Standard, II1/2G Exia, IS	Plastic M20x1.5	5...10 mm
ATEX II1/2D, II1/3D, II1/2GD Exia, II1GD Exia II3G Ex nA	Metal M20x1.5 (Ex e)	7...10.5 mm

Terminals

for wire cross-sections of 0.5 to 2.5 mm^2

Taking 4...20 mA test signal

A 4...20 mA signal may be measured via the positive and test terminal without interrupting the measurement. The minimum supply voltage of the device can be reduced by simply changing the position of the jumper. As a result, operation is also possible with lower voltage sources. Observe the position of the jumper in accordance with the following table.

Jumper position for test signal	Description
	– Taking 4...20 mA test signal via plus and test terminal: possible. (Thus, the output current can be measured without interruption via the diode.) – Delivery status – minimum supply voltage: 11.5 V DC
	– Taking 4...20 mA test signal via plus and test terminal: not possible. – minimum supply voltage: 10.5 V DC

Supply voltage	Note! ■ When using the measuring device in hazardous areas, installation must comply with the corresponding national standards and regulations and the Safety Instructions or Installation or Control Drawings. ■ All explosion protection data are given in separate documentation which is available upon request. The Ex documentation is supplied as standard with all devices approved for use in explosion hazardous areas. → 📄 90 ff sections "Safety Instructions" and "Installation/Control Drawings". **4...20 mA HART** ■ Version for non-hazardous areas, jumper for 4...20 mA test signal in "Test" position (delivery status): 11.5...45 V DC ■ Version for non-hazardous areas, jumper for 4...20 mA test signal in "Non-test" position: 10.5...45 V DC **PROFIBUS PA** ■ Version for non-hazardous areas: 9...32 V DC **FOUNDATION Fieldbus** ■ Version for non-hazardous areas: 9...32 V DC
Current consumption	■ PROFIBUS PA: 13 mA ± 1 mA, switch-on current corresponds to IEC 61158-2, Clause 21 ■ FOUNDATION Fieldbus: 15 mA ± 1 mA, switch-on current corresponds to IEC 61158-2, Clause 21
Cable entry	→ 📄 77 ff, feature 30 "Ordering information".
Cable specification	■ Endress+Hauser recommends using shielded, twisted-pair two-wire cables. ■ Terminals for wire cross-sections 0.5...2.5 mm^2 ■ Cable external diameter: 5...9 mm
Residual ripple	Without influence on 4...20 mA signal up to ± 5% residual ripple within the permitted voltage range [according to HART hardware specification HCF_SPEC-54 (DIN IEC 60381-1)]
Influence of power supply	≤ 0.0006% of URL/1 V

Performance characteristics – general

Reference operating conditions

- As per IEC 60770
- Ambient temperature T_U = constant, in the range of: +21...+33°C (+69.8...+91.4°F)
- Humidity φ = constant, in the range of: 5...80 % r.H
- Ambient pressure p_U = constant, in the range of: 860...1060 mbar
- Position of the measuring cell: constant, in the range of: ±1°
- Input of LOW SENSOR TRIM and HIGH SENSOR TRIM for lower range value and upper range value
- Zero based span
- Process isolating diaphragm material PMC71: Al_2O_3 (Aluminium oxide ceramic)
- Process isolating diaphragm material PMP71 and PMP75: AISI 316L/1.4435
- Filling oil PMP71 and PMP75: silicone oil
- Supply voltage: 24 V DC ± 3 V DC
- Load with HART: 250 Ω

Uncertainty of measurement for small absolute pressure ranges

The smallest extended uncertainty of measurement that can be returned by our standards is:
- 0.4% of the set span in the range of 1...30 mbar and
- 1% of the set span in the range < 1 mbar.

Long-term stability

PMC71/PMP71/PMP75:
- For measuring ranges ≥ 1 bar: ± 0.05 % of URL/year

PMC71:
- 100 mbar ... 40 bar: ±0.2 % of URL/10 years
- 100 mbar ... 40 bar (absolute pressure sensor): ±0.3 % of URL/10 years

PMP71 gauge pressure sensors:

	1 year	5 years	10 year
Measuring range [bar]	**% of URL**		
1	±0.020	±0.080	±0.180
10	±0.025	±0.050	±0.075
40	±0.025	±0.075	±0.100
100	±0.050	±0.150	±0.200
400	–	–	1

Influence of the installation position

- PMC71 [1]: ≤ 0.18 mbar
- PMP71 [1, 2]
  - Process connections thread G 1 A, G 1 1/2, G 2, 1 1/2 MNPT, 2 MNPT, M44x1.25, EN/DIN, ANSI and JIS flanges: ≤ 10 mbar
  - Process connections thread: G 1/2, 1/2 MNPT, JIS G 1/2, JIS R 1/2, M20x1.5: ≤ 4 mbar

1) Device rotated 180°, process connection pointing upwards.
2) This value is doubled for devices with inert oil.

Note!
Position-dependent zero shift can be corrected. → 24, section "General installation instructions" and → 74 ff section "Installation instructions".

Performance characteristics – ceramic process isolating diaphragm

Reference accuracy – PMC71

The reference accuracy comprises the non-linearity according to limit point setting, hysteresis and non-reproducibility as per IEC 60770. The data refer to the calibrated span.

Measuring cell	Gauge pressure sensor	Absolute pressure sensor
	% of the set span	
100 mbar	▪ TD 1:1 to TD 10:1 = ±0.075 ▪ TD > 10:1 = ±0.0075 x TD	▪ TD 1:1 to TD 5:1 = ±0.075 ▪ TD > 5:1 = ±0.015 x TD
250 mbar	▪ TD 1:1 to TD 15:1 = ±0.075 ▪ TD > 15:1 = ±0.005 x TD	▪ TD 1:1 to TD 10:1 = ±0.075 ▪ TD > 10:1 = ±0.0075 x TD
400 mbar, 1 bar, 2 bar, 4 bar, 10 bar	▪ TD 1:1 to TD 15:1 = ±0.075 ▪ TD > 15:1 = ±0.005 x TD	▪ TD 1:1 to TD 15:1 = ±0.075 ▪ TD > 15:1 = ±0.005 x TD
40 bar	▪ TD 1:1 to TD 10:1 = ±0.075 ▪ TD > 10:1 = ±0.0075 x TD	▪ TD 1:1 to TD 10:1 = ±0.075 ▪ TD > 10:1 = ±0.0075 x TD
Platinum version: 1 bar, 2 bar, 4 bar, 10 bar	▪ TD 1:1 = ±0.05	▪ TD 1:1 = ±0.05

Total performance – PMC71

The "Total performance" specification comprises the non-linearity including hysteresis, non-reproducibility as well as the thermal change of the zero point.

Measuring cell	PMC71	PMC71 High temperature version
	% of URL	
100 mbar, 250 mbar, 400 mbar	±0.2	±0.46
1 bar, 2bar, 4 bar, 10 bar, 40 bar	±0.15	±0.46
All specifications apply to the temperature range –10...+60°C (+14...+140°F).		

Total Error - PMC71

The total error comprises the long-term stability and the total performance:

Measuring cell	PMC71	PMC71 High temperature version
	% of URL/year	
100 mbar, 250 mbar, 400 mbar	±0.25	±0.51
1 bar, 2bar, 4 bar, 10 bar, 40 bar	±0.2	±0.51

Warm-up period – PMC71

- 4...20 mA HART : < 10 s
- PROFIBUS PA: 6 s
- FOUNDATION Fieldbus: 50 s

Thermal change of the zero output and the output span – PMC71

PMC71

Measuring cell	–10...+60 °C (+14...+140 °F)	–20...–10 °C, +60...+125 °C (–4...+14°F, +140...+257°F)
	% of the set span	
100 mbar, 250 mbar, 400 mbar	±(0.088 x TD + 0.088)	±(0.138 x TD + 0.138)
1 bar, 2bar, 4 bar, 10 bar, 40 bar	±(0.088 x TD + 0.04)	±(0.175 x TD + 0.075)

PMC71 High temperature version

Measuring cell	–10...+60 °C (+14...+140 °F)	–20...–10 °C, +60...+150 °C (–4...+14°F, +140...+302°F)
	% of the set span	
100 mbar, 250 mbar, 400 mbar	±(0.088 x TD + 0.088)	—
1 bar, 2bar, 4 bar, 10 bar, 40 bar	±(0.088 x TD + 0.04)	±(0.50 x TD)
100 mbar (Absolute pressure sensor)	—	±(1.25 x TD)
250 mbar, 400 mbar, 1 bar, 2 bar, 4 bar, 10 bar (Absolutdrucksensor)	—	±(0.75 x TD)
40 bar (Absolute pressure sensor)	—	±(0.50 x TD)

Performance characteristics – metallic process isolating diaphragm

Reference accuracy – PMP71, PMP75

The reference accuracy comprises the non-linearity according to limit point setting, hysteresis and non-reproducibility as per IEC 60770. The data refer to the calibrated span.

Measuring cell	Sensor	without capillary (PMP71 and PMP75)	with capillary (only PMP75)
		% of the set span	
400 mbar	Gauge pressure/ Absolute pressure	▪ TD 1:1 = ±0.15 ▪ TD > 1:1 = ±0.15 x TD	▪ TD 1:1 = ±0.15 ▪ TD > 1:1 = ±0.15 x TD
1 bar	Gauge pressure/ Absolute pressure	▪ TD 1:1 to TD 2.5:1 = ±0.075 ▪ TD > 2.5:1 = ±0.03 x TD	▪ TD 1:1 to TD 2.5:1 = ±0.1 ▪ TD > 2.5:1 = ±0.04 x TD
2 bar	Gauge pressure	▪ TD 1:1 to TD 5:1 = ±0.075 ▪ TD > 5:1 = ±0.015 x TD	▪ TD 1:1 to TD 2.5:1 = ±0.1 ▪ TD > 2.5:1 = ±0.04 x TD
2 bar	Absolute pressure	▪ TD 1:1 to TD 5:1 = ±0.075 ▪ TD > 5:1 = ±0.015 x TD	▪ TD 1:1 to TD 5:1 = ±0.075 ▪ TD > 5:1 = ±0.015 x TD
4 bar	Gauge pressure/ Absolute pressure	▪ TD 1:1 to TD 10:1 = ±0.075 ▪ TD > 10:1 = ±0.0075 x TD	▪ TD 1:1 to TD 10:1 = ±0.075 ▪ TD > 10:1 = ±0.0075 x TD
10 bar, 40 bar	Gauge pressure/ Absolute pressure	▪ TD 1:1 to TD 15:1 = ±0.075 ▪ TD > 15:1 = ±0.005 x TD	▪ TD 1:1 to TD 15:1 = ±0.075 ▪ TD > 15:1 = ±0.005 x TD
100 bar	Gauge pressure/ Absolute pressure	▪ TD 1:1 to TD 10:1 = ±0.075 ▪ TD > 10:1 = ±0.0075 x TD	▪ TD 1:1 to TD 10:1 = ±0.075 ▪ TD > 10:1 = ±0.0075 x TD
400 bar	Gauge pressure/ Absolute pressure	▪ TD 1:1 to TD 5:1 = ±0.15 ▪ TD > 5:1 = ±0.03 x TD	▪ TD 1:1 to TD 5:1 = ±0.15 ▪ TD > 5:1 = ±0.03 x TD
700 bar (only PMP71)	Absolute pressure	▪ TD 1:1 to TD 5:1 = ±0.15 ▪ TD > 5:1 = ±0.03 x TD	—
Platinum version [1] 1 bar, 2 bar, 4 bar, 10 bar, 40 bar, 100 bar	Gauge pressure/ Absolute pressure	▪ TD 1:1 = ±0.05	—

1) Platinum version not for flush-mounted process connections G 1/2 and M20.

Total performance – PMP71

The "Total performance" specification comprises the non-linearity including hysteresis, non-reproducibility as well as the thermal change of the zero point.

Measuring cell	PMP71	PMP71 with Gold-Rhodium-coated process isolating diaphragm
	% of URL	
400 mbar	±0.25	±1.25
1 bar	±0.15	±0.75
2 bar	±0.15	±0.45
4 bar	±0.15	±0.3
10 bar, 40 bar	±0.15	±0.15
100 bar	±0.25	±0.25
400 bar	±0.3	±0.3
700 bar	±0.3	±0.3
All specifications apply to the temperature range –10...+60°C (+14...+140°F).		

Total Error - PMP71

The total error comprises the long-term stability and the total performance:

Measuring cell	% of URL/year
400 mbar	▪ ±0.3
1 bar, 2 bar, 4 bar, 10 bar, 40 bar	▪ ±0.2
100 bar	▪ ±0.3
400 bar	▪ ±0.35
700 bar	▪ ±0.35

Warm-up period – PMP71, PMP75

- 4...20 mA HART : < 10 s
- PROFIBUS PA: 6 s
- FOUNDATION Fieldbus: 50 s

Thermal change of the zero output and the output span – PMP71 and PMP75

PMP71 and PMP75 (basic device)

Measuring cell	−10...+60 °C (+14...+140°F)	−40...−10 °C, +60...+85 °C (−40...+14°F, +140...+185°F)
	% of the set span	
400 mbar	±(0.2 x TD + 0.015)	±(0.4 x TD + 0.03)
1 bar, 2 bar, 4 bar, 10 bar, 40 bar	±(0.1 x TD + 0.01)	±(0.4 x TD + 0.02)
100 bar	±(0.2 x TD + 0.015)	±(0.4 x TD + 0.03)
400 bar	±(0.35 x TD + 0.02)	±(0.7 x TD + 0.04)
700 bar	±(0.35 x TD + 0.02)	±(0.7 x TD + 0.04)

Note!
When using a PMP75, the influence from the respective diaphragm seal must be taken into account.
(→ 68 ff "Planning instructions, diaphragm seal systems" and → 47 ff "Process connections PMP75 (with metallic process isolating diaphragm)").

Operating conditions (installation)

General installation instructions

- For PMP75: → 🗎 74, "Installation instructions" section.
- The position-dependent zero shift can be corrected directly at the device via operating key, for devices with external operation even in hazardous areas. Diaphragm seals also shift the zero point, depending on the installation position.
  (→ 🗎 74 ff, section "Installation instructions").
- The housing of the Cerabar S can be rotated up to 380°. → 🗎 27, section "Turn the housing".
- Endress+Hauser offers a mounting bracket for installing on pipes or walls. → 🗎 25, section "Wall and pipe-mounting".

Installation instructions for devices without diaphragm seal – PMC71 and PMP71

Cerabar S transmitters without diaphragm seal are mounted as per the norms for a manometer (DIN EN 837-2). We recommend the use of shut-off devices and siphons. The orientation depends on the measuring application.

Pressure measurement in gases

- Mount Cerabar S with shut-off device above the tapping point so that condensate can flow into the process.

Pressure measurement in steams

- Mount Cerabar S with siphon above the tapping point.
  The siphon reduces the temperature to almost ambient temperature.
- Fill the siphon with fluid before commissioning.

Pressure measurement in liquids

- Mount Cerabar S with shut-off device below or at the same level as the tapping point.

Level measurement

- Mount Cerabar S below the lowest measuring point.
- Do not mount the device at the following positions:
  In the fill flow, in the tank outlet or at a point in the container which could be affected by pressure pulses from an agitator or a pump.
- The calibration and functional test can be carried out more easily if you mount the device after a shut-off device.

Heat insulation – PMC71 high temperature version and PMP75

The PMC71 high temperature version and the PMP75 must only be insulated up to a certain height. The maximum permitted insulation height is labelled on the devices and applies to an insulation material with a heat conductivity ≤ 0.04 W/(m x K) and to the maximum permitted ambient and process temperature (→ see table below). The data were determined under the most critical application "quiescent air".

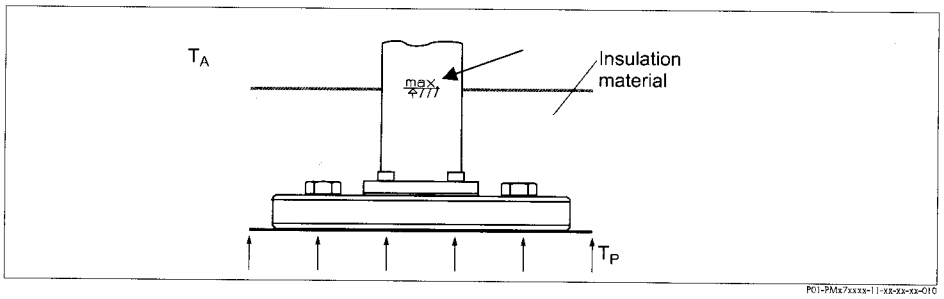

Maximum insulation height, here e.g. PMC71 with flange

	PMC71 high temperature version	PMP75
Ambient temperature (T_A)	≤ 70°C (158°F)	≤ 70°C (158°F)
Process temperature (T_P)	≤ 150°C (302°F)	max. 350°C (662°F), depending on the diaphragm seal filling oil used (→ 🗎 69)

Mounting with temperature isolator

Endress+Hauser recommends the use of temperature isolators in the event of constant extreme fluid temperatures which lead to the maximum permissible ambient temperature of +85°C (+185°F) being exceeded. Depending on the filling oil used, Cerabar S devices with temperature isolators can be used for maximum temperatures of up to 260°C (+500°F). → For the temperature application limits of filling oils, → 69, "Diaphragm seal filling oil" section.
To minimise the influence of rising heat, Endress+Hauser recommends the device be mounted horizontally or with the housing pointing downwards.
The additional installation height also brings about a zero point shift of maximum 21 mbar due to the hydrostatic columns in the temperature isolator. The position-dependent zero shift can be corrected.

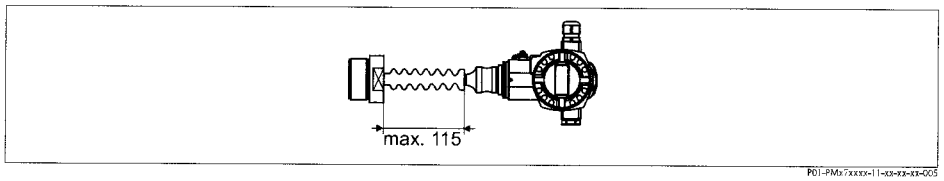

P01-PMx75xxxx-11-xx-xx-xx-005

PMP75 with temperature isolator

Wall and pipe-mounting

Endress+Hauser offers a mounting bracket for installing the device on pipes or walls. → 77 ff, feature 110, "Additional options 2".

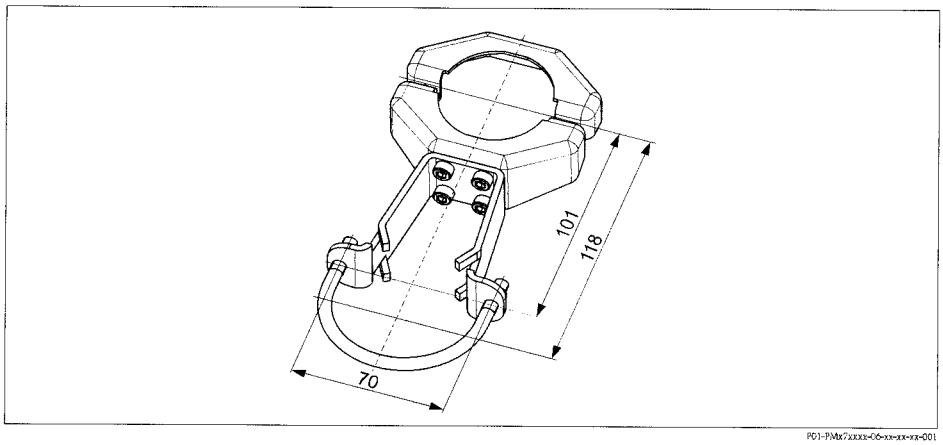

P01-PMx75xxxx-06-xx-xx-xx-001

"Separate housing" version

With the "separate housing" version, you are able to mount the housing with the electronics insert at a distance from the measuring point. This facilitates zero-interference measurement:
- Under particularly difficult measuring conditions (at installation locations that are cramped or difficult to access)
- If rapid cleaning of the measuring point is required
- If the measuring point is exposed to vibrations.

You can choose between different cable versions:
- PE (2 m, 5 m and 10 m)
- FEP (5 m).

→ 77 ff, Feature 110, "Additional options 2", Version "G".

For the dimensions, → 60.

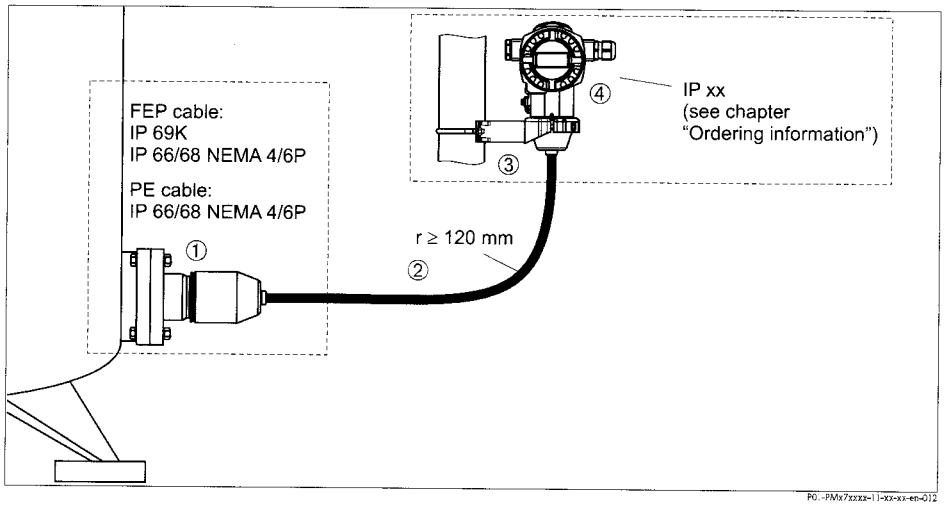

In the case of the "separate housing" version, the sensor is delivered with the process connection and cable ready mounted. The housing and a mounting bracket are enclosed as separate units. The cable is provided with a socket at both ends. These sockets are simply connected to the housing and the sensor.

1 *Process connection with sensor*
2 *Cable, both ends are fitted with a socket*
3 *Mounting bracket provided, suitable for pipe and wall mounting*
4 *Housing with electronic insert*

Degree of protection for the process connection with sensor with the use of
- FEP cable:
  - IP 69K
  - IP 66 NEMA 4/6P
  - IP 68 (1.83 mH_2O for 24 h) NEMA 4/6P
- PE cable:
  - IP 66 NEMA 4/6P
  - IP 68 (1.83 mH_2O for 24 h) NEMA 4/6P

Technical data of the PE and FEP cable:
- Minimum bending radius: 120 mm (4.72 inch)
- Cable extraction force: max. 450 N
- Resistance to UV light

Use in hazardous area:
- Intrinsically safe installations (Ex ia/IS)
- FM/CSA IS: for Div.1 installatin only

Turn the housing

The housing can be rotated up to 380° after loosening the Allen screw.

Your benefits
- Simple mounting by optimally aligning the housing
- Good, accessible device operation
- Optimum readability of the on-site display (optional).

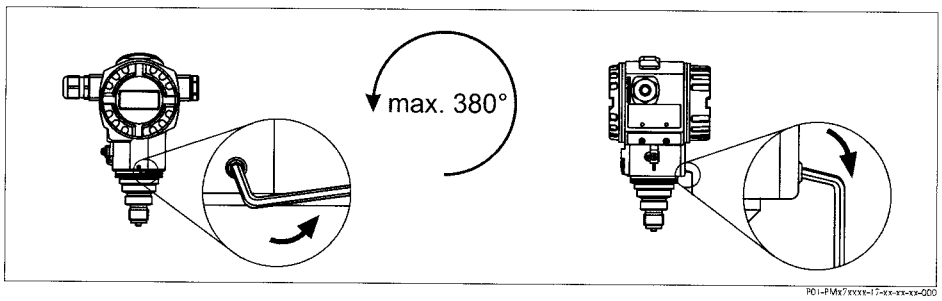

Align the housing by loosening the Allen screw.
T14 housing: 2 mm Allen key; T17 housing: 3 mm Allen key

Oxygen applications

Oxygen and other gases can react explosively to oils, grease and plastics, such that, among other things, the following precautions must be taken:
- All components of the system, such as measuring devices, must be cleaned in accordance with the BAM (DIN 19247) requirements.
- Dependent on the materials used, a certain maximum temperature and a maximum pressure for oxygen applications must not be exceeded.

The devices suitable for gaseous oxygen applications are listed in the following table with the specification p_{max}.

Order code for devices cleaned for oxygen applications	p_{max} for oxygen applications	T_{max} for oxygen applications
PMC71 – * * * ** * ** 2 * *, Devices with sensors, nominal value < 10 bar	Overpressure limit (OPL) of sensor[1, 2]	60°C (140°F)
PMC71 – * * * ** * ** 2 * *, Devices with sensors, nominal value ≥ 10 bar	30 bar	60°C (140°F)
PMP71 – * * * ** * * ** N * *	Depends on the weakest link in terms of pressure of the selected components: over pressure limit (OPL) of sensor[1] or process connection (1.5 x PN) or filling fluid (160 bar)	85°C (185°F)
PMP75 – * * * ** * * * ** N * *	Depends on the weakest link in terms of pressure of the selected components: over pressure limit (OPL) of sensor[1] or process connection (1.5 x PN) or filling fluid (160 bar)	85°C (185°F)

1) → 77 ff "Ordering information", feature 40 "Sensor range; sensor overload limit (= OPL)"

2) PMC71 with PVDF thread or flange p_{max} = 15 bar (225 psi)

Silicone-free applications

Cleaning of the transmitter for the use e.g. in paint shops → 79 "Ordering information PMC71", feature 80 "Seal", version "L" and "M".

Ultra pure gas applications

Endress+Hauser also offers the degreased device for special applications, such as ultra pure gas.
No special restrictions regarding the process conditions apply to this device.

→ 79, "Ordering information PMC71", feature 80 "Seal" or → 83, "Ordering information PMC71", feature 90 "Fill fluid".

Applications with hydrogen

With regard to materials in which hydrogen build-up takes place, hydrogen atoms can diffuse through the metal process isolating diaphragm. This can result in incorrect measurement results.
Endress+Hauser offers process isolating diaphragms with Gold-Rhodium coating for this application.

→ 82 "Ordering information PMP71" and → 86 "Ordering information PMP75", feature 60 "Membrane material" version "6".

Operating conditions (environment)

Ambient temperature limits

- PMC71:
  - –40...+85°C (–40...+185°F)
  - High temperature version: –20...+70°C (–4...+158°F)
    (Version "T" for feature 100 "Additional options 1" or feature 110 "Additional options 2"),
    → For the maximum insulation height see → 25.
- PMP71: –40...+85°C (–40...+185°F)
  devices for lower temperatures on request
- PMP75: –40...+85°C (–40...+185°F)
  devices for lower temperatures on request
  → For the maximum insulation height see → 25.
- On-site display: –20...+70°C (–4...+158°F)
  Extended temperature application range with restrictions in optical properties such as display speed and contrast: –40...+85°C (–40...+185°F)
- Separate housing: –40 to +60°C (–40 to +140°F)

Note!
For high-temperature applications, either a PMP75 with a temperature isolator or with a capillary can be used. If vibrations also occur in the application, Endress+Hauser recommends you use a PMP75 with a capillary. If a PMP75 with a temperature isolator or capillary is used, we recommend a suitable retaining unit for mounting (see "Wall and pipe-mounting" Section on → 25).

For devices for use in hazardous areas, see Safety instructions, Installation or Control Drawing. (→ 90, sections "Safety Instructions" and "Installation/Control Drawings".)

The device can be used in this temperature range. The values of the specification, such as thermal change, may be exceeded. → DIN 16086.

Storage temperature range

- –40...+ 90°C (–40...+ 194°F)
- On-site display: –40...+85°C (–40...+185°F)
- Separate housing: –40 to +60°C (–40 to +140°F)

Degree of protection

- → 77 ff, feature 30 "Housing, Cable entry, Protection".
- Degree of protection IP 68 for T17 housing: 1.83 mH_2O for 24 h
- Seperate housing → 26.

Climate class

Class 4K4H (air temperature: –20...55°C/–4...+131°F, relative humidity: 4...100%) fulfilled as per DIN EN 60721-3-4 (condensation possible)

1) With PMC71, avoid condensate in the device (avoid moisture collecting in the device).

Vibration resistance

Device/Additional option	Test standard	Vibration resistance
PMC71 [1]	GL	guaranteed for 3...25 Hz: ±1.6 mm; 25...100 Hz: 4 g in all 3 planes
PMP71		
PMP75 [2, 3]		
with mounting bracket	IEC 61298-3	guaranteed for 10...60 Hz: ±0.15 mm; 60...500 Hz: 2 g in all 3 planes

1) not for high temperature version with Ex d[ia], CSA XP or FM XP

2) with aluminium T14 housing only

3) For applications with high temperatures, either a PMP75 with a temperature isolator or with a capillary can be used. If vibrations also occur in the application, Endress+Hauser recommends using a PMP75 with a capillary. If a PMP75 with a temperature isolator or capillary is used, it must be mounted with a mounting bracket. (→ 25).

Electromagnetic compatibility

- Electromagnetic compatibility to EN 61326 and NAMUR recommendation EMC (NE21). For details refer to the declaration of conformity.
- With enhanced immunity against electromagnetic fields as per EN 61000-4-3: 30 V/m with closed cover [1]
- Maximum deviation: < 0.5% of span
- All EMC measurements were performed with a turn down (TD) = 2:1.

1) for devices with T14 housing

Overvoltage protection

- Overvoltage protection:
  - Nominal functioning DC voltage: 600 V
  - Nominal discharge current: 10 kA
- Surge current check $\hat{I}$ = 20 kA as per DIN EN 60079-14: 8/20 µs satisfied
- Arrester AC current check I = 10 A satisfied

→ 79 ff, feature 100 "Additional options 1" and feature 110 "Additional options 2", version "M Overvoltage protection".

Note!
Devices with integrated overvoltage protection must be earthed.

Operating conditions (Process)

Process temperature limits

PMC71 (with ceramic process isolating diaphragm)

- –25...+125°C (–13...+257°F)
- High temperature version: –20...+150°C (–4...+302°F)
  → 79, feature 100 "Additional options 1", Version "T".
- Observe the process temperature range of the seal. See also the following section "Process temperature range, seals".

Extreme jumps in temperature can result in temporary measuring errors. Temperature compensation takes effect after several minutes. Internal temperature compensation is faster the smaller the temperature jump and the longer the time interval.

PMP71 (with metallic process isolating diaphragm)

Description	Temperature operating range
Process connections with internal process isolating diaphragm	–40...+125°C (–40...+257°F) (+150 °C/302°F for max. one hour)
Process connections with flush-mounted process isolating diaphragm, G 1 A, G 1 1/2 A, G 2 A, 1 NPT, 1 1/2 NPT, 2 NPT, M 44 x 1.25, EN/DIN, ANSI and JIS flanges	–40...+100°C (–40...+212°F)
Process connections with flush-mounted process isolating diaphragm, G 1/2 A, M 20	–20...+85°C (–4...+185°F)

Lower temperatures on request.

PMP75 (with metallic process isolating diaphragm)

- depending on the diaphragm seal and filling oil from -70°C (-94°F) up to +400°C (+752°F). Observe the temperature application limits of the diaphragm seal oil. → 69, section "Diaphragm seal filling oils".

Note!

- Do not use diaphragm seals with 0.09 mm PTFE foil on AISI 316L (1.4435/1.4404) for vacuum applications, upper temperature limit +204°C (+400°F).
- For oxygen applications, observe → 27, section "Oxygen applications".

Process temperature range, seals

PMC71 (with ceramic process isolating diaphragm)

Version for feature 80 in the order code	Seal	Process temperature range
A, L	FKM Viton	–25...+125°C/150°C [1] (–13...+257°F/302°F)
B [2, 3]	EPDM (FDA 21CFR177.2600; 3A Class II; USP Class VI) DVGW (KTW, W270, W534), WRAS, ACS, NSF61	–20...+125°C/150°C [1] (–4...+257°F/302°F)
B [3]	EPDM	–20...+125°C (–4...+257°F)
D, M	Kalrez, Compound 4079	+5...+125°C/150°C [1] (+41...+257°F/302°F)
E	Chemraz, Compound 505	–10...+125°C/150°C [1] (+14...+257°F/302°F)
F [2, 4]	HNBR (FDA 21CFR177.2600; 3A Class II; KTW; AFNOR; BAM)	–25...+125°C (–13...+257°F)
F [4]	NBR	–10...+100°C (+14...+212°F)
G	FKM Viton, FDA	–5...+125°C (+23 ...+257°F)
1	FKM Viton, cleaned from oil and greace	–10...+125°C/150°C [1] (+14...+257°F/302°F)
2	FKM Viton, cleaned for oxygen service	–10...+60 °C (+14...+140°F)
The process temperature ranges specified here refer to permanent application of the PMC71. They may be exceeded for a short time (e.g. for cleaning).		

1) +150°C (+302°F): for high temperature version
→ 79, feature 100 "Additional options 1" and feature 110 "Additional options 2", Version "T".

2) These seals are used for devices with 3A-approved process connections.

3) With applications of saturated steam a Cerabar S with metallic process isolating diaphragm is to be used.

4) For devices with NBR or HNBR seals, the values for "Toatal Performance" (→ 20) and "Thermal change" (→ 21) must be multiplied by the factor 3.

Pressure specifications

- The maximum pressure for the measuring device is dependent on the lowest-rated element with regard to pressure, see the following sections for this:
  – → 7 ff, section "Measuring range"
  – chapter "Mechanical construction".
  The MWP (maximum working pressure) is specified on the nameplate. This value refers to a reference temperature of 20°C (68°F) or 100°F for ANSI flanges and may be applied to the device for an unlimited time. Observe temperature dependency.
- The pressure values permitted at higher temperatures can be found in the following standards:
  – EN 1092-1: 2001 Tab. 18 [1]
  – ASME B 16.5a – 1998 Tab. 2-2.2 F316
  – ASME B 16.5a – 1998 Tab. 2.3.8 N10276
  – JIS B 2220.
- The test pressure corresponds to the over pressure limit of the measuring instrument (Over Pressure Limits OPL = 1.5 x MWP [2]) and may fit only temporally limited, so that no permanent damage develops.
- The Pressure Equipment Directive (EC Directive 97/23/EC) uses the abbreviation "PS". The abbreviation "PS" corresponds to the MWP (maximum working pressure) of the measuring device.
- In the case of sensor range and process connections where the OPL (Over pressure limit) of the pressure connection is smaller than the nominal value of the sensor, the device is set at the factory, at the very maximum, to the OPL value of the process connection. If you want to use the entire sensor range, select a process connection with a higher OPL value (1.5 x PN; PN = MWP).
- In oxygen applications, the values for "p_{max} and T_{max} for oxygen applications" as per → 27, "Oxygen applications" may not be exceeded.

1) With regard to their stability-temperature property, the materials 1.4435 and 1.4404 are grouped together under 13EO in EN 1092-1 Tab. 18. The chemical composition of the two materials can be identical.

2) The equation does not apply for PMP71 and PMP75 with a 40 bar or 100 bar measuring cell.

Mechanical construction

Housing dimensions T14

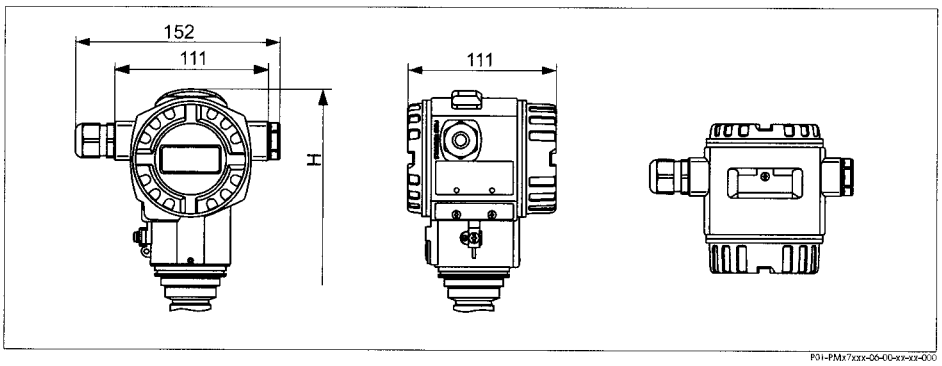

Front view, left-hand side view, top view
→ See the process connection in question for installation height. Housing weight → 61.

Housing dimensions T17

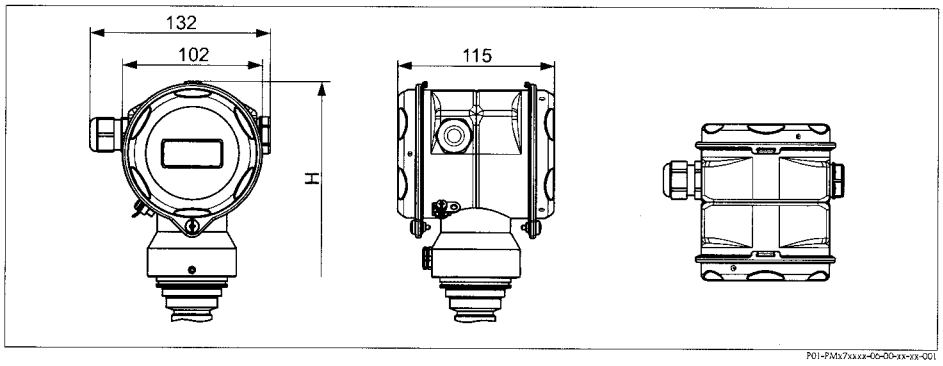

Front view, left-hand side view, top view
→ See the process connection in question for installation height. Housing weight → 61.

Process connections PMC71 (with ceramic process isolating diaphragm)

Note!
Some device versions have CRN approval. For a CRN-approved device, a CRN-approved process connection (→ 77, feature 70 "Process connection") has to be ordered with a CSA approval (→ 77, feature 10 "Approval"). These devices are fitted with a separate plate bearing the registration number 0F10525.5C.

Thread, internal process isolating diaphragm

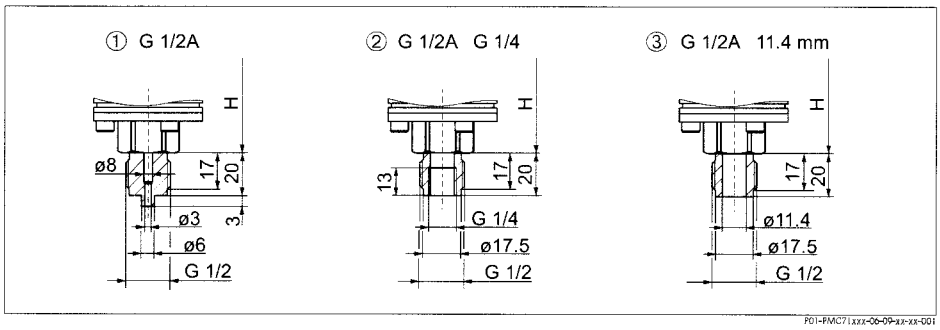

Process connections PMC71, thread ISO 228
Installation height → 34.

1 *Thread ISO 228 G 1/2 A EN 837;*
Material version GA: AISI 316L, version GB: Alloy C276/2.4819, version GC: Monel,
Version GD: PVDF (max.: 15 bar/225 psi, max.: −10...+60°C/+14...+140°F); mount version "GD" with a mounting bracket only (→ 25); Weight: 0.63 kg
2 *Thread ISO 228 G 1/2 A G 1/4 (female);*
Material version GE: AISI 316L, version GF: Alloy C276/2.4819, version GG: Monel; Weight: 0.63 kg
3 *Thread ISO 228 G 1/2 A hole 11.4 mm;*
Material version GH: AISI 316L, version GJ: Alloy C276/2.4819, version GK: Monel; Weight: 0.63 kg

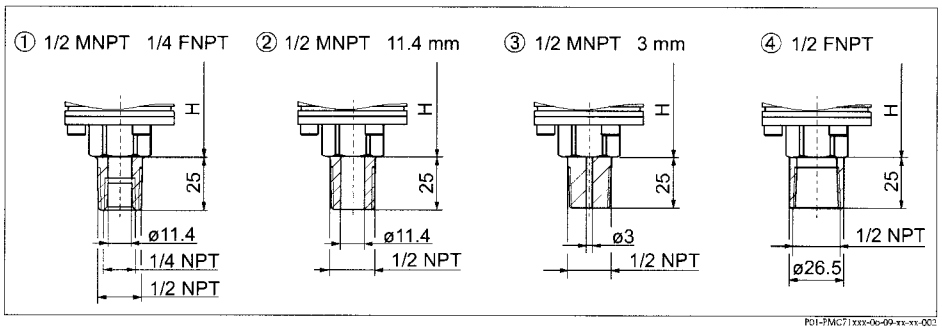

Process connections PMC71, thread ANSI
Installation height → 34.

1 *Thread ANSI 1/2 MNPT 1/4 FNPT;*
Material version RA: AISI 316L, version RB: Alloy C276/2.4819, version RC: Monel; Weight: 0.63 kg
2 *Thread ANSI 1/2 MNPT hole 11.4;*
Material version RD: AISI 316L, version RE: Alloy C276/2.4819, version RF: Monel; Weight: 0.63 kg
3 *Thread ANSI 1/2 MNPT hole 3 mm;*
Material version RG: PVDF(max.: 15 bar/225 psi, max.: −10...+60°C/+14...+140°F),
mount with mounting bracket only (→ 25); Weight: 0.63 kg
4 *Thread ANSI 1/2 FNPT;*
Material version RH: AISI 316L, version RJ: Alloy C276/2.4819, version RK: Monel; Weight: 0.63 kg

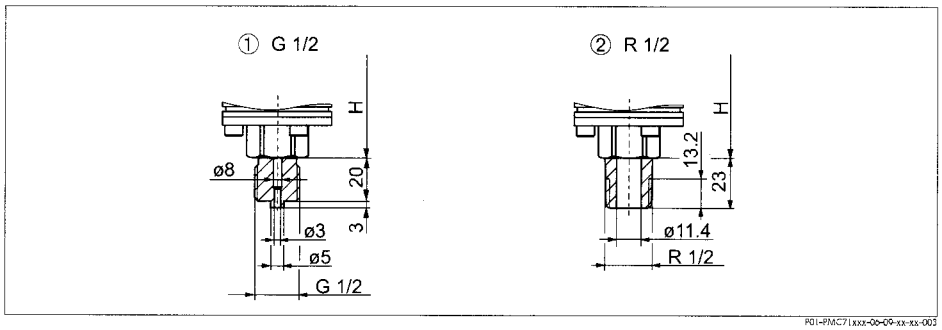

P01-PMC71xxx-06-09-xx-xx-003

Process connections PMC71, thread JIS
Installation height → 34.

1 Version GL: thread JIS B0202 G 1/2 (male), material: AISI 316L; Weight: 0.63 kg
2 Version RL: thread JIS B0203 R 1/2 (male), material: AISI 316L; Weight: 0.63 kg

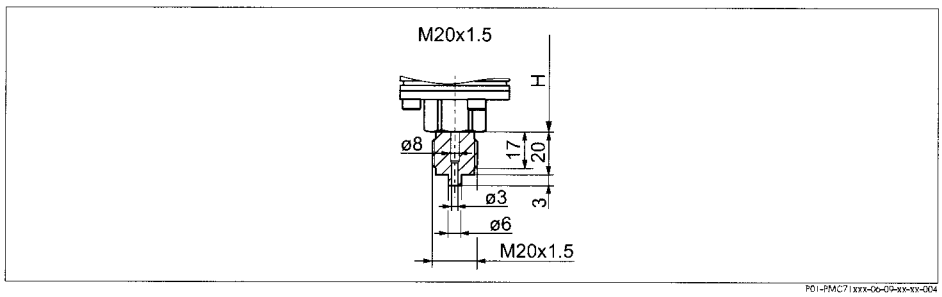

P01-PMC71xxx-06-09-xx-xx-004

Process connections PMC71 thread DIN 13 M 20x1.5 hole 3 mm
Material version GP: AISI 316L, version GQ: Alloy C276/2.4819
Installation height → 34; Weight: 0.63 kg.

Installation height H for devices with thread connection and internal process isolating diaphragm

Description	Housing T14	Housing T17
PMC71	155 mm	171 mm
PMC71 with Ex d[ia], CSA XP or FM XP	225 mm	241 mm (Ex d = 311 mm)
PMC71 High temperature version [1]	235 mm	251 mm
PMC 71 High temperature version [1] with Ex d[ia], CSA XP or FM XP	305 mm	321 mm (Ex d = 391 mm)

1) High temperature version, → 79, feature 100 "Additional options 1" and feature 110 "Additional options 2", versions "T"

Thread, flush-mounted process isolating diaphragm

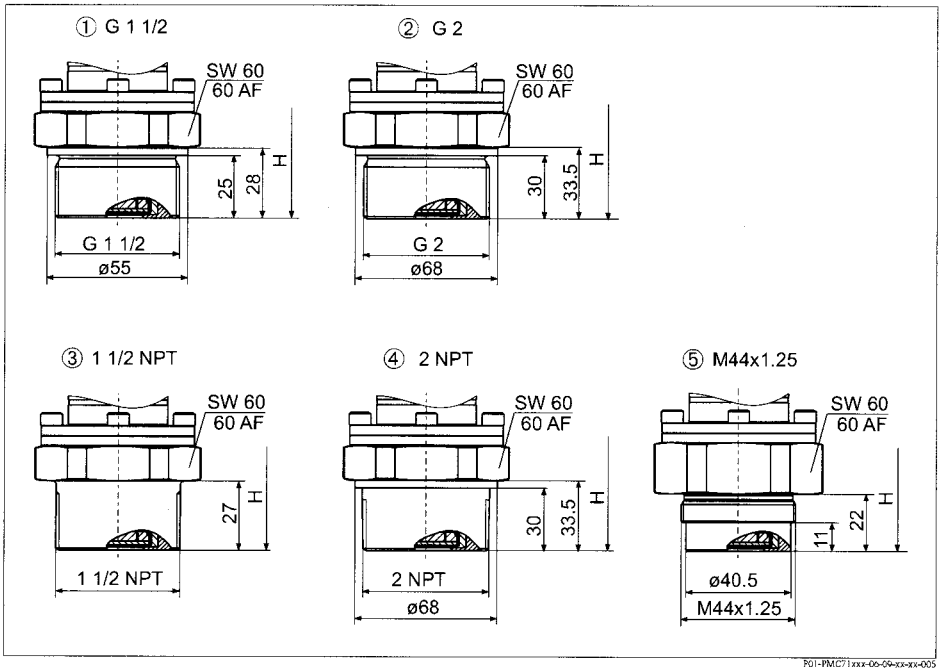

P01-PMC71xxx-06-09-xx-xx-005

Process connections PMC71,
→ Installation height see table below.

1 *Thread ISO 228 G 1 1/2 A;*
Material version 1G: AISI 316L, version 1H: Alloy C276/2.4819, version 1J: Monel; Weight: 0.63 kg
2 *Thread ISO 228 G 2 A;*
Material version 1K: AISI 316L, version 1L: Alloy C276/2.4819, version 1M: Monel; Weight: 0.63 kg
3 *Thread ANSI 1 1/2 MNPT;*
Material version 2D: AISI 316L, version 2E: Alloy C276/2.4819, version 2F: Monel; Weight: 0.63 kg
4 *Thread ANSI 2 MNPT;*
Material version 2G: AISI 316L, version 2H: Alloy C276/2.4819, version 2J: Monel; Weight: 0.63 kg
5 *Thread DIN 13 M 44x1.25;*
Material version 1R: AISI 316L, version 1S: Alloy C276/2.4819; Weight: 0.63 kg

Installation height H for devices with thread connection and flush-mounted process isolating diaphragm

Description	Housing T14	Housing T17
PMC71/PMC71 high temperature version	215 mm	231 mm
PMC71/PMC71 high temperature version: with Ex d[ia], CSA XP or FM XP	280 mm	296 mm

EN/DIN flanges, connection dimensions as per EN 1092-1/DIN 2527

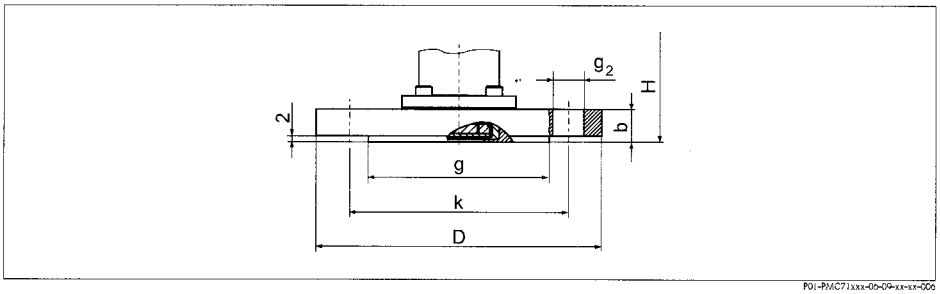

P01-PMC71xxx-05-09-xx-xx-006

Process connection PMC71, EN/DIN flange with raised face (flush-mounted process isolating diaphragm)
Installation height → 38.

	Flange[1]							Boltholes			
Version	**Material**	**Nominal diameter**	**Nominal pressure**	**Shape [2]**	**Diameter D** [mm]	**Thick-ness b** [mm]	**Raised face g** [mm]	**Quantity**	**Diameter g_2** [mm]	**Hole circle k** [mm]	**Flange weight [3]** [kg]
CP	AISI 316L	DN 32	PN 10-40	B1 (D)	140	18	77	4	18	100	1.9
CQ	AISI 316L	DN 40	PN 10-40	B1 (D)	150	18	87	4	18	110	2.2
BR	PVDF [4]	DN 50	PN 10-16	B1 (D)	165	21.4	102	4	18	125	0.6
B3	AISI 316L	DN 50	PN 10-40	B1 (D)	165	20	102	4	18	125	3.0
C3	AISI 316L	DN 50	PN 63	B2 (D)	180	26	108	4	22	135	4.6
BS	PVDF [4]	DN 80	PN 10/16	B1 (D)	200	21.4	138	8	18	160	1.0
B4	AISI 316L	DN 80	PN 10-40	B1 (D)	200	24	138	8	18	160	5.4

1) The roughness of the surface in contact with the medium, including the raised face of the flanges (all standards), made of Hastelloy C, Monel or Tantalum is Ra 0.8 µm. Lower surface roughness on request.

2) Designation in brackets as per DIN 2527

3) Housing weight → 61

4) Max.: 15 bar (225 psi), max.: −10...+60°C (+14...+140°F)

ANSI flange, connection dimensions as per ANSI B 16.5, raised face RF

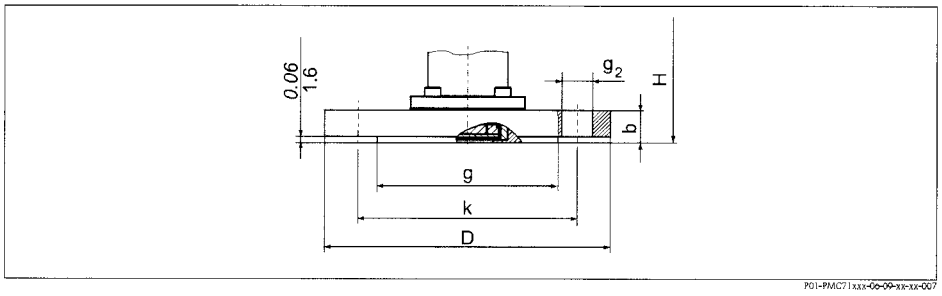

Process connection PMC71, ANSI flange with raised face (flush-mounted process isolating diaphragm)
Installation height → 38.

	Flange [1]						Boltholes			
Version	**Material**	**Nominal diameter** [in]	**Class** [lb./sq.in]	**Diameter D** [in] *[mm]*	**Thickness b** [in] *[mm]*	**Raised face g** [in] *[mm]*	**Quantity**	**Diameter g_2** [in] *[mm]*	**Hole circle k** [in] *[mm]*	**Flange weight [2]** [kg]
AE	AISI 316/316L [3]	1 1/2	150	5 / *127*	0.69 / *17.5*	2.88 / *73.2*	4	0.62 / *15.7*	3.88 / *98.6*	1.0
AQ	AISI 316/316L [3]	1 1/2	300	6.12 / *155.4*	0.81 / *20.6*	2.88 / *73.2*	4	0.88 / *22.4*	4.5 / *114.3*	2.6
AF	AISI 316/316L [3]	2	150	6 / *152.4*	0.75 / *19.1*	3.62 / *91.9*	4	0.75 / *19.1*	4.75 / *120.7*	2.4
JR	ECTFE [4]	2	150	6 / *152.4*	0.75 / *19.1*	3.62 / *91.9*	4	0.75 / *19.1*	4.75 / *120.7*	2.4
A3	PVDF [5]	2	150	6 / *152.4*	0.75 / *19.1*	3.62 / *91.9*	4	0.75 / *19.1*	4.75 / *120.7*	0.5
AR	AISI 316/316L [3]	2	300	6.5 / *165.1*	0.88 / *22.4*	3.62 / *91.9*	8	0.75 / *19.1*	5 / *127*	3.2
AG	AISI 316/316L [3]	3	150	7.5 / *190.5*	0.94 / *23.9*	5 / *127*	4	0.75 / *19.1*	6 / *152.4*	4.9
JS	ECTFE [4]	3	150	7.5 / *190.5*	0.94 / *23.9*	5 / *127*	4	0.75 / *19.1*	6 / *152.4*	4.9
A4	PVDF [5]	3	150	7.5 / *190.5*	0.94 / *23.9*	5 / *127*	4	0.75 / *19.1*	6 / *152.4*	0.9
AS	AISI 316/316L [3]	3	300	8.25 / *209.5*	1.12 / *28.4*	5 / *127*	8	0.88 / *22.4*	6.62 / *168.1*	6.8
AH	AISI 316/316L [3]	4	150	9 / *228.6*	0.94 / *23.9*	6.19 / *157.2*	8	0.75 / *19.1*	7.5 / *190.5*	7.1
JT	ECTFE [4]	4	150	9 / *228.6*	0.94 / *23.9*	6.19 / *157.2*	8	0.75 / *19.1*	7.5 / *190.5*	7.1
AT	AISI 316/316L [3]	4	300	10 / *254*	1.25 / *31.8*	6.19 / *157.2*	8	0.88 / *22.4*	7.88 / *200.2*	11.6

1) The roughness of the surface in contact with the medium, including the raised face of the flanges (all standards), made of Hastelloy C, Monel or Tantalum is Ra 0.8 µm. Lower surface roughness on request.

2) Housing weight → 61

3) Combination of AISI 316 for required pressure resistance and AISI 316L for required chemical resistance (dual rated)

4) ECTFE coating on AISI 316L/1.4435
When operating in hazardous area, avoid electrostatic charge of the plastic surface.

5) max.: 15 bar (225 psi), max.: −10...+60°C (+14...+140°F)

JIS flange, connection dimensions as per JIS B 2220 BL, raised face RF

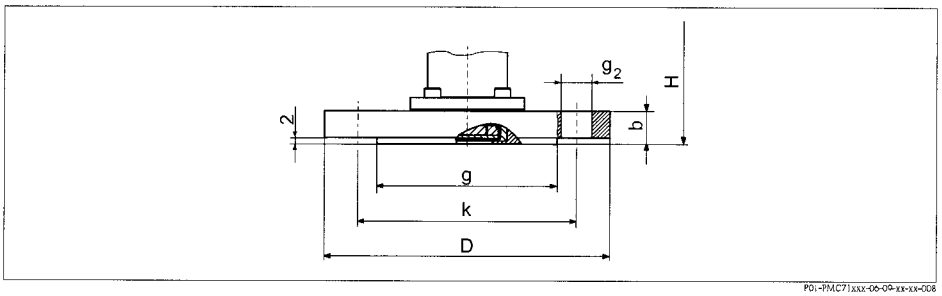

Process connection PMC71, JIS flange with raised face RF (flush-mounted process isolating diaphragm), AISI 316L/ 1.4435
→ Installation height see table below.

	Flange [1]					Boltholes			
Versions	**Nominal dimension**	**Nominal pressure**	**Diameter** **D** [mm]	**Thickness** **b** [mm]	**Raised face** **g** [mm]	**Quantity**	**Diameter** **g_2** [mm]	**Hole circle** **k** [mm]	**Flange weight [2]** [kg]
KF	50 A	10 K	155	16	96	4	19	120	2.0
KL	80 A	10 K	185	18	127	8	19	150	3.3
KH	100 A	10 K	210	18	151	8	19	175	4.4

1) The roughness of the surface in contact with the medium, including the raised face of the flanges (all standards), made of Hastelloy C, Monel or Tantalum is Ra 0.8. Lower surface roughness on request.

2) Housing weight see → ≙ 61

Installation height H for devices with flange

Description	T14 housing	T17 housing
PMC71	215 mm	231 mm
PMC71 with Ex d[ia], CSA XP or FM XP	280 mm	296 mm

Hygienic connections, flush-mounted process isolating diaphragm

Note!
Many process connections with an EPDM or HNBR seal are in accordance with the 3A-sanitary standard approved for PMC71. This means that a 3A-approved process connection in combination with an EPDM or HNBR seal must be selected when ordering for the 3A approval for the PMC71 version to be valid.
→ For ordering information on EPDM or HNBR seals, → 79 "Ordering information PMC71", feature 80 "Sensor seal", version B or F.

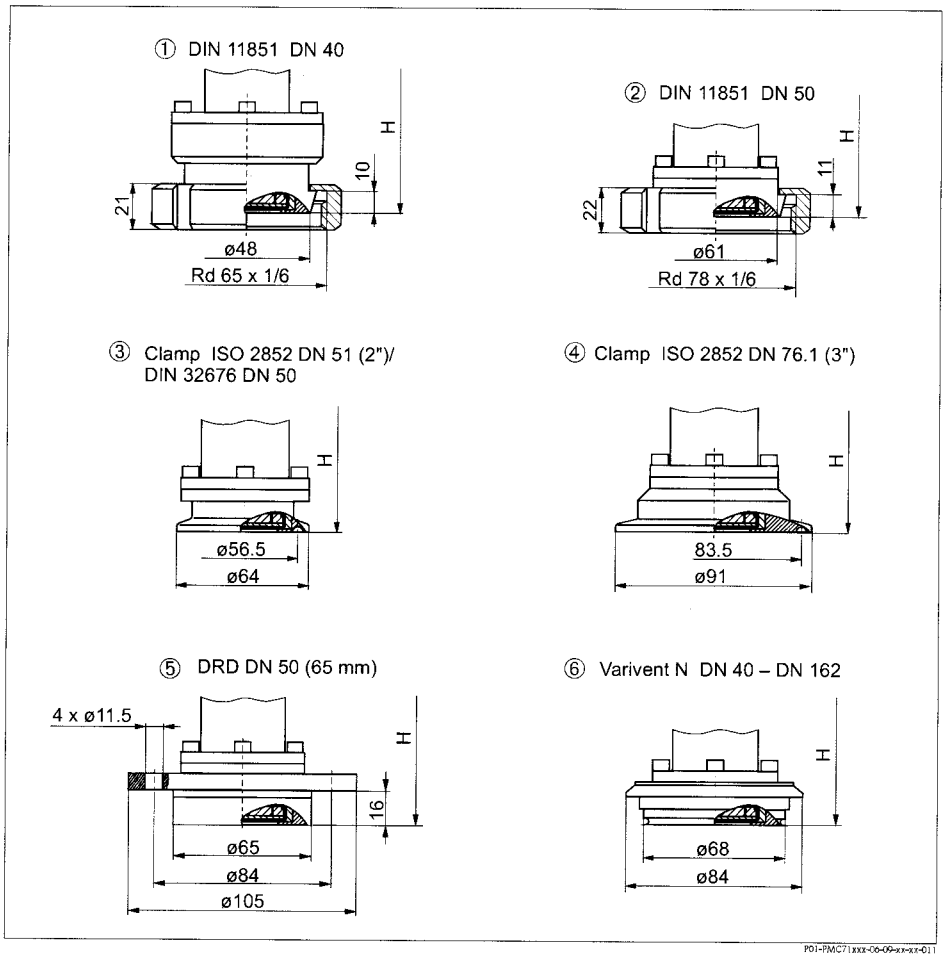

Process connections PMC71, Hygienic connections, material AISI 316L
surface roughness of the surfaces in contact with the medium ≤ 0.8 µm as standard. Lower surface roughness on request.

1 *Version MP: DIN 11851 DN 40 PN 25, 3A with HNBR or EPDM seal*
2 *Version MR: DIN 11851 DN 50 PN 25, 3A with HNBR or EPDM seal*
3 *Version TD: Tri-Clamp ISO 2852 (2"), DIN 32675 DN 50, 3A with HNBR or EPDM seal*
4 *Version TF: Tri-Clamp ISO 2852 (3"), 3A with HNBR or EPDM seal*
5 *Version TK: DRD DN50 (65 mm) PN 25, 3A with HNBR or EPDM seal*
6 *Version TR: Varivent Type N for pipes 40 – 162, PN 40, 3A with HNBR or EPDM seal*

Installation height H for devices with hygienic connection and flush-mounted process isolating diaphragm

Description	T14 housing	T17 housing
PMC71/PMC71 high temperature version	215 mm	231 mm
PMC71/PMC71 high temperature version: with Ex d[ia], CSA XP or FM XP	280 mm	296 mm

Process connections PMP71 (with metallic process isolating diaphragm)

Note!
Some device versions have CRN approval. For a CRN-approved device, a CRN-approved process connection (→ 78, feature 70 "Process connection") has to be ordered with a CSA approval (→ 77, feature 10 "Approval"). These devices are fitted with a separate plate bearing the registration number 0F10525.5C.

Thread, internal process isolating diaphragm

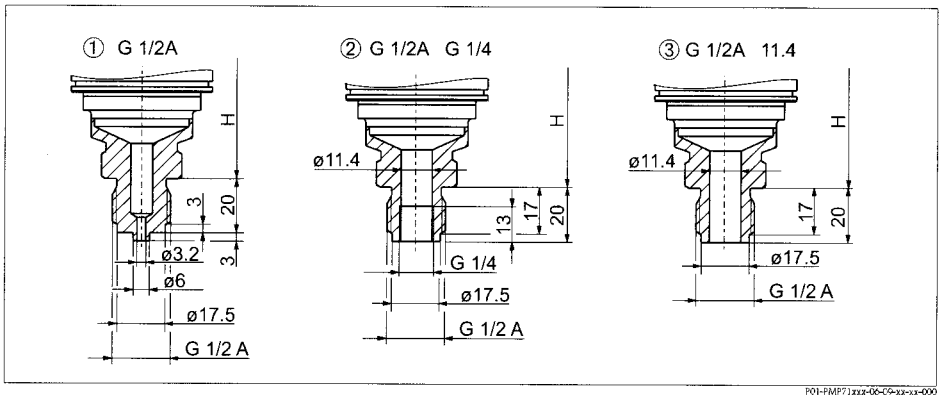

Process connections PMP71, thread ISO 228
Installation height H → 41.

1 *Thread ISO 228 G 1/2 A EN 837;*
Material version GA: AISI 316L, version GB: Alloy C276/2.4819; Weight: 0.6 kg
2 *Thread ISO 228 G 1/2 A G 1/4 (female);*
Material version GE: AISI 316L, version GF: Alloy C276/2.4819; Weight: 0.6 kg
3 *Thread ISO 228 G 1/2 A hole 11.4 mm;*
Material version GH: AISI 316L, version GJ: Alloy C276/2.4819; Weight: 0.6 kg

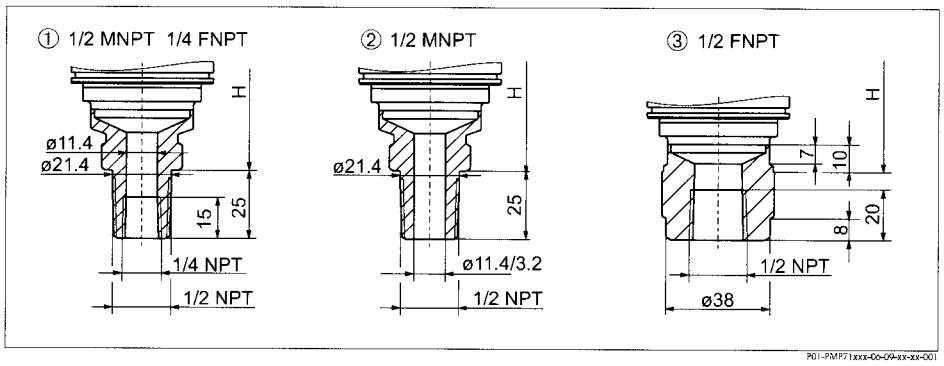

Process connections PMP71, thread ANSI
Installation height → 41.

1 *Thread ANSI 1/2 MNPT 1/4 FNPT;*
Material version RA: AISI 316L, version RB: Alloy C276/2.4819; Weight: 0.6 kg
2 *Thread ANSI 1/2 MNPT; hole: 400 bar = 11.4 mm, 700 bar = 3.2 mm*
Material version RD: AISI 316L, version RE: Alloy C276/2.4819; Weight: 0.6 kg
3 *Thread ANSI 1/2 FNPT;*
Material version RH: AISI 316L, version RJ: Alloy C276/2.4819; Weight: 0.7 kg

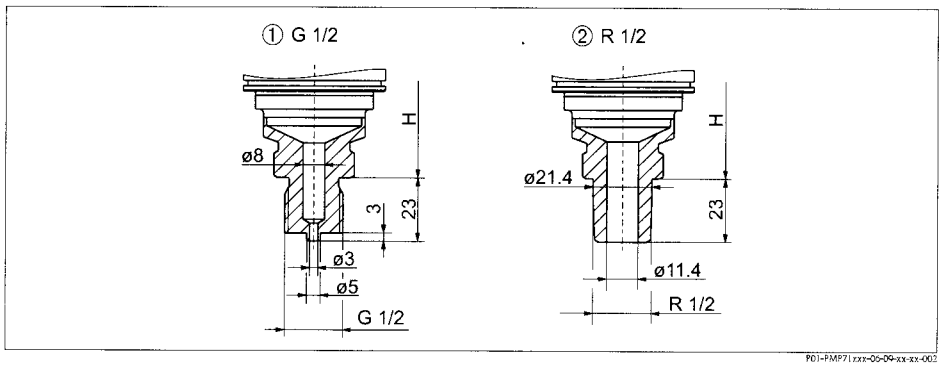

Process connections PMP71, thread JIS
→ Installation height H see table below.

1 Version GL: thread JIS B0202 G 1/2 (male), material: AISI 316L; Weight: 0.6 kg
2 Version RL: thread JIS B0203 R 1/2 (male), material: AISI 316L; Weight: 0.6 kg

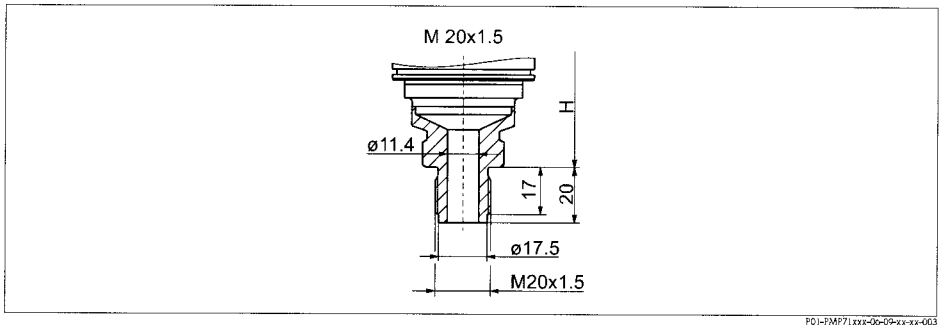

Process connections PMP71 thread DIN 13 M 20x1.5 hole 11.4 mm
Material version GP: AISI 316L, version GQ: Alloy C276/2.4819; Weight: 0.6 kg
→ Installation height H see table below.

Installation height H for devices with thread connection and internal flush-mounted process isolating diaphragm

	T14 housing	**T17 housing**
Height H	165 mm	181 mm
	Note! The versions with 700 bar sensor are approx. 20 mm (0.79 inch) higher.	

Thread, flush-mounted process isolating diaphragm

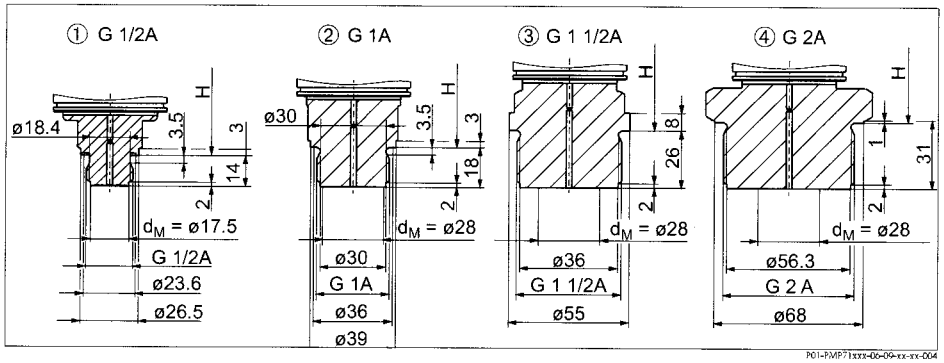

Process connections PMP71, thread ISO 228
Installation height → ⇗ 43.

1 *Thread ISO 228 G 1/2 A DIN 3852 (viton seal provided);*
Material version 1A: AISI 316L, version 1B: Alloy C276/2.4819; Weight: 0.4 kg
2 *Thread ISO 228 G 1 A;*
Material version 1D: AISI 316L, version 1E: Alloy C276/2.4819; Weight: 0.7 kg
3 *Thread ISO 228 G 1 1/2 A*
Material version 1G: AISI 316L, version 1H: Alloy C276/2.4819; Weight: 1.1 kg
4 *Thread ISO 228 G 2 A*
Material version 1K: AISI 316L, version 1L: Alloy C276/2.4819; Weight: 1.5 kg

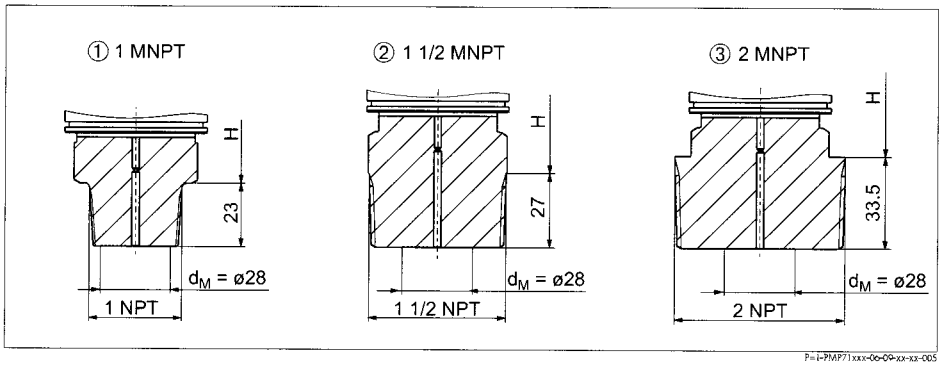

Process connections PMP71, thread ANSI
Installation height → ⇗ 43.

1 *Thread ANSI 1 MNPT;*
Material version 2A: AISI 316L, version 2B: Alloy C276/2.4819; Weight: 0.7 kg
2 *Thread ANSI 1 1/2 MNPT;*
Material version 2D: AISI 316L, version 2E: Alloy C276/2.4819; Weight: 1.0 kg
3 *Thread ANSI 2 MNPT*
Material version 2G: AISI 316L, version 2H: Alloy C276/2.4819; Weight: 1.3 kg

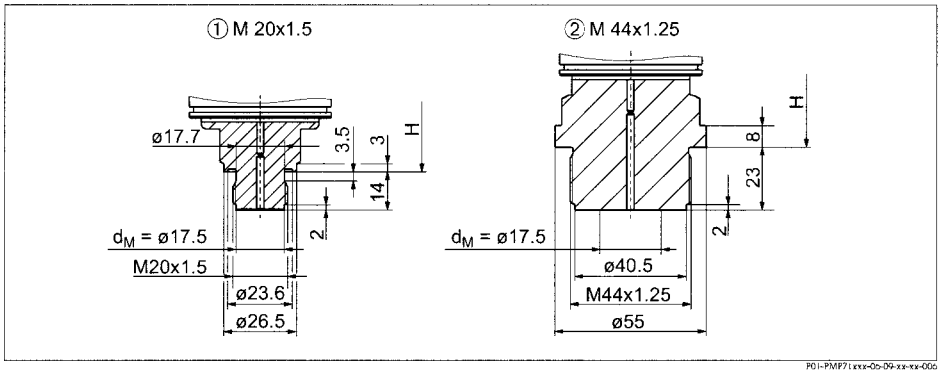

Process connections PMP71, thread DIN
→ Installation height see table, below.

1 Thread DIN 16288 M20;
Material version 1N: AISI 316L, version 1P: Alloy C276/2.4819; Weight: 0.4 kg
2 Thread DIN 13 M 44 x 1.25;
Material version 1R: AISI 316L, version 1S: Alloy C276/2.4819; Weight: 1.1 kg

Installation height H for devices with thread connection and flush-mounted process isolating diaphragm

Description	Housing T14	Housing T17
G 1/2	163 mm	179 mm
G 1	167 mm	183 mm
G 1 1/2 A	163 mm	179 mm
G 2 A	162 mm	178 mm
1 MNPT	162 mm	178 mm
1 1/2 MNPT	165 mm	181 mm
2 MNPT	159 mm	175 mm
M 20x1.5	163 mm	179 mm
M 44x1.25	170 mm	186 mm

EN/DIN flanges, connection dimensions as per EN 1092-1/DIN 2527

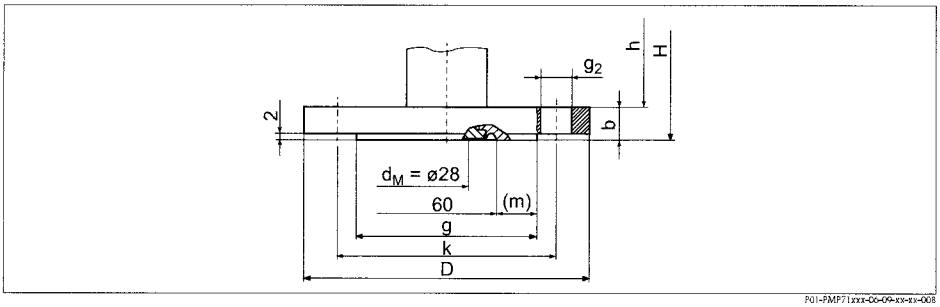

Process connection PMP71, EN/DIN flange with raised face, material AISI 316L

H: device height = height of device without flange h + flange thickness b
Height h → ≥ 46.

	Flange [1]							Boltholes			
Version	**Nominal diameter**	**Nominal pressure**	**Shape [2]**	**Diameter** D [mm]	**Thickness** b [mm]	**Raised face** g [mm]	**Width of the raised face** (m) [mm]	**Quantity**	**Diameter** g_2 [mm]	**Hole circle** k [mm]	**Flange weight [3]** [kg]
CN	DN 25	PN 10-40	B1 (D)	115	18	66 [4]	4	4	14	85	1.2
CP	DN 32	PN 10-40	B1 (D)	140	18	77 [4]	8.5	4	18	100	1.9
CQ	DN 40	PN 10-40	B1 (D)	150	18	87 [4]	-	4	18	110	2.2
B3	DN 50	PN 10-40	B1 (D)	165	20	102	-	4	18	125	3.0
B4	DN 80	PN 10-40	B1 (D)	200	24	138	-	8	18	160	5.3

1) The roughness of the surface in contact with the medium, including the raised face of the flanges (all standards), made of Hastelloy C, Monel or Tantalum is Ra 0.8 µm. Lower surface roughness on request.

2) Designation as per DIN 2527 in brackets

3) Housing weight → ≥ 61

4) With these process connections the raised face is smaller than described in the standard. Due to a smaller raised face a special seal must be used. Refer to a manufacturer of seals or your local Endress+Hauser Sales Center.

ANSI flanges, connection dimensions as per ANSI B 16.5, raised face RF
JIS flanges, connection dimensions as per B 2220 BL, Raised face RF

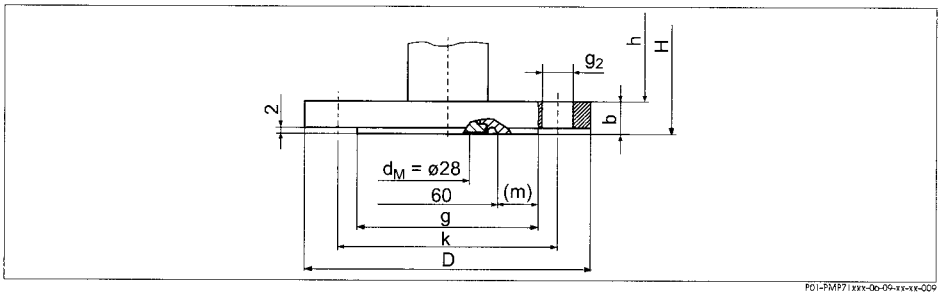

Process connection PMP71, ANSI flange or JIS flange with raised face RF; material

H: device height = height of device without flange h + flange thickness b. For the height h → *46.*

	Flange [1]							Boltholes			
Version	**Material**	**Nominal diameter**	**Class/ Nominal pressure**	**Diameter D** [in] / *[mm]*	**Thickness b** [in] / *[mm]*	**Diameter raised face g** [in] / *[mm]*	**Width of the raised face (m)** [in] / *[mm]*	**Quantity**	**Diameter g_2** [in] / *[mm]*	**Hole circle k** [in] / *[mm]*	**Flange weight [2]** [kg]
ANSI flange											
AN	AISI 316/316L [3]	1 in	300 lb./sq.in	4.88 / *124*	0.69 / *17.5*	2.76 [4] / *70*	0.2 / *5*	4	0.75 / *19.1*	3.5 / *88.9*	1.3
AE	AISI 316/316L [3]	1 1/2 in	150 lb./sq.in	5 / *127*	0.69 / *17.5*	2.88 [4] / *73.2*	0.52 / *6.6*	4	0.62 / *15.7*	3.88 / *98.6*	1.5
AQ	AISI 316/316L [3]	1 1/2 in	300 lb./sq.in	6.12 / *155.4*	0.81 / *20.6*	2.88 [4] / *73.2*	0.52 / *6.6*	4	0.88 / *22.4*	4.5 / *114.3*	2.6
AF	AISI 316/316L [3]	2 in	150 lb./sq.in	6 / *152.4*	0.75 / *19.1*	3.62 / *91.9*	-	4	0.75 / *19.1*	4.75 / *120.7*	2.4
AR	AISI 316/316L [3]	2 in	300 lb./sq.in	7.5 / *190.5*	0.88 / *22.3*	3.62 / *91.9*	-	8	0.75 / *19.1*	5 / *127*	3.2
AG	AISI 316/316L [3]	3 in	150 lb./sq.in	7.5 / *190.5*	0.94 / *23.9*	5 / *127*	-	4	0.75 / *19.1*	6 / *152.4*	4.9
AS	AISI 316/316L [3]	3 in	300 lb./sq.in	8.25 / *209.5*	1.12 / *28.4*	5 / *127*	-	8	0.88 / *22.4*	6.62 / *168.1*	6.7
AH	AISI 316/316L [3]	4 in	150 lb./sq.in	9 / *228.6*	0.94 / *23.9*	6.19 / *157.2*	-	8	0.75 / *19.1*	7.5 / *190.5*	7.1
AT	AISI 316/316L [3]	4 in	300 lb./sq.in	10 / *254*	1.25 / *31.8*	6.19 / *157.2*	-	8	0.88 / *22.4*	7.88 / *200.2*	11.6
JIS flange											
KA	AISI 316L	25 A	20 K	*125*	*16*	*67*	0.14 / 3.5	4	*19*	*90*	1.5
KF	AISI 316L	50 A	10 K	*155*	*16*	*96*	-	4	*19*	*120*	2.0
KL	AISI 316L	80 A	10 K	*185*	*18*	*127*	-	8	*19*	*150*	3.3
KH	AISI 316L	100 A	10 K	*210*	*18*	*151*	-	8	*19*	*175*	4.4

1) The roughness of the surface in contact with the medium, including the raised face of the flanges (all standards), made of Hastelloy C, Monel or Tantalum is Ra 0.8 µm. Lower surface roughness on request.

2) Housing weight → 61

3) Combination of AISI 316 for required pressure resistance and AISI 316L for required chemical resistance (dual rated)

4) With these process connections the raised face is smaller than described in the standard. Due to a smaller raised face a special seal must be used. Refer to a manufacturer of seals or your local Endress+Hauser Sales Center.

Height h for devices with flange

	T14 housing	T17 housing
Height h	165 mm	181 mm

Oval flange

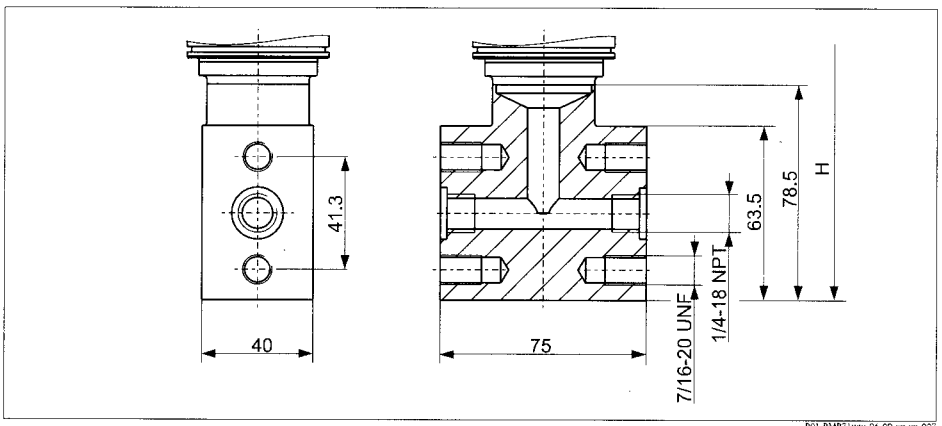

Version UR: oval flange adapter 1/4-18 NPT according to IEC 61518, mounting: 7/16-20 UNF; Weight: 1.9 kg

Prepared for diaphragm seal mount

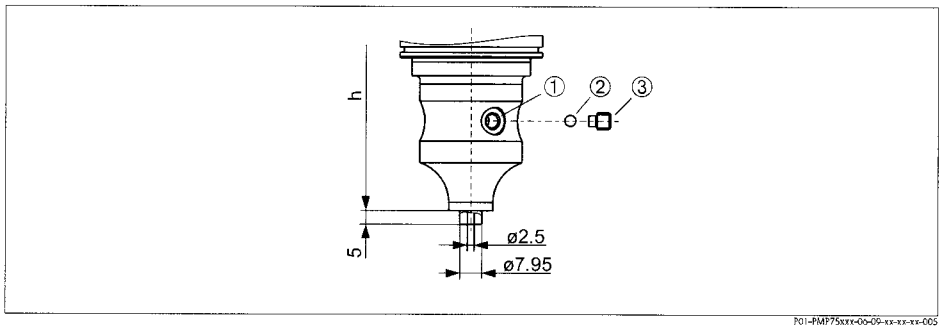

Version U1: prepared for diaphragm seal mount

1 *Hole for filling fluid*
2 *Bearing*
3 *Threaded pin with an internal hexagon 4 mm*

	T14 housing	T17 housing
Height h	190 mm	204 mm

PMP75 Basic unit

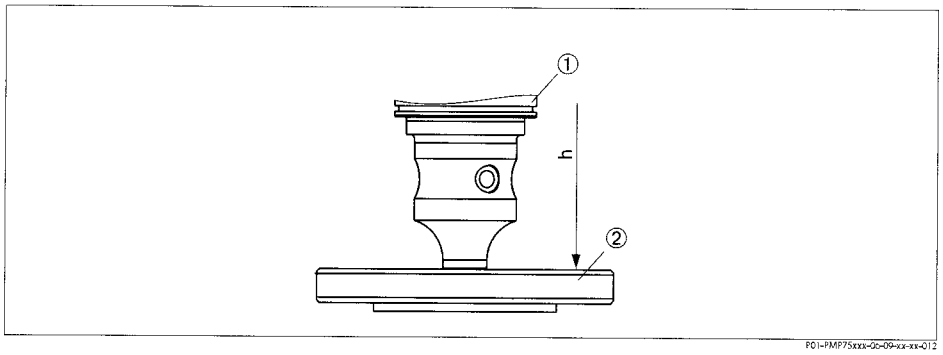

PMP75 Basic unit with diaphragm seal

1 PMP75 Basic unit
2 Diaphragm seal, here e.g. flange diaphragm seal

	T14 housing	**T17 housing**
Height	190 mm	204 mm

Process connections PMP75 (with metallic process isolating diaphragm)

Note!

- Some device versions have CRN approval. For a CRN-approved device, a CRN-approved process connection (→ 86, feature 70 "Process connection") has to be ordered with a CSA approval (→ 85, feature 10 "Approval"). Devices with capillary are not CRN-approved. These devices are fitted with a separate plate bearing the registration number 0F10525.5C.
- Specifications for the "T_K Process" are listed in the following tables. These are typical values. The temperature coefficients apply to silicone oil and the process isolating diaphragm material AISI 316L/1.4435. For other filling oils, this temperature coefficient must be multiplied by the T_K correction factor of the corresponding filling oil. For the T_K correction factors, → 69, section "Diaphragm seal filling oils".
- With regard to the temperature coefficient "T_K Ambient", devices with a temperature isolator behave like devices with the same process connection with 0.1 m capillary.
- In addition, the temperature coefficient "T_K Ambient" is listed in relation to the capillary length for the diaphragm seal versions which can be supplied with capillaries as standard. This information is found on → 69 ff, section "Influence of the temperature on the zero point".
- The weights of the diaphragm seals are given in the tables. → 61 for the weight of the housing.
- The following drawings are drawings that illustrate how the system works in principle. In other words, the dimensions of a diaphragm seal supplied can deviate from the dimensions given in this document.

Thread, flush-mounted process isolating diaphragm

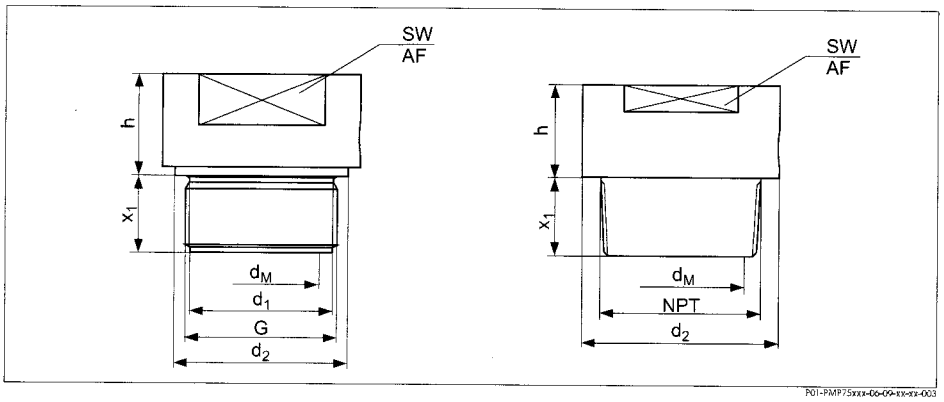

Process connections PMP75, left: thread ISO 228, right: thread ANSI

Threaded connection								Diaphragm seal					
Version	**Material** [1]	**Thread**	**Nominal pressure**	**Diameter**	**Diameter**	**Screw-in length**	**Across flats**	**max. Diaphragm diameter**	**T_K Ambient ≤ 40 bar**	**T_K Ambient > 40 bar**	**T_K Process**	**Height**	**Diaphragm seal weight**
			PN	**d_1**	**d_2**	**x_1**	**SW/AF**	**d_M**				**h**	
				[mm]	[mm]	[mm]		[mm]		[mbar/10 K]		[mm]	[kg]
1D	AISI 316L	G 1 A	400	30	39	21 [2]	41	30	+16.03	+24.33	+4.70	19	0.4
1E	Alloy C276								–	–	–		0.5
1G	AISI 316L	G 1 1/2 A	400	44	55	30	50	42	+5.4	+8.18	+3.50	20	0.9
1H	Alloy C276								–	–	–		1.0
1K	AISI 316L	G 2	400	56	68	30	65	50	+1.76	+2.68	+1.60	20	1.9
1L	Alloy C276								–	–	–		2.1
2A	AISI 316L	1 MNPT	400	–	48	28	41	24	+15.66	+24.42	+8.50	37	0.6
2B	Alloy C276								–	–	–		0.7
2D	AISI 316L	1 1/2 MNPT	400	–	52	30	46	36	+8.14	+12.39	+3.90	20	0.9
2E	Alloy C276								–	–	–		1.0
2G	AISI 316L	2 MNPT	400	–	78	30	65	38	+5.4	+8.18	+2.59	35	1.8
2H	Alloy C276								–	–	–		2.0

1) AISI 316L; Alloy C276/2.4819

2) 28 mm in conjucntion with high temperature oil

Note!
With the use of high temperature oils the design can deviate strongly.
For further information please contact your local Endress+Hauser Sales Center.

Tri-Clamp ISO 2852

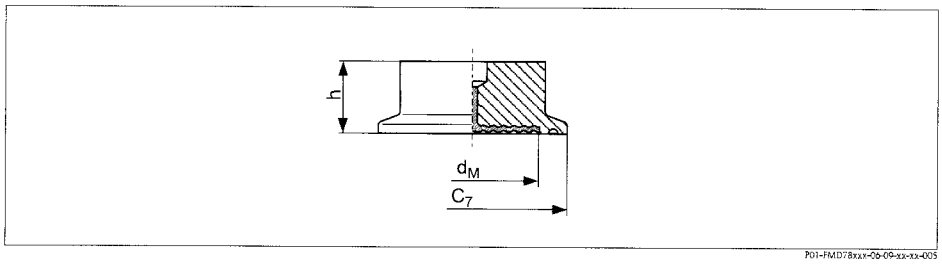

Process connection PMP75, material: AISI 316L, surface roughness of the surfaces in contact with the medium $R_a \leq 0.8$ µm as standard. Lower surface roughness on request.

Version	Nominal diameter ISO 2852	Nominal diameter DIN 32676	Nominal diameter	Diameter C_7	max. Diaphragm diameter d_M	Height h	T_K Ambient ≤ 40 bar	T_K Ambient > 40 bar	T_K Process	Diaphragm seal weight
			[in]	[mm]	[mm]	[mm]	[mbar/10 K]			[kg]
TB	DN 25	DN 25	1	50.5	24	37	+15.33	+24.0	+4.25	0.32
TC [1]	DN 38	DN 40	1 1/2	50.5	34	30	+8.14	+12.39	+1.91	1.0
TD [1]	DN 51	DN 50	2	64	48	30	+3.45	+4.81	+1.25	1.1
TF	DN 76.1	–	3	91	73	30	+0.3	+0.35	+0.18	1.2

1) Diaphragm seal versions optionally in conformity with ASME-BPE for use in biochemical processes, wetted surfaces $R_a \leq 0.38$ µm (15.75 µin; 180 grit), electropolished; to be ordered using feature 60 "Additional option", version "P" in the order code

Tri-Clamp pipe diaphragm seal ISO 2852

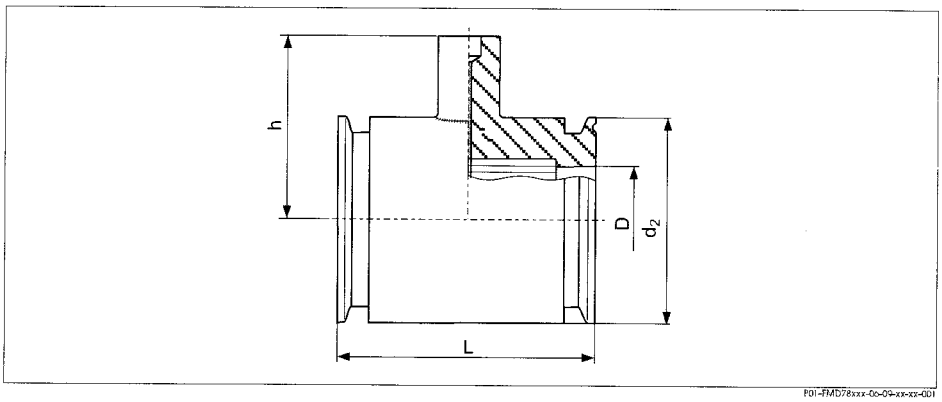

Process connection PMP75, material AISI 316L, surface roughness of the surfaces in contact with the medium $R_a \leq 0.8\ \mu m$ as standard. Lower surface roughness on request.

Version	Nominal diameter ISO 2852	Nominal diameter	Diameter D	Diameter d_2	Height h	Face-to-face-length L	T_K Ambient ≤ 40 bar	T_K Ambient > 40 bar	T_K Process	Diaphragm seal weight
			[in]	[mm]	[mm]	[mm]	[mbar/10 K]			[kg]
SB	DN 25	1	22.5	50.5	67	126	+7.75	+8.69	+4.49	1.7
SC [1]	DN 38	1 1/2	35.5	50.5	67	126	+5.17	+5.69	+3.46	1.0
SD [1]	DN 51	2	48.6	64	79	100	+3.56	+3.91	+2.69	1.7

1) Including 3.1 and pressure test as per Pressure Equipment Directive, category II

Varivent N for pipes DN 40 – DN 162

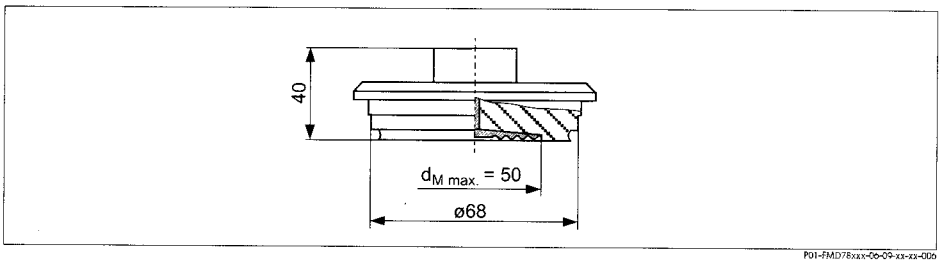

Process connection PMP75, surface roughness of the surfaces in contact with the medium $R_a \leq 0.8\ \mu m$ as standard. Lower surface roughness on request.

Version	Material	Nominal pressure	T_K Ambient ≤ 40 bar	T_K Ambient > 40 bar	T_K Process	Diaphragm seal weight
			[mbar/10 K]			[kg]
TR [1]	AISI 316L	PN 40	+2.26	+3.11	+1.65	1.3

1) Diaphragm seal versions optionally in conformity with ASME-BPE for use in biochemical processes, wetted surfaces $R_a \leq 0.38\ \mu m$ (15.75 µin; 180 grit), electropolished; to be ordered using feature 60 "Additional option", version "P" in the order code

DRD DN50 (65 mm)

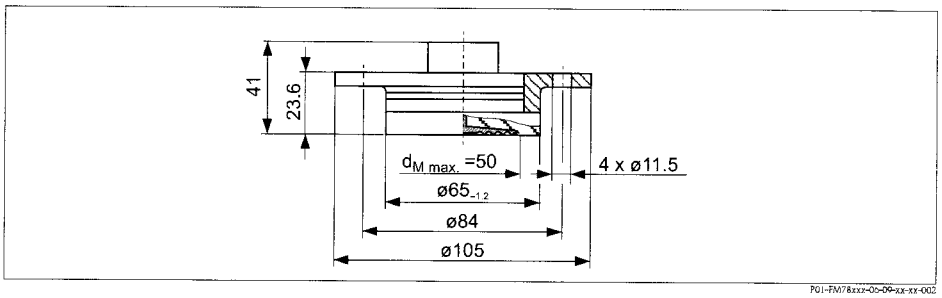

Process connection PMP75, surface roughness of the surfaces in contact with the medium $R_a \leq 0.8\,\mu m$ as standard. Lower surface roughness on request.

Version	Material	Nominal pressure	T_K Ambient ≤ 40 bar	T_K Ambient > 40 bar	T_K Process	Diaphragm seal weight
			[mbar/10 K]			[kg]
TK	AISI 316L	PN 25	+2.26	+3.11	+1.65	0.75

SMS nozzles with coupling nut

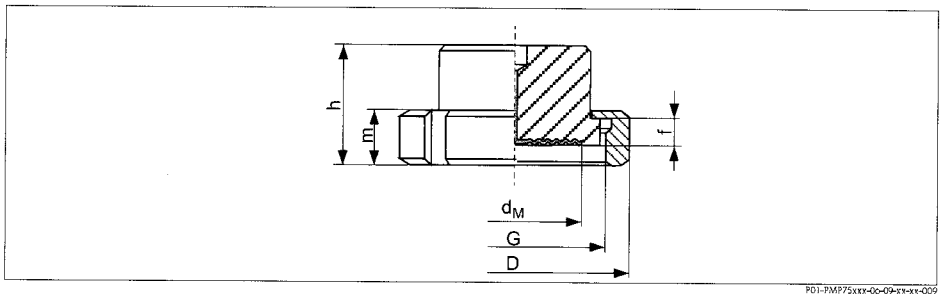

Process connection PMP75, material AISI 316L, surface roughness of the surfaces in contact with the medium $R_a \leq 0.8\,\mu m$ as standard. Lower surface roughness on request.

Version	Nominal diameter	Nominal pressure	Diameter D	Adapter height f	Thread G	Height m	Height h	max. diaphragm diameter d_M	T_K Ambient ≤ 40 bar	T_K Ambient > 40 bar	T_K Process	Weight diaphragm seal
	[inch]	[bar]	[mm]	[mm]		[mm]	[mm]	[mm]	[mbar/10 K]			[kg]
TG	1	PN 25	54	3.5	Rd 40 – 1/6	20	42.5	24	+15.66	+24.22	+7.25	0.25
TH	1 1/2	PN 25	74	4	Rd 60 – 1/6	25	57	36	+8.18	+12.39	+2.59	0.65
TI	2	PN 25	84	4	Rd 70 – 1/6	26	62	48	+5.4	+8.18	+1.10	1.05

APV-RJT nozzles with coupling nut

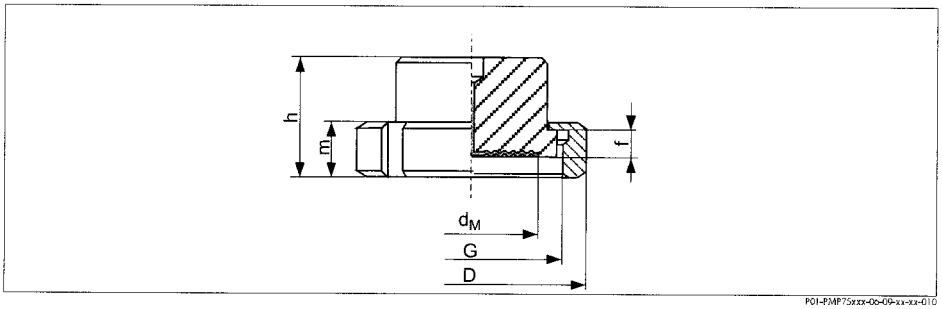

Process connection PMP75, material AISI 316L, surface roughness of the surfaces in contact with the medium $R_a \leq 0.8\,\mu m$ as standard. Lower surface roughness on request.

Version	Nominal diameter	Nominal pressure	Diameter	Adapter height	Thread	Height	Height	max. diaphragm diameter	T_K Ambient ≤ 40 bar	T_K Ambient > 40 bar	T_K Process	Weight diaphragm seal
		PN	D	f	G	m	h	d_M				
	[inch]	[bar]	[mm]	[mm]		[mm]	[mm]	[mm]	[mbar/10 K]			[kg]
TL	1	PN 40	77	6.5	1 13/16 – 1/8"	22	42.6	21	+15.66	+24.42	+4.21	0.45
TM	1 1/2	PN 40	72	6.4	2 5/16 – 1/8"	22	42.6	28	+8.18	+12.39	+2.59	0.75
TN	2	PN 40	86	6.4	2 7/8 – 1/8"	22	42.6	38	+5.4	+8.18	+1.76	1.2

APV-ISS nozzles with coupling nut

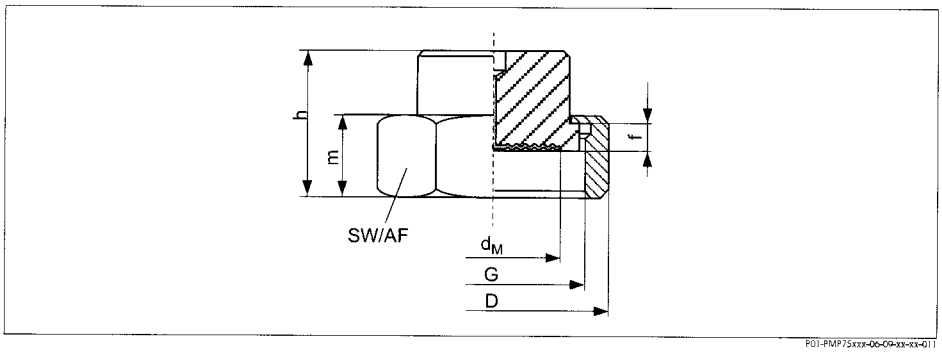

Process connection PMP75, material AISI 316L, surface roughness of the surfaces in contact with the medium $R_a \leq 0.8\,\mu m$ as standard. Lower surface roughness on request.

Version	Nominal diameter	Nominal pressure	Diameter	Adapter height	Thread	Height	Across flat	Height	max. diaphragm seal	T_K Ambient ≤ 40 bar	T_K Ambient > 40 bar	T_K Process	Weight Diaphragm seal
			D	f	G	m	AF	h	d_M				
	[inch]	[bar]	[mm]	[mm]		[mm]		[mm]	[mm]	[mbar/10 K]			[kg]
TP	1	PN 40	54.1	4	1 1/2" – 1/8"	30	46.8	50	24	+15.66	+24.42	+4.21	0.4
TQ	1 1/2	PN 40	72	4	2" – 1/8"	30	62	50	34	+8.14	+12.39	+2.59	0.6
TS	2	PN 40	89	4	2 1/2" – 1/8"	30	77	50	45	+5.4	+8.18	+1.76	1.1

Taper adapter with coupling nut, DIN 11851

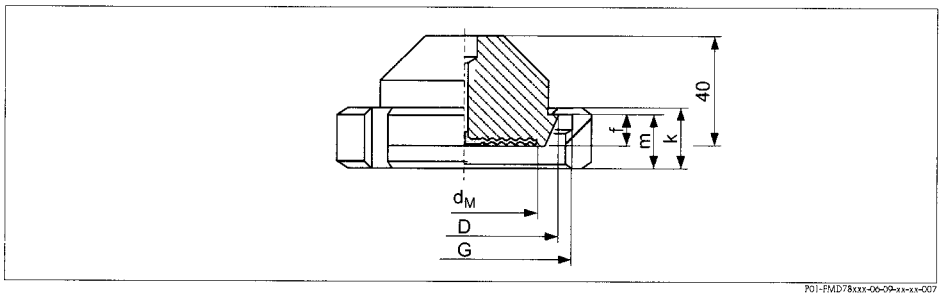

Process connection PMP75, material AISI 316L, surface roughness of the surfaces in contact with the medium $R_a \leq 0.8\ \mu m$ as standard. Lower surface roughness on request.

	Taper adapter				Slotted nut			Diaphragm seal				
Version	**Nominal diameter**	**Nominal pressure**	**Diameter** D [mm]	**Adapter height** f [mm]	**Thread** G	**Height** k [mm]	**Height** m [mm]	**max. Diaphragm diameter** d_M [mm]	**T_K Ambient ≤ 40 bar** [mbar/10 K]	**T_K Ambient > 40 bar** [mbar/10 K]	**T_K Process** [mbar/10 K]	**Diaphragm seal weight** [kg]
MR	DN 50	PN 25	68.5	11	Rd 78 x 1/6"	22	19	52	+2.21	+3.02	+1.40	1.1
MS	DN 65	PN 25	86	12	Rd 95 x 1/6"	35	21	66	+1.6	+2.1	+0.60	2.0
MT	DN 80	PN 25	100	12	Rd 110 x 1/4"	30	26	81	+0.66	+0.81	+0.40	2.55

Threaded adapter, DIN 11851

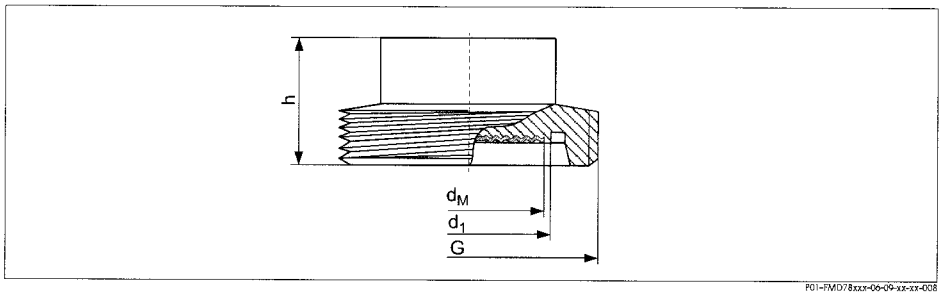

Process connection PMP75, material AISI 316L, surface roughness of the surfaces in contact with the medium $R_a \leq 0.8\ \mu m$ as standard. Lower surface roughness on request.

	Threaded adapter					Diaphragm seal				
Version	**Nominal diameter**	**Nominal pressure**	**Diameter** d_1 [mm]	**Thread** G	**Height** h [mm]	**max. Diaphragm diameter** d_M [mm]	**T_K Ambient ≤ 40 bar** [mbar/10 K]	**T_K Ambient > 40 bar** [mbar/10 K]	**T_K Process** [mbar/10 K]	**Diaphragm seal weight** [kg]
M3	DN 50	PN 25	54	Rd 78 x 1/6"	35	52	+2.21	+3.02	+0.88	0.9
M4	DN 65	PN 25	71	Rd 95 x 1/6"	40	66	+1.6	+2.1	+0.60	1.7
M5	DN 80	PN 25	85	Rd 110 x 1/4"	40	81	+0.66	+0.81	+0.40	2.0

EN/DIN flanges, connection dimensions as per EN 1092-1/DIN 2527 and DIN 2501-1

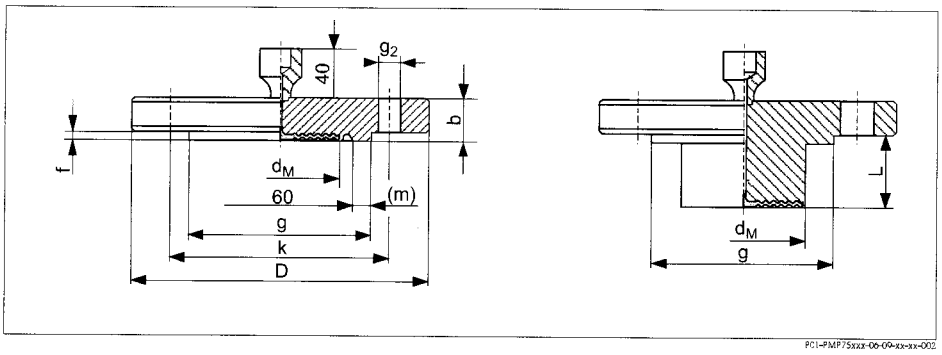

Process connection PMP75, EN/DIN flange with flush-mounted process isolating diaphragm, material AISI 316L

	Flange [1]								Boltholes			Diaphragm seal				
Version	Nominal diameter	Nominal pressure	Shape [2]	Diameter	Thickness	Raised face			Quantity	Diameter	Hole circle	max. Diaphragm diameter	T_K Ambient ≤ 40 bar	T_K Ambient > 40 bar	T_K Process	Diaphragm seal weight
				D	b	g	f	(m)		g_2	k	d_M				
				[mm]	[mm]	[mm]	[mm]	[mm]		[mm]	[mm]	[mm]	[mbar/10 K]			[kg]
CN	DN 25	PN 10-40	B1 (D)	115	18	66	3	3 [3]	4	14	85	32	+16.03	+24.33	+3.20	2.1
DN	DN 25	PN 63-160	E	140	24	68	2	-	4	18	100	28	+16.03	+24.33	+3.20	2.5
EN	DN 25	PN 250	E	150	28	68	2	-	4	22	105	28	+16.03	+24.33	+5.17	3.7
E1	DN 25	PN 400	E	180	38	68	2	-	4	26	130	28	+16.03	+24.33	+5.17	7.0
CP	DN 32	PN 10-40	B1 (D)	140	18	77	2.6	8.5 [3]	4	18	100	34	+8.14	+12.39	+2.59	1.9
CQ	DN 40	PN 10-40	B1 (D)	150	18	87	2.6	-	4	18	110	48	+5.40	+8.18	+2.15	2.2
B3	DN 50	PN 10-40	B1 (D)	165	26	102	3	-	4	18	125	59	+2.21	+3.02	+1.50	3.0
C3	DN 50	PN 63	B2 (E)	180	26	102	3	-	4	22	135	59	+2.21	+3.02	+1.00	4.6
EF	DN 50	PN 100/160	E	195	30	102	3	-	4	26	145	59	+2.21	+3.02	+1.00	6.2
ER	DN 50	PN 250	E	200	38	102	3	-	8	26	150	59	+2.21	+3.02	+1.15	7.7
E3	DN 50	PN 400	E	235	52	102	3	-	8	30	180	59	+2.21	+3.02	+1.15	14.7
B4	DN 80	PN 10-40	B1 (D)	200	24	138	3.5	-	8	18	160	89	+0.19	+0.25	+0.20	5.3
C4	DN 80	PN 100	B2 (E)	230	32	138	4	-	8	24	180	89	+0.19	+0.25	+0.35	8.9
C5	DN 100	PN 100	B2 (E)	265	36	175	5	-	8	30	210	89	+0.19	+0.25	+0.11	13.7
D3 [4]	DN 50	PN 10-40	B1 (D)	165	20	102	3	-	4	18	125	47	+3.45	+4.81	+1.67	[4]
D4 [4]	DN 80	PN 10-40	B1 (D)	200	24	138	3.5	-	8	18	160	72	+0.19	+0.25	+0.70	[4]

1) The roughness of the surface in contact with the medium, including the raised face of the flanges (all standards), made of Hastelloy C, Monel or Tantalum is Ra 0.8 μm. Lower surface roughness on request.

2) Designation as per DIN 2527 in brackets

3) With these process connections the width of the raised face is smaller than described in the standard. Due to a smaller width of the raised face a special seal must be used. Refer to a manufacturer of seals or your local Endress+Hauser Sales Center.

4) 50 mm, 100 mm or 200 mm extension selectable, for extension diameter and weight see the following table.

Version	Nominal diameter	Nominal pressure	Extension length [mm]	Extension diameter d_3 [mm]	Diaphragm seal weight [kg]
D3	DN 50	PN 10-40	50 / 100 / 200	48.3	3.2 / 3.8 / 4.4
D4	DN 80	PN 10-40	50 /100 / 200	76	6.2 / 6.7 / 7.8

ANSI flanges, connection dimensions as per ANSI B 16.5, raised face RF

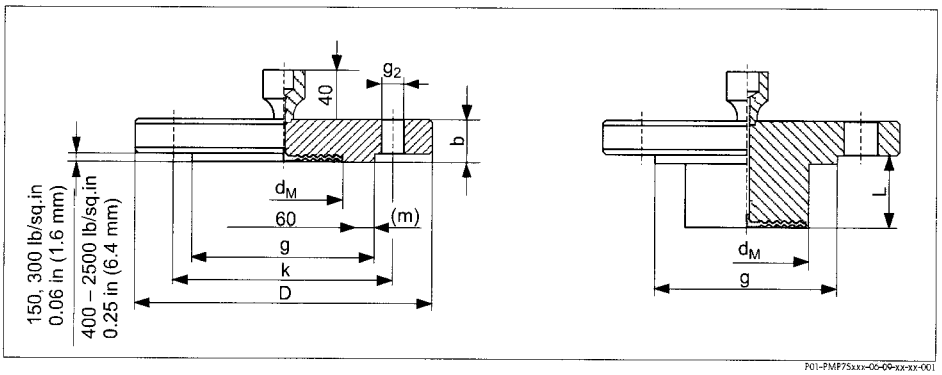

Process connection PMP75, ANSI flange with and without extended diaphragm seal

	Flange [1]							Boltholes			Diaphragm seal				
Version	Material [2]	Nominal diameter [in]	Class [lb./sq.in]	Diameter D [in] *[mm]*	Thickness b [in] *[mm]*	Raised face g [in] *[mm]*	Raised face (m) [in] *[mm]*	Quantity	Diameter g_2 [in] *[mm]*	Hole circle k [in] *[mm]*	max. Diaphragm diameter d_M [in] *[mm]*	T_K Ambient ≤ 40 bar [mbar/10 K]	T_K Ambient > 40 bar [mbar/10 K]	T_K Process [mbar/10 K]	Diaphragm seal weight [kg]
AC	AISI 316/ 316L	1	150	4.25 *108*	0.56 *14.2*	2 *50.8*	-	4	0.62 *15.7*	3.12 *79.2*	1.26 *32*	+16.03	+24.33	+3.65	1.2
AN	AISI 316/ 316L	1	300	4.88 *124*	0.69 *17.5*	2.76 *70*	2 *5* [3]	4	0.75 *19.1*	3.5 *88.9*	1.26 *32*	+16.03	+24.33	+3.65	1.3
HC	AISI 316/ 316L	1	400/ 600	4.88 *124*	0.69 *17.5*	2 *50.8*	-	4	0.75 *19.1*	3.5 *88.9*	1.26 *32*	+16.03	+24.33	+5.17	1.4
HN	AISI 316/ 316L	1	900/ 1500	5.88 *149.4*	1.12 *28.4*	2 *50.8*	-	4	1 *25.4*	4 *101.6*	1.26 *32*	+16.03	+24.33	+5.17	3.2
HO	AISI 316/ 316L	1	2500	6.25 *158.8*	1.38 *35.1*	2 *50.8*	-	4	1 *25.4*	4.25 *108*	1.26 *32*	+16.03	+24.33	+5.17	4.6
AE	AISI 316/ 316L	1 1/2	150	5 *127*	0.69 *17.5*	2.88 *73.2*	0.52 *6.6* [3]	4	0.62 *15.7*	3.88 *96.6*	1.89 *48*	+8.14	+12.39	+1.90	1.5
AQ	AISI 316/ 316L	1 1/2	300	6.12 *155.4*	0.81 *20.6*	2.88 *73.2*	0.52 *6.6* [3]	4	0.88 *22.4*	4.5 *114.3*	1.89 *48*	+8.14	+12.39	+2.59	2.6
AF	AISI 316/ 316L	2	150	6 *152.4*	0.75 *19.1*	3.62 *91.9*	-	4	0.75 *19.1*	4.75 *120.7*	2.32 *59*	+2.21	+3.02	+1.60	2.2
J3 [4]	AISI 316/ 316L	2	150	6 *152.4*	0.75 *19.1*	3.62 *91.9*	-	4	0.75 *19.1*	4.75 *120.7*	1.85 *47*	+3.45	+4.81	+1.67	[4]
AR	AISI 316/ 316L	2	300	6.5 *165.1*	0.88 *22.4*	3.62 *91.9*	-	8	0.75 *19.1*	5 *127*	2.32 *59*	+2.21	+3.02	+0.85	3.4
HF	AISI 316/ 316L	2	400/ 600	6.5 *165.1*	1 *25.4*	3.62 *91.9*	-	8	0.75 *19.1*	5 *127*	2.32 *59*	+2.21	+3.02	+0.85	4.3

	Flange [1]							Boltholes			Diaphragm seal				
Version	Material [2]	Nominal diameter	Class	Diameter	Thickness	Raised face		Quantity	Diameter	Hole circle	max. Diaphragm diameter	T_K Ambient ≤ 40 bar	T_K Ambient > 40 bar	T_K Process	Diaphragm seal weight
				D	b	g	(m)		g_2	k	d_M				
		[in]	[lb./sq.in]	[in] *[mm]*	[in] *[mm]*	[in] *[mm]*	[in] *[mm]*		[in] *[mm]*	[in] *[mm]*	[in] *[mm]*	[mbar/10 K]			[kg]
HR	AISI 316/ 316L	2	900/ 1500	8.5 *215.9*	1.5 *38.1*	3.62 *91.9*	-	8	1 *25.4*	6.5 *165.1*	2.32 *59*	+2.21	+3.02	+0.75	10.3
H3	AISI 316/ 316L	2	2500	9.25 *235*	2 *50.8*	3.62 *91.9*	-	8	1.12 *28.4*	6.75 *171.5*	2.32 *59*	+2.21	+3.02	+0.75	15.8
AG	AISI 316/ 316L	3	150	7.5 *190.5*	0.94 *23.9*	5 *127*	-	4	0.75 *19.1*	6 *152.4*	3.50 *89*	+0.19	+0.25	+0.18	5.1
AS	AISI 316/ 316L	3	300	8.25 *209.5*	1.12 *28.4*	5 *127*	-	8	0.75 *19.1*	6 *152.4*	3.5 *89*	+0.19	+0.25	+0.11	7.0
J4 [4]	AISI 316/ 316L	3	150	7.5 *190.5*	0.94 *23.9*	5 *127*	-	4	0.75 *19.1*	6 *152.4*	2.83 *72*	+0.19	+0.25	+0.70	[4]
J7 [4]	AISI 316/ 316L	3	300	8.25 *209.5*	1.12 *28.4*	5 *127*	-	8	0.88 *22.4*	6.62 *168.1*	2.83 *72*	+0.19	+0.25	+0.70	[4]
AH	AISI 316/ 316L	4	150	9 *228.6*	0.94 *23.9*	6.19 *157.2*	-	8	0.75 *19.1*	7.5 *190.5*	3.50 *89*	+0.19	+0.25	+0.33	7.2
AT	AISI 316/ 316L	4	300	10 *254*	1.25 *31.8*	6.19 *157.2*	-	8	0.88 *22.4*	7.88 *200.2*	3.50 *89*	+0.19	+0.25	+0.11	11.7
J5 [4]	AISI 316/ 316L	4	150	9 *228.6*	0.94 *23.9*	6.19 *157.2*	-	8	0.75 *19.1*	7.5 *190.5*	3.50 *89*	+0.19	+0.25	+0.11	[4]
J8 [4]	AISI 316/ 316L	4	300	10 *254*	1.25 *31.8*	6.19 *157.2*	-	8	0.88 *22.4*	7.88 *200.2*	3.50 *89*	+0.19	+0.25	+0.11	[4]

1) The roughness of the surface in contact with the medium, including the raised face of the flanges (all standards), made of Hastelloy C, Monel or Tantalum is Ra 0.8 μm. Lower surface roughness on request.

2) Combination of AISI 316 for required pressure resistance and AISI 316L for required chemical resistance (dual rated)

3) With these process connections the width of the raised face is smaller than described in the standard. Due to a smaller width of the raised face a special seal must be used. Refer to a manufacturer of seals or your local Endress+Hauser Sales Center.

4) 2", 4", 6" or 8" extension selectable, for extension diameter and weight see the following table

Version	Nominal diameter	Class	Extension length (L)	Extension diameter	Diaphragm seal weight
	[in]	[lb./sq.in]	[in] *[(mm)]*	[in] *[(mm)]*	[kg]
J3	2	150	– 2 *(50.8)* – 4 (101.6) – 6 *(152.4)* – 8 *(203.2)*	1.9 *(48.3)*	– 3.0 – 3.4 – 3.9 – 4.4
J4	3	150	– 2 *(50.8)* – 4 (101.6) – 6 *(152.4)* – 8 *(203.2)*	2.99 *(75.9)*	– 6.0 – 6.6 – 7.1 – 7.8
J7	3	300	– 2 *(50.8)* – 4 (101.6) – 6 *(152.4)* – 8 *(203.2)*	2.99 *(75.9)*	– 7.9 – 8.5 – 9.0 – 9.6
J5	4	150	– 2 *(50.8)* – 4 (101.6) – 6 *(152.4)* – 8 *(203.2)*	3.7 *(94)*	– 8.6 – 9.9 – 11.2 – 12.4

Version	Nominal diameter	Class	Extension length (L)	Extension diameter	Diaphragm seal weight
J8	4	300	– 2 *(50.8)* – 4 [101.6] – 6 *(152.4)* – 8 *(203.2)*	3.7 *(94)*	– 13.1 – 14.4 – 15.7 – 16.9

JIS flanges, connection dimensions as per JIS B 2220 BL, raised face RF

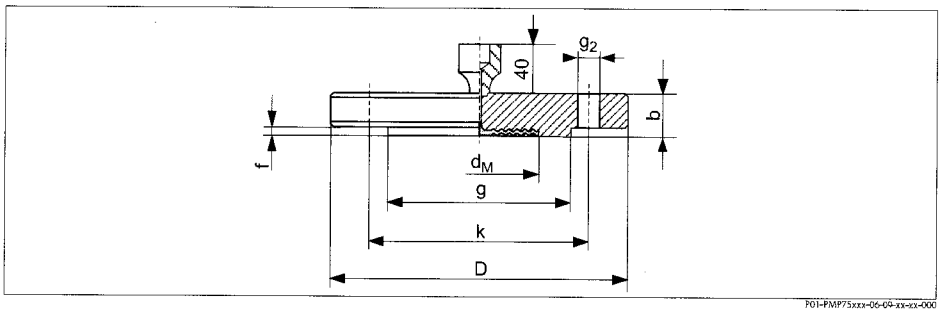

Process connection PMP75, JIS flange with raised face RF, material AISI 316L

	Flange [1]						Boltholes			Diaphragm seal				
Version	Nominal diameter	Nominal pressure	Diameter D [mm]	Thickness b [mm]	Diameter raised face g [mm]	Height raised face f [mm]	Quantity	Diameter g_2 [mm]	Hole circle k [mm]	max. Diaphragm diameter d_M [mm]	T_K Ambient ≤ 40 bar [mbar/10 K]	T_K Ambient > 40 bar [mbar/10 K]	T_K Process [mbar/10 K]	Diaphragm seal weight [2] [kg]
KC	25 A	10 K	125	14	67	1	4	19	90	32	+16.03	+24.33	+5.17	1.5
KF	50 A	10 K	155	16	96	2	4	19	120	59	+2.21	+3.02	+1.00	2.3
KL	80 A	10 K	185	18	127	2	8	19	150	89	+0.19	+0.25	+0.11	3.3
KH	100 A	10 K	210	18	151	2	8	19	175	89	+0.19	+0.25	+0.11	4.4

1) The roughness of the surface in contact with the medium, including the raised face of the flanges (all standards), made of Hastelloy C, Monel or Tantalum is Ra 0.8 µm. Lower surface roughness on request.

2) Housing weight → 61

Thread 1/2 NPT und 1 NPT, seperator

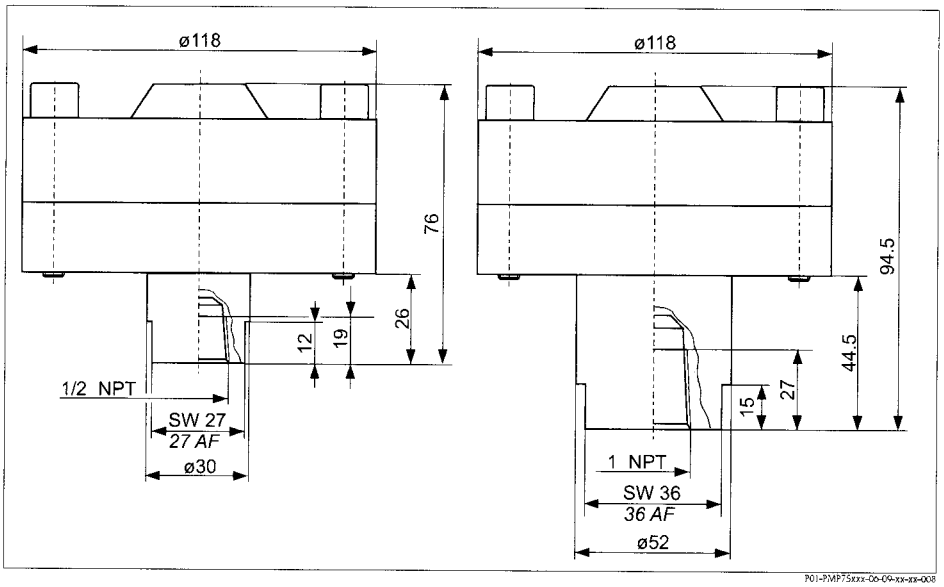

Process connection PMP75, versions "UG" and "UH", screwed, material AISI 316L , seal Viton

Version	Description	Nominal pressure	T_K Ambient	T_K Process	Diaphragm seal weight
			[mbar/10 K]		[kg]
UG	1/2 NPT	PN 250	+3.45	+1.28	4.75
UH	1 NPT	PN 250	+3.45	+1.28	5.0

Thread ISO 228 G 1/2 A and ANSI 1/2 MNPT, seperator

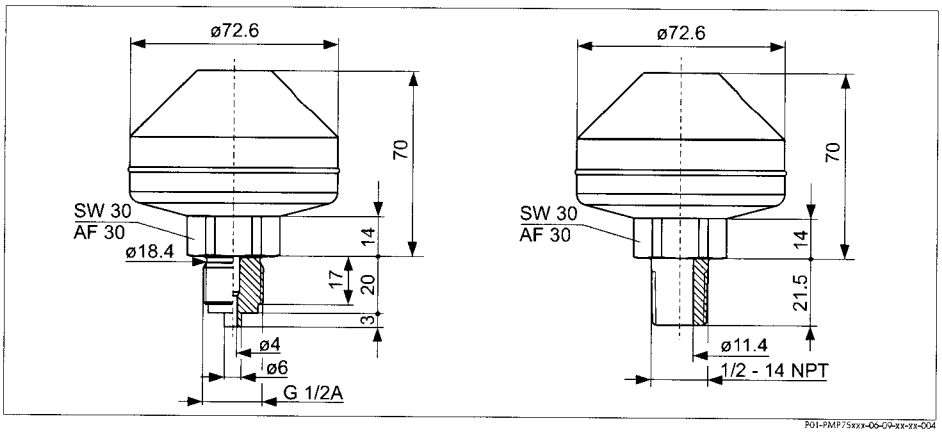

Process connection PMP75, versions "UA" and "UB", welded, material AISI 316L

Version	Description	Nominal pressure	T_K Ambient	T_K Process	Diaphragm seal weight
			[mbar/10 K]		[kg]
UA	ISO 228 G 1/2 A	PN 160	+0.9	+0.30	1.43
UB	ANSI 1/2 MNPT	PN 160	+0.9	+0.30	1.43

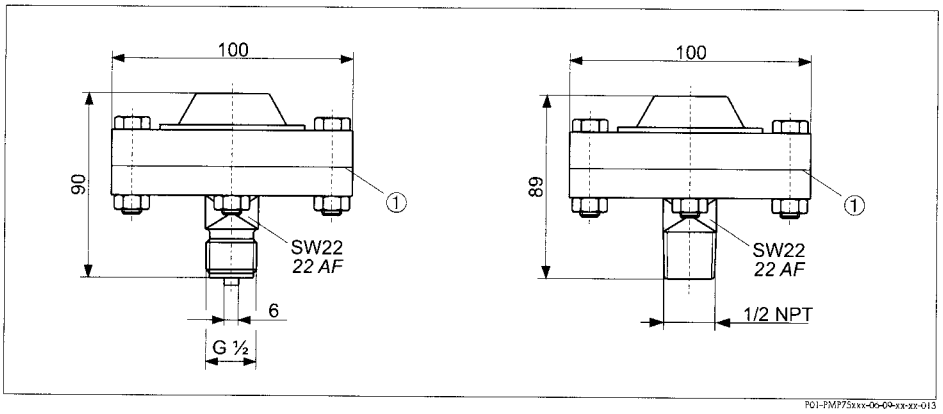

Process connection PMP75, left: version "UC" with threaded connection ISO 228 G 1/2 B, right: version "UD" with threaded connection ANSI 1/2 MNPT

1 PTFE seal as standard max. 260 °C/500 °F (higher temperatures on request)

Version	Measuring range	Description	Nominal pressure	T_K Process [mbar/10 K]	Diaphragm seal weight [kg]
UC	≤ 40 bar	ISO 228 G 1/2 B	PN 40	+0.75	1.43
UD	≤ 40 bar	ANSI 1/2 MNPT	PN 40	+0.55	1.43

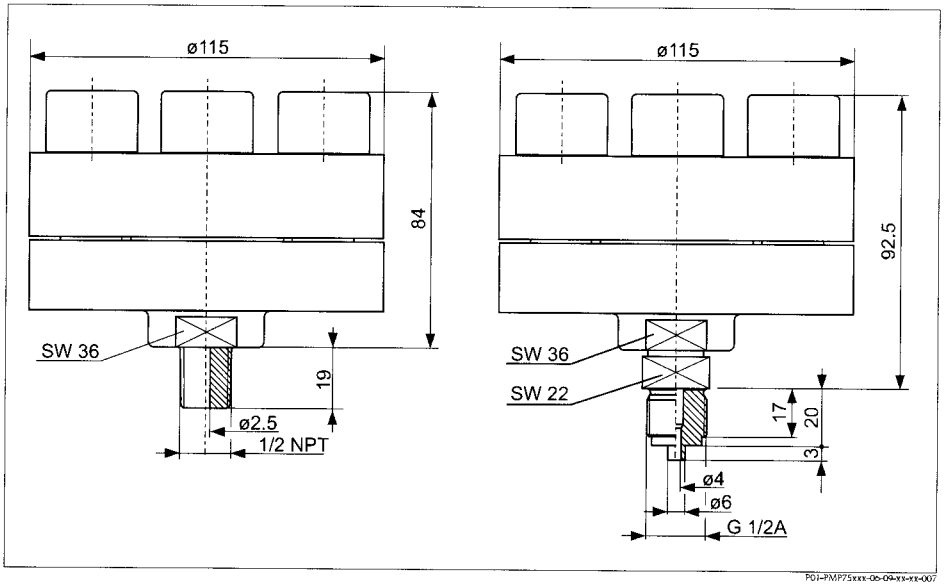

Process connection PMP75, versions "UC" and "UD", screwed, with integrated sealing lip, material AISI 316L

Version	Measuring range	Description	Nominal pressure	T_K Ambient [mbar/10 K]	T_K Process	Diaphragm seal weight [kg]
UC	> 40 bar	ISO 228 G 1/2 A	PN 400	+3.45	+1.28	1.43
UD	> 40 bar	ANSI 1/2 MNPT	PN 400	+3.45	+1.28	4.75

Note!
With the use of high temperature oils the design can deviate strongly.
For further information please contact your local Endress+Hauser Sales Center.

"Separate housing" version

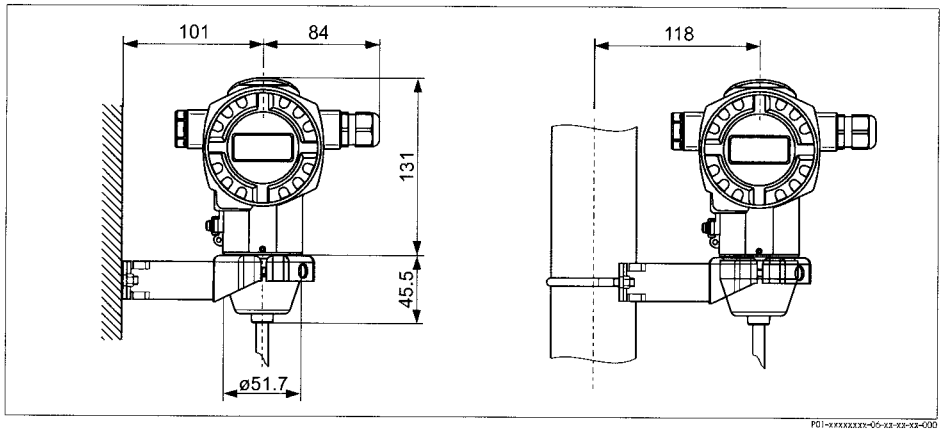

Dimensions T14 housing, optional display on the side. Housing weight see → 61.

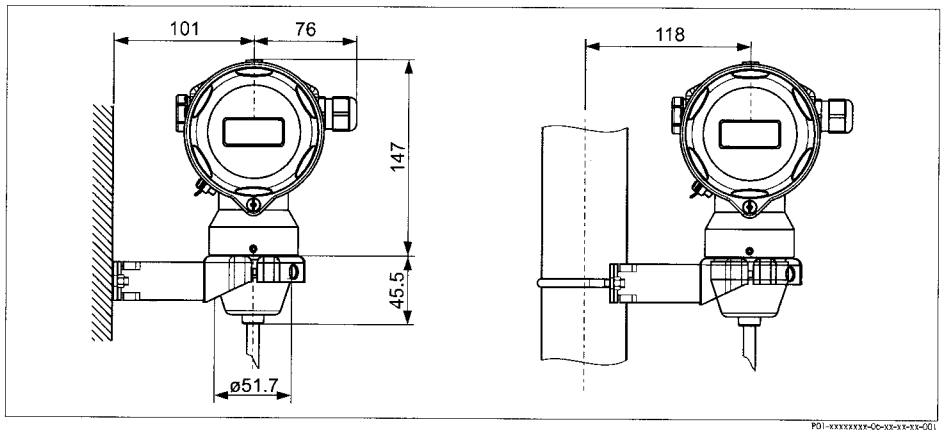

Dimensions T17 housing, optional display on the side. Housing weight see → 61.

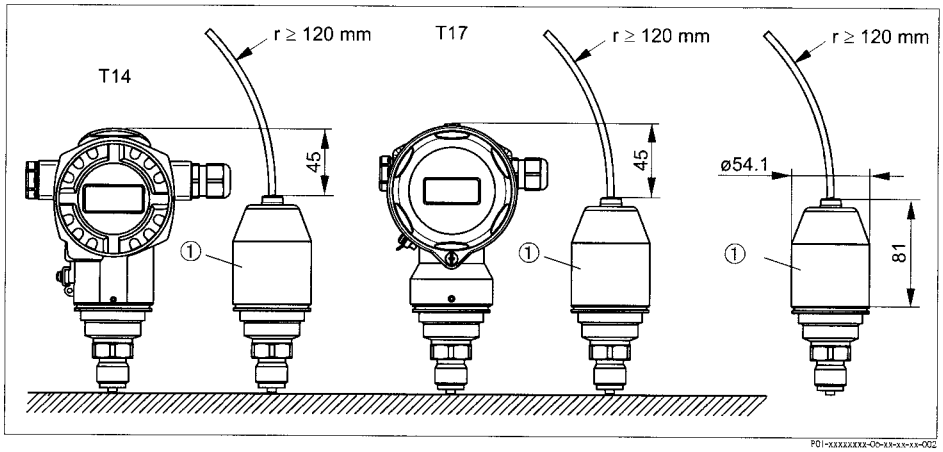

Reduction of the mounting height of the process connection, for application of the separate housing.
1 Process connection adapter.

If the separate housing is used, the mounting height of the process connection is reduced by approx. 45 mm as compared to the dimensions of the standard version.
The minimum bending radius (r) for the cable is 120 mm (4.7").

Weight

Housing

	T14		T17	Separate housing
	Aluminium	AISI 316L	AISI 316L	
With electronic insert and on-site display	1.2 kg	2.1 kg	1.2 kg	Weight of housing T14 or T17 + 0.5 kg. Weight of sensor + 0.5 kg.
With electronic insert without on-site display	1.1 kg	2.0 kg	1.1 kg	

Process connections

- Process connections PMC71 (with ceramic process isolating diaphragm): → 33 ff
- Process connections PMP71 (with metallic process isolating diaphragm): → 40 ff
- Process connections PMP75 (with metallic process isolating diaphragm): → 47 ff

Material

T14 housing:
- T14 housing, selectable:
  - Die-cast aluminium with protective powder-coating on polyester basis: RAL 5012 (blue), cover: RAL 7035 (grey)
  - Precision cast stainless steel AISI 316L (1.4435)
- External operation (keys and key covering): Polycarbonate PC-FR, RAL 7035 (grey)
- Sight glass: Mineral glass
- Cable gland: Polyamid (PA)
- Pressure compensation filter: PA6 GF10
- Blind plug: PBT-GF30 FR, for Dust Ex, Ex d, FM XP and CSA XP: AISI 316L (1.4435)
- Seals:
  - Cable and blind plug seal: Silicone (VMQ)
  - Pressure compensation filter o-ring: Silicone (VMQ)
  - Cover: EPDM
  - Sight glass: Silicone (VMQ)
- Nameplates: AISI 304 (1.4301)

T17 housing:
- Housing: Stainless steel AISI 316L (1.4404)
- Sight glass:
  - Version for non-hazardous area, ATEX Ex ia, NEPSI Zone 0/1 Ex ia, IECEx Zone 0/1 Ex ia, FM NI, FM IS, CSA IS: Polycarbonate (PC)
  - ATEX 1/2 D, ATEX 1/3 D, ATEX 1 GD, ATEX 1/2 GD, ATEX 3 G, FM DIP, CSA Dust Ex: Mineral glass
- Cable gland: Polyamid PA, for Dust-Ex: CuZn nickel-plated
- Blind plug: PBT-GF30 FR, for Dust-Ex: AISI 316L (1.4435)
- Pressure compensation filter: PA6 GF10
- Seals:
  - Cable and blind plug seal: Silicone (VMQ)
  - Pressure compensation filter o-ring: Silicone (VMQ)
  - Cover: EPDM
  - Sight glass: EPDM
- Nameplates: lasered

Process connection

- "Clamp connections" and "Hygienic connections" (see also Chapter "Ordering information"): AISI 316L/ 1.4435
- "Threaded connection" and "DIN/EN flanges" (see also Chapter "Ordering information"): stainless steel AISI 316L with the material number 1.4435 or 1.4404
- With regard to their stability-temperature property, the materials 1.4435 and 1.4404 are grouped together under 13E0 in EN 1092-1 Tab.18. The chemical composition of the two materials can be identical.

Cable for separate housing:

- PE cable:
  Slip-resistant cable with strain-relief members made of Dynemo; shielded using aluminium-coated film; insulated with polyethylene (PE-LD), black; copper wires, twisted, UV resistant
- FEP cable:
  Slip-resistant cable; shielded using galvanized steel wire netting; insulated with fluorinated ethylene propylene (FEP), black; copper wires, twisted, UV resistant

TSE Certificate of Suitability

The following applies to all process wetted device components:
- They do not contain any materials derived from animals.
- No auxiliaries or operating materials derived from animals are used in production or processing.

Note!
Process wetted device components are listed in the "Mechanical construction" (→ 32) and "Ordering information" (→ 77) sections.

Miscellaneous:

- Process isolating diaphragm PMC71: Al_2O_3 Aluminium-oxide-ceramic (FDA 21CFR186.1256, USP Class VI), ultrapure 99.9% (→ www.endress.com/ceraphire)
- Mounting accessories: Mounting kit with screws AISI 304 (1.4301)
- Capillary: AISI 316 Ti (1.4571)
- Protective hose for capillary: AISI 304 (1.4301)
- External earth terminal: AISI 304 (1.4301)

→ For process connections, process diaphragms, seals and filling oils see ordering information, → 77 ff.

Human interface

Operating elements

On-site display (optional)

A 4-line liquid crystal display (LCD) is used for display and operation. The on-site display shows measured values, dialog text as well as fault and notice messages in plain text, thereby supporting the user in every stage of operation. The liquid crystal display of the device can be turned in 90° steps.
Depending on the installation position of the device, this makes it easy to operate the device and read the measured value.

Functions:
- 8-digit measured value display including sign and decimal point, bar graph for 4 to 20 mA HART as current display or for PROFIBUS PA as graphical display of the scaled value of the AI Block
- Simple and complete menu guidance thanks to seperation of the parameters into three levels
- Ech parameter is given as 3-digit ID number for easy navigation
- Option for configuring the display according to individual requirements and desires, such as language, alternating display, display of other measured values such as sensor temperature, contrast setting
- Comprehensive diagnostic functions (fault and warning message, peak-hold indicators, etc.)
- Rapid and safe commissioning with the Quick Setup menus

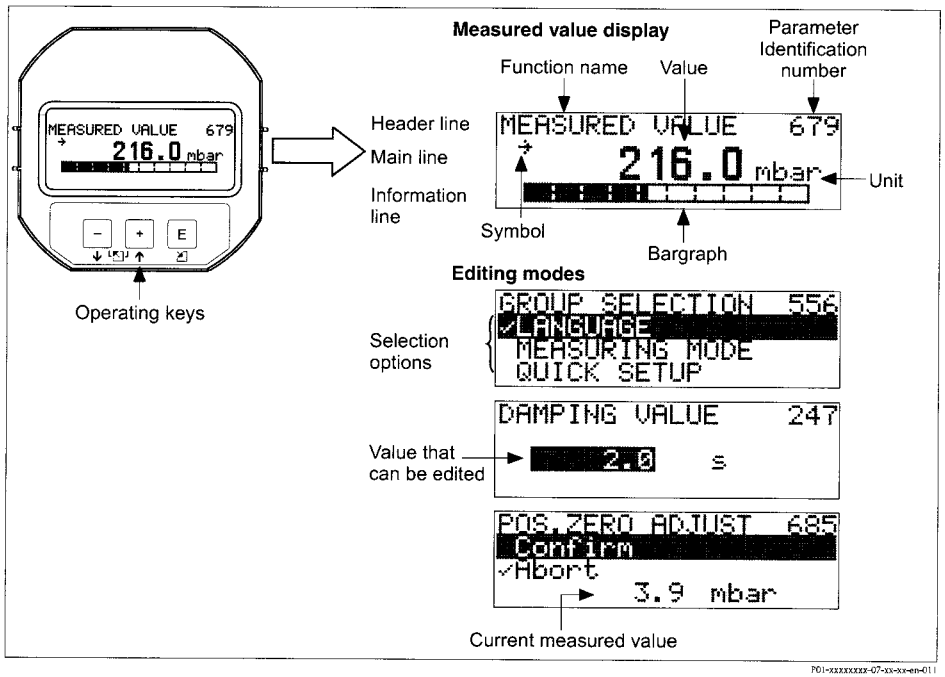

P01-xxxxxxxx-07-xx-xx-en-011

Operating elements

Operating keys on the exterior of the device

The operating keys of the housing T14 (aluminium or stainless steel) are located either outside of the housing, under the protection cap or upon the electronic insert. The operating keys of the housing T17 (ironing stainless steel) are located inside the housing upon the electronic insert

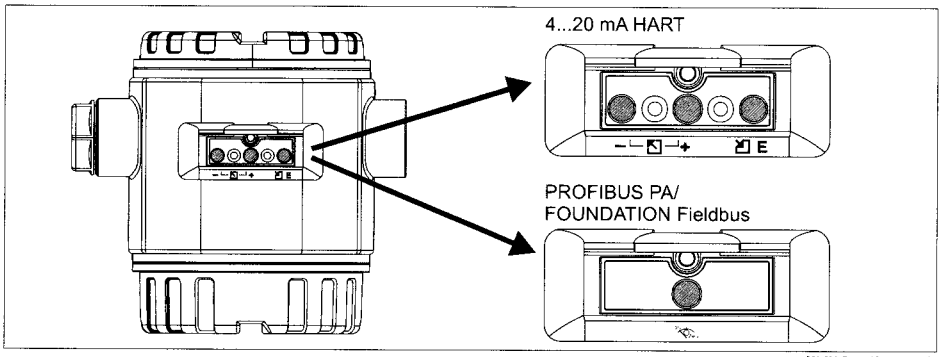

The operating keys located externally on the device work on the Hall sensor principle. As a result, no additional openings are required in the device. This guarantees:

- Complete protection against environmental influences such as moisture and contamination
- Simple operation without any tools
- No wear.

Operating keys and elements located internally on the electronic insert

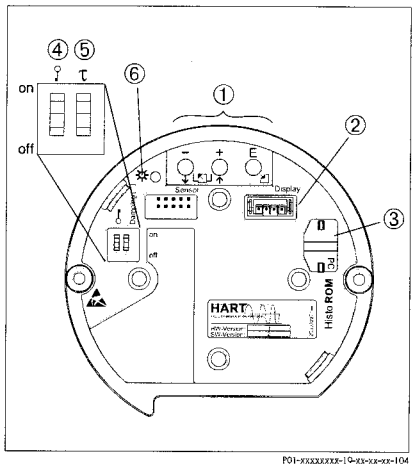

Electronic insert HART

1 *Operating keys*
2 *Slot for optional display*
3 *Slot for optional HistoROM®/M-DAT*
4 *DIP-switch for locking/unlocking measured-value-relevant parameters*
5 *DIP-switch for damping on/off*
6 *Green LED to indicate value being accepted*

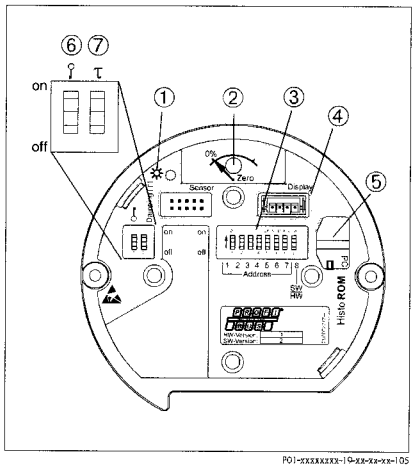

Electronic insert PROFIBUS PA

1 *Green LED to indicate value being accepted*
2 *Key for position calibration and device reset*
3 *DIP-switch for bus address*
4 *Slot for optional display*
5 *Slot for optional HistoROM®/M-DAT*
6 *DIP-switch for locking/unlocking measured-value-relevant parameters*
7 *DIP-switch for damping on/off*

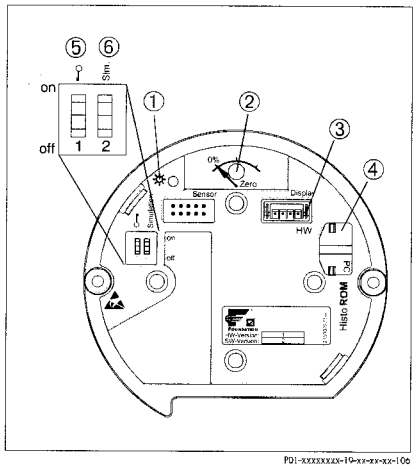

Electronic insert FOUNDATION Fieldbus

1 *Green LED to indicate value being accepted*
2 *Key for position calibration and device reset*
3 *Slot for optional display*
4 *Slot for optional HistoROM®/M-DAT*
5 *DIP-switch for locking/unlocking measured-value-relevant parameters*
6 *DIP-switch for simulation mode on/off*

Local operation

Function	External operation (operation keys, optional, not T17 housing)	Internal operation (electronic insert)	Display (optional)
Position calibration (zero point correction)	X	X	X
Setting lower-range value and upper-range value - reference pressure present at the device	X (HART only)	X (HART only)	X
Device Reset	X	X	X
Locking and unlocking measured-value-relevant parameters	—	X	X
Value acceptance indicated by green LED	X	X	X
Switching damping on and off	—	X (HART and PA only)	X
Setting bus address (PA)	—	X	X
Switching simulation mode on and off (FOUNDATION Fieldbus)	—	X	X

Remote operation

Depending on the position of the write protection switch at the device, all software parameters are accessible.

HART

Remote operation via:
- Handheld terminal Field Communicator 375 (see Chapter "Hard- und Software for on-site and remote operation" → ☞ 66)
- FieldCare (see Chapter "Hard- und Software for on-site and remote operation" → 📖 66 ff) with
  - Commubox FXA191 (see Chapter "Hard- und Software for on-site and remote operation" → 📖 66 ff)
  - Commubox FXA195 (see Chapter "Hard- und Software for on-site and remote operation" → 📖 66 ff)
- Field Xpert:
  Field Xpert is an industrial PDA with integrated 3.5" touchscreen from Endress+Hauser based on Windows Mobile. It communicates via wireless with the optional VIATOR Bluetooth modem connected to a HART device point-to-point or wireless via WiFi and Endress+Hauser's Fieldgate FXA520. Field Xpert also works as a stand-alone device for asset management applications. For details refer to BA060S/00/en.

PROFIBUS PA

Remote operation via:
- FieldCare (see Chapter "Hard- und Software for on-site and remote operation" → 📖 66 ff)
  - Profiboard: For the Connection of a Personal Computer to PROFIBUS
  - Proficard: For the Connection of a Laptop to PROFIBUS

FOUNDATION Fieldbus

Remote operation via:
- Handheld terminal Field Communicator 375 (see Chapter "Hard- und Software for on-site and remote operation" → 📖 66 ff)
- Use an FF-configuration program for e.g. NI-FBUS configurator, to
  - connect devices with "FOUNDATION Fieldbus signal" into an FF-network
  - set FF-specific parameter

  Operation with NI-FBUS Configurator:
  The NI-FBUS Configurator is an easy-to-use graphical environment for creating linkages, loops and a schedule based on the fieldbus concept.
  You can use the NI-FBUS Configurator to configure a fieldbus network as follows:
  - Set block and device tags
  - Set device addresses
  - Create and edit function block control strategies (function block applications)
  - Configure vendor -defined function and transducer blocks
  - Create and edit schedules
  - Read and write to function block control strategies (function block applications)
  - Invoke Device Description (DD) methods

- Display DD menus
- Download a configuration
- Verify a configuration and compare it to a saved configuration
- Monitor a downloaded configuration
- Replace a virual device by a real device
- Save and print a configuration

Note!
For further information please contact your local Endress+Hauser Sales Center.

Hard- und Software for on-site and remote operation

Commubox FXA191

For intrinsically safe communication with FieldCare via the RS232C interface. For details refer to TI237F700/en.

Commubox FXA195

For intrinsically safe communication with FieldCare via the USB interface. For details TI404F/00/en.

Commubox FXA291

The Commubox FXA291 connects Endress+Hauser field instruent with CDI interface (=Endress+Hauser Common Data Interface) to the USB interface of a personal computer or a notebook.
For details TI405C/07/en.

Note!
For the following Endress+Hauser instruments you need the "ToF Adapter FXA291" as an additional accessory:

- Cerabar S PMC71, PMP7x
- Deltabar S PMD7x, FMD7x
- Deltapilot S FMB70

ToF Adapter FXA291

The ToF Adapter FXA291 connects the Commubox FXA291 with instruments of the ToF platform, pressure instruments and Gammapilot via the USB interface of a personal computer or a notebook. For details refer to KA271F.

Field Communicator 375

With a handheld terminal, all the parameters can be configured anywhere along the 4 to 20 mA line via menu operation.

HistoROM®/M-DAT (optional)

HistoROM®/M-DAT is a memory module, which is attached to the electronic insert. The HistoROM®/M-DAT can be retrofitted at any stage (Order number: 52027785).

Your benefits

- Quick and safe commissioning of the same measuring points by copying the configuration data of one transmitter to another transmitter
- Reliable process monitoring thanks to cyclical recording of pressure and sensor temperature measured values
- Simple dagnosis by recording diverse events such as alarms, configuration changes, counters for measuring range undershoot and overshoot for pressure and temperature as well as user limit overshoot and undershoot for pressure and temperature etc.
- Analysis and graphic evaluation of the events and process parameters via software (contained in scope of supply).

HistoROM®/M-DAT can be ordered via feature 100 "Additional options 1" or feature 110 "Additional options 2" or as spare parts. → 77 ff. A CD with Endress+Hauser operating program is also included in the scope of delivery.
You can copy data from one transmitter to another transmitter when operating a FOUNDATION Fieldbus device via an FF configuration program. You need the Endress+Hauser FieldCare operating program and the Commubox FXA291 service interface and the ToF Adapter FXA291 to be able to access the data and events saved in the HistoROM®/M-DAT.

FieldCare

FieldCare is an Endress+Hauser asset management tool based on FDT technology. With FieldCare, you can configure all Endress+Hauser devices as wella s devices from other manufacturers that support the FDT standard.

FieldCare supports the following functions:
- Configuration of transmitter in offline and online operation
- Loading and saving device data (upload/download)
- HistoROM®/M-DAT analysis
- Documentation of the measuring point

Connection options:
- HART via Commubox FXA191 and the RS232C serial interface of a computer
- HART via Commubox FXA195 and the USB port on a computer
- PROFIBUS PA via segment coupler and PROFIBUS interface card
- FOUNDATION Fieldbus via Commubox FXA193 and the RS232C serial interface of a computer
- Service interface with adapter Commubox FXA291 and ToF Adapter FXA291 (USB).

For further information → www.endress.com

Planning instructions, diaphragm seal systems

With the Endress Hauser selection tool "Applicator" you will find the optimum diaphragm seal for your application. Online on "www.endress.com/applicator" or offline on CD.
For further information please contact your local Endress+Hauser Sales Center.

Applications

Diaphragm seal systems should be used if the process media and the device should be separated. Diaphragm seal systems offer clear advantages in the following instances:
- In the case of high process temperatures (→ 30, section "Process temperature limits".)
- For aggressive media
- If good and rapid measuring point cleaning is necessary
- If the measuring point is exposed to vibrations
- For mounting locations that are difficult to access
- For very humid mounting locations

Planning instructions

Diaphragm seals are separating equipment between the measuring system and the process medium.

A diaphragm seal system consists of:
- A diaphragm seal in a one-sided system
- Capillary tube
- Fill fluid and
- A pressure transmitter.

The process pressure acts via the process isolating diaphragm of a diaphragm seal on the liquid-filled system, which transfers the process pressure via the capillary tube onto the sensor of the pressure transmitter. Endress+Hauser delivers all diaphragm seal systems as welded versions. The system is hermetically sealed, which ensures the highest reliability.

Note!
The correlations between the individual diaphragm seal components are presented in the following section. For further information and comprehensive diaphragm seal system designs, please contact your local Endress+Hauser Sales Center.

Diaphragm seal

The diaphragm seal determines the application range of the system by
- the process isolating diaphragm diameter
- the diaphragms: stiffness and material
- the design (oil volume).

Process isolating diaphragm diameter

The larger the process isolating diaphragm diameter (less stiffness), the smaller the temperature effect on the measurement result.
Note: To keep the temperature effect in practice-oriented limits, you should select diaphragm seals with a nominal diameter of ≥ DN 80, in as far as the process connection allows for it.

Process isolating diaphragm stiffness

The stiffness is dependent on the process isolating diaphragm diameter, the material, any available coating and on the process isolating diaphragm thickness and shape. The process isolating diaphragm thickness and the shape are defined constructively. The stiffness of a process isolating diaphragm of a diaphragm seal influences the temperature operating range and the measuring error caused by temperature effects.

Capillary

Capillaries with an internal diameter of 1 mm are used as standard.
The capillary tube influences the T_K zero point, the ambient temperature operating range and the response time of a diaphragm seal system as a result of its length and internal diameter.
→ 69 ff, sections "Influence of the temperature on the zero point" and "Ambient temperature range".
→ Observe the installation instructions regarding capillary tubes. → 74 ff, section "Installation instructions".

Filling oil

When selecting the filling oil, fluid and ambient temperature as well as the operating pressure are of crucial importance. Observe the temperatures and pressures during commissioning and cleaning. A further selection criterion is the compatibility of the filling oil with the requirements of the process medium. For this reason, only filling oils that are harmless to health are used in the food industry, such as vegetable oil or silicone oil → See also the following section "Diaphragm seal filling oils" section.
The filling oil used influences the T_K zero point and the temperature operating range of a diaphragm seal system and the response time. → 69 ff, section "Influence of the temperature on the zero point".

Pressure transmitter

The pressure transmitter influences the temperature operating range, the T_K zero point and the response time as a result of its volume change. The volume change is the volume that has to be shifted to pass through the complete measuring range.
Pressure transmitters from Endress+Hauser are optimised with regard to minimum volume change.

Diaphragm seal filling oils

Version [1]	Filling oil	Permissible temperature range [2] at 0.05 bar ≤ p_{abs} ≤ 1 bar	Permissible temperature [2] range at p_{abs} ≥ 1 bar	Density [g/cm³]	Viscosity [cSt at 25°C (77°F)]	Coefficient of thermal expansion [1/K]	T_K correction factor	Note
A, H, 1 or 2	Silicone oil	−40...+180°C (−40...+356°F)	−40...+250°C (−40...+482°F)	0.96	100	0.00096	1	suitable for foods FDA 21 CFR 175.105
G, 3 or 4	High temperature oil	−10...+200°C (+14...+392°F)	−10...+400°C (+14...+752°F)	1.07	37	0.0007	0.72	high temperatures
F or N	Inert oil	−40...+80°C (−40...+176°F)	−40...+175°C (−40...+347°F)	1.87	27	0.000876	0.91	for ultra pure gas and oxygen applications
D, 5 or 6	Vegetable oil	−10...+120°C (+14...+248°F)	−10...+200°C (+14...+392°F)	0.94	9.5	0.00101	1.05	suitable for foods FDA 21 CFR 172.856
7 or 8	Low temperature oil	−70...+80°C −94...+176°F	−70...+180°C −94...+356°F	0.92	4.4	0.00108	1.12	low temperatures

1) Version for feature 90 in the order code

2) Observe temperature limits of the device (→ 28 and → 30).

Influence of the temperature on the zero point

A temperature change results in a volume change of the filling oil. The volume change is dependent on the coefficient of thermal expansion of the filling oil and on the volume of the filling oil at calibration temperature (constant in the range: +21 to +33°C (+69.8 to 91.4°F)). → 69, "Filling oil" section.
For example, the filling oil expands in the event of a temperature increase. The additional volume presses against the process isolating diaphragm of a diaphragm seal. The stiffer a process isolating diaphragm is, the greater its return force, which counteracts a volume change and acts on the measuring cell together with the operating pressure, thus shifting the zero point. For the "T_K Process" and "T_K Ambient (for devices without capillary)", see → 47 ff, section "Process connections PMP75".

The following diagrams display the temperature coefficient "T_K Ambient" dependent on the capillary length. The following application is displayed: capillary temperature and transmitter temperature (ambient temperature) change, the process temperature corresponds to the calibration temperature.
The temperature coefficients obtained from the diagrams apply to silicone oil and the process isolating diaphragm material AISI 316L/1.4435. For other filling oils, these temperature coefficients must be multiplied by the T_K correction factor of the corresponding filling oil. For the T_K correction factors, see → 69, section "Diaphragm seal filling oils".
With regard to the temperature coefficient "T_K Ambient", devices with temperature isolator behave like devices with the same process connection and 0.1 m capillary.

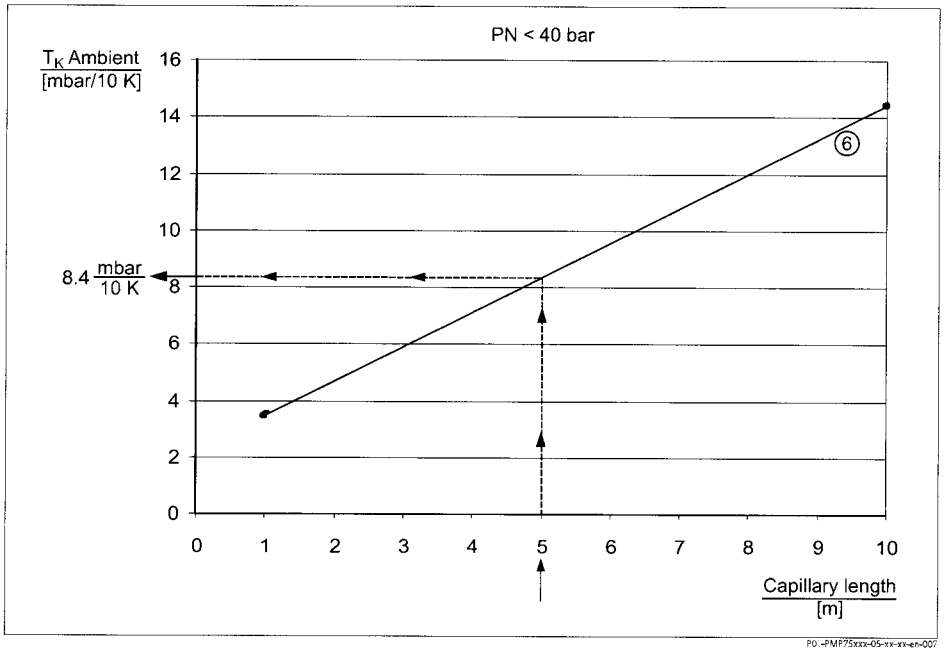

Diagram T_K Ambient dependent on the capillary length for PMP75, PN < 40 bar

Example for:
- Diaphragm seal versions "B3, EN/DIN flange DN 50 PN 10-40 B1, AISI 316L"
- Capillary length: 5 m
- Ambient temperature, capillary/transmitter: 45°C
- Filling oil: silicone oil

1. Select characteristic curve type for the diaphragm seal versions "B3" in accordance with the following table.
   Result: characteristic curve type 6
2. Obtain value for T_K Ambient from the diagram.
   Result: 8.4 mbar/10 K
3. $T_{Ambient} - T_{Calibration} = 45°C - 25°C = 20°C \Rightarrow 8.4$ mbar/10 K x 20 K = 16.8 mbar

Result: In this application, the zero point is shifted by 16.8 mbar.

Note!
- The influence of temperature on the zero point can be corrected with position calibration.
- The temperature influence can be minimised by using a filling oil with a smaller coefficient of thermal expansion, shorter capillary, diaphragm seal with larger process isolating diaphragm diameter or by using a smaller capillary internal diameter.

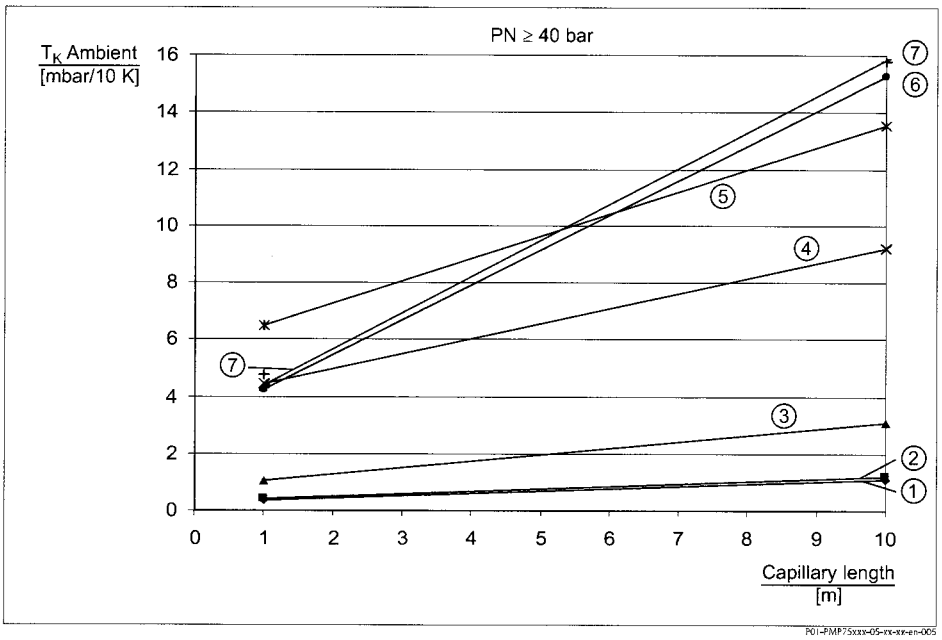

Diagram T_K Ambient dependent on the capillary length for PMP75, PN ≥ 40 bar

Characteristic curve type	Version	Diaphragm seal
1	B4	EN/DIN flange DN 80 PN 10-40 B1, AISI 316L
	C4	EN/DIN flange DN 80 PN 100 B2, AISI 316L
	C5	EN/DIN flange DN 100 PN 100 B2, AISI 316L
	KL	JIS flange 10K 80A RF, AISI 316L
	KH	JIS flange 10K 100A RF, AISI 316L
	D4	EN/DIN flange DN 80, PN 10-40 B1, Extensions: 50 mm/100 mm/200 mm, AISI 316L
	AG	ANSI flange 3" 150 lbs RF, AISI 316/316L
	AS	ANSI flange 3" 300 lbs RF, AISI 316/316L
	AH	ANSI flange 4" 150 lbs RF, AISI 316/316L
	AT	ANSI flange 4" 300 lbs RF, AISI 316/316L
	J4	ANSI flange 3" 150 lbs RF, Extensions: 2"/4"/6"/8", AISI 316/316L
	J7	ANSI flange 3" 300 lbs RF, Extensions: 2"/4"/6"/8", AISI 316/316L
	J5	ANSI flange 4" 150 lbs RF, Extensions: 2"/4"/6"/8", AISI 316/316L
	J8	ANSI flange 4" 300 lbs RF, Extensions: 2"/4"/6"/8", AISI 316/316L
2	TF	Tri-Clamp, ISO 2852 DN 76.1 (3"), AISI 316L/1.4435
3	MT	DIN 11851 DN 80 PN 25, AISI 316L/1.4435
	M5	DIN 11851 DN 80 PN 25 socket, AISI 316L/1.4435
4	SD	Pipe diaphragm seal Tri-Clamp, ISO 2852 DN 51 (2"), AISI 316L
5	SC	Pipe diaphragm seal Tri-Clamp, ISO 2852 DN 38 (1 1/2"), AISI 316L
6	B3	EN/DIN flange DN 50 PN 1040 B1, AISI 316L
	C3	EN/DIN flange DN 50 PN 63 B2, AISI 316L
	EF	EN/DIN flange DN 50 PN 100-160 E, AISI 316L
	ER	EN/DIN flange DN 50 PN 250 E, AISI 316L
	E3	EN/DIN flange DN 50 PN 400 E, AISI 316L
	AF	ANSI flange 2" 150 lbs RF, AISI 316/316L
	AR	ANSI flange 2" 300 lbs RF, AISI 316/316L
	HF	ANSI flange 2" 400/600 lbs RF, AISI 316/316L
	HR	ANSI flange 2" 900/1500 lbs RF, AISI 316/316L
	H3	ANSI flange 2" 2500 lbs RF, AISI 316/316L
	KF	JIS 10K 50A RF, AISI 316L
	MR	DIN 11851 DN 50 PN 25, AISI 316L/1.4435
	MS	DIN 11851 DN 65 PN 25, AISI 316L/1.4435
	M3	DIN 11851 DN 50 PN 25 socket, AISI 316L/1.4435
	M4	DIN 11851 DN 65 PN 25 socket, AISI 316L/1.4435
7	TR	Varivent Type N for tubes DN 40 – DN 162, PN 40, AISI 316L/1.4435
	TK	DRD DN50 (65 mm), PN 25, AISI 316L/1.4435

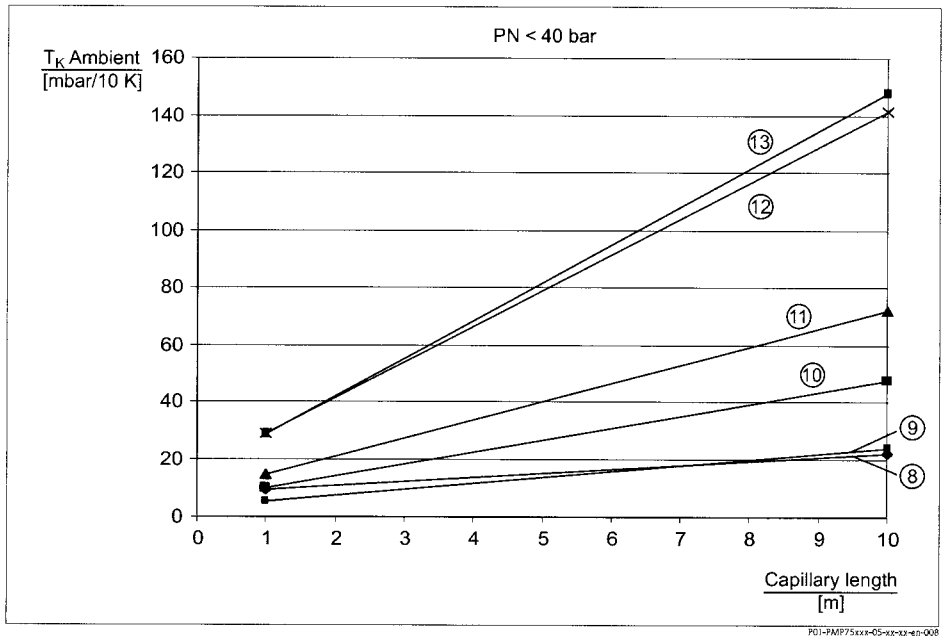

Diagram T_K Ambient dependent on the capillary length for PMP75, PN < 40 bar

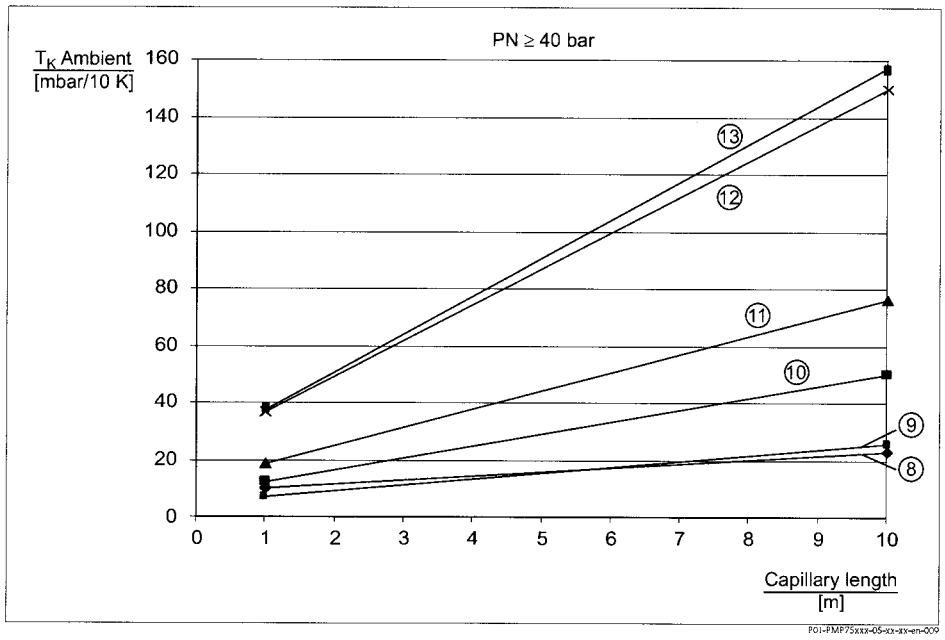

Diagram T_K Ambient dependent on the capillary length for PMP75, PN ≥ 40 bar

Characteristic curve type	Version	Diaphragm seal
8	SB	Pipe diaphragm seal Tri-Clamp, ISO 2852 DN 25 (1"), AISI 316L
9	D3	EN/DIN flange PN10-40 B1, Extensions: 50 mm/100 mm/200 mm, AISI 316L
	J3	ANSI flange 2" 150 lbs, Extensions: 2"/4"/6"/8", AISI 316/316L
	TD	Tri-Clamp, ISO 2852 DN 51 (2"), AISI 316L/1.4435
10	CQ	EN/DIN flange DN 40 PN 10-40 B1, AISI 316L
	TI	SMS 2" PN 25, AISI 316L/1.4435
	TN	APV-RJT 2" PN 40, AISI 316L/1.4435
	TS	APV-ISS 2" PN 40, AISI 316L/1.4435
11	CP	EN/DIN flange DN32 PN 10-40 B1, AISI 316L
	AE	ANSI flange 1 1/2" 150 lbs RF, AISI 316/316L
	AQ	ANSI flange 1 1/2" 300 lbs RF, AISI 316/316L
	TC	Tri-Clamp, ISO 2852 DN 38 (1 1/2"), DIN 32676 DN 40, AISI 316L/1.4435
	TH	SMS 1 1/2" PN 25, AISI 316L/1.4435
	TM	APV-RJT 1 1/2" PN 40, AISI 316L/1.4435
	TS	APV-ISS 1 1/2" PN 40, AISI 316L/1.4435
12	CN	EN/DIN flange PN 10-40 B1, AISI 316L
	DN	EN/DIN flange PN 64-160 E, AISI 316L
	EN	EN/DIN flange PN 250 E, AISI 316L
	E1	EN/DIN flange PN 400 E, AISI 316L
	AC	ANSI flange 1" 150 lbs RF, AISI 316/316L
	AN	ANSI flange 1" 300 lbs RF, AISI 316/316L
	HC	ANSI flange 1" 400/600 lbs RF, AISI 316/316L
	HN	ANSI flange 1" 900/1500 lbs RF, AISI 316/316L
	HO	ANSI flange 1" 2500 lbs RF, AISI 316/316L
	KC	JIS flange 10K 25 A RF, AISI 316L
13	TB	Tri-Clamp, ISO 2852 DN 25 (1"), DIN 32676 DN 25, AISI 316L/1.4435

Ambient temperature range

The operating temperature range of a diaphragm seal system depends on Fill fluid, "Capillary length and internal diameter, Process temperature and Diaphragm seal oil volume.
The range of application can be extended by using a fill fluid with a smaller expansion coefficient and a shorter capillary. The permitted operating temperature ranges in relation to the capillary length can be calculated online at "Applicator Sizing Diaphragm Seal":
http://www.endress.com/applicator -> Applicator Sizing Diaphragm Seal -> Horncurve

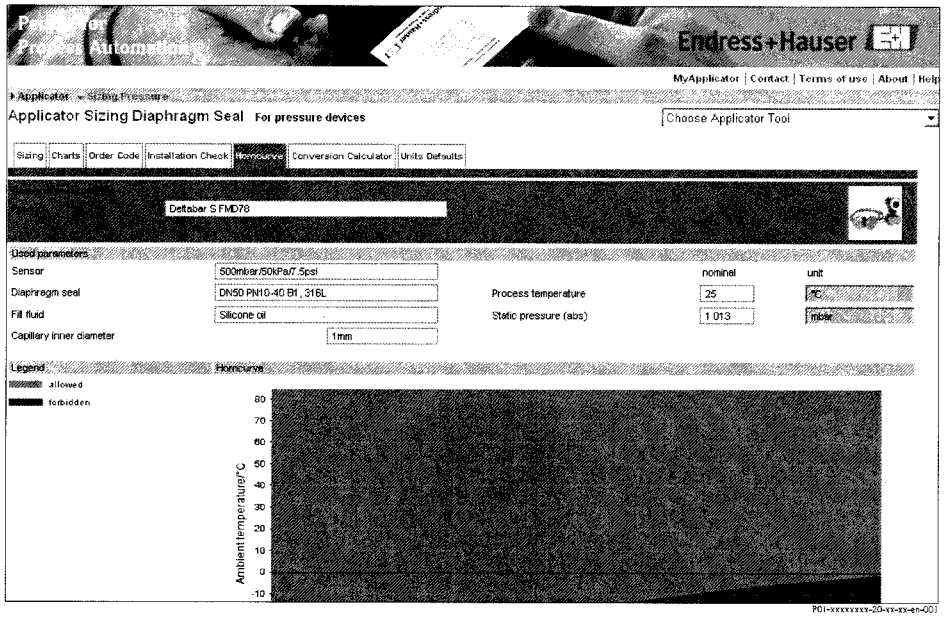

Note!
- Endress+Hauser recommends you use a low temperature oil for applications that require short response times or are close to the lower temperature limit (see "diaphragm seal fill fluid").
- Please contact your Endress+Hauser sales office for further information, comprehensive diaphragm seal system designs and measuring technology solutions that are close to the application limits.

Installation instructions

Instructions for diaphragm seal systems

- Endress+Hauser offer flushing rings as accessory to clean process isolating diaphragms without taking the transmitters out of process.
  For further information please contact your local Endress+Hauser Sales Center.
- The diaphragm seal together with the transmitter form a closed, calibrated system, which is filled through ports in the diaphragm seal and in the measurement system of the transmitter. These ports are sealed and must not be opened.
- In the case of devices with diaphragm seals and capillaries, the zero point shift caused by the hydrostatic pressure of the filling liquid column in the capillaries must be taken into account when selecting the measuring cell. If a measuring cell with a small measuring range is selected, a position adjustment can cause an overdrive. See the following diagram and the following example.
- For devices with temperature isolator or capillary a suitable fastening device (mounting bracket) is recommended.
- When using a mounting bracket, sufficient strain relief must be allowed for in order to prevent the capillary bending down (bending radius ≥ 100 mm).

Installation instructions for capillaries

In order to obtain more precise measurement results and to avoid a defect in the device, mount the capillaries as follows:
- vibration-free (in order to avoid additional pressure fluctuations)
- not in the vicinity of heating or cooling lines
- insulate if the ambient temperature is below ore above the reference temperature
- with a bending radius of ≥ 100 mm.

Vacuum applications

For applications under vacuum, Endress+Hauser recommends mounting the pressure transmitter below the diaphragm seal. A vacuum load of the diaphragm seal caused by the presence of fill fluid in the capillary prevents is hereby prevented.

When the pressure transmitter is mounted above the diaphragm seal, the maximum height difference H1 in accordance with the following illustration on the left must not be exceeded. The maximum height difference is dependent on the density of the filling oil and the smallest ever pressure that is permitted to occur at the diaphragm seal (empty tank), see the following illustration, on the right.

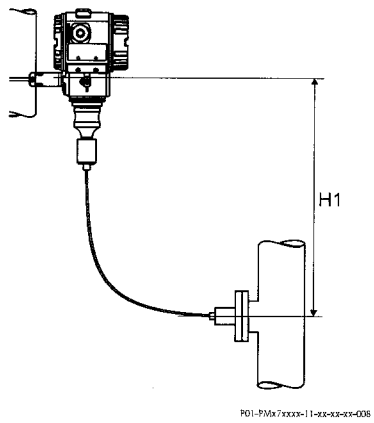

Installation above the diaphragm seal

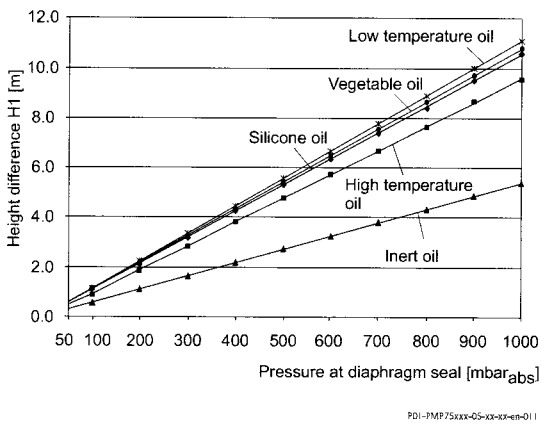

Diagram of maximum installation height above the diaphragm seal for vacuum applications

Certificates and approvals

CE mark

The device meets the legal requirements of the relevant EC directives.
Endress+Hauser confirms that the device has been successfully tested by applying the CE mark.

Ex approvals

- ATEX
- FM
- CSA
- NEPSI
- IECEx
- GOST
- also combinations of different approvals

All explosion protection data are given in separate documentation which is available upon request. The Ex documentation is supplied as standard with all devices approved for use in explosion hazardous areas.
→ 90 ff, sections "Safety Instructions" and "Installation/Control Drawings".

Suitability for hygenic processes

The Cerabar S is suitable for the employment in hygenic processes.
Overview of permitted process connections from page 32.
Many versions meet the requirements of 3A-Sanitary Standard No. 74 and are certified by the EHEDG.

Note!
The gap-free connections can be cleaned without residue using the usual cleaning methods.

Marine certificate

- GL
- ABS

Functional Safety SIL / IEC 61508 Declaration of conformity (optional)

The Cerabar S with 4 to 20 mA output signal have been developed to IEC 61508 standard. These devices can be used for process pressure and level measurement monitoring up to SIL 3.
For a detailed description of the safety functions with Cerabar S, settings and characteristic quantities for functional safety, please refer to the "Manual for Functional Safety- Cerabar S" SD190.
For devices with SIL / IEC 61508 declaration of conformity see → 77 ff, Feature 100 "Additional option 1" and Feature 110 "Additional option 2" version E "SIL / IEC 61508, declaration of Conformity".

Overspill protection

WHG

CRN approvals

Some device versions have CRN approval. For a CRN-approved device, a CRN-approved process connection (→ 78, feature 70 "Process connection") has to be ordered with a CSA approval (→ 77, feature 10 "Approval"). PMP75 devices with capillary are not CRN-approved. These devices are fitted with a separate plate bearing the registration number 0F10525.5C.

Pressure Equipment Directive (PED)

The devices PMC71, PMP71 and PMP75 correspond to Article 3 (3) of the EC directive 97/23/EC (Pressure Equipment Directive) and has been designed and manufactured according to good engineering practice.

Additionally applies:
- PMP71 with threaded connection and internal process isolating diaphragm PN > 200 as well as oval flange adapter PN > 200:
  Suitable for stable gases in group 1, category I
- PMP75 with pipe diaphragm seal ≥ 1.5"/PN 40:
  Suitable for stable gases in group 1, category II
- PMP75 with separator PN > 200:
  Suitable for stable gases in group 1, category 1
- PMP75 with threaded connection PN > 200

Standards and guidelines

DIN EN 60770 (IEC 60770):
Transmitters for use in industrial-process control systems
Part 1: Methods for inspection and routine testing

DIN 16086:
Electrical pressure measuring instruments, pressure sensors, pressure transmitters, pressure measuring instruments, concepts, specifications in data sheets

EN 61326-X:
EMC product family standard for electrical equipment for measurement, control and laboratory use.

Ordering information

PMC71

This overview does not mark options which are mutually exclusive.

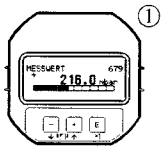

10	Approval:
A	For non-hazardous areas
E	Combi-certification ATEX II Ex ia + FM IS + CSA IS ATEX II 1/2G Ex ia IIC T6 + FM/CSA IS Class I, II, III Division 1 Group A - G
1	ATEX II 1/2 G Ex ia IIC T6
6	ATEX II 1/2 G Ex ia IIC T6, overspill protection WHG
2	ATEX II 1/2 D Ex ia IIC T6
8	ATEX II 1 GD Ex ia IIC T6
3	ATEX II 1/2 GD Ex ia IIC T6
5	ATEX II 2 G Ex d[ia] IIC T6
7	ATEX II 3 G Ex nA II T6
S	FM IS, Class I, II, III Division 1, Groups A – G; NI Class I Division 2, Groups A – D; AEx ia
T	FM XP, Class I Division 1, Groups A – D; AEx d
R	FM NI, Class I, Division 2, Groups A – D
U	CSA IS, Class I, II, III Division 1, Groups A – G; Class I Division 2, Groups A – D, Ex ia
V	CSA XP, Class I Division 1, Groups B – D; Ex d
G	NEPSI Ex d[ia] IIC T4/T6
H	NEPSI Ex ia IIC T6
L	TIIS Ex d (ia) IIC T6
M	TIIS Ex d (ia) IIC T4
I	IECEx Zone 0/1 Ex ia IIC T6

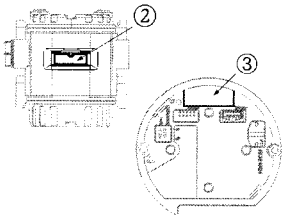

20	Output; Operation:
A	4...20 mA HART, operation outside, LCD (→ see Fig. ①, ②)
B	4...20 mA HART, operation inside, LCD (→ see Fig. ①, ③)
C	4...20 mA HART, operation inside (→ see Fig.③)
M	PROFIBUS PA, operation outside, LCD (→ see Fig. ①, ②)
N	PROFIBUS PA, operation inside, LCD (→ see Fig. ①, ③)
O	PROFIBUS PA, operation inside (→ see Fig. ③)
P	FOUNDATION Fieldbus, operation outside, LCD (→ see Fig. ①, ③)
Q	FOUNDATION Fieldbus, operation inside, LCD (→ see Fig. ①, ③)
R	FOUNDATION Fieldbus, operation inside (→ see Fig. ③)

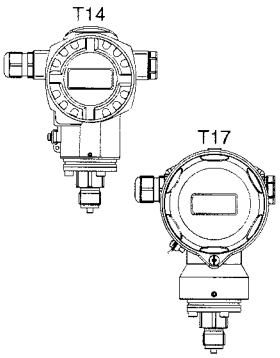

30	Housing; Cable entry; Protection:
A	Aluminium T14 housing, optional display on the side, IP 66/67/NEMA 4X/ 6P, Gland M 20x1.5
B	Aluminium T14 housing, optional display on the side, IP 66/67/NEMA 4X/ 6P, Thread G 1/2
C	Aluminium T14 housing, optional display on the side, IP 66/67/NEMA 4X/ 6P, Thread 1/2 NPT
D	Aluminium T14 housing, optional display on the side, IP 66/67/NEMA 4X/ 6P, M 12x1 PA plug
E	Aluminium T14 housing, optional display on the side, IP 66/67/NEMA 4X/ 6P, 7/8" FF plug
F	Aluminium T14 housing, optional display on the side, IP 65/NEMA 4X, Hand 7D plug 90°
1	AISI 316L T14 housing, optional display on the side, IP 66/67/NEMA 4X/ 6P, Gland M 20x1.5
2	AISI 316L T14 housing, optional display on the side, IP 66/67/NEMA 4X/ 6P, Thread G 1/2
3	AISI 316L T14 housing, optional display on the side, IP 66/67/NEMA 4X/ 6P, Thread 1/2 NPT
4	AISI 316L T14 housing, optional display on the side, IP 66/67/NEMA 4X/ 6P, M 12x1 PA plug
5	AISI 316L T14 housing, optional display on the side, IP 66/67/NEMA 4X/ 6P, 7/8" FF plug
6	AISI 316L T14 housing, optional display on the side, IP 65/NEMA 4X, Hand 7D plug 90°
R	T17 316L Hygiene IP66/68 NEMA6P; M20 gland, T17 = side cover
S	T17 316L Hygiene IP66/68 NEMA6P; G1/2 thread, T17 = side cover
T	T17 316L Hygiene IP66/68 NEMA6P; NPT1/2 thread, T17 = side cover
U	T17 316L Hygiene IP66/68 NEMA6P; M12 plug, T17 = side cover
V	T17 316L Hygiene IP66/68 NEMA6P; 7/8" plug, T17 = side cover

40 Sensor range; Sensor overload limit (= OPL):

Sensors for gauge pressure

Measurement limits: –100 % (–1 bar)...+100 % of sensor nominal range

	Sensor nominal value (URL)	OPL (Over pressure limit)
1C	100 mbar/10 kPa/1.5 psi g	4 bar/400 kPa/60 psi g
1E	250 mbar/25 kPa/3.75 psi g	5 bar/500 kPa/75 psi g
1F	400 mbar/40 kPa/6 psi g	8 bar/800 kPa/120 psi g
1H	1 bar/100 kPa/15 psi g	10 bar/1 MPa/150 psi g
1K	2 bar/200 kPa/30 psi g	18 bar/1.8 MPa/270 psi g
1M	4 bar/400 kPa/60 psi g	25 bar/2.5 MPa/375 psi g
1P	10 bar/1 MPa/150 psi g	40 bar/4 MPa/600 psi g
1S	40 bar/4 MPa/600 psi g	60 bar/6 MPa/900 psi g

40	Sensor range; Sensor overload limit (= OPL):	
	Sensors for absolute pressure	
	Sensor nominal value (URL)	**OPL (Over pressure limit)**
2C	100 mbar/10 kPa/1.5 psi abs	4 bar/400 kPa/60 psi abs
2E	250 mbar/25 kPa/3.75 psi abs	5 bar/500 kPa/75 psi abs
2F	400 mbar/40 kPa/6 psi abs	8 bar/800 kPa/120 psi abs
2H	1 bar/100 kPa/15 psi abs	10 bar/1 MPa/150 psi abs
2K	2 bar/200 kPa/30 psi abs	18 bar/1.8 MPa/270 psi abs
2M	4 bar/400 kPa/60 psi abs	25 bar/2.5 MPa/375 psi abs
2P	10 bar/1 MPa/150 psi abs	40 bar/4 MPa/600 psi abs
2S	40 bar/4 MPa/600 psi abs	60 bar/6 MPa/900 psi abs

50	Calibration; Unit:
1	Sensor range; mbar/bar
2	Sensor range; kPa/MPa
3	Sensor range; mmH_2O/mH_2O
4	Sensor range; inH_2O/ftH_2O
6	Sensor range; psi
B	Customised; see additional specification
C	Factory certificate 5-point; see additional specification
D	DKD certificate; see additional specification
K	Platinum; see additional specification
L	Platinum and factory certificate 5-point; see additional specification
M	Platinum and DKD certificate; see additional specification

70	Process connection; Material:
	Thread, internal process isolating diaphragm
GA	Thread ISO 228 G 1/2 A EN 837, AISI 316L (CRN)
GB	Thread ISO 228 G 1/2 A EN 837, Alloy C (CRN)
GC	Thread ISO 228 G 1/2 A EN 837, Monel
GD	Thread ISO 228 G 1/2 A EN 837, PVDF (max. 15 bar/225 psi, −10...+60°C/+14...+140°F)
GE	Thread ISO 228 G 1/2 A G 1/4 (female), AISI 316L (CRN)
GF	Thread ISO 228 G 1/2 A G 1/4 (female), Alloy C (CRN)
GG	Thread ISO 228 G 1/2 A G 1/4 (female), Monel
GH	Thread ISO 228 G 1/2 A hole 11.4 mm, AISI 316L (CRN)
GJ	Thread ISO 228 G 1/2 A hole 11.4 mm, Alloy C (CRN)
GK	Thread ISO 228 G 1/2 A hole 11.4 mm, Monel
RA	Thread ANSI 1/2 MNPT 1/4 FNPT, AISI 316L (CRN)
RB	Thread ANSI 1/2 MNPT 1/4 FNPT, Alloy C (CRN)
RC	Thread ANSI 1/2 MNPT 1/4 FNPT, Monel
RD	Thread ANSI 1/2 MNPT, hole 11.4 mm, AISI 316L (CRN)
RE	Thread ANSI 1/2 MNPT, hole 11.4 mm, Alloy C (CRN)
RF	Thread ANSI 1/2 MNPT, hole 11.4 mm, Monel
RG	Thread ANSI 1/2 MNPT hole 3 mm, PVDF (max. 15 bar/225 psi, −10...+60°C/+14...+140°F)
RH	Thread ANSI 1/2 FNPT, AISI 316L (CRN)
RJ	Thread ANSI 1/2 FNPT, Alloy C (CRN)
RK	Thread ANSI 1/2 FNPT, Monel
GL	Thread JIS B0202 G 1/2 (male), AISI 316L
RL	Thread JIS B0203 R 1/2 (male), AISI 316L
GP	Thread DIN 13 M 20x1.5 EN 837 hole 3 mm, AISI 316L
GQ	Thread DIN 13 M 20x1.5 EN 837 hole 3 mm, Alloy C
	For continuation "Process connection, Material" see next page.
	Thread, flush-mounted process isolating diaphragm
1G	Thread ISO 228 G 1 1/2 A, AISI 316L
1H	Thread ISO 228 G 1 1/2 A, Alloy C
1J	Thread ISO 228 G 1 1/2 A, Monel
1K	Thread ISO 228 G 2 A, AISI 316L
1L	Thread ISO 228 G 2 A, Alloy C
1M	Thread ISO 228 G 2 A, Monel
2D	Thread ANSI 1 1/2 MNPT, AISI 316L (CRN)
2E	Thread ANSI 1 1/2 MNPT, Alloy C (CRN)
2F	Thread ANSI 1 1/2 MNPT, Monel (CRN)
2G	Thread ANSI 2 MNPT, AISI 316L (CRN)
2H	Thread ANSI 2 MNPT, Alloy C
2J	Thread ANSI 2 MNPT, Monel
1R	Thread DIN 13 M 44x1.25, AISI 316L
1S	Thread DIN 13 M 44x1.25, Alloy C
	EN/DIN flanges, flush-mounted process isolating diaphragm

70	Process connection; Material:
CP	DN 32 PN 10-40 B1, AISI 316L
CQ	DN 40 PN 10-40 B1, AISI 316L
BR	DN 50 PN 10-16 A, PVDF (max. 15 bar/150 psi, –10...+60°C/+14...+140°F)
B3	DN 50 PN 10-40 B1, AISI 316L
C3	DN 50 PN 63 B2, AISI 316L
BS	DN 80 PN 10-16 A, PVDF (max. 15 bar/150 psi, –10...+60°C/+14...+140°F)
B4	DN 80 PN 10-40 B1, AISI 316L
	ANSI flanges, flush-mounted process isolating diaphragm
AE	1 1/2" 150 lbs RF, AISI 316/316L (CRN)
AQ	1 1/2" 300 lbs RF, AISI 316/316L (CRN)
AF	2" 150 lbs RF, AISI 316/316L (CRN)
JR	2" 150 lbs RF, AISI 316L with ECTFE-coating
A3	2" 150 lbs RF, PVDF (max. 15 bar/225 psi, –10...+60°C/+14...+140°F)
AR	2" 300 lbs RF, AISI 316/316L (CRN)
AG	3" 150 lbs RF, AISI 316/316L (CRN)
JS	3" 150 lbs RF, AISI 316L with ECTFE-coating
A4	3" 150 lbs RF, PVDF (max. 15 bar/225 psi, –10...+60°C/+14...+140°F)
AS	3" 300 lbs RF, AISI 316/316L (CRN)
AH	4" 150 lbs RF, AISI 316/316L (CRN)
JT	4" 150 lbs RF, AISI 316L with ECTFE-coating
AT	4" 300 lbs RF, AISI 316/316L (CRN)
	JIS flanges, flush-mounted process isolating diaphragm
KF	10K 50A RF, AISI 316L
KL	10K 80A RF, AISI 316L
KH	10K 100A RF, AISI 316L
	Hygienic connections, flush-mounted process isolating diaphragm
MP	DIN 11851 DN 40 PN 25, AISI 316L, EHEDG, 3A with HNBR/EPDM seal (CRN)
MR	DIN 11851 DN 50 PN 25, AISI 316L, EHEDG, 3A with HNBR/EPDM seal (CRN)
TD	Tri-Clamp ISO 2852 DN 51 (2"), AISI 316L, EHEDG, 3A with HNBR/EPDM seal (CRN)
TF	Tri-Clamp ISO 2852 DN 76.1 (3"), AISI 316L, EHEDG, 3A with HNBR/EPDM seal (CRN)
TK	DRD DN50 (65 mm), PN 25, AISI 316L, EHEDG, 3A with HNBR/EPDM seal
TR	Varivent type N for tubes DN 40 – DN 162, PN 40, AISI 316L, EHEDG, 3A with HNBR/EPDM seal (CRN)

80	Seal:
A	FKM Viton
B	EPDM
D	Kalrez
E	Chemraz
F	NBR/3A: HNBR (FDA)
L	FKM Viton, cleaned for silicone-free service
M	Kalrez, cleaned for silicone-free service
1	FKM Viton, cleaned from oil and greace
2	FKM Viton, oxygen service Note application limits pressure/temp.

100	Additional option 1:
A	not selected
E	SIL/IEC 61508 Declaration of conformity
T	High temperature version
B	Material test certificate for wetted parts, inspection certificate as per EN 10204 3.1 acc. to specification 52005759
M	Overvoltage protection
J	Software adjustment, see additional spec.
N	HistoROM/M-DAT
S	GL (German Lloyd)/ABS marine certificate
V	Mounting on shut-off valve from above
2	Test report acc. to EN 10204 2.2
3	Routine test with certificate, inspection certificate as per EN 10204 3.1
4	Overpressure test with certificate, inspection certificate as per EN 10204 3.1

110	Additional option 2:
A	not selected
E	SIL/IEC 61508 Declaration of conformity
G	Separate housing, cable length see additional spec. + mounting bracket, wall/pipe, 316L
T	High temperature version
M	Overvoltage protection
J	Software adjustment, see additional spec.

110										Additional option 2:
									N	HistoROM/M-DAT
									S	GL (German Lloyd)/ABS marine certificate
									U	Mounting bracket for wall/pipe, AISI 304
									2	Test report acc. to EN 10204 2.2
									3	Routine test with certificate, inspection certificate as per EN 10204 3.1
									4	Overpressure test with certificate, inspection certificate as per EN 10204 3.1
									5	Helium leak test EN 1518 with test certificate, inspection certificate as per EN 10204 3.1

995										Marking:
									1	Tagging (TAG), see additional spec.
									2	Bus adress, see additional spec.

PMC71										order code

PMP71

This overview does not mark options which are mutually exclusive.

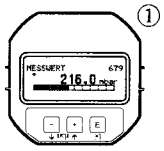

10	Approval:
A	For non-hazardous areas
1	ATEX II 1/2 G Ex ia IIC T6
6	ATEX II 1/2 G Ex ia IIC T6, overspill protection WHG
2	ATEX II 1/2 D
4	ATEX II 1/3 D
8	ATEX II 1 GD Ex ia IIC T6
3	ATEX II 1/2 GD Ex ia IIC T6
5	ATEX II 2 G Ex d IIC T6
7	ATEX II 3 G Ex nA II T6
S	FM IS, Class I, II, III Division 1, Groups A – G; NI Class I Division 2, Groups A – D; AEx ia
T	FM XP, Class I Division 1, Groups A – D; AEx d
Q	FM DIP, Class II, III Division 1, Groups E – G
R	FM NI, Class I, Division 2, Groups A – D
U	CSA IS, Class I, II, III Division 1, Groups A – G; Class I Division 2, Groups A – D, Ex ia
V	CSA XP, Class I Division 1, Groups B – D; Ex d
W	CSA Class II, III Division 1, Groups E – G (Dust Ex)
G	NEPSI Ex d IIC T6
H	NEPSI Ex ia IIC T6
L	TIIS Ex d IIC T6
I	IECEx Zone 0/1 Ex ia IIC T6
B	Combined certificates: ATEX II 1/2 G Ex ia IIC T6 + II 2 G Ex d IIC T6
C	Combined certificates: FM IS and XP Class I Division 1, Groups A – D
D	Combined certificates: CSA IS and XP Class I Division 1, Groups A – D
E	Combined certificates: FM/CSA IS and XP Class I Division 1, Groups A – D
F	Combined certificates: ATEX II Ex ia / Ex d + FM/CSA IS + XP ATEX II 1/2G Ex ia IIC T6+ ATEX II 2G Ex d IIC T6+ FM/CSA IS + XP Cl.I Div.1 Gr.A-D

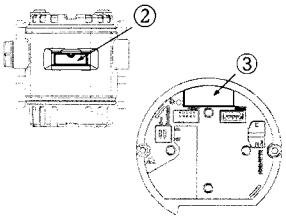

20	Output; Operation:
A	4...20 mA HART, operation outside, LCD (→ see Fig. ①, ②)
B	4...20 mA HART, operation inside, LCD (→ see Fig. ①, ③)
C	4...20 mA HART, operation inside (→ see Fig. ③)
M	PROFIBUS PA, operation outside, LCD (→ see Fig. ①, ②)
N	PROFIBUS PA, operation inside, LCD (→ see Fig. ①, ③)
O	PROFIBUS PA, operation inside (→ see Fig. ③)
P	FOUNDATION Fieldbus, operation outside, LCD (→ see Fig. ①, ③)
Q	FOUNDATION Fieldbus, operation inside, LCD (→ see Fig. ①, ③)
R	FOUNDATION Fieldbus, operation inside (→ see Fig. ③)

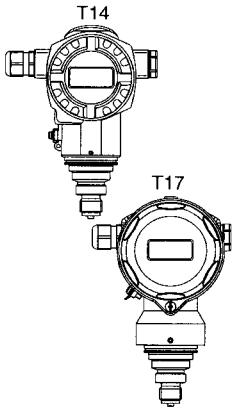

30	Housing; Cable entry; Protection:
A	Aluminium T14 housing, optional display on the side, IP 66/67/NEMA 4X/ 6P, Gland M 20x1.5
B	Aluminium T14 housing, optional display on the side, IP 66/67/NEMA 4X/ 6P, Thread G 1/2
C	Aluminium T14 housing, optional display on the side, IP 66/67/NEMA 4X/ 6P, Thread 1/2 NPT
D	Aluminium T14 housing, optional display on the side, IP 66/67/NEMA 4X/ 6P, M 12x1 PA plug
E	Aluminium T14 housing, optional display on the side, IP 66/67/NEMA 4X/ 6P, 7/8" FF plug
F	Aluminium T14 housing, optional display on the side, IP 65/NEMA 4X, Hand 7D plug 90°
1	AISI 316L T14 housing, optional display on the side, IP 66/67/NEMA 4X/ 6P, Gland M 20x1.5
2	AISI 316L T14 housing, optional display on the side, IP 66/67/NEMA 4X/ 6P, Thread G 1/2
3	AISI 316L T14 housing, optional display on the side, IP 66/67/NEMA 4X/ 6P, Thread 1/2 NPT
4	AISI 316L T14 housing, optional display on the side, IP 66/67/NEMA 4X/ 6P, M 12x1 PA plug
5	AISI 316L T14 housing, optional display on the side, IP 66/67/NEMA 4X/ 6P, 7/8" FF plug
6	AISI 316L T14 housing, optional display on the side, IP 65/NEMA 4X, Hand 7D plug 90°
R	T17 316L Hygiene IP66/68 NEMA6P; M20 gland, T17 = side cover
S	T17 316L Hygiene IP66/68 NEMA6P; G1/2 thread, T17 = side cover
T	T17 316L Hygiene IP66/68 NEMA6P; NPT1/2 thread, T17 = side cover
U	T17 316L Hygiene IP66/68 NEMA6P; M12 plug, T17 = side cover
V	T17 316L Hygiene IP66/68 NEMA6P; 7/8" plug, T17 = side cover

40 — Sensor range; Sensor overload limit (= OPL):

Sensors for gauge pressure

Measurement limits: –100 % (–1 bar)...+100 % of sensor nominal range

	Sensor nominal value (URL)	OPL (Over pressure limit)
1F	400 mbar/40 kPa/6 psi g	6 bar/600 kPa/90 psi g
1H	1 bar/100 kPa/15 psi g	10 bar/1 MPa/150 psi g
1K	2 bar/200 kPa/30 psi g	20 bar/2 MPa/300 psi g

40	Sensor range; Sensor overload limit (= OPL):	
1M	4 bar/400 kPa/60 psi g	28 bar/2.8 MPa/420 psi g
1P	10 bar/1 MPa/150 psi g	40 bar/4 MPa/600 psi g
1S	40 bar/4 MPa/600 psi g	160 bar/16 MPa/2400 psi g
1U	100 bar/10 MPa/1500 psi g	400 bar/40 MPa/6000 psi g
1W	400 bar/40 MPa/6000 psi g	600 bar/60 MPa/9000 psi g
1X	700 bar/70 MPa/10500 psi g	1050 bar/105 MPa/15700 psi g
Sensors for absolute pressure		
	Sensor nominal value (URL)	**OPL (Over pressure limit)**
2F	400 mbar/40 kPa/6 psi abs	6 bar/600 kPa/90 psi abs
2H	1 bar/100 kPa/15 psi abs	10 bar/1 MPa/150 psi abs
2K	2 bar/200 kPa/30 psi abs	20 bar/2 MPa/300 psi abs
2M	4 bar/400 kPa/60 psi abs	28 bar/2.8 MPa/420 psi abs
2P	10 bar/1 MPa/150 psi abs	40 bar/4 MPa/600 psi abs
2S	40 bar/4 MPa/600 psi abs	160 bar/16 MPa/2400 psi abs
2U	100 bar/10 MPa/1500 psi g	400 bar/40 MPa/6000 psi g
2W	400 bar/40 MPa/6000 psi g	600 bar/60 MPa/9000 psi g
2X	700 bar/70 MPa/10500 psi g	1050 bar/105 MPa/15700 psi g

50	Calibration; Unit:
1	Sensor range; mbar/bar
2	Sensor range; kPa/MPa
3	Sensor range; mmH_2O/mH_2O
4	Sensor range; inH_2O/ftH_2O
6	Sensor range; psi
B	Customised; see additional specification
C	Factory certificate 5-point; see additional specification
D	DKD certificate; see additional specification
K	Platinum; see additional specification
L	Platinum and factory certificate 5-point; see additional specification
M	Platinum and DKD certificate; see additional specification

60	Membrane material:
1	AISI 316L
2	Alloy C276
6	AISI 316L with Gold-Rhodium coating

70	Process connection; Material:
	Thread, internal process isolating diaphragm
GA	Thread ISO 228 G 1/2 A EN 837, AISI 316L
GB	Thread ISO 228 G 1/2 A EN 837, Alloy C
GE	Thread ISO 228 G 1/2 A G 1/4 (female), AISI 316L
GF	Thread ISO 228 G 1/2 A G 1/4 (female), Alloy C
GH	Thread ISO 228 G 1/2 A hole 11.4 mm, AISI 316L
GJ	Thread ISO 228 G 1/2 A hole 11.4 mm, Alloy C
RA	Thread ANSI 1/2 MNPT 1/4 FNPT, AISI 316L (CRN)
RB	Thread ANSI 1/2 MNPT 1/4 FNPT, Alloy C (CRN)
RD	Thread ANSI 1/2 MNPT hole, AISI 316L (CRN)
RE	Thread ANSI 1/2 MNPT hole, Alloy C (CRN)
RH	Thread ANSI 1/2 FNPT, AISI 316L
RJ	Thread ANSI 1/2 FNPT, Alloy C
GL	Thread JIS B0202 G 1/2 (male), AISI 316L
RL	Thread JIS B0203 R 1/2 (male), AISI 316L
	For continuation "Process connection; Material", see next page.
	Thread, internal process isolating diaphragm (continued)
GP	Thread DIN 13 M 20x1.5 EN 837 hole 11.4 mm, AISI 316L
GQ	Thread DIN 13 M 20x1.5 EN 837 hole 11.4 mm, Alloy C
	Thread, flush-mounted process isolating diaphragm
1A	Thread ISO 228 G 1/2 A, DIN 3852, AISI 316L
1B	Thread ISO 228 G 1/2 A, DIN 3852, Alloy C
1D	Thread ISO 228 G 1 A, AISI 316L
1E	Thread ISO 228 G 1 A, Alloy C
1G	Thread ISO 228 G 1 1/2 A, AISI 316L
1H	Thread ISO 228 G 1 1/2 A, Alloy C
1K	Thread ISO 228 G 2 A, AISI 316L
1L	Thread ISO 228 G 2 A, Alloy C
2A	Thread ANSI 1 MNPT, AISI 316L (CRN)
2B	Thread ANSI 1 MNPT, Alloy C (CRN)
2D	Thread ANSI 1 1/2 MNPT, AISI 316L (CRN)
2E	Thread ANSI 1 1/2 MNPT, Alloy C (CRN)

70	Process connection; Material:
2G	Thread ANSI 2 MNPT, AISI 316L (CRN)
2H	Thread ANSI 2 MNPT, Alloy C
1N	Thread DIN 16288 M 20x1.5, AISI 316L
1P	Thread DIN 16288 M 20x1.5, Alloy C
1R	Thread DIN 13 M 44x1.25, AISI 316L
1S	Thread DIN 13 M 44x1.25, Alloy C
	EN/DIN flanges, flush-mounted process isolating diaphragm
CN	DN 25 PN 10-40 B1, AISI 316L
CP	DN 32 PN 10-40 B1, AISI 316L
CQ	DN 40 PN 10-40 B1, AISI 316L
B3	DN 50 PN 10-40 B1, AISI 316L
B4	DN 80 PN 10-40 B1, AISI 316L
	ANSI flanges, flush-mounted process isolating diaphragm
AN	1" 300 lbs RF, AISI 316/316L (CRN)
AE	1 1/2" 150 lbs RF, AISI 316/316L (CRN)
AQ	1 1/2" 300 lbs RF, AISI 316/316L (CRN)
AF	2" 150 lbs RF, AISI 316/316L (CRN)
AR	2" 300 lbs RF, AISI 316/316L (CRN)
AG	3" 150 lbs RF, AISI 316/316L (CRN)
AS	3" 300 lbs RF, AISI 316/316L (CRN)
AH	4" 150 lbs RF, AISI 316/316L (CRN)
AT	4" 300 lbs RF, AISI 316/316L (CRN)
	JIS flanges, flush-mounted process isolating diaphragm
KA	20K 25A RF, AISI 316L
KF	10K 50A RF, AISI 316L
KL	10K 80A RF, AISI 316L
KH	10K 100A RF, AISI 316L
	Other
UR	Ovalflange adapter 1/4-18 NPT, mounting: 7/16-20 UNF, AISI 316L (CRN)
U1	Prepared for diaphragm seal mount, AISI 316L (CRN)

90	Fill fluid:
A	Silicone oil fill
F	Inert oil fill
K	Inert oil fill, cleaned from oil and greace
N	Inert oil fill, cleaned for oxygen services (Note application limits pressure/temperature)

100	Additional option 1:
A	not selected
E	SIL/IEC 61508 Declaration of conformity
B	Material test certificate for wetted parts, inspection certificate as per EN 10204 3.1 acc. to specification 52005759
C	NACE MR0175 (wetted parts)
D	Material test certificate for wetted parts as per EN 10204 3.1 and NACE MR0175 material, inspection certificate as per EN 10204 acc. to specification 52010806
M	Overvoltage protection
J	Software adjustment, see additional spec.
N	HistoROM/M-DAT
S	GL (German Lloyd)/ABS marine certificate
2	Test report acc. to EN10204 2.2
3	Routine test with certificate, inspection certificate as per EN 10204 3.1
4	Overpressure test with certificate, inspection certificate as per EN 10204 3.1

110	Additional option 2:
A	not selected
E	SIL/IEC 61508 Declaration of conformity
G	Separate housing, cable length see additional spec. + mounting bracket, wall/pipe, 316L
M	Overvoltage protection
J	Software adjustment, see additional spec.
N	HistoROM/M-DAT
S	GL (German Lloyd)/ABS marine certificate
U	Mounting bracket for wall/pipe, AISI 304
2	Test report acc. to EN10204 2.2
3	Routine test with certificate, inspection certificate as per EN 10204 3.1
4	Overpressure test with certificate, inspection certificate as per EN 10204 3.1
5	Helium leak test EN 1528 with test certificate, inspection certificate as per EN 10204 3.1

995											Marking:	
											1	Tagging (TAG), see additional spec.
											2	Bus adress, see additional spec.
PMP71											order code	

PMP75

This overview does not mark options which are mutually exclusive.

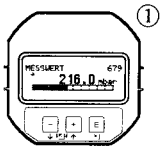

10	Approval:
A	For non-hazardous areas
1	ATEX II 1/2 G Ex ia IIC T6
6	ATEX II 1/2 G Ex ia IIC T6, overspill protection WHG
2	ATEX II 1/2 D
4	ATEX II 1/3 D
8	ATEX II 1 GD Ex ia IIC T6
3	ATEX II 1/2 GD Ex ia IIC T6
5	ATEX II 2 G Ex d IIC T6
7	ATEX II 3 G Ex nA II T6
S	FM IS, Class I, II, III Division 1, Groups A – G; NI Class I Division 2, Groups A – D; AEx ia
T	FM XP, Class I Division 1, Groups A – D; AEx d
Q	FM DIP, Class II, III Division 1, Groups E – G
R	FM NI, Class I, Division 2, Groups A – D
U	CSA IS, Class I, II, III Division 1, Groups A – G; Class I Division 2, Groups A – D, Ex ia
V	CSA XP, Class I Division 1, Groups B – D; Ex d
W	CSA Class II, III Division 1, Groups E – G (Dust Ex)
G	NEPSI Ex d IIC T6
H	NEPSI Ex ia IIC T6
L	TIIS Ex d IIC T6
I	IECEx Zone 0/1 Ex ia IIC T6
B	Combined certificates: ATEX II 1/2 G Ex ia IIC T6 + II 2 G Ex d IIC T6
C	Combined certificates: FM IS and XP Class I Division 1, Groups A – D
D	Combined certificates: CSA IS and XP Class I Division 1, Groups A – D
E	Combined certificates: FM/CSA IS and XP Class I Division 1, Groups A – D
F	Combined certificates: ATEX II Ex ia / Ex d + FM/CSA IS + XP ATEX II 1/2G Ex ia IIC T6+ ATEX II 2G Ex d IIC T6+ FM/CSA IS + XP Cl.I Div.1 Gr.A-D

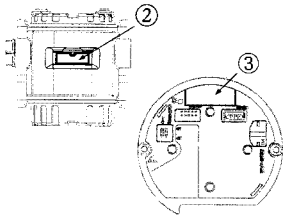

20	Output; Operation:
A	4...20 mA HART, operation outside, LCD (→ see Fig. ①, ②)
B	4...20 mA HART, operation inside, LCD (→ see Fig. ①, ③)
C	4...20 mA HART, operation inside (→ see Fig. ③)
M	PROFIBUS PA, operation outside, LCD (→ see Fig. ①, ②)
N	PROFIBUS PA, operation inside, LCD (→ see Fig. ①, ③)
O	PROFIBUS PA, operation inside (→ see Fig. ③)
P	FOUNDATION Fieldbus, operation outside, LCD (→ see Fig. ①, ③)
Q	FOUNDATION Fieldbus, operation inside, LCD (→ see Fig. ①, ③)
R	FOUNDATION Fieldbus, operation inside (→ see Fig. ③)

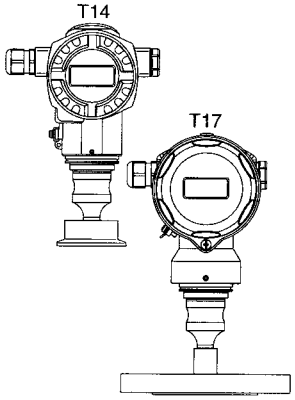

30	Housing; Cable entry; Protection:
A	Aluminium T14 housing, optional display on the side, IP 66/67/NEMA 4X/ 6P, Gland M 20x1.5
B	Aluminium T14 housing, optional display on the side, IP 66/67/NEMA 4X/ 6P, Thread G 1/2
C	Aluminium T14 housing, optional display on the side, IP 66/67/NEMA 4X/ 6P, Thread 1/2 NPT
D	Aluminium T14 housing, optional display on the side, IP 66/67/NEMA 4X/ 6P, M 12x1 PA plug,
E	Aluminium T14 housing, optional display on the side, IP 66/67/NEMA 4X/ 6P, 7/8" FF plug
F	Aluminium T14 housing, optional display on the side, IP 65/NEMA 4X, Hand 7D plug 90°
1	AISI 316L T14 housing, optional display on the side, IP 66/67/NEMA 4X/ 6P, Gland M 20x1.5
2	AISI 316L T14 housing, optional display on the side, IP 66/67/NEMA 4X/ 6P, Thread G 1/2
3	AISI 316L T14 housing, optional display on the side, IP 66/67/NEMA 4X/ 6P, Thread 1/2 NPT
4	AISI 316L T14 housing, optional display on the side, IP 66/67/NEMA 4X/ 6P, M 12x1 PA plug
5	AISI 316L T14 housing, optional display on the side, IP 66/67/NEMA 4X/ 6P, 7/8" FF plug
6	AISI 316L T14 housing, optional display on the side, IP 65/NEMA 4X, Hand 7D plug 90°
R	T17 316L Hygiene IP66/68 NEMA6P; M20 gland, T17 = side cover
S	T17 316L Hygiene IP66/68 NEMA6P; G1/2 thread, T17 = side cover
T	T17 316L Hygiene IP66/68 NEMA6P; NPT1/2 thread, T17 = side cover
U	T17 316L Hygiene IP66/68 NEMA6P; M12 plug, T17 = side cover
V	T17 316L Hygiene IP66/68 NEMA6P; 7/8" plug, T17 = side cover

40	Sensor range; Sensor overload (= OPL):	
	Sensors for gauge pressure	
	Measurement limits: –100 % (–1 bar)...+100 % of sensor nominal range	
	Sensor nominal value (URL)	**OPL (Over pressure limit)**
1F	400 mbar/40 kPa/6 psi	6 bar/600 kPa/90 psi
1H	1 bar/100 kPa/15 psi	10 bar/1 MPa/150 psi
1K	2 bar/200 kPa/30 psi	20 bar/2 MPa/300 psi

40	Sensor range; Sensor overload (= OPL):	
1M	4 bar/400 kPa/60 psi	28 bar/2.8 MPa/420 psi
1P	10 bar/1 MPa/150 psi	40 bar/4 MPa/600 psi
1S	40 bar/4 MPa/600 psi	160 bar/16 MPa/2400 psi
1U	100 bar/10 MPa/1500 psi	400 bar/40 MPa/6000 psi
1W	400 bar/40 MPa/6000 psi	600 bar/60 MPa/9000 psi
	Sensors for absolute pressure	
	Sensor nominal value (URL)	**OPL (Over pressure limit)**
2F	400 mbar/40 kPa/6 psi abs	6 bar/600 kPa/90 psi abs
2H	1 bar/100 kPa/15 psi abs	10 bar/1 MPa/150 psi abs
2K	2 bar/200 kPa/30 psi abs	20 bar/2 MPa/300 psi abs
2M	4 bar/400 kPa/60 psi abs	28 bar/2.8 MPa/420 psi abs
2P	10 bar/1 MPa/150 psi abs	40 bar/4 MPa/600 psi abs
2S	40 bar/4 MPa/600 psi abs	160 bar/16 MPa/2400 psi abs
2U	100 bar/10 MPa/1500 psi abs	400 bar/40 MPa/6000 psi abs
2W	400 bar/40 MPa/6000 psi abs	600 bar/60 MPa/9000 psi abs

50	Calibration; Unit:
1	Sensor range; mbar/bar
2	Sensor range; kPa/MPa
3	Sensor range; mmH_2O/mH_2O
4	Sensor range; inH_2O/ftH_2O
6	Sensor range; psi
B	Customised; see additional specification
C	Factory certificate 5-point; see additional specification
D	DKD calibration: see additional specification

60	Membrane material:
1	AISI 316L
2	Alloy C276
3	Monel
5	Tantal
6	AISI 316L with Gold-Rhodium coating
7	AISI 316L with 0.09 mm PTFE foil (not for vacuum applications)
8	AISI 316L with 0.25 mm PTFE foil (not for vacuum applications, only for non-hazardous areas)

70	Process connection, Material:
	Thread, flush-mounted process isolating diaphragm
1D	Thread ISO 228 G 1 A, AISI 316L
1E	Thread ISO 228 G 1 A, Alloy C
1G	Thread ISO 228 G 1 1/2 A, AISI 316L
1H	Thread ISO 228 G 1 1/2 A, Alloy C
1K	Thread ISO 228 G 2 A, AISI 316L
1L	Thread ISO 228 G 2 A, Alloy C
2A	Thread ANSI 1 MNPT, AISI 316L
2B	Thread ANSI 1 MNPT, Alloy C (CRN)
2D	Thread ANSI 1 1/2 MNPT, AISI 316L
2E	Thread ANSI 1 1/2 MNPT, Alloy C (CRN)
2G	Thread ANSI 2 MNPT, AISI 316L
2H	Thread ANSI 2 MNPT, Alloy C (CRN)
	Clamp connections
TB	Tri-Clamp, ISO 2852 DN 25 (1"), DIN 32676 DN 25, AISI 316L (CRN), EHEDG
TC	Tri-Clamp, ISO 2852 DN 38 (1 1/2"), DIN 32676 DN 40, AISI 316L (CRN), EHEDG
TD	Tri-Clamp, ISO 2852 DN 40 – DN 51 (2")/DN 50, AISI 316L (CRN), EHEDG
TF	Tri-Clamp, ISO 2852 DN 70 – DN 76.1 (3"), AISI 316L (CRN), EHEDG
	Pipe diaphragm seal, Clamp
SB	Tri-Clamp, ISO 2852 DN 25 (1"), AISI 316L (CRN)
SC	Tri-Clamp, ISO 2852 DN 38 (1 1/2"), AISI 316L, 3.1 + Pressure test acc. to PED Cat.II (CRN)
SD	Tri-Clamp, ISO 2852 DN 51 (2"), AISI 316L, 3.1 + Pressure test acc. to PED Cat.II (CRN)
	Hygienic connections
MR	DIN 11851 DN 50 PN 25, AISI 316L, EHEDG
MS	DIN 11851 DN 65 PN 25, AISI 316L, EHEDG
MT	DIN 11851 DN 80 PN 25, AISI 316L, EHEDG
M3	DIN 11851 DN 50 PN 25 thread, AISI 316L, EHEDG
M4	DIN 11851 DN 65 PN 25 thread, AISI 316L, EHEDG
M5	DIN 11851 DN 80 PN 25 thread, AISI 316L, EHEDG
TG	SMS 1" PN 25, AISI 316L, EHEDG
TH	SMS 1 1/2" PN 25, AISI 316L, EHEDG
TI	SMS 2" PN 25, AISI 316L, EHEDG

70	Process connection, Material:
TL	APV-RJT 1" PN 40, AISI 316L
TM	APV-RJT 1 1/2" PN 40, AISI 316L
TN	APV-RJT 2" PN 40, AISI 316L
TP	APV-ISS 1" PN 40, AISI 316L
TQ	APV-ISS 1 1/2" PN 40, AISI 316L
TS	APV-ISS 2" PN 40, AISI 316L
TK	DRD DN50 (65 mm) PN 25, AISI 316L
TR	Varivent Type N for pipes DN 40 – DN 162 PN 40, AISI 316L, EHEDG
	EN/DIN flanges, flush-mounted process isolating diaphragm
CN	DN 25 PN 10-40 B1, AISI 316L
DN	DN 25 PN 63-160 E, AISI 316L
EN	DN 25 PN 250 E, AISI 316L
E1	DN 25 PN 400 E, AISI 316L
CP	DN 32 PN 10-40 B1, AISI 316L
CQ	DN 40 PN 10-40 B1, AISI 316L
B3	DN 50 PN 10-40 B1, AISI 316L
C3	DN 50 PN 63 B2, AISI 316L 2
EF	DN 50 PN 100-160 E, AISI 316L
ER	DN 50 PN 250 E, AISI 316L
E3	DN 50 PN 400 E, AISI 316L
B4	DN 80 PN 10-40 B1, AISI 316L
C4	DN 80 PN 100 B2, AISI 316L
C5	DN 100 PN 100 B2, AISI 316L
	EN/DIN flanges with extended diaphragm seal, flush-mounted process isolating diaphragm
D3	DN 50 PN 10-40 B1, Tubus 50 mm/100 mm/200 mm, AISI 316L
D4	DN 80 PN 10-40 B1, Tubus 50 mm/100 mm/200 mm, AISI 316L
	ANSI flanges, flush-mounted process isolating diaphragm
AC	1" 150 lbs RF, AISI 316/316L (CRN)
AN	1" 300 lbs RF, AISI 316/316L (CRN)
HC	1" 400/600 lbs RF, AISI 316/316L (CRN)
HN	1" 900/1500 lbs RF, AISI 316/316L (CRN)
H0	1" 2500 lbs RF, AISI 316/316L (CRN)
AE	1 1/2" 150 lbs RF, AISI 316/316L (CRN)
AQ	1 1/2" 300 lbs RF, AISI 316/316L (CRN)
AF	2" 150 lbs RF, AISI 316/316L (CRN)
AR	2" 300 lbs RF, AISI 316/316L (CRN)
HF	2" 400/600 lbs RF, AISI 316/316L (CRN)
HR	2" 900/1500 lbs RF, AISI 316/316L (CRN)
H3	2" 2500 lbs RF, AISI 316/316L
AG	3" 150 lbs RF, AISI 316/316L (CRN)
AS	3" 300 lbs RF, AISI 316/316L (CRN)
AH	4" 150 lbs RF, AISI 316/316L (CRN)
AT	4" 300 lbs RF, AISI 316/316L (CRN)
	ANSI flanges with extended diaphragm seal
J3	2" 150 lbs RF, Tubus 2"/4"/6"/8", AISI 316/316L (CRN)
J4	3" 150 lbs RF, Tubus 2"/4"/6"/8", AISI 316/316L (CRN)
J7	3" 300 lbs RF, Tubus 2"/4"/6"/8", AISI 316/316L (CRN)
J5	4" 150 lbs RF, Tubus 2"/4"/6"/8", AISI 316/316L (CRN)
J8	4" 300 lbs RF, Tubus 2"/4"/6"/8", AISI 316/316L (CRN)
	JIS flanges, flush-mounted process isolating diaphragm
KC	10K 25A RF, AISI 316L
KF	10K 50A RF, AISI 316L
KL	10K 80A RF, AISI 316L
KH	10K 100A RF, AISI 316L
	Other
UA	Thread ISO 228 G 1/2 A PN 160, seperator, EN 837, welded, AISI 316L
UB	Thread ANSI 1/2 MNPT PN 160, seperator, welded, AISI 316L (CRN)
UC	Thread ISO 228 G 1/2 B, seperator, EN 837, threaded, AISI 316L
UD	Thread ANSI 1/2 MNPT, seperator, threaded, AISI 316L
UG	Thread 1/2 NPT PN 250, seperator, threaded, AISI 316L
UH	Thread 1 NPT PN 250, seperator, threaded, AISI 316L

90	Fill fluid:
A	Silicone oil
B	...m capillary, inert oil
C	...ft capillary, inert oil
D	Vegetable oil
F	Inert oil

90	Fill fluid:
G	High temperature oil, Temp. isolator 100 mm
H	Silicone oil, Temp. isolator 100 mm
K	Inert oil, cleaned from oil and greace
N	Inert oil, cleaned for oxygen services
1	... m capillary, silicone oil
2	... ft capillary, silicone oil
3	... m capillary, high temperature oil
4	... ft capillary, high temperature oil
5	... m capillary, vegetable oil
6	... ft capillary, vegetable oil
7	... m capillary, Low temperature oil
8	... ft capillary, Low temperature oil

100	Additional option 1:
A	not selected
E	SIL/IEC 61508 Declaration of conformity
B	Material test certificate for wetted parts, inspection certificate as per EN 10204 3.1 acc. to specification 52005759
C	NACE MR0175 (wetted parts)
D	Material test certificate for wetted parts, inspection certificate as per EN 10204 3.1 and NACE MR0175 material, inspection certificate as per EN 10204 acc. to specification 52010806
M	Overvoltage protection
J	Software adjustment, see additional spec.
N	HistoROM/M-DAT
S	GL (German Lloyd)/ABS marine certificate
2	Test report acc. to EN 10204 2.2
3	Routine test with certificate, inspection certificate as per EN 10204 3.1
4	Overpressure test with certificate, inspection certificate as per EN 10204 3.1

110	Additional option 2:
A	not selected
E	SIL/IEC 61508 Declaration of conformity
G	Separate housing, cable length see additional spec. + mounting bracket, wall/pipe, 316L
M	Overvoltage protection
J	Software adjustment, see additional spec.
N	HistoROM/M-DAT
P	Ra < 0.38 µm/15.75 µin, electropolished + EN10204-3.1 material (wetted) inspection certificate; in conjunction with process connection versions "TC", "TD" and "TR" please order roughness test separetely
S	GL (German Lloyd)/ABS marine certificate
U	Mounting bracket for wall/pipe, AISI 304
2	Test report acc. to EN 10204 2.2
3	Routine test with certificate, inspection certificate as per EN 10204 3.1
4	Overpressure test with certificate, inspection certificate as per EN 10204 3.1

995	Marking:
1	Tagging (TAG), see additional spec.
2	Bus adress, see additional spec.

PMP75	order code

Additional documentation

Field of Activities	■ Pressure measurement, Powerful instruments for process pressure, differential pressure, level and flow: FA004P/00/en
Technical Information	■ Deltabar S: TI382P/00/en ■ Deltapilot S: TI416P/00/en ■ EMC test basic principles TI241F/00/en
Operating Instructions	4...20 mA HART: ■ Cerabar S: BA271P/00/de ■ Description of device functions Cerabar S/Deltabar S/Deltapilot S: BA274P/00/en PROFIBUS PA: ■ Cerabar S: BA295P/00/de ■ Description of device functions Cerabar S/Deltabar S/Deltapilot S: BA296P/00/en FOUNDATION Fieldbus: ■ Cerabar S: BA302P/00/de ■ Description of device functions Cerabar S/Deltabar S: BA303P/00/en
Brief operating instructions	■ 4...20 mA HART, Cerabar S: KA1019P/00/en ■ PROFIBUS PA, Cerabar S: KA1022P/00/en ■ FOUNDATION Fieldbus, Cerabar S: KA1025P/00/en
Manual for Functional Safety (SIL)	■ Cerabar S (4...20 mA): SD190P/00/en

Safety Instructions

Certificate/Type of Protection	Device	Electronic insert	Documentation	Version in the order code
ATEX II 1/2 G Ex ia IIC T6	PMC71, PMP71, PMP75	– 4...20 mA HART, PROFIBUS PA, FOUNDATION Fieldbus	– XA244P	1
ATEX II 1/2 D	PMP71, PMP75	– 4...20 mA HART – PROFIBUS PA, FOUNDATION Fieldbus	– XA246P – XA289P	2
ATEX II 1/2 D Ex ia IIC	PMC71	– 4...20 mA HART – PROFIBUS PA, FOUNDATION Fieldbus	– XA247P – XA290P	2
ATEX II 1/3 D	PMP71, PMP75	– 4...20 mA HART – PROFIBUS PA, FOUNDATION Fieldbus	– XA248P – XA291P	4
ATEX II 2 G Ex d IIC T6	PMP71, PMP75	– 4...20 mA HART, PROFIBUS PA, FOUNDATION Fieldbus	– XA249P	5
ATEX II 2 G Ex d[ia] IIC T6	PMC71	– 4...20 mA HART, PROFIBUS PA., FOUNDATION Fieldbus	– XA250P	5
ATEX II 3 G Ex nA II T6	PMC71, PMP71, PMP75	– 4...20 mA HART, PROFIBUS PA, FOUNDATION Fieldbus	– XA251P	7
ATEX II 1/2 GD Ex ia IIC T6	PMC71, PMP71, PMP75	– 4...20 mA HART, PROFIBUS PA, FOUNDATION Fieldbus	– XA253P	3
ATEX II 1 GD Ex ia IIC T6	PMC71, PMP71, PMP75	– 4...20 mA HART, PROFIBUS PA, FOUNDATION Fieldbus	– XA276P	8
ATEX II 1/2 G Ex ia IIC T6 + ATEX II 2 G Ex d IIC T6	PMP71, PMP75	– 4...20 mA HART, PROFIBUS PA, FOUNDATION Fieldbus	– XA252P	B

Certificate/Type of Protection	Device	Electronic insert	Documentation	Version in the order code
IECEx Zone 0/1 Ex ia IIC T6	PMC71, PMP71, PMP75	– 4...20 mA HART	– XB005P	I

Certificate/Type of Protection	Device	Electronic insert	Documentation	Version in the order code
NEPSI Ex ia IIC T6	PMC71, PMP71, PMP75	– 4...20 mA HART, PROFIBUS PA, FOUNDATION Fieldbus	– XC003P	H
NEPSI Ex d IIC T6	PMP71, PMP75	– 4...20 mA HART, PROFIBUS PA, FOUNDATION Fieldbus	– XC005P	G
NEPSI Ex d[ia] IIC T6	PMC71	– 4...20 mA HART, PROFIBUS PA, FOUNDATION Fieldbus	– XC005P	G

Installation/Control Drawings

Certificate/Type of Protection	Device	Electronic Insert	Documentation	Version in the order code
FM IS Class I, II, III, Division 1, Groups A – G; NI, Class I Division 2, Groups A – D; AEx ia	PMC71, PMP71, PMP75	– 4...20 mA HART – PROFIBUS PA, FOUNDATION Fieldbus	– ZD147P – ZD188P	S
CSA IS Class I, II, III, Division 1, Groups A – G; Class I Division 2, Groups A – G	PMC71, PMP71, PMP75	– 4...20 mA HART – PROFIBUS PA, FOUNDATION Fieldbus	– ZD148P – ZD189P	U
FM IS + XP Class , Division 1, Groups A – D	PMP71, PMP75	– 4...20 mA HART – PROFIBUS PA, FOUNDATION Fieldbus	– ZD187P – ZD190P	C
CSA IS + XP Class I Division 1, Groups A – D	PMP71, PMP75	– 4...20 mA HART – PROFIBUS PA, FOUNDATION Fieldbus	– ZD154P – ZD191P	D
FM/CSA IS + XP Class I Division 1, Groups A – D	PMP71, PMP75	– 4...20 mA HART – PROFIBUS PA, FOUNDATION Fieldbus	– ZD154P + ZD187P – ZD190P + ZD191P	E
CSA +XP Class I Division 1, Groups B - D, Class II Division 1, Groups E - G, Class III	PMP71, PMP75	– 4...20 mA HART – PROFIBUS PA, FOUNDATION Fieldbus	– in Vorbereitung	-

Overspill protection

- WHG: ZE260P/00/de

Instruments International

Endress+Hauser
Instruments International AG
Kaegenstrasse 2
4153 Reinach
Switzerland

Tel. +41 61 715 81 00
Fax +41 61 715 25 00
www.endress.com
info@ii.endress.com

Endress+Hauser
People for Process Automation

TI383P/00/EN/06.09
No. 71095447
CCS/FM+SGML 6.0

71095447

Arizona Water Company
Valley Farms Arsenic Removal Facility

Float Switch

Contractor:
Felix Construction Company
1326 W Industrial Dr
Coolidge, AZ 85142
Ph: (480) 464-0011
Fx: (480) 464-0078
www.felixconstruction.com

Water Technologies

9G-EF (Mercury Free) Direct Acting Float Switch (B100)

SIEMENS

Arguably the best non-mercury float switch available, this Teflon®-coated non-differential float of Type 316 stainless steel measures 5.5" in diameter. It is appropriate for a variety of applications, including sewage wet wells, storm water basins, water reservoirs, sludge tanks, irrigation canals and process sumps. The float operates reliably in even the most difficult environments. The 9G-EF can be used singly to sense an alarm level, but typically two or more switches are used in conjunction with our controllers to provide a float-based control system. The 9G-EF can be used as the redundant control sensor in larger automation installations.

TYPICAL SPECIFICATIONS

Float switch body shall be constructed of Teflon®-coated, 20 gauge, 316 stainless steel housing measuring not less than 51/2" in diameter. A long life, high reliability, potted SPST magnetic reed switch rated for not less than 100 VA at up to 250 Volts shall be mounted inside the float and connected to a multi-stranded, 2 conductor plus ground, 16 gauge, CPE jacketed cable. The cord shall have fine strand conductors (not more than 34 gauge) made especially for heavy flexing service. The cable connection point shall be potted in epoxy providing a strong bond to the float and reed switch forming a water/moisture tight connection. A flexible Neoprene sleeve, not less than 1/8" thick, shall be provided over the CPE jacketed cable extending not less than 5" from the top of the mounting bracket extending down through the cable mounting bracket hinge point to the top of the float switch body, providing cable stress point relief and extended operational life.

A 316 stainless steel flanged cable mounting clamp assembly shall be supplied allowing pipe or cable mounting as specified below. The float cable-mounting bracket shall be flared on both sides providing hinge point stress relief to both sides of the cable.

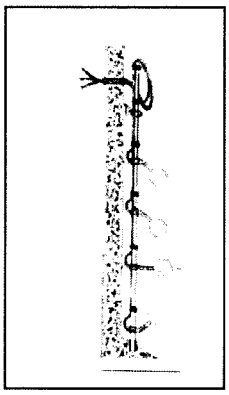

9G EF Floats provide reliable performance in "unbelievable surroundings."

The float switch assembly shall provide a minimum of two pounds of buoyancy in solutions with a specific gravity of 1.0 (water) and shall have an operating temperature rating of -35 to +90 degrees C.

The float switches shall be Model 9G-EF floats as manufactured by Siemens Water Technologies, Control Systems Products.

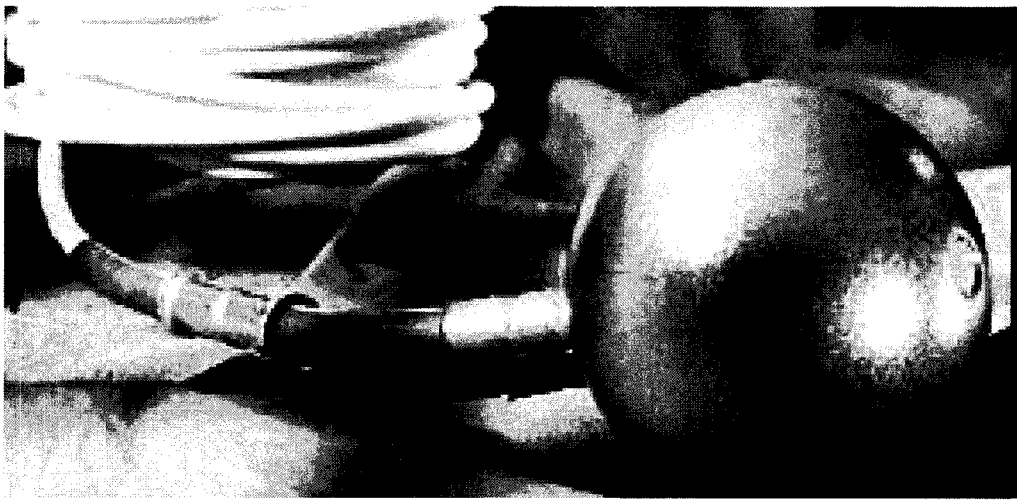

FEATURES

- Mercury Free – Magnetic Reed Switch
- Long life and reliable operation
- Non-oxidizing contacts allow low DC voltage signals for use with intrinsic safety devices
- Non-stick surface
- High buoyancy
- Pipe or suspension mounting
- 3 year factory warranty

DESCRIPTION	PART NO.
9G-EF (Mercury Free) NOTP Float Switch	
Teflon coated 316 SS Float Switch w/1 N.O. Contact & 30' Cable	6013520030
Teflon coated 316 SS Float Switch w/1 N.O. Contact & 60' Cable	6013520060
9G-EF (Mercury Free) NCTP Float Switch	
Teflon coated 316 SS Float Switch w/1 N.C. Contact & 30' Cable	6013530030
Teflon coated 316 SS Float Switch w/1 N.C. Contact & 60' Cable	6013530060
Mounting Hardware & Accessories	
9G Float Cable Clamp Assembly	6012120001
9G Float 1" Pipe Clamp Assembly	6011840001
316 SS cable suspension kit, 21'	6014400020
316 SS cable suspension kit, 31'	6014400030
316 SS cable suspension kit, 41'	6014400040
316 SS cable suspension kit, 61'	6014400060
316 SS cable suspension kit, 81'	6014400080
316 SS cable suspension kit, 101'	6014400100
5 Float Suspension Mount, 2 piece bracket w/strain reliefs	8031340001
9G CL3 1" stainless steel pipe mount clamps (transducer or float mount)	6011340001
15# Anchor	xx-333-100
Float Cable/Anchor kit 30' (w/15lb anchor, 30' SS cable, wall bracket, 5 cable clamp)	8032110003
Float Cable/Anchor kit 60' (w/15lb anchor, 60' SS cable, wall bracket, 5 cable clamp)	8032110006
IS6 Six Circuit Intrinsically Safe (Switch Circuit) Barrier: 12-24V DC powered	6013160002
9G JCTF fiberglass junction box (supports up to XXXX floats)	6011020001

Typical Mounting

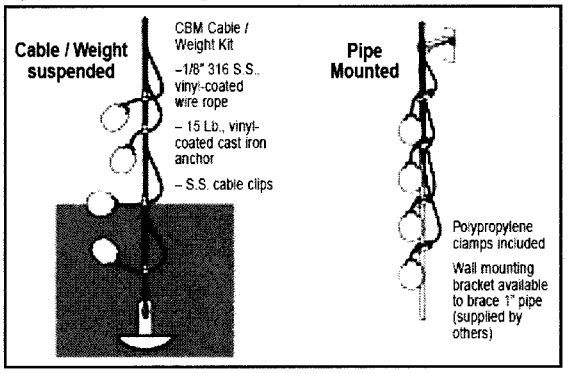

Pipe Mounting Dimensions

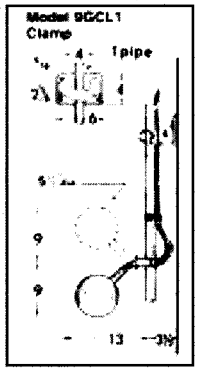

COMPLETE CONTROL CAPABILITIES

Siemens Water Technologies, Control Systems Products, offers a single, high-quality source for everything from simple level sensors to telemetry systems to complex system control engineering and software. Based in St. Paul, Minnesota, Control Systems is part of the leading global provider of industrial, municipal and residential water and wastewater treatment systems, products and services. As a major manufacturer/integrator with an extensive selection of specialized product lines in the areas of SCADA and telemetry, power equipment integration, automation and measurement, Control Systems is uniquely positioned to provide cost effective, comprehensive solutions for water, wastewater, and process control and telemetry applications.

The information provided in this literature contains merely general descriptions or characteristics of performance which in actual case of use do not always apply as described or which may change as a result of further development of the products. An obligation to provide the respective characteristics shall only exist if expressly agreed in the terms of the contract.

Siemens
Water Technologies
1239 Willow Lake Boulevard
Vadnais Heights, MN 55110
800.224.9474 phone
651.766.2700 phone
651.766.2701 fax

Printed in U.S.A.
CS-9GEF-DS-1006
©2006 Siemens Water Technologies Corp.
Subject to change without prior notice.

Chemical Feeding Technologies, Inc.
Quality Products for Environmental Quality®

Prepared: February 18, 2015 Revision: 1

Engineering Re-Submittal
Valley Farms Arsenic System
Disinfection System

Prepared by Chemical Feeding Technologies, Inc.

for

Felix Construction Co.

Phone: 602/650-1557 Fax: 602/277-2270 E-mail: rick@chemfeedtech.com

SPECIFICATIONS SHEET 85 PUMP SERIES

STENNER PUMPS

SINGLE HEAD ADJUSTABLE OUTPUT

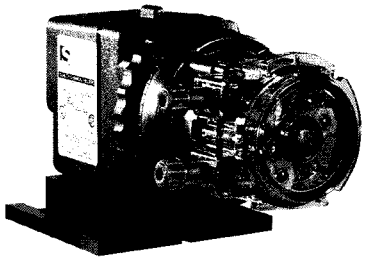

MODELS

- 85MHP5
- 85MHP17
- 85MHP40
- 85M1
- 85M2
- 85M3
- 85M4
- 85M5

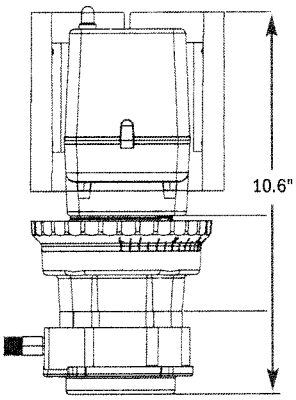

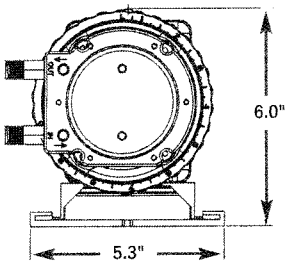

SHIPPING WEIGHT 8 lbs (3.6 kg)

SINGLE HEAD FIXED OUTPUT

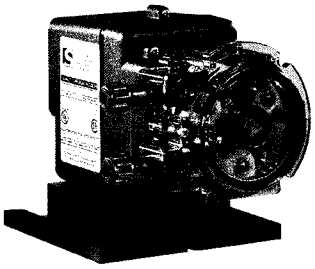

MODELS

- 85MPHP5
- 85MPHP17
- 85MPHP40
- 85MP1
- 85MP2
- 85MP3
- 85MP4
- 85MP5

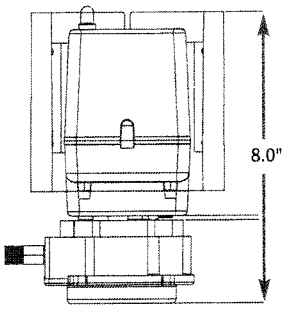

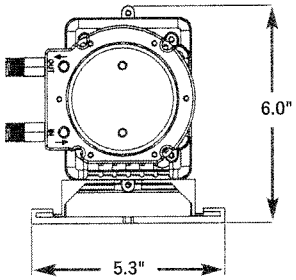

SHIPPING WEIGHT 6 lbs (2.7 kg)

METERING PUMP
UL LISTED
96F0

METERING PUMP
LR79585
NRTL /C

CE

IPX4

SANITATION ETL LISTED CM
94247
SANITATION LISTED
CONFORMS TO
STD. NSF-50
CIRCULATION SYSTEM COMPONENTS FOR SWIMMING POOLS, SPAS, OR HOT TUBS

THIS PRODUCT HAS BEEN TESTED AND CERTIFIED BY THE WATER QUALITY ASSOCIATION ACCORDING TO NSF/ANSI 61 FOR MATERIALS SAFETY ONLY.

PRODUCT LISTINGS VARY BY MODEL. CONTACT FACTORY FOR DETAILS.

FEATURES

- Positive displacement pump
- 3-point roller design assists in anti-siphon protection.
- Pump head requires no valves, allows for easy maintenance.
- Self-priming against maximum working pressure, foot valve not required.
- Pump does not lose prime or vapor lock.
- Pumps off-gassing solutions and can run dry.
- Output volume is not affected by back pressure.
- Injection check valve included w/85MHP & 85MPHP models.
- Easy to change pump tube; lubrication is not required.
- Pump tubes and pump heads interchange between models.
- Models tested by WQA to conform to ANSI/NSF STD 61.
- Models tested by ETL to conform to ANSI/NSF STD 50.
- All pump accessories included allow a fast and easy installation.

STENNER

3174 DeSalvo Road
Jacksonville, Florida 32246
Phone 904.641.1666
US Toll Free 800.683.2378
Fax 904.642.1012

www.stenner.com
sales@stenner.com

Hours of Operation (EST)
Mon. - Fri. 7:00 am - 5:30 pm

© Stenner Pump Company
All Rights Reserved

SPECIFICATION SHEET: 85 PUMP SERIES

STENNER PUMPS

SPECIFICATIONS

OUTPUT RANGE
adjustable models only, 5%-100%, 2.5% increments

MAXIMUM WORKING PRESSURE
100psi (1.7 bar) for the following models
85MHP5, 85MHP17, 85MHP40, 85MPHP5, 85MPHP17, 85MPHP40
25 psi (6.9 bar) for the following models
85M1, 85M2, 85M3, 85M4, 85M5, 85MP1, 85MP2, 85MP3, 85MP4, 85MP5

MAXIMUM AMBIENT and FLUID TEMPERATURE
125°F (52° C)

MAXIMUM SUCTION LIFT
25' vertical lift

MOTOR TYPE
1/30 HP, shaded pole, class B

FINAL MOTOR RPM
44

DUTY CYCLE
Continuous

MOTOR VOLTAGE (AMP DRAW)
120V 60Hz 1PH (1.7)
220V 60Hz 1PH (0.9)
230V 50Hz 1PH (0.9) International
250V 50Hz 1PH (0.9) International

POWER CORD PLUG END
120V 60Hz - NEMA 5/15, 230V 50Hz - CEE 7/VII
220V 60Hz - NEMA 6/15, 250V 50Hz - CEE 7/VII

WET END COMPONENTS

PERISTALTIC TUBE
Santoprene® *FDA approved
optional Tygothane®** FDA approved

TUBE FITTINGS, COMPRESSION NUTS
Type 1 rigid PVC-NSF listed

SUCTION STRAINER & WEIGHT
Type 1 rigid PVC body, ceramic weight - NSF listed

SUCTION/DISCHARGE TUBING & FERRULES
LDPE polyethylene, NSF and FDA approved

CHECK VALVE (injection fitting & body)
Type 1 rigid PVC-NSF listed

CHECK VALVE DUCKBILL
Santoprene®* FDA Approved
Pellathane®† (w/Tygothane® tube)

OTHER COMPONENTS

ALL PUMP HOUSINGS
GE Lexan®†† Polycarbonate

PUMP HEAD ROLLERS
LDPE

ROLLER BUSHINGS
Bronze Oilite

ALL FASTENERS
Stainless Steel

POWER CORD TYPE
SJTOW

*Santoprene® is a registered trademark of Advanced Elastomer System.
**Tygothane® is a registered trademark of Saint-Gobain Performance Plastics.
†Pellathane® is a registered trademark of The Dow Company, Midland, MI.
††Lexan® is a registered trademark of General Electric. Consult General Electric for chemical resistance of Lexan®.

ACCESSORY KIT SHIPPED WITH EACH PUMP
- 3 connecting nuts (1/4" or 3/8")
- 3 ferrules w/1/4" & 6mm OR 2 ferrules w/3/8"
- 1 injection check valve (100 psi) OR (1) injection fitting (25 psi)
- 1 weighted suction line strainer
- 1 20' roll of suction/discharge tubing 1/4" or 3/8" in white or UV black 6 mm Europe tubing in white only
- 1 spare pump tube
- 1 mounting bracket
- 1 manual

85 SERIES PUMP ADJUSTABLE OUTPUT

			Approximate Outputs @ 60 Hz						Approximate Outputs @ 50 Hz		
Single Head Model	Maximum Pressure	Pump Tube Number	gallons per day	liters per day	gallons per hour	liters per hour	ounces per minute	milliliters per minute	liters per day	liters per hour	milliliters per minute
85MHP5* 85M1	100 psi (6.9 bar) 25 psi (1.7 bar)	#1 #1	0.3 to 5.0	1.1 to 18.9	0.01 to 0.21	0.05 to 0.79	0.03 to 0.44	0.76 to 13.13	0.9 to 15.1	0.04 to 0.63	0.52 to 10.49
85MHP17* 85M2	100 psi (6.9 bar) 25 psi (1.7 bar)	#2 #2	0.8 to 17.0	3.0 to 64.4	0.03 to 0.71	0.13 to 2.68	0.07 to 1.51	2.08 to 44.65	2.4 to 51.5	0.10 to 2.15	1.67 to 35.76
85MHP40* 85M3	100 psi (6.9 bar) 25 psi (1.7 bar)	#7 #3	2.0 to 40.0	7.6 to 151.4	0.08 to 1.67	0.32 to 6.31	0.18 to 3.55	5.27 to 105.14	6.1 to 121.1	0.25 to 5.05	4.24 to 84.10
85M4	25 psi (1.7 bar)	#4	3.0 to 60.0	11.4 to 227.1	0.13 to 2.50	0.48 to 9.46	0.27 to 5.33	7.92 to 157.71	9.1 to 181.7	0.38 to 7.57	6.32 to 126.18
85M5	25 psi (1.7 bar)	#5	4.3 to 85.0	16.3 to 321.8	0.18 to 3.54	0.68 to 13.40	0.38 to 7.55	11.32 to 223.40	13.0 to 257.4	0.54 to 10.73	9.03 to 178.75

The dial ring for adjustable pumps is marked L-10; L=5%, 1-10 indicates 10% increments of maximum output.

85 SERIES PUMP FIXED OUTPUT

			Approximate Outputs @ 60 Hz						Approximate Outputs @ 50 Hz		
Single Head Model	Maximum Pressure	Pump Tube Number	gallons per day	liters per day	gallons per hour	liters per hour	ounces per minute	milliliters per minute	liters per day	liters per hour	milliliters per minute
85MPHP5* 85MP1	100 psi (6.9 bar) 25 psi (1.7 bar)	#1 #1	5.0	18.9	0.21	0.79	0.44	13.13	15.1	0.63	10.49
85MPHP17* 85MP2	100 psi (6.9 bar) 25 psi (1.7 bar)	#2 #2	17.0	64.4	0.71	2.68	1.51	44.65	51.5	2.15	35.76
85MPHP40* 85MP3	100 psi (6.9 bar) 25 psi (1.7 bar)	#7 #3	40.0	151.4	1.67	6.31	3.55	105.14	121.1	5.05	84.10
85MP4	25 psi (1.7 bar)	#4	60.0	227.1	2.50	9.46	5.33	157.71	181.7	7.57	126.18
85MP5	25 psi (1.7 bar)	#5	85.0	321.8	3.54	13.40	7.55	223.40	257.4	10.73	178.75

*pump supplied with injection check valve for 26-100 psi applications

NOTICE: The information within this chart is solely intended for use as a guide. The output data is an approximation based on pumping water under a controlled testing environment. Many variables can affect the output of the pump. Stenner Pump Company recommends that all metering pumps undergo field calibration by means of analytical testing to confirm their outputs.

www.warminsterfiberglass.com
sales@warminsterfiberglass.com

WARMINSTER FIBERGLASS

WFS1000
SPECIFICATION

Fiberglass Reinforced Plastic Buildings, Shelters and Enclosures

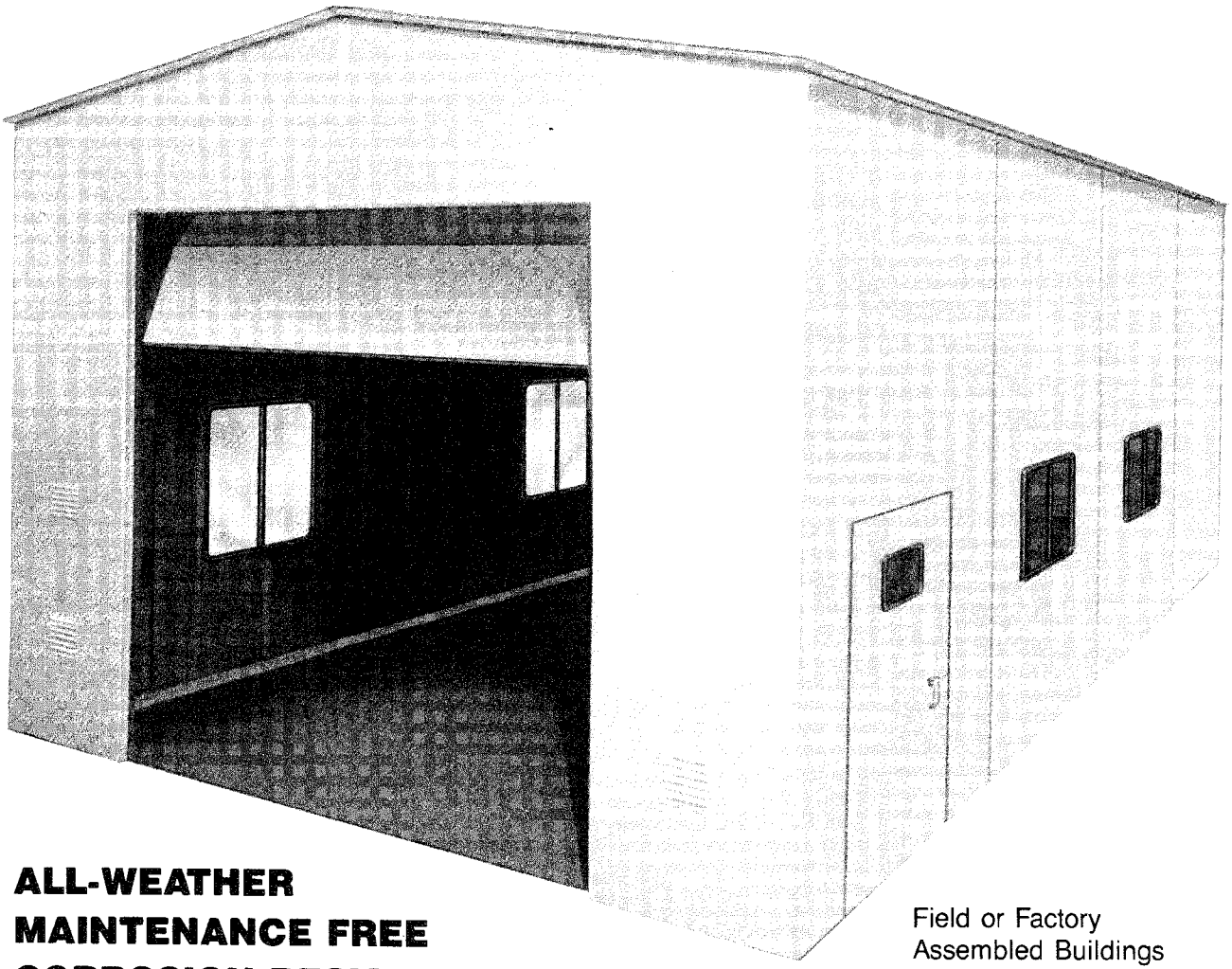

Field or Factory
Assembled Buildings

- **ALL-WEATHER**
- **MAINTENANCE FREE**
- **CORROSION RESISTANT**
- **INDUSTRIAL QUALITY**

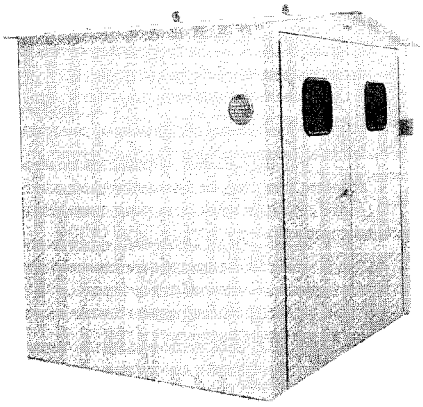

One-Piece Molded Shelters

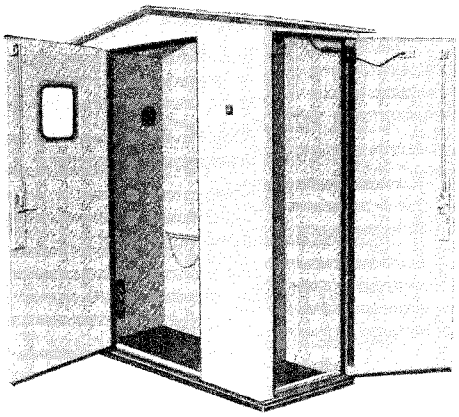

Two Compartment Shelters

WFS1000
SPECIFICATION

APPLICATIONS

Warminster Fiberglass Company multi-purpose all-weather buildings and shelters are tough, shock resistant, non-conductive, light weight, corrosion resistant, maintenance free and easy to install. The insulated fiberglass reinforced, composite construction provides a unique thermal barrier which greatly minimizes heating and cooling requirements.

These structures meet a wide variety of applications.

Environmental Protection
Generating and Transmission Equipment
Pollution Monitoring Equipment
Analyzers and Field-Mounted Instruments
Laboratories
Security and Service Personnel
Fire Fighting Equipment
Micro-Wave Stations and Pump Stations
Chemical and Polymer Feed Systems
Safety Showers
Chlorination equipment for well fields and water and wastewater treatment plants
Containment of hazardous or toxic chemicals

STANDARD DESIGN FEATURES

- ALL WEATHER
  Wind load 125 MPH
  Snow load 30 lbs/ft^2
  Seizmic loads
  Thermal resistance of R-7
  Temperatures from −150° F to 175°F
  Resistant to ultra-violet degradation
  Resistant to salt-spray, rain, ice, sandstorms
- MAINTENANCE FREE
  Never needs painting - color molded-in
  Smooth non-porous exterior surface
- CORROSION RESISTANT
  Polyester resin reinforced interior and exterior laminates
- INDUSTRIAL QUALITY
  Structures are designed and engineered using materials of fiberglass reinforced plastic composite construction

STANDARD CONSTRUCTION AND EQUIPMENT

- Walls and Roof - fiberglass composite of:
  White gelcoated exterior fiberglass laminate
  Rigid polyisocyanurate insulated core 1″ thick
  White pigmented interior fiberglass laminate
  Encapsulated steel and aluminum reinforcements as required
- Door typical to fiberglass composite
- Door latch - stainless steel
- Door hinge - stainless steel
- Door gasket - neoprene rubber
- Door stop chain - cadmium plated
- Lifting eyes - cadmium plated - removable
- Louver - Two - 6″ aluminum, with manual damper and insect screen
- Floor gasket - neoprene rubber

OPTIONAL EQUIPMENT

- ☐ Fiberglass Floor, with insulation value of R-14, 100 P.S.F. load rating
- ☐ Fiberglass Containment Floor
- ☐ Self-extinguishing construction - Class A - flame spread 20-25 per ASTM E-84
- ☐ Self-extinguishing construction - Class B - flame spread 70-75 per ASTM E-84
- ☐ Chemical resistant gel-coat
- ☐ Color selection (other than standard white)
- ☐ Additional wall height
- ☐ Partition walls
- ☐ Increased insulation to 2″ thickness, R-14
- ☐ Double door assembly (in place of single door)
- ☐ Double door assembly (in addition to single door)
- ☐ Second single door assembly
- ☐ Door window - 12″ x 12″ safety glass
- ☐ Door latch, two point, padlockable, stainless steel exterior
- ☐ Door panic hardware - aluminum
- ☐ Fixed or sliding wall windows
- ☐ Hatches, bulkheads and cutouts
- ☐ Mounting channel - galvanized 1-5/8 x 13/16
- ☐ Mounting channel - galvanized 1-5/8 x 1-5/8
- ☐ Lifting eyes - stainless steel (in place of plated)
- ☐ Exhaust fan - with gravity shutter and including fiber - glass canopy with insect screen. 7″ 135 CFM; 10″ 520 CFM; 12″ 650 CFM or as required
- ☐ Fiberglass louver - 6″ diameter with manual damper and insect screen (in place of aluminum)
- ☐ Fiberglass intake louver - 12″ square, with gravity shutter and insect screen
- ☐ Lamp - incandescent - vaportite
- ☐ Lamp - fluorescent - 48″ 2-bulb fixture with acrylic lens
- ☐ Duplex switch box - 2 toggle (inside)
- ☐ Duplex switch box - 2 toggle weatherproof (outside)
- ☐ Door actuated switch and manual/automatic selector switch
- ☐ Heater 1500 watt with thermostat and tip-over switch, or wattage as required
- ☐ Heater mounting - includes mounting channel, outlet & brackets
- ☐ Duplex outlet
- ☐ Air conditioner - BTU as required
- ☐ Heat pump - BTU heating & cooling as required
- ☐ Duplex fuse box 30 amp
- ☐ Circuit breaker panel 125 amp, MLO - including 4 - 1 pole breakers (total spaces - 8)
- ☐ Electrical wiring in flexible, liquid tight, PVC jacketed galvanized steel Anaconda conduit Type EF:
  - ☐ Fan and switch
  - ☐ Lamp and switch
  - ☐ Duplex outlet
- ☐ Explosion proof equipment
- ☐ Stainless steel expansion anchors
- ☐ Other special equipment per customer requirements

NOTE: Specifications are subject to change without notice.

Revised December, 1998

WARMINSTER FIBERGLASS

P.O. BOX 188
SOUTHAMPTON, PA 18966
PHONE: (215) 953-1260
FAX: (215) 357-7893
VISIT OUR WEBSITE: www.warminsterfiberglass.com

ONE PIECE MOLDED SHELTERS and ENCLOSURES

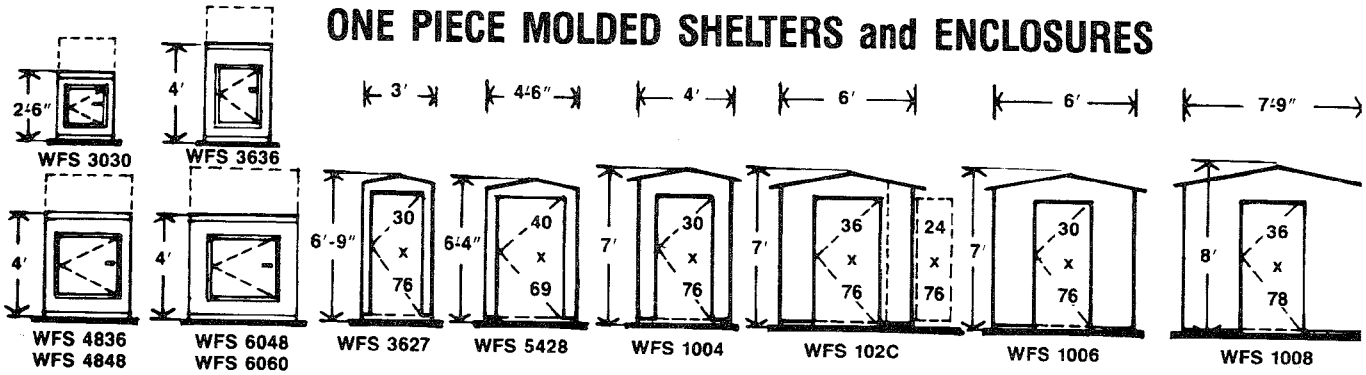

WFS 1004	DEPTHS	2'6"	4'	6'
AREA	FT²	10	16	24
VOLUME	FT³	67	109	164
WEIGHT	LBS	250	315	400

		WFS 3627	WFS 5428	WFS 102C
DEPTH	IN	27	28	30
VOLUME	FT³	45	66	101
WEIGHT	LBS.	180	240	380

WFS 1006	DEPTHS	4'	6'	8'	10'	12'	14'	16'
AREA	FT²	24	36	48	60	72	84	96	—
VOLUME	FT³	162	243	324	405	485	567	648	—
WEIGHT	LBS	400	490	580	670	760	850	940	—

WFS 1008	DEPTHS	6'	8'	10'	12'	14'	16'	18'	20'
AREA	FT²	48	64	80	93	108	124	140	155
VOLUME	FT³	356	475	600	710	830	950	1069	1188
WEIGHT	LBS	710	830	950	1070	1190	1310	143(	1550

SECTION 13121 — SPECIFICATION FOR ONE PIECE MOLDED SHELTER OR ENCLOSURE

MANUFACTURER

A) One piece molded shelter shall be manufactured by Warminster Fiberglass Company, Southampton, PA., Model No. WFS _____.

B) Options including lighting, heating, ventilating, air conditioning and other accessories shall be the standard equipment of the manufacturer or as specified by engineer in the plans and listed under optional equipment.

ONE-PIECE MOLDED SHELTER

A) The one piece molded shelter shall be _____ feet wide by _____ feet deep by standard eave height.
Shelters shall withstand 125 miles per hour wind load and 30 pounds per square foot snow load.
Fiberglass reinforced plastic shelter shall be of one piece molded construction with composite walls and roof. The exterior surface shall be white gelcoat with a low luster finish which is smooth and free from fiber pattern, roughness or other irregularities.
The exterior laminate which chemically bonds with the gelcoat shall be a minimum of 1/8" thick. The laminate consisting of polyester resin and chopped strand fiberglass shall have a minimum glass content of 25%.
The center core shall be 1" thick with a minimum insulating value of R-7.
The core material shall be rigid closed cell, self extinguishing polyisocyanurate foam with a density of 1.9 pounds per cubic foot.
The white interior laminate shall encapsulate the core in place.
The molding shall be continuous forming a one piece molded composite shelter with an integral 4" wide internal mounting flange around the perimeter.
The flange shall be pre-drilled on 12" centers with 7/16" diameter holes for bolting to a structural fiberglass floor or a concrete pad.

EQUIPMENT

A) The one piece molded fiberglass composite door shall be 1 3/8" thick and typical to materials of construction of the walls. The door shall be mounted using a continuous stainless steel hinge. The door shall be provided with a one point keyed stainless steel latch and cadimum plated door stop with chain.

B) The door gasket shall be extruded closed cell neoprene sponge rubber and provide a weather tight seal.

C) The base mounting flange gasket shall be 1/4" thick by 4" wide closed cell neoprene sponge rubber, and provide a weather tight seal around the shelter perimeter.

D) Two 6" diameter aluminum wall louvers shall be provided with manually adjustable damper and an insect screen.

E) Lifting eye bolts in the roof shall be cadmium plated and removable after installation.

OPTIONAL EQUIPMENT

A) Additional equipment for lighting, heating, ventilating, air conditioning and other accessories shall be from a list of the manufacturers pre-selected equipment.

STRUCTURAL FIBERGLASS FLOOR

A) The one piece molded fiberglass floor shall be _____ feet wide by _____ feet deep. The floor shall be 3" thick with a 2" thick polyisocyanurate foam core. The floor shall have an insulation value of R-14. Bolts for attaching the structure to the fiberglass floor shall be 3/8" diameter stainless steel. The floor load rating shall be 100 pounds per square foot. The floor shall have a skid resistant surface.

CONCRETE PAD

A) The concrete pad shall be supplied by owner in accordance with contract plans and specifications.

B) Anchor bolts for attaching the shelter to the concrete pad shall be 3/8" diameter stainless steel expansion anchors, supplied by the contractor.

SOURCE QUALITY CONTROL

A) The manufacturer shall maintain a continuous quality control program and upon request, shall furnish to the engineer certified test results of the physical properties. Test results shall meet or exceed those listed in the specification.

LAMINATE PROPERTIES	VALUE	TEST METHOD
Tensile Strength	11,000 PSI	ASTM D638
Flexural Strength	18,000 PSI	ASTM D790
Shear Strength	12,000 PSI	ASTM D732
Barcol Hardness	40	ASTM D2583
Impact	12 ft lbs/inch	ASTM D256
Heat Distortion Point	175 °F	ASTM D384
Density/Specific Gravity	93.6 PCF/1.5	ASTM D792
Burning Characteristics	<150 Flame spread <1000 Smoke Density	ASTM E84
CORE PROPERTIES		
Thermal Conductivity	$.13 \frac{BTU \cdot IN}{HR \cdot FT^2 \cdot °F}$	ASTM C-518
Density/Specific Gravity	1.9 PCF/.03	ASTM D1622
Burning Characteristic	35 Flame Spread 240 Smoke Density	ASTM E-84

The procedure used in determining the minimum properties shall be in accordance with ASTM Standards, using the method designated. Test coupons shall be prepared in accordance with ASTM D618 test method.

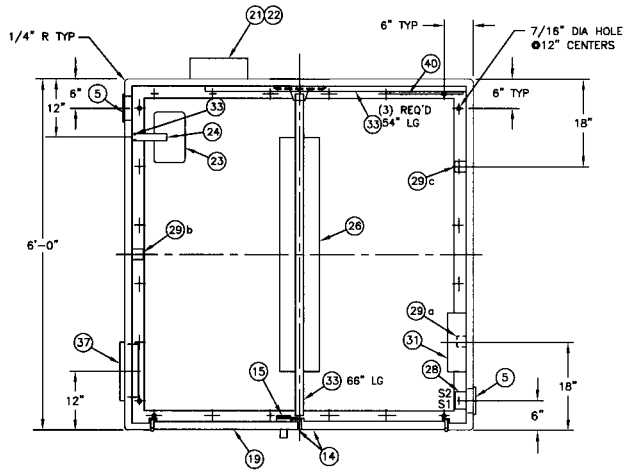

PLAN VIEW BELOW ROOF

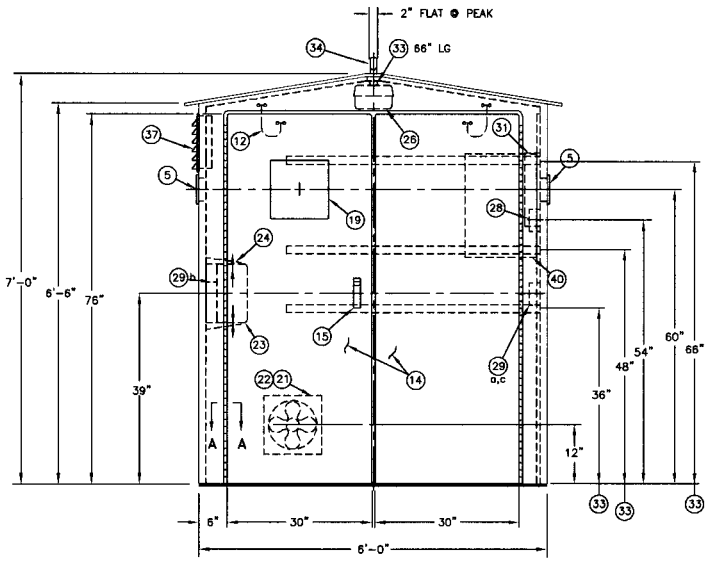

FRONT ELEVATION

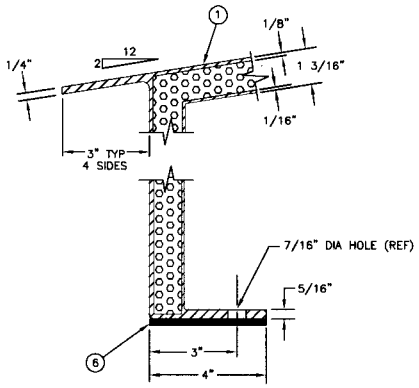

SECTION
ROOF, SIDE WALL & FLANGE
SCALE: 1/2" = 1"

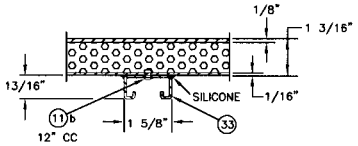

SECTION – POWER STRUT MTG
SCALE: 1/2" = 1"

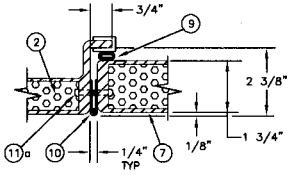

SECTION A–A
SCALE: 1/2" = 1"

BILL OF MATERIAL

ITEM	QTY	DESCRIPTION
1	1	SHELTER– ONE PIECE MOLDED FIBERGLASS CONSTRUCTION– WHITE
2	AR	INSULATION – 1" THK RIGID POLYISOCYANURATE FOAM
3	–	LIFTING EYE BOLT – 3/4–10 NC CADMIUM PLATED
4	–	LIFTING EYE BOLT SUPPORT – STL. 6" X 2" X 1" ENCAPSULATED
5	2	LOUVRE – 6" DIA PVC W/SCREEN MANUALLY ADJUSTABLE
6	AR	FLOOR GASKET– 4" X 1/2" NEOPRENE SPONGE
7	–	DOOR – FIBERGLASS 36" W X 78" H X 1 3/4" THK
8	–	DOOR ENTRANCE LOCKSET– PDQ # SR–CQ–US32D–SS–W/KEYS
9	AR	DOOR GASKET NEOPRENE HOLLOW BULB TRIM SEAL # 4100–1/4 OR =
10	1	DOOR HINGE – S.S. 2 1/2" OPEN PIANO TYPE 6' LG
11	AR	FASTENER – POP RIVET #AD610BS (11)a #AD66BS (11)b
12	1	DOOR STOP– CHAIN & SPRING ASSY, PLATED
13	AR	DOOR & FRAME REINFORCEMENT– ENCAPSULATED
14	1	DOUBLE DOOR ASSEMBLY – FIBERGLASS EACH LEAF 30" W X 76" H
15	1	DOOR LATCH– 2 POINT EBERHARD #5647 W/PADLOCKABLE S.S. HANDLE
16	YES	SELF EXTINGUISHING CONSTRUCTION – CLASS A FLAME SPREAD 21
17		CHEMICAL RESISTANT GEL–COAT
18		SPECIAL COLOR
19	1	DOOR WINDOW – SAFETY GLASS 12" X 12" X 1/4" W/GASKET
20		PANIC HARDWARE, STAINLESS STEEL– CAL ROYAL #9800EO36 WITH LEVER
		#NESC9800
21	1	EXHAUST FAN 10" 585 CFM – DAYTON #1HLA1 W/GRAVITY SHUTTER
22	1	EXHAUST FAN CANOPY– PVC W/INSECT SCREEN
23	1	HEATER– DAYTON #3VU33 – 1300/1500 WATTS W/THERMOSTAT
24	1	HEATER MTG BRACKETS– POWER STRUT #PS–840 R&L
25		LAMP INCANDESCENT VAPORTIGHT W/GLOBE & GUARD, RAB #VX100DG OR =
26	1	FLUORESCENT FIXTURE– 2 BULB, 48" VAPORTITE NON–CORROSIVE FRP
		GASKETED W/LENS LITHONIA #DMW232MVOLTGEB101SWWGR (3YA23)
27		SINGLE SWITCHBOX– 1 TOGGLE IN PVC BOX W/GASKETED FLIP COVER
28	1	DUPLEX SWITCHBOX, WEATHERPROOF, 2 TOGGLE IN PVC BOX W/GASKETED
		FLIP COVER
29	3	DUPLEX OUTLET– IN PVC BOX W/GASKETED FLIP COVERS
30		DUPLEX FUSE BOX– 2 POLE 30 AMP–SQUARE D #D221N W/FUSES OR =
31	1	CIRCUIT BREAKER LOAD CENTER–1 PH, 3 WIRE,120/240V, 125 AMP MAIN
		LUGS ONLY, W/ –15 AMP, 1P & 4–20 AMP, 1P BREAKERS– TOTAL SPACES 12,
		SQUARE D #QO112L125G (5F649) OR = W/DOOR 1D428
32	YES	WIRING IN RIGID SCHEDULE 40 PVC CONDUIT W/FLEXIBLE CONNECTIONS AS REQ'D
		AND NON–METALLIC FITTINGS & CLIPS – ALL WIRE #12
	1	FAN & SWITCH (21) THRU (28) S2 } TO (31) CIRC#1
	1	LIGHT & SWITCH (28) THRU (28) S1 } TO (31) CIRC#1
	2	DUPLEX OUTLET (29)a,b TO (31) CIRC#2
	1	HEATER OUTLET (29)c TO (31) CIRC#3 CIRC#4 SPARE
33	5	MTG CHANNEL, GALV. STL. POWER–STRUT #PS–500, W/(2) 3/8" CLAMPING
		NUT & SPRING ASS'Y, POWER–STRUT #PS–BSS
34	2	LIFTING EYE BOLT 3/4"–10 NC STAINLESS STEEL BOLTED THRU 5'–0" CC
35		FLOOR– FIBERGLASS, INSULATED & REINFORCED
36		LOUVRE – 6" DIA ALUM. W/SCREEN MANUALLY ADJUSTABLE
37	1	LOUVRE– 12" X 12" PVC FIXED OPEN W/SCREEN & FRP GRAVITY SHUTTER
		DAYTON #5C211
38	–	MICROSWITCH AUTO/LIGHT & FAN, OPERATED BY OPENING DOOR
39	–	SELECTOR SWITCH – 2 POSITION, AUTO/MANUAL– LIGHT & FAN OPERATION
40	1	SUB–PANEL, FIBERGLASS 21" X 15" X 1/4" THICK

NOTES:
1. EXTERIOR SURFACE – SMOOTH GEL–COATED FINISH W/COLOR MOLDED IN
2. THERMAL RESISTANCE RATING R=7
3. WIND LOADING RESISTANCE 125 MPH
4. GROUND SNOW LOAD RESISTANCE 30 LBS PER SQ FT
5. FLOOR GASKET – ITEM #6, SHIPPED WITH SHELTER, FIELD INSTALLED
6. APPROX TOTAL NET WEIGHT – 495 LBS

QTY: ONE
SIZE: 6'–0"W X 6'–0"D
COLOR: WHITE
PO#: 26031

REF: VALLEY FARMS ARSENIC SYSTEM

REV				
1	ENGINEERING	UPDATED	10FEB15	J. Loring
		REVISION DESCRIPTION	12DEC14	J. LORING
REV	U.O., R.H., O.P. AUTHORIZATION	MODEL NO. / SCALE 13/16"=1'–0" / REF. DWG.	DATE	BY

6'–0" W ONE PIECE MOLDED FIBERGLASS SHELTER FOR CHEMICAL FEEDING TECHNOLOGIES

WARMINSTER FIBERGLASS
P.O. BOX 1000, SOUTHAMPTON, PA 18966

WFS1006–06–SD
REV 1
45469–1

PHOENIX PUMPS, INC.

EQUIPMENT SUBMITTAL

ARIZONA WATER COMPANY

VALLEY FARMS ARSENIC REMOVAL FACILITY

BAG FILTER

CONTRACTOR
Felix Construction
1326 West Industrial Drive
Coolidge, AZ 85128
Phone:(480) 464-0011
www.felixconstruction.com

ENGINEER
GHD USA
7600 North 16th Street, Suite 205
Phoenix, AZ 85020
Phone: Phoenix, AZ 85020
www.ghd.com/usa/

MANUFACTURER
Pall Filter Specialists, Inc.
100 Anchor Road
Michigan City, IN 46360
Phone: (800) 348-3205
www.fsifilters.com

MANUFACTURER'S REPRESENTATIVE
Phoenix Pumps, Inc.
5100 S. 36th Street
Phoenix, AZ 85040
Phone: 602.232.2994
Fax: 602.232.2995
www.phoenixpumps.com

Submitted By: Tom Daniels
tdaniels@phoenixpumps.com

EQUIPMENT SUBMITTAL

ARIZONA WATER COMPANY

VALLEY FARMS ARSENIC REMOVAL FACILITY

BAG FILTER

Phoenix Pumps, Inc.
5100 S. 36th Street
Phoenix, AZ 85040
p.602.232.2994
f.602.232.2995
www.phoenixpumps.com

Submitted By:
Tom Daniels
tdaniels@phoenixpumps.com

1 SCOPE OF SUPPLY

2 CONTRACT DRAWING

3 FILTER HOUSING DATA

4 FILTER BAG CATALOG

5 INSTALLATION, OPERATION & MAINTENANCE MANUAL

TAB #1

SCOPE OF SUPPLY

SCOPE OF SUPPLY

BAG FILTER

Qty-1 Pall / Filter Specialists, Inc. Model CBFP-14 single bag vessel in 304SS construction, 2" NPT Connections, Style 2 (side in, bottom out). Includes perforated basket assembly. **Note; no bags included.**

Qty-1 Filter Leg Kit

Qty-1 Spare O-Ring

Includes freight to jobsite and startup services.

TAB #2

CONTRACT DRAWING

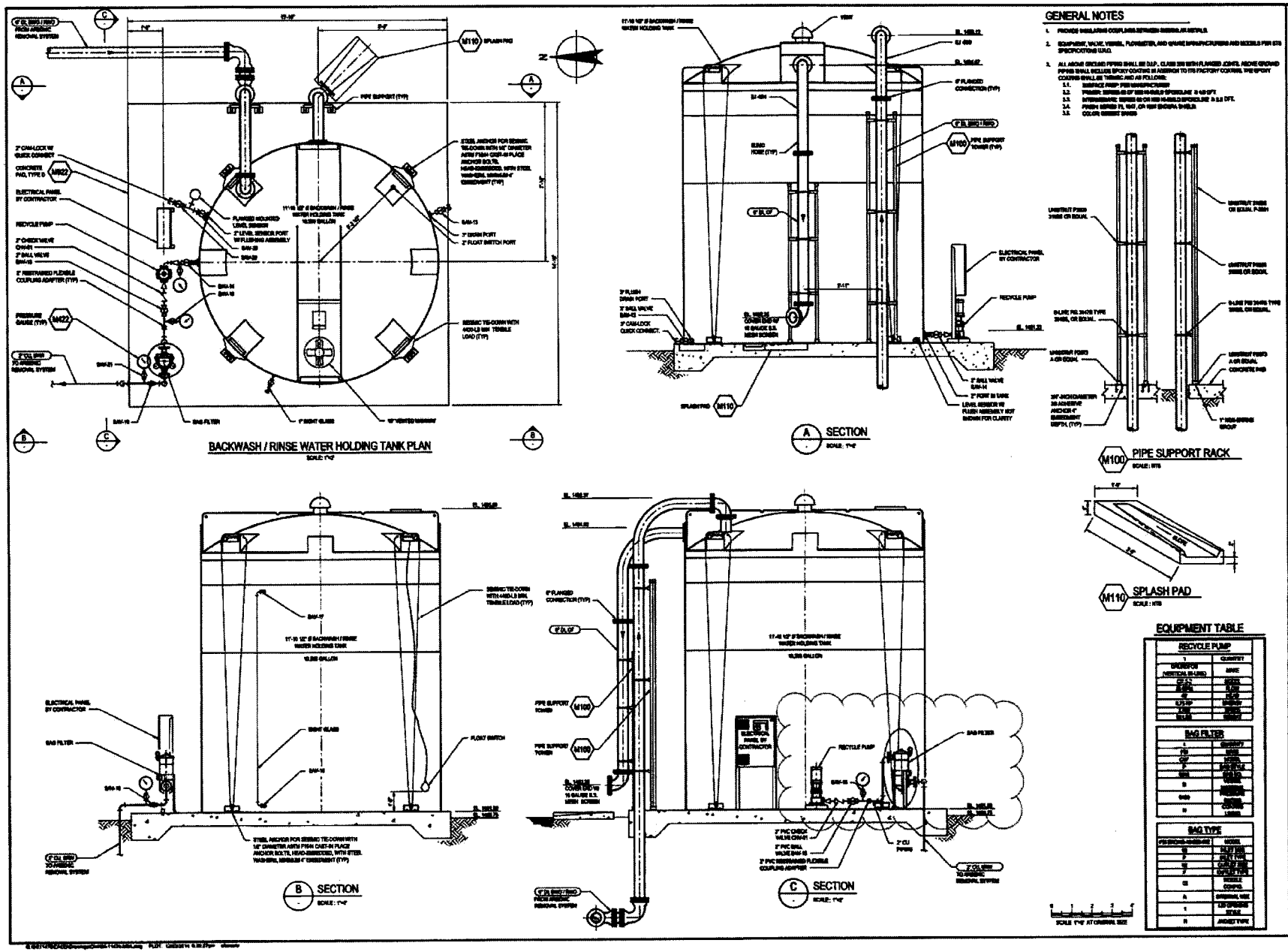
BACKWASH / RINSE WATER HOLDING TANK PLAN
SCALE: 1"=2'
A SECTION
SCALE: 1"=2'
B SECTION
SCALE: 1"=2'
C SECTION
SCALE: 1"=2'
M100 PIPE SUPPORT RACK
SCALE: NTS
M110 SPLASH PAD
SCALE: NTS
GENERAL NOTES
EQUIPMENT TABLE
RECYCLE PUMP
BAG FILTER
BAG TYPE
ARIZONA WATER COMPANY
3805 N. BLACK CANYON HWY. POST OFFICE BOX 29009
PHOENIX, ARIZONA 85038-9008
(602) 240-6860
VALLEY FARMS ARSENIC REMOVAL FACILITY
10804 E. VAN NUYS ROAD - VALLEY FARMS, AZ 85181
BACKWASH / RINSE WATER HOLDING TANK
PLAN, SECTIONS, AND DETAILS
GHD
7600 North 15th Street, Suite 205, Phoenix, Arizona 85020 USA
T 1 602 216 7200 F 1 602 216 7201
E phoenix@ghd.com W www.ghd.com
263-1100
1-800-STAKE-IT
SEC 17 - T6S - R9E
12/17/2014
AS SHOWN
SJG
FHT
M4
SHEET 10 OF 25

TAB #3

FILTER HOUSING DATA

Company Profile

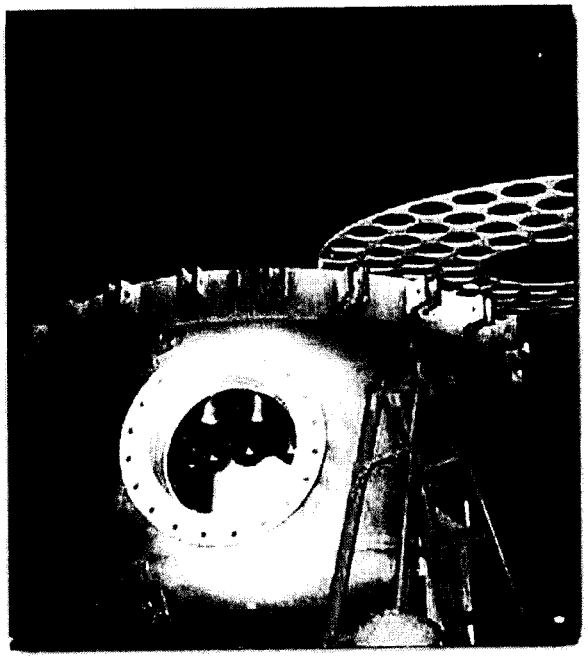

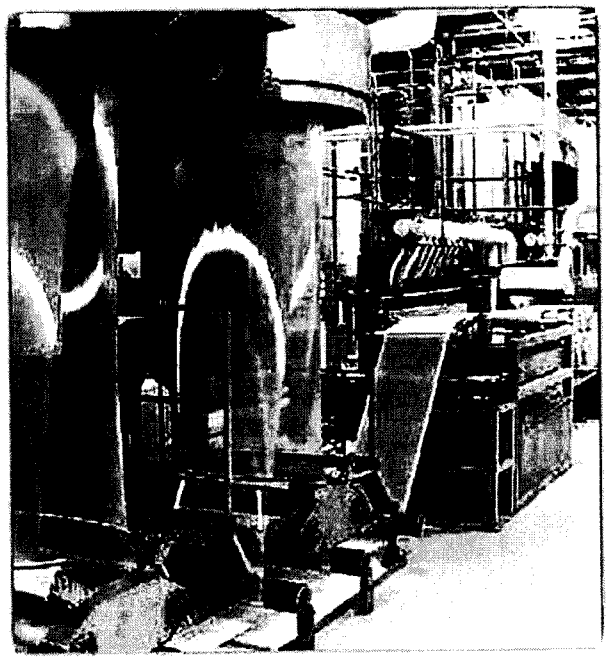

Creating Filtration Solutions

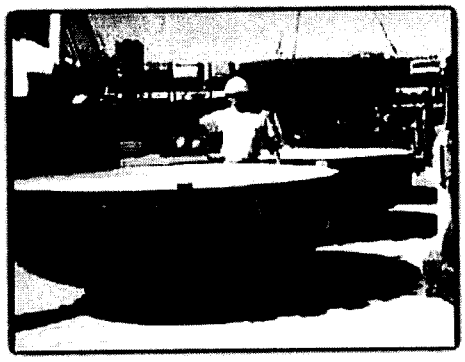

FSI is the industry leader when it comes to manufacturing innovative, state-of-the-art filtration products. As a fully-integrated operation, we maintain complete control over the entire manufacturing process. No matter how large or small the project, FSI achieves the highest levels of quality for all of our filters and vessels!

From our beginnings in 1972 in Michigan City, Indiana, FSI has grown into a worldwide supplier of both high quality and economical filtration products. We now serve customers from our production facilities in Europe, South America, China, and throughout North America.

To maintain the highest quality standards for workmanship and materials in the industry, we have established advanced laboratory facilities in Soddy Daisy, Tennessee. All of our materials and processes are submitted for regular, comprehensive microscopic and chemical analysis to confirm they are completely contaminant free.

FSI is committed to remaining at the leading edge of innovation, as we continue to develop filtration products that revolutionize the industry. We were the first to introduce the Polyloc® bag ring, which completely eliminates the need for under-basket gaskets, as it hermetically seals to prevent liquid bypass. Our groundbreaking Polyweld® welded seam filter bag removes the risk of unfiltered bypass that needle holes on traditional filter bags allow through.

Our determination to lead rather than follow is one reason behind our vertically-integrated manufacturing process. Our emphasis on innovation and engineering expertise has helped us develop world-class filtration systems. The reason we do all this is simple – so that our customers can achieve the highest levels of product quality.

Company Profile

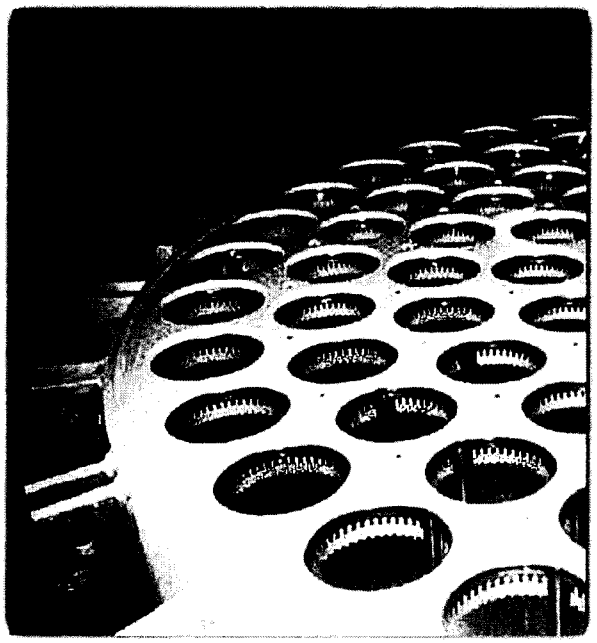

Our Experience Enables Us to:

- Assess the processing requirements of customer systems and fulfill them to our customers' complete satisfaction.
- Provide the highest quality filtration products, filter bags and cartridge filters, and a wide range of filter vessels.
- Design and manufacture custom products to nearly any customer specification.
- Offer advanced filtration products, like the FSI BOS Polymicro® seamless design, and our Extended Life filter bags, which provide at least twice the dirt holding capacity of a standard felt bag, and which feature our no-bypass, welded seam design.
- Maintain a completely ISO 9000 certified North American network of manufacturing sources, where we create all elements of our filter and cartridge products, including the fiber for our in-house produced felts.
- Manufacture ASME code-compliant vessels designed to meet the needs and requirements of our clients' most demanding liquid flows.
- Manufacture API compliant and NSF certified vessels.
- Meet custom filtration requirements by designing and manufacturing products to your particular specifications.

The FSI Quality Process at Work

Our worldwide FSI sales and distribution offices work with clients to determine the best product for their particular fluid application. Our experienced engineers and R&D staff then set out to create the best filters available on the market.

Next, our manufacturing locations in the United States, Mexico, Brazil, China and the U.K. take that data and create the perfect filtration solution to fit your needs.

Even after the sale, we continue to work with our clients. We continually check on how our products are performing, taking the feedback and data from those uses and applying them to update and improve our complete line of products. You can rely on FSI to work with you on your specific application requirements.

www.fsifilters.com
1-800-348-3205

FILTER VESSELS

Bag Filter Housings

FSPN Vessels | FSPN E-Z Open | CBFP 11, 12 Vessels | **CBFP 13, 14 Vessels** | QX4 Filter Vessel | SBF Compact Bag Vessels | FMC Drum Filters

Cartridge Filter Housings

FSMC Cartridge Filter Vessels

Plastic Filter Housings

X100 Convertible Filter Housing | XL234 Modular Filter Housings

Specialty Filter Housings

Basket Strainers

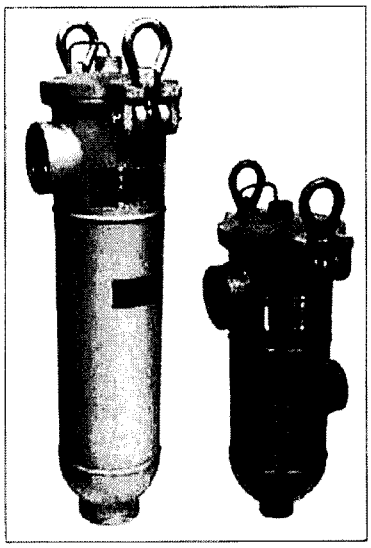

BAG FILTER HOUSINGS
CBFP 13, 14 Vessels

Introduction

The CBFP 13 & 14 are cost effective bag filter vessels that are durable and reliable for low flow applications using a size 3 or 4 filter bag.

Features

- Offset, Side Inlet with Side Outlet (same side or opposite), or Side Inlet with Bottom Outlet configuration available
- Positive bag seating without the use of a manual hold-down device
- Single gasket cover seal
- Connections sizes available in either 1" or 2" NPT

www.fsifilters.com
1-800-348-3205

FSI
FILTER SPECIALISTS, INC

FILTER VESSELS

Bag Filter Housings

FSPN Vessels | FSPN E-Z Open | CBFP 11, 12 Vessels | **CBFP 13, 14 Vessels** | QX4 Filter Vessel | SBF Compact Bag Vessels | FMC Drum Filters

Cartridge Filter Housings

FSMC Cartridge Filter Vessels

Plastic Filter Housings

X100 Convertible Filter Housing | XL234 Modular Filter Housings

Specialty Filter Housings

Basket Strainers

BAG FILTER HOUSINGS

Options

- **Mesh lined and heavy duty rimmed basket available**
- **Flange, Sanitary and Victaulic connections** *(available upon request)*
- **Adjustable clamp-on legs in Carbon Steel or 304 Stainless Steel**

CBFP 13, 14 Vessels

Specifications

Number of Bags	1
Filter Bag Size	3, 4
Maximum Operating Pressure	150 PSI (10.34 Bar)
Design Temperature Range	Carbon Steel: 20 to 500°F (-6 to 260°C) Stainless Steel: -20 to 250°F (-28 to 121°C)
Materials of Construction	Carbon Steel, 304 & 316 Stainless Steel
Non-Wetted Parts	Carbon Steel: Carbon Steel Stainless Steel: May contain some plated Carbon Steel materials
Number of Gaskets	1
Connections	NPT
Surface Finish	Carbon Steel: Acrylic enamel painted exterior Stainless Steel: Light sand blast
Code Stamp	None
Gasket Material	Buna, EPR, Viton, Buna White FDA
PolyLoc® Bag Seal	Positive Bag Seal without manual hold down
Lid Opening	Swing bolt

Locate Your Sales Representative

TABLE OF CONTENTS

www.fsifilters.com
1-800-348-3205

FSI
FILTER SPECIALISTS, INC

FILTER VESSELS

Bag Filter Housings

FSPN Vessels | FSPN E-Z Open | CBFP 11, 12 Vessels | **CBFP 13, 14 Vessels** | QX4 Filter Vessel | SBF Compact Bag Vessels | FMC Drum Filters

Cartridge Filter Housings

FSMC Cartridge Filter Vessels

Plastic Filter Housings

X100 Convertible Filter Housing | XL234 Modular Filter Housings

Specialty Filter Housings

Basket Strainers

CBFP 13, 14 Vessels ~ HOW TO ORDER

CBF	P	0013	A	0150	N	02	F	02	F	06	A	1	N
1	2	3	4	5	6	7	8	9	10	11	12	13	14

1 Model Number
CBF

2 Bag Style
P = PolyLoc®

3 Number of Bags
0013 = (1) #3 bag
0014 = (1) #4 bag

4 Vessel Material
A = Carbon Steel
B = 304 Stainless Steel
C = 316 Stainless Steel

5 Vessel Pressure Rating (PSI)
0150

6 Coating/Lining Material
A = Electropolish
F = Paint finish/prep
N = None
S = Special
X = Passivation

7 Inlet Size
Use basic pipe size with the folowing exceptions:
01 = 1"
02 = 2"

8 Inlet Type
C = Sanitary fitting
D = Flange, din
E = European EN Flange
F = Flange, slip-on, raised face, std.
N = Female NPT
P = Plain pipe
S = Special
T = Plain OD Tube
W= Socket weld

9 Outlet Size
See Inlet Size for codes

10 Outlet Type
See Inlet Type for code letter

11 Nozzle Configuration
02 = Side In/Bottom Out
06 = Side In/Side Out, Offset
08 = Side In/Side Out, Same Side

See the nozzle configuration chart

12 Internal Usage
A = Standard

13 Lid Opening Type
1 = Hinge, std.

14 Jacket Type
N = None

MODEL # CBF P 0014 B 0150 N 02 N 02 N 02 A 1 N

Locate Your Sales Representative

www.fsifilters.com
1-800-348-3205

FILTER VESSELS

Bag Filter Housings

FSPN Vessels | FSPN E-Z Open | CBFP 11, 12 Vessels | **CBFP 13, 14 Vessels** | QX4 Filter Vessel | SBF Compact Bag Vessels | FMC Drum Filters

Cartridge Filter Housings

FSMC Cartridge Filter Vessels

Plastic Filter Housings

X100 Convertible Filter Housing | XL234 Modular Filter Housings

Specialty Filter Housings

Basket Strainers

CBFP Inlet-Outlet Configurations

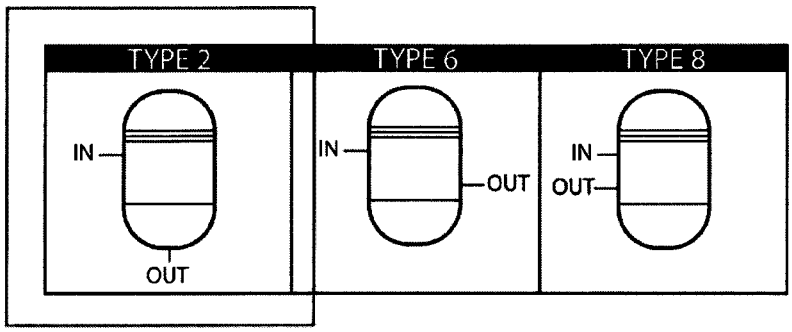

CBFP 13, 14 Flow Rate Chart

Model Number	CBFP 13	CBFP 14
No. of Bags	1	1
Bag Size No.	3	4
Surface Area per Bag, Ft.	0.5	1.0
Surface Area per Vessel, Ft2	0.5	1.0
Inlet and Outlet Size	1"	1"
Max Flow Rate, GPM	15	30

NOTE: The maximum flow rate GPM is the MAXIMUM FLOW RATE recommended through the vessel using a 10 micron felt filter bag (PONG10) filtering water. Any increase in fluid viscosity will reduce the maximum GPM figures significantly. Please consult your FSI representative when sizing these vessels.

Locate Your Sales Representative

ITEM	QTY	DESCRIPTION	CARBON STEEL	304 S.S. MATERIAL	304 S.S. PART NO.	316 S.S.
1	1	HOUSING WELD ASS'Y		304 S.S.	436755B	
2	1	COVER LID ASS'Y		316 S.S.	PCA436763C	
3	2	EYE BOLT (1/2-13 UNC X 1 7/8"L)		SA-193-B8	PHB25037A24	
4	2	EYE NUT (1/2-13 UNC)		SA-194-1 NI. PLATED	PHE25000A10E	
5	2	WASHER (1/2" SAE)		S.S.	EHWS08S0B	
6	1	CLEVIS PIN (3/8 DIA. X 1 3/4"L)		SA-193-B8	PHP25141A24	
7	1	CLEVIS PIN (3/8 DIA. X 2 3/4"L)		SA-193-B8	PHP25356A24	
8	2	WASHER (3/8" SAE)		S.S.	EHWS06S0B	
9	2	COTTER PIN		S.S.	EHCP03X160B	
10	1	GASKET		CUST. SPEC.	EGR30087_	
11	1	BASKET ASS'Y		CUST. SPEC.	EBA27058_	

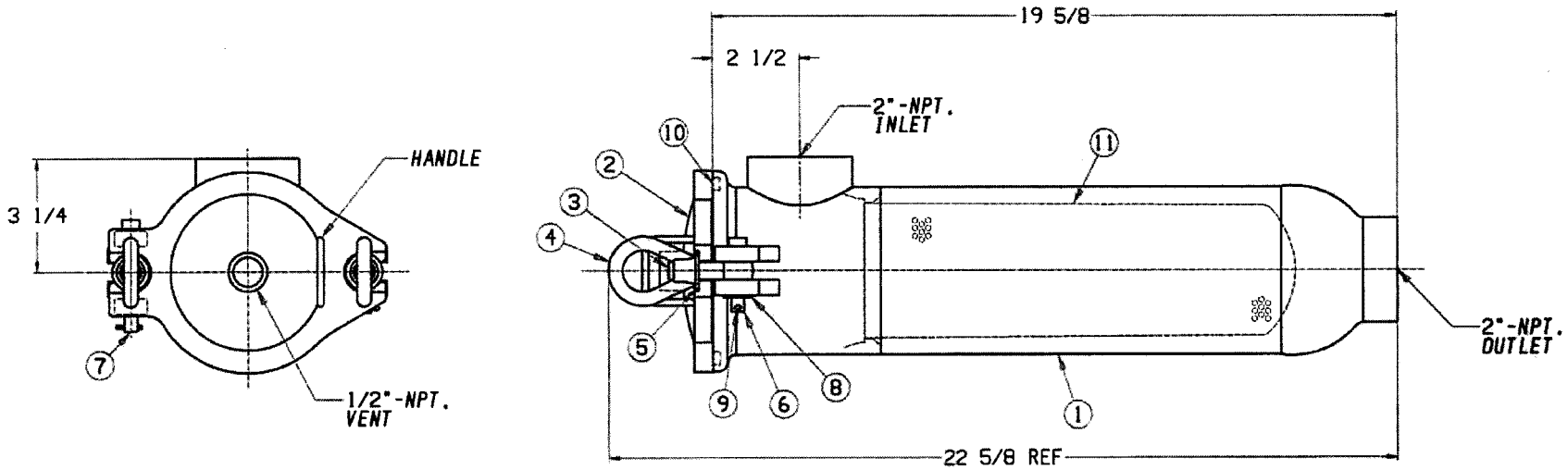

316 S.S.	VB436756CS
304 S.S.	VB436756BS
CARBON STEEL	VB436756AS
MATERIAL	PART NO.

DESIGN-
CARBON STEEL: 150 PSI @ 500°F MAX. / 20°F MIN.
STAINLESS STEEL: 150 PSI @ 250°F MAX. / -20°F MIN.

HYDROSTATIC TEST PRESSURE: 195 PSI.

CHG	REVISION	BY	DATE

FSI FILTER SPECIALISTS INC. MICHIGAN CITY, IND. 46360

FILTER ASS'Y
CBFP-14 #2 - 2"NPT - STD
PART NO. VB436756_S

DATE 3/26/12 DWN BY LVL
APP'D LVL SCALE 1-2.5
MATERIAL CS/304SS/316SS
DRAWING NO. 1910494

TAB #4

FILTER BAG CATALOG

FSI®
FILTER SPECIALISTS, INC.

FILTER BAGS

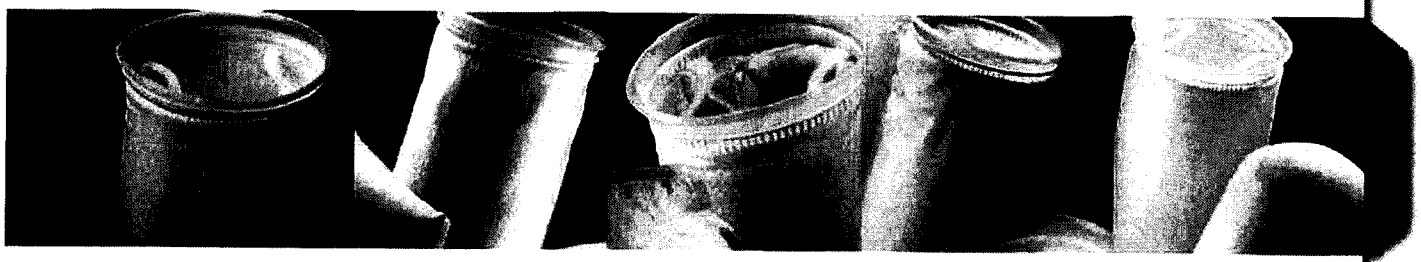

Felt Filter Bags 2-9

Standard Felt Filter Bags
Polyweld® Filter Bags
Extended Life Filter Bags (POEX/PEEX)
MAX PONG Filter Bags

Polymicro Microfiber Filter Bags 10-11

POMF Filter Bags

Seamless Absolute-Rated 12-17

BOS Filter Bags
BOS Gradient Filter Elements
BOS MAX Filter Bags

Mesh Filter Bags 18-19

Filter Fabric Qualities / Filter Bag Data 20

Filter Bag Flow Rates / Micron Rating & Availability 21

Innovative Solutions. Clear Results.

www.fsifilters.com
1-800-348-3205

www.fsifilters.com
1-800-348-3205

FILTER BAGS

Felt Filter Bags

- **Standard Felt Filter Bags** | Polyweld® Filter Bags |
  Extended Life Filter Bags (POEX/PEEX) | MAX PONG Filter Bags

Polymicro Microfiber Filter Bags

POMF Filter Bags

Seamless-Absolute Rated

BOS Filter Bags | BOS Gradient Filter Elements | BOS MAX Filter Bags

Mesh Filter Bags

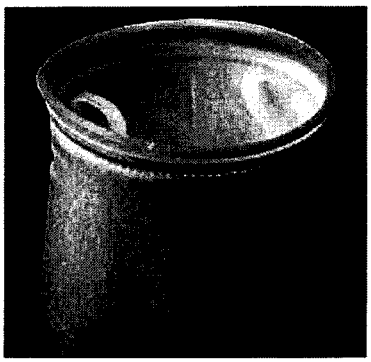

FELT FILTER BAGS
Standard Felt Filter Bags

FSI Felt Bags are the Answer

When it comes to felt filter bags, FSI has the answer. Our years of experience give us an advantage over our competitors, and our felt filter bags show it. Our felt bags are designed to withstand higher solid loading, and are suitable for applications using vessel or open filtration systems.

FSI's "Comprehensive Manufacturing Control" philosophy insures that we will maintain our status as the industry leader in all phases of the filter business. Our integrated technology, control over our manufacturing and quality leads to consistent performance. With FSI filter bags, you can count on a quality product every time.

We start with the finest material possible. FSI makes its own fiber to produce the felt material used in our felt filter bags inhouse, guaranteeing the highest quality. Our Extended Life filter bag provides superior filtration of all sized particles, as well as up to twice the dirt holding capacity of a standard filter bag.

Our no-bypass welded seams eliminate the possibility of fluid bypass through needle holes. We provide a variety of glazed and singed finishes to inhibit fiber migration. FSI also offers polyester inserted felts. These inserted felts include a reinforcing scrim needled inside the felt material, to provide added strength and durability, when a restrainer basket is not being used.

Features

- We offer a full line of felt materials and micron ratings
- Conventional sewn bags or the PolyWeld® welded seam bags available
- FSI PolyLoc® ring or other common bag rings available on most bags
- Heavy Duty and Extended Life designs available to suit your filtration needs

www.fsifilters.com
1-800-348-3205

FILTER BAGS

Felt Filter Bags

- **Standard Felt Filter Bags** | Polyweld® Filter Bags |
  Extended Life Filter Bags (POEX/PEEX) | MAX PONG Filter Bags

Polymicro Microfiber Filter Bags

POMF Filter Bags

Seamless-Absolute Rated

BOS Filter Bags | BOS Gradient Filter Elements | BOS MAX Filter Bags

Mesh Filter Bags

Specifications

- **Available Materials**
  PO = Felt, Polypropylene
  PE = Felt, Polyester
  N = Felt, Nylon
  HT = Felt, High Temperature
  TFE = Felt, Teflon
- **Maximum Operating Temperature**
  Polypropylene: 200-220° F (93-104° C)
  Polyester: 275-325° F (135-162° C)
  Nylon: 275-300° F (135-149° C)
  High Temperature: 400-450° F (204-232° C)
  Teflon: 450-500° F (232-260° C)
- **Suggested Differential Pressure**
  35 PSIG maximum — dirty
  10-15 PSIG optimum change out
- **Micron Rating**
  PO = 1, 3, 5, 10, 25, 50, 100
  PE = 1, 3, 5, 10, 25, 50, 75, 100, 200
  N = 5, 10, 25, 50, 100
  HT = 5, 10, 25, 50, 100, 200
  TFE = 1, 5, 10, 25
- **Sizes**
  #1: 7" x 16" (17.78 cm x 40.65 cm)
  #2: 7" x 32" (17.78 cm x 81.28 cm)
  #3: 4" x 8.25" (10.16 cm x 20.96 cm)
  #4: 4" x 14" (10.16 cm x 35.56 cm)
  #5: 6 7/8" x 34" (17.46 cm x 86.36 cm)
  #6: 6 7/8" x 16" 1/2" (17.46 cm x 41.91 cm)
  #7: 5 1/2" x 16" (13.97 cm x 40.64 cm)
  #8: 5 1/2" x 22" (13.97 cm x 55.88 cm)
  #9: 5 1/2" x 33" (13.97 cm x 83.82 cm)
- **Rings**
  P = Polypropylene PolyLoc®
  PE = Polyester PolyLoc®
  N = Nylon PolyLoc®
  C = Cuno
  S = Snap ring metal
  SSS = Stainless steel snap ring
  CO = Commercial steel ring
  COP = Commercial plastic ring
  RP = Ronningen-Petter snap ring
  RPP = Ronningen-Petter plastic ring
  RPF = Ronningen-Petter flange

FELT FILTER BAGS

Standard Felt Filter Bags

Item # **BPONG10P2PC**

Type of Filter	B = Filter Bag	
Material	See specifications	N = Non-inserted felt I = Inserted felt *(polyester only)* G = Glazed finish F = Fuzzy finish *(polyester only)*
Micron Rating	See specifications	
Cover	P = Plain PEM = Polyester multifilament NMO = Nylon monofilament	
Size	1, 2, 3, 4, 5*, 6*, 7, 8, 9	
Ring	See specifications	
Suffix	WE** = Welded Seam Construction A = Auto Construction *(seam inside bag)* C = Cotton Handle N = Nylon Handle LOOPS = Loops	

* SIZES 5, 6, AVAILABLE WITH S RING ONLY
** AVAILABLE IN SIZES 1 AND 2, POLYPROPYLENE AND POLYESTER NON-INSERTED ONLY

How To Install a Bag Properly

Locate Your Sales Representative

www.fsifilters.com
1-800-348-3205

FILTER BAGS

Felt Filter Bags

- Standard Felt Filter Bags | **Polyweld® Filter Bags** |
  Extended Life Filter Bags (POEX/PEEX) | MAX PONG Filter Bags

Polymicro Microfiber Filter Bags

POMF Filter Bags

Seamless-Absolute Rated

BOS Filter Bags | BOS Gradient Filter Elements | BOS MAX Filter Bags

Mesh Filter Bags

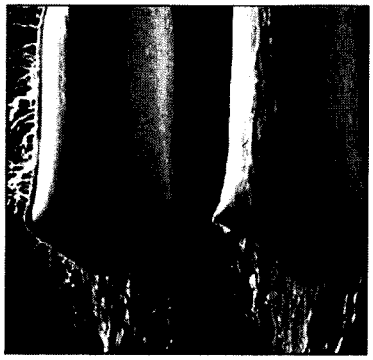

FELT FILTER BAGS
Polyweld® Filter Bags

FSI's PolyWeld® filter bags hold a distinct advantage over all types of needle-sewn bags. The welded seams completely eliminate the possibility of unfiltered liquid bypass occurring due to needle holes. The result is a tighter seam, higher bag efficiencies and improved finish product yields. In addition, the fused edges of our PolyWeld bag provide a fiber-free finish and virtually eliminate unwanted fiber migration. Since the PolyWeld bag is not constructed with thread, the possibility of silicone contamination from this source is also removed. FSI's PolyWeld filter bags are available in standard and extended life polypropylene felt, and standard and extended life polyester felt.

Features

- Welded construction of bags completely eliminates unfiltered liquid bypass from occurring due to needle holes
- Available in standard polypropylene, polyester and extended life felt for broad range of product compatibility
- Glazed finish eliminates fiber migration for clearer results
- PolyLoc® ring creates a hermetic seal that prevents liquid bypass and produces clearer results
- Polypropylene is FDA food grade compliant to government standards
- FDA Compliant Polyester felt is available (non-standard)
- Silicone free to eliminate cratering for improved surface results
- Available from stock for quick delivery

www.fsifilters.com
1-800-348-3205

FILTER BAGS

Felt Filter Bags

- Standard Felt Filter Bags | **Polyweld® Filter Bags** |
  Extended Life Filter Bags (POEX/PEEX) | MAX PONG Filter Bags

Polymicro Microfiber Filter Bags

POMF Filter Bags

Seamless-Absolute Rated

BOS Filter Bags | BOS Gradient Filter Elements | BOS MAX Filter Bags

Mesh Filter Bags

FELT FILTER BAGS

Specifications

- **Available Materials**
  Polypropylene, Polyester Standard and FDA Compliant Polyester

  Polypropylene and Polyester Extended Life
- **Maximum Operating Temperature**
  Polypropylene: 200-220° F (93-104° C)
  Polyester: 275-325° F (135-162° C)
- **Suggested Differential Pressure**
  35 PSIG maximum — dirty
  10-15 PSIG optimum change out
- **Micron Rating**
  BPONG = 1, 3, 5, 10, 25, 50, 100
  BPENG = 1, 3, 5, 10, 25, 75, 100, 200
  BPOEX = 5, 10, 25, 50 100
  BPEEX = 1, 5, 10, 25, 50, 100
- **Sizes**
  #1: 7" x 16" (17.78 cm x 40.65 cm)
  #2: 7" x 32" (17.8 cm x 81.3 cm)
- **Plastic PolyLoc® Rings**
- **Welded Seam Construction**

Polyweld® Filter Bags

Item # BPONG100P2PWE

Type of Filter	**B = Filter Bag**	
Material	Standard: PONG = Polypropylene PENG = Polyester	Extended Life: POEX = Polypropylene PEEX = Polyester
Micron Rating	See specifications	See specifications
Cover	P = Plain (no cover)	
Size	1, 2	
Ring	P = Polypropylene PolyLoc® PE = Polyester PolyLoc®	
Suffix	WE = Welded Seam Construction F = FDA Compliant Polyester	

How To Install a Bag Properly

Locate Your Sales Representative

www.fsifilters.com
1-800-348-3205

FILTER BAGS

Felt Filter Bags

Standard Felt Filter Bags | Polyweld® Filter Bags |

Extended Life Filter Bags (POEX/PEEX) | MAX PONG Filter Bags

Polymicro Microfiber Filter Bags

POMF Filter Bags

Seamless-Absolute Rated

BOS Filter Bags | BOS Gradient Filter Elements | BOS MAX Filter Bags

Mesh Filter Bags

Slides: • POEX Filter Bags
• POEX Felt *(close up)*

FELT FILTER BAGS
Extended Life Filter Bags (POEX/PEEX)

The Extended Life filter bags (POEX and PEEX) provide outstanding performance on many types of contaminants such as gels, particles with wide ranges of sizes, and particles with various irregular shapes. The coarse, pre-filtering layer is designed to provide long service life, capturing a large amount of contaminants without excess surface loading. The POEX has been field-proven to hold up to twice the amount of contaminants as a standard felt bag, reducing waste volume and bag changes. The Extended Life filter bag is ideal for automotive coatings, chemicals, resins, edible oils and other fluid applications.

Features

- Excellent filtration on many contaminants - gels, particles with wide range of sizes and particles with irregular shapes
- A coarse inner layer, graded pore structure, greater depth than standard bags provides excellent filtration performance
- Available in polyester (PEEX) and polypropylene (POEX)
- Twice the standard dirt-holding capacity of traditional felt bags to provide longer service life, fewer change-outs and reduced waste
- Polypropylene bags are FDA compliant
- Micron rating for polypropylene 5-100; polyester 1-100
- PolyWeld® seam construction with hermetically sealing PolyLoc® ring eliminates liquid bypass
- Glazed finish eliminates unwanted fiber migration

www.fsifilters.com
1-800-348-3205

FILTER BAGS

Felt Filter Bags

Standard Felt Filter Bags | Polyweld® Filter Bags |

● **Extended Life Filter Bags (POEX/PEEX)** | MAX PONG Filter Bags

Polymicro Microfiber Filter Bags

POMF Filter Bags

Seamless-Absolute Rated

BOS Filter Bags | BOS Gradient Filter Elements | BOS MAX Filter Bags

Mesh Filter Bags

FELT FILTER BAGS

Specifications

- **Available Materials**
  Polypropylene
  Polyester
- **Maximum Operating Temperature**
  Polypropylene: 200-220° F (93-104° C)
  Polyester: 275-325° F (135-162° C)
- **Suggested Differential Pressure**
  35 PSIG maximum — dirty
  10-15 PSIG optimum change out
- **Micron Rating**
  PEEX= 1, 5, 10, 25, 50, 100
  POEX= 5, 10, 25, 50, 100
- **Sizes**
  #1: 7" x 16" (17.78 cm x 40.65 cm)
  #2: 7" x 32" (17.8 cm x 81.3 cm)
- **Plastic PolyLoc® Rings**
- **Welded Seam Construction**

Extended Life Filter Bags (POEX/PEEX)

Item # **BPOEX10P2PWE**

Type of Filter	B = Filter Bag		
Material	PEEX = Polyester extended life felt	POEX = Polypropylene extended life felt	
Micron Rating	See specifications	See specifications	
Cover	P = Plain		
Size	1, 2		
Ring	P = Polypropylene PolyLoc®	PE = Polyester PolyLoc®	S = Steel Ring*
Suffix	WE = Welded Seam Construction		

* AVAILABLE WITH SEWN SEAMS ONLY

How To Install a Bag Properly

Locate Your Sales Representative

www.fsifilters.com
1-800-348-3205

FILTER BAGS

Felt Filter Bags

Standard Felt Filter Bags | Polyweld® Filter Bags |

● Extended Life Filter Bags (POEX/PEEX) | **MAX PONG Filter Bags**

Polymicro Microfiber Filter Bags

POMF Filter Bags

Seamless-Absolute Rated

BOS Filter Bags | BOS Gradient Filter Elements | BOS MAX Filter Bags

Mesh Filter Bags

FELT FILTER BAGS
MAX PONG

The PONG Heavy Duty Extended Life filter bag (MAX PONG) is the leader in high-efficiency, low-cost filtration. Its seamless micro-fiber graded density cartridge insert removes trace oils that frequently occur in process fluids, and provides up to four times the dirt-holding capacity of conventional polypropylene bags. Combined with its welded seam felt cover and PolyLoc® ring for elimination of unfiltered bypass, it becomes the perfect choice for uses where longer-lasting, high-efficiency filter bags are needed. The MAX PONG Heavy Duty Extended Life filter bag is ideal for continuous flow applications such as e-coat and phosphate baths, and batch applications including oils, edible oils and syrups, or any final or polishing filter requirements.

Features

- High-efficiency, low-cost filtration is ideal for continuous flow applications
- Welded seam construction eliminates unfiltered bypass due to needle holes
- Large dirt-holding capacity and lower pressure drop provide long service life
- Adsorbs smaller particles and filters wide range of particle sizes
- Pure polypropylene microfiber insert contains no sizing, bonding adhesive, resin, lubricant, silicone or antistatic chemicals
- FDA compliant to meet food grade government standards
- PolyLoc® ring creates hermetic seal to prevent liquid bypass

www.fsifilters.com
1-800-348-3205

FILTER BAGS

Felt Filter Bags

Standard Felt Filter Bags | Polyweld® Filter Bags |

Extended Life Filter Bags (POEX/PEEX) | **MAX PONG Filter Bags**

Polymicro Microfiber Filter Bags

POMF Filter Bags

Seamless-Absolute Rated

BOS Filter Bags | BOS Gradient Filter Elements | BOS MAX Filter Bags

Mesh Filter Bags

FELT FILTER BAGS

Specifications

- **Available Materials**
  Polypropylene filter bag with
  100% polypropylene rigid insert
- **Maximum Operating Temperature**
  Polypropylene: 200-220° F (93-104° C)
- **Suggested Differential Pressure**
  35 PSIG maximum — dirty
  10-15 PSIG optimum change out
- **Micron Rating**
  1, 5, 10, 25, 50, 100
- **Sizes**
  #1: 7" x 16" (17.78 cm x 40.64 cm)
  #2: 7" x 32" (17.78 cm x 80 cm)
- **Plastic PolyLoc® Rings**
- **Welded Seam Construction**

MAX PONG Filter Bags

Item # BMAXPONG52PWE

Type of Filter	B = Filter Bag
Prefix	MAX = Maximum Life
Material	PONG = Polypropylene non-inserted felt
Micron Rating	See specifications
Size	1, 2
Ring	P = PolyLoc®
Suffix	WE = Welded Seam Construction

How To Install a Bag Properly

Locate Your Sales Representative

TABLE OF CONTENTS

www.fsifilters.com
1-800-348-3205

FILTER BAGS

Felt Filter Bags

Standard Felt Filter Bags | Polyweld® Filter Bags |

Extended Life Filter Bags (POEX/PEEX) | MAX PONG Filter Bags

Polymicro Microfiber Filter Bags

POMF Filter Bags

Seamless-Absolute Rated

BOS Filter Bags | BOS Gradient Filter Elements | BOS MAX Filter Bags

Mesh Filter Bags

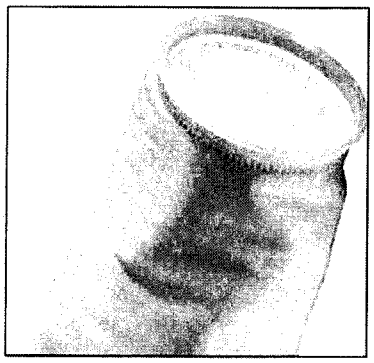

POLYMICRO MICROFIBER FILTER BAGS
POMF Filter Bags

The Polymicro microfiber filter bag (POMF) provides outstanding performance for applications requiring higher filtration efficiency. The POMF contains three layers: a pre-filtering layer that removes coarse debris; the primary layer, composed of micro pores (for efficient particle retention); and an outer cover that prevents fiber migration. The finish-free fibers are non-foaming, which is ideal for food, beverage, water, chemical and coating applications.

Features

- Proprietary polypropylene, triple-layer construction adsorbs hydrocarbons from air, gas and aqueous streams for clearer results
- Outer cover prevents fiber migration to reduce waste
- Non-foaming microfiber offers product cleanliness, high performance and longer service life
- High void volume means longer service life, higher contaminant loading and reduced waste loads
- Easy change-out reduces down time
- PolyLoc® ring creates a hermetic seal within a vessel housing to prevent liquid bypass
- POMF 1A, 2A, 10A and 25A bags are made from FDA-compliant materials
- POMF1A, 2A, 10A & 25A are available with NSF Standard 61 Certification
- Available in stock for quick, one-week delivery

www.fsifilters.com
1-800-348-3205

FILTER BAGS

Felt Filter Bags

Standard Felt Filter Bags | Polyweld® Filter Bags |

Extended Life Filter Bags (POEX/PEEX) | MAX PONG Filter Bags

Polymicro Microfiber Filter Bags

POMF Filter Bags

Seamless-Absolute Rated

BOS Filter Bags | BOS Gradient Filter Elements | BOS MAX Filter Bags

Mesh Filter Bags

Specifications

- **POMF1A, 2A, 10A & 25A**
  Available with NSF Standard 61 Certification
- **POMF 1A, 2A, 10A and 25A**
  Bags are made from FDA-compliant materials (OA bags also include an additional layer of oil removing material)
- **Auto Construction**
  (Seams on Inside)
- **Available Materials**
  Polypropylene microfiber
- **Maximum Operating Temperature**
  160° F (93° C)
- **Suggested Differential Pressure**
  35 PSIG maximum — dirty
  10-15 PSIG optimum change out
- **Micron Rating**
  1A: 1 micron
  2A: 2 micron
  10A: 10 micron
  25A: 25 micron
  50A: 50 micron
  90A: 90 micron
  120A: 120 micron
  OA: Special purpose 25 micron
  (includes an additional layer of oil removing material)
- **Sizes**
  #1: 7" dia. x 16" long, 65 GPM
  #2: 7" dia. x 32" long, 125 GPM
  #3: 4" dia. x 8.25" long, 20 GPM
  #4: 4" dia. x 14" long, 35 GPM
- **Available Rings**
  (See chart on right for all available rings)

POLYMICRO MICROFIBER FILTER BAGS

POMF Filter Bags

Item # BPOMF1AP2P

Type of Filter	B= Filter Bag
Material	POMF = Polypropylene microfiber
Micron Rating	See specifications
Cover	Plain
Size	1, 2, 3, 4
Ring	P = PolyLoc® S = Snap fit metal RPP = Ronningen-Petter plastic ring CO = Commercial steel ring COP = Commercial plastic ring RP = Ronningen-Petter snap fit

Item # BPOMF1APP2P61

Type of Filter, Material, Micron Rating, Size and Ring nomenclature same for NSF 61 Certified bags. *See Above.*

Cover	PP = Special NSF Construction
Suffix	61 = NSF 61 Certified

How To Install a Bag Properly

Locate Your Sales Representative

www.fsifilters.com
1-800-348-3205

FILTER BAGS

Felt Filter Bags

Standard Felt Filter Bags | Polyweld® Filter Bags |

Extended Life Filter Bags (POEX/PEEX) | MAX PONG Filter Bags

Polymicro Microfiber Filter Bags

POMF Filter Bags

Seamless-Absolute Rated

BOS Filter Bags | BOS Gradient Filter Elements | BOS MAX Filter Bags

Mesh Filter Bags

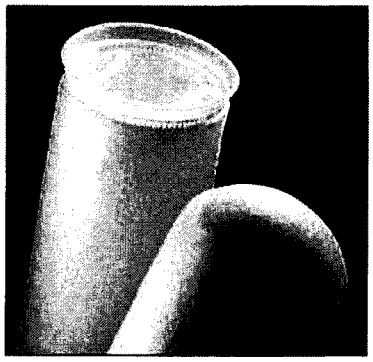

SEAMLESS-ABSOLUTE RATED BOS Filter Bags

The BOS filter bag is a Polymicro® seamless filter bag, constructed entirely without seams. This unique material composition allows for a higher efficiency, with graded pore-size distribution creating absolute filtration. Thermally bonded microfibers create a seamless filter bag that has high tensile strength, providing superior resistance to channeling, unloading, bypass and other forms of traditional leakage that result from pulsating water.

The benefit of using this advanced filter bag is precise particle retention. The BOS filter bag is an ideal product for use in a wide variety of high-purity applications, where absolute filtration is required.

Features

- Seamless construction offers unequalled benefit of eliminating fluid bypass
- Absolute rated (98%) 3-100 microns for highest efficiency and consistent quality
- Microfiber-graded pore design provides lower initial pressure drop
- Thermally-bonded microfibers contain no sizing, bonding adhesive, resin or silicone
- FDA compliant
- Can be incinerated for easy disposal
- Available with NSF Standard 61 Certification

www.fsifilters.com
1-800-348-3205

FSI
FILTER SPECIALISTS, INC

FILTER BAGS

Felt Filter Bags

Standard Felt Filter Bags | Polyweld® Filter Bags |

Extended Life Filter Bags (POEX/PEEX) | MAX PONG Filter Bags

Polymicro Microfiber Filter Bags

POMF Filter Bags

Seamless-Absolute Rated

BOS Filter Bags | BOS Gradient Filter Elements | BOS MAX Filter Bags

Mesh Filter Bags

SEAMLESS-ABSOLUTE RATED

Specifications

- **Available Materials**
  Polypropylene
- **Seamless Construction**
- **Maximum Operating Temperature**
  160° F (71° C)
- **Suggested Differential Pressure**
  35 PSIG maximum – dirty
  10-15 PSIG optimum change out
- **Absolute (98%) Micron Rating**
  3, 5, 10, 25, 35, 50, 75, 100
- **Sizes**
  #1: 7" x 16" (17.8 cm x 40.65 cm)
  #2: 7" x 32" (17.8 cm x 81.3 cm)
- **Plastic PolyLoc® Rings**
- **Available with NSF Standard 61 Certification**

BOS Filter Bags

Item # BOS5PM2P	
Code	BOS = Polymicro seamless
Micron Rating	See specifications
Cover	PM = Polypropylene
Size	1, 2
Ring	P = Polypropylene PolyLoc®

Item # BOS5PP2P61	
Code	BOS = Polymicro seamless
Micron Rating	See specifications
Cover	PP = Special NSF Construction
Size	2
Ring	P = Polypropylene PolyLoc®
Suffix	61 = NSF 61 Certified

How To Install a Bag Properly

Locate Your Sales Representative

TABLE OF CONTENTS

www.fsifilters.com
1-800-348-3205

FILTER BAGS

Felt Filter Bags

Standard Felt Filter Bags | Polyweld® Filter Bags |

Extended Life Filter Bags (POEX/PEEX) | MAX PONG Filter Bags

Polymicro Microfiber Filter Bags

POMF Filter Bags

Seamless-Absolute Rated

BOS Filter Bags | **BOS Gradient Filter Element** | BOS MAX Filter Bags

Mesh Filter Bags

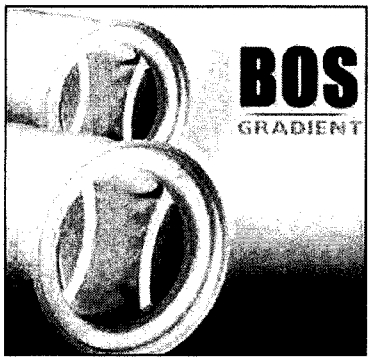

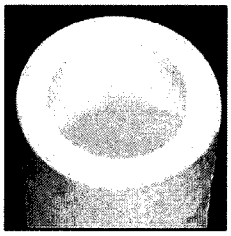

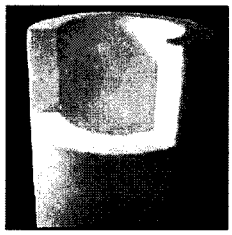

SEAMLESS-ABSOLUTE RATED
BOS Gradient Filter Elements

BOS Gradient Filter element is the first of its kind, with seamless design and true gradient density. This absolute rated element provides users with the depth of a cartridge and the convenience of a bag. This 100% polypropylene microfiber product adsorbs up to 16 times its own weight in hydrocarbons (oils) and will last up to 18 times the life of other products (depending on particle distribution and application).

Features/Benefits

Gradient Density provides:

- Up to 18 times extended life compared to other products, dependent upon particle distribution and application
- Longer life means fewer bag changes which results in lower labor costs and less loss of product
- Not compressible in operation providing greater dirt holding capacity
- Designed for typical broad particle distribution applications.
- Will allow more efficient filtration (lower micron) without sacrificing product life

Polypropylene Microfiber Material

- Adsorbs up to 16 times its own weight in hydrocarbons (oils)
- Inventory reduction. Eliminates need for stocking "oil" bags
- Thermally bonded, with no lubricants or surface active agents
- Available with NSF Standard 61 Certification

Fits existing FSI standard basket

- No retrofit costs

www.fsifilters.com
1-800-348-3205

FSI
FILTER SPECIALISTS, INC

FILTER BAGS

Felt Filter Bags

Standard Felt Filter Bags | Polyweld® Filter Bags |

Extended Life Filter Bags (POEX/PEEX) | MAX PONG Filter Bags

Polymicro Microfiber Filter Bags

POMF Filter Bags

Seamless-Absolute Rated

BOS Filter Bags | **BOS Gradient Filter Element** | BOS MAX Filter Bags

Mesh Filter Bags

SEAMLESS-ABSOLUTE RATED

Specifications

- **Available Materials**
  Polypropylene Microfiber
- **Seamless Construction**
- **Maximum Operating Temperature**
  160° F (71° C)
- **Suggested Differential Pressure**
  20 PSIG maximum – dirty
  10-15 PSIG optimum change out
- **Absolute (98%) Micron Rating**
  3, 5, 10, 25, 50, 75, 100, 125
- **Sizes**
  #2: 7" X 32" (17.8 cm X 81.32 cm)
- **Thermally Bonded Ring**
- **Available with NSF Standard 61 Certification**

BOS Gradient Filter Elements

Item # BOSG50PM2P	
Code	BOS = Seamless Polypropylene
Type of Filter	G = Gradient
Micron Rating	See specifications
Cover	PM = Polypropylene
Size	2
Ring	P = Polypropylene

Item # BOSG50PP2PG61	
Code	BOS = Seamless Polypropylene
Type of Filter	G = Gradient
Micron Rating	See specifications
Cover	PP = Special NSF Construction
Size	2
Ring	P = Polypropylene
Suffix	G61 = NSF 61 Certified

How To Install a Bag Properly

Locate Your Sales Representative

TABLE OF CONTENTS

www.fsifilters.com
1-800-348-3205

FILTER BAGS

Felt Filter Bags

Standard Felt Filter Bags | Polyweld® Filter Bags |

Extended Life Filter Bags (POEX/PEEX) | MAX PONG Filter Bags

Polymicro Microfiber Filter Bags

POMF Filter Bags

Seamless-Absolute Rated

BOS Filter Bags | BOS Gradient Filter Elements | **BOS MAX Filter Bags**

Mesh Filter Bags

SEAMLESS-ABSOLUTE RATED BOS MAX Filter

The innovative BOS MAX heavy duty seamless filter bags have an advanced design that provides extended life and increased efficiency with a greater depth filtration than conventional filter bags. It provides all of the benefits of the standard BOS filter bag with a semi-rigid microfiber insert that increases the dirt holding capacity of the filter while providing the absolute filtration of the BOS filter bag.

Features

- BOS MAX Heavy Duty Extended Life Bags contain a semi-rigid, microfiber cartridge insert for up to four times the life of standard BOS bags and are ideal for high-purity applications
- Absolute rated 3-100 microns for high efficiency and consistent quality
- Thermally-bonded microfibers contain no sizing, bonding adhesive, resin or silicone
- Contaminant free to eliminate craters providing better surface results
- PolyLoc® ring creates hermetic seal within a vessel housing to prevent liquid bypass

www.fsifilters.com
1-800-348-3205

FILTER BAGS

Felt Filter Bags

Standard Felt Filter Bags | Polyweld® Filter Bags |

Extended Life Filter Bags (POEX/PEEX) | MAX PONG Filter Bags

Polymicro Microfiber Filter Bags

POMF Filter Bags

Seamless-Absolute Rated

BOS Filter Bags | BOS Gradient Filter Elements | **BOS MAX Filter Bags**

Mesh Filter Bags

SEAMLESS-ABSOLUTE RATED

Specifications

- **Available Materials**
  Polypropylene
- **Seamless Construction**
- **Maximum Operating Temperature**
  160° F (71° C)
- **Suggested Differential Pressure**
  35 PSIG maximum – dirty
  10-15 PSIG optimum change out
- **Absolute (98%) Micron Rating**
  3, 5, 10, 25, 35, 50, 75, 100
- **Sizes**
  #1: 7" x 16" (17.8 cm x 40.65 cm)
  #2: 7" x 32" (17.8 cm x 81.3 cm)
- **Plastic PolyLoc® Rings**

BOS MAX Filter Bags

Item # BOS5PM2PMAX

Code	BOS = Polymicro seamless
Micron Rating	See specifications
Cover	PM = Polypropylene
Size	1, 2
Ring	P = Polypropylene PolyLoc®
Suffix	MAX = Maximum life

How To Install a Bag Properly

Locate Your Sales Representative

www.fsifilters.com
1-800-348-3205

FILTER BAGS

Felt Filter Bags

Standard Felt Filter Bags | Polyweld® Filter Bags |

Extended Life Filter Bags (POEX/PEEX) | MAX PONG Filter Bags

Polymicro Microfiber Filter Bags

POMF Filter Bags

Seamless-Absolute Rated

BOS Filter Bags | BOS Gradient Filter Elements | BOS MAX Filter Bags

Mesh Filter Bags

MESH FILTER BAGS

All FSI mesh bags are constructed using a woven or knitted fabric. Whether your particular environment requires a single filament mesh that provides excellent strength with no fiber migration, or a woven multi-strand mesh designed for economical filtration bags, we have your needs covered. The yarn in all of our mesh filter bags is abrasion resistant, compatible with a broad range of chemicals, unaffected by metal fatigue or corrosion, and boasts high tensile strength.

Features

- Available in nylon monofilament, polyester multifilament and polypropylene monofilament offering broad range of chemical compatibility and price ranges
- Monofilament mesh bags provide extra strength and abrasion resistance
- Precision mesh materials produce predictable results for consistent performance
- Offered in standard and custom sizes to provide a perfect fit for standard and unique applications
- Offered in micron ratings 1-1500 with plastic and metal rings for versatility
- Silicone free to prevent cratering for a better surface finish

Monofilament Mesh is a woven fabric where each thread is a single filament, boasting excellent strength with no fiber migration.

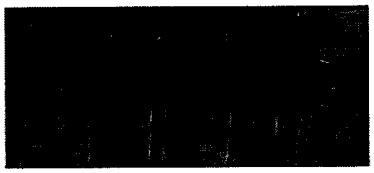

Mutifilament Mesh is a woven fabric where each strand consists of many smaller diameter threads.

www.fsifilters.com
1-800-348-3205

FILTER BAGS

Felt Filter Bags

Standard Felt Filter Bags | Polyweld® Filter Bags |

Extended Life Filter Bags (POEX/PEEX) | MAX PONG Filter Bags

Polymicro Microfiber Filter Bags

POMF Filter Bags

Seamless-Absolute Rated

BOS Filter Bags | BOS Gradient Filter Elements | BOS MAX Filter Bags

Mesh Filter Bags

FILTER BAGS

Specifications

- **Available Materials**
  Nylon Monofilament
  Polyester Multifilament
  Polypropylene Monofilament
- **Micron Rating**
  NMO = 1, 5, 10, 25, 35, 45, 55, 65, 75, 100, 125, 150, 175, 200, 250, 400, 600, 800, 1200

  PEM = 75, 100, 125, 150, 200, 250, 400, 800, 1500

  PMO = 100, 150, 200, 250, 300, 600, 800
- **Sizes**
  #1: 7" x 16" (17.78 cm x 40.65 cm)
  #2: 7" x 32" (17.78 cm x 80 cm)
  #3: 4" x 8 1/4" (10.16 cm x 20.96 cm)
  #4: 4" x 14" (10.16 cm x 35 cm)
  #5: 6 7/8" x 34" (17.46 cm x 86.36 cm)
  #6: 6 7/8" x 16 1/2" (17.46 cm x 41.91 cm)
  #7: 5 1/2" x 16" (13.97 cm x 40.64 cm)
  #8: 5 1/2" x 22" (13.97 cm x 55.88 cm)
  #9: 5 1/2" x 33" (13.97 cm x 83.82 cm)

  5GP: 5 Gallon Pail (19L)
  12X18D: 12" x 18" Drawstring (30.48 cm x 43.2 cm)

  18X24D: 18" x 24" Drawstring (45 cm x 60.96 cm)

  18X28D: 18" x 28" Drawstring (45 cm x 71.12 cm)

MESH FILTER BAGS

Item # BPEM100P1PA

Type of Filter	B = Filter Bag
Material	NMO = Mesh, Nylon monofilament PEM = Mesh, Polyester multifilament PMO = Mesh, Polypropylene monofilament
Micron Rating	See specifications
Cover	P = Plain (no cover)
Size	1, 2, 3, 4, 5, 6, 7, 8, 9 5GP (5 Gallon Pail) 12x18D, 18x24D, 18x28D (D = Draw-string)
Ring	P = Polypropylene PolyLoc® PE = Polyester PolyLoc® C = Cuno N = Nylon PolyLoc® S = Snap fit metal SSS = Stainless steel snap fit CO = Commercial steel ring COP = Commercial plastic ring
Suffix	WE = Welded Seam Construction *(available on sizes 3 & 4 NMO only)* A = Auto Construction LOOPS = Loops C = Cotton Handle N = Nylon Handle

How To Install a Bag Properly

Locate Your Sales Representative

www.fsifilters.com
1-800-348-3205

FSI
FILTER SPECIALISTS INC

FILTER BAGS

Felt Filter Bags

Standard Felt Filter Bags | Polyweld® Filter Bags |

Extended Life Filter Bags (POEX/PEEX) | MAX PONG Filter Bags

Polymicro Microfiber Filter Bags

POMF Filter Bags

Seamless-Absolute Rated

BOS Filter Bags | BOS Gradient Filter Elements | BOS MAX Filter Bags

Mesh Filter Bags

Filter Fabric Qualities

Fabric	Cotton	Polyester	Glass	Nylon	Nomex	Polypropylene
Specific Gravity	1.55	1.38	2.56	1.14	1.14	0.9
Tensile Strength	44 - 109	64 - 124	200 - 215	58 - 128	58 - 128	50 - 85
Abrasion & Flex	Fair	Very Good	Poor	Excellent	Very Good	Very Good
Weak Acids	Poor	Very Good	Excellent	Fair	Fair	Excellent
Strong Acids	Poor	Good	Good	Poor	Poor	Excellent
Weak Alkali	Excellent	Good	Fair	Excellent	Excellent	Excellent
Strong Alkali	Excellent	Poor	Poor	Excellent	Excellent	Excellent
Solvents	Good	Good	Excellent	Good	Good	Fair
Temperature (F°)	200 - 240°	275 - 325°	500 - 600°	275 - 300°	400 - 450°	200 - 220°

Filter Bag Data

Bag Size	1	2	3	4	X01	XL
Surface Area Per Bag (ft2/m2)	2.0/0.19	4.4/0.41	0.5/0.05	1.0/0.9	2.0/0.19	5.3/0.49
Volume Per Bag (gal*/liter)	2.1/7.9	4.6/17.3	0.37/1.4	0.67/2.5	2.1/7.9	5.5/0.51
Bag Diameter (inch/cm)	7.0/17.8	7.0/17.8	4.0/10.2	4.0/10.2	6.0/15.2	9.25/23.5
Bag Length (inch/cm)	16/40.65	32.0/81.3	8.25/20.9	14.0/35.5	22/55.9	32/81.3
FSI Filter Vessel Model Number	FSPN-40 CBFP-11	FSPN-85 FSPN-250 CBFP-12 and all multi-hole vessels	FSPN-20 BFN-13	FSPN-35 BFN-14	X100B	XL234

TABLE OF CONTENTS

www.fsifilters.com
1-800-348-3205

FILTER BAGS

Felt Filter Bags

Standard Felt Filter Bags | Polyweld® Filter Bags |

Extended Life Filter Bags (POEX/PEEX) | MAX PONG Filter Bags

Polymicro Microfiber Filter Bags

POMF Filter Bags

Seamless-Absolute Rated

BOS Filter Bags | BOS Gradient Filter Elements | BOS MAX Filter Bags

Mesh Filter Bags

Flow Rates of Filter Bags

In most filtration applications, fluid viscosities do not exceed 50cps. Using the following Flow Rates Per #2 Size Bag as a guide, the suggested flow rates should result in a CLEAN Pressure Drop under 2 PSID.

Material Used	Micron Rating	Flow Rate (GPM)
Felt	1 & 3	80 GPM/#2 BAG
Felt	5 THRU 200	120 GPM/#2 BAG
Mesh	1, 3, 5 & 100	100 GPM/#2 BAG
Mesh	25 THRU 100	125 GPM/#2 BAG
Mesh	150 THRU 800	150 GPM/#2 BAG
Microfiber	1A and 2A	60 GPM/#2 BAG
Microfiber	10A, 25A, 90A & 0A	80 GPM/#2 BAG

Micron Rating & Availability

Micron Availability		Micron Rating																									
Fiber	Material	1	3	5	10		25	35	50	65	75	90	100	120	125	150	175	200	250	300	400	600	700	800	1200	1500
Polyester Felt	Felt	■	■	■	■		■		■		■		■					■								
Nylon	Felt			■	■		■		■				■													
Polypropylene	Felt	■	■	■	■		■		■				■													
Teflon®	Felt	■		■	■		■																			
High Temperature	Felt			■	■		■		■				■					■								
Polypropylene	Microfiber	■	■		■		■		■			■		■												
Nylon	Monofilament Mesh	■		■	■		■	■	■	■	■		■		■	■	■	■	■	■	■	■		■	■	
Polypropylene	Monofilament Mesh												■			■		■	■	■		■		■		
Polyester	Multifilament Mesh										■		■		■	■		■	■	■	■	■		■		■

TAB #5

INSTALLATION, OPERATION & MAINTENANCE MANUAL

INSTALLATION, OPERATION AND MAINTENANCE MANUAL

FSI

FILTER VESSELS

IMPORTANT! READ AND UNDERSTAND ENTIRE MANUAL BEFORE OPERATING THIS VESSEL

This manual contains important revised information and supersedes all prior publications

SAFETY

This manual has been prepared for the safe installation, operation, and maintenance of FSI pressure vessels. Warning labels have been reprinted in this manual. The application of warning labels to vessels is based upon vessel type and adequate space to affix labels. **Warning labels are not a substitute for reading and understanding this manual.**

LABEL FORMAT

A. Hazard Alert Word
B. Hazard and Consequence Statement
C. Instruction Statement

A. → ⚠ WARNING!

B. → Improper use of this vessel can cause serious injury, blindness or death.

C. → Read the vessel ASME code plate, warning labels and this instruction manual for the installation, operation and maintenance of filter vessels before installation and operation.

All labels must be replaced when legibility is lost or visibility is blocked. Labels have a part number in the lower right hand corner for reordering.

PROTECTIVE CLOTHING

Before operating this vessel, operator should wear protective clothing including protective gloves and face shield. If handling hot liquids, operator should wear heat-resistant clothing such as Nomex garments to prevent possible burning or scalding. Refer to Material Safety Data Sheet (MSDS) for specific instructions for handling the liquid as supplied by the manufacturer of the material.

INSTALLATION

MOVING VESSEL

A. Mount vessel securely to a skid and move skid with fork lift.

B. Vessel can be lifted by means of a multi-legged sling chain with a safety hook attached to the end of each leg. Attach the hook of each leg to an eyenut and space legs around vessel equally. (See Figure 1)

PLACEMENT OF MANUAL FOR THE INSTALLATION, OPERATION AND MAINTENANCE OF FILTER VESSELS

The end user is to locate one manual for the installation, operation, and maintenance of filter vessels on each vessel at final installation so it is visible and accessible to an operator.

MOUNTING

All vessels must be properly bolted to the floor before moving the lid. This will assure vessel stability and prevent tipping.

EXISTING CONCRETE FLOOR

For vessels placed on existing floors, use the following or an equivalent:
Red 1 – Chem-threaded anchor rod
Red 1 – Chem capsules

Refer to manufacturer's literature for part number and installation instructions.
ITW Ramset/Red Head
U.S. 12 & Liberty Trail
Michigan City, IN 46360
Phone Number: (219) 874-4217
Fax Number: (219) 874-7035

For vessel weight, check the bill of lading.

⚠ WARNINGS

Never use the lid support arm to lift vessel.

Damage to lift assembly will result.

Vessel may drop.

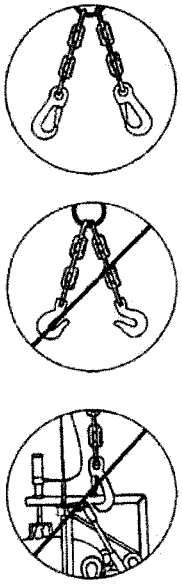

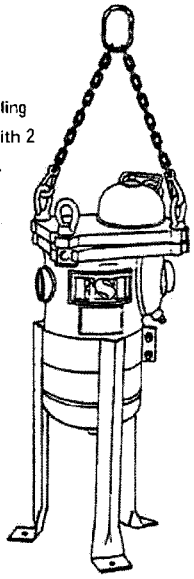

Two-legged sling for vessels with 2 or 4 eyenuts.

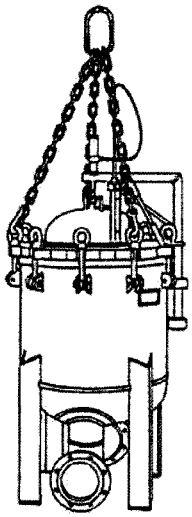

Three-legged sling equally spaced for vessels with 3 eyenuts, and 5 or more eyenuts. **Never use lid support (Davit) arm to lift vessel.**

FIGURE 1

NEW FLOOR CONSTRUCTION

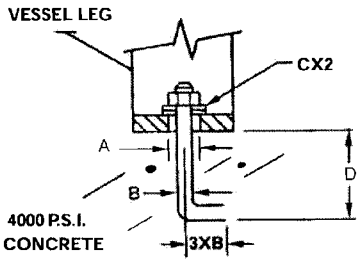

A	B	C			D	
Mounting Plt. Hole Diameter	Anchor Thread Diameter	American Standard Plane Washer			Embed-ment	Minimum Pullout
		ID	OD	THK		
17/32 in 13.4 mm	3/8 9.5	7/16 11	1 25.4	.10 2.5	3 76	4000 lb 1814 kg
1 in 25.4 mm	1/2 12.7	9/16 14.3	1-3/8 34.9	.13 3.3	4 101	7500 lb 3402 kg

INSTALLATION

PIPING

The piping material used should be the same as the base material of the vessel. It should have a rating equal to or greater than the pressure and temperature rating of the vessel.

RELIEF VALVE

It is the responsibility of the end user to protect system components, such as the FSI Filter, from being over pressurized. This can be achieved by installing a system relief valve.

PRESSURE GAUGE, TEMPERATURE GAUGE, AND VENT VALVE

FSI does not supply the vessel pressure gauge, temperature gauge, or the vent valve. It is the responsibility of the end user to obtain, install and maintain the proper gauge, indicating vessel temperature and internal vessel pressure. (Refer to Figure 2, Page 5)

GASKET

Note: The operating temperature of a gasket material changes with respect to the fluid temperature and chemical concentration.

Each FSI gasket is labeled to show the vessel type it will fit and the gasket material.

LABEL FORMAT

EXAMPLE:

VESSEL TYPE →	FS 3500, 3000, 2500, 30021 FSP 4000
GASKET MATERIAL →	Viton®

SPECIAL INSTRUCTION LABELS

Gasket installed with lips toward center of vessel.

Use only FSI approved gaskets.

SYSTEM CHECK

It is advisable to hydro-statically test this vessel with water to determine if there are any leaks in the system.

Should there be any questions or if assistance is needed in the installation, operation or maintenance of this vessel, please contact the Engineering Department, Filter Specialists, Inc., P.O. Box 735, Michigan City, IN 46360.
Phone: 800-348-3205
Fax: (219) 877-0639

⚠ WARNINGS

Gaskets can fail, causing serious injury and/or blindness.

Gasket material must be chemically and temperature compatible with fluid being filtered.

Viton® is a registered trademark of Dupont Dow Elastomers.

MANUAL LIFTING DEVICE:
Refer to Figure 2

This device consists of a threaded stud (Item 16) welded to the lid and an internally threaded crank handle (Item 15).

A. Keep threads clean and well lubricated with a lubricant acceptable for the customer's application.

B. Threads should be inspected periodically for wear and tear. Should the wear become excessive, parts should be replaced with authorized FSI parts.

CRANK HANDLE – P/N 26004
Specify carbon steel OR stainless steel vessel
*THREAD STUD – P/N 20521
Specify carbon steel OR stainless steel vessel

C. Lubricate the support and swivel blocks (Item 14) of the Davit Arm which supports the lid when opened.

HYDRAULIC LIFTING DEVICE:
Refer to Figure 2

FSI offers three basic lid lifting cylinder assemblies. See Table 1 for replacement parts.

A. Maintain the hydraulic reservoir in the dump (Item 12) with hydraulic fluid. Refer to the manufacturer's maintenance literature (See Pages 6-7). The pump relief valve is factory set to prevent excess pressure (1800 PSI).

B. Check the hydraulic hoses (Item 13) periodically for tears, abrasion and kinks. Replace if needed.

C. There are two (2) nuts attached to the end of the cylinder rod. The first is a jam nut (GR5) (Item 10) and the second is a lock nut with a nylon insert (Item 11). If item 11 is removed, it must be replaced with a new one to keep it from vibrating loose.

D. On the lift cylinder assemblies, the lid lowering rate can be set by adjusting the flow control valve mounted in the cylinder end cap. Adjust speed so that the lid comes down slowly. (Item 19, Figure 2)

*Threaded stud must be welded by an authorized ASME code weld facility. The vessel must be re-inspected after welding by an authorized inspector.

TABLE 1 **REPLACEMENT PART LIST FOR LID-LIFTING DEVICE**

General application for vessels rated at 150 PSI or less and NO corrosion allowance. Please have FSI verify the actual lift cylinder assembly by matching it with the vessel serial number for all other vessels.					Grade #5	
MODEL NO.	LIFT CYLINDER ASSEMBLY PART NO.	HYDRAULIC PUMP PART NO.	HYDRAULIC HOSE PART NO.	HYDRAULIC CYLINDER PART NO.	LOCK NUT	LOCK NUT WITH NYLON INSERT
252-3500	19982	26220	26222	3/4 BORE X 3 STK # 26010	1/4-28 # 25115	1/4-28 # 25116
4000-5000	402184	26221	26222	1-1/8 BORE X 3 STK # 26218	3/8-24 # 25117	3/8-24 # 25118
5500 and up	404342	26221	26222	1-3/8 BORE X 3 STK # 26209	# 25117	# 25118

FIGURE 2

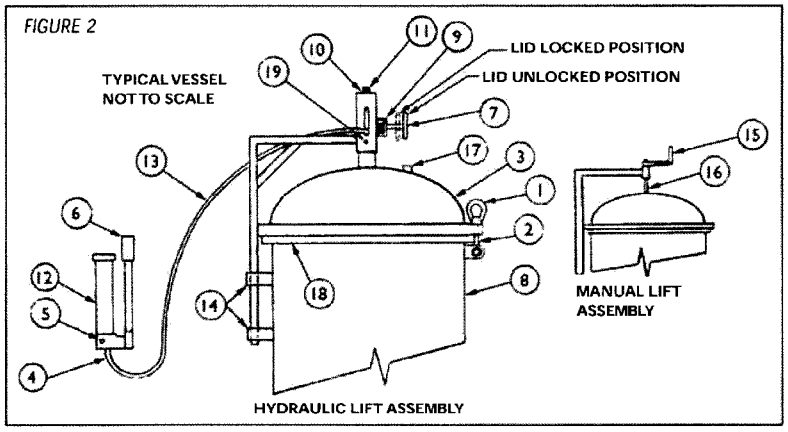

ITEM	DESCRIPTION	ITEM	DESCRIPTION
1	Eye Nut	11	Lock Nut
2	Lid Restraining Bolts	12	Hand Pump
3	Lid	13	Hose
4	Pump Hose End	14	Support Blocks Davit Arm
5	Pump Release Valve	15	Handle
6	Pump Handle	16	Stud
7	Safety Pin	17	Vent
8	Vessel Body	18	Collar Plate
9	Spring	19	Flow Control Valve in Cylinder End Cap
10	Jam Nut		

OPERATION

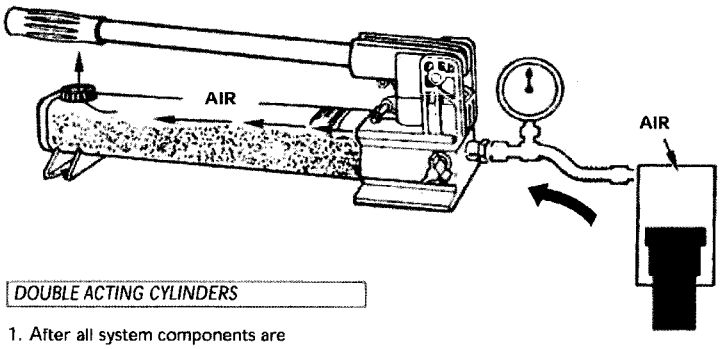

REMOVAL OF AIR

When hoses, cylinders and other components are connected to build a system, air will be trapped in the system. To function properly, the air in the system must be removed. However, the hand pump does require air in the reservoir to prevent a vacuum. If the pump reservoir is totally filled and the vent cap is closed tight, the vacuum created will prevent oil flow out of the pump. Fill reservoirs only to level indicated on the pump end cap.

SINGLE ACTING CYLINDER SYSTEMS

1. After all system components are connected to the hand pump, check reservoir oil level. Fill to indicator mark on the end cap. Replace the fill cap and be sure it is closed (not in vent position).
2. Turn pump release valve to closed position. Operate hand pump until cylinder plunger is completely extended.
3. Invert cylinder (plunger end down). Open the pump release valve; as the plunger retracts, the air in the system will be forced into the pump reservoir and replaced by oil. Close the release valve.
4. Turn the cylinder upright. Operate the pump to cycle the cylinder plunger. If air is out of the system, the plunger will advance and retract smoothly. If the plunger is erratic, repeat steps 1 through 4.
5. Open the pump fill cap and check the oil level. Fill to the indicator mark on the end cap.

DOUBLE ACTING CYLINDERS

1. After all system components are connected to the hand pump, check pump reservoir oil level. Fill to the indicator mark on the pump end cap. Replace end cap and tighten (not in vent position).
2. Place hand pump in a place where it will be higher than the hydraulic cylinder. Lay the hydraulic cylinder on its side with the couplers facing up.
3. Close the pump release valve (finger tight). Operate the pump to advance and retract the cylinder plunger three or four times.
4. Open pump release valve to retract the cylinder plunger. Check pump oil level. Add oil as necessary to restore correct level in the reservoir.

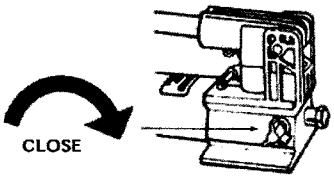

1. **To advance cylinder plunger, turn pump release valve clockwise as illustrated and close fingertight.** CAUTION: To avoid release valve damage, do not use tools to tighten valve.
2. Operate pump handle.

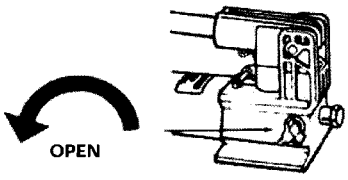

3. To retract cylinder plunger, turn release valve counterclockwise as illustrated.
4. Pump can be operated from horizontal or vertical (as long as hose end is down).

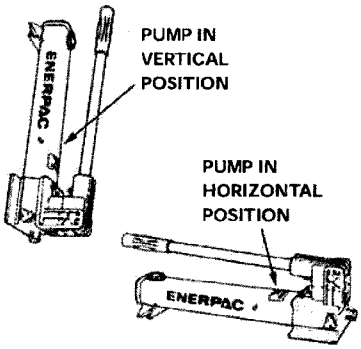

MAINTENANCE

To check oil level in pump, open pump release valve to allow cylinder (if connected) to return to pump. Remove fill cap. Add ENERPAC hydraulic oil until level with mark on rear cap. **DO NOT** overfill. To function properly, all hand pumps require air in the reservoir. If oil level is too high, the pump will not operate. If hydraulic system is used under extremely dirty conditions, frequently drain pump completely. Refill with clean ENERPAC hydraulic oil. Install fill cap and close it.

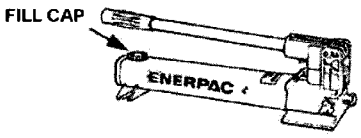

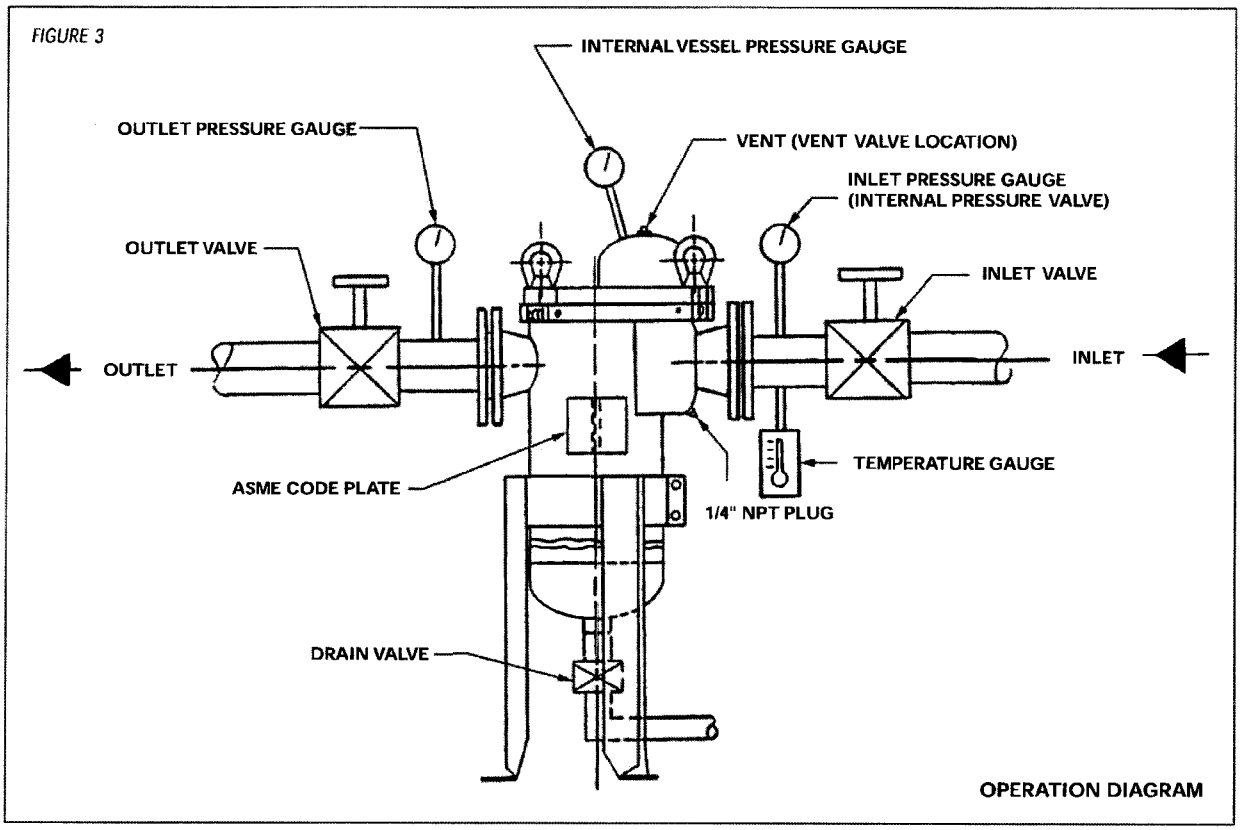

REPLACING COUPLER

ASSEMBLING TO HOSE

Clamp the hexagon nut of the hose fitting in a vise as illustrated. Remove the old coupler or rigid adaptor. Install new coupler clockwise on to hose fitting to a firm fit. Use high quality thread sealer on threads (one wrap only). A kit has been prepared for the purpose of replacing a worn out seal and may be obtained at your nearest authorized technical service center.

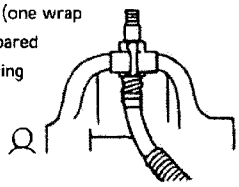

ASSEMBLING SPEED-D-COUPLERS TO CYLINDER

Use wrench to unscrew old coupler half from cylinder. Thread new coupler to cylinder and tighten firmly. Use a high quality thread sealant on coupler thread (one wrap only).

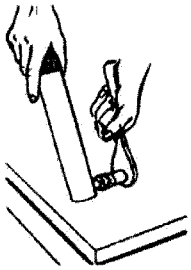

LIDS WITH NO LIFT MECHANISM — lid nuts should be unscrewed far enough to allow the lid to rest on the gasket freely and parallel to the vessel collar plate.

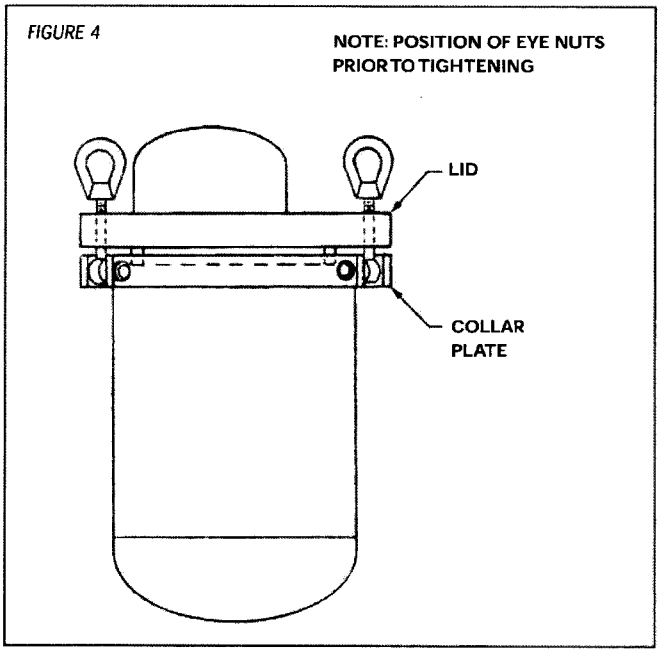

WARNING

Hot and/or chemically active liquids can cause serious injury and blindness.

Before operating this vessel, operator should wear protective clothing, including protective gloves and face shield. If handling hot liquids, operators should wear heat resistant clothing such as Nomex garments, to prevent possible burns.

WARNINGS

Do not exceed the operating limits of this vessel and gasket.

Serious injury or death can result if limits are exceeded.

Refer to the Material Safety Data Sheet (MSDS) for specific information on material. The MSDS is supplied by the manufacturer of the material.

For maximum pressure, check ASME code plate of vessel.

For maximum temperature of vessel, check ASME code plate.

For maximum operating temperature of gasket, call FSI, (219) 879-3307. The maximum gasket operating temperature can change with changes in fluid, chemical composition, temperature and pressure.

Note: Do not exceed the lesser of the two maximum temperatures.

I. INITIAL CLOSING OF THE VESSEL

Vessel must be isolated from system – pump turned off and locked out; inlet and outlet valves closed. Refer to Figure 3, Page 7.

A. Insert basket into seat. The basket rim flange must cover entire opening. If not, the basket may cock and be forced through the opening under pressure. Refer to Figure 5, Page 9.

B. Insert new filter elements, making sure that all bags or cartridges are properly seated. Snap ring bags must have the selvage on the inside of the bag to prevent bypass. Refer to Figure 5, Page 9.

C. Inspect gasket groove and gasket. Refer to Figure 6, Page 10. If gasket is nicked or worn, replace only with FSI replacement parts. For ordering replacements, refer to vessel model number and serial number.

D. Insert gasket, making sure gasket is not twisted, and if a lip-type gasket is used, the lips must point inward as shown in Figure 6, Page 10. If gasket wants to roll out of groove, stretch gasket slightly by hand, inspect gasket seam, and refit into groove.

E. Position lid for closing.

1. Lids with no lift mechanism — lid nuts must be unscrewed far enough to allow the lid to rest on the gasket freely and parallel to the vessel collar plate. Refer to Figure 4, Page 7.

2. Lids with a crank—Refer to Figure 3, Page 7.

   a. Rotate lid over vessel so the eye nut and bolt bracket are in line.

   b. Turn crank to lower lid.

   c. Realign brackets, if necessary, before lid sets down on vessel body.

3. Lids with hydraulic lifts—Refer to Figure 2, Page 5.

   a. Refer to steps E2a, E2b, E2c.

   b. Hold hand pump in vertical position with hose end down and raise lid slightly.

   c. With one hand, pull safety pin out to disengage it. Hold in this position.

   d. With other hand, crack open the pump release valve.

   e. Lower lid until it almost touches gasket, release safety pin, align eyebolt and eyenut brackets, and continue to lower lid until it rests freely on the gasket.

WARNINGS

A falling lid can cause serious injury and loss of limb.

Never place hands, fingers, or limbs between lid and vessel.

F. Engage all bolts. Hand tighten nuts. Refer to Figure 7, Page 10.

G. Moderately torque nuts at 180° to each other, rotating around the vessel until tight. Refer to Figure 7, Page 10.

H. Close vent valve. Refer to Figure 3, Page 7.

I. Turn pump on.

J. Open inlet valve slowly and observe for leaks. Should any leaks appear, close valve immediately and continue with part II. Refer to Figure 2, Page 5.

K. If necessary, fill vessel with product by evacuating the air via the vent valve.

L. Open outlet valve. Refer to Figure 3, Page 7.

II. OPENING AND CLOSING OF THE VESSEL LID

Adhere to the following sequence. Refer to Figure 2, Page 5.

⚠ WARNING

Do not open a vessel under pressure.

Escaping fluid can cause serious injury and blindness.

A. Before opening vessel:

1. Turn off pump and lock it out.
2. Close inlet and outlet valve.

B. Open vent valve. Make sure that the valve outlet is so piped that escaping fluids are so directed to prevent personal injury of the operator and surrounding area.

C. Check pressure gauge to make sure that the isolated vessel's internal pressure is zero PSI gauge. Refer to Figure 3, Page 7.

D. Drain fluid from vessel by gravity flow through drain valve. Close drain valve. Evacuation can be assisted with pressurization. Refer to "Blow Down Procedure," Page 11.

E. Loosen lid nuts and swing nuts and bolts free of lid.

F. Lift lid.

Lids with hydraulic lifts:
Hold hand pump vertically with hose end down. Close pump release valve and pump until lid lifts high enough to engage spring loaded safety pin.

⚠ WARNING

Safety pin must be engaged when lid is open.

A falling lid can cause serious injury and loss of limb.

G. Rotate lid off of vessel.

H. Remove filter bag or cartridges with caution.

I. Inspect basket for roundness and flange condition.

J. Verify that basket and bag-bearing surfaces are clean and free of nicks.

K. Insert new filter elements, making sure that all bags or cartridges are properly seated. Snap ring bags must have selvage on inside of bag. Refer to Figure 5.

L. Remove gasket; clean gasket groove. If gasket is worn or nicked, replace only with FSI replacement parts. For correct replacements, refer to the vessel model number and serial number. Use only FSI authorized gaskets.

M. Rotate lid over vessel and align bolt and nut brackets.

N. Close lid. Same as E1, E2, and E3, Page 8.

O. Same as I.F.

P. Same as I.G.

Q. Same as I.H.

R. Same as I.L.

S. Same as I.J.

T. Same as I.K.

U. Same as I.L.

If a vessel still leaks, depressurize vessel and retorque bolts according to step I.G., Page 8. If vessel leakage continues, call FSI.

FIGURE 5

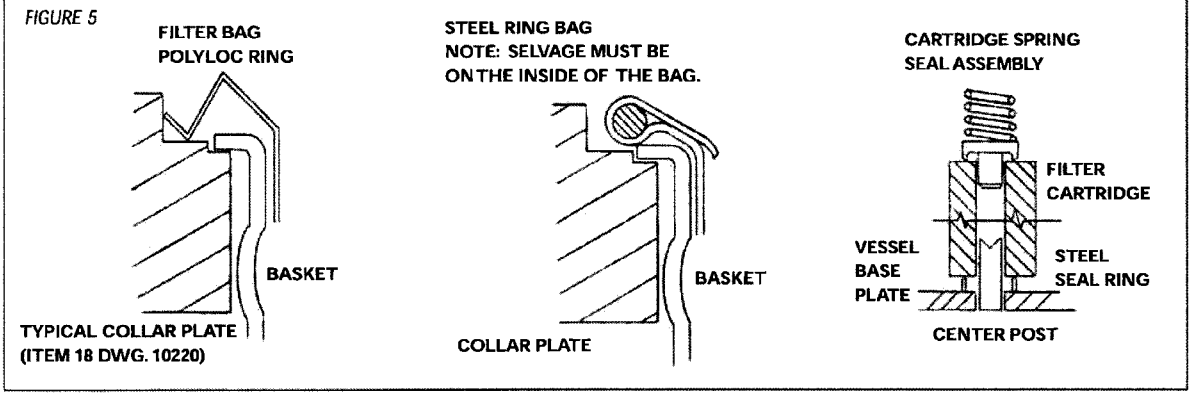

FIGURE 6

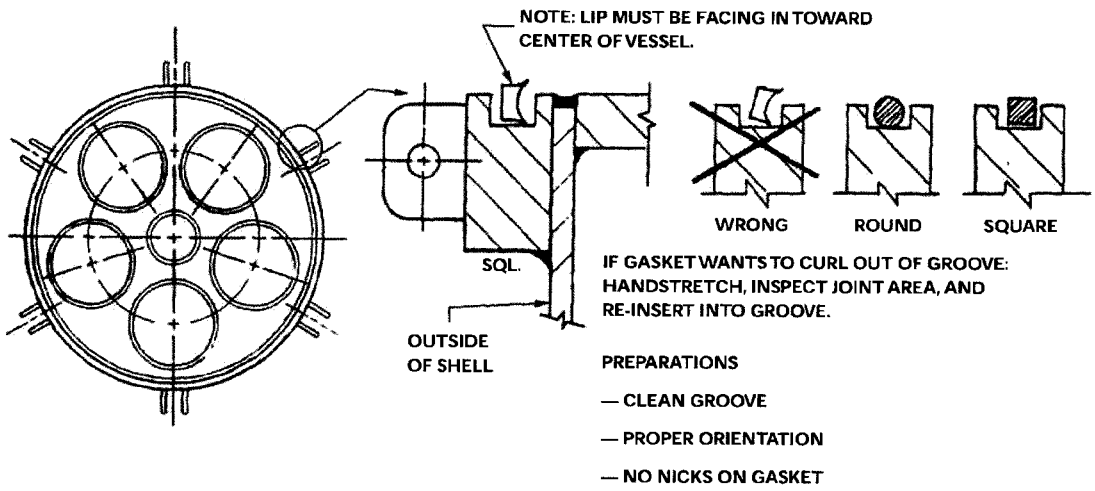

GASKET INSTALLATION

FIGURE 7

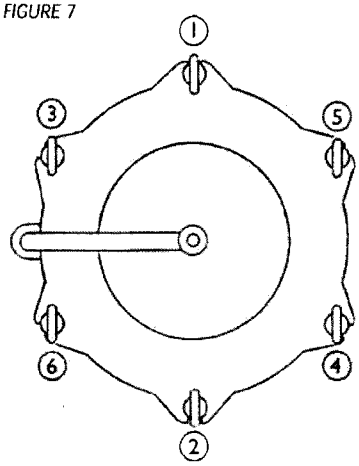

NOTE: EXCESSIVE TORQUE SHOULD NOT BE NECESSARY WHEN USING FSI SELF-ENERGIZING GASKETS.

BOLT TIGHTENING SEQUENCE

Standard FSI vessels are designed to use gaskets made of self-energizing material, such as BUNA, EPR, or Viton®. The torque requirements to seal a vessel with such gaskets is minimal. It is, therefore, not necessary to use extensions or cheater bars when torquing eyenuts. FSI does not recommend the use of gaskets made of non-energizing material or rope-type gaskets. They may require excessive tightening torque. Due to the many variables that influence torque, exact values are not given herein. For general torque values applicable to your particular vessel, call FSI at 1-800-348-3205.

BLOW DOWN PROCEDURE

To aid filter element changes, the liquid in the vessel can be evacuated prior to the change.

1. Close inlet valve. Refer to Figure 3, Page 7.
2. Close outlet valve.
3. Open vent valve.
4. Check gauge — internal pressure must be zero.
5. Open drain valve.
6. Close vent.
7. Connect gas to vessel via vent valve. Use only if gravity evacuation does not yield desired results.
8. Open vent valve slowly.
9. Close vent valve metering out fluid.
10. Disconnect gas.
11. Close drain valve.
12. Make sure internal pressure is zero and continue with opening instructions.

FILTER IN OPERATION

Once the filter is operational and in use, the differential pressure should be checked regularly. It is suggested that when the differential pressure across the filter elements reaches a predetermined amount, the elements be changed. If the differential pressure suddenly drops, stop filtration immediately and check bags for proper seal or rupture.

WARNINGS

The gas used for blow down must be stable in the environment of the fluid being evacuated.

WARNINGS

- PRESSURE GAUGE AND VENT VALVE MUST BE INSTALLED IN ACCESS HOLE.
- FAILURE TO INSTALL PRESSURE GAUGE AND VENT CAN RESULT IN SERIOUS INJURY WHEN OPENING THE LID.
- DIRECT VENT VALVE EXHAUST TO A SAFE PLACE.

1289 PT. NO. 35001

WARNINGS

- VESSEL MAY TIP IF NOT PROPERLY BOLTED TO FLOOR.
- A TIPPING VESSEL CAN CAUSE SERIOUS INJURY.
- PROPERLY BOLT VESSEL TO FLOOR BEFORE ROTATING LID.
- REFER TO MANUAL FOR THE INSTALLATION, OPERATION, AND MAINTENANCE OF FILTER VESSELS.

1289 PT. NO. 35002

T-HANDLE POLYLOC® INSERT TOOL

ASSEMBLY INSTRUCTIONS

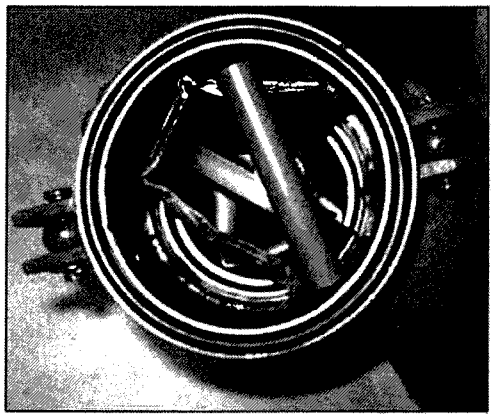

Step 1

Open filter.

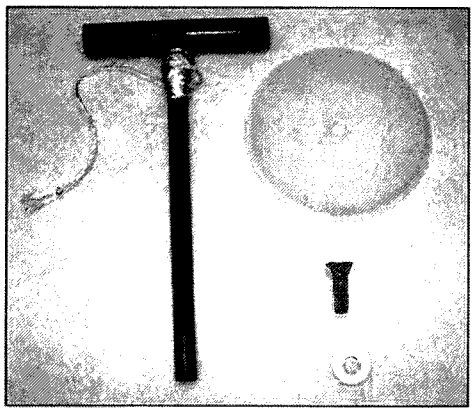

Step 2

Pull out T-handle, Polyloc® tool, instructions, and any cardboard inside filter. Remove the socket cap screw and washer from the bottom of the T-handle.

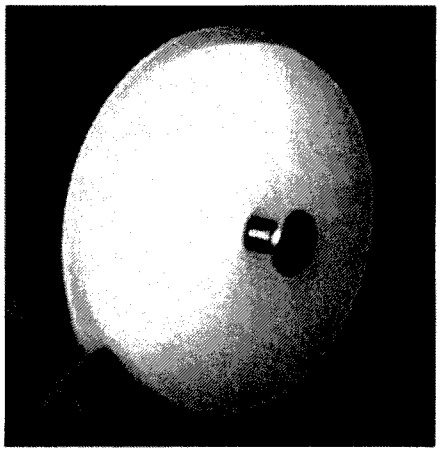

Step 3

Place socket cap screw into the Polyloc® tool through the chamfered side so that the socket cap screw sits flush with the Polyloc® tool.

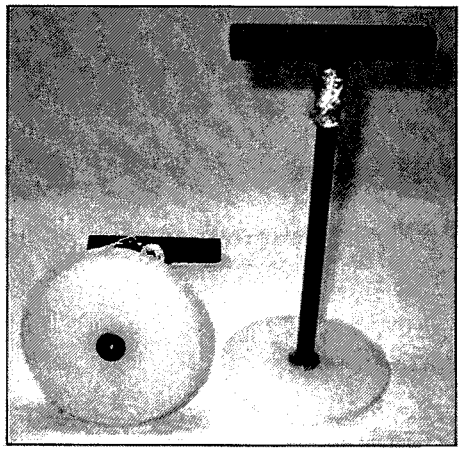

Step 4

Slide washer over end of socket cap screw. Tighten socket cap screw to T-handle.

Note: The string tied to the T-handle may be used to attach the T-handle Polyloc® insert tool to a convenient location near the filter.

06/00

filter specialists, inc. michigan city, in 46360 1-800-348-3205

T-HANDLE POLYLOC® INSERT TOOL

INSTRUCTIONS FOR USE

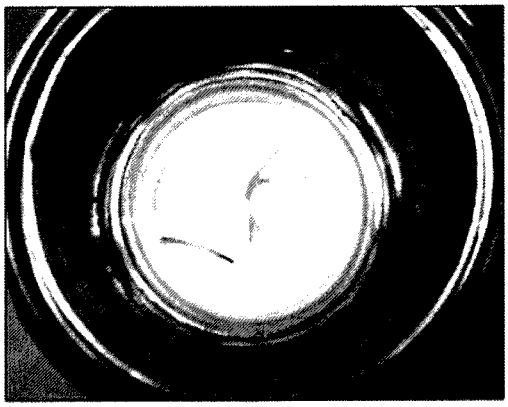

Step 1
Place bag into filter.

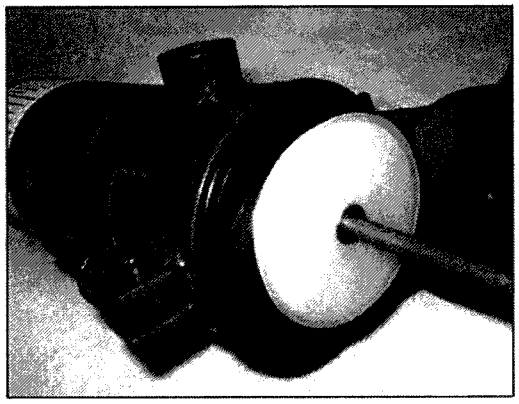

Step 2
Place T-handle Polyloc® insert tool over bag.

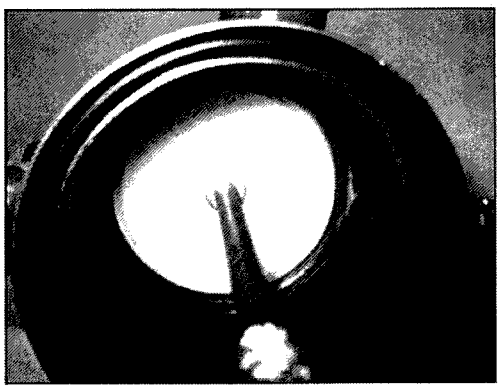

Step 3
Press T-handle Polyloc® insert tool down until bag 'snaps' into place.

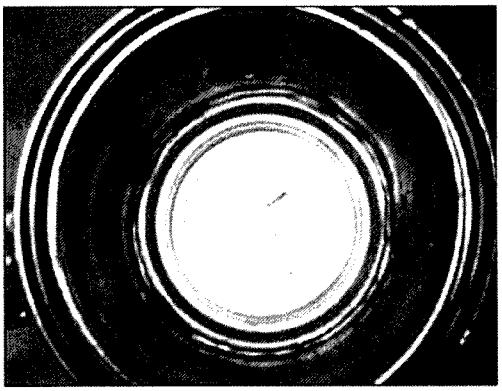

Step 4
Remove T-handle Polyloc® insert tool from filter.

CAUTION

Do NOT operate the filter with any part of the T-handle Polyloc® insert tool inside.

06/00

filter specialists, inc. michigan city, in 46360 1-800-348-3205

POLYLOC® INSERT TOOL

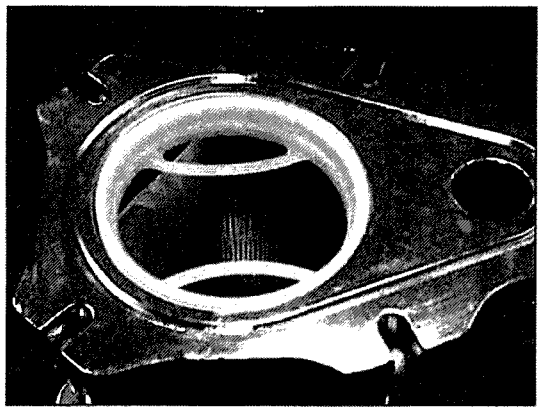

Step 1

Open filter. Remove instructions and any packing material.

Step 2

Place Polyloc® bag into filter.

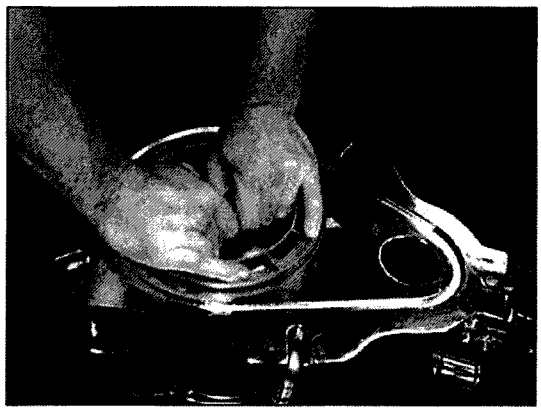

Step 3

Place Polyloc® insert tool over bag. With both hands, firmly push down on the Polyloc® insert tool. An audible snap will be heard indicating that the Polyloc® bag ring is locked in place.

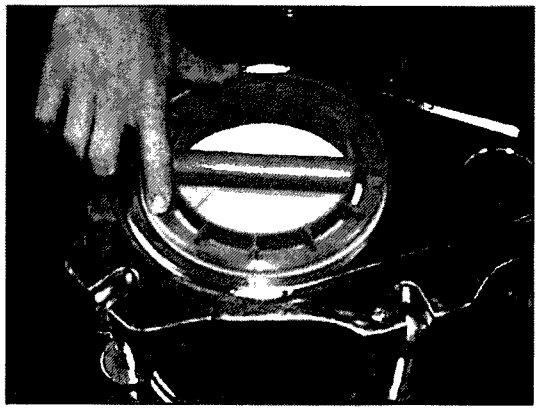

Step 4

To ensure complete engagement, press down firmly with thumb and forefinger around the outside of the Polyloc® insert tool.

Step 5

Make a visual check and *lightly* pull on the Polyloc® bag ring handles to ensure the Polyloc®
bag ring is completely seated.

08/00

WARNING!

- VESSEL AND/OR GASKET CAN FAIL IF OPERATING LIMITS ARE EXCEEDED.
- A FAILURE CAN CAUSE SERIOUS INJURY, BLINDNESS OR DEATH.
- DO NOT EXCEED MAXIMUM OPERATING PRESSURE PER VESSEL CODE PLATE.
- CHECK TEMPERATURE RANGE ON VESSEL CODE PLATE.
- CHECK TEMPERATURE RANGE OF GASKET MATERIAL WITH RESPECT TO FLUID BEING FILTERED.
- DO NOT EXCEED THE LESSER OF THE TWO OPERATING TEMPERATURES.
- SECURE LID BY TIGHTENING LID EYENUTS.
- READ THE MANUAL FOR THE INSTALLATION, OPERATION, AND MAINTENANCE OF FILTER VESSELS.

1289 PT. NO. 35000

WARNING!

- RAISED LID MAY FALL IN THE EVENT OF A HYDRAULIC OR MECHANICAL FAILURE.
- A FALLING LID CAN SERIOUSLY INJURE OR CAUSE LOSS OF LIMB.
- REFER TO FSI OPERATING AND MAINTENANCE INSTRUCTIONS.
- READ AND UNDERSTAND THE FOLLOWING INSTRUCTIONS:
  - — NO BODY PARTS UNDER THE LID AT ANY TIME.
  - — WEAR EYE PROTECTION IN CASE OF HYDRAULIC COMPONENT RUPTURE.
  - — ENGAGE LID SAFETY LATCH WHERE APPLICABLE.

1289 PT. NO. 35003

WARNING!

- IF IMPROPERLY USED, THIS VESSEL CAN CAUSE SERIOUS INJURY, BLINDNESS OR DEATH.
- READ ALL WARNING LABELS AND MANUAL FOR THE INSTALLATION, OPERATION, AND MAINTENANCE OF FILTER VESSELS BEFORE USE.
- FOR ADDITIONAL MANUALS, CALL FSI AT 1-800-348-3205.

PT. NO. 35005

WARNING!

- GASKET SEAL MAY LEAK OR SQUIRT FLUID UNDER PRESSURE IF THE LID OPENING AND CLOSING INSTRUCTIONS ARE NOT FOLLOWED.
- SQUIRTING FLUID CAN CAUSE SERIOUS INJURY OR BLINDNESS.
- READ THE MANUAL FOR INSTALLATION, OPERATION, AND MAINTENANCE OF FILTER VESSELS.
- WEAR PROTECTIVE CLOTHING.
- WEAR FACE SHIELD.
- BEFORE OPENING, TURN PUMP OFF AND LOCK IT OUT.
- CLOSE INLET AND OUTLET VALVE.
- OPEN VENT SLOWLY — DIRECT EXHAUST TO SAFE PLACE.
- INTERNAL PRESSURE SHOULD BE ZERO PSI GAUGE.
- DRAIN FLUID VIA DRAIN VALVE.
- CLOSE DRAIN VALVE.
- UNBOLT LID LUGS.
- LIFT LID.
- ENGAGE LID SAFETY PIN (IF APPLICABLE).
- ROTATE LID, UNCOVERING VESSEL.
- CHANGE FILTER ELEMENT.
- REMOVE GASKET, CLEAN GASKET GROOVE AND GASKET.
- INSPECT GASKET GROOVE AND LID SEALING AREA FOR DAMAGE.
- REPLACE DAMAGED PARTS WITH FSI REPLACEMENT PARTS ONLY.
- REPOSITION LID, DISENGAGE SAFETY PIN AND LOWER LID ONTO VESSEL SLOWLY.
- REPLACE WASHERS UNDER NUTS IF NECESSARY.
- ENGAGE ALL BOLTS, HAND TIGHTEN NUTS.
- NUT AND BOLT THREADS MUST BE FREE OF RUST AND FOREIGN MATTER.
- MODERATELY TORQUE NUTS AT 180° TO EACH OTHER, ROTATING AROUND VESSEL.
- CLOSE VENT VALVE.
- ACTIVATE PUMP.
- OPEN INLET VALVE SLOWLY. OBSERVE FOR LEAKS. IF LEAK APPEARS, CLOSE VALVE AND START OVER.
- IF THERE ARE NO LEAKS, OPEN OUTLET VALVES SLOWLY.

1289 PT. NO. 35004

TO LEARN MORE ABOUT FILTER SPECIALISTS, INC. PRODUCTS, CONTACT OUR OFFICE BELOW OR VISIT OUR WEB PAGE: http://www.fsifilters.com.

FSI ® 100 Anchor Road
P.O. Box 735
Michigan City, IN 46361
(219) 879-3307
(219) 877-0632 FAX

Filter Specialists, Inc. 800-348-3205

Viton® is a registered trademark of Dupont Dow Elastomers.
There are no expressed or implied warranties, including the implied warranty of merchantability and fitness for a particular purpose not specific herein respecting this agreement or the product being sold hereunder or the service provided herein

MANUFACTURED IN THE USA

PRINTED IN USA
OPMAN-002-302
Part No. RMLOPMAN

Appendix G - Mechanical Equipment and Instruments

VALLEY FARMS
ARSENIC REMOVAL FACILITY
SORB 33® ADSORBER SYSTEM

(1) ONE 8'0" DIA. ADSORBER

SEVERN TRENT SERVICES
PROJECT # 22643

SECTION 5 **MECHANICAL EQUIPMENT**

A. MANUAL BUTTERFLY VALVES
B. MANUAL BALL VALVES
C. AIR RELEASE VALVES
D. EXPANSION JOINTS
E. PRESSURE RELIEF VALVES

VALLEY FARMS
ARSENIC REMOVAL FACILITY
SORB 33® ADSORBER SYSTEM

(1) ONE 8'0" DIA. ADSORBER

SEVERN TRENT SERVICES
PROJECT # 22643

SECTION 5 **MECHANICAL EQUIPMENT**

A. MANUAL BUTTERFLY VALVES

MARK	QTY	SIZE	SERVICE
V-121A	1	6"	TREATED INFLUENT WATER
V-122A	1	6"	TREATED EFFLUENT WATER
V-123A	1	6"	BACKWASH WATER SUPPLY
V-124A	1	6"	BACKWASH WATER OUT WASTE
V-125A	1	6"	RINSE WATER OUT WASTE

TTE F E WW

F M TE		MM			E T		
Project	ARSENIC REMOVAL SYSTEM	Tetra Cont. No.	22643	Rev.	1	By	AS	Date	25-Sep-14
Customer	AZ WATER	Cost Code		Date	11/17/2014	Ckd.		Date	
Location	VALLEY FARMS					Sheet	1 of		1

Qty	Mark	Materials Description			Ref. Dwg No.	Item Code
		WW M TTE F E F T E W TE E				
		DESIGN PRESSURE	100 PSIG	125 °F		
		E	E E	E T		
1	V-121A	6"	FEED INFLUENT WATER	HANDWHEEL		
1	V-122A	6"	TREATED EFFLUENT	HANDWHEEL		
1	V-123A	6"	BACKWASH WATER IN	HANDWHEEL		
1	V-124A	6"	BACKWASH WATER OUT WASTE	HANDWHEEL		
1	V-125A	6"	RINSE WATER OUT WASTE	HANDWHEEL		
5		MARK NOS REPRESENTS :	VESSEL "A"			
		r d rd r				
		WW d r F d rd				
		r F d d r Ed				
	Rev. 1	r M d F				
		ACTUATOR TO BE HANDWHEEL OR CHAINWHEEL AS SPECIFIED ABOVE. CHAIN TO BE HOT DIPPED GALVANIZED.				
		CHAINWHEEL SHALL BE EQUIPPED WITH GUIDE TO ALLOW RAPID HANDLING OF CHAIN WITHOUT "GAUGING" OF THE WHEEL.				
		MANUAL OPERATOR OF WORM GEAR OR LEAD SCREW TYPE, SELF-LOCKING, DESIGNED TO HAVE VALVE IN				
		INTERMIDIATE POSITION .				
		OPERATOR TO INCLUDE POSITION INDICATORS AND MECHANICAL STOPS LIMITING DEVICES TO PREVENT OVER				
		TRAVEL OF DISC IN OPEN AND CLOSED POSITION.				

ACTUATOR SIZE	J	L	M	N	P	Q	R	S	T	V	W	NUMBER OF TURNS
MDT-2S	4-11/16	2	2-1/8	2	4-1/2	4-1/4	8-1/4	7-7/8	7-7/8	8	9-1/8	32
MDT-3S	5-5/8	2-7/16	3-1/4	3-5/32	5-5/8	5-3/8	10-3/8	10-1/2	10-1/8	12	9-1/8	30
MDT-4S	6-3/8	2-27/32	3-3/8	4	7-5/16	6-3/4	11-5/16	11-1/2	11	12	9-1/8	40
MDT-5	7-9/16	3-15/32	4-1/2	5-1/2	8-3/4	10	17	17 3/16	17-3/16	18	16-7/16	44

VALVE SIZE	A	B	C	D	E ⚠	F	G
3	4-3/4	3-1/4 ⚠	7-1/2	5	13/16	4--5/8	6
4	5-1/2	3-1/2 ⚠	9	5	1	8--5/8	7-1/2
6	6-1/2	5-1/8	11	5	1-1/16	8--3/4	9-1/2
8	7-3/4	6-1/2	13-1/2	6	1-3/16	8--3/4	11-3/4
10	9	9-7/8	16	8	1-3/16	12--7/8	14-1/4
12	10-1/2	11-3/8	19	8	1-5/16	12--7/8	17
14	11-7/8	12-3/4	21	8	1-3/8	12--1	18-3/4
16	13-1/2	14-3/8	23-1/2	8	1-7/16	16--1	21-1/4
18	14-3/8	15-1/4	25	8	1-9/16	16--1-1/8	22-3/4
20	16	16-7/8	27-1/2	8	1-11/16	20--1-1/8	25

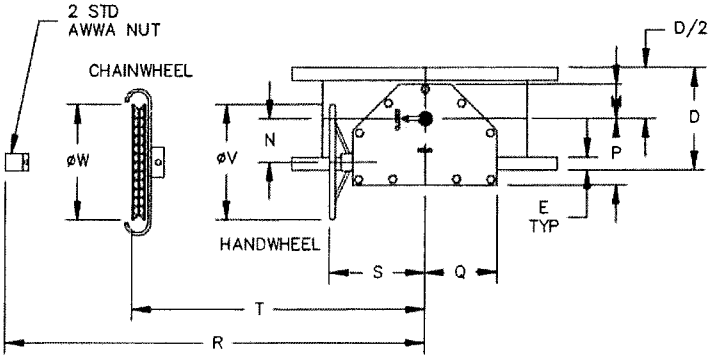

ACTUATOR POSITION 1

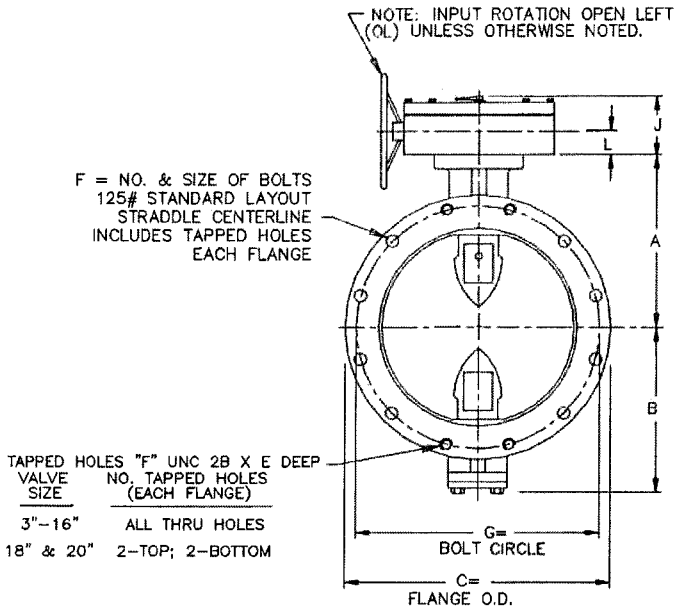

VALVE SIZE	NO. TAPPED HOLES (EACH FLANGE)
3"-16"	ALL THRU HOLES
18" & 20"	2-TOP; 2-BOTTOM

NOTES:

1. ALL DIMENSIONS SHOWN IN INCHES.
2. "D" DIMENSION ±1/16" FOR 3" THRU 10" VALVES.
   "D" DIMENSION ±1/8" FOR 12" THRU 20" VALVES.
3. FOR BOLTS SMALLER THAN ø1-3/4, BOLT HOLES WILL BE 1/8" LARGER THAN DIAMETER OF BOLT.
   FOR BOLTS ø1-3/4 OR LARGER , BOLT HOLES WILL BE 1/4" LARGER THAN DIAMETER OF BOLT.
4. DIMENSIONS AND DRILLING OF END FLANGES CONFORM TO THE AMERICAN CAST IRON FLANGE STANDARDS, CLASS 125 (B16.1).
5. VALVES MANUFACTURED & TESTED IN ACCORDANCE WITH AWWA SPECIFICATION C-504 LATEST REVISION, CLASS 150B.
6. RECOMMENDATION FOR MATING FLANGES: WHERE INSULATING BUSHINGS ARE USED, IT IS NECESSARY THAT BOLT HOLES BE DRILLED OVERSIZE BY AN AMOUNT EQUAL TO TWO TIMES THE INSULATING SLEEVE THICKNESS TO MAINTAIN THE SAME MINIMUM CLEARANCE FOR BOLTS.

⚠

TOLERANCES	
FLANGE THICKNESS "E":	$^{+1/8"}_{-0}$
LAYING LENGTH "D":	
3" THRU 10"	±1/16"
12" THRU 20"	±1/8"
BOLT CIRCLE "G":	±1/64"
FLANGE O.D."C":	
3" THRU 10"	±1/8"
12" THRU 20"	±3/16"

REV	DATE	BY	DESCRIPTION	APP
1	5-5-11	JLM	REV COL B & E ADD TOLERANCES	

PRATT® HENRY PRATT COMPANY AURORA, ILL.

3" - 20" FLG BUTTERFLY VALVE
MDT MANUAL ACTUATOR

SCALE NONE DATE 1-20-09
DRAWN BY CEM CHECKED BY JR
APPROVED GA=BORDER
DRWG. NO. GA-11864 REV 1 A/C

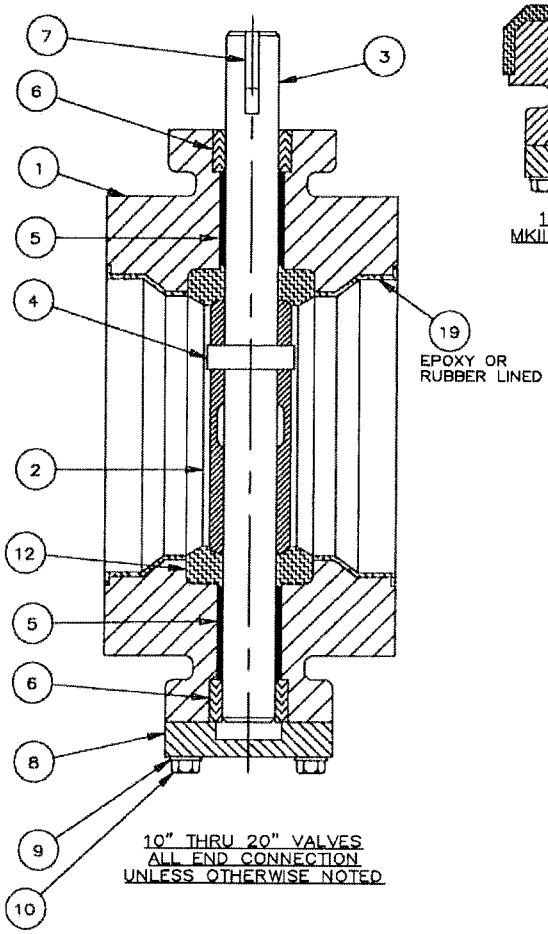

10" THRU 20" VALVES
ALL END CONNECTION
UNLESS OTHERWISE NOTED

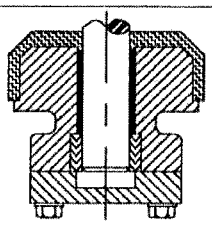

10" THRU 20"
MKII WAFER VALVES

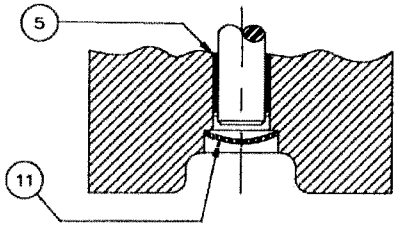

3" THRU 8" VALVES
ALL END CONNECTIONS
UNLESS OTHERWISE NOTED

MATERIAL OPTIONS AS CHECKED

ITEM NO.	DESCRIPTION	MATERIALS	✓
1	BODY	CAST IRON ASTM A-48 CLASS 40 (MKII ONLY)	
		CAST IRON ASTM A-126 CLASS B *	✓
		DUCTILE IRON ASTM A-536 (65-45-12)	
2	DISC	CAST IRON ASTM A-126 CLASS B STAINLESS STEEL EDGE TYPE 316 (DUCTILE IRON MAY BE SUBSTITUTED)	
		DUCTILE IRON ASTM A-536 (65-45-12) STAINLESS STEEL EDGE TYPE 316	
		STAINLESS STEEL ASTM A-351 GRADE CF8M	✓
3	SHAFT	STAINLESS STEEL ASTM A-276 TYPE 304	✓
		STAINLESS STEEL ASTM A-276 TYPE 316	
		STN. STL. A-564 TYPE 630 COND. H-1150	
4	SQUEEZE PIN	STAINLESS STEEL ASTM A-276 TYPE 304	✓
		STAINLESS STEEL ASTM A-276 TYPE 316	
		STN. STL. A-564 TYPE 630 COND. H-1150	
5	BEARING	NYLATRON GS	✓
		RULON LR (HIGH TEMPERATURE ONLY)	
		FLUOMETAL (PTFE IMPREGNATED W/ EXPANDED 317L METAL SHEET)	
6	PACKING	RUBBER BUNA-N	✓
		RUBBER (EPDM)	
7	KEY	AISI C1045 COLD DRAWN STEEL	
8	COVER	CAST IRON ASTM A-48 CLASS 40	
		CAST IRON ASTM A-126 CLASS B	✓
9	LOCKWASHER	STAINLESS STEEL TYPE 304	✓
		STAINLESS STEEL TYPE 316	
10	CAP SCREW	STAINLESS STEEL TYPE 304	✓
		STAINLESS STEEL TYPE 316	
11	EXP. PLUG	STAINLESS STEEL TYPE 304	✓
		STAINLESS STEEL TYPE 316	
12	SEAT	RUBBER BUNA-N	✓
		RUBBER (EPDM)	
13	BONNET	CAST IRON ASTM A-48 CLASS 40 FOR 3"-10" & 12" W/ MDT2S	
		DUCTILE IRON ASTM A-536 65-45-12 FOR 10" W/ MDT3S & 12" -20"	
14	CAP SCREW	ALLOY STEEL SAE GRADE 8	
15	LOCKWASHER	STAINLESS STEEL TYPE 304	
16	THD. STUD	STAINLESS STEEL TYPE 304	
17	HEX NUT	STAINLESS STEEL TYPE 304	
18	GLAND	BRONZE ASTM B-584 ALLOY C86400	
19	LINING	EPOXY	
		RUBBER (SAME AS 12)	

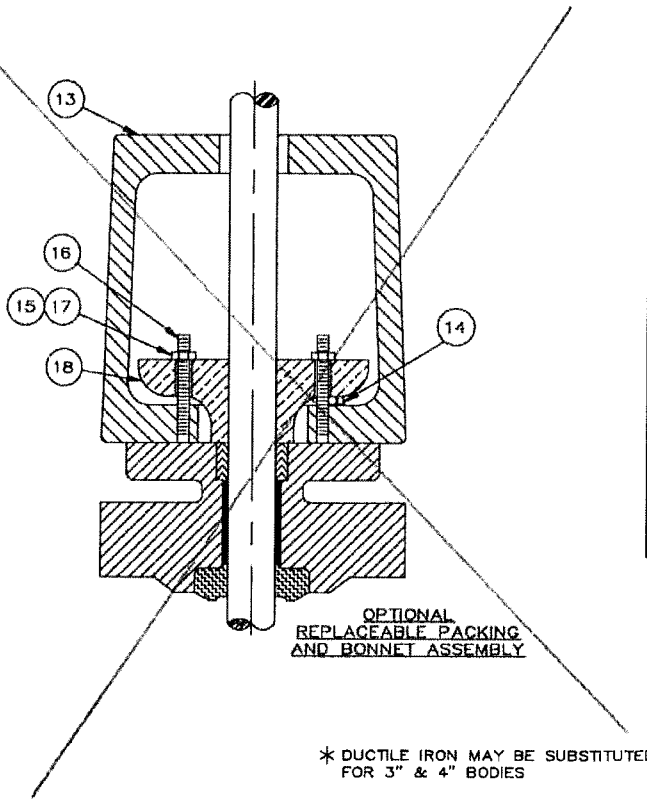

OPTIONAL
REPLACEABLE PACKING
AND BONNET ASSEMBLY

* DUCTILE IRON MAY BE SUBSTITUTED
FOR 3" & 4" BODIES

REV	DATE	BY	DESCRIPTION	APP.
10	5/28/14	DSL	UPDATED TITLE BLOCK	

PRATT® HENRY PRATT COMPANY AURORA, ILL.

CROSS SECTION
PARTS AND MATERIALS LIST
3"-20" BONDED SEAT VALVES
150B & 250B

SCALE NONE DATE 10-27-05
DRAWN BY ES CHECKED BY RCB
APPROVED GA-BORDER
DRWG. NO. GA-11486 REV 10 A/C

T TEM MM

SYSTEM PART NO.	A069636A	A069636B	A069636C	A069636D	A069636E
PART NO.	2308405	2308406	2308407		
ALTERNATE SYSTEM	NO	NO	NO	NO	NO
MULTIPLE COLOR SYSTEM	NO	NO	NO	NO	NO
MANUFACTURER	PPG PROTECTIVE & MARINE COATINGS	PPG PROTECTIVE & MARINE COATINGS	PPG PROTECTIVE & MARINE COATINGS	PPG PROTECTIVE & MARINE COATINGS	PPG PROTECTIVE & MARINE COATINGS
MANUFACTURER'S DESIGNATION	AMERCOAT 370	AMERCOAT 370	AMERCOAT 370	AMERCOAT 370	AMERCOAT 370
USE CATEGORY	ALL	ALL	ALL	ALL	ALL
SUBMERSIBLE[4]	YES	YES	YES	YES	YES
MIN. TOTAL DRY MIL THICKNESS	SEE NOTE 1	SEE NOTE 1	SEE NOTE 1	SEE NOTES 1 AND 2	SEE NOTE 1
MAXIMUM TOTAL DRY MIL THICKNESS	24	24	24	24	24
NSF/UL RECOAT TIME	1 HOUR @ 70° F	1 HOUR @ 70° F	1 HOUR @ 70° F	1 HOUR @ 70° F	1 HOUR @ 70° F
NSF/UL CURING TIME	7 DAYS @ 70° F	7 DAYS @ 70° F	7 DAYS @ 70° F	7 DAYS @ 70° F	7 DAYS @ 70° F
SURFACE PREPARATION	SSPC-SP10	SSPC-SP10	SSPC-SP10	SSPC-SP10	SSPC-SP5
COLOR (IF SPECIFIED)	OXIDE RED	WHITE	PEARL GRAY	WHITE	OXIDE RED
CLASS I INSPECTION	NO	NO	NO	NO	NO
MAT'L CATEGORY	PE	PE	PE	PE	PE
MIN. TOTAL DRY MIL THICKNESS	8	8	8	8	8
THEORETICAL COVERAGE SQ FT / GAL / MIL	1011	1011	1011	1011	1011
OTHER	2.50-3.0 LBS/GAL F STD 61 63% +/- 3% TEM E T E E E E 250°F DRY CONTINUOUS	2.50-3.0 LBS/GAL F STD 61 63% +/- 3% TEM E T E E E E 250°F DRY CONTINUOUS	2.50-3.0 LBS/GAL F STD 61 63% +/- 3% TEM E T E E E E 250°F DRY CONTINUOUS	2.50-3.0 LBS/GAL F STD 61 63% +/- 3% TEM E T E E E E 250°F DRY CONTINUOUS	2.50-3.0 LBS/GAL F STD 61 63% +/- 3% TEM E T E E E E 250°F DRY CONTINUOUS
AWWA C-550 NSF 61 USDA NFPA CLASS 1 TEMP: 200◇F	NSF – YES	NSF – YES	NSF – NO	NSF – YES	NSF - YES

8 mils coating

NOTES:

1) MINIMUM THICKNESS SHALL BE PER THE SHOP ORDER JDE SCREEN AND GENERAL ARRANGEMENT DRAWING WHICH MUST INDICATE THE SAME MINIMUM NUMBER OF MILS.
2) FOR MULTIPLE COLOR SYSTEMS, FIRST COLOR LISTED SHALL BE APPLIED FIRST TO A THICKNESS OF 1/2 THE TOTAL REQUIRED MIL THICKNESS, FOLLOWED BY THE SECOND COLOR MAKING UP THE SECOND 1/2 OF REQUIRED MIL THICKNESS.
3) AWWA C-550 APPROVED.
4) NSF-61 APPROVED VALVES ARE NOT TO BE USED SUBMERGED IN POTABLE WATER SYSTEMS.
5) MAY BE THINNED WITH THINNER #65 UP TO 12% BY VOLUME.
6) FOR NSF61 APPLICATIONS, ONLY 4" AND LARGE VALVES ARE ALLOWED.

UL/FM

PRATT Henry Pratt Company

HENRY PRATT COMPANY

PPG
AMERCOAT 370
(FACTORY ACCELERATED)

MATERIAL SPECIFICATIONS

REV	DATE	BY	APP	REV	DATE	BY	APP
3	4/9/08	SD	SS	6			
2	7/1/05	SD	SS	5	3/23/11 Dry Mil Thickness to 8	Tim Fallon	RCB
1	10/29/03	SJR	SS	4	3/11/10 Per ECO 1502150	RCB	JHW

DRAWN	SD	CHKD BY	SS	APPROVED	LAST MODIFIED
SCALE		DATE	4/9/08		

PPG Amercoat

Amercoat® 370

370 Series — *Fast-dry multi-purpose epoxy*

Product Data/ Application Instructions

- High performance, corrosion resistance
- Fast drying, fast curing epoxy composition
- Application over wide range of surface temperatures from 20°F (-7°C) to 120°F (60°C)
- Self-priming, high-build coating
- Primer for wide range of topcoats
- Excellent shop primer for corrosion resistance
- Compatible with inorganic zinc silicate primers
- No lead pigments added
- VOC compliant
- Suitable for immersion in fresh and salt water
- Compatible with compromised surface preparation

Amercoat 370 forms an excellent corrosion barrier and is suitable for most industrial and marine new construction, repair, and field maintenance applications.

The fast curing properties of Amercoat 370 make it especially beneficial as a shop-applied coating where fast-drying and handling of coated parts are required.

Amercoat 370 is user-friendly and can be applied by a variety of spray application methods.

Typical Uses

Tank exteriors, structural steel, and piping in chemical plants, refineries, pulp and paper mills, offshore platforms, ship hulls, ballast tank service, anticorrosive under antifoulings and other structures exposed to severe weathering or salt spray.

Typical Properties

Physical

Abrasion (ASTM D4060) 1 kg load/1000 cycles CS-17 wheel	250 mg weight loss
Adhesion, Elcometer (ASTM D4541)	>1000 psi

Performance

Salt spray – 1 coat @ 6 mils 3000 hours exposure	
face corrosion (ASTM B117)	None
face blistering (ASTM B117)	None
Humidity (condensation) (ASTM D4585) 3000 hours exposure:	
face corrosion	None
Steam cleanable	Yes
Chemical resistance – Condition after 1 year immersion	
salt water	Excellent
fresh water	Excellent

Qualifications

AWWA C550

NSF Standard 61* - For use in drinking water.

**For NSF application information, please visit our website at www.amercoatings.com/usa/nsf*

NSF

Physical Data

Finish	Flat	
Color	Pearl gray, light buff, white, oxide red	
Components	2	
Curing mechanism	Solvent release and chemical reaction between components	
Volume solids (ISO 3233)	66% ± 3%	
Dry film thickness per coat	4-6 mils (100 - 150 microns)	
Coats	1 or 2	
Coverage	ft²/gal	m²/L
1 mil (25 microns)	1059	25.4
5 mils (125 microns)	212	5.1
VOC	lb/gal	g/L
mixed	2.5	300
mixed/thinned (½ pt/gal)	2.8	335
mixed/thinned (1 pt/gal)	3.0	359
Temperature limit	°F	°C
continuous (dry)	200	93
intermittent (dry)	250	121
Flash point (SETA)	°F	°C
cure	82	28
resin	82	28
Amercoat 65	81	27
Amercoat 12	2	-17
Amercoat 101	145	63

Application Data

Applied over	Primed or prepared steel	
Surface preparation		
new steel	SSP-SP6	
primed steel	See specific primer	
previously painted or pitted steel	SSPC-SP10	
Primer	Dimetcote*	
Method	Airless or conventional spray	
Mixing ratio (by volume)	4 parts resin to 1 part cure	
Environmental conditions		
Temperature	°F	°C
air and surface	20 to 120	-7 to 49
material (minimum)	40	4

Surface temperatures must be at least 5°F (3°C) above dew point to prevent condensation.

Thinner	
below 60°F	Amercoat 65
over Dimetcote or above 60°F	Amercoat 101
Equipment cleaner	Thinner or Amercoat 12

UL/FM

PRATT Henry Pratt Company	HENRY PRATT COMPANY	MATERIAL SPECIFICATIONS									
		3	4/9/08	SD	SS	6					
PPG AMERCOAT 370 (FACTORY ACCELERATED)		2	7/1/05	SD	SS	5	3/23/11 Dry Mil Thickness to 8	Tim Fallon	RCB		
		1	10/29/03	SJR	SS	4	3/11/10 Per ECO 1502150	RCB	JHW		
DRAWN	SD	CHKD BY	SS	REV	DATE	BY	APP	REV	DATE	BY	APP
SCALE		DATE	4/9/08	APPROVED				LAST MODIFIED			

Amercoat 370 Chemical Resistance Guide

Environment	Splash and Spillage	Fumes and Weather
Acidic	F	G
Alkaline	E	E
Solvents	E	E
Salt solutions		
Acidic	G	VG
Neutral	E	E
Alkaline	E	E
Water	E	E

F-Fair G-Good E-Excellent VG-Very Good

This chart shows typical resistance of Amercoat 370. Contact your PPG representative for your specific requirements.

Systems Using Amercoat 370

1st Coat	2nd Coat	3rd Coat
Amercoat 370	–	–
Amercoat 370	Amershield™	–
Amercoat 370	450H	–
Dimetcote 9 Series, 21-5	370	Amershield, 450H
Amercoat 68HS	370	Amershield, 450H
Amercoat 370	370	ABC 3, ABC 4

Confirm compliance with VOC regulations before using coating systems. For immersion service, apply 2 coats at a minimum of 8 mils total DFT.

Over Dimetcote or Amercoat 68HS primer, a mist coat and thinning with Amercoat 101 may be required to prevent application bubbling.

Surface Preparation

Coating performance is, in general, proportional to the degree of surface preparation. Surface must be clean, dry, undamaged and free of all contaminants prior to coating.

Welds should be continuous with no overlapping steel surfaces or rough edges. Remove all weld spatter.

Steel, non-immersion – Remove all loose rust, dirt, grease or other contaminants by one of the following depending on the degree of cleanliness required: SSPC-SP2, 3, 6, 7 or 11. UHP waterjetting per SSPC SP-12 WJ2 is also acceptable.

Steel, immersion – For more severe service and immersion, clean to SSPC-SP10. The choice of surface preparation will depend on the system selected and end-use service conditions.

Blast to achieve a surface profile not to exceed 3 mils (75 microns) as indicated by a Keane-Tator Surface Profile Comparator Testex Tape. Increase coating thickness if profile greater than 3 mils.

Primed steel – Prepare surface in accordance with application instructions for the specific primer being used. Be sure primer is clean and dry when Amercoat 370 is applied. Remove all loose rust, dirt, moisture, grease or contaminants.

Repair – Prepare damaged areas to original surface preparation specifications, feathering edges of intact coating. Thoroughly remove dust or abrasive residue before touch up.

Application Equipment

The following is a guide; suitable equipment from other manufacturers may be used. Changes in pressure, hose and tip size may be needed for proper spray characteristics.

Airless spray – Standard equipment such as Graco Bulldog Hydra-Spray or larger with a 0.015- to 0.021-inch (0.38 mm to 0.53 mm) fluid tip.

Conventional spray – Industrial equipment, such as DeVilbiss, MBC or JGA gun with 78 or 765 air can and "E" fluid tip, or Binks No. 18 or 62 gun with a 66x63PB nozzle set up. Separate air and fluid pressure regulators, mechanical pot agitator, and a moisture and oil trap in the main air supply line are recommended.

Environmental Conditions

Temperature	°F	°C
air and surface	20 to 120	-7 to 49
material	40	4

Surface temperatures must be at least 5°F (3°C) above dew point to prevent condensation.

Application Procedure

Amercoat 370 is packaged in two components in the proper proportions which must be mixed together before use.

1. Flush equipment with thinner or Amercoat 12 before use.
2. Stir each component thoroughly, then combine and mix until uniform.
3. For general use, if thinning is necessary for workability, add Amercoat 65 below 60°F or Amercoat 101 at 60°F and above. Thin in quantities up to 1 pint per gallon of Amercoat 370. For potable water tanklining applications, see current NSF listing at www.nsf.org for approved thinner and thinning restrictions.
4. Do not mix more material than will be used within 4 hours at 70°F (21°C). Pot life is shortened by higher temperatures. Thinning may be necessary for workability periodically throughout pot life.

Pot Life and Dry Times

Temperature (°F/°C)	Pot-Life (Hours)	Touch Dry (Min.)	Through Dry (Hours)	Recoat (Hours)
20/-7	—	90	20	2½
32/0	—	60	9	2
40/4	7	45	7	2
50/10	6	30	4½	1½
60/16	5	22	2¾	1
70/21	4	15	1½	½
80/27	3	12	1¼	½
90/32	2	10	1	½

Topcoat or recoat time (days) (maximum)

	°F/°C			
	90/32	70/21	50/10	20/-7
Amercoat 450H, Amershield™	14	30	45	60
Amercoat 370				
non-immersion	6 months – Clean surface required *(clean and roughen if exceeded)*			
immersion	1 month – Clean surface			
ABC 3, ABC4	Apply while 370 is soft to thumb pressure*			

** Failure to apply antifoulings while coating is still soft to thumb pressure may result in poor adhesion and eventual delamination.*

Drying times are dependent on air and surface temperatures as well as film thickness, ventilation and relative humidity. Maximum recoating time is highly dependent upon actual surface temperatures - not simply ambient air temperatures. Surface temperatures should be monitored, especially with sun-exposed or otherwise heated surfaces. Higher surface tempertures shorten the maximum recoat window.

If maximum topcoat time is exceeded, either clean and roughen the Amercoat 370 surface or clean and apply a tack coat of Amercoat 370 before topcoating with Amercoat 450H, Amershield or antifouling.

Time before service @ 8 mils (hours)

	°F/°C				
Amercoat 370	90/32	70/21	50/10	32/0	20/-7
non-immersion**	6	12	24	96	120
immersion	12	24	48	168	NR

NR=Not recommended

Cure to full physical properties.

5. When applying by conventional spray, use adequate air pressure and volume to ensure proper atomization.
6. When applying over inorganic zinc or zinc rich primers, a "mist coat" 1-1½ mils wet./full coat technique may be required to minimize bubbling. This will depend on the age of the Dimetcote, surface roughness and conditions during curing. When applying Amercoat 370 over Dimetcote at 60°F and above, use Amercoat 101 thinner up to 1 pint per gallon. For potable water tanks, use only Amercoat 65 thinner.
7. Normal recommended dry film thickness is 5 mils (125 microns). Total dry film thickness must not exceed 15 mils (375 microns).

UL/FM

PRATT Henry Pratt Company	HENRY PRATT COMPANY	MATERIAL SPECIFICATIONS									
		3	4/9/08	SD	SS	6					
PPG AMERCOAT 370 (FACTORY ACCELERATED)		2	7/1/05	SD	SS	5	3/23/11 Dry Mil Thickness to 8	Tim Fallon	RCB		
		1	10/29/03	SJR	SS	4	3/11/10 Per ECO 1502150	RCB	JHW		
DRAWN	SD	CHKD BY	SS	REV	DATE	BY	APP	REV	DATE	BY	APP
SCALE		DATE	4/9/08	APPROVED				LAST MODIFIED			

8. The application of a wet film thickness of 7 to 8 mils (175 to 200 microns) will normally provide 5 mils (125 microns) of dry film.
9. Clean all equipment with thinner or Amercoat 12 immediately after use.

Safety Precautions

Read each component's material safety data sheet before use. Mixed material has hazards of each component. Safety precautions must be strictly followed during storage, handling and use.

CAUTION – Improper use and handling of this product can be hazardous to health and cause fire or explosion.

Do not use this product without first taking all appropriate safety measures to prevent property damage and injuries. These measures may include, without limitation: implementation of proper ventilation, use of proper lamps, wearing of proper protective clothing and masks, tenting and proper separation of application areas. Consult your supervisor. Proper ventilation and protective measures must be provided during application and drying to keep spray mists and vapor concentrations within safe limits and to protect against toxic hazards. Necessary safety equipment must be used and ventilation requirements carefully observed, especially in confined or enclosed spaces, such as tank interiors and buildings.

This product is to be used by those knowledgeable about proper application methods. PPG makes no recommendation about the types of safety measures that may need to be adopted because these depend on application environment and space, of which PPG is unaware and over which it has no control.

If you do not fully understand these warnings and instructions or if you cannot strictly comply with them, do not use the product.

Note: Consult Code of Federal Regulations Title 29, Labor, parts 1910 and 1915 concerning occupational safety and health standards and regulations, as well as any other applicable federal, state and local regulations on safe practices in coating operations.

This product is for professional use only. Not for residential use.

Shipping Data

Packaging units	1 gal	5 gal
cure	0.2 gal in 1-qt can	1 gal in 1-gal can
resin	0.8 gal in 1-gal can	4 gal in 5-gal can

Shipping weight (approx)	lb	kg
1-gal unit		
cure	1.9	0.9
resin	14.2	6.5
5-gal can		
cure	8.6	3.9
resin	70.4	32

Shelf life when stored indoors at 40 to 100°F (4 to 38°C)
cure and resin — 1 year from shipment date

Numerical values are subject to normal manufacturing tolerances, colors and testing variances. Allow for application losses and surface irregularities.

This product is photochemically reactive as defined by the South Coast Air Quality Management District's Rule 102 or equivalent regulations.

UL/FM

PRATT Henry Pratt Company	HENRY PRATT COMPANY	MATERIAL SPECIFICATIONS							
		3	4/9/08	SD	SS	6			
PPG AMERCOAT 370 (FACTORY ACCELERATED)		2	7/1/05	SD	SS	5	3/23/11 Dry Mil Thickness to 8	Tim Fallon	RCB
		1	10/29/03	SJR	SS	4	3/11/10 Per ECO 1502150	RCB	JHW

DRAWN	SD	CHKD BY	SS	REV	DATE	BY	APP	REV	DATE	BY	APP
SCALE		DATE	4/9/08	APPROVED				LAST MODIFIED			

UL/FM

PPG Protective & Marine Coatings
www.ppgpmc.com

One PPG Place, Pittsburgh, PA 15272 • Tel: (800) 441-9695

©2007 PPG Industries • Printed in U.S.A. • R 11/07 supersedes 11/06

PRATT Henry Pratt Company	HENRY PRATT COMPANY	MATERIAL SPECIFICATIONS									
		3	4/9/08	SD	SS	6					
PPG AMERCOAT 370 (FACTORY ACCELERATED)		2	7/1/05	SD	SS	5	3/23/11 Dry Mil Thickness to 8	Tim Fallon	RCB		
		1	10/29/03	SJR	SS	4	3/11/10 Per ECO 1502150	RCB	JHW		

DRAWN	SD	CHKD BY	SS	REV	DATE	BY	APP	REV	DATE	BY	APP
SCALE		DATE	4/9/08	APPROVED				LAST MODIFIED			

PRATT

Henry Pratt Company

AWWA Butterfly Valves
3" – 20"

Engineering Creative Solutions
for Fluid Systems Since 1901

A Tradition of Excellence

With the development of the first rubber seated butterfly valve more than 70 years ago, the Henry Pratt Company became a trusted name in the flow control industry, setting the standard for product quality and customer service. Today Pratt provides the following range of superior products to the water, wastewater and power generation industries.

Butterfly Valves: from 3" to 162"

Rectangular Valves: 1' x 1' to 14' x 16'

Ball Valves –
Rubber Seated: from 4" to 60"
Metal Seated: from 6" to 48"

Plug Valves: from 1/2" to 72", 100% port available up to 48", 3 ways

Air Valves for Water and Wastewater: from 1/2" to 20"

Hydraulic Control Systems

Valve Controls

Energy Dissipating Valves and Fixed Energy Dissipaters

Cone Valves

Check Valves

Plunger Valves

A Commitment to Meeting The Customers' Needs

Henry Pratt valves represent a long-term commitment to both the customer and to a tradition of product excellence. This commitment is evident in the number of innovations we have brought to the industries we serve. In fact, the Henry Pratt Company was the first to introduce many of the flow control products in use today, including the first rubber seated butterfly valve, one of the first nuclear N-Stamp valves, and the bonded seat butterfly valve.

Innovative Products For Unique Applications

Though many of the standard valves we produce are used in water filtration and distribution applications, Pratt has built a reputation on the ability to develop specialized products that help customers to meet their individual operational challenges.

Creative Engineering for Fluid Systems

Pratt's ability to provide practical solutions to complex issues is demonstrated by the following case histories.

Earthquake Proof Valves

Pratt designed and manufactured hydraulically actuated valves for a water storage application so that the valves would automatically operate in the event of earthquakes. This led to the development of a valve that will withstand acceleration forces of up to 6gs.

Custom Actuation/Isolation Valves

Pratt has designed and manufactured nuclear quality quarter-turn valves and parts since the first nuclear-powered generating plants were built. Our custom valves are able to close in a millisecond, using specially designed Pratt electro-pneumatic actuators.

Valves Designed for Harsh Environments

Pratt designed and manufactured a 144" diameter butterfly valve for the emergency cooling system at a jet engine test facility. The valve was designed to supply water to help dissipate the tremendous heat generated by the engines during testing.

PRATT
Henry Pratt Company

Through experience, commitment and creative engineering, Pratt is uniquely suited to provide superior products for our customers' special needs.
For more information, contact our corporate headquarters in Aurora, Illinois.

PRATT
Henry Pratt Company

401 South Highland Avenue
Aurora, Illinois 60506-5563
www.henrypratt.com
phone: 630.844.4000
fax: 630.844.4160

Table of Contents

AWWA Butterfly Valve 3 through 20 inches:

Scope of Line – 3 through 20 inches

2FII Butterfly Valve 2

Monoflange MKII Butterfly Valve 2

Design Details 3

Features and Benefits 4

C_V Values 4

Suggested Specifications 5

Dimensions –

2FII (Flanged) 6

Monoflange MKII (Wafer) 6

2MII (Mechanical Joint) 7

2MFII (Mechanical Joint and Flanged) 7

2PII & 2FPII (Push-On and Push-On X Flanged) 8

2VII (Victaulic) 9

Actuator Dimensional Data 9

Scope of Line:
AWWA In-Plant Rubber Seated Butterfly Valves

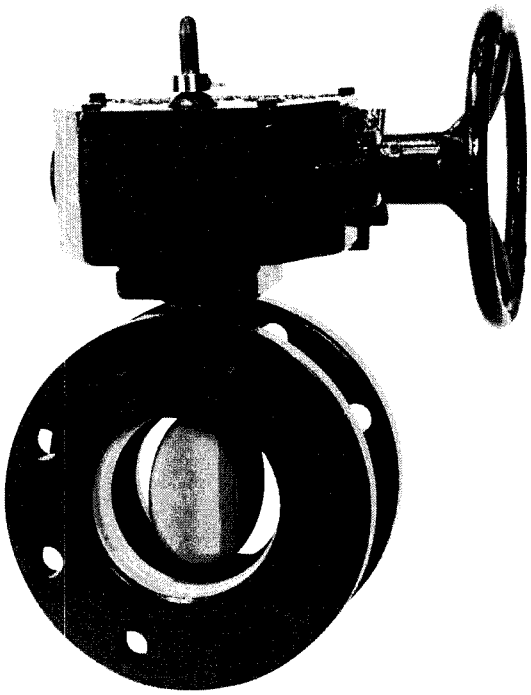

Model 2FII Butterfly Valve

Model 2FII Flanged Butterfly Valve

Sizes: 3 through 20 inches

Body Style: Flanged x flanged ends

Other Body Style Options:
- Mechanical joint
- Victaulic
- Flanged & mechanical joint
- Push-on
- Push-on & flanged

Pressure Class:
- Class 150B per AWWA Standard C504

Working Pressure: 150 psig

Flanges:
- Flat faced and drilled in accordance with ANSI B16.1, Class 125 standards.

Rubber Seat: Bonded seat-in-body

Actuation Options:
- Pratt hand lever
- MDT manual actuator with AWWA nut, handwheel or chainwheel
- Pratt Dura-Cyl hydraulic or pneumatic cylinder
- Pratt Positron electric actuator

Monoflange MKII Wafer Butterfly Valve

Sizes: 3 through 20 inches

Body Style: Wafer-type

Pressure Class:
- Class 150B per AWWA Standard C504

Working Pressure: 150 psig

Rubber Seat:
- Bonded seat-in-body extends over inner surface to form self-gasketing feature

Actuation Options:
- Pratt hand lever
- MDT manual actuator with AWWA nut, handwheel or chainwheel
- Pratt Dura-Cyl hydraulic or pneumatic cylinder
- Pratt Positron electric actuator

Monoflange MKII Butterfly Valve

Design Details: Models 2FII and MKII

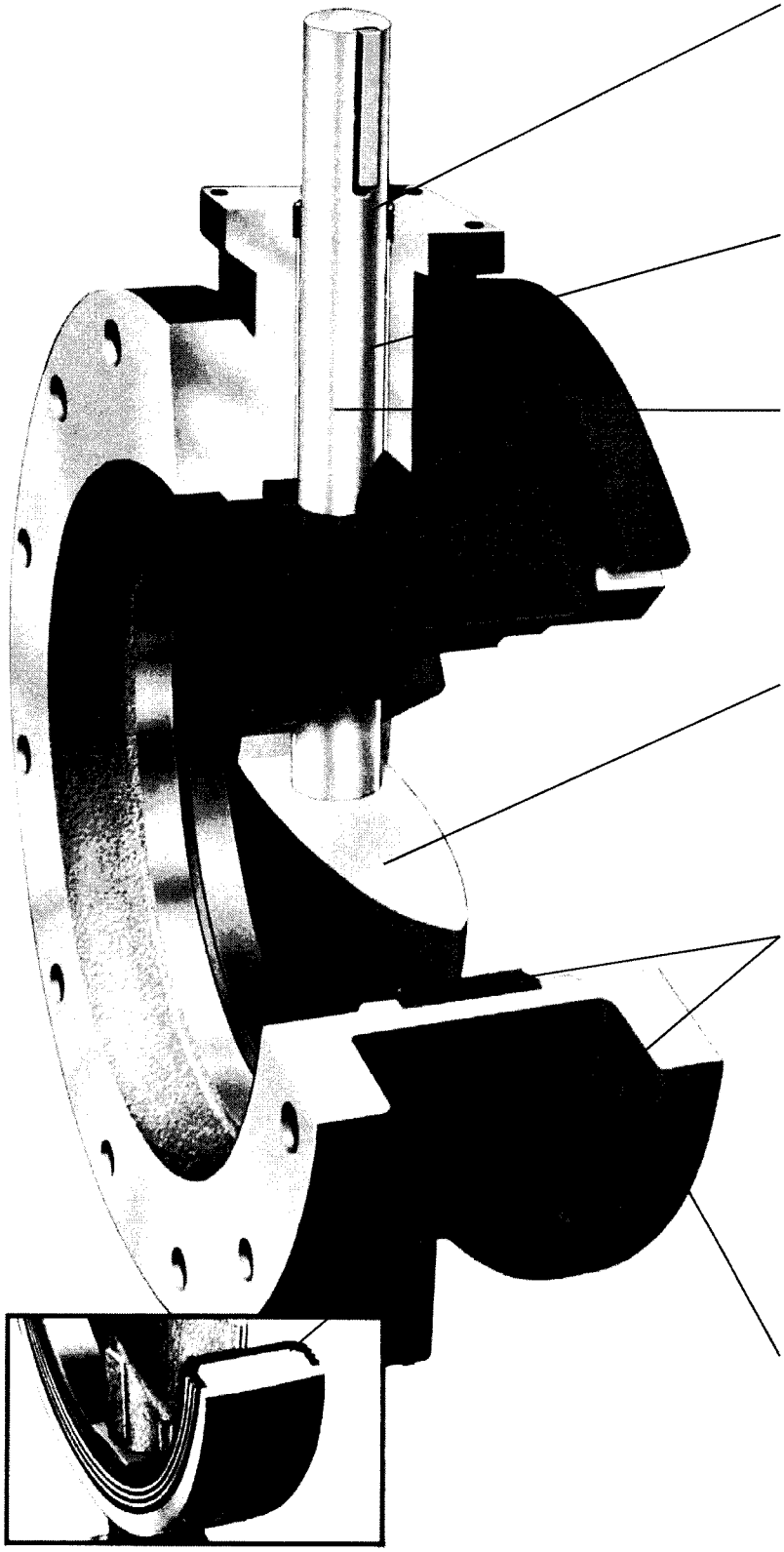

Self Adjusting Permanent Packing

Chevron type packing increases sealing force as line pressure increases. The self adjusting packing bears on turned, ground and polished stainless steel, minimizing wear and assuring long life. Packing is accessible for replacement without dismantling the valve per AWWA Standard C504.

Lifetime Bearings

Pratt's chemically inert nylon bearings are sized to meet or exceed AWWA specification pressure loads. They are self-lubricating, require no periodic maintenance and are designed to outlast the life of the pipeline.

Corrosion Resistant Shafts

The shafts in Pratt's rubber seated butterfly valves, 3" through 20", are constructed of centerless, ground ASTM A276 type 304 or type 316 stainless steel bar and thus are not susceptible to corrosion as are carbon steel or other similar materials. Shafts are one-piece, through-shaft construction, sized to meet or exceed the requirements of AWWA Standard C504 for Class 150B butterfly valves.

Streamlined Discs

Pratt's lens-shaped discs are designed to minimize pressure drop and turbulence. In the full open position, the disc creates no more friction loss than a 45° elbow. Discs are secured to shafts by stainless steel pins to transmit required torques and withstand stresses imposed under a variety of operating conditions.

Body Seat

Our standard seats are constructed of Buna N rubber and bonded to the valve body in Pratt's manufacturing facility using a unique thermal process. This molding process ensures that the disc-to-seat interference will not cause excessive wear or abrasion under normal operating conditions. On the wafer type MKII bodies, the rubber seat covers the entire inner surface plus the outside face of the valve body to provide a self-gasketing feature. Pratt's seat-in-body design minimizes the effects of corrosive buildup on the inside of the valve because deposits are swept away by the hard sealing edge of the disc each time the valve is exercised.

Heavy Duty Bodies

Both Monoflange MKII and Model 2FII bodies are heavy duty cast iron. Model 2FII flanges are fully faced and drilled in accordance with ANSI B16.1, Class 125 standard for cast iron flanges. Monoflange MKII bodies incorporate an overlapping seat which also forms a gasket for the flange face. The actuator mounting trunnion is machined and drilled for a 4-bolt connection.

Features and Benefits: of Pratt Models 2FII and MKII

Feature	Benefit
Seat-in-body design **Seat molded in recessed body cavity, protected by metal on 3 sides**	▪ Reduces seat failure due to corrosive buildup in the valve and pipeline. No hardware to loosen. No periodic maintenance required. Rubber protected from flow media to increase seat life.
Valve withstood proof-of-design testing of 100,000 cycles – AWWA only requires **10,000 cycle proof-of-design testing**	▪ Proven reliability over the life of the valve
Through-disc pinning	▪ Provides a tight disc-to-shaft pin connection, greatly reducing the possibility of loosening through vibration
Symmetrical lens-shaped disc	▪ Higher C_V : lower head loss results in energy savings for customer's system
Nonmetallic bearings	▪ Prevents galvanic corrosion and provides lower coefficient of friction
Chevron V-type packing	▪ Self-adjusting, lasts the life of the valve

Valve Size	C_V	Valve Size	C_V	Valve Size	C_V
3"	323	10"	4458	16"	11413
4"	575	12"	6420	18"	14444
6"	1294	14"	8738	20"	17832
8"	2300	C_V values for the 2FII and MKII in the full open position			

Valve Model	Body	Seat	Disc	Shaft
2FII	ASTM A126, Class B Cast Iron*	Buna-N**	Cast Iron/316 Edge	Stainless Steel, Type 304
MKII 3"-6"	ASTM A536, (65-45-12) Ductile Iron	Buna-N**	CF8M	Stainless Steel, Type 304
MKII 8" +	ASTM A536, (65-45-12) Ductile Iron	Buna-N**	Cast Iron/316 Edge	Stainless Steel, Type 304

* Model 2FII valves also available with optional ASTM A536 (65-45-12) ductile iron body for all sizes and ductile iron disc on sizes 8"-20"
**Also available with optional EPDM seat

Suggested Specification for the Pratt Rubber Seated Butterfly Valve, Sizes 3 through 20 inches

General

Butterfly valves shall be manufactured in accordance with the latest revision of AWWA C504, Class 150B and conform to NSF Standard 61. The manufacturer shall have produced AWWA butterfly valves for a minimum of five years. All valves shall be either Henry Pratt Model 2FII or Monoflange MKII and comply with the following details.

Valve Bodies

Valve bodies shall be constructed of ASTM A126, Class B cast iron for flanged valves or ASTM A536 (65-45-12) for wafer style. Flanged valves shall be fully faced and drilled in accordance with ANSI Standard B16.1, Class 125.

Valve Seats

Rubber body seats shall be of one piece construction, simultaneously molded and bonded into a recessed cavity in the valve body. Seats may not be located on the disc or be retained by segments and/or screws. For wafer style valves, the seat shall cover the entire inner surface of the valve body and extend over the outside face of the valve body to form a flange gasket.

Valve Bearings

Valve bearings shall be of a self-lubricating, nonmetallic material to effectively isolate the disc-shaft assembly from the valve body. Metal-to-metal thrust bearings in the flow stream are not allowed.

Valve Disc

The disc shall be a lens-shaped design to afford minimal pressure drop and line turbulence. Materials of construction shall be:

- 3"-6" – ASTM A351 Gr. CF8M stainless steel disc
- 8"-20" – ASTM A126, Class B cast iron disc with a stainless steel type 316 edge

Discs shall be retained by stainless steel pins which should extend through the full diameter of the shaft to withstand the specified line pressure up to valve rating and the torque required to operate the valve. Disc stops located in the flow stream are not allowed.

Valve Shafts

Valve shafts shall be of stainless steel type 304. At the operator end of the valve shaft, a packing gland utilizing "V" type chevron packing shall be utilized. "O" ring and/or "U" cup packing is not allowed.

Painting

All surfaces of the valve interior shall be clean, dry and free from grease before painting. The valve interior and exterior, except for disc edge, rubber seat and finished portions shall be evenly coated with an NSF61 approved 2-part liquid epoxy. Minimum dry film thickness shall be 8 Mils.

Testing

Hydrostatic and seat leakage tests shall be conducted in strict accordance with AWWA Standard C504.

Proof of Design

The manufacturer furnishing valves under the specification shall be prepared to provide Proof of Design Test reports to illustrate that the valves supplied meet the design requirements of AWWA C504.

Manual Actuators: Manual actuators shall be of the traveling nut, self-locking type and shall be designed to hold the valve in any intermediate position between fully open and fully closed without creeping or fluttering. Actuators shall be equipped with mechanical stop-limiting devices to prevent overtravel of the disc in the open and closed positions. Actuators shall be fully enclosed and designed to produce the specified torque with a maximum pull of 80 lb. on the handwheel or chainwheel. Actuator components shall withstand an input torque of 450 Lb. Ft. at extreme operator position without damage. Manual actuators shall conform to AWWA C504 and shall be Pratt MDT or an approved equal.

Powered Actuators: Refer to Pratt's Butterfly Valve Actuator brochure for suggested specifications and detailed information regarding cylinder actuators and electric actuators.

Dimensional Data: Model 2FII, Flanged Butterfly Valve

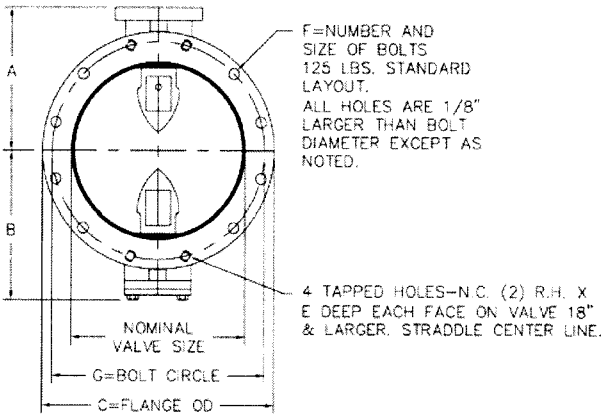

Nominal Valve Size	A	B	C	D	E	F	G
3	4 3/4	31/4	7 1/2	5	3/4	4 – 5/8	6
4	5 1/2	3 1/2	9	5	15/16	8 – 5/8	7 1/2
6	6 1/2	51/8	11	5	1	8 – 3/4	9 1/2
8	7 3/4	6 1/2	13 1/2	6	1 1/8	8 – 3/4	11 3/4
10	9	9 7/8	16	8	1 3/16	12 – 7/8	14 1/4
12	10 1/2	11 3/8	19	8	1 1/4	12 – 7/8	17
14	11 7/8	12 3/4	21	8	1 3/8	12 – 1	18 3/4
16	13 1/2	14 3/8	23 1/2	8	1 7/16	16 – 1	21 1/4
18	14 3/8	15 1/4	25	8	1 9/16	16 – 1 1/8	22 3/4
20	16	16 7/8	27 1/2	8	11 1/16	20 – 1 1/8	25

All dimensions shown in inches.

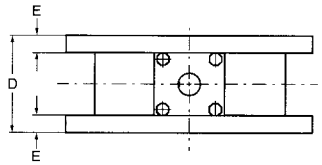

– Available in sizes 3 through 20 inches

Dimensional Data: Monoflange MKII Wafer Butterfly Valve

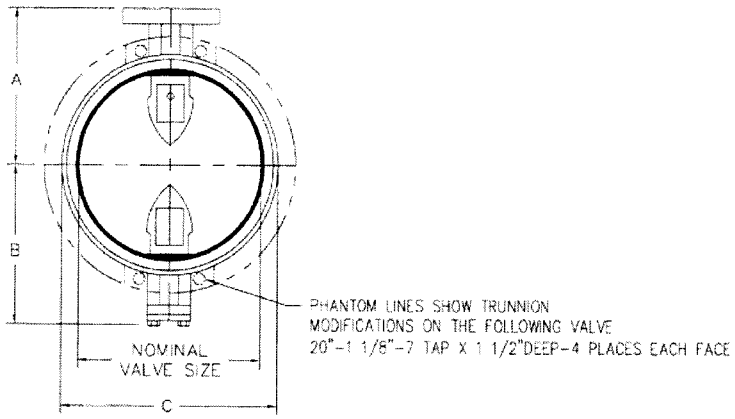

Nominal Valve Size	A	B	C	D
3	4 3/4	3 1/4	5 1/4	2 1/16
4	5 1/2	3 1/2	6 3/4	2 5/16
6	6 1/2	5 1/8	8 5/8	2 15/16
8	7 3/4	6 1/2	10 7/8	3 1/16
10	9	9 7/8	13 1/4	3 3/16
12	10 1/2	11 5/16	16	3 7/16
14	11 7/8	12 3/4	17 5/8	3 11/16
16	13 1/2	14 3/8	20 1/8	4 3/16
18	14 3/8	15 1/4	21 1/2	4 11/16
20	16	16 13/16	23 3/4	5 3/16

All dimensions shown in inches.

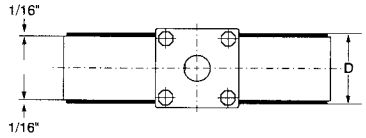

VALVE SIZE (in.)	DISC O.D. (in.)	MINIMUM MATING PIPE I.D. (in.)*
3	3.089	2.41
4	4.074	3.44
6	6.070	5.38
8	8.078	7.53
10	10.098	9.62
12	12.108	11.64
14	13.339	12.86
16	15.336	14.79
18	17.370	16.75
20	19.380	18.71

Dimensional Data: Model 2MII Mechanical Joint End Butterfly Valve

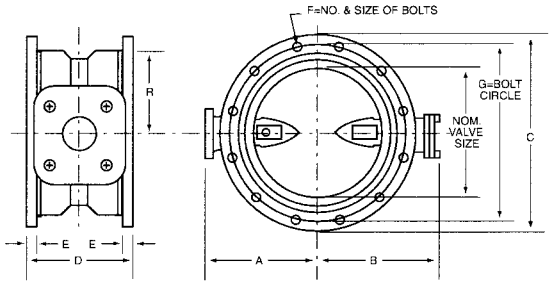

Nominal Valve Size	A	B	C	D	E	F	G	X
4	5½	3½	9	8⅛	1	4 – ¾	7½	3⅛
6	6½	5⅛	11	8½	1 1/16	6 – ¾	9½	3½
8	7¾	6½	13¼	8⅝	1⅛	6 – ¾	11¾	3⅝
10	9	9¾	15 9/16	9¼	1 3/16	8 – ¾	14	4¼
12	10½	11⅜	17 15/16	9¼	1¼	8 – ¾	16¼	4¼
14	11⅞	12¾	20 5/16	11½	1 5/16	10 – ¾	18¾	4½
16	13½	14 5/16	22 9/16	12	1⅜	12 – ¾	21	5
18	14⅜	15⅜	24 11/16	12¼	1⅜	12 – ¾	23¼	5¼
20	16	17	27 3/32	12½	1½	14 – ¾	25½	5½

All dimensions shown in inches.
Mechanical joint end is in compliance with ANSI 21.11.

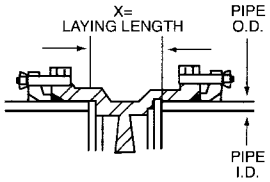

Installation Diagram
Note: The following items to be furnished by others unless otherwise specified in contract: **Bolts, Glands, Nuts, Gaskets**

See Note 1.

PIPE SIZE	PIPE O.D.	PIPE I.D. MIN.
4	4.80	3.10
6	6.90	5.69
8	9.05	7.65
10	11.10	9.93
12	13.20	11.70
14	15.30	12.91
16	17.40	14.91
18	19.50	16.95
20	21.60	18.96

– Available in sizes 4 through 20 inches

Dimensional Data: Model 2MFII Mechanical Joint and Flange End Butterfly Valve

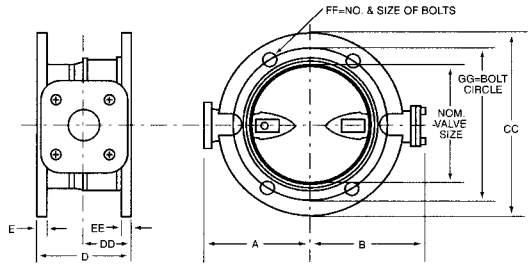

Nominal Valve Size	A	B	C	CC	D	DD	E	EE	F	FF	G	GG	X
6	6½	5⅛	11	11	6¾	4¼	1 1/16	1 1/16	8 – ¾	6 – ¾	9½	9½	4¼
8	7¾	6½	13½	13¼	7 5/16	4 5/16	1⅛	1⅛	8 – ¾	6 – ¾	11¾	11¾	4 13/16
10	9	9⅞	16	15 9/16	8⅝	4⅝	1¼	1 3/16	12 – ⅞	8 – ¾	14¼	14	6⅛
12	10½	11⅜	19	17 15/16	8⅝	4⅝	1¼	1¼	12 – ⅞	8 – ¾	17	16¼	6⅛
14	11⅞	12¾	21	20 5/16	9¾	5¾	1⅜	1 5/16	12 – 1	10 – ¾	18¾	18¾	6¼
16	13½	14⅜	23½	22 9/16	10	6	1 7/16	1⅜	16 – 1	12 – ¾	21¼	21	6½
18	14⅜	15¼	25	24 11/16	10⅛	6⅛	1 9/16	1 7/16	16 – 1⅛	12 – ¾	22¾	23¼	6⅝
20	16	16⅞	27½	27 3/32	10¼	6¼	1 11/16	1½	20 – 1⅛	14 – ¾	25	25½	6¾

All dimensions shown in inches.

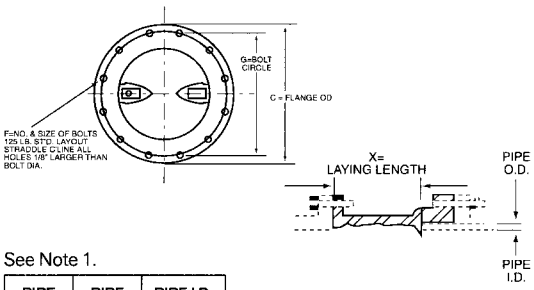

See Note 1.

PIPE SIZE	PIPE O.D.	PIPE I.D. MIN.
4	4.80	3.10
6	6.90	5.69
8	9.05	7.65
10	11.10	9.93
12	13.20	11.70
14	15.30	12.91
16	17.40	14.91
18	19.50	16.95
20	21.60	18.96

Installation Diagram
Note: **Bolts, Nuts, Glands and Gaskets** furnished by others unless otherwise specified in contract.

– Available in sizes 6 through 20 inches.

Note 1: Min. Pipe I.D. value has zero clearance between mating pipe and valve disc. Properly sized piping must include appropriate clearance.

Dimensional Data: Model 2PII Push-On Joint End Butterfly Valve

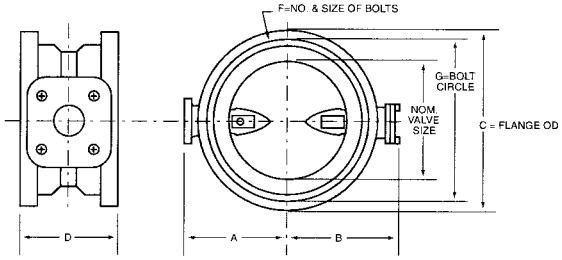

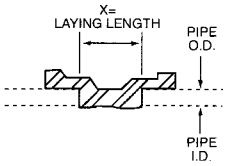

Installation Diagram
Note: **Rubber ring gaskets** furnished by others unless otherwise specified in contract.

See Note 1.

Pipe Size	Pipe O.D.	Min. Pipe I.D.
4	4.80	2.61
6	6.90	4.96
8	9.05	7.22
10	11.10	9.22
12	13.20	10.97
14	15.30	12.56
16	17.40	14.59

Nominal Valve Size	A	B	C	D	X
4	5½	3½	6⅞	10⅜	3⅛
6	6½	5⅛	9	10¾	3½
8	7¾	6½	11¼	12	3⅝
10	9	9⅞	14	12⅝	4⅛
12	10½	11⅜	16⅜	15	5⅛
14	11⅞	12¾	18⅞	14¾	4½
16	13½	14⅜	21¼	15	4¾

- All dimensions shown in inches.
- Available in sizes 4 through 16 inches.
- D ± 1/16" through 10" valves, ± ⅛" for 12" and larger valves.
- The valve end is designed for iron or PVC pipe with cast iron equivalent O.D.s (not for use with IPS O.D. pipe.)
- Use with "Tyton" (Reg. T.M. or U.S. Pipe & Foundry Co.) rubber ring gasket.

Dimensional Data: Model 2FPII Push-On X Flange End Butterfly Valve

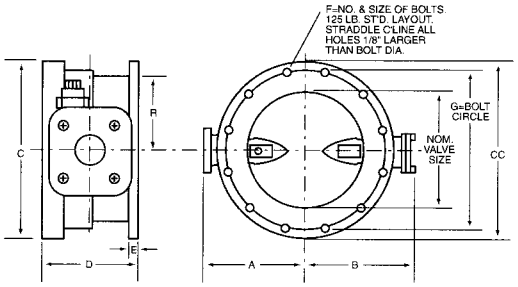

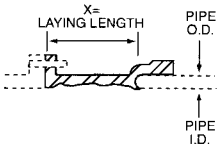

Installation Diagram
Note: **Bolts, Nuts, and Rubber Gaskets** furnished by others unless otherwise specified in contract.

See Note 1.

Pipe Size	Pipe O.D.	Min. Pipe I.D.
4	4.80	2.61
6	6.90	4.96
8	9.05	7.22
10	11.10	9.22
12	13.20	10.97
14	15.30	12.56
16	17.40	14.59

Note 1: Min. Pipe I.D. value has zero clearance between mating pipe and valve disc. Properly sized piping must include appropriate clearance.

Nominal Valve Size	A	B	C	CC	D	E	F	G
4	5½	3½	6⅞	9	7 11/16	1 5/16	8 – ⅝	7½
6	6½	5⅛	9	11	7⅞	1	8 – ¾	9½
8	7¾	6½	11¼	13½	8 15/16	1⅛	8 – ¾	11¾
10	9	9⅞	14	16	10 5/16	1 3/16	12 – ⅞	14½
12	10½	11⅜	16⅜	19	11½	1¼	12 – ⅞	17
14	11⅞	12 11/16	18⅞	21	11⅜	1⅜	12 – 1	18¾
16	13½	14 5/16	21¼	23½	11½	1 7/16	16 – 1	21¼

- All dimensions shown in inches.
- Available in sizes 4 through 12 inches.
- D ± 1/16" through 10" valves, ± ⅛" for 12" and larger valves.
- The valve end is designed for iron or PVC pipe with cast iron equivalent O.D.s (not for use with IPS O.D. pipe.)
- Use with "Tyton" (Reg. T.M. or U.S. Pipe & Foundry Co.) rubber ring gasket.

Dimensional Data: Model 2VII Victaulic End Butterfly Valve

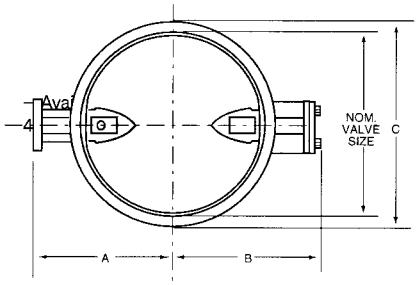

– Available in sizes 4 through 20 inches.

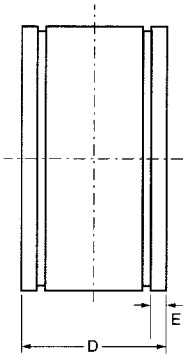

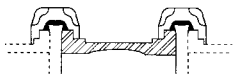

INSTALLATION DETAIL
NOTE: VICTAULIC COUPLINGS, GLANDS, AND GASKETS FURNISHED BY OTHERS

Nominal Valve Size	A	B	C	D	E
4	5½	3½	5 5/16	8⅛	¾
6	6½	5⅛	7½	8½	¾
8	7¾	6½	9¾	8⅝	⅞
10	9	9⅞	12	8	15/16
12	10½	11 5/16	14¼	8	15/16
14	11⅞	12 11/16	16 7/16	8	15/16
16	13½	14 5/16	18½	8	1 3/16
18	14⅜	15 3/16	20 15/16	8	1¼
20	16	16 13/16	22⅞	8	1 3/16

All dimensions shown in inches.

"D" dimension ± 1/16" for 4" thru 10" valves.
"D" dimension ± ⅛" for 12" thru 20" valves.

Victaulic groove profile style 44

Actuator Dimensional Data for Models 2FII and MKII Pratt MDT Manual Actuator

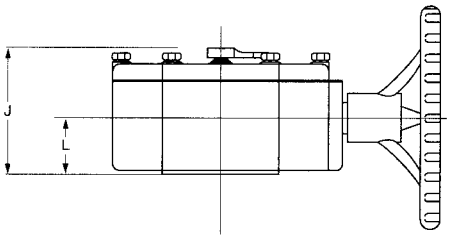

All dimensions shown in inches

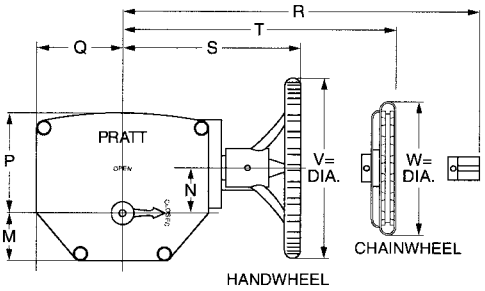

Valve Size	MDT Size	J	L	M	N	P	Q	R	S	T	V	W	# Turns to Close
3 to 12"	MDT-2	4 11/16	2	2⅛	2	4½	4¼	7⅝	7⅞	7⅞	8	9⅛	32
14, 16"	MDT-3	5⅝	2 7/16	3¼	3 5/32	5⅝	5⅜	9¼	10½	10	12	9⅛	30
18, 20"	MDT-4	6⅜	22 7/32	3⅜	4	7 5/16	6¾	10½	11½	11	12	9⅛	40

For further information regarding manual actuators, refer to Pratt's Butterfly Valve Actuator brochure.

PRATT PRODUCT GUIDE

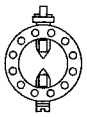

Model 2FII

Monoflange MKII

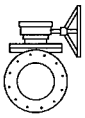

Plug Valve

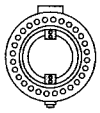

Triton® XR70

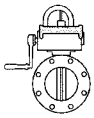

Indicating Butterfly Valve UL & FM approved

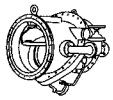

Tilting Disc Check Valve

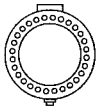

Triton® XL

N-Stamp Nuclear Butterfly Valve

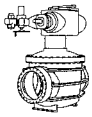

Cone Valve

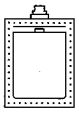

Rectangular

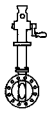

PIVA Post Indicating Valve Assembly UL & FM approved

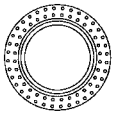

Sleeve Valve

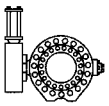

Rubber Seated Ball Valve

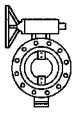

Triton® HP250

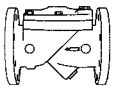

Check Valve

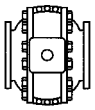

Metal Seated Ball Valve

Control Systems

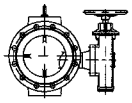

Plunger Valve

PRATT

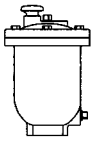

Air Valve

Henry Pratt Company
401 South Highland Avenue
Aurora, Illinois 60506-5563 - US
P: 630-844-4000 F: 630-844-4160
www.henrypratt.com
ISO 9001: 2000 Certified

©2012 Henry Pratt Company | Printed in the U.S.A. | BFV320-0214

VALLEY FARMS
ARSENIC REMOVAL FACILITY
SORB 33® ADSORBER SYSTEM

(1) ONE 8'0" DIA. ADSORBER

SEVERN TRENT SERVICES
PROJECT # 22643

SECTION 5 **MECHANICAL EQUIPMENT**

B. MANUAL BALL VALVES

E

F M TE		MM				E T			
Project	ARSENIC REMOVAL SYSTEM	Tetra Cont. No.	22643	Rev.	0	By		Date	
Customer	AZ WATER	Cost Code		Date	12/17/2014	Ckd.		Date	
Location	VALLEY FARMS					Sheet	1	of	1

Qty	Mark	Materials Description		Drawing No.	Code Letter
		M T TE E F T E W TE F TE			
		DESIGN PRESSURE 100 PSIG 125 ° F			
		Threaded, 2-Piece, Standard Port, Stainless Steel Ball Valve			
		Blow-out-proof stem design, Reinforced TFE Seals and TFE Seals			
		E T E	r		
		MF	W r		
			r r		
2	V-402	2" DIAMETER	AIR IN / VENT & DRAIN		
1	V-402	1" DIAMETER	AIR RELEASE SHUT OFF		
1	V-402	3/4" DIAMETER	VESSEL MEDIA SAMPLE		
7	V-402	1/2" DIAMETER	INSTRUMENT / SAMPLE		
2	V-402	1/4" DIAMETER	SAMPLE SCREEN		
		TAG EACH ITEM WITH "MARK NO." USING CORROSION RESISTANT			
		TAG ATTACHED WITH SS WIRE.			

E E T E TW TE F T F T T T P.O. No.

76F-100-A SERIES

Stainless Steel Full Port Ball Valve

Female NPT Thread, 1/4"-3" 1000 CWP (psig), Cold Non-Shock. (See referenced P/T chart)
150 psig Saturated Steam.
Vacuum Service to 29 inches Hg.
MSS SP-110 compliant.

FEATURES

- Investment cast components
- Reinforced seats
- Blow-out-proof stem design
- Adjustable packing gland
- Stainless Steel lever and nut
- Fire tested API 607, 6th edition (Requires "24" suffix)
- Meets NACE MR0175 (2000) & MR0103 (2012)
- CSA/CAN 3.16-M88 (2009) (Requires "01" suffix)
- NSF/ANSI 61 (2010) Section 8, Annex F & G
- NSF-372, Drinking Water System Components - Lead Content

OPTIONS AVAILABLE: (More information in Section J)

(SUFFIX)	OPTION	SIZES
-01	Standard Configuration	All
-P -01-	BSPP (Parallel) Thread Connection	1/2" to 2"
-T -01-	BSPT (Tapered) Thread Connection	1/2" to 3"
-02-	Stem Grounded	1/2" to 3"
-04-	2.25" Stem Extension	1/2" to 2"
-08-	90° Reversed Stem	1/2" to 2"
-11-	Therma-Seal™ Insulating Tee Handle	1/4" to 2"
-14-	Side Vented Ball (Uni-Directional)	3/8" to 3"
-24-	Graphite Packing	1/2" to 3"
-27-	SS Latch-Lock Lever & Nut	1/4" to 3"
-30-	Cam-Lock and Grounded	1/2" to 2"
-32-	SS Tee Handle & Nut	1/2" to 2"
-39-	SS Hi-Rise Locking Wheel Handle, SS Nut	1/2" to 2"
-40-	Cyl-Loc and Grounded	1/2" to 2"
-44-	Seal Welded	1/4" to 3"
-45-	Less Lever & Nut	1/2" to 3"
-46-	Latch Lock Lever - Lock in Closed Position Only	1/2" to 2"
-47-	SS Latch Lock Oval Handle	1/2" to 2"
-48-	SS Oval Handle (No Latch) & Nut	1/4" to 2"
-49-	No Lubrication. Assembled Dry.	1/2" to 3"
-56-	Multifill Seats & Packing	1/2" to 3"
-60-	Static Grounded Ball & Stem	1/2" to 3"

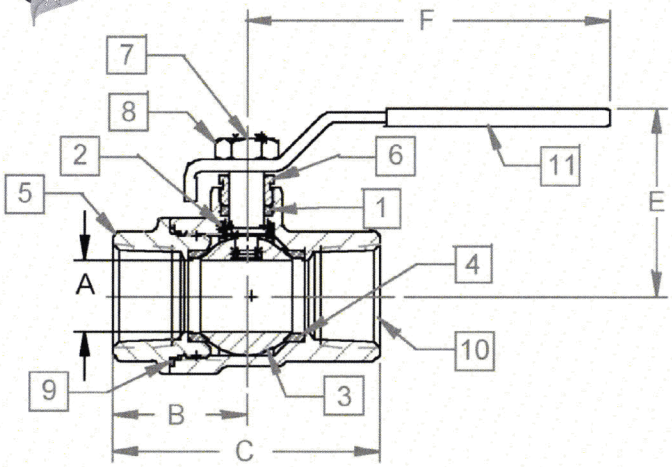

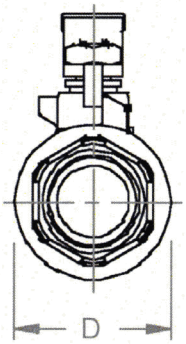

STANDARD MATERIAL LIST

	PART	MATERIAL
1	Stem packing	MPTFE
2	Stem bearing	RPTFE
3	Ball	A276-316 Stainless Steel
4	Seat (2)	RPTFE
5	Retainer	A351-CF8M Stainless Steel
6	Gland	A276-316 Stainless Steel
7	Stem	A276-316 Stainless Steel
8	Lever nut	304 Stainless Steel
9	Body Seal	RPTFE (1/2" to 2")
10	Body	A351-CF8M
11	Lever and grip	SS w/vinyl

PRODUCT NUMBER	SIZE	A	B	C	D	E	F	WT.
76F-101-01	1/4"	0.37	0.95	1.91	1.12	1.60	3.85	0.47
76F-102-01	3/8"	0.37	0.95	1.91	1.12	1.60	3.85	0.44
76F-103-01A	1/2"	0.50	1.21	2.35	1.27	1.73	3.85	0.57
76F-104-01A	3/4"	0.81	1.39	2.77	1.62	1.96	3.85	0.91
76F-105-01A	1"	1.00	1.67	3.34	2.00	2.27	4.75	1.38
76F-106-01A	1.25"	1.25	1.96	3.92	2.73	3.21	7.77	4.17
76F-107-01A	1.5"	1.50	2.05	4.10	2.92	3.31	7.77	4.69
76F-108-01A	2"	2.00	2.37	4.74	3.75	3.69	7.77	6.90
76F-100-01A	3"	3.00	3.70	7.40	5.68	5.23	10.00	22.40

** LEAD FREE: The wetted surfaces of this product shall contain no more than 0.25% lead by weighted average. Complies with CA AB1953, VT Act 193, MD HB372, LA HB471 and Federal Public Law 111-380. ANSI 3rd party approved and listed.*

FOR PRESSURE/TEMPERATURE RATINGS, REFER TO PAGE M-12, GRAPH NO. 8

FLOW DATA

For Apollo® Ball Valves

The listed Cv "factors" are derived from actual flow testing, in the Apollo® Ball Valve Division, Conbraco Industries, Inc., Pageland, South Carolina. These tests were completed using standard "off the shelf" valves with no special preparation and utilizing standard schedule 40 pipe. It should be understood that these factors are for the valve only and also include the connection configuration. The flow testing is done utilizing water as a fluid media and is a direct statement of the gallons of water flowed per minute with a 1 psig pressure differential across the valve/connection unit. Line pressure is not a factor. Because the Cv is a factor, the formula can be used to estimate flow of most media for valve sizing.

FLOW OF LIQUID

$$Q = C_V \sqrt{\frac{\Delta P}{SpGr}}$$

$$\text{or } \Delta P = \frac{(Q)^2\,(SpGr)}{(Cv)^2}$$

Where:

Q = flow in US gpm
ΔP = pressure drop (psig)
SpGr = specific gravity at flowing temperature
Cv = valve constant

FLOW OF GAS

$$Q = 1360\, C_V \sqrt{\frac{(\Delta P)\,(P_2)}{(SpGr)\,(T)}}$$

$$\text{or } \Delta P = \frac{5.4 \times 10^{-7}\,(SpGr)\,(T)\,(Q)^2}{(Cv)^2\,(P_2)}$$

Where:

Q = flow in SCFH
ΔP = pressure drop (psig)
SpGr = specific gravity (based on air = 1.0)
P_2 = outlet pressure–psia (psig + 14.7)
T = (temp. °F + 460)
Cv = valve constant

Cv FACTORS FOR APOLLO VALVES

SIZE (IN.) / VALVE	1/4	3/8	1/2	3/4	1	1.25	1.5	2	2.5	3	4	6	8	10	12
32-100/200 Series	5.1	6.6	8	24	30	45	55	95	--	--	--	--	--	--	--
64-100/200 Series	6	7	19	34	50	104	268	309	629	1018	1622	--	--	--	--
64W Series	--	--	--	--	--	--	--	--	629	1018	1622	--	--	--	--
70B-140 Series	8.4	7.2	15	30	43	48	84	108	190	370	670	--	--	--	--
70-100/200 Series	8.4	7.2	15	30	43	48	84	108	190	370	670	--	--	--	---
70-300/400 Series	--	--	15	30	43	48	84	108	--	--	--	--	--	--	--
70-600 Series	2.3	4.5	5.4	12	14	21	34	47	--	--	--	--	--	--	--
70-800 Series	8.4	7.2	15	30	43	48	84	--	--	--	--	--	--	--	--
71AR Series	--	--	--	30	43	48	84	108	190	370	--	--	--	--	--
71-100/200 Series	--	--	--	30	43	48	84	108	190	370	--	--	--	--	--
72-100/900 Series	--	--	26	48	65	125	170	216	--	--	--	--	--	--	--
73A-100 Series	8.4	7.2	15	30	43	48	84	108	--	--	--	--	--	--	--
73-300/400 Series	--	--	26	48	65	125	170	216	--	--	--	--	--	--	--
74-100 Series	8.4	7.2	15	30	43	48	84	108	190	370	670	--	--	--	--
75-100 Series	8.4	7.2	15	30	43	48	84	108	190	370	670	--	--	--	--
76AR Series	8.4	7.2	15	30	43	48	84	108	190	370	670	--	--	--	--
76F-100 Series	8.1	15	15	51	68	125	177	389	--	--	--	--	--	--	--
76-100 Series	8.4	7.2	15	30	43	48	84	108	190	370	--	--	--	--	--
76-300/400 Series	--	--	26	48	65	125	170	216	--	--	--	--	--	--	--
76-600 Series	2.3	4.5	5.4	12	14	21	34	47	--	--	--	--	--	--	--
7K-100 Series	--	--	15	51	68	125	177	389	503	--	--	--	--	--	--
77AR Series	8.1	15	15	51	68	125	177	389	--	--	--	--	--	--	--
77C-100/200 Series	4.5	7.2	16	36	68	125	177	389	503	--	--	--	--	--	--
77D-140 Series	4.5	7.2	16	36	68	125	177	389	--	--	--	--	--	--	--
77D-640 Series	--	--	--	11	24	35	--	--	--	--	--	--	--	--	--
77G-UL Series	4.5	7.2	16	36	68	125	177	389	503	--	--	--	--	--	--
77W Series	--	--	16	36	68	125	177	389	--	--	--	--	--	--	--
77X Series	--	--	16	36	68	--	--	--	--	--	--	--	--	--	--
77-100/200 Series	8.1	15	15	51	68	125	177	389	503	--	--	--	--	--	--
79 Series	8.5	8.5	9.8	32	44	66	148	218	440	390	--	--	--	--	--

continued on next page

Copyright ©2013 Apollo Valves, Manufactured by Conbraco Industries - Printed in the USA

1000# CS (GRAPH 7)

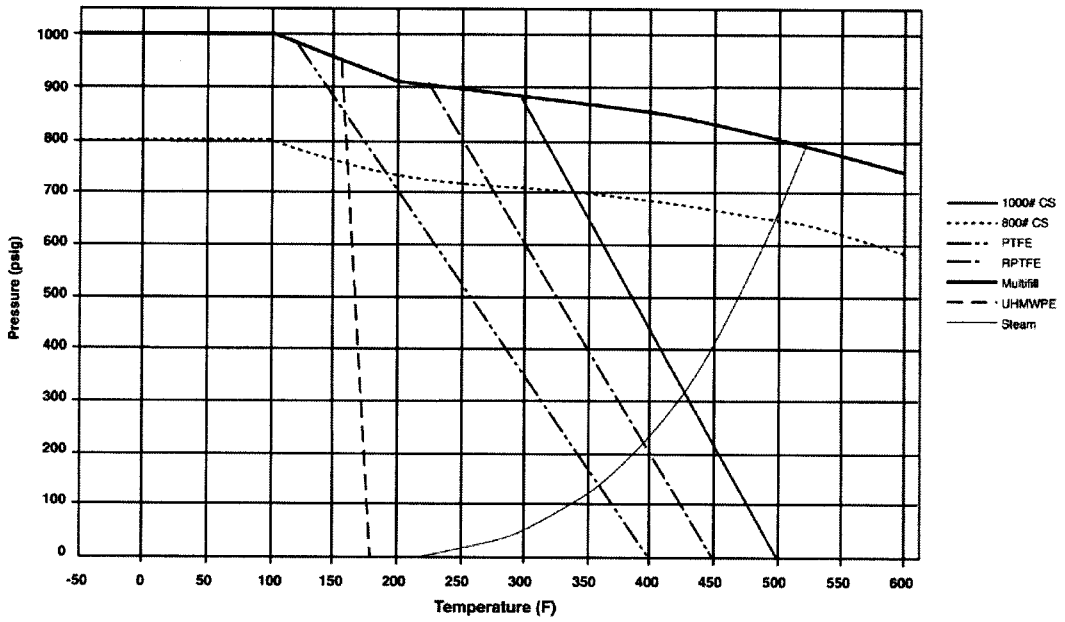

1000# SS (GRAPH 8)

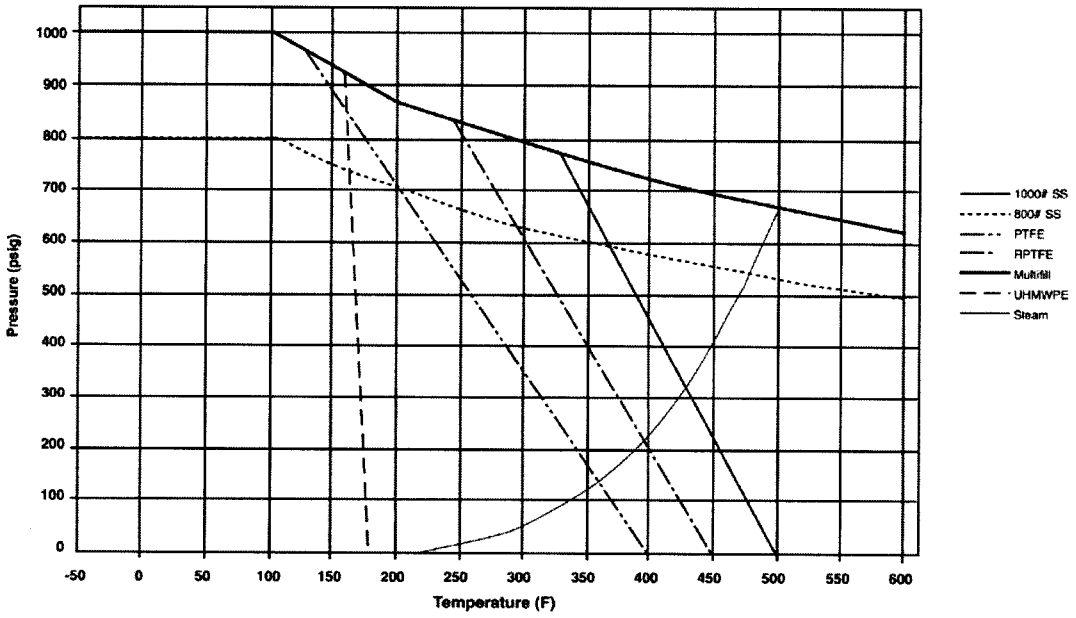

VALLEY FARMS
ARSENIC REMOVAL FACILITY
SORB 33® ADSORBER SYSTEM

(1) ONE 8'0" DIA. ADSORBER

SEVERN TRENT SERVICES
PROJECT # 22643

SECTION 5 **MECHANICAL EQUIPMENT**

C. AIR RELEASE VALVES

MARK	QTY	SIZE	SERVICE
AV-001	2	1"	POTABLE WATER

E E E E

F M TE		MM				E T			
Project	ARSENIC REMOVAL SYSTEM	Tetra Cont. No.	22643	Rev.	0	By		Date	25-Sep-14
Customer	AZ WATER	Cost Code		Date	9/25/2014	Ckd.		Date	
Location	VALLEY FARMS					Sheet	1 of		1

Qty	Mark	Materials Description					Drawing No.	Code Letter
		M T M E E E E						
1	AV-001	SERVICE: POTABLE WATER						
		PURPOSE:						
		FILLING AND PREVENT FORMATION OF EXCESSIVE VACUUM CONDITION S DURING DRAINING OPEARATIONS						
		VESSEL RATING	100	PSIG	125	° F		
		SIZE: 1" DIAMETER						
		END CONNECTIONS		THREADED				
		BODY AND COVER		CAST IRON				
		FLOAT		316 STAILESS STEEL				
		SEAT		BUNA N (NSF)				
		TE T E WW W T F E M TE						
		ACCEPTABLE		APCO SERIES 140C				
		MANUFACTURERS:		GA INDUSTRIES FIG. 945				
				CRISPIN SERIES C				
				PRATT				
		TAG EACH VALVE WITH "MARK NO." USING CORROSION RESISTANT						
		TAG ATTACHED WITH SS WIRE.						
		SUBMIT CATALOGUE CUTS MARKED WITH						
		TAG NUMBER						
		SIZE						
		QUANTITY						
		FEATURES						

E E T E TW TE F T F T T T P.O. No.

KINETIC COMPACT COMBINATION AIR VALVE

1/2" through 1" NPT Inlet and Outlet

FIG. 945

COMBINETIC

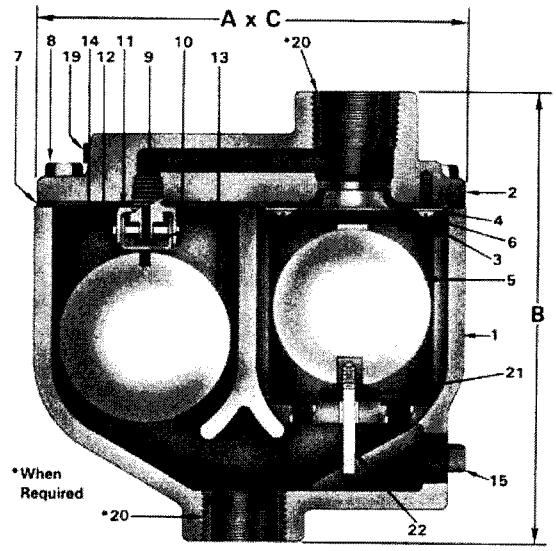

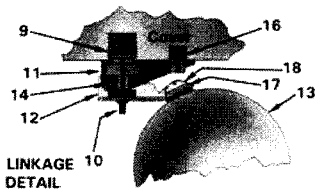

FIG. 945

GENERAL DIMENSIONS

VALVE SIZE	A (SQUARE)	B (HEIGHT)	C (WIDTH)	WEIGHT (LBS.)
1/2" NPT	6-1/4"	7-1/4"	3-7/8"	16
3/4" NPT	6-1/4"	7-1/4"	3-7/8"	16
1" NPT	6-1/4"	7-1/4"	3-7/8"	16

ENGINEERING SPECIFICATION

The Combination Air Valve shall consist of a KINETIC Air & Vacuum Valve and an Air Release Valve contained in a single body housing. The valve shall be designed to exhaust large amounts of air during filling, to release small amounts of accumulated air during operation and to admit large amounts of air upon impending vacuum during draining.

The inlet shall be the nominal size of the valve and the outlet shall be the same size as the inlet. Body and cover shall be of cast iron conforming to ASTM A126, Class B. The Air & Vacuum portion of the valve shall be designed to exhaust air at up to sonic velocity without blowing shut. The floats shall be spherical and shall be capable of withstanding a test pressure of 1000 psi. The Air Release portion shall have a stainless steel leverage mechanism and float. The small orifice shall be stainless steel and have a rubber seat.

KINETIC Compact Combination Air Valves shall be as manufactured by GA Industries, Inc., their Figure 945.

PARTS LIST

1. BODY - Cast Iron A126 Class B
2. COVER - Cast Iron A126 Class B
3. SEAT (Air Vacuum) - Buna-N
4. SUPPORT RING - 316 Stainless Steel
5. FLOAT BALL (Air Vacuum) - 316 Stainless Steel
6. SEAT SCREWS - 18-8 Stainless Steel
7. COVER GASKET - Composition
8. COVER BOLTS - Steel Grade 2
9. ORIFICE - 316 Stainless Steel
10. ORIFICE BUTTON - Buna-N
11. LEVERAGE BRACKET - 316 Stainless Steel
12. FLOAT ARM - 316 Stainless Steel
13. FLOAT BALL (Air Release) - 316 Stainless Steel
14. COILED SPRING PIN - 302 Stainless Steel
15. PIPE PLUG - Steel (Commercial)
16. SLOTTED SPRING PIN - 410/420 Stainless Steel
17. LOCKWASHER - 18-8 Stainless Steel
18. FLOAT SCREW - 18-8 Stainless Steel
19. COUNTERSUNK PLUG - Steel (Commercial)
20. REDUCING BUSHING - Steel (Commercial)
21. CUSHION - Buna-N
21. BALL GUIDE - UHMW-PE

ENGINEERING DATA

Kinetic Operating Principle of the Combinetic Valve:

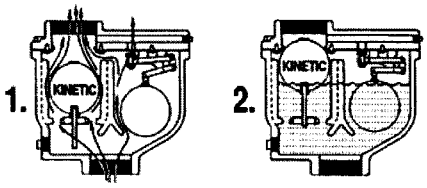

1. During the exhausting sequence, the air flowing around the large orifice buoy ball produces a resultant downward force which maintains the ball in the open position.
2. The buoyant force of the balls will seal both orifices when water reaches the balls.

Pressure Rating:
NPT Inlet Body rated to 300 psi WOG; tested to 450 psi
Float tested to 1000 psi.

Working Pressure:
10-150 psi with 3/32" orifice (Standard - Fig. 945)
10-300 psi with 1/16" orifice (Optional - Fig. 945H)
CONSULT FACTORY IF OPERATING PRESSURE IS LESS THAN 10 PSI.

Small Orifice (Air Release) Maximum Venting Rate:
Figure 945@ 150 psi with 3/32" orifice = 14.7 SCFM
Figure 945-H@ 300 psi with 1/16" orifice = 8.5 SCFM
FOR SIZING AND LOCATING SEE PAGES 16-17, 36-37.

Connections:
Inlet - NPT, Standard
Outlet - NPT, Standard

Options:
For Optional Cowl, specify 945-C.
For Optional Throttling Device, specify 945-P
see pages 41 and 35.

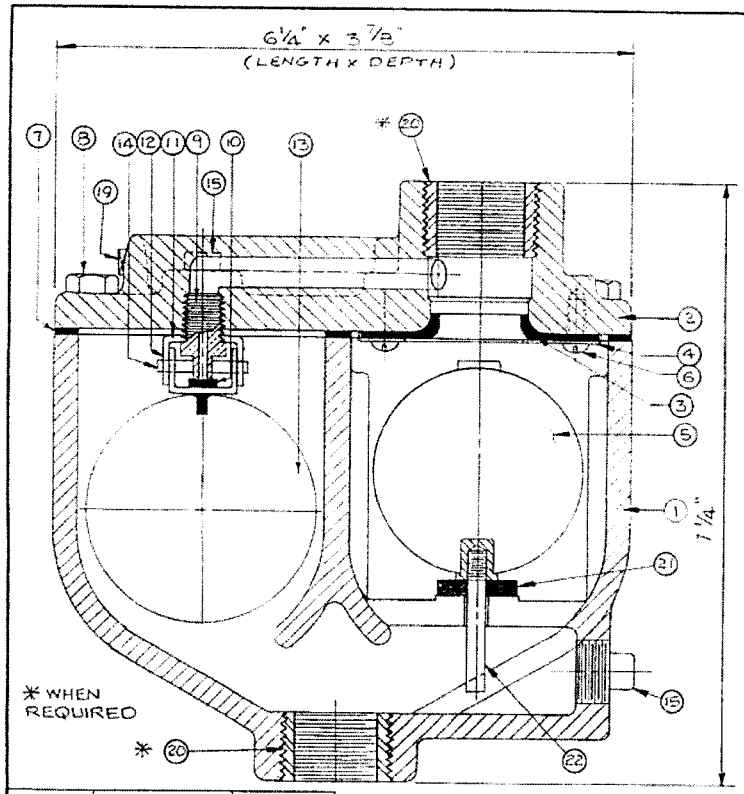

PART NO.	DESCRIPTION	MATERIAL
1	BODY	CAST IRON A126 CL B
2	COVER	CAST IRON A126 CL B
3	SEAT (AIR VACUUM)	BUNA-N
4	SUPPORT RING	304 STN. STL.
5	FLOAT BALL (AIR VACUUM)	304 STN. STL.
6	SEAT SCREWS	18-8 STN. STL.
7	COVER GASKET	ARMSTRONG CS-301
8	COVER BOLTS	STEEL GRADE 2
9	ORIFICE	303 STN. STL.
10	ORIFICE BUTTON	BUNA-N
11	LEVERAGE BRACKET	302/304 STN. STL.
12	FLOAT ARM	302/304 STN. STL.
13	FLOAT BALL (AIR-RELEASE)	304 STN. STL.
14	SPIRCL PIN	302 STN. STL.
15	PIPE PLUG	STEEL (COMM.)
16	SPRING PIN	18-8 STN. STL.
17	LOCKWASHER	18-8 STN. STL.
18	FLOAT SCREW	18-8 STN. STL.
19	COUNTERSUNK PLUG	STEEL (COMM.)
20	REDUCING BUSHING	STEEL (COMM.)
21	CUSHION	BUNA-N
22	BALL GUIDE	UHMW

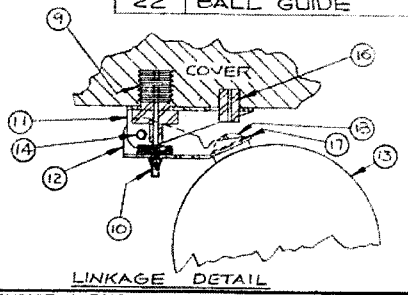

LINKAGE DETAIL

VALVE SIZE	SIZE INLET & OUTLET	WEIGHT
1/2"	1/2" N.P.T.	15 LBS.
3/4"	3/4" N.P.T.	15 LBS.
1"	1" N.P.T.	15 LBS.

ORIFICE SIZE:
3/32" FOR 0-150 PSI (STANDARD)
1/16" FOR 151-300 PSI (OPTIONAL)

EMPIRE SPECIALTY COMPANY PITTSBURGH, PA

1/2", 3/4", 1" FIG. # 945
COMBINATION AIR VALVE (NEW STYLE)

SCALE N.T.S. | DRAWN RRS | FIG. # 945 | DATE 3-12-91 | DWG. NO. ECAV-7136

VALLEY FARMS
ARSENIC REMOVAL FACILITY
SORB 33® ADSORBER SYSTEM

(1) ONE 8'0" DIA. ADSORBER

SEVERN TRENT SERVICES
PROJECT # 22643

SECTION 5 **MECHANICAL EQUIPMENT**
D. EXPANSION JOINTS

E T

F M TE		MM				E T			
Project	ARSENIC REMOVAL SYSTEM	Tetra Cont. No.	22643	Rev.	0	By		Date	25-Sep-14
Customer	AZ WATER	Cost Code		Date	9/25/2014	Ckd.		Date	
Location	VALLEY FARMS					Sheet	1	of	1

Qty	Mark	Materials Description	Drawing No.	Code Letter
		E T		
		Single Arch, Flanged, EPDM - NSF listed rubber, Galvanized CS back up rings,		
		Drilled per ANSI Class 125 Flanges, rated for 100 PSIG @ 125 ° F		
		Include Galvanized Carbon Steel Control Rods designed for Maximum Design Pressure.		
		Face to face dimension 6"		
		MANUFACTURER E E		
2	EJ-001	SIZE 6.0 IN DIAMETER		
		TAG EACH ITEM WITH "MARK NO." USING CORROSION RESISTANT		
		TAG ATTACHED WITH SS WIRE.		
		SUBMIT CATALOGUE CUTS MARKED W/		
		TAG NUMBER		
		SIZE		
		QUANTITY		
		FEATURES		

E E T E TW TE F T F T T T P.O. No.

Proco Style 240/242 Molded Spherical Joints

Proco Style 240/242 Spherical Molded Expansion Joints are designed for piping systems to absorb pipe movements, relieve stress, reduce system noise/vibration, compensate for misalignment/offset and to protect rotating mechanical equipment against start-up surge forces.

The molded style 240 single sphere and 242 twin sphere designed bellows are inherently stronger than the conventional hand-built style spool arch type. Internal pressure within a "sphere" is exerted in all directions, distributing forces evenly over a larger area. The spherical design "flowing arch" reduces turbulence and sediment buildup.

Features and Benefits:

Absorbs Directional Movement

Thermal movements appear in any rigid pipe system due to temperature changes. The Style 240 and Style 242 spherical arch expansion joints allow for axial compression or axial extension, lateral deflection as well as angular movement. (Note: Rated movements in this publication are based on single plane movements. Multiple movement conditions are based on a multiple movement calculation. Contact Proco for information when designing multiple pipe movements.)

Easy Installation with Rotating Metallic Flanges

The floating metallic flanges freely rotate on the bellows, compensating for mating flange misalignment, thus speeding up installation time. Gaskets are not required with the Style 240 or Style 242, provided the expansion joints are mated against a flat face flange as required in the installation instructions.

Flange Materials/Drilling

The Proco Style 240 and Style 242 molded expansion joints are furnished complete with plated carbon steel flanges for corrosion protection. 304 or 316 stainless steel flanges are available upon request as well as ANSI 250/300 lb., BS-10, DIN PN10 & PN16 and JIS-10K drilling.

Absorbs Vibration, Noise and Shock

The Proco Style 240 and Style 242 molded expansion joints effectively dampen and insulate downstream piping against the transmission of noise and vibration generated by mechanical equipment. Noise and vibration caused by equipment can cause stress in pipe, pipe guides, anchors and other equipment downstream. Water hammer and pumping impulses can also cause strain, stress or shock to a piping system. Install the Style 240 or Style 242 molded expansion joints to help compensate for these system pressure spikes.

Wide Service Range with Low Cost

Engineered to operate up to 300 PSIG or 265°F, the Proco Style 240 and Style 242 can be specified for a wide range of piping requirements. Compared to conventional hand-built spool type joints, you will invest less money when specifying the mass-produced, consistent high quality, molded single or twin sphere expansion joints.

Material Identification

All Style 240 or Style 242 molded expansion joints have branded elastomer designations. Neoprene Tube/Neoprene Cover (NN) and Nitrile Tube/Neoprene Cover (NP) elastomer designated joints meet the Coast Guard Requirements and conform to ASTM F1123-87. 240C/NP-9 joints have ABS certification.

Large Inventory

Proco Products, Inc. maintains one of the largest inventories of rubber expansion joints in the world. Please contact us for price and availability.

Table 1: Available Styles • Materials

For Specific Elastomer Recommendations, See: **PROCO** "Chemical To Elastomer Guide"

240-A	240-C	240-AV,D,E,M	242-A,B,C	PROCO Material Code	Cover Elastomer [1]	Tube Elastomer [2]	Maximum Operating Temp. °F	Identifying Color Band/Label
		X	X	/BB[3]	Chlorobutyl	Chlorobutyl	250°	Black
		X	X	/EE[3]	EPDM	EPDM	250°	Red
X	X			/EE[3,4]	EPDM	FDA-EPDM	250°	Red
		X		/EQ[3]	EPDM	FDA-EPDM	250°	Red
X	X			/EE-9[3,5]	EPDM	EPDM	265°	DBL Red
	X			/HH	CSM	CSM	212°	Green
		X	X	/NH	Neoprene	CSM	212°	Green
	X			/NJ	Neoprene	FDA-Nitrile	212°	White
	X	X	X	/NN	Neoprene	Neoprene	225°	Blue
X	X	X	X	/NP	Neoprene	Nitrile	212°	Yellow
X	X			/NP-9[6]	Neoprene	Nitrile-ABS	212°	DBL Yellow

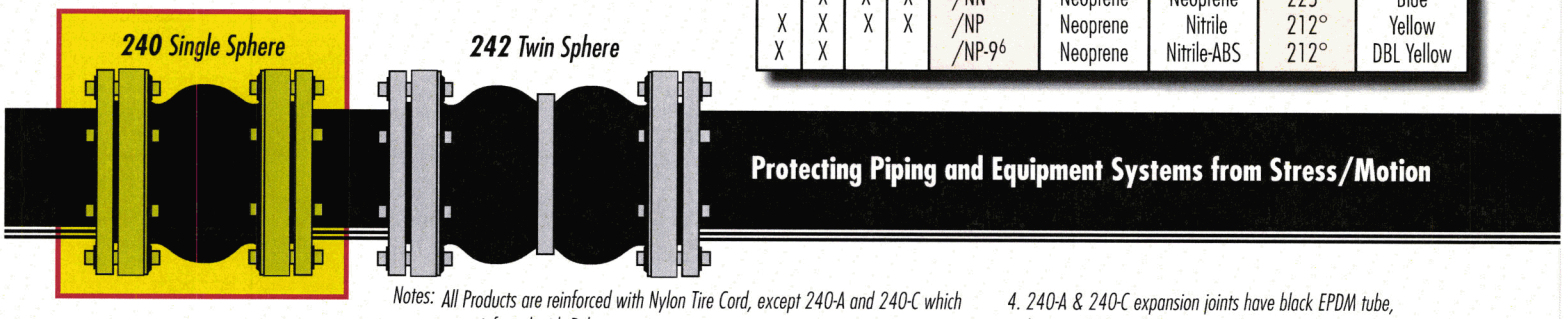

Notes: All Products are reinforced with Nylon Tire Cord, except 240-A and 240-C which are reinforced with Polyester.

1. *All NN & NP elastomer designated joints meet the Coast Guard Requirements and conform to ASTM F 1123-87 and are marked accordingly.*
2. *Branding Label will be marked as "Food Grade".*
3. *BB, EE or EE-9 are good for 300°F blower service at 20 PSI or less.*
4. *240-A & 240-C expansion joints have black EPDM tube, but are FDA compliant.*
5. *EE-9 joints are peroxide cured.*
6. *NP-9 joints have ABS certification.*
7. *All elastomers above are not intended for steam service.*
8. *Only available up to 12" I.D.*
9. *For PTFE lined single sphere see www.procoproducts.com/ptfelined.html*

Information subject to change without notice.

Style 240 Single Sphere Performance Data

Table 2: Sizes • Movements • Pressures • Flange Standards • Weights

NOMINAL Pipe Size I.D.	Neutral Length	PROCO Style Number [1]	240 Movement Capability: From Neutral Position [2]					Pressure [4]		Standard Flange Drilling Dimensions [8]					Weight in lbs	
			Axial Compression Inches	Axial Extension Inches	Lateral Deflection Inches	Angular Deflection Degrees	Thrust Factor [3]	Positive PSIG [5]	Vacuum [6] Inches of Hg	Flange O.D. Inches	Bolt Circle Inches	Number of Holes	Size of Holes Inches	Bolt Hole [7] Thread	Exp. Joint & Flanges	Control Unit Set (2 Rod)
6 (150)	5.00	240-C	1.063	1.250	1.188	23		225	8	11.0	9.5	8	0.875	—	22.6	10.4
	5.00	240-E	0.750	0.500	0.500	9		225	26	11.0	9.5	8	0.875	—	26.0	10.4
	6.00	240-A	1.188	1.188	1.188	21		235	10	11.0	9.5	8	0.875	—	24.0	10.4
	6.00	**240-AV**	0.750	0.500	0.500	9	41.28	225	26	11.0	9.5	8	0.875	3/4-10 UNC	26.8	10.4
	7.09	240-D	0.750	0.500	0.500	9		225	26	11.0	9.5	8	0.875	—	29.0	10.6
	8.00	**240-AV**	0.750	0.500	0.500	9		225	26	11.0	9.5	8	0.875	3/4-10 UNC	29.1	10.8
	6.00	Q-240-HW	0.750	0.500	0.500	9		300	26	12.5	10.62	12	0.875	—	39.0	10.4
8 (200)	5.00	240-C	1.063	1.188	1.188	17		235	8	13.5	11.75	8	0.875	—	35.5	13.4
	5.00	240-E	0.750	0.500	0.500	7		225	26	13.5	11.75	8	0.875	—	40.0	13.4
	6.00	240-A	1.188	1.188	1.188	16		235	8	13.5	11.75	8	0.875	—	38.5	13.4
	6.00	**240-AV**	0.750	0.500	0.500	7	63.62	225	26	13.5	11.75	8	0.875	3/4-10 UNC	40.6	13.4
	8.07	240-D	1.000	0.563	0.875	8		225	26	13.5	11.75	8	0.875	—	41.3	14.0
	6.00	Q-240-HW	0.750	0.500	0.500	7		300	26	15.0	13.00	12	1.000	—	70.0	13.4
10 (250)	5.00	240-C	1.063	1.188	1.188	14		235	6	16.0	14.25	12	1.000	—	49.3	21.0
	5.00	240-E	1.000	0.625	0.750	7		225	26	16.0	14.25	12	1.000	—	56.0	21.0
	8.00	240-A	1.188	1.188	1.188	13		235	6	16.0	14.25	12	1.000	—	53.6	21.3
	8.00	**240-AV**	1.000	0.625	0.750	7	103.87	225	26	16.0	14.25	12	1.000	7/8-9 UNC	56.6	21.3
	9.00	**240-AV**	1.000	0.625	0.750	7		225	26	16.0	14.25	12	1.000	7/8-9 UNC	57.0	22.0
	9.45	240-D	1.000	0.625	0.750	7		225	26	16.0	14.25	12	1.000	—	58.5	22.0
	10.00	**240-AV**	1.000	0.625	0.875	7		225	26	16.0	14.25	12	1.000	7/8-9 UNC	60.5	26.5
	8.00	Q-240-HW	1.000	0.625	0.750	7		275	26	17.5	15.25	16	1.125	—	56.0	22.0
12 (300)	5.00	240-C	1.063	1.250	1.188	12		235	6	19.0	17.0	12	1.000	—	73.4	26.5
	5.00	240-E	1.000	0.625	0.750	6		225	26	19.0	17.0	12	1.000	—	74.0	26.5
	8.00	240-A	1.188	1.188	1.188	11		235	6	19.0	17.0	12	1.000	—	80.0	27.0
	8.00	**240-AV**	1.000	0.625	0.750	6	137.89	225	26	19.0	17.0	12	1.000	7/8-9 UNC	83.0	27.0
	9.00	**240-AV**	1.000	0.625	0.750	6		225	26	19.0	17.0	12	1.000	7/8-9 UNC	88.0	27.0
	10.24	240-D	1.000	0.625	0.875	6		225	26	19.0	17.0	12	1.000	—	89.0	28.0
	8.00	Q-240-HW	1.000	0.625	0.750	6		275	26	20.5	17.75	16	1.250	—	100.0	27.0
14 (350)	8.00	240-C	1.000	1.063	1.188	8	182.65	200	6	21.0	18.75	12	1.125	—	162.0	28.0
	8.00	**240-AV**	1.000	0.625	0.750	6		150	26				1.125	—	115.0	28.0
16 (400)	8.00	240-C	1.000	1.063	1.188	8		145	6				1.125	—	136.0	26.8
	8.00	240-HW	1.000	0.625	0.750	4		175	26				1.125	—	186.0	26.8
	8.00	**240-AV**	1.000	0.625	0.750	4	240.53	125	26	23.5	21.25	16	1.125	—	165.0	26.8
	9.00	240-M	1.000	0.625	0.750	4		125	26				1.125	—	168.0	27.0
	10.43	240-D	1.000	0.625	0.875	4		125	26				1.125	—	170.0	27.0
18 (450)	8.00	240-HW	1.000	0.625	0.750			175	26				1.250	—	209.0	31.4
	8.00	**240-AV**	1.000	0.625	0.750	4	298.65	125	26	25.0	22.75	16	1.250	—	168.0	31.4
	9.00	240-M	1.000	0.625	0.750			125	26				1.250	—	169.0	33.1
	10.43	240-D	1.000	0.625	0.875			125	26				1.250	—	170.0	33.1
20 (500)	8.00	240-C	1.000	1.063	1.188	6		145	6				1.250	—	154.0	32.4
	8.00	240-HW	1.000	0.625	0.750	3		175	26				1.250	—	234.0	32.4
	8.00	**240-AV**	1.000	0.625	0.750	3	363.05	125	26	27.5	25.00	20	1.250	—	170.0	32.4
	9.00	240-M	1.000	0.625	0.750	3		125	26				1.250	—	173.0	34.1
	10.43	240-D	1.000	0.625	0.875	3		125	26				1.250	—	175.0	34.1

See Notes Page 4

Style 240/242 Drilling Chart

Table 4: Flange Drilling

NOMINAL Pipe Size Inch (mm)	American 125/150# Conforms to ANSI B16.1 and B16.5						American 250/300# Conforms to ANSI B16.1 and B16.5					British Standard 10:1962 Conforms to BS 10 Table E				
	Flange Thickness	Flange O.D.	Bolt Circle	No. of Holes	Drilled Hole Size	Threaded Hole Size	Flange Thickness	Flange O.D.	Bolt Circle	No. of Holes	Hole Size	Flange Thickness	Flange O.D.	Bolt Circle	No. of Holes	Hole Size
1 (25)	0.55 (14.0)	4.25 (108.0)	3.13 (79.4)	4	0.62 (15.9)	1/2 - 13 UNC	0.63 (16.0)	4.88 (124.0)	3.5 (88.9)	4	0.75 (19.1)	0.59 (15.0)	4.5 (114.0)	3.25 (82.6)	4	0.62 (15.9)
1.25 (32)	0.55 (14.0)	4.63 (118.0)	3.5 (88.9)	4	0.62 (15.9)	1/2 - 13 UNC	0.63 (16.0)	5.25 (133.0)	3.88 (98.4)	4	0.75 (19.1)	0.59 (15.0)	4.75 (121.0)	3.44 (87.3)	4	0.62 (15.9)
1.5 (40)	0.55 (14.0)	5.0 (127.0)	3.88 (98.4)	4	0.62 (15.9)	1/2 - 13 UNC	0.63 (16.0)	6.12 (156.0)	4.50 (114.3)	4	0.88 (22.2)	0.59 (15.0)	5.25 (133.0)	3.88 (98.4)	4	0.62 (15.9)
2 (50)	0.63 (16.0)	6.0 (152.0)	4.75 (120.7)	4	0.75 (19.1)	5/8 - 11 UNC	0.71 (18.0)	6.50 (165.0)	5.00 (127.0)	8	0.75 (19.1)	0.63 (16.0)	6.0 (152.0)	4.5 (114.3)	4	0.75 (19.1)
2.5 (65)	0.71 (18.0)	7.0 (178.0)	5.5 (139.7)	4	0.75 (19.1)	5/8 - 11 UNC	0.71 (18.0)	7.5 (191.0)	5.88 (149.2)	8	0.88 (22.2)	0.71 (18.0)	6.5 (165.0)	5.0 (127.0)	4	0.75 (19.1)
3 (80)	0.71 (18.0)	7.5 (191.0)	6.0 (152.4)	4	0.75 (19.1)	5/8 - 11 UNC	0.79 (20.0)	8.25 (210.0)	6.62 (168.2)	8	0.88 (22.2)	0.71 (18.0)	7.25 (184.0)	5.75 (146.1)	4	0.75 (19.1)
3.5 (90)	0.71 (18.0)	8.5 (216.0)	7.0 (177.8)	8	0.75 (19.1)	5/8 - 11 UNC	0.79 (20.0)	9.0 (229.0)	7.25 (184.2)	8	0.88 (22.2)	0.71 (18.0)	8.0 (203.0)	6.5 (165.1)	8	0.75 (19.1)
4 (100)	0.71 (18.0)	9.0 (229.0)	7.5 (190.5)	8	0.75 (19.1)	5/8 - 11 UNC	0.79 (20.0)	10.0 (254.0)	7.88 (200.0)	8	0.88 (22.2)	0.71 (18.0)	8.5 (216.0)	7.0 (177.8)	8	0.75 (19.1)
5 (125)	0.79 (20.0)	10.0 (254.0)	8.5 (215.9)	8	0.88 (22.2)	3/4 - 10 UNC	0.87 (22.0)	11.0 (279.0)	9.25 (235.0)	8	0.88 (22.2)	0.79 (20.0)	10.0 (254.0)	8.25 (209.6)	8	0.75 (19.1)
6 (150)	0.87 (22.0)	11.0 (279.0)	9.5 (241.3)	8	0.88 (22.2)	3/4 - 10 UNC	0.87 (22.2)	12.5 (318.0)	10.62 (269.9)	12	0.88 (22.2)	0.87 (22.2)	11.0 (279.0)	9.25 (235.0)	8	0.88 (22.2)
8 (200)	0.87 (22.0)	13.5 (343.0)	11.75 (298.5)	8	0.88 (22.2)	3/4 - 10 UNC	0.95 (24.0)	15.0 (381.0)	13.0 (330.2)	12	1.00 (25.4)	0.87 1 (22.2)	3.25 (337.0)	11.5 (292.1)	8	0.88 (22.2)
10 (250)	0.95 (24.0)	16.0 (406.0)	14.25 (362.0)	12	1.00 (25.4)	7/8 - 9 UNC	1.02 (26.0)	17.5 (445.0)	15.25 (387.4)	16	1.13 (28.6)	0.95 (24.0)	116.0 (406.0)	14.0 (355.6)	12	0.88 (22.2)
12 (300)	0.95 (24.0)	19.0 (483.0)	17.0 (431.8)	12	1.00 (25.4)	7/8 - 9 UNC	1.02 (26.0)	20.5 (521.0)	17.75 (450.9)	16	1.25 (31.8)	0.95 (24.0)	18.0 (457.0)	16.0 (406.4)	12	1.00 (25.4)
14 (350)	1.02 (26.0)	21.0 (533.0)	18.75 (476.3)	12	1.13 (28.6)	1 - 8 UNC	1.10 (28.0)	23.0 (584.0)	20.25 (514.4)	20	1.25 (31.8)	1.02 (26.0)	20.75 (527.0)	18.5 (469.9)	12	1.00 (25.4)
16 (400)	1.10 (28.0)	23.5 (597.0)	21.25 (539.8)	16	1.13 (28.6)	1 - 8 UNC	1.18 (30.0)	25.5 (648.0)	22.5 (571.5)	20	1.38 (34.9)	1.10 (28.0)	22.75 (578.0)	20.5 (520.7)	12	1.00 (25.4)
18 (450)	1.18 (30.0)	25.0 (635.0)	22.75 (577.9)	16	1.25 (31.8)	1 1/8 - 7 UNC	1.18 (30.0)	28.0 (711.0)	24.75 (628.7)	24	1.38 (34.9)	1.18 (30.0)	25.25 (641.0)	23.0 (584.2)	16	1.00 (25.4)
20 (500)	1.18 (30.0)	27.5 (699.0)	25.0 (635.0)	20	1.25 (31.8)	1 1/8 - 7 UNC	1.18 (30.0)	30.5 (775.0)	27.0 (685.8)	24	1.38 (34.9)	1.18 (30.0)	27.75 (705.0)	25.25 (641.4)	16	1.00 (25.4)
24 (600)	1.18 (30.0)	32.06 (813.0)	29.5 (749.3)	20	1.38 (34.9)	1 1/4 - 7 UNC	1.18 (30.0)	36.0 (914.0)	32.0 (812.8)	24	1.62 (41.3)	1.18 (30.0)	32.5 (826.0)	29.75 (755.7)	16	1.25 (31.8)
30 (750)	1.26 (32.0)	38.75 (984.0)	36.0 (914.4)	28	1.38 (34.9)	1 1/4 - 7 UNC	1.26 (32.0)	43.0 (1092.0)	39.25 (997.0)	28	2.00 (50.8)	1.26 (32.0)	39.25 (997.0)	36.5 (927.1)	20	1.38 (34.9)

Drilling Chart for Bolting Requirements

Table 5:	Standard Drilling for PROCO Rubber Expansion Joints					Thickness of Materials for PROCO Rubber Expansion Joints			Control Unit Plate Detail	
	Flange Dimensions [2]					Material Thickness [1] for Bolt Length Requirements				
Nominal Pipe Size Expansion Joint I.D. Inch /(mm)	Flange O.D. Inch / (mm)	Bolt Circle Inch / (mm)	Number Of Holes	Size Of Holes Inch / (mm)	Bolt Hole Thread	Nominal Flange/ Beaded End Thickness Inch / (mm) (Approx. Value)	Adjacent Mating [3] Flange Thickness	Max. Control [4] Rod Plate Thickness Inch / (mm)	Control Rod [6] Plate O.D. Inch / (mm)	Maximum [7] Rod Diameter Inch / (mm)
1 (25)	4.25 (108.0)	3.13 (79.50)	4	0.625 (15.87)	1/2-13 UNC	1.25 (31.75)	CUSTOMER TO SPECIFY MATING FLANGE THICKNESS	0.375 (9.53)	8.375 (215.9)	0.625 (15.9)
1.25 (32)	4.63 (118.0)	3.5 (88.90)	4	0.625 (15.87)	1/2-13 UNC	1.25 (31.75)		0.375 (9.53)	8.750 (222.3)	0.625 (15.9)
1.5 (40)	5.0 (127.0)	3.88 (98.55)	4	0.625 (15.87)	1/2-13 UNC	1.25 (31.75)		0.375 (9.53)	9.125 (231.8)	0.625 (15.9)
2 (50)	6.00 (152.00)	4.75 (120.65)	4	0.750 (19.05)	5/8-11 UNC	1.25 (31.75)		0.375 (9.53)	10.125 (257.2)	0.625 (15.9)
2.5 (65)	7.00 (178.00)	5.50 (139.70)	4	0.750 (19.05)	5/8-11 UNC	1.25 (31.75)		0.375 (9.53)	11.125 (282.6)	0.625 (15.9)
3 (80)	7.50 (191.00)	6.00 (152.40)	4	0.750 (19.05)	5/8-11 UNC	1.25 (31.75)		0.375 (9.53)	11.625 (295.3)	0.625 (15.9)
3.5 (90)	8.5 (216.0)	7.0 (177.80)	8	0.750 (19.05)	5/8-11 UNC	1.25 (31.75)		0.375 (9.53)	12.625 (320.7)	0.625 (15.9)
4 (100)	9.00 (229.00)	7.50 (190.50)	8	0.750 (19.05)	5/8-11 UNC	1.25 (31.75)		0.375 (9.53)	13.125 (333.4)	0.625 (15.9)
5 (125)	10.00 (254.00)	8.50 (215.90)	8	0.875 (22.23)	3/4-10 UNC	1.50 (38.10)		0.500 (12.70)	14.125 (358.8)	0.625 (15.9)
6 (150)	11.00 (279.00)	9.50 (241.30)	8	0.875 (22.23)	3/4-10 UNC	1.50 (38.10)		0.500 (12.70)	15.125 (384.2)	0.625 (15.9)
8 (200)	13.50 (343.00)	11.75 (298.45)	8	0.875 (22.23)	3/4-10 UNC	1.50 (38.10)		0.750 (19.05)	19.125 (485.8)	1.000 (25.4)
10 (250)	16.00 (406.00)	14.25 (361.95)	12	1.000 (25.40)	7/8-9 UNC	1.50 (38.10)		0.750 (19.05)	21.625 (549.3)	1.000 (25.4)
12 (300)	19.00 (483.00)	17.00 (431.80)	12	1.000 (25.40)	7/8-9 UNC	1.50 (38.10)		0.750 (19.05)	24.625 (625.5)	1.000 (25.4)
14 (350)	21.00 (533.00)	18.75 (476.25)	12	1.125 (28.58)	—	1.75 (44.45)		0.750 (19.05)	26.625 (676.3)	1.000 (25.4)
16 (400)	23.50 (597.00)	21.25 (539.75)	16	1.125 (28.58)	—	1.75 (44.45)		0.750 (19.05)	30.125 (765.2)	1.250 (31.8)
18 (450)	25.00 (635.00)	22.75 (577.85)	16	1.250 (31.75)	—	2.00 (50.80)		0.750 (19.05)	31.625 (803.3)	1.250 (31.8)
20 (500)	27.50 (699.00)	25.00 (635.00)	20	1.250 (31.75)	—	2.00 (50.80)		0.750 (19.05)	34.125 (866.8)	1.250 (31.8)
24 (600)	32.00 (813.00)	29.50 (749.30)	20	1.375 (34.93)	—	2.00 (50.80)		1.000 (25.40)	38.625 (981.1)	1.250 (31.8)
30 (750)	38.75 (984.00)	36.00 (914.40)	28	1.375 (34.93)	—	2.00 (50.80)		1.250 (31.75)	46.375 (1177.9)	1.500 (38.1)

Metric Conversion Formula:
Nominal I.D.:
in. x 25 = mm; Dimensions/ Thickness': in. x 25.4 = mm.

Notes:

1. *Limit/Control Rod length is determined by neutral length of rubber expansion joint, rated extension, control rod plate thickness, mating flange thickness and number of nuts. Consult PROCO for rod lengths.*
2. *Flange Dimensions shown are in accordance with ANSI B16.1 and ANSI B16.5 Class 125/150, AWWA C-207-07, Tbl 2 and 3 - Class D, Table 4 - Class E. Hole size shown is 1/8" larger than AWWA Standard.*
3. *Adjacent mating flange thickness is required to determine overall rod length and compression sleeve length (if required).*
4. *Plate thickness is based on a maximum width PROCO would use to design a Limit/Control Rod plate.*
5. *Flat Washers required at ring splits and are supplied by others.*
6. *Control rod plate O.D. installed dimension is based on a maximum O.D. Proco would supply.*
7. *Control rod diameter is based on a maximum diameter Proco would use to design a control rod.*

VALLEY FARMS
ARSENIC REMOVAL FACILITY
SORB 33® ADSORBER SYSTEM

(1) ONE 8'0" DIA. ADSORBER

SEVERN TRENT SERVICES
PROJECT # 22643

SECTION 5 **MECHANICAL EQUIPMENT**

E. PRESSURE RELIEF VALVE

PRESSURE RELIEF VALVES

Project	ARSENIC REMOVAL SYSTEM	Tetra Cont. No.	22643	Rev.	0	By		Date	
Customer	AZ WATER	Cost Code		Date	11/25/2014	Ckd.		Date	
Location	VALLEY FARMS					Sheet	1 of		1

Qty	Mark	Materials Description					Drawing No.	Code Letter
1		PRESSURE RELIEF VALVE FOR LIQUID SERVICE						
		VESSEL RATING:	100	PSIG	125	° F		
		LIQUID:	WATER					
		INLET PRESSURE RANGE:	30-35	PSIG				
		OUTLET PRESSURE RANGE:	ATM	PSIG				
		SET PRESSURE:	100	PSIG				
		BODY:						
		TRIM:						
		INLET CONNECTION:	"					
		OUTLET CONNECTION:	"					
		MANUFACTURER:						
		Documentation:	Five (5) Copies of Installation, O & M Manuals					
							P.O. No.	

PENTAIR VALVES & CONTROLS

KUNKLE SAFETY AND RELIEF PRODUCTS
MODELS 91, 218 AND 228

Cast Iron Liquid Relief Valves

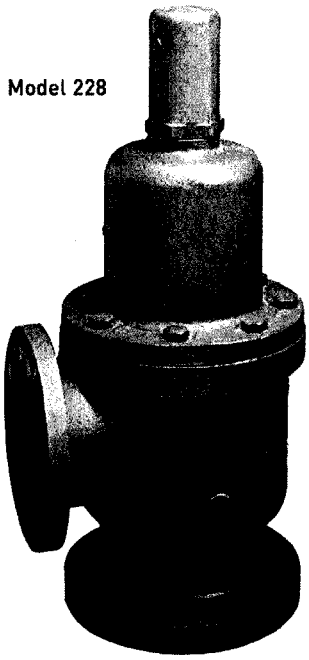

Model 228

Model descriptions

Model 91: Bronze trim, with pressuretight cap. Suitable for maximum back pressure of 60 psig1. Variation "03" for field adjustability.

Model 218: Bronze trim, UL and FM approved for fire pump installations. Special design offers minimum set pressure of 60 psig[1]. Easily adjustable with handwheel to 200 psig (175 psig with optional 125# inlet flange).

Model 228: Bronze trim, with pressuretight cap. UL and FM approved for fire pump installations. Suitable for maximum back pressure of 60 psig[1]. Supplied with handwheel.

Features

- Bolted bonnet permits easy inspection and servicing without removal from system.
- Quality cast iron body and bonnet, insert and disc are available in either bronze or Stainless Steel (SS) and lapped for optimum performance.
- Springs are steel with plating for corrosion protection.
- High lift, wing-guided disc offers high relieving capacity. Pivot between disc and spring corrects misalignment and compensates for spring side thrust.
- Each Kunkle valve is tested and inspected for pressure setting and leakage.

Technical data

Pressure and Temperature Limits[2]

Model 91:
5 to 400 psig;
-20° to 406°F

Models 218, 228:
60 to 200 psig;
-20° to 406°F

Furnished standard with ANSI rated B16.1 - 250# inlet flange and ANSI rated B16.1 - 125# outlet flange.

Applications

- Fire Pump Service, UL1478 listed and FM approved. (models 218, 228)
- Overpressure relief and protection of pumps, tanks, lines and hydraulic systems.
- Pressure regulation.

Options

- SS trim. (insert and disc) (variation 02)
- Female x Female NPT connections. (1 1/2" to 4" sizes)
- Inlet and outlet flanges per ANSI B16.1 - 125#. Limited to 175 psig maximum set pressure.
- Epoxy-coated internal body and bonnet for corrosive environments. Temperature limit 125°F (52°C).

Notes:

1. Back pressure increases set pressure on a one to one basis, and reduces capacity. Back pressure in excess of 10% of set pressure is not recommended.
2. For other pressure and temperature limits, consult ANSI B16 cast iron flange standards.

 Copyright © 2012 Pentair

Parts and Materials

Model 91[3, 6] - Non-code, Liquid Relief Valve

No.	Part Name	Materials
1	Body	Iron, A126 Class A or B
2	O-ring	BUNA-N
3	Insert	[1]
4	Disc	[1]
5	Spring Step	[2]
6	Spring	Steel, Aluminum Coated
7	Bonnet Gasket	Fiber and Nitrile, Klinger C-4400 or C-4401
8	Hex Head Cap Screw[3]	Steel, SAE Gr. 5
9	Bonnet	Iron, A126 Class A or B
10	Cap Gasket[5]	Fiber and Nitrile, Klinger C-4400 or C-4401
11	Compression Screw Bushing	Iron, A536 80-55-06
12	Jam Nut	[4]
13	Compression Screw	[4]
14	Cap[5]	Iron, A126 Class A or B
15	Socket Set Screw	Steel, Commercial
16	Stem	[2]

Items Not Shown

	Handwheel[5]	Iron, A126 Class A or B
	Handwheel Jam Nut[5]	Steel Plated, Commercial

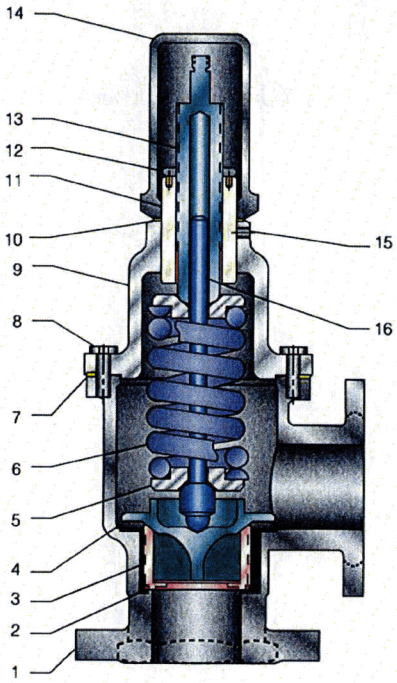

Model 91

Notes:

1. Disc (item 4) and insert (item 3) material Bronze, B-584 Alloy 84400 or B62, also available in SS, A743 Gr. CF-8, as a package option.
2. Material CS with anti-corrosion coating, commercial Gr. or Brass, B16.
3. 6 bolts required for 3" and 4" sizes, and 8 bolts required for 6" size.
4. Material Brass, B16 or Bronze, B584 casting.
5. Handwheel option available, delete cap (item 14) and gasket (item 10).
6. Inlet and outlet flanges per ANSI B16.1 250#, inlet flange standard and 125# inlet flange optional. Outlet flange 125#.

 Copyright © 2012 Pentair

Parts and Materials

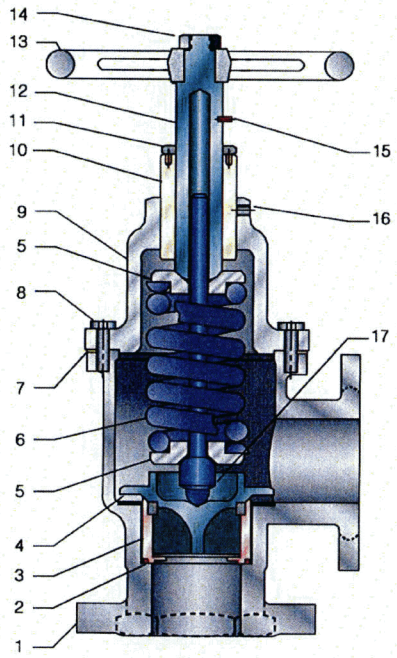

Model 218

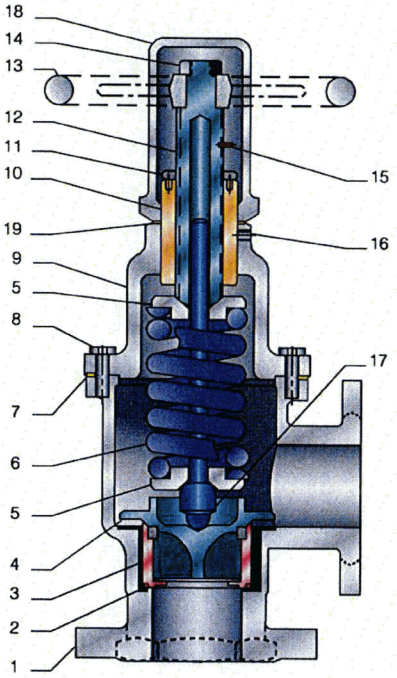

Model 228

Models 218 and 228 - Non-code		
No.	**Part Name**	**Materials**
1	Body[1]	Iron, A126 Class A or B
2	O-ring	BUNA-N
3	Insert	[2]
4	Disc	[2]
5	Spring Step	[3]
6	Spring	Steel, Aluminum Coated
7	Bonnet Gasket	Fiber and Nitrile, Klinger C-4400 or C-4401
8	Hex Head Cap Screw[4]	Steel, SAE Gr.[5]
9	Bonnet	Iron, A126 Class A or B
10	Compression Screw Bushing	Brass, B16
11	Jam Nut	Brass, B16
12	Compression Screw	[5]
13	Handwheel	Iron, A126 Class A or B
14	Handwheel Locknut	Steel Plated, Commercial Gr.
15	Spring Pin	Steel, Commercial Gr.
16	Socket Set Screw	Steel, Commercial Gr.
17	Stem	[3]
	Compression Screw Locknut Wrench[6]	Steel, A366
	Installation Instruction[6]	Paper, Commercial Gr.

Model 228 Only		
18	Cap[7]	Iron, A126 Class A or B
19	Cap Gasket[7]	Gasket, Klinger Silicone C-4400

Notes:

1. Inlet and outlet flanges per ANSI B16.1 250#, inlet flange standard and 125# inlet flange optional. Outlet flange 125#.
2. Disc (item 4) and insert (item 3) material Bronze, B-584 Alloy 84400 or B62, also available in SS, A743 Gr. CF-8, as a package option.
3. Material CS with anti-corrosion coating, commercial Gr., Brass, B16 or SS, A582 TY 416.
4. 6 bolts required for 3" and 4" sizes, and 8 bolts required for 6" size.
5. Material Brass, B16 or Bronze, B584 casting (Model 218 only), B584 Alloy 84400 (Model 228 only).
6. Not shown on assembly.
7. Cap (item 18), Gasket (item 19) and Locknut (item 11) factory installed. Handwheel (item 13) shipped unassembled (Models 218 and 228).

Specifications

Model 91

Model Number	Valve Size (in)	Connections ANSI Standard Inlet	Connections ANSI Standard Outlet	Valve Dimensions in A	Valve Dimensions in B	Valve Dimensions in C	Min/Max Set Pressure (psig)	Approx. Weight (lb)
091A-G	1½ x 1½	Female NPT	Female NPT	4¾	4¼	11⅞	5/400	27
091H-G	1½ x 1½	125# Flange	125# Flange	4¾	4¼	11¼	5/175	36
091K-G	1½ x 1½	250# Flange	125# Flange	5	4¾	11¼	5/400	36
091A-H	2 x 2	Female NPT	Female NPT	4⅛	4⅛	12¾	5/400	35
091H-H	2 x 2	125# Flange	125# Flange	4¾	4⅝	12¾	5/175	47
091K-H	2 x 2	250# Flange	125# Flange	5	4⅝	12¾	5/400	47
091A-J	2½ x 2½	Female NPT	Female NPT	4½	4½	14¼	5/400	48
091H-J	2½ x 2½	125# Flange	125# Flange	5¼	4¾	14¼	5/175	65
091K-J	2½ x 2½	250# Flange	125# Flange	5¼	4¾	14¼	5/400	65
091A-K	3 x 3	Female NPT	Female NPT	5⅞	5⅞	21	5/400	81
091H-K	3 x 3	125# Flange	125# Flange	5⅞	5⅞	21¾	5/175	98
091K-K	3 x 3	250# Flange	125# Flange	6¼	5⅞	21¾	5/400	98
091A-M	4 x 4	Female NPT	Female NPT	6⅝	6½	26	5/400	132
091H-M	4 x 4	125# Flange	125# Flange	6⅝	6½	26	5/175	170
091K-M	4 x 4	250# Flange	125# Flange	6⅝	6½	26	5/400	170
091H-P	6 x 6	125# Flange	125# Flange	9⅜	8½	31	5/175	340
091K-P	6 x 6	250# Flange	125# Flange	9⅜	8½	31	5/300	340

Models 218 and 228

Model Number	Valve Size	Connections ANSI Standard Inlet	Connections ANSI Standard Outlet	Valve Dimensions in A	Valve Dimensions in B	Valve Dimensions in C (218)	Valve Dimensions in C (228)	Min/Max Set Pressure (psig)	Approx. Weight (lb)
2*8A-K[2]	3 x 3	Female NPT	Female NPT	6⅛	5⅞	20⅝	21⅝	60/200	85
2*8H-K[2]	3 x 3	125# Flange	125# Flange	6⅛	5⅞	20⅝	21⅝	60/175	110
2*8K-K[2]	3 x 3	250# Flange	125# Flange	6⅛	5⅞	20⅝	21⅝	60/200	110
2*8A-M[2]	4 x 4	Female NPT	Female NPT	6⅝	6½	25	26	60/200	143
2*8H-M[2]	4 x 4	125# Flange	125# Flange	6⅝	6½	25	26	60/175	185
2*8K-M[2]	4 x 4	250# Flange	125# Flange	6⅝	6½	25	26	60/200	185
2*8H-P[2]	6 x 6	125# Flange	125# Flange	9⅜	8½	30	31	60/175	350
2*8K-P[2]	6 x 6	250# Flange	125# Flange	9⅜	8½	30	31	60/200	350

Dimensions are for reference only.

Notes:

1. Temperature limits -20°F to 406°F.
2. Replace asterisk with desired model number. Data applicable to models 218, 228.

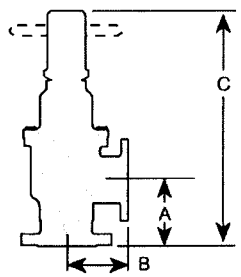

Model 91

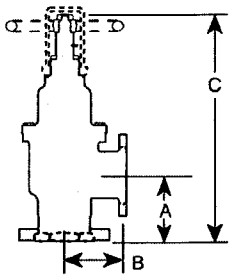

Models 218, 228

 Copyright © 2012 Pentair

Capacities

Liquid Overpressure Factors

To determine capacities at other than 25% overpressure/accumulation, multiply capacity shown by:

10% Acc. = 0.6
15% Acc. = 0.8
20% Acc. = 0.9

Model 218, 228 Capacities

UL/FM Size, in	Certified Capacities1 GPM
3 x 3	500
4 x 4	1000
6 x 6	2000

Note:

1. Rated at 100 psig set pressure and 25% accumulation 125 psig.

Non-code Liquid - 25% Accumulation (GPM) - Model 91 Only

Set Pressure (psig)	Inlet Size 1 1/2"	2"	2 1/2"	3"	4"	6"
5	31	56	87	125	224	447
10	44	79	123	177	316	632
20	63	111	174	250	447	894
30	77	136	213	307	548	1095
40	88	157	246	354	633	1265
50	99	176	275	396	707	1414
60	108	193	301	434	775	1549
70	117	208	325	468	837	1673
80	125	223	348	501	895	1789
90	133	236	369	531	949	1897
100	140	249	389	560	1000	2000
110	147	261	408	587	1049	2097
120	153	273	426	613	1096	2191
130	159	284	443	638	1140	2280
140	165	295	460	663	1183	2366
150	171	305	476	686	1225	2449
160	177	315	492	708	1265	2530
170	182	325	507	730	1304	2607
180	188	334	522	751	1342	2683
190	193	343	536	772	1379	2757
200	198	352	550	792	1414	2828
210	203	361	563	811	1449	2898
220	207	369	577	831	1483	2966
230	212	378	590	849	1517	3033
240	217	386	602	867	1549	3098
250	221	394	615	885	1581	3162
260	225	401	627	903	1613	3225
270	230	409	639	920	1643	3286
280	234	417	650	937	1673	3346
290	238	424	662	954	1703	3406
300	242	431	673	970	1732	3464
310	246	438	684	986	1761	—
320	250	445	695	1002	1789	—
330	254	452	706	1017	1817	—
340	258	459	717	1033	1844	—
350	261	466	727	1048	1871	—
360	265	472	738	1062	1898	—
370	269	479	748	1077	1924	—
380	272	485	758	1092	1950	—
390	276	492	768	1106	1975	—
400	280	498	777	1120	2000	—

Model Number/Order Guide

Model Number Position	1	2	3	4	5	6	7	8	9	10	11	12	13	14	15
Example	0	9	1	K	—	M	0	1	A	M	S	0	4	0	0

Model
091
218
228

Connection Type
A - Female x Female NPT
H - 125# Flange x 125# Flange
K - 250# Flange x 125# Flange

Inlet Size
G - 1½"
H - 2"
J - 2½"
K - 3"
M - 4"
P - 6"

Variation
01 - Catalog standard
02 - SS seat and disc
03 - Model 91 w/handwheel (K, M and P inlet only)
03 - SST Seat, Disc and Stem (Model 218K-P only)
03 - Epoxy coated body and bonnet internal surfaces (all Models except Model 218K-P)
04 - Epoxy coated body and bonnet internal surfaces (Model 218K-P only)

Design Revision
Indicates non-interchangeable revision.
Current Design at Revision "A".

Valve Service
M - Liquid

Spring Material
C - Aluminum Coated, ASTM A231 Steel (G, H, J inlet sizes only)
S - Aluminum Coated, ASTM A229 Steel (K, M, P inlet sizes only)

Set Pressure
0005 - 5 psig
0400 - 400 psig

PENTAIR VALVES & CONTROLS

5500 WAYZATA BLVD # 800, MINNEAPOLIS, MN 55416 WWW.PENTAIR.COM/VALVES
KUNKLE FACILITY PHONE: 1-828-669-3700 • WWW.KUNKLEVALVE.COM
All Pentair trademarks and logos are owned by Pentair, Ltd. All other brand or product names trademarks or registered marks of their respective owners. Because we are continuously improving our products and services, Pentair reserves the right to change specifications without prior notice. Pentair is an equal opportunity employer.

 Copyright © 2012 Pentair

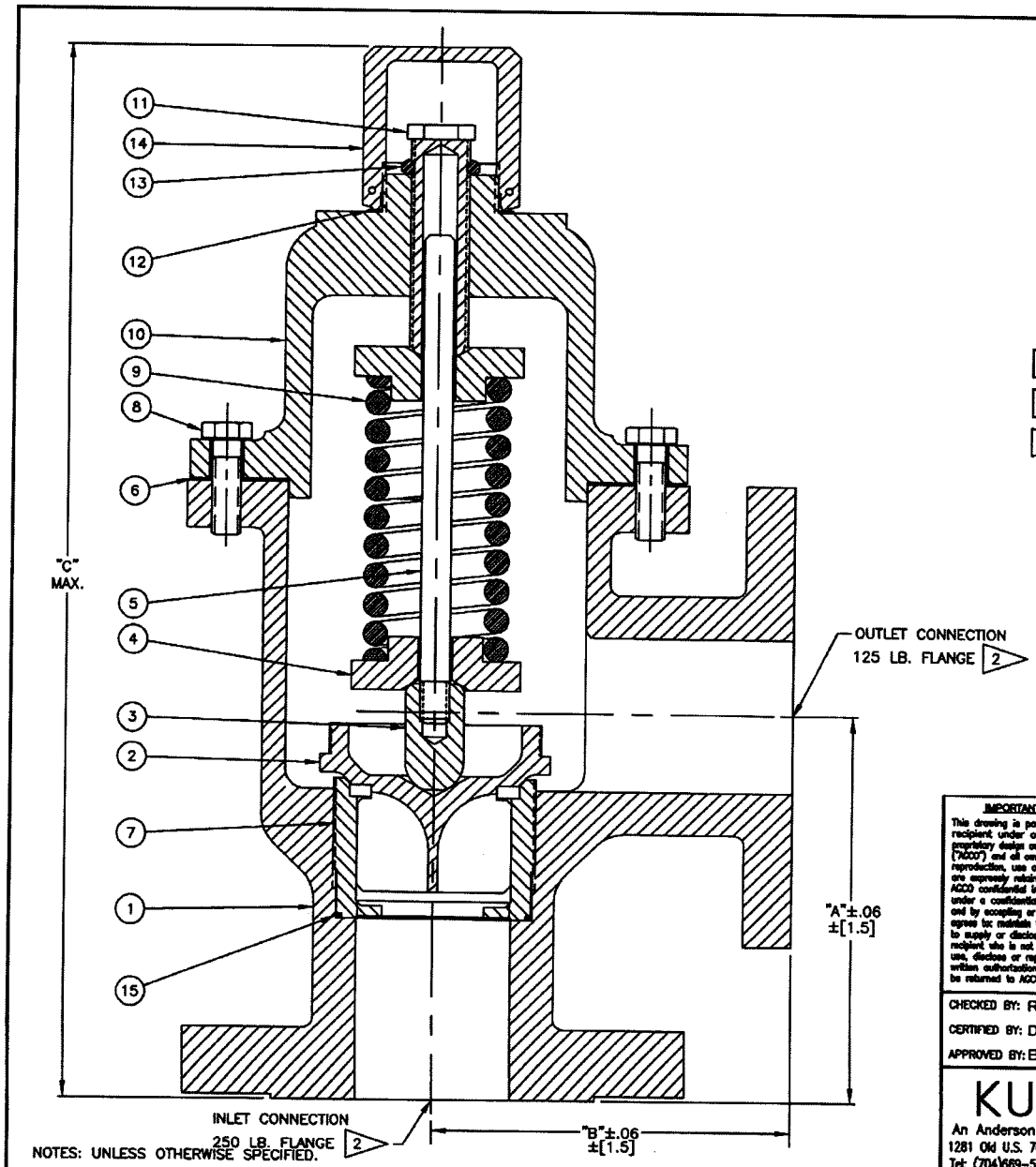

NOTES: UNLESS OTHERWISE SPECIFIED.

ITEM NO	DESCRIPTION	MATERIAL
1	BODY	IRON A126 CLASS A OR B
2	DISC	BRONZE B584 ALY 84400
3	RETAINER-STEM	SST A582-416 COND A
4	STEP-SPRING	STL A108-1018/ZNCO
5	STEM	STL A108-1018/ZNCO
6	GASKET-BONNET	FIBER AND NITRILE
7	INSERT	BRONZE B584 ALY 84400
8	BOLT	STL A193-B7/BK OX
9	SPRING	STL A231
10	BONNET	IRON A126 CLASS A OR B
11	SCREW-PRESSURE	SST A582-416 COND A
12	GASKET-CAP	TEFLON
13	NUT-HEX	SST A582-416 COND A
14	CAP	STL A108-1018/ZNCO
15	SEAL-INSERT	BUNA-N
3 16	NAMEPLATE	ALUMINUM COMMERCIAL
3 17	SCREW-DRIVE	SST 18-8

NOTE:

1 DIMENSIONS ARE IN INCHES, DIMENSIONS IN [ ] ARE MILLIMETERS.

2 FLANGES PER ANSI B16.1, 125 LB. INLET OPTIONAL.

3 THESE PARTS NOT SHOWN.

PRESSURE RATING PSIG [BARS]	TEMPERATURE RATING F° [C°]
400 [27.6]	-20/150 [-29/66]

INLET & OULET SIZE (NPT)	DIMENSIONS 1			WEIGHT LBS [Kg]
	A	B	C	
1-1/2"	5.00 [127.0]	4.62 [117.3]	12.50 [317.5]	35 [15.8]
2"	5.00 [127.0]	4.62 [117.3]	14.00 [355.6]	50 [22.6]
2-1/2"	5.12 [130.0]	4.81 [122.2]	15.13 [384.3]	70 [31.7]

IMPORTANT NOTICE. READ FIRST

This drawing is part of information made available to recipient under obligations of confidentiality on a proprietary design owned by Anderson, Greenwood & Co. ("AGCO") and all ownership, patent, design, manufacturing, reproduction, use and sale rights regarding the same are expressly retained by AGCO. This drawing contains AGCO confidential information and is submitted by AGCO under a confidential relationship for an agreed purpose, and by accepting or reviewing this drawing, the recipient agrees to: maintain this drawing in strict confidence; not to supply or disclose this drawing to any employee or recipient who is not authorized by AGCO; and not otherwise use, disclose or reproduce this drawing without AGCO's written authorization. This drawing and all copies shall be returned to AGCO on request.

CHECKED BY: R.D.P. 11-14-74

CERTIFIED BY: D.A.N. 11-14-74

APPROVED BY: B.A.R. 11-14-74

KUNKLE

An Anderson, Greenwood Company
1281 Old U.S. 70, Black Mountain, NC 28711
Tel: (704)669-5515 Fax: (704)669-4017

CUSTOMER:

ORDER NO.:

CATALOG NO.:

SERIAL NO.:

TAG NO.:

SET PRESSURE:

TITLE:

MODEL 91
1-1/2", 2-1/2" FLANGED

DWG. NO. 3180 REV. 13

SCALE: NONE SHEET 1 OF 1

FILENAME: KUNKLE\3180.DWG

PLOT SCALE: 1/1

VALLEY FARMS
ARSENIC REMOVAL FACILITY
SORB 33® ADSORBER SYSTEM

(1) ONE 8'0" DIA. ADSORBER

SEVERN TRENT SERVICES
PROJECT # 22643

SECTION 6 INSTRUMENTS

A. MAGNETIC FLOWMETERS
B. PRESSURE DIFFERENTIAL SWITCHES
C. PRESSURE GAUGES

VALLEY FARMS
ARSENIC REMOVAL FACILITY
SORB 33® ADSORBER SYSTEM

(1) ONE 8'0" DIA. ADSORBER

SEVERN TRENT SERVICES
PROJECT # 22643

SECTION 6 INSTRUMENTS

A. MAGNETIC FLOWMETERS

MARK	QTY	SIZE	SERVICE
FE/FIT-101A	1	6"	ADSORBER A INFLUENT
FE/FIT-108	1	3"	TREATMENT BYPASS

□□T□□ME□T □□T□ □□EET

E E T E T E E	M ET F W METE				Sheet :	1 OF 1
					Spec:	624-1
	No.	By	Date	Revision	Contract:	22643
Park West One, Suite 600	A	JWS	10/02/14		P. O. #	
Pittsburgh, PA 15275					By:	JWS
(412) 788-8300					Chk:	

1	Meter Tag Number			FE-101A	
2	Service			ADSORBER EAS-A INFLUENT / FEED FLOWMETER	
3	Location			6"	
M 4	CONN'S.	Line Size /Schedule / Material		6"	
E 5		Connection Type / Material		FLANGED	
T 6		Tube Material | Liner Material		304 SS POLYURETHANE	DRINKING WATER
E 7		Electrode Type | Material		FLUSH HAST C	
R 8	METER	Meter Casing		MFG. STD. STEEL	
I 9		Power Supply | Elect. Code		FROM TRANSMITTER	
N 10		Grounding : Type | Material		REQD. 316 SS.	
G 11		Enclosure Class		NEMA 4X	
12		Fluid		CLEAN WATER DRINKING WATER	
E 13		Max. Flow | Max. Velocity		550 GPM	
L 14		Normal Flow | Minimum Flow		190 GPM 0 GPM	
E 15	FLUID	Max. Temp. | Minimum Temp.		95 F 85 F	
M 16		Max. Pressure | Min. Pressure		100 PSIG	
E 17		Min. Fluid Condyctivity		DRINKING WATER	
N 18		Vacuum Possibility		NONE	
T					
A 19	Instrument Tag Number			FIT-101A	
S 20	Function			TRANSMITT INDICATE	
S 21	Mounting			2" PIPE MOUNT / WALL MOUNT	
O 22	Enclosure Class			NEMA 4X	
C 23	length Signal cable			25'-0	
I 24	Type Scan adjustment			N/A	
A 25	Power Supply			120 VAC 60 HZ	
T 26	XMITTER	TOTALIZER	OUTPUT	4-20 MA LOCAL DISPLAY WITH TRANSMITTER	
E 27		Scale Size	Range	CALB. 4-20 MA = 0-800 GPM	
28	DISPLAY			TOTALYZER	
I 29				MUST READ FWD. AND REV. FLOW	
N 30		Integrator		N/A	
S 31	CONTR.	Modes	Output	EMPTY PIPE DETECTION	
T 32		Action	Auto- Man		
R 33		Contact No.	Form		
U 34	ALARM	Rating	Elec. Code		
M 35		Action			
E 36	Manufacturer			ENDRESS HAUSER	
N 37	Meter Model Number			PROMAG 53W SERIES	
T 38	Instrument Model Number			PROMAG 53W SERIES WITH GROUND RINGS	

Notes: NOTE. 1 ENDRESS HAUSER SHALL SUPPLY S.S. TAG BEARING INSTRUMENT TAG NUMBER. DRINKING WATER SERVICE
SUPPLY 25'-0 CABLE FOR REMOTE TRANSMITTER

□□T□□ME□T □□T□ □□EET

E E T E T E E	M ET F W METE				Sheet :	1 OF 1
					Spec:	624-2
	No.	By	Date	Revision	Contract:	22643
Park West One, Suite 600	A	JWS	10/02/14		P. O. #	
Pittsburgh, PA 15275	B	JWS	11/17/14		By:	JWS
(412) 788-8300					Chk:	

	1	Meter Tag Number			FE-108	
	2	Service			BY-PASS FLOWMETER	
	3	Location			3"	
M	4	CONN'S.	Line Size /Schedule / Material		3"	
E	5		Connection Type / Material		FLANGED	
T	6		Tube Material | Liner Material		304 SS POLYURETHANE	DRINKING WATER
E	7		Electrode Type | Material		FLUSH HAST C	
R	8	METER	Meter Casing		MFG. STD. STEEL	
I	9		Power Supply | Elect. Code		FROM TRANSMITTER	
N	10		Grounding : Type | Material		REQD. 316 SS.	
G	11		Enclosure Class		NEMA 4X	
	12		Fluid		CLEAN WATER DRINKING WATER	
E	13		Max. Flow | Max. Velocity		133 GPM	
L	14		Normal Flow | Minimum Flow		60 GPM 30 GPM	
E	15	FLUID	Max. Temp. | Minimum Temp.		95 F 85 F	
M	16		Max. Pressure | Min. Pressure		100 PSIG	
E	17		Min. Fluid Condyctivity		DRINKING WATER	
N	18		Vacuum Possibility		NONE	
T						
A	19	Instrument Tag Number			FIT-108	
S	20	Function			TRANSMITT INDICATE	
S	21	Mounting			2" PIPE MOUNT / WALL MOUNT	
O	22	Enclosure Class			NEMA 4X	
C	23	length Signal cable			25'-0	
I	24	Type Scan adjustment			N/A	
A	25	Power Supply			120 VAC 60 HZ	
T	26	XMITTER	TOTALIZER	OUTPUT	4-20 MA LOCAL DISPLAY WITH TRANSMITTER	
E	27		Scale Size	Range	CALB. 4-20 MA = 0-200 GPM	
	28	DISPLAY			TOTALYZER	
I	29					
N	30		Integrator		N/A	
S	31	CONTR.	Modes	Output	EMPTY PIPE DETECTION	
T	32		Action	Auto- Man		
R	33		Contact No.	Form		
U	34	ALARM	Rating	Elec. Code		
M	35		Action			
E	36	Manufacturer			ENDRESS HAUSER	
N	37	Meter Model Number			PROMAG 53W SERIES	
T	38	Instrument Model Number			PROMAG 53W SERIES WITH GROUND RINGS	

Notes: NOTE. 1 ENDRESS HAUSER SHALL SUPPLY S.S. TAG BEARING INSTRUMENT TAG NUMBER. DRINKING WATER SERVICE
SUPPLY 25'-0 CABLE FOR REMOTE TRANSMITTER

Level Pressure Flow Temperature Liquid Analysis Registration Systems Components Services Solutions

Technical Information

Proline Promag 50W, 53W

Electromagnetic Flow Measuring System
Flow measurement of liquids in water or wastewater applications

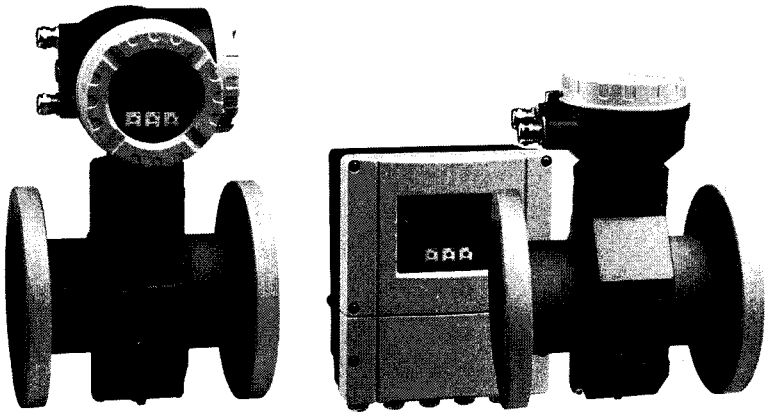

Application

Electromagnetic flowmeter for bidirectional measurement of liquids with a minimum conductivity of ≥ 5 µS/cm:
- Drinking water
- Wastewater
- Sewage sludge

- Flow measurement up to 110000 m³/h (484315 gal/min)
- Fluid temperature up to +80 °C (+176 °F)
- Process pressures up to 40 bar (580 psi)
- Lengths in accordance with DVGW/ISO

Application-specific lining of the measuring pipe from polyurethane or hard rubber with the following drinking water permissions:
- KTW
- WRAS
- NSF
- ACS

Approvals for hazardous area:
- ATEX
- IECEx
- FM
- CSA
- NEPSI

Connection to process control system:
- HART
- PROFIBUS DP/PA
- FOUNDATION Fieldbus
- MODBUS RS485

Your benefits

Promag measuring devices offer you cost-effective flow measurement with a high degree of accuracy for a wide range of process conditions.

The uniform Proline transmitter concept comprises:
- Modular device and operating concept resulting in a higher degree of efficiency
- Software options for batching, electrode cleaning and for measuring pulsating flow
- High degree of reliability and measuring stability
- Uniform operating concept

The tried-and-tested Promag sensors offer:
- No pressure loss
- Not sensitive to vibrations
- Simple installation and commissioning

TI046D/24/en/07.10

Endress+Hauser
People for Process Automation

Table of contents

Function and system design 3
Measuring principle 3
Measuring system 3

Input 4
Measured variable 4
Measuring ranges 4
Operable flow range 4
Input signal 4

Output 4
Output signal 4
Signal on alarm 6
Load 6
Low flow cutoff 6
Galvanic isolation 6
Switching output 6

Power supply 7
Electrical connection, measuring unit 7
Electrical connection, terminal assignment 8
Electrical connection, remote version 9
Supply voltage (power supply) 9
Cable entry 9
Remote version cable specifications 9
Power consumption 10
Power supply failure 10
Potential equalization 11

Performance characteristics 13
Reference operating conditions 13
Maximum measured error 13
Repeatability 13

Operating conditions: Installations 14
Installation instructions 14
Inlet and outlet run 18
Adapters 18
Length of connecting cable 19

Operating conditions: Environment 20
Ambient temperature range 20
Storage temperature 20
Degree of protection 20
Shock and vibration resistance 20
Electromagnetic compatibility (EMC) 20

Operating conditions: Process 21
Medium temperature range 21
Conductivity 21
Medium pressure range (nominal pressure) 21
Pressure tightness 21
Limiting flow 22
Pressure loss 23

Mechanical construction 24
Design, dimensions 24
Weight 37
Measuring tube specifications 39
Material 40
Material load diagram 40
Fitted electrodes 43
Process connections 43
Surface roughness 43

Human interface 43
Display elements 43
Operating elements 43
Language groups 43
Remote operation 43

Certificates and approvals 44
CE mark 44
C-tick mark 44
Pressure measuring device approval 44
Ex approval 44
Other standards and guidelines 44
FOUNDATION Fieldbus certification 44
MODBUS RS485 certification 44
PROFIBUS DP/PA certification 44

Accessories 45

Documentation 45

Registered trademarks 46

Order Codes 47

Function and system design

Measuring principle

Following Faraday's law of magnetic induction, a voltage is induced in a conductor moving through a magnetic field.
In the electromagnetic measuring principle, the flowing medium is the moving conductor.
The voltage induced is proportional to the flow velocity and is supplied to the amplifier by means of two measuring electrodes. The flow volume is calculated by means of the pipe cross-sectional area.
The DC magnetic field is created through a switched direct current of alternating polarity.

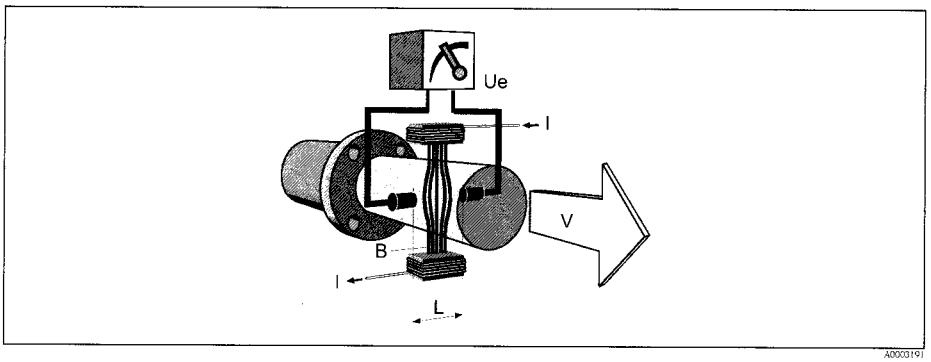

$Ue = B \cdot L \cdot v$
$Q = A \cdot v$

Ue	Induced voltage
B	Magnetic induction (magnetic field)
L	Electrode spacing
v	Flow velocity
Q	Volume flow
A	Pipe cross-section
I	Current strength

Measuring system

The measuring system consists of a transmitter and a sensor.
Two versions are available:
- Compact version: Transmitter and sensor form a mechanical unit.
- Remote version: Sensor is mounted separate from the transmitter.

Transmitter:
- Promag 50 (user interface with push buttons for operation, two-line display, illuminated)
- Promag 53 ("Touch Control" without opening the housing, four-line display, unilluminated)

Sensor:
- Promag W (DN 25 to 2000 / 1 to 78")

Input

Measured variable

Flow velocity (proportional to induced voltage)

Measuring ranges

Measuring ranges for liquids
Typically v = 0.01 to 10 m/s (0.03 to 33 ft/s) with the specified accuracy

Operable flow range

Over 1000 : 1

Input signal

Status input (auxiliary input)
- U = 3 to 30 V DC, R_i = 5 kΩ, galvanically isolated
- Configurable for: totalizer(s) reset, measured value suppression, error-message reset

Status input (auxiliary input) with PROFIBUS DP and MODBUS RS485
- U = 3 to 30 V DC, R_i = 3 kΩ, galvanically isolated
- Switching level: 3 to 30 V DC, independent of polarity
- Configurable for: totalizer(s) reset, measured value suppression, error-message reset, batching start/stop (optional), batch totalizer reset (optional)

Current input (only Promag 53)
- active/passive selectable, galvanically isolated, full scale value selectable, resolution: 3 µA, temperature coefficient: typ. 0.005% o.r./°C (o.r. = of reading)
- active: 4 to 20 mA, $R_i \leq 150\ \Omega$, max. 24 V DC, short-circuit-proof
- passive: 0/4 to 20 mA, $R_i < 150\ \Omega$, max. 30 V DC

Output

Output signal

Promag 50

Current output
active/passive selectable, galvanically isolated, time constant selectable (0.01 to 100 s), full scale value selectable, temperature coefficient: typ. 0.005% o.r./°C (o.r. = of reading), resolution: 0.5 µA
- active: 0/4 to 20 mA, $R_L < 700\ \Omega$ (HART: $R_L \geq 250\ \Omega$)
- passive: 4 to 20 mA, operating voltage V_S: 18 to 30 V DC, $R_i \geq 150\ \Omega$

Pulse/frequency output
passive, open collector, 30 V DC, 250 mA, galvanically isolated
- Frequency output: full scale frequency 2 to 1000 Hz (f_{max} = 1250 Hz), on/off ratio 1:1, pulse width max. 10s
- Pulse output: pulse value and pulse polarity selectable, max. pulse width configurable (0.5 to 2000 ms)

PROFIBUS DP interface
- Transmission technology (Physical Layer): RS485 in accordance with ANSI/TIA/EIA-485-A: 1998, galvanically isolated
- Profil version 3.0
- Data transmission rate: 9,6 kBaud to 12 MBaud
- Automatic data transmission rate recognition
- Function blocks: 1 × analog Input, 1 × totalizer
- Output data: volume flow, totalizer
- Input data: positive zero return (ON/OFF), totalizer control, value for local display
- Cyclic data transmission compatible with previous model Promag 33
- Bus address adjustable via miniature switches or local display (optional) at the measuring device

PROFIBUS PA interface
- Transmission technology (Physical Layer): IEC 61158-2 (MBP), galvanically isolated
- Profil version 3.0
- Current consumption: 11 mA
- Permissible supply voltage: 9 to 32 V
- Bus connection with integrated reverse polarity protection
- Error current FDE (Fault Disconnection Electronic): 0 mA
- Function blocks: 1 × analog input, 2 × totalizer
- Output data: volume flow, totalizer
- Input data: positive zero return (ON/OFF), control totalizer, value for local display
- Cyclic data transmission compatible with previous model Promag 33
- Bus address adjustable via miniature switches or local display (optional) at the measuring device

Promag 53

Current output
active/passive selectable, galvanically isolated, time constant selectable (0.01 to 100 s),
full scale value selectable, temperature coefficient: typ. 0.005% o.r./°C (o.r. = of reading), resolution: 0.5 µA
- active: 0/4 to 20 mA, $R_L < 700\ \Omega$ (HART: $R_L \geq 250\ \Omega$)
- passive: 4 to 20 mA, operating voltage V_S: 18 to 30 V DC, $R_i \geq 150\ \Omega$

Pulse/frequency output
active/passive selectable, galvanically isolated (Ex i version: only passive)
- active: 24 V DC, 25 mA (max. 250 mA during 20 ms), $R_L > 100\ \Omega$
- passive: open collector, 30 V DC, 250 mA
- Frequency output: full scale frequency 2 to 10000 Hz (f_{max} = 12500 Hz), EEx-ia: 2 to 5000 Hz; on/off ratio 1:1, pulse width max. 10 s
- Pulse output: pulse value and pulse polarity selectable, max. pulse width configurable (0.05 to 2000 ms)

PROFIBUS DP interface
- Transmission technology (Physical Layer): RS485 in accordance with ANSI/TIA/EIA-485-A: 1998, galvanically isolated
- Profil version 3.0
- Data transmission rate: 9,6 kBaud to 12 MBaud
- Automatic data transmission rate recognition
- Function blocks: 2 × analog Input, 3 × totalizer
- Output data: volume flow, calculated mass flow, totalizer 1 to 3
- Input data: positive zero return (ON/OFF), totalizer control, value for local display
- Cyclic data transmission compatible with previous model Promag 33
- Bus address adjustable via miniature switches or local display (optional) at the measuring device
- Available output combination → 8

PROFIBUS PA interface
- Transmission technology (Physical Layer): IEC 61158-2 (MBP), galvanically isolated
- Profil version 3.0
- Current consumption: 11 mA
- Permissible supply voltage: 9 to 32 V
- Bus connection with integrated reverse polarity protection
- Error current FDE (Fault Disconnection Electronic): 0 mA
- Function blocks: 2 × analog input, 3 × totalizer
- Output data: volume flow, calculated mass flow, totalizer 1 to 3
- Input data: positive zero return (ON/OFF), totalizer control, value for local display
- Cyclic data transmission compatible with previous model Promag 33
- Bus address adjustable via miniature switches or local display (optional) at the measuring device

MODBUS RS485 interface
- Transmission technology (Physical Layer): RS485 in accordance with ANSI/TIA/EIA-485-A: 1998, galvanically isolated
- MODBUS device type: Slave
- Adress range: 1 to 247
- Bus address adjustable via miniature switches or local display (optional) at the measuring device
- Supported MODBUS function codes: 03, 04, 06, 08, 16, 23
- Broadcast: supported with the function codes 06, 16, 23
- Übertragungsmodus: RTU oder ASCII
- Supported baudrate: 1200, 2400, 4800, 9600, 19200, 38400, 57600, 115200 Baud
- Response time:
  - Direct data access = typically 25 to 50 ms
  - Auto-scan buffer (data range) = typically 3 to 5 ms
- Available output combination → 8

FOUNDATION Fieldbus interface
- FOUNDATION Fieldbus H1
- Transmission technology (Physical Layer): IEC 61158-2 (MBP), galvanically isolated
- ITK version 5.01
- Current consumption: 12 mA
- Error current FDE (Fault Disconnection Electronic): 0 mA
- Bus connection with integrated reverse polarity protection
- Function blocks:
  - 5 × Analog Input (execution time: 18 ms each)
  - 1 × PID (25 ms)
  - 1 × Digital Output (18 ms)
  - 1 × Signal Characterizer (20 ms)
  - 1 × Input Selector (20 ms)
  - 1 × Arithmetic (20 ms)
  - 1 × Integrator (18 ms)
- Output data: volume flow, calculated mass flow, temperature, totalizer 1 to 3
- Input data: positive zero return (ON/OFF), reset totalizer
- Link Master (LM) functionality is supported

Signal on alarm

- Current output → failure response selectable (e.g. in accordance with NAMUR recommendation NE 43)
- Pulse/frequency output → failure response selectable
- Status output (Promag 50) → non-conductive by fault or power supply failure
- Relay output (Promag 53) → de-energized by fault or power supply failure

Load

see "Output signal"

Low flow cutoff

Switch points for low flow cutoff are selectable.

Galvanic isolation

All circuits for inputs, outputs and power supply are galvanically isolated from each other.

Switching output

Status output (Promag 50, Promag 53)
Open collector, max. 30 V DC / 250 mA, galvanically isolated.
Configurable for: error messages, Empty Pipe Detection (EPD), flow direction, limit values.

Relay outputs (Promag 53)
Normally closed (NC or break) or normally open (NO or make) contacts available
(default: relay 1 = NO, relay 2 = NC), max. 30 V / 0,5 A AC ; 60 V / 0,1 A DC, galvanically isolated.
Configurable for: error messages, Empty Pipe Detection (EPD), flow direction, limit values, batching contacts.

Power supply

Electrical connection, measuring unit

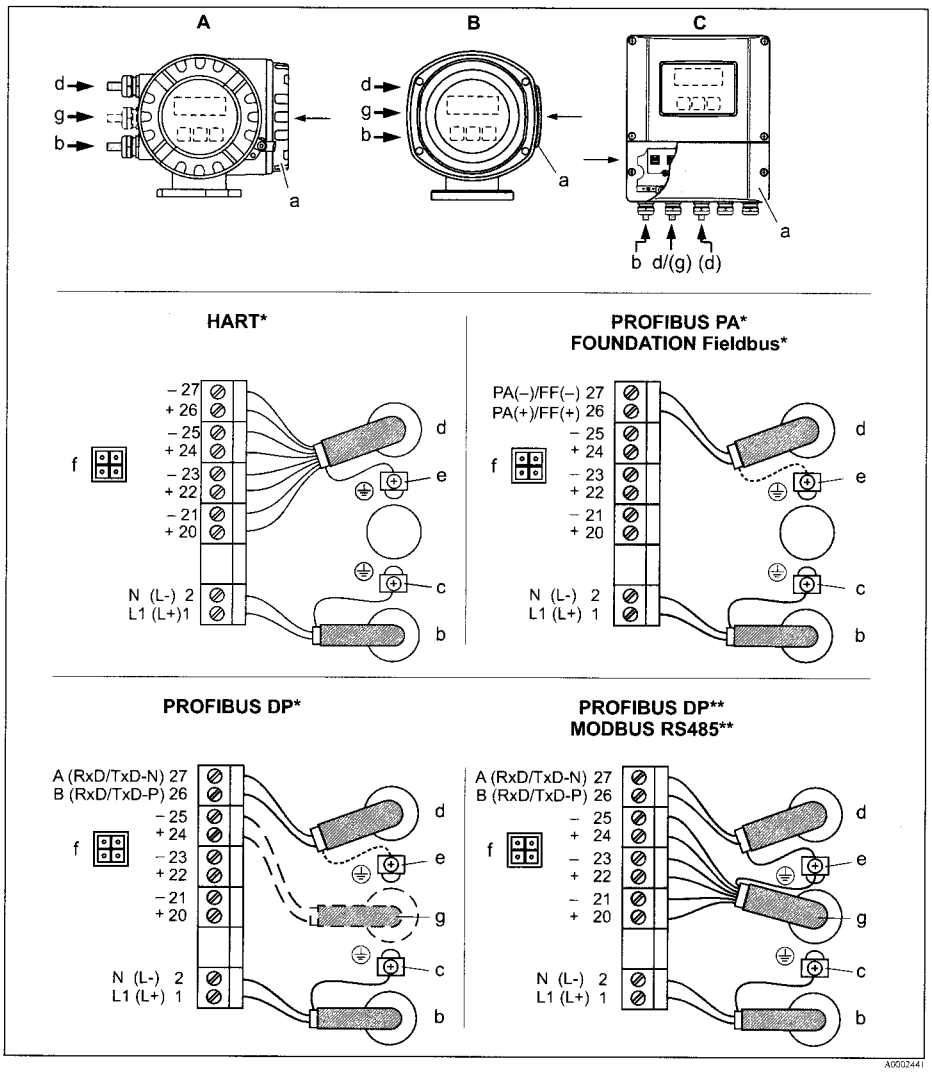

Connecting the transmitter, cable cross-section max. 2.5 mm² (14 AWG)

A View A (field housing)
B View B (stainless steel field housing)
C View C (wall-mount housing)

*) fixed communication boards
**) flexible communication boards
a Connection compartment cover
b Cable for power supply: 85 to 260 V AC / 20 to 55 V AC / 16 to 62 V DC
- Terminal No. 1: L1 for AC, L+ for DC
- Terminal No. 2: N for AC, L– for DC
c Ground terminal for protective conductor
d Signal cable: see "Electrical connection, terminal assignment" → 8
Fieldbus cable:
- Terminal No. 26: DP (B) / PA + / FF + / MODBUS RS485 (B) / (PA, FF: with polarity protection)
- Terminal No. 27: DP (A) / PA – / FF – / MODBUS RS485 (A) / (PA, FF: with polarity protection)
e Ground terminal for signal cable shield / Fieldbus cable / RS485 line
f Service adapter for connecting service interface FXA193 (Fieldcheck, FieldCare)
g Signal cable: see "Electrical connection, terminal assignment" → 8
Cable for external termination (only for PROFIBUS DP with fixed assignment communication board):
- Terminal No. 24: +5 V
- Terminal No. 25: DGND

Electrical connection, terminal assignment

Terminal assignment, Promag 50

Order variant	Terminal No. (inputs/outputs)			
	20 (+) / 21 (–)	22 (+) / 23 (–)	24 (+) / 25 (–)	26 (+) / 27 (–)
50***-**********W	–	–	–	Current output HART
50***-**********A	–	–	Frequency output	Current output HART
50***-**********D	Status input	Status output	Frequency output	Current output HART
50***-**********H	–	–	–	PROFIBUS PA
50***-**********J	–	–	+5 V (external termination)	PROFIBUS DP
50***-**********S	–	–	Frequency output, Ex i, passive	Current output, Ex i, passive, HART
50***-**********T	–	–	Frequency output, Ex i, passive	Current output, Ex i, passive, HART

Ground terminal → 7

Terminal assignment, Promag 53

The inputs and outputs on the communication board can be either permanently assigned or variable, depending on the version ordered (see table). Replacements for modules which are defective or which have to be replaced can be ordered as accessories.

Order variant	Terminal No. (inputs/outputs)			
	20 (+) / 21 (–)	22 (+) / 23 (–)	24 (+) / 25 (–)	26 (+) / 27 (–)
Fixed communication boards (fixed assignment)				
53***-**********A	–	–	Frequency output	Current output HART
53***-**********B	Relay output 2	Relay output 1	Frequency output	Current output HART
53***-**********F	–	–	–	PROFIBUS PA, Ex i
53***-**********G	–	–	–	FOUNDATION Fieldbus, Ex i
53***-**********H	–	–	–	PROFIBUS PA
53***-**********J	–	–	–	PROFIBUS DP
53***-**********K	–	–	–	FOUNDATION Fieldbus
53***-**********Q	–	–	Status input	MODBUS RS485
53***-**********S	–	–	Frequency output, Ex i	Current output, Ex i, passive, HART
53***-**********T	–	–	Frequency output, Ex i	Current output, Ex i, passive, HART
Flexible communication boards				
53***-**********C	Relay output 2	Relay output 1	Frequency output	Current output HART
53***-**********D	Status input	Relay output	Frequency output	Current output HART
53***-**********L	Status input	Relay output 2	Relay output 1	Current output HART
53***-**********M	Status input	Frequency output	Frequency output	Current output HART
53***-**********N	Current output	Frequency output	Status input	MODBUS RS485
53***-**********P	Current output	Frequency output	Status input	PROFIBUS DP
53***-**********V	Relay output 2	Relay output 1	Status input	PROFIBUS DP
53***-**********2	Relay output	Current output	Frequency output	Current output HART
53***-**********4	Current input	Relay output	Frequency output	Current output HART
53***-**********7	Relay output 2	Relay output 1	Status input	MODBUS RS485

Ground terminal → 7

Electrical connection, remote version

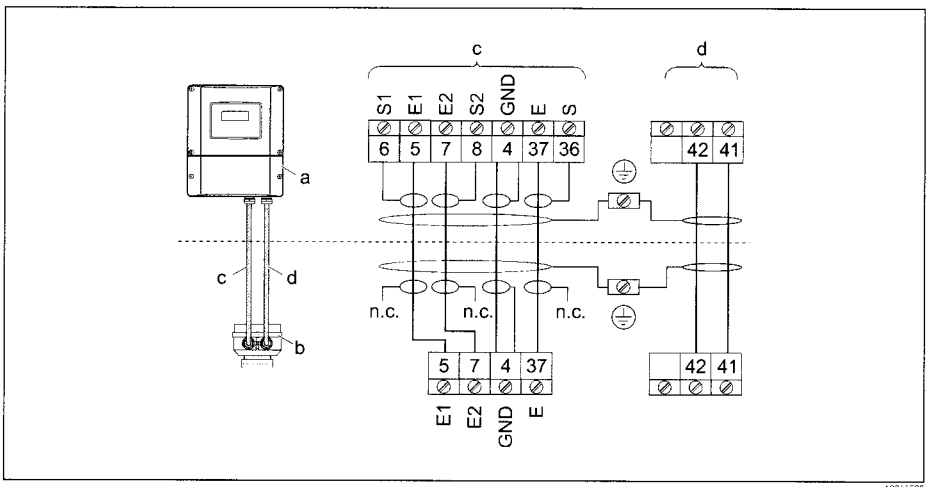

Connecting the remote version

a Wall-mount housing connection compartment
b Sensor connection housing cover
c Signal cable
d Coil current cable
n.c. Not connected, insulated cable shields
Terminal no. and cable colors: 6/5 = brown; 7/8 = white; 4 = green; 36/37 = yellow

Supply voltage (power supply)

- 85 to 260 V AC, 45 to 65 Hz
- 20 to 55 V AC, 45 to 65 Hz
- 16 to 62 V DC

PROFIBUS PA and FOUNDATION Fieldbus
- Non-Ex: 9 to 32 V DC
- Ex i: 9 to 24 V DC
- Ex d: 9 to 32 V DC

Cable entry

Power supply and signal cables (inputs/ outputs):
- Cable entry M20 × 1.5 (8 to 12 mm / 0.31 to 0.47")
- Sensor cable entry for armoured cables M20 × 1.5 (9.5 to 16 mm / 0.37 to 0.63")
- Thread for cable entries, ½" NPT, G ½"

Connecting cable for remote version:
- Cable entry M20 × 1.5 (8 to 12 mm / 0.31 to 0.47")
- Sensor cable entry for armoured cables M20 × 1.5 (9.5 to 16 mm / 0.37 to 0.63")
- Thread for cable entries, ½" NPT, G ½"

Remote version cable specifications

Coil cable
- 2 × 0.75 mm^2 (18 AWG) PVC cable with common, braided copper shield (∅ ~ 7 mm / 0.28")
- Conductor resistance: ≤ 37 Ω/km (≤ 0.011 Ω/ft)
- Capacitance core/core, shield grounded: ≤ 120 pF/m (≤ 37 pF/ft)
- Operating temperature: –20 to +80 °C (–68 to +176 °F)
- Cable cross-section: max. 2.5 mm^2 (14 AWG)
- Test voltage for cable insulation: ≤ 1433 AC r.m.s. 50/60 Hz or ≥ 2026 V DC

Signal cable
- 3 × 0.38 mm^2 (20 AWG) PVC cable with common, braided copper shield (∅ ~ 7 mm / 0.28") and individual shielded cores
- With empty pipe detection (EPD): 4 × 0.38 mm^2 (20 AWG) PVC cable with common, braided copper shield (∅ ~ 7 mm / 0.28") and individual shielded cores
- Conductor resistance: ≤ 50 Ω/km (≤ 0.015 Ω/ft)
- Capacitance core/shield: ≤ 420 pF/m (≤ 128 pF/ft)
- Operating temperature: –20 to +80 °C (–68 to +176 °F)
- Cable cross-section: max. 2.5 mm^2 (14 AWG)

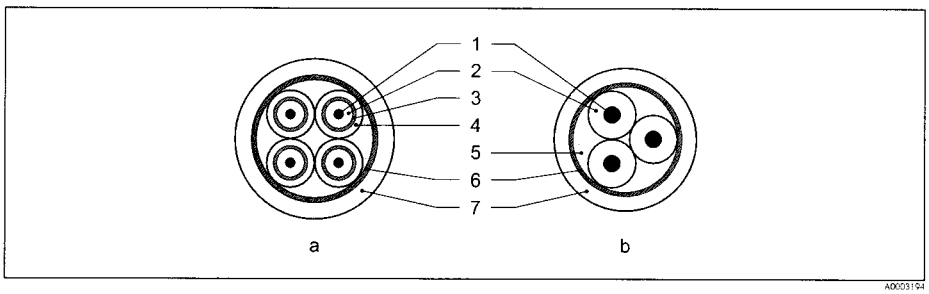

a Signal cable
b Coil current cable

1 Core
2 Core insulation
3 Core shield
4 Core jacket
5 Core reinforcement
6 Cable shield
7 Outer jacket

Operation in zones of severe electrical interference
The measuring device complies with the general safety requirements in accordance with EN 61010 and the EMC requirements of IEC/EN 61326 and NAMUR recommendation NE 21.

Caution!
Grounding is by means of the ground terminals provided for the purpose inside the connection housing. Ensure that the stripped and twisted lengths of cable shield to the ground terminal are as short as possible.

Power consumption

- AC: < 15 VA (incl. sensor)
- DC: < 15 W (incl. sensor)

Switch-on current:
- Max. 3 A (< 5 ms) for 260 V AC
- Max. 13.5 A (< 50 ms) for 24 V DC

Power supply failure

Lasting min. ½ cycle frequency: EEPROM saves measuring system data
- EEPROM or T-DAT (Promag 53 only) retain the measuring system data in the event of a power supply failure
- S-DAT: exchangeable data storage chip which stores the data of the sensor (nominal diameter, serial number, calibration factor, zero point etc.)

Potential equalization

Warning!
The measuring system must be included in the potential equalization.

Perfect measurement is only ensured when the fluid and the sensor have the same electrical potential. This is ensured by the reference electrode integrated in the sensor as standard.

The following should also be taken into consideration for potential equalization:
- Internal grounding concepts in the company
- Operating conditions, such as the material/ grounding of the pipes (see table)

Standard situation

Operating conditions	Potential equalization
When using the measuring device in a: ■ Metal, grounded pipe Potential equalization takes place via the ground terminal of the transmitter. Note! When installing in metal pipes, we recommend you connect the ground terminal of the transmitter housing with the piping.	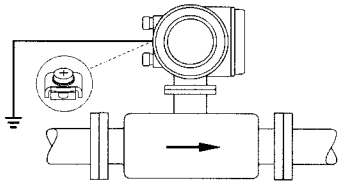 A0011892 Via the ground terminal of the transmitter

Special situations

Operating conditions	Potential equalization
When using the measuring device in a: ■ Metal pipe that is not grounded This connection method also applies in situations where: ■ Customary potential equalization cannot be ensured. ■ Excessively high equalizing currents can be expected. Both sensor flanges are connected to the pipe flange by means of a ground cable (copper wire, at least 6 mm² / 0.0093 in²) and grounded. Connect the transmitter or sensor connection housing, as applicable, to ground potential by means of the ground terminal provided for the purpose. ■ DN ≤ 300 (12"): the ground cable is mounted directly on the conductive flange coating with the flange screws. ■ DN ≥ 350 (14"): the ground cable is mounted directly on the transportation metal support. Note! The ground cable for flange-to-flange connections can be ordered separately as an accessory from Endress+Hauser.	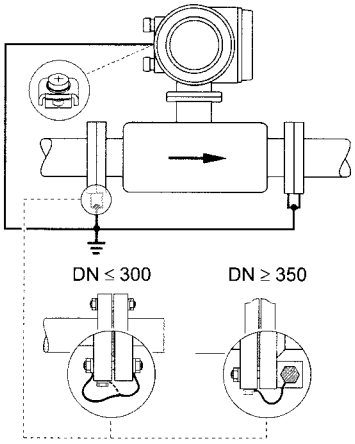 A0011893 Via the ground terminal of the transmitter and the flanges of the pipe
When using the measuring device in a: ■ Plastic pipe ■ Pipe with insulating lining This connection method also applies in situations where: ■ Customary potential equalization cannot be ensured. ■ Excessively high equalizing currents can be expected. Potential equalization takes place using additional ground disks, which are connected to the ground terminal via a ground cable (copper wire, at least 6 mm² / 0.0093 in²). When installing the ground disks, please comply with the enclosed Installation Instructions.	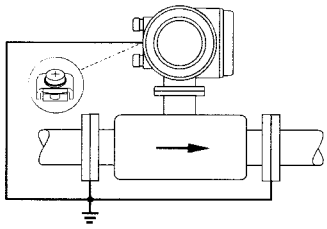 A0011895 Via the ground terminal of the transmitter and the optionally available ground disks

Operating conditions	Potential equalization
When using the measuring device in a: ■ Pipe with a cathodic protection unit The device is installed potential-free in the pipe. Only the two flanges of the pipe are connected with a ground cable (copper wire, at least 6 mm² / 0.0093 in²). Here, the ground cable is mounted directly on the conductive flange coating with flange screws. Note the following when installing: ■ The applicable regulations regarding potential-free installation must be observed. ■ There should be **no** electrically conductive connection between the pipe and the device. ■ The mounting material must withstand the applicable torques.	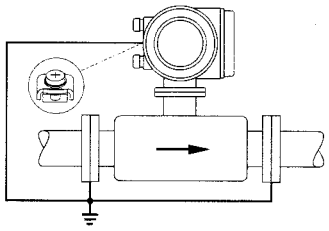 A0031896 Potential equalization and cathodic protection 1 Power supply isolation transformer 2 Electrically isolated

Performance characteristics

Reference operating conditions

As per DIN EN 29104 and VDI/VDE 2641:
- Fluid temperature: +28 °C ± 2 K (+82 °F ± 2 K)
- Ambient temperature: +22 °C ±2 K (+72 °F ± 2 K)
- Warm-up period: 30 minutes

Installation conditions:
- Inlet run > 10 × DN
- Outlet run > 5 × DN
- Sensor and transmitter grounded.
- The sensor is centered in the pipe.

Maximum measured error

Promag 50:
- Current output: also typically ± 5 µA
- Pulse output: ±0.5% o.r. ± 1 mm/s (±0.5% o.r. ± 0.04 in/s)
  optional: ±0.2% o.r. ± 2 mm/s (±0.2% o.r. ± 0.08 in/s) (o.r. = of reading)

Promag 53:
- Current output: also typically ± 5 µA
- Pulse output: ±0.2% o.r. ± 2 mm/s (±0.2% o.r. ± 0.08 in/s) (o.r. = of reading)

Fluctuations in the supply voltage do not have any effect within the specified range.

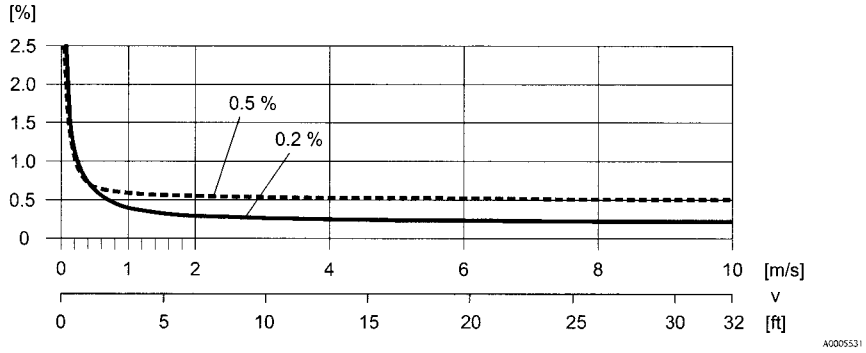

Max. measured error in % of reading

Repeatability

Max. ±0.1% o.r. ± 0.5 mm/s (±0.1% o.r. ± 0.02 in/s) (o.r. = of reading)

Operating conditions: Installations

Installation instructions

Mounting location

Entrained air or gas bubble formation in the measuring tube can result in an increase in measuring errors.
Avoid the following installation locations in the pipe:
- Highest point of a pipeline. Risk of air accumulating!
- Directly upstream from a free pipe outlet in a vertical pipeline.

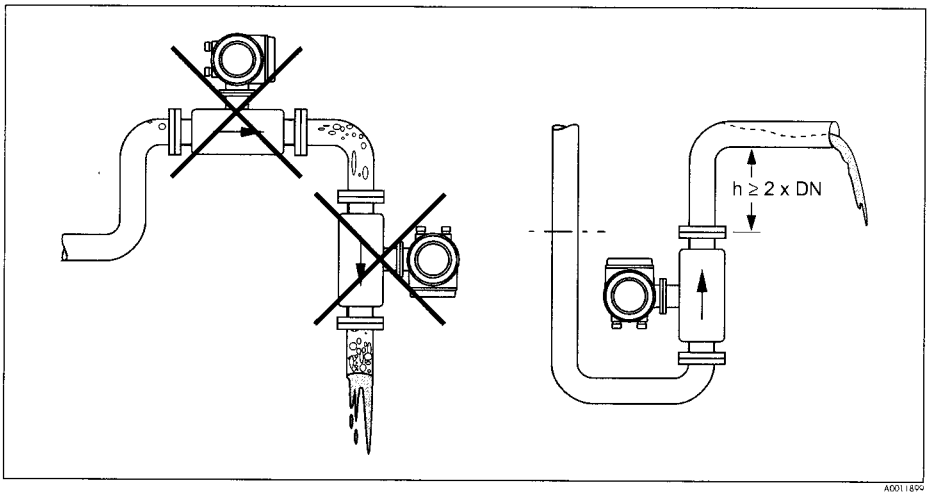

Mounting location

Installation of pumps

Sensors may not be installed on the pump suction side. This precaution is to avoid low pressure and the consequent risk of damage to the lining of the measuring tube. Information on the pressure tightness of the measuring tube lining → 21, Section "Pressure tightness".
Pulsation dampers may be needed when using piston pumps, piston diaphragm pumps or hose pumps. Information on the shock and vibration resistance of the measuring system → 20, Section "Shock and vibration resistance".

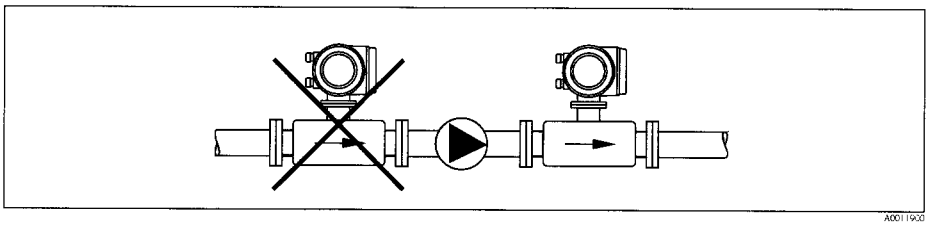

Installation of pumps

Partially filled pipes
Partially filled pipes with gradients necessitate a drain-type configuration.
The empty pipe detection function (EPD) provides additional security in detecting empty or partially filled pipes.

Caution!
Risk of solids accumulating. Do not install the sensor at the lowest point in the drain. It is advisable to install a cleaning valve.

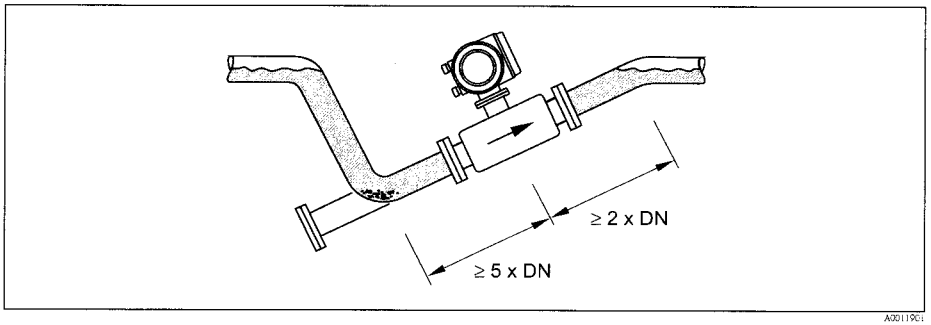

Installation with partially filled pipes

Down pipes
Install a siphon or a vent valve downstream of the sensor in down pipes h ≥ 5 m (16.4 ft). This precaution is to avoid low pressure and the consequent risk of damage to the lining of the measuring tube. This measure also prevents the liquid current stopping in the pipe which could cause air locks. Information on the pressure tightness of the measuring tube lining → 21, Section "Pressure tightness".

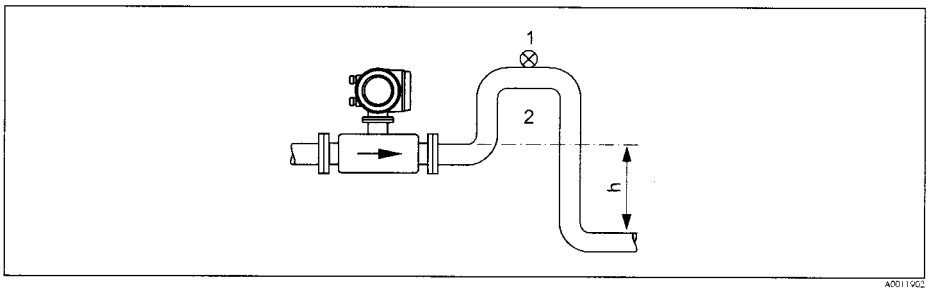

Installation measures for vertical pipes

1 Vent valve
2 Pipe siphon
h Length of the down pipe

Orientation

An optimum orientation helps avoid gas and air accumulations and deposits in the measuring tube. However, the measuring device also offers the additional function of empty pipe detection (EPD) for detecting partially filled measuring tubes or if outgassing fluids or fluctuating operating pressures are present.

Vertical orientation

This is the ideal orientation for self-emptying piping systems and for use in conjunction with empty pipe detection.

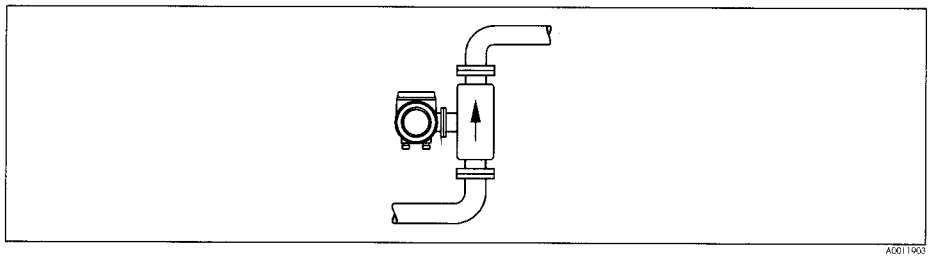

Vertical orientation

Horizontal orientation

The measuring electrode axis should be horizontal. This prevents brief insulation of the two measuring electrodes by entrained air bubbles.

Caution!

Empty pipe detection only works correctly with horizontal orientation if the transmitter housing is facing upwards. Otherwise there is no guarantee that empty pipe detection will respond if the measuring tube is only partially filled or empty.

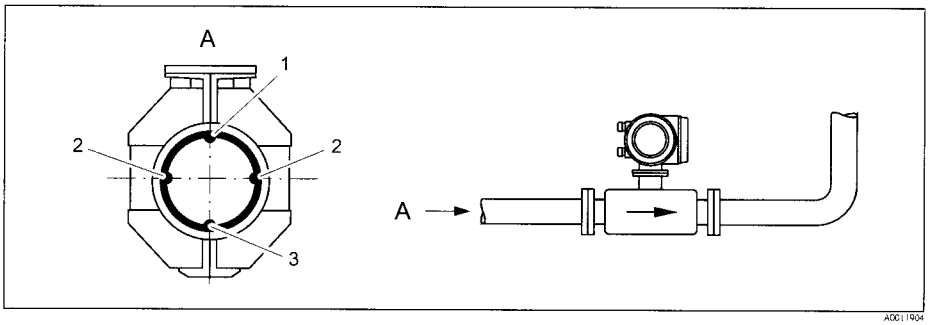

Horizontal orientation

1 EPD electrode for empty pipe detection
2 Measuring electrodes for signal detection
3 Reference electrode for potential equalization

Vibrations
Secure the piping and the sensor if vibration is severe.

Caution!
If vibrations are too severe, we recommend the sensor and transmitter be mounted separately. Information on the permitted shock and vibration resistance → 20, Section "Shock and vibration resistance".

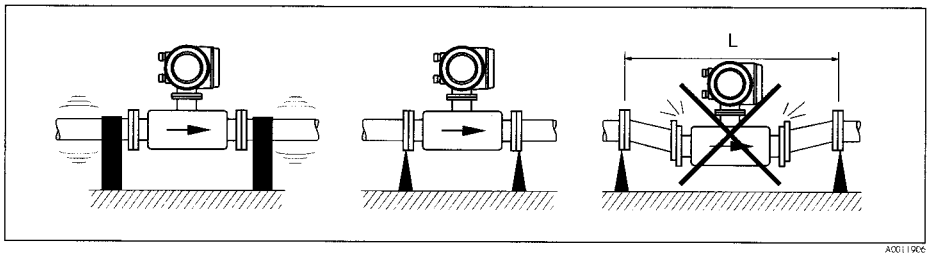

Measures to prevent vibration of the measuring device

L > 10 m (33 ft)

Foundations, supports
If the nominal diameter is DN ≥ 350, mount the transmitter on a foundation of adequate load-bearing strength.

Caution!
Do not allow the casing to take the weight of the sensor. This would buckle the casing and damage the internal magnetic coils.

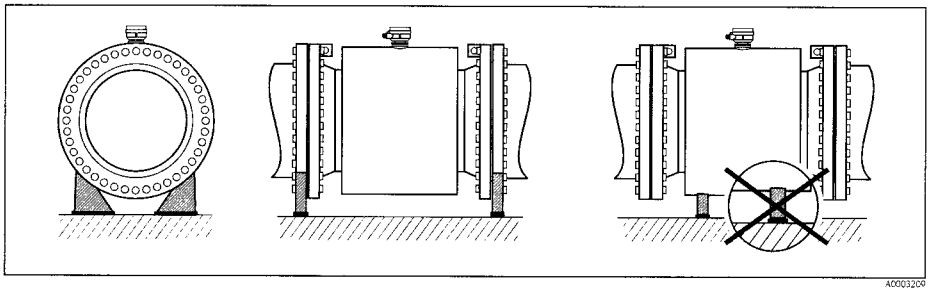

Inlet and outlet run

If possible, install the sensor well clear of assemblies such as valves, T-pieces, elbows etc.

Note the following inlet and outlet runs to comply with measuring accuracy specifications:
- Inlet run: ≥ 5 × DN
- Outlet run: ≥ 2 × DN

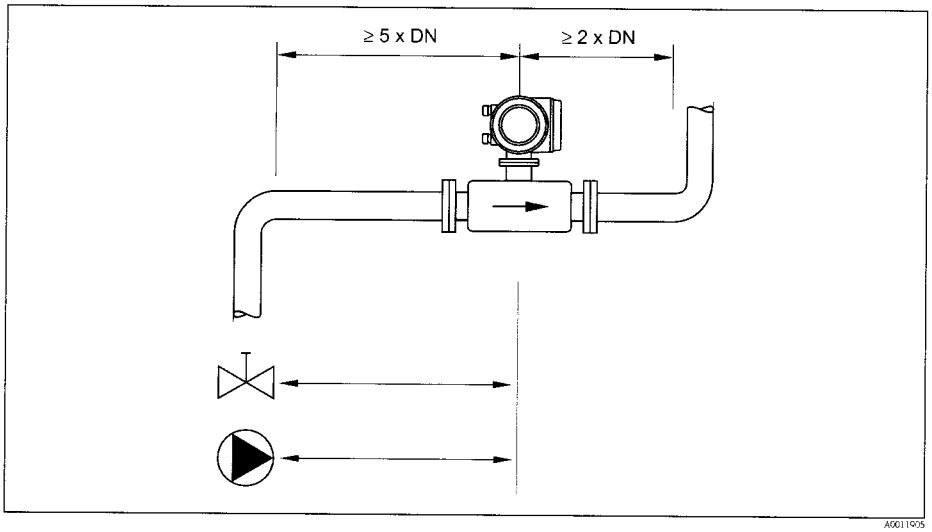

Inlet and outlet run

Adapters

Suitable adapters to DIN EN 545 (double-flange reducers) can be used to install the sensor in larger-diameter pipes. The resultant increase in the rate of flow improves measuring accuracy with very slow-moving fluids. The nomogram shown here can be used to calculate the pressure loss caused by reducers and expanders.

Note!
The nomogram only applies to liquids of viscosity similar to water.

1. Calculate the ratio of the diameters d/D.
2. From the nomogram read off the pressure loss as a function of flow velocity (downstream from the reduction) and the d/D ratio.

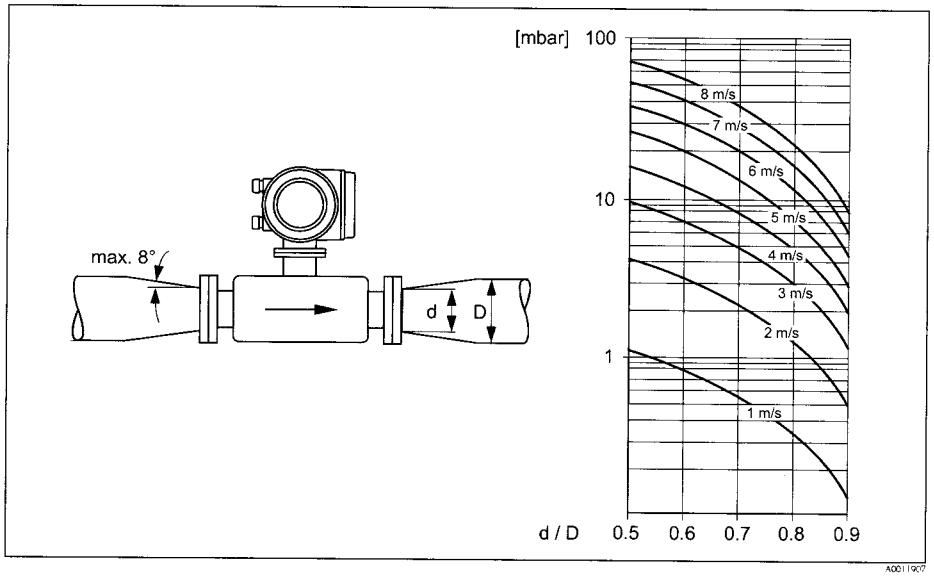

Pressure loss due to adapters

Length of connecting cable

When mounting the remote version, please note the following to achieve correct measuring results:

- Fix cable run or lay in armored conduit. Cable movements can falsify the measuring signal especially in the case of low fluid conductivities.
- Route the cable well clear of electrical machines and switching elements.
- If necessary, ensure potential equalization between sensor and transmitter.
- The permitted cable length L_{max} is determined by the fluid conductivity. A minimum conductivity of 20 µS/cm is required for measuring demineralized water.
- When the empty pipe detection function is switched on (EPD), the maximum connecting cable length is 10 m (33 ft).

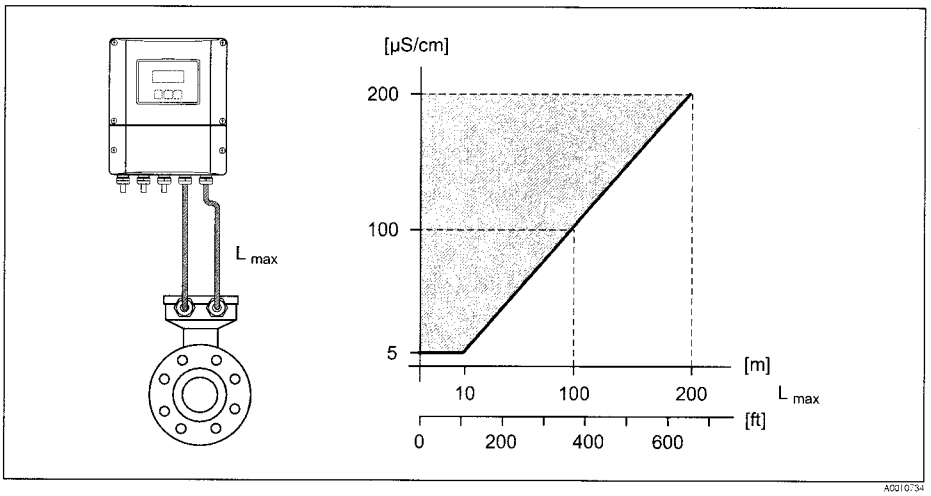

Permitted length of connecting cable for remote version
Area marked in gray = permitted range; L_{max} = length of connecting cable in [m] ([ft]); fluid conductivity in [µS/cm]

Operating conditions: Environment

Ambient temperature range

Transmitter
- Standard: –20 to +60 °C (–4 to +140 °F)
- Optional: –40 to +60 °C (–40 to +140 °F)

Note!
At ambient temperatures below –20 °C (–4 °F)the readability of the display may be impaired.

Sensor
- Flange material carbon steel: –10 to +60 °C (14 to +140 °F)
- Flange material stainless steel: –40 to +60 °C (–40 to +140 °F)

Caution!
The permitted temperature range of the measuring tube lining may not be undershot or overshot
→ 21, Section "Medium temperature range".

Please note the following points:
- Install the device in a shady location. Avoid direct sunlight, particularly in warm climatic regions.
- The transmitter must be mounted separate from the sensor if both the ambient and fluid temperatures are high.

Storage temperature

The storage temperature corresponds to the operating temperature range of the measuring transmitter and the appropriate measuring sensors.

Caution!
- The measuring device must be protected against direct sunlight during storage in order to avoid unacceptably high surface temperatures.
- A storage location must be selected where moisture does not collect in the measuring device. This will help prevent fungus and bacteria infestation which can damage the liner.
- Do not remove the protective plates or caps on the process connections until the device is ready to install.

Degree of protection

- Standard: IP 67 (NEMA 4X) for transmitter and sensor.
- Optional: IP 68 (NEMA 6P) for sensor for remote version.
- For information regarding applications where the device is buried directly in the soil or is installed in a flooded wastewater basin please contact your local Endress+Hauser Sales Center.

Shock and vibration resistance

Acceleration up to 2 g following IEC 600 68-2-6

Electromagnetic compatibility (EMC)

- As per IEC/EN 61326 and NAMUR recommendation NE 21.

Operating conditions: Process

Medium temperature range

The permitted temperature depends on the lining of the measuring tube:
- Polyurethane: –20 to +50 °C (–4 to +122 °F) (DN 25 to 1200 / 1 to 48")
- Hard rubber: ±0 to +80 °C (+32 to +176 °F) (DN 50 to 2000 / 2 to 78")

Conductivity

The minimum conductivity is:
- ≥ 5 µS/cm for fluids generally
- ≥ 20 µS/cm for demineralized water

Note!
In the remote version, the necessary minimum conductivity also depends on the cable length (→ 19, Section "Length of connecting cable").

Medium pressure range (nominal pressure)

- EN 1092-1 (DIN 2501)
  - PN 6 (DN 350 to 2000 / 14 to 78")
  - PN 10 (DN 200 to 2000 / 8 to 78")
  - PN 16 (DN 65 to 2000 / 3 to 78")
  - PN 25 (DN 200 to 1000 / 8 to 40")
  - PN 40 (DN 25 to 150 / 1 to 6")
- ANSI B 16.5
  - Class 150 (DN 1 to 24")
  - Class 300 (DN 1 to 6")
- AWWA
  - Class D (DN 28 to 78")
- JIS B2220
  - 10 K (DN 50 to 300 / 2 to 12")
  - 20 K (DN 25 to 300 / 1 to 12")
- AS 2129
  - Table E (DN 80, 100, 150 to 400, 500, 600 / 3", 4", 6 to 16", 20", 24")
- AS 4087
  - PN 16 (DN 80, 100, 150 to 400, 500, 600 / 3", 4", 6 to 16", 20", 24")

Pressure tightness

Measuring tube lining: Polyurethane

Nominal diameter		Limit values for abs. pressure [mbar] ([psi]) at fluid temperatures:			
		25 °C (77 °F)		50 °C (122 °F)	
[mm]	[inch]	[mbar]	[psi]	[mbar]	[psi]
25 to 1200	1 to 48"	0	0	0	0

Measuring tube lining: Hard rubber

Nominal diameter		Limit values for abs. pressure [mbar] ([psi]) at fluid temperatures:					
		25 °C (77 °F)		50 °C (122 °F)		80 °C (176 °F)	
[mm]	[inch]	[mbar]	[psi]	[mbar]	[psi]	[mbar]	[psi]
50 to 2000	2 to 78"	0	0	0	0	0	0

Limiting flow

The diameter of the pipe and the flow rate determine the nominal diameter of the sensor.
The optimum flow velocity is between 2 to 3 m/s (6.5 to 9.8 ft/s). The velocity of flow (v), moreover, has to be matched to the physical properties of the fluid:

- v < 2 m/s (6.5 ft/s): for abrasive fluids such as potter's clay, lime milk, ore slurry etc.
- v > 2 m/s (6.5 ft/s): for fluids causing build-up such as wastewater sludges etc.

Flow characteristic values (SI units)

Diameter		Recommended flow	Factory settings		
[mm]	[inch]	Min./max. full scale value (v ~ 0.3 or 10 m/s)	Full scale value Current output (v ~ 2.5 m/s)	Pulse value (~ 2 pulses/s)	Low flow (v ~ 0.04 m/s)
25	1"	9 to 300 dm^3/min	75 dm^3/min	0.50 dm^3	1 dm^3/min
32	–	15 to 500 dm^3/min	125 dm^3/min	1.00 dm^3	2 dm^3/min
40	1½"	25 to 700 dm^3/min	200 dm^3/min	1.50 dm^3	3 dm^3/min
50	2"	35 to 1100 dm^3/min	300 dm^3/min	2.50 dm^3	5 dm^3/min
65	–	60 to 2000 dm^3/min	500 dm^3/min	5.00 dm^3	8 dm^3/min
80	3"	90 to 3000 dm^3/min	750 dm^3/min	5.00 dm^3	12 dm^3/min
100	4"	145 to 4700 dm^3/min	1200 dm^3/min	10.00 dm^3	20 dm^3/min
125	–	220 to 7500 dm^3/min	1850 dm^3/min	15.00 dm^3	30 dm^3/min
150	6"	20 to 600 m^3/h	150 m^3/h	0.025 m^3	2.5 m^3/h
200	8"	35 to 1100 m^3/h	300 m^3/h	0.05 m^3	5.0 m^3/h
250	10"	55 to 1700 m^3/h	500 m^3/h	0.05 m^3	7.5 m^3/h
300	12"	80 to 2400 m^3/h	750 m^3/h	0.10 m^3	10 m^3/h
350	14"	110 to 3300 m^3/h	1000 m^3/h	0.10 m^3	15 m^3/h
375	15"	140 to 4200 m^3/h	1200 m^3/h	0.15 m^3	20 m^3/h
400	16"	140 to 4200 m^3/h	1200 m^3/h	0.15 m^3	20 m^3/h
450	18"	180 to 5400 m^3/h	1500 m^3/h	0.25 m^3	25 m^3/h
500	20"	220 to 6600 m^3/h	2000 m^3/h	0.25 m^3	30 m^3/h
600	24"	310 to 9600 m^3/h	2500 m^3/h	0.30 m^3	40 m^3/h
700	28"	420 to 13500 m^3/h	3500 m^3/h	0.50 m^3	50 m^3/h
–	30"	480 to 15000 m^3/h	4000 m^3/h	0.50 m^3	60 m^3/h
800	32"	550 to 18000 m^3/h	4500 m^3/h	0.75 m^3	75 m^3/h
900	36"	690 to 22500 m^3/h	6000 m^3/h	0.75 m^3	100 m^3/h
1000	40"	850 to 28000 m^3/h	7000 m^3/h	1.00 m^3	125 m^3/h
–	42"	950 to 30000 m^3/h	8000 m^3/h	1.00 m^3	125 m^3/h
1200	48"	1250 to 40000 m^3/h	10000 m^3/h	1.50 m^3	150 m^3/h
–	54"	1550 to 50000 m^3/h	13000 m^3/h	1.50 m^3	200 m^3/h
1400	–	1700 to 55000 m^3/h	14000 m^3/h	2.00 m^3	225 m^3/h
–	60"	1950 to 60000 m^3/h	16000 m^3/h	2.00 m^3	250 m^3/h
1600	–	2200 to 70000 m^3/h	18000 m^3/h	2.50 m^3	300 m^3/h
–	66"	2500 to 80000 m^3/h	20500 m^3/h	2.50 m^3	325 m^3/h
1800	72"	2800 to 90000 m^3/h	23000 m^3/h	3.00 m^3	350 m^3/h
–	78"	3300 to 100000 m^3/h	28500 m^3/h	3.50 m^3	450 m^3/h
2000	–	3400 to 110000 m^3/h	28500 m^3/h	3.50 m^3	450 m^3/h

Flow characteristic values (US units)					
Diameter		Recommended flow rate	Factory settings		
[inch]	[mm]	Min./max. full scale value (v ~ 0.3 or 10 m/s)	Full scale value Current output (v ~ 2.5 m/s)	Pulse value (~ 2 pulses/s)	Low flow (v ~ 0.04 m/s)
1"	25	2.5 to 80 gal/min	18 gal/min	0.20 gal	0.25 gal/min
–	32	4 to 130 gal/min	30 gal/min	0.20 gal	0.50 gal/min
1½"	40	7 to 190 gal/min	50 gal/min	0.50 gal	0.75 gal/min
2"	50	10 to 300 gal/min	75 gal/min	0.50 gal	1.25 gal/min
–	65	16 to 500 gal/min	130 gal/min	1 gal	2.0 gal/min
3"	80	24 to 800 gal/min	200 gal/min	2 gal	2.5 gal/min
4"	100	40 to 1250 gal/min	300 gal/min	2 gal	4.0 gal/min
–	125	60 to 1950 gal/min	450 gal/min	5 gal	7.0 gal/min
6"	150	90 to 2650 gal/min	600 gal/min	5 gal	12 gal/min
8"	200	155 to 4850 gal/min	1200 gal/min	10 gal	15 gal/min
10"	250	250 to 7500 gal/min	1500 gal/min	15 gal	30 gal/min
12"	300	350 to 10600 gal/min	2400 gal/min	25 gal	45 gal/min
14"	350	500 to 15000 gal/min	3600 gal/min	30 gal	60 gal/min
15"	375	600 to 19000 gal/min	4800 gal/min	50 gal	60 gal/min
16"	400	600 to 19000 gal/min	4800 gal/min	50 gal	60 gal/min
18"	450	800 to 24000 gal/min	6000 gal/min	50 gal	90 gal/min
20"	500	1000 to 30000 gal/min	7500 gal/min	75 gal	120 gal/min
24"	600	1400 to 44000 gal/min	10500 gal/min	100 gal	180 gal/min
28"	700	1900 to 60000 gal/min	13500 gal/min	125 gal	210 gal/min
30"	–	2150 to 67000 gal/min	16500 gal/min	150 gal	270 gal/min
32"	800	2450 to 80000 gal/min	19500 gal/min	200 gal	300 gal/min
36"	900	3100 to 100000 gal/min	24000 gal/min	225 gal	360 gal/min
40"	1000	3800 to 125000 gal/min	30000 gal/min	250 gal	480 gal/min
42"	–	4200 to 135000 gal/min	33000 gal/min	250 gal	600 gal/min
48"	1200	5500 to 175000 gal/min	42000 gal/min	400 gal	600 gal/min
54"	–	9 to 300 Mgal/min	75 Mgal/min	0.0005 Mgal	1.3 Mgal/min
–	1400	10 to 340 Mgal/min	85 Mgal/min	0.0005 Mgal	1.3 Mgal/min
60"	–	12 to 380 Mgal/min	95 Mgal/min	0.0005 Mgal	1.3 Mgal/min
–	1600	13 to 450 Mgal/min	110 Mgal/min	0.0008 Mgal	1.7 Mgal/min
66"	–	14 to 500 Mgal/min	120 Mgal/min	0.0008 Mgal	2.2 Mgal/min
72"	1800	16 to 570 Mgal/min	140 Mgal/min	0.0008 Mgal	2.6 Mgal/min
78"	–	18 to 650 Mgal/min	175 Mgal/min	0.001 Mgal	3.0 Mgal/min
–	2000	20 to 700 Mgal/min	175 Mgal/min	0.001 Mgal	3.0 Mgal/min

Pressure loss

- No pressure loss if the sensor is installed in a pipe with the same nominal diameter.
- Pressure losses for configurations incorporating adapters according to DIN EN 545 (→ 18, Section "Adapters").

Mechanical construction

Design, dimensions

Transmitter remote version, wall-mount housing (non Ex-zone and II3G/Zone 2)

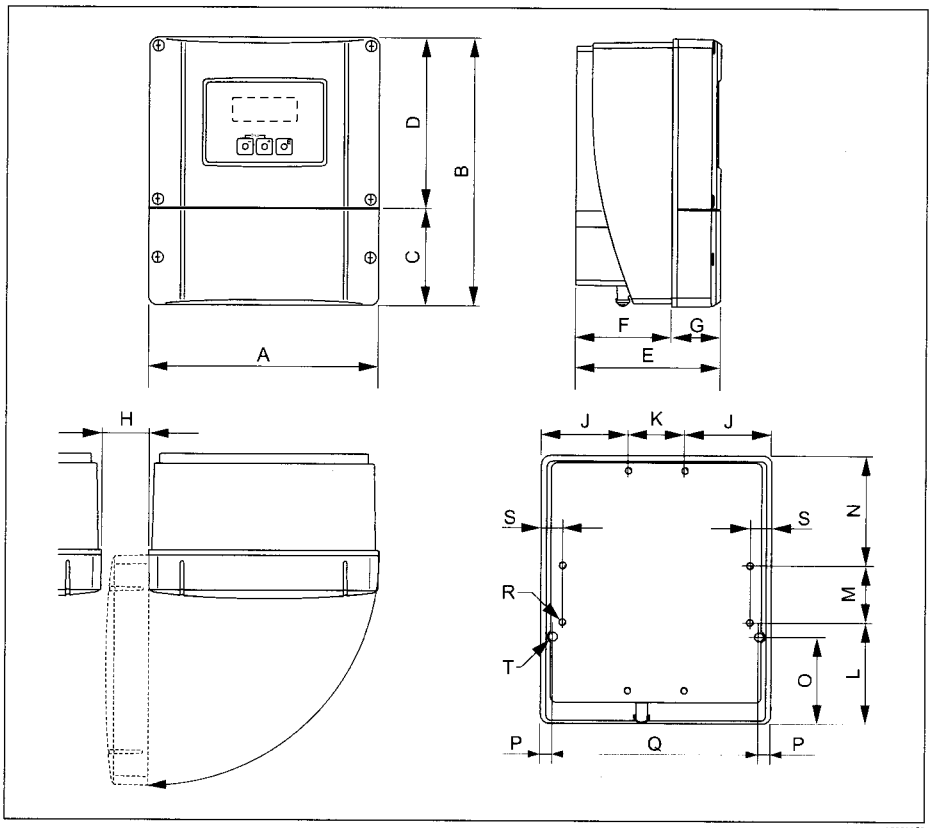

Dimensions (SI units)

A	B	C	D	E	F	G	H	J
215	250	90.5	159.5	135	90	45	> 50	81
K	L	M	N	O	P	Q	R	S
53	95	53	102	81.5	11.5	192	8 × M5	20

All dimensions in [mm]

Dimensions (US units)

A	B	C	D	E	F	G	H	J
8.46	9.84	3.56	6.27	5.31	3.54	1.77	> 1.97	3.18
K	L	M	N	O	P	Q	R	S
2.08	3.74	2.08	4.01	3.20	0.45	7.55	8 × M5	0.79

All dimensions in [inch]

Transmitter remote version, connection housing (II2GD/Zone 1)

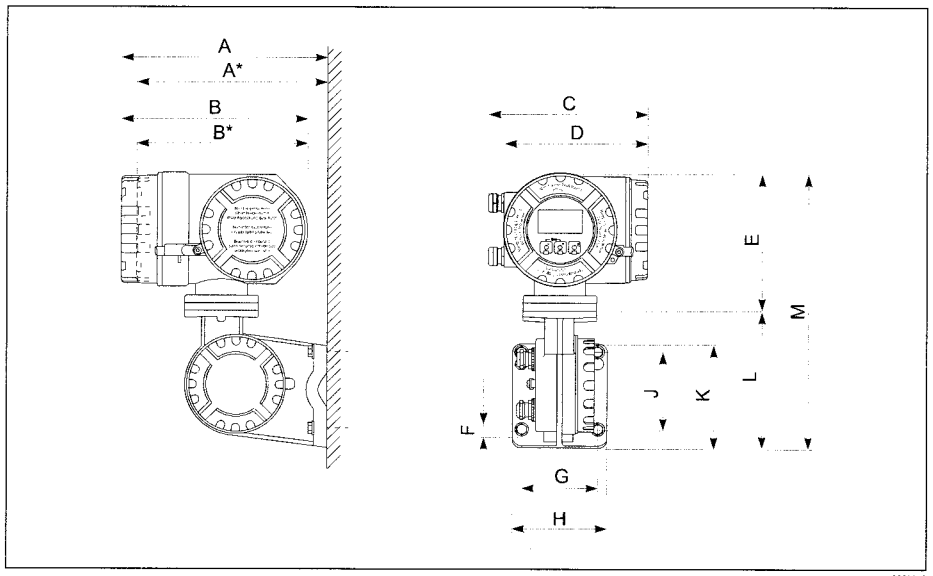

Dimensions (SI units)

A	A*	B	B*	C	D	E	ØF	G	H	J	K	L	M
265	242	240	217	206	186	178	8.6 (M8)	100	130	100	144	170	355

All dimensions in [mm]

Dimensions (US units)

A	A*	B	B*	C	D	E	ØF	G	H	J	K	L	M
10.4	9.53	9.45	8.54	8.11	7.32	7.01	0.34 (M8)	3.94	5.12	3.94	5.67	6.69	14.0

All dimensions in [inch]

There is a separate mounting kit for the wall-mounted housing. It can be ordered from Endress+Hauser as an accessory. The following installation variants are possible:
- Panel-mounted installation
- Pipe mounting

Installation in control panel

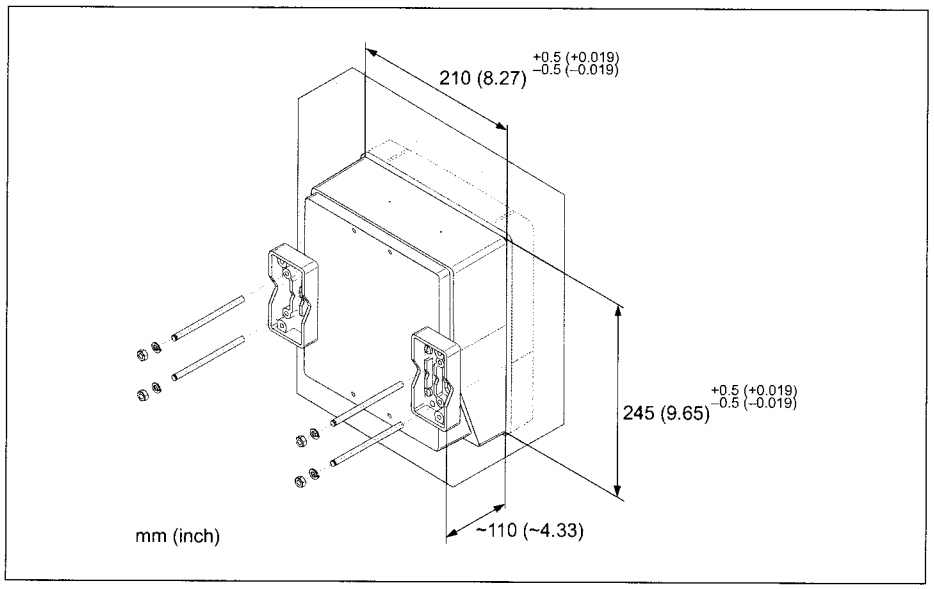

A0001131

Pipe mounting

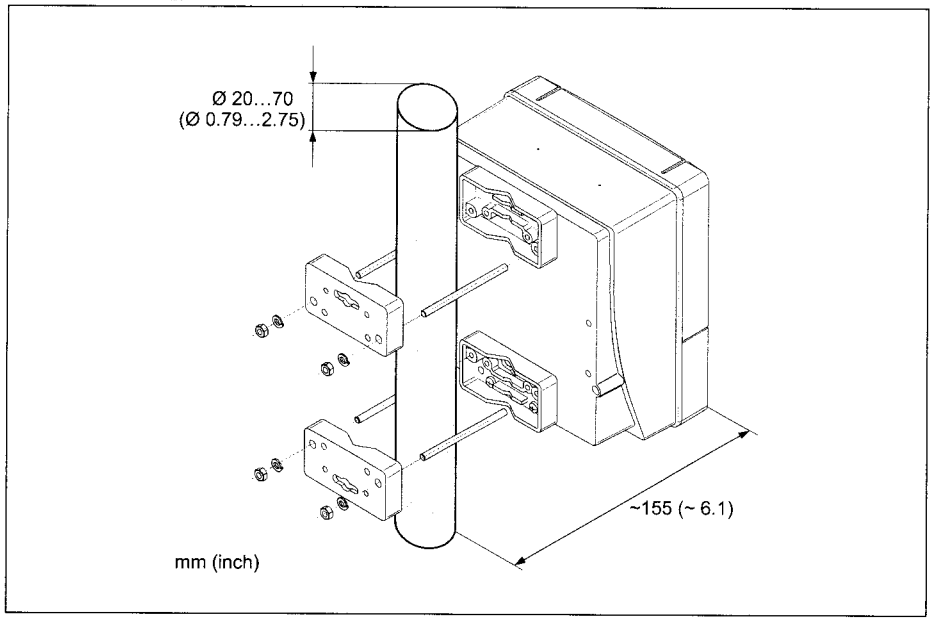

A0001132

Compact version DN ≤ 300 (12")

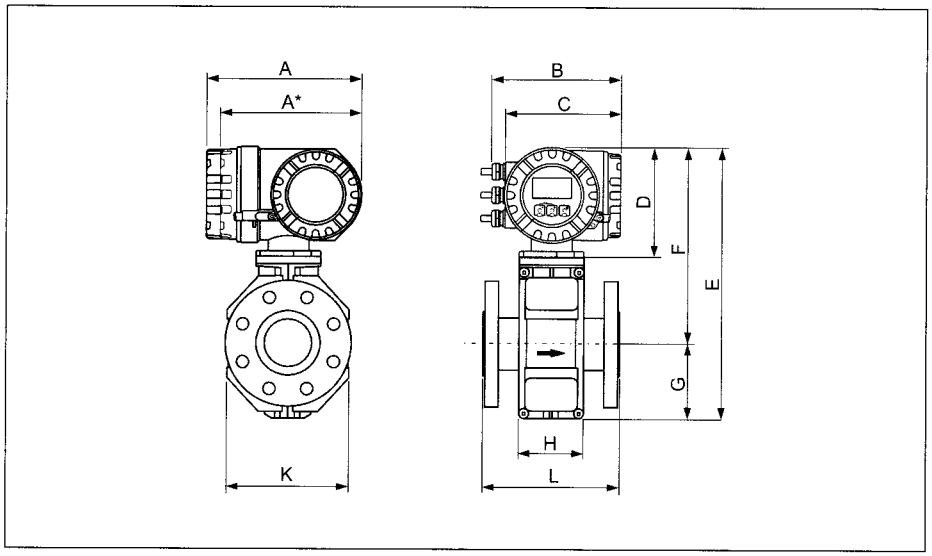

Dimensions (SI units)

DN EN (DIN) / JIS / AS [2]	L [1]	A	A*	B	C	D	E	F	G	H	K
25	200	227	207	187	168	160	341	257	84	94	120
32	200						341	257	84	94	120
40	200						341	257	84	94	120
50	200						341	257	84	94	120
65	200						391	282	109	94	180
80	200						391	282	109	94	180
100	250						391	282	109	94	180
125	250						472	322	150	140	260
150	300						472	322	150	140	260
200	350						527	347	180	156	324
250	450						577	372	205	166	400
300	500						627	397	230	166	460

[1] The length is regardless of the pressure rating selected. Fitting length to DVGW.
[2] For flanges to AS, only the nominal diameters DN 80, 100 and 150 to 300 are available.
All dimensions in [mm]

Dimensions (US units)

DN ANSI	L [1]	A	A*	B	C	D	E	F	G	H	K
1"	7.87						13.4	10.1	3.31	3.70	4.72
1½"	7.87						13.4	10.1	3.31	3.70	4.72
2"	7.87						13.4	10.1	3.31	3.70	4.72
3"	7.87						15.4	11.1	4.29	3.70	7.09
4"	9.84	8.94	8.15	7.36	6.61	6.30	15.4	11.1	4.29	3.70	7.09
6"	11.8						18.6	12.7	5.91	5.51	10.2
8"	13.8						20.8	13.7	7.09	6.14	12.8
10"	17.7						22.7	14.7	8.07	6.14	15.8
12"	19.7						24.7	15.6	9.06	6.54	18.1

[1] The length is regardless of the pressure rating selected. Fitting length to DVGW.
All dimensions in [inch]

Compact version DN ≥ 350 (14")

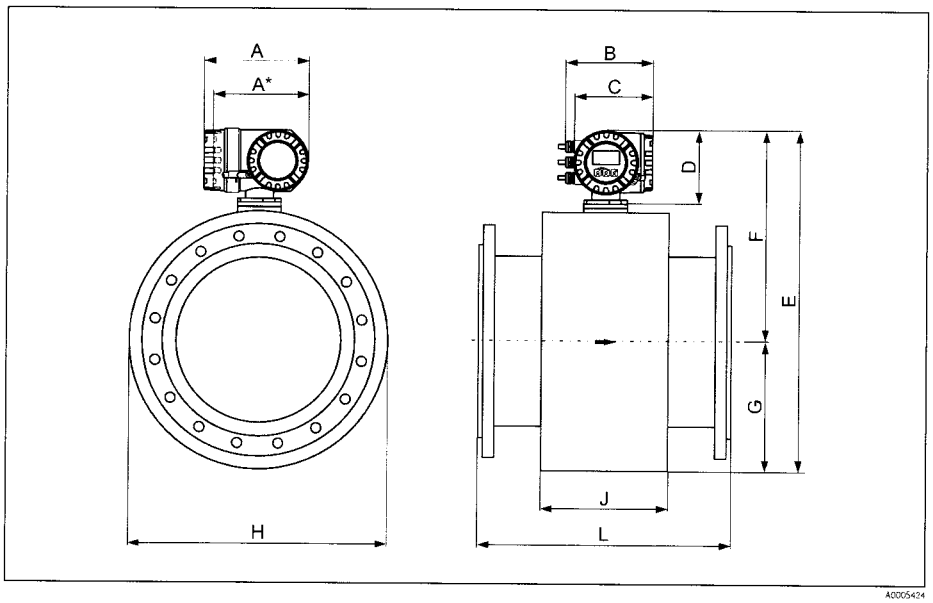

A0005424

Dimensions (SI units)

DN EN (DIN) / AS [2]	L [1]	A	A*	B	C	D	E	F	G	H	J
350	550	227	207	187	168	160	738.5	456.5	282.0	276	564
375	600						790.5	482.5	308.0	276	616
400	600						790.5	482.5	308.0	276	616
450	650						840.5	507.5	333.0	292	666
500	650						891.5	533.0	358.5	292	717
600	780						995.5	585.0	410.5	402	821
700	910						1198.5	686.5	512.0	589	1024
750	975						1198.5	686.5	512.0	626	1024
800	1040						1241.5	708.5	533.5	647	1067
900	1170						1394.5	784.5	610.0	785	1220
1000	1300						1546.5	860.5	686.0	862	1372
1050	1365						1598.5	886.5	712.0	912	1424
1200	1560						1796.5	985.5	811.0	992	1622
1350	1755						1998.5	1086.5	912.0	1252	1824
1400	1820						2148.5	1161.5	987.0	1252	1974
1500	1950						2196.5	1185.5	1011.0	1392	2022
1600	2080						2286.5	1230.5	1056.0	1482	2112
1650	2145						2360.5	1267.5	1093.0	1482	2186
1800	2340						2550.5	1362.5	1188.0	1632	2376
2000	2600						2650.5	1412.5	1238.0	1732	2476

[1] The length is regardless of the pressure rating selected. Fitting length to DVGW.
[2] For flanges to AS, only DN 350, 400, 500 and 600 are available.
All dimensions in [mm]

Dimensions (US units)

DN ANSI / AWWA [2]	L [1]	A	A*	B	C	D	E	F	G	H	J
14"	21.6	8.94	8.15	7.36	6.61	6.30	29.1	17.9	11.1	10.9	22.2
15"	23.6						31.1	18.9	12.1	10.9	24.2
16"	23.6						31.1	18.9	12.1	10.9	24.2
18"	25.6						33.1	19.9	13.1	11.5	26.2
20"	25.6						35.1	20.9	14.1	11.5	28.2
24"	30.7						39.2	23.0	16.2	15.8	32.3
28"	35.8						47.2	27.0	20.1	23.2	40.3
30"	38.4						47.2	27.0	20.1	24.6	40.3
32"	40.9						48.9	27.9	21.0	25.5	42.0
36"	46.0						54.9	30.9	24.0	30.9	48.0
40"	51.2						60.9	33.9	27.0	33.9	54.0
42"	53.7						62.9	34.9	28.0	35.9	56.0
48"	61.4						71.7	38.8	31.9	39.0	63.8
54"	69.1						78.7	42.8	35.9	42.3	71.8
56"	71.7						84.6	45.7	38.9	49.3	77.7
60"	76.8						86.5	46.7	39.8	54.8	79.6
64"	81.9						90.0	48.4	41.6	58.4	83.2
66"	84.4						92.9	49.9	43.0	58.4	86.0
72"	92.1						100.4	53.6	46.8	64.2	93.5
78"	102.3						104.3	55.6	48.7	68.2	97.5

[1] The length is regardless of the pressure rating selected. Fitting length to DVGW.
[2] Flanges ≤ 24" only to ANSI available, ≥ 28" only to AWWA available.
All dimensions in [inch]

Sensor, remote version DN ≤ 300 (12")

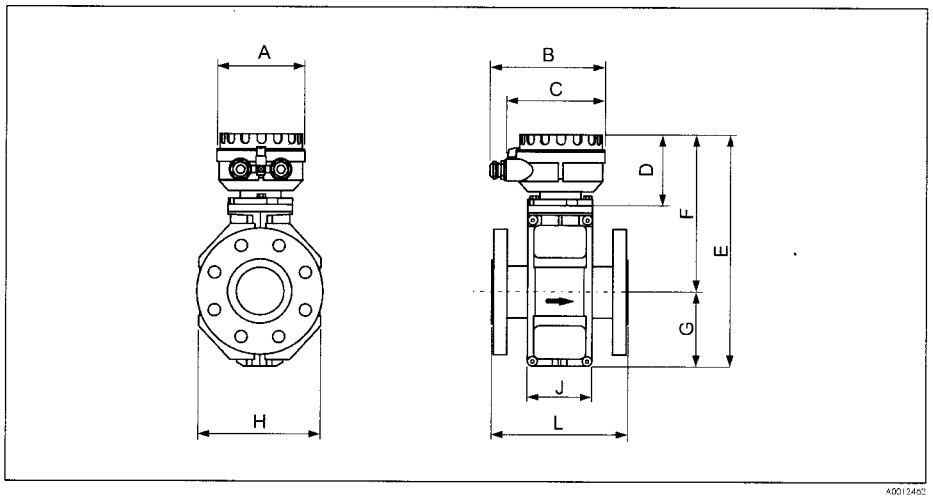

Dimensions (SI units)

DN EN (DIN) / JIS / AS [2]	L [1]	A	B	C	D	E	F	G	H	J
25	200	129	163	143	102	286	202	84	120	94
32	200	129	163	143	102	286	202	84	120	94
40	200	129	163	143	102	286	202	84	120	94
50	200	129	163	143	102	286	202	84	120	94
65	200	129	163	143	102	336	227	109	180	94
80	200	129	163	143	102	336	227	109	180	94
100	250	129	163	143	102	336	227	109	180	94
125	250	129	163	143	102	417	267	150	260	140
150	300	129	163	143	102	417	267	150	260	140
200	350	129	163	143	102	472	292	180	324	156
250	450	129	163	143	102	522	317	205	400	166
300	500	129	163	143	102	572	342	230	460	166

[1] The length is regardless of the pressure rating selected. Fitting length to DVGW.
[2] For flanges to AS, only the nominal diameters DN 80, 100 and 150 to 300 are available.
All dimensions in [mm]

Dimensions (US units)

DN ANSI	L [1]	A	B	C	D	E	F	G	H	J
1"	7.87	5.08	6.42	5.63	4.02	11.3	7.95	3.32	4.72	3.70
1½"	7.87	5.08	6.42	5.63	4.02	11.3	7.95	3.32	4.72	3.70
2"	7.87	5.08	6.42	5.63	4.02	11.3	7.95	3.32	4.72	3.70
3"	7.87	5.08	6.42	5.63	4.02	13.2	8.94	4.30	7.10	3.70
4"	9.84	5.08	6.42	5.63	4.02	13.2	8.94	4.30	7.10	3.70
6"	11.8	5.08	6.42	5.63	4.02	16.4	10.5	5.91	10.2	5.51
8"	13.8	5.08	6.42	5.63	4.02	18.6	11.5	7.10	12.8	6.14
10"	17.7	5.08	6.42	5.63	4.02	20.6	12.5	8.08	15.8	6.14
12"	19.7	5.08	6.42	5.63	4.02	22.5	13.5	9.06	18.1	6.54

[1] The length is regardless of the pressure rating selected. Fitting length to DVGW.
All dimensions in [inch]

Sensor, remote version DN ≥ 350 (14")

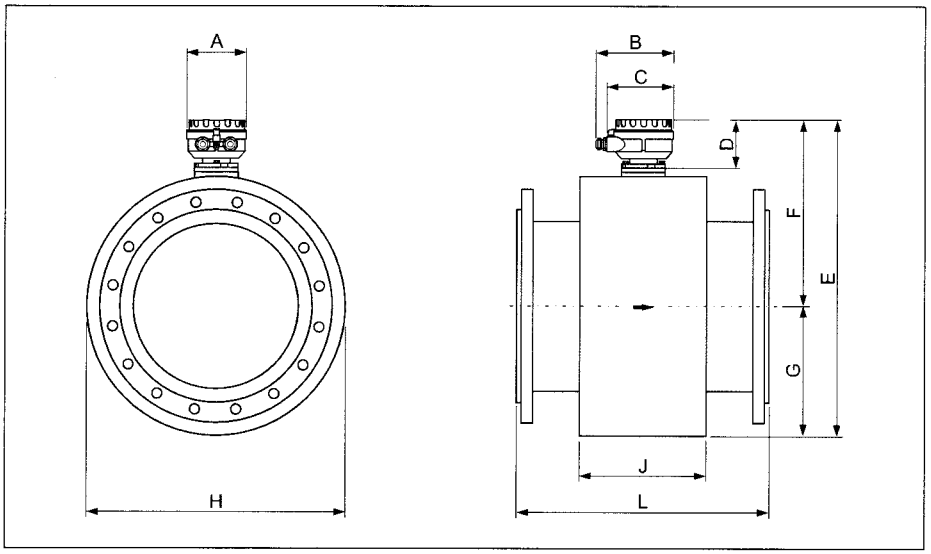

A0003220

Dimensions (SI units)

DN EN (DIN) / AS [2]	L [1]	A	B	C	D	E	F	G	H	J
350	550					683.5	401.5	282.0	564	276
375	600					735.5	427.5	308.0	616	276
400	600					735.5	427.5	308.0	616	276
450	650					785.5	452.5	333.0	666	292
500	650					836.5	478.0	358.5	717	292
600	780					940.5	530.0	410.5	821	402
700	910					1143.5	631.5	512.0	1024	589
750	975					1143.5	631.5	512.0	1024	626
800	1040					1186.5	653.0	533.5	1067	647
900	1170	129	163	143	102	1339.5	729.5	610.0	1220	785
1000	1300					1491.5	805.5	686.0	1372	862
1050	1365					1543.5	831.5	712.0	1424	912
1200	1560					1741.5	930.5	811.0	1622	992
1350	1755					1943.5	1031.5	912.0	1824	1252
1400	1820					2093.5	1106.5	987.0	1974	1252
1500	1950					2141.5	1130.5	1011.0	2022	1392
1600	2080					2231.5	1175.5	1056.0	2112	1482
1650	2145					2305.5	1212.5	1093.0	2186	1482
1800	2340					2495.5	1307.5	1188.0	2376	1632
2000	2600					2595.5	1357.5	1238.0	2476	1732

[1] The length is regardless of the pressure rating selected. Fitting length to DVGW.
[2] For flanges to AS, only DN 350, 400, 500 and 600 are available.
All dimensions in [mm]

Dimensions (US units)

DN ANSI / AWWA [2]	L [1]	A	B	C	D	E	F	G	H	J
14"	21.6	5.08	6.42	5.63	4.02	29.1	15.8	11.1	22.2	10.9
15"	23.6					31.1	16.8	12.1	24.2	10.9
16"	23.6					31.1	16.8	12.1	24.2	10.9
18"	25.6					33.1	17.8	13.1	26.2	11.5
20"	25.6					35.1	18.8	14.1	28.2	11.5
24"	30.7					39.2	20.9	16.2	32.3	15.8
28"	35.8					45.0	24.9	20.1	40.3	23.2
30"	38.4					45.0	24.9	20.1	40.3	24.6
32"	40.9					46.7	25.7	21.0	42.0	25.5
36"	46.0					52.7	28.7	24.0	48.0	30.9
40"	51.2					58.7	31.7	27.0	54.0	33.9
42"	53.7					60.7	32.7	28.0	56.0	35.9
48"	61.4					68.5	36.6	31.9	63.8	39.0
54"	69.1					76.5	40.6	35.9	71.8	42.3
56"	71.7					82.4	43.6	38.9	77.7	49.3
60"	76.8					84.3	44.5	39.8	79.6	54.8
64"	81.9					87.9	46.3	41.6	83.2	58.4
66"	84.4					90.8	47.7	43.0	86.0	58.4
72"	92.1					98.2	51.5	46.8	93.5	64.2
78"	102.3					102.2	53.4	48.7	97.5	68.2

[1] The length is regardless of the pressure rating selected. Fitting length to DVGW.
[2] Flanges ≤ 24" only to ANSI available, ≥ 28" only to AWWA available.
All dimensions in [inch]

Ground disk for flange connections

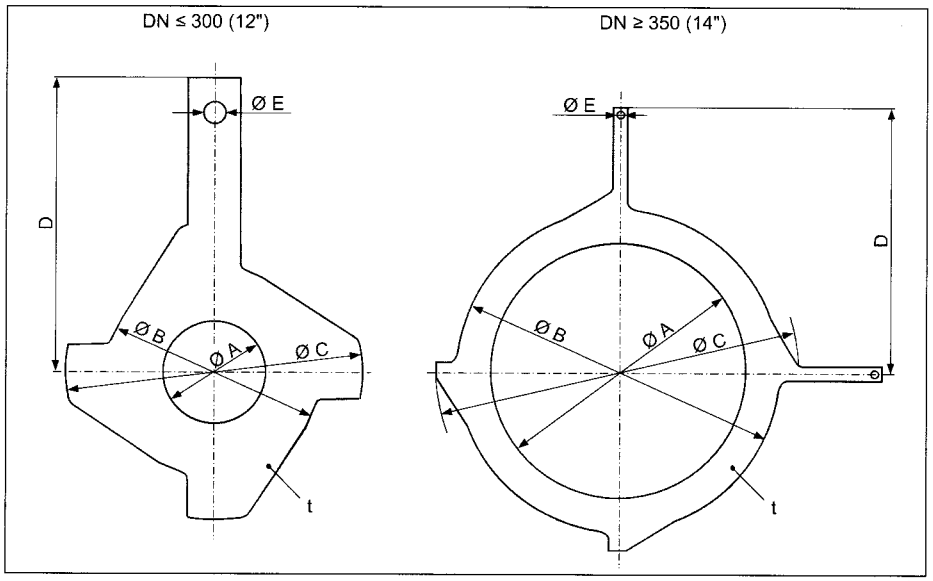

Dimensions (SI units)

DN [1] EN (DIN) / JIS / AS [2]	A	B	C	D	E	t
25	26	62	77.5	87.5	6.5	2
32	35	80	87.5	94.5		
40	41	82	101	103		
50	52	101	115.5	108		
65	68	121	131.5	118		
80	80	131	154.5	135		
100	104	156	186.5	153		
125	130	187	206.5	160		
150	158	217	256	184		
200	206	267	288	205		
250	260	328	359	240		
300 [3]	312	375	413	273		
300 [4]	310	375	404	268		
350 [3]	343	433	479	365	9.0	
375 [3]	393	480	542	395		
400 [3]	393	480	542	395		
450 [3]	439	538	583	417		
500 [3]	493	592	650	460		
600 [3]	593	693	766	522		

[1] Ground disks can be used for all flange standards/pressure ratings that can be delivered, except for DN ≥ 300.
[2] Only DN 32, 40, 65 and 125 are available for flanges according to AS.
[3] PN 10/16
[4] PN 25, JIS 10K/20K
All dimensions in [mm]

Dimensions (US units)

DN [1] ANSI	A	B	C	D	E	t
1"	1.02	2.44	3.05	3.44	0.26	0.08
1½"	1.61	3.23	3.98	4.06		
2"	2.05	3.98	4.55	4.25		
3"	3.15	5.16	6.08	5.31		
4"	4.09	6.14	7.34	6.02		
6"	6.22	8.54	10.08	7.24		
8"	8.11	10.5	11.3	8.07		
10"	10.2	12.9	14.1	9.45		
12"	12.3	14.8	16.3	10.8		
14"	13.5	17.1	18.9	14.4	0.35	
15"	15.45	18.9	21.3	15.6		
16"	15.45	18.9	21.3	15.6		
18"	17.3	21.2	23.0	16.4		
20"	19.4	23.3	25.6	18.1		
24"	23.4	27.3	30.1	20.6		

[1] Ground disks can be used for all flange standards/pressure ratings.
All dimensions in [inch]

Weight

Weight in SI units

Weight data in kg												
Nominal diameter		Compact version						Remote version (without cable)				
								Sensor				Transmitter
[mm]	[inch]	EN (DIN) / AS [1]		JIS		ANSI / AWWA		EN (DIN) / AS [1]		JIS		ANSI / AWWA	Wall-mount housing
25	1"	PN 40	7.3	10K	7.3	Class 150	7.3	PN 40	5.3	10K	5.3	Class 150	5.3	6.0
32	–		8.0		7.3		–		6.0		5.3		–	
40	1½"		9.4		8.3		9.4		7.4		6.3		7.4	
50	2"		10.6		9.3		10.6		8.6		7.3		8.6	
65	–	PN 16	12		11.1		–	PN 16	10.0		9.1		–	
80	3"		14		112.5		14.0		12.0		10.5		12.0	
100	4"		16		14.7		16.0		14.0		12.7		14.0	
125	–		21.5		21.0		–		19.5		19.0		–	
150	6"		25.5		24.5		25.5		23.5		22.5		23.5	
200	8"	PN 10	45		41.9		45	PN 10	43		39.9		43	
250	10"		65		69.4		75		63		67.4		73	
300	12"		70		72.3		110		68		70.3		108	
350	14"	PN 6	105				175	PN 6	103				173	
375	15"		120				–		118				–	
400	16"		120				205		118				203	
450	18"		161				255		159				253	
500	20"		156				285		154				283	
600	24"		208				405		206				403	
700	28"		304			Class D	400		302			Class D	398	
–	30"		–				460		–				458	
800	32"		357				550		355				548	
900	36"		485				800		483				798	
1000	40"		589				900		587				898	
–	42"		–				1100		–				1098	
1200	48"		850				1400		848				1398	
–	54"		–				2200		–				2198	
1400	–		1300				–		1298				–	
–	60"		–				2700		–				2698	
1600	–		1700				–		1698				–	
–	66"		–				3700		–				3698	
1800	72"		2200				4100		2198				4098	
–	78"		–				4600		–				4598	
2000	–		2800				–		2798				–	

[1] For flanges to AS, only DN 80, 100, 150 to 400, 500 and 600 are available.

- Transmitter (compact version): 3.4 kg
- Weight data valid for standard pressure ratings and without packaging material.

Weight in US units (only ANSI / AWWA)

Weight data in lbs						
Nominal diameter		Compact version		Remote version (without cable)		
				Sensor		Transmitter
[mm]	[inch]		ANSI / AWWA		ANSI / AWWA	Wall-mount housing
25	1"	Class 150	16.1	Class 150	11.7	13.2
40	1½"		20.7		16.3	
50	2"		23.4		19.0	
80	3"		30.9		26.5	
100	4"		35.3		30.9	
150	6"		56.2		51.8	
200	8"		99.2		94.8	
250	10"		165.4		161.0	
300	12"		242.6		238.1	
350	14"		385.9		381.5	
400	16"		452.0		447.6	
450	18"		562.3		557.9	
500	20"		628.4		624.0	
600	24"		893.0		888.6	
700	28"	Class D	882.0	Class D	877.6	
–	30"		1014.3		1009.9	
800	32"		1212.8		1208.3	
900	36"		1764.0		1759.6	
1000	40"		1984.5		1980.1	
–	42"		2425.5		2421.1	
1200	48"		3087.0		3082.6	
–	54"		4851.0		4846.6	
–	60"		5953.5		5949.1	
–	66"		8158.5		8154.1	
1800	72"		9040.5		9036.1	
–	78"		10143.0		10138.6	

- Transmitter (compact version): 7.5 lbs
- Weight data valid for standard pressure ratings and without packaging material.

Measuring tube specifications

Diameter		Pressure rating						Internal diameter			
		EN (DIN)	AS 2129	AS 4087	ANSI	AWWA	JIS	Hard rubber		Polyurethane	
[mm]	[inch]	[bar]			[lbs]			[mm]	[inch]	[mm]	[inch]
25	1"	PN 40	–	–	Cl. 150	–	20 K	–	–	24	0.94
32	–	PN 40	–	–	–	–	20 K	–	–	32	1.26
40	1½"	PN 40	–	–	Cl. 150	–	20 K	–	–	38	1.50
50	2"	PN 40	Table E	PN 16	Cl. 150	–	10 K	50	1.97	50	1.97
65	–	PN 16	–	–	–	–	10 K	66	2.60	66	2.60
80	3"	PN 16	Table E	PN 16	Cl. 150	–	10 K	79	3.11	79	3.11
100	4"	PN 16	Table E	PN 16	Cl. 150	–	10 K	102	4.02	102	4.02
125	–	PN 16	–	–	–	–	10 K	127	5.00	127	5.00
150	6"	PN 16	Table E	PN 16	Cl. 150	–	10 K	156	6.14	156	6.14
200	8"	PN 10	Table E	PN 16	Cl. 150	–	10 K	204	8.03	204	8.03
250	10"	PN 10	Table E	PN 16	Cl. 150	–	10 K	258	10.2	258	10.2
300	12"	PN 10	Table E	PN 16	Cl. 150	–	10 K	309	12.2	309	12.2
350	14"	PN 6	Table E	PN 16	Cl. 150	–	–	342	13.5	342	13.5
375	15"	–	–	PN 16	–	–	–	392	15.4	–	–
400	16"	PN 6	Table E	PN 16	Cl. 150	–	–	392	15.4	392	15.4
450	18"	PN 6	–	–	Cl. 150	–	–	437	17.2	437	17.2
500	20"	PN 6	Table E	PN 16	Cl. 150	–	–	492	19.4	492	19.4
600	24"	PN 6	Table E	PN 16	Cl. 150	–	–	594	23.4	594	23.4
700	28"	PN 6	–	–	–	Class D	–	692	27.2	692	27.2
–	30"	–	–	–	–	Class D	–	742	29.2	742	29.2
800	32"	PN 6	–	–	–	Class D	–	794	31.3	794	31.3
900	36"	PN 6	–	–	–	Class D	–	891	35.1	891	35.1
1000	40"	PN 6	–	–	–	Class D	–	994	39.1	994	39.1
–	42"	–	–	–	–	Class D	–	1043	41.1	1043	41.1
1200	48"	PN 6	–	–	–	Class D	–	1197	47.1	1197	47.1
–	54"		–	–	–	Class D	–	1339	52.7	–	–
1400	–	PN 6	–	–	–	–	–	1402	55.2	–	–
–	60"	–	–	–	–	Class D	–	1492	58.7	–	–
1600	–	PN 6	–	–	–	–	–	1600	63.0	–	–
–	66"	–	–	–	–	Class D	–	1638	64.5	–	–
1800	72"	PN 6	–	–	–	Class D	–	1786	70.3	–	–
2000	78"	PN 6	–	–	–	Class D	–	1989	78.3	–	–

Material

- Transmitter housing
  - Compact housing: powder-coated die-cast aluminum
  - Wall-mount housing: powder-coated die-cast aluminum
- Sensor housing
  - DN 25 to 300 (1 to 12"): powder-coated die-cast aluminum
  - DN 350 to 2000 (14 to 78"): with protective lacquering
- Measuring tube
  - DN ≤ 300 (12"): stainless steel 1.4301 or 1.4306/304L; (for flanges made of carbon steel with Al/Zn protective coating)
  - DN ≥ 350 (14"): stainless steel 1.4301 or 1.4306/304L; (for flanges made of carbon steel with Al/Zn protective coating)
- Electrodes: 1.4435, Alloy C-22, Tantalum
- Flanges
  - EN 1092-1 (DIN 2501): 1.4571/316L; RSt37-2 (S235JRG2); C22; FE 410W B (DN ≤ 300 (12"): with Al/Zn protective coating; DN ≥ 350 (14") with protective lacquering)
  - ANSI: A105; F316L (DN ≤ 300 (12"): with Al/Zn protective coating; DN ≥ 350 (14") with protective lacquering)
  - AWWA: 1.0425
  - JIS: RSt37-2 (S235JRG2); HII; 1.0425/316L (DN ≤ 300 (12"): with Al/Zn protective coating; DN ≥ 350 (14") with protective lacquering)
  - AS 2129
    - DN 150 to 300, 600 (6 to 12", 24"): A105 or RSt37-2 (S235JRG2)
    - DN 50, 80, 100, 350, 400, 500 (2", 3", 4", 14", 16", 20"): A105 or St44-2 (S275JR)
  - AS 4087: A105 or St44-2 (S275JR)
- Seals: to DIN EN 1514-1
- Ground disks: 1.4435/316L, Alloy C-22, Tantalum

Material load diagram

Caution!
The following diagrams contain material load diagrams (reference curves) for flange materials with regard to the medium temperature. However, the maximum medium temperatures permitted always depend on the lining material of the sensor and/or the sealing material (→ 21).

Flange connection to EN 1092-1 (DIN 2501)
Material: RSt37-2 (S235JRG2) / C22 / Fe 410W B

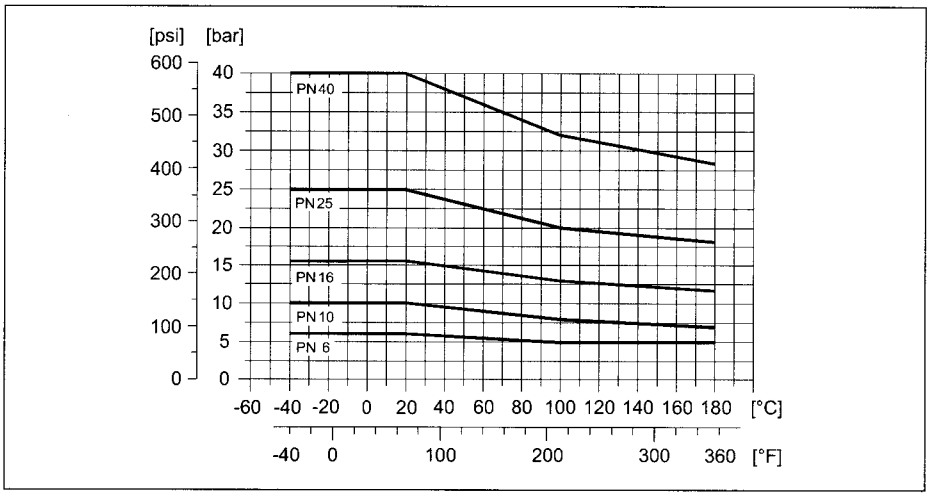

A0005594

Flange connection to EN 1092-1 (DIN 2501)
Material: 316L / 1.4571

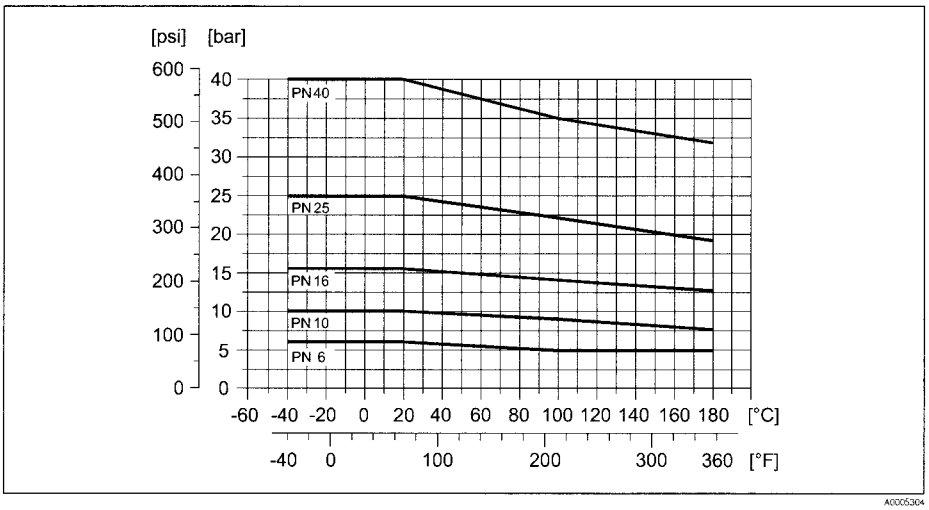

A0005304

Flange connection to ANSI B16.5
Material: A 105

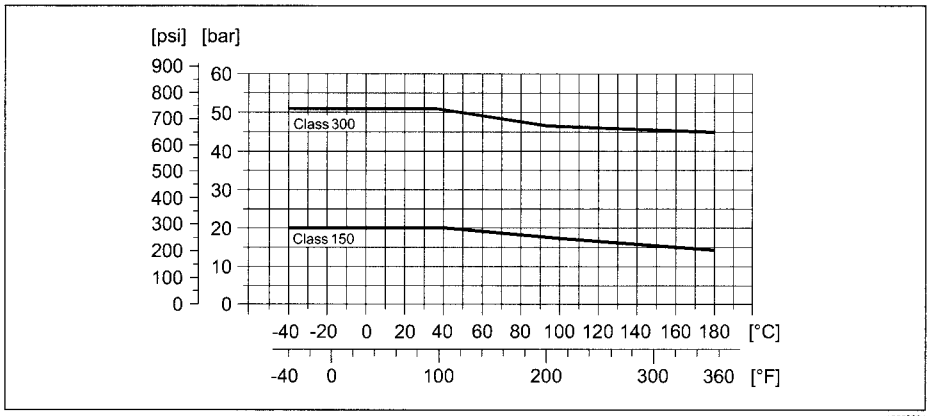

A0003226

Flange connection to ANSI B16.5
Material: F316L

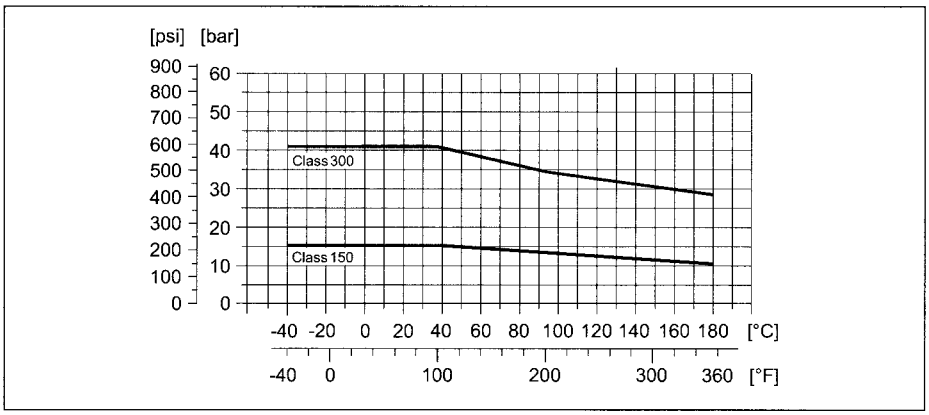

A0005307

Flange connection to AWWA C 207, Class D
Material: 1.0425

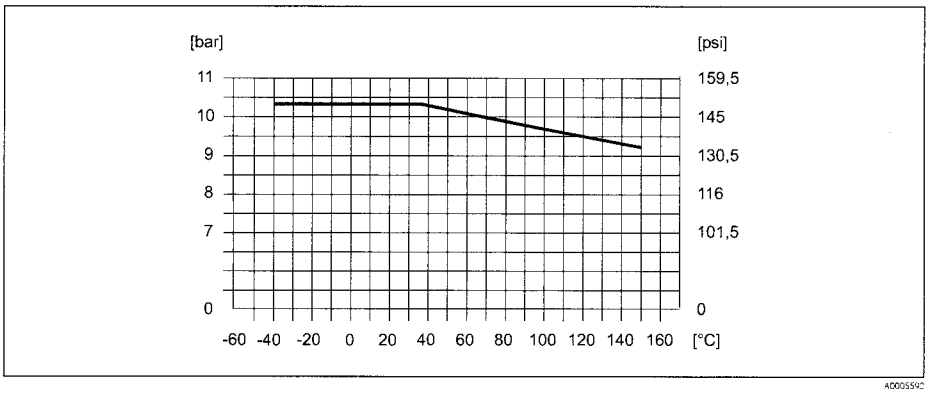

A0005592

Flange connection to JIS B2220
Material: RSt37-2 (S235JRG2) / HII / 1.0425 / 316L

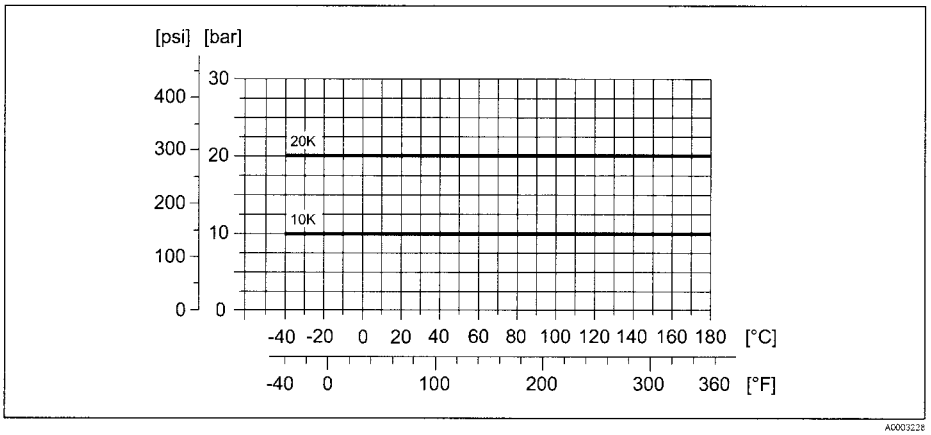

A0003228

Flange connection to AS 2129 Table E or AS 4087 PN 16
Material: A105 / RSt37-2 (S235JRG2) / St44-2 (S275JR)

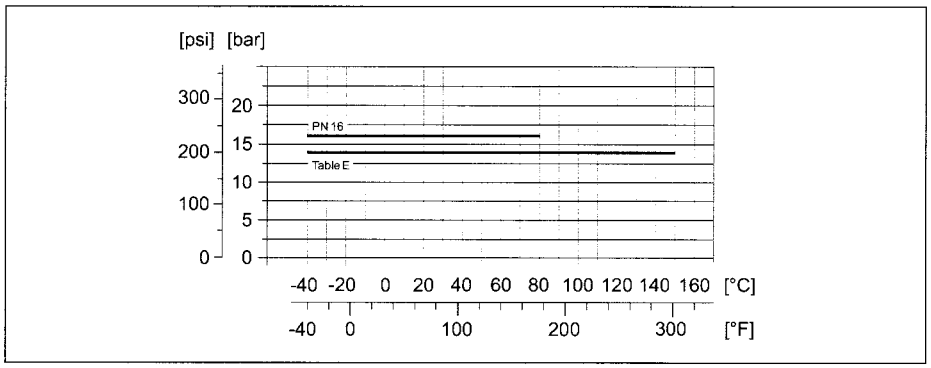

A0005595

Fitted electrodes

Measuring electrodes, reference electrodes and empty pipe detection electrodes:
- Standard available with 1.4435, Alloy C-22, tantalum
- Optional: exchangeable measuring electrodes made of 1.4435 (DN 350 to 2000 / 14 to 78")

Process connections

Flange connection:
- EN 1092-1 (DIN 2501), DN ≤ 300 (12") form A, DN ≥ 350 (14") form B
  (Dimensions to DIN 2501, DN 65 PN 16 and DN 600 (24") PN 16 exclusively to EN 1092-1)
- ANSI B16.5
- AWWA C 207, Class D
- JIS B2220
- AS 2129 Table E
- AS 4087 PN 16

Surface roughness

- Electrodes
  - 1.4435, Alloy C-22, tantal: ≤ 0.3 to 0.5 µm (≤ 11.8 to 19.7 µin)

(all data refer to parts in contact with medium)

Human interface

Display elements

- Liquid crystal display: backlit, two lines (Promag 50) or four lines (Promag 53) with 16 characters per line
- Custom configurations for presenting different measured-value and status variables
- Totalizer
  - Promag 50: 2 totalizers
  - Promag 53: 3 totalizers

Operating elements

Unified operation concept for both types of transmitter:

Promag 50:
- Local operation via three keys (□, □, □)
- Quick Setup menus for straightforward commissioning

Promag 53:
- Local operation via three keys (□, □, □)
- Application-specific Quick Setup menus for straightforward commissioning

Language groups

Language groups available for operation in different countries:

Promag 50, Promag 53:
- Western Europe and America (WEA):
  English, German, Spanish, Italian, French, Dutch, Portuguese
- Eastern Europe and Scandinavia (EES):
  English, Russian, Polish, Norwegian, Finnish, Swedish, Czech
- South and east Asia (SEA):
  English, Japanese, Indonesian

Promag 53:
- China (CN):
  English, Chinese

You can change the language group via the operating program "FieldCare".

Remote operation

- Promag 50: Remote control via HART, PROFIBUS DP/PA
- Promag 53: Remote control via HART, PROFIBUS DP/PA, MODBUS RS485, FOUNDATION Fieldbus

Certificates and approvals

CE mark	The measuring system is in conformity with the statutory requirements of the EC Directives. Endress+Hauser confirms successful testing of the device by affixing to it the CE mark.
C-tick mark	The measuring system meets the EMC requirements of the "Australian Communications and Media Authority (ACMA)".
Pressure measuring device approval	Measuring devices with a nominal diameter smaller than or equal to DN 25 correspond to Article 3(3) of the EC Directive 97/23/EC (Pressure Equipment Directive) and have been designed and manufactured according to good engineering practice. Where necessary (depending on the medium and process pressure), there are additional optional approvals to Category II/III for larger nominal diameters.
Ex approval	Information about currently available Ex versions (ATEX, IECEx, FM, CSA, NEPSI) can be supplied by your Endress+Hauser Sales Center on request. All explosion protection data are given in a separate documentation which is available upon request.
Other standards and guidelines	▪ EN 60529 Degrees of protection by housing (IP code) ▪ EN 61010 Protection Measures for Electrical Equipment for Measurement, Control, Regulation and Laboratory Procedures. ▪ IEC/EN 61326 "Emission in accordance with requirements for Class A". Electromagnetic compatibility (EMC requirements) ▪ NAMUR NE 21: Electromagnetic compatibility (EMC) of industrial process and laboratory control equipment. ▪ NAMUR NE 43: Standardization of the signal level for the breakdown information of digital transmitters with analog output signal. ▪ NAMUR NE 53: Software of field devices and signal-processing devices with digital electronics. ▪ ANSI/ISA-S82.01 Safety Standard for Electrical and Electronic Test, Measuring, Controlling and related Equipment - General Requirements Pollution degree 2, Installation Category II. ▪ CAN/CSA-C22.2 No. 1010.1-92 Safety requirements for Electrical Equipment for Measurement and Control and Laboratory Use. Pollution degree 2, Installation Category II
FOUNDATION Fieldbus certification	The flow device has successfully passed all the test procedures carried out and is certified and registered by the Fieldbus Foundation. The device thus meets all the requirements of the following specifications: ▪ Certified to FOUNDATION Fieldbus Specification ▪ The device meets all the specifications of the FOUNDATION Fieldbus H1. ▪ Interoperability Test Kit (ITK), revision status 5.01 (device certification number: on request) ▪ The device can also be operated with certified devices of other manufacturers ▪ Physical Layer Conformance Test of the Fieldbus Foundation
MODBUS RS485 certification	The measuring device meets all the requirements of the MODBUS/TCP conformity test and has the "MODBUS/TCP Conformance Test Policy, Version 2.0". The measuring device has successfully passed all the test procedures carried out and is certified by the "MODBUS/TCP Conformance Test Laboratory" of the University of Michigan.
PROFIBUS DP/PA certification	The flow device has successfully passed all the test procedures carried out and is certified and registered by the PNO (PROFIBUS User Organisation). The device thus meets all the requirements of the following specifications: ▪ Certified to PROFIBUS PA, profile version 3.0 (device certification number: on request) ▪ The device can also be operated with certified devices of other manufacturers (interoperability)

Accessories

Various accessories, which can be ordered separately from Endress+Hauser, are available for the transmitter and the sensor. Your Endress+Hauser service organization can provide detailed information on the order codes in question.

Documentation

- Flow Measurement (FA005D/06)
- Operating Instructions Promag Promag 50 (BA046D/06 and BA049D/06)
- Operating Instructions Promag Promag 50 PROFIBUS PA (BA055D/06 and BA056D/06)
- Operating Instructions Promag Promag 53 (BA047D/06 and BA048D/06)
- Operating Instructions Promag Promag 53 FOUNDATION Fieldbus (BA051D/06 and BA052D/06)
- Operating Instructions Promag Promag 53 MODBUS RS485 (BA117D/06 and BA118D/06)
- Operating Instructions Promag Promag 53 PROFIBUS DP/PA (BA053D/06 and BA054D/06)
- Supplementary documentation on Ex-ratings: ATEX, IECEx, FM, CSA, NEPSI

Registered trademarks

HART®
Registered trademark of the HART Communication Foundation, Austin, USA

PROFIBUS®
Registered trademark of the PROFIBUS Nutzerorganisation e.V., Karlsruhe, D

FOUNDATION™ Fieldbus
Registered trademark of the Fieldbus Foundation, Austin, USA

MODBUS®
Registered trademark of the MODBUS Organisation

HistoROM™, S-DAT®, T-DAT™, F-CHIP®, FieldCare®, Fieldcheck®, FieldXpert™, Applicator®
Registered or registration-pending trademarks of Endress+Hauser Flowtec AG, Reinach, CH

Order Codes

NOTE: Endress+Hauser reserves the right to change or modify product, specifications, and ordering information at any time without notice.
Please consult Endress+Hauser or your local representative for the most recent information.

Please note that the Promag 50W/53W is also available with:
- Hard rubber and Polyurethane liners; ACS, KTW/W270 and WRAS B59620 approvals
- PED Cat. II / III material certificates
- ATEX and NEPSI hazardous area approvals
- DIN2501 and JIS B2220 process connections

Consult factory for information.

Promag 50W, 1" to 24"

		010	020	030	040	050	060	070	080	090	100	110	120
Promag 50W	-												

Nominal Diameter
- 25 1"
- 40 1-1/2"
- 50 2"
- 80 3"
- 1H 4"
- 1F 6"
- 2H 8"
- 2F 10"
- 3H 12"
- 3F 14"
- 4H 16"
- 4F 18"
- 5H 20"
- 6H 24"

010 Liner
- D Hard rubber, NSF61 drinking water approval (not available for 1", 1-1/2" or 2" sensors)
- H Hard rubber (not available for 1", 1-1/2" or 2" sensors)
- P Polyurethane, NSF61 drinking water approval
- S Hard rubber HR (not available for 1", 1-1/2" or 2" sensors)
- U Polyurethane
- 9 Special version, to be specified

020 Process connection
- L Class 150 ANSI B16.5 CS steel A105 flanges
- M Class 300 ANSI B16.5 CS steel A105 flanges (not for 8" and larger)
- R Class 150 ANSI B16.5 316L SS flanges
- S Class 300 ANSI B16.5 316L SS flanges (not for 8" and larger)
- 9 Special version, to be specified

030 Electrodes / material
- 0 Measuring, reference and EPD electrodes / 316L SS
- 1 Measuring, reference and EPD electrodes / Alloy C22
- 2 Measuring, reference and EPD electrodes / tantalum
- 7 Measuring electrode, exchangeable / 316L SS (for hard rubber liner only, 14" and larger sensors, no EPD or reference electrodes, for safe areas only)
- G Measuring, reference and EPD electrodes, bullet nose / 316L SS
- H Measuring, reference and EPD electrodes, bullet nose / Alloy C-22
- 9 Special version, to be specified

040 Calibration
- A 3-point calibration, 0.5%
- B 3-point calibration, 0.2%
- D SCS/A2LA 3-point 0.5% calibration (ISO/IEC 17025) with certificate traceable according to ISO 9000 (specify range)
- E SCS/A2LA 3-point 0.2% calibration (ISO/IEC 17025) with certificate traceable according to ISO 9000 (specify range)
- 9 Special version, to be specified

050 Certificates
- 1 Standard, no certificate
- 2 3.1B material certificate for pipe and flanges
- 3 2.3 pressure test certificate (1.5 x PN, 3 minutes) for sensors up to 12" only
- 4 3.1B material and 2.3 pressure test certificate for sensors up to 12" only
- 5 CRN approval
- 8 CRN approval + material certificate + pressure test
- 9 Special version, to be specified

060 Approvals
- A For use in non-hazardous areas
- N FM explosion proof Class I, Div. 1 / CSA Class I, Div. 1 (only for aluminum field housing, compact version, not for 14" and larger sensors)
- R FM non-incendive Class I, Div. 2 / CSA Class I, Div. 2

070 Housing
- A NEMA 4X (IP 67) compact aluminum housing
- C NEMA 4X (IP 67) remote wall-mounted (only for approvals A or R)
- G NEMA 4X (IP 67) remote aluminum field housing for non-hazardous areas
- K NEMA 6P sensor, wall-mounted housing (only for approvals A or R)
- N NEMA 6P sensor, aluminum field housing, non-hazardous
- P NEMA 4X (IP 67) compact aluminum housing, HE (harsh environment), compact and remote sensor sizes up to 12" only *
- S NEMA 4X (IP 67) remote wall-mounted housing, HE (harsh environment), remote sensor sizes 14" to 78" (only for approvals A and R) *
- 1 -40°F (-40°C) ambient temperature, NEMA 4X (IP 67), compact, aluminum field housing (only for approvals A and R)
- 3 -40°F (-40°C) ambient temperature, NEMA 4X (IP 67), compact (only for approvals A and R)
- 5 -40°F (-40°C) ambient temperature, NEMA 4X (IP 67) wall mount housing, for NEMA 6P sensor (only for approvals A and R)
- 9 Special version, to be specified

080 Cable for remote
- 0 Without cable
- 1 15 foot coil and signal cable
- 2 30 foot coil and signal cable
- 5 Coil and signal cable, specify length (maximum 650 ft depending on conductivity of process material)
- 7 Coil and signal cable, flexible conduit, specify length (maximum 650 ft depending on conductivity of process material)
- 9 Special version, to be specified

090 Cable entries
- B 1/2" NPT
- L 1/2" NPT fieldbus connector (only for approval A and R)
- 9 Special version, to be specified

100 Power supply / display
- 7 85 to 260 VAC, without display, remote configuration only (not for wall mount or SS housing)
- 8 20 to 55 VAC / 16 to 62 VDC, without display, remote configuration only (not for wall mount or SS housing)
- A 85 to 260 VAC, with display, push button operation (language: EN, ES, FR, IT, NL, PT, DE)
- B 20 to 55 VAC / 16 to 62 VDC, with display, push button operation (language: EN, ES, FR, IT, NL, PT, DE)
- X Sensor only (without transmitter, only available up to 8")
- 9 Special version, to be specified

110 Software
- A Standard software
- X Sensor only (up to 8" only)
- 9 Special version, to be specified

120 Outputs / Inputs
- A Current HART, SIL, frequency
- D Current HART, SIL, frequency, status output, status input
- H PROFIBUS-PA (approvals A and R only)
- J PROFIBUS-DP (approvals A and R only)
- S Current HART, SIL, frequency; active I.S. (not for approvals A and R)
- T Current HART, SIL, frequency; passive I.S. (not for approvals A and R)
- W Current HART, SIL
- X Sensor only
- 9 Special version, to be specified

* Harsh environment (HE) option is available for process conditions where cool process temperatures in tropical (high humidity) environments or process fluids which undergo large cyclical temperature variations which can cause high amounts of moisture that could condense onto the measurement tube.

Promag 50W, 28" to 78"

		010	020	030	040	050	060	070	080	090	100	110	120
Promag 50W	-												

Nominal Diameter
- 7H 28"
- 7F 30", AWWA
- 8H 32"
- 9H 36"
- TO 40"
- VO 42", AWWA
- T2 48"
- V3 54", AWWA
- V5 60", AWWA
- V6 66", AWWA
- T8 72"
- V9 78", AWWA

010 Liner
- D Hard rubber, NSF61 drinking water approval
- H Hard rubber
- P Polyurethane, NSF61 drinking water approval (not available for 42" up to 78")
- S Hard rubber HR
- U Polyurethane (not available for 42" up to 78")
- 9 Special version, to be specified

020 Process connection
- P Class D AWWA carbon steel A105 flanges
- 9 Special version, to be specified

030 Electrodes / material
- 0 Measuring, reference and EPD electrodes / 316L SS
- 1 Measuring, reference and EPD electrodes / Alloy C22
- 2 Measuring, reference and EPD electrodes / tantalum
- 7 Measuring electrode, exchangeable / 316L SS (for hard rubber liner only, 14" and larger sensors, no EPD or reference electrodes, for safe areas only)
- G Measuring, reference and EPD electrodes, bullet nose / 316L SS
- H Measuring, reference and EPD electrodes, bullet nose / Alloy C-22
- 9 Special version, to be specified

040 Calibration
- A 3-point calibration, 0.5%
- B 3-point calibration, 0.2%
- D SCS/A2LA 3-point 0.5% calibration (ISO/IEC 17025) with certificate traceable according to ISO 9000 (specify range)
- E SCS/A2LA 3-point 0.2% calibration (ISO/IEC 17025) with certificate traceable according to ISO 9000 (specify range)
- 9 Special version, to be specified

050 Certificates
- 1 Standard, no certificate
- 2 3.1B material certificate for pipe and flanges
- 9 Special version, to be specified

060 Approvals
- A For use in non-hazardous areas
- R FM non-incendive Class I, Div. 2 / CSA Class I, Div. 2

070 Housing
- A NEMA 4X (IP 67) compact aluminum housing
- C NEMA 4X (IP 67) remote wall-mounted (only for approvals A or R)
- G NEMA 4X (IP 67) remote aluminum field housing for non-hazardous areas
- K NEMA 6P sensor, wall-mounted housing (only for approvals A or R)
- S NEMA 4X (IP 67) remote wall-mounted housing, HE (harsh environment), remote sensor sizes 14" to 78" (only for approvals A and R) *
- 1 -40°F (-40°C) ambient temperature, NEMA 4X (IP 67), compact, aluminum field housing (only for approvals A and R)
- 3 -40°F (-40°C) ambient temperature, NEMA 4X (IP 67), compact (only for approvals A and R)
- 5 -40°F (-40°C) ambient temperature, NEMA 4X (IP 67) wall mount housing, for NEMA 6P sensor (only for approvals A and R)
- 9 Special version, to be specified

080 Cable for remote
- 0 Without cable
- 1 15 foot coil and signal cable
- 2 30 foot coil and signal cable
- 5 Coil and signal cable, specify length (maximum 650 ft depending on conductivity of process material)
- 7 Coil and signal cable, flexible conduit, specify length (maximum 650 ft depending on conductivity of process material)
- 9 Special version, to be specified

090 Cable entries
- B 1/2" NPT
- L 1/2" NPT fieldbus connector (only for approval A and R)
- 9 Special version, to be specified

100 Power supply / display
- 7 85 to 260 VAC, without display, remote configuration only (not for wall mount or SS housing)
- 8 20 to 55 VAC / 16 to 62 VDC, without display, remote configuration only (not for wall mount or SS housing)
- A 85 to 260 VAC, with display, push button operation (language: EN, ES, FR, IT, NL, PT, DE)
- B 20 to 55 VAC / 16 to 62 VDC, with display, push button operation (language: EN, ES, FR, IT, NL, PT, DE)
- X Sensor only (without transmitter, only available up to 8")
- 9 Special version, to be specified

110 Software
- A Standard software
- 9 Special version, to be specified

120 Outputs / Inputs
- A Current HART, SIL, frequency
- D Current HART, SIL, frequency, status output, status input
- H PROFIBUS-PA (approvals A and R only)
- J PROFIBUS-DP (approvals A and R only)
- S Current HART, SIL, frequency; active I.S. (not for approvals A and R)
- T Current HART, SIL, frequency; passive I.S. (not for approvals A and R)
- W Current HART, SIL
- X Sensor only
- 9 Special version, to be specified

* Harsh environment (HE) option is available for process conditions where cool process temperatures in tropical (high humidity) environments or process fluids which undergo large cyclical temperature variations which can cause high amounts of moisture that could condense onto the measurement tube.

Promag 53W, 1" to 24"

		010	020	030	040	050	060	070	080	090	100	110	120
Promag 53W	-												

Nominal Diameter
- 25 1"
- 40 1-1/2"
- 50 2"
- 80 3"
- 1H 4"
- 1F 6"
- 2H 8"
- 2F 10"
- 3H 12"
- 3F 14"
- 4H 16"
- 4F 18"
- 5H 20"
- 6H 24"

010 Liner
- D Hard rubber, NFS61 drinking water approval (not available for 1", 1-1/2" or 2" sensors)
- H Hard rubber (not available for 1", 1-1/2" or 2" sensors)
- P Polyurethane, NSF61 drinking water approval
- S Hard rubber HR (not available for 1", 1-1/2" or 2" sensors)
- U Polyurethane
- 9 Special version, to be specified

020 Process connection
- L Class 150 ANSI B16.5 CS steel A105 flanges
- M Class 300 ANSI B16.5 CS steel A105 flanges (not for 8" and larger)
- R Class 150 ANSI B16.5 316L SS flanges
- S Class 300 ANSI B16.5 316L SS flanges (not for 8" and larger)
- 9 Special version, to be specified

030 Electrodes / material
- 0 Measuring, reference and EPD electrodes / 316L SS
- 1 Measuring, reference and EPD electrodes / Alloy C22
- 2 Measuring, reference and EPD electrodes / tantalum
- 7 Measuring electrode, exchangeable / 316L SS (for hard rubber liner only, 14" and larger sensors, no EPD or reference electrodes, for safe areas only)
- G Measuring, reference and EPD electrodes, bullet nose / 316L SS
- H Measuring, reference and EPD electrodes, bullet nose / Alloy C-22
- 9 Special version, to be specified

040 Calibration
- B 3-point calibration, 0.2%
- E SCS/A2LA 3-point, 0.2% calibration (ISO/IEC 17025) with certificate traceable according to ISO 9000 (specify range)
- 9 Special version, to be specified

050 Certificates
- 1 Standard, no certificate
- 2 3.1B material certificate for pipe and flanges
- 3 2.3 pressure test certificate (1.5 x PN, 3 minutes) for sensors up to 12" only
- 4 3.1B material and 2.3 pressure test certificate for sensors up to 12" only
- 5 CRN approval
- 8 CRN approval + material certificate + pressure test
- 9 Special version, to be specified

060 Approvals
- A For use in non-hazardous areas
- N FM explosion proof Class I, Div. 1 / CSA Class I, Div. 1 (only for aluminum field housing, compact version, not for 14" and larger sensors)
- R FM non-incendive Class I, Div. 2 / CSA Class I, Div. 2

070 Housing
- A NEMA 4X (IP 67) compact aluminum housing
- C NEMA 4X (IP 67) remote wall-mounted (only for approvals A or R)
- G NEMA 4X (IP 67) remote aluminum field housing for non-hazardous areas
- K NEMA 6P sensor, wall-mounted housing (only for approvals A or R)
- N NEMA 6P sensor, aluminum field housing, non-hazardous
- P NEMA 4X (IP 67) compact aluminum housing, HE (harsh environment), compact and remote sensor sizes up to 12" only *
- S NEMA 4X (IP 67) remote wall-mounted housing, HE (harsh environment), remote sensor sizes 14" to 78" (only for approvals A and R) *
- 1 -40°F (-40°C) ambient temperature, NEMA 4X (IP 67), compact, aluminum field housing (only for approvals A and R)
- 3 -40°F (-40°C) ambient temperature, NEMA 4X (IP 67), compact (only for approvals A and R)
- 5 -40°F (-40°C) ambient temperature, NEMA 4X (IP 67) wall mount housing, for NEMA 6P sensor (only for approvals A and R)
- 9 Special version, to be specified

080 Cable for remote
- 0 Without cable
- 1 15 foot coil and signal cable
- 2 30 foot coil and signal cable
- 5 Coil and signal cable, specify length (maximum 650 ft depending on conductivity of process material)
- 7 Coil and signal cable, flexible conduit, specify length (maximum 650 ft depending on conductivity of process material)
- 9 Special version, to be specified

090 Cable entries
- B 1/2" NPT
- L 1/2" NPT Fieldbus connector (only for approval A and R)
- 9 Special version, to be specified

100 Power supply / display
- 7 85 to 260 VAC, without display, remote configuration only (not for wall mount or SS housing)
- 8 20 to 55 VAC / 16 to 62 VDC, without display, remote configuration only (not for wall mount or SS housing)
- A 85 to 260 VAC, with display, push button operation (language: EN, ES, FR, IT, NL, PT, DE)
- B 20 to 55 VAC / 16 to 62 VDC, with display, push button operation (language: EN, ES, FR, IT, NL, PT, DE)
- X Sensor only (without transmitter, only available up to 8")
- 9 Special version, to be specified

110 Software
- A Standard software
- C ECC electrode cleaning circuit (only for approvals A and R)
- 9 Special version, to be specified

120 Outputs / Inputs

Fixed communication boards
- A Current HART, SIL, frequency
- B Current HART, SIL, frequency, 2 relays
- F PROFIBUS-PA, IS
- G Foundation Fieldbus, IS
- H PROFIBUS-PA
- J PROFIBUS-DP
- K Foundation Fieldbus
- Q Modbus RS485, status input
- S Current HART, SIL, frequency; active I.S
- T Current HART, SIL, frequency; passive I.S

Flexible communication boards
- C Current HART, SIL, frequency, 2 relays, flexible module
- D Current HART, SIL, frequency, relay, and status input, flexible module
- L Current HART, SIL, 2 relays and status input/output
- M Current HART, SIL, 2 frequency output, status input
- N Modbus RS 485, current and frequency output, status input
- P PROFIBUS-DP, current and frequency output, status input
- V PROFIBUS-DP, two relay outputs, status input
- 2 Current HART, SIL, relay, current, frequency ouputs
- 4 Current HART, SIL, relay, frequency outputs, current input
- 7 Modbus RS485, two relay outputs, status input
- X Sensor only
- 9 Special version, to be specified

* Harsh environment (HE) option is available for process conditions where cool process temperatures in tropical (high humidity) environments or process fluids which undergo large cyclical temperature variations which can cause high amounts of moisture that could condense onto the measurement tube.

Promag 53W, 28" to 78"

		010	020	030	040	050	060	070	080	090	100	110	120
Promag 53W	-												

Nominal Diameter
- 7H 28"
- 7F 30", AWWA
- 8H 32"
- 9H 36"
- TO 40"
- VO 42", AWWA
- T2 48"
- V3 54", AWWA
- V5 60", AWWA
- V6 66", AWWA
- T8 72"
- V9 78", AWWA

010 Liner
- D Hard rubber, NSF61 drinking water approval
- H Hard rubber
- P Polyurethane, NSF61 drinking water approval (not available for 42" to 78" sensors)
- S Hard rubber HR
- U Polyurethane (not available for 42" to 78" sensors)
- 9 Special version, to be specified

020 Process connection
- P Class D AWWA carbon steel A105 flanges
- 9 Special version, to be specified

030 Electrodes / material
- 0 Measuring, reference and EPD electrodes / 316L SS
- 1 Measuring, reference and EPD electrodes / Alloy C22
- 2 Measuring, reference and EPD electrodes / tantalum
- 7 Measuring electrode, exchangeable / 316L SS (for hard rubber liner only, 14" and larger sensors, no EPD or reference electrodes, for safe areas only)
- G Measuring, reference and EPD electrodes, bullet nose / 316L SS
- H Measuring, reference and EPD electrodes, bullet nose / Alloy C-22
- 9 Special version, to be specified

040 Calibration
- B 3-point calibration, 0.2%
- E SCS/A2LA 3-point 0.2% calibration (ISO/IEC 17025) with certificate traceable according to ISO 9000 (specify range)
- 9 Special version, to be specified

050 Certificates
- 1 Standard, no certificate
- 2 3.1B material certificate for pipe and flanges
- 9 Special version, to be specified

060 Approvals
- A For use in non-hazardous areas
- R FM non-incendive Class I, Div. 2 / CSA Class I, Div. 2

070 Housing
- A NEMA 4X (IP 67) compact aluminum housing
- C NEMA 4X (IP 67) remote wall-mounted (only for approvals A or R)
- G NEMA 4X (IP 67) remote aluminum field housing for non-hazardous areas
- K NEMA 6P sensor, wall-mounted housing (only for approvals A or R)
- S NEMA 4X (IP 67) remote wall-mounted housing, HE (harsh environment), remote sensor sizes 14" to 78" (only for approvals A and R) *
- 1 -40°F (-40°C) ambient temperature, NEMA 4X (IP 67), compact, aluminum field housing (only for approvals A and R)
- 3 -40°F (-40°C) ambient temperature, NEMA 4X (IP 67), compact (only for approvals A and R)
- 5 -40°F (-40°C) ambient temperature, NEMA 4X (IP 67) wall mount housing, for NEMA 6P sensor (only for approvals A and R)
- 9 Special version, to be specified

* Harsh environment (HE) option is available for process conditions where cool process temperatures in tropical (high humidity) environments or process fluids which undergo large cyclical temperature variations which can cause high amounts of moisture that could condense onto the measurement tube.

080 Cable for remote
- 0 Without cable
- 1 15 foot coil and signal cable
- 2 30 foot coil and signal cable
- 5 Coil and signal cable, specify length (maximum 650 ft depending on conductivity of process material)
- 7 Coil and signal cable, flexible conduit, specify length (maximum 650 ft depending on conductivity of process material)
- 9 Special version, to be specified

090 Cable entries
- B 1/2" NPT
- L 1/2" NPT Fieldbus connector (only for approval A and R)
- 9 Special version, to be specified

100 Power supply / display
- 7 85 to 260 VAC, without display, remote configuration only (not for wall mount or SS housing)
- 8 20 to 55 VAC / 16 to 62 VDC, without display, remote configuration only (not for wall mount or SS housing)
- A 85 to 260 VAC, with display, push button operation (language: EN, ES, FR, IT, NL, PT, DE)
- B 20 to 55 VAC / 16 to 62 VDC, with display, push button operation (language: EN, ES, FR, IT, NL, PT, DE)
- 9 Special version, to be specified

110 Software
- A Standard software
- C ECC electrode cleaning circuit (only for approvals A and R)
- 9 Special version, to be specified

120 Outputs / Inputs

Fixed communication boards
- A Current HART, SIL, frequency
- B Current HART, SIL, frequency, 2 relays
- F PROFIBUS-PA, IS
- G Foundation Fieldbus, IS
- H PROFIBUS-PA
- J PROFIBUS-DP
- K Foundation Fieldbus
- Q Modbus RS485, status input
- S Current HART, SIL, frequency; active I.S
- T Current HART, SIL, frequency; passive I.S

Flexible communication boards
- C Current HART, SIL, frequency, 2 relays, flexible module
- D Current HART, SIL, frequency, relay, and status input, flexible module
- L Current HART, SIL, 2 relays and status input/output
- M Current HART, SIL, 2 frequency output, status input
- N Modbus RS 485, current and frequency output, status input
- P PROFIBUS-DP, current and frequency output, status input
- V PROFIBUS-DP, two relay outputs, status input
- 2 Current HART, SIL, relay, current, frequency outputs
- 4 Current HART, SIL, relay, frequency outputs, current input
- 7 Modbus RS485, two relay outputs, status input
- X Sensor only
- 9 Special version, to be specified

United States

Endress+Hauser, Inc.
2350 Endress Place
Greenwood, IN 46143
Tel. 317-535-7138
Sales 888-ENDRESS
(888-363-7377)
Service 800-642-8737
fax 317-535-8498
inquiry@us.endress.com
www.us.endress.com

Canada

Endress+Hauser Canada
1075 Sutton Drive
Burlington, ON L7L 5Z8
Tel. 905-681-9292
800-668-3199
Fax 905-681-9444
info@ca.endress.com
www.ca.endress.com

Mexico

Endress+Hauser, México, S.A. de C.V.
Fernando Montes de Oca 21 Edificio A Piso 3
Fracc. Industrial San Nicolás
54030. Tlalnepantla de Baz
Estado de México
México
Tel: +52 55 5321 2080
Fax +52 55 5321 2099
eh.mexico@mx.endress.com
www.mx.endress.com

Instruments International

Endress+Hauser
Instruments International AG
Kaegenstrasse 2
4153 Reinach
Switzerland
Tel. +41 61 715 81 00
Fax +41 61 715 25 00
www.endress.com
info@ii.endress.com

TI046D/24/en/07.10
© 2010 Endress+Hauser, Inc.

Endress+Hauser
People for Process Automation

VALLEY FARMS
ARSENIC REMOVAL FACILITY
SORB 33® ADSORBER SYSTEM

(1) ONE 8'0" DIA. ADSORBER

SEVERN TRENT SERVICES
PROJECT # 22643

SECTION 6 **INSTRUMENTS**

B. PRESSURE DIFFERENTIAL SWITCHES

MARK	QTY	SIZE	SERVICE
PDIS-102A	1		ADSORBER A – HIGH DIFF PRESSURE

□□T□□ME□T □□T□ □□EET

SEVERN TRENT SERVICES	FFE E T E E T ME T				Sheet : 1 OF 1
					Spec: 636-1
	No.	By	Date	Revision	Contract: 22643
Park West One, Suite 600	A	JWS	10/02/14		P. O. #
Pittsburgh, PA 15275					By: JWS
(412) 788-8300					Chk:

	1	TAG PDSH-102A	SERVICE: ADSORBER EAS-A HIGH DIFFERENTIAL PRESSURE
	2	Function	HIGH DIFF. PRESSURE SWITCH
	3	Case	CAST ALUMINUM
	4	Mounting	MFG. STD.
	5	Enclosure Class	NEMA 4X
			For Instrinsically Safe System ☐ Other:
	6	Power Supply	N/A
	7	Chart	N/A Range: No.:
	8	Chart Drive	N/A
	9	Scale	Type: Range:
X M T	10	Transmitter Output	NONE For Receiver Instrument, See Sheet :
C O N T R O L L E R	11	Control Modes	NONE P = Proportional (Gain), I = Integral (Auto Reset) D = Derivative(Rate), Sub: s= Slow, f = Fast
	12	Action	On Meas. Increase Output
	13	Auto - Manual Switch	N/A
	14	Setpoint Adjustment	N/A
	15	Manual regulator	N/A
	16	Output	N/A
	17		
	18		
U N I T	19	Service	DIFF.PRESSURE
	20	Element Type	DIFF BUNA-N DIAPHRAGM
	21	Material	Body: ALUMINUM Element:
	22	Rating	Overrange: MFG. STD. Body Rating: 225 PSID
	23	Differential Range	Range: 3-30 PSI Set At 10 PSI
	24		(SCALE) . (SWITCH)
	25	Process Data	Fluid: WATER
			Maximum Temp. 95 F Maximum Pressue: 250 PSI
	26	Process Connection	IMPULSE LINES TAPS (1/4" NPT)
	27	Alarm Switches	Quantity: 1 Form: SPDT Rating: 15A
	28	Function	Contacts To On Increase In Meas
	29	Options	Pressure Element ☐ Range: Material
			Temperature Element ☐ Range: Material
	30		
	31		
	32		Valve Manifold: N/A
	33		
	34		DISPLAY REQD. DIFFERENTIAL PRESSURE INDICATION
	35	Manufacturer & Model No.	UNITED ELECTRIC J400K-S147B-M210-M900

Notes: VENDOR SHALL SUPPLY S.S TAG BEARING INSTRUMENT TAG NO.
PROVIDE INTERNAL ADJ. PROVIDE DISPLAY

400 Series

PRESSURE, VACUUM, DIFFERENTIAL PRESSURE AND TEMPERATURE SWITCHES

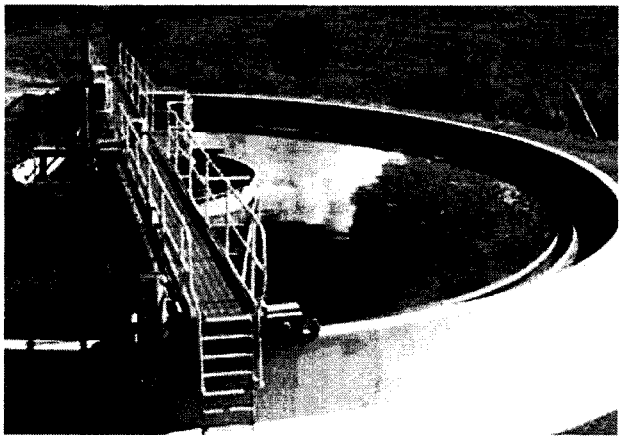

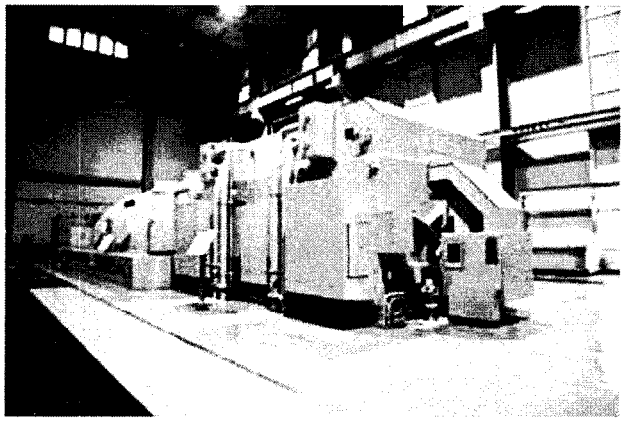

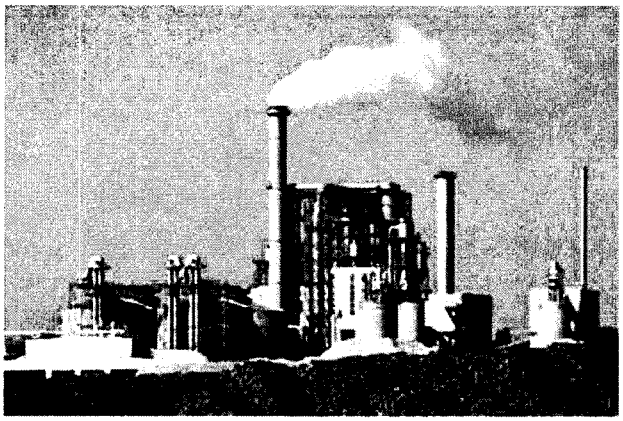

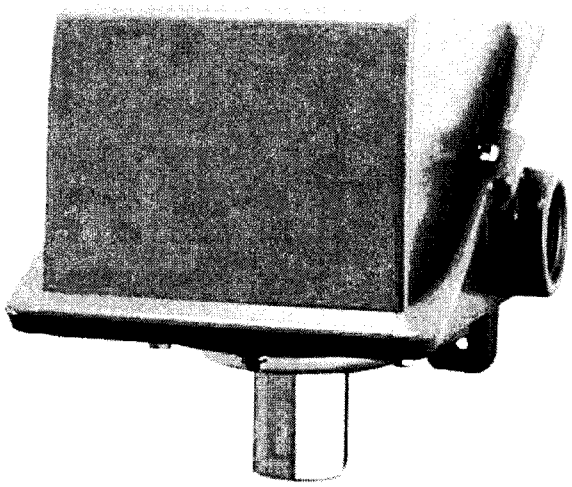

FEATURES

- 1, 2 & 3 switch outputs
- Epoxy-coated enclosure designed to meet enclosure type 4X
- Wide variety of pressure sensors and materials
- Setting via reference dial or hex screw adjustment
- FM approved
- Adjustable Ranges:

  "WC ranges: 300 "wc vacuum to 250 "wc pressure (-746,7 to 622,3 mbar)

  Pressure: 30 "Hg Vac to 6000 psi (-1,0 to 413,7 bar)

  Differential pressure: 1"wcd to 200 psid (2.5 mbar to 13,8 bar)

  Temperature: -180 to 650 °F (-117.8 to 343.3 °C)

ISO 9001 CERTIFIED COMPANY

UNITED ELECTRIC CONTROLS

400 Series

OVERVIEW

The 400 Series is a versatile family of vacuum, pressure, differential pressure and temperature switches for applications that require single or multiple switching capabilities. Dual and triple switch versions provide multi-output for alarm and shutdown, pre-alarm and alarm, high/low limit or level staging functions.

A wide variety of microswitch and process connection options, along with a weather-tight enclosure, make the 400 Series an ideal choice for most ordinary location applications. Its worldwide use is assured with approvals and certifications to agency standards.

Widely used throughout the process industries, the 400 Series provides threshold protection and control for many critical functions. Typical installations are found in industrial gas production, energy generation including pumps, turbines and compressors, pulp and paper, and water and wastewater treatment.

FEATURES

- UL listed and cUL certified. FM approved.
- CE compliant to low voltage directive and pressure equipment directive.
- Optional ATEX or GOST intrinsic safety compliance.
- One, two or three switch outputs may be separated up to 100% of range.
- Wide variety of available options and pressure sensor modules.
- Most models available for immediate delivery.

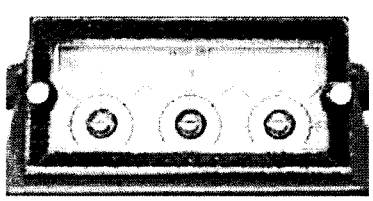

Reference scale, for types B, E & H with option M321

Enlarged View

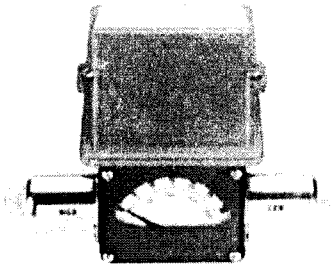

Differential Pressure Model with M210 Option - Dial Indication

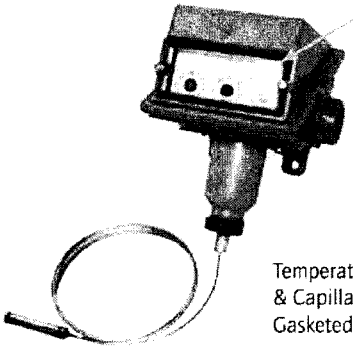

Temperature Model with Remote Bulb & Capillary and M321 option - Gasketed Lexan® Window

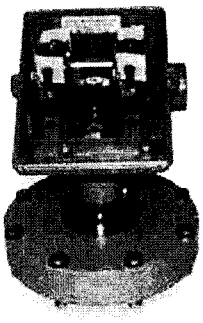

Dual Switch, Low Water Column Differential Pressure Model

Lexan® is a registered trademark of Sabic Innovative Plastics

SPECIFICATIONS

STORAGE TEMPERATURE	-65 to 160°F (-54 to 71°C)
AMBIENT TEMPERATURE LIMITS	-40 to 160°F (-40 to 71°C); set point typically shifts less than 1% of range for a 50°F (28°C) ambient temperature change
SET POINT REPEATABILITY	Temperature models: ± 2% of full scale range Pressure: models 126-376, 520-535, 540-547, 570-572, S126B-S164B: ± 2% of full scale range; models 440-457, 550-559: ± 1% of full scale range; models 610-614: ± 3% of full scale range
SHOCK	Set point repeats after 15 G, 10 millisecond duration
VIBRATION	Set point repeats after 2.5 G, 5-500 Hz
ENCLOSURE	Die cast aluminum, epoxy powder coated, gasketed, captive cover screws
ENCLOSURE CLASSIFICATION	Designed to meet enclosure type 4X requirements
SWITCH OUTPUT	One, two or three SPDT switches, may be separated up to 100% of range except models 521-524, 531-534: 50%; models 520, 525, 530, 535, 570-572: 30%; switches may be wired "normally open" or "normally closed"
ELECTRICAL RATING	15 A 125/250/480 VAC resistive. Electrical switches have limited DC capabilities. Consult factory for additional information.
WEIGHT	Approx. 3 to 7.5 lbs.; varies with model
ELECTRICAL CONNECTION	One 3/4" NPT and two 7/8" diameter knockouts
PRESSURE CONNECTION	All models 1/4" NPT (female) except models S126B-S164B, 520-535: 1/2" NPT (female); models 540-547: 1/8" NPT (female)
TEMPERATURE ASSEMBLY	'E' types use the same assemblies as 'F' types, however, range spans are limited due to use of reference dials Bulb and capillary: 6 feet 304 stainless steel Immersion stem: models 120 &121: nickel-plated brass; optional 316L stainless steel available
FILL	Temperature Models: Model 1BS: solvent filled; models 2-8: non-toxic oil filled
TEMPERATURE DEADBAND	Type F typically 1% and type E, B & C typically 2% of range under laboratory conditions (70°F ambient circulating bath at rate of 1/2°F per minute change)
DIFFERENTIAL PRESSURE INDICATOR (OPTION M210)	Differential pressure indication available J400K, J402K models 147-S157B; accuracy approximately 1-1/2% mid 50% of range, 3% at ends; window is plexiglass and gasketed; indicator may be field adjusted for approximately ±1% accuracy at any set point within range

APPROVALS

UNITED STATES AND CANADA
Type 400 & 402
UL Listed, cUL Certified
Pressure: UL 508; CSA C22.2 No. 14, file # E42272
Temperature: UL 873; CSA C22.2 No. 24, file # E10667

Type 403
UL Recognized, cUL Recognized
Pressure: UL 508; CSA C22.2 No. 14, file # E42272
Temperature: UL 873; CSA C22.2 No. 24, file # E10667

All Types
FM Approved
Pressure: Class 3510
Temperature: Class 3545

EUROPE
ATEX Directive (94/9/EC)
II 1 G EEx ia IIC T6 **(OPTIONAL – code M405)**
Tamb = -50°C to +60°C
UL International DEMKO A/S (N.B.# 0539)
Certificate # DEMKO 03 ATEX 0335063
EN 50014, 50020 & 50284

Low Voltage Directive (LVD) (73/23/EC & 93/68/EEC)
Compliant to LVD
Products rated lower than 50 VAC and 75 VDC are outside of the scope of the LVD

Pressure Equipment Directive (PED) (97/23/EC)
Compliant to PED
Products rated below 7.5 PSI are outside the scope of PED

RUSSIA
Gosgortechnadzor Permit **(OPTIONAL – code M406)**
0ExiaIICT6
Tamb = -50°C to +60°C
NANIO CCVE Certification Center
Certificate # ROSS US.GB05.Bo2933
GOST R 51330.0, 51330.1, 51330.10 & 51330.14

PRESSURE MODEL CHART

Type H400, single switch output with internal adjustment via reference dial
Type H402, dual switch output with internal adjustment via reference dial
Type H403, triple switch output with internal adjustment via reference dial

Model	Adjustable Set Point Range Low end of range on fall; High end of range on rise		Deadband Deadband doubles for 2 and 3 switch types		Proof Pressure**		Scale Division
	psi (unless noted)	bar (unless noted)	psi (unless notec)	bar (unless noted)	psi	bar	psi (unless noted)
Teflon® diaphragm and Viton® O-Ring with 316L stainless steel 1/4" NPT (female) pressure connection and cap							
550††	30 "Hg Vac to 0	-1 to 0	0.1 to 0.6 "Hg	3,4 to 20,3 mbar	225	15,5	2 "Hg
552††	30 "Hg Vac to 20 psi	-1 to 1,4	0.2 to 1 "Hg	6,8 to 33,9 mbar	225	15,5	2 "Hg & 2 psi
553††	0 to 20	0 to 1,4	0.05 to 0.3	3,4 to 20,7 mbar	225	15,5	1
554††	0 to 30	0 to 2,1	0.1 to 0.4	6,9 to 27,6 mbar	225	15,5	1
555††	0 to 100	0 to 6,9	0.25 to 0.75	17,2 to 51,7 mbar	225	15,5	5

****Proof pressure:** The maximum pressure to which a pressure sensor may be subjected, which causes no permanent damage. The unit may require calibration (e.g. start-up, testing).
† Model not available on types H402 and H403
†† Model not available on type H403

DIFFERENTIAL PRESSURE MODEL CHART

Type J400K, single switch output with internal hex screw adjustment
Type J402K, dual switch output with internal hex screw adjustment

Model	Adjustable Set Point Range Low end of range on fall: High end of range on rise		Deadband Deadband doubles for 2 and 3 switch types		Working Pressure***		Proof Pressure**	
	psid (unless noted)	bar (unless noted)	psi (unless noted)	mbar	psi	bar	psi	bar
Welded 316L stainless steel bellows and 1/2" NPT (female) pressure connections								
S147B	3 to 30	0,2 to 2,1	0.5 to 2	34,5 to 137,9	30 "Hg Vac to 100	-1 to 6,9	300	20,7
S157B	10 to 100	0,7 to 6,9	0.5 to 3	34,5 to 206,8	30 "Hg Vac to 180	-1 to 12,4	300	20,7
Brass bellows with nickel-plated brass 1/4" NPT (female) pressure connections								
147	3 to 30	0,2 to 2,1	0.5 to 2	34,5 to 137,9	30 "Hg Vac to 100	-1 to 6,9	180	12,4
157	10 to 100	0,7 to 6,9	0.5 to 3	34,5 to 206,8	30 "Hg Vac to 150	-1 to 10,3	180	12,4
Buna-N diaphragm and O-Ring with aluminum 1/4" NPT (female) pressure connections								
455	5 to 80 "wcd	12,4 to 199,1 mbar	1 to 4 "wc	2,5 to 10	30 "Hg Vac to 225	-1 to 15,5	225	15,5
456	2 to 20	0,1 to 1,4	0.1 to 0.3	6,9 to 20,7	30 "Hg Vac to 225	-1 to 15,5	225	15,5
457	3 to 30	0,2 to 2,1	0.1 to 0.4	6,9 to 27,6	30 "Hg Vac to 225	-1 to 15,5	225	15,5

*****Working Pressure Range:** The pressure range within which two opposing sensors can be safely operated and still maintain set point adjustability.

HOW TO ORDER

BUILDING A PART NUMBER

Select a **Type**

Refer to the "Type" section below.

Determine type number based on switch output, enclosure, adjustment and reference.

Fill in the type portion of your part number with the corresponding number.

Select a **Model**

Refer to the "Model Charts".

Determine model based on adjustable range, deadband and proof pressure.

Fill in the model portion of your part number with the corresponding number.

Select an **Option**

Refer to the "Options" section.

Determine option number based on switch output, optional materials or other product enhancements.

Fill in the option portion of your part number with the corresponding number.

Leave "option" portion blank if no options are needed.

FOR MULTIPLE OPTIONS: Call United Electric Controls.

TYPE	DESCRIPTION	
PRESSURE	Type J400 -	One SPDT output; internal hex screw adjustment
	Type J402 -	Two SPDT outputs; internal hex screw adjustment
	Type J403 -	Three SPDT outputs; internal hex screw adjustment
	Type H400 -	One SPDT output; internal adjustment with reference dial
	Type H402 -	Two SPDT outputs; internal adjustment with reference dial
	Type H403 -	Three SPDT outputs; internal adjustment with reference dial
DIFFERENTIAL PRESSURE	Type J400K -	One SPDT output; internal hex screw adjustment
	Type J402K -	Two SPDT outputs; internal hex screw adjustment
	Type H400K -	One SPDT output; internal adjustment with reference dial
	Type H402K -	Two SPDT outputs; internal adjustment with reference dial
TEMPERATURE	Type B400 -	Immersion stem; one SPDT output; internal adjustment with reference dial
	Type B402 -	Immersion stem; two SPDT outputs; internal adjustment with reference dial
	Type B403 -	Immersion stem; three SPDT outputs; internal adjustment with reference dial
	Type C400 -	Immersion stem; one SPDT output; internal hex screw adjustment
	Type C402 -	Immersion stem; two SPDT outputs; internal hex screw adjustment
	Type C403 -	Immersion stem; three SPDT outputs; internal hex screw adjustment
	Type E400 -	Bulb and capillary; one SPDT output; internal adjustment with reference dial
	Type E402 -	Bulb and capillary; two SPDT outputs; internal adjustment with reference dial
	Type E403 -	Bulb and capillary; three SPDT outputs; internal adjustment with reference dial
	Type F400 -	Bulb and capillary; one SPDT output; internal hex screw adjustment
	Type F402 -	Bulb and capillary; two SPDT outputs; internal hex screw adjustment
	Type F403 -	Bulb and capillary; three SPDT outputs; internal hex screw adjustment

HOW TO ORDER OPTIONS

SWITCH OPTIONS*	DESCRIPTION
0140	Gold contacts, 1 A 125 VAC resistive. NOT AVAILABLE MODELS 440-443
0500	Close deadband, 5 A 125/250 VAC resistive. NOT AVAILABLE MODELS 440-443, 520-535 & 540-547
1010	DPDT switch, 10 A 125/250 VAC resistive; deadband and minimum set point will increase. NOT AVAILABLE TEMPERATURE VERSIONS, TYPE J403, TYPE H403 AND MODELS 440-449, 520-535, 540-547, 570-572
1070	10 A 125 VDC resistive; deadband and minimum set point will increase. NOT AVAILABLE TYPES B, E AND MODELS 440-449, 520-535, 540-547, 570-572
1520	Adjustable deadband, 15 A 125/250/480 VAC resistive. Adjustment wheel changes rise setting only if adjustment on fall setting is required, use primary adjustment (see product Installation & Maintenance instructions for additional information or consult UE). NOTE: NOT AVAILABLE ON MIDDLE SWITCH FOR TYPE J403, C403 AND F403. NOT AVAILABLE TYPES B, E, H, OR MODELS 440-443, 520-535, 540-547, 570-572, 610-614
1530	External manual reset, 15 A 125/250/480 VAC resistive, latches on rise only. NOT AVAILABLE TRIPLE SWITCH VERSIONS, OR MODELS 440-443, 520-535, 570-572
1535	High ambient, 15 A 125/250/480 VAC resistive; temperatures up to 250°F/145°C. NOT AVAILABLE MODELS 440-443, 520-535
1537	Vapor-sealed 15 A 125/250 VAC resistive. NOT AVAILABLE MODELS 440-443, 520-535
1539	Fungus resistant case, 15 A 125/250 VAC resistive. NOT AVAILABLE MODELS 440-443, 520-535
2000	20 A 125/250/480 VAC resistive. NOT AVAILABLE MODELS 440-443, 520-535, 540-547, 570-572
OTHER OPTIONS	
M020	Single red status light, 115 VAC only. Specify whether light goes on or off with increasing or decreasing pressure or temperature. NOT AVAILABLE J400K, H400K, J402K, H402K OR MODELS 440-443, 449
M201	Factory set one switch; specify set point on increasing or decreasing pressure, differential pressure or temperature. NOT AVAILABLE DUAL OR TRIPLE SWITCH VERSIONS
M202	Factory set two switches; specify set points on increasing or decreasing pressure, differential pressure or temperature. NOT AVAILABLE SINGLE OR TRIPLE SWITCH VERSIONS
M203	Factory set three switches; note: the third or middle switch must always be set to highest pressure or temperature when switches are set apart; specify set points on increasing or decreasing pressure, differential pressure or temperature. NOT AVAILABLE SINGLE OR DUAL SWITCH VERSIONS
M210	Differential pressure indication. AVAILABLE J400K AND J402K, MODELS 147, S147B, 157 & S157B
M277	Range indicated on nameplate in kPa or MPa, factory selected. NOT AVAILABLE TEMPERATURE VERSIONS
M278	Range indicated on nameplate in Kg/cm^2. NOT AVAILABLE TEMPERATURE VERSIONS
M321	Gasketed Lexan® window. NOT AVAILABLE ON J, C, F TYPES
M405	Intrinsic safety compliance for European Union per ATEX standards
M406	Intrinsic safety compliance for Russia per Gosgortechnadzor standards
M444	Paper ID tag
M446	Stainless steel ID tag & wire attachment
M449	Surface mounting hardware kit that is required for models 520-535 when surface mounting. Use option code only at time of ordering product, otherwise use surface and pipe mounting kit part number 6361-704 as a separate order or for other models.
M504	316L Stainless steel immersion temperature stem. AVAILABLE TEMPERATURE MODELS 120, 121 ONLY
M540	Viton® construction (deadband and low end range may increase slightly); wetted parts include Viton® with standard connection material. AVAILABLE MODELS 448-454 and 540-547. TYPES J400K & J402K MODELS 455-457 include Viton® sealing diaphragms and O-rings with Teflon® main diaphragm. TYPES H400K & H402K MODELS 456-457 include Viton® sealing diaphragms and O-rings with Teflon® main diaphragm. MODELS 610-614 (Viton® O-ring only).
M550	Oxygen service cleaning; alcohol cleaning to remove residue from the process connection. NOT AVAILABLE ON MODELS 440-443 OR H400K-455 AND H402K-455.
M900	Watertight conduit fitting; converts 7/8" hole to 1/2" NPT fitting. Required for product to meet NEMA 4X if using knockout holes for wiring
M913	1/4" NPT (female) stainless steel pressure connection. AVAILABLE MODELS S126B-S146B, S156B, S164B ONLY
M914	1/2" NPT (female) stainless steel pressure connection. AVAILABLE MODELS 358-376
M921	1/4" NPT (female) brass pressure connection. AVAILABLE MODELS 610-614, TYPE J402 ONLY
6361-704	Surface and pipe mount hardware kit for all models. Required for surface mounting needs 520-535, if not previously ordered with option M449.
SD6286-51	Watertight conduit fitting; connects 7/8" hole to 1/2" NPT (female) fitting, if not previously ordered with option M900

**All switches have limited DC capabilities. Consult factory for details.*

DIMENSIONAL DRAWINGS

Dimensional drawings for all models may be found at www.ueonline.com

Internal Hex Screw Set Point Adjustment

Types J400, J402, J403, J400K, J402K, C400, C402, C403, F400, F402, F403

Set Point Adjustment via Reference Dial

Types H400, H402, H403, H400K, H402K, B400, B402, B403, E400, E402, E403

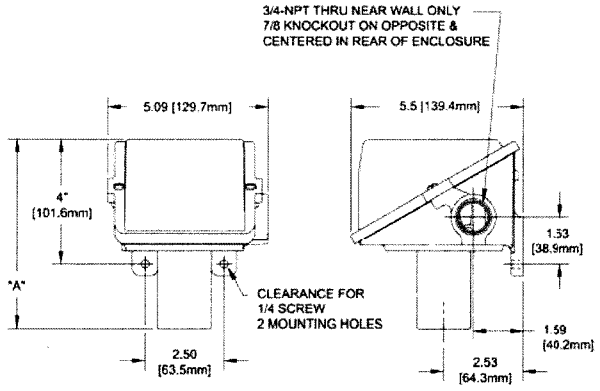

Models	Dimension A Inches	mm	NPT
PRESSURE			
126-164	5.91	150.0	1/4
S126B-S164B	6.31	160.3	1/2
270-376	5.50	139.7	1/4
440-443, 449			
451, 453, 454	4.28	108.7	1/4
448, 450, 452	5.03	127.8	1/4
520-525	8.25	209.6	1/2
530-535	8.13	206.5	1/2
551, 553-555	4.56	115.8	1/4
550, 552	5.03	127.8	1/4
570-572	4.56	115.8	1/4
610-614	6.31	160.3	1/4
DIFFERENTIAL PRESSURE			
147-157	6.13	155.7	1/4
S147B-S157B	6.13	155.7	1/2
455-559	7.00	177.8	1/4
540-543	7.97	202.4	1/8
544-547	8.03	204.0	1/8
TEMPERATURE			
120, 121	7.38	187.3	Immersion Stem
1BS-8BS	6.72	170.7	Bulb & Capillary

Pressure Sensors *All dimensions stated in inches (millimeters)*

Models 126-164

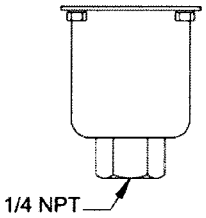

Models S126B-S164B

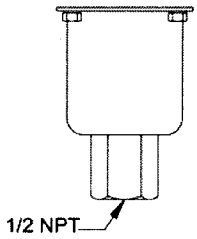

Models 270-376

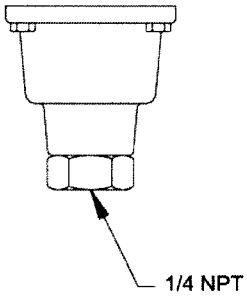

Models 440-454, 550-555, 570-572

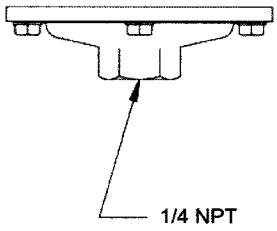

Models 610-614

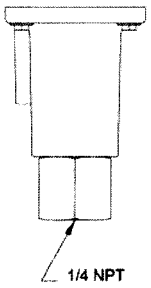

Models 520-525

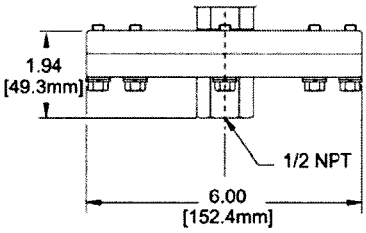

Models 530-535

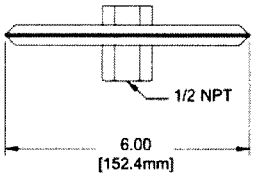

DIMENSIONAL DRAWINGS

Dimensional drawings for all models may be found at www.ueonline.com

Differential Pressure Sensors

Models 147-157

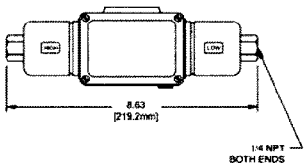

Models 540-543

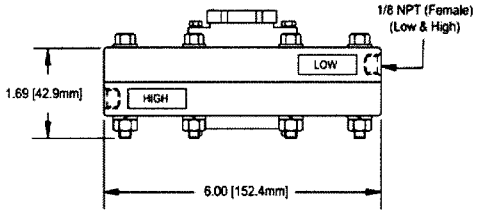

Models S147B-S157B

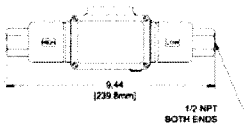

Models 544-547

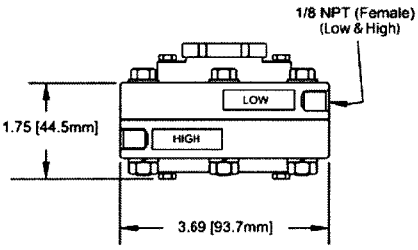

Models 455-457, 559

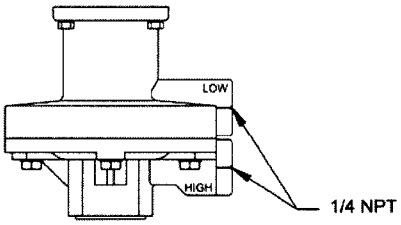

Temperature Sensors

Models 120-121

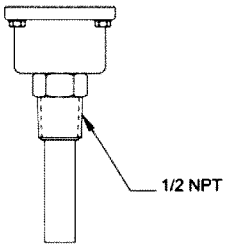

Local mount temperature version

Models 1BS-8BS

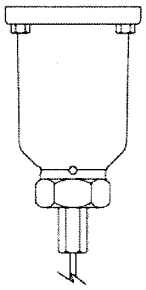

Remote mount temperature version

RECOMMENDED PRACTICES AND WARNINGS

United Electric Controls Company recommends careful consideration of the following factors when specifying and installing UE pressure and temperature units. Before installing a unit, the Installation and Maintenance instructions provided with unit must be read and understood.

- To avoid damaging unit, proof pressure and maximum temperature limits stated in literature and on nameplates must never be exceeded, even by surges in the system. Operation of the unit up to maximum pressure or temperature is acceptable on a limited basis (e.g., start-up, testing) but continuous operation must be restricted to the designated adjustable range. Excessive cycling at maximum pressure or temperature limits could reduce sensor life.
- A back-up unit is necessary for applications where damage to a primary unit could endanger life, limb or property. A high or low limit switch is necessary for applications where a dangerous runaway condition could result.
- The adjustable range must be selected so that incorrect, inadvertent or malicious setting at any range point cannot result in an unsafe system condition.
- Install unit where shock, vibration and ambient temperature fluctuations will not damage unit or affect operation. When applicable, orient unit so that moisture does not enter the enclosure via the electrical connection. When appropriate, this entry point should be sealed to prevent moisture entry.
- Unit must not be altered or modified after shipment. Consult UE if modification is necessary.
- Monitor operation to observe warning signs of possible damage to unit, such as drift in set point or faulty display. Check unit immediately.
- Preventative maintenance and periodic testing is necessary for critical applications where damage could endanger property or personnel.
- Electrical ratings stated in literature and on nameplate must not be exceeded. Overload on a switch can cause damage, even on the first cycle. Wire unit according to local and national electrical codes, using wire size recommended in installation sheet.
- Do not mount unit in ambient temp. exceeding published limits.

LIMITED WARRANTY

Seller warrants that the product hereby purchased is, upon delivery, free from defects in material and workmanship and that any such product which is found to be defective in such workmanship or material will be repaired or replaced by Seller (Ex-works, Factory, Watertown, Massachusetts. INCOTERMS); provided, however, that this warranty applies only to equipment found to be so defective within a period of 24 months from the date of manufacture by the Seller. Seller shall not be obligated under this warranty for alleged defects which examination discloses are due to tampering, misuse, neglect, improper storage, and in any case where products are disassembled by anyone other than authorized Seller's representatives. EXCEPT FOR THE LIMITED WARRANTY OF REPAIR AND REPLACEMENT STATED ABOVE, SELLER DISCLAIMS ALL WARRANTIES WHATSOEVER WITH RESPECT TO THE PRODUCT, INCLUDING ALL IMPLIED WARRANTIES OF MERCHANTABILITY OR FITNESS FOR ANY PARTICULAR PURPOSE.

LIMITATION OF SELLER'S LIABILITY

SELLER'S LIABILITY TO BUYER FOR ANY LOSS OR CLAIM, INCLUDING LIABILITY INCURRED IN CONNECTION WITH (I) BREACH OF ANY WARRANTY WHATSOEVER, EXPRESSED OR IMPLIED, (II) A BREACH OF CONTRACT, (III) A NEGLIGENT ACT OR ACTS (OR NEGLIGENT FAILURE TO ACT) COMMITTED BY SELLER, OR (IV) AN ACT FOR WHICH STRICT LIABILITY WILL BE INPUTTED TO SELLER, IS LIMITED TO THE "LIMITED WARRANTY" OF REPAIR AND/OR REPLACEMENT AS SO STATED IN OUR WARRANTY OF PRODUCT. IN NO EVENT SHALL THE SELLER BE LIABLE FOR ANY SPECIAL, INDIRECT, CONSEQUENTIAL OR OTHER DAMAGES OF A LIKE GENERAL NATURE, INCLUDING, WITHOUT LIMITATION, LOSS OF PROFITS OR PRODUCTION, OR LOSS OR EXPENSES OF ANY NATURE INCURRED BY THE BUYER OR ANY THIRD PARTY.

UE specifications subject to change without notice.

U.S. SALES OFFICES

United Electric Controls
31 Old Stage Road
Hampton Falls, NH 03844
Phone: 617-899-1132
email: northeastsales@ueonline.com

United Electric Controls
28 N. Wise Ave.
Freeport, IL 61032
Phone: 815-341-2588
email: midwestsales@ueonline.com

United Electric Controls
1022 Vineyard Drive
Conyers, GA 30013
Phone: 770-335-9802
email: southeastsales@ueonline.com

United Electric Controls
5829 Grazing Court
Mason, OH 45040
Phone: 513-535-5486
email: midatlanticsales@ueonline.com

United Electric Controls
102 Salazar Court
Clayton, CA 94517
Phone: 925-408-5997
email: westcoastsales@ueonline.com

United Electric Controls
27 Summit Terrace
Sparta, NJ 07871
Phone: 973-271-2550
email: easternsales@ueonline.com

United Electric Controls
33018 Weatherby Court
Fulshear, TX 77441
Phone: 832-457-6138
email: southwestsales@ueonline.com

CANADA

EASTERN
68 Mosley Crescent
Brampton, Ontario
Canada L6Y 5C8
Phone: 905-455-5131
FAX: 905-455-5131

INTERNATIONAL OFFICES

CHINA

United Electric Controls, *Shanghai Office*
Room 1011, 10th Flr,
Huai Hai Zhonghua Building
No. 885, Renmin Road, Luwan District
Shanghai 200010, P.R. China
Phone: +8621-6255 8059
email: chinasales@ueonline.com

United Electric Controls, *Beijing Office*
Room 1006, Jainhao International Bldg.
Block D, No. 116
Zizhuyuanlu, Haidian District
Beijing, China 100089
Phone & Fax: +86-10-5893-0551
email: beijingsales@ueonline.com

EUROPE

United Electric Controls
05-806 Komorow
Kujawska 5, Poland
Phone: +48 22 499 4804
email: easterneuropesales@ueonline.com

INDIA

United Electric Controls
402, Aries Avenue - I, 58-United Colony
Sama, Baroda - 390008 India
Phone: (+91) 265 3191711
email: indiasales@ueonline.com

ASIA-PACIFIC

United Electric Controls, Far East
No. 1-2-2, 2nd Floor
Jalan 4/101C
Cheras Business Centre
Batu 5, Jalan Cheras
56100 Kuala Lumpur, Malaysia
Phone: 603-9133-4122
email: fareastsales@ueonline.com

MEXICO-LATIN AMERICA

United Electric Controls
Zacatecas #206 Suite 20
Col Guadalupe CP 89120
Tampico, Tamaulipas Mexico
Phone: 52 (833) 2175201
email: latinamericasales@ueonline.com

RUSSIA & SCANDINAVIA

United Electric Controls, Moscow
Elninskaya str., 15-140
Moscow, 121552, Russia
Phone: +7 (495) 792-88-06
email: russiansales@ueonline.com

UNITED ELECTRIC CONTROLS
180 Dexter Avenue, P.O. Box 9143
Watertown, MA 02471-9143 USA
Telephone: 617 926-1000 Fax: 617 926-2568
http://www.ueonline.com

CP11111000

VALLEY FARMS
ARSENIC REMOVAL FACILITY
SORB 33® ADSORBER SYSTEM

(1) ONE 8'0" DIA. ADSORBER

SEVERN TRENT SERVICES
PROJECT # 22643

SECTION 6 **INSTRUMENTS**
C. PRESSURE GAUGES

MARK	QTY	SIZE	SERVICE
PI-171	1	4-1/2"	HEADER PRESSURE
PI-172	1	4-1/2"	HEADER PRESSURE

□□T□□ME□T □□T□ □□EET

SEVERN TRENT SERVICES	E E E				Sheet : 1 Of 1
					Spec: 646-1
	No.	By	Date	Revision	Contract: 22643
Park West One, Suite 600	A	JWS	10/02/14		P. O. #
Pittsburgh, PA 15275					By: JWS
(412) 788-8300					Chk:

1 Type: DIRECT READING
2 Mounting: STEM
3 Dial Dia.: 4 1/2"
Color: WHITE
4 Case: PHENOLIC
5 Ring: THREADED
6 Blow-Out Protection: SOLID FRONT
7 Lens: SAFTYGLASS (SHATTERPROOF)
8 Option: LIQUID FILL (SILICONE)

9 Nominal Accuracy Reqired: 0.50%

10 Manufacturer ASHCROFT DURAGAUGE
Model No.: 1279S
11 Pressure Element: BOURDON
12 Element: 316 S.S.
13 Socket Material: 316 S.S.
14 Connection: 1/2" BOTTOM
15 Movement: ROTARY-GEARED
16 Diaphragm Seal:

	Tag Number	Range	Operating Pressure	Service
1	PI-171	0-160 PSI	100 PSI	RAW WELL WATER INFLUENT
2	PI-172	0-160 PSI	100 PSI	BLENDED EFFLUENT WATER

Notes: VENDOR SHALL SUPPLY S.S. TAG BEARING INSTRUMENT TAG NO.

ASHCROFT®

Type 1279 Duragauge® Pressure Gauge Available With *PLUS!*™ Performance Option

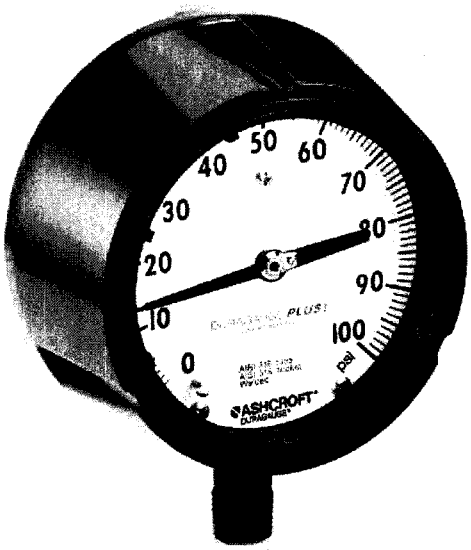

PLUS! Performance

- ***Solid front case design, field convertible to hermetically sealed or liquid filled style***
- ***Pressure ranges from vacuum — 30,000 psi***
- ***Select from various socket and Bourdon tube materials***
- ***Micrometer adjustable pointer***
- ***400 Series stainless steel movement wears better for longer life***
- ***Teflon-coated pinion for longer life***
- ***Patented Duratube™ with as-welded tube construction controls stresses for longer life***
- ***PLUS!™ Performance Option:***
  - ***Liquid-filled performance in a dry gauge***
  - ***Fights vibration and pulsations without liquid-filled headaches***
  - ***Order as option XLL***

The Ashcroft® Duragauge® pressure gauge is the finest production gauge on the market for industrial use where precise indications are required. The product line offers a wide variety of case styles, Bourdon tubes and pressure ranges to meet your application needs .

With the component combinations available in the Duragauge gauge line, over ten million variations are possible to serve the needs of all types of industries, including process, power, nuclear, aerospace and cryogenics.

TEMPERATURE LIMITS

	Ambient	Process	Storage
Dry	–20/200°F(1) (–29/93°C)	–20/250°F(1) (–29/121°C)	–40/250°F (–40/121°C)
LF (glycerin)	20/150°F (7/66°C)	20/200°F (7/93°C)	0/150°F (–18/66°C)
(silicone)	–40/150°F (–40/66°C)	–40/200°F (–40/93°C)	–40/150°F (–40/66°C)
(halocarbon)	–40/150°F (–40/66°C)	–40/200°F (–40/93°C)	–40/150°F (–40/66°C)

Note: Other than discoloration of the dial and hardening of the gasketing that may occur as ambient or process temperatures exceeds 150°F, non-liquid-filled gauges with standard glass windows, can withstand continuous operating temperatures up to 250°F (121°C). Liquid-filled gauges can withstand 200°F (93°C) but glycerin fill and acrylic window will tend to yellow. Accuracy at temperatures above or below the reference ambient temperature of 68°F (20°C) will be affected by approximately .4% per 25°F. Gauges with welded joints will withstand 750°F (450°F (232°C) with silver brazed joints) for short times without rupture, although other parts of the gauge will be destroyed and calibration will be lost. For continuous use and for process or ambient temperatures above 250°F (121°C), a diaphragm seal or capillary or siphon is recommended.

(1) Available for temperatures below –20°F, see Product Information page ASH/PI-21B for details.

PRODUCT SPECIFICATIONS

Model Number:	1279
Accuracy:	½% full scale (Grade 2A, ASME B40.100)
Ranges:	Vac., compound to 30,000 psi
Dial Size:	4½″ diameter
Case Material:	Black phenolic, solid front
Weather Protection:	Dry Case: IP54 Liquid filled or hermetically sealed case: IP 65
Ring:	Threaded reinforced black polypropylene
Window:	Glass
Dial:	Aluminum, white background, black figures and intervals
Pointer:	Micrometer adjustable
Movement:	Rotary, 400 SS, Teflon® coated pinion gear and segment
Bourdon Tube and Socket:	C510 Phos. bronze/brass (A)(1) 316L SS/steel (R)(2) 316L SS/316L SS (S)(2) K Monel/ Monel (P)(2)
Conn. Size:	¼″, ½″ NPT
Conn. Location:	Lower or back

OPTIONAL FEATURES

Fill:	L-Glycerin-Standard XGV-Silicone-Optional XGX-Halocarbon-Optional
***PLUS!*™ Performance:**	XLL
Hermetically Sealed, IP65:	H
Flush Mounting Ring:	X56
Receiver Gauge:	XPR
Shatter Proof Glass Window:	XSG
Acrylic Window:	XPD
Red Set Hand:	XSH
Maximum Pointer:	XEP

(1) Joints silver brazed
(2) Joints welded

STANDARD RANGE TABLE*

Pressure – psi		
Range	**Figure interval**	**Minor Graduation**
0/15	1	0.1
0/30	5	0.2
0/60	5	0.5
0/100	10	1
0/160	20	2
0/200	20	2
0/300	50	2
0/400	50	5
0/600	50	5
0/800	100	10
0/1000	100	10
0/1500	200	20
0/2000	200	20
0/3000	500	20
0/5000	500	50
0/6000	500	50
0/10,000	1000	100
0/20,000	2000	200
0/30,000	5000	200

* Full standard and metric equivalent range table available on our web site.

ISO 9001
REGISTERED FIRM

BULLETIN DU-1 1279

All specifications are subject to change without notice.
All sales subject to standard terms and conditions.
© Ashcroft Inc. 2013 Rev. 12/13

Ashcroft Inc., 250 East Main Street, Stratford, CT 06614 USA
Tel: 203-378-8281 • Fax: 203-385-0408
email: info@ashcroft.com • www.ashcroft.com

ASHCROFT®

Type 1279 Duragauge® Pressure Gauge Available With *PLUS!*™ Performance Option

Compound

Range	Figure Interval		Minor Grads	
	in Hg	psi	in Hg	psi
30″ Hg/15 psi	5	3	0.5	0.2
30″ Hg/30 psi	10	5	1	0.5
30″ Hg/60 psi	10	10	1	1
30″ Hg/100 psi	10	10	2	1
30″ Hg/150 psi	10	20	5	2
30″ Hg/200 psi	30	20	5	2
30″ Hg/300 psi	30	50	5	2

Vacuum

Range	Figure Interval	Minor Grads
30/0 in. Hg	5 in	0.2 in
34/0 ft H_2O	5 ft	0.5 ft

TYPE 1278M SERIES FLUSH MOUNTING RING

Used to flush mount gauge case Type 1279(*)S. Standard finish is black; optional polished stainless steel finish is available.

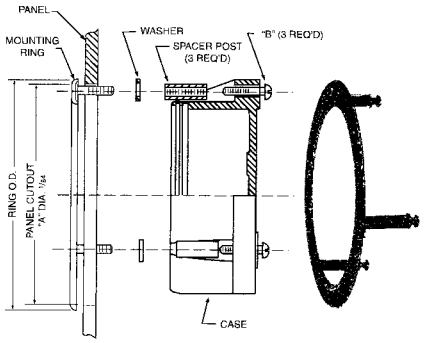

GAUGE SIZE	RING O.D.	"A" DIA.	"B" Size of 3 Screws	"C" Size of Washers
4½	6.000 (152)	5⅝ (148)	#10-24 x 1⅝	7/16 x 17/64 x ⅝

Dimensions

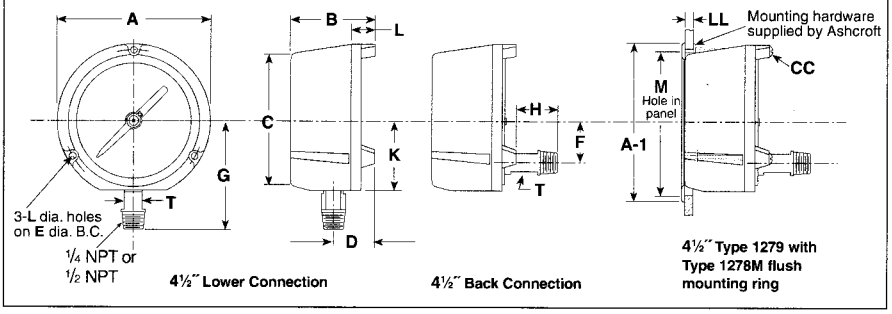

Dial Size Inches	A	B	C	D	E	F	G	H	K	L	T	V	Weight (lbs)
4½	5.81 (147.6)	3.36 (85.3)	5.07 (128.7)	1.06 (40.6)	5.375 (137)	1.62 (41.2)	4.08 (103.7)	.73 (18.4)	2.62 (66.6)	.22 (5.5)	.62 (15.7)	2.625 (67)	2.5 (Dry) 3.5 (L.F.)

Order Coding Example

45	1279	S	S	04	L	XEPNH	100	#

SIZE	TYPE	SYSTEM (TUBE & SOCKET)	CASE DESIGN SOLID FRONT	PROCESS CONNECTION SIZE	CONNECTION LOCATION	OPTIONS (X VARIATIONS)[1]	RANGE	ENGINEERING UNITS[1]
(45) 4½	1279	(A) Bronze tube, Brass socket[1] (P) K-Monel 500 tube, Monel 400 socket[2] (R) 316L st st tube, steel socket (S) 316L[2] [1] Max pressure 1000psi [2] Max pressure 30,000psi	(S) Dry(IP54) (SH) Dry, Hermetically Sealed, Field Fillable (IP65) (SL) Liquid filled (glycerin standard) (IP65)	(02) 1/4 NPT male[1] (04) 1/2 NPT male[1] (09) 9/16-18 UNF-2B Aminco (standard for high pressure >20,000psi) [1] Max pressure 20,000psi	(B) Back (D) Side (3:00) (E) Side (9:00) (L) Lower (T) Top (12:00)	(GV) Silicone case fill (GX) Halocarbon case fill (NH) St. St. Wired Tag (TS) Throttle screw[2] (6B) Oxygen service (PD) Acrylic window[2] (SG) Safety glass (EP) Maximum pointer, adjustable (SH) Red set hand, stationary (LL) *PLUS!* Performance (56) Flush mounting ring (C4) Individual calibration chart [1] Others on request [2] Standard with hermetically sealed or liquid filled gauge	See website for most common ranges offered	(#) PSI (BR)) Bar (KG) Kilograms/CM2 (KP) Kilopascal (IMV) Inches of Mercury Vacuum [1] See website for more units of measure

ISO 9001
REGISTERED FIRM

BULLETIN DU-1 1279

All specifications are subject to change without notice.
All sales subject to standard terms and conditions.
© Ashcroft Inc. 2013 Rev. 12/13

Ashcroft Inc., 250 East Main Street, Stratford, CT 06614 USA
Tel: 203-378-8281 • Fax: 203-385-0408
email: info@ashcroft.com • www.ashcroft.com

www.ghd.com

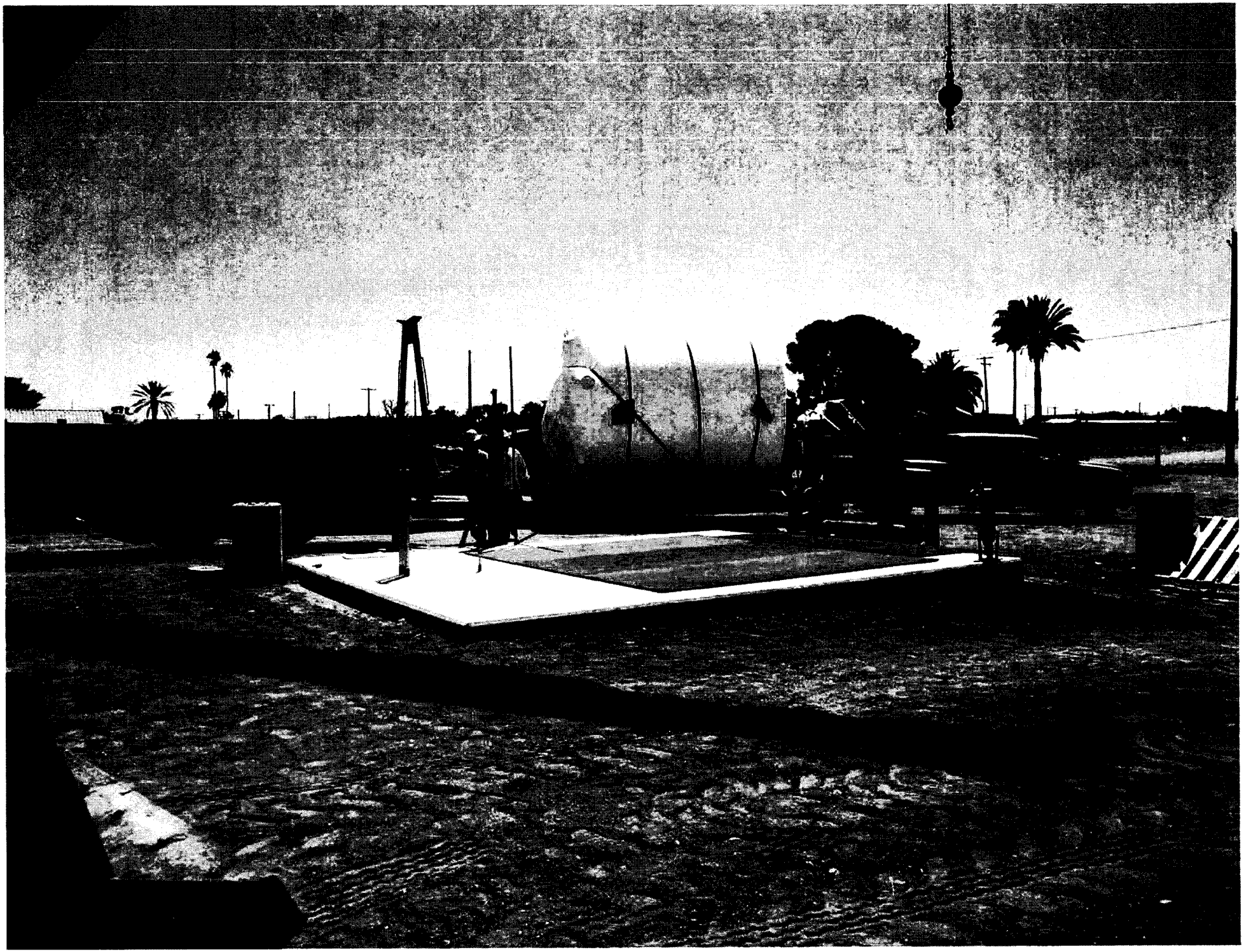

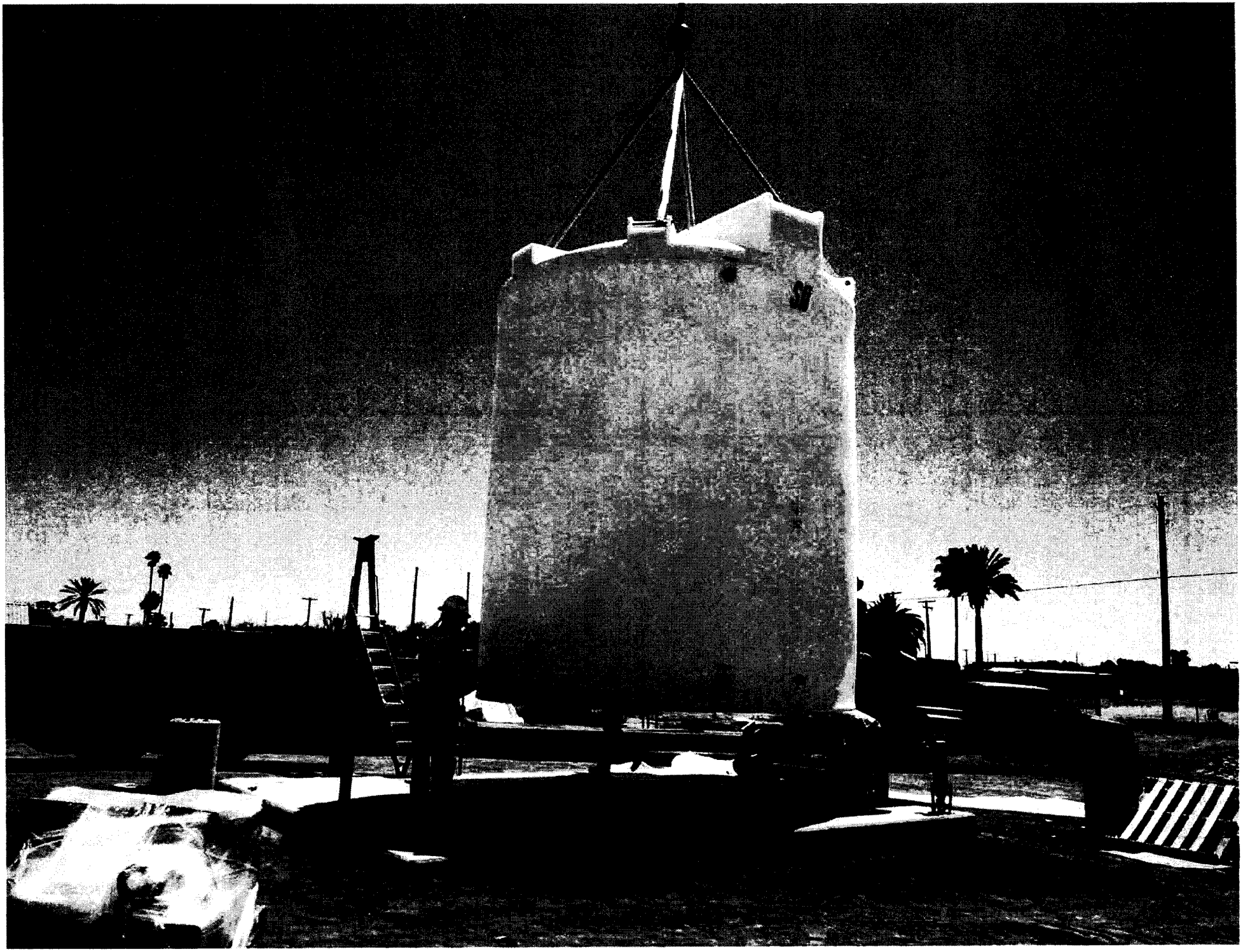

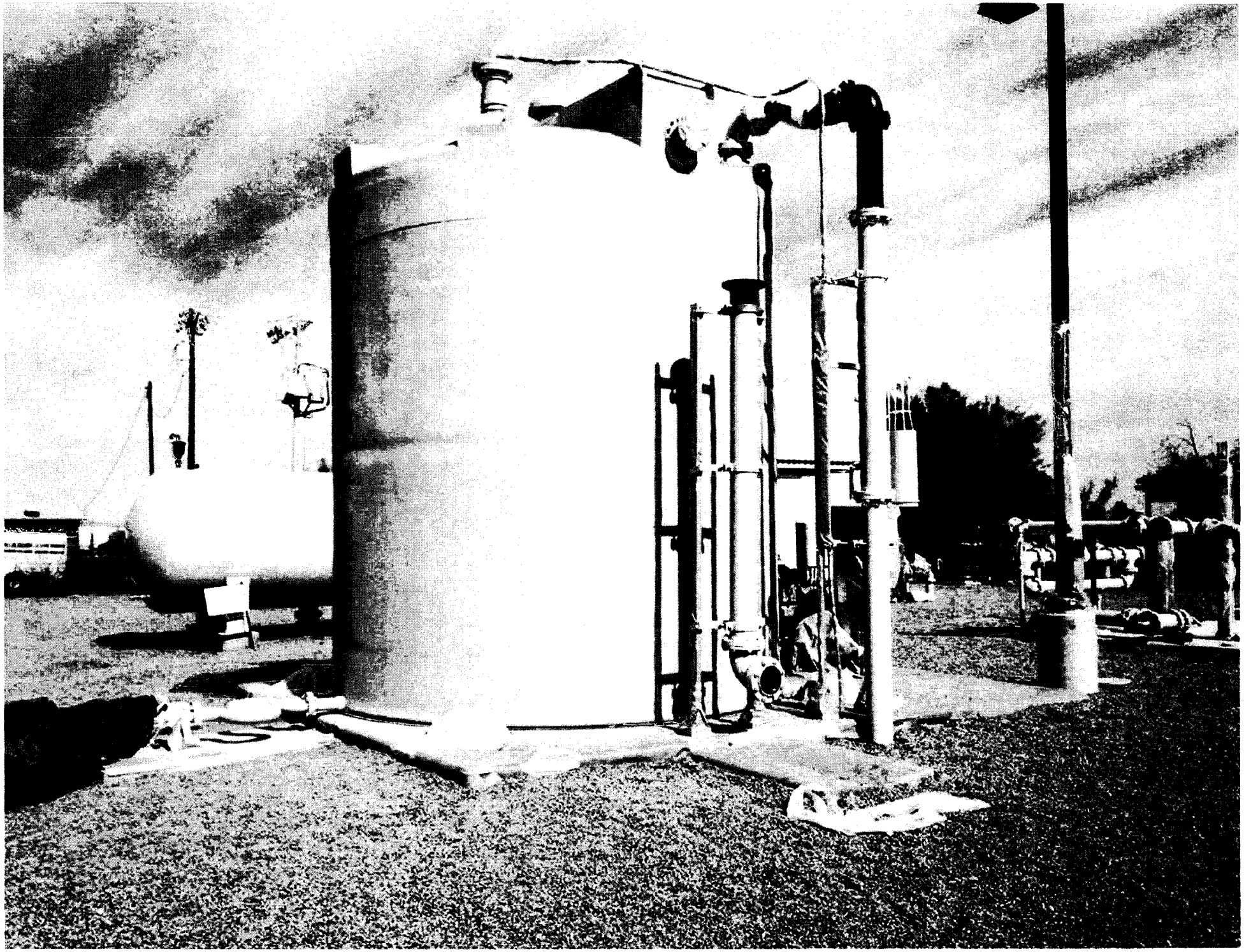

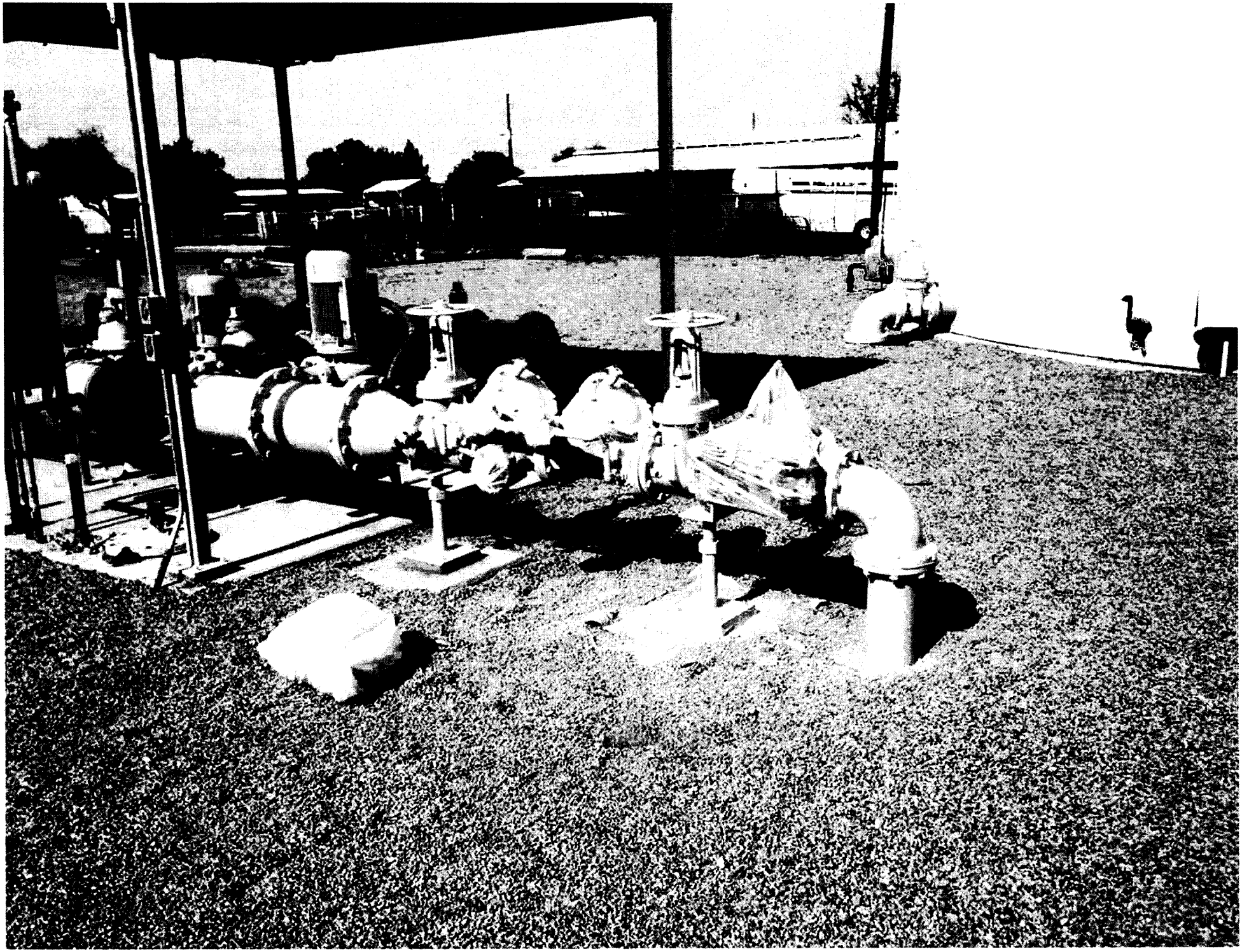

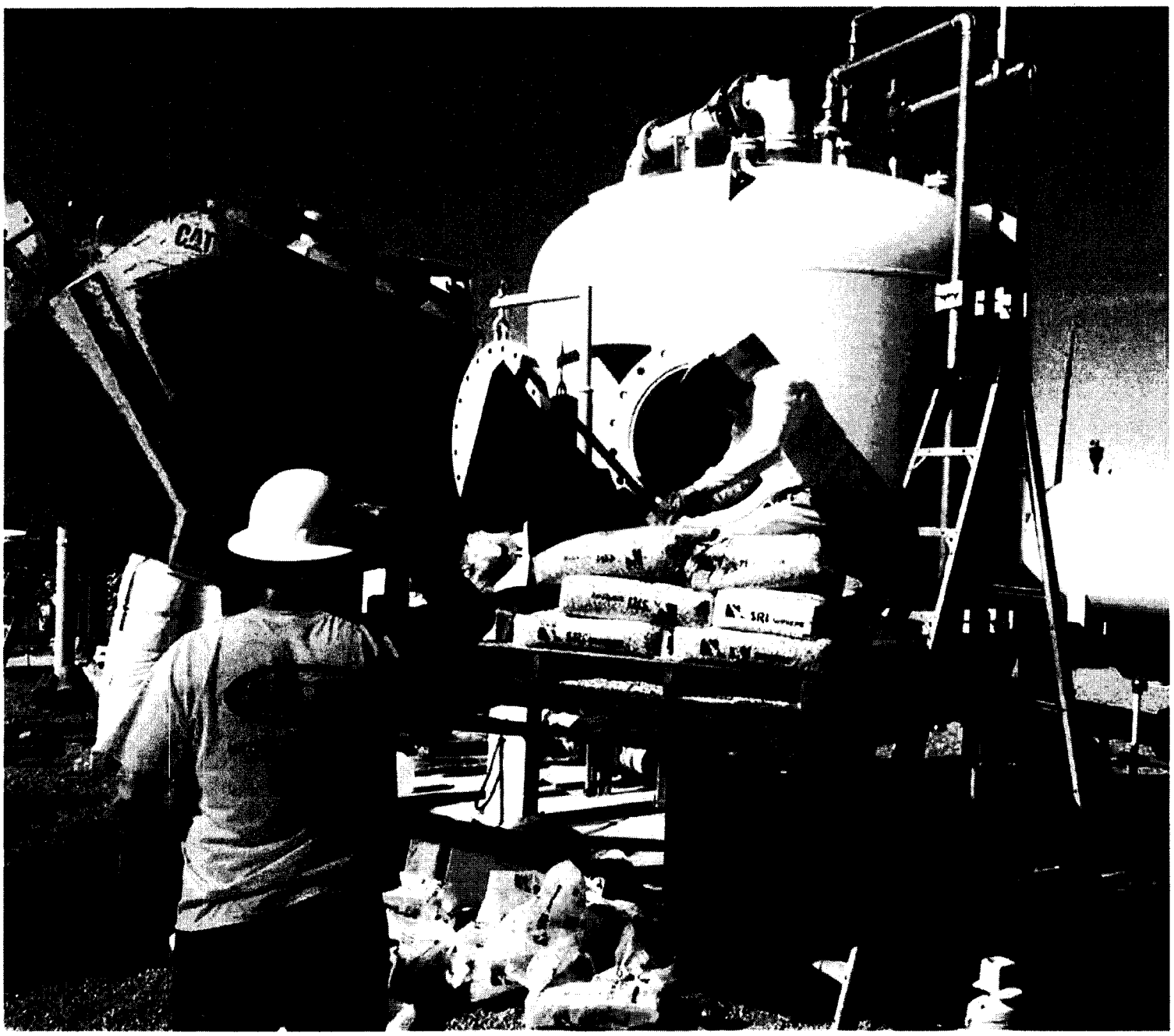

Valley Farms ARF - 6-2-15
Loading Gravel into the Arsenic Vessel

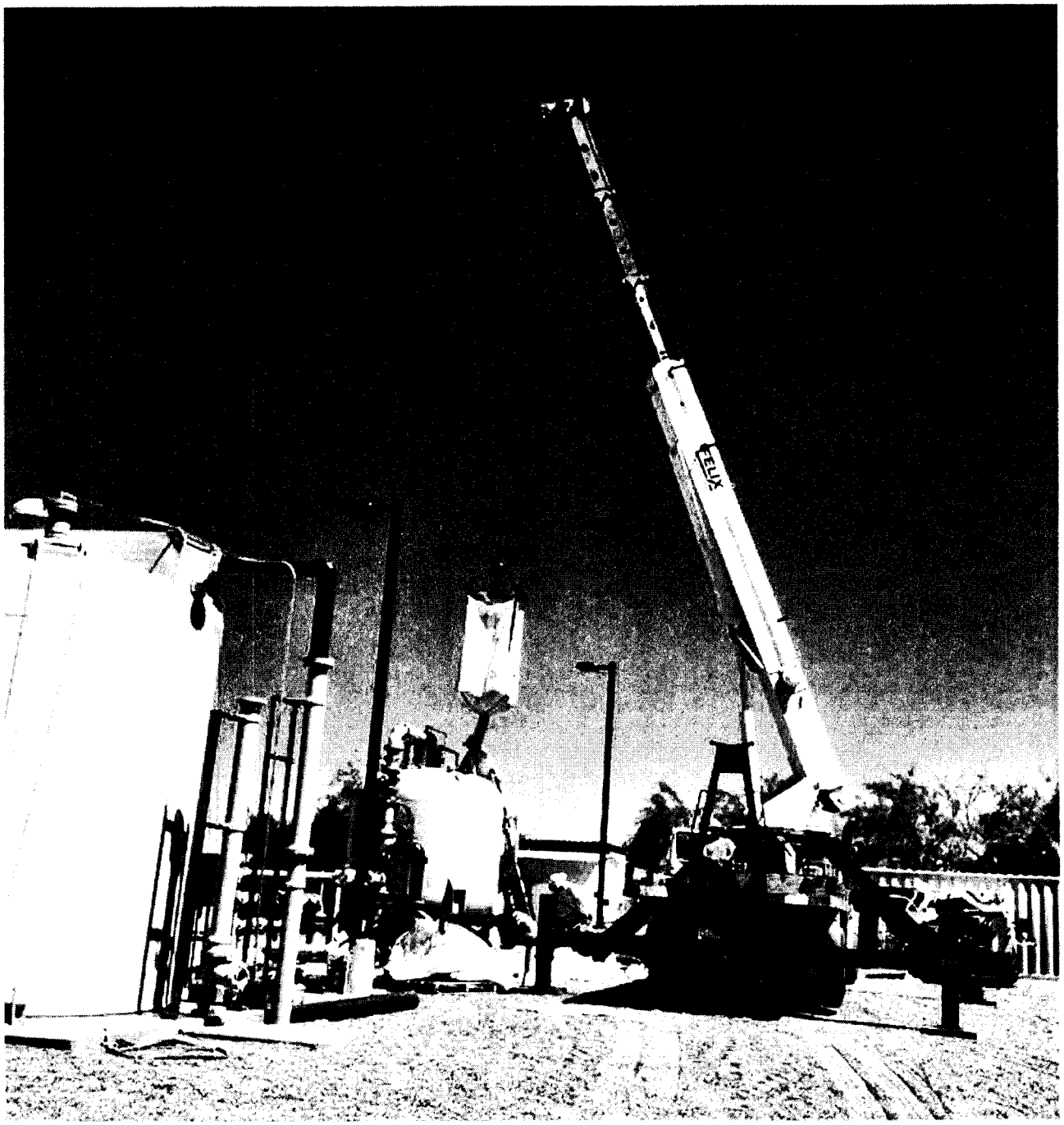

Valley Farms 6-2-15
Loading Arsenic Removal Media
Into Vessel
Looking North

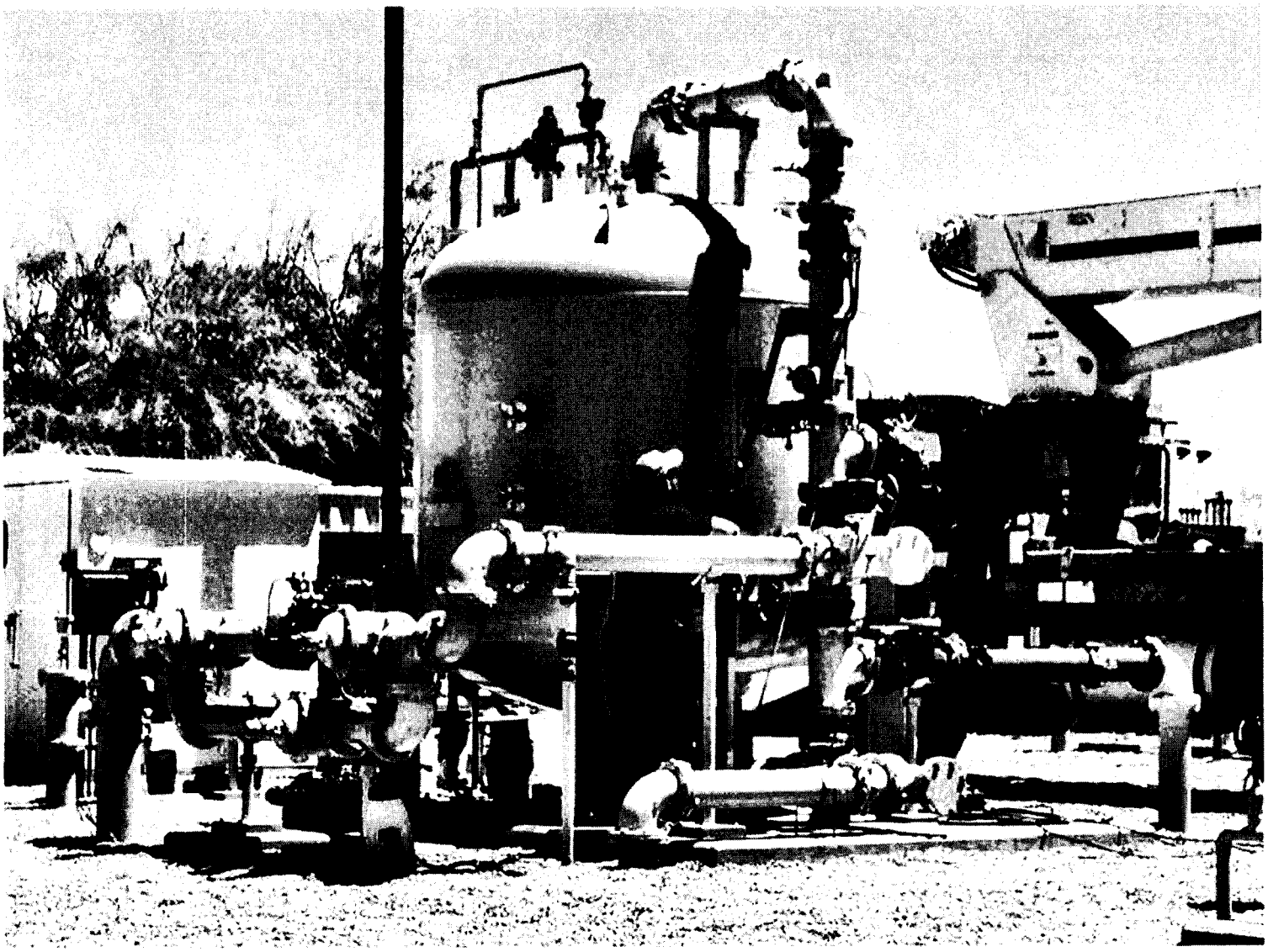

Valley Farms 6-3-15
Severn Trent representative on site to supervise
Arsenic Vessel back washing

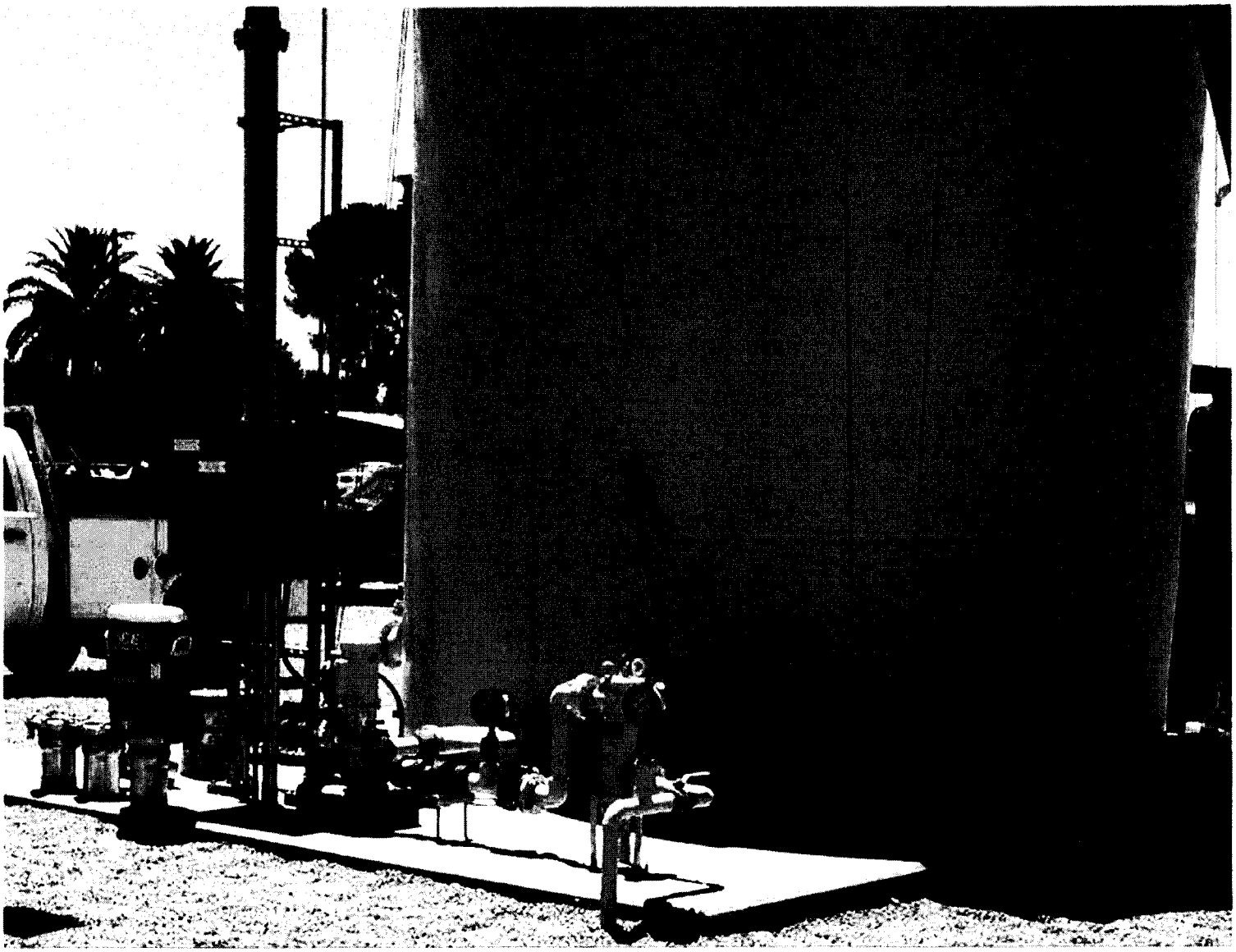

Valley Farms 6-3-15
Recycle pump and piping

ARIZONA DEPARTMENT
OF
ENVIRONMENTAL QUALITY

Douglas A. Ducey
Governor

Henry R. Darwin
Director

APPROVAL OF CONSTRUCTION

Project Description: Valley Farms Arsenic Removal Facility
Installation of ab Arsenic removal system (SORB 33 Engineered Arsenic System), blending plan, booster pumps, and related appurtenances.

Location: Valley Farms, AZ

Project Owner: Arizona Water Company
Address: PO Box 29006, Phoenix, AZ 85038

The Arizona Department of Environmental Quality (ADEQ) hereby issues an Approval of Construction for the above-described facility based on the following provisions of Arizona Administrative Code (A.A.C.) R18-5-507 et seq.

On 6/24/15 William Roberts, P.E., certified that the project was built according to the as-built plans and specifications and ADEQ's Certificate of Approval to Construct.

On 1/12/15, ADEQ issued a Certificate of Approval to Construct for the referenced project.

This Approval of Construction authorizes the owner to begin operating the above-described facilities as represented in the approved plan on file with the ADEQ. Be advised that A.A.C. R18-4-203 requires the owner of a public water system to maintain and operate all water production, treatment and distribution facilities in accordance with ADEQ Safe Drinking Water Rules.

RDR

PWS No.: 141-099
LTF No.: 62636

for 7-7-15
David Burchard
Manager
Date Approved

C: ADEQ File No.: 20140293
Pinal County Health Department
AZ Corporation Commission
Engineer

RIGHT TO APPEAL INFORMATION

The Arizona Department of Environmental Quality's review of this application was subject to the requirements of the licensing time frames ("LTF") statute under Arizona Revised Statutes ("A.R.S.") § 41-1072 through § 41-1079 and the LTF rules under Arizona Administrative Code ("A.A.C.") R18-1-501 through R18-1-525. This Notice is being issued within the overall time frame for your application.

ADEQ hereby approves your application for Approval of Construction Drinking Water Facilities under A.R.S. § 49-351. Your copy of the Approval of Construction Permit is on the reverse side of this Right to Appeal Information sheet.

This decision is an appealable agency action under A.R.S. § 41-1092. You have a right to request a hearing and file an appeal under A.R.S. § 41-1092.03(B). You must file a written Request for Hearing or Notice of Appeal within **30 days** of your receipt of this Notice. A Request for Hearing or Notice of Appeal is filed when it is received by ADEQ's Hearing Administrator as follows:

Office of Administrative Counsel
Arizona Department of Environmental Quality
1110 W. Washington Street
Phoenix, AZ 85007

The Request for Hearing or Notice of Appeal shall identify the party, the party's address, the agency and the action being appealed and shall contain a concise statement of the reasons for the appeal. Upon proper filing of a Request for Hearing or Notice of Appeal, ADEQ will serve a Notice of Hearing on all parties to the appeal. If you file a timely Request for Hearing or Notice of Appeal you have a right to request an informal settlement conference with ADEQ under A.R.S. § 41-1092.06. This request must be made in writing no later than **20 days** before a scheduled hearing and must be filed with the Hearing Administrator at the above address.

Please contact Ali Baadiyan at (602) 771-4127 or asb@azdeq.gov if you have questions regarding this Notice or the Certificate of Approved of Construction.

ARIZONA WATER COMPANY

CONSTRUCTION PLACED IN SERVICE NOTICE

WORK AUTHORIZATION NO.: 1-5167

DIVISION: PV/CG

DATE PLACED IN SERVICE: 7 | 8 | 2015

CONTRACT NO:

FOR PURPOSES OF *MODIFIED ACCELERATED COST RECOVERY SYSTEM*, AN ASSET IS "PLACED IN SERVICE" WHEN IT IS IN A CONDITION OR STATE OF READINESS AND AVAILABILITY FOR A SPECIFICALLY ASSIGNED FUNCTION, WHETHER IT BE FOR USE IN A TRADE OR BUSINESS, OR FOR THE PRODUCTION OF INCOME.

I CERTIFY THAT THE ASSET(S) CONSTRUCTED PURSUANT TO THE PROVISIONS OF THE ABOVE-REFERENCED WORK AUTHORIZATION ARE READY FOR SERVICE AS OF THE DATE SHOWN ABOVE.

Division Manager or Operations Superintendent
(signature)

7-31-15
Date

SUBMIT ORIGINAL TO ACCOUNTING DEPARTMENT

A-1-3-1
FKS 11/24/11