0000161562

Transcript Exhibit(s)

Arizona Corporation Commission
DOCKETED
MAR 30 2015
DOCKETED BY

Docket #(s): WS-01303A-14-0010

Exhibit #: Part 5 of 9

S1-S11

RECEIVED
2015 MAR 30 P 3: 44
AZ CORP COMMISSION
DOCKET CONTROL

EXHIBIT
S-1
ADMITTED

BEFORE THE ARIZONA CORPORATION COMMISSION

SUSAN BITTER SMITH
Chairman
BOB STUMP
Commissioner
BOB BURNS
Commissioner
DOUG LITTLE
Commissioner
TOM FORESE
Commissioner

IN THE MATTER OF THE APPLICATION OF EPCOR WATER ARIZONA, INC., AN ARIZONA CORPORATION, FOR A DETERMINATION OF THE CURRENT FAIR VALUE OF ITS UTILITY PLANT AND PROPERTY AND FOR INCREASES IN ITS RATES AND CHARGES FOR UTILITLY SERVICE BY ITS MOHAVE WATER DISTRICT, PARADISE VALLEY WATER DISTRICT, SUN CITY WATER DISTRICT, TUBAC WATER DISTRICT, AND MOHAVE WASTEWATER DISTRICT.	)	DOCKET NO. WS-01303A-14-0010

DIRECT

TESTIMONY

OF

MICHAEL S. THOMPSON, P. E.

UTILITIES ENGINEER

UTILITIES DIVISION

ARIZONA CORPORATION COMMISSION

JANUARY 23, 2015

TABLE OF CONTENTS

	PAGE
INTRODUCTION	1
PURPOSE OF TESTIMONY	3
ENGINEERING REPORT	4
CONCLUSIONS AND RECOMMENDATIONS	4

EXHIBITS

Engineering Report for Mohave Water District	MST-1
Engineering Report for Paradise Valley Water District	MST-2
Engineering Report for Sun City Water District	MST-3
Engineering Report for Tubac Water District	MST-4
Engineering Report for Mohave Wastewater District	MST-5

INTRODUCTION

Q. Please state your name and business address.

A. My name is Michael Thompson. My business address is 1200 West Washington Street, Phoenix, Arizona 85007.

Q. By whom and in what position are you employed?

A. I am employed by the Arizona Corporation Commission ("Commission" or "ACC") as a Utilities Engineer - Water/Wastewater in the Utilities Division.

Q. How long have you been employed by the Commission?

A. I have been employed by the Commission since June 2013.

Q. What are your responsibilities as a Utilities Engineer - Water/Wastewater?

A. As a Utilities Engineer, specializing in water and wastewater engineering, my responsibilities include: the inspection, investigation, and evaluation of water and wastewater systems; obtaining data, and preparing investigative reports; providing technical recommendations and suggesting corrective action for water and wastewater systems; and providing written and oral testimony in rate cases and other cases before the Commission.

Q. How many companies have you analyzed for the Utilities Division?

A. I have analyzed 14 companies covering various responsibilities for the Utilities Division Staff ("Utilities Staff" or "Staff").

Q. Have you previously testified before this Commission?

A. Yes, I have testified before this Commission.

Q. What is your educational background?

A. I graduated from the SUNY College of Environmental Science and Forestry ("ESF") at Syracuse, New York, and Syracuse University ("SU") at Syracuse, New York. I have a Bachelor of Science Degree in Pulp and Paper Engineering from ESF and Chemical Engineering from SU.

Q. Briefly describe your pertinent work experience.

A. Prior to my employment with the Commission, I was the Operations Engineer, from 2009 to 2012, for the Southwest and Central Districts of Golden State Water Company ("GSWC"), located in Gardena and Santa Fe Springs, California, respectively. As the Operations Engineer, I provided technical assistance and support to the districts' operations departments with primary focus on resolving operational problems and optimizing the efficiency of the water system operations. Prior to my employment with GSWC, I was employed with Chaparral City Water Company ("Chaparral"), from 2002 to 2009 as District Operations Engineer. While at Chaparral, I performed all capital, new business, and water quality activities within the district. I served as field engineer/construction manager for all capital and new business projects under construction. I also managed all water quality activities including monitoring, sampling, and reporting as required by 40 CFR (National Primary Drinking Water Regulations) and Arizona Administrative Code, Title 18, Chapter 4.

From 2000 to 2002, I was employed with the Fountain Hills Sanitary District as Engineering Assistant. I performed plan review of all commercial and residential projects in the Town of Fountain Hills, and managed the district's construction projects.

From 1996 to 2000, I was employed as an Environmental Engineering Specialist with the Arizona Department of Environmental Quality ("ADEQ"). During that time period, I

performed operations and maintenance site inspections of public water systems in Gila, LaPaz, Mohave, and Southwestern Yavapai Counties.

Q. Please state your professional membership, registrations, and licenses.

A. I am registered as a Professional Engineer (Civil) in the State of Arizona, and a Grade 2 Certified Water Treatment Plant Operator, and a Grade 3 Certified Water Distribution System Operator. I am a member of the American Water Works Association and Arizona Water Association.

PURPOSE OF TESTIMONY

Q. What was your assignment in this rate proceeding?

A. My assignment was to provide Staff's engineering evaluations for the EPCOR Water Arizona, Inc. ("EWAZ" or "Company") rate proceedings. Five of the Company's Districts are included: Mohave Water District ("Mohave Water"), Paradise Valley Water District ("Paradise Valley Water"), Sun City Water District ("Sun City Water"), Tubac Water District ("Tubac Water"), and Mohave Wastewater District ("Mohave Wastewater").

Q. What is the purpose of your testimony in this proceeding?

A. To present the findings of Staff's engineering evaluation of the operations for Mohave Water, Paradise Valley Water, Sun City Water, Tubac Water, and Mohave Wastewater. The findings are contained in the Engineering Reports that I have prepared for this proceeding. The reports are included as Exhibits MST-1 thru MST-5 in this pre-filed testimony.

ENGINEERING REPORT

Q. Please describe the information contained in your Engineering Reports.

A. The Reports are divided into four (4) general sections: *1) Executive Summary, 2) Engineering Report Discussion, 3) Engineering Report Figures, and 4) Engineering Report Attachments.* The *Discussion* section for the Mohave, Paradise Valley, Sun City, and Tubac Water Districts is further divided into ten (10) subsections: *1) Introduction and Location of the District Water Systems, 2) Description of the Water Systems, 3) Water Usage, 4) Growth, 5) MCDES Compliance or ADEQ Compliance, 6) Arizona Department of Water Resources Compliance, 7) Arizona Corporation Commission Compliance, 8) Water Testing Expenses, 9) Depreciation Rates, and 10) Other Issues.* The *Discussion* section for the Mohave Wastewater District is divided into eight subsections: 1*) Introduction and Location of the District Wastewater Systems, 2) Description of the Wastewater System, 2) Wastewater Usage, 3) Growth, 4) ADEQ Compliance, 5) Arizona Corporation Commission Compliance, 6) Wastewater Testing Expenses, 7) Depreciation Rates, and 8) Other Issues.*

Q. Was the Engineering Report prepared by you?

A. Yes.

CONCLUSIONS AND RECOMMENDATIONS

Q. What are Staff's conclusions and recommendations regarding the operations of the District's Water Systems?

A. Staff's conclusions and recommendations for each District are contained in the Executive Summary of the respective engineering report.

Q. Does this conclude your Direct Testimony?

A. Yes, it does.

EXHIBIT MST-1

ENGINEERING REPORT FOR EPCOR WATER ARIZONA, INC.,

MOHAVE WATER DISTRICT

BY MICHAEL THOMPSON

JANUARY 20, 2015

ENGINEERING REPORT FOR
EPCOR Water Arizona Inc.
Mohave Water District

Docket No. WS-01303A-14-0010 (Rates)

By Michael Thompson, P. E.

December 15, 2014

EXECUTIVE SUMMARY

CONCLUSIONS

1. The Arizona Corporation Commission ("ACC" or "Commission") Utilities Division Staff ("Utilities Staff" or "Staff") concludes that the Mohave Water District ("Mohave Water" or "District") water systems, with the exception of Rio Vista Ranches, have adequate production and storage capacity to serve the present customer base and any reasonable growth. Rio Vista Ranches water system has no production or storage facilities, it receives water from an interconnect with Bermuda Water Company.

2. The Arizona Department of Environmental Quality ("ADEQ") Compliance Status Reports ("CSRs") indicate that the District water systems and Bermuda Water Company are currently delivering water that meets water quality standards required by 40 CFR 141 (National Primary Drinking Water Regulations) and Arizona Administrative Code, Title 18, Chapter 4.

3. The District's water system service areas are not located within an Arizona Department of Water Resources ("ADWR") Active Management Area ("AMA").

4. ADWR's Water Provider Compliance Reports, dated June 6, 2014, indicate that the District's water systems are currently in compliance with departmental requirements governing water providers and/or community water systems.

5. According to the Commissions Utilities Division Compliance Section database the District currently has no delinquent Commission compliance items.

6. The District has approved Cross-Connection/Backflow Prevention and Curtailment Tariffs on file with the Commission.

7. The District has ten (10) Best Management Practices ("BMPs") on file with the Commission.

8. The Mohave water system has five (5) inactive wells, listed under Table A, which have been disconnected, capped, and abandoned. Staff concludes that the wells are not used and useful to the District's provision of service.

9. The Camp Mohave water system has one (1) inactive well, listed under Table B, which has been disconnected, capped, and abandoned. Staff concludes that the well is not used and useful to the District's provision of service.

10. The Lake Mohave water system has one (1) inactive well, listed under Table C, which has been disconnected from the water system. Staff concludes that the well is not used and useful to the District's provision of service.

11. The Desert Foothills water system has one (1) inactive well, listed under Table ~~A~~ D, which has been disconnected from the water system. Staff concludes that the well is not used and useful to the District's provision of service.

12. On May 2, 2012, the Environmental Protection Agency ("EPA") revised and implemented the Unregulated Contaminant Monitoring Rule 3 ("UCMR3"). The District began sampling for the first sample set of UCRM3 contaminants in August 2014. The second set of samples will be sampled in February 2015. The total cost for testing the samples, as illustrated in Table P, is anticipated to be $9,240. Staff concludes that the one-time expense of $9,240 associated with sampling and testing of the UCMR3 contaminants is reasonable and appropriate.

13. The District Post Test Year Investment Projects ("IPs"), listed in Table P, were found to be in-service and used and useful during the plant facilities site inspection on June 24 & 25, 2014. Staff concludes that the costs ($5,355,826) associated with the installation of the District's IPs, listed in Table P, are reasonable and appropriate.

14. Staff has determined that the District's proposed System Improvement Benefit ("SIB") Mechanism (eligible 5-year infrastructure replacement plan), totaling $9,884,632, to be reasonable and appropriate. However, no "used and useful" determination of the proposed plant items was made, and no conclusions should be inferred for rate base purposes in the future.

RECOMMENDATIONS

1. Staff recommends an annual water testing expense, for the District, of $32,262 be used for the purposes of this application.

2. Staff recommends the depreciation rates listed under "Staff's Recommended Rates" in Table N be adopted.

3. Staff has no objections to the continued use of the currently authorized meter and service installation charges, as proposed by the District, and recommends the charges listed under "Staff's Recommendations" in Table O be adopted.

4. Water loss in the Desert Foothills water system was 14.33 percent in 2013, exceeding the 10 percent limit. Staff recommends that the District continue its efforts, via the District's Non Revenue Water Program, to reduce water loss in the Desert Foothills water system to below 10 percent. (See Section C, Paragraph 2 of the report for additional discussion and details).

5. EPCOR Water Arizona, Inc. ("EWAZ" or "Company") filed a proposed change to the Meter Repair and/or Replacement Tariff ("BMP 4.2"). In the proposed change, EWAZ requested that paragraph 3 of the BMP tariff, which refers to the inspection of meters, be modified such that pulling a meter for inspection would no longer be required and therefore be stricken from the tariff. Staff recommends approval of the modification in BMP 4.2, as proposed by EWAZ.

6. Staff recommends that the District file with Docket Control, as a compliance item in this docket and within 90 days of the effective date of a decision in this proceeding, documentation that the installation of a purchased water meter at the Bermuda Water Company and Rio Vista water system interconnect has been completed. Installation of the meter will provide usage figures that would enable the District to determine the Rio Vista water system water loss. Staff further recommends that District begin monitoring water loss, on a monthly basis, by coordinating the readings of the purchased water meter and the individual customer meters, and reporting the results in its Commission Annual Report going forward.

7. Staff recommends approval of the District's proposed Plant Table I of the SIB Mechanism (eligible 5 year infrastructure improvement projects), submitted as a supplement to the District's application by EWAZ on March 17, 2014, totaling $9,884,632 as tabulated in Table T. Staff further recommends that SIB Attachments 2A-2E, 3A-3J, 4A-4E, and 5A-5G, 6, 7A-7O be adopted.

TABLE OF CONTENTS

PAGE

A. INTRODUCTION AND LOCATION OF COMPANY 8

B. DESCRIPTION OF THE WATER SYSTEMS 8

(1) *MOHAVE WATER SYSTEM – PUBLIC WATER SYSTEM ("PWS") NO. 04-08-032* 8
(2) *CAMP MOHAVE WATER SYSTEM – PWS NO. 04-08-037* 10
(3) *LAKE MOHAVE HIGHLANDS WATER SYSTEM- PWS NO. 04-08-062* 11
(4) *DESERT FOOTHILLS WATER SYSTEM- PWS NO. 04-08-137* 13
(5) *ARIZONA GATEWAY WATER SYSTEM- PWS NO. 04-08-163* 14
(6) *RIO VISTA RANCHES WATER SYSTEM- PWS NO. 04-08-333* 15

C. WATER USE 15

(1) *WATER SOLD* 15
(2) *NON-ACCOUNTED FOR WATER* 16
(3) *WATER SYSTEM ANALYSIS* 17

D. GROWTH 18

E. ARIZONA DEPARTMENT OF ENVIRONMENTAL QUALITY ("ADEQ") COMPLIANCE 19

(1) *COMPLIANCE STATUS* 19
(2) *WATER MONITORING AND TESTING EXPENSES* 20

F. ARIZONA DEPARTMENT OF WATER RESOURCES ("ADWR") COMPLIANCE 23

G. ARIZONA CORPORATION COMMISSION COMPLIANCE 24

I. OTHER ISSUES 26

(1) *SERVICE LINE AND METER INSTALLATION CHARGES* 26
(2) *CURTAILMENT TARIFF* 27
(3) *CROSS-CONNECTION/BACKFLOW PREVENTION TARIFF* 27
(4) *BEST MANAGEMENT PRACTICES ("BMP") TARIFF* 27
(5) *UNREGULATED CONTAMINANT MONITORING* 27
(6) *MOHAVE WATER DISTRICT POST TEST YEAR PLANT ADDITIONS – POST TEST YEAR INVESTMENT PROJECTS ("TPS") USED AND USEFUL (JULY 2013 – JUNE 30, 2014)* 28
(7) *SYSTEM IMPROVEMENT BENEFIT ("SIB") – MOHAVE WATER DISTRICT* 28

FIGURES

PAGE

FIGURE 1: MOHAVE COUNTY MAP 32
FIGURE 2: MOHAVE WATER DISTRICT CERTIFIED AREA 33
FIGURE 3A – 3E: MOHAVE WATER SYSTEM SCHEMATIC DIAGRAMS 34-38
FIGURE 3A: 16-1 & 24.1 Well Sites, & Silver Creek & Laredo Village Tank Sites 34
FIGURE 3B. 16-4 & Laredo Village No. 1 & 2 Well Sites 35
FIGURE 3C. 16.2 & 16.3 Well Sites, & Riverview Mall Booster Pumps Station ("B.P.S.") 36
FIGURE 3D. Big Bend Well Site, Mohave Drive B.P.S. & Desert Glen B.P.S. 37
FIGURE 3E. Bullhead City No. 5 Well Site, Upper Tank Zone & Mountain View B.P.S. 38
FIGURE 3F. CAMP MOHAVE & ARIZONA GATEWAY WATER SYSTEM SCHEMATIC DIGRAMS 39
FIGURE 3F. Camp Mohave Well Site & Arizona Gateway Well & Tank Sites 39
FIGURE 3G. LAKE MOHAVE HIGHLANDS WATER SYSTEM SCHEMATIC DIAGRAM 40

FIGURE 3G. Lake Mohave Highlands Well Site & Pegasus Ranch & Upper B.P.S. *40*
FIGURE 3H. DESERT FOOTHILLS WATER SYSTEM SCHEMATIC DIAGRAM **41**
FIGURE 3H. Desert Foothills & Laughlin Ranch Well Sites & Terraces B.P.S. *41*
FIGURE 4A. MOHAVE WATER SYSTEM WATER CONSUMPTION GRAPH **42**
FIGURE 4B. CAMP MOHAVE WATER SYSTEM WATER CONSUMPTION GRAPH **42**
FIGURE 4C. LAKE MOHAVE HIGHLANDS WATER SYSTEM WATER CONSUMPTION GRAPH **43**
FIGURE 4D. DESERT FOOTHILLS WATER SYSTEM WATER CONSUMPTION GRAPH **43**
FIGURE 4E. ARIZONA GATEWAY WATER SYSTEM WATER CONSUMPTION GRAPH **44**
FIGURE 4F. RIO VISTA RANCHES WATER SYSTEM WATER CONSUMPTION GRAPH **44**
FIGURE 5. MOHAVE WATER DISTRICT ACTUAL & PROJECTED GROWTH GRAPH **45**

ATTACHMENTS

METER REPAIR AND/OR REPLACEMENT TARIFF – BMP 4.2 ..... **1**
SIB SERVICE LINE REPLACEMENTS TABLE I, 1-1 THRU 1-5 ..... **2A – 2E**
Mohave Water System Service Line Replacements Table I, 1-1 2015 ..... *2A*
Mohave Water System Service Line Replacements Table I, 1-2 2016 ..... *2B*
Mohave Water System Service Line Replacements Table I, 1-3 2017 ..... *2C*
Mohave Water System Service Line Replacements Table I, 1-4 2018 ..... *2D*
Mohave Water System Service Line Replacements Table I, 1-5 2019 ..... *2E*
SIB VALVE REPLACEMENTS TABLE I, 2-1 THRU 2-10 ..... **3A – 3J**
Mohave Water System Service Line Replacements Table I, 2-1 2015 ..... *3A*
Mohave Water System Service Line Replacements Table I, 2-2 2016 ..... *3B*
Mohave Water System Service Line Replacements Table I, 2-3 2017 ..... *3C*
Mohave Water System Service Line Replacements Table I, 2-4 2018 ..... *3D*
Mohave Water System Service Line Replacements Table I, 2-5 2019 ..... *3E*
Desert Foothills Water System Valve Replacements Table I, 2-6 2019 ..... *3F*
Lake Mohave Highlands Water System Valve Replacements Table I, 2-7 2019 ..... *3G*
Camp Mohave Water System Valve Replacements Table I, 2-8 2019 ..... *3H*
Rio Vista Water System Valve Replacements Table I, 2-9 2019 ..... *3I*
Arizona Gateway Water System Valve Replacements Table I, 2-10 2019 ..... *3J*
SIB MAIN REPLACEMENTS TABLE I, 3-1 THRU 3-5 ..... **4A – 4E**
Mohave Water System Main Replacements Table I, 3-1 2015 ..... *4A*
Mohave Water System Main Replacements Table I, 3-2 2016 ..... *4B*
Mohave Water System Main Replacements Table I, 3-3 2017 ..... *4C*
Mohave Water System Main Replacements Table I, 3-4 2018 ..... *4D*
Mohave Water System Main Replacements Table I, 3-5 2019 ..... *4E*
SIB METER REPLACEMENTS TABLE I, 4-1 THRU 4-7 ..... **5A – 5G**
Mohave Water System Meter Replacements Table I, 4-1 2015 ..... *5A*
Mohave Water System Meter Replacements Table I, 4-2 2016 ..... *5B*
Mohave Water System Meter Replacements Table I, 4-3 2017 ..... *5C*
Mohave Water System Meter Replacements Table I, 4-4 2018 ..... *5D*

Desert Foothills Water System Meter Replacements Table I, 4-5 2018 ..... *5E*
Mohave Water System Meter Replacements Table I, 4-6 2019 ..... *5F*
Rio Vista Water System Meter Replacements Table I, 4-7 2019 ..... *5G*
MOHAVE WATER DISTRICT ("MWD") PLAN OF ADMINISTRATION **6**
MWD SIB PLANT TABLES I & II, SUMMARY TABLE & SCHEDULES ..... **7A – 7O**
Mohave Water District SIB Table I *7A*
Mohave Water District SIB Table II, Main Replacement, Page 1A *7B*
Mohave Water District SIB Table II, Main Replacement, Page 1B *7C*
Mohave Water District SIB Table II, Valve Replacements, Page 2A *7D*
Mohave Water District SIB Table II, Valve Replacements, Page 2B *7E*
Mohave Water District SIB Table II, Service Replacements, Page 3A *7F*
Mohave Water District SIB Table II, Service Replacements, Page 3B *7G*
Mohave Water District SIB Table II, Meter Replacements, Page 4A *7H*
Mohave Water District SIB Table II, Meter Replacements, Page 4B *7I*
Mohave Water District SIB Summary Table *7J*
Mohave Water District SIB Schedule A *7K*
Mohave Water District SIB Schedule B *7L*
Mohave Water District SIB Schedule C *7M*
Mohave Water District SIB Schedule D *7N*
Mohave Water District SIB Sub Schedule List D *7O*

A. INTRODUCTION AND LOCATION OF COMPANY

On March 7, 2014, EPCOR Arizona Water Company, Inc. ("EWAZ" or "Company") filed an application with the Arizona Corporation Commission ("ACC" or "Commission") for approval of a rate increase (Docket No. WS-01303A-14-0010) for its Mohave Water District ("Mohave Water" or "District"). Mohave Water's current rates were approved in Commission Decision No. 73145, dated May 1, 2012.

The District provides public utility water service to approximately 16,000 metered connections.[1] The District is located within the city of Bullhead City and in the unincorporated areas of Mohave County, and is comprised of six (6) separate water systems which include Camp Mohave, Lake Mohave Highlands, Desert Foothills, Rio Vista Ranches, Arizona Gateway, and Mohave (aka Bullhead City water system). The location of the District and the area covered by its Certificate of Convenience and Necessity ("CC&N"), which covers approximately 16,663 acres (26.1 square miles), are shown in Figures 1 and 2, respectively. The original CC&N area was transferred from Arizona-American Water Company to EWAZ in Commission Decision No. 72668 dated November 17, 2011.

B. DESCRIPTION OF THE WATER SYSTEMS[2]

The District's water systems were visited on June 24 & 25, 2014, by Staff member Michael Thompson. Mr. Thompson was accompanied by Teresa Hunsaker (Staff Public Utilities Analyst III), Mr. Jeffrey Stuck (EWAZ Director of Operation, Eastern Division), Mr. Roland Tanner (EWAZ Manager, Rates & Regulation), and Mr. David Evans (EWAZ Operations Manager, Mohave Water District). Mr. Evans is responsible for the day-to-day operations of the District, and is also the lead certified operator of record.[3] Mr. Evans currently supervises twenty one (21) employees, which includes customer service and field operations.

(1) Mohave Water System – Public Water System ("PWS") No. 04-08-032

The Mohave Water System serves a majority of the Bullhead City area, with a certified area of approximately 13,228 acres (20.7 square miles), encompasses eighteen (18) pressure zones with elevations ranging from 640 to 1390 feet above sea level ("FASL"). The water system contains six (6) well/booster pump station/storage tank sites, four (4) booster pump station/storage tank sites, one (1) storage tank site, one (1) booster pump station site, and three (3) well sites. In all, the water system has a total of nine (9) active drinking water wells, fourteen (14) storage tanks, five (5) pressure tanks, twenty three (23) booster pumps, one portable emergency generator, and one (1) permanently mounted emergency generator. Additionally, the water system has five (5) inactive wells that have been disconnected and capped. The inactive wells are considered not used and useful to the

---

[1] Per water use data submitted with the application.

[2] The description of the water systems is based on one, or a combination of, the following sources: 1) Company's Application, 2) Direct Testimony of Jeff Stuck, dated March 7, 2014, 3) Information contained in the Company's Response to Staff Data Requests and, 4) Information collected during Staff's site visit. Check other footnotes should all be the same.

[3] Mr. Evans is certified with the Arizona Department of Environmental Quality ("ADEQ") as a Grade 4 Water Distribution System Operator, a Grade 4 Treatment Plant Operator, a Grade 4 Wastewater Treatment Plant Operator, and a Grade 4 Wastewater Collection System Operator. ADEQ Operator Identification No. OP000655, expiration date April 30, 2017.

District's provision of service. The in-service plant facilities (i.e., wells, tanks, pumps, and visible pipe) within the Mohave Water System service areas appeared to be in proper working order, properly maintained, and in excellent condition. Staff did not observe any leaks at the plant facilities, or in the distribution system.

Detailed listings of the plant facilities are included in Table A. Schematics of the service area are illustrated in Figures 3A through 3E.

Table A. Mohave Water System Plant Facilities Summary

Well Data – Active Wells							
Well ID	ADWR Well ID	Pump (hp)[1]	Pump Yield (gpm)[2]	Casing Depth (feet)	Casing Diameter (inches)	Meter Size (inches)	Year Drilled
(T) BBA	55-519149	100	2,100	280	18	12	1987
(S) BHC-5	55-603477	40	350	450	12	6	1975
(S) LV-1	55-214621	60	180	1,410	8	3	2008
(S) LV-2	55-221762	40	100	1,406	12	3	2013
(T) 16-1	55-603473	200	2,150	400	14-16	8	1970
(S) 16-2	55-603472	75	600	610	12-10	8	1975
(T) 16-3	55-509446	75	500	602	14	12	1985
(S) 16-4	55-222149	250	1,400	860	21	6	2013
(T) 24-1	55-506309	250	1,400	515	16	6	1983

(S) Signifies Submersible Pump Well
(T) Signifies Turbine Pump Well
[1] hp Signifies horsepower
[2] gpm Signifies gallons per minute

Well Data – Inactive Wells (Disconnected & Capped)							
Well ID	ADWR Well ID	Pump (hp)	Pump Yield (gpm)	Casing Depth (feet)	Casing Diameter (inches)	Meter Size (inches)	Year Drilled
River Bend Well	55-603415	25	112	200	16	6	Unknown
Riveria Well	55-603474	18	450	101	16	6	1959
BBA-1	55-603476	Unknown	250	115	8	None	1961
BHC-3	55-603478	8	350	450	12	6	Unknown
BHC-4	55-603479	20	220	580	12	6	1963

Water Storage and Booster Pump Stations					
Site	Storage Tanks (Gallons)	Pressure Tanks (Gallons)	Booster Pumps	Wells	Emergency Back-up Generator
Big Bend Acres Well, Booster Pump Station, & Storage Tank Site	1 – 250,000	None	3 - 50 hp	BBA	None
Desert Glen Booster Pump Station, & Storage Tank Site	1 – 200,000	1 – 5,000	1 – 100 hp 2 – 15 hp	None	None
Laredo Vista Well #1, Booster Pump Station, & Storage Tank Site	1 – 36,500	None	2 – 15 hp	LV-1	None
Laredo Vista Well #2, Booster Pump Station, & Storage Tank Site	1 – 37,500	None	2 – 7.5 hp	LV-2	Portable Generator

Laredo Village Storage Tank Site	1 – 500,000 1 – 750,000	None	None	None	None
Mohave Drive Booster Pump Station Site	None	1 – 5,000	1 – 1 ½ hp 1 – 2 hp 1 – 50 hp	None	None
Mountain View Booster Pump Station & Storage Tank Site	1 – 125,000	1 - 70	2 – 20 hp	None	None
Riverview Mall Booster Pump Station, & Storage Tank Site	1 – 35,000	1 – 5,000	1 – 50 hp 2 – 15 hp	None	None
Silver Creek Storage Tank Site	1 – 300,000	None	1 – 40 hp	None	None
16-1 Well & Storage Tank Site	1 – 450,000 1 – 1,000,000	None	1 – 15 hp	16-1	None
16-2 Well & Storage Tank Site	1 – 450,000 1 – 1,000,000	1 – 10,000	1 – 100 hp	16-2	None
24-1 Well & Storage Tank Site	1 – 1,000,000	None	2 – 100 hp	24-1	400 kw Generator

Service Area Distribution Mains		
Diameter (inches)	Material	Length (feet)
2	Various	14,037
3	Various	74,380
4	Various	214,839
6	Various	416,079
8	Various	208,575
10	Various	16,900
12	Various	88,703
16	Various	3,025
18	Various	1,176
24	Various	126
Undetermined	Various	6,505
Total Length		1,044,345

Service Areas Meters	
Size (inches	Quantity
5/8 x 3/4	15,925
3/4	12
1	370
1 ½	6
2	439
3	25
4	5
6	4
Total Quantity	16,786

(2) Camp Mohave Water System – PWS No. 04-08-037

The Camp Mohave Water System serves an unincorporated portion of southern Bullhead City, with a certified area of approximately 329 acres (0.5 square miles), consisting of one (1) pressure zone with an elevation of approximately 520 FASL. The water system has one (1) well/storage tank/ booster pump station site that contains one (1) active drinking water well, one (1) inactive/disconnected and capped well, (1) storage tank, one (1) pressure tank, four (4) booster pumps, an iron/manganese removal plant, and a granular activated carbon ("GAC") finishing filter for total organic carbon ("TOC") reduction. The inactive well is considered not used and useful to the District's provisions of service. The in-service plant facilities (i.e., wells, tanks, pumps, and visible

pipe) appeared to be in proper working order, properly maintained, and in excellent condition. Staff did not observe any leaks at the plant facilities, or in the distribution system.

Detailed listings of the plant facilities are included in Table B. Schematics of the service area are illustrated in Figure 3F.

Table B. Camp Mohave Water System Plant Facilities Summary

Well Data – Active Well							
Well ID	ADWR Well ID	Pump (hp)	Pump Yield (gpm)	Casing Depth (feet)	Casing Diameter (inches)	Meter Size (inches)	Year Drilled
(S) Well-2	55-559559	20	500	312	8	4	1996

(S) Signifies Submersible Pump Well

Well Data – Inactive Well (Disconnected & Capped)							
Well ID	ADWR Well ID	Pump (hp)	Pump Yield (gpm)	Casing Depth (feet)	Casing Diameter (inches)	Meter Size (inches)	Year Drilled
Well-1	55-603416	Unknown	55	200	8	None	Unknown

Service Area Distribution Mains		
Diameter (inches)	Material	Length (feet)
6	Various	6,930
8	Various	5,185
10	Various	4,429
Undetermined	Various	34
Total Length		18,232

ge and Bo	
sure Tanks	
Gallons)	
1 – 250,000	1 – 5,000

Service Areas Meters	
Size (inches	Quantity
5/8 – 3/4	Wells 53
3/4	None
12 – 15 hp	Well-2 9
12½ 40 hp	Well-1 Inactive None
2	9
Total Quantity	71

Booster Pumps	Emergency Back-up Generator
Camp Mohave Well, Booster Pump Station & Storage Tank Site	175 kw Generator

(3) Lake Mohave Highlands Water System- PWS No. 04-08-062

The Lake Mohave Highlands Water System serves an area north of Bullhead City and Desert Foothills, with a certified area of approximately 322 acres (0.5 square miles), consisting of three (3) pressure zones with elevations ranging from 870 to 1,080 FASL. The water system contains one (1) well/booster pump station/storage tank site (Lake Mohave Highlands Well Site), one (1) booster pump station/storage tank site (Pegasus Ranch Booster Pump Station & Storage Tank Site), and one (1) booster pump station site (Upper Booster Pump Station Site). In all, the water system has a total of two (2) active drinking water wells, one (1) inactive well, four (4) storage tanks (one (1) not in use),

three (3) pressure tanks, seven (7) booster pumps, and one (1) permanently mounted emergency generator.

The inactive well, located at the Pegasus Ranch Booster Pump Station & Storage Tank Site has been disconnected from the water system. The well is considered not used and useful to the District's provisions of service.

The Lake Mohave Highlands Well Site has one (1) storage tank, provided by a developer, which is currently not in use or connected to the water system. The storage tank was originally built to provide service to the Hillcrest subdivision. However, since acquiring the North Mohave water system and installing the Pegasus Ranch/North Mohave interconnect, the tank is not currently needed. The District will likely place the storage tank in service once the Hillcrest subdivision is built out. Therefore, the storage tank is considered not used and useful to the District's provision of service.

The in-service plant facilities (i.e., wells, tanks, pumps, and visible pipe) appeared to be in proper working order, properly maintained, and in excellent condition. Staff did not observe any leaks at the plant facilities, or in the distribution system.

Detailed listings of the plant facilities are included in Table C. Schematics of the service area are illustrated in Figure 3G.

Table C. Lake Mohave Highlands Water System Plant Facilities Summary

Well Data – Active Well							
Well ID	ADWR Well ID	Pump (hp)	Pump Yield (gpm)	Casing Depth (feet)	Casing Diameter (inches)	Meter Size (inches)	Year Drilled
(S) Well-1	55-603417	20	150	500	10	4	1973
(S) Well-2	55-556101	20	150	505	8	4	1996

(S) Signifies Submersible Pump Well

Well Data – Non-Drinking Water Well (Disconnected from Water System)							
Well ID	ADWR Well ID	Pump (hp)	Pump Yield (gpm)	Casing Depth (feet)	Casing Diameter (inches)	Meter Size (inches)	Year Drilled
Well-3	55-548414	Unknown	500	760	24	None	1995

Water Storage and Booster Pump Stations					
Site	Storage Tanks (Gallons)	Pressure Tanks (Gallons)	Booster Pumps	Wells	Emergency Back-up Generator
Lake Mohave Highlands Well, Booster Pump Station, & Storage Tank Site	1 – 150,000 1 – 100,000	1 – 10,000	2 – 25 hp	Well-1 Well-2	60 kw Generator
Pegasus Ranch Booster Pump Station & Storage Tank Site	1 – 125,000	1 – 1,000	1 – 10 hp 2 – 25 hp	Well-3 Inactive	None
Upper Booster Pump Station	None	1 – 3,000	2 – 5 hp	None	None

Service Area Distribution Mains		
Diameter (inches)	Material	Length (feet)
2	Various	477
3	Various	163
4	Various	10,382
6	Various	9,694
8	Various	4,954
Total Length		25,670

Service Areas Meters	
Size (inches	Quantity
5/8 x 3/4	270
3/4	None
1	6
Total Quantity	71

(4) Desert Foothills Water System- PWS No. 04-08-137

The Desert Foothills Water System serves an area northeast of Bullhead City, with a certified area of approximately 2,283 acres (3.6 square miles), consisting of four (4) pressure zones with elevations ranging from 935 to 1,275 FASL. The water system contains one (1) active well/booster pump station/storage tank site (Desert Foothills Well Site), one (1) booster pump station site (Terraces Booster Pump Station Site), and one (1) well site (Laughlin Ranch Well Site). In all, the water system has a total of two (2) active drinking water wells, one (1) inactive well, two (2) storage tanks, two (2) pressure tanks, seven (7) booster pumps, and one (1) permanently mounted emergency generator.

The inactive well, located at the Desert Foothills Well Site, has been disconnected from the water system. The well is considered not used and useful to the District's provision of service.

The in-service plant facilities (i.e., wells, tanks, pumps, and visible pipe) appeared to be in proper working order, properly maintained, and in excellent condition. Staff did not observe any leaks at the plant facilities, or in the distribution system.

Detailed listings of the plant facilities are included in Table D. Schematics of the service area are illustrated in Figure 3H.

Table D. Desert Foothills Water System Plant Facilities Summary

Well Data – Active Well							
Well ID	ADWR Well ID	Pump (hp)	Pump Yield (gpm)	Casing Depth (feet)	Casing Diameter (inches)	Meter Size (inches)	Year Drilled
(S) DF-2	55-557919	150	600	1,073	12	12	1996
(S) LR-1	55-204657	75	214	710	17	4	2005

(S) Signifies Submersible Pump Well

Well Data – Inactive Well (Disconnected)							
Well ID	ADWR Well ID	Pump (hp)	Pump Yield (gpm)	Casing Depth (feet)	Casing Diameter (inches)	Meter Size (inches)	Year Drilled
DF-1	55-551125	10	25	1,212	5	2	1995

Water Storage and Booster Pump Stations					
Site	Storage Tanks (Gallons)	Pressure Tanks (Gallons)	Booster Pumps	Wells	Emergency Back-up Generator
Desert Foothills Well, Booster Pump Station, & Storage Tank Site	2 – 500,000	1 – 5,000	3 – 10 hp 1 – 25 hp	Well-1 Well-2	100 kw Generator
Terraces Booster Pump Station Site	None	1 – 3,000	2 – 10 hp 1 – 40 hp	None	None
Laughlin Ranch Well Site	None	None	None	LR-1	None

Service Areas Meters	
Size (inches	Quantity
5/8 x 3/4	1,034
3/4	1
1	7
2	23
4	1
Total Quantity	1,066

Service Area Distribution Mains		
Diameter (inches)	Material	Length (feet)
2	Various	3
6	Various	18,025
8	Various	65,591
10		2,715
12		14,290
Undetermined	Various	481
Total Length		101,105

(5) Arizona Gateway Water System- PWS No. 04-08-163

The Arizona Gateway Water System serves an area approximately 30 miles southeast of Bullhead City, with a certified area of approximately 179 acres (0.3 square miles), consisting of one (1) pressure zone with an elevation of approximately 1,000 FASL. The water system contains one (1) well site, one (1) booster pump station/storage tank site. In all, the water system has a total of two (2) active drinking water wells, one (1) storage tank, four (4) booster pumps, and one (1) permanently mounted emergency generator.

The in-service plant facilities (i.e., wells, tanks, pumps, and visible pipe) appeared to be in proper working order, properly maintained, and in excellent condition. Staff did not observe any leaks at the plant facilities, or in the distribution system.

Detailed listings of the plant facilities are included in Table E. Schematics of the service area are illustrated in Figure 3F.

Table E. Arizona Gateway Water System Plant Facilities Summary

Well Data – Active Well							
Well ID	ADWR Well ID	Pump (hp)	Pump Yield (gpm)	Casing Depth (feet)	Casing Diameter (inches)	Meter Size (inches)	Year Drilled
(S) Well-1	55-586016	8	35	695	8	2	2003
(T) Well-2	55-200219	60	300	775	10	6	2007

(S) Signifies Submersible Pump Well
(T) Signifies Turbine Pump Well

Water Storage and Booster Pump Stations

Site	Storage Tanks (Gallons)	Pressure Tanks (Gallons)	Booster Pumps	Wells	Emergency Back-up Generator
Booster Pump Station, & Storage Tank Site	1 – 350,000	3 – 120	4 – 40 hp	Well-1 Well-2	150 kw Generator

Service Areas Meters	
Size (inches	Quantity
5/8 x 3/4	4
2	6
Total Quantity	10

Service Area Distribution Mains		
Diameter (inches)	Material	Length (feet)
6	Various	23
8	Various	2,181
10	Various	1,478
12	Various	2,680
16	Various	148
Undetermined	Various	6,775
Total Length		13,285

(6) Rio Vista Ranches Water System- PWS No. 04-08-333

The Rio Vista Ranches Water System serves a subdivision in southern Bullhead City, with a certified area of approximately 322 acres (0.5 square miles), consisting of one (1) pressure zone with an elevation of approximately 520 FASL. Rio Vista Ranches is a consecutive water system that receives its water from the Bermuda Water Company (PWS No. 04-08-063) through an interconnection with Rio Vista Ranches distribution system. The water system has no wells, booster pumps, or storage tanks. Staff did not observe any leaks in the distribution system.

Detailed listings of the plant facilities are included in Table F.

Table F. Rio Vista Ranches Water System Plant Facilities Summary

Service Area Distribution Mains		
Diameter (inches)	Material	Length (feet)
6	Various	8,965
8	Various	4,359
12	Various	637
Total Length		13,961

Service Areas Meters	
Size (inches	Quantity
5/8 x 3/4	121
1	3
Total Quantity	124

C. WATER USE

(1) Water Sold

Figures 4A through 4F represent the water consumption data, in graphical form, for each District water system during the 12 month period for the test year, July 2012 through June 2013. The water consumption graphs, figures 4A through 4F, are located in the Figure Section of this report.

Table G below represents the high and low water consumption of each of the six (6) District water systems.

Table G. Mohave Water District Water System Water Usage
Test Year July 2012 – June 2013

High & Low Water Consumption (Gallons/Day/Connection)						
Water Usage	Arizona Gateway	Desert Foothills	Camp Mohave	Lake Mohave Highlands	Mohave	Rio Vista
High Usage Month	Sep - 2012	Sep - 2012	Jul - 2012	Sep - 2012	Sep- 2012	Jun - 2013
Highest Daily Average Usage	2,725	785	703	312	384	443
Low Usage Month	Jan – 2013	Mar - 2013	Mar - 2103	Mar – 2013	Mar - 2013	Dec - 2102
Lowest Daily Average Usage	1,262	416	342	144	230	236
Test Year Average Usage	1,988	582	511	223	298	329

(2) Non-Accounted For Water

Non-accounted for water should be 10 percent or less and never more than 15 percent. It is important to be able to reconcile the difference between water sold and the water produced by the source. A water balance will allow a water company to identify water and revenue losses due to leakage and any non-metered water use such as construction, firefighting, and line flushing. Water loss percentages for each water system within the District are listed in the Table H. below.

Table H. Mohave Water District Water System Water Loss

Water Loss							
Water System	Arizona Gateway	Desert Foothills	Camp Mohave	Lake Mohave Highlands	Mohave	Rio Vista	Average Water Loss
2011 Water Loss (%)	12.01	20.60	5.13	11.90	11.80	0.00	**10.24**
2012 Water Loss (%)	5.16	13.97	4.37	8.46	10.84	0.00	**7.13**
2013 Water Loss (%)	2.04	14.19	1.60	5.60	9.39	0.00	**5.47**

As the table indicates, water loss in five (5) of the six (6) water systems has been decreasing for the past three (3) calendar years. Desert Foothills is the only water system exceeding the 10 percent limit. However, its water loss is below the 15 percent threshold.

In Decision No. 73145, dated May 1, 2012, EWAZ was ordered to file with Docket Control a five-year plan for reducing non-revenue water. The plan was to be based on leak surveys and system analysis for determining the most cost-effective approach to reduce water loss in the Mohave Water District. As required in the order, EWAZ submitted its Non-Revenue Water Program for the Mohave District on March 1, 2013. Staff recommends that the District continue its efforts, via the District's Non Revenue Water Program, to reduce water loss in the Desert Foothills water system to below 10 percent.

Overall, the District's average water loss has decreased from 10.24 percent in 2011, to 5.47 percent in 2013. However, since the average water loss includes the zero (0) water loss from the Rio Vista water system, the resultant average is lower than if the water system reported actual water loss figures.

Bermuda Water Company does not meter the water it provides to Rio Vista. As a result, Rio Vista is unable to determine its actual water loss. Hence, the zero (0) water loss results for the Rio Vista water system. Installation of a purchased water meter at the interconnection would enable the District to determine the water system's water loss. Staff recommends that the District install a meter at the Bermuda Water Company and Rio Vista Water System interconnect in order to record the quantity of purchased water entering the Rio Vista Water System. Staff further recommends that the District begin monitoring water loss, on a monthly basis, by coordinating the readings of the purchased water meter and the individual customer meters, and reporting the results in its Commission Annual Report going forward.

(3) Water System Analysis

a) Mohave Water System – Public Water System ("PWS") No. 04-08-032

The Mohave Water System has nine (9) active wells with a total production capacity of approximately 8,780 gpm (12,643,200 gallons per day ("GPD")). The water system has a total of fourteen (14) storage tanks with a total storage capacity of approximately 5,905,500 gallons. During the peak month, September 2012, the water system was serving 14,469 connections when EWAZ reported 166,757,000 gallons of water sold. Average daily demand for the month of September 2012 was determined to be 5,558,567 gpd. Staff concludes that the water system has adequate production and storage capacity to serve the present customer base and any reasonable growth.

b) Camp Mohave Water System – PWS No. 04-08-037

The Camp Mohave Water System has one (1) active well with a total production capacity of approximately 500 gallons per minute ("GPM") (720,000 gpd), and one (1) storage tank with a total storage capacity of approximately 250,000 gallons. During the peak month, July 2012, the water system was serving 78 connections when EWAZ reported 1,701,000 gallons of water sold. Average daily demand for the month of July 2012 was determined to be 54,871 gpd. Staff concludes that the water system has adequate production and storage capacity to serve the present customer base and any reasonable growth.

c) Lake Mohave Highlands Water System- PWS No. 04-08-062

The Lake Mohave Water System has two (2) active wells with a total production capacity of approximately 300 gpm (432,000 gpd), and three (3) storage tanks with a total storage capacity of approximately 375,000 gallons. During the peak month, September 2012, the water system was serving 271 connections when EWAZ

reported 2,535,000 gallons of water sold. Average daily demand for the month of September 2012 was determined to be 84,500 gpd. Staff concludes that the water system has adequate production and storage capacity to serve the present customer base and any reasonable growth.

d) Desert Foothills Water System- PWS No. 04-08-137

The Desert Foothills Water System has two (2) active wells with a total production capacity of approximately 814 gpm (1,172,160 gpd), and two (2) storage tanks with a total storage capacity of approximately 1,000,000 gallons. During the peak month, September 2012, the water system was serving 1,056 connections when EWAZ reported 24,881,000 gallons of water sold. Average daily demand for the month of September 2012 was determined to be 829,367 gpd. Staff concludes that the water system has adequate production and storage capacity to serve the present customer base and any reasonable growth.

e) Arizona Gateway Water System- PWS No. 04-08-163

The Arizona Gateway Water System has two (2) active wells with a total production capacity of approximately 335 gpm (482,400 gpd), and one (1) storage tank with a total storage capacity of approximately 350,000 gallons. During the peak month, September 2012, the water system was serving 8 connections when EWAZ reported 654,000 gallons of water sold. Average daily demand for the month of September 2012 was determined to be 21,800 gpd. Staff concludes that the water system has adequate production and storage capacity to serve the present customer base and any reasonable growth.

f) Rio Vista Ranches Water System- PWS No. 04-08-333

The Rio Vista Ranches Water System is a consecutive water system that receives its water from the Bermuda Water Company (PWS No. 04-08-063) through an interconnection with Rio Vista Ranches distribution system. The water system has no wells, booster pumps, or storage tanks. During the peak month, June 2013, the water system was serving 121 connections when EWAZ reported 1,608,000 gallons of water purchased and sold. Average daily demand for the month of June 2013 was determined to be 53,600 gpd.

D. GROWTH[4]

Table I and Figure 5 show the District's customer growth based on service connection data contained in the EWAZ Enterprise Customer Information System ("eCIS") data base. Accordingly,

[4] Staff's historical growth figures are based on the data reported by EWAZ from its Enterprise Customer Information System ("eCIS") data base. Projected growth figures are based on EWAZ projections from its eCIS data base, local economists, and local developers.

Table I and Figure 5 indicate that the District experienced negative growth in 2009 at a rate of 0.41 percent (loss of 65 customers), positive growth in 2011 and 2012 at a total rate of 1.09 percent (gain of 170 customers), and negative growth again in 2013 at a rate of 0.32 percent (loss of 50 customers). Overall, the District has seen a net gain of 56 customers (0.36 percent increase) from 2008 to 2013. However, from 2008 through 2012 Bullhead City has seen a decline in its population by 2.81 percent.[5]

With respect to future growth, EWAZ is projecting a positive trend in growth from 2014 through 2019. The EWAZ growth projections, which are updated each year in April, are based on data obtained from the eCIS data base, local economists, and local developers. For 2014, EWAZ is projecting a 0.80 percent increase in the District's growth rate, a gain of 127 customers. That appears to be reasonable as Bullhead City is predicting moderate growth of approximately 0.56 percent in 2014.[6] In general, EWAZ is projecting the District's growth to increase at a total rate of 2.12 percent (projected gain of 335 customers) from 2014 through 2019.

Table I. Mohave Water District Actual and Projected Growth

Year	Number of Customers	
2008	15,731	eCIS
2009	15,666	eCIS
2010	15,667	eCIS
2011	15,763	eCIS
2012	15,837	eCIS
2013	15,787	eCIS
2014	15,914	Projected
2015	15,992	Projected
2016	16,040	Projected
2017	16,075	Projected
2018	16,104	Projected
2019	15,861	Projected

E. ARIZONA DEPARTMENT OF ENVIRONMENTAL QUALITY ("ADEQ") COMPLIANCE

(1) Compliance Status

ADEQ Compliance Status Reports ("CSR") indicate that the six (6) District Water Systems are currently in full compliance with its requirements.[7] Additionally, ADEQ has indicated that Bermuda Water Company, which provides water to the District's Rio Vista Ranches Water System, is currently in full compliance with its requirements.[8]

[5] Information obtained from the Bullhead City AZ/City Details
[6] Information obtained from CLR Search.com
[7] ADEQ CSR's dated May 19, 2014, July 9, 2014, and August 6, 2014.
[8] ADEQ CSR dated August 18, 2014.

According to the ADEQ CSR's, the District's water systems and the Bermuda Water Company water system are currently delivering water that meets water quality standards required by 40 CFR 141 (National Primary Drinking Water Regulations) and Arizona Administrative Code, Title 18, Chapter 4.

(2) Water Monitoring and Testing Expenses

District water sampling for monitoring and testing is divided into two (2) categories, Compliance Analysis and Process Analysis. Compliance sampling is conducted, as required by ADEQ, on source water, finished/treated water, and water in the distribution system. Process sampling is conducted on source water, finished/treated water, and at various stages of a treatment process. Process sampling essentially provides timely data to 1) ensure that a Plant is operating as expected in producing water that meets regulatory limits; 2) adjust plant operations based on changes to source and finished water quality; 3) adjust chemical additions (volume and type); 4) track the breakthrough of filtration media; and 5) adjust the volume of water required to be treated for contaminant removal in order to maintain compliance with ADEQ.

a) Mohave Water System (PWS No. 08-032)

The District proposed a total of $21,400 for the Mohave Water System annual water testing expense. Table J represents the monitoring and testing expenses that were reviewed, evaluated, and recalculated by Staff. The estimated annual water testing expense for the Mohave water system was determined to be $21,400. Staff concludes that this expense is reasonable and appropriate.

Table J. Water Monitoring & Testing Costs – Mohave Water System (PWS No. 04-08-032)

Compliance Analysis Testing	Cost per Test	Quantity of Tests per Three Year Period	Cost per Three Year Period	Annual Costs
Total Coliform	$ 18	1440	$ 25,920	$ 8,640
Lead & Copper	$ 27	30	$ 810	$ 270
Disinfection By-Products (TTHM)[1]	$ 90	10	$ 900	$ 300
Disinfection By-Products (HAA5)[1]	$ 189	10	$ 1,890	$ 630
Nitrate/Nitrite	$ 23	20	$ 450	$ 150
Inorganic Compounds (IOCs)	$ 202	7	$ 1,414	$ 471
Synthetic Organic Compounds (SOCs)	$ 1,744	14	$ 24,416	$ 8,138
Volatile Organic Compounds (VOCs)	$ 176	12	$ 2,112	$ 704
Radiochemicals (RADs)	$ 340	10	$ 3,400	$ 1,133
ICP/MS Digest	$ 15	7	$ 105	$ 35
Process Analysis Testing	**Cost per Test**	**Quantity of Tests per Three Year Period**	**Cost Per Three Year Period**	**Annual Costs**
Perchloroethylene (PCE)	$ 176	6	$ 1,056	$ 352
Total Coliform	$ 18	96	$ 1,728	$ 576
Total Annual Water Testing Costs				**$ 21,400**

[1] TTHM means Total Trihalomethanes and HAA5 means Haloacetic Acids.

b) Camp Mohave (PWS No. 08-032), Lake Mohave Highlands (PWS No. 08-062), and Desert Foothills (PWS No. 08-137) Water Systems

In addition to Total Coliform, Lead & Copper, Disinfectant-By-Products, Manganese, and Total Organic Carbon testing, the Camp Mohave, Lake Mohave, and Desert Foothills water systems are also subject to mandatory participation in the Monitoring Assistance Program ("MAP").[9] The District proposed a total of $9,681 for the three (3) water system annual water testing expenses. The monitoring and testing expenses that were reviewed, evaluated, and recalculated by Staff are represented in Table K. The total estimated annual water testing expenses for the three (3) water Systems was determined to be $9,681. Staff concludes that this expense is reasonable and appropriate.

[9] The MAP is mandatory for water systems which serve less than 10,000 persons (approximately 3,300 service connections).

Table K. Water Monitoring & Testing Costs – Camp Mohave (PWS No. 04-08-037), Lake Mohave Highlands (PWS No. 04-08-062), & Desert Foothills (PWS No. 04-08-137) Water Systems

Compliance Analysis Testing	Cost per Test	Quantity of Test Per Three Year Period			Annual Costs			
PWS Number		08-037	08-062	08-137	08-037	08-062	08-137	Total
Total Coliform	$ 18	36	36	108	$ 216	$ 216	$ 648	$ 1,080
Lead & Copper	$ 27	5	10	10	$ 45	$ 90	$ 90	$ 225
Disinfection-By-Products (TTHM's)	$ 90	7	5	5	$ 210	$ 150	$ 150	$ 510
Disinfection-By-Products (HAA5's)	$ 189	7	5	5	$ 441	$ 315	$ 315	$ 1,071
IOCs, Nitrate, Nitrite, SOCs, VOCs, Radiochemicals (RADs), & Asbestos	MAP	MAP	MAP	MAP	$ 451	$ 944	$ 2,964	$ 4,359
Process Analysis Testing	**Cost per Test**	**Quantity of Tests Per Three Year Period**			**Annual Costs**			
Disinfection-By-Products (TTHM's)	$ 90	24	N/A	N/A	$ 720	$ 0	$ 0	$ 720
Manganese	$ 18	36	N/A	N/A	$ 216	$ 0	$ 0	$ 216
Total Organic Carbon (TOC)	$ 35	36	N/A	N/A	$ 420	$ 0	$ 0	$ 420
Total Coliform	$ 18	36	72	72	$ 216	$ 432	$ 432	$ 1,080
Total Annual Water Testing Costs					**$ 2,935**	**$ 2,147**	**$ 4,599**	**$ 9,681**

c) Arizona Gateway (PWS No. 08-163) and Rio Vista Ranches (PWS No. 08-333) Water Systems

Since Arizona Gateway water system is currently classified a transient Non-Community public water system, and Rio Vista Ranches water system is classified a consecutive water system, the water systems are exempt from participating in the MAP program. The District proposed a total of $1,181 for the two (2) water system annual water testing expenses. The monitoring and testing expenses that were reviewed, evaluated, and recalculated by Staff are represented in Table L. The estimated annual water testing expense for the Rio Vista Ranches and Arizona Gateway water systems was determined to be $1,181. Staff concludes that this expense is reasonable and appropriate.

Table L. Water Monitoring & Testing Costs – Rio Vista Ranches (PWS No. 04-08-333) & Arizona Gateway (PWS No. 04-08-163) Water Systems

Compliance Analysis Testing	Cost per Test	Quantity of Test Taken Annually		Annual Costs		
PWS Number		08-163	08-333	08-163	08-333	Total
Total Coliform	$ 18	36	36	$ 216	$ 216	$ 432
Lead & Copper	$ 27	N/A	5	$ 0	$ 45	$ 45
Disinfection-By-Products (TTHM's)	$ 90	N/A	5	$ 0	$ 150	$ 150
Disinfection-By-Products (HAA5's)	$ 189	N/A	5	$ 0	$ 315	$ 315
Nitrate /Nitrite	$ 23	3	N/A	$ 23	$ 0	$ 23
Process Analysis Testing	**Cost per Test**	**Quantity of Test Taken Annually**		**Annual Costs**		
Total Coliform	$ 18	36	N/A	$ 216	$ 0	$ 216
Total Annual Water Testing Costs				**$ 455**	**$ 726**	**$ 1,181**

d) Mohave Water District

The District reported water testing expenses of $26,727 during the test year. The combined monitoring and testing expenses of the District, expressed in Table M, totals $32,262. Staff recommends an annual water testing expense, for the District, of $32,262 be used for the purposes of this application.

Table M. Water Monitoring & Testing Costs – Mohave Water District

MWD Water System	PWS No.	Annual Costs	MAP Costs	Total Annual Costs
Arizona Gateway	04-08-163	$ 455	$ 0	$ 455
Camp Mohave	04-08-037	$ 2,484	$ 451	$ 2,935
Desert Foothills	04-08-137	$ 1,635	$ 2,964	$ 4,599
Lake Mohave Highlands	04-08-062	$ 1,203	$ 944	$ 2,147
Mohave	04-08-032	$ 24,480	$ 0	$ 21,400
Rio Vista Ranches	04-08-333	$ 726	$ 0	$ 726
Total Annual Water Testing Costs		**$ 30,983**	**$ 4,359**	**$ 32,262**

F. ARIZONA DEPARTMENT OF WATER RESOURCES ("ADWR") COMPLIANCE

The District's water system service areas are not located within an ADWR Active Management Area ("AMA"). ADWR's Water Provider Compliance Reports, dated June 6, 2014, indicate that the District's water systems are currently in compliance with departmental requirements governing water providers and/or community water systems.

G. ARIZONA CORPORATION COMMISSION COMPLIANCE

A check of the Utilities Division Compliance Section database showed that there are no delinquent Commission compliance items for District.[10]

H. DEPRECIATION RATES

EWAZ proposed only a few changes to the current District depreciation rates, which are shown in the District's Proposed Rates column in Table N. Staff recommends the depreciation rates listed under "Staff's Recommended Rates" in Table N be adopted.

Table N. Depreciation Rate Table – Mohave Water District

NARUC Account Numbers	EWAZ Account Numbers	Depreciable Plant	District Current Rates (%) Decision No. 73145	District Proposed Rates (%)	Staff's Typical Rates (%)	Staff Recommended Rates (%)
301	301000	**Organization**	0.00	0.00	0.00	0.00
302	302000	**Franchises**	0.00	0.00	0.00	0.00
303		**Land & Land Rights**				
	303200	Land & Land Rights – SS	0.00	0.00	0.00	0.00
	303300	Land & Land Rights – Pumping	0.00	0.00	0.00	0.00
	303400	Land & Land Rights – Treatment	0.00	0.00	0.00	0.00
	303500	Land & Land Rights – T&D	0.00	0.00	0.00	0.00
	303600	Land & Land Rights – AG	0.00	0.00	0.00	0.00
304		**Structures & Improvements**				
	304100	Structure & Improvement – Source of Supply	2.50	2.50	3.33	2.50
	304200	Structure & Improvement – Pumping	2.00	2.00	3.33	2.00
	304300	Structure & Improvement – Water Treatment Equipment	2.00	2.00	3.33	2.00
	304400	Structure & Improvement – T & D	2.00	2.00	3.33	2.00
	304500	Structure & Improvement – General Plant	2.50	2.50	3.33	2.50
	304600	Structure & Improvement – Offices	2.50	2.50	3.33	2.50
	304620	Structure & Improvement – Leasehold	2.50	2.50	3.33	2.50
	304700	Structure & Improvement – Store, Shop & Garage	2.50	2.50	3.33	2.50
	304800	Structure & Improvement – Miscellaneous	2.50	2.50	3.33	2.50
305	305000	**Collection & Impounding Reservoirs – Source & Pumping**	1.67	1.67	2.50	1.67
306	306000	**Lake & River Intakes**	1.67	0.00	2.50	0.00
307	307000	**Wells & Springs – Source & Pumping**	2.50	2.50	3.33	2.50
308	308000	**Infiltration Galleries – Source & Pumping**	2.50	0.00	6.67	0.00
309	309000	**Supply Mains – Source & Pumping**	1.67	1.67	2.00	1.67
310		**Power Generation Equipment – S & P**				
	310000	Power Production Equipment	0.00	3.33	5.00	3.33
	310100	Power Generation Equipment – Other S & P	3.33	0.00	5.00	0.00
311		**Pumping Equipment**				
	311000	Pump Equipment – Steam	0.00	4.00	12.5	4.00
	311200	Pump Equipment – Electric	4.00	4.00	12.5	4.00
	311300	Pump Equipment – Diesel	4.00	4.00	12.5	4.00
	311400	Pump Equipment – Hydraulic	4.00	4.00	12.5	4.00

[10] Per Compliance Section email, dated August 8, 2014.

	311500	Pump Equipment – Other	0.00	4.00	12.5	4.00
	311530	Pump Equipment – Water Treatment	0.00	4.00	12.5	4.00
	311540	Pump Equipment – Transmission & Distribution	4.00	0.00	12.5	0.00
	311600	Pump Equipment – Source & Pumping	4.00	0.00	12.5	0.00
320		**Water Treatment Equipment**				
	320000	Water Treatment Equipment – Purification Equip.	5.00	0.00	3.33	0.00
320.1	320100	Water Treatment Equipment – Non-Media	5.00	5.00	3.33	5.00
	320200	Water Treatment Equipment – Filter Media	10.00	10.00	20.00	10.00
330		**Distribution Reservoirs & Standpipes**				
	330000	Distribution Reservoirs & Standpipes	1.54	1.54	2.22	1.54
330.1	330100	Elevated Tanks & Standpipes	1.54	0.00	2.22	0.00
	330200	Ground Level Tanks	1.54	1.54	2.22	1.54
330.2	330300	Below Ground Tanks	1.54	0.00	2.22	0.00
	330400	Clearwell	2.00	0.00	2.22	0.00
331		**Transmission and Distribution**				
	331000	TD Mains – Water Treatment Equipment	1.43	0.00	2.00	0.00
	331001	TD Mains – Not Classified by Size	2.00	2.00	2.00	2.00
	331100	TD mains – 4-inch & less	1.43	1.43	2.00	1.43
	331200	TD mains – 6-inch to 8-inch	1.43	1.43	2.00	1.43
	331300	TD mains – 10-inch to 16-inch	1.43	1.43	2.00	1.43
	331400	TD Mains – 18-inch and Greater	0.00	1.43	2.00	1.43
332	332000	**Fire mains**	1.43	1.43		1.43
333		**Services**				
	333000	Services	0.00	2.50	3.33	2.50
	333100	Services – Water Treatment Equipment	2.50	0.00	3.33	0.00
334		**Meters**				
	334100	Meters	6.67	8.33	8.33	8.33
	334200	Meter installations	2.50	2.50	8.33	2.50
	334300	Meter Vaults	2.50	2.50	8.33	2.50
335	335000	**Hydrants**	2.00	2.00	2.00	2.00
336	336000	**Backflow Prevention Devices**	6.67	0.00	6.67	6.67
339		**Other Plant & Miscellaneous Equipment**				
	339000	Other Plant/Miscellaneous Equipment – TD Plant	3.33	0.00	6.67	0.00
	339100	Other Plant/Miscellaneous Equipment - Intangible	0.00	0.00	6.67	0.00
	339200	Other Plant/Miscellaneous Equipment – Supply	0.00	3.33	6.67	3.33
	339500	Other Plant/Miscellaneous Equipment – T & D	0.00	0.00	6.67	0.00
	339600	Other Plant/Miscellaneous Equipment - CPS	0.00	3.33	6.67	3.33
340		**Office Furniture & Equipment**				
	340000	Office Furniture & Equipment – General Plant	5.00	0.00	6.67	0.00
	340100	Office Furniture & Equipment	0.00	4.50	6.67	4.50
	340200	Computer & Peripheral Equipment	10.00	10.00	20.00	10.00
	340300	Computer Software	20.00	20.00	20.00	20.00
	340310	Computer Software – Mainframe	20.00	20.00	20.00	20.00
	340325	Computer Software – Customized	20.00	20.00	20.00	20.00
	340330	Computer Software – Other	20.00	0.00	20.00	0.00
	340400	Date Handling Equipment – General Plant	20.00	0.00	20.00	0.00
	340500	Office Equipment – Other	6.67	0.00	6.67	0.00
341		**Transportation Equipment**				
	341000	Transportation Equipment – General Plant	20.00	0.00	20.00	0.00
	341100	Transportation Equipment – Light Duty Trucks	20.00	20.00	20.00	20.00
	341200	Transportation Equipment – Heavy Duty Trucks	14.29	14.29	20.00	14.29
	341300	Transportation Equipment – Autos	16.67	0.00	20.00	20.00
	341400	Transportation Equipment – Other	16.67	16.67	20.00	16.67
342	342000	**Stores Equipment**	4.00	4.00	4.00	4.00
343	343000	**Tools, Shop & Garage Equipment**	4.00	4.00	5.00	4.00
344	344000	**Laboratory Equipment**	4.00	4.00	10.00	4.00
345	345000	**Power Operated Equipment**	5.00	5.00	5.00	5.00
346		**Communication Equipment**				

	346000	Communication Equipment – General Plant	10.00	0.00	10.00	0.00
	346100	Communication Equipment – Non-Telephone	10.00	10.00	10.00	10.00
	346190	Remote Control & Instrument	10.00	10.00	10.00	10.00
	346200	Communication Equipment – Telephone	10.00	10.00	10.00	10.00
	346300	Communication Equipment – Other	10.00	10.00	10.00	10.00
347	347000	**Miscellaneous Equipment**	6.25	6.25	10.00	6.25

I. OTHER ISSUES

(1) Service Line and Meter Installation Charges

EWAZ did not propose any changes to the District's existing service line and meter installation charges.[11] The proposed charges are refundable advances, and are within Staff's typical range of charges for service line and meter installations. Since the District may at times install meters on existing service lines, it would be appropriate for some customers to only be charged for the meter installation.

Staff has no objections to the continued use of the currently authorized meter and service installation charges, as proposed by EWAZ, and recommends the charges listed under "Staff's Recommendations" in Table O be adopted.

Table O. Service Line and Meter Installation Charges – Mohave Water District

	Company Current/Proposed			Staff's Recommendations		
Meter Size	Service Line Charge	Meter Charge	Total Charge	Service Line Charge	Meter Charge	Total Charge
5/8 x 3/4-inch	$370	$130	$500	$370	$130	$500
3/4-inch	$370	$205	$575	$370	$205	$575
1-inch	$420	$240	$660	$420	$240	$660
1-1/2-inch	$450	$450	$900	$450	$450	$900
2-inch Turbine	$580	$945	$1,525	$580	$945	$1,525
2-inch Compound	$580	$1,640	$2,220	$580	$1,640	$2,220
3-inch Turbine	$745	$1,420	$2,165	$745	$1,420	$2,165
3-inch Compound	$465	$2,195	$2,660	$465	$2,195	$2,660
4-inch Turbine	$1,090	$2,270	$3,360	$1,090	$2,270	$3,360
4-inch compound	$1,120	$3,145	$4,265	$1,120	$3,145	$4,265
6-inch Turbine	$1,610	$4,425	$6,035	$1,610	$4,425	$6,035
6-inch Compound	$1,630	$6,120	$7,750	$1,630	$6,120	$7,750
8-inch or Larger	ICB*	ICB*	ICB*	ICB*	ICB*	ICB*

ICB* Indicates Individual Case Basis at Actual Cost.

[11] The Company's current charges were approved in Decision No. 73145, effective May 1, 2012.

(2) Curtailment Tariff

The District has an approved Curtailment Tariff on file with the Commission. This tariff became effective October 24, 2007.

(3) Cross-Connection/Backflow Prevention Tariff

The District has an approved Cross-Connection/Backflow Prevention Tariff on file with the Commission. This tariff became effective June 16, 2013.

(4) Best Management Practices ("BMP") Tariff

The District has ten (10) BMP's on file with the Commission. The BMP tariff became effective January 20, 2012.

On June 13, ~~2104~~ 2014, EWAZ filed an amendment to the application proposing a change to the Meter Repair and/or Replacement Tariff (BMP 4.2). In the proposed change, EWAZ requested that paragraph 3 of the BMP tariff, which refers to the inspection of meters, be modified such that pulling a meter for inspection would no longer be required and therefore be stricken from the tariff. Staff concludes that the request to modify BMP 4.2 is appropriate and relevant. Staff recommends approval of the modification in BMP 4.2, attached hereto as Attachment A.

(5) Unregulated Contaminant Monitoring

On May 2, 2012, the Environmental Protection Agency ("EPA") revised and implemented the Unregulated Contaminant Monitoring Rule 3 ("UCMR3"). ADEQ does not regulate the UCMR3 program. The purpose of the UCMR3 (monitoring and sampling assessment) is for water systems to collect occurrence data for contaminants suspected to be present in drinking water, but that do not have health-based standards set under the Safe Drinking Water Act ("SDWA"). The UCMR3 program is the primary source of drinking water contaminant occurrence data used by the EPA in regulatory determinations. The UCMR3 program requires water systems to perform the monitoring and sampling assessment only once during the time frame between January 2013 – December 2015.

EWAZ is required by the EPA to conduct assessment monitoring and sampling in the Mohave Water System for the presence of UCMR3 contaminants. Samples to be tested for the presence of twenty one (21) of the UCMR3 contaminants are to be taken twice (2) from each EPDS within one (1) consecutive twelve (12) month period. Samples to be tested for the presence of seven (7) of the UCMR3 contaminants are to be taken twice (2) from the distribution system maximum residence time sampling locations within the same consecutive twelve (12) month period. Each sampling event must occur five (5) to seven (7) months apart. Sampling can span more than one calendar year, as long as the sampling is conducted during a twelve (12) month period.

The District began sampling for the first sample set of UCRM3 contaminants in August 2014. The second set of samples will be sampled in February 2015. The total cost for testing the samples, as illustrated in Table P, which is a one-time occurrence is anticipated to be $9,240. Staff concludes that the one-time expense of $9,240 associated with sampling and testing of the UCMR3 contaminants is reasonable and appropriate.

Table P. EPA Mandated UCMR3 Testing Costs

Sample Locations	Number of Samples	Sample Date	Laboratory	Cost Per Sample	Total Cost
Distribution System – Maximum Residence Time ("DSMRT")	7	August 2014	Belleville	$ 160	$ 1,120
Entry Point – Distribution System ("EPDS")	7	August 2014	Belleville	$ 500	$ 3,500
Distribution System – Maximum Residence Time ("DSMRT")	7	February 2015	Belleville	$ 160	$ 1,120
Entry Point – Distribution System ("EPDS")	7	February 2015	Belleville	$ 500	$ 3,500
Total					**$ 9,240**

(6) Mohave Water District Post Test Year Plant Additions – Post Test Year Investment Projects ("IPs") Used and Useful (July ~~2103~~ 2013 – June 30, 2014)

EWAZ has requested that four (4) District post-test year capital investment projects ("IPs"), totaling $5,398,138, be included as Post Test Year Plant Additions. Each of the District IPs, listed in Table P, were found to be in-service and used and useful during the plant facilities site inspection on June 24 & 25, 2014. Staff concludes that the costs associated with the installation of the Districts IPs, listed in Table Q, are reasonable and appropriate.

Table Q. Post Test Year Plant Additions – Mohave Water District Investment Projects (Used and Useful)

Item No.	Investment Project	District Water System	ADEQ Approval of Construction (AOC) Issued	NARUC Account No.	EWAZ Project No.	Total Cost
1	Laredo Vista Well Site No. 2	Mohave	6/11/2014	307000	279011	$2,591,679
2	Well Site No. 16-4	Mohave	2/18/2014	307000	379008	$1,913,013
3	Camp Mohave Manganese Treatment	Camp Mohave	11/22/2013	320200	279012	$360,547
4	Pegasus Ranch Interconnect		N/A	331200	479021	$42,312
5	Old Bullhead City Main Replacement	Mohave	10/3/2013	331300	279343	$490,587
Total Investment Project Costs						**$5,398,138**

(7) System Improvement Benefit ("SIB") – Mohave Water District

EWAZ is seeking a SIB to address necessary distribution system infrastructure replacements that provide service to the existing District customers. As a supplement to its application, EWAZ

submitted a SIB Engineering Report ("SIB Report"), dated March 17, 2014, supporting the need for its proposed 5-year infrastructure replacement projects for the District's six (6) water systems.[12] The proposed infrastructure replacement projects are expected to commence in 2015 and finish, 4 years later, in 2019. The Report identifies the most critical areas within the District, provides estimates for the quantity of service lines, meters, water mains, and valves that need to be replaced within the District, and estimates the associated replacement costs.

Historical repair and replacement data was utilized by EWAZ to assess the Districts existing plant (e.g. mains, services, and valves). Table S., which illustrates the results from the assessment was used to assist with establishing existing plant replacements for the SIB.

Table S. Water Main, Services, & Valve Assessment – Mohave Water District

Existing Plant	Material/Type	Units[1]	Average Useful Life (Years)	Existing Plant Exceeding Average Useful Life (Units)	Existing Plant Exceeding Average Useful Life (%)	Units to be Replaced
Mains[2]	Acrylonitrile Butadiene Styrene (ABS)	599,060	42	417,419	70	17,657
	Polyvinyl Chloride (PVC)	415,564	34	70,206	17	0
	Asbestos-Cement (AC)	185,492	49	26,364	14	0
	Ductile Iron (DI)	19,526	23	6,158	32	0
Services	Polyethylene	10,600	26	2,600	25	777
Valves	Gate Valves	2,791	39	1,303	47	228

[1] Does not include assets previously replaced.
[2] Main replacement units are expressed as Linear Feet ("LF").

A summary of the District's planned infrastructure replacement projects, which includes replacements of approximately 17,657 linear feet ("lf") of water main, 777 service lines, 228 valves, and 6,474 meters, is tabulated in Table T. Specific details of each of the proposed projects are described in a SIB Plant Table 1. The tables, separated by the project year (2015 through 2019), the project (water mains, service lines, valves, and meters), and the project location, are included in this report as Attachments 2A-2E, 3A-3J, 4A-4E, and 5A-5G.

The Plan of Administration ("POA") and its exhibits, for the District's SIB projects, was reviewed and is included in this report. The POA is attached as Attachment 6 and the exhibits, which include SIB Tables I and II, and the Schedules, are attached as Attachments 7A-7O.

Based on a review of the SIB Report, Staff has determined that the proposed 5-year infrastructure replacement projects tabulated in Table T, totaling $9,884,632, appear to be reasonable and appropriate. However, no "used and useful" determination of the proposed plant items was made, and no conclusions should be inferred for rate base purposes in the future. Staff recommends approval of the District's proposed Plant Table I of the SIB Mechanism (eligible 5 year infrastructure

[12] SIB Engineering Report - EWAZ Exhibit CC-1-A, dated March 17, 2014.

improvement projects), submitted as a supplement to the District's application by EWAZ on March 17, 2014, totaling $9,884,632 as tabulated in Table T. Staff further recommends that SIB Attachments 2A-2E, 3A-3J, 4A-4E, 5A-5G, 6, and 7A-7O be adopted.

Table T. SIB – Mohave Water District Planned Infrastructure Replacement Projects (2015 – 2019)

Year	2015		2016		2017		2018		2019		Total	
Plant	Units	Cost[2]	Units	Cost[2]	Units	Cost[2]	Units	Cost[2]	Units	Cost[2]	Units	Cost[2]
Mains[1]	2,162	$566,093	3,820	$872,322	4,085	$1,126,877	4,087	$1,030,934	3,503	$992,251	17,657	$4,588,477
Services	274	$1,063,339	153	$593,762	102	$395,842	145	$562,716	103	$399,722	777	$3,015,382
Valves	46	$212,819	46	$217,439	46	$225,289	45	$229,658	45	$227,256	228	$1,112,461
Meters	1,479	$266,908	1,782	$314,733	1,638	$298,679	1,457	$266,481	118	$21,511	6,474	$1,168,312
Total		**$2,109,159**		**$1,998,256**		**$2,046,687**		**$2,089,789**		**$1,640,740**		**$9,884,632**

[1] Water Main Replacement Units are expressed in linear feet.
[2] Cost estimates are in 2014 dollars and do not account for inflation.

FIGURES

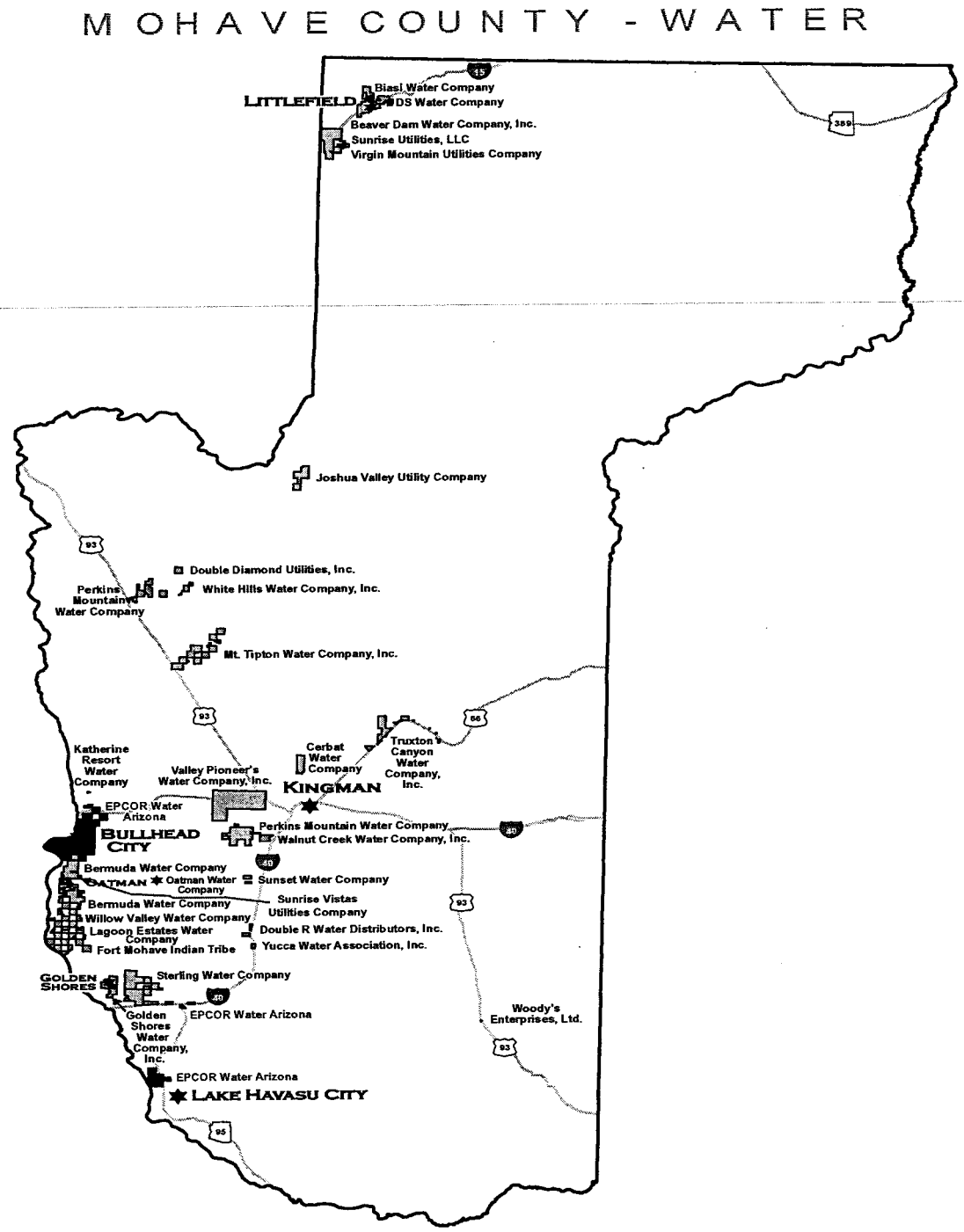

FIGURE 1 – MOHAVE COUNTY MAP

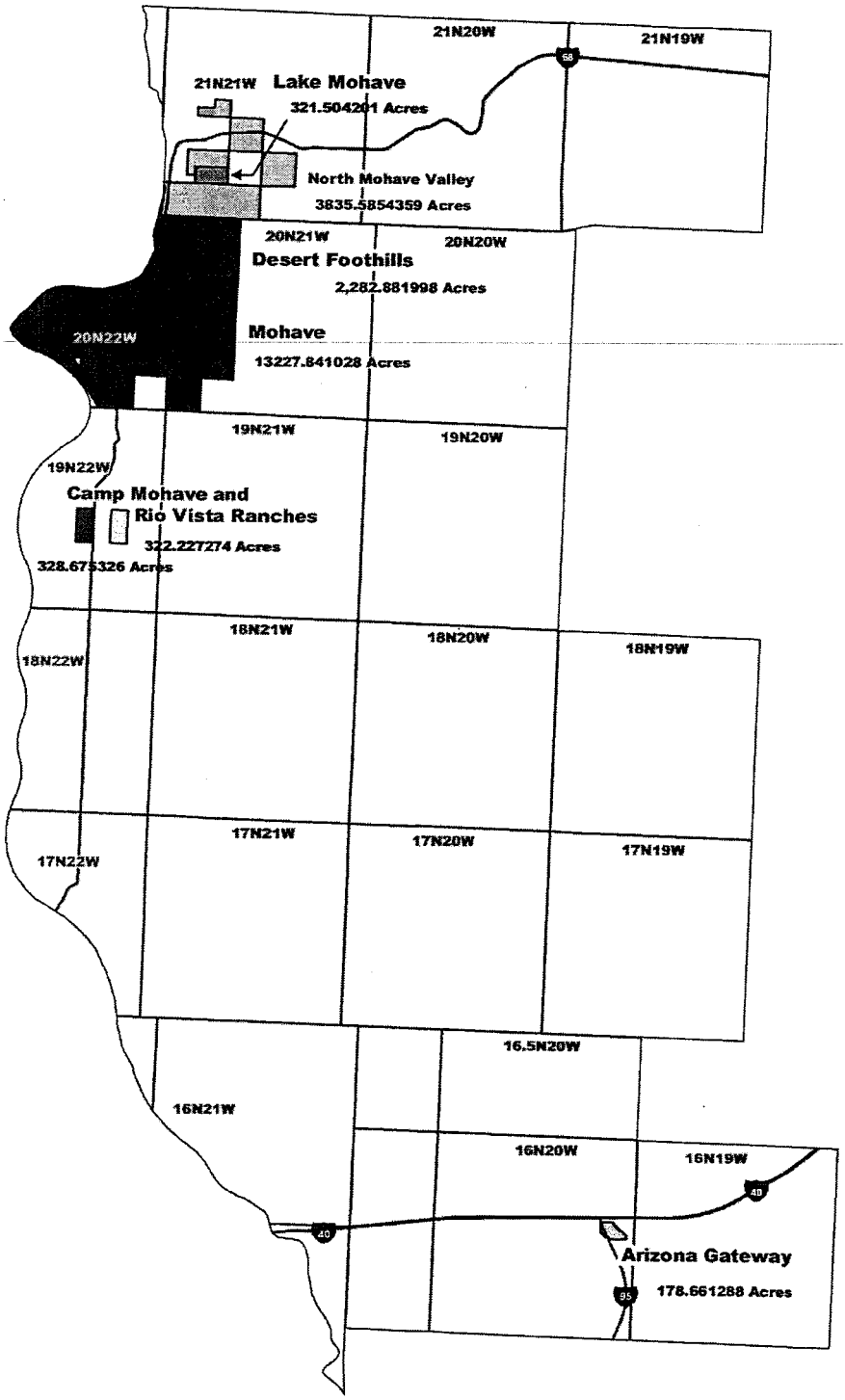

FIGURE 2 – CERTIFICATED AREA

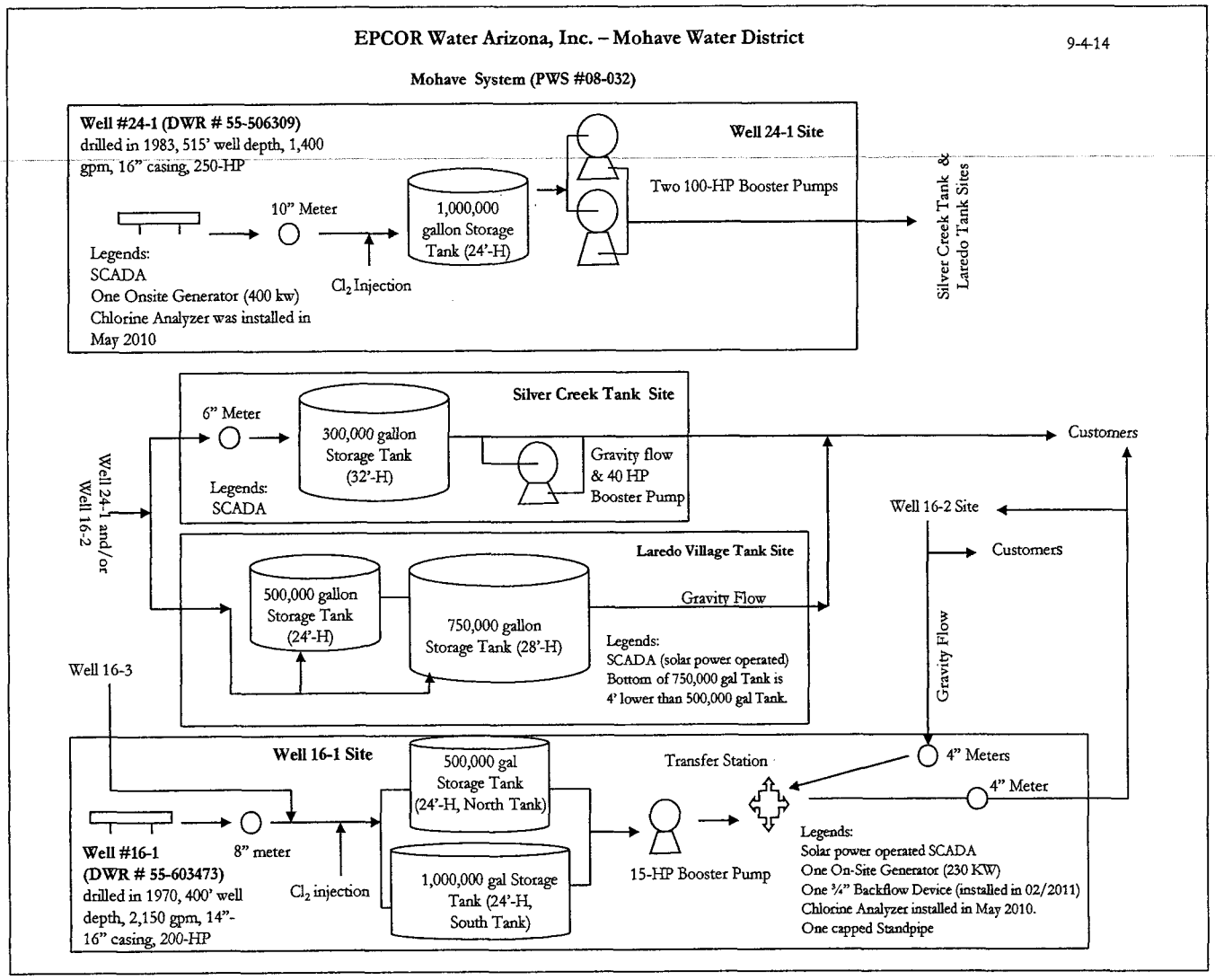

FIGURE 3A

MOHAVE WATER DISTRICT - MOHAVE WATER SYSTEM (PWS No. 04-08-032)

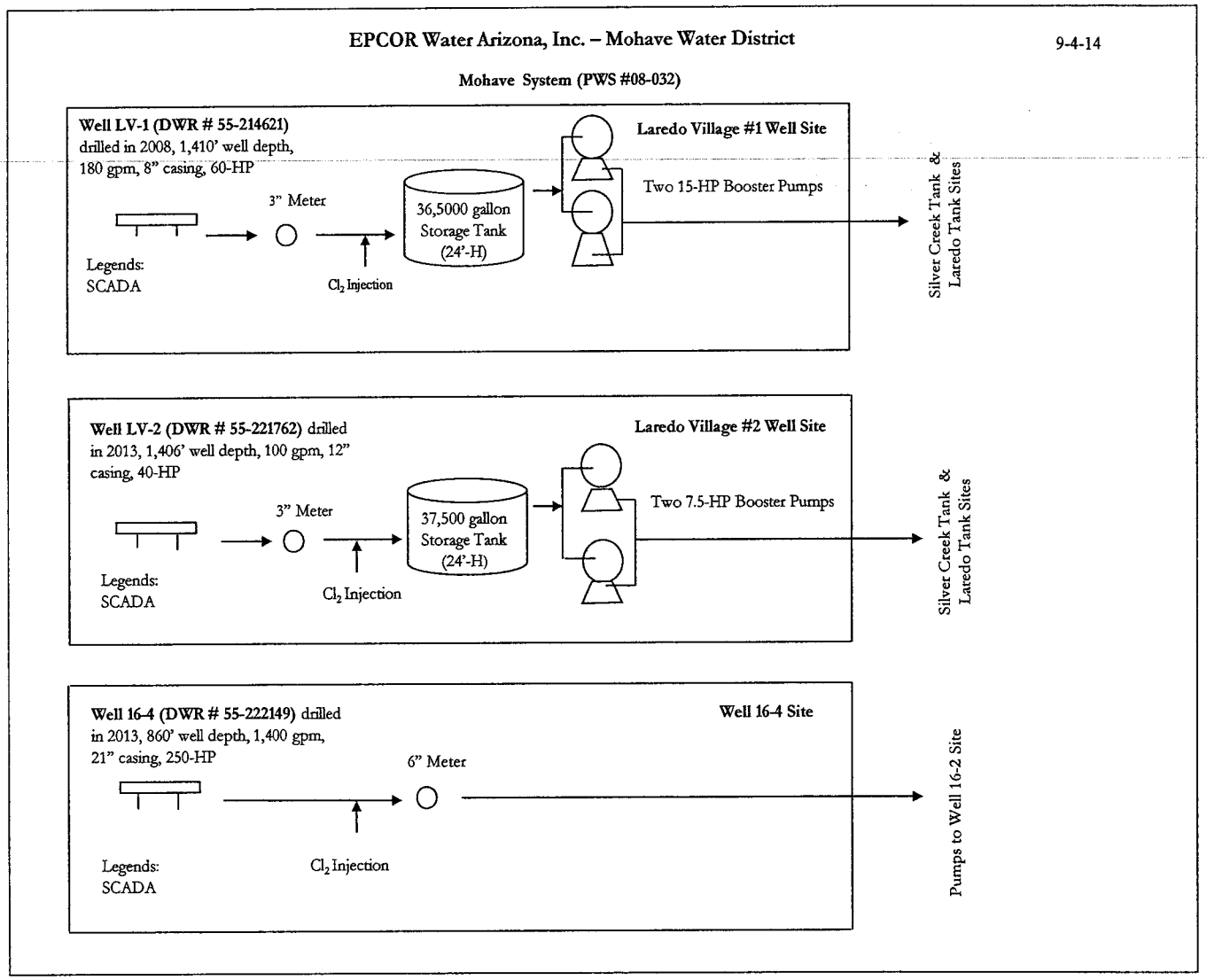

FIGURE 3B

MOHAVE WATER DISTRICT - MOHAVE WATER SYSTEM (PWS No. 04-08-032)

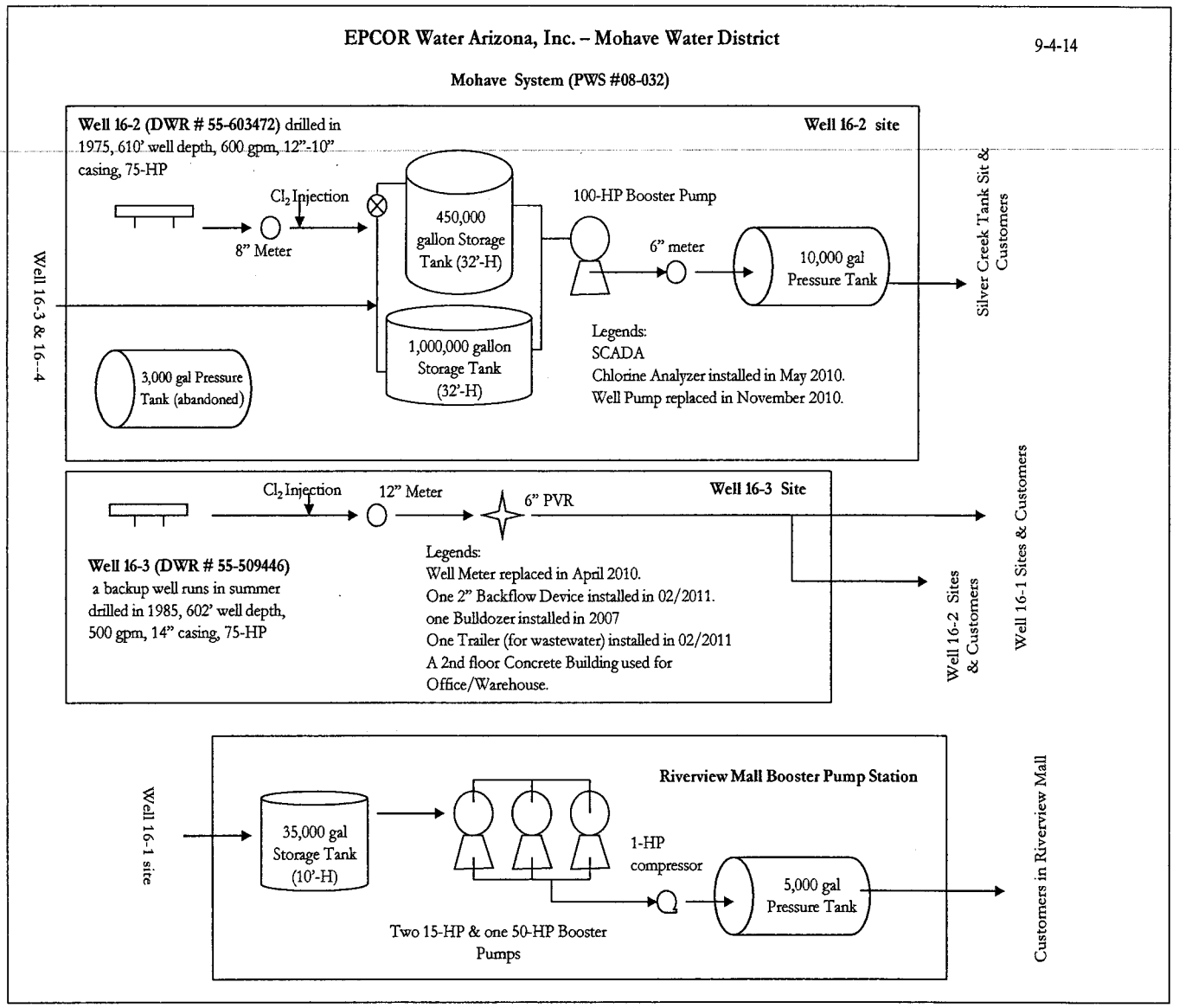

FIGURE 3C

MOHAVE WATER DISTRICT - MOHAVE WATER SYSTEM (PWS No. 04-08-032)

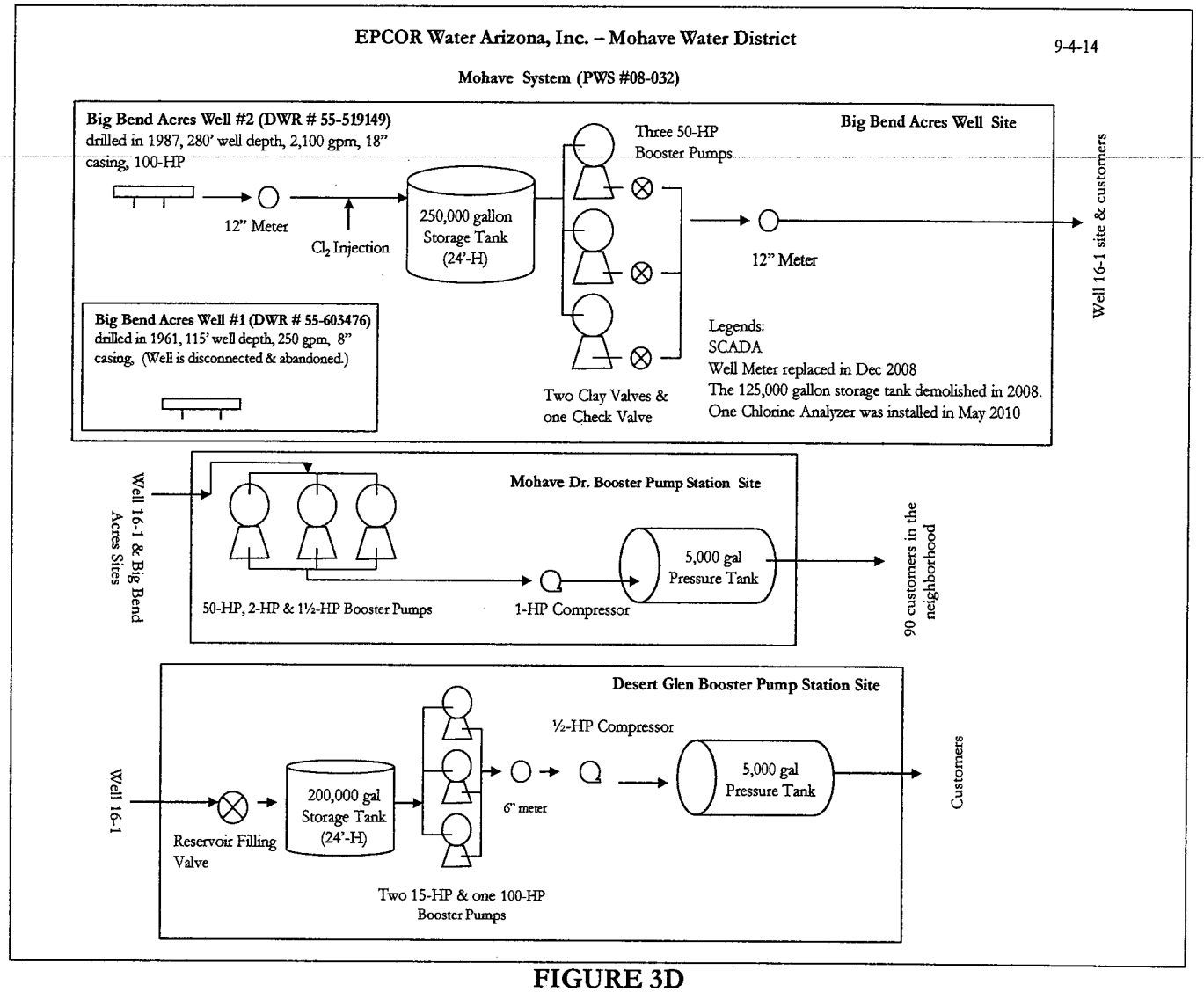

FIGURE 3D

MOHAVE WATER DISTRICT – MOHAVE WATER SYSTEM (PWS No. 04-08-032)

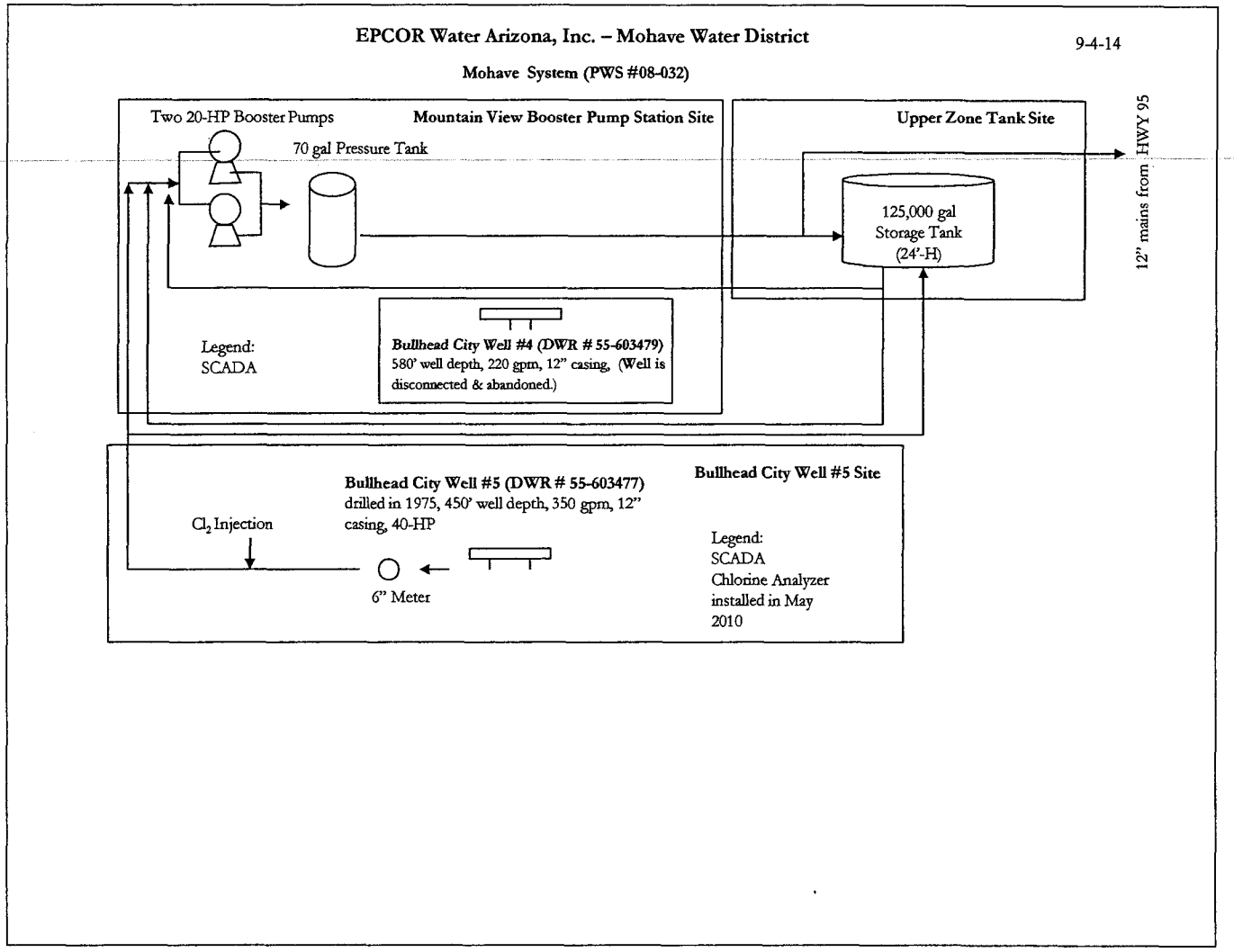

FIGURE 3E

MOHAVE WATER DISTRICT – MOHAVE WATER SYSTEM (PWS No. 04-08-032)

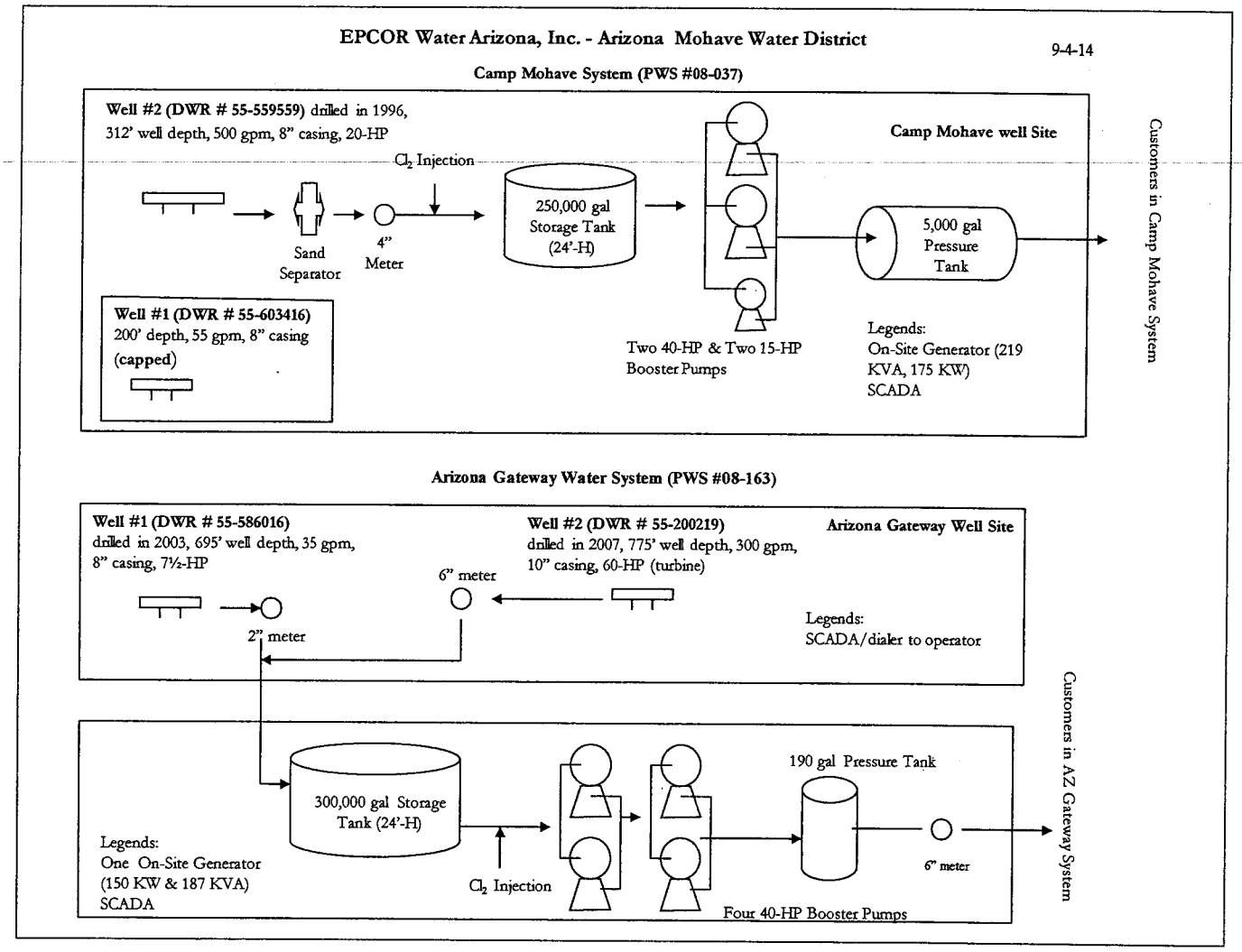

FIGURE 3F

MOHAVE WATER DISTRICT – CAMP MOHAVE & ARIZONA GATEWAY WATER SYSTEMS (PWS No. 04-08-037 & 04-08-163)

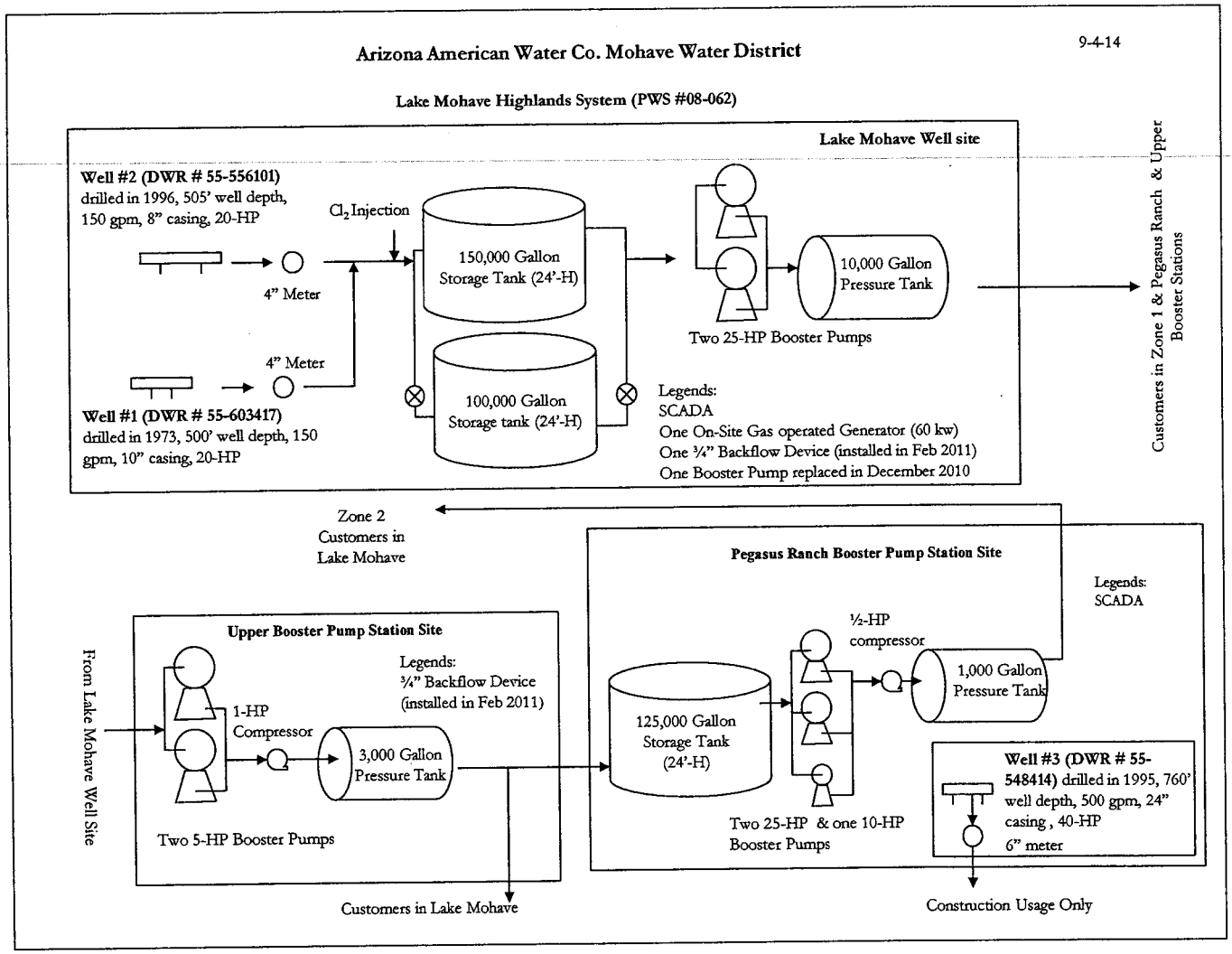

FIGURE 3G

MOHAVE WATER DISTRICT – LAKE MOHAVE HIGHLANDS WATER SYSTEM (PWS No. 04-08-062)

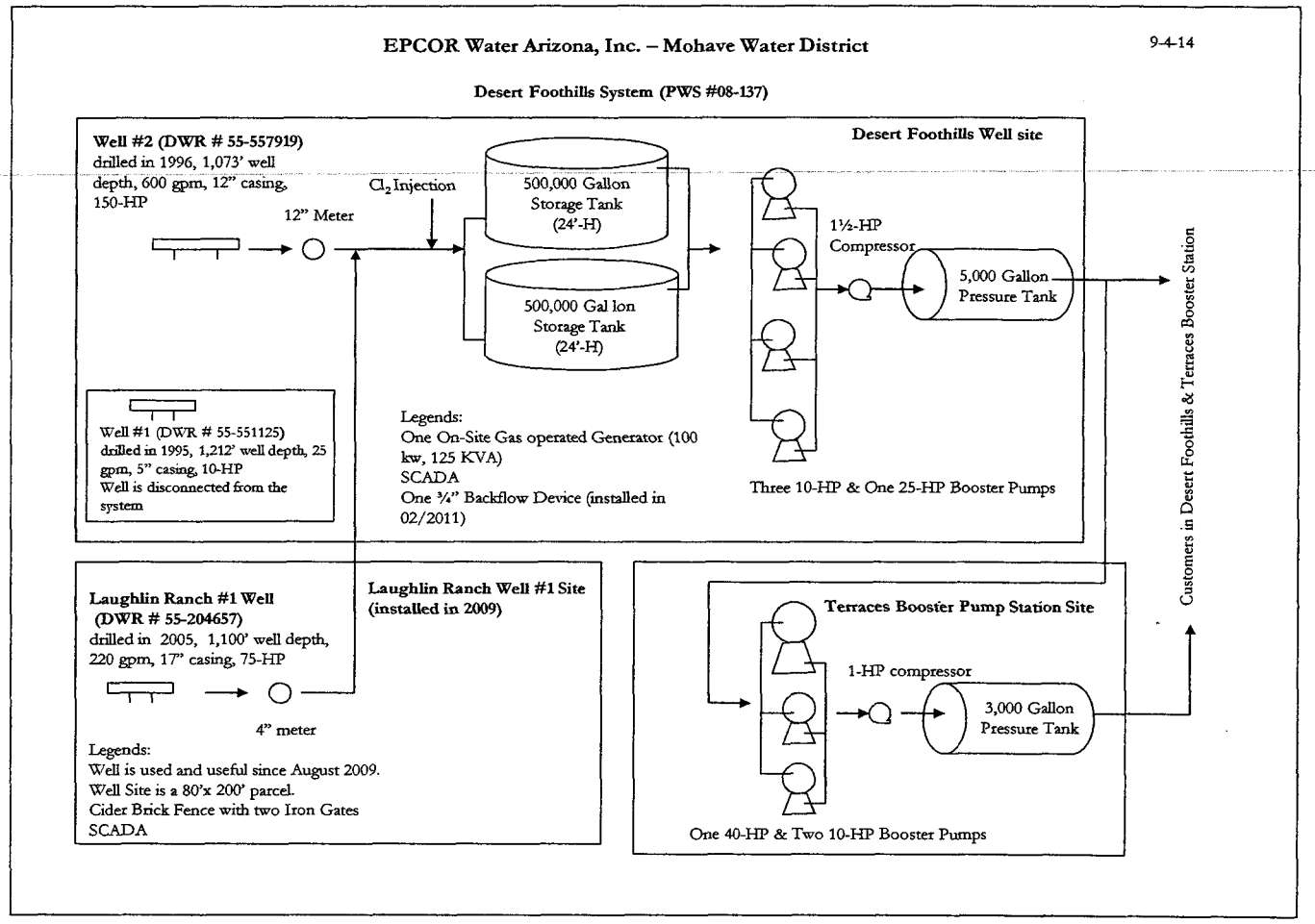

FIGURE 3H

MOHAVE WATER DISTRICT – DESERT FOOTHILLS WATER SYSTEM (PWS No. 04-08-137)

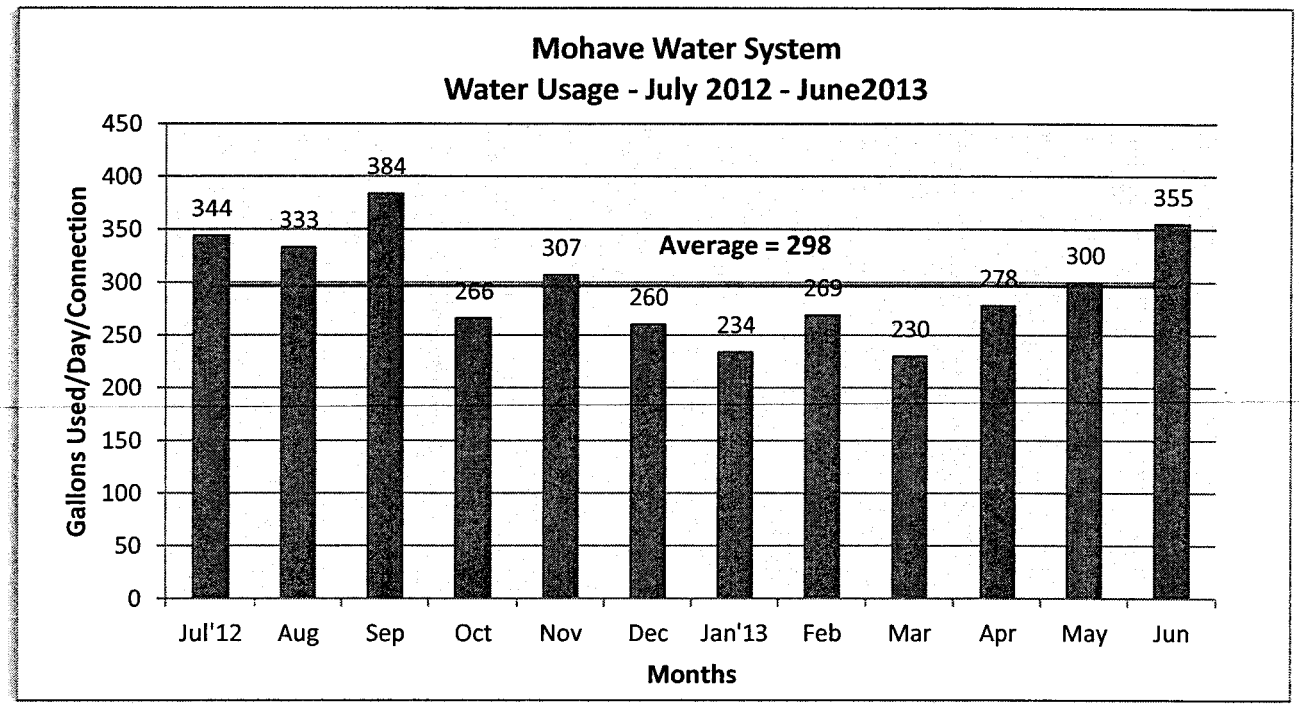

FIGURE 4A – MOHAVE WATER SYSTEM WATER CONSUMPTION

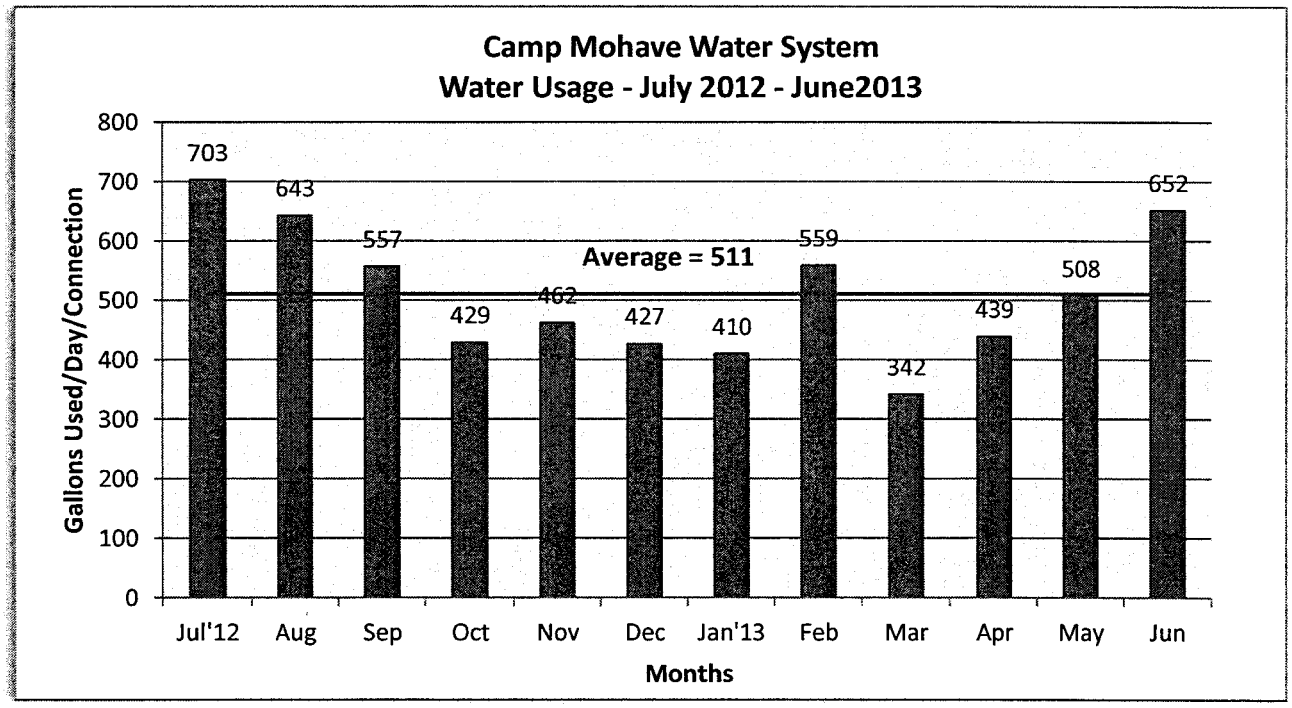

FIGURE 4B – CAMP MOHAVE WATER SYSTEM WATER CONSUMPTION

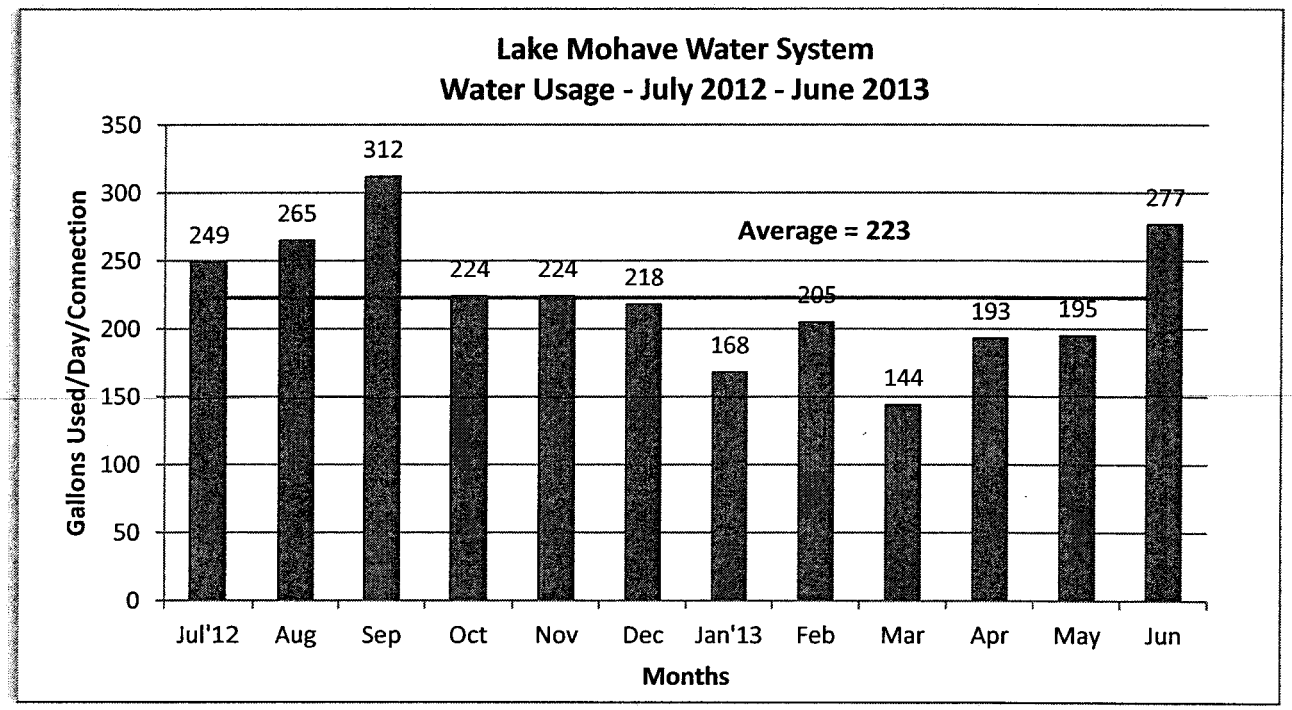

FIGURE 4C – LAKE MOHAVE HIGHLANDS WATER SYSTEM WATER CONSUMPTION

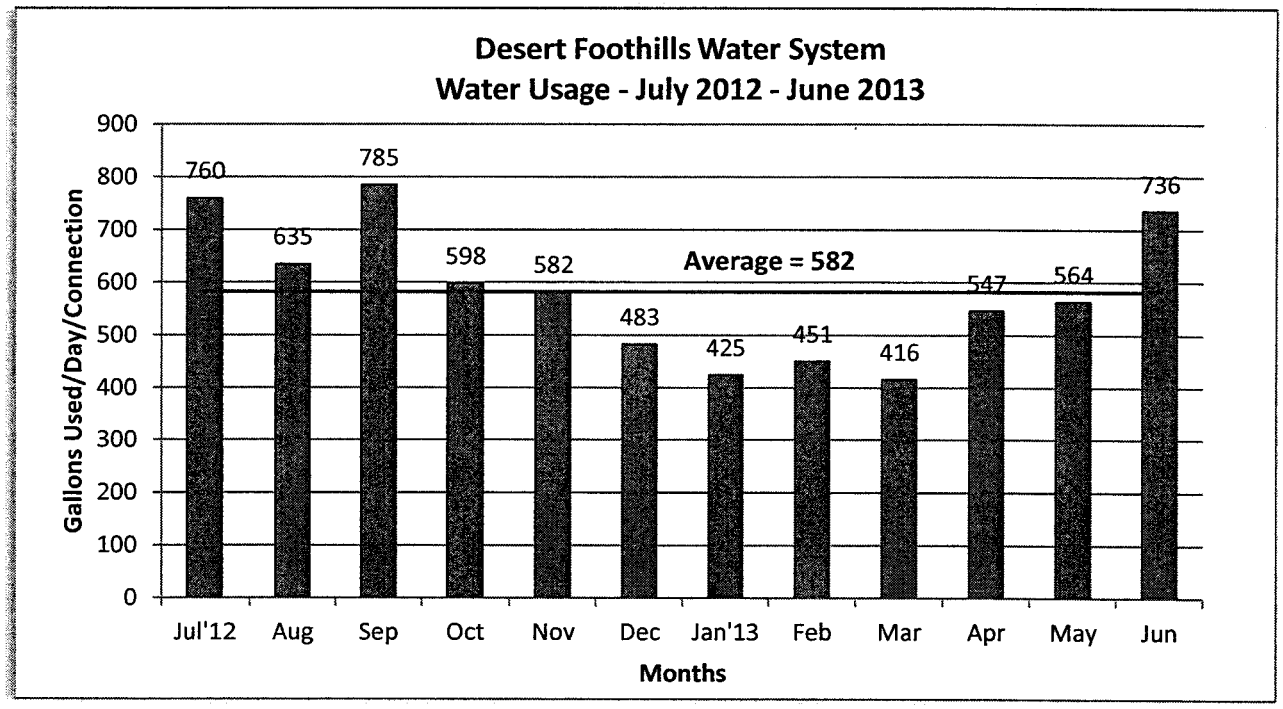

FIGURE 4D – DESERT FOOTHILLS WATER SYSTEM WATER CONSUMPTION

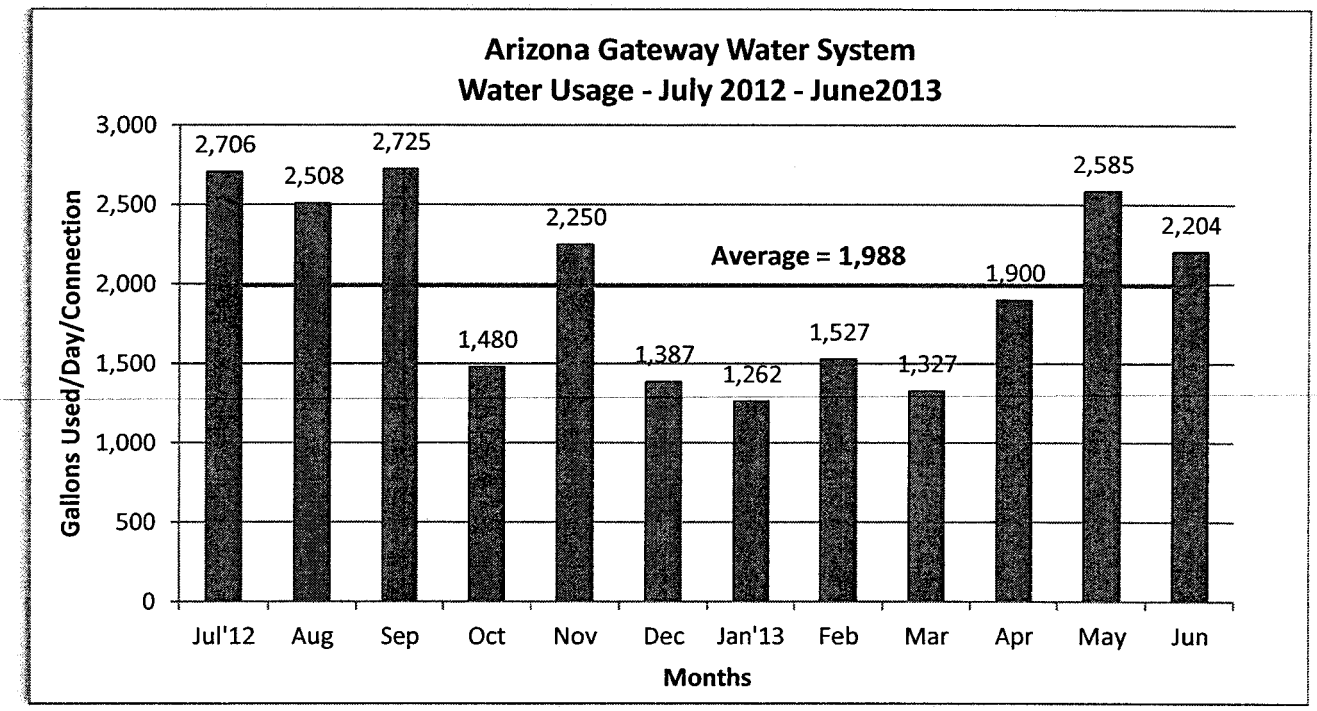

FIGURE 4E – ARIZONA GATEWAY WATER SYSTEM WATER CONSUMPTION

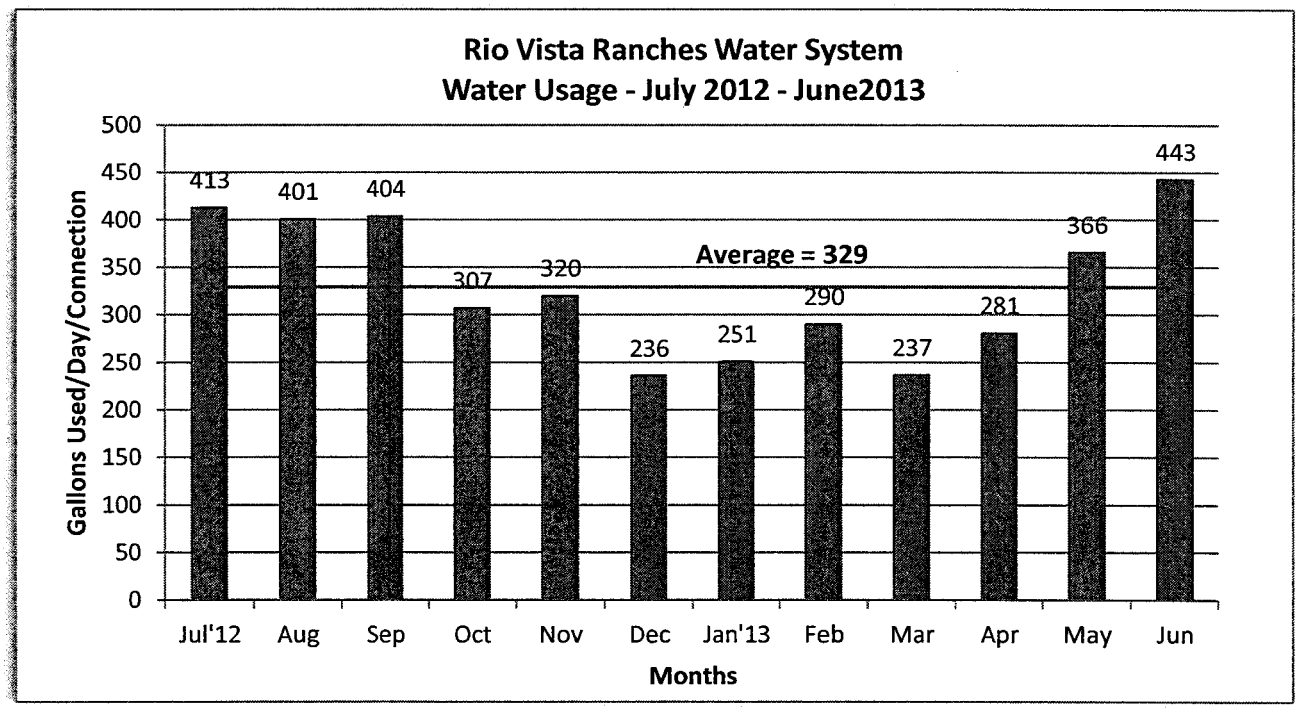

FIGURE 4F – RIO VISTA RANCHES WATER SYSTEM WATER CONSUMPTION

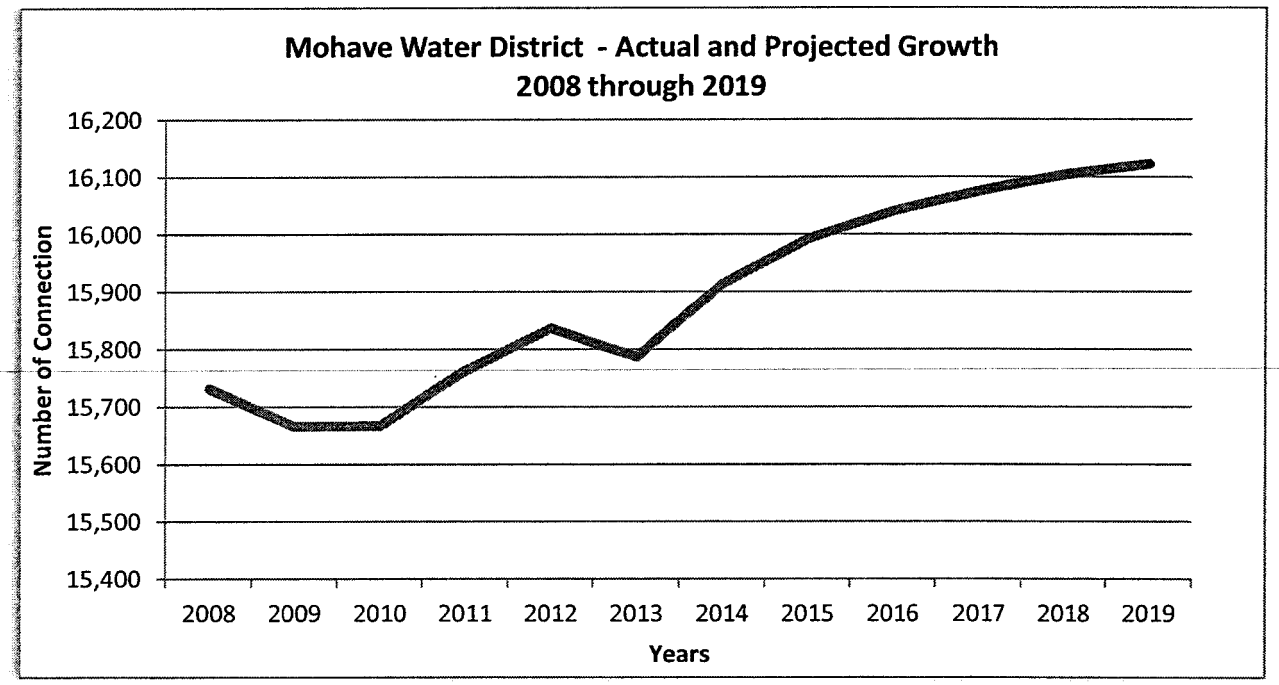

FIGURE 5 – MOHAVE WATER DISTRICT ACTUAL & PROJECTED GROWTH

ATTACHMENTS

ATTACHMENT 1

Meter Repair and/or Replacement Tariff – BMP 4.2

PURPOSE

A program for the Company to systematically assess all in-service water meters (including Company production meters) in its water service area to identify under-registering meters for repair or replacement (Modified Non-Per Capita Conservation Program Best Management Practice Category 4: Physical System Evaluation and Improvement 4.2 Meter Repair and/or Replacement Program).

REQUIREMENTS

The requirements of this tariff are governed by Rules of the Arizona Corporation Commission and were adapted from the Arizona Department of Water Resources' Required Public Education Program and Best Management Practices in the Modified Non-Per Capita Conservation Program.

1. On a systematic basis, the Company will inspect 100 percent of its 1-inch and smaller in-service water meters at least once every ten years for one of the following reasons (whichever occurs first):
    a. A meter reading complaint is filed with the Company by a customer or Arizona Corporation Commission Staff,
    b. A meter has registered 1,000,000 gallons of usage,
    c. A meter has been in service for ten years.

2. Meters larger than 1-inch shall be inspected for one of the following reasons:
    a. A meter reading complaint is filed with the Company by a customer or Arizona Corporation Commission Staff,
    b. A meter has been in service for five years.

3. The inspection will be accomplished by having a Company Technician physically inspect each meter and its fittings for leaks, registers which may have become loose or are not properly attached to the meter and could be under-registering or other broken parts which need repair. In addition, meters shall be randomly selected for flow testing to identify potentially under-registering meters.

4. The Company shall also replace or reprogram any water meters that do not register in gallons. Upon the effective date of this tariff, the Company shall install all replacement meters with new:
    a. 1-inch and smaller meters that register in 1 gallon increments,
    b. 1-1/2-inch through 4-inch meters that register in 10 gallon increments, and
    c. 6-inch and larger meters that register in 100 gallon increments.

5. The Company shall keep records of all inspected and replacement meters and make this information available to the Commission upon request.

ATTACHMENT 2A

Mohave Water District, Mohave System – PWS ID No. 08-032

SIB PLANT TABLE I, 1-1

2015 Service Line Replacements

Information to be included with SIB-Eligible Project Notification

	NARUC Acct No. (SIB-eligible plant)	Replacement Plant Description (SIB-eligible plant)					Site (location description)	Replacement Plant			
Project No.	**331 T&D Mains** **333 Services** **334 Meters**	Description	Pipe length/ Quantity	Diameter/ Size	Material	Installed Cost/Unit (Estimated)		Expected In-Service Date	Estimated Subtotal Cost (by NARUC Acct No)	Estimated Subtotal Cost (by project)	1. Provide narrative why Replacement Plant is necessary - replacement of existing plant that has exceeded its designated useful life and has worn out or is in deteriorating condition due to no fault of the utility - replacement of existing plant to address excessive water loss (10% or more) - replacement of existing plant for other reasons supported by persuasive showing by utility 2. Provide narrative explaining why this segment of plant is a priority. 3. Provide narrative explaining how replacing this plant will benefit existing customers. 4. Provide affirmation that Replacement Plant does not include the costs for extending or expanding facilities to serve new customers. 5. Provides reference to related page No. in the submitted detailed Engineering Analysis supporting the need for SIB. Engineering Analysis shall also include narrative explaining the utility's systematic assessment, inspection, maintenance, and repair/replacement program.
S-1	333	service lines	36	¾" & 1"	Copper	$3,881	Calle de Mercado	12/2015	n/a	$139,709	Replace 34 residential and 2 commercial services on Silver Creek Rd, Calle de Mercado, and Mercado Ct between El Cazador and Rosewood Rd. Many of the services are branched black poly lines (one service for two customers) that are failing at a high rate. These services are a priority for replacement because of the historical failure rate of the pipe material as well as the need to connect a single service to each customer. In the last ten years, 348 services in the Silver Creek area previously failed and were replaced or repaired. Replacing the services will help reduce system water loss and improve customer pressure and flow with a single service for each customer. The service line replacements are for existing customers and not related to new growth. See Section 1 narrative and Map No. S-1 in Exhibit CC-1-A for more detail.

S-2	333	service lines	53	¾" & 1"	Copper	$3,881	Avenida Colibri	12/2015	n/a	$205,682	Replace 53 residential services on Avenida Colibri and Colibri Ct between Corona Vista and Rosewood Rd. Many of the services are branched black poly lines (one service for two customers) that are failing at a high rate. These services are a priority for replacement because of the historical failure rate of the pipe material as well as the need to connect a single service to each customer. In the last ten years, 348 services in the Silver Creek area previously failed and were replaced or repaired. Replacing the services will help reduce system water loss and improve customer pressure and flow with a single service for each customer. The service line replacements are for existing customers and not related to new growth. See Section 1 narrative and Map No. S-2 in Exhibit CC-1-A for more detail.
S-3	333	service lines	25	¾" & 1"	Copper	$3,881	Paloma Senda Dr	12/2015	n/a	$97,020	Replace 25 residential services on Paloma Senda Dr between Corona Vista and Rosewood Rd. Many of the services are branched black poly lines (one service for two customers) that are failing at a high rate. These services are a priority for replacement because of the historical failure rate of the pipe material as well as the need to connect a single service to each customer. In the last ten years, 348 services in the Silver Creek area previously failed and were replaced or repaired. Replacing the services will help reduce system water loss and improve customer pressure and flow with a single service for each customer. The service line replacements are for existing customers and not related to new growth. See Section 1 narrative and Map No. S-3 in Exhibit CC-1-A for more detail.
S-4	333	service lines	24	¾" & 1"	Copper	$3,881	Avenida Grande	12/2015	n/a	$93,139	Replace 24 residential services on Avenida Grande between Corona Vista and Avenida Ventura Dr. Many of the services are branched black poly lines (one service for two customers) that are failing at a high rate. These services are a priority for replacement because of the historical failure rate of the pipe material as well as the need to connect a single service to each customer. In the last ten years, 348 services in the Silver Creek area previously failed and were replaced or repaired. Replacing the services will help reduce system water loss and improve customer pressure and flow with a single service for each customer. The service line replacements are for existing customers and not related to new growth See Section 1 narrative and Map No. S-4 in Exhibit CC-1-A for more detail.

S-5	333	service lines	37	¾" & 1"	Copper	$3,881	El Cazador	12/2015	n/a	$143,590	Replace 37 residential services on Calle de Mercado, Valley Vista, El Cazador, Corona Vista, Avenida Grande, Corona Redonda, and Via Corona south of Silver Creek Rd Many of the services are branched black poly lines (one service for two customers) that are failing at a high rate. These services are a priority for replacement because of the historical failure rate of the pipe material as well as the need to connect a single service to each customer. In the last ten years, 348 services in the Silver Creek area previously failed and were replaced or repaired. Replacing the services will help reduce system water loss and improve customer pressure and flow with a single service for each customer. The service line replacements are for existing customers and not related to new growth. See Section 1 narrative and Map No. S-5 in Exhibit CC-1-A for more detail.
S-6	333	service lines	99	¾" & 1"	Copper	$3,881	Riverside Dr North	12/2015	n/a	$384,199	Replace 99 residential services on Riverside Dr between Orca Ln and Colorado Blvd. Many of the services are branched black poly lines (one service for two customers) that are failing at a high rate. These services are a priority for replacement because of the historical failure rate of the pipe material as well as the need to connect a single service to each customer. In the last ten years, 151 services in the River Bend area previously failed and were replaced or repaired. Replacing the services will help reduce system water loss and improve customer pressure and flow with a single service for each customer. The service line replacements are for existing customers and not related to new growth. See Section 1 narrative and Map No. S-6 in Exhibit CC-1-A for more detail.
Total			**274**							**$1,063,339**	

ATTACHMENT 2B

Mohave Water District, Mohave System – PWS ID No. 08-032

SIB PLANT TABLE I, 1-2

2016 Service Line Replacements

Information to be included with SIB-Eligible Project Notification

	NARUC Acct No. (SIB-eligible plant)	Replacement Plant Description (SIB-eligible plant)					Site (location description)	Replacement Plant			
Project No.	**331 T&D Mains** **333 Services** **334 Meters**	Description	Pipe length/ Quantity	Diameter/ Size	Material	Installed Cost/Unit (Estimated)		Expected In-Service Date	Estimated Subtotal Cost (by NARUC Acct No)	Estimated Subtotal Cost (by project)	1. Provide narrative why Replacement Plant is necessary - replacement of existing plant that has exceeded its designated useful life and has worn out or is in deteriorating condition due to no fault of the utility - replacement of existing plant to address excessive water loss (10% or more) - replacement of existing plant for other reasons supported by persuasive showing by utility 2. Provide narrative explaining why this segment of plant is a priority. 3. Provide narrative explaining how replacing this plant will benefit existing customers. 4. Provide affirmation that Replacement Plant does not include the costs for extending or expanding facilities to serve new customers. 5. Provides reference to related page No. in the submitted detailed Engineering Analysis supporting the need for SIB. Engineering Analysis shall also include narrative explaining the utility's systematic assessment, inspection, maintenance, and repair/replacement program.
S-7	333	service lines	38	¾" & 1"	Copper	$3,881	Riverside Dr South	12/2016	n/a	$147,470	Replace 38 residential services on Riverside Dr between Orca Ln and Capistrano Ln. Many of the services are branched black poly lines (one service for two customers) that are failing at a high rate. These services are a priority for replacement because of the historical failure rate of the pipe material as well as the need to connect a single service to each customer. In the last ten years, 151 services in the River Bend area previously failed and were replaced or repaired. Replacing the services will help reduce system water loss and improve customer pressure and flow with a single service for each customer. The service line replacements are for existing customers and not related to new growth. See Section 1 narrative and Map No. S-7 in Exhibit CC-1-A for more detail.

S-8	333	service lines	69	¾" & 1"	Copper	$3,881	Castle Rock	12/2016	n/a	$267,775	Replace 69 residential services on Castle Rock Cir and Capistrano Ln between Riverside Dr and Marina Blvd. Many of the services are branched black poly lines (one service for two customers) that are failing at a high rate. These services are a priority for replacement because of the historical failure rate of the pipe material as well as the need to connect a single service to each customer. In the last ten years, 151 services in the River Bend area previously failed and were replaced or repaired. Replacing the services will help reduce system water loss and improve customer pressure and flow with a single service for each customer. The service line replacements are for existing customers and not related to new growth. See Section 1 narrative and Map No. S-8 in Exhibit CC-1-A for more detail.
S-9	333	service lines	46	¾" & 1"	Copper	$3,881	Capistrano Ln	12/2016	n/a	$178,517	Replace 46 residential services on Castle Berry Ln and Capistrano Ln between Riverside Dr and Orca Ln. Many of the services are branched black poly lines (one service for two customers) that are failing at a high rate. These services are a priority for replacement because of the historical failure rate of the pipe material as well as the need to connect a single service to each customer. In the last ten years, 151 services in the River Bend area previously failed and were replaced or repaired. Replacing the services will help reduce system water loss and improve customer pressure and flow with a single service for each customer. The service line replacements are for existing customers and not related to new growth. See Section 1 narrative and Map No. S-9 in Exhibit CC-1-A for more detail.
Total			**153**							**$593,762**	

ATTACHMENT 2C

Mohave Water District, Mohave System – PWS ID No. 08-032

SIB PLANT TABLE I, 1-3

2017 Service Line Replacements

Information to be included with SIB-Eligible Project Notification

	NARUC Acct No. (SIB-eligible plant)	Replacement Plant Description (SIB-eligible plant)					Site (location description)	Replacement Plant			
Project No.	**331 T&D Mains** **333 Services** **334 Meters**	Description	Pipe length/ Quantity	Diameter/ Size	Material	Installed Cost/Unit (Estimated)		Expected In-Service Date	Estimated Subtotal Cost (by NARUC Acct No)	Estimated Subtotal Cost (by project)	1. Provide narrative why Replacement Plant is necessary - replacement of existing plant that has exceeded its designated useful life and has worn out or is in deteriorating condition due to no fault of the utility - replacement of existing plant to address excessive water loss (10% or more) - replacement of existing plant for other reasons supported by persuasive showing by utility 2. Provide narrative explaining why this segment of plant is a priority. 3. Provide narrative explaining how replacing this plant will benefit existing customers. 4. Provide affirmation that Replacement Plant does not include the costs for extending or expanding facilities to serve new customers. 5. Provides reference to related page No. in the submitted detailed Engineering Analysis supporting the need for SIB. Engineering Analysis shall also include narrative explaining the utility's systematic assessment, inspection, maintenance, and repair/replacement program.
S-10	333	service lines	40	¾" & 1"	Copper	$3,881	Orca Ln	12/2017	n/a	$155,232	Replace 40 residential services on Orca Ln between Riverside Dr and Colorado Blvd. Many of the services are branched black poly lines (one service for two customers) that are failing at a high rate. These services are a priority for replacement because of the historical failure rate of the pipe material as well as the need to connect a single service to each customer. In the last ten years, 151 services in the River Bend area previously failed and were replaced or repaired. Replacing the services will help reduce system water loss and improve customer pressure and flow with a single service for each customer. The service line replacements are for existing customers and not related to new growth. See Section 1 narrative and Map No. S-10 in Exhibit CC-1-A for more detail.

S-11	333	service lines	62	¾" & 1"	Copper	$3,881	Tanglewood Ln	12/2017	n/a	$240,610	Replace 62 residential services on Tanglewood Ln and Willowood Ln between Riverside Dr and Colorado Blvd. Many of the services are branched black poly lines (one service for two customers) that are failing at a high rate. These services are a priority for replacement because of the historical failure rate of the pipe material as well as the need to connect a single service to each customer. In the last ten years, 151 services in the River Bend area previously failed and were replaced or repaired. Replacing the services will help reduce system water loss and improve customer pressure and flow with a single service for each customer. The service line replacements are for existing customers and not related to new growth. See Section 1 narrative and Map No. S-11 in Exhibit CC-1-A for more detail.
Total			**102**							**$395,842**	

ATTACHMENT 2D

Mohave Water District, Mohave System – PWS ID No. 08-032

SIB PLANT TABLE I, 1-4

2018 Service Line Replacements

Information to be included with SIB-Eligible Project Notification

	NARUC Acct No. (SIB-eligible plant)	Replacement Plant Description (SIB-eligible plant)					Site (location description)	Replacement Plant			
Project No.	**331 T&D Mains** **333 Services** **334 Meters**	Description	Pipe length/ Quantity	Diameter/ Size	Material	Installed Cost/Unit (Estimated)		Expected In-Service Date	Estimated Subtotal Cost (by NARUC Acct No)	Estimated Subtotal Cost (by project)	1. Provide narrative why Replacement Plant is necessary - replacement of existing plant that has exceeded its designated useful life and has worn out or is in deteriorating condition due to no fault of the utility - replacement of existing plant to address excessive water loss (10% or more) - replacement of existing plant for other reasons supported by persuasive showing by utility 2. Provide narrative explaining why this segment of plant is a priority. 3. Provide narrative explaining how replacing this plant will benefit existing customers. 4. Provide affirmation that Replacement Plant does not include the costs for extending or expanding facilities to serve new customers. 5. Provides reference to related page No. in the submitted detailed Engineering Analysis supporting the need for SIB. Engineering Analysis shall also include narrative explaining the utility's systematic assessment, inspection, maintenance, and repair/replacement program.
S-12	333	service lines	45	¾" & 1"	Copper	$3,881	Meander Ln	12/2018	n/a	$174,636	Replace 45 residential services on Meander Dr between Thunderbird Ln and Rio Grande Rd. Many of the services are branched black poly lines (one service for two customers) that are failing at a high rate. These services are a priority for replacement because of the historical failure rate of the pipe material as well as the need to connect a single service to each customer. In the last ten years, 151 services in the River Bend area previously failed and were replaced or repaired. Replacing the services will help reduce system water loss and improve customer pressure and flow with a single service for each customer. The service line replacements are for existing customers and not related to new growth. See Section 1 narrative and Map No. S-12 in Exhibit CC-1-A for more detail.

S-13	333	service lines	51	¾" & 1"	Copper	$3,881	Colorado Blvd South	12/2018	n/a	$197,921	Replace 51 residential services on Colorado Blvd between Marina Blvd and Riverwood Ln. Many of the services are branched black poly lines (one service for two customers) that are failing at a high rate. These services are a priority for replacement because of the historical failure rate of the pipe material as well as the need to connect a single service to each customer. In the last ten years, 151 services in the River Bend area previously failed and were replaced or repaired. Replacing the services will help reduce system water loss and improve customer pressure and flow with a single service for each customer. The service line replacements are for existing customers and not related to new growth. See Section 1 narrative and Map No. S-13 in Exhibit CC-1-A for more detail.
S-14	333	service lines	49	¾" & 1"	Copper	$3,881	Forest Dr	12/2018	n/a	$190,159	Replace 49 residential services on Forest Dr between Riverwood Ln and Hancock Rd. Many of the services are branched black poly lines (one service for two customers) that are failing at a high rate. These services are a priority for replacement because of the historical failure rate of the pipe material as well as the need to connect a single service to each customer. Replacing the services will help reduce system water loss and improve customer pressure and flow with a single service for each customer. The service line replacements are for existing customers and not related to new growth. See Section 1 narrative and Map No. S-14 in Exhibit CC-1-A for more detail.
Total			**145**							**$562,716**	

ATTACHMENT 2E

Mohave Water District, Mohave System – PWS ID No. 08-032

SIB PLANT TABLE I, 1-5

2019 Service Line Replacements

Information to be included with SIB-Eligible Project Notification

	NARUC Acct No. (SIB-eligible plant)	Replacement Plant Description (SIB-eligible plant)					Site (location description)	Replacement Plant			
Project No.	**331 T&D Mains** **333 Services** **334 Meters**	Description	Pipe length/ Quantity	Diameter/ Size	Material	Installed Cost/Unit (Estimated)		Expected In-Service Date	Estimated Subtotal Cost (by NARUC Acct No)	Estimated Subtotal Cost (by project)	1. Provide narrative why Replacement Plant is necessary - replacement of existing plant that has exceeded its designated useful life and has worn out or is in deteriorating condition due to no fault of the utility - replacement of existing plant to address excessive water loss (10% or more) - replacement of existing plant for other reasons supported by persuasive showing by utility 2. Provide narrative explaining why this segment of plant is a priority. 3. Provide narrative explaining how replacing this plant will benefit existing customers. 4. Provide affirmation that Replacement Plant does not include the costs for extending or expanding facilities to serve new customers. 5. Provides reference to related page No. in the submitted detailed Engineering Analysis supporting the need for SIB. Engineering Analysis shall also include narrative explaining the utility's systematic assessment, inspection, maintenance, and repair/replacement program.
S-15	333	service lines	40	¾" & 1"	Copper	$3,881	Cyprus Ln	12/2019	n/a	$155,232	Replace 40 residential services on Cyprus Ln between Colorado Blvd and Riverside Dr Many of the services are branched black poly lines (one service for two customers) that are failing at a high rate. These services are a priority for replacement because of the historical failure rate of the pipe material as well as the need to connect a single service to each customer. In the last ten years, 151 services in the River Bend area previously failed and were replaced or repaired. Replacing the services will help reduce system water loss and improve customer pressure and flow with a single service for each customer. The service line replacements are for existing customers and not related to new growth. See Section 1 narrative and Map No. S-15 in Exhibit CC-1-A for more detail.

S-16	333	service lines	16	¾" & 1"	Copper	$3,881	Riverwood Ln	12/2019	n/a	$62,093	Replace 16 residential services on Riverwood Ln between Colorado Blvd and Riverside Dr. Many of the services are branched black poly lines (one service for two customers) that are failing at a high rate. These services are a priority for replacement because of the historical failure rate of the pipe material as well as the need to connect a single service to each customer. In the last ten years, 151 services in the River Bend area previously failed and were replaced or repaired. Replacing the services will help reduce system water loss and improve customer pressure and flow with a single service for each customer. The service line replacements are for existing customers and not related to new growth. See Section 1 narrative and Map No. S-16 in Exhibit CC-1-A for more detail.
S-17	333	service lines	47	¾" & 1"	Copper	$3,881	Colorado Blvd North	12/2019	n/a	$182,398	Replace 47 residential services on Colorado Blvd. between Riverwood Ln. and Hancock Rd. Many of the services are branched black poly lines (one service for two customers) that are failing at a high rate. These services are a priority for replacement because of the historical failure rate of the pipe material as well as the need to connect a single service to each customer. Replacing the services will help reduce system water loss and improve customer pressure and flow with a single service for each customer. The service line replacements are for existing customers and not related to new growth. See Section 1 narrative and Map No. S-17 in Exhibit CC-1-A for more detail.
Total			**103**							**$399,722**	

ATTACHMENT 3A

Mohave Water District, Mohave System – PWS ID No. 08032

SIB PLANT TABLE I, 2-1

2015 Valve Replacements

Information to be included with SIB-Eligible Project Notification

	NARUC Acct No. (SIB-eligible plant)	Replacement Plant Description (SIB-eligible plant)					Site (location description)	Replacement Plant			
Project No.	**331 T&D Mains** **333 Services** **334 Meters**	Description	Pipe length/ Quantity	Diameter/ Size	Material	Installed Cost/Unit (Estimated)		Expected In-Service Date	Estimated Subtotal Cost (by NARUC Acct No)	Estimated Subtotal Cost (by project)	1. Provide narrative why Replacement Plant is necessary - replacement of existing plant that has exceeded its designated useful life and has worn out or is in deteriorating condition due to no fault of the utility - replacement of existing plant to address excessive water loss (10% or more) - replacement of existing plant for other reasons supported by persuasive showing by utility 2. Provide narrative explaining why this segment of plant is a priority. 3. Provide narrative explaining how replacing this plant will benefit existing customers. 4. Provide affirmation that Replacement Plant does not include the costs for extending or expanding facilities to serve new customers. 5. Provides reference to related page No. in the submitted detailed Engineering Analysis supporting the need for SIB. Engineering Analysis shall also include narrative explaining the utility's systematic assessment, inspection, maintenance, and repair/replacement program.
V-1	331	gate valves	46	22-4" 19-6" 4-8" 1-12"	cast iron with rubberized epoxy coating	4"-$4,431 6"-$4,651 8"-$5,201 12"-$6,173	Area bounded by the Colorado River on the west, Hancock Rd on the north, and Lakeside Dr on the east	12/2015	n/a	$212,819	Replace 22-4", 19-6", 4-8", and 1-12" (estimated, 46 total) distribution system valves that are no longer functioning. These numbers are only estimates and are based on the percentage of existing valve sizes in the project area. This area represents approximately 20% of the total system valves. Valves found broken as a part of the annual valve maintenance program will be replaced. The valves in this area are 47 years old. Thirty-four valves in this area previously failed and were replaced. Making certain that all system valves are operational ensures that the time required to shut down water mains in the event of a main break or system maintenance is minimized. This reduces customer service disruptions and decreases water loss during main breaks. These valve replacements are not related to new growth. See Section 2 narrative and Map V-1 in Exhibit CC-1-A for more detail.
Total			**46**							**$212,819**	

ATTACHMENT 3B

Mohave Water District, Mohave System – PWS ID No. 08032

SIB PLANT TABLE I, 2-2

2016 Valve Replacements

Information to be included with SIB-Eligible Project Notification

	NARUC Acct No. (SIB-eligible plant)	Replacement Plant Description (SIB-eligible plant)					Site (location description)	Replacement Plant			
Project No.	**331 T&D Mains** **333 Services** **334 Meters**	Description	Pipe length/ Quantity	Diameter/ Size	Material	Installed Cost/Unit (Estimated)		Expected In-Service Date	Estimated Subtotal Cost (by NARUC Acct No)	Estimated Subtotal Cost (by project)	1. Provide narrative why Replacement Plant is necessary - replacement of existing plant that has exceeded its designated useful life and has worn out or is in deteriorating condition due to no fault of the utility - replacement of existing plant to address excessive water loss (10% or more) - replacement of existing plant for other reasons supported by persuasive showing by utility 2. Provide narrative explaining why this segment of plant is a priority. 3. Provide narrative explaining how replacing this plant will benefit existing customers. 4. Provide affirmation that Replacement Plant does not include the costs for extending or expanding facilities to serve new customers. 5. Provides reference to related page No. in the submitted detailed Engineering Analysis supporting the need for SIB. Engineering Analysis shall also include narrative explaining the utility's systematic assessment, inspection, maintenance, and repair/replacement program.
V-2	331	gate valves	46	11-4" 26-6" 8-8" 1-12"	cast iron with rubberized epoxy coating	4"-$4,431 6"-$4,651 8"-$5,201 12"-$6,173	Area bounded by the Colorado River on the west, Hancock Rd on the south, and Hwy 95 and Fletcher Ln on the east	12/2016	n/a	$217,439	Replace 11-4", 26-6", 8-8", and 1-12" (estimated, 46 total) distribution system valves that are no longer functioning. These numbers are only estimates and are based on the percentage of existing valve sizes in the project area. This area represents approximately 20% of the total system valves. Valves found broken as a part of the annual valve maintenance program will be replaced. The valves in this area are 35 to 45 years old. Thirty-eight valves in this area previously failed and were replaced. Making certain that all system valves are operational ensures that the time required to shut down water mains in the event of a main break or system maintenance is minimized. This reduces customer service disruptions and decreases water loss during main breaks. These valve replacements are not related to new growth. See Section 2 narrative and Map V-2 in Exhibit CC-1-A for more detail.
Total			**46**							**$217,439**	

ATTACHMENT 3C

Mohave Water District, Mohave System – PWS ID No. 08032

SIB PLANT TABLE I, 2-3

2017 Valve Replacements

Information to be included with SIB-Eligible Project Notification

	NARUC Acct No. (SIB-eligible plant)	Replacement Plant Description (SIB-eligible plant)					Site (location description)	Replacement Plant			1. Provide narrative why Replacement Plant is necessary - replacement of existing plant that has exceeded its designated useful life and has worn out or is in deteriorating condition due to no fault of the utility - replacement of existing plant to address excessive water loss (10% or more) - replacement of existing plant for other reasons supported by persuasive showing by utility 2. Provide narrative explaining why this segment of plant is a priority. 3. Provide narrative explaining how replacing this plant will benefit existing customers. 4. Provide affirmation that Replacement Plant does not include the costs for extending or expanding facilities to serve new customers. 5. Provides reference to related page No. in the submitted detailed Engineering Analysis supporting the need for SIB. Engineering Analysis shall also include narrative explaining the utility's systematic assessment, inspection, maintenance, and repair/replacement program.
Project No.	**331 T&D Mains** **333 Services** **334 Meters**	Description	Pipe length/ Quantity	Diameter/ Size	Material	Installed Cost/Unit (Estimated)		Expected In-Service Date	Estimated Subtotal Cost (by NARUC Acct No)	Estimated Subtotal Cost (by project)	
V-3	331	gate valves	46	8-4" 23-6" 10-8" 5-12"	cast iron with rubberized epoxy coating	4"-$4,431 6"-$4,651 8"-$5,201 12"-$6,173	Area bounded by Camino Del Rio and Lakeside Dr on the west, Hancock Rd on the north, Hwy 95 on the east, and Rainbow Dr on the south; also the area bounded by Hwy 95 on the west and north, Arcadia Blvd on the east, and Rio Vista Dr on the south	12/2017	n/a	$225,289	Replace 8-4", 23-6", 10-8", and 5-12" (estimated, 46 total) distribution system valves that are no longer functioning. These numbers are only estimates and are based on the percentage of existing valve sizes in the project area. This area represents approximately 20% of the total system valves. Valves found broken as a part of the annual valve maintenance program will be replaced. The valves in this area are 43 to 47 years old. Thirteen valves in this area previously failed and were replaced. Making certain that all system valves are operational ensures that the time required to shut down water mains in the event of a main break or system maintenance is minimized. This reduces customer service disruptions and decreases water loss during main breaks. These valve replacements are not related to new growth. See Section 2 narrative and Map V-3 in Exhibit CC-1-A for more detail.
Total			**46**							**$225,289**	

ATTACHMENT 3D

Mohave Water District, Mohave System – PWS ID No. 08032

SIB PLANT TABLE I, 2-4

2018 Valve Replacements

Information to be included with SIB-Eligible Project Notification

	NARUC Acct No. (SIB-eligible plant)	Replacement Plant Description (SIB-eligible plant)					Site (location description)	Replacement Plant			
Project No.	**331 T&D Mains** **333 Services** **334 Meters**	Description	Pipe length/ Quantity	Diameter / Size	Material	Installed Cost/Unit (Estimated)		Expected In-Service Date	Estimated Subtotal Cost (by NARUC Acct No)	Estimated Subtotal Cost (by project)	1. Provide narrative why Replacement Plant is necessary - replacement of existing plant that has exceeded its designated useful life and has worn out or is in deteriorating condition due to no fault of the utility - replacement of existing plant to address excessive water loss (10% or more) - replacement of existing plant for other reasons supported by persuasive showing by utility 2. Provide narrative explaining why this segment of plant is a priority. 3. Provide narrative explaining how replacing this plant will benefit existing customers. 4. Provide affirmation that Replacement Plant does not include the costs for extending or expanding facilities to serve new customers. 5. Provides reference to related page No. in the submitted detailed Engineering Analysis supporting the need for SIB. Engineering Analysis shall also include narrative explaining the utility's systematic assessment, inspection, maintenance, and repair/replacement program.
V-4	331	gate valves	45	1-4" 17-6" 20-8" 2-10" 5-12"	cast iron with rubberized epoxy coating	4"-$4,431 6"-$4,651 8"-$5,201 10"-$5,641 12"-$6,173	Area east of Arcadia Blvd and Hwy 95 between the Pass Canyon Rd and Rainbow Dr	12/2018	n/a	$229,658	Replace 1-4", 17-6", 20-8", 2-10", and 5-12" (estimated, 45 total) distribution system valves that are no longer functioning. These numbers are only estimates and are based on the percentage of existing valve sizes in the project area. This area represents approximately 20% of the total system valves. Valves found broken as a part of the annual valve maintenance program will be replaced The valves in this area are 13 to 43 years old. Six valves in this area previously failed and were replaced. Making certain that all system valves are operational ensures that the time required to shut down water mains in the event of a main break or system maintenance is minimized. This reduces customer service disruptions and decreases water loss during main breaks. These valve replacements are not related to new growth. See Section 2 narrative and Map V-4 in Exhibit CC-1-A for more detail.
Total			**45**							**$229,658**	

ATTACHMENT 3E

Mohave Water District, Mohave System – PWS ID No. 08032

SIB PLANT TABLE I, 2-5

2019 Valve Replacements

Information to be included with SIB-Eligible Project Notification

	NARUC Acct No. (SIB-eligible plant)	Replacement Plant Description (SIB-eligible plant)					Site (location description)	Replacement Plant			1. Provide narrative why Replacement Plant is necessary - replacement of existing plant that has exceeded its designated useful life and has worn out or is in deteriorating condition due to no fault of the utility - replacement of existing plant to address excessive water loss (10% or more) - replacement of existing plant for other reasons supported by persuasive showing by utility 2. Provide narrative explaining why this segment of plant is a priority. 3. Provide narrative explaining how replacing this plant will benefit existing customers. 4. Provide affirmation that Replacement Plant does not include the costs for extending or expanding facilities to serve new customers. 5. Provides reference to related page No. in the submitted detailed Engineering Analysis supporting the need for SIB. Engineering Analysis shall also include narrative explaining the utility's systematic assessment, inspection, maintenance, and repair/replacement program.
Project No.	**331 T&D Mains** **333 Services** **334 Meters**	Description	Pipe length/ Quantity	Diameter/ Size	Material	Installed Cost/Unit (Estimated)		Expected In-Service Date	Estimated Subtotal Cost (by NARUC Acct No)	Estimated Subtotal Cost (by project)	
V-5	331	gate valves	12	4-4" 3-6" 3-8" 2-12"	cast iron with rubberized epoxy coating	4"-$4,431 6"-$4,651 8"-$5,201 12"-$6,173	Old Bullhead City	12/2019	n/a	$59,624	Replace 4-4", 3-6", 3-8", and 2-12" (estimated, 12 total) distribution system valves that are no longer functioning. These numbers are only estimates and are based on the percentage of existing valve sizes in the project area. This area represents approximately 20% of the total system valves. Valves found broken as a part of the annual valve maintenance program will be replaced. The valves in this area are 44 years old. Two valves in this area previously failed and were replaced. Making certain that all system valves are operational ensures that the time required to shut down water mains in the event of a main break or system maintenance is minimized. This reduces customer service disruptions and decreases water loss during main breaks. These valve replacements are not related to new growth. See Section 2 narrative and Map V-5 in Exhibit CC-1-A for more detail.
Total			**12**							**$59,624**	

ATTACHMENT 3F

Mohave Water District, Desert Foothills System – PWS ID No. 08137

SIB PLANT TABLE I, 2-6

2019 Valve Replacements

Information to be included with SIB-Eligible Project Notification

	NARUC Acct No. (SIB-eligible plant)	Replacement Plant Description (SIB-eligible plant)					Site (location description)	Replacement Plant			
Project No.	**331 T&D Mains** **333 Services** **334 Meters**	Description	Pipe length/ Quantity	Diameter/ Size	Material	Installed Cost/Unit (Estimated)		Expected In-Service Date	Estimated Subtotal Cost (by NARUC Acct No)	Estimated Subtotal Cost (by project)	1. Provide narrative why Replacement Plant is necessary - replacement of existing plant that has exceeded its designated useful life and has worn out or is in deteriorating condition due to no fault of the utility - replacement of existing plant to address excessive water loss (10% or more) - replacement of existing plant for other reasons supported by persuasive showing by utility 2. Provide narrative explaining why this segment of plant is a priority. 3. Provide narrative explaining how replacing this plant will benefit existing customers. 4. Provide affirmation that Replacement Plant does not include the costs for extending or expanding facilities to serve new customers. 5. Provides reference to related page No. in the submitted detailed Engineering Analysis supporting the need for SIB. Engineering Analysis shall also include narrative explaining the utility's systematic assessment, inspection, maintenance, and repair/replacement program.
V-6	331	gate valves	20	4-6" 14-8" 2-12"	cast iron with rubberized epoxy coating	6"-$4,651 8"-$5,201 12"-$6,173	Desert Foothills	12/2019	n/a	$103,761	Replace 4-6", 14-8", and 2-12" (estimated, 20 total) distribution system valves that are no longer functioning. These numbers are only estimates and are based on the percentage of existing valve sizes in the project area. This area represents approximately 20% of the total system valves. Valves found broken as a part of the annual valve maintenance program will be replaced. The valves in this area are 9 to 18 years old. Making certain that all system valves are operational ensures that the time required to shut down water mains in the event of a main break or system maintenance is minimized. This reduces customer service disruptions and decreases water loss during main breaks. These valve replacements are not related to new growth. See Section 2 narrative and Map V-6 in Exhibit CC-1-A for more detail.
Total			**20**							**$103,761**	

ATTACHMENT 3G

Mohave Water District, Lake Mohave Highlands System – PWS ID No. 08062

SIB PLANT TABLE I, 2-7

2019 Valve Replacements

Information to be included with SIB-Eligible Project Notification

	NARUC Acct No. (SIB-eligible plant)	Replacement Plant Description (SIB-eligible plant)					Site (location description)	Replacement Plant			
Project No.	**331 T&D Mains** **333 Services** **334 Meters**	Description	Pipe length/ Quantity	Diameter/ Size	Material	Installed Cost/Unit (Estimated)		Expected In-Service Date	Estimated Subtotal Cost (by NARUC Acct No)	Estimated Subtotal Cost (by project)	1. Provide narrative why Replacement Plant is necessary - replacement of existing plant that has exceeded its designated useful life and has worn out or is in deteriorating condition due to no fault of the utility - replacement of existing plant to address excessive water loss (10% or more) - replacement of existing plant for other reasons supported by persuasive showing by utility 2. Provide narrative explaining why this segment of plant is a priority. 3. Provide narrative explaining how replacing this plant will benefit existing customers. 4. Provide affirmation that Replacement Plant does not include the costs for extending or expanding facilities to serve new customers. 5. Provides reference to related page No. in the submitted detailed Engineering Analysis supporting the need for SIB. Engineering Analysis shall also include narrative explaining the utility's systematic assessment, inspection, maintenance, and repair/replacement program.
V-7	331	gate valves	6	2-4" 1-6" 3-8"	cast iron with rubberized epoxy coating	4"-$4,431 6"-$4,651 8"-$5,201	Lake Mohave Highlands	12/2019	n/a	$29,115	Replace 2-4", 1-6", and 3-8" (estimated, 6 total) distribution system valves that are no longer functioning. These numbers are only estimates and are based on the percentage of existing valve sizes in the project area. This area represents approximately 20% of the total system valves. Valves found broken as a part of the annual valve maintenance program will be replaced. Most of the valves in this area are 39 years old; some are about 14 years old. Three valves in this area previously failed and were replaced. Making certain that all system valves are operational ensures that the time required to shut down water mains in the event of a main break or system maintenance is minimized. This reduces customer service disruptions and decreases water loss during main breaks. These valve replacements are not related to new growth. See Section 2 narrative and Map V-7 in Exhibit CC-1-A for more detail.
Total			6							**$29,115**	

ATTACHMENT 3H

Mohave Water District, Camp Mohave System – PWS ID No. 08037

SIB PLANT TABLE I, 2-8

2019 Valve Replacements

Information to be included with SIB-Eligible Project Notification

	NARUC Acct No. (SIB-eligible plant)	Replacement Plant Description (SIB-eligible plant)					Site (location description)	Replacement Plant			
Project No.	**331 T&D Mains** **333 Services** **334 Meters**	Description	Pipe length/ Quantity	Diameter/ Size	Material	Installed Cost/Unit (Estimated)		Expected In-Service Date	Estimated Subtotal Cost (by NARUC Acct No)	Estimated Subtotal Cost (by project)	1. Provide narrative why Replacement Plant is necessary - replacement of existing plant that has exceeded its designated useful life and has worn out or is in deteriorating condition due to no fault of the utility - replacement of existing plant to address excessive water loss (10% or more) - replacement of existing plant for other reasons supported by persuasive showing by utility 2. Provide narrative explaining why this segment of plant is a priority. 3. Provide narrative explaining how replacing this plant will benefit existing customers. 4. Provide affirmation that Replacement Plant does not include the costs for extending or expanding facilities to serve new customers. 5. Provides reference to related page No. in the submitted detailed Engineering Analysis supporting the need for SIB. Engineering Analysis shall also include narrative explaining the utility's systematic assessment, inspection, maintenance, and repair/replacement program.
V-8	331	gate valves	4	2-4" 1-8" 1-10"	cast iron with rubberized epoxy coating	4"-$4,431 8"-$5,201 10"-$5,641	Camp Mohave	12/2019	n/a	$19,703	Replace 2-4", 1-8", and 1-10" (estimated, 4 total) distribution system valves that are no longer functioning. These numbers are only estimates and are based on the percentage of existing valve sizes in the project area. This area represents approximately 20% of the total system valves. Valves found broken as a part of the annual valve maintenance program will be replaced. The valves in this area are 17 years old. Four valves in this area previously failed and were replaced. Making certain that all system valves are operational ensures that the time required to shut down water mains in the event of a main break or system maintenance is minimized. This reduces customer service disruptions and decreases water loss during main breaks. These valve replacements are not related to new growth. See Section 2 narrative and Map V-8 in Exhibit CC-1-A for more detail.
Total			**4**							**$19,703**	

ATTACHMENT 3I

Mohave Water District, Rio Vista System – PWS ID No. 08333

SIB PLANT TABLE I, 2-9

2019 Valve Replacements

Information to be included with SIB-Eligible Project Notification

	NARUC Acct No. (SIB-eligible plant)	Replacement Plant Description (SIB-eligible plant)					Site (location description)	Replacement Plant			
Project No.	**331 T&D Mains** **333 Services** **334 Meters**	Description	Pipe length/ Quantity	Diameter/ Size	Material	Installed Cost/Unit (Estimated)		Expected In-Service Date	Estimated Subtotal Cost (by NARUC Acct No)	Estimated Subtotal Cost (by project)	1. Provide narrative why Replacement Plant is necessary - replacement of existing plant that has exceeded its designated useful life and has worn out or is in deteriorating condition due to no fault of the utility - replacement of existing plant to address excessive water loss (10% or more) - replacement of existing plant for other reasons supported by persuasive showing by utility 2. Provide narrative explaining why this segment of plant is a priority. 3. Provide narrative explaining how replacing this plant will benefit existing customers. 4. Provide affirmation that Replacement Plant does not include the costs for extending or expanding facilities to serve new customers. 5. Provides reference to related page No. in the submitted detailed Engineering Analysis supporting the need for SIB. Engineering Analysis shall also include narrative explaining the utility's systematic assessment, inspection, maintenance, and repair/replacement program.
V-9	331	gate valves	2	1-6" 1-8"	cast iron with rubberized epoxy coating	6"-$4,651 8"-$5,201	Rio Vista Ranches	12/2019	n/a	$9,852	Replace 1-6" and 1-8" (estimated, 2 total) distribution system valves that are no longer functioning. These numbers are only estimates and are based on the percentage of existing valve sizes in the project area. This area represents approximately 20% of the total system valves. Valves found broken as a part of the annual valve maintenance program will be replaced. The valves in this area are 9 to 35 years old. Two valves in this area previously failed and were replaced. Making certain that all system valves are operational ensures that the time required to shut down water mains in the event of a main break or system maintenance is minimized. This reduces customer service disruptions and decreases water loss during main breaks. These valve replacements are not related to new growth. See Section 2 narrative and Map V-9 in Exhibit CC-1-A for more detail.
Total			**2**							**$9,852**	

ATTACHMENT 3J

Mohave Water District, Arizona Gateway System – PWS ID No. 08163

SIB PLANT TABLE I, 2-10

2019 Valve Replacements

Information to be included with SIB-Eligible Project Notification

	NARUC Acct No. (SIB-eligible plant)	Replacement Plant Description (SIB-eligible plant)					Site (location description)	Replacement Plant			1. Provide narrative why Replacement Plant is necessary - replacement of existing plant that has exceeded its designated useful life and has worn out or is in deteriorating condition due to no fault of the utility - replacement of existing plant to address excessive water loss (10% or more) - replacement of existing plant for other reasons supported by persuasive showing by utility 2. Provide narrative explaining why this segment of plant is a priority. 3. Provide narrative explaining how replacing this plant will benefit existing customers. 4. Provide affirmation that Replacement Plant does not include the costs for extending or expanding facilities to serve new customers. 5. Provides reference to related page No. in the submitted detailed Engineering Analysis supporting the need for SIB. Engineering Analysis shall also include narrative explaining the utility's systematic assessment, inspection, maintenance, and repair/replacement program.
Project No.	**331 T&D Mains** **333 Services** **334 Meters**	Description	Pipe length/ Quantity	Diameter/ Size	Material	Installed Cost/Unit (Estimated)		Expected In-Service Date	Estimated Subtotal Cost (by NARUC Acct No)	Estimated Subtotal Cost (by project)	
V-10	331	gate valves	1	1-8"	cast iron with rubberized epoxy coating	$5,201	Arizona Gateway	12/2019	n/a	$5,201	Replace 1-8" (estimated) distribution system valve that is no longer functioning. This number is only an estimate and is based on the percentage of existing valve sizes in the project area. This area represents approximately 20% of the total system valves. Valves found broken as a part of the annual valve maintenance program will be replaced. The valves in this area are 12 to 13 years old. Making certain that all system valves are operational ensures that the time required to shut down water mains in the event of a main break or system maintenance is minimized. This reduces customer service disruptions and decreases water loss during main breaks. These valve replacements are not related to new growth. See Section 2 narrative and Map V-10 in Exhibit CC-1-A for more detail.
Total			1							**$5,201**	

ATTACHMENT 4A

Mohave Water District, Mohave System – PWS ID No. 08032

SIB PLANT TABLE I, 3-1

2015 Main Replacements

Information to be included with SIB-Eligible Project Notification

	NARUC Acct No. (SIB-eligible plant)	Replacement Plant Description (SIB-eligible plant)					Site (location description)	Replacement Plant			
Project No.	**331 T&D Mains** **333 Services** **334 Meters**	Description	Pipe length/ Quantity	Diameter/ Size	Material	Installed Cost/Unit (Estimated)		Expected In-Service Date	Estimated Subtotal Cost (by NARUC Acct No)	Estimated Subtotal Cost (by project)	1. Provide narrative why Replacement Plant is necessary - replacement of existing plant that has exceeded its designated useful life and has worn out or is in deteriorating condition due to no fault of the utility - replacement of existing plant to address excessive water loss (10% or more) - replacement of existing plant for other reasons supported by persuasive showing by utility 2. Provide narrative explaining why this segment of plant is a priority. 3. Provide narrative explaining how replacing this plant will benefit existing customers. 4. Provide affirmation that Replacement Plant does not include the costs for extending or expanding facilities to serve new customers. 5. Provides reference to related page No. in the submitted detailed Engineering Analysis supporting the need for SIB. Engineering Analysis shall also include narrative explaining the utility's systematic assessment, inspection, maintenance, and repair/replacement program.
WM-1	331	Distribution Main	485 LF	6"	PVC	$235	Juanita Ln	12/2015	n/a	$113,878	Replace 485 LF of existing ABS thin-wall main with 6" PVC in Juanita Ln. The main was installed in 1982 and the existing material is not of sufficient strength for use in a public water system which has resulted in four breaks or leaks in the last ten years. Replacing the main will help reduce system water loss and improve customer pressure and flow. The existing main is 3" in diameter, which is not sufficient for installing hydrants or supporting fire flow. The main replacement is for existing customers and not related to new growth. See Section 3 narrative and Map No. WM-1 in Exhibit CC-1-A for more detail.

WM-2	331	Distribution Main	1,677 LF	8"	PVC	$270	Safari Dr	12/2015	n/a	$452,216	Replace existing mains in rear-lot easements along Safari Dr between Riverview Way and Riverview Dr and along Riverview Cv north of Riverview Dr with 1,677 LF of 8" main in Safari Dr between Riverview Way and Riverview Dr and Riverview Cv north of Riverview Dr. The existing mains in this area were installed in 1967. The existing pipe material does not meet current standards for use in public water systems and is not of sufficient strength, which has resulted in many leaks and/or breaks in the area. One break has previously been repaired on the specific main to be replaced, although there have been many more leaks and breaks in the immediate vicinity on pipes with the same age and material. Replacing the main will help reduce system water loss and improve system reliability. The existing mains are located in rear-lot easements which are difficult to access for repairs. The mains are not sufficient to support fire flow nor are they accessible for emergency vehicles. One main in the street will replace the two existing mains on either side of the street in the rear easements. The main replacement is for existing customers and not related to new growth. See Section 3 narrative and Map No. WM-2 in Exhibit CC-1-A for more detail.
Total			**2,162 LF**							**$566,093**	

ATTACHMENT 4B

Mohave Water District, Mohave System – PWS ID No. 08032

SIB PLANT TABLE I, 3-2

2016 Main Replacements

Information to be included with SIB-Eligible Project Notification

	NARUC Acct No. (SIB-eligible plant)	Replacement Plant Description (SIB-eligible plant)					Site (location description)	Replacement Plant			
Project No.	**331 T&D Mains** **333 Services** **334 Meters**	Description	Pipe length/ Quantity	Diameter/ Size	Material	Installed Cost/Unit (Estimated)		Expected In-Service Date	Estimated Subtotal Cost (by NARUC Acct No)	Estimated Subtotal Cost (by project)	1. Provide narrative why Replacement Plant is necessary - replacement of existing plant that has exceeded its designated useful life and has worn out or is in deteriorating condition due to no fault of the utility - replacement of existing plant to address excessive water loss (10% or more) - replacement of existing plant for other reasons supported by persuasive showing by utility 2. Provide narrative explaining why this segment of plant is a priority. 3. Provide narrative explaining how replacing this plant will benefit existing customers. 4. Provide affirmation that Replacement Plant does not include the costs for extending or expanding facilities to serve new customers. 5. Provides reference to related page No. in the submitted detailed Engineering Analysis supporting the need for SIB. Engineering Analysis shall also include narrative explaining the utility's systematic assessment, inspection, maintenance, and repair/replacement program.
WM-3	331	Distribution Main	571 LF	8"	PVC	$207	Riverview Way	12/2016	n/a	$118,041	Replace existing mains in rear-lot easements along Riverview Way between Riverview Dr and Swan Dr with 571 LF of 8" main in Riverview Way between Riverview Dr and Swan Dr. The existing mains in this area were installed in 1967. The existing pipe material does not meet current standards for use in public water systems and is not of sufficient strength, which has resulted in many leaks and/or breaks in the area. Two breaks have previously been repaired on the specific main to be replaced, although there have been many more leaks and breaks in the immediate vicinity on pipes with the same age and material. Replacing the main will help reduce system water loss and improve system reliability. The existing mains are located in rear-lot easements which are difficult to access for repairs. The mains are not sufficient to support fire flow nor are they accessible for emergency vehicles. The main replacement is for existing customers and not related to new growth. See Section 3 narrative and Map No. WM-3 in Exhibit CC-1-A for more detail.

WM-4	331	Distribution Main	1,860 LF	8"	PVC	$231	Swan Dr	12/2016	n/a	$430,441	Replace existing mains in rear-lot easements along Swan Dr between Bermuda Dr and Newport Dr with 1,860 LF of 8" main in Swan Dr between Bermuda Dr and Newport Dr. The existing mains in this area were installed in 1967. The existing pipe material does not meet current standards for use in public water systems and is not of sufficient strength, which has resulted in many leaks and/or breaks in the area. Four breaks have previously been repaired on the specific main to be replaced, although there have been many more leaks and breaks in the immediate vicinity on pipes with the same age and material. Replacing the main will help reduce system water loss and improve system reliability. The existing mains are located in rear-lot easements which are difficult to access for repairs. The mains are not sufficient to support fire flow nor are they accessible for emergency vehicles. The main replacement is for existing customers and not related to new growth. See Section 3 narrative and Map No. WM-4 in Exhibit CC-1-A for more detail.
WM-5	331	Distribution Main	978 LF	8"	PVC	$216	Coronado Dr	12/2016	n/a	$211,229	Replace existing mains in rear-lot easements along Coronado Dr between Swan Dr and Bermuda Dr with 978 LF of 8" main in Coronado Dr between Swan Dr and Bermuda Dr. The existing mains in this area were installed in 1967. The existing pipe material does not meet current standards for use in public water systems and is not of sufficient strength, which has resulted in many leaks and/or breaks in the area. Two breaks have previously been repaired on the specific main to be replaced, although there have been many more leaks and breaks in the immediate vicinity on pipes with the same age and material. Replacing the main will help reduce system water loss and improve system reliability. The existing mains are located in rear-lot easements which are difficult to access for repairs. The mains are not sufficient to support fire flow nor are they accessible for emergency vehicles. The main replacement is for existing customers and not related to new growth. See Section 3 narrative and Map No. WM-5 in Exhibit CC-1-A for more detail.
WM-6	331	Distribution Main	411 LF	8"	PVC	$272	Swan Pl	12/2016	n/a	$111,612	Replace existing mains in rear-lot easements along Swan Pl between Bermuda Dr and Swan Dr with 411 LF of 8" main in Swan Pl between Bermuda Dr and Swan Dr. The existing mains in this area were installed in 1967. The existing pipe material does not meet current standards for use in public water systems and is not of sufficient strength, which has resulted in many leaks and/or breaks in the area. One break has previously been repaired on the specific main to be replaced, although there have been many more leaks and breaks in the immediate vicinity on pipes with the same age and material. Replacing the main will help reduce system water loss and improve system reliability. The existing mains are located in rear-lot easements which are difficult to access for repairs. The mains are not sufficient to support fire flow nor are they accessible for emergency vehicles. The main replacement is for existing customers and not related to new growth. See Section 3 narrative and Map No. WM-6 in Exhibit CC-1-A for more detail.

Total	3,820 LF							$872,322	

ATTACHMENT 4C

Mohave Water District, Mohave System – PWS ID No. 08032

SIB PLANT TABLE I, 3-3

2017 Main Replacements

Information to be included with SIB-Eligible Project Notification

	NARUC Acct No. (SIB-eligible plant)	Replacement Plant Description (SIB-eligible plant)					Site (location description)	Replacement Plant			
Project No.	**331 T&D Mains** **333 Services** **334 Meters**	Description	Pipe length/ Quantity	Diameter/ Size	Material	Installed Cost/Unit (Estimated)		Expected In-Service Date	Estimated Subtotal Cost (by NARUC Acct No)	Estimated Subtotal Cost (by project)	1. Provide narrative why Replacement Plant is necessary - replacement of existing plant that has exceeded its designated useful life and has worn out or is in deteriorating condition due to no fault of the utility - replacement of existing plant to address excessive water loss (10% or more) - replacement of existing plant for other reasons supported by persuasive showing by utility 2. Provide narrative explaining why this segment of plant is a priority. 3. Provide narrative explaining how replacing this plant will benefit existing customers. 4. Provide affirmation that Replacement Plant does not include the costs for extending or expanding facilities to serve new customers. 5. Provides reference to related page No. in the submitted detailed Engineering Analysis supporting the need for SIB. Engineering Analysis shall also include narrative explaining the utility's systematic assessment, inspection, maintenance, and repair/replacement program.
WM-7	331	Distribution Main	1,155 LF	8"	PVC	$354	Morro Dr	12/2017	n/a	$408,980	Replace existing mains in rear-lot easements along along Morro Dr and Morro Cv between Bermuda Dr and Riverview Dr with 1,155 LF of 8" main in Morro Dr and Morro Cv between Bermuda Dr and Riverview Dr The existing mains in this area were installed in 1967. The existing pipe material does not meet current standards for use in public water systems and is not of sufficient strength, which has resulted in many leaks and/or breaks in the area. Four breaks have previously been repaired on the specific main to be replaced, although there have been many more leaks and breaks in the immediate vicinity on pipes with the same age and material. Replacing the main will help reduce system water loss and improve system reliability. The existing mains are located in rear-lot easements which are difficult to access for repairs. The mains are not sufficient to support fire flow nor are they accessible for emergency vehicles. The main replacement is for existing customers and not related to new growth. See Section 3 narrative and Map No. WM-7 in Exhibit CC-1-A for more detail.

WM-8	331	Distribution Main	353 LF	8"	PVC	$263	Coronado Dr	12/2017	n/a	$92,667	Replace existing mains in rear-lot easements along Coronado Dr between Riverview Dr and Malibu Dr with 353 LF of 8" main in Coronado Dr between Riverview Dr and Malibu Dr. The existing mains in this area were installed in 1967. The existing pipe material does not meet current standards for use in public water systems and is not of sufficient strength, which has resulted in many leaks and/or breaks in the area. Three breaks have previously been repaired on the specific main to be replaced, although there have been many more leaks and breaks in the immediate vicinity on pipes with the same age and material. Replacing the main will help reduce system water loss and improve system reliability. The existing mains are located in rear-lot easements which are difficult to access for repairs. The mains are not sufficient to support fire flow nor are they accessible for emergency vehicles. The main replacement is for existing customers and not related to new growth. See Section 3 narrative and Map No. WM-8 in Exhibit CC-1-A for more detail.
WM-9	331	Distribution Main	190 LF	8"	PVC	$356	Alpine Cv	12/2017	n/a	$67,733	Replace existing mains in rear-lot easements along Alpine Cv between Riverview Dr and Malibu Dr with 190 LF of 8" main in Alpine Cv between Riverview Dr and Malibu Dr. The existing mains in this area were installed in 1967. The existing pipe material does not meet current standards for use in public water systems and is not of sufficient strength, which has resulted in many leaks and/or breaks in the area. Two breaks have previously been repaired on the specific main to be replaced, although there have been many more leaks and breaks in the immediate vicinity on pipes with the same age and material. Replacing the main will help reduce system water loss and improve system reliability. The existing mains are located in rear-lot easements which are difficult to access for repairs. The mains are not sufficient to support fire flow nor are they accessible for emergency vehicles. The main replacement is for existing customers and not related to new growth. See Section 3 narrative and Map No. WM-9 in Exhibit CC-1-A for more detail.
WM-10	331	Distribution Main	548 LF	8"	PVC	$230	Ventura Dr	12/2017	n/a	$126,049	Replace existing mains in rear-lot easements along Ventura Dr between Riverview Dr and Malibu Dr with 548 LF of 8" main in Ventura Dr between Riverview Dr and Malibu Dr. The existing mains in this area were installed in 1967. The existing pipe material does not meet current standards for use in public water systems and is not of sufficient strength, which has resulted in many leaks and/or breaks in the immediate vicinity on pipes with the same age and material. Replacing the main will help reduce system water loss and improve system reliability. The existing mains are located in rear-lot easements which are difficult to access for repairs. The mains are not sufficient to support fire flow nor are they accessible for emergency vehicles. The main replacement is for existing customers and not related to new growth. See Section 3 narrative and Map No. WM-10 in Exhibit CC-1-A for more detail.

WM-11	331	Distribution Main	1,839 LF	8"	PVC	$235	Bermuda Dr	12/2017	n/a	$431,449	Replace existing mains in rear-lot easements along Bermuda Dr between Riverview Dr and Coronado Dr with 1,839 LF of 8" main in Bermuda Dr between Riverview Dr and Coronado Dr. The existing mains in this area were installed in 1967. The existing pipe material does not meet current standards for use in public water systems and is not of sufficient strength, which has resulted in many leaks and/or breaks in the area. Six breaks have previously been repaired on the specific main to be replaced, and there have been many more leaks and breaks in the immediate vicinity on pipes with the same age and material. Replacing the main will help reduce system water loss and improve system reliability. The existing mains are located in rear-lot easements which are difficult to access for repairs. The mains are not sufficient to support fire flow nor are they accessible for emergency vehicles. The main replacement is for existing customers and not related to new growth. See Section 3 narrative and Map No. WM-11 in Exhibit CC-1-A for more detail.
Total			**4,085 LF**							**$1,126,877**	

ATTACHMENT 4D

Mohave Water District, Mohave System – PWS ID No. 08032

SIB PLANT TABLE I, 3-4

2018 Main Replacements

Information to be included with SIB-Eligible Project Notification

	NARUC Acct No. (SIB-eligible plant)	Replacement Plant Description (SIB-eligible plant)					Site (location description)	Replacement Plant			
Project No.	**331 T&D Mains** **333 Services** **334 Meters**	Description	Pipe length/ Quantity	Diameter/ Size	Material	Installed Cost/Unit (Estimated)		Expected In-Service Date	Estimated Subtotal Cost (by NARUC Acct No)	Estimated Subtotal Cost (by project)	1. Provide narrative why Replacement Plant is necessary - replacement of existing plant that has exceeded its designated useful life and has worn out or is in deteriorating condition due to no fault of the utility - replacement of existing plant to address excessive water loss (10% or more) - replacement of existing plant for other reasons supported by persuasive showing by utility 2. Provide narrative explaining why this segment of plant is a priority. 3. Provide narrative explaining how replacing this plant will benefit existing customers. 4. Provide affirmation that Replacement Plant does not include the costs for extending or expanding facilities to serve new customers. 5. Provides reference to related page No. in the submitted detailed Engineering Analysis supporting the need for SIB. Engineering Analysis shall also include narrative explaining the utility's systematic assessment, inspection, maintenance, and repair/replacement program.
WM-12	331	Distribution Main	655 LF	8"	PVC	$232	Montecito Dr	12/2018	n/a	$151,762	Replace existing mains in rear-lot easements along Montecito Dr between Riverview Dr and Malibu Dr with 655 LF of 8" main in Montecito Dr between Riverview Dr and Malibu Dr The existing mains in this area were installed in 1967. The existing pipe material does not meet current standards for use in public water systems and is not of sufficient strength, which has resulted in many leaks and/or breaks in the area. One break has previously been repaired on the specific main to be replaced, although there have been many more leaks and breaks in the immediate vicinity on pipes with the same age and material. Replacing the main will help reduce system water loss and improve system reliability. The existing mains are located in rear-lot easements which are difficult to access for repairs. The mains are not sufficient to support fire flow nor are they accessible for emergency vehicles. The main replacement is for existing customers and not related to new growth. See Section 3 narrative and Map No. WM-12 in Exhibit CC-1-A for more detail.

WM-13	331	Distribution Main	2,090 LF	8"	PVC	$258	Hermosa Dr	12/2018	n/a	$538,549	Replace existing mains in rear-lot easements along Hermosa Dr between Riverview Dr and Coronado Dr with 2,090 LF of 8" main in Hermosa Dr between Riverview Dr and Coronado Dr. The existing mains in this area were installed in 1967. The existing pipe material does not meet current standards for use in public water systems and is not of sufficient strength, which has resulted in many leaks and/or breaks in the area. Five breaks have previously been repaired on the specific main to be replaced, and there have been many more leaks and breaks in the immediate vicinity on pipes with the same age and material. Replacing the main will help reduce system water loss and improve system reliability. The existing mains are located in rear-lot easements which are difficult to access for repairs. The mains are not sufficient to support fire flow nor are they accessible for emergency vehicles. The main replacement is for existing customers and not related to new growth. See Section 3 narrative and Map No. WM-13 in Exhibit CC-1-A for more detail.
WM-14	331	Distribution Main	1,342 LF	8"	PVC	$254	Balboa Dr South	12/2018	n/a	$340,624	Replace existing mains in rear-lot easements along Balboa Dr between Riverview Dr and Swan Dr with 1,342 LF of 8" main in Balboa Dr between Riverview Dr and Swan Dr. The existing mains in this area were installed in 1967. The existing pipe material does not meet current standards for use in public water systems and is not of sufficient strength, which has resulted in many leaks and/or breaks in the area. One break has previously been repaired on the specific main to be replaced, although there have been many more leaks and breaks in the immediate vicinity on pipes with the same age and material. Replacing the main will help reduce system water loss and improve system reliability. The existing mains are located in rear-lot easements which are difficult to access for repairs. The mains are not sufficient to support fire flow nor are they accessible for emergency vehicles. The main replacement is for existing customers and not related to new growth. See Section 3 narrative and Map No. WM-14 in Exhibit CC-1-A for more detail.
Total			**4,087 LF**							**$1,030,934**	

ATTACHMENT 4E

Mohave Water District, Mohave System – PWS ID No. 08032

SIB PLANT TABLE I, 3-5

2019 Main Replacements

Information to be included with SIB-Eligible Project Notification

	NARUC Acct No. (SIB-eligible plant)	Replacement Plant Description (SIB-eligible plant)					Site (location description)	Replacement Plant			
Project No.	**331 T&D Mains** **333 Services** **334 Meters**	Description	Pipe length/ Quantity	Diameter/ Size	Material	Installed Cost/Unit (Estimated)		Expected In-Service Date	Estimated Subtotal Cost (by NARUC Acct No)	Estimated Subtotal Cost (by project)	1. Provide narrative why Replacement Plant is necessary - replacement of existing plant that has exceeded its designated useful life and has worn out or is in deteriorating condition due to no fault of the utility - replacement of existing plant to address excessive water loss (10% or more) - replacement of existing plant for other reasons supported by persuasive showing by utility 2. Provide narrative explaining why this segment of plant is a priority. 3. Provide narrative explaining how replacing this plant will benefit existing customers. 4. Provide affirmation that Replacement Plant does not include the costs for extending or expanding facilities to serve new customers. 5. Provides reference to related page No. in the submitted detailed Engineering Analysis supporting the need for SIB. Engineering Analysis shall also include narrative explaining the utility's systematic assessment, inspection, maintenance, and repair/replacement program.
WM-15	331	Distribution Main	900 LF	8"	PVC	$281	Balboa Dr North	12/2019	n/a	$252,945	Replace existing mains in rear-lot easements along Del Rey Dr between Swan Dr and Coronado Dr with 900 LF of 8" main in Del Rey Dr between Swan Dr and Coronado Dr The existing mains in this area were installed in 1967. The existing pipe material does not meet current standards for use in public water systems and is not of sufficient strength, which has resulted in many leaks and/or breaks in the area. One break has previously been repaired on the specific main to be replaced, although there have been many more leaks and breaks in the immediate vicinity on pipes with the same age and material. Replacing the main will help reduce system water loss and improve system reliability. The existing mains are located in rear-lot easements which are difficult to access for repairs. The mains are not sufficient to support fire flow nor are they accessible for emergency vehicles. The main replacement is for existing customers and not related to new growth. See Section 3 narrative and Map No. WM-15 in Exhibit CC-1-A for more detail.

WM-16	331	Distribution Main	2,603 LF	8"	PVC	$284	Del Rey Dr	12/2019	n/a	$739,306	Replace existing mains in rear-lot easements along Del Rey Dr between Riverview Dr and Coronado Dr with 2,603 LF of 8" main in Del Rey Dr between Riverview Dr and Coronado Dr. The existing mains in this area were installed in 1967. The existing pipe material does not meet current standards for use in public water systems and is not of sufficient strength, which has resulted in many leaks and/or breaks in the area. Two breaks have previously been repaired on the specific main to be replaced, although there have been many more leaks and breaks in the immediate vicinity on pipes with the same age and material. Replacing the main will help reduce system water loss and improve system reliability. The existing mains are located in rear-lot easements which are difficult to access for repairs. The mains are not sufficient to support fire flow nor are they accessible for emergency vehicles. The main replacement is for existing customers and not related to new growth. See Section 3 narrative and Map No. WM-16 in Exhibit CC-1-A for more detail.
Total			**3,503 LF**							**$992,251**	

ATTACHMENT 5A

Mohave Water District, Mohave System – PWS ID No. 08-032

SIB PLANT TABLE I, 4-1

2015 Meter Replacements

Information to be included with SIB-Eligible Project Notification

	NARUC Acct No. (SIB-eligible plant)	Replacement Plant Description (new plant) (SIB-eligible plant)					Site (location description)	Replacement Plant			
Project No.	**331 T&D Mains** **333 Services** **334 Meters**	Description	Pipe length/ Quantity	Diameter/ Size	Material	Installed Cost/Unit (estimated)		Expected In-Service Date	Estimated Subtotal Cost (by NARUC Acct No)	Estimated Subtotal Cost (by project)	1. Provide narrative why Replacement Plant is necessary - replacement of existing plant that has exceeded its designated useful life and has worn out or is in deteriorating condition due to no fault of the utility - replacement of existing plant to address excessive water loss (10% or more) - replacement of existing plant for other reasons supported by persuasive showing by utility 2. Provide narrative explaining why this segment of plant is a priority. 3. Provide narrative explaining how replacing this plant will benefit existing customers. 4. Provide affirmation that Replacement Plant does not include the costs for extending or expanding facilities to serve new customers. 5. Provides reference to related page No. in the submitted detailed Engineering Analysis supporting the need for SIB. Engineering Analysis shall also include narrative explaining the utility's systematic assessment, inspection, maintenance, and repair/replacement program.
M-1	334	meters	1,479	5/8" to >2"	Copper/ Plastic	5/8"-$173 3/4"-$195 1"-$234 1½"-$367 2"-$447 >2"-$1,223	Meter Routes 1019, 1061, and 1111-1116 (see map M-1 in Exhibit CC-1)	12/2015	n/a	$266,908	Replace 1,408 - 5/8", 2 - 3/4", 39 – 1", and 30 – 2" (1,479 total) meters in Mohave district meter routes 1019, 1061, and 1111-1116. The existing meters in these routes will be between 12 and 16 years old at the time of replacement; most will be at least 15 years old. They are experiencing a rapid decline in meter accuracy. Prior to replacement, a 10% sample of the route meters will be tested for accuracy. The new meters will help reduce system water loss. The meter replacements are for existing customers and not related to new growth. See Section 4 narrative and Map M-1 in Exhibit CC-1-A for more detail.
Total			**1,479**							**$266,908**	

ATTACHMENT 5B

Mohave Water District, Mohave System – PWS ID No. 08-032

SIB PLANT TABLE I, 4-2

2016 Meter Replacements

Information to be included with SIB-Eligible Project Notification

	NARUC Acct No. (SIB-eligible plant)	Replacement Plant Description (new plant) (SIB-eligible plant)					Site (location description)	Replacement Plant			
Project No.	**331 T&D Mains** **333 Services** **334 Meters**	Description	Pipe length/ Quantity	Diameter/ Size	Material	Installed Cost/Unit (estimated)		Expected In-Service Date	Estimated Subtotal Cost (by NARUC Acct No)	Estimated Subtotal Cost (by project)	1. Provide narrative why Replacement Plant is necessary - replacement of existing plant that has exceeded its designated useful life and has worn out or is in deteriorating condition due to no fault of the utility - replacement of existing plant to address excessive water loss (10% or more) - replacement of existing plant for other reasons supported by persuasive showing by utility 2. Provide narrative explaining why this segment of plant is a priority. 3. Provide narrative explaining how replacing this plant will benefit existing customers. 4. Provide affirmation that Replacement Plant does not include the costs for extending or expanding facilities to serve new customers. 5. Provides reference to related page No. in the submitted detailed Engineering Analysis supporting the need for SIB. Engineering Analysis shall also include narrative explaining the utility's systematic assessment, inspection, maintenance, and repair/replacement program.
M-2	334	meters	1,782	5/8" to >2"	Copper/ Plastic	5/8"-$173 3/4"-$195 1"-$234 1½"-$367 2"-$447 >2"-$1,223	Meter Routes 1005, 1105-1110, and 1130 (see map M-2 in Exhibit CC-1)	12/2016	n/a	$314,733	Replace 1,733 - 5/8", 34 – 1", 3 – 1.5", and 12 – 2" (1,782 total) meters in Mohave district meter routes 1005, 1105-1110, and 1130. The existing meters in these routes will be between 12 and 17 years old at the time of replacement; most will be at least 16 years old. They are experiencing a rapid decline in meter accuracy. Prior to replacement, a 10% sample of the route meters will be tested for accuracy. The new meters will help reduce system water loss. The meter replacements are for existing customers and not related to new growth. See Section 4 narrative and Map M-2 in Exhibit CC-1-A for more detail.
Total			**1,782**							**$314,733**	

ATTACHMENT 5C

Mohave Water District, Mohave System – PWS ID No. 08-032

SIB PLANT TABLE I, 4-3

2017 Meter Replacements

Information to be included with SIB-Eligible Project Notification

	NARUC Acct No. (SIB-eligible plant)	Replacement Plant Description (new plant) (SIB-eligible plant)					Site (location description)	Replacement Plant			
Project No.	**331 T&D Mains** **333 Services** **334 Meters**	Description	Pipe length/ Quantity	Diameter/ Size	Material	Installed Cost/Unit (estimated)		Expected In-Service Date	Estimated Subtotal Cost (by NARUC Acct No)	Estimated Subtotal Cost (by project)	1. Provide narrative why Replacement Plant is necessary - replacement of existing plant that has exceeded its designated useful life and has worn out or is in deteriorating condition due to no fault of the utility - replacement of existing plant to address excessive water loss (10% or more) - replacement of existing plant for other reasons supported by persuasive showing by utility 2. Provide narrative explaining why this segment of plant is a priority. 3. Provide narrative explaining how replacing this plant will benefit existing customers. 4. Provide affirmation that Replacement Plant does not include the costs for extending or expanding facilities to serve new customers. 5. Provides reference to related page No. in the submitted detailed Engineering Analysis supporting the need for SIB. Engineering Analysis shall also include narrative explaining the utility's systematic assessment, inspection, maintenance, and repair/replacement program.
M-3	334	meters	1,638	5/8" to >2"	Copper/ Plastic	5/8"-$173 3/4"-$195 1"-$234 1½"-$367 2"-$447 >2"-$1,223	Meter Routes 1002, 1003, 1014, and 1101-1104 (see map M-3 in Exhibit CC-1)	12/2017	n/a	$298,679	Replace 1,557 - 5/8", 34 – 1", 1 – 1.5", and 46 – 2" (1,638 total) meters in Mohave district meter routes 1002, 1003, 1014, and 1101-1104. The existing meters in these routes will be between 16 and 23 years old at the time of replacement; most will be at least 17 years old. They are experiencing a rapid decline in meter accuracy. Prior to replacement, a 10% sample of the route meters will be tested for accuracy. The new meters will help reduce system water loss. The meter replacements are for existing customers and not related to new growth. See Section 4 narrative and Map M-3 in Exhibit CC-1-A for more detail.
Total			**1,638**							**$298,679**	

ATTACHMENT 5D

Mohave Water District, Mohave System – PWS ID No. 08-032

SIB PLANT TABLE I, 4-4

2018 Meter Replacements

Information to be included with SIB-Eligible Project Notification

	NARUC Acct No. (SIB-eligible plant)	Replacement Plant Description (new plant) (SIB-eligible plant)					Site (location description)	Replacement Plant			
Project No.	**331 T&D Mains** **333 Services** **334 Meters**	Description	Pipe length/ Quantity	Diameter/ Size	Material	Installed Cost/Unit (estimated)		Expected In-Service Date	Estimated Subtotal Cost (by NARUC Acct No)	Estimated Subtotal Cost (by project)	1. Provide narrative why Replacement Plant is necessary - replacement of existing plant that has exceeded its designated useful life and has worn out or is in deteriorating condition due to no fault of the utility - replacement of existing plant to address excessive water loss (10% or more) - replacement of existing plant for other reasons supported by persuasive showing by utility 2. Provide narrative explaining why this segment of plant is a priority. 3. Provide narrative explaining how replacing this plant will benefit existing customers. 4. Provide affirmation that Replacement Plant does not include the costs for extending or expanding facilities to serve new customers. 5. Provides reference to related page No. in the submitted detailed Engineering Analysis supporting the need for SIB. Engineering Analysis shall also include narrative explaining the utility's systematic assessment, inspection, maintenance, and repair/replacement program.
M-4	334	meters	1,026	5/8" to >2"	Copper/ Plastic	5/8"-$173 3/4"-$195 1"-$234 1½"-$367 2"-$447 >2"-$1,223	Meter Routes 1008, 1009, 1011-1013, 1042, and 1124 (see map M-4 in Exhibit CC-1)	12/2018	n/a	$191,670	Replace 948 - 5/8", 35 – 1", and 43 – 2" (1,026 total) meters in Mohave district meter routes 1008, 1009, 1011-1013, 1042, and 1124. The existing meters in these routes will be between 13 and 19 years old at the time of replacement; most will be at least 14 years old. They are experiencing a rapid decline in meter accuracy. Prior to replacement, a 10% sample of the route meters will be tested for accuracy. The new meters will help reduce system water loss. The meter replacements are for existing customers and not related to new growth. See Section 4 narrative and Map M-4 in Exhibit CC-1-A for more detail.
Total			**1,026**							**$191,670**	

ATTACHMENT 5E

Mohave Water District, Desert Foothills System – PWS ID No. 08-137

SIB PLANT TABLE I, 4-5

2018 Meter Replacements

Information to be included with SIB-Eligible Project Notification

	NARUC Acct No. (SIB-eligible plant)	Replacement Plant Description (new plant) (SIB-eligible plant)					Site (location description)	Replacement Plant			
Project No.	**331 T&D Mains** **333 Services** **334 Meters**	Description	Pipe length/ Quantity	Diameter/ Size	Material	Installed Cost/Unit (estimated)		Expected In-Service Date	Estimated Subtotal Cost (by NARUC Acct No)	Estimated Subtotal Cost (by project)	1. Provide narrative why Replacement Plant is necessary - replacement of existing plant that has exceeded its designated useful life and has worn out or is in deteriorating condition due to no fault of the utility - replacement of existing plant to address excessive water loss (10% or more) - replacement of existing plant for other reasons supported by persuasive showing by utility 2. Provide narrative explaining why this segment of plant is a priority. 3. Provide narrative explaining how replacing this plant will benefit existing customers. 4. Provide affirmation that Replacement Plant does not include the costs for extending or expanding facilities to serve new customers. 5. Provides reference to related page No. in the submitted detailed Engineering Analysis supporting the need for SIB. Engineering Analysis shall also include narrative explaining the utility's systematic assessment, inspection, maintenance, and repair/replacement program.
M-5	334	meters	431	5/8" to >2"	Copper/ Plastic	5/8"-$173 3/4"-$195 1"-$234 1½"-$367 2"-$447 >2"-$1,223	Meter Routes 1131, 1133, and 1137 (see map M-5 in Exhibit CC-1)	12/2018	n/a	$74,811	Replace 429 - 5/8" and 2 – 1" (431 total) meters in Mohave district meter routes 1131, 1133, and 1137. The existing meters in these routes will be between 13 and 19 years old at the time of replacement; most will be at least 14 years old. They are experiencing a rapid decline in meter accuracy. Prior to replacement, a 10% sample of the route meters will be tested for accuracy. The new meters will help reduce system water loss. The meter replacements are for existing customers and not related to new growth. See Section 4 narrative and Map M-5 in Exhibit CC-1-A for more detail.
Total			**431**							**$74,811**	

ATTACHMENT 5F

Mohave Water District, Mohave System – PWS ID No. 08-032

SIB PLANT TABLE I, 4-6

2019 Meter Replacements

Information to be included with SIB-Eligible Project Notification

	NARUC Acct No. (SIB-eligible plant)	Replacement Plant Description (new plant) (SIB-eligible plant)					Site (location description)	Replacement Plant			
Project No.	**331 T&D Mains** **333 Services** **334 Meters**	Description	Pipe length/ Quantity	Diameter/ Size	Material	Installed Cost/Unit (estimated)		Expected In-Service Date	Estimated Subtotal Cost (by NARUC Acct No)	Estimated Subtotal Cost (by project)	1. Provide narrative why Replacement Plant is necessary - replacement of existing plant that has exceeded its designated useful life and has worn out or is in deteriorating condition due to no fault of the utility - replacement of existing plant to address excessive water loss (10% or more) - replacement of existing plant for other reasons supported by persuasive showing by utility 2. Provide narrative explaining why this segment of plant is a priority. 3. Provide narrative explaining how replacing this plant will benefit existing customers. 4. Provide affirmation that Replacement Plant does not include the costs for extending or expanding facilities to serve new customers. 5. Provides reference to related page No. in the submitted detailed Engineering Analysis supporting the need for SIB. Engineering Analysis shall also include narrative explaining the utility's systematic assessment, inspection, maintenance, and repair/replacement program.
M-6	334	meters	11	5/8" to >2"	Copper/ Plastic	5/8"-$173, ¾"-$195 1"-$234 1½"-$367 2"-$447 >2"-$1,223	Meter Route 1062 (see map M-6 in Exhibit CC-1)	12/2019	n/a	$2,847	Replace 6 - 5/8", 2 – 1", and 3 – 2" (11 total) meters in Mohave district meter route 1062. The existing meters in these routes will be between 13 and 19 years old at the time of replacement; most will be at least 14 years old. They are experiencing a rapid decline in meter accuracy. Prior to replacement, a 10% sample of the route meters will be tested for accuracy. The new meters will help reduce system water loss. The meter replacements are for existing customers and not related to new growth. See Section 4 narrative and Map M-6 in Exhibit CC-1-A for more detail.
Total			**11**							**$2,847**	

ATTACHMENT 5G

Mohave Water District, Rio Vista System – PWS ID No. 08-333

SIB PLANT TABLE I, 4-7

2019 Meter Replacements

Information to be included with SIB-Eligible Project Notification

	NARUC Acct No. (SIB-eligible plant)	Replacement Plant Description (new plant) (SIB-eligible plant)					Site (location description)	Replacement Plant			
Project No.	**331 T&D Mains** **333 Services** **334 Meters**	Description	Pipe length/ Quantity	Diameter/ Size	Material	Installed Cost/Unit (estimated)		Expected In-Service Date	Estimated Subtotal Cost (by NARUC Acct No)	Estimated Subtotal Cost (by project)	1. Provide narrative why Replacement Plant is necessary - replacement of existing plant that has exceeded its designated useful life and has worn out or is in deteriorating condition due to no fault of the utility - replacement of existing plant to address excessive water loss (10% or more) - replacement of existing plant for other reasons supported by persuasive showing by utility 2. Provide narrative explaining why this segment of plant is a priority. 3. Provide narrative explaining how replacing this plant will benefit existing customers. 4. Provide affirmation that Replacement Plant does not include the costs for extending or expanding facilities to serve new customers. 5. Provides reference to related page No. in the submitted detailed Engineering Analysis supporting the need for SIB. Engineering Analysis shall also include narrative explaining the utility's systematic assessment, inspection, maintenance, and repair/replacement program.
M-7	334	meters	107	5/8" to >2"	Copper/ Plastic	5/8"-$173, ¾"-$195 1"-$234 1½"-$367 2"-$447 >2"-$1,223	Meter Routes 1074 and 1075 (see map M-7 in Exhibit CC-1)	12/2019	n/a	$18,664	Replace 105 - 5/8", and 2 – 1" (107 total) meters in Mohave district meter routes 1074 and 1075. The existing meters in these routes will be between 13 and 19 years old at the time of replacement; most will be at least 14 years old. They are experiencing a rapid decline in meter accuracy. Prior to replacement, a 10% sample of the route meters will be tested for accuracy. The new meters will help reduce system water loss. The meter replacements are for existing customers and not related to new growth. See Section 4 narrative and Map M-7 in Exhibit CC-1-A for more detail.
Total			**107**							**$18,664**	

ATTACHMENT 6

EPCOR Water – Mohave Water District
Docket No. WS-01303A-14-0010

Plan of Administration
System Improvement Benefit Mechanism ("SIB")

TABLE OF CONTENTS

I. GENERAL DESCRIPTION 89

II. DEFINITIONS 89

III. SIB RELATED FILINGS 90

IV. SURCHARGE CALCULATIONS 92

V. ADDING PROJECTS TO SIB TABLE I UNDER EMERGENCY CIRCUMSTANCES 94

VI. SIB SURCHARGE RATE DESIGN 95

VII. SIB SURCHARGE NOTICE REQUIREMENTS 96

EXHIBITS

SIB PLANT TABLE I[13] ..... Exhibit 1

SIB PLANT TABLE II[14] ..... Exhibit 2

SIB SCHEDULE A - CALCULATION OF OVERALL SIB REVENUE REQUIREMENTS AND EFFICIENCY CREDIT ..... Exhibit 3

SIB SCHEDULE B - CALCULATION OF SIB TRUE-UP REVENUE REQUIREMENTS ADJUSTMENT Exhibit 4

SIB SCHEDULE C - TYPICAL BILLS ANALYSIS ..... Exhibit 5

SIB SCHEDULE D - SUMMARY OF REVENUE AND RATE BASE IMPACTS INCLUDING EARNINGS TEST ..... Exhibit 6

[13] Revised 4-1-2014
[14] Revised 4-1-2014

I. GENERAL DESCRIPTION

This document is the Plan of Administration ("POA") for the System Improvement Benefits ("SIB") Mechanism approved for EPCOR Water's ("Company") Sun City Water District by the Arizona Corporation Commission ("ACC" or "Commission") in Decision No. XXXXX on Month, Day, Year. The SIB provides for recovery of the capital costs (return on investment, income taxes and depreciation expense) associated with distribution system improvement projects listed in SIB Plant Table I that have been verified to be completed,[15] net of associated retirements and placed in service per SIB Plant Table II and where costs have not been included in rate base for recovery in Decision No. XXXXX. Any expenditures offset by contributions in aid of construction or advances in aid of construction are not eligible for inclusion in the SIB.

II. DEFINITIONS

- NARUC – National Association of Regulatory Utility Commissioners
- SIB – System Improvement Benefit mechanism to be implemented between rate proceedings to support investment in plant recorded in SIB Eligible NARUC accounts.
- SIB Eligible Plant – Investments in plant recorded in SIB Eligible NARUC accounts.
- SIB Eligible NARUC accounts:
  - NARUC Account No. 309 – Supply Mains
  - NARUC Account No. 331 – Transmission and Distribution Mains
  - NARUC Account No. 333 – Services
  - NARUC Account No. 334 - Meters and Meter Installations;
  - NARUC Account No. 335 – Hydrants
- SIB Plant Table I (Excerpt attached as Exhibit 1)[16] – The schedule of planned SIB eligible projects that is either approved in the Company's most recent rate case or updated by a subsequent Commission decision. As used herein, this term refers to the most recently updated SIB Plant Table I available unless reference is made to a particular Commission decision.
- SIB Plant Table II – The schedule of completed and verified SIB eligible projects from the latest Commission approved SIB Plant Table I and associated retirements.

[15] Acceptable form of verifications may include the Maricopa County Environmental Services Department Approval of Construction, Professional Engineer's Certificate of Completion, etc.
[16] See Company filing of August 22, 2013

- Total Revenue Requirement – The revenue requirement approved in Decision No. XXXXX, plus the SIB Revenue Requirement.

- SIB Revenue Requirement – The revenue requirement equal to the return on investment, income taxes and depreciation expense necessary to support the SIB Plant Table II amounts.

- SIB Revenue Requirement Efficiency Credit – An amount equal to 5 percent of the SIB Revenue Requirement.

- SIB Authorized Revenue – Amount equal to the SIB Revenue Requirement less the SIB Revenue Requirement Efficiency Credit plus any SIB True up Adjustment.

- Gross SIB Surcharge – Amount to be shown on customers' bills based on meter sizes without consideration to the SIB Surcharge Efficiency Credit.

- SIB Surcharge Efficiency Credit – An amount equal to 5 percent of the Gross SIB Surcharge to be shown on customers' bills.

- SIB Surcharge – The amount equal to the Gross SIB Surcharge less the SIB Surcharge Efficiency Credit to be charged, based on meter size, calculated to recover the SIB Authorized Revenue. The SIB Surcharge is to be shown as a separate line item on customers' bills.

- SIB True-up Adjustment – An amount to adjust for over- or under-collection of the SIB Authorized Revenues as compared with the total SIB Surcharges collected for the preceding 12 month period. Each SIB true–up shall also analyze the cumulative over- or under-collections to include a comparison of all past SIB Authorized Revenues, total SIB Surcharge collections, and prior true-ups to be used in calculation of the SIB true-up surcharge or credit by meter size.

III. SIB RELATED FILINGS

A. Progress Reports – Once a SIB is approved in a decision, the Company must file with Docket Control semi-annual status reports delineating the status of all SIB Eligible Plant, on a project by project basis as listed in the latest Commission approved SIB Plant Table I. The initial semi-annual status report shall include only those projects from the initial SIB Plant Table I which the Company has designated as most likely to be completed in the first 12 months.

B. Reconciliation and True Up – Once a SIB Surcharge is implemented, the Company must file annually to true up its SIB Surcharge collections over the preceding twelve months with the SIB Authorized Revenue for that period and establish a surcharge or credit to true up over or under collections, regardless of whether it seeks a new surcharge. The filing dates for these annual true-ups shall be as established in the Commission's Decision approving the SIB Surcharge.

C. SIB Surcharge Requests – To obtain its SIB Surcharge the Company must file the following:

1. SIB Plant Table II[17] (with supporting information and documentation), showing the SIB eligible projects completed for which the Company seeks cost recovery. Such projects must:

   a. be projects listed in the SIB Plant Table I;

   b. have been completed by the Company;

   c. have been verified; and

   d. be actually serving customers.

2. A summary of Commission approved SIB-eligible projects contemplated for the next twelve (12)-month SIB surcharge period from SIB Plant Table I[18] from Decision No. XXXXX to allow the Commission to establish the latest SIB Plant Table I.

3. SIB Schedule A (sample attached as Exhibit 3), showing a calculation of the SIB Revenue Requirement and SIB Revenue Requirement Efficiency Credit, SIB Authorized Revenue, Gross SIB Surcharge, SIB Surcharge Efficiency Credit, and the SIB Surcharge. Schedule A shall be supported by revenue requirements schedules supporting the revenue requirements in Decision No. XXXXX and the pro-forma revenue requirements including the effects of SIB Eligible Plant.

4. Schedule B (sample attached as Exhibit 4) showing the overall SIB True-up Adjustment calculation for the prior twelve-month SIB Surcharge period, as well as the individual SIB True-up Adjustment for each meter size.

5. SIB Schedule C (sample attached as Exhibit 5) showing the effect of the SIB Surcharge on a typical residential customer bill for both median and average usage.

6. SIB Schedule D (sample attached as Exhibit 6) which shall include an analysis of the impact of completed SIB Eligible Plant projects on the fair value rate base, revenue, and the fair value rate of return. The Company shall also file the following as part of SIB D Schedule:

[17] Sample attached as Exhibit 2

[18] Beginning with its SIB Surcharge Request filing for the second 12-month surcharge period, the Company may request a change from the estimated Cost/Unit (approved in the Company's most recent rate case Decision) due to inflation using the latest calendar year Consumer Price Index (see sample attached as Exhibit 1). This may be done only if the original SIB Plant Table I unit cost did not account for inflation.

a. the most current balance sheet at the time of the filing;

b. the most current income statement;

c. an earnings test schedule;

d. a rate review schedule (including the incremental and pro forma effects of the proposed increase);

e. an adjusted rate base schedule; and

f. a Construction Work in Progress ledger for each project showing accumulation of charges by month and paid contractor invoices including a summary page showing the calculation of the SIB eligible rate base and depreciation expense net of associated retirements.

D. The Company will maintain and provide to the Commission's Utilities Division (Staff) and the Residential Utility Consumer Office (RUCO) schedules in Microsoft Excel format (with all formulae intact) supporting the revenue requirement approved in Decision No. XXXXX, and the effects of completed SIB eligible plant for the current SIB Surcharge Request and any previously approved SIB Surcharge and SIB True-up Adjustment Requests.

E. The Company may make its initial SIB Surcharge Request through Docket Control no earlier than twelve months after the entry of Decision No. XXXXX.

F. The Company may make no more than one SIB Surcharge Request every twelve months with no more than five SIB Surcharge Requests between rate case decisions. A True-up must be filed with each SIB Surcharge Request, except the first.

G. Unless otherwise authorized by the Commission, the Company shall be required to file its next general rate case no later than Month, Day, Year, with a test year ending no later than Month, Day, Year.

H. Any SIB Surcharges that are in effect shall be reset to zero upon the date new rates become effective in the Company's next general rate case.

IV. SURCHARGE CALCULATIONS

A. Calculations of Amounts to Be Collected By the SIB Surcharge

1. The amount to be collected by the SIB Authorized Revenue shall be equal to the SIB Revenue Requirement minus the SIB Revenue Requirements Efficiency Credit plus any SIB True up Adjustment.
For purposes of calculating the SIB Revenue Requirement:

(1) The required rate of return is equal to the overall rate of return authorized in Decision No. XXXXX.

(2) The gross revenue conversion factor/tax multiplier is equal to the gross revenue conversion factor/tax multiplier approved in Decision No. XXXXX; and

(3) The applicable depreciation rate(s) is equal to the depreciation rate(s) approved in Decision No. XXXXX.

2. The SIB plant unit cost to be used in calculating the SIB Revenue Requirement shall be the lesser of the installed SIB plant unit cost listed in ~~SIB Plant Table II or 110 percent of the SIB plant estimated unit cost listed~~ in the latest Commission approved SIB Plant Table I.

3. The amount to be collected by each SIB Surcharge Request shall be capped annually at five percent of the revenue requirement authorized in Decision No. XXXXX.

B. Reconciliation And True-Ups

1. The revenue collected by the total SIB Surcharges over the preceding twelve months shall be trued-up and reconciled with the SIB Authorized Revenue for that period.

2. A new SIB Surcharge shall be combined with an existing SIB Surcharge such that a single SIB surcharge and SIB Efficiency Credit are shown on a customer's bill.

3. For each twelve (12) month period that a SIB surcharge is in effect, the Company shall reconcile the amounts collected by the SIB Surcharge with the SIB Authorized Revenue, for that twelve (12)-month period, consistent with Schedule B, attached hereto as Exhibit 4.

4. Any under- or over-collected SIB Authorized Revenues shall be recovered or refunded, without interest, over a twelve-month period by means of a SIB True-up Surcharge or Credit.

5. Starting with the second annual SIB Surcharge, where there are over- or under-collected balances, such over- or under-collected balances shall be carried over to the next year, and considered in the calculation of the new SIB True-up Surcharge or Credit. If, after the five-year period there remains an over- or under-collected balance, such balance shall be reset to zero, and addressed in the next rate case.

C. Earnings Test

1. Once a SIB Surcharge is in effect, the Company shall be required to perform an annual earnings test calculation for each SIB Surcharge Request to determine whether the actual rate of return reflected by the operating income for the affected system or division for the relevant 12-month period exceeded the most recently authorized fair value rate of return for the affected system or division.

2. The earnings test shall be:

a) based on the most recent available operating income,

b) adjusted for any operating revenue and expense adjustments adopted in the most recent general rate case; and

c) based on the rate base adopted in the most recent general rate case, updated to recognize changes in plant, accumulated depreciation, contributions in aid of construction, advances in aid of construction, and accumulated deferred income taxes through the most recent available financial statement (quarterly or longer).

V. ADDING PROJECTS TO SIB TABLE I UNDER EMERGENCY CIRCUMSTANCES

A. The Company may seek Commission approval to add projects in SIB Plant Table I only in the event of emergency circumstances. No such changes may be made without Commission approval.

B. Any addition to SIB Plant Table I must be plant investment that maintains or improves existing customer service, system reliability, integrity and safety. Eligible plant additions are limited to plant replacement projects. The costs of extending facilities or capacity to serve new customers are not recoverable through the SIB mechanism.

C. To be eligible for SIB treatment, a project must be SIB Eligible Plant.

D. SIB Eligible Plant must satisfy at least one of the following criteria:

1. Water loss for the system exceeds ten (10) percent, as calculated by the following formula: ((Volume of Water Produced and/ or Purchased) – (Volume of Water Sold + Volume of Water Put to Beneficial Use)) divided by (Volume of Water Produced and/or Purchased). If the Volume of Water Put to Beneficial Use is not metered, it shall be established in a reliable, verifiable manner.

2. Plant assets that have remained in service beyond their useful service lives (based on the Company's system's authorized utility plant depreciation rates) and are in need of replacement due to being worn out or in a deteriorating condition through no fault of the Company;

3. Any other engineering, operational or financial justification supporting the need for a plant asset replacement, other than the Company's negligence or improper maintenance, including, but not limited to:

   a. A documented increasing level of repairs to, or failures of, a plant asset justifying its replacement prior to reaching the end of its useful service life (e.g. black poly pipe);

   b. Assets that are required to be moved, replaced or abandoned by a governmental agency or political subdivision if the Company can show that it has made a good faith effort to seek reimbursement for all or part of the costs incurred.

VI. SIB SURCHARGE RATE DESIGN

A. The SIB Surcharge rate design shall be calculated as follows:

1. The SIB Surcharge shall be a fixed monthly surcharge containing a Gross SIB Surcharge and the SIB Surcharge Efficiency Credit as its two components.

2. The SIB Surcharge shall be calculated by dividing the SIB Authorized Revenue by the number of equivalent active 5/8-inch meters at the end of the most recent twelve (12) month period, and shall increase with meter size based on the following meter capacity multipliers:

5/8-inch x ¾-inch	1.0 times
¾-inch	1.5 times
1-inch	2.5 times
1½-inch	5 times
2-inch	8 times
3-inch	16 times
4-inch	25 times
6-inch	50 times
8-inch	80 times
10-inch & above	115 times

B. The SIB Surcharge shall apply to all of the Company's metered customers, including private fire service customers.

VII. SIB SURCHARGE NOTICE REQUIREMENTS

A. Thirty days prior to filing each application to implement a SIB Surcharge, the Company shall file a proposed form of notice to Staff for review, and a Summary of what the Company will be requesting in the application. Once the notice is approved by Staff, the Company shall provide a copy of the approved notice to its customers via newsletter or bill insert. After providing notice, the Company shall fie a copy of the notice and a description of when and how it provided notice with each application to implement a SIB surcharge. The Summary and Notice shall include at least the following information:

1. The individual Gross SIB Surcharge, by meter size;
2. The individual SIB Surcharge Efficiency Credit, by meter size;
3. The SIB Surcharge, by meter size; and
4. Directions to where the customer may obtain a summary of the projects included in the current SIB Surcharge request, including a description of each project and its cost.

B. A SIB Surcharge shall not become effective until approved by the Commission.

C. The Company shall provide a proposed order for the Commission's consideration.

D. The Company shall notice its customers of the SIB Surcharge approved herein as soon as possible in a form acceptable to Staff and consistent with the notice requirements of Decision No. XXXXX.

E. The Company shall not implement the SIB Surcharge until 30 days after having filed documentation in Docket Control providing the date when all effected customers have been notified of the Commission approved SIB Surcharge.

ATTACHMENT 7A

Mohave Water District, PWSID No.

SIB PLANT TABLE I

Information to be included with SIB-Eligible Project Filings

Replacement Plant Description (new plant) (SIB-eligible plant)											
Project No.	NARUC Acct No./ Plant 331 T&D Mains 331 T&D Valves 333 Services 334 Meters	Units (Quantity)	Diameter/ Size	Material	Cost/Unit (estimated)[19]	Cost/Unit (estimated)[20]	Subtotal Cost (estimated)	Site (location description)	Expected In-Service Date	Project Status	1. Provide narrative why Replacement Plant is necessary - replacement of existing plant that has exceeded its designated useful life and has worn out or is in deteriorating condition due to no fault of the utility - replacement of existing plant to address excessive water loss (10% or more) - replacement of existing plant for other reasons supported by persuasive showing by utility 2. Provide narrative explaining why this segment of plant is a priority. 3. Provide narrative explaining how replacing this plant will benefit existing customers. 4. Provide affirmation that Replacement Plant does not include the costs for extending or expanding facilities to serve new customers. 5. Provide reference to related page No. in the submitted detailed Engineering Analysis supporting the need for SIB. Engineering Analysis shall also include narrative explaining the utility's systematic assessment, inspection, maintenance and repair/replacement program.
Estimated Total Cost											

Revised 4/1/201

[19] Per the Commission approved Initial SIB Table I.

[20] Beginning with its SIB Surcharge Request filing for Year Two, the Company may request a change from the estimated Cost/Unit (in the Commission approved Initial SIB Table I) due to inflation using the latest calendar year Consumer Price Index. This may be done only if the Initial SIB Plant Table I unit cost did not account for inflation.

ATTACHMENT 7B

Mohave Water District, PWSID No.

SIB PLANT TABLE II (Page 1a)

Information to be included with SIB-Eligible Completed Project Filings

Replacement Plant Description (installed new plant) (SIB-eligible plant)									Original Plant (Plant Being Retired)				
Project No.	NARUC Acct No./ Plant 331 T&D Mains	Description (Note any changes)	Installed Quantity	Diameter/ Size	Material	Installed Cost/Unit (actual cost)	Actual Cost (by NARUC Acct No)	In-Service Date (provide ADEQ AOC and other related approvals by state and/or federal agencies when applicable; pictures of installed plant)	Actual Retirement Date	Original In-Service Date	Original Cost	Accumulated Depreciation Reserve (as of the actual retirement date)	Net Value of Retired Plant

Revised 4/1/2014

ATTACHMENT 7C

Mohave Water District, PWSID No.
SIB PLANT TABLE II (Page 1b)

Information to be included with SIB-Eligible Completed Project Filings

Project No.	NARUC Acct. No. Plant 331 T&D Mains	a Cost/Unit (Estimated) (from Table I)	b Cost/Unit (Installed)	c Installed Units (Quantity)	d Actual Cost (by NARUC Acct) (d)=(b) x (c)	e Is (b) less than 110% of (a)? Enter "Yes" or "No	f If (e) is "No", Calculate Allowable Installed cost: (f)=110% of (a) x (c)	g Net Value of Retired Plant	h SIB Allowed Cost (h)=(d)-(g) when Column (e) is "Yes" (h)=(f)-(g) when Column (e) is "No"

ATTACHMENT 7D

Mohave Water District, PWSID No.

SIB PLANT TABLE II (Page 2a)

Information to be included with SIB-Eligible Completed Project Filings

Replacement Plant Description (installed new plant) (SIB-eligible plant)									Original Plant (Plant Being Retired)				
Project No.	NARUC Acct No./ Plant 331 T&D Valves	Description (Note any changes)	Installed Quantity	Diameter/ Size	Material	Installed Cost/Unit (actual cost)	Actual Cost (by NARUC Acct No)	In-Service Date (provide ADEQ AOC and other related approvals by state and/or federal agencies when applicable; pictures of installed plant)	Actual Retirement Date	Original In-Service Date	Original Cost	Accumulated Depreciation Reserve (as of the actual retirement date)	Net Value of Retired Plant

ATTACHMENT 7E

Mohave Water District, PWSID No.
SIB PLANT TABLE II (Page 2b)

Information to be included with SIB-Eligible Completed Project Filings

Project No.	NARUC Acct. No./ Plant 331 T&D Valves	a Cost/Unit (Estimated) (from Table I)	b Cost/Unit (Installed)	c Installed Units (Quantity)	d Actual Cost (by NARUC Acct) (d)=(b) x (c)	e Is (b) less than 110% of (a)? Enter "Yes" or "No	f If (e) is "No", Calculate Allowable Installed cost: (f)=110% of (a) x (c)	g Net Value of Retired Plant	h SIB Allowed Cost (h)=(d)-(g) when Column (e) is "Yes" (h)=(f)-(g) when Column (e) is "No"

ATTACHMENT 7F

Mohave Water District, PWSID No.

SIB PLANT TABLE II (Page 3a)

Information to be included with SIB-Eligible Completed Project Filings

Replacement Plant Description (installed new plant) (SIB-eligible plant)									Original Plant (Plant Being Retired)				
Project No.	NARUC Acct No./ Plant 333 Services	Description (Note any changes)	Installed Quantity	Diameter/ Size	Material	Installed Cost/Unit (actual cost)	Actual Cost (by NARUC Acct No)	In-Service Date (provide ADEQ AOC and other related approvals by state and/or federal agencies when applicable; pictures of installed plant)	Actual Retirement Date	Original In-Service Date	Original Cost	Accumulated Depreciation Reserve (as of the actual retirement date)	Net Value of Retired Plant

ATTACHMENT 7G

Mohave Water District, PWSID No.
SIB PLANT TABLE II (Page 3b)

Information to be included with SIB-Eligible Completed Project Filings

Project No.	NARUC Acct. No./ Plant 333 Services	a Cost/Unit (Estimated) (from Table I)	b Cost/Unit (Installed)	c Installed Units (Quantity)	d Actual Cost (by NARUC Acct) (d)=(b) x (c)	e Is (b) less than 110% of (a)? Enter "Yes" or "No	f If (e) is "No", Calculate Allowable Installed cost: (f)=110% of (a) x (c)	g Net Value of Retired Plant	h SIB Allowed Cost (h)=(d)-(g) when Column (e) is "Yes" (h)=(f)-(g) when Column (e) is "No"

ATTACHMENT 7H

Mohave Water District, PWSID No.
SIB PLANT TABLE II (Page 4a)

Information to be included with SIB-Eligible Completed Project Filings

Replacement Plant Description (installed new plant) (SIB-eligible plant)									Original Plant (Plant Being Retired)				
Project No.	NARUC Acct No./ Plant 334 Meters	Description (Note any changes)	Installed Quantity	Diameter/ Size	Material	Installed Cost/Unit (actual cost)	Actual Cost (by NARUC Acct No)	In-Service Date (provide ADEQ AOC and other related approvals by state and/or federal agencies when applicable; pictures of installed plant)	Actual Retirement Date	Original In-Service Date	Original Cost	Accumulated Depreciation Reserve (as of the actual retirement date)	Net Value of Retired Plant

ATTACHMENT 7I

Mohave Water District, PWSID No.
SIB PLANT TABLE II (Page 4b)

Information to be included with SIB-Eligible Completed Project Filings

Project No.	NARUC Acct. No./ Plant 334 Meters	a Cost/Unit (Estimated) (from Table I)	b Cost/Unit (Installed)	c Installed Units (Quantity)	d Actual Cost (by NARUC Acct) (d)=(b) x (c)	e Is (b) less than 110% of (a)? Enter "Yes" or "No	f If (e) is "No", Calculate Allowable Installed cost: (f)=110% of (a) x (c)	g Net Value of Retired Plant	h SIB Allowed Cost (h)=(d)-(g) when Column (e) is "Yes" (h)=(f)-(g) when Column (e) is "No"

ATTACHMENT 7J

Mohave Water District, PWSID No.
SIB PLANT TABLE II- **SUMMARY** (Page 5)

Information to be included with SIB-Eligible Completed Project Filings

Project No.	NARUC Acct No. (SIB-eligible plant) 331 333 334	Description	1 Actual Cost (from Table II column d)	2 **SIB Allowed Cost**[21] (from Table II column h)
		Total		

[21] Total SIB Allowed Cost to be used in calculating the SIB Revenue Requirement

ATTACHMENT 7K

SIB Schedule A

EPCOR Water
Mohave Water District, PWSID No.
Decision No. XXX
Effective Date XXX

Check if
☐ Consolidated

LINE NO.	CALCULATION OF OVERALL SIB REVENUE REQUIREMENT AND EFFICIENCY CREDIT		
1	Total Authorized Revenue Requirement, Per Decision xxxxx, See Attached Schedules	TBD	
2	SIB Revenue Cap percentage	5%	Per Year
3	SIB Revenue Cap	TBD	
4	SIB Allowed Cost (Per SIB Table II, Summary page, Column 2)	TBD	
5	Total Revenue Requirement, (with pro forma SIB investments). See attached revenue requirements schedules as provided by Company.	TBD	
6	SIB Revenue Requirement (line 5 minus line 1)	TBD	
7	SIB Revenue Requirement Efficiency Credit	5%	
8	SIB True-Up Adjustment (from SIB Schedule B)	TBD	
9	SIB Authorized Revenue (line 6 plus line 7 plus line 8)	TBD	
	* Number of Equivalent Meters, below		TBD
	* Charge per 5/8" meter		TBD

	No. of Customers at SIB Cycle Year End	Multipliers	5/8 x 3/4-inch Equivalent Meters	Fixed Surcharge	Annual Rev by Meter Size
5/8 x 3/4-inch	TBD	1	TBD	TBD	TBD
3/4-inch	TBD	1.5	TBD	TBD	TBD
1-inch	TBD	2.5	TBD	TBD	TBD
1 1/2-inch	TBD	5	TBD	TBD	TBD
2-inch	TBD	8	TBD	TBD	TBD
3-inch	TBD	16	TBD	TBD	TBD
4-inch	TBD	25	TBD	TBD	TBD
6 -inch	TBD	50	TBD	TBD	TBD
8 -inch	TBD	80	TBD	TBD	TBD
10-inch	TBD	115	TBD	TBD	TBD
Totals	TBD		TBD		TBD

ATTACHMENT 7L

EPCOR Water

Mohave Water District, PWSID No.

Decision No. XXX

Effective Date XXX

SIB Schedule B

CALCULATION OF SIB TRUE-UP REVENUE REQUIREMENTS ADJUSTMENT	SIB Filing Sequence				
	SIB year 1*	SIB year 2	SIB year 3	SIB year 4	SIB year 5
SIB Authorized Revenue , Per SIB Schedule A	TBD	TBD	TBD	TBD	TBD
Total SIB Surcharges collections for Period	TBD	TBD	TBD	TBD	TBD
SIB True-Up Adjustment	TBD	TBD	TBD	TBD	TBD

Note: The Company shall also provide an analysis of cumulative over or under collections and a net amount to be included in the SIB True-up Adjustment

*SIB year 1 is one year after effective date

ATTACHMENT 7M

EPCOR Water
Mohave Water District, PWSID No.
Decision No. XXX
Effective Date XXX

SIB Schedule C

TYPICAL BILL IMPACTS
5/8 -Inch Customers

		Step 1			Step 2			Step 3			Step 4			Step 5		
Gallons	Per Dec. No. XXXXX(no SIB Surcharge)	Total Bill w/ SIB Year 1 *	SIB Inc.	Cumulative % Increase	Total Bill w/ SIB Year 2 *	SIB Inc.	Cumulative % Increase	Total Bill w/ SIB Year 3 *	SIB Inc.	Cumulative % Increase	Total Bill w/ SIB Year 4 *	SIB Inc.	Cumulative % Increase	Total Bill w/ SIB Year 5 *	SIB Inc.	Cumulative % Increase
0	TBD	TBD	TBD	TBD	TBD	TBD	TBD	TBD	TBD	TBD	TBD	TBD	TBD	TBD	TBD	TBD
1000	TBD	TBD	TBD	TBD	TBD	TBD	TBD	TBD	TBD	TBD	TBD	TBD	TBD	TBD	TBD	TBD
2000	TBD	TBD	TBD	TBD	TBD	TBD	TBD	TBD	TBD	TBD	TBD	TBD	TBD	TBD	TBD	TBD
3000	TBD	TBD	TBD	TBD	TBD	TBD	TBD	TBD	TBD	TBD	TBD	TBD	TBD	TBD	TBD	TBD
4000	TBD	TBD	TBD	TBD	TBD	TBD	TBD	TBD	TBD	TBD	TBD	TBD	TBD	TBD	TBD	TBD
5000	TBD	TBD	TBD	TBD	TBD	TBD	TBD	TBD	TBD	TBD	TBD	TBD	TBD	TBD	TBD	TBD
6000	TBD	TBD	TBD	TBD	TBD	TBD	TBD	TBD	TBD	TBD	TBD	TBD	TBD	TBD	TBD	TBD
7000	TBD	TBD	TBD	TBD	TBD	TBD	TBD	TBD	TBD	TBD	TBD	TBD	TBD	TBD	TBD	TBD
8000	TBD	TBD	TBD	TBD	TBD	TBD	TBD	TBD	TBD	TBD	TBD	TBD	TBD	TBD	TBD	TBD
9000	TBD	TBD	TBD	TBD	TBD	TBD	TBD	TBD	TBD	TBD	TBD	TBD	TBD	TBD	TBD	TBD
10000	TBD	TBD	TBD	TBD	TBD	TBD	TBD	TBD	TBD	TBD	TBD	TBD	TBD	TBD	TBD	TBD
11000	TBD	TBD	TBD	TBD	TBD	TBD	TBD	TBD	TBD	TBD	TBD	TBD	TBD	TBD	TBD	TBD
12000	TBD	TBD	TBD	TBD	TBD	TBD	TBD	TBD	TBD	TBD	TBD	TBD	TBD	TBD	TBD	TBD
13000	TBD	TBD	TBD	TBD	TBD	TBD	TBD	TBD	TBD	TBD	TBD	TBD	TBD	TBD	TBD	TBD
14000	TBD	TBD	TBD	TBD	TBD	TBD	TBD	TBD	TBD	TBD	TBD	TBD	TBD	TBD	TBD	TBD
15000	TBD	TBD	TBD	TBD	TBD	TBD	TBD	TBD	TBD	TBD	TBD	TBD	TBD	TBD	TBD	TBD
20000	TBD	TBD	TBD	TBD	TBD	TBD	TBD	TBD	TBD	TBD	TBD	TBD	TBD	TBD	TBD	TBD
25000	TBD	TBD	TBD	TBD	TBD	TBD	TBD	TBD	TBD	TBD	TBD	TBD	TBD	TBD	TBD	TBD
Median (Cite Usage)	TBD	TBD	TBD	TBD	TBD	TBD	TBD	TBD	TBD	TBD	TBD	TBD	TBD	TBD	TBD	TBD
Mean (Cite Usage)	TBD	TBD	TBD	TBD	TBD	TBD	TBD	TBD	TBD	TBD	TBD	TBD	TBD	TBD	TBD	TBD

*: Bills in Years 1 -5 are net of Efficiency Credit

ATTACHMENT 7N

EPCOR Water
Mohave Water District, PWSID No.
Decision No. XXX
Effective Date XXX

SIB Schedule D

Fair Value Rate Base, Revenue & Rate of Return - Decision No. _____

	Per Dec. No XXXXXX	SIB Step 1	SIB Step 2	SIB Step 3	SIB Step 4	SIB Step 5	Total Pro-forma with SIB
Total Operating Revenue *	TBD	TBD	TBD	TBD	TBD	TBD	TBD
Operating Expenses	TBD	TBD	TBD	TBD	TBD	TBD	TBD
Operations & Maintenance	TBD	TBD	TBD	TBD	TBD	TBD	TBD
Depreciation & Amortizaiton	TBD	TBD	TBD	TBD	TBD	TBD	TBD
Taxes Other than Income	TBD	TBD	TBD	TBD	TBD	TBD	TBD
Income Taxes	TBD	TBD	TBD	TBD	TBD	TBD	TBD
Total Operating Expenses	TBD	TBD	TBD	TBD	TBD	TBD	TBD
Operating Income	TBD	TBD	TBD	TBD	TBD	TBD	TBD
Rate Base	TBD	TBD	TBD	TBD	TBD	TBD	TBD
Rate of Return on Rate Base	TBD	TBD	TBD	TBD	TBD	TBD	TBD
Authorized Rate of Return on Rate Base	TBD	TBD	TBD	TBD	TBD	TBD	TBD

*: SIB Revenues in Years 1 -5 are net of
5% Efficiency Credit

ATTACHMENT 7O

EPCOR Water
Mohave Water District, PWSID No.
Decision No. XXX

Schedule D	Fair Value Rate Base, Revenue & Rate of Return
	Rate Review
	Balance Sheet
	Income Statement
	Earnings Test
	Rate Base
	Construction Work in Progerss (CWIP) Ledger
	Calculation of Corporate Allocation Factor

EXHIBIT MST-2

ENGINEERING REPORT FOR EPCOR WATER ARIZONA, INC.,

PARADISE VALLEY WATER DISTRICT

BY MICHAEL THOMPSON

JANUARY 20, 2015

ENGINEERING REPORT FOR
EPCOR Water Arizona Inc.
Paradise Valley Water District

Docket No. WS-01303A-14-0010 (Rates)

By Michael Thompson, P. E.

December 24, 2014

EXECUTIVE SUMMARY

CONCLUSIONS

1. The Arizona Corporation Commission ("ACC" or "Commission") Utilities Division Staff ("Utilities Staff" or "Staff") concludes that the Paradise Valley Water District ("Paradise Valley" or "District") water system, has adequate production and storage capacity to serve the present customer base and any reasonable growth.

2. The Maricopa County Environmental Services Department ("MCESD") Compliance Status Report ("CSR"), indicates that the District water system is currently delivering water that meets water quality standards required by 40 CFR 141 (National Primary Drinking Water Regulations) and Arizona Administrative Code, Title 18, Chapter 4.

3. The District's water system service area is located within the Arizona Department of Water Resources ("ADWR") Phoenix Active Management Area ("AMA").

4. ADWR's Water Provider Compliance Reports, dated June 6, 2014, indicate that the District's water system is currently in compliance with departmental requirements governing water providers and/or community water systems.

5. According to the Commissions Utilities Division Compliance Section database the District currently has no delinquent Commission compliance items.

6. The District has approved Cross-Connection/Backflow Prevention and Curtailment Tariffs on file with the Commission.

7. The District has ten (10) Best Management Practices ("BMPs") on file with the Commission.

8. On May 2, 2012, the Environmental Protection Agency ("EPA") revised and implemented the Unregulated Contaminant Monitoring Rule 3 ("UCMR3"). The District began sampling for the first sample set of UCRM3 contaminants in December 2013. The second set of samples were sampled in June 2014. The total cost for testing the samples, as illustrated in Table H, was $1,320. Staff concludes that the one-time expense of $1,320 associated with sampling and testing of the UCMR3 contaminants is reasonable and appropriate.

TABLE OF CONTENTS

PAGE

A. INTRODUCTION AND LOCATION OF COMPANY 6

B. DESCRIPTION OF THE WATER SYSTEM 6

C. WATER USE 8

(1) WATER SOLD 8
(2) NON-ACCOUNTED FOR WATER 9
(3) WATER SYSTEM ANALYSIS 9

D. GROWTH 10

E. MARICOPA COUNTY ENVIRONMENTAL SERVICES DEPARTMENT ("MCESD") COMPLIANCE11

(1) COMPLIANCE STATUS 11
(2) WATER MONITORING AND TESTING EXPENSES 11

F. ARIZONA DEPARTMENT OF WATER RESOURCES ("ADWR") COMPLIANCE 12

G. ARIZONA CORPORATION COMMISSION COMPLIANCE 12

H. DEPRECIATION RATES 13

I. OTHER ISSUES 15

(1) SERVICE LINE AND METER INSTALLATION CHARGES 15
(2) CURTAILMENT TARIFF 15
(3) CROSS-CONNECTION/BACKFLOW PREVENTION TARIFF 15
(4) BEST MANAGEMENT PRACTICES ("BMP") TARIFF 16
(5) UNREGULATED CONTAMINANT MONITORING 16
(6) TANK MAINTENANCE PROGRAM 17
(7) PARADISE VALLEY WATER DISTRICT POST TEST YEAR PLANT ADDITIONS – POST TEST YEAR INVESTMENT PROJECTS ("IPS") USED AND USEFUL (JULY ~~2103~~ 2013 – JUNE 30, 2014) 19
(8) SYSTEM IMPROVEMENT BENEFIT ("SIB") – PARADISE VALLEY WATER DISTRICT 20

FIGURES

PAGE

FIGURE 1. MARICOPA COUNTY MAP 23

FIGURE 2. PARADISE VALLEY WATER DISTRICT CERTIFIED AREA 24

FIGURE 3A – 3E. PARADISE VALLEY WATER SYSTEM SCHEMATIC DIAGRAMS 25-29

FIGURE 3A. Paradise Valley Well Sites 14, 16 & 17 25

FIGURE 3B. Paradise Valley Arsenic Treatment Facility & Well Sites 11, 12 & 12B 26

FIGURE 3C. Paradise Valley Miller Road Treatment Facility & Well Site 15 27

FIGURE 3D. Paradise Valley 60th Street, Club Estimates, Country Club & Stone Canyon Storage Tanks & Club Estates,Country Club, Glen Canyon Drive & Stone Canyon Booster Pump Stations 28

FIGURE 3E. Paradise Valley Clearwater Hills 1, 2 & 3, Raquet Club Storage Tanks, Clearwater Hills High Cliff & Las Brisas Booster Pump Stations 29

FIGURE 4. PARADISE VALLEY WATER SYSTEM CONSUMPTION GRAPH 30

FIGURE 5. PARADISE VALLEY WATER DISTRICT ACTUAL & PROJECTED GROWTH GRAPH 30

9. Staff concludes that the District's tank maintenance plan is appropriate and the cost estimate, as adjusted by Staff and outlined in Table J, to be reasonable.

10. The District Post Test Year Investment Project ("IP"), listed in Table K, was found to be in-service and used and useful during the plant facilities site inspection on June 12, 2014. Staff concludes that the cost ($1,279,112) associated with the installation of the District's IP, listed in Table K, is reasonable and appropriate.

11. Staff has determined that District's proposed System Improvement Benefit ("SIB") Mechanism (eligible 5-year infrastructure replacement plan), totaling $7,019,992 as tabulated in Table N, to be reasonable and appropriate. However, no "used and useful" determination of the proposed plant items was made, and no conclusions should be inferred for rate base purposes in the future.

RECOMMENDATIONS

1. Staff recommends, for the District, an annual water testing expense of $13,152, as tabulated in Table E, be used for the purposes of this application.

2. Staff recommends the depreciation rates listed under "Staff's Recommended Rates" in Table F be adopted.

3. Staff has no objections to the continued use of the currently authorized meter and service installation charges, as proposed by the District, and recommends the charges listed under "Staff's Recommendations" in Table G be adopted.

4. EWAZ filed a proposed change to the Meter Repair and/or Replacement Tariff ("BMP 4.2"). In the proposed change, EWAZ requested that paragraph 3 of the BMP tariff, which refers to the inspection of meters, be modified such that pulling a meter for inspection would no longer be required and therefore be stricken from the tariff. Staff recommends approval of the modification in BMP 4.2, as proposed by EWAZ.

5. Staff recommends that EWAZ file with Docket Control, as a compliance item is this docket by December 31st of each year following the decision in this proceeding, documentation demonstrating the status of the storage tank maintenance plan and the storage tank on which maintenance has been completed.

6. Staff recommends approval of the District's proposed Plant Table I of the System Improvement Benefits ("SIB") Mechanism (eligible 5 year infrastructure improvement projects), submitted as a supplement to the District's application by EWAZ on March 25, 2014, totaling $7,019,992 as tabulated in Table N. Staff further recommends that SIB Attachments 2A-2E, 3A-3E, 4A-4E, and 5, and 6A-6M be adopted.

ATTACHMENTS

METER REPAIR AND/OR REPLACEMENT TARIFF – BMP 4.2 1

SIB SERVICE LINE REPLACEMENTS, TABLE I 1-1 THRU 1-5 ..... 2A-2E

Paradise Valley Service Line Replacements Table I, 1-1 2015 ..... 2A

Paradise Valley Service Line Replacements Table I, 1-2 2016 ..... 2B

Paradise Valley Service Line Replacements Table I, 1-3 2017 ..... 2C

Paradise Valley Service Line Replacements Table I, 1-4 2018 ..... 2D

Paradise Valley Service Line Replacements Table I, 1-5 2019 ..... 2E

SIB VALVE REPLACEMENT, TABLE I, 2-1 THRU 2-5 ..... 3A-3E

Paradise Valley Valve Replacements Table I, 2-1 2015 ..... 3A

Paradise Valley Valve Replacements Table I, 2-2 2016 ..... 3B

Paradise Valley Valve Replacements Table I, 2-3 2017 ..... 3C

Paradise Valley Valve Replacements Table I, 2-4 2018 ..... 3D

Paradise Valley Valve Replacements Table I, 2-5 2019 ..... 3E

SIB MAIN REPLACEMENTS, TABLE I, 3-1 THRU 3-5 ..... 4A-4E

Paradise Valley Main Replacements Table I, 3-1 2015 ..... 4A

Paradise Valley Main Replacements Table I, 3-2 2016 ..... 4B

Paradise Valley Main Replacements Table I, 3-3 2017 ..... 4C

Paradise Valley Main Replacements Table I, 3-4 2018 ..... 4D

Paradise Valley Main Replacements Table I, 3-5 2019 ..... 4E

PARADISE VALLEY WATER DISTRICT PLAN OF ADMINISTRATION 5

SIB PLANT TABLES I & II, SUMMARY TABLE & SCHEDULES 6A-6M

Paradise Valley Water District SIB Table I 6A

Paradise Valley Water District SIB Table II, Main Replacements, Page 1A 6B

Paradise Valley Water District SIB Table II, Main Replacements, Page 1B 6C

Paradise Valley Water District SIB Table II, Valve Replacements, Page 2A 6D

Paradise Valley Water District SIB Table II, Valve Replacements, Page 2B 6E

Paradise Valley Water District SIB Table II, Service Replacements, Page 3A 6F

Paradise Valley Water District SIB Table II, Service Replacements, Page 3B 6G

Paradise Valley Water District SIB Summary Table 6H

Paradise Valley Water District SIB Schedule A 6I

Paradise Valley Water District SIB Schedule B 6J

Paradise Valley Water District SIB Schedule C 6K

Paradise Valley Water District SIB Schedule D 6L

Paradise Valley Water District SIB Sub Schedule List D 6M

A. INTRODUCTION AND LOCATION OF COMPANY

On March 7, 2014, EPCOR Arizona Water Company, Inc. ("EWAZ" or "Company") filed an application with the Arizona Corporation Commission ("ACC" or "Commission") for approval of a rate increase in (Docket No. WS-01303A-14-0010) for its Paradise Valley Water District ("Paradise Valley" or "District"). Paradise Valley's current rates were approved in Commission Decision No. 71410, dated December 8, 2009.

The District water system, Public Water System ("PWS") No. 04-07-056, provides public utility water service to approximately 4,860 metered connections[1] in the Town of Paradise Valley, the City of Scottsdale, and the City of Phoenix in Maricopa County. The location of the District and the area covered by its Certificate of Convenience and Necessity ("CC&N"), which covers approximately 5,432 acres (8.5 square miles), are shown in Figures 1 and 2, respectively. The original CC&N area was transferred from Arizona-American Water Company to EWAZ in Commission Decision No. 72668 dated November 17, 2011.

B. DESCRIPTION OF THE WATER SYSTEM[2]

The District water system was visited on June 12, 2014, by Staff member Michael Thompson. Mr. Thompson was accompanied by Ms. Mary Rimback and Ms. Phan Tsan (Staff Public Utilities Analysts), Mr. Jeffrey Stuck (EWAZ Director of Operation, Eastern Division), Mr. Roland Tanner (EWAZ Manager, Rates & Regulation), Mr. John Lulewicz (EWAZ Operations Manager), Mr. Paul Cornejo (EWAZ Operations Manager, Anthem), Mr. Todd Farrel (EWAZ Production Foreman), and Mr. Tim Williams (EWAZ Maintenance Foreman). Mr. Todd Farrel is the District's lead certified operator of record.[3]

The District water system consists of seven (7) active wells, a 21.3 million gallon per day ("MGD") Arsenic Removal Facility ("ARF"), thirty (30) booster pumps, eleven (11) storage tanks, and the Miller Road Treatment Facility ("MRTF").

The in-service plant facilities (i.e., wells, tanks, pumps, and visible pipe) within the District's water system service area appeared to be in proper working order, properly maintained, and in good condition. However, a majority of the District's storage tanks were in poor to moderately poor condition with respect to corrosion protection, and structural remediation. Staff did not observe any leaks at the plant facilities, or in the distribution system.

Detailed listings of the plant facilities are included in Table A. Schematics of the service area are illustrated in Figures 3A through 3E.

---

[1] Metered connections are included in the water use data submitted with the application.
[2] The description of the water system is based on one, or a combination of, the following sources: 1) Company's Application, 2) Direct Testimony of Jeffrey Stuck, dated March 7, 2014, 3) Information contained in the Company's Response to Staff Data Requests and, 4) Information collected during Staff's site visit.
[3] Mr. Farrell has certifications with the State of Arizona as a Grade 2 Wastewater Collection System Operator, Grade 2 Water Distribution System Operator, and a Grade 3 Water Treatment Plant Operator. ADEQ Operator Identification No. OP022238, expiration date February 28, 2016.

Table A. Paradise Valley Water System Plant Facilities Summary

Well Data – Active Wells							
Well ID	ADWR Well ID	Pump (hp)[1]	Pump Yield (gpm)[2]	Casing Depth (feet)	Casing Diameter (inches)	Meter Size (inches)	Year Drilled
(T) Well No. 11	55-624805	300	1,900	1,396	20 – 16	12	1959
(T) Well No. 12	55-624806	300	1,400	1,301	24 – 20	12	1962
(T) Well No. 12B	55-220510	400	2,980	1,130	20	12	2011
(S) Well No. 14	55-624807	350	2,400	1,743	20 – 8	10	1965
(S) Well No. 15	55-624808	350	2,100	1,430	20 – 18 - 16	10	1969
(S) Well No. 16	55-624809	350	2,400	1,500	18	12	1980
(T) Well No. 17	55-537967	400	2,650	1,100	20	12	1993

(S) Signifies Submersible Pump Well, and (T) Signifies Turbine Pump Well.
[1] hp signifies horsepower.
[2] gpm signifies gallons per minute.

Water Treatment Facilities					
Site	Storage Tanks (Gallons)	Pressure Tanks (Gallons)	Booster Pumps (hp)	Wells	Emergency Back-up Generator
Arsenic Removal Facility (ARF)	2 – 1,500,000	None	3 – 400 2 – 600	Well Nos. 11, 12 & 12B	1 – 2,000 kW
Miller Road Treatment Facility (MRTF)	500,000 (Underground)	None	3 – 125	Well No. 15	None

Water Storage, Pressure Tanks, & Booster Pump Stations			
Site	Storage Tank Capacity (Gallons)	Pressure Tank Capacity (Gallons)	Booster Pumps (hp)
60th Street Tank	1 – 200,000	None	None
Club Estates Booster Pump Station	N/A	None	2 – 10
Club Estates Tank and Booster Pump Station (a.k.a. Glen Drive Tank)	30,000	500	3 – 1.5
Stone Canyon Booster Pump Station	None	None	2 – 40
Stone Canyon Tank	95,000	None	None
Racquet Club Tank	100,000	None	None
Clearwater Hills Tank No. 1 and Booster Pump Station No. 3	100,000	None	2 – 3
Clearwater Hills Tank No. 2	100,000	None	None
Clearwater Hills Tank No. 3	22,000	None	None
Clearwater Hills Booster Pump Station	None	None	3 – 60
High Cliff Booster Pump Station	None	500	3 – 20
Las Brisas Booster Pump Station	None	None	2 – 7.5 1 – 30
Country Club Tank	1 – 500,000 1 – 360,000	None	None
Country Club Booster Pump Station	None	None	4 – 30

Service Area Distribution Mains		
Diameter (inches)	Material	Length (feet)
1	Various	768
1 ½	Various	185
2	Various	5,089
2 ½	Various	425
3	Various	713
4	Various	88,269
6	Various	280,320
8	Various	176,508
10	Various	2,431
12	Various	58,658
16	Various	42,909
18	Various	62
20	Various	2,925
24	Various	18,058
30	Various	2,617
36	Various	271
42	Various	446
Undetermined	Various	457
Total Length		681,111

Service Area Meters	
Size (inches	Quantity
5/8 x 3/4	2,286
3/4	25
1	2,100
1 ½	170
2	313
3	4
4	1
6	5
Total Quantity	**4,904**

Fire Hydrants	
Size/Description	**Quantity**
Standard Wet Barrel	**657**

C. WATER USE

(1) Water Sold

Figure 4 represents the water consumption data, in graphical form, for the District's water system during the 12 month period for the test year, July 2012 through June 2013. The water consumption graph is located in the Figure Section of this report. Table B represents the high, low, and average water consumption for the District's water system.

Table B. Paradise Valley Water District Water System Water Usage
Test Year July 2012 – June 2013

High & Low Water Consumption (Gallons/Day/Connection)	
Water Usage	**Sun City Water System**
High Usage Month	September - 2012
Highest Daily Average Usage	2,516
Low Usage Month	March – 2013
Lowest Daily Average Usage	960
Test Year Average Usage	1,782

(2) Non-Accounted For Water

Non-accounted for water should be 10 percent or less and never more than 15 percent. It is important to be able to reconcile the difference between water sold and the water produced by the source. A water balance will allow a water company to identify water and revenue losses due to leakage and any non-metered water use such as construction, firefighting, and line flushing. The water loss percentage within the District's water system during the test year (fiscal year) was calculated to be 7.67 percent. Water loss percentages for the District's water system from the District's 2011 through 2013 annual reports are listed in the Table C below.

Table C. Paradise Valley Water District Water System Water Loss

Water Loss	
Water System	**Paradise Valley**
2011 Water Loss (%)	8.83
2012 Water Loss (%)	9.32
2013 Water Loss (%)	5.96

As the table indicates, water loss in the Paradise Valley water system has been less than 10 percent for the past three (3) calendar years (2011 through 2013).

(3) Water System Analysis

The District water system has seven (7) active drinking water wells with a total production capacity of approximately 15,830 gpm (22,795,200 gallons per day (gpd)). The water system has a total of eleven (11) storage tanks with a total storage capacity of approximately 5,007,000 gallons. During the peak month, September 2012, the water system was serving 4,863 connections when EWAZ reported 367,100,000 gallons of water sold. Average daily demand for the month of September 2012 was determined to be 12,236,667 gpd. Staff concludes that the water system has

adequate production and storage capacity to serve the present customer base and any reasonable growth.

D. GROWTH[4]

Table D and Figure 5 show the District's customer growth based on service connection data contained in the EWAZ Enterprise Customer Information System ("eCIS") data base. Accordingly, the District experienced a decrease in growth from 2008 to 2010 at a total rate of 0.75 percent (loss of 36 customers). From 2011 to 2013 the District experienced an increase in growth at a total rate of 0.80 percent (gain of 38 customers).

With respect to future growth, EWAZ is projecting a positive trend in growth from 2014 through 2019. The EWAZ growth projections, which are updated each year in April, are based on data obtained from the eCIS data base, local economists, and local developers. In general, EWAZ is projecting the District's growth to increase at a total rate of 4.40 percent (projected gain of 211 customers) from 2014 through 2019.

Table D. Paradise Valley Water District Actual and Projected Growth

Year	Number of Customers	
2008	4,792	eCIS
2009	4,770	eCIS
2010	4,756	eCIS
2011	4,768	eCIS
2012	4,769	eCIS
2013	4,794	eCIS
2014	4,817	Projected
2015	4,841	Projected
2016	4,864	Projected
2017	4,897	Projected
2018	4,941	Projected
2019	5,005	Projected

[4] Staff's historical growth figures are based on the data reported by EWAZ from its Enterprise Customer Information System ("eCIS") data base. Projected growth figures are based on EWAZ projections from its eCIS data base, local economists, and local developers.

E. MARICOPA COUNTY ENVIRONMENTAL SERVICES DEPARTMENT ("MCESD") COMPLIANCE

(1) Compliance Status

MCESD Compliance Status Reports ("CSR") indicates that the Paradise Valley Water District water system is currently in full compliance with its requirements and is currently delivering water that meets water quality standards required by 40 CFR 141 (National Primary Drinking Water Regulations) and Arizona Administrative Code, Title 18, Chapter 4[5].

(2) Water Monitoring and Testing Expenses

The District reported water testing expenses of $11,734 during the test year. Table E represents the monitoring and testing expenses that were reviewed, evaluated, and recalculated by Staff. The estimated annual water testing expense for the Paradise Valley Water System is $13,152. The increase in estimated water testing expenses, as compared to the test year expenses, is based on increased testing requirements. Staff concludes that the estimated water testing expenses are reasonable. Staff recommends, for the District, an annual water testing expense of $13,152, as tabulated in Table E, be used for the purposes of this application.

[5] MCESD CSR's dated December 10, 2013 for the Paradise Valley Water District water system.

Table E. Water Testing Costs – Paradise Valley Water District (PWS No. 04-07-056)

Compliance Analysis Testing	Cost per Test	Quantity of Tests per Three Year Period	Cost per Three Year Period	Annual Costs
Total Coliform	$ 11	360	$ 3,960	$ 1,320
Lead & Copper	$ 24	30	$ 720	$ 240
Arsenic	$ 14	33	$ 462	$ 154
Disinfection By-Products (TTHM)[1]	$ 70	6	$ 420	$ 140
Disinfection By-Products (HAA5)[1]	$ 160	6	$ 960	$ 320
Nitrate/Nitrite	$ 27	3	$ 81	$ 27
Inorganic Compounds (IOCs)	$ 202	1	$ 202	$ 67
Synthetic Organic Compounds (SOCs)	$ 1,744	2	$ 3,488	$ 1,163
Volatile Organic Compounds (VOCs)[2]	$ 176	0	$ 0	$ 0
Radiochemicals (RADs)	$ 340	3	$ 1,020	$ 340
ICP/MS Digest	$ 16	34	$ 544	$ 181
TCLP – VOCs[3]	$ 157	3	$ 471	$ 157
TCLP – Metals[3]	$ 67	3	$ 201	$ 67
Process Analysis Testing	**Cost per Test**	**Quantity of Tests per Three Year Period**	**Cost Per Three Year Period**	**Annual Costs**
Iron	$ 14	36	$ 504	$ 168
Arsenic	$ 14	36	$ 504	$ 168
Trichloroethene	$ 176	144	$ 25,344	$ 8,448
ICP?MS Digest	$ 16	36	$ 576	$ 192
Total Annual Water Testing Costs			**$ 39,457**	**$ 13,152**

[1]TTHM is the initialism for Total Trihalomethanes and HAA5 is the initialism for Haloacetic Acids.
[2]Beginning July 1, 2014 Motorola will pay for VOC costs.
[3]TCLP is the acronym for Toxicity Characteristic Leaching Procedure.

F. ARIZONA DEPARTMENT OF WATER RESOURCES ("ADWR") COMPLIANCE

The District's water system service area is located within the ADWR Phoenix Active Management Area ("AMA"). ADWR's Water Provider Compliance Reports, dated June 6, 2014, indicate that the District's Water Systems are currently in compliance with departmental requirements governing water providers and/or community water systems.

G. ARIZONA CORPORATION COMMISSION COMPLIANCE

A check of the Utilities Division Compliance Section database showed that there are no delinquent Commission compliance items for the District.[6]

[6] Per Compliance Section email, dated August 8, 2014.

H. DEPRECIATION RATES

EWAZ proposed only a few changes to the current District depreciation rates, which are shown in the District's Proposed Rates column in Table F. Staff recommends the depreciation rates listed under "Staff's Recommended Rates" in Table F be adopted.

Table F. Depreciation Rate Table – Paradise Valley Water District

NARUC Account Numbers	EWAZ Account Numbers	Depreciable Plant	District Current Rates (%) Decision No. 71410	District Proposed Rates (%)	Staff's Typical Rates (%)	Staff Recommended Rates (%)
301	301000	**Organization**	0.00	0.00	0.00	0.00
302	302000	**Franchises**	0.00	0.00	0.00	0.00
303		**Land & Land Rights**				
	303200	Land & Land Rights – SS	0.00	0.00	0.00	0.00
	303300	Land & Land Rights – Pumping	0.00	0.00	0.00	0.00
	303400	Land & Land Rights – Treatment	0.00	0.00	0.00	0.00
	303500	Land & Land Rights – T&D	0.00	0.00	0.00	0.00
	303600	Land & Land Rights – AG	0.00	0.00	0.00	0.00
304		**Structures & Improvements**				
	304100	Structure & Improvement – Source of Supply	2.50	2.50	3.33	2.50
	304200	Structure & Improvement – Pumping	3.99	2.00	3.33	2.00
	304300	Structure & Improvement – Water Treatment Equipment	2.00	2.00	3.33	2.00
	304400	Structure & Improvement – T & D	1.50	2.00	3.33	2.00
	304500	Structure & Improvement – General Plant	3.99	2.50	3.33	2.50
	304600	Structure & Improvement – Offices	0.00	2.50	3.33	2.50
	304620	Structure & Improvement – Leasehold	0.00	2.50	3.33	2.50
	304700	Structure & Improvement – Store, Shop & Garage	3.99	2.50	3.33	2.50
	304800	Structure & Improvement – Miscellaneous	3.99	0.00	3.33	0.00
305	305000	**Collection & Impounding Reservoirs – Source & Pumping**	0.00	1.67	2.50	1.67
306	306000	**Lake & River Intakes**	0.00	0.00	2.50	0.00
307	307000	**Wells & Springs – Source & Pumping**	2.48	2.50	3.33	2.50
308	308000	**Infiltration Galleries – Source & Pumping**	0.00	0.00	6.67	0.00
309	309000	**Supply Mains – Source & Pumping**	0.00	1.67	2.00	1.67
310		**Power Generation Equipment – S & P**				
	310000	Power Production Equipment	0.00	3.33	5.00	3.33
	310100	Power Generation Equipment - Other	4.39	0.00	5.00	0.00
311		**Pumping Equipment**				
	311000	Pump Equipment – Steam	0.00	4.00	12.5	4.00
	311200	Pump Equipment – Electric	4.39	4.00	12.5	4.00
	311300	Pump Equipment – Diesel	4.39	4.00	12.5	4.00
	311400	Pump Equipment – Hydraulic	0.00	4.00	12.5	4.00
	311500	Pump Equipment – Other	0.00	4.00	12.5	4.00
	311530	Pump Equipment – Water Treatment	0.00	4.00	12.5	4.00
	311540	Pump Equipment – Transmission & Distribution	0.00	0.00	12.5	0.00
	311600	Pump Equipment – Source & Pumping	0.00	0.00	12.5	0.00
320		**Water Treatment Equipment**				
	320000	Water Treatment Equipment – Purification Equip.	0.00	0.00	3.33	0.00
320.1	320100	Water Treatment Equipment – Non-Media	7.06	5.00	3.33	5.00
	320200	Water Treatment Equipment – Filter Media	5.00	10.00	20.00	10.00
	320300	Water Treatment Equipment – Sludge Disposal				

		Equipment (Arsenic Removal)	5.00	0.00	10.00	0.00
330		**Distribution Reservoirs & Standpipes**				
	330000	Distribution Reservoirs & Standpipes	3.15	1.54	2.22	1.54
330.1	330100	Elevated Tanks & Standpipes	0.00	0.00	2.22	0.00
	330200	Ground Level Tanks	0.00	1.54	2.22	1.54
330.2	330300	Below Ground Tanks	0.00	0.00	2.22	0.00
	330400	Clearwell	0.00	0.00	2.22	0.00
331		**Transmission and Distribution**				
	331000	TD Mains – Water Treatment Equipment	0.00	0.00	2.00	0.00
	331001	TD Mains – Not Classified by Size	0.00	2.00	2.00	2.00
	331100	TD mains – 4-inch & less	4.17	1.43	2.00	1.43
	331200	TD mains – 6-inch to 8-inch	2.52	1.43	2.00	1.43
	331300	TD mains – 10-inch to 16-inch	2.34	1.43	2.00	1.43
	331400	TD Mains – 18-inch and Greater	2.00	1.43	2.00	1.43
332	332000	**Fire mains**	2.00	1.43		1.43
333		**Services**				
	333000	Services	4.72	2.50	3.33	2.50
	333100	Services – Water Treatment Equipment	0.00	0.00	3.33	0.00
334		**Meters**				
	334100	Meters	2.51	8.33	8.33	8.33
	334200	Meter installations	1.51	2.50	8.33	2.50
	334300	Meter Vaults	0.00	2.50	8.33	2.50
335	335000	**Hydrants**	2.10	2.00	2.00	2.00
336	336000	**Backflow Prevention Devices**	6.67	0.00	6.67	6.67
339		**Other Plant & Miscellaneous Equipment**				
	339000	Other Plant/Miscellaneous Equipment – TD Plant	0.00	0.00	6.67	0.00
	339100	Other Plant/Miscellaneous Equipment - Intangible	0.00	0.00	6.67	0.00
	339200	Other Plant/Miscellaneous Equipment - Supply	0.00	3.33	6.67	3.33
	339500	Other Plant/Miscellaneous Equipment – T & D	0.00	0.00	6.67	0.00
	339600	Other Plant/Miscellaneous Equipment – CPS	0.00	3.33	6.67	3.33
340		**Office Furniture & Equipment**				
	340000	Office Furniture & Equipment – General Plant	0.00	0.00	6.67	0.00
	340100	Office Furniture & Equipment	4.04	4.50	6.67	4.50
	340200	Computer & Peripheral Equipment	10.00	10.00	20.00	10.00
	340300	Computer Software	25.00	20.00	20.00	20.00
	340310	Computer Software – Mainframe	0.00	20.00	20.00	20.00
	340325	Computer Software – Customized	0.00	20.00	20.00	20.00
	340330	Computer Software – Other	0.00	0.00	20.00	0.00
	340400	Date Handling Equipment – General Plant	0.00	0.00	20.00	0.00
	340500	Office Equipment – Other	7.13	6.67	6.67	6.67
341		**Transportation Equipment**				
	341000	Transportation Equipment – General Plant	0.00	0.00	20.00	0.00
	341100	Transportation Equipment – Light Duty Trucks	20.00	0.00	20.00	0.00
	341200	Transportation Equipment – Heavy Duty Trucks	0.00	0.00	20.00	0.00
	341300	Transportation Equipment – Autos	7.80	0.00	20.00	20.00
	341400	Transportation Equipment – Other	16.67	16.67	20.00	16.67
342	342000	**Stores Equipment**	4.00	4.00	4.00	4.00
343	343000	**Tools, Shop & Garage Equipment**	3.61	4.00	5.00	4.00
344	344000	**Laboratory Equipment**	10.00	4.00	10.00	4.00
345	345000	**Power Operated Equipment**	4.64	5.00	5.00	5.00
346		**Communication Equipment**				
	346000	Communication Equipment – General Plant	0.00	0.00	10.00	0.00
	346100	Communication Equipment – Non-Telephone	9.76	10.00	10.00	10.00
	346190	Remote Control & Instrument	0.00	10.00	10.00	10.00
	346200	Communication Equipment – Telephone	0.00	10.00	10.00	10.00
	346300	Communication Equipment – Other	4.93	10.00	10.00	10.00
347	347000	**Miscellaneous Equipment**	0.00	6.25	10.00	6.25

I. OTHER ISSUES

(1) Service Line and Meter Installation Charges

EWAZ did not propose any changes to the District's existing service line and meter installation charges.[7] The proposed charges are refundable advances, and are similar to the Staff's typical range of charges for service line and meter installations. Since the District may at times install meters on existing service lines, it would be appropriate for some customers to only be charged for the meter installation.

Staff has no objections to the continued use of the currently authorized meter and service installation charges, as proposed by EWAZ, and recommends the charges listed under "Staff's Recommendations" in Table G be adopted.

Table G. Service Line and Meter Installation Charges – Paradise Valley Water District

	Company Current/Proposed			Staff's Recommendations		
Meter Size	Service Line Charge	Meter Charge	Total Charge	Service Line Charge	Meter Charge	Total Charge
5/8 x 3/4-inch	$445	$155	$600	$445	$155	$600
3/4-inch	$445	$255	$700	$445	$255	$700
1-inch	$495	$315	$810	$445	$315	$810
1-1/2-inch	$550	$525	$1,075	$550	$525	$1,075
2-inch	$830	$1,045	$1,875	$830	$1,045	$1,875
3-inch	ICB*	ICB*	ICB*	ICB*	ICB*	ICB*
4-inch	ICB*	ICB*	ICB*	ICB*	ICB*	ICB*
6-inch Turbine	ICB*	ICB*	ICB*	ICB*	ICB*	ICB*
8-inch or Larger	ICB*	ICB*	ICB*	ICB*	ICB*	ICB*

ICB* Indicates Individual Case Basis at Actual Cost.

(2) Curtailment Tariff

The District has an approved Curtailment Tariff on file with the Commission. This tariff became effective October 24, 2007.

(3) Cross-Connection/Backflow Prevention Tariff

The District has an approved Cross-Connection/Backflow Prevention Tariff on file with the Commission. This tariff became effective June 16, 2013.

[7] The Company's current charges were approved in Decision No. 73145, effective May 1, 2012.

(4) Best Management Practices ("BMP") Tariff

The District has ten (10) BMP's on file with the Commission. The BMP tariff became effective January 20, 2012.

EWAZ filed a proposed change to the Meter Repair and/or Replacement Tariff (BMP 4.2). In the proposed change, EWAZ requested that paragraph 3 of the BMP tariff, which refers to the inspection of meters, be modified such that pulling a meter for inspection would no longer be required and therefore be stricken from the tariff. Staff concludes that the request to modify BMP 4.2 is appropriate and relevant. Staff recommends approval of the modification in BMP 4.2, attached hereto as Attachment 1.

(5) Unregulated Contaminant Monitoring

On May 2, 2012, the Environmental Protection Agency ("EPA") revised and implemented the Unregulated Contaminant Monitoring Rule 3 ("UCMR3"). ADEQ does not regulate the UCMR3 program. The purpose of the UCMR3 (monitoring and sampling assessment) is for water systems to collect occurrence data for contaminants suspected to be present in drinking water, but that do not have health-based standards set under the Safe Drinking Water Act ("SDWA"). The UCMR3 program is the primary source of drinking water contaminant occurrence data used by the EPA in regulatory determinations. The UCMR3 program requires water systems to perform the monitoring and sampling assessment only once during the time frame between January 2013 – December 2015.

EWAZ is required by the EPA to conduct assessment monitoring and sampling in the Paradise Valley water system for the presence of UCMR3 contaminants. Samples to be tested for the presence of twenty one (21) of the UCMR3 contaminants are to be taken twice (2) from each EPDS within one (1) consecutive twelve (12) month period. Samples to be tested for the presence of seven (7) of the UCMR3 contaminants are to be taken twice (2) from the distribution system maximum residence time sampling locations within the same consecutive twelve (12) month period. Each sampling event must occur five (5) to seven (7) months apart. Sampling can span more than one calendar year, as long as the sampling is conducted during a twelve (12) month period.

The District began sampling for the first sample set of UCRM3 contaminants in December 2013. The second sample set was sampled in June 2014. The total cost for testing the samples, as illustrated in Table H, which was a one-time occurrence was $1,320. Staff concludes that the one-time expense of $1,320 associated with sampling and testing of the UCMR3 contaminants is reasonable and appropriate.

Table H. EPA Mandated UCMR3 Testing Costs

Sample Locations	Number of Samples	Sample Date	Laboratory	Cost Per Sample	Total Cost
Distribution System – Maximum Residence Time ("DSMRT")	1	December 2013	Belleville	$ 160	$ 160
Distribution System – Maximum Residence Time ("DSMRT")	1	June 2014	Belleville	$ 160	$ 160
Entry Point – Distribution System ("EPDS")	1	December 2013	Belleville	$ 500	$ 500
Entry Point – Distribution System ("EPDS")	1	June 2104	Belleville	$ 500	$ 500
Total					**$ 1,320**

(6) Tank Maintenance Program

EWAZ proposed a tank maintenance plan spanning a period of 14 years for nine (9) of its water storage tanks. The plan includes recoating the interior and exterior of each tank, as well as any structural repairs that may be needed. EWAZ is requesting an estimated $2,601,920 for the tank maintenance plan with an annual revenue stream of approximately $185,851 for the 14 year period. Table I, provided by EWAZ, represents the breakdown of the estimated costs for its storage tank maintenance plan.

EWAZ established the tank maintenance plan on recommendations provided by Tank Industry Consultants, Inc. ("TIC"), as outlined in its field evaluation report dated September 21, 2010. TIC's recommendations are based on the interior and exterior evaluation of the Clearwater Hills No. 2 storage tank, which was conducted on September 16, 2010. Comparatively, the eight (8) storage tanks, which were not included in the field evaluation, have similar issues to those of the Clearwater Hills No. 2 storage tank.

An independent field evaluation, conducted in July 2014, by Industrial Inspection and Consulting, LLC ("IIC") provides additional support for the tank maintenance plan. In ICC's field evaluation report, dated July 28, 2014, ICC concluded that all of the tanks are in need of various stages of remediation.

Table I. EWAZ Storage Tank Maintenance Plan Expense Calculation

			Inspection Schedule for one tank per year														
		Erection	1	2	3	4	5	6	7	8	9	10	11	12	13	14	15
Tank Name	Capacity	Date	2012	2013	2014	2015	2016	2017	2018	2019	2020	2021	2022	2023	2024	2025	2026
60th Street Tank	200,000	1960					x										
Clearwater Hills #1	102,000	1956				x											
Clearwater Hills #2	100,000	1965	x														
Clearwater Hills #3	20,000	1968								x							
Club Estates Tank	30,000	1961							x								
Country Club #1	500,000															x	
Country Club #2	360,000	1960/61										x					
PVARF #1	1,500,000	2006															
PVARF #2	1,500,000	2006															
Racquet Club Tank	102,000	1955			x												
Stone Canyon Tank	90,000	1955		x													
First 7 Tanks	1,312,000		$173,000	$155,700	$176,460	$176,460	$346,000		$51,900	$34,600		$622,800				$865,000	$2,601,920
Last 2 Tanks	192,000																
Total Volume	1,504,000																

PARADISE VALLEY COST BASIS per TCI REPORT	$173,000
PRICE PER GALLON	$1.73
TOTAL ESTIMATED PROGRAM COST	$2,601,920
AVERAGE 14 - YEAR ANNUALIZED COST	$185,851

From a review of the TIC tank evaluation report and the IIC field evaluation report, adjustments were made to the EWAZ storage tank maintenance expense estimates. Staff believes the adjustments, which are expressed in Table J, are more representative with actual tank maintenance costs. Based on the adjustments, the total cost of the storage tank maintenance plan has decreased from $2,601,920 to $1,707,208. Staff concludes that the District's tank maintenance plan is appropriate and the cost estimate, as adjusted by Staff and outlined in Table J, to be reasonable. Staff recommends that EWAZ file with Docket Control, as a compliance item is this docket by December 31st of each year following the decision in this proceeding, documentation demonstrating the status of the storage tank maintenance plan and the storage tank on which maintenance has been completed.[8]

[8] In Decision No. 71410, dated December 8, 2009, Paradise Valley was granted $124,831 per year for annual tank maintenance expenses which was based on a three year normalization period totaling $374,493. In the test year, ending June 30, 2013, the District had spent only $19,773 on tank maintenance.

Table J. Storage Tank Maintenance Plan Adjusted Expense (Staff Recommendation)

	Tank Name	60th Street	Clearwater Hills #1	Clearwater Hills #2	Clearwater Hills #3	Club Estates	Country Club #1	Country Club #2	Racquet Club	Stone Canyon	Total
	Tank Capacity (Gallons)	200,000	102,000	100,000	20,000	30,000	500,000	360,000	102,000	90,000	
No.	Item										
	Clean & Paint Exterior:										
1	Epoxy/Polyurethane System	$24,100	$15,800	$0	$6,100	$7,300	$43,700	$35,000	$15,800	$0	$147,800
2	Containment (Lead)	$40,100	$26,200	$0	$10,200	$12,200	$72,800	$58,300	$26,200	$0	$246,000
	Clean & Paint Interior:										
3	3 - Coat Epoxy System	$92,800	$37,200	$55,800	$13,000	$24,100	$126,000	$96,700	$37,200	$35,200	$518,000
4	Cathodic Protection	$10,000	$9,000	$9,000	$6,000	$6,000	$12,000	$11,000	$9,000	$8,000	$80,000
5	Miscellaneous Chipping & Grinding	$0	$0	$0	$0	$0	$0	$0	$0	$0	$0
6	Seam Sealing	$0	$0	$0	$0	$0	$0	$0	$0	$0	$0
7	Pit Repair	$17,100	$5,800	$8,700	$2,300	$3,100	$28,000	$20,100	$5,800	$5,400	$96,300
8	Exterior Flexible Piping Connections (2)	$12,000	$6,120	$6,000	$1,200	$1,800	$30,000	$21,600	$6,120	$5,400	$90,240
9	Overflow Pipe & Install Check Valve	$12,000	$6,120	$6,000	$1,200	$1,800	$30,000	$21,600	$6,120	$5,400	$90,240
10	Exterior Ladder Well Removal	$0	$0	$0	$0	$0	$0	$0	$0	$0	$0
11	Exterior Ladder Replacement	$0	$0	$0	$0	$0	$0	$0	$0	$0	$0
12	Exterior Ladder Safe-Climbing Device	$2,000	$2,000	$2,000	$2,000	$2,000	$2,000	$2,000	$2,000	$2,000	$18,000
13	Vandal Deterent - Safety Cage Door	$1,000	$1,000	$1,000	$1,000	$1,000	$1,000	$1,000	$1,000	$1,000	$9,000
14	Additional Roof Safety Railing Installation	$4,000	$4,000	$4,000	$4,000	$4,000	$4,000	$4,000	$4,000	$4,000	$36,000
15	Existing Roof Safety Railing Modifications	$2,000	$2,000	$2,000	$2,000	$2,000	$2,000	$2,000	$2,000	$2,000	$18,000
16	Additional Shell Manhole	$15,000	$15,000	$15,000	$15,000	$15,000	$15,000	$15,000	$15,000	$15,000	$135,000
17	Additional Roof Manhole	$0	$0	$0	$0	$0	$0	$0	$0	$0	$0
18	Clog-Resistant Vent Installation	$7,500	$7,500	$7,500	$7,500	$7,500	$7,500	$7,500	$7,500	$7,500	$67,500
18	Contingency Items	$23,960	$13,774	$11,700	$7,150	$8,780	$37,400	$29,500	$13,774	$9,090	$155,128
	Total Cost (Each Storage Tank)	$263,560	$151,514	$128,700	$78,650	$96,580	$411,400	$325,300	$151,514	$99,990	$1,707,208

(7) *Paradise Valley Water District Post Test Year Plant Additions – Post Test Year Investment Projects ("IPs") Used and Useful (July ~~2103~~ 2013 – June 30, 2014)*

EWAZ has requested that one (1) District post-test year capital investment project ("IP"), totaling $1,279,112 be included as Post Test Year Plant Addition. The District IP, listed in Table K, was found to be in-service and used and useful during the plant facilities site inspection on June 12, 2014. Staff concludes that the cost associated with the installation of the Districts IP, listed in Table K, is reasonable and appropriate.

Table K. Post Test Year Plant Additions – Paradise Valley Water District Investment Projects (Used and Useful)

Item No.	Investment Project	District Water System	MCESD Approval of Construction (AOC) Issued	NARUC Account No.	EWAZ Project No.	Total Cost
1	Country Club Booster Pump Station	Paradise Valley	11/18/13	304200	279011	$1,279,112
Total Investment Project Cost						**$1,279,112**

(8) System Improvement Benefit ("SIB") – Paradise Valley Water District

EWAZ is seeking a SIB to address necessary distribution system infrastructure replacements that provide service to the existing District customers. As a supplement to its application, EWAZ submitted a SIB Engineering Report ("Report") supporting the need for its proposed 5-year infrastructure replacement projects for the District's Sun City water systems.[9] The proposed infrastructure replacement projects are expected to commence in 2015 and finish, 4 years later, in 2019. The Report identifies the most critical areas within the District, provides estimates for the quantity of service lines, meters, water mains, and valves that need to be replaced within the District, and estimates the associated replacement costs.

Historical repair and replacement data was utilized by EWAZ to assess the Districts existing plant (e.g. mains, services, and valves). Table M., which illustrates the results from the assessment, was used to assist with establishing existing plant replacements for the SIB.

Table M. Water Main, Services, & Valve Assessment – Paradise Valley Water District

Existing Plant	Material/Type	Units[1]	Average Useful Life (Years)	Existing Plant Exceeding Average Useful Life (Units)	Existing Plant Exceeding Average Useful Life (%)	Units to be Replaced
Mains[2]	Asbestos-Cement (AC)	255,373	59	20,430	8	9,226
	Galvanized Steel Pipe	5,699	47	57	1	0
	Cast Iron Pipe	277,709	58	41,656	15	0
Services	Galvanized Steel	5,000	52	1,500	30	1,088
Valves	Gate Valves	3,870	52	968	25	200

[1] Does not include assets previously replaced.
[2] Main replacement units are expressed as Linear Feet ("LF").

A summary of the District's planned infrastructure replacement projects, which includes replacement of approximately 9,226 linear feet ("lf") of water main, 1,088 service lines, and 200 valves, is tabulated in Table N. The tables, separated by the project year (2015 through 2019), the

[9] SIB Engineering Report - EWAZ Exhibit CC-1-B, dated March 26, 2014.

project (water mains, service lines, and valves), and the project location, are included in this report as attachments 2A-2E, 3A-3E, and 4A-4E.

The Plan of Administration ("POA") and its exhibits, for the District's SIB projects, was reviewed and is included in this report. The POA is attached as Attachment 5 and the exhibits, which include SIB Tables I and II, and the Schedules, are attached as Attachments 6A-6M.

Based on a review of the Report, Staff has determined that the proposed 5-year infrastructure replacement plan, totaling $7,019,992, to be reasonable and appropriate. However, no "used and useful" determination of the proposed plant items was made, and no conclusions should be inferred for rate base purposes in the future. Staff recommends approval of the District's proposed Plant Table I of the SIB Mechanism (eligible 5 year infrastructure improvement projects), submitted as a supplement to the District's application by EWAZ on March 25, 2014, totaling $7,019,992 as tabulated in Table N. Staff further recommends that SIB Attachments 2A-2E, 3A-~~E~~ 3E, 4A-4E, 5, and 6A-6M be adopted.

Table N. SIB – Paradise Valley Water District Planned Infrastructure Replacement Projects (2015 – 2019)

Year	2015		2016		2017		2018		2019		Total	
Plant	Units	Cost[2]	Units	Cost[2]	Units	Cost[2]	Units	Cost[2]	Units	Cost[2]	Units	Cost[2]
Mains[1]	2,088	$454,179	1,298	$346,614	1,700	$291,500	2,030	$362,142	1,426	$224,369	9,226	$1,678,804
Services	209	$813,727	212	$824,710	239	$930,283	232	$904,042	196	$761,957	1,088	$4,234,719
Valves	40	$203,628	40	$225,795	40	$242,691	40	$204,380	40	$229,975	200	$1,106,469
Total		**$1,471,534**		**$1,397,119**		**$1,464,474**		**$1,470,564**		**$1,216,301**		**$7,019,992**

[1] Water Main Replacement Units are expressed in linear feet.
[2] Cost estimates are in 2014 dollars and do not account for inflation.

FIGURES

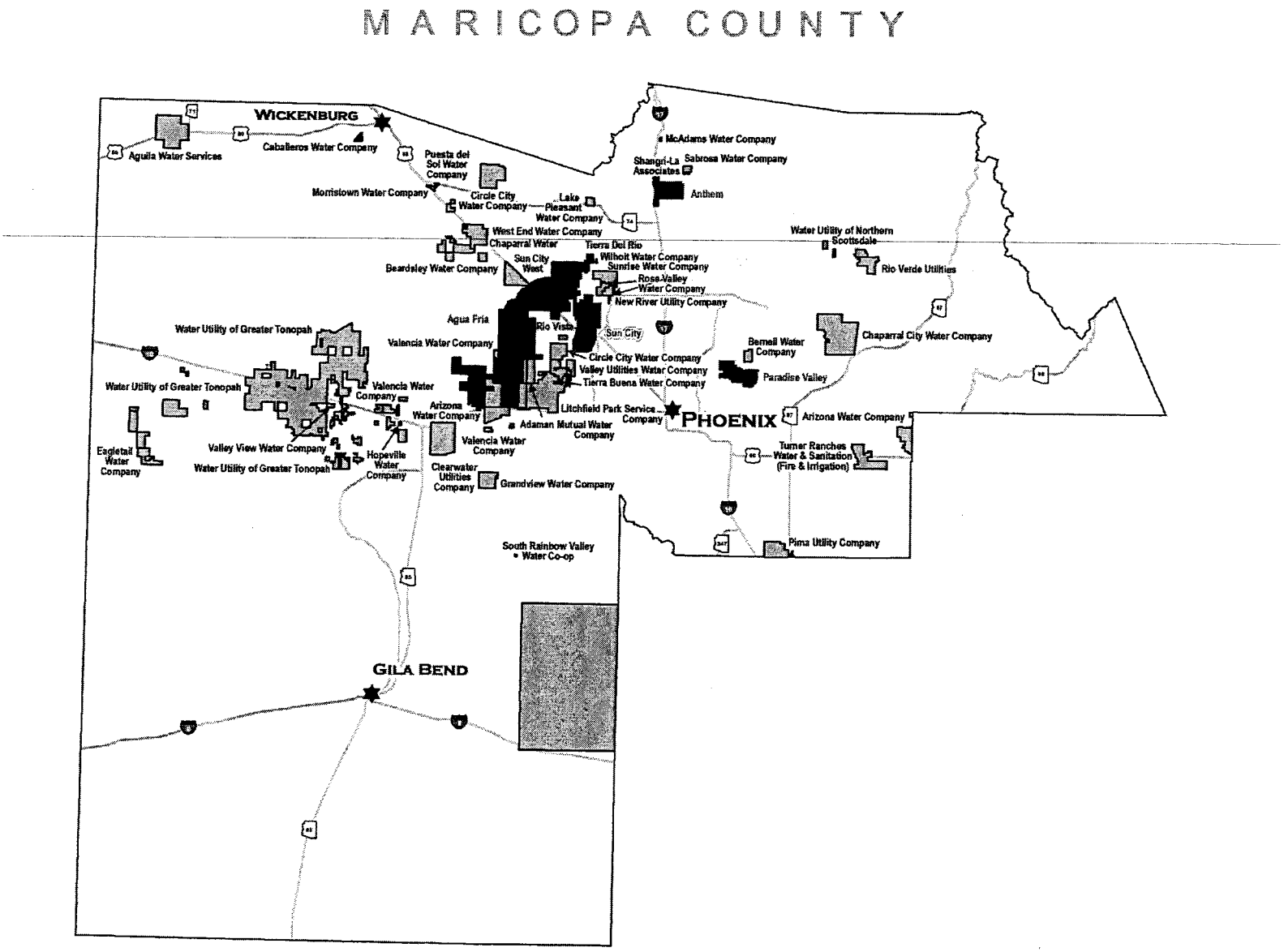

FIGURE 1 – MARICOPA COUNTY MAP

EPCOR Water Arizona, Inc.

Maricopa County

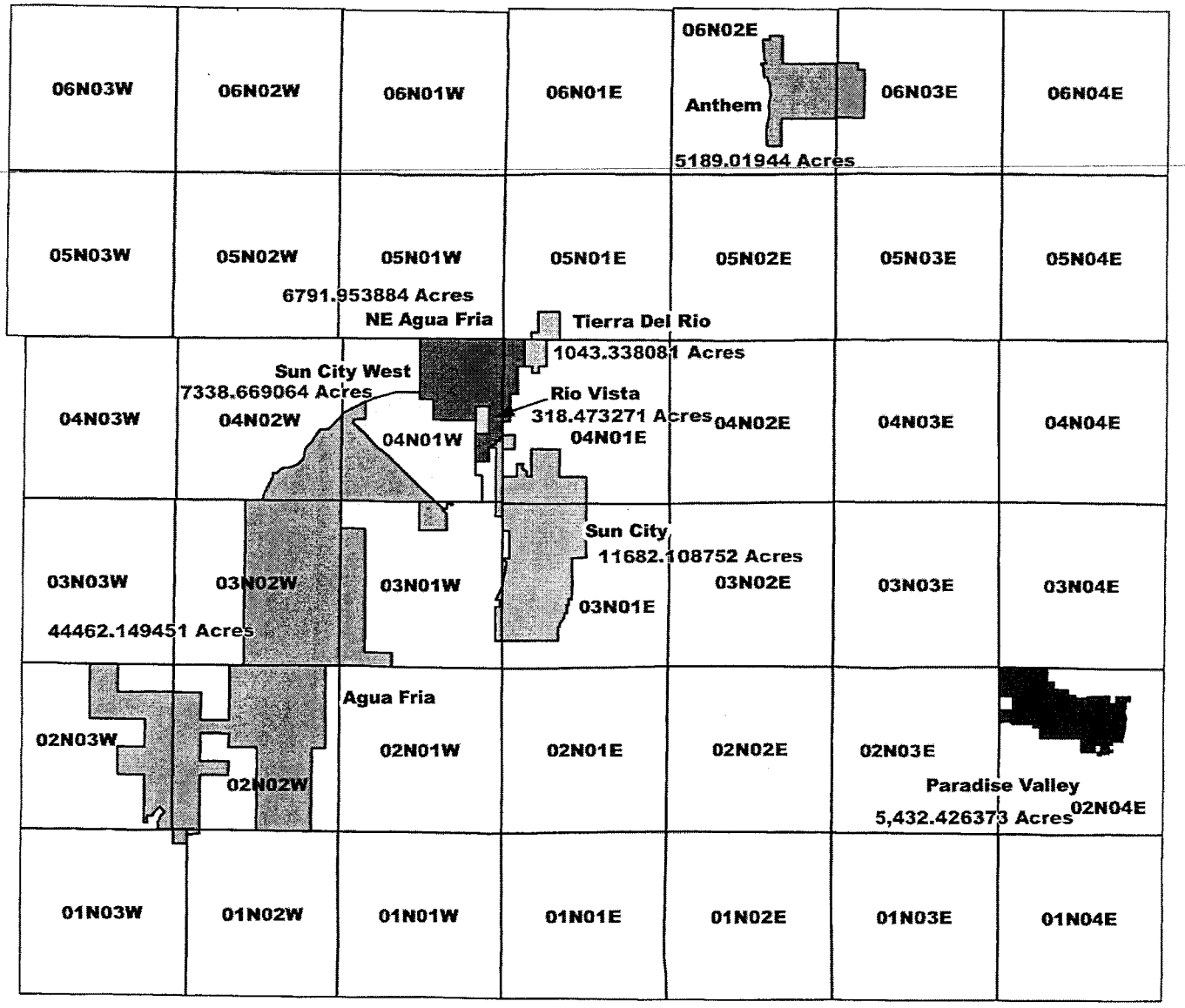

FIGURE 2 – CERTIFICATED AREA

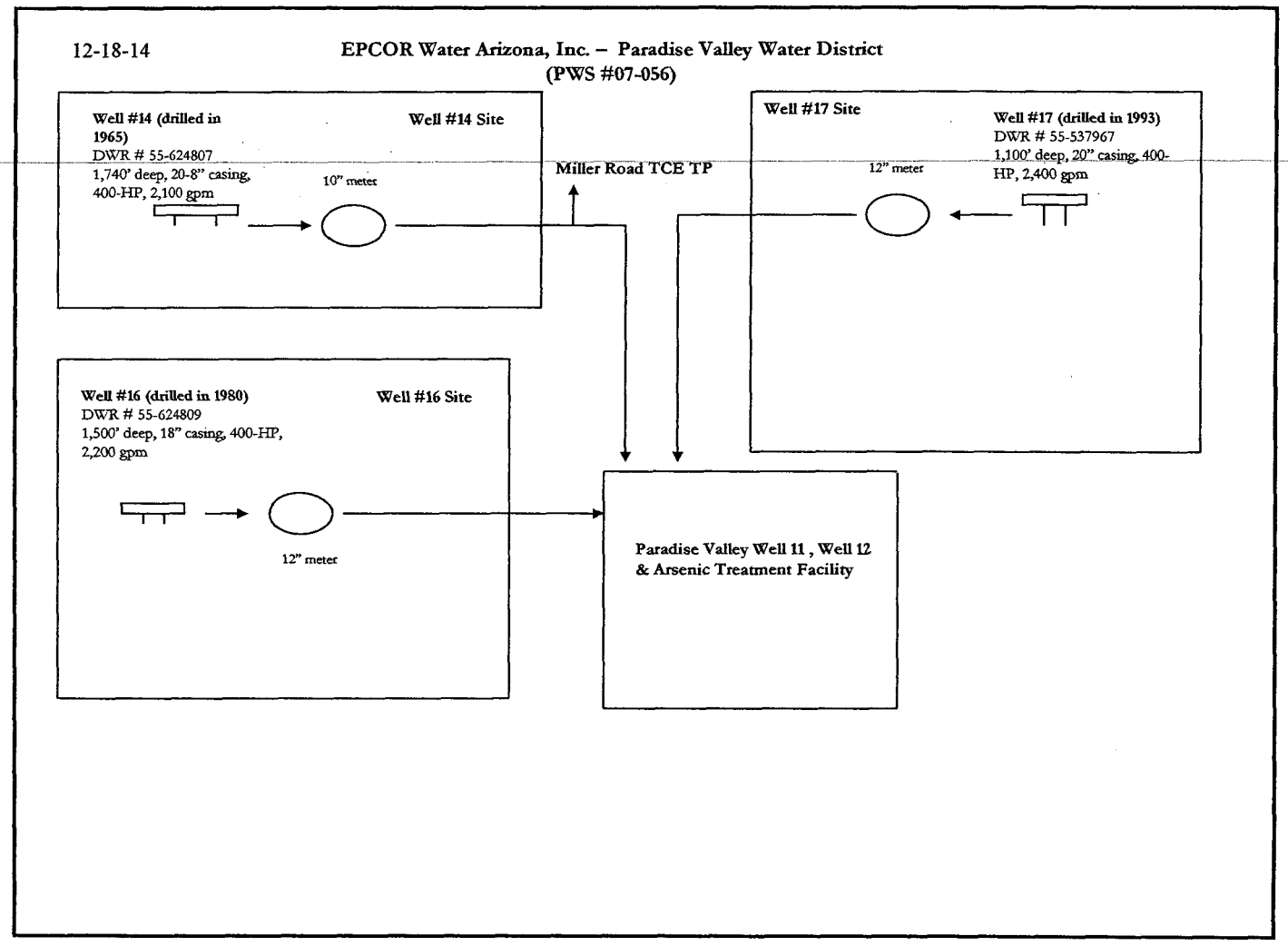

FIGURE 3A

PARADISE VALLEY WATER DISTRICT – WATER SYSTEM (PWS No. 04-07-056)

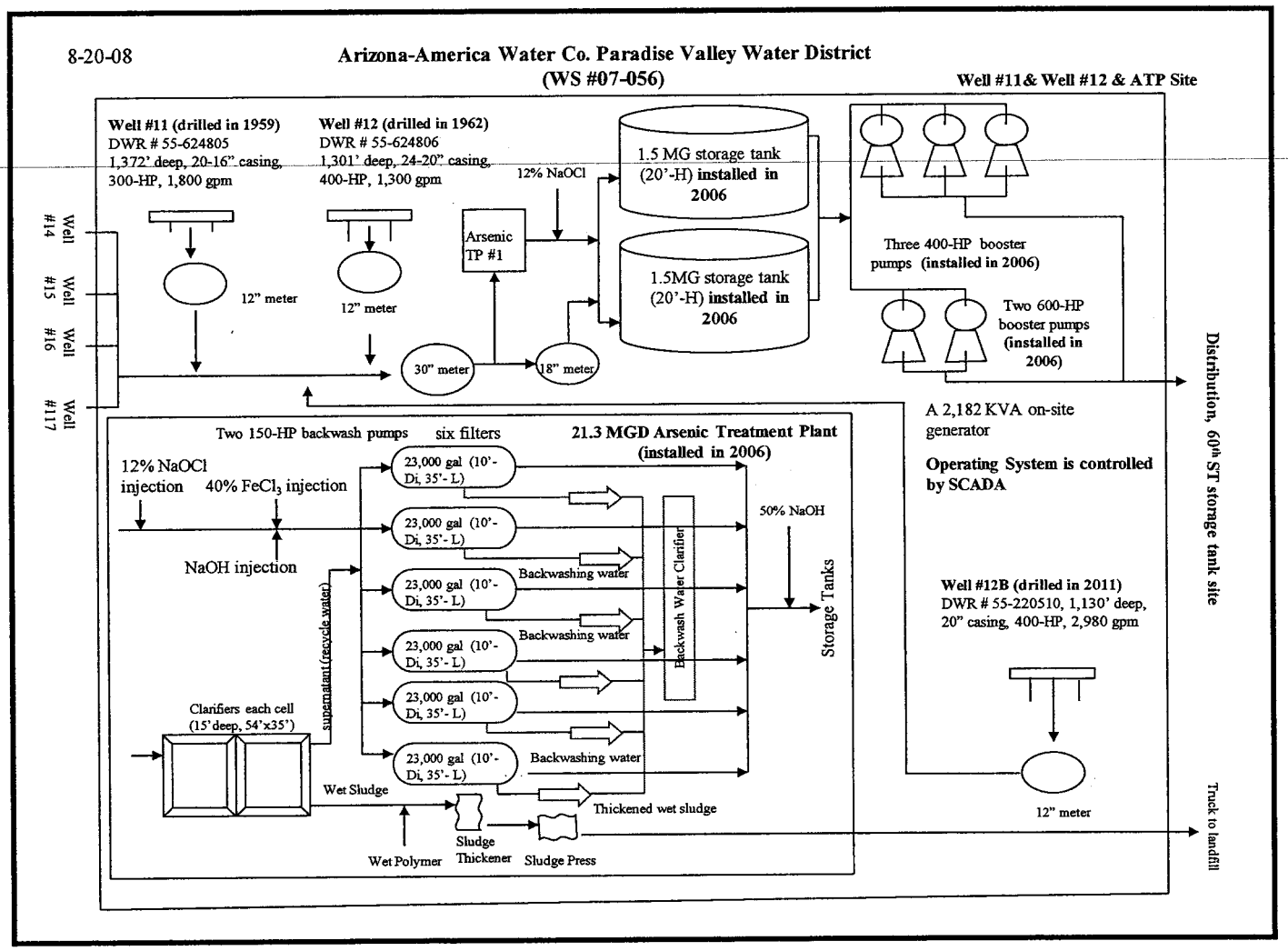

FIGURE 3B

SUN CITY WATER DISTRICT – SUN CITY WATER SYSTEM (PWS No. 04-07-099)

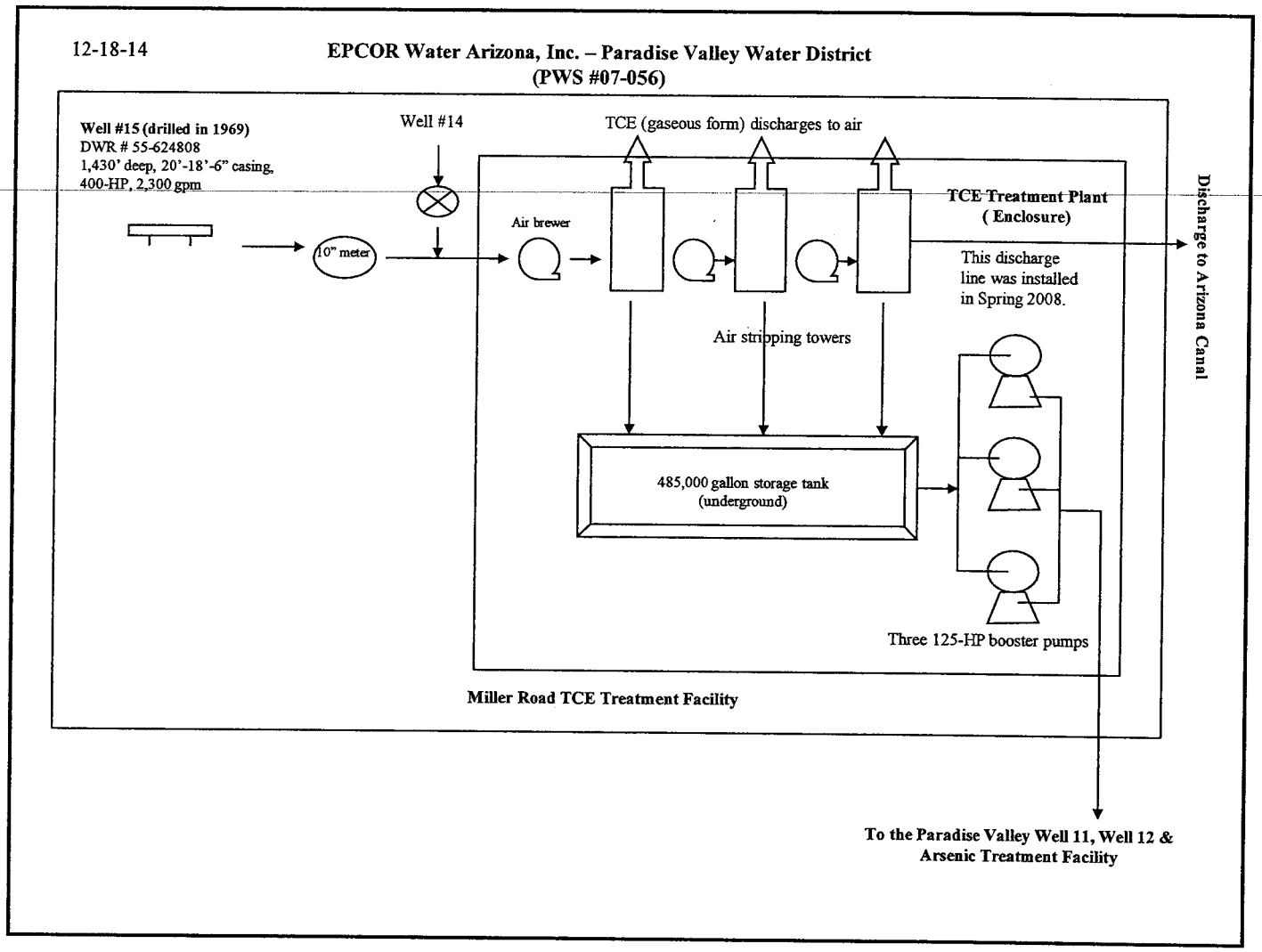

FIGURE 3C

PARADISE VALLEY WATER DISTRICT – WATER SYSTEM (PWS No. 04-07-056)

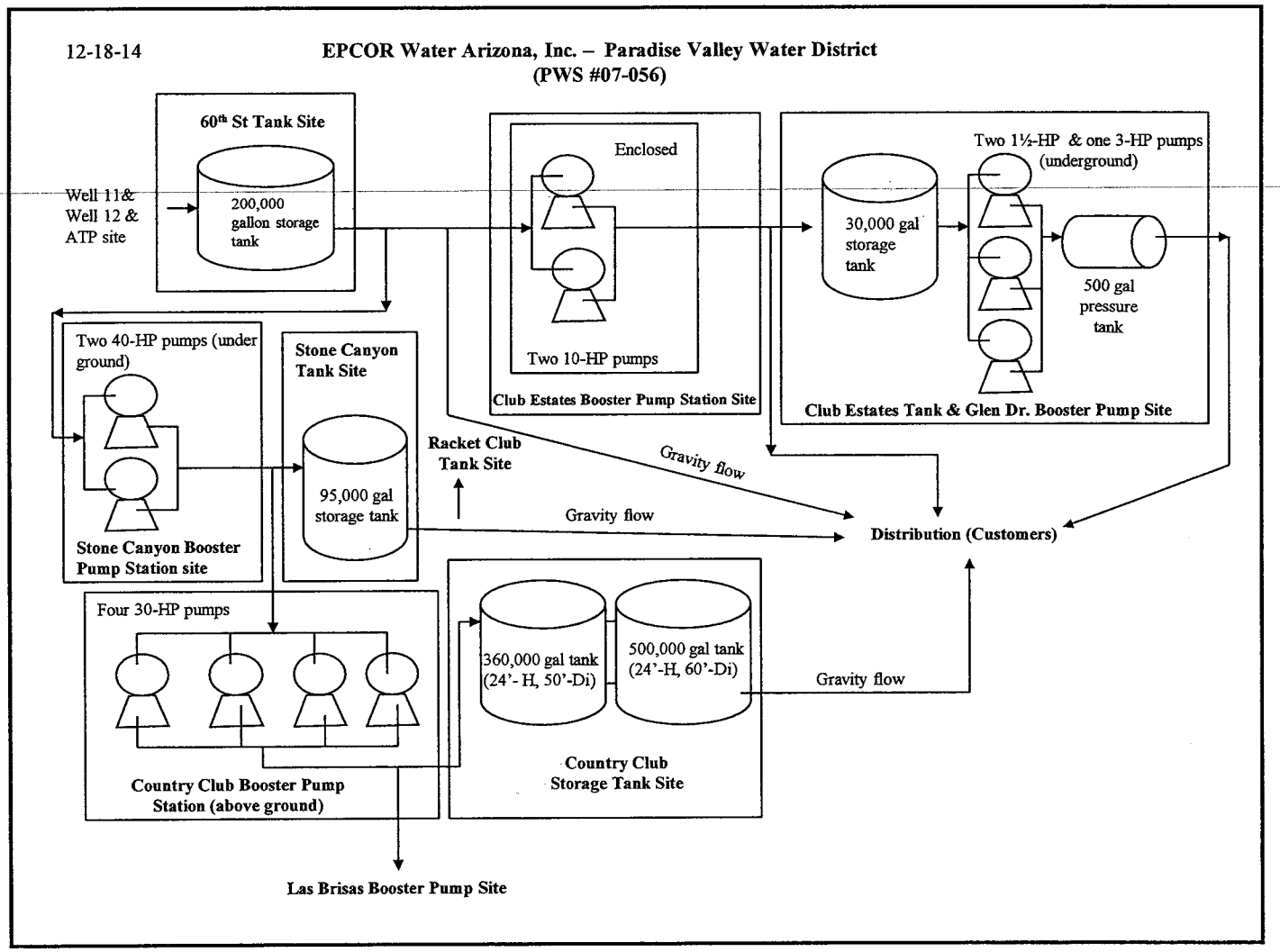

FIGURE 3D

PARADISE VALLEY WATER DISTRICT – WATER SYSTEM (PWS No. 04-07-056)

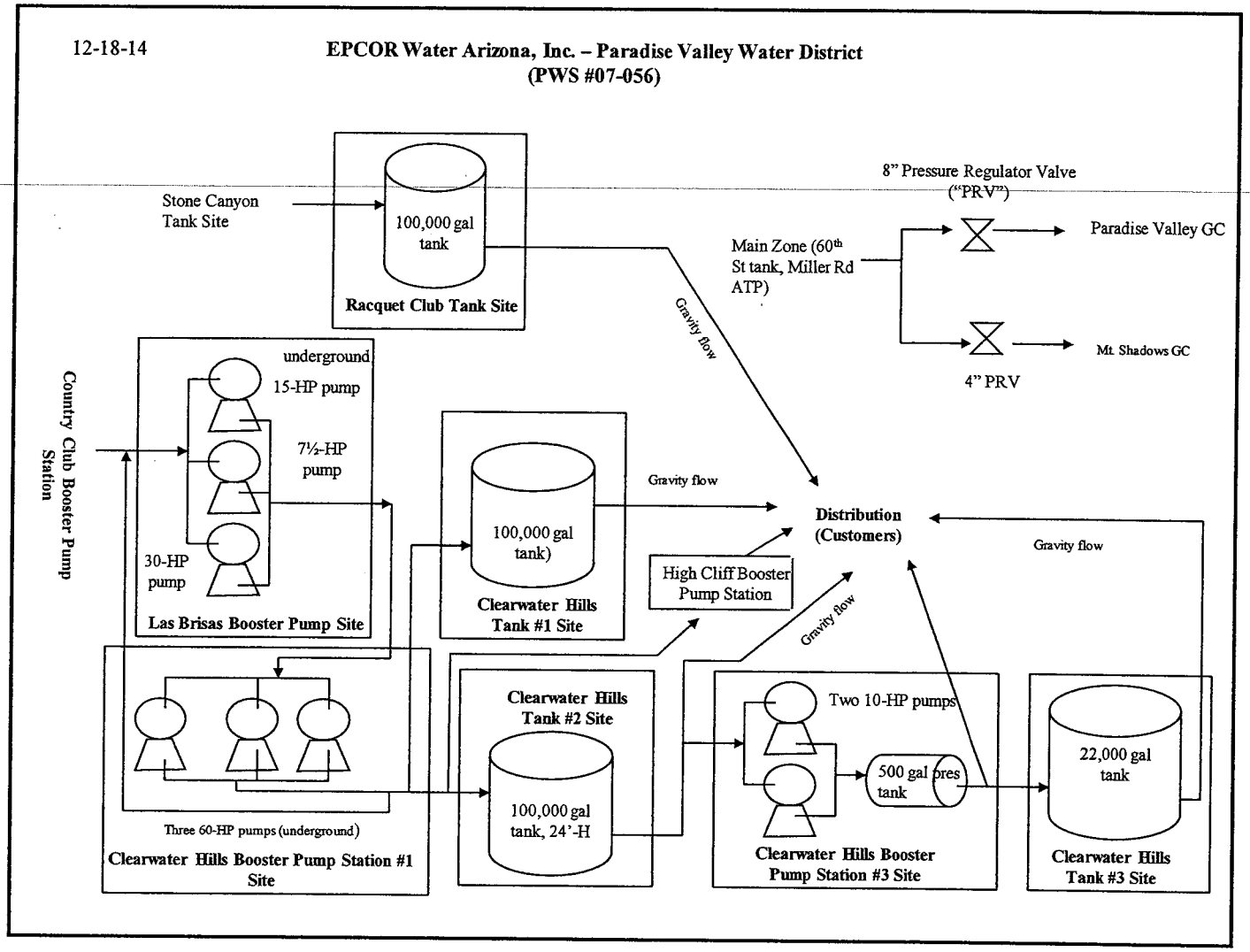

FIGURE 3E

PARADISE VALLEY WATER DISTRICT – WATER SYSTEM (PWS No. 04-07-056)

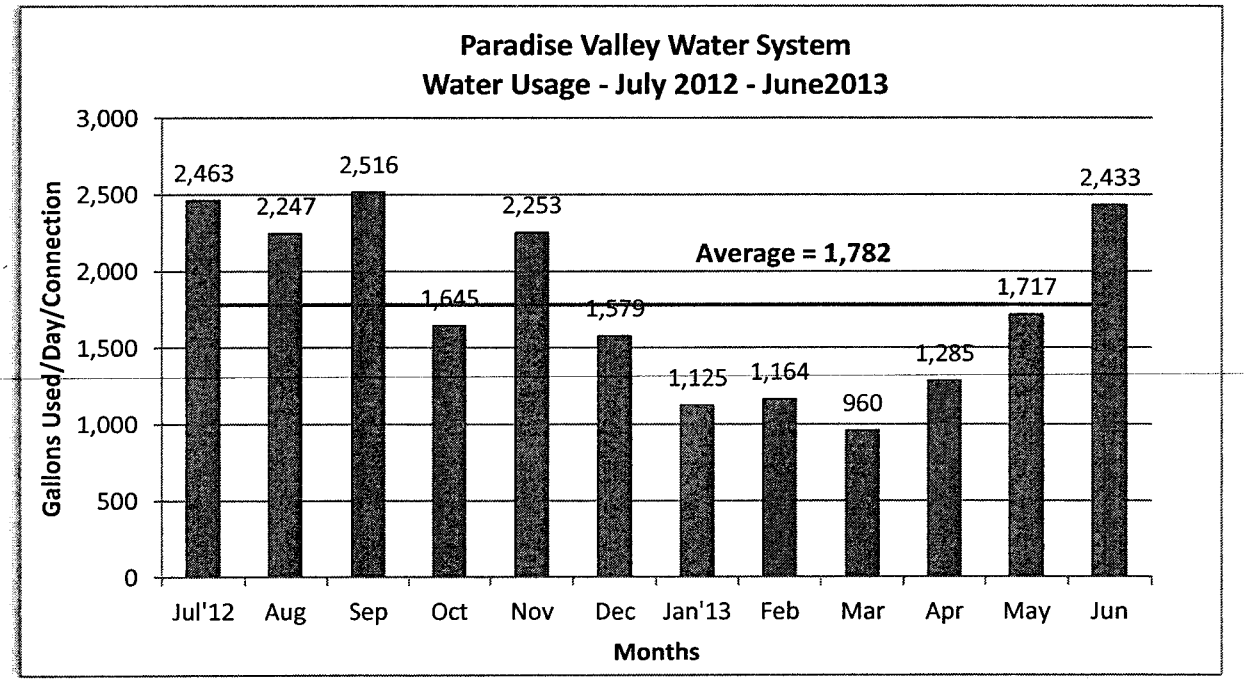

FIGURE 4 – PARADISE VALLEY WATER SYSTEM WATER CONSUMPTION

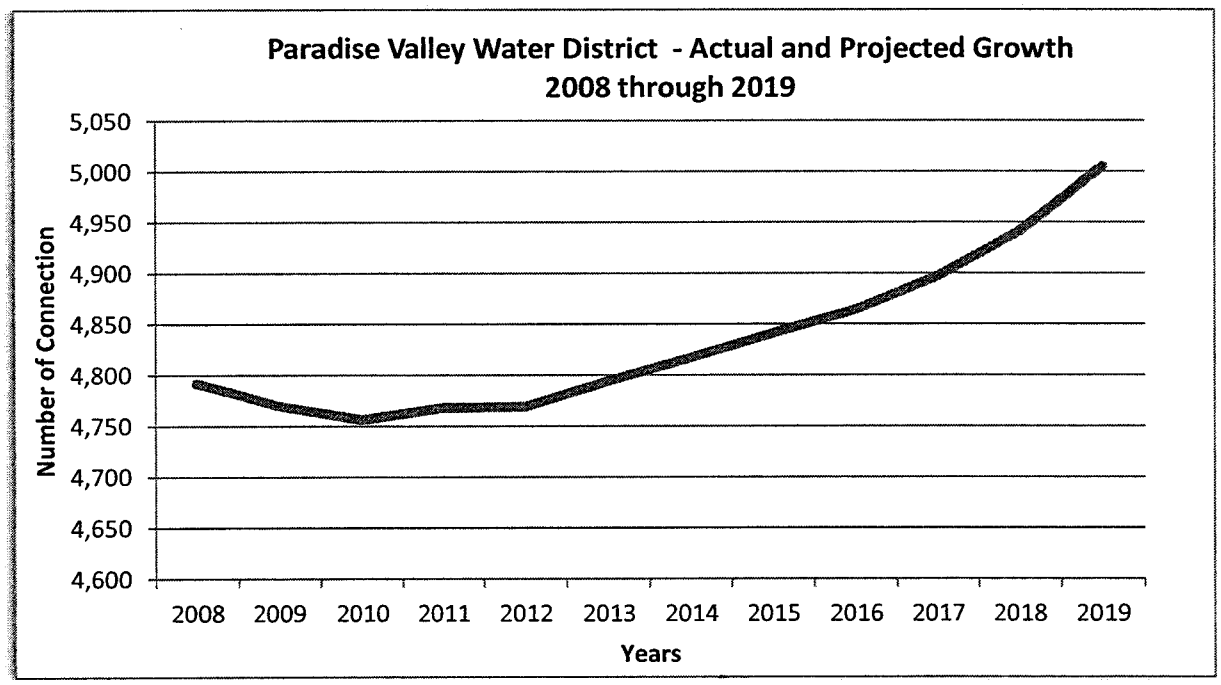

FIGURE 5 – PARADISE VALLEY WATER DISTRICT ACTUAL & PROJECTED GROWTH

ATTACHMENTS

ATTACHMENT 1

Meter Repair and/or Replacement Tariff – BMP 4.2

PURPOSE

A program for the Company to systematically assess all in-service water meters (including Company production meters) in its water service area to identify under-registering meters for repair or replacement (Modified Non-Per Capita Conservation Program Best Management Practice Category 4: Physical System Evaluation and Improvement 4.2 Meter Repair and/or Replacement Program).

REQUIREMENTS

The requirements of this tariff are governed by Rules of the Arizona Corporation Commission and were adapted from the Arizona Department of Water Resources' Required Public Education Program and Best Management Practices in the Modified Non-Per Capita Conservation Program.

1. On a systematic basis, the Company will inspect 100 percent of its 1-inch and smaller in-service water meters at least once every ten years for one of the following reasons (whichever occurs first):
    a. A meter reading complaint is filed with the Company by a customer or Arizona Corporation Commission Staff,
    b. A meter has registered 1,000,000 gallons of usage,
    c. A meter has been in service for ten years.

2. Meters larger than 1-inch shall be inspected for one of the following reasons:
    a. A meter reading complaint is filed with the Company by a customer or Arizona Corporation Commission Staff,
    b. A meter has been in service for five years.

3. The inspection will be accomplished by having a Company Technician physically inspect each meter and its fittings for leaks, registers which may have become loose or are not properly attached to the meter and could be under-registering or other broken parts which need repair. In addition, meters shall be randomly selected for flow testing to identify potentially under-registering meters.

4. The Company shall also replace or reprogram any water meters that do not register in gallons. Upon the effective date of this tariff, the Company shall install all replacement meters with new:
    a. 1-inch and smaller meters that register in 1 gallon increments,
    b. 1-1/2-inch through 4-inch meters that register in 10 gallon increments, and
    c. 6-inch and larger meters that register in 100 gallon increments.

5. The Company shall keep records of all inspected and replacement meters and make this information available to the Commission upon request.

ATTACHMENT 2A

Paradise Valley – PWS ID No. 0407056

SIB PLANT TABLE I, 1-1

2015 Service Line Replacements

Information to be included with SIB-Eligible Project Notification

	NARUC Acct No. (SIB-eligible plant)	Replacement Plant Description (SIB-eligible plant)					Site (location description)	Replacement Plant			
Project No.	**331 T&D Mains** **333 Services** **334 Meters**	Description	Pipe length/ Quantity	Diameter/ Size	Material	Installed Cost/Unit (Estimated)		Expected In-Service Date	Estimated Subtotal Cost (by NARUC Acct No)	Estimated Subtotal Cost (by project)	1. Provide narrative why Replacement Plant is necessary - replacement of existing plant that has exceeded its designated useful life and has worn out or is in deteriorating condition due to no fault of the utility - replacement of existing plant to address excessive water loss (10% or more) - replacement of existing plant for other reasons supported by persuasive showing by utility 2. Provide narrative explaining why this segment of plant is a priority. 3. Provide narrative explaining how replacing this plant will benefit existing customers. 4. Provide affirmation that Replacement Plant does not include the costs for extending or expanding facilities to serve new customers. 5. Provides reference to related page No. in the submitted detailed Engineering Analysis supporting the need for SIB. Engineering Analysis shall also include narrative explaining the utility's systematic assessment, inspection, maintenance, and repair/replacement program.
S-1	333	service lines	39	33-1" 4-1.5" 2-2"	Copper	1"-$3,881 1.5"-$3,947 2"-$4,013	Keim Dr	12/2015	n/a	$151,879	Replace 33-1", 4-1.5", and 2-2" (39 total) residential services between McDonald Dr, Keim Dr, 40th St, and 44th St. These services are a priority for replacement because they are galvanized steel pipe and will be about 58 years old in 2015. Galvanized pipe is prone to corrosion and has been shown to have a useful lifetime less than 40 years. In the past two years, 293 galvanized services were replaced in the system. Replacing the services will help reduce system water loss and improve customer pressure and flow. The service line replacements are for existing customers and not related to new growth. See Section 1 narrative and Map No. S-1 in Exhibit CC-1-C for more detail.
S-2	333	service lines	23	18-1" 3-1.5" 2-2"	Copper	1"-$3,881 1.5"-$3,947 2"-$4,013	Hoghan Dr	12/2015	n/a	$89,720	Replace 18-1", 3-1.5", and 2-2" (23 total) residential services north of Keim Dr between 44th St and 40th St. These services are a priority for replacement because they are galvanized steel pipe and will be about 58 years old in 2015. Galvanized pipe is prone to corrosion and has been shown to have a useful lifetime less than 40 years. In the past two years, 293 galvanized services were replaced in the system. Replacing the services will help reduce system water loss and improve customer pressure and flow. The service line replacements are for existing customers and not related to new growth See Section 1 narrative and Map No. S-2 in Exhibit CC-1-C for more detail.

S-3	333	service lines	55	52-1" 3-1.5"	Copper	1"-$3,881 1.5"-$3,947	Lincoln Dr	12/2015	n/a	$213,642	Replace 52-1" and 3-1.5" (55 total) residential services north of Lincoln Dr between 40th St and Hillside Dr. These services are a priority for replacement because they are galvanized steel pipe and will be about 55 years old in 2015. Galvanized pipe is prone to corrosion and has been shown to have a useful lifetime less than 40 years. In the past two years, 293 galvanized services were replaced in the system. Replacing the services will help reduce system water loss and improve customer pressure and flow. The service line replacements are for existing customers and not related to new growth See Section 1 narrative and Map No. S-3 in Exhibit CC-1-C for more detail.
S-4	333	service lines	45	37-1" 5-1.5" 3-2"	Copper	1"-$3,881 1.5"-$3,947 2"-$4,013	Highlands Dr	12/2015	n/a	$175,362	Replace 37-1", 5-1.5", and 3-2" (45 total) residential services on Highlands Dr and Lamar Rd between 40th St and Hillside Dr. These services are a priority for replacement because they are galvanized steel pipe and will be about 55 years old in 2015. Galvanized pipe is prone to corrosion and has been shown to have a useful lifetime less than 40 years. In the past two years, 293 galvanized services were replaced in the system. Replacing the services will help reduce system water loss and improve customer pressure and flow. The service line replacements are for existing customers and not related to new growth. See Section 1 narrative and Map No. S-4 in Exhibit CC-1-C for more detail.
S-5	333	service lines	47	39-1" 5-1.5" 3-2"	Copper	1"-$3,881 1.5"-$3,947 2"-$4,013	Upper Ridge Way	12/2015	n/a	$183,124	Replace 39-1", 5-1.5", and 3-2" (47 total) residential services on Lakeside Ln and Sandy Mountain Rd between 40th St and Upper Ridge Way. These services are a priority for replacement because they are galvanized steel pipe and will be about 55 years old in 2015. Galvanized pipe is prone to corrosion and has been shown to have a useful lifetime less than 40 years. In the past two years, 293 galvanized services were replaced in the system. Replacing the services will help reduce system water loss and improve customer pressure and flow. The service line replacements are for existing customers and not related to new growth. See Section 1 narrative and Map No. S-5 in Exhibit CC-1-C for more detail.
Total			**209**							**$813,727**	

ATTACHMENT 2B

Paradise Valley – PWS ID No. 0407056

SIB PLANT TABLE I, 1-2

2016 Service Line Replacements

Information to be included with SIB-Eligible Project Notification

	NARUC Acct No. (SIB-eligible plant)	Replacement Plant Description (SIB -eligible plant)					Site (location description)	Replacement Plant			
Project No.	**331 T&D Mains** **333 Services** **334 Meters**	Description	Pipe length/ Quantity	Diameter/ Size	Material	Installed Cost/Unit (Estimated)		Expected In-Service Date	Estimated Subtotal Cost (by NARUC Acct No)	Estimated Subtotal Cost (by project)	1. Provide narrative why Replacement Plant is necessary - replacement of existing plant that has exceeded its designated useful life and has worn out or is in deteriorating condition due to no fault of the utility - replacement of existing plant to address excessive water loss (10% or more) - replacement of existing plant for other reasons supported by persuasive showing by utility 2. Provide narrative explaining why this segment of plant is a priority. 3. Provide narrative explaining how replacing this plant will benefit existing customers. 4. Provide affirmation that Replacement Plant does not include the costs for extending or expanding facilities to serve new customers. 5. Provides reference to related page No. in the submitted detailed Engineering Analysis supporting the need for SIB. Engineering Analysis shall also include narrative explaining the utility's systematic assessment, inspection, maintenance, and repair/replacement program.
S-6	333	service lines	35	29-1" 4-1.5" 2-2"	Copper	1"-$3,881 1.5"-$3,947 2"-$4,013	Black Rock Trl	12/2016	n/a	$136,356	Replace 29-1", 4-1.5", and 2-2" (35 total) residential services along Black Rock Trl and Clearwater Pkwy north of Lakeside Ln. These services are a priority for replacement because they are galvanized steel pipe and will be about 55 years old in 2016. Galvanized pipe is prone to corrosion and has been shown to have a useful lifetime less than 40 years. In the past two years, 293 galvanized services were replaced in the system. Replacing the services will help reduce system water loss and improve customer pressure and flow. The service line replacements are for existing customers and not related to new growth. See Section 1 narrative and Map No. S-6 in Exhibit CC-1-C for more detail.
S-7	333	service lines	31	25-1" 4-1.5" 2-2"	Copper	1"-$3,881 1.5"-$3,947 2"-$4,013	Red Ledge Dr	12/2016	n/a	$120,833	Replace 25-1", 4-1.5", and 2-2" (31 total) residential services along Red Ledge Dr, Clearwater Pkwy, and Highcliff Dr. These services are a priority for replacement because they are galvanized steel pipe and will be about 56 years old in 2016. Galvanized pipe is prone to corrosion and has been shown to have a useful lifetime less than 40 years. In the past two years, 293 galvanized services were replaced in the system. Replacing the services will help reduce system water loss and improve customer pressure and flow. The service line replacements are for existing customers and not related to new growth. See Section 1 narrative and Map No. S-7 in Exhibit CC-1-C for more detail.

S-8	333	service lines	36	30-1" 4-1.5" 2-2"	Copper	1"-$3,881 1.5"-$3,947 2"-$4,013	Praying Monk Rd	12/2016	n/a	$140,237	Replace 30-1", 4-1.5", and 2-2" (36 total) residential and commercial services along Praying monk Rd, Joshua Tree Ln, and Lincoln Dr between Tatum and Desert Fairways. These services are a priority for replacement because they are galvanized steel pipe and will be about 62 years old in 2016. Galvanized pipe is prone to corrosion and has been shown to have a useful lifetime less than 40 years. In the past two years, 293 galvanized services were replaced in the system. Replacing the services will help reduce system water loss and improve customer pressure and flow. The service line replacements are for existing customers and not related to new growth. See Section 1 narrative and Map No. S-8 in Exhibit CC-1-C for more detail.
S-9	333	service lines	43	42-1" 1-2"	Copper	1"-$3,881 2"-$4,013	Camelback Inn	12/2016	n/a	$166,940	Replace 42-1" and 1-2" (43 total) residential and commercial services in the Camelback Inn north of Lincoln. These services are a priority for replacement because they are galvanized steel pipe and will be about 50 years old in 2016. Galvanized pipe is prone to corrosion and has been shown to have a useful lifetime less than 40 years. In the past two years, 293 galvanized services were replaced in the system. Replacing the services will help reduce system water loss and improve customer pressure and flow. The service line replacements are for existing customers and not related to new growth. See Section 1 narrative and Map No. S-9 in Exhibit CC-1-C for more detail.
S-10	333	service lines	40	38-1" 2-2"	Copper	1"-$3,881 2"-$4,013	Lost Dutchman Dr	12/2016	n/a	$155,364	Replace 38-1" and 2-2" (40 total) residential and commercial services along Lost Dutchman Dr, Smoke Tree Ln, Cactus Wren Rd, and 59th St. These services are a priority for replacement because they are galvanized steel pipe and will be about 52 years old in 2016. Galvanized pipe is prone to corrosion and has been shown to have a useful lifetime less than 40 years. In the past two years, 293 galvanized services were replaced in the system. Replacing the services will help reduce system water loss and improve customer pressure and flow. The service line replacements are for existing customers and not related to new growth. See Section 1 narrative and Map No. S-10 in Exhibit CC-1-C for more detail.
S-11	333	service lines	27	24-1" 3-2"	Copper	1"-$3,881 2"-$4,013	Berridge Ln	12/2016	n/a	$104,980	Replace 24-1" and 3-2" (27 total) residential and commercial services along Berridge ln and Sundown Dr. These services are a priority for replacement because they are galvanized steel pipe and will be about 58 years old in 2016. Galvanized pipe is prone to corrosion and has been shown to have a useful lifetime less than 40 years. In the past two years, 293 galvanized services were replaced in the system. Replacing the services will help reduce system water loss and improve customer pressure and flow. The service line replacements are for existing customers and not related to new growth. See Section 1 narrative and Map No. S-11 in Exhibit CC-1-C for more detail.
Total			**212**							**$824,710**	

ATTACHMENT 2C

Paradise Valley – PWS ID No. 0407056

SIB PLANT TABLE I, 1-3

2017 Service Line Replacements

Information to be included with SIB-Eligible Project Notification

	NARUC Acct No. (SIB-eligible plant)	Replacement Plant Description (SIB-eligible plant)					Site (location description)	Replacement Plant			
Project No.	**331 T&D Mains** **333 Services** **334 Meters**	Description	Pipe length/ Quantity	Diameter/ Size	Material	Installed Cost/Unit (Estimated)		Expected In-Service Date	Estimated Subtotal Cost (by NARUC Acct No)	Estimated Subtotal Cost (by project)	1. Provide narrative why Replacement Plant is necessary - replacement of existing plant that has exceeded its designated useful life and has worn out or is in deteriorating condition due to no fault of the utility - replacement of existing plant to address excessive water loss (10% or more) - replacement of existing plant for other reasons supported by persuasive showing by utility 2. Provide narrative explaining why this segment of plant is a priority. 3. Provide narrative explaining how replacing this plant will benefit existing customers. 4. Provide affirmation that Replacement Plant does not include the costs for extending or expanding facilities to serve new customers. 5. Provides reference to related page No. in the submitted detailed Engineering Analysis supporting the need for SIB. Engineering Analysis shall also include narrative explaining the utility's systematic assessment, inspection, maintenance, and repair/replacement program.
S-12	333	service lines	38	34-1" 4-1.5"	Copper	1"-$3,881 1.5"-$3,947	Cattletrack Rd	12/2017	n/a	$147,734	Replace 34-1" and 4-1.5" (38 total) residential and commercial services between Cattletrack Rd, 74th St, Lincoln Dr, and Whispering Winds Rd. These services are a priority for replacement because they are galvanized steel pipe and will be about 40 years old in 2017. Galvanized pipe is prone to corrosion and has been shown to have a useful lifetime less than 40 years. In the past two years, 293 galvanized services were replaced in the system. Replacing the services will help reduce system water loss and improve customer pressure and flow. The service line replacements are for existing customers and not related to new growth. See Section 1 narrative and Map No. S-12 in Exhibit CC-1-C for more detail.
S-13	333	service lines	33	29-1" 4-2"	Copper	1"-$3,881 2"-$4,013	73rd Way	12/2017	n/a	$128,330	Replace 29-1" and 4-2" (33 total) residential and commercial services between 73rd Way, Scottsdale Rd, Lincoln Dr, and Citrus Way. These services are a priority for replacement because they are galvanized steel pipe and will be about 45 years old in 2017. Galvanized pipe is prone to corrosion and has been shown to have a useful lifetime less than 40 years. In the past two years, 293 galvanized services were replaced in the system. Replacing the services will help reduce system water loss and improve customer pressure and flow. The service line replacements are for existing customers and not related to new growth. See Section 1 narrative and Map No. S-13 in Exhibit CC-1-C for more detail.

S-14	333	service lines	33	33-1"	Copper	1"-$3,881	Balfour Rd	12/2017	n/a	$128,066	Replace 40-1" residential services south of Vista Dr between 68th St and Scottsdale Rd. These services are a priority for replacement because they are galvanized steel pipe will be about 59 years old in 2017. Galvanized pipe is prone to corrosion and has been shown to have a useful lifetime less than 40 years. In the past two years, 293 galvanized services were replaced in the system. Replacing the services will help reduce system water loss and improve customer pressure and flow. The service line replacements are for existing customers and not related to new growth. See Section 1 narrative and Map No. S-14 in Exhibit CC-1-C for more detail.
S-15	333	service lines	21	16-1" 3-1.5" 2-2"	Copper	1"-$3,881 1.5"-$3,947 2"-$4,013	Paradise Canyon Rd	12/2017	n/a	$81,959	Replace 16-1", 3-1.5", and 2-2" (21 total) residential services along Las Brisas Ln and Paradise Canyon Rd. These services are a priority for replacement because they are galvanized steel pipe and will be about 46 years old in 2017. Galvanized pipe is prone to corrosion and has been shown to have a useful lifetime less than 40 years. In the past two years, 293 galvanized services were replaced in the system. Replacing the services will help reduce system water loss and improve customer pressure and flow. The service line replacements are for existing customers and not related to new growth. See Section 1 narrative and Map No. S-15 in Exhibit CC-1-C for more detail.
S-16	333	service lines	22	17-1" 3-1.5" 2-2"	Copper	1"-$3,881 1.5"-$3,947 2"-$4,013	54th St	12/2017	n/a	$85,840	Replace 17-1", 3-1.5", and 2-2" (22 total) residential services along 54th St, Desert Park Ln, Roadrunner Rd, and Desert Vista Rd. These services are a priority for replacement because they are galvanized steel pipe and will be about 43 years old in 2017. Galvanized pipe is prone to corrosion and has been shown to have a useful lifetime less than 40 years. In the past two years, 293 galvanized services were replaced in the system. Replacing the services will help reduce system water loss and improve customer pressure and flow. The service line replacements are for existing customers and not related to new growth. See Section 1 narrative and Map No. S-16 in Exhibit CC-1-C for more detail.
S-17	333	service lines	32	26-1" 4-1.5" 2-2"	Copper	1"-$3,881 1.5"-$3,947 2"-$4,013	Shadow Mountain Rd	12/2017	n/a	$124,714	Replace 26-1", 4-1.5", and 2-2" (32 total) residential services between Shadow Mountain Rd, Tatum Blvd, Roadrunner Rd, and Prickly Pear Ln. These services are a priority for replacement because they are galvanized steel pipe and will be about 61 years old in 2017. Galvanized pipe is prone to corrosion and has been shown to have a useful lifetime less than 40 years. In the past two years, 293 galvanized services were replaced in the system. Replacing the services will help reduce system water loss and improve customer pressure and flow. The service line replacements are for existing customers and not related to new growth. See Section 1 narrative and Map No. S-17 in Exhibit CC-1-C for more detail.

S-18	333	service lines	60	51-1" 6-1.5" 3-2"	Copper	1"-$3,881 1.5"-$3,947 2"-$4,013	Crestview Dr	12/2017	n/a	$233,640	Replace 51-1", 6-1.5", and 3-2" (60 total) residential services between Desert Jewel Dr, Roadrunner Rd, Tatum Blvd, and Shadow Mountain Rd. These services are a priority for replacement because they are galvanized steel pipe and will be about 47 years old in 2017. Galvanized pipe is prone to corrosion and has been shown to have a useful lifetime less than 40 years. In the past two years, 293 galvanized services were replaced in the system. Replacing the services will help reduce system water loss and improve customer pressure and flow. The service line replacements are for existing customers and not related to new growth. See Section 1 narrative and Map No. S-18 in Exhibit CC-1-C for more detail.
Total			239							$930,283	

ATTACHMENT 2D

Paradise Valley – PWS ID No. 0407056

SIB PLANT TABLE I, 1-4

2018 Service Line Replacements

Information to be included with SIB-Eligible Project Notification

	NARUC Acct No. (SIB-eligible plant)	Replacement Plant Description (SIB-eligible plant)					Site (location description)	Replacement Plant			
Project No.	**331 T&D Mains** **333 Services** **334 Meters**	Description	Pipe length/ Quantity	Diameter/ Size	Material	Installed Cost/Unit (Estimated)		Expected In-Service Date	Estimated Subtotal Cost (by NARUC Acct No)	Estimated Subtotal Cost (by project)	1. Provide narrative why Replacement Plant is necessary - replacement of existing plant that has exceeded its designated useful life and has worn out or is in deteriorating condition due to no fault of the utility - replacement of existing plant to address excessive water loss (10% or more) - replacement of existing plant for other reasons supported by persuasive showing by utility 2. Provide narrative explaining why this segment of plant is a priority. 3. Provide narrative explaining how replacing this plant will benefit existing customers. 4. Provide affirmation that Replacement Plant does not include the costs for extending or expanding facilities to serve new customers. 5. Provides reference to related page No. in the submitted detailed Engineering Analysis supporting the need for SIB. Engineering Analysis shall also include narrative explaining the utility's systematic assessment, inspection, maintenance, and repair/replacement program.
S-19	333	service lines	21	16-1" 3-1.5" 2-2"	Copper	1"-$3,881 1.5"-$3,947 2"-$4,013	Clearwater Pkwy	12/2018	n/a	$81,959	Replace 16-1", 3-1.5", and 2-2" (21 total) residential services Clearwater Pkwy and Tatum Blvd. These services are a priority for replacement because they are galvanized steel pipe and will be about 63 years old in 2018. Galvanized pipe is prone to corrosion and has been shown to have a useful lifetime less than 40 years. In the past two years, 293 galvanized services were replaced in the system. Replacing the services will help reduce system water loss and improve customer pressure and flow. The service line replacements are for existing customers and not related to new growth. See Section 1 narrative and Map No. S-19 in Exhibit CC-1-C for more detail.
S-20	333	service lines	65	54-1" 7-1.5" 4-2"	Copper	1"-$3,881 1.5"-$3,947 2"-$4,013	Lakeside Ln	12/2018	n/a	$253,242	Replace 54-1", 7-1.5", and 4-2" (65 total) residential services along Lakeside Ln, Moonlight Way, Clearwater Pkwy, and Brookview Way. These services are a priority for replacement because they are galvanized steel pipe and will be about 62 years old in 2018. Galvanized pipe is prone to corrosion and has been shown to have a useful lifetime less than 40 years. In the past two years, 293 galvanized services were replaced in the system. Replacing the services will help reduce system water loss and improve customer pressure and flow. The service line replacements are for existing customers and not related to new growth. See Section 1 narrative and Map No. S-20 in Exhibit CC-1-C for more detail.
S-21	333	service lines	43	35-1" 5-1.5" 3-2"	Copper	1"-$3,881 1.5"-$3,947 2"-$4,013	Crystal Ln	12/2018	n/a	$167,600	Replace 35-1", 5-1.5", and 3-2" (43 total) residential services along Crystal Ln, Sparkling Ln, and Moonlight Way. These services are a priority for replacement because they are

											galvanized steel pipe and will be about 55 years old in 2018. Galvanized pipe is prone to corrosion and has been shown to have a useful lifetime less than 40 years. In the past two years, 293 galvanized services were replaced in the system. Replacing the services will help reduce system water loss and improve customer pressure and flow. The service line replacements are for existing customers and not related to new growth. See Section 1 narrative and Map No. S-21 in Exhibit CC-1-C for more detail.
S-22	333	service lines	45	37-1" 5-1.5" 3-2"	Copper	1"-$3,881 1.5"-$3,947 2"-$4,013	Desert Fairways Dr	12/2018	n/a	$175,362	Replace 37-1", 5-1.5", and 3-2" (45 total) residential services along Desert Fairways Dr, Palo Verde Pl, Pepper Tree Ln, and Arroyo Rd. These services are a priority for replacement because they are galvanized steel pipe and will be about 65 years old in 2018. Galvanized pipe is prone to corrosion and has been shown to have a useful lifetime less than 40 years. In the past two years, 293 galvanized services were replaced in the system. Replacing the services will help reduce system water loss and improve customer pressure and flow. The service line replacements are for existing customers and not related to new growth. See Section 1 narrative and Map No. S-22 in Exhibit CC-1-C for more detail.
S-23	333	service lines	58	49-1" 6-1.5" 3-2"	Copper	1"-$3,881 1.5"-$3,947 2"-$4,013	Joshua Tree Ln	12/2018	n/a	$225,878	Replace 49-1", 6-1.5", and 3-2" (58 total) residential services between Indian Bend Rd, Lincoln Dr, 60th St, and Lost Dutchman Dr. These services are a priority for replacement because they are galvanized steel pipe and will be about 60 years old in 2018. Galvanized pipe is prone to corrosion and has been shown to have a useful lifetime less than 40 years. In the past two years, 293 galvanized services were replaced in the system. Replacing the services will help reduce system water loss and improve customer pressure and flow. The service line replacements are for existing customers and not related to new growth. See Section 1 narrative and Map No. S-23 in Exhibit CC-1-C for more detail.
Total			**232**							**$904,042**	

ATTACHMENT 2E

Paradise Valley – PWS ID No. 0407056

SIB PLANT TABLE I, 1-5

2019 Service Line Replacements

Information to be included with SIB-Eligible Project Notification

	NARUC Acct No. (SIB-eligible plant)	Replacement Plant Description (SIB-eligible plant)					Site (location description)	Replacement Plant			
Project No.	**331 T&D Mains** **333 Services** **334 Meters**	Description	Pipe length/ Quantity	Diameter/ Size	Material	Installed Cost/Unit (Estimated)		Expected In-Service Date	Estimated Subtotal Cost (by NARUC Acct No)	Estimated Subtotal Cost (by project)	1. Provide narrative why Replacement Plant is necessary - replacement of existing plant that has exceeded its designated useful life and has worn out or is in deteriorating condition due to no fault of the utility - replacement of existing plant to address excessive water loss (10% or more) - replacement of existing plant for other reasons supported by persuasive showing by utility 2. Provide narrative explaining why this segment of plant is a priority. 3. Provide narrative explaining how replacing this plant will benefit existing customers. 4. Provide affirmation that Replacement Plant does not include the costs for extending or expanding facilities to serve new customers. 5. Provides reference to related page No. in the submitted detailed Engineering Analysis supporting the need for SIB. Engineering Analysis shall also include narrative explaining the utility's systematic assessment, inspection, maintenance, and repair/replacement program.
S-24	333	service lines	62	51-1" 7-1.5" 4-2"	Copper	1"-$3,881 1.5"-$3,947 2"-$4,013	51st Pl	12/2019	n/a	$241,600	Replace 51-1", 7-1.5", and 4-2" (62 total) residential services along 51st Pl, Valley Vista Ln, and Rovey Ave. These services are a priority for replacement because they are galvanized steel pipe and are will be about 66 years old in 2019. Galvanized pipe is prone to corrosion and has been shown to have a useful lifetime less than 40 years. In the past two years, 293 galvanized services were replaced in the system. Replacing the services will help reduce system water loss and improve customer pressure and flow. The service line replacements are for existing customers and not related to new growth. See Section 1 narrative and Map No. S-24 in Exhibit CC-1-C for more detail.
S-25	333	service lines	63	63-1"	Copper	1"-$3,881	Marston Dr	12/2019	n/a	$244,490	Replace 63-1" residential and commercial services along Arroyo Verde Dr, Valley Vista Ln, and Marston Dr. These services are a priority for replacement because they are galvanized steel pipe and will be about 41 years old in 2019. Galvanized pipe is prone to corrosion and has been shown to have a useful lifetime less than 40 years. In the past two years, 293 galvanized services were replaced in the system. Replacing the services will help reduce system water loss and improve customer pressure and flow. The service line replacements are for existing customers and not related to new growth. See Section 1 narrative and Map No. S-25 in Exhibit CC-1-C for more detail.
S-26	333	service lines	30	30-1"	Copper	1"-$3,881	Pebble Ridge Rd	12/2019	n/a	$116,424	Replace 30-1" residential services along Pebble Ridge Rd. These services are a priority for replacement because they are

											galvanized steel pipe and will be about 45 years old in 2019. Galvanized pipe is prone to corrosion and has been shown to have a useful lifetime less than 40 years. In the past two years, 293 galvanized services were replaced in the system. Replacing the services will help reduce system water loss and improve customer pressure and flow. The service line replacements are for existing customers and not related to new growth. See Section 1 narrative and Map No. S-26 in Exhibit CC-1-C for more detail.
S-27	333	service lines	41	36-1" 5-1.5"	Copper	1"-$3,881 1.5"-$3,947 2"-$4,013	Claremont Ave and Maderos Del Cuenta Dr	12/2019	n/a	$159,443	Replace 36-1" and 5-1.5" (41 total) residential services on Claremont Ave, 42nd St, Marlette Ave, and Maderos Del Cuenta Dr. These services are a priority for replacement because they are galvanized steel pipe and will be about 41 years old in 2019. Galvanized pipe is prone to corrosion and has been shown to have a useful lifetime less than 40 years. In the past two years, 293 galvanized services were replaced in the system. Replacing the services will help reduce system water loss and improve customer pressure and flow. The service line replacements are for existing customers and not related to new growth. See Section 1 narrative and Map No. S-27 in Exhibit CC-1-C for more detail.
Total			**196**							**$761,957**	

ATTACHMENT 3A

Paradise Valley – PWS ID No. 0407056

SIB PLANT TABLE I, 2-1

2015 Valve Replacements

Information to be included with SIB-Eligible Project Notification

	NARUC Acct No. (SIB-eligible plant)	Replacement Plant Description (SIB-eligible plant)					Site (location description)	Replacement Plant			
Project No.	**331 T&D Mains** **333 Services** **334 Meters**	Description	Pipe length/ Quantity	Diameter/ Size	Material	Installed Cost/Unit (Estimated)		Expected In-Service Date	Estimated Subtotal Cost (by NARUC Acct No)	Estimated Subtotal Cost (by project)	1. Provide narrative why Replacement Plant is necessary - replacement of existing plant that has exceeded its designated useful life and has worn out or is in deteriorating condition due to no fault of the utility - replacement of existing plant to address excessive water loss (10% or more) - replacement of existing plant for other reasons supported by persuasive showing by utility 2. Provide narrative explaining why this segment of plant is a priority. 3. Provide narrative explaining how replacing this plant will benefit existing customers. 4. Provide affirmation that Replacement Plant does not include the costs for extending or expanding facilities to serve new customers. 5. Provides reference to related page No. in the submitted detailed Engineering Analysis supporting the need for SIB. Engineering Analysis shall also include narrative explaining the utility's systematic assessment, inspection, maintenance, and repair/replacement program.
V-1	331	gate valves	40	5-4" 28-6" 6-8" 1-16"	cast iron with rubberized epoxy coating	4"-$4,431 6"-$4,651 8"-$5,201 16"-$20,046	Area north of Lincoln Dr between 40th St and 54th Pl (see map V-1 for detail)	12/2015	n/a	$203,628	Replace 5-4", 28-6", 6-8", and 1-16" (estimated, 40 total) distribution system valves that are leaking and/or inoperable. These numbers are only estimates and are based on the percentage of existing valve sizes in the project area. This area represents approximately 20% of the total system valves. Valves found broken as a part of the annual valve maintenance program will be replaced. Over a quarter of the system valves are nearing 70 years old. In the past two years, 44 valves were replaced; the average age of those valves was 35 years. Making certain that all system valves are operational ensures that the time required to shut down water mains in the event of a main break or system maintenance is minimized. This reduces customer service disruptions and decreases water loss during main breaks. These valve replacements are not related to new growth. See Section 2 narrative and Map V-1 in Exhibit CC-1-C for more detail.
Total			40							**$203,628**	

ATTACHMENT 3B

Paradise Valley – PWS ID No. 0407056
SIB PLANT TABLE I, 2-2
2016 Valve Replacements

Information to be included with SIB-Eligible Project Notification

	NARUC Acct No. (SIB-eligible plant)	Replacement Plant Description (SIB-eligible plant)					Site (location description)	Replacement Plant			
Project No.	**331 T&D Mains** **333 Services** **334 Meters**	Description	Pipe length/ Quantity	Diameter / Size	Material	Installed Cost/Unit (Estimated)		Expected In-Service Date	Estimated Subtotal Cost (by NARUC Acct No)	Estimated Subtotal Cost (by project)	1. Provide narrative why Replacement Plant is necessary - replacement of existing plant that has exceeded its designated useful life and has worn out or is in deteriorating condition due to no fault of the utility - replacement of existing plant to address excessive water loss (10% or more) - replacement of existing plant for other reasons supported by persuasive showing by utility 2. Provide narrative explaining why this segment of plant is a priority. 3. Provide narrative explaining how replacing this plant will benefit existing customers. 4. Provide affirmation that Replacement Plant does not include the costs for extending or expanding facilities to serve new customers. 5. Provides reference to related page No. in the submitted detailed Engineering Analysis supporting the need for SIB. Engineering Analysis shall also include narrative explaining the utility's systematic assessment, inspection, maintenance, and repair/replacement program.
V-2	331	gate valves	40	5-4" 17-6" 14-8" 3-12" 1-24"	cast iron with rubberized epoxy coating	4"-$4,431 6"-$4,651 8"-$5,201 12"-$6,173 24"-$33,246	Area south of Lincoln Dr between 40th St and Invergordon Dr (see map V-2 for detail)	12/2016	n/a	$225,795	Replace 5-4", 17-6", 14-8", 3-12", and 1-24" (estimated, 40 total) distribution system valves that are leaking and/or inoperable. These numbers are only estimates and are based on the percentage of existing valve sizes in the project area. This area represents approximately 20% of the total system valves. Valves found broken as a part of the annual valve maintenance program will be replaced. Over a quarter of the system valves are nearing 70 years old. In the past two years, 44 valves were replaced; the average age of those valves was 35 years. Making certain that all system valves are operational ensures that the time required to shut down water mains in the event of a main break or system maintenance is minimized. This reduces customer service disruptions and decreases water loss during main breaks. These valve replacements are not related to new growth. See Section 2 narrative and Map V-2 in Exhibit CC-1-C for more detail.
Total			**40**							**$225,795**	

ATTACHMENT 3C

Paradise Valley – PWS ID No. 0407056
SIB PLANT TABLE I, 2-3
2017 Valve Replacements

Information to be included with SIB-Eligible Project Notification

	NARUC Acct No. (SIB-eligible plant)	Replacement Plant Description (SIB-eligible plant)					Site (location description)	Replacement Plant			
Project No.	**331 T&D Mains** **333 Services** **334 Meters**	Description	Pipe length/ Quantity	Diameter/ Size	Material	Installed Cost/Unit (Estimated)		Expected In-Service Date	Estimated Subtotal Cost (by NARUC Acct No)	Estimated Subtotal Cost (by project)	1. Provide narrative why Replacement Plant is necessary - replacement of existing plant that has exceeded its designated useful life and has worn out or is in deteriorating condition due to no fault of the utility - replacement of existing plant to address excessive water loss (10% or more) - replacement of existing plant for other reasons supported by persuasive showing by utility 2. Provide narrative explaining why this segment of plant is a priority. 3. Provide narrative explaining how replacing this plant will benefit existing customers. 4. Provide affirmation that Replacement Plant does not include the costs for extending or expanding facilities to serve new customers. 5. Provides reference to related page No. in the submitted detailed Engineering Analysis supporting the need for SIB. Engineering Analysis shall also include narrative explaining the utility's systematic assessment, inspection, maintenance, and repair/replacement program.
V-3	331	gate valves	40	7-4" 13-6" 12-8" 9-12" 1-24"	cast iron with rubberized epoxy coating	4"-$4,431 6"-$4,651 8"-$5,201 12"-$6,173 24"-$33,246	Area between Desert Fairways and Mockingbird Ln north of Lincoln Dr and Invergordon Dr and Scottsdale Rd south of Lincoln Dr (see map V-3 for detail)	12/2017	n/a	$242,691	Replace 7-4", 13-6", 12-8", 9-12", and 1-24" (estimated, 40 total) distribution system valves that are leaking and/or inoperable. These numbers are only estimates and are based on the percentage of existing valve sizes in the project area. This area represents approximately 20% of the total system valves. Valves found broken as a part of the annual valve maintenance program will be replaced. Over a quarter of the system valves are nearing 70 years old. In the past two years, 44 valves were replaced; the average age of those valves was 35 years. Making certain that all system valves are operational ensures that the time required to shut down water mains in the event of a main break or system maintenance is minimized. This reduces customer service disruptions and decreases water loss during main breaks. These valve replacements are not related to new growth. See Section 2 narrative and Map V-3 in Exhibit CC-1-C for more detail.
Total			40							**$242,691**	

ATTACHMENT 3D

Paradise Valley – PWS ID No. 0407056

SIB PLANT TABLE I, 2-4

2018 Valve Replacements

Information to be included with SIB-Eligible Project Notification

	NARUC Acct No. (SIB-eligible plant)	Replacement Plant Description (SIB-eligible plant)					Site (location description)	Replacement Plant			
Project No.	**331 T&D Mains** **333 Services** **334 Meters**	Description	Pipe length/ Quantity	Diameter/ Size	Material	Installed Cost/Unit (Estimated)		Expected In-Service Date	Estimated Subtotal Cost (by NARUC Acct No)	Estimated Subtotal Cost (by project)	1. Provide narrative why Replacement Plant is necessary - replacement of existing plant that has exceeded its designated useful life and has worn out or is in deteriorating condition due to no fault of the utility - replacement of existing plant to address excessive water loss (10% or more) - replacement of existing plant for other reasons supported by persuasive showing by utility 2. Provide narrative explaining why this segment of plant is a priority. 3. Provide narrative explaining how replacing this plant will benefit existing customers. 4. Provide affirmation that Replacement Plant does not include the costs for extending or expanding facilities to serve new customers. 5. Provides reference to related page No. in the submitted detailed Engineering Analysis supporting the need for SIB. Engineering Analysis shall also include narrative explaining the utility's systematic assessment, inspection, maintenance, and repair/replacement program.
V-4	331	gate valves	40	11-4" 20-6" 7-8" 1-12" 1-16"	cast iron with rubberized epoxy coating	4"-$4,431 6"-$4,651 8"-$5,201 12"-$6,173 16"-$20,046	Area south of McDonald Dr between Invergordon Dr and Scottsdale Rd (see map V-4 for detail)	12/2018	n/a	$204,380	Replace 11-4", 20-6", 7-8", 1-12", and 1-16" (estimated, 40 total) distribution system valves that are leaking and/or inoperable. These numbers are only estimates and are based on the percentage of existing valve sizes in the project area. This area represents approximately 20% of the total system valves. Valves found broken as a part of the annual valve maintenance program will be replaced. Over a quarter of the system valves are nearing 70 years old. In the past two years, 44 valves were replaced; the average age of those valves was 35 years. Making certain that all system valves are operational ensures that the time required to shut down water mains in the event of a main break or system maintenance is minimized. This reduces customer service disruptions and decreases water loss during main breaks. These valve replacements are not related to new growth. See Section 2 narrative and Map V-4 in Exhibit CC-1-C for more detail.
Total			40							**$204,380**	

ATTACHMENT 3E

Paradise Valley – PWS ID No. 0407056

SIB PLANT TABLE I, 2-5

2019 Valve Replacements

Information to be included with SIB-Eligible Project Notification

	NARUC Acct No. (SIB-eligible plant)	Replacement Plant Description (SIB-eligible plant)					Site (location description)	Replacement Plant			
Project No.	**331 T&D Mains** **333 Services** **334 Meters**	Description	Pipe length/ Quantity	Diameter/ Size	Material	Installed Cost/Unit (Estimated)		Expected In-Service Date	Estimated Subtotal Cost (by NARUC Acct No)	Estimated Subtotal Cost (by project)	1. Provide narrative why Replacement Plant is necessary - replacement of existing plant that has exceeded its designated useful life and has worn out or is in deteriorating condition due to no fault of the utility - replacement of existing plant to address excessive water loss (10% or more) - replacement of existing plant for other reasons supported by persuasive showing by utility 2. Provide narrative explaining why this segment of plant is a priority. 3. Provide narrative explaining how replacing this plant will benefit existing customers. 4. Provide affirmation that Replacement Plant does not include the costs for extending or expanding facilities to serve new customers. 5. Provides reference to related page No. in the submitted detailed Engineering Analysis supporting the need for SIB. Engineering Analysis shall also include narrative explaining the utility's systematic assessment, inspection, maintenance, and repair/replacement program.
V-5	331	gate valves	40	1-4" 15-6" 20-8" 3-12" 1-24"	cast iron with rubberized epoxy coating	4"-$4,431 6"-$4,651 8"-$5,201 12"-$6,173 24"-$33,246	Area east of Scottsdale Rd (see map V-5 for detail)	12/2019	n/a	$229,975	Replace 1-4", 15-6", 20-8", 3-12", and 1-24" (estimated, 40 total) distribution system valves that are leaking and/or inoperable. These numbers are only estimates and are based on the percentage of existing valve sizes in the project area. This area represents approximately 20% of the total system valves. Valves found broken as a part of the annual valve maintenance program will be replaced. Over a quarter of the system valves are nearing 70 years old. In the past two years, 44 valves were replaced; the average age of those valves was 35 years. Making certain that all system valves are operational ensures that the time required to shut down water mains in the event of a main break or system maintenance is minimized. This reduces customer service disruptions and decreases water loss during main breaks. These valve replacements are not related to new growth. See Section 2 narrative and Map V-5 in Exhibit CC-1-C for more detail.
Total			40							$229,975	

ATTACHMENT 4A

Paradise Valley – PWS ID No. 0407056
SIB PLANT TABLE I, 3-1
2015 Main Replacements

Information to be included with SIB-Eligible Project Notification

	NARUC Acct No. (SIB-eligible plant)	Replacement Plant Description (SIB-eligible plant)					Site (location description)	Replacement Plant			
Project No.	**331 T&D Mains** **333 Services** **334 Meters**	Description	Pipe length/ Quantity	Diameter/ Size	Material	Installed Cost/Unit (Estimated)		Expected In-Service Date	Estimated Subtotal Cost (by NARUC Acct No)	Estimated Subtotal Cost (by project)	1. Provide narrative why Replacement Plant is necessary - replacement of existing plant that has exceeded its designated useful life and has worn out or is in deteriorating condition due to no fault of the utility - replacement of existing plant to address excessive water loss (10% or more) - replacement of existing plant for other reasons supported by persuasive showing by utility 2. Provide narrative explaining why this segment of plant is a priority. 3. Provide narrative explaining how replacing this plant will benefit existing customers. 4. Provide affirmation that Replacement Plant does not include the costs for extending or expanding facilities to serve new customers. 5. Provides reference to related page No. in the submitted detailed Engineering Analysis supporting the need for SIB. Engineering Analysis shall also include narrative explaining the utility's systematic assessment, inspection, maintenance, and repair/replacement program.
WM-1	331	Distribution Main	2,179 LF	6"	PVC	$208	Pasadena Loop	12/2015	n/a	$454,179	Replace 2,179 LF of existing main with 6" PVC in Pasadena Ave, 70th St, 70th Pl, 1st St, and 71st Pl. Ln. The main was installed in 1951 and the existing pipe material is a combination of asbestos-cement and galvanized steel which has resulted in several leaks. There have been ten repairs on this main since 2009. Replacing the main will help reduce system water loss and improve system reliability. The existing main is 4" in diameter, which is not appropriate for installing hydrants or supporting fire flow, nor is it sufficient to handle the high pressures in this area (>100 psi). The main replacement is for existing customers and not related to new growth. See Section 3 narrative and Map No. WM-1 in Exhibit CC-1-C for more detail.
Total			**2,088 LF**							**$454,179**	

ATTACHMENT 4B

Paradise Valley – PWS ID No. 0407056
SIB PLANT TABLE I, 3-2
2016 Main Replacements

Information to be included with SIB-Eligible Project Notification

	NARUC Acct No. (SIB-eligible plant)	Replacement Plant Description (SIB-eligible plant)					Site (location description)	Replacement Plant			
Project No.	**331 T&D Mains** **333 Services** **334 Meters**	Description	Pipe length/ Quantity	Diameter/ Size	Material	Installed Cost/Unit (Estimated)		Expected In-Service Date	Estimated Subtotal Cost (by NARUC Acct No)	Estimated Subtotal Cost (by project)	1. Provide narrative why Replacement Plant is necessary - replacement of existing plant that has exceeded its designated useful life and has worn out or is in deteriorating condition due to no fault of the utility - replacement of existing plant to address excessive water loss (10% or more) - replacement of existing plant for other reasons supported by persuasive showing by utility 2. Provide narrative explaining why this segment of plant is a priority. 3. Provide narrative explaining how replacing this plant will benefit existing customers. 4. Provide affirmation that Replacement Plant does not include the costs for extending or expanding facilities to serve new customers. 5. Provides reference to related page No. in the submitted detailed Engineering Analysis supporting the need for SIB. Engineering Analysis shall also include narrative explaining the utility's systematic assessment, inspection, maintenance, and repair/replacement program.
WM-2	331	Distribution Main	1,462 LF	6"	PVC	$192	Mariposa Dr	12/2016	n/a	$280,944	Replace existing main in 69th Pl, Mariposa Dr, 69th St, 70th St, and Rancho Vista Dr with 1,462 feet of 6" main. The main was installed in 1954 and the existing pipe material is asbestos-cement which has resulted in several leaks. There have been two repairs on this main since 2009. Replacing the main will help reduce system water loss and improve system reliability. The existing main is 4" in diameter, which is not appropriate for installing hydrants or supporting fire flow, nor is it sufficient to handle the high pressures in this area (>100 psi). The main replacement is for existing customers and not related to new growth. See Section 3 narrative and Map No. WM-2 in Exhibit CC-1-C for more detail.
WM-3	331	Distribution Main	520 LF	4"	PVC	$126	Silvercrest Way	12/2016	n/a	$65,670	Replace existing main in Silvercrest Way between Clearwater Hills Tanks 1 and 3 with 520 feet of 4" main. The main was installed in 1953 and the existing pipe material is asbestos-cement. This main is currently known to be leaking, but requires Clearwater Hills Tanks 1 and 3 be temporarily shut down in order to be replaced. Replacing the main will help reduce system water loss and improve system reliability. The main replacement is for existing customers and not related to new growth. See Section 3 narrative and Map No. WM-3 in Exhibit CC-1-C for more detail.
Total			**1,982 LF**							**$346,614**	

ATTACHMENT 4C

Paradise Valley – PWS ID No. 0407056

SIB PLANT TABLE I, 3-3

2017 Main Replacements

Information to be included with SIB-Eligible Project Notification

	NARUC Acct No. (SIB-eligible plant)	Replacement Plant Description (SIB-eligible plant)					Site (location description)	Replacement Plant			
Project No.	**331 T&D Mains** **333 Services** **334 Meters**	Description	Pipe length/ Quantity	Diameter/ Size	Material	Installed Cost/Unit (Estimated)		Expected In-Service Date	Estimated Subtotal Cost (by NARUC Acct No)	Estimated Subtotal Cost (by project)	1. Provide narrative why Replacement Plant is necessary - replacement of existing plant that has exceeded its designated useful life and has worn out or is in deteriorating condition due to no fault of the utility - replacement of existing plant to address excessive water loss (10% or more) - replacement of existing plant for other reasons supported by persuasive showing by utility 2. Provide narrative explaining why this segment of plant is a priority. 3. Provide narrative explaining how replacing this plant will benefit existing customers. 4. Provide affirmation that Replacement Plant does not include the costs for extending or expanding facilities to serve new customers. 5. Provides reference to related page No. in the submitted detailed Engineering Analysis supporting the need for SIB. Engineering Analysis shall also include narrative explaining the utility's systematic assessment, inspection, maintenance, and repair/replacement program.
WM-4	331	Distribution Main	1,700 LF	6"	PVC	$171	Starlight Way	12/2017	n/a	$291,500	Replace existing main in Starlight Way between Cameldale Way and Superstition Ln with 1,700 feet of 6" main. Most of this main was installed in 1953 and the existing pipe material is asbestos-cement which has resulted in several leaks. There have been six repairs on this main since 2009. Replacing the main will help reduce system water loss and improve system reliability. The existing main is 4" in diameter, which is not appropriate for installing hydrants or supporting fire flow, nor is it sufficient to handle the high pressures in this area (>100 psi). The main replacement is for existing customers and not related to new growth. See Section 3 narrative and Map No. WM-4 in Exhibit CC-1-C for more detail.
Total			**1,700 LF**							**$291,500**	

ATTACHMENT 4D

Paradise Valley – PWS ID No. 0407056

SIB PLANT TABLE I, 3-4

2018 Main Replacements

Information to be included with SIB-Eligible Project Notification

	NARUC Acct No. (SIB-eligible plant)	Replacement Plant Description (SIB-eligible plant)					Site (location description)	Replacement Plant			
Project No.	**331 T&D Mains** **333 Services** **334 Meters**	Description	Pipe length/ Quantity	Diameter/ Size	Material	Installed Cost/Unit (Estimated)		Expected In-Service Date	Estimated Subtotal Cost (by NARUC Acct No)	Estimated Subtotal Cost (by project)	1. Provide narrative why Replacement Plant is necessary - replacement of existing plant that has exceeded its designated useful life and has worn out or is in deteriorating condition due to no fault of the utility - replacement of existing plant to address excessive water loss (10% or more) - replacement of existing plant for other reasons supported by persuasive showing by utility 2. Provide narrative explaining why this segment of plant is a priority. 3. Provide narrative explaining how replacing this plant will benefit existing customers. 4. Provide affirmation that Replacement Plant does not include the costs for extending or expanding facilities to serve new customers. 5. Provides reference to related page No. in the submitted detailed Engineering Analysis supporting the need for SIB. Engineering Analysis shall also include narrative explaining the utility's systematic assessment, inspection, maintenance, and repair/replacement program.
WM-5	331	Distribution Main	1,530 LF	6"	PVC	$180	Horseshoe Ln	12/2018	n/a	$274,802	Replace existing main in Horseshoe Ln and 66th Ln with 1,530 feet of 6" main. The main was installed in 1953 and the existing pipe material is asbestos-cement. This main was repaired for leaks in 2013. Replacing the main will help reduce system water loss and improve system reliability. The existing main is 4" in diameter, which is not appropriate for installing hydrants or supporting fire flow, nor is it sufficient to handle the high pressures in this area (>100 psi). The main replacement is for existing customers and not related to new growth. See Section 3 narrative and Map No. WM-5 in Exhibit CC-1-C for more detail.
WM-6	331	Distribution Main	500 LF	6"	PVC	$175	Quail Run	12/2018	n/a	$87,340	Replace existing main in the rear lot easement between Quail Run and Quail Pl with with 500 feet of 4" main in Quail Run. The main was installed in 1955 and the existing pipe material is asbestos-cement which has resulted in several leaks. There have been eight repairs on this main since 2009. Replacing the main will help reduce system water loss and increase system reliability. The existing main is 4" in diameter, which is not appropriate for installing hydrants or supporting fire flow, nor is it sufficient to handle the high pressures in this area (>100 psi). The main replacement is for existing customers and not related to new growth. See Section 3 narrative and Map No. WM-6 in Exhibit CC-1-C for more detail.
Total			**2,030 LF**							**$362,142**	

ATTACHMENT 4E

Paradise Valley – PWS ID No. 0407056

SIB PLANT TABLE I, 3-5

2019 Main Replacements

Information to be included with SIB-Eligible Project Notification

	NARUC Acct No. (SIB-eligible plant)	Replacement Plant Description (SIB-eligible plant)					Site (location description)	Replacement Plant			
Project No.	**331 T&D Mains** **333 Services** **334 Meters**	Description	Pipe length/ Quantity	Diameter/ Size	Material	Installed Cost/Unit (Estimated)		Expected In-Service Date	Estimated Subtotal Cost (by NARUC Acct No)	Estimated Subtotal Cost (by project)	1. Provide narrative why Replacement Plant is necessary - replacement of existing plant that has exceeded its designated useful life and has worn out or is in deteriorating condition due to no fault of the utility - replacement of existing plant to address excessive water loss (10% or more) - replacement of existing plant for other reasons supported by persuasive showing by utility 2. Provide narrative explaining why this segment of plant is a priority. 3. Provide narrative explaining how replacing this plant will benefit existing customers. 4. Provide affirmation that Replacement Plant does not include the costs for extending or expanding facilities to serve new customers. 5. Provides reference to related page No. in the submitted detailed Engineering Analysis supporting the need for SIB. Engineering Analysis shall also include narrative explaining the utility's systematic assessment, inspection, maintenance, and repair/replacement program.
WM-7	331	Distribution Main	525 LF	6"	PVC	$173	68 Pl and Chaparral	12/2019	n/a	$90,943	Replace existing main on Chaparral Rd and 68th Pl with 525 feet of 6" main. The main was installed in 1958 and the existing pipe material is asbestos-cement which has resulted in several leaks. There have been four repairs on this main since 2009. Replacing the main will help reduce system water loss and improve system reliability. The existing main is 4" in diameter, which is not appropriate for installing hydrants or supporting fire flow, nor is it sufficient to handle the high pressures in this area (>100 psi). The main replacement is for existing customers and not related to new growth. See Section 3 narrative and Map No. WM-7 in Exhibit CC-1-C for more detail.
WM-8	331	Distribution Main	246 LF	4"	PVC	$165	Sierra Vista	12/2019	n/a	$40,493	Replace existing main in Sierra Vista with 246 feet of 4" main. The main was installed in 1960 and the existing pipe material is galvanized steel which has resulted in several leaks. There have been two repairs on this main since 2009. Replacing the main will help reduce system water loss and improve system reliability. The main replacement is for existing customers and not related to new growth. See Section 3 narrative and Map No. WM-8 in Exhibit CC-1-C for more detail.

WM-9	331	Distribution Main	655 LF	4"	PVC	$142	Tamanar Dr	12/2019	n/a	$92,934	Replace existing main in the four cul-de-sacs on Tamanar Dr with 655 feet of 4" main. The main was installed in 1960 and the existing pipe material is galvanized steel which has resulted in several leaks. There have been three repairs on this main since 2009. Replacing the main will help reduce system water loss and improve system reliability. The main replacement is for existing customers and not related to new growth. See Section 3 narrative and Map No. WM-9 in Exhibit CC-1-C for more detail.
Total			**1,426 LF**							**$224,369**	

ATTACHMENT 5

EPCOR Water – Paradise Valley Water District
Docket No. WS-01303A-14-0010

Plan of Administration
System Improvement Benefit Mechanism ("SIB")

TABLE OF CONTENTS

I. GENERAL DESCRIPTION 56

II. DEFINITIONS 56

III. SIB RELATED FILINGS 57

IV. SURCHARGE CALCULATIONS 59

V. ADDING PROJECTS TO SIB TABLE I UNDER EMERGENCY CIRCUMSTANCES 61

VI. SIB SURCHARGE RATE DESIGN 62

VII. SIB SURCHARGE NOTICE REQUIREMENTS 63

EXHIBITS

SIB PLANT TABLE I[10] ..... EXHIBIT 1

SIB PLANT TABLE II[11] ..... EXHIBIT 2

SIB SCHEDULE A - CALCULATION OF OVERALL SIB REVENUE REQUIREMENTS AND EFFICIENCY CREDIT ..... EXHIBIT 3

SIB SCHEDULE B - CALCULATION OF SIB TRUE-UP REVENUE REQUIREMENTS ADJUSTMENT EXHIBIT 4

SIB SCHEDULE C - TYPICAL BILLS ANALYSIS ..... EXHIBIT 5

SIB SCHEDULE D - SUMMARY OF REVENUE AND RATE BASE IMPACTS INCLUDING EARNINGS TEST ..... EXHIBIT 6

[10] Revised 4-1-2014
[11] Revised 4-1-2014

I. GENERAL DESCRIPTION

This document is the Plan of Administration ("POA") for the System Improvement Benefits ("SIB") Mechanism approved for EPCOR Water's ("Company") Sun City Water District by the Arizona Corporation Commission ("ACC" or "Commission") in Decision No. XXXXX on Month, Day, Year. The SIB provides for recovery of the capital costs (return on investment, income taxes and depreciation expense) associated with distribution system improvement projects listed in SIB Plant Table I that have been verified to be completed,[12] net of associated retirements and placed in service per SIB Plant Table II and where costs have not been included in rate base for recovery in Decision No. XXXXX. Any expenditures offset by contributions in aid of construction or advances in aid of construction are not eligible for inclusion in the SIB.

II. DEFINITIONS

- NARUC – National Association of Regulatory Utility Commissioners
- SIB – System Improvement Benefit mechanism to be implemented between rate proceedings to support investment in plant recorded in SIB Eligible NARUC accounts.
- SIB Eligible Plant – Investments in plant recorded in SIB Eligible NARUC accounts.
- SIB Eligible NARUC accounts:
  - NARUC Account No. 309 – Supply Mains
  - NARUC Account No. 331 – Transmission and Distribution Mains
  - NARUC Account No. 333 – Services
  - NARUC Account No. 334 - Meters and Meter Installations;
  - NARUC Account No. 335 – Hydrants
- SIB Plant Table I (Excerpt attached as Exhibit 1)[13] – The schedule of planned SIB eligible projects that is either approved in the Company's most recent rate case or updated by a subsequent Commission decision. As used herein, this term refers to the most recently updated SIB Plant Table I available unless reference is made to a particular Commission decision.
- SIB Plant Table II – The schedule of completed and verified SIB eligible projects from the latest Commission approved SIB Plant Table I and associated retirements.

[12] Acceptable form of verifications may include the Maricopa County Environmental Services Department Approval of Construction, Professional Engineer's Certificate of Completion, etc.
[13] See Company filing of August 22, 2013

- Total Revenue Requirement – The revenue requirement approved in Decision No. XXXXX, plus the SIB Revenue Requirement.

- SIB Revenue Requirement – The revenue requirement equal to the return on investment, income taxes and depreciation expense necessary to support the SIB Plant Table II amounts.

- SIB Revenue Requirement Efficiency Credit – An amount equal to 5 percent of the SIB Revenue Requirement.

- SIB Authorized Revenue – Amount equal to the SIB Revenue Requirement less the SIB Revenue Requirement Efficiency Credit plus any SIB True up Adjustment.

- Gross SIB Surcharge – Amount to be shown on customers' bills based on meter sizes without consideration to the SIB Surcharge Efficiency Credit.

- SIB Surcharge Efficiency Credit – An amount equal to 5 percent of the Gross SIB Surcharge to be shown on customers' bills.

- SIB Surcharge – The amount equal to the Gross SIB Surcharge less the SIB Surcharge Efficiency Credit to be charged, based on meter size, calculated to recover the SIB Authorized Revenue. The SIB Surcharge is to be shown as a separate line item on customers' bills.

- SIB True-up Adjustment – An amount to adjust for over- or under-collection of the SIB Authorized Revenues as compared with the total SIB Surcharges collected for the preceding 12 month period. Each SIB true–up shall also analyze the cumulative over- or under-collections to include a comparison of all past SIB Authorized Revenues, total SIB Surcharge collections, and prior true-ups to be used in calculation of the SIB true-up surcharge or credit by meter size.

III. SIB RELATED FILINGS

A. Progress Reports – Once a SIB is approved in a decision, the Company must file with Docket Control semi-annual status reports delineating the status of all SIB Eligible Plant, on a project by project basis as listed in the latest Commission approved SIB Plant Table I. The initial semi-annual status report shall include only those projects from the initial SIB Plant Table I which the Company has designated as most likely to be completed in the first 12 months.

B. Reconciliation and True Up – Once a SIB Surcharge is implemented, the Company must file annually to true up its SIB Surcharge collections over the preceding twelve months with the SIB Authorized Revenue for that period and establish a surcharge or credit to true up over or under collections, regardless of whether it seeks a new surcharge. The filing dates for these annual true-ups shall be as established in the Commission's Decision approving the SIB Surcharge.

C. SIB Surcharge Requests – To obtain its SIB Surcharge the Company must file the following:

1. SIB Plant Table II[14] (with supporting information and documentation), showing the SIB eligible projects completed for which the Company seeks cost recovery. Such projects must:

   a. be projects listed in the SIB Plant Table I;

   b. have been completed by the Company;

   c. have been verified; and

   d. be actually serving customers.

2. A summary of Commission approved SIB-eligible projects contemplated for the next twelve (12)-month SIB surcharge period from SIB Plant Table I[15] from Decision No. XXXXX to allow the Commission to establish the latest SIB Plant Table I.

3. SIB Schedule A (sample attached as Exhibit 3), showing a calculation of the SIB Revenue Requirement and SIB Revenue Requirement Efficiency Credit, SIB Authorized Revenue, Gross SIB Surcharge, SIB Surcharge Efficiency Credit, and the SIB Surcharge. Schedule A shall be supported by revenue requirements schedules supporting the revenue requirements in Decision No. XXXXX and the pro-forma revenue requirements including the effects of SIB Eligible Plant.

4. Schedule B (sample attached as Exhibit 4) showing the overall SIB True-up Adjustment calculation for the prior twelve-month SIB Surcharge period, as well as the individual SIB True-up Adjustment for each meter size.

5. SIB Schedule C (sample attached as Exhibit 5) showing the effect of the SIB Surcharge on a typical residential customer bill for both median and average usage.

6. SIB Schedule D (sample attached as Exhibit 6) which shall include an analysis of the impact of completed SIB Eligible Plant projects on the fair value rate base, revenue, and the fair value rate of return. The Company shall also file the following as part of SIB D Schedule:

[14] Sample attached as Exhibit 2

[15] Beginning with its SIB Surcharge Request filing for the second 12-month surcharge period, the Company may request a change from the estimated Cost/Unit (approved in the Company's most recent rate case Decision) due to inflation using the latest calendar year Consumer Price Index (see sample attached as Exhibit 1). This may be done only if the original SIB Plant Table I unit cost did not account for inflation.

a. the most current balance sheet at the time of the filing;

b. the most current income statement;

c. an earnings test schedule;

d. a rate review schedule (including the incremental and pro forma effects of the proposed increase);

e. an adjusted rate base schedule; and

f. a Construction Work in Progress ledger for each project showing accumulation of charges by month and paid contractor invoices including a summary page showing the calculation of the SIB eligible rate base and depreciation expense net of associated retirements.

D. The Company will maintain and provide to the Commission's Utilities Division (Staff) and the Residential Utility Consumer Office (RUCO) schedules in Microsoft Excel format (with all formulae intact) supporting the revenue requirement approved in Decision No. XXXXX, and the effects of completed SIB eligible plant for the current SIB Surcharge Request and any previously approved SIB Surcharge and SIB True-up Adjustment Requests.

E. The Company may make its initial SIB Surcharge Request through Docket Control no earlier than twelve months after the entry of Decision No. XXXXX.

F. The Company may make no more than one SIB Surcharge Request every twelve months with no more than five SIB Surcharge Requests between rate case decisions. A True-up must be filed with each SIB Surcharge Request, except the first.

G. Unless otherwise authorized by the Commission, the Company shall be required to file its next general rate case no later than Month, Day, Year, with a test year ending no later than Month, Day, Year.

H. Any SIB Surcharges that are in effect shall be reset to zero upon the date new rates become effective in the Company's next general rate case.

IV. SURCHARGE CALCULATIONS

A. Calculations of Amounts to Be Collected By the SIB Surcharge

1. The amount to be collected by the SIB Authorized Revenue shall be equal to the SIB Revenue Requirement minus the SIB Revenue Requirements Efficiency Credit plus any SIB True up Adjustment.
For purposes of calculating the SIB Revenue Requirement:

(1) The required rate of return is equal to the overall rate of return authorized in Decision No. XXXXX.

(2) The gross revenue conversion factor/tax multiplier is equal to the gross revenue conversion factor/tax multiplier approved in Decision No. XXXXX; and

(3) The applicable depreciation rate(s) is equal to the depreciation rate(s) approved in Decision No. XXXXX.

2. The SIB plant unit cost to be used in calculating the SIB Revenue Requirement shall be the lesser of the installed SIB plant unit cost listed in SIB Plant Table II or 110 percent of the SIB plant estimated unit cost listed in the latest Commission approved SIB Plant Table I.

3. The amount to be collected by each SIB Surcharge Request shall be capped annually at five percent of the revenue requirement authorized in Decision No. XXXXX.

B. Reconciliation And True-Ups

1. The revenue collected by the total SIB Surcharges over the preceding twelve months shall be trued-up and reconciled with the SIB Authorized Revenue for that period.

2. A new SIB Surcharge shall be combined with an existing SIB Surcharge such that a single SIB surcharge and SIB Efficiency Credit are shown on a customer's bill.

3. For each twelve (12) month period that a SIB surcharge is in effect, the Company shall reconcile the amounts collected by the SIB Surcharge with the SIB Authorized Revenue, for that twelve (12)-month period, consistent with Schedule B, attached hereto as Exhibit 4.

4. Any under- or over-collected SIB Authorized Revenues shall be recovered or refunded, without interest, over a twelve-month period by means of a SIB True-up Surcharge or Credit.

5. Starting with the second annual SIB Surcharge, where there are over- or under-collected balances, such over- or under-collected balances shall be carried over to the next year, and considered in the calculation of the new SIB True-up Surcharge or Credit. If, after the five-year period there remains an over- or under-collected balance, such balance shall be reset to zero, and addressed in the next rate case.

C. Earnings Test

1. Once a SIB Surcharge is in effect, the Company shall be required to perform an annual earnings test calculation for each SIB Surcharge Request to determine whether the actual rate of return reflected by the operating income for the affected system or division for the relevant 12-month period exceeded the most recently authorized fair value rate of return for the affected system or division.

2. The earnings test shall be:

a) based on the most recent available operating income,

b) adjusted for any operating revenue and expense adjustments adopted in the most recent general rate case; and

c) based on the rate base adopted in the most recent general rate case, updated to recognize changes in plant, accumulated depreciation, contributions in aid of construction, advances in aid of construction, and accumulated deferred income taxes through the most recent available financial statement (quarterly or longer).

V. ADDING PROJECTS TO SIB TABLE I UNDER EMERGENCY CIRCUMSTANCES

A. The Company may seek Commission approval to add projects in SIB Plant Table I only in the event of emergency circumstances. No such changes may be made without Commission approval.

B. Any addition to SIB Plant Table I must be plant investment that maintains or improves existing customer service, system reliability, integrity and safety. Eligible plant additions are limited to plant replacement projects. The costs of extending facilities or capacity to serve new customers are not recoverable through the SIB mechanism.

C. To be eligible for SIB treatment, a project must be SIB Eligible Plant.

D. SIB Eligible Plant must satisfy at least one of the following criteria:

1. Water loss for the system exceeds ten (10) percent, as calculated by the following formula: ((Volume of Water Produced and/ or Purchased) – (Volume of Water Sold + Volume of Water Put to Beneficial Use)) divided by (Volume of Water Produced and/or Purchased). If the Volume of Water Put to Beneficial Use is not metered, it shall be established in a reliable, verifiable manner.

2. Plant assets that have remained in service beyond their useful service lives (based on the Company's system's authorized utility plant depreciation rates) and are in need of replacement due to being worn out or in a deteriorating condition through no fault of the Company;

3. Any other engineering, operational or financial justification supporting the need for a plant asset replacement, other than the Company's negligence or improper maintenance, including, but not limited to:

   a. A documented increasing level of repairs to, or failures of, a plant asset justifying its replacement prior to reaching the end of its useful service life (e.g. black poly pipe);

   b. Assets that are required to be moved, replaced or abandoned by a governmental agency or political subdivision if the Company can show that it has made a good faith effort to seek reimbursement for all or part of the costs incurred.

VI. SIB SURCHARGE RATE DESIGN

A. The SIB Surcharge rate design shall be calculated as follows:

1. The SIB Surcharge shall be a fixed monthly surcharge containing a Gross SIB Surcharge and the SIB Surcharge Efficiency Credit as its two components.

2. The SIB Surcharge shall be calculated by dividing the SIB Authorized Revenue by the number of equivalent active 5/8-inch meters at the end of the most recent twelve (12) month period, and shall increase with meter size based on the following meter capacity multipliers:

5/8-inch x ¾-inch	1.0 times
¾-inch	1.5 times
1-inch	2.5 times
1½-inch	5 times
2-inch	8 times
3-inch	16 times
4-inch	25 times
6-inch	50 times
8-inch	80 times
10-inch & above	115 times

B. The SIB Surcharge shall apply to all of the Company's metered customers, including private fire service customers.

VII. SIB SURCHARGE NOTICE REQUIREMENTS

A. Thirty days prior to filing each application to implement a SIB Surcharge, the Company shall file a proposed form of notice to Staff for review, and a Summary of what the Company will be requesting in the application. Once the notice is approved by Staff, the Company shall provide a copy of the approved notice to its customers via newsletter or bill insert. After providing notice, the Company shall fie a copy of the notice and a description of when and how it provided notice with each application to implement a SIB surcharge. The Summary and Notice shall include at least the following information:

1. The individual Gross SIB Surcharge, by meter size;
2. The individual SIB Surcharge Efficiency Credit, by meter size;
3. The SIB Surcharge, by meter size; and
4. Directions to where the customer may obtain a summary of the projects included in the current SIB Surcharge request, including a description of each project and its cost.

B. A SIB Surcharge shall not become effective until approved by the Commission.

C. The Company shall provide a proposed order for the Commission's consideration.

D. The Company shall notice its customers of the SIB Surcharge approved herein as soon as possible in a form acceptable to Staff and consistent with the notice requirements of Decision No. XXXXX.

E. The Company shall not implement the SIB Surcharge until 30 days after having filed documentation in Docket Control providing the date when all effected customers have been notified of the Commission approved SIB Surcharge.

ATTACHMENT 6A

Paradise Valley Water District, PWSID No. 0407056

SIB PLANT TABLE I

Information to be included with SIB-Eligible Project Filings

Replacement Plant Description (new plant) (SIB-eligible plant)											
Project No.	NARUC Acct No./ Plant 331 T&D Mains . 331 T&D Valves 333 Services	Units (Quantity)	Diameter/ Size	Material	Cost/Unit (estimated)[16]	Cost/Unit (estimated)[17]	Subtotal Cost (estimated)	Site (location description)	Expected In-Service Date	Project Status	1. Provide narrative why Replacement Plant is necessary - replacement of existing plant that has exceeded its designated useful life and has worn out or is in deteriorating condition due to no fault of the utility - replacement of existing plant to address excessive water loss (10% or more) - replacement of existing plant for other reasons supported by persuasive showing by utility 2. Provide narrative explaining why this segment of plant is a priority. 3. Provide narrative explaining how replacing this plant will benefit existing customers. 4. Provide affirmation that Replacement Plant does not include the costs for extending or expanding facilities to serve new customers. 5. Provide reference to related page No. in the submitted detailed Engineering Analysis supporting the need for SIB. Engineering Analysis shall also include narrative explaining the utility's systematic assessment, inspection, maintenance and repair/replacement program.
						Estimated Total Cost					

[16] Per the Commission approved Initial SIB Table I.

[17] Beginning with its SIB Surcharge Request filing for Year Two, the Company may request a change from the estimated Cost/Unit (in the Commission approved Initial SIB Table I) due to inflation using the latest calendar year Consumer Price Index. This may be done only if the Initial SIB Plant Table I unit cost did not account for inflation.

ATTACHMENT 6B

Paradise Valley Water District, PWSID No. 0407056

SIB PLANT TABLE II (Page 1a)

Information to be included with SIB-Eligible Completed Project Filings

Replacement Plant Description (installed new plant) (SIB-eligible plant)									Original Plant (Plant Being Retired)				
Project No.	NARUC Acct No./ Plant 331 T&D Mains	Description (Note any changes)	Installed Quantity	Diameter/ Size	Material	Installed Cost/Unit (actual cost)	Actual Cost (by NARUC Acct No)	In-Service Date (provide ADEQ AOC and other related approvals by state and/or federal agencies when applicable; pictures of installed plant)	Actual Retirement Date	Original In-Service Date	Original Cost	Accumulated Depreciation Reserve (as of the actual retirement date)	Net Value of Retired Plant

Revised 4/1/2014

ATTACHMENT 6C

Paradise Valley Water District, PWSID No. 0407056

SIB PLANT TABLE II (Page 1b)

Information to be included with SIB-Eligible Completed Project Filings

Project No.	NARUC Acct. No./ Plant 331 T&D Mains	a Cost/Unit (Estimated) (from Table I)	b Cost/Unit (Installed)	c Installed Units (Quantity)	d Actual Cost (by NARUC Acct) (d)=(b) x (c)	e Is (b) less than 110% of (a)? Enter "Yes" or "No	f If (e) is "No", Calculate Allowable Installed cost: (f)=110% of (a) x (c)	g Net Value of Retired Plant	h SIB Allowed Cost (h)=(d)-(g) when Column (e) is "Yes" (h)=(f)-(g) when Column (e) is "No"

ATTACHMENT 6D

Paradise Valley Water District, PWSID No. 0407056

SIB PLANT TABLE II (Page 2a)

Information to be included with SIB-Eligible Completed Project Filings

Replacement Plant Description (installed new plant) (SIB-eligible plant)									Original Plant (Plant Being Retired)				
Project No.	NARUC Acct No./ Plant 331 T&D Valves	Description (Note any changes)	Installed Quantity	Diameter/ Size	Material	Installed Cost/Unit (actual cost)	Actual Cost (by NARUC Acct No)	In-Service Date (provide ADEQ AOC and other related approvals by state and/or federal agencies when applicable; pictures of installed plant)	Actual Retirement Date	Original In-Service Date	Original Cost	Accumulated Depreciation Reserve (as of the actual retirement date)	Net Value of Retired Plant

ATTACHMENT 6E

Paradise Valley Water District, PWSID No. 0407056
SIB PLANT TABLE II (Page 2b)

Information to be included with SIB-Eligible Completed Project Filings

Project No.	NARUC Acct. No./ Plant 331 T&D Valves	a Cost/Unit (Estimated) (from Table I)	b Cost/Unit (Installed)	c Installed Units (Quantity)	d Actual Cost (by NARUC Acct) (d)=(b) x (c)	e Is (b) less than 110% of (a)? Enter "Yes" or "No	f If (e) is "No", Calculate Allowable Installed cost: (f)=110% of (a) x (c)	g Net Value of Retired Plant	h SIB Allowed Cost (h)=(d)-(g) when Column (e) is "Yes" (h)=(f)-(g) when Column (e) is "No"

ATTACHMENT 6F

Paradise Valley Water District, PWSID No. 0407056

SIB PLANT TABLE II (Page 3a)

Information to be included with SIB-Eligible Completed Project Filings

Replacement Plant Description (installed new plant) (SIB-eligible plant)									Original Plant (Plant Being Retired)				
Project No.	NARUC Acct No./ Plant 333 Services	Description (Note any changes)	Installed Quantity	Diameter/ Size	Material	Installed Cost/Unit (actual cost)	Actual Cost (by NARUC Acct No)	In-Service Date (provide ADEQ AOC and other related approvals by state and/or federal agencies when applicable; pictures of installed plant)	Actual Retirement Date	Original In-Service Date	Original Cost	Accumulated Depreciation Reserve (as of the actual retirement date)	Net Value of Retired Plant

ATTACHMENT 6G

Paradise Valley Water District, PWSID No. 0407056

SIB PLANT TABLE II (Page 3b)

Information to be included with SIB-Eligible Completed Project Filings

Project No.	NARUC Acct. No./ Plant 333 Services	a Cost/Unit (Estimated) (from Table I)	b Cost/Unit (Installed)	c Installed Units (Quantity)	d Actual Cost (by NARUC Acct) (d)=(b) x (c)	e Is (b) less than 110% of (a)? Enter "Yes" or "No	f If (e) is "No", Calculate Allowable Installed cost: (f)=110% of (a) x (c)	g Net Value of Retired Plant	h SIB Allowed Cost (h)=(d)-(g) when Column (e) is "Yes" (h)=(f)-(g) when Column (e) is "No"

ATTACHMENT 6H

Paradise Valley Water District, PWSID No. 0407056

SIB PLANT TABLE II- SUMMARY (Page 4)

Information to be included with SIB-Eligible Completed Project Filings

Project No.	NARUC Acct No. (SIB-eligible plant) 331 333	Description	1 Actual Cost (from Table II column d)	2 **SIB Allowed Cost**[18] (from Table II column h)
		Total		

[18] Total SIB Allowed Cost to be used in calculating the SIB Revenue Requirement

ATTACHMENT 6I

EPCOR Water
Paradise Valley Water District, PWSID No. 0407056
Decision No. XXX
Effective Date XXX

SIB Schedule A

Check if

☐ Consolidated

LINE NO.	CALCULATION OF OVERALL SIB REVENUE REQUIREMENT AND EFFICIENCY CREDIT		
1	Total Authorized Revenue Requirement, Per Decision xxxxx, See Attached Schedules	TBD	
2	SIB Revenue Cap percentage	5%	Per Year
3	SIB Revenue Cap	TBD	
4	SIB Allowed Cost (Per SIB Table II, Summary page, Column 2)	TBD	
5	Total Revenue Requirement, (with pro forma SIB investments). See attached revenue requirements schedules as provided by Company.	TBD	
6	SIB Revenue Requirement (line 5 minus line 1)	TBD	
7	SIB Revenue Requirement Efficiency Credit	5%	
8	SIB True-Up Adjustment (from SIB Schedule B)	TBD	
9	SIB Authorized Revenue (line 6 plus line 8)	TBD	
	* Number of Equivalent Meters, below		TBD
	* Charge per 5/8" meter		TBD

	No. of Customers at SIB Cycle Year End	Multipliers	5/8 x 3/4-inch Equivalent Meters	Fixed Surcharge	Annual Rev by Meter Size
5/8 x 3/4-inch	TBD	1	TBD	TBD	TBD
3/4-inch	TBD	1.5	TBD	TBD	TBD
1-inch	TBD	2.5	TBD	TBD	TBD
1 1/2-inch	TBD	5	TBD	TBD	TBD
2-inch	TBD	8	TBD	TBD	TBD
3-inch	TBD	16	TBD	TBD	TBD
4-inch	TBD	25	TBD	TBD	TBD
6 -inch	TBD	50	TBD	TBD	TBD
8 -inch	TBD	80	TBD	TBD	TBD
10-inch	TBD	115	TBD	TBD	TBD
Totals	TBD		TBD		TBD

ATTACHMENT 6J

EPCOR Water
Paradise Valley Water District, PWSID No. 0407056
Decision No. XXX
Effective Date XXX

SIB Schedule B

CALCULATION OF SIB TRUE-UP REVENUE REQUIREMENTS ADJUSTMENT	SIB Filing Sequence				
	SIB year 1*	SIB year 2	SIB year 3	SIB year 4	SIB year 5
SIB Authorized Revenue , Per SIB Schedule A	TBD	TBD	TBD	TBD	TBD
Total SIB Surcharges collections for Period	TBD	TBD	TBD	TBD	TBD
SIB True-Up Adjustment	TBD	TBD	TBD	TBD	TBD

Note: The Company shall also provide an analysis of cumulative over or under collections and a net amount to be included in the SIB True-up Adjustment

*SIB year 1 is one year after effective date

ATTACHMENT 6K

EPCOR Water
Paradise Valley Water District, PWSID No. 0407056
Decision No. XXX
Effective Date XXX

SIB Schedule C

TYPICAL BILL IMPACTS
5/8 -Inch Customers

		Step 1			Step 2			Step 3			Step 4			Step 5		
Gallons	Per Dec. No. XXXXX(no SIB Surcharge)	Total Bill w/ SIB Year 1 *	SIB Inc.	Cumulative % Increase	Total Bill w/ SIB Year 2 *	SIB Inc.	Cumulative % Increase	Total Bill w/ SIB Year 3 *	SIB Inc.	Cumulative % Increase	Total Bill w/ SIB Year 4 *	SIB Inc.	Cumulative % Increase	Total Bill w/ SIB Year 5 *	SIB Inc.	Cumulative % Increase
0	TBD	TBD	TBD	TBD	TBD	TBD	TBD	TBD	TBD	TBD	TBD	TBD	TBD	TBD	TBD	TBD
1000	TBD	TBD	TBD	TBD	TBD	TBD	TBD	TBD	TBD	TBD	TBD	TBD	TBD	TBD	TBD	TBD
2000	TBD	TBD	TBD	TBD	TBD	TBD	TBD	TBD	TBD	TBD	TBD	TBD	TBD	TBD	TBD	TBD
3000	TBD	TBD	TBD	TBD	TBD	TBD	TBD	TBD	TBD	TBD	TBD	TBD	TBD	TBD	TBD	TBD
4000	TBD	TBD	TBD	TBD	TBD	TBD	TBD	TBD	TBD	TBD	TBD	TBD	TBD	TBD	TBD	TBD
5000	TBD	TBD	TBD	TBD	TBD	TBD	TBD	TBD	TBD	TBD	TBD	TBD	TBD	TBD	TBD	TBD
6000	TBD	TBD	TBD	TBD	TBD	TBD	TBD	TBD	TBD	TBD	TBD	TBD	TBD	TBD	TBD	TBD
7000	TBD	TBD	TBD	TBD	TBD	TBD	TBD	TBD	TBD	TBD	TBD	TBD	TBD	TBD	TBD	TBD
8000	TBD	TBD	TBD	TBD	TBD	TBD	TBD	TBD	TBD	TBD	TBD	TBD	TBD	TBD	TBD	TBD
9000	TBD	TBD	TBD	TBD	TBD	TBD	TBD	TBD	TBD	TBD	TBD	TBD	TBD	TBD	TBD	TBD
10000	TBD	TBD	TBD	TBD	TBD	TBD	TBD	TBD	TBD	TBD	TBD	TBD	TBD	TBD	TBD	TBD
11000	TBD	TBD	TBD	TBD	TBD	TBD	TBD	TBD	TBD	TBD	TBD	TBD	TBD	TBD	TBD	TBD
12000	TBD	TBD	TBD	TBD	TBD	TBD	TBD	TBD	TBD	TBD	TBD	TBD	TBD	TBD	TBD	TBD
13000	TBD	TBD	TBD	TBD	TBD	TBD	TBD	TBD	TBD	TBD	TBD	TBD	TBD	TBD	TBD	TBD
14000	TBD	TBD	TBD	TBD	TBD	TBD	TBD	TBD	TBD	TBD	TBD	TBD	TBD	TBD	TBD	TBD
15000	TBD	TBD	TBD	TBD	TBD	TBD	TBD	TBD	TBD	TBD	TBD	TBD	TBD	TBD	TBD	TBD
20000	TBD	TBD	TBD	TBD	TBD	TBD	TBD	TBD	TBD	TBD	TBD	TBD	TBD	TBD	TBD	TBD
25000	TBD	TBD	TBD	TBD	TBD	TBD	TBD	TBD	TBD	TBD	TBD	TBD	TBD	TBD	TBD	TBD
Median (Cite Usage)	TBD	TBD	TBD	TBD	TBD	TBD	TBD	TBD	TBD	TBD	TBD	TBD	TBD	TBD	TBD	TBD
Mean (Cite Usage)	TBD	TBD	TBD	TBD	TBD	TBD	TBD	TBD	TBD	TBD	TBD	TBD	TBD	TBD	TBD	TBD

*: Bills in Years 1 -5 are net of Efficiency Credit

ATTACHMENT 6L

EPCOR Water
Paradise Valley Water District, PWSID No. 0407056
Decision No. XXX
Effective Date XXX

SIB Schedule D

Fair Value Rate Base, Revenue & Rate of Return - Decision No. _____

	Per Dec. No XXXXXX	SIB Step 1	SIB Step 2	SIB Step 3	SIB Step 4	SIB Step 5	Total Pro-forma with SIB
Total Operating Revenue *	TBD	TBD	TBD	TBD	TBD	TBD	TBD
Operating Expenses	TBD	TBD	TBD	TBD	TBD	TBD	TBD
Operations & Maintenance	TBD	TBD	TBD	TBD	TBD	TBD	TBD
Depreciation & Amortizaiton	TBD	TBD	TBD	TBD	TBD	TBD	TBD
Taxes Other than Income	TBD	TBD	TBD	TBD	TBD	TBD	TBD
Income Taxes	TBD	TBD	TBD	TBD	TBD	TBD	TBD
Total Operating Expenses	TBD	TBD	TBD	TBD	TBD	TBD	TBD
Operating Income	TBD	TBD	TBD	TBD	TBD	TBD	TBD
Rate Base	TBD	TBD	TBD	TBD	TBD	TBD	TBD
Rate of Return on Rate Base	TBD	TBD	TBD	TBD	TBD	TBD	TBD
Authorized Rate of Return on Rate Base	TBD	TBD	TBD	TBD	TBD	TBD	TBD

*: SIB Revenues in Years 1 -5 are net of
5% Efficiency Credit

ATTACHMENT 6M

EPCOR Water

Paradise Valley Water District, PWSID No. 0407056

Decision No. XXX

	Schedule D	Fair Value Rate Base, Revenue & Rate of Return
		Rate Review
		Balance Sheet
		Income Statement
		Earnings Test
		Rate Base
		Construction Work in Progerss (CWIP) Ledger
		Calculation of Corporate Allocation Factor

EXHIBIT MST-3

ENGINEERING REPORT FOR EPCOR WATER ARIZONA, INC.,

SUN CITY WATER DISTRICT

BY MICHAEL THOMPSON

JANUARY 20, 2015

ENGINEERING REPORT FOR
EPCOR Water Arizona Inc.
Sun City Water District

Docket No. WS-01303A-14-0010 (Rates)

By Michael Thompson, P. E.

December 26, 2014

EXECUTIVE SUMMARY

CONCLUSIONS

1. The Arizona Corporation Commission ("ACC" or "Commission") Utilities Division Staff ("Utilities Staff" or "Staff") concludes that the Sun City Water District ("Sun City" or "District") water systems, have adequate production and storage capacity to serve the present customer base and any reasonable growth.

2. The Maricopa County Environmental Services Department ("MCESD") Compliance Status Reports ("CSRs"), indicate that the District water systems are currently delivering water that meets water quality standards required by 40 CFR 141 (National Primary Drinking Water Regulations) and Arizona Administrative Code, Title 18, Chapter 4.

3. The District's water system service areas are located within the Arizona Department of Water Resources ("ADWR") Phoenix Active Management Area ("AMA").

4. ADWR's Water Provider Compliance Reports, dated June 6, 2014, indicate that the District's water systems are currently in compliance with departmental requirements governing water providers and/or community water systems.

5. According to the Commissions Utilities Division Compliance Section database the District currently has no delinquent Commission compliance items.

6. The District has approved Cross-Connection/Backflow Prevention and Curtailment Tariffs on file with the Commission.

7. The District has ten (10) Best Management Practices ("BMPs") on file with the Commission.

8. The Sun City water system has seven (7) inactive wells, listed under Table A, that have been disconnected, abandoned, capped, or are out of service. Staff concludes that the wells are not used and useful to the District's provision of service.

9. The Tierra Del Rio water system has one (1) well, listed under Table B, which has been capped. Staff concludes that the well is not used and useful to the District's provision of service.

10. On May 2, 2012, the Environmental Protection Agency ("EPA") revised and implemented the Unregulated Contaminant Monitoring Rule 3 ("UCMR3"). The District began sampling for the first sample set of UCRM3 contaminants in February 2013. The second set of samples were sampled in August 2013. The total cost for testing the samples, as illustrated in Table K, was $18,900. Staff concludes that the one-time expense of $18,900 associated with sampling and testing of the UCMR3 contaminants is reasonable and appropriate.

11. The District has not requested any Post-Test Year Capital Investment Projects ("IPs") be included as Post Test Year Plant Additions.

12. Staff has determined that District's proposed System Improvement Benefit ("SIB") Mechanism (eligible 5-year infrastructure replacement plan), totaling $10,999,325 as tabulated in Table N, to be reasonable and appropriate. However, no "used and useful" determination of the proposed plant items was made, and no conclusions should be inferred for rate base purposes in the future.

RECOMMENDATIONS

1. Staff recommends, for the District, an annual water testing expense of $25,080, as tabulated in Table H, be used for the purposes of this application.

2. Staff recommends the depreciation rates listed under "Staff's Recommended Rates" in Table I be adopted.

3. Staff has no objections to the continued use of the currently authorized meter and service installation charges, as proposed by the District, and recommends the charges listed under "Staff's Recommendations" in Table J be adopted.

4. EPCOR Water Arizona, Inc. ("EWAZ" or "Company") filed a proposed change to the Meter Repair and/or Replacement Tariff ("BMP 4.2"). In the proposed change, EWAZ requested that paragraph 3 of the BMP tariff, which refers to the inspection of meters, be modified such that pulling a meter for inspection would no longer be required and therefore be stricken from the tariff. Staff recommends approval of the modification in BMP 4.2, as proposed by EWAZ.

5. Staff recommends approval of the District's proposed Plant Table I of the System Improvement Benefits ("SIB") Mechanism (eligible 5 year infrastructure improvement projects), submitted as a supplement to the District's application by EWAZ on March 26, 2014, totaling $10,999,325 as tabulated in Table N. Staff further recommends that SIB Attachments 2A-2D, 3A-3E, 4A-4E, and 5A-5E, 6, and 7A-7O be adopted.

TABLE OF CONTENTS

PAGE

A. INTRODUCTION AND LOCATION OF COMPANY 6
B. DESCRIPTION OF THE WATER SYSTEMS 6
(1) *SUN CITY WATER SYSTEM – PUBLIC WATER SYSTEM ("PWS") NO. 04-07-099* 6
(2) *TIERRA DEL RIO WATER SYSTEM – PWS NO. 04-07-532* 9
C. WATER USE 11
(1) *WATER SOLD* 11
(2) *NON-ACCOUNTED FOR WATER* 11
(3) *WATER SYSTEM ANALYSIS* 12
D. GROWTH 12
E. MARICOPA COUNTY ENVIRONMENTAL SERVICES DEPARTMENT ("MCESD") COMPLIANCE 13
~~F. ARIZONA DEPARTMENT OF WATER RESOURCES ("ADWR") COMPLIANCE ..... 15~~
G. ARIZONA CORPORATION COMMISSION COMPLIANCE 16
H. DEPRECIATION RATES 16
I. OTHER ISSUES 18
(1) *SERVICE LINE AND METER INSTALLATION CHARGES* 18
(2) *CURTAILMENT TARIFF* 19
(3) *CROSS-CONNECTION/BACKFLOW PREVENTION TARIFF* 19
(4) *BEST MANAGEMENT PRACTICES ("BMP") TARIFF* 19
(5) *UNREGULATED CONTAMINANT MONITORING* 19
(6) *SUN CITY WATER DISTRICT POST TEST YEAR PLANT ADDITIONS – POST TEST YEAR INVESTMENT PROJECTS ("TPS") USED AND USEFUL (JULY ~~2103~~ 2013 – JUNE 30, 2014)* 20
(7) *SYSTEM IMPROVEMENT BENEFIT ("SIB") – SUN CITY WATER DISTRICT* 20

FIGURES

PAGE

FIGURE 1. MARICOPA COUNTY MAP 24
FIGURE 2. SUN CITY WATER DISTRICT CERTIFIED AREA 25
FIGURES 3A-3F. SUN CITY WATER SYSTEM SCHEMATIC DIAGRAMS 26-31
Figure 3A. Plant Site #1, Well Sites 1.1, 1.2, & 4.1 26
Figure 3B. Plant Site #2, Well Sites 2.1, 2.2, & 2.3 27
Figure 3C. Plant Site #3, Well Site 3..1 28
Figure 3D. Plant Site #5, Well Sites 5.1, 5.2, 5.3, 5.4, & 5.5 29
Figure 3E. Plant Site #6, Well Sites 6.1, 6.2, 6.3, & 6.4. 30
Figure 3F. Plant Site #8, Well Sites 8.1, 8.2, 8.3, & 8.3B. 31
FIGURE 4A-4B. TIERRA DEL RIO WATER SYSTEM SCHEMATIC DIAGRAMS 32-33
Figure 4A. Plant Site #9, Well Sites 9.1, 9.2, 9.3, & 9.4 32
Figure 4B. Booster Plant Site 33
FIGURE 5A. SUN CITY WATER SYSTEM WATER CONSUMPTION GRAPH 34
FIGURE 5B. TIERRA DEL RIO WATER SYSTEM WATER CONSUMPTION GRAPH 34
FIGURE 6. SUN CITY WATER DISTRICT ACTUAL & PROJECTED GROWTH GRAPH 35

ATTACHMENTS

METER REPAIR AND/OR REPLACEMENT TARIFF - BMP 4.2 1

SIB SERVICE LINE REPLACEMENTS, table I, 1-1 thru 1-4 ..... 2A – 2D

Sun City Service Line Replacements Table I, 1-1 2015 ..... 2A

Sun City Service Line Replacements Table I, 1-2 2017 ..... 2B

Sun City Service Line Replacements Table I, 1-3 2018 ..... 2C

Sun City Service Line Replacements Table I, 1-4 2019 ..... 2D

SIB MAIN REPLACEMENTS, TABLE I, 2-1 THRU 2-5 ..... 3A – 3E

Sun City Valve Replacements Table I, 2-1 2015 ..... 3A

Sun City Valve Replacements Table I, 2-2 2016 ..... 3B

Sun City Valve Replacements Table I, 2-3 2017 ..... 3C

Sun City Valve Replacements Table I, 2-4 2018 ..... 3D

Sun City Valve Replacements Table I, 2-5 2019 ..... 3E

SIB MAIN REPLACEMENTS, TABLE I, 3-1 THRU 3-5 ..... 4A – 4E

Sun City Main Replacements Table I, 3-1 2015 ..... 4A

Sun City Main Replacements Table I, 3-2 2016 ..... 4B

Sun City Main Replacements Table I, 3-3 2017 ..... 4C

Sun City Main Replacements Table I, 3-4 2018 ..... 4D

Sun City Main Replacements Table I, 3-5 2019 ..... 4E

SIB METER REPLACEMENTS, TABLE I, 4-1 THRU 4-5 ..... 5A – 5E

Sun City Meter Replacements Table I, 4-1 2015 ..... 5A

Sun City Meter Replacements Table I, 4-2 2016 ..... 5B

Sun City Meter Replacements Table I, 4-3 2017 ..... 5C

Sun City Meter Replacements Table I, 4-4 2018 ..... 5D

Sun City Meter Replacements Table I, 4-5 2019 ..... 5E

SUN CITY WATER DISTRICT PLAN OF ADMINISTRATION 6

SIB PLANT TABLES I & II, SUMMARY TABLE, & SCHEDULES ..... 7A – 7O

Sun City Water District SIB Table I 7A

Sun City Water District SIB Table II, Main Replacements, Page 1A 7B

Sun City Water District SIB Table II, Main Replacements, Page 1B 7C

Sun City Water District SIB Table II, Valve Replacements, Page 2A 7D

Sun City Water District SIB Table II, Valve Replacements, Page 2B 7E

Sun City Water District SIB Table II, Service Replacements, Page 3A 7F

Sun City Water District SIB Table II, Service Replacements, Page 3B 7G

Sun City Water District SIB Table II, Meter Replacements, Page 4A 7H

Sun City Water District SIB Table II, Meter Replacements, Page 4B 7I

Sun CityWater District SIB Summary Table 7J

Sun City Water District SIB Schedule A 7K

Sun City Water District SIB Schedule B 7L

Sun City Water District SIB Schedule C 7M

Sun City Water District SIB Schedule D 7N

Sun City Water District SIB Sub Schedule list D 7O

A. INTRODUCTION AND LOCATION OF COMPANY

On March 7, 2014, EPCOR Arizona Water Company, Inc. ("EWAZ" or "Company") filed an application with the Arizona Corporation Commission ("ACC" or "Commission") for approval of a rate increase in (Docket No. WS-01303A-14-0010) for its Sun City Water District ("Sun City" or "District"). Sun City's current rates were approved in Commission Decision No. 72047, dated January 6, 2011.

The District provides public utility water service to approximately 23,000 metered connections.[1] The District consists of two (2) water systems, located in Maricopa County, Arizona, which include the Sun City Water System and the Tierra Del Rio Water System. The location of the District and the area covered by its Certificate of Convenience and Necessity ("CC&N"), which covers approximately 12,725 acres (19.9 square miles), are shown in Figures 1 and 2, respectively. The original CC&N area was transferred from Arizona-American Water Company to EWAZ in Commission Decision No. 72668 dated November 17, 2011.

B. DESCRIPTION OF THE WATER SYSTEMS[2]

The Districts water systems were visited on May 28 & 29, 2014, by Staff member Michael Thompson. Mr. Thompson was accompanied by Ms. Mary Rimback and Mr. Briton Baxter (Staff Public Utilities Analysts), Mr. Shawn Bradford (EWAZ Director of Operation, Central Division), Mr. Roland Tanner (EWAZ Manager, Rates & Regulation), Mr. Michael Worlton, P.E. (EWAZ Director of Engineering), Ms. Sandra Murrey (EUSA Senior Rate Analyst), Mr. Joe Cornejo (EWAZ Operations Manager) and, and Mr. Paul Taylor (EWAZ Operations Supervisor). The District has three (3) lead certified operators of record.[3]

(1) Sun City Water System – Public Water System ("PWS") No. 04-07-099

The Sun City Water System serves the Sun City area, with a certified area of approximately 11,682 acres (18.2 square miles). The water system contains seven (7) water plants (wells, booster pump stations and storage tanks), and thirteen (13) wells sites. In all, the water system has a total of twenty one (21) active drinking water wells, thirteen (13) storage tanks, fifteen (15) pressure tanks, twenty nine (29) booster pumps, four (4) portable emergency generators, and one (1) permanently mounted emergency generator. Additionally, the water system has seven (7) inactive wells that have

---

[1] Per water use data submitted with the application.

[2] The description of the water systems is based on one, or a combination of, the following sources: 1) Company's Application, 2) Direct Testimony of Shawn Bradford, dated March 7, 2014, 3) Information contained in the Company's Response to Staff Data Requests and, 4) Information collected during Staff's site visit.

[3] The three (3) operators certified with the Arizona Department of Environmental Quality ("ADEQ") are: (1) Mr. John Payan a Certified Grade 4 Water Distribution System Operator, Grade 4 Treatment Plant Operator, Grade 1 Wastewater Treatment Plant Operator, and Grade 2 Wastewater Collection System Operator. ADEQ Operator Identification No. OP021168, expiration date June 30, 2016, (2) Mr. Jason Kriess is Certified Grade 4 Water Distribution System Operator, Grade 4 Treatment Plant Operator, Grade 4 Wastewater Treatment Plant Operator, and Grade 4 Wastewater Collection System Operator. ADEQ Operator Identification No. OP021131, expiration date March 31, 2017, and, (3) Mr. Dale Kennow a Certified Grade 4 Water Distribution System Operator, Grade 4 Treatment Plant Operator, Grade 2 Wastewater Treatment Plant Operator, and Grade 4 Wastewater Collection System Operator. ADEQ Operator Identification No. OP004007, expiration date March 31, 2017.

been disconnected, abandoned, capped, or are out of service. Staff concludes that the wells are not used and useful to the Districts provision of service.

The in-service plant facilities (i.e., wells, tanks, pumps, and visible pipe) within the Sun City Water System service areas appeared to be in proper working order, properly maintained, and in excellent condition. Staff did not observe any leaks at the plant facilities, or in the distribution system.

Detailed listings of the plant facilities are included in Table A. Schematics of the service area are illustrated in Figures 3A through 3F.

Table A. Sun City Water System Plant Facilities Summary[4]

Well Data – Active Wells							
Well ID	ADWR Well ID	Pump (hp)	Pump Yield (gpm)	Casing Depth (feet)	Casing Diameter (inches)	Meter Size (inches)	Year Drilled
(T) Well No. 1.1	55-606529	250	1,575	900	20	10	1951
(T) Well No. 1.2	55-608176	200	1,000	1,090	20	8	1958
(T) Well No. 2.1	55-606532	250	1,025	1,000	20	12	1954
(T) Well No. 2.2	55-606530	200	875	750	20	12	1948
(T) Well No. 2.3	55-606531	125	500	600	16	10	1953
(S) Well No. 2.4[1]	55-207783	200	1,200	1,090	20	10	2006
(T) Well No. 3.1	55-606528	500	2,500	1,200	16	14	1975
(T) Well No. 4.1	55-606524	325	1,250	1,206	16	10	1969
(S) Well No. 5.1	55-217004	300	1,724	1,196	18	12	2008
(T) Well No. 5.2	55-606523	400	1,420	1,000	20	12	1954
(T) Well No. 5.3	55-606522	400	1,910	1,206	16	12	1973
(T) Well No. 5.4	55-606521	350	1,320	1,176	20	12	1952
(T) Well No. 5.5	55-606534	400	1,765	1,215	16	8	1974
(S) Well No. 6.1	55-574914	250	1,200	1,200	16	12	1999
(T) Well No. 6.2	55-606520	450	1,820	1,317	16	12	1973
(T) Well No. 6.4	55-606518	400	750	910	20	12	1950
(T) Well No. 8.1	55-536983	250	1,250	1,020	16	12	1993
(T) Well No. 8.2	55-606535	350	1,600	1,000	20	12	1946/1952
(T) Well No. 8.3	55-606536	500	1,850	1,214	16	12	1975
(S) Well No. 8.3B[2]	55-222007	300	1,400	1,420	20	12	2013
(S) Irrigation Well	55-807594	125	650	360	16	8	1998

(S) Signifies Submersible Pump Well
(T) Signifies Turbine Pump Well.
[1] Well No. 2.4 (ADWR No. 55-207783) replaced the original well, Well No. 2.4 (DWR No. 55-608177,) due to a corroded casing.
[2] Well No. 8.3B was placed in service during the Post Test Year.
[3] hp signifies horsepower.
[4] gpm signifies gallon per minute.

[4] The information listed was based on one, or a combination, of the following sources: 1) Company's Application, 2) Commission Annual Reports, 3) Information contained in the Company's response to Staff Data Requests and, 4) Information collected during Staff's site visit.

Well Data – Inactive Wells (Disconnected/Abandoned/Capped)								
Well ID	ADWR Well ID No.	Pump (hp)	Pump Yield (gpm)	Casing Depth (feet)	Casing Diameter (inches)	Meter Size (inches)	Year Drilled	Year Inactivated
Well No. 2.4[1]	55-608177	250	900	1,119	18	8	1982	2005/2007
Well No. 5.1[1]	55-606525	250	1,250	1,000	20	16	1948	2007/2008
Well No. 6.3[1]	55-606526	350	1,340	1,006	20	12	1956	2014
Well No. 8.4[2]	55-606533	200	1,100	1,000	20	8	1946	2000
Well No. 17A[3]	55-606527	450	2,000	1,000	20	N/A	1953	1981
Well No. 20A[4]	55-606537	N/A	750	1,000	20	N/A	1953	Unknown
Well No. 18C[5]	55-608175	75	600	1,050	14	10	1947	2002

[1] Indicates that the Well No.'s 2.4, 5.1, & 6.3 have been disconnected and abandoned.
[2] Indicates that Well No. 8.4 has been capped.
[3] Indicates that Well No. 17A is out-of-service. Well was taken out of service due to high head pressure resulting in high power costs.
[4] Indicates that Well No. 20A is utilized as an observation well. Well has never been equipped.
[5] Well No. 18C is identified as the Old Youngtown Well located at the abandoned Youngtown Plant. The well is disconnected.

Water Storage, Pressure Tanks, Booster Pump Stations, & Emergency Generators					
Site	Storage Tanks (Gallons)	Pressure Tanks (Gallons)	Booster Pumps	Wells	Emergency Back-up Generator
Water Plant No. 1	2 – 300,000	1 – 10,000	3 – 75 hp	Well No. 1.1	None
Well Site No 1.2	N/A	N/A	N/A	Well No. 1.2	None
Water Plant No. 2	3 – 300,000	1 – 10,000	2 – 75 hp 2 – 100 hp	Well No. 2.1	None
Well Site No. 2.2	None	None	None	Well No. 2.2	None
Well Site No. 2.3	None	None	None	Well No. 2.3	None
Well Site No. 2.4	None	None	None	Well No. 2.4	None
Water Plant No. 3	2 – 500,000	1 – 10,000	4 – 100 hp	Well No. 3.1	None
Water Plant No. 4	None	1 – 5,000	None	Well No. 4.1	Gen-Tech 35 kW
Water Plant No. 5	2 – 1,250,000	2 – 10,000	4 – 100 hp 4 – 150 hp	None	Kohler 250 kVA Generac 250 kVA Cummins 375 kVA Catapillar 150 kVA
Well Site No. 5.1	None	None	None	Well No. 5.1	None
Well Site No. 5.2	None	1 – 5,000	None	Well No. 5.2	None
Well Site No. 5.3	None	1 – 5,000	None	Well No. 5.3	None
Well Site No. 5.4	None	1 – 5,000	None	Well No. 5.4	None
Well Site No. 5.5	None	1 – 5,000	None	Well No. 5.5	None
Water Plant No. 6	2 – 1,250,000	2 – 10,000	3 – 100 hp 3 – 150 hp	Well No. 6.1	None
Well Site No. 6.2	None	1 – 5,000	None	Well No. 6.2	None
Well Site No. 6.4	None	None	None	Well No. 6.4	None
Water Plant 8	2 – 680,000	1 – 10,000	1 – 75 hp 3 – 100 hp	Well No. 8.1	None
Well Site No. 8.2	None	None	None	Well No. 8.2	None
Well Site No. 8.3	None	1 – 5,000	None	Well No. 8.3	None
Well Site No. 8.3B	None	None	None	Well No.8.3B	None

Service Area Distribution Mains		
Diameter (inches)	Material	Length (feet)
1	Various	971
1 ¼	Various	1,204
1 ½	Various	11,992
2	Various	13,491
3	Various	12,731
4	Various	168,007
6	Various	792,568
8	Various	285,170
10	Various	112,453
12	Various	226,223
14	Various	367
16	Various	22,319
18	Various	2,449
Undetermined	Various	9,326
Total Length		1,659,271

Service Area Meters	
Size (inches	Quantity
5/8 x 3/4	19,321
3/4	816
1	531
1 ½	1,548
2	623
3	28
4	4
6	12
8	1
10	2
Total Quantity	22,886

Fire Hydrants	
Size/Description	Quantity
Standard Wet Barrel	2,069

(2) Tierra Del Rio Water System – PWS No. 04-07-532

The Tierra Del Rio Water System serves a certified area north of Sun City which is located in Peoria, Arizona. The certified area is approximately 1,043 acres (1.63 square miles) and consists of two (2) pressure zones. The water system contains one (1) water plant (consisting of a 1.5 million gallon storage tank, 15,000 gallon pressure tank, and six (6) booster pumps), and three (3) active drinking water wells, one (1) inactive/disconnected well.

The inactive/disconnected well was drilled in December 2005. According to the District, equipping the well is directly dependent upon water demand in the system, with development of the area driving the specific timing. Staff concludes that the well is not used and useful to the District's provision of service.

The in-service plant facilities (i.e., wells, tanks, pumps, and visible pipe) appeared to be in proper working order, properly maintained, and in excellent condition. Staff did not observe any leaks at the plant facilities, or in the distribution system.

Detailed listings of the plant facilities are included in Table B. Schematics of the service area are illustrated in Figures 4A & 4B.

Table B. Tierra Del Rio Water System Plant Facilities Summary[5]

Well Data – Active Well							
Well ID	ADWR Well ID	Pump (hp)	Pump Yield (gpm)	Casing Depth (feet)	Casing Diameter (inches)	Meter Size (inches)	Year Drilled
(S) Well No. 9.2	55-205600	882	550	984	18	6	2005
(S) Well No. 9.3	55-207076	125	1,100	682	18	8	2006
(S) Well No. 9.4	55-211616	125	700	777	18	8	2006

(S) Signifies Submersible Pump Well

Well Data – Inactive Well (Capped)							
Well ID	ADWR Well ID	Pump (hp)	Pump Yield (gpm)	Casing Depth (feet)	Casing Diameter (inches)	Meter Size (inches)	Year Drilled
Well No. 9.1[1]	55-207439	N/A	N/A	678	18	N/A	2006

[1]The well is unfurnished. Pumping equipment has not been installed.

Water Storage and Booster Pump Station					
Site	Storage Tanks (Gallons)	Pressure Tanks (Gallons)	Booster Pumps	Wells	Emergency Back-up Generator
Water Plant No. 9	1 – 1,500,000	1 – 15,000	3 – 60 hp 3 – 100 hp	None	1 – 750 kW
Tierra Del Rio Booster Pump Station	None	None	6 – 20 hp	None	1 – 200 kW

Service Area Distribution Mains		
Diameter (inches)	Material	Length (feet)
2	Various	14
6	Various	1,470
8	Various	20,505
12	Various	19,204
16	Various	12,171
Undetermined	Various	23
Total Length		**53,387**

Service Area Meters	
Size (inches	Quantity
5/8 X 3/4	
3/4	245
1	66
1 ½	3
2	17
3	6
Total Quantity	337

Fire Hydrants	
Size/Description	Quantity
Standard Wet Barrel	92

[5] The information listed was based on one, or a combination, of the following sources: 1) Company's Application, 2) Commission Annual Reports, 3) Information contained in the Company's response to Staff Data Requests and, 4) Information collected during Staff's site visit.

C. WATER USE

(1) Water Sold

Figures 5A and 5B represent the water consumption data, in graphical form, for the Sun City and Tierra Del Rio Water Systems, respectively, during the 12 month period for the test year, July 2012 through June 2013. The water consumption graphs, Figures 5A and 5B, are located in the Figure Section of this report. Table C below represents the high, low, and average water consumption for each of the two (2) District Water Systems.

Table C. Sun City Water District Water System Water Usage
Test Year July 2012 – June 2013

High & Low Water Consumption (Gallons/Day/Connection)		
Water Usage	**Sun City Water System**	**Tierra Del Rio Water System**
High Usage Month	September - 2012	July - 2012
Highest Daily Average Usage	637	786
Low Usage Month	March – 2013	February - 2013
Lowest Daily Average Usage	309	340
Test Year Average Usage	475	549

(2) Non-Accounted For Water

Non-accounted for water should be 10 percent or less and never more than 15 percent. It is important to be able to reconcile the difference between water sold and the water produced by the source. A water balance will allow a water company to identify water and revenue losses due to leakage and any non-metered water use such as construction, firefighting, and line flushing. Water loss percentages for the two (2) water systems within the District are listed in the Table D below.

Table D. Sun City Water District Water System Water Loss

Water Loss		
Water System	**Sun City**	**Tierra Del Rio**
2011 Water Loss (%)	4.34	8.22
2012 Water Loss (%)	5.98	0.57
2013 Water Loss (%)	6.63	7.52

As the table indicates, water loss in the Sun City and Tierra Del Rio water systems has been less than 10 percent for the past three (3) calendar years (2011 through 2013).

(3) Water System Analysis

a) Sun City Water System – Public Water System ("PWS") No. 04-07-099

The Sun City Water System has twenty (20) active drinking water wells with a total production capacity of approximately 27,910 gallons per minute ("GPM") (40,190,400 gallons per day ("GPD")). The water system has a total of thirteen (13) storage tanks with a total storage capacity of approximately 6,360,000 gallons. During the peak month, September 2012, the water system was serving 22,867 connections when EWAZ reported 436,682,000 gallons of water sold. Average daily demand for the month of September 2012 was determined to be 14,556,067 gpd. Staff concludes that the water system has adequate production and storage capacity to serve the present customer base and any reasonable growth.

b) Tierra Del Rio Water System – PWS No. 04-07-532

The Tierra Del Rio Water System has three (3) active drinking water wells with a total production capacity of approximately 2,350 gpm (3,384,000 gpd), and one (1) storage tank with a total storage capacity of approximately 1,500,000 gallons. During the peak month, July 2012, the water system was serving 143 connections when EWAZ reported 3,484,000 gallons of water sold. Average daily demand for the month of July 2012 was determined to be 112,387 gpd. Staff concludes that the water system has adequate production and storage capacity to serve the present customer base and any reasonable growth.

D. GROWTH[6]

Table E and Figure 6 show the District's customer growth based on service connection data contained in the EWAZ Enterprise Customer Information System ("eCIS") data base. District growth includes the Sun City and Tierra Del Rio water systems. Accordingly, Table E and Figure 6 indicate that the District experienced positive growth from 2008 to 2013 at a total rate of 2.14 percent (gain of 487 customers).

With respect to future growth, EWAZ is projecting a positive trend in growth from 2014 through 2019. The EWAZ growth projections, which are updated each year in April, are based on data obtained from the eCIS data base, local economists, and local developers. In general, EWAZ is projecting the District's growth to increase a total of 5.09 percent (projected gain of 1,181 customers) from 2014 through 2019.

[6] Staff's historical growth figures are based on the data reported by EWAZ from its Enterprise Customer Information System ("eCIS") data base. Projected growth figures are based on EWAZ projections from its eCIS data base, local economists, and local developers.

Table E. Sun City Water District Actual and Projected Growth

Year	Number of Customers	
2008	22,723	eCIS
2009	22,768	eCIS
2010	22,766	eCIS
2011	22,846	eCIS
2012	23,058	eCIS
2013	23,210	eCIS
2014	23,424	Projected
2015	23,659	Projected
2016	23,896	Projected
2017	24,106	Projected
2018	24,267	Projected
2019	24,391	Projected

E. MARICOPA COUNTY ENVIRONMENTAL SERVICES DEPARTMENT ("MCESD") COMPLIANCE

(1) Compliance Status

MCESD Compliance Status Reports ("CSR") indicate that the Sun City (PWS No. 07-099) and Tierra Del Rio (07-532) Water Systems are currently in full compliance with its requirements and are currently delivering water that meets water quality standards required by 40 CFR 141 (National Primary Drinking Water Regulations) and Arizona Administrative Code, Title 18, Chapter 4[7].

(2) Water Monitoring and Testing Expenses

District water sampling for monitoring and testing is divided into two (2) categories, Compliance Analysis and Process Analysis. Compliance sampling is conducted, as required by ADEQ, on source water, finished/treated water, and water in the distribution system. Process sampling is conducted on source water, finished/treated water, and at various stages of a treatment process. Process sampling essentially provides timely data to 1) ensure that a Plant is operating as expected in producing water that meets regulatory limits; 2) adjust plant operations based on changes to source and finished water quality; 3) adjust chemical additions (volume and type); 4) track the breakthrough of filtration media; and 5) adjust the volume of water required to be treated for contaminant removal in order to maintain compliance with ADEQ.

[7] MCESD CSR's dated December 10, 2013 for the Sun City Water System, and February 10, 2014 for the Tierra Del Rio Water System.

a) Sun City Water System (PWS No. 04-07-099)

The District proposed a total of $24,085 for the Sun City Water System annual water testing expense. Table F represents the monitoring and testing expenses that were reviewed, evaluated, and recalculated by Staff. The estimated annual water testing expense for the Sun City Water System is $24,085. Staff recommends an annual water testing expense, for the District, of $24,085 be used for the purposes of this application.

Table F. Water Testing Costs – Sun City Water System (PWS No. 04-07-099)

Compliance Analysis Testing	Cost per Test	Quantity of Tests per Three Year Period	Cost per Three Year Period	Annual Costs
Total Coliform	$ 11	1440	$ 15,840	$ 5,280
Lead & Copper	$ 24	30	$ 720	$ 240
Asbestos	$ 160	1	$ 160	$ 53
Arsenic	$ 14	24	$ 336	$ 112
Disinfection By-Products (TTHM)[1]	$ 70	20	$ 1,400	$ 467
Disinfection By-Products (HAA5)[1]	$ 160	20	$ 3,200	$ 1,067
Nitrate/Nitrite	$ 27	47	$ 1,269	$ 423
Inorganic Compounds (IOCs)	$ 202	8	$ 1,616	$ 539
Synthetic Organic Compounds (SOCs)	$ 1,744	19	$ 33,136	$ 11,045
Volatile Organic Compounds (VOCs)	$ 176	16	$ 2,816	$ 939
Radiochemicals (RADs)	$ 340	13	$ 4,420	$ 1,473
ICP/MS Digest	$ 16	25	$ 400	$ 133
Process Analysis Testing	**Cost per Test**	**Quantity of Tests per Three Year Period**	**Cost Per Three Year Period**	**Annual Costs**
Nitrate	$ 27	96	$ 2,592	$ 864
Arsenic	$ 14	57	$ 798	$ 266
VOC	$ 176	15	$ 2,640	$ 880
ICP?MS Digest	$ 16	57	$ 912	$ 304
Total Annual Water Testing Costs			**$ 72,255**	**$ 24,085**

[1]TTHM is an initialism for Total Trihalomethanes and HAA5 is an initialism for Haloacetic Acids.

b) Tierra Del Rio (PWS No. 04-0-532) Water System

In addition to Total Coliform, Lead & Copper, Disinfectant-By-Products, Manganese, and Total Organic Carbon testing, the Tierra Del Rio Water System is also subject to mandatory participation in the Monitoring Assistance Program ("MAP").[8] The District proposed a total of $995 for the Tierra Del Rio water system

[8] The MAP is mandatory for water systems which serve less than 10,000 persons (approximately 3,300 service connections).

annual water testing expense. The monitoring and testing expenses that were reviewed, evaluated, and recalculated by Staff are represented in Table G. The total estimated annual water testing expenses for the water system is $995. Staff recommends an annual water testing expense, for the District, of $995 be used for the purposes of this application.

Table G. Water Testing Costs – Tierra Del Rio Water System (PWS No. 04-07-532)

Compliance Analysis Testing	Cost per Test	Quantity of Test Taken Annually	Cost Per Three Year Period	Annual Costs
Total Coliform	$ 11	36	$ 396	$ 132
Lead & Copper	$ 24	10	$ 240	$ 80
Nitrate	$ 27	3	$ 81	$ 27
Disinfection-By-Products (TTHM's)	$ 70	2	$ 140	$ 47
Disinfection-By-Products (HAA5's)	$ 160	2	$ 320	$ 107
IOCs, Nitrate, Nitrite, SOCs, VOCs, Radiochemicals (RADs), & Asbestos	MAP	MAP	$ 1,806	$ 602
Total			**$ 2,985**	**$ 995**

c) Sun City Water District

The District reported water testing expenses of $30,180 during the test year. The combined monitoring and testing expenses of the District's water systems, expressed in Table H, totals $25,080. Staff recommends an annual water testing expense, for the District, of $25,080 be used for the purposes of this application.

Table H. Water Testing Costs – Sun City Water District

MWD Water System	PWS No.	Annual Costs	MAP Costs	Total Annual Costs
Sun City Water System	04-07-099	$ 24,085	$ 0	$ 24,085
Tierra Del Rio	04-07-532	$ 393	$ 602	$ 995
Total Annual Water Testing Costs		**$ 24,478**	**$ 602**	**$ 25,080**

F. ARIZONA DEPARTMENT OF WATER RESOURCES ("ADWR") COMPLIANCE

The District's water system service areas are located within the ADWR Phoenix Active Management Area ("AMA"). ADWR's Water Provider Compliance Reports, dated June 6, 2014, indicate that the District's Water Systems are currently in compliance with departmental requirements governing water providers and/or community water systems.

G. ARIZONA CORPORATION COMMISSION COMPLIANCE

A check of the Utilities Division Compliance Section database showed that there are no delinquent Commission compliance items for the District.[9]

H. DEPRECIATION RATES

EWAZ proposed only a few changes to the current District depreciation rates, which are shown in the District's Proposed Rates column in Table I. Staff recommends the depreciation rates listed under "Staff's Recommended Rates" in Table I be adopted.

Table I. Depreciation Rate Table – Sun City Water District

NARUC Account Numbers	EWAZ Account Numbers	Depreciable Plant	District Current Rates (%) Decision No. 72047	District Proposed Rates (%)	Staff's Typical Rates (%)	Staff Recommended Rates (%)
301	301000	**Organization**	0.00	0.00	0.00	0.00
302	302000	**Franchises**	0.00	0.00	0.00	0.00
303		**Land & Land Rights**				
	303200	Land & Land Rights – SS	0.00	0.00	0.00	0.00
	303300	Land & Land Rights – Pumping	0.00	0.00	0.00	0.00
	303400	Land & Land Rights – Treatment	0.00	0.00	0.00	0.00
	303500	Land & Land Rights – T&D	0.00	0.00	0.00	0.00
	303600	Land & Land Rights – AG	0.00	0.00	0.00	0.00
304		**Structures & Improvements**				
	304100	Structure & Improvement – Source of Supply	2.50	2.50	3.33	2.50
	304200	Structure & Improvement – Pumping	1.67	2.00	3.33	2.00
	304300	Structure & Improvement – Water Treatment Equipment	1.67	2.00	3.33	2.00
	304400	Structure & Improvement – T & D	2.00	2.00	3.33	2.00
	304500	Structure & Improvement – General Plant	3.99	2.50	3.33	2.50
	304600	Structure & Improvement – Offices	4.63	2.50	3.33	2.50
	304620	Structure & Improvement – Leasehold	0.00	2.50	3.33	2.50
	304700	Structure & Improvement – Store, Shop & Garage	0.00	0.00	3.33	0.00
	304800	Structure & Improvement – Miscellaneous	1.67	2.50	3.33	2.50
305	305000	**Collection & Impounding Reservoirs – Source & Pumping**	2.50	1.67	2.50	1.67
306	306000	**Lake & River Intakes**	0.00	0.00	2.50	0.00
307	307000	**Wells & Springs – Source & Pumping**	2.52	2.50	3.33	2.50
308	308000	**Infiltration Galleries – Source & Pumping**	0.00	0.00	6.67	0.00
309	309000	**Supply Mains – Source & Pumping**	2.00	1.67	2.00	1.67
310		**Power Generation Equipment – S & P**				
	310000	Power Production Equipment	4.42	3.33	5.00	3.33
	310100	Power Generation Equipment – Other S & P	4.42	0.00	5.00	0.00
311		**Pumping Equipment**				
	311000	Pump Equipment – Steam	0.00	4.00	12.5	4.00
	311200	Pump Equipment – Electric	4.42	4.00	12.5	4.00
	311300	Pump Equipment – Diesel	5.00	4.00	12.5	4.00
	311400	Pump Equipment – Hydraulic	4.42	4.00	12.5	4.00

[9] Per Compliance Section email, dated August 8, 2014.

	311500	Pump Equipment – Other	5.01	4.00	12.5	4.00
	311530	Pump Equipment – Water Treatment	0.00	4.00	12.5	4.00
	311540	Pump Equipment – Transmission & Distribution	0.00	0.00	12.5	0.00
	311600	Pump Equipment – Source & Pumping	0.00	0.00	12.5	0.00
320		**Water Treatment Equipment**				
	320000	Water Treatment Equipment – Purification Equip.	0.00	0.00	3.33	0.00
320.1	320100	Water Treatment Equipment – Non-Media	7.06	5.00	3.33	5.00
	320200	Water Treatment Equipment – Filter Media	0.00	10.00	3.33	10.00
330		**Distribution Reservoirs & Standpipes**				
	330000	Distribution Reservoirs & Standpipes	1.67	1.54	2.22	1.54
330.1	330100	Elevated Tanks & Standpipes	0.00	0.00	0.00	0.00
	330200	Ground Level Tanks	0.00	1.54	2.22	1.54
330.2	330300	Below Ground Tanks	0.00	0.00	2.22	0.00
	330400	Clearwell	0.00	0.00	2.22	0.00
331		**Transmission and Distribution**				
	331000	TD Mains – Water Treatment Equipment	0.00	0.00	2.00	0.00
	331001	TD Mains – Not Classified by Size	1.53	2.00	2.00	2.00
	331100	TD mains – 4-inch & less	1.53	1.43	2.00	1.43
	331200	TD mains – 6-inch to 8-inch	1.53	1.43	2.00	1.43
	331300	TD mains – 10-inch to 16-inch	1.53	1.43	2.00	1.43
	331400	TD Mains – 18-inch and Greater	2.00	1.43	2.00	1.43
332	332000	**Fire mains**	0.00	1.43		1.43
333		**Services**				
	333000	Services	2.48	2.50	3.33	2.50
	333100	Services – Water Treatment Equipment	0.00	0.00	3.33	0.00
334		**Meters**				
	334100	Meters	6.67	8.33	8.33	8.33
	334200	Meter installations	2.51	2.50	8.33	2.50
	334300	Meter Vaults	0.00	2.50	8.33	2.50
335	335000	**Hydrants**	2.00	2.00	2.00	2.00
336	336000	**Backflow Prevention Devices**	6.67	0.00	6.67	6.67
339		**Other Plant & Miscellaneous Equipment**				
	339000	Other Plant/Miscellaneous Equipment – TD Plant	0.00	0.00	6.67	0.00
	339100	Other Plant/Miscellaneous Equipment - Intangible	0.00	0.00	6.67	0.00
	339200	Other Plant/Miscellaneous Equipment - Supply	0.00	0.00	6.67	0.00
	339500	Other Plant/Miscellaneous Equipment – T & D	0.00	3.33	6.67	3.33
	339600	Other Plant/Miscellaneous Equipment – CPS	0.00	3.33	6.67	3.33
340		**Office Furniture & Equipment**				
	340000	Office Furniture & Equipment – General Plant	0.00	0.00	6.67	0.00
	340100	Office Furniture & Equipment	4.59	4.50	6.67	4.50
	340200	Computer & Peripheral Equipment	10.00	10.00	20.00	10.00
	340300	Computer Software	25.00	20.00	20.00	20.00
	340310	Computer Software – Mainframe	25.00	20.00	20.00	20.00
	340325	Computer Software – Customized	25.00	20.00	20.00	20.00
	340330	Computer Software – Other	25.00	0.00	20.00	0.00
	340400	Date Handling Equipment – General Plant	0.00	0.00	20.00	0.00
	340500	Office Equipment – Other	7.13	6.67	6.67	6.67
341		**Transportation Equipment**				
	341000	Transportation Equipment – General Plant	0.00	0.00	20.00	0.00
	341100	Transportation Equipment – Light Duty Trucks	20.00	20.00	20.00	20.00
	341200	Transportation Equipment – Heavy Duty Trucks	15.00	14.29	20.00	14.29
	341300	Transportation Equipment – Autos	0.00	0.00	20.00	20.00
	341400	Transportation Equipment – Other	16.67	16.67	20.00	16.67
342	342000	**Stores Equipment**	3.91	4.00	4.00	4.00
343	343000	**Tools, Shop & Garage Equipment**	4.02	4.00	5.00	4.00
344	344000	**Laboratory Equipment**	3.71	4.00	10.00	4.00
345	345000	**Power Operated Equipment**	5.20	5.00	5.00	5.00
346		**Communication Equipment**				

	346000	Communication Equipment – General Plant	0.00	0.00	10.00	0.00
	346100	Communication Equipment – Non-Telephone	10.30	10.00	10.00	10.00
	346190	Remote Control & Instrument	10.30	10.00	10.00	10.00
	346200	Communication Equipment – Telephone	10.30	10.00	10.00	10.00
	346300	Communication Equipment – Other	4.93	10.00	10.00	10.00
347	347000	**Miscellaneous Equipment**	6.19	6.25	10.00	6.25

I. OTHER ISSUES

(1) Service Line and Meter Installation Charges

EWAZ did not propose any changes to the District's existing service line and meter installation charges.[10] The proposed charges are refundable advances, and are similar to the Staff's typical range of charges for service line and meter installations. Since the District may at times install meters on existing service lines, it would be appropriate for some customers to only be charged for the meter installation. Those charges are included in Table J listed under "Staff's Recommendations".

Staff has no objections to the continued use of the currently authorized meter and service installation charges, as proposed by EWAZ, and recommends the charges listed under "Staff's Recommendations" in Table J be adopted.

Table J. Service Line and Meter Installation Charges – Sun City Water District

		Company Proposed			Staff's Recommendations		
Meter Size	Company Current Tariff	Service Line Charge	Meter Charge	Total Charge	Service Line Charge	Meter Charge	Total Charge
5/8 x 3/4-inch	$500	$370	$130	$500	$370	$130	$500
3/4-inch	$575	$370	$205	$575	$370	$205	$575
1-inch	$660	$420	$240	$660	$420	$240	$660
1-1/2-inch	$900	$450	$450	$900	$450	$450	$900
2-inch Turbine	$1,525	$580	$945	$1,525	$580	$945	$1,525
2-inch Compound	$2,220	$580	$1,640	$2,220	$580	$1,640	$2,220
3-inch Turbine	$2,165	$745	$1,420	$2,165	$745	$1,420	$2,165
3-inch Compound	$2,960	$765	$2,195	$2,960	$765	$2,195	$2,960
4-inch Turbine	$3,360	$1,090	$2,270	$3,360	$1,090	$2,270	$3,360
4-inch compound	$4,265	$1,120	$3,145	$4,265	$1,120	$3,145	$4,265
6-inch Turbine	$6,035	$1,610	$4,425	$6,035	$1,610	$4,425	$6,035
6-inch Compound	$7,750	$1,630	$6,120	$7,750	$1,630	$6,120	$7,750
8-inch or Larger	ICB*	ICB*	ICB*	ICB*	ICB*	ICB*	ICB*

ICB* Indicates Individual Case Basis at Actual Cost.

[10] The Company's current charges were approved in Decision No. 73145, effective May 1, 2012.

(2) Curtailment Tariff

The District has an approved Curtailment Tariff on file with the Commission. This tariff became effective October 24, 2007.

(3) Cross-Connection/Backflow Prevention Tariff

The District has an approved Cross-Connection/Backflow Prevention Tariff on file with the Commission. This tariff became effective June 16, 2013.

(4) Best Management Practices ("BMP") Tariff

The District has ten (10) BMP's on file with the Commission. The BMP tariff became effective January 20, 2012.

On June 13, 2014, EWAZ filed an amendment to the application proposing a change to the Meter Repair and/or Replacement Tariff (BMP 4.2). In the proposed change, EWAZ requested that paragraph 3 of the BMP tariff, which refers to the inspection of meters, be modified such that pulling a meter for inspection would no longer be required and therefore be stricken from the tariff. Staff concludes that the request to modify BMP 4.2 is appropriate and relevant. Staff recommends approval of the modification in BMP 4.2, attached hereto as Attachment 1.

(5) Unregulated Contaminant Monitoring

On May 2, 2012, the Environmental Protection Agency ("EPA") revised and implemented the Unregulated Contaminant Monitoring Rule 3 ("UCMR3"). ADEQ does not regulate the UCMR3 program. The purpose of the UCMR3 (monitoring and sampling assessment) is for water systems to collect occurrence data for contaminants suspected to be present in drinking water, but that do not have health-based standards set under the Safe Drinking Water Act ("SDWA"). The UCMR3 program is the primary source of drinking water contaminant occurrence data used by the EPA in regulatory determinations. The UCMR3 program requires water systems to perform the monitoring and sampling assessment only once during the time frame between January 2013 – December 2015.

EWAZ is required by the EPA to conduct assessment monitoring and sampling in the Sun City water system for the presence of UCMR3 contaminants. Samples to be tested for the presence of twenty one (21) of the UCMR3 contaminants are to be taken twice (2) from each EPDS within one (1) consecutive twelve (12) month period. Samples to be tested for the presence of seven (7) of the UCMR3 contaminants are to be taken twice (2) from the distribution system maximum residence time sampling locations within the same consecutive twelve (12) month period. Each sampling event must occur five (5) to seven (7) months apart. Sampling can span more than one calendar year, as long as the sampling is conducted during a twelve (12) month period.

The District began sampling for the first sample set of UCRM3 contaminants in February 2013. The second set of samples were sampled in August 2013. The total cost for testing the samples, as illustrated in Table K, which is a one-time occurrence was $18,900. Staff concludes that the one-time expense of $18,900 associated with sampling and testing of the UCMR3 contaminants is reasonable and appropriate.

Table K. EPA Mandated UCMR3 Testing Costs

Sample Locations	Number of Samples	Sample Date	Laboratory	Cost Per Sample	Total Cost
Distribution System – Maximum Residence Time ("DSMRT")	9	February 2013	Legend	$ 300	$ 2,700
Distribution System – Maximum Residence Time ("DSMRT")	9	August 2013	Belleville	$ 160	$ 1,440
Entry Point – Distribution System ("EPDS")	9	February 2013	Legend	$ 1,140	$ 10,260
Entry Point – Distribution System ("EPDS")	9	August 2103	Belleville	$ 500	$ 4,500
Total					**$ 18,900**

(6) Sun City Water District Post Test Year Plant Additions – Post Test Year Investment Projects ("IPs") Used and Useful (July ~~2103~~ 2013 – June 30, 2014)

The District has not requested any Post-Test Year Capital Investment Projects ("IP") be included as Post Test Year Plant Additions.[11]

(7) System Improvement Benefit ("SIB") – Sun City Water District

EWAZ is seeking a SIB to address necessary distribution system infrastructure replacements that provide service to the existing District customers. As a supplement to its application, EWAZ submitted a SIB Engineering Report ("Report"), dated March 26, 2014, supporting the need for its proposed 5-year infrastructure replacement projects for the District's Sun City water systems.[12] The proposed infrastructure replacement and improvement projects are expected to commence in 2015 and finish, 4 years later, in 2019. The Report identifies the most critical areas within the District, provides estimates for the quantity of service lines, meters, water mains, and valves that need to be replaced within the District, and estimates the associated replacement costs.

Historical repair and replacement data was utilized by EWAZ to assess the Districts existing plant (e.g. mains, services, and valves). Table M., which illustrates the results from the assessment, was used to assist with establishing existing plant replacements for the SIB.

[11] The District placed Well No. 8.3B in service during the post-test year; however, it decided not to include the well in the District's Post-Test Year Plant Additions. Total construction cost of the well was approximately $2,151,294.
[12] SIB Engineering Report - EWAZ Exhibit CC-1-B, dated March 26, 2014.

Table M. Water Main, Services, & Valve Assessment – Sun City Water District

Existing Plant	Material/Type	Units[1]	Average Useful Life (Years)	Existing Plant Exceeding Average Useful Life (Units)	Existing Plant Exceeding Average Useful Life (%)	Units to be Replaced
Mains[2]	Polyvinyl Chloride (PVC)	710,000	28	142,635	20	18,655
	Asbestos-Cement (AC)	860,000	50	357,498	42	10,311
Services	Galvanized Steel	20,166	50	3,851	19	1,100
Valves	Gate Valves	3,870	45	1,365	35	80

[1] Does not include assets previously replaced.
[2] Main replacement units are expressed as Linear Feet ("LF").

A summary of the District's planned infrastructure replacement projects, which includes replacement of approximately 28,966 linear feet ("LF") of water main, 1,084 service lines, 80 valves, and 11,598 meters, is tabulated in Table N. Specific details of each of the proposed projects are described in a SIB Plant Table 1. The tables, separated by the project year (2015 through 2019), the project (water mains, service lines, valves, and meters), and the project location, are included in this report as Attachments 2A-2D, 3A-3E, 4A-4E, and 5A-5E.

The Plan of Administration ("POA") and its exhibits, for the District's SIB projects, was reviewed and is included in this report. The POA is attached as Attachment 6 and the exhibits, which include SIB Tables I and II, and the Schedules, are attached as Attachments 7A-7O.

Based on a review of the Report, Staff has determined that the proposed 5-year infrastructure replacement projects tabulated in Table N, totaling $10,999,325, to be reasonable and appropriate. However, no "used and useful" determination of the proposed plant items was made, and no conclusions should be inferred for rate base purposes in the future. Staff recommends approval of the District's proposed Plant Table I of the SIB Mechanism (eligible 5 year infrastructure improvement projects), submitted as a supplement to the District's application by EWAZ on March 26, 2014, totaling $10,999,325 as tabulated in Table N. Staff further recommends that SIB Attachments 2A-2D, 3A-3E, 4A-4E, 5A-5E, 6, and 7A-7O be adopted.

Table N. SIB – Sun City Water District Planned Infrastructure Replacement Projects (2015 – 2019)

Year	2015		2016		2017		2018		2019		Total	
Plant	Units	Cost[2]	Units	Cost[2]	Units	Cost[2]	Units	Cost[2]	Units	Cost[2]	Units	Cost[2]
Mains[1]	5,786	$1,005,087	12,869	$1,680,440	3,854	$471,483	2,633	$349,698	3,824	$575,162	28,966	$4,081,870
Services	165	$650,232	0	$0	313	$1,241,420	316	$1,256,363	290	$1,145,430	1,084	$4,293,445
Valves	16	$76,375	16	$81,418	16	$82,188	16	$77,018	16	$82,610	80	$399,608
Meters	2,100	$409,508	2,071	$376,982	2,292	$432,728	2,784	$534,279	2,351	$470,906	11,598	$2,224,402
Total		$2,141,201		$2,138,840		$2,227,818		$2,217,357		$2,274,108		$10,999,325

[1] Water Main Replacement Units are expressed in linear feet.
[2] Cost estimates are in 2014 dollars and do not account for inflation.

FIGURES

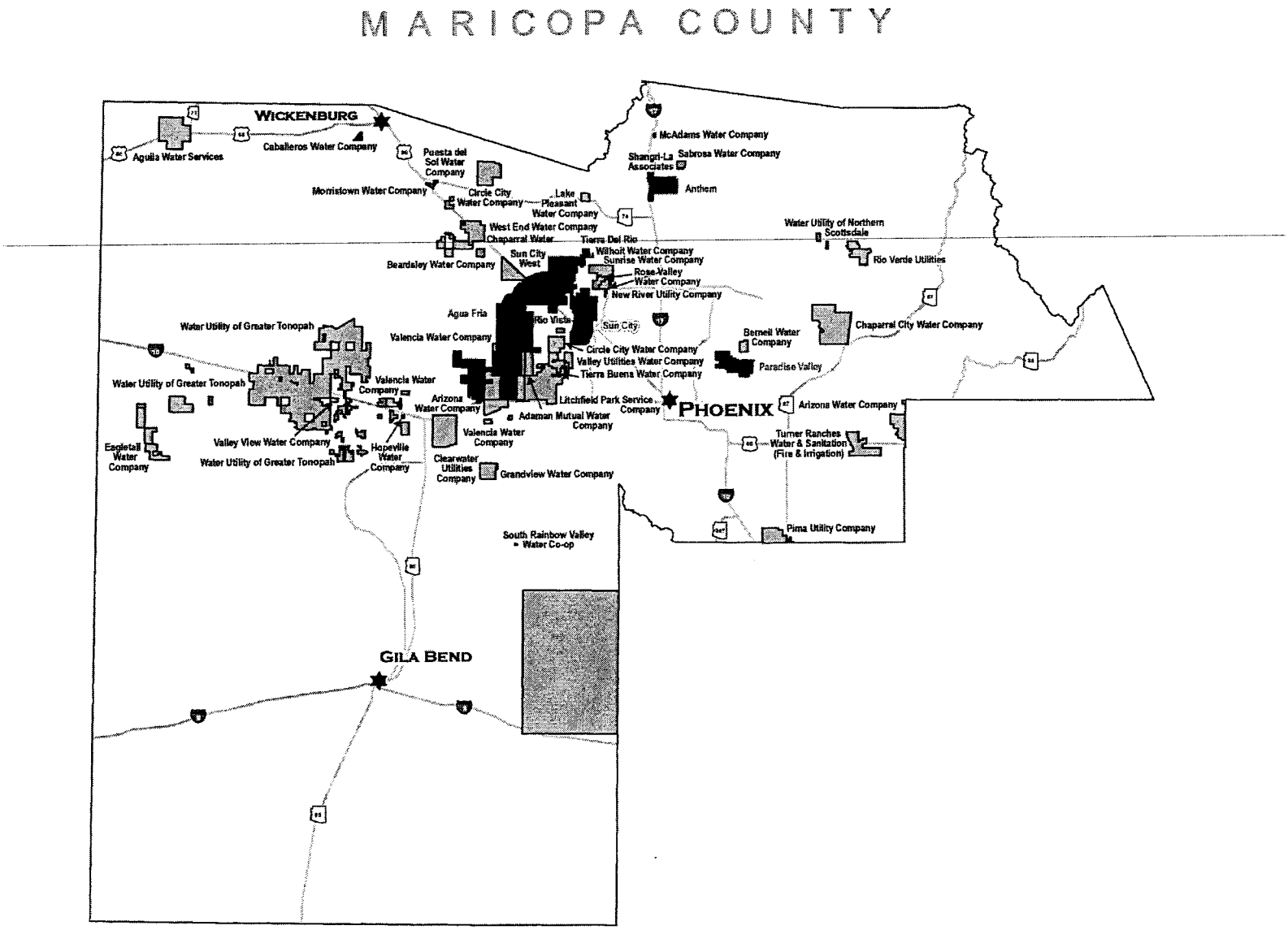

FIGURE 1 – MARICOPA COUNTY MAP

EPCOR Water Arizona, Inc.

Maricopa County

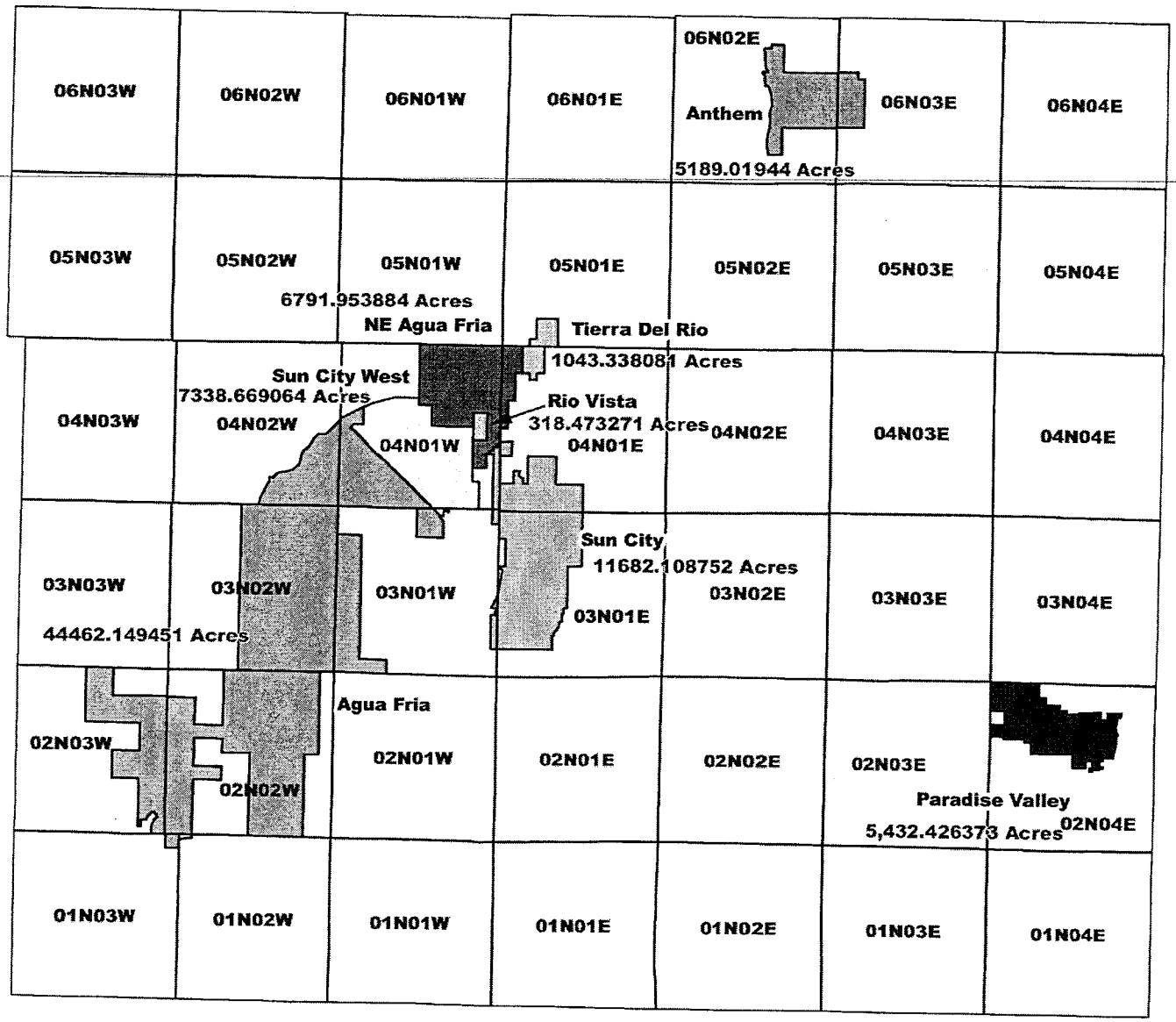

FIGURE 2 – CERTIFICATED AREA

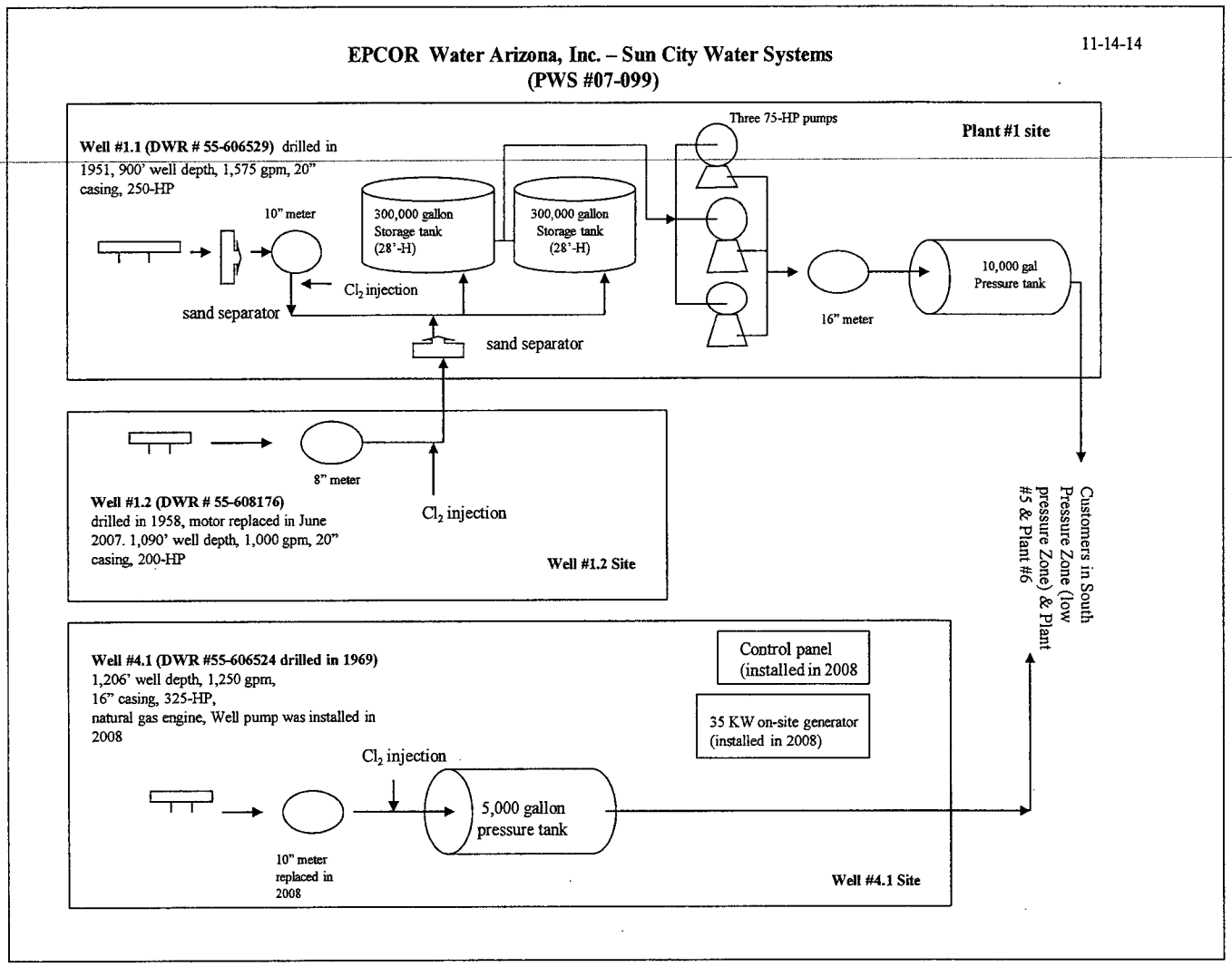

FIGURE 3A

MOHAVE WATER DISTRICT – SUN CITY WATER SYSTEM (PWS No. 04-07-099)

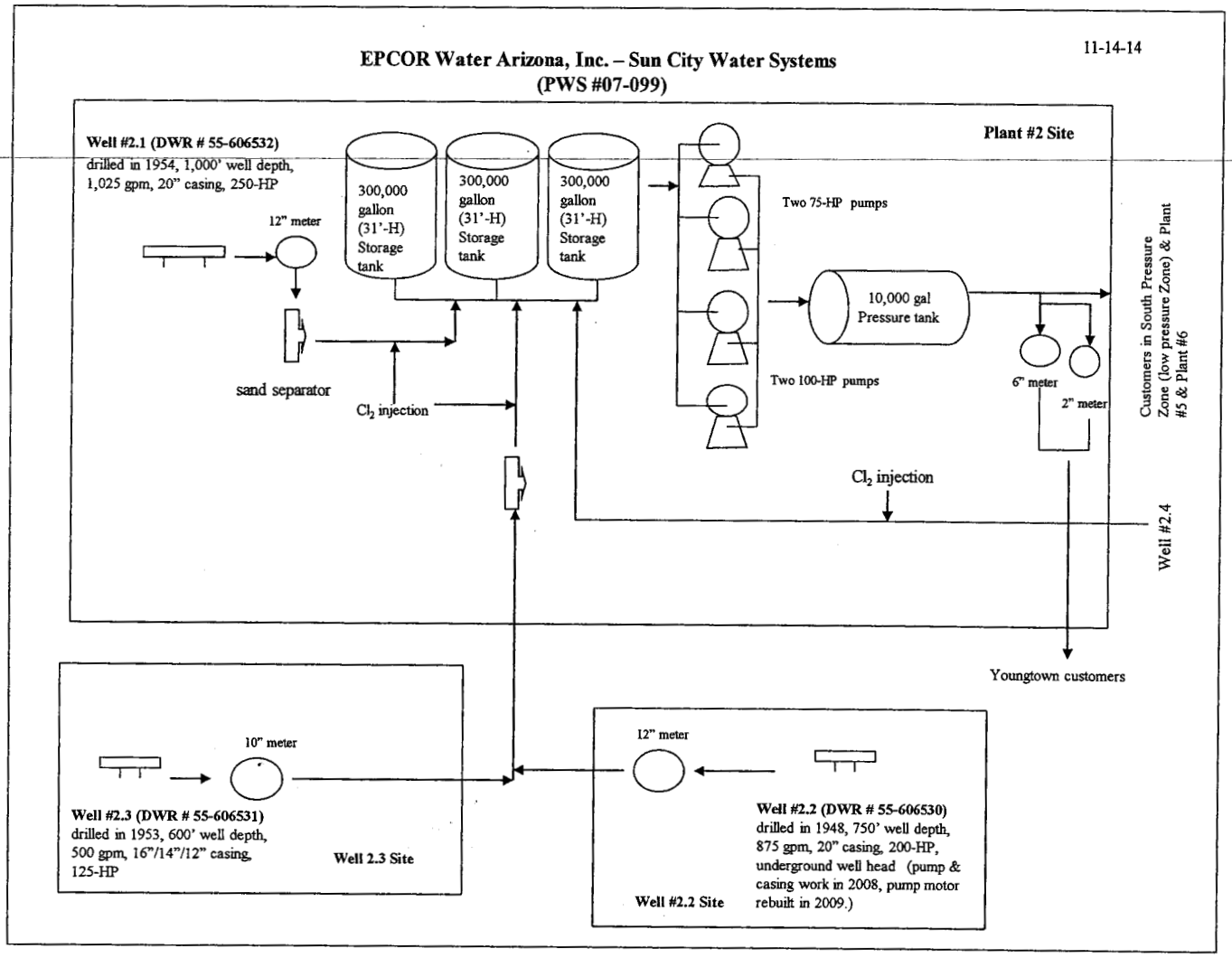

FIGURE 3B

SUN CITY WATER DISTRICT – SUN CITY WATER SYSTEM (PWS No. 04-07-099)

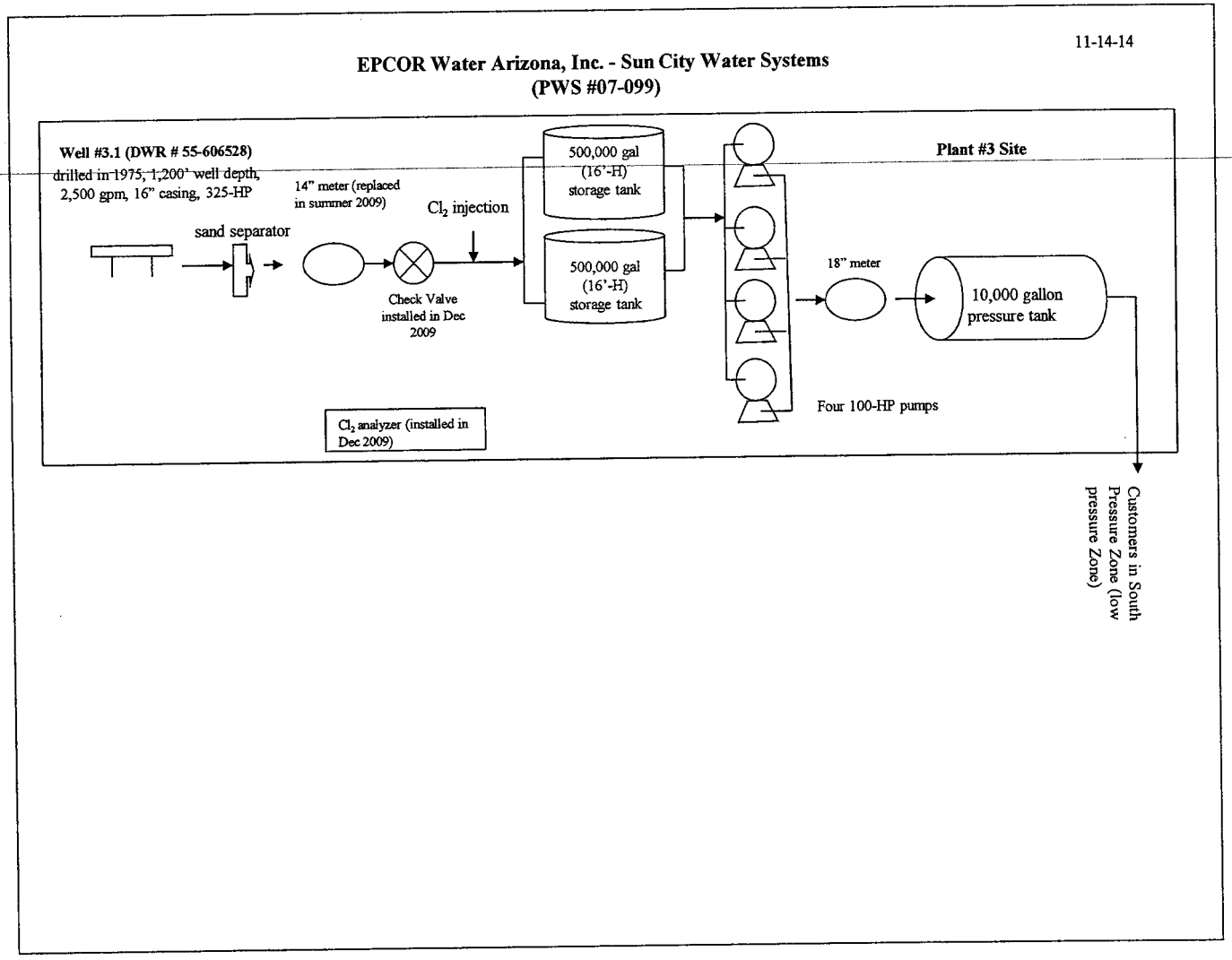

FIGURE 3C

SUN CITY WATER DISTRICT – SUN CITY WATER SYSTEM (PWS No. 04-07-099)

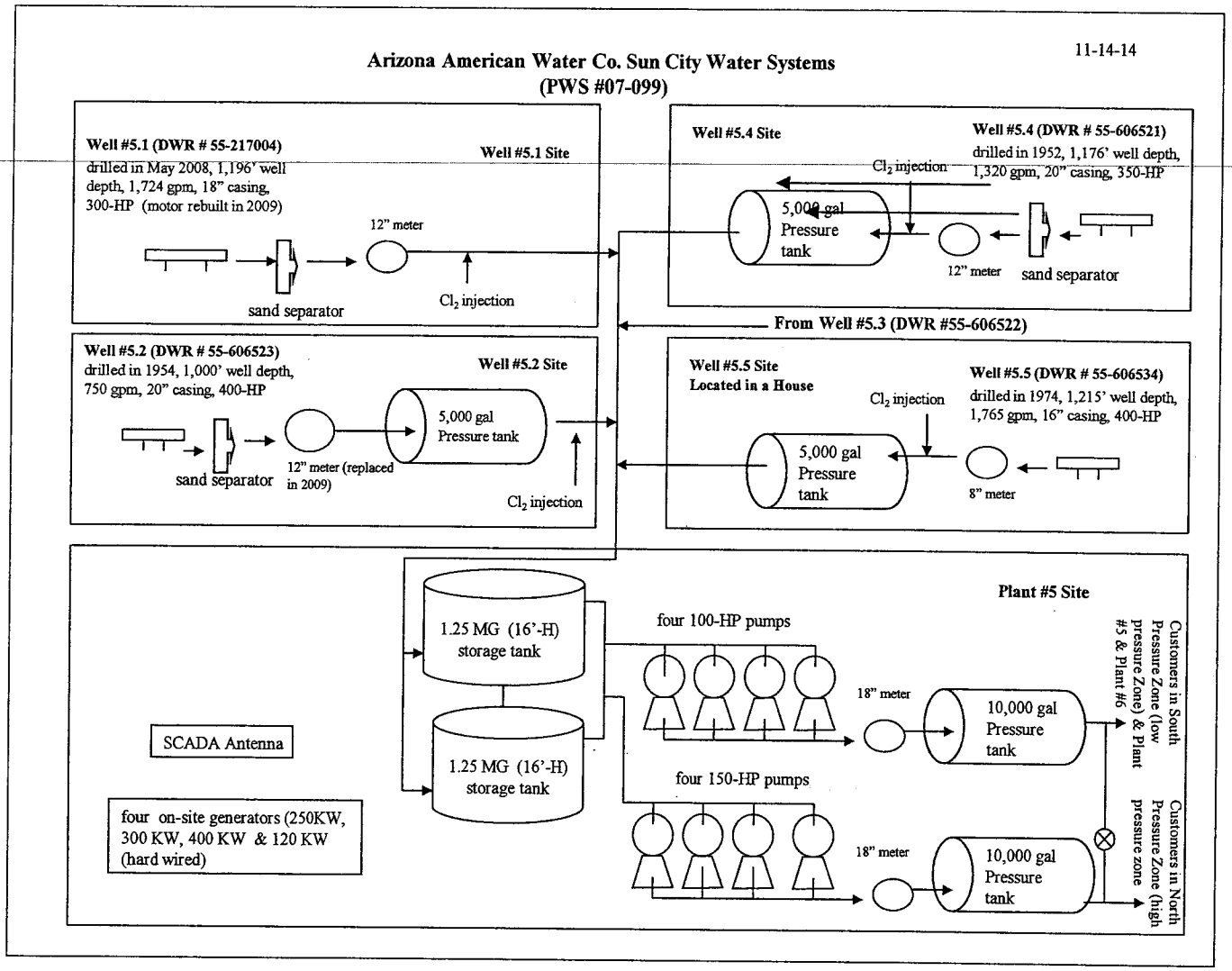

FIGURE 3D

SUN CITY WATER DISTRICT – SUN CITY WATER SYSTEM (PWS No. 04-07-099)

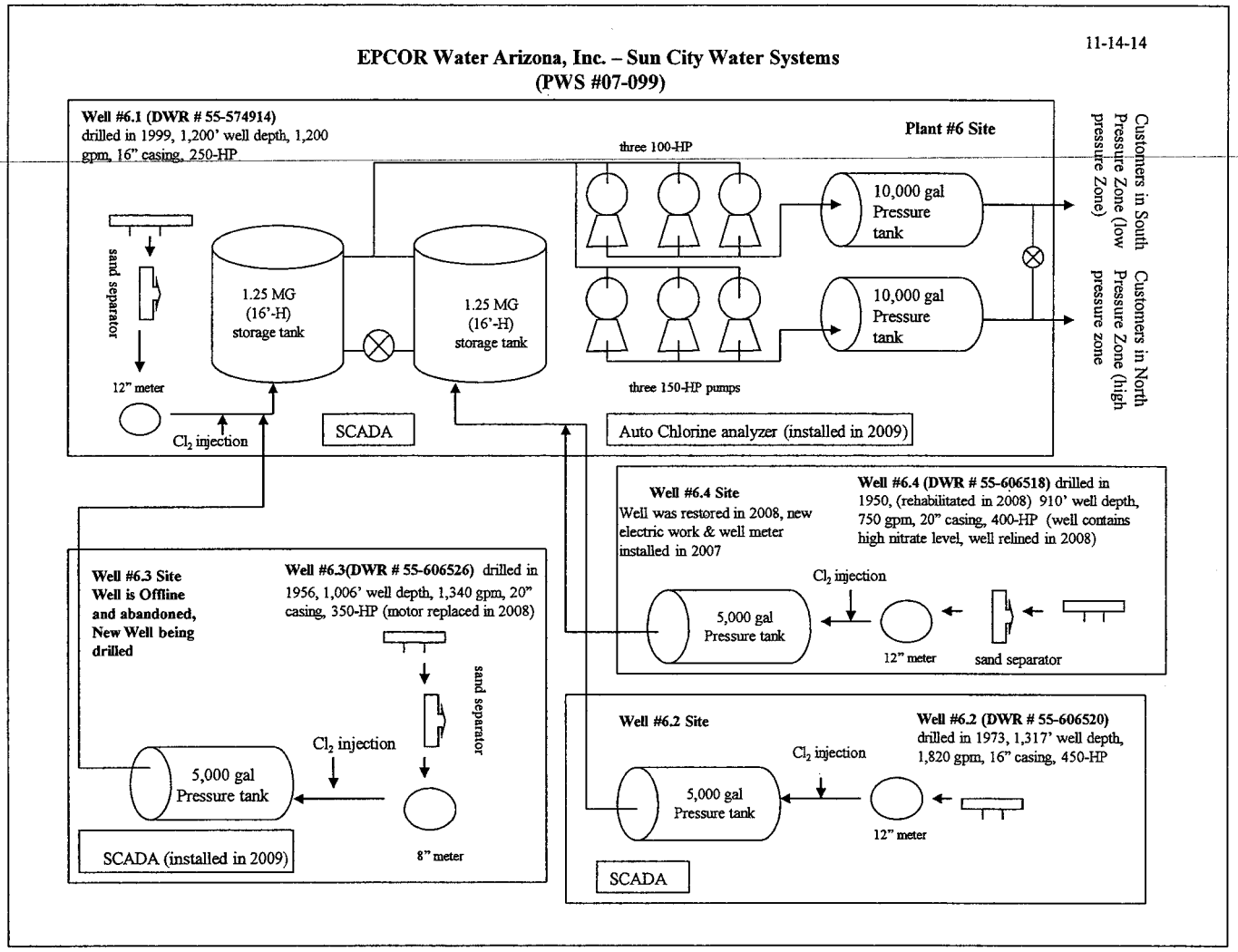

FIGURE 3E

SUN CITY WATER DISTRICT – SUN CITY WATER SYSTEM (PWS No. 04-07-099)

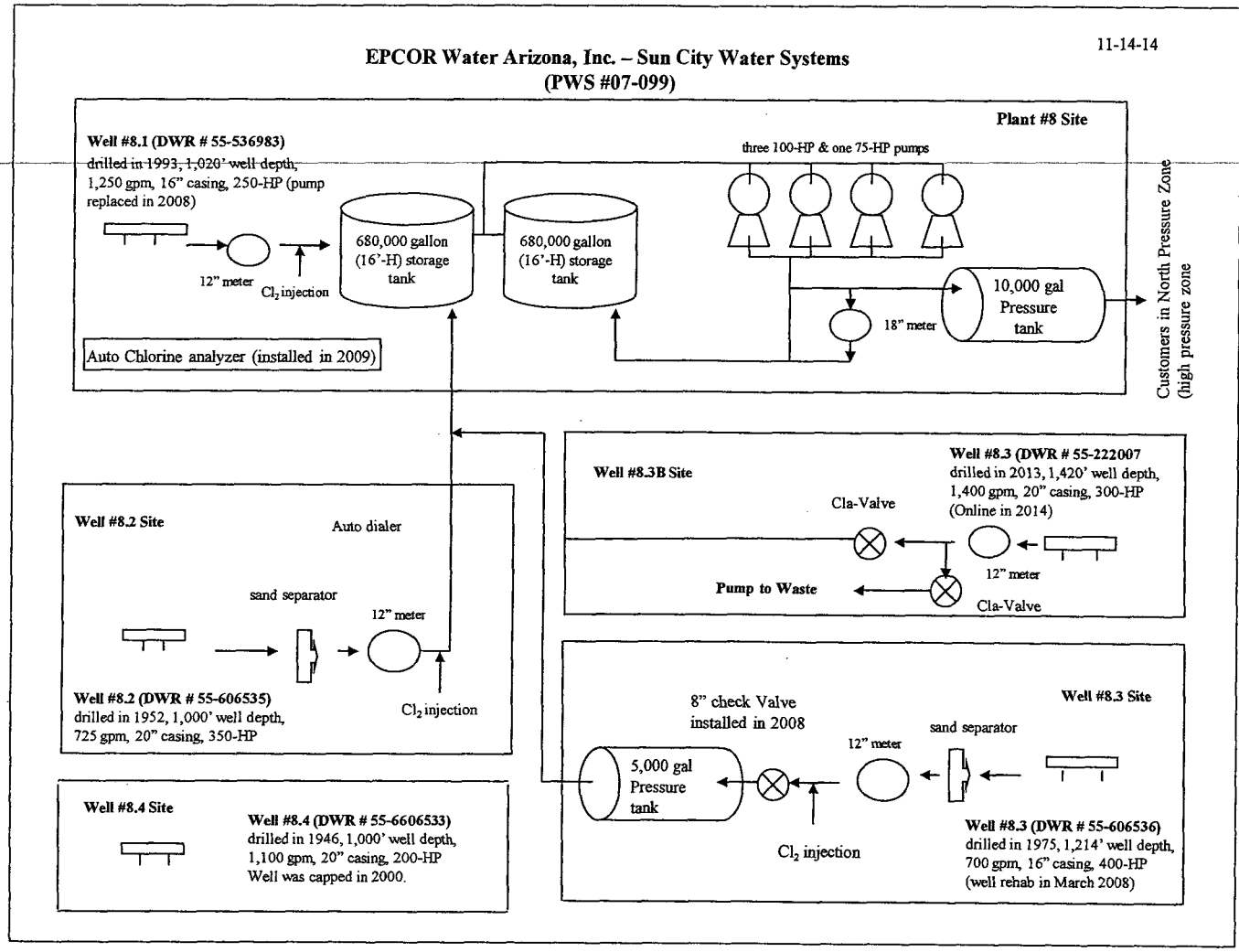

FIGURE 3F

SUN CITY WATER DISTRICT – SUN CITY WATER SYSTEM (PWS No. 04-07-099)

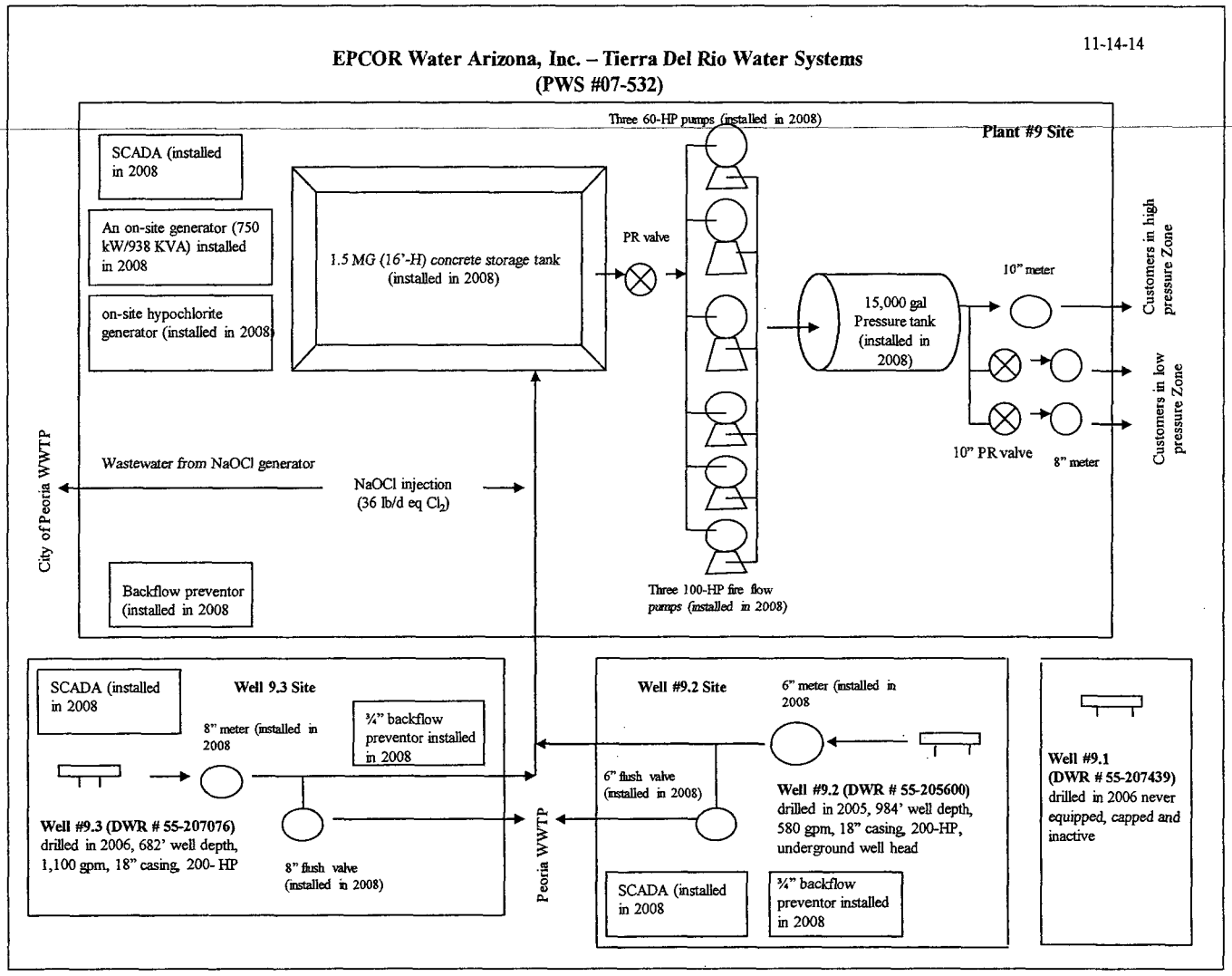

FIGURE 4A

SUN CITY WATER DISTRICT – TIERRA DEL RIO WATER SYSTEM (PWS No. 04-07-532)

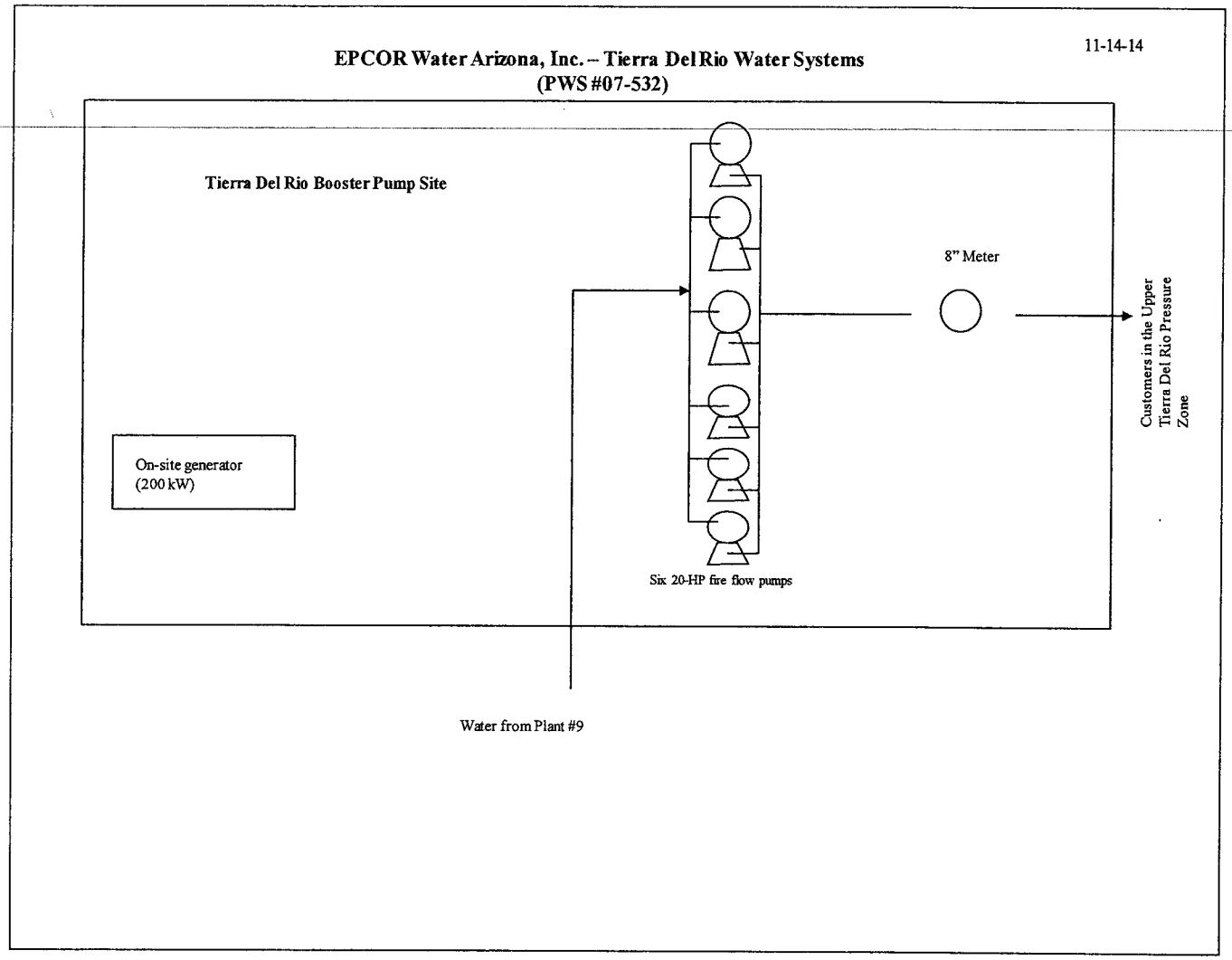

FIGURE 4B

SUN CITY WATER DISTRICT – TIERRA DEL RIO WATER SYSTEM (PWS No. 04-07-532)

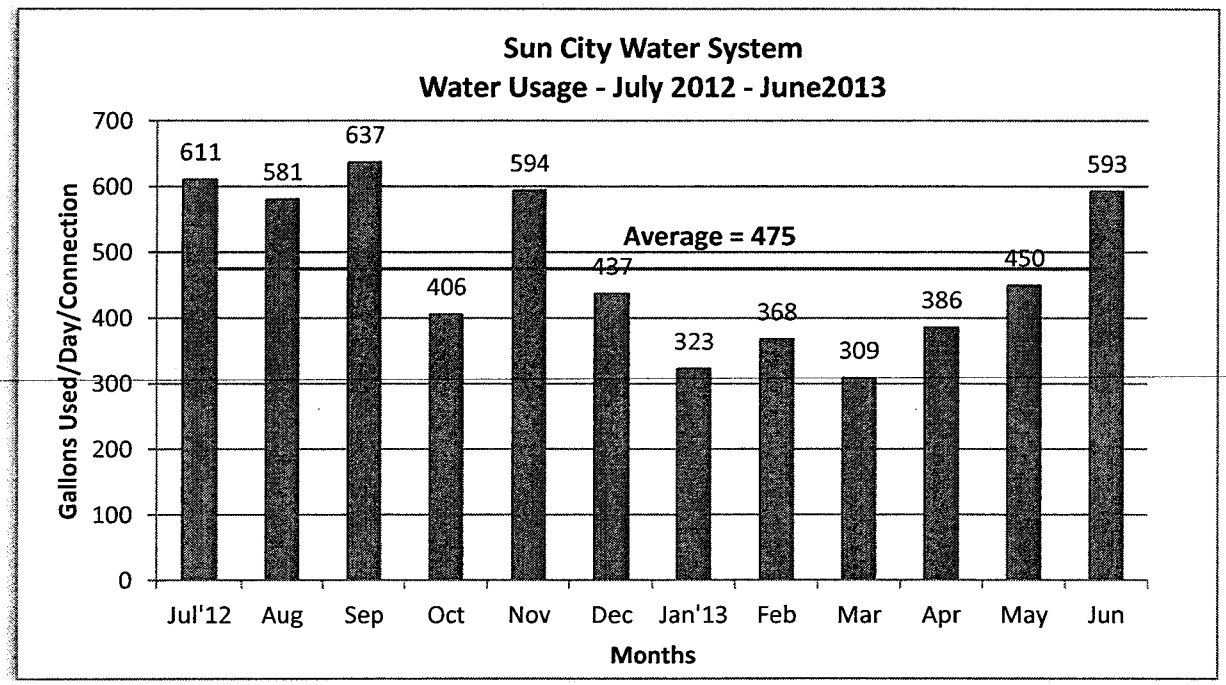

FIGURE 5A – SUN CITY WATER SYSTEM WATER CONSUMPTION

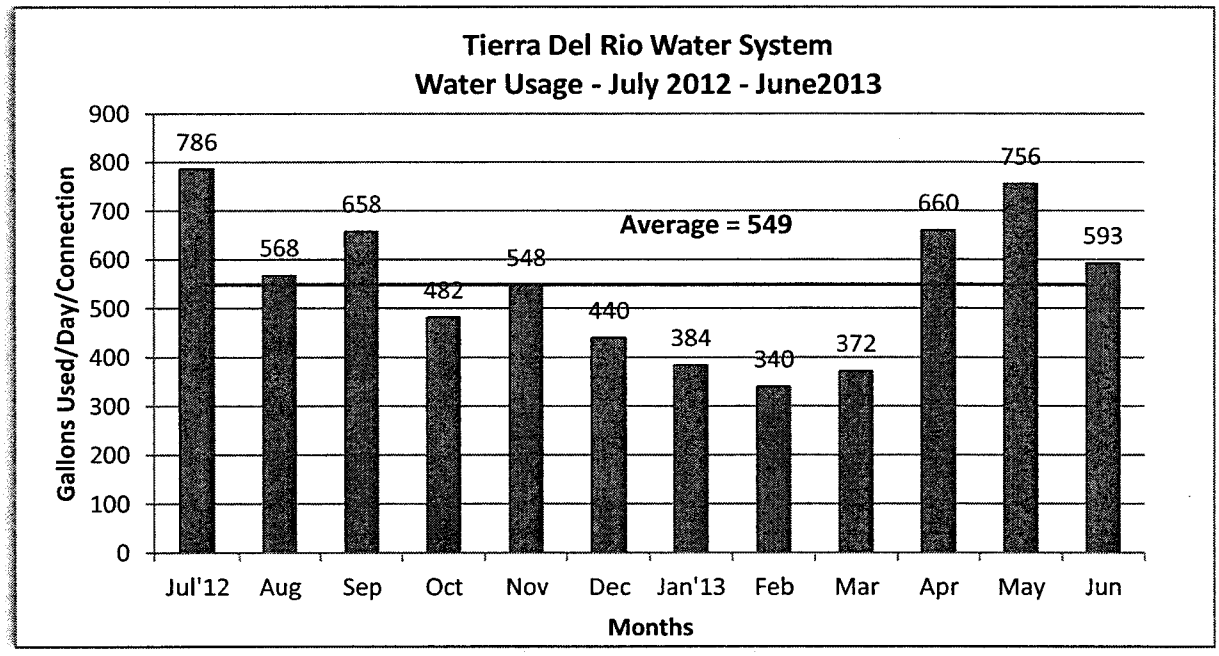

FIGURE 5B – TIERRA DEL RIO WATER SYSTEM WATER CONSUMPTION

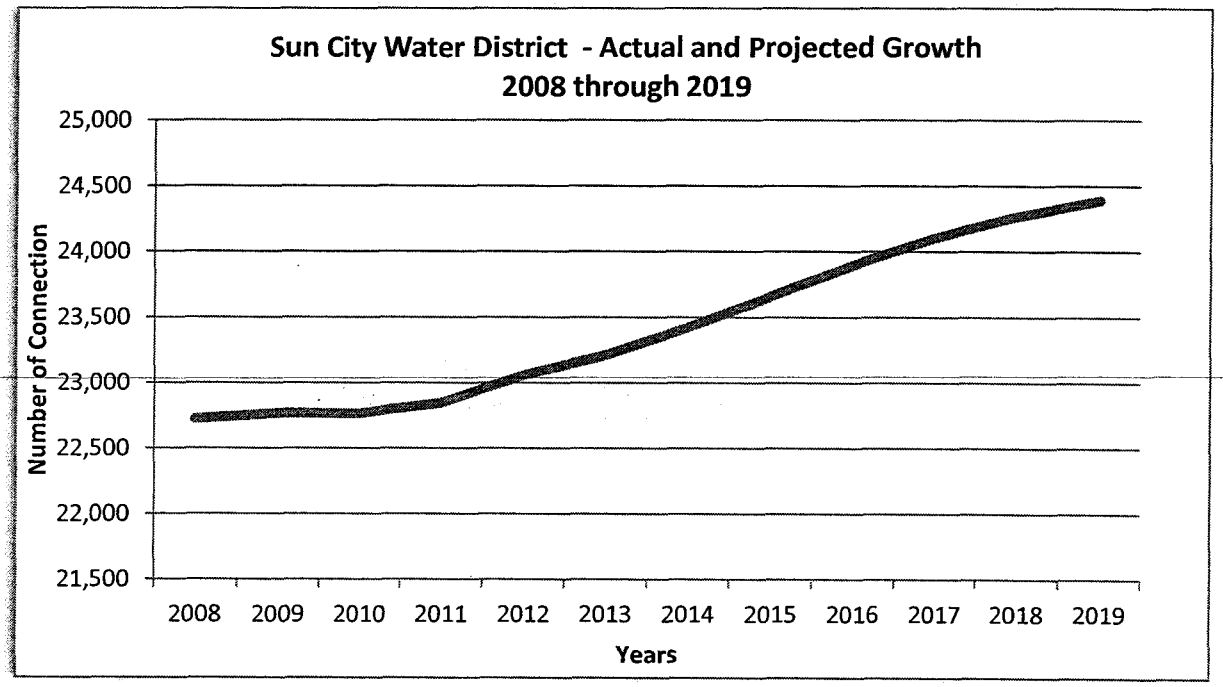

FIGURE 6 – SUN CITY WATER DISTRICT ACTUAL & PROJECTED GROWTH

ATTACHMENTS

ATTACHMENT 1

Meter Repair and/or Replacement Tariff – BMP 4.2

PURPOSE

A program for the Company to systematically assess all in-service water meters (including Company production meters) in its water service area to identify under-registering meters for repair or replacement (Modified Non-Per Capita Conservation Program Best Management Practice Category 4: Physical System Evaluation and Improvement 4.2 Meter Repair and/or Replacement Program).

REQUIREMENTS

The requirements of this tariff are governed by Rules of the Arizona Corporation Commission and were adapted from the Arizona Department of Water Resources' Required Public Education Program and Best Management Practices in the Modified Non-Per Capita Conservation Program.

1. On a systematic basis, the Company will inspect 100 percent of its 1-inch and smaller in-service water meters at least once every ten years for one of the following reasons (whichever occurs first):
    a. A meter reading complaint is filed with the Company by a customer or Arizona Corporation Commission Staff,
    b. A meter has registered 1,000,000 gallons of usage,
    c. A meter has been in service for ten years.

2. Meters larger than 1-inch shall be inspected for one of the following reasons:
    a. A meter reading complaint is filed with the Company by a customer or Arizona Corporation Commission Staff,
    b. A meter has been in service for five years.

3. The inspection will be accomplished by having a Company Technician physically inspect each meter and its fittings for leaks, registers which may have become loose or are not properly attached to the meter and could be under-registering or other broken parts which need repair. In addition, meters shall be randomly selected for flow testing to identify potentially under-registering meters.

4. The Company shall also replace or reprogram any water meters that do not register in gallons. Upon the effective date of this tariff, the Company shall install all replacement meters with new:
    a. 1-inch and smaller meters that register in 1 gallon increments,
    b. 1-1/2-inch through 4-inch meters that register in 10 gallon increments, and
    c. 6-inch and larger meters that register in 100 gallon increments.

5. The Company shall keep records of all inspected and replacement meters and make this information available to the Commission upon request.

ATTACHMENT 2A

Sun City – PWS ID No. 07-099

SIB PLANT TABLE I, 1-1

2015 Service Line Replacements

Information to be included with SIB-Eligible Project Notification

	NARUC Acct No. (SIB-eligible plant)	Replacement Plant Description (SIB-eligible plant)					Site (location description)	Replacement Plant			
Project No.	**331 T&D Mains** **333 Services** **334 Meters**	Description	Pipe length/ Quantity	Diameter/ Size	Material	Installed Cost/Unit (Estimated)		Expected In-Service Date	Estimated Subtotal Cost (by NARUC Acct No)	Estimated Subtotal Cost (by project)	1. Provide narrative why Replacement Plant is necessary - replacement of existing plant that has exceeded its designated useful life and has worn out or is in deteriorating condition due to no fault of the utility - replacement of existing plant to address excessive water loss (10% or more) - replacement of existing plant for other reasons supported by persuasive showing by utility 2. Provide narrative explaining why this segment of plant is a priority. 3. Provide narrative explaining how replacing this plant will benefit existing customers. 4. Provide affirmation that Replacement Plant does not include the costs for extending or expanding facilities to serve new customers. 5. Provides reference to related page No. in the submitted detailed Engineering Analysis supporting the need for SIB. Engineering Analysis shall also include narrative explaining the utility's systematic assessment, inspection, maintenance, and repair/replacement program.
S-1	333	service lines	42	2-1" 40-1.5"	Copper	1"-$3,881, 1.5"-$3,947	Kelso Dr	12/2015	n/a	$165,634	Replace aging services with copper service lines to reduce water leaks and emergency repairs. (42 total on 107th Dr, 109th Ave, Caron Dr, Denham Dr, Kelso Dr and Mission Ln between 109th Ave and 107 Ave.) The services are old and are failing at a high rate. These services are a priority because they are galvanized steel pipe and they were installed 40 to 50 years ago. Galvanized pipe is prone to corrosion and has been shown to have a useful life of less than 40 years. In the area of these projects, 444 services previously failed and were replaced. Replacing the services will help reduce system water loss and improve customer pressure and flow. The service line replacements are for existing customers and not related to new growth. See Section 1 narrative and Map No. S-1 in Exhibit CC-1-B for more detail.
S-2	333	service lines	17	1"	Copper	1"-$3,881	Hatcher Rd	12/2015	n/a	$65,974	Replace aging services with copper service lines to reduce water leaks and emergency repairs. (17 total on 109th Dr and Hatcher Rd between Kelso Dr and 107th Ave.) The services are old and are failing at a high rate. These services are a priority because they are galvanized steel pipe and they were installed 40 to 50 years ago. Galvanized pipe is prone to corrosion and has been shown to have a useful life of less than 40 years. In the area of these projects, 444 services previously failed and were replaced. Replacing the services will help reduce system water loss and improve customer pressure and flow. The service line replacements are for existing customers and not related to new growth. See Section 1 narrative and

												Map No. S-2 in Exhibit CC-1-B for more detail.
S-3	333	service lines	18	14-1.5" 4-2"	Copper	1.5"-$3,947 2"-$4,013	110th Ave	12/2015	n/a		$71,306	Replace aging services with copper service lines to reduce water leaks and emergency repairs. (18 total on 110th Ave and Apartments between Kelso Dr and Mountain View Rd.) The services are old and are failing at a high rate. These services are a priority because they are galvanized steel pipe and they were installed 40 to 50 years ago. Galvanized pipe is prone to corrosion and has been shown to have a useful life of less than 40 years. In the area of these projects, 444 services previously failed and were replaced. Replacing the services will help reduce system water loss and improve customer pressure and flow. The service line replacements are for existing customers and not related to new growth. See Section 1 narrative and Map No. S-3 in Exhibit CC-1-B for more detail.
S-4	333	service lines	16	1.5"	Copper	$3,947	Mountain View Rd	12/2015	n/a		$63,149	Replace aging services with copper service lines to reduce water leaks and emergency repairs. (16 total on Mountain View Rd and Venturi Dr between Cumberland Dr and 107th Ave.) The services are old and are failing at a high rate. These services are a priority because they are galvanized steel pipe and they were installed 40 to 50 years ago. Galvanized pipe is prone to corrosion and has been shown to have a useful life of less than 40 years. In the area of these projects, 444 services previously failed and were replaced. Replacing the services will help reduce system water loss and improve customer pressure and flow. The service line replacements are for existing customers and not related to new growth. See Section 1 narrative and Map No. S-4 in Exhibit CC-1-B for more detail.
S-5	333	service lines	22	1.5"	Copper	$3,947	Cheryl Dr	12/2015	n/a		$86,830	Replace aging services with copper service lines to reduce water leaks and emergency repairs. (22 total on Cheryl Dr, Cinnabar Ave, Cumberland Dr, and Salem Dr between Mountain View Rd and 107th Ave.) The services are old and are failing at a high rate. These services are a priority because they are galvanized steel pipe and they were installed 40 to 50 years ago. Galvanized pipe is prone to corrosion and has been shown to have a useful life of less than 40 years. In the area of these projects, 444 services previously failed and were replaced. Replacing the services will help reduce system water loss and improve customer pressure and flow. The service line replacements are for existing customers and not related to new growth. See Section 1 narrative and Map No. S-5 in Exhibit CC-1-B for more detail.

S-6	333	service lines	5	1.5"	Copper	$3,947	103rd Ave	12/2015	n/a	$19,734	Replace aging services with copper service lines to reduce water leaks and emergency repairs. (5 total on 103rd Ave between Mountain View Rd and Olive Ave.) The services are old and are failing at a high rate. These services are a priority because they are galvanized steel pipe and they were installed 40 to 50 years ago. Galvanized pipe is prone to corrosion and has been shown to have a useful life of less than 40 years. In the area of these projects, 444 services previously failed and were replaced. Replacing the services will help reduce system water loss and improve customer pressure and flow. The service line replacements are for existing customers and not related to new growth. See Section 1 narrative and Map No. S-6 in Exhibit CC-1-B for more detail.
S-7	333	service lines	11	1.5"	Copper	$3,947	Balboa Dr	12/2015	n/a	$43,415	Replace aging services with copper service lines to reduce water leaks and emergency repairs. (11 total on Balboa Dr between Mountain View Rd and Ironwood Dr.) The services are old and are failing at a high rate. These services are a priority because they are galvanized steel pipe and they were installed 40 to 50 years ago. Galvanized pipe is prone to corrosion and has been shown to have a useful life of less than 40 years. In the area of these projects, 444 services previously failed and were replaced. Replacing the services will help reduce system water loss and improve customer pressure and flow. The service line replacements are for existing customers and not related to new growth. See Section 1 narrative and Map No. S-7 in Exhibit CC-1-B for more detail.
S-8	333	service lines	24	1.5"	Copper	$3,947	108th Dr	12/2015	n/a	$94,723	Replace aging services with copper service lines to reduce water leaks and emergency repairs. (24 total on 108th Ave, 108th Dr, Clair Dr, Deanne Cir and Peoria Ave between 109th Ave and 107th Ave.) The services are old and are failing at a high rate. These services are a priority because they are galvanized steel pipe and they were installed 40 to 50 years ago. Galvanized pipe is prone to corrosion and has been shown to have a useful life of less than 40 years. In the area of these projects, 444 services previously failed and were replaced. Replacing the services will help reduce system water loss and improve customer pressure and flow. The service line replacements are for existing customers and not related to new growth. See Section 1 narrative and Map No. S-8 in Exhibit CC-1-B for more detail.
S-9	333	service lines	10	1.5"	Copper	$3,947	Clair Dr	12/2015	n/a	$39,468	Replace aging services with copper service lines to reduce water leaks and emergency repairs. (10 total on Clair Dr and Peoria Ave between 111th Ave and 108th Ave.) The services are old and are failing at a high rate. These services are a priority because they are galvanized steel pipe and they were installed 40 to 50 years ago. Galvanized pipe is prone to corrosion and has been shown to have a useful life of less than 40 years. In the area of these projects, 444 services previously failed and were replaced. Replacing the services will help reduce system water loss and improve customer pressure and flow. The service line replacements are for existing customers and not related to new growth. See Section 1 narrative and Map No. S-9 in Exhibit CC-1-B for more detail.
Total			**165**							**$650,232**	

ATTACHMENT 2B

Sun City – PWS ID No. 07-099

SIB PLANT TABLE I, 1-2

2017 Service Line Replacements

Information to be included with SIB-Eligible Project Notification

	NARUC Acct No. (SIB-eligible plant)	Replacement Plant Description (SIB-eligible plant)					Site (location description)	Replacement Plant			
Project No.	**331 T&D Mains** **333 Services** **334 Meters**	Description	Pipe length/ Quantity	Diameter/ Size	Material	Installed Cost/Unit (Estimated)		Expected In-Service Date	Estimated Subtotal Cost (by NARUC Acct No)	Estimated Subtotal Cost (by project)	1. Provide narrative why Replacement Plant is necessary - replacement of existing plant that has exceeded its designated useful life and has worn out or is in deteriorating condition due to no fault of the utility - replacement of existing plant to address excessive water loss (10% or more) - replacement of existing plant for other reasons supported by persuasive showing by utility 2. Provide narrative explaining why this segment of plant is a priority. 3. Provide narrative explaining how replacing this plant will benefit existing customers. 4. Provide affirmation that Replacement Plant does not include the costs for extending or expanding facilities to serve new customers. 5. Provides reference to related page No. in the submitted detailed Engineering Analysis supporting the need for SIB. Engineering Analysis shall also include narrative explaining the utility's systematic assessment, inspection, maintenance, and repair/replacement program.
S-10	333	service lines	11	2-1" 40-1.5"	Copper	1"-$3,881 1.5"-$3,947	105th Dr	12/2017	n/a	$43,415	Replace aging services with copper service lines to reduce water leaks and emergency repairs. (11 total on 105th Ave, 105th Dr, 106th Ave, 106th Dr, Audrey Dr, Clair Dr and Deanne Dr between 107th Ave and 105th Ave.) The services are old and are failing at a high rate. These services are a priority because they are galvanized steel pipe and they were installed 40 to 50 years ago. Galvanized pipe is prone to corrosion and has been shown to have a useful life of less than 40 years. In the area of these projects, 444 services previously failed and were replaced. Replacing the services will help reduce system water loss and improve customer pressure and flow. The service line replacements are for existing customers and not related to new growth. See Section 1 narrative and Map No. S-10 in Exhibit CC-1-B for more detail.
S-11	333	service lines	25	1"	Copper	1"-$3,881	Audrey Dr	12/2017	n/a	$98,670	Replace aging services with copper service lines to reduce water leaks and emergency repairs. (25 total on Audrey Dr, Clair Dr, Corte Del Sol Este, Corte Del Sol Oeste, Deanne Dr and Peoria Ave between 105th Ave and 103 Ave.) The services are old and are failing at a high rate. These services are a priority because they are galvanized steel pipe and they were installed 40 to 50 years ago. Galvanized pipe is prone to corrosion and has been shown to have a useful life of less than 40 years. In the area of these projects, 444 services previously failed and were replaced. Replacing the services will help reduce system water loss and improve customer pressure and

											flow. The service line replacements are for existing customers and not related to new growth. See Section 1 narrative and Map No. S-11 in Exhibit CC-1-B for more detail.
S-12	333	service lines	22	14-1.5" 4-2"	Copper	1.5"-$3,947 2"-$4,013	Caron Dr	12/2017	n/a	$86,830	Replace aging services with copper service lines to reduce water leaks and emergency repairs. (22 total on Tonada Dr, Caron Dr, Kelso Dr and109th Dr between 111th Ave and 109th Ave.) The services are old and are failing at a high rate. These services are a priority because they are galvanized steel pipe and they were installed 40 to 50 years ago. Galvanized pipe is prone to corrosion and has been shown to have a useful life of less than 40 years. In the area of these projects, 444 services previously failed and were replaced. Replacing the services will help reduce system water loss and improve customer pressure and flow. The service line replacements are for existing customers and not related to new growth. See Section 1 narrative and Map No. S-12 in Exhibit CC-1-B for more detail.
S-13	333	service lines	14	11-1.5" 3-2"	Copper	1.5"-$3,947 2"-$4,013	Mountain View Rd West	12/2017	n/a	$55,453	Replace aging services with copper service lines to reduce water leaks and emergency repairs. (14 total on 105th Ave, 105th Dr, 107th Ave, Mountain View Rd, Rodgers Cir and Winninger Cir between 107th and 103rd Ave.) The services are old and are failing at a high rate. These services are a priority because they are galvanized steel pipe and they were installed 40 to 50 years ago. Galvanized pipe is prone to corrosion and has been shown to have a useful life of less than 40 years. In the area of these projects, 444 services previously failed and were replaced. Replacing the services will help reduce system water loss and improve customer pressure and flow. The service line replacements are for existing customers and not related to new growth. See Section 1 narrative and Map No. S-13 in Exhibit CC-1-B for more detail.
S-14	333	service lines	14	1.5"	Copper	$3,947	Mountain View Rd East	12/2017	n/a	$55,255	Replace aging services with copper service lines to reduce water leaks and emergency repairs. (14 total on Mountain View Rd between 103rd Ave and Balboa Dr.) The services are old and are failing at a high rate. These services are a priority because they are galvanized steel pipe and they were installed 40 to 50 years ago. Galvanized pipe is prone to corrosion and has been shown to have a useful life of less than 40 years. In the area of these projects, 444 services previously failed and were replaced. Replacing the services will help reduce system water loss and improve customer pressure and flow. The service line replacements are for existing customers and not related to new growth. See Section 1 narrative and Map No. S-14 in Exhibit CC-1-B for more detail.

S-15	333	service lines	4	1.5"	Copper	$3,947	Peoria Ave and 103rd Ave	12/2017	n/a	$15,787	Replace aging services with copper service lines to reduce water leaks and emergency repairs. (4 total on Peoria Ave between 103th Ave and 99 Ave.) The services are old and are failing at a high rate. These services are a priority because they are galvanized steel pipe and they were installed 40 to 50 years ago. Galvanized pipe is prone to corrosion and has been shown to have a useful life of less than 40 years. In the area of these projects, 444 services previously failed and were replaced. Replacing the services will help reduce system water loss and improve customer pressure and flow. The service line replacements are for existing customers and not related to new growth. See Section 1 narrative and Map No. S-15 in Exhibit CC-1-B for more detail.
S-16	333	service lines	8	1.5"	Copper	$3,947	Abbott Ave West	12/2017	n/a	$31,574	Replace aging services with copper service lines to reduce water leaks and emergency repairs. (8 total on Abbott Ave between 111th Ave and 109th Ave.) The services are old and are failing at a high rate. These services are a priority because they are galvanized steel pipe and they were installed 40 to 50 years ago. Galvanized pipe is prone to corrosion and has been shown to have a useful life of less than 40 years. In the area of these projects, 444 services previously failed and were replaced. Replacing the services will help reduce system water loss and improve customer pressure and flow. The service line replacements are for existing customers and not related to new growth. See Section 1 narrative and Map No. S-16 in Exhibit CC-1-B for more detail.
S-17	333	service lines	14	1.5"	Copper	$3,947	Abbott Ave East	12/2017	n/a	$52,255	Replace aging services with copper service lines to reduce water leaks and emergency repairs. (14 total on Abbott Ave and 107th Ave between 109th Ave and 107th Ave.) The services are old and are failing at a high rate. These services are a priority because they are galvanized steel pipe and they were installed 40 to 50 years ago. Galvanized pipe is prone to corrosion and has been shown to have a useful life of less than 40 years. In the area of these projects, 444 services previously failed and were replaced. Replacing the services will help reduce system water loss and improve customer pressure and flow. The service line replacements are for existing customers and not related to new growth. See Section 1 narrative and Map No. S-17 in Exhibit CC-1-B for more detail.
S-18	333	service lines	3	2-1.5" 1-3"	Copper	1.5"-$3,947 3"-$4,145	Peoria Ave and 105th Ave	12/2017	n/a	$12,038	Replace aging services with copper service lines to reduce water leaks and emergency repairs. (3 total on Peoria Ave and 105th Ave between 107th Ave and 105th Ave.) The services are old and are failing at a high rate. These services are a priority because they are galvanized steel pipe and they were installed 40 to 50 years ago. Galvanized pipe is prone to corrosion and has been shown to have a useful life of less than 40 years. In the area of these projects, 444 services previously failed and were replaced. Replacing the services will help reduce system water loss and improve customer pressure and flow. The service line replacements are for existing customers and not related to new growth. See Section 1 narrative and Map No. S-18 in Exhibit CC-1-B for more detail.

S-19	333	service lines	1	1.5"	Copper	$3,947	Peoria Ave and 99th Ave	12/2017	n/a		$3,947	Replace aging service with copper service line to reduce water leaks and emergency repairs. (1 total on Peoria Ave between 99th Ave and 96th Ave.) This service is a priority because it was installed 40 to 50 years ago. Replacing the service will help reduce system water loss and improve customer pressure and flow. The service line replacement is for existing customers and not related to new growth. See Section 1 narrative and Map No. S-19 in Exhibit CC-1-B for more detail.
S-20	333	service lines	3	1.5"	Copper	$3,947	Snead Circle	12/2017	n/a		$11,840	Replace aging services with copper service lines to reduce water leaks and emergency repairs. (3 total on Sneed Circle west of 103 Ave.) The services are old and are failing at a high rate. These services are a priority because they are galvanized steel pipe and they were installed 40 to 50 years ago. Galvanized pipe is prone to corrosion and has been shown to have a useful life of less than 40 years. In the area of these projects, 444 services previously failed and were replaced. Replacing the services will help reduce system water loss and improve customer pressure and flow. The service line replacements are for existing customers and not related to new growth. See Section 1 narrative and Map No. S-20 in Exhibit CC-1-B for more detail.
S-21	333	service lines	10	1.5"	Copper	$3,947	Coggins Dr	12/2017	n/a		$39,468	Replace aging services with copper service lines to reduce water leaks and emergency repairs. (10 total on Coggins Dr and Lakeview Cir between Sun City Blvd and Balboa Dr.) The services are old and are failing at a high rate. These services are a priority because they are galvanized steel pipe and they were installed 40 to 50 years ago. Galvanized pipe is prone to corrosion and has been shown to have a useful life of less than 40 years. In the area of these projects, 444 services previously failed and were replaced. Replacing the services will help reduce system water loss and improve customer pressure and flow. The service line replacements are for existing customers and not related to new growth. See Section 1 narrative and Map No. S-21 in Exhibit CC-1-B for more detail..
S-22	333	service lines	1	1.5"	Copper	$3,947	99th Ave	12/2017	n/a		$4,145	Replace aging services with copper service lines to reduce water leaks and emergency repairs. (1 total on 99th Ave between Sun City Blvd and Peoria Ave.) This service is a priority because it was installed 40 to 50 years ago. Replacing the service will help reduce system water loss and improve customer pressure and flow. The service line replacement is for existing customers and not related to new growth. See Section 1 narrative and Map No. S-22 in Exhibit CC-1-B for more detail.
S-23	333	service lines	4	1.5"	Copper	$3,947	111th Ave South	12/2017	n/a		$15,787	Replace aging services with copper service lines to reduce water leaks and emergency repairs. (4 total on 111th Ave between Elk Ave and Iowa Ave.) The services are old and are failing at a high rate. These services are a priority because they are galvanized steel pipe and they were installed 40 to 50 years ago. Galvanized pipe is prone to corrosion and has been shown to have a useful life of less than 40 years. In the area of these projects, 444 services previously failed and were replaced. Replacing the services will help reduce system water loss and improve customer pressure and flow. The service line replacements are for existing customers and not related to new growth. See Section 1 narrative and Map No. S-23 in Exhibit

											CC-1-B for more detail.
S-24	333	service lines	8	1.5"	Copper	$3,947	107th Ave South	12/2017	n/a	$31,574	Replace aging services with copper service lines to reduce water leaks and emergency repairs. (8 total on 107th Ave between Connecticut Ave and Elk Ave and Hope Dr.) The services are old and are failing at a high rate. These services are a priority because they are galvanized steel pipe and they were installed 40 to 50 years ago. Galvanized pipe is prone to corrosion and has been shown to have a useful life of less than 40 years. In the area of these projects, 444 services previously failed and were replaced. Replacing the services will help reduce system water loss and improve customer pressure and flow. The service line replacements are for existing customers and not related to new growth. See Section 1 narrative and Map No. S-24 in Exhibit CC-1-B for more detail.
S-25	333	service lines	5	1.5"	Copper	$3,947	111th Ave North	12/2017	n/a	$19,734	Replace aging services with copper service lines to reduce water leaks and emergency repairs. (5 total on 111th Ave and Alabama Ave between Elk Ave and Cherry Hills Dr.) The services are old and are failing at a high rate. These services are a priority because they are galvanized steel pipe and they were installed 40 to 50 years ago. Galvanized pipe is prone to corrosion and has been shown to have a useful life of less than 40 years. In the area of these projects, 444 services previously failed and were replaced. Replacing the services will help reduce system water loss and improve customer pressure and flow. The service line replacements are for existing customers and not related to new growth. See Section 1 narrative and Map No. S-25 in Exhibit CC-1-B for more detail.
S-26	333	service lines	12	1.5"	Copper	$3,947	107th Ave North	12/2017	n/a	$47,362	Replace aging services with copper service lines to reduce water leaks and emergency repairs. (12 total on 107th Ave and Alabama Ave between Pebble Beach Dr and Connecticut Ave.) The services are old and are failing at a high rate. These services are a priority because they are galvanized steel pipe and they were installed 40 to 50 years ago. Galvanized pipe is prone to corrosion and has been shown to have a useful life of less than 40 years. In the area of these projects, 444 services previously failed and were replaced. Replacing the services will help reduce system water loss and improve customer pressure and flow. The service line replacements are for existing customers and not related to new growth. See Section 1 narrative and Map No. S-26 in Exhibit CC-1-B for more detail.
S-27	333	service lines	8	1.5"	Copper	$3,947	Alabama Ave and 107th Ave	12/2017	n/a	$31,574	Replace aging services with copper service lines to reduce water leaks and emergency repairs. (8 total on 107th Ave and Alabama Ave between Cherry Hills Dr and 105th Ave.) The services are old and are failing at a high rate. These services are a priority because they are galvanized steel pipe and they were installed 40 to 50 years ago. Galvanized pipe is prone to corrosion and has been shown to have a useful life of less than 40 years. In the area of these projects, 444 services previously failed and were replaced. Replacing the services will help reduce system water loss and improve customer pressure and flow. The service line replacements are for existing customers and not related to new growth. See Section 1 narrative and Map No. S-27 in Exhibit CC-1-B for more detail.

S-28	333	service lines	10	1.5"	Copper	$3,947	Alabama Ave at Thunderbird	12/2017	n/a	$39,468	Replace aging services with copper service lines to reduce water leaks and emergency repairs. (10 total on Alabama Ave and 103th Ave between 105th Ave and Oakmont Dr.) The services are old and are failing at a high rate. These services are a priority because they are galvanized steel pipe and they were installed 40 to 50 years ago. Galvanized pipe is prone to corrosion and has been shown to have a useful life of less than 40 years. In the area of these projects, 444 services previously failed and were replaced. Replacing the services will help reduce system water loss and improve customer pressure and flow. The service line replacements are for existing customers and not related to new growth. See Section 1 narrative and Map No. S-28 in Exhibit CC-1-B for more detail.
S-29	333	service lines	7	1.5"	Copper	$3,947	Alabama Ave at Coggins	12/2017	n/a	$27,628	Replace aging services with copper service lines to reduce water leaks and emergency repairs. (7 total on Alabama Ave between 103rd Ave and 99th Ave.) The services are old and are failing at a high rate. These services are a priority because they are galvanized steel pipe and they were installed 40 to 50 years ago. Galvanized pipe is prone to corrosion and has been shown to have a useful life of less than 40 years. In the area of these projects, 444 services previously failed and were replaced. Replacing the services will help reduce system water loss and improve customer pressure and flow. The service line replacements are for existing customers and not related to new growth. See Section 1 narrative and Map No. S-29 in Exhibit CC-1-B for more detail.
S-30	333	service lines	27	14-1.5" 13-2"	Copper	1.5"-$3,947 2"-$4,013	Coggins Dr	12/2017	n/a	$107,422	Replace aging services with copper service lines to reduce water leaks and emergency repairs. (27 total on Coggins Dr and Windsor Dr between 111th Ave and 108th Ave.) The services are old and are failing at a high rate. These services are a priority because they are galvanized steel pipe and they were installed 40 to 50 years ago. Galvanized pipe is prone to corrosion and has been shown to have a useful life of less than 40 years. In the area of these projects, 444 services previously failed and were replaced. Replacing the services will help reduce system water loss and improve customer pressure and flow. The service line replacements are for existing customers and not related to new growth. See Section 1 narrative and Map No. S-30 in Exhibit CC-1-B for more detail.
S-31	333	service lines	10	8-1.5" 2-2"	Copper	1.5"-$3,947 2"-$4,013	Oakmont Dr West	12/2017	n/a	$39,600	Replace aging services with copper service lines to reduce water leaks and emergency repairs. (10 total on Oakmont Dr, 107th Ave and 108th Ave between Grand Ave and Cherry Hills Dr.) The services are old and are failing at a high rate. These services are a priority because they are galvanized steel pipe and they were installed 40 to 50 years ago. Galvanized pipe is prone to corrosion and has been shown to have a useful life of less than 40 years. In the area of these projects, 444 services previously failed and were replaced. Replacing the services will help reduce system water loss and improve customer pressure and flow. The service line replacements are for existing customers and not related to new growth. See Section 1 narrative and Map No. S-31 in Exhibit CC-1-B for more detail.

S-32	333	service lines	14	6-1.5" 8-2"	Copper	1.5"-$3,947 2"-$4,013	Oakmont Dr East	12/2017	n/a	$55,783	Replace aging services with copper service lines to reduce water leaks and emergency repairs. (14 total on 105th Ave, Coggins Dr and Oakmont Dr between 107th Ave and 105th Ave.) The services are old and are failing at a high rate. These services are a priority because they are galvanized steel pipe and they were installed 40 to 50 years ago. Galvanized pipe is prone to corrosion and has been shown to have a useful life of less than 40 years. In the area of these projects, 444 services previously failed and were replaced. Replacing the services will help reduce system water loss and improve customer pressure and flow. The service line replacements are for existing customers and not related to new growth. See Section 1 narrative and Map No. S-32 in Exhibit CC-1-B for more detail.
S-33	333	service lines	21	5-1.5" 16-2"	Copper	1.5"-$3,947 2"-$4,013	Newcastle Dr	12/2017	n/a	$83,939	Replace aging services with copper service lines to reduce water leaks and emergency repairs. (21 total on Emerald Dr, Garden Court , Newcastle Dr, Silverbell Dr and Thunderbird Blvd between Emerald Dr and 111th Ave.) The services are old and are failing at a high rate. These services are a priority because they are galvanized steel pipe and they were installed 40 to 50 years ago. Galvanized pipe is prone to corrosion and has been shown to have a useful life of less than 40 years. In the area of these projects, 444 services previously failed and were replaced. Replacing the services will help reduce system water loss and improve customer pressure and flow. The service line replacements are for existing customers and not related to new growth. See Section 1 narrative and Map No. S-33 in Exhibit CC-1-B for more detail.
S-34	333	service lines	25	4-1.5" 20-2" 1-2.5"	Copper	1.5"-$3,947 2"-$4,013 2.5"-$4,079	Santa Fe Dr West	12/2017	n/a	$100,122	Replace aging services with copper service lines to reduce water leaks and emergency repairs. (25 total on 109th Ave, 110th Ave, 111th Ave, Santa Fe Dr and Thunderbird Blvd between 111th Ave and 109th Ave.) The services are old and are failing at a high rate. These services are a priority because they are galvanized steel pipe and they were installed 40 to 50 years ago. Galvanized pipe is prone to corrosion and has been shown to have a useful life of less than 40 years. In the area of these projects, 444 services previously failed and were replaced. Replacing the services will help reduce system water loss and improve customer pressure and flow. The service line replacements are for existing customers and not related to new growth. See Section 1 narrative and Map No. S-34 in Exhibit CC-1-B for more detail.
S-35	333	service lines	32	10-1.5" 22-2"	Copper	1.5"-$3,947 2"-$4,013	Santa Fe Dr East	12/2017	n/a	$127,750	Replace aging services with copper service lines to reduce water leaks and emergency repairs. (32 total on 108th Ave, 108th Dr, Santa Fe Dr and Thunderbird Blvd between 109th Ave and Del Webb Blvd.) The services are old and are failing at a high rate. These services are a priority because they are galvanized steel pipe and they were installed 40 to 50 years ago. Galvanized pipe is prone to corrosion and has been shown to have a useful life of less than 40 years. In the area of these projects, 444 services previously failed and were replaced. Replacing the services will help reduce system water loss and improve customer pressure and flow. The service line replacements are for existing customers and not related to new growth. See Section 1 narrative and Map No. S-35 in Exhibit CC-1-B for more detail.

Total	313							$1,241,420	

ATTACHMENT 2C

Sun City – PWS ID No. 07-099

SIB PLANT TABLE I, 1-3

2018 Service Line Replacements

Information to be included with SIB-Eligible Project Notification

	NARUC Acct No. (SIB-eligible plant)	Replacement Plant Description (SIB-eligible plant)					Site (location description)	Replacement Plant			
Project No.	**331 T&D Mains** **333 Services** **334 Meters**	Description	Pipe length/ Quantity	Diameter/ Size	Material	Installed Cost/Unit (Estimated)		Expected In-Service Date	Estimated Subtotal Cost (by NARUC Acct No)	Estimated Subtotal Cost (by project)	1. Provide narrative why Replacement Plant is necessary - replacement of existing plant that has exceeded its designated useful life and has worn out or is in deteriorating condition due to no fault of the utility - replacement of existing plant to address excessive water loss (10% or more) - replacement of existing plant for other reasons supported by persuasive showing by utility 2. Provide narrative explaining why this segment of plant is a priority. 3. Provide narrative explaining how replacing this plant will benefit existing customers. 4. Provide affirmation that Replacement Plant does not include the costs for extending or expanding facilities to serve new customers. 5. Provides reference to related page No. in the submitted detailed Engineering Analysis supporting the need for SIB. Engineering Analysis shall also include narrative explaining the utility's systematic assessment, inspection, maintenance, and repair/replacement program.
S-36	333	service lines	11	5-1.5" 5-2" 1-3"	Copper	1.5"-$3,947 2"-$4,013 3"-$4,145	Thunderbird Blvd	12/2018	n/a	$43,943	Replace aging services with copper service lines to reduce water leaks and emergency repairs. (11 total on 105th Ave and Thunderbird Blvd between Del Webb Blvd and 103rd Ave.) The services are old and are failing at a high rate. These services are a priority because they are galvanized steel pipe and they were installed 40 to 50 years ago. Galvanized pipe is prone to corrosion and has been shown to have a useful life of less than 40 years. In the area of these projects, 444 services previously failed and were replaced. Replacing the services will help reduce system water loss and improve customer pressure and flow. The service line replacements are for existing customers and not related to new growth. See Section 1 narrative and Map No. S-36 in Exhibit CC-1-B for more detail.
S-37	333	service lines	9	7-1.5" 2-2"	Copper	1.5"-$3,947 2"-$4,013	Royal Oak Rd South	12/2018	n/a	$31,640	Replace aging services with copper service lines to reduce water leaks and emergency repairs. (9 total on 103rd Ave, 99th Ave and Santa Fe Dr between 103rd Ave and 99th Ave.) The services are old and are failing at a high rate. These services are a priority because they are galvanized steel pipe and they were installed 40 to 50 years ago. Galvanized pipe is prone to corrosion and has been shown to have a useful life of less than 40 years. In the area of these projects, 444 services previously failed and were replaced. Replacing the services will help reduce system water loss and improve customer pressure and flow. The service line replacements are for existing customers and not related to new growth. See Section 1 narrative and Map No. S-37 in Exhibit CC-1-B for more detail.

S-38	333	service lines	39	2-1.5" 37-2"	Copper	1.5"-$3,947 2"-$4,013	Royal Oak Rd North	12/2018	n/a		$156,367	Replace aging services with copper service lines to reduce water leaks and emergency repairs. (39 total on 100th Ave, 100th Dr, 99th Dr, Cedar Dr, Forrester Dr, Royal Oak Rd and Thunderbird Blvd between Thunderbird Bld and 99th Ave.) The services are old and are failing at a high rate. These services are a priority because they are galvanized steel pipe and they were installed 40 to 50 years ago. Galvanized pipe is prone to corrosion and has been shown to have a useful life of less than 40 years. In the area of these projects, 444 services previously failed and were replaced. Replacing the services will help reduce system water loss and improve customer pressure and flow. The service line replacements are for existing customers and not related to new growth. See Section 1 narrative and Map No. S-38 in Exhibit CC-1-B for more detail.
S-39	333	service lines	22	3-1.5" 19-2"	Copper	1.5"-$3,947 2"-$4,013	Hawthorn Dr	12/2018	n/a		$88,084	Replace aging services with copper service lines to reduce water leaks and emergency repairs. (22 total on 100th Ave, Emberwood Dr, Hawthorn Dr and Thunderbird Blvd between Forrester Dr and Lancaster Dr.) The services are old and are failing at a high rate. These services are a priority because they are galvanized steel pipe and they were installed 40 to 50 years ago. Galvanized pipe is prone to corrosion and has been shown to have a useful life of less than 40 years. In the area of these projects, 444 services previously failed and were replaced. Replacing the services will help reduce system water loss and improve customer pressure and flow. The service line replacements are for existing customers and not related to new growth. See Section 1 narrative and Map No. S-39 in Exhibit CC-1-B for more detail.
S-40	333	service lines	14	1.5"	Copper	$3,947	Candlewood Dr	12/2018	n/a		$55,255	Replace aging services with copper service lines to reduce water leaks and emergency repairs. (14 total on Royal Oak Rd and Candlewood Dr between 103rd Ave and Thunderbird Blvd.) The services are old and are failing at a high rate. These services are a priority because they are galvanized steel pipe and they were installed 40 to 50 years ago. Galvanized pipe is prone to corrosion and has been shown to have a useful life of less than 40 years. In the area of these projects, 444 services previously failed and were replaced. Replacing the services will help reduce system water loss and improve customer pressure and flow. The service line replacements are for existing customers and not related to new growth. See Section 1 narrative and Map No. S-40 in Exhibit CC-1-B for more detail.
S-41	333	service lines	5	1.5"	Copper	$3,9477	Bolivar Dr	12/2018	n/a		$19,734	Replace aging services with copper service lines to reduce water leaks and emergency repairs. (5 total on Bolivar Dr and Crown Pt between 103rd Ave and Teakwood Dr.) The services are old and are failing at a high rate. These services are a priority because they are galvanized steel pipe and they were installed 40 to 50 years ago. Galvanized pipe is prone to corrosion and has been shown to have a useful life of less than 40 years. In the area of these projects, 444 services previously failed and were replaced. Replacing the services will help reduce system water loss and improve customer pressure and flow. The service line replacements are for existing customers and not related to new growth. See Section 1 narrative and Map No. S-41 in Exhibit CC-1-B for more detail.

S-42	333	service lines	17	1.5"	Copper	$3,947	Tumble-brook Way	12/2018	n/a	$67,096	Replace aging services with copper service lines to reduce water leaks and emergency repairs. (17 total on 99th Dr, Bolivar Dr, Thunderbird Blvd and Tumblebrook Way between LancasterDr and 99th Ave.) The services are old and are failing at a high rate. These services are a priority because they are galvanized steel pipe and they were installed 40 to 50 years ago. Galvanized pipe is prone to corrosion and has been shown to have a useful life of less than 40 years. In the area of these projects, 444 services previously failed and were replaced. Replacing the services will help reduce system water loss and improve customer pressure and flow. The service line replacements are for existing customers and not related to new growth. See Section 1 narrative and Map No. S-42 in Exhibit CC-1-B for more detail.
S-43	333	service lines	1	1.5"	Copper	$3,947	Thunderbird Ave	12/2018	n/a	$3,947	Replace aging services with copper service lines to reduce water leaks and emergency repairs. (1 total on Thunderbird Rd between Sahara Dr and 93rd Ave.) This service is a priority because it was installed 40 to 50 years ago. Replacing the service will help reduce system water loss and improve customer pressure and flow. The service line replacement is for existing customers and not related to new growth. See Section 1 narrative and Map No. S-43 in Exhibit CC-1-B for more detail.
S-44	333	service lines	18	1-1.5" 17-2"	Copper	1.5"-$3,947 2"-$4,013	Newcastle Dr	12/2018	n/a	$72,164	Replace aging services with copper service lines to reduce water leaks and emergency repairs. (18 total on Cameo Dr, Desert Butte Dr, Newcastle Dr, PalmRidge Dr and Thunderbird Blvd between Cameo Dr and Emerald Dr.) The services are old and are failing at a high rate. These services are a priority because they are galvanized steel pipe and they were installed 40 to 50 years ago. Galvanized pipe is prone to corrosion and has been shown to have a useful life of less than 40 years. In the area of these projects, 444 services previously failed and were replaced. Replacing the services will help reduce system water loss and improve customer pressure and flow. The service line replacements are for existing customers and not related to new growth. See Section 1 narrative and Map No. S-44 in Exhibit CC-1-B for more detail.
S-45	333	service lines	24	8-1.5" 16-2"	Copper	1.5"-$3,947 2"-$4,013	Palm Ridge Dr	12/2018	n/a	$95,779	Replace aging services with copper service lines to reduce water leaks and emergency repairs. (24 total on 111th Ave, Cameo Dr and Palm Ridge Dr between Thunderbird Blvd and 111th Ave.) The services are old and are failing at a high rate. These services are a priority because they are galvanized steel pipe and they were installed 40 to 50 years ago. Galvanized pipe is prone to corrosion and has been shown to have a useful life of less than 40 years. In the area of these projects, 444 services previously failed and were replaced. Replacing the services will help reduce system water loss and improve customer pressure and flow. The service line replacements are for existing customers and not related to new growth. See Section 1 narrative and Map No. S-45 in Exhibit CC-1-B for more detail.

S-46	333	service lines	20	6-1.5" 14-2"	Copper	1.5"-$3,947 2"-$4,013	Topaz Dr	12/2018	n/a	$79,860	Replace aging services with copper service lines to reduce water leaks and emergency repairs. (20 total on 109th Ave, 110th Ave, Cameo Dr and Topaz Dr between 111th Ave and 109th Ave.) The services are old and are failing at a high rate. These services are a priority because they are galvanized steel pipe and they were installed 40 to 50 years ago. Galvanized pipe is prone to corrosion and has been shown to have a useful life of less than 40 years. In the area of these projects, 444 services previously failed and were replaced. Replacing the services will help reduce system water loss and improve customer pressure and flow. The service line replacements are for existing customers and not related to new growth. See Section 1 narrative and Map No. S-46 in Exhibit CC-1-B for more detail.
S-47	333	service lines	33	8-1.5" 25-2"	Copper	1.5"-$3,947 2"-$4,013	108th Dr	12/2018	n/a	$131,894	Replace aging services with copper service lines to reduce water leaks and emergency repairs. (33 total on 107th Dr, 108th Dr, Buccaneer Dr, Cameo Dr and Emerald Dr between 109th Ave and 107th Ln.) The services are old and are failing at a high rate. These services are a priority because they are galvanized steel pipe and they were installed 40 to 50 years ago. Galvanized pipe is prone to corrosion and has been shown to have a useful life of less than 40 years. In the area of these projects, 444 services previously failed and were replaced. Replacing the services will help reduce system water loss and improve customer pressure and flow. The service line replacements are for existing customers and not related to new growth. See Section 1 narrative and Map No. S-47 in Exhibit CC-1-B for more detail.
S-48	333	service lines	8	7-1.5" 1-2"	Copper	1.5"-$3,947 2"-$4,013	Buccaneer Dr	12/2018	n/a	$31,640	Replace aging services with copper service lines to reduce water leaks and emergency repairs. (8 total on Bayside Rd, Buccaneer Way and Del Webb Blvd between Cameo Dr and Buccaneer Way.) The services are old and are failing at a high rate. These services are a priority because they are galvanized steel pipe and they were installed 40 to 50 years ago. Galvanized pipe is prone to corrosion and has been shown to have a useful life of less than 40 years. In the area of these projects, 444 services previously failed and were replaced. Replacing the services will help reduce system water loss and improve customer pressure and flow. The service line replacements are for existing customers and not related to new growth. See Section 1 narrative and Map No. S-48 in Exhibit CC-1-B for more detail.
S-49	333	service lines	32	1.5"	Copper	$3,947	Tropicana Cir South	12/2018	n/a	$126,298	Replace aging services with copper service lines to reduce water leaks and emergency repairs. (32 total on Del Webb Blvd, Saratoga Cir and Tropicana Cir between Del Webb Blvd and Talisman Rd.) The services are old and are failing at a high rate. These services are a priority because they are galvanized steel pipe and they were installed 40 to 50 years ago. Galvanized pipe is prone to corrosion and has been shown to have a useful life of less than 40 years. In the area of these projects, 444 services previously failed and were replaced. Replacing the services will help reduce system water loss and improve customer pressure and flow. The service line replacements are for existing customers and not related to new growth. See Section 1 narrative and Map No. S-49 in Exhibit

											CC-1-B for more detail.
S-50	333	service lines	22	1.5"	Copper	$3,947	Tropicana Cir North	12/2018	n/a	$86,830	Replace aging services with copper service lines to reduce water leaks and emergency repairs. (22 total on Del Webb Blvd, Saratoga Cir and Tropicana Cir between Del Webb Blvd and Talisman Rd.) The services are old and are failing at a high rate. These services are a priority because they are galvanized steel pipe and they were installed 40 to 50 years ago. Galvanized pipe is prone to corrosion and has been shown to have a useful life of less than 40 years. In the area of these projects, 444 services previously failed and were replaced. Replacing the services will help reduce system water loss and improve customer pressure and flow. The service line replacements are for existing customers and not related to new growth. See Section 1 narrative and Map No. S-50 in Exhibit CC-1-B for more detail.
S-51	333	service lines	41	1.5"	Copper	$3,947	El Capitan Cir	12/2018	n/a	$161,819	Replace aging services with copper service lines to reduce water leaks and emergency repairs. (41 total on Camelot Cir, Del Webb Blvd, El Capitan Cir and Roundelay Cir between Del Webb Blvd and Talisman Rd.) The services are old and are failing at a high rate. These services are a priority because they are galvanized steel pipe and they were installed 40 to 50 years ago. Galvanized pipe is prone to corrosion and has been shown to have a useful life of less than 40 years. In the area of these projects, 444 services previously failed and were replaced. Replacing the services will help reduce system water loss and improve customer pressure and flow. The service line replacements are for existing customers and not related to new growth. See Section 1 narrative and Map No. S-51 in Exhibit CC-1-B for more detail.
Total			**316**							**$1,256,363**	

ATTACHMENT 2D

Sun City – PWS ID No. 07-099

SIB PLANT TABLE I, 1-4

2019 Service Line Replacements

Information to be included with SIB-Eligible Project Notification

	NARUC Acct No. (SIB-eligible plant)	Replacement Plant Description (SIB-eligible plant)					Site (location description)	Replacement Plant			
Project No.	**331 T&D Mains** **333 Services** **334 Meters**	Description	Pipe length/ Quantity	Diameter/ Size	Material	Installed Cost/Unit (Estimated)		Expected In-Service Date	Estimated Subtotal Cost (by NARUC Acct No)	Estimated Subtotal Cost (by project)	1. Provide narrative why Replacement Plant is necessary - replacement of existing plant that has exceeded its designated useful life and has worn out or is in deteriorating condition due to no fault of the utility - replacement of existing plant to address excessive water loss (10% or more) - replacement of existing plant for other reasons supported by persuasive showing by utility 2. Provide narrative explaining why this segment of plant is a priority. 3. Provide narrative explaining how replacing this plant will benefit existing customers. 4. Provide affirmation that Replacement Plant does not include the costs for extending or expanding facilities to serve new customers. 5. Provides reference to related page No. in the submitted detailed Engineering Analysis supporting the need for SIB. Engineering Analysis shall also include narrative explaining the utility's systematic assessment, inspection, maintenance, and repair/replacement program.
S-52	333	service lines	10	5-1.5" 5-2"	Copper	1.5"-$3,947 2"-$4,013	Del Webb Blvd	12/2019	n/a	$39,798	Replace aging services with copper service lines to reduce water leaks and emergency repairs. (10 total at the intersection of Del Webb Blvd, Thunderbird Blvd and Talisman Rd.) The services are old and are failing at a high rate. These services are a priority because they are galvanized steel pipe and they were installed 40 to 50 years ago. Galvanized pipe is prone to corrosion and has been shown to have a useful life of less than 40 years. In the area of these projects, 444 services previously failed and were replaced. Replacing the services will help reduce system water loss and improve customer pressure and flow. The service line replacements are for existing customers and not related to new growth. See Section 1 narrative and Map No. S-52 in Exhibit CC-1-B for more detail.
S-53	333	service lines	49	1.5"	Copper	1.5"-$3,947	Saratoga Circle	12/2019	n/a	$193,393	Replace aging services with copper service lines to reduce water leaks and emergency repairs. (49 total on Camelot Cir, El Capitan Cir, Roundelay Cir, Saratoga Cir and Tropicana Cir between Del Webb Blvd and Talisman Rd.) The services are old and are failing at a high rate. These services are a priority because they are galvanized steel pipe and they were installed 40 to 50 years ago. Galvanized pipe is prone to corrosion and has been shown to have a useful life of less than 40 years. In the area of these projects, 444 services previously failed and were replaced. Replacing the services will help reduce system water loss and improve customer pressure and flow. The service line replacements are for existing customers and not related to new growth. See Section 1 narrative and Map No. S-

												53 in Exhibit CC-1-B for more detail.
S-54	333	service lines	41	1.5"	Copper	1.5"-$3,947	Kingswood Cir West	12/2019	n/a		$161,819	Replace aging services with copper service lines to reduce water leaks and emergency repairs. (41 total on Bright Angel Cir, Desert Forest Cir, Kingswood Cir and Prairie Hills Cir between Talisman Rd and Boswell Blvd.) The services are old and are failing at a high rate. These services are a priority because they are galvanized steel pipe and they were installed 40 to 50 years ago. Galvanized pipe is prone to corrosion and has been shown to have a useful life of less than 40 years. In the area of these projects, 444 services previously failed and were replaced. Replacing the services will help reduce system water loss and improve customer pressure and flow. The service line replacements are for existing customers and not related to new growth. See Section 1 narrative and Map No. S-54 in Exhibit CC-1-B for more detail.
S-55	333	service lines	43	42-1.5" 1-2"	Copper	1.5"-$3,947 2"-$4,013	Kingswood Cir East	12/2019	n/a		$169,778	Replace aging services with copper service lines to reduce water leaks and emergency repairs. (43 total on Bright Angel Cir, Desert Forest Cir, Kingswood Cir and Prairie Hills Cir between Boswell Blvd and 103rd Ave.) The services are old and are failing at a high rate. These services are a priority because they are galvanized steel pipe and they were installed 40 to 50 years ago. Galvanized pipe is prone to corrosion and has been shown to have a useful life of less than 40 years. In the area of these projects, 444 services previously failed and were replaced. Replacing the services will help reduce system water loss and improve customer pressure and flow. The service line replacements are for existing customers and not related to new growth. See Section 1 narrative and Map No. S-55 in Exhibit CC-1-B for more detail.
S-56	333	service lines	53	49-1.5" 4-2"	Copper	1.5"-$3,947 2"-$4,013	Shasta Dr	12/2019	n/a		$209,444	Replace aging services with copper service lines to reduce water leaks and emergency repairs. (53 total on Boswell Blvd, Desert Rose Dr, Pleasant Valley Rd, Sandstone Dr and Shasta Dr between Boswell Blvd and 99th Ave.) The services are old and are failing at a high rate. These services are a priority because they are galvanized steel pipe and they were installed 40 to 50 years ago. Galvanized pipe is prone to corrosion and has been shown to have a useful life of less than 40 years. In the area of these projects, 444 services previously failed and were replaced. Replacing the services will help reduce system water loss and improve customer pressure and flow. The service line replacements are for existing customers and not related to new growth. See Section 1 narrative and Map No. S-

											56 in Exhibit CC-1-B for more detail.
S-57	333	service lines	44	42-1.5" 2-2"	Copper	1.5"-$3,947 2"-$4,013	Prairie Hills Cir	12/2019	n/a	$173,791	Replace aging services with copper service lines to reduce water leaks and emergency repairs. (44 total on 103rd Ave, Boswell Blvd, Kingswood Cir, Newport Dr, Pineridge Dr, Prairie Hills Cir, Raintree Dr and Spruce Dr between 103rd Ave and Boswell Blvd.) The services are old and are failing at a high rate. These services are a priority because they are galvanized steel pipe and they were installed 40 to 50 years ago. Galvanized pipe is prone to corrosion and has been shown to have a useful life of less than 40 years. In the area of these projects, 444 services previously failed and were replaced. Replacing the services will help reduce system water loss and improve customer pressure and flow. The service line replacements are for existing customers and not related to new growth. See Section 1 narrative and Map No. S-57 in Exhibit CC-1-B for more detail.
S-58	333	service lines	50	49-1.5" 1-2"	Copper	1.5"-$3,947 2"-$4,013	Sandstone Dr	12/2019	n/a	$197,406	Replace aging services with copper service lines to reduce water leaks and emergency repairs. (50 total on Cameo Dr, Lakeforest Dr, Long Hills Dr, Sandstone Dr and Shasta Dr between 99th Ave and Cameo Dr.) The services are old and are failing at a high rate. These services are a priority because they are galvanized steel pipe and they were installed 40 to 50 years ago. Galvanized pipe is prone to corrosion and has been shown to have a useful life of less than 40 years. In the area of these projects, 444 services previously failed and were replaced. Replacing the services will help reduce system water loss and improve customer pressure and flow. The service line replacements are for existing customers and not related to new growth. See Section 1 narrative and Map No. S-58 in Exhibit CC-1-B for more detail.
Total			**290**							**$1,145,430**	

ATTACHMENT 3A

Sun City – PWS ID No. 07-099

SIB PLANT TABLE I, 2-1

2015 Valve Replacements

Information to be included with SIB-Eligible Project Notification

	NARUC Acct No. (SIB-eligible plant)	Replacement Plant Description (SIB-eligible plant)					Site (location description)	Replacement Plant			
Project No.	**331 T&D Mains** **333 Services** **334 Meters**	Description	Pipe length/ Quantity	Diameter/ Size	Material	Installed Cost/Unit (Estimated)		Expected In-Service Date	Estimated Subtotal Cost (by NARUC Acct No)	Estimated Subtotal Cost (by project)	1. Provide narrative why Replacement Plant is necessary - replacement of existing plant that has exceeded its designated useful life and has worn out or is in deteriorating condition due to no fault of the utility - replacement of existing plant to address excessive water loss (10% or more) - replacement of existing plant for other reasons supported by persuasive showing by utility 2. Provide narrative explaining why this segment of plant is a priority. 3. Provide narrative explaining how replacing this plant will benefit existing customers. 4. Provide affirmation that Replacement Plant does not include the costs for extending or expanding facilities to serve new customers. 5. Provides reference to related page No. in the submitted detailed Engineering Analysis supporting the need for SIB. Engineering Analysis shall also include narrative explaining the utility's systematic assessment, inspection, maintenance, and repair/replacement program.
V-1	331	gate valves	16	3-4" 10-6" 2-8" 1-12"	cast iron with rubberized epoxy coating	4"-$4,431 6"-$4,651 8"-$5,201 12"-$6,173	Youngtown and area north of Grand Ave between 95th Ave and 115th Ave (see map V-1 for detail)	12/2015	n/a	$76,375	Replace 3-4", 10-6", 2-8", and 1-12" (estimated 16 total) distribution system valves that are no longer functioning. Approximately 20% of the valves will be tested annually. Valves found broken as a part of the annual valve maintenance program will be replaced. The valves in this area are about 35 to 55 years old. In the last five years, three valves in the area failed and were replaced. In the last year, approximately 2% of valves tested in the District were found to be inoperable or broken. The same replacement rate is expected with this project. Replacing the valves decreases time required to shutdown water mains in the event of main break or other system maintenance, which reduces customer service disruption and decreases water loss during main breaks. The valve replacements are not related to new growth. See Section 2 narrative and Map V-1 in Exhibit CC-1-B for more detail.
Total			**16**							**$76,375**	

ATTACHMENT 3B

Sun City – PWS ID No. 07-099

SIB PLANT TABLE I, 2-2

2016 Valve Replacements

Information to be included with SIB-Eligible Project Notification

	NARUC Acct No. (SIB-eligible plant)	Replacement Plant Description (SIB-eligible plant)					Site (location description)	Replacement Plant			
Project No.	**331 T&D Mains** **333 Services** **334 Meters**	Description	Pipe length/ Quantity	Diameter/ Size	Material	Installed Cost/Unit (Estimated)		Expected In-Service Date	Estimated Subtotal Cost (by NARUC Acct No)	Estimated Subtotal Cost (by project)	1. Provide narrative why Replacement Plant is necessary - replacement of existing plant that has exceeded its designated useful life and has worn out or is in deteriorating condition due to no fault of the utility - replacement of existing plant to address excessive water loss (10% or more) - replacement of existing plant for other reasons supported by persuasive showing by utility 2. Provide narrative explaining why this segment of plant is a priority. 3. Provide narrative explaining how replacing this plant will benefit existing customers. 4. Provide affirmation that Replacement Plant does not include the costs for extending or expanding facilities to serve new customers. 5. Provides reference to related page No. in the submitted detailed Engineering Analysis supporting the need for SIB. Engineering Analysis shall also include narrative explaining the utility's systematic assessment, inspection, maintenance, and repair/replacement program.
V-2	331	gate valves	16	1-4" 8-6" 5-8" 1-12" 1-16"	cast iron with rubberized epoxy coating	4"-$4,431 6"-$4,651 8"-$5,201 12"-$6,173 16"-$7,603	Agua Fria Ranch and the area south of Bell Rd between 99th Ave and 111th Ave (see map V-2 for detail)	12/2016	n/a	$81,418	Replace 1-4", 8-6", 5-8", 1-12", and 1-16" (estimated 16 total) distribution system valves that are no longer functioning. Approximately 20% of the valves will be tested annually. Valves found broken as a part of the annual valve maintenance program will be replaced. The valves are about 10 to 11 years old in Agua Fria Ranch and 41 to 45 years old in the area south of Bell Road between 99th Avenue and 111th Avenue. In the last five years, one valve in the 99th Avenue and Bell Road area failed and was replaced. In the last year, approximately 2% of valves tested in the District were found to be inoperable or broken. The same replacement rate is expected with this project. Replacing the valves decreases time required to shutdown water mains in the event of main break or other system maintenance, which reduces customer service disruption and decreases water loss during main breaks. The valve replacements are not related to new growth. . See Section 2 narrative and Map V-2 in Exhibit CC-1-B for more detail.
Total			**16**							**$81,418**	

ATTACHMENT 3C

Sun City – PWS ID No. 07-099

SIB PLANT TABLE I, 2-3

2017 Valve Replacements

Information to be included with SIB-Eligible Project Notification

	NARUC Acct No. (SIB-eligible plant)	Replacement Plant Description (SIB-eligible plant)					Site (location description)	Replacement Plant			
Project No.	**331 T&D Mains** **333 Services** **334 Meters**	Description	Pipe length/ Quantity	Diameter/ Size	Material	Installed Cost/Unit (Estimated)		Expected In-Service Date	Estimated Subtotal Cost (by NARUC Acct No)	Estimated Subtotal Cost (by project)	1. Provide narrative why Replacement Plant is necessary - replacement of existing plant that has exceeded its designated useful life and has worn out or is in deteriorating condition due to no fault of the utility - replacement of existing plant to address excessive water loss (10% or more) - replacement of existing plant for other reasons supported by persuasive showing by utility 2. Provide narrative explaining why this segment of plant is a priority. 3. Provide narrative explaining how replacing this plant will benefit existing customers. 4. Provide affirmation that Replacement Plant does not include the costs for extending or expanding facilities to serve new customers. 5. Provides reference to related page No. in the submitted detailed Engineering Analysis supporting the need for SIB. Engineering Analysis shall also include narrative explaining the utility's systematic assessment, inspection, maintenance, and repair/replacement program.
V-3	331	gate valves	16	1-4" 8-6" 5-10" 2-12"	cast iron with rubberized epoxy coating	4"-$4,431 8"-$5,201 12"-$6,173	Coyote Lakes, Citrus Point, and area west of 99th Ave between Union Hills and Bell Rd (see map V-3 for detail)	12/2017	n/a	$82,188	Replace 1-4", 8-6", 5-10", and 2-12" (estimated 16 total) distribution system valves that are no longer functioning. Approximately 20% of the valves will be tested annually. Valves found broken as a part of the annual valve maintenance program will be replaced. The valves in this area are about 13 to 40 years old. In the last five years, one valve in the area failed and was replaced. In the last year, approximately 2% of valves tested in the District were found to be inoperable or broken. The same replacement rate is expected with this project. Replacing the valves decreases time required to shutdown water mains in the event of main break or other system maintenance, which reduces customer service disruption and decreases water loss during main breaks. The valve replacements are not related to new growth. . See Section 2 narrative and Map V-3 in Exhibit CC-1-B for more detail.
Total			16							$82,188	

ATTACHMENT 3D

Sun City – PWS ID No. 07-099

SIB PLANT TABLE I, 2-4

2018 Valve Replacements

Information to be included with SIB-Eligible Project Notification

	NARUC Acct No. (SIB-eligible plant)	Replacement Plant Description (SIB-eligible plant)					Site (location description)	Replacement Plant			
Project No.	**331 T&D Mains** **333 Services** **334 Meters**	Description	Pipe length/ Quantity	Diameter/ Size	Material	Installed Cost/Unit (Estimated)		Expected In-Service Date	Estimated Subtotal Cost (by NARUC Acct No)	Estimated Subtotal Cost (by project)	1. Provide narrative why Replacement Plant is necessary - replacement of existing plant that has exceeded its designated useful life and has worn out or is in deteriorating condition due to no fault of the utility - replacement of existing plant to address excessive water loss (10% or more) - replacement of existing plant for other reasons supported by persuasive showing by utility 2. Provide narrative explaining why this segment of plant is a priority. 3. Provide narrative explaining how replacing this plant will benefit existing customers. 4. Provide affirmation that Replacement Plant does not include the costs for extending or expanding facilities to serve new customers. 5. Provides reference to related page No. in the submitted detailed Engineering Analysis supporting the need for SIB. Engineering Analysis shall also include narrative explaining the utility's systematic assessment, inspection, maintenance, and repair/replacement program.
V-4	331	gate valves	16	2-4" 12-6" 2-12"	cast iron with rubberized epoxy coating	4"-$4,431 6"-$4,651 12"-$6,173	Area east of 99th Ave between Thunderbird and Union Beardsley and east of 99th Ave north of Beardsley (see map V-4 for detail)	12/2018	n/a	$77,018	Replace 2-4", 12-6", and 2-12" (estimated 16 total) distribution system valves that are no longer functioning. Approximately 20% of the valves will be tested annually. Valves found broken as a part of the annual valve maintenance program will be replaced. The valves in this area are about 35 to 43 years old. In the last five years, one valve in the area failed and was replaced. In the last year, approximately 2% of valves tested in the District were found to be inoperable or broken. The same replacement rate is expected with this project. Replacing the valves decreases time required to shutdown water mains in the event of main break or other system maintenance, which reduces customer service disruption and decreases water loss during main breaks. The valve replacements are not related to new growth. . See Section 2 narrative and Map V-4 in Exhibit CC-1-B for more detail.
Total			**16**							**$77,018**	

ATTACHMENT 3E

Sun City – PWS ID No. 07-099

SIB PLANT TABLE I, 2-5

2019 Valve Replacements

Information to be included with SIB-Eligible Project Notification

	NARUC Acct No. (SIB-eligible plant)	Replacement Plant Description (SIB-eligible plant)					Site (location description)	Replacement Plant			
Project No.	**331 T&D Mains** **333 Services** **334 Meters**	Description	Pipe length/ Quantity	Diameter/ Size	Material	Installed Cost/Unit (Estimated)		Expected In-Service Date	Estimated Subtotal Cost (by NARUC Acct No)	Estimated Subtotal Cost (by project)	1. Provide narrative why Replacement Plant is necessary - replacement of existing plant that has exceeded its designated useful life and has worn out or is in deteriorating condition due to no fault of the utility - replacement of existing plant to address excessive water loss (10% or more) - replacement of existing plant for other reasons supported by persuasive showing by utility 2. Provide narrative explaining why this segment of plant is a priority. 3. Provide narrative explaining how replacing this plant will benefit existing customers. 4. Provide affirmation that Replacement Plant does not include the costs for extending or expanding facilities to serve new customers. 5. Provides reference to related page No. in the submitted detailed Engineering Analysis supporting the need for SIB. Engineering Analysis shall also include narrative explaining the utility's systematic assessment, inspection, maintenance, and repair/replacement program.
V-5	331	gate valves	16	1-4" 5-6" 7-8" 3-12"	cast iron with rubberized epoxy coating	4"-$4,431 6"-$4,651 8"-$5,201 12"-$6,173	Area between Grand Ave and Olive Ave and between 111th Ave/127th Ave and the Agua Fria Wash (see map V-5 for detail)	12/2019	n/a	$82,610	Replace 1-4", 5-6", 7-8", and 3-12" (estimated 16 total) distribution system valves that are no longer functioning. Approximately 20% of the valves will be tested annually. Valves found broken as a part of the annual valve maintenance program will be replaced. The valves in this area are about 35 to 55 years old. In the last five years, 21 valves in the area failed and were replaced. In the last year, approximately 2% of valves tested in the District were found to be inoperable or broken. The same replacement rate is expected with this project. Replacing the valves decreases time required to shutdown water mains in the event of main break or other system maintenance, which reduces customer service disruption and decreases water loss during main breaks. The valve replacements are not related to new growth. . See Section 2 narrative and Map V-5 in Exhibit CC-1-B for more detail.
Total			**16**							**$82,610**	

ATTACHMENT 4A

Sun City – PWS ID No. 07-099

SIB PLANT TABLE I, 3-1

2015 Main Replacements

Information to be included with SIB-Eligible Project Notification

	NARUC Acct No. (SIB-eligible plant)	Replacement Plant Description (SIB-eligible plant)					Site (location description)	Replacement Plant			
Project No.	**331 T&D Mains** **333 Services** **334 Meters**	Description	Pipe length/ Quantity	Diameter/ Size	Material	Installed Cost/Unit (Estimated)		Expected In-Service Date	Estimated Subtotal Cost (by NARUC Acct No)	Estimated Subtotal Cost (by project)	1. Provide narrative why Replacement Plant is necessary - replacement of existing plant that has exceeded its designated useful life and has worn out or is in deteriorating condition due to no fault of the utility - replacement of existing plant to address excessive water loss (10% or more) - replacement of existing plant for other reasons supported by persuasive showing by utility 2. Provide narrative explaining why this segment of plant is a priority. 3. Provide narrative explaining how replacing this plant will benefit existing customers. 4. Provide affirmation that Replacement Plant does not include the costs for extending or expanding facilities to serve new customers. 5. Provides reference to related page No. in the submitted detailed Engineering Analysis supporting the need for SIB. Engineering Analysis shall also include narrative explaining the utility's systematic assessment, inspection, maintenance, and repair/replacement program.
WM-1	331	Mains	5,786 LF	2,842 LF-4" 2,944 LF-8"	PVC	$174	115th Dr, in north 1/3 of Coyote Lakes	12/2015	n/a	$1,005,087	Replace existing mains with 2,842 LF of 4" main and 2,944 LF of 8" main in 115th Dr and adjacent cul-de-sacs in the northern 1/3 of the Coyote Lakes development. The mains were installed in 1998 in native soil which has resulted in several leaks due to rocks puncturing and cracking the pipe. Due to the high flows and pressures in this area, main breaks result in large amounts of lost water. Replacing the mains will help reduce system water loss and improve system reliability. The main replacement is for existing customers and not related to new growth. See Section 3 narrative and Map No. WM-1 in Exhibit CC-1-B for more detail.
Total			**5,786 LF**							**$1,005,087**	

ATTACHMENT 4B

Sun City – PWS ID No. 07-099

SIB PLANT TABLE I, 3-2

2016 Main Replacements

Information to be included with SIB-Eligible Project Notification

	NARUC Acct No. (SIB-eligible plant)	Replacement Plant Description (SIB-eligible plant)					Site (location description)	Replacement Plant			
Project No.	**331 T&D Mains** **333 Services** **334 Meters**	Description	Pipe length/ Quantity	Diameter/ Size	Material	Installed Cost/Unit (Estimated)		Expected In-Service Date	Estimated Subtotal Cost (by NARUC Acct No)	Estimated Subtotal Cost (by project)	1. Provide narrative why Replacement Plant is necessary - replacement of existing plant that has exceeded its designated useful life and has worn out or is in deteriorating condition due to no fault of the utility - replacement of existing plant to address excessive water loss (10% or more) - replacement of existing plant for other reasons supported by persuasive showing by utility 2. Provide narrative explaining why this segment of plant is a priority. 3. Provide narrative explaining how replacing this plant will benefit existing customers. 4. Provide affirmation that Replacement Plant does not include the costs for extending or expanding facilities to serve new customers. 5. Provides reference to related page No. in the submitted detailed Engineering Analysis supporting the need for SIB. Engineering Analysis shall also include narrative explaining the utility's systematic assessment, inspection, maintenance, and repair/replacement program.
WM-2	331	Mains	12,869 LF	4,871 LF-4" 832 LF-6" 6,004 LF-8" 1,170 LF-12"	PVC	$131	115th Dr, Coyote Lakes Pkwy, in south 2/3 of Coyote Lakes	12/2016	n/a	$1,680,440	Replace existing mains with 4,871 LF of 4", 832 LF of 6", 6,004 LF of 8", and 1,170 LF of 12" main in 115th Dr, in Coyote Lakes Pkwy, and in adjacent cul-de-sacs in the southern 2/3 of the Coyote Lakes development The mains were installed in 1998 in native soil which has resulted in several leaks due to rocks puncturing and cracking the pipe. Due to the high flows and pressures in this area, main breaks result in large amounts of lost water. Replacing the mains will help reduce system water loss and improve system reliability. The main replacement is for existing customers and not related to new growth. See Section 3 narrative and Map No. WM-2 in Exhibit CC-1-B for more detail.
Total			**12,869 LF**							**$1,680,440**	

ATTACHMENT 4C

Sun City – PWS ID No. 07-099

SIB PLANT TABLE I, 3-3

2017 Main Replacements

Information to be included with SIB-Eligible Project Notification

	NARUC Acct No. (SIB-eligible plant)	Replacement Plant Description (SIB-eligible plant)					Site (location description)	Replacement Plant			
Project No.	**331 T&D Mains** **333 Services** **334 Meters**	Description	Pipe length/ Quantity	Diameter/ Size	Material	Installed Cost/Unit (Estimated)		Expected In-Service Date	Estimated Subtotal Cost (by NARUC Acct No)	Estimated Subtotal Cost (by project)	1. Provide narrative why Replacement Plant is necessary - replacement of existing plant that has exceeded its designated useful life and has worn out or is in deteriorating condition due to no fault of the utility - replacement of existing plant to address excessive water loss (10% or more) - replacement of existing plant for other reasons supported by persuasive showing by utility 2. Provide narrative explaining why this segment of plant is a priority. 3. Provide narrative explaining how replacing this plant will benefit existing customers. 4. Provide affirmation that Replacement Plant does not include the costs for extending or expanding facilities to serve new customers. 5. Provides reference to related page No. in the submitted detailed Engineering Analysis supporting the need for SIB. Engineering Analysis shall also include narrative explaining the utility's systematic assessment, inspection, maintenance, and repair/replacement program.
WM-3	331	Mains	3,854 LF	6"	PVC	$122	Cherry Hills Dr/Hillcrest Dr	12/2017	n/a	$471,483	Replace existing main with 3,854 LF of 6"main in Cherry Hills Dr and Hillcrest Dr south of Alabama Ave. The main was installed in 1959 and has broken numerous times in the last 5 years. The pipe material is asbestos-cement, which is known to have a high failure rate as it ages and has not been used in water systems for decades. The existing main is 4" in diameter which cannot support the flows necessary for fire protection. Replacing the mains will help reduce system water loss and improve customer pressure and flow. The main replacement is for existing customers and not related to new growth. See Section 3 narrative and Map No. WM-3 in Exhibit CC-1-B for more detail.
Total			**3,854 LF**							**$471,483**	

ATTACHMENT 4D

Sun City – PWS ID No. 07-099

SIB PLANT TABLE I, 3-4

2018 Main Replacements

Information to be included with SIB-Eligible Project Notification

	NARUC Acct No. (SIB-eligible plant)	Replacement Plant Description (SIB-eligible plant)					Site (location description)	Replacement Plant			
Project No.	**331 T&D Mains** **333 Services** **334 Meters**	Description	Pipe length/ Quantity	Diameter/ Size	Material	Installed Cost/Unit (Estimated)		Expected In-Service Date	Estimated Subtotal Cost (by NARUC Acct No)	Estimated Subtotal Cost (by project)	1. Provide narrative why Replacement Plant is necessary - replacement of existing plant that has exceeded its designated useful life and has worn out or is in deteriorating condition due to no fault of the utility - replacement of existing plant to address excessive water loss (10% or more) - replacement of existing plant for other reasons supported by persuasive showing by utility 2. Provide narrative explaining why this segment of plant is a priority. 3. Provide narrative explaining how replacing this plant will benefit existing customers. 4. Provide affirmation that Replacement Plant does not include the costs for extending or expanding facilities to serve new customers. 5. Provides reference to related page No. in the submitted detailed Engineering Analysis supporting the need for SIB. Engineering Analysis shall also include narrative explaining the utility's systematic assessment, inspection, maintenance, and repair/replacement program.
WM-4	331	Mains	2,633 LF	6"	PVC	$133	Riviera Dr	12/2018	n/a	$349,698	Replace existing main with 2,633 LF of 6"main in Riviera Dr between 103rd Ave and 99th Ave. The main was installed in 1959 and has broken numerous times in the last 5 years. The pipe material is asbestos-cement, which is known to have a high failure rate as it ages and has not been used in water systems for decades. The existing main is 4" in diameter which cannot support the flows necessary for fire protection. Replacing the mains will help reduce system water loss and improve customer pressure and flow. The main replacement is for existing customers and not related to new growth. See Section 3 narrative and Map No. WM-4 in Exhibit CC-1-B for more detail.
Total			**2,633 LF**							**$349,698**	

ATTACHMENT 4E

Sun City – PWS ID No. 07-099

SIB PLANT TABLE I, 3-5

2019 Main Replacements

Information to be included with SIB-Eligible Project Notification

	NARUC Acct No. (SIB-eligible plant)	Replacement Plant Description (SIB-eligible plant)					Site (location description)	Replacement Plant			
Project No.	**331 T&D Mains** **333 Services** **334 Meters**	Description	Pipe length/ Quantity	Diameter/ Size	Material	Installed Cost/Unit (Estimated)		Expected In-Service Date	Estimated Subtotal Cost (by NARUC Acct No)	Estimated Subtotal Cost (by project)	1. Provide narrative why Replacement Plant is necessary - replacement of existing plant that has exceeded its designated useful life and has worn out or is in deteriorating condition due to no fault of the utility - replacement of existing plant to address excessive water loss (10% or more) - replacement of existing plant for other reasons supported by persuasive showing by utility 2. Provide narrative explaining why this segment of plant is a priority. 3. Provide narrative explaining how replacing this plant will benefit existing customers. 4. Provide affirmation that Replacement Plant does not include the costs for extending or expanding facilities to serve new customers. 5. Provides reference to related page No. in the submitted detailed Engineering Analysis supporting the need for SIB. Engineering Analysis shall also include narrative explaining the utility's systematic assessment, inspection, maintenance, and repair/replacement program.
WM-5	331	Mains	2,148 LF	6"	PVC	$144	105th Ave	12/2019	n/a	$308,391	Replace existing main with 2,148 LF of 6"main in 105th Ave between Alabama Ave and Desert Hills Dr. The main was installed in 1959 and has broken numerous times in the last 5 years. The pipe material is asbestos-cement, which is known to have a high failure rate as it ages and has not been used in water systems for decades. Replacing the mains will help reduce system water loss and improve customer pressure and flow. The main replacement is for existing customers and not related to new growth. See Section 3 narrative and Map No. WM-5 in Exhibit CC-1-B for more detail.
WM-6	331	Mains	1,676 LF	8"	PVC	$159	Oakmont Dr	12/2019	n/a	$266,771	Replace existing main with 1,676 LF of 8"main in Oakmont Dr between 107th Ave and 105th Ave. The main was installed in 1959 and has broken numerous times in the last 5 years. The pipe material is asbestos-cement, which is known to have a high failure rate as it ages and has not been used in water systems for decades. Replacing the mains will help reduce system water loss and improve customer pressure and flow. The main replacement is for existing customers and not related to new growth. See Section 3 narrative and Map No. WM-6 in Exhibit CC-1-B for more detail.
Total			**3,824 LF**							**$575,162**	

ATTACHMENT 5A

Sun City water district – PWS ID No. 07-099

SIB PLANT TABLE I, 4-1

2015 Meter Replacements

Information to be included with SIB-Eligible Project Notification

	NARUC Acct No. (SIB-eligible plant)	Replacement Plant Description (new plant) (SIB-eligible plant)					Site (location description)	Replacement Plant			
Project No.	**331 T&D Mains** **333 Services** **334 Meters**	Description	Pipe length/ Quantity	Diameter/ Size	Material	Installed Cost/Unit (estimated)		Expected In-Service Date	Estimated Subtotal Cost (by NARUC Acct No)	Estimated Subtotal Cost (by project)	1. Provide narrative why Replacement Plant is necessary - replacement of existing plant that has exceeded its designated useful life and has worn out or is in deteriorating condition due to no fault of the utility - replacement of existing plant to address excessive water loss (10% or more) - replacement of existing plant for other reasons supported by persuasive showing by utility 2. Provide narrative explaining why this segment of plant is a priority. 3. Provide narrative explaining how replacing this plant will benefit existing customers. 4. Provide affirmation that Replacement Plant does not include the costs for extending or expanding facilities to serve new customers. 5. Provides reference to related page No. in the submitted detailed Engineering Analysis supporting the need for SIB. Engineering Analysis shall also include narrative explaining the utility's systematic assessment, inspection, maintenance, and repair/replacement program.
M-1	334	meters	2,100	5/8" to 2"	Copper/ Plastic	5/8"-$173 ¾"-$195 1"-$234 1½"-$367 2"-$447	Meter Routes 128, 202, 203, 204, 205, and 229 (see map M-1 for detail)	12/2015	n/a	$409,508	Replace 1,857 - 5/8", 3 - 3/4", 13 – 1", 218 – 1.5", and 9 – 2" (2,100 total) meters in SC district Meter Routes 128, 202, 203, 204, 205, and 229. The existing meters in these routes will be at least 16 years old when replaced. They are experiencing a rapid decline in meter accuracy. Prior to replacement, a 10% sample of the route meters will be tested for accuracy. The new meters will help keep system water loss below 10%. The meter replacements are for existing customers and not related to new growth. See Section 4 narrative and Map No. M-1 in Exhibit CC-1-B for more detail.
Total			**2,100**							**$409,508**	

ATTACHMENT 5B

Sun City water district – PWS ID No. 07-099

SIB PLANT TABLE I, 4-2

2016 Meter Replacements

Information to be included with SIB-Eligible Project Notification

	NARUC Acct No. (SIB-eligible plant)	Replacement Plant Description (new plant) (SIB-eligible plant)					Site (location description)	Replacement Plant			
Project No.	**331 T&D Mains** **333 Services** **334 Meters**	Description	Pipe length/ Quantity	Diameter/ Size	Material	Installed Cost/Unit (estimated)		Expected In-Service Date	Estimated Subtotal Cost (by NARUC Acct No)	Estimated Subtotal Cost (by project)	1. Provide narrative why Replacement Plant is necessary - replacement of existing plant that has exceeded its designated useful life and has worn out or is in deteriorating condition due to no fault of the utility - replacement of existing plant to address excessive water loss (10% or more) - replacement of existing plant for other reasons supported by persuasive showing by utility 2. Provide narrative explaining why this segment of plant is a priority. 3. Provide narrative explaining how replacing this plant will benefit existing customers. 4. Provide affirmation that Replacement Plant does not include the costs for extending or expanding facilities to serve new customers. 5. Provides reference to related page No. in the submitted detailed Engineering Analysis supporting the need for SIB. Engineering Analysis shall also include narrative explaining the utility's systematic assessment, inspection, maintenance, and repair/replacement program.
M-2	334	meters	2,071	5/8" to 2"	Copper/ Plastic	5/8"-$173 ¾"-$195 1"-$234 1½"-$367 2"-$447	Meter Routes 135, 206, 211, 216, 227, and 232 (see map M-2 for detail)	12/2016	n/a	$376,982	Replace 1,665 - 5/8", 351 – 3/4", 13 - 1", 24 – 1.5", and 18 – 2" (2,071 total) in SC district meter routes 135, 206, 211, 216, 227, and 232. The existing meters in these routes will be over 12 years old at replacement; meters in routes 227 and 232 will be 17 and 16 years old, respectively. They are experiencing a rapid decline in meter accuracy. Prior to replacement, a 10% sample of the route meters will be tested for accuracy. The new meters will help keep system water loss below 10%. The meter replacements are for existing customers and not related to new growth. See Section 4 narrative and Map No. M-2 in Exhibit CC-1-B for more detail.
Total			**2,071**							**$376,982**	

ATTACHMENT 5C

Sun City water district – PWS ID No. 07-099

SIB PLANT TABLE I, 4-3

2017 Meter Replacements

Information to be included with SIB-Eligible Project Notification

	NARUC Acct No. (SIB-eligible plant)	Replacement Plant Description (new plant) (SIB-eligible plant)					Site (location description)	Replacement Plant			
Project No.	**331 T&D Mains** **333 Services** **334 Meters**	Description	Pipe length/ Quantity	Diameter/ Size	Material	Installed Cost/Unit (estimated)		Expected In-Service Date	Estimated Subtotal Cost (by NARUC Acct No)	Estimated Subtotal Cost (by project)	1. Provide narrative why Replacement Plant is necessary - replacement of existing plant that has exceeded its designated useful life and has worn out or is in deteriorating condition due to no fault of the utility - replacement of existing plant to address excessive water loss (10% or more) - replacement of existing plant for other reasons supported by persuasive showing by utility 2. Provide narrative explaining why this segment of plant is a priority. 3. Provide narrative explaining how replacing this plant will benefit existing customers. 4. Provide affirmation that Replacement Plant does not include the costs for extending or expanding facilities to serve new customers. 5. Provides reference to related page No. in the submitted detailed Engineering Analysis supporting the need for SIB. Engineering Analysis shall also include narrative explaining the utility's systematic assessment, inspection, maintenance, and repair/replacement program.
M-3	334	meters	2,292	5/8" to 2"	Copper/ Plastic	5/8"-$173 ¾"-$195 1"-$234 1½"-$367 2"-$447	Meter routes 136, 210, 219, 222, 224, 225, and 228 (see map M-3 for detail)	12/2017	n/a	$432,728	Replace 1,762 - 5/8", 398 - 3/4", 12 – 1", 85 – 1.5", and 35 – 2" (2,292 total) meters in SC district meter routes 136, 210, 219, 222, 224, 225, and 228. The existing meters in these routes will be between 12 and 13 years when replaced. The meters are experiencing a rapid decline in meter accuracy. Prior to replacement, a 10% sample of the route meters will be tested for accuracy. The new meters will help keep system water loss below 10%. The meter replacements are for existing customers and not related to new growth. See Section 4 narrative and Map No. M-3 in Exhibit CC-1-B for more detail.
Total			**2,292**							**$432,728**	

ATTACHMENT 5D

Sun City water district – PWS ID No. 07-099

SIB PLANT TABLE I, 4-4

2018 Meter Replacements

Information to be included with SIB-Eligible Project Notification

	NARUC Acct No. (SIB-eligible plant)	Replacement Plant Description (new plant) (SIB-eligible plant)					Site (location description)	Replacement Plant			
Project No.	**331 T&D Mains** **333 Services** **334 Meters**	Description	Pipe length/ Quantity	Diameter/ Size	Material	Installed Cost/Unit (estimated)		Expected In-Service Date	Estimated Subtotal Cost (by NARUC Acct No)	Estimated Subtotal Cost (by project)	1. Provide narrative why Replacement Plant is necessary - replacement of existing plant that has exceeded its designated useful life and has worn out or is in deteriorating condition due to no fault of the utility - replacement of existing plant to address excessive water loss (10% or more) - replacement of existing plant for other reasons supported by persuasive showing by utility 2. Provide narrative explaining why this segment of plant is a priority. 3. Provide narrative explaining how replacing this plant will benefit existing customers. 4. Provide affirmation that Replacement Plant does not include the costs for extending or expanding facilities to serve new customers. 5. Provides reference to related page No. in the submitted detailed Engineering Analysis supporting the need for SIB. Engineering Analysis shall also include narrative explaining the utility's systematic assessment, inspection, maintenance, and repair/replacement program.
M-4	334	meters	2,784	5/8" to 2"	Copper/ Plastic	5/8"-$173 ¾"-$195 1"-$234 1½"-$367 2"-$447	Meter routes 131, 133, 212, 217, 218, 220, 221, and 231 (see map M-4 for detail)	12/2018	n/a	$534,279	Replace 2,380 - 5/8", 1 - 3/4", 215 – 1", 159 – 1.5", and 29 – 2" (2,784 total) meters in SC district meter routes 131, 133, 212, 217, 218, 220, 221, and 231. The existing meters in these routes will be between 12 and 17 years old when replaced. The meters are experiencing a rapid decline in meter accuracy. Prior to replacement, a 10% sample of the route meters will be tested for accuracy. The new meters will help keep system water loss below 10%. The meter replacements are for existing customers and not related to new growth. See Section 4 narrative and Map No. M-4 in Exhibit CC-1-B for more detail.
Total			**2,784**							**$534,279**	

ATTACHMENT 5E

Sun City water district – PWS ID No. 07-099

SIB PLANT TABLE I, 4-5

2019 Meter Replacements

Information to be included with SIB-Eligible Project Notification

	NARUC Acct No. (SIB-eligible plant)	Replacement Plant Description (new plant) (SIB-eligible plant)					Site (location description)	Replacement Plant			
Project No.	**331 T&D Mains** **333 Services** **334 Meters**	Description	Pipe length/ Quantity	Diameter/ Size	Material	Installed Cost/Unit (estimated)		Expected In-Service Date	Estimated Subtotal Cost (by NARUC Acct No)	Estimated Subtotal Cost (by project)	1. Provide narrative why Replacement Plant is necessary - replacement of existing plant that has exceeded its designated useful life and has worn out or is in deteriorating condition due to no fault of the utility - replacement of existing plant to address excessive water loss (10% or more) - replacement of existing plant for other reasons supported by persuasive showing by utility 2. Provide narrative explaining why this segment of plant is a priority. 3. Provide narrative explaining how replacing this plant will benefit existing customers. 4. Provide affirmation that Replacement Plant does not include the costs for extending or expanding facilities to serve new customers. 5. Provides reference to related page No. in the submitted detailed Engineering Analysis supporting the need for SIB. Engineering Analysis shall also include narrative explaining the utility's systematic assessment, inspection, maintenance, and repair/replacement program.
M-5	334	meters	2,351	5/8" to 2"	Copper/ Plastic	5/8"-$173 ¾"-$195 1"-$234 1½"-$367 2"-$447	Meter routes 207, 208, 209, 213, 214, 215, 223, and 226 (see map M-5 for detail)	12/2019	n/a	$470,906	Replace 2,018 - 5/8", 26 – 1", 277 – 1.5", and 30 – 2" (2,351 total) meters in SC district meter routes 207, 208, 209, 213, 214, 215, 223, and 226. The existing meters in these routes will be 14 years old when replaced. The meters are experiencing a rapid decline in meter accuracy. Prior to replacement, a 10% sample of the route meters will be tested for accuracy. The new meters will help keep system water loss below 10%. The meter replacements are for existing customers and not related to new growth. See Section 4 narrative and Map No. M-5 in Exhibit CC-1-B for more detail.
Total			**2,351**							**$470,906**	

ATTACHMENT 6

EPCOR Water – Sun City Water District
Docket No. WS-01303A-14-0010

Plan of Administration
System Improvement Benefit Mechanism ("SIB")

TABLE OF CONTENTS

I. GENERAL DESCRIPTION 73

II. DEFINITIONS 73

III. SIB RELATED FILINGS 74

IV. SURCHARGE CALCULATIONS 76

V. ADDING PROJECTS TO SIB TABLE I UNDER EMERGENCY CIRCUMSTANCES 78

VI. SIB SURCHARGE RATE DESIGN 79

VII. SIB SURCHARGE NOTICE REQUIREMENTS 79

EXHIBITS

SIB PLANT TABLE I[13] ..... Exhibit 1

SIB PLANT TABLE II[14] ..... Exhibit 2

SIB SCHEDULE A - CALCULATION OF OVERALL SIB REVENUE REQUIREMENTS AND EFFICIENCY

CREDIT ..... Exhibit 3

SIB SCHEDULE B - CALCULATION OF SIB TRUE-UP REVENUE REQUIREMENTS ADJUSTMENT ..... Exhibit 4

SIB SCHEDULE C - TYPICAL BILLS ANALYSIS ..... Exhibit 5

SIB SCHEDULE D - SUMMARY OF REVENUE AND RATE BASE IMPACTS INCLUDING

EARNINGS TEST ..... Exhibit 6

[13] Revised 4-1-2014
[14] Revised 4-1-2014

I. GENERAL DESCRIPTION

This document is the Plan of Administration ("POA") for the System Improvement Benefits ("SIB") Mechanism approved for EPCOR Water's ("Company") Sun City Water District by the Arizona Corporation Commission ("ACC" or "Commission") in Decision No. XXXXX on Month, Day, Year. The SIB provides for recovery of the capital costs (return on investment, income taxes and depreciation expense) associated with distribution system improvement projects listed in SIB Plant Table I that have been verified to be completed,[15] net of associated retirements and placed in service per SIB Plant Table II and where costs have not been included in rate base for recovery in Decision No. XXXXX. Any expenditures offset by contributions in aid of construction or advances in aid of construction are not eligible for inclusion in the SIB.

II. DEFINITIONS

- NARUC – National Association of Regulatory Utility Commissioners
- SIB – System Improvement Benefit mechanism to be implemented between rate proceedings to support investment in plant recorded in SIB Eligible NARUC accounts.
- SIB Eligible Plant – Investments in plant recorded in SIB Eligible NARUC accounts.
- SIB Eligible NARUC accounts:
  - NARUC Account No. 309 – Supply Mains
  - NARUC Account No. 331 – Transmission and Distribution Mains
  - NARUC Account No. 333 – Services
  - NARUC Account No. 334 - Meters and Meter Installations;
  - NARUC Account No. 335 – Hydrants
- SIB Plant Table I (Excerpt attached as Exhibit 1)[16] – The schedule of planned SIB eligible projects that is either approved in the Company's most recent rate case or updated by a subsequent Commission decision. As used herein, this term refers to the most recently updated SIB Plant Table I available unless reference is made to a particular Commission decision.
- SIB Plant Table II – The schedule of completed and verified SIB eligible projects from the latest Commission approved SIB Plant Table I and associated retirements.

[15] Acceptable form of verifications may include the Maricopa County Environmental Services Department Approval of Construction, Professional Engineer's Certificate of Completion, etc.
[16] See Company filing of August 22, 2013

- Total Revenue Requirement – The revenue requirement approved in Decision No. XXXXX, plus the SIB Revenue Requirement.

- SIB Revenue Requirement – The revenue requirement equal to the return on investment, income taxes and depreciation expense necessary to support the SIB Plant Table II amounts.

- SIB Revenue Requirement Efficiency Credit – An amount equal to 5 percent of the SIB Revenue Requirement.

- SIB Authorized Revenue – Amount equal to the SIB Revenue Requirement less the SIB Revenue Requirement Efficiency Credit plus any SIB True up Adjustment.

- Gross SIB Surcharge – Amount to be shown on customers' bills based on meter sizes without consideration to the SIB Surcharge Efficiency Credit.

- SIB Surcharge Efficiency Credit – An amount equal to 5 percent of the Gross SIB Surcharge to be shown on customers' bills.

- SIB Surcharge – The amount equal to the Gross SIB Surcharge less the SIB Surcharge Efficiency Credit to be charged, based on meter size, calculated to recover the SIB Authorized Revenue. The SIB Surcharge is to be shown as a separate line item on customers' bills.

- SIB True-up Adjustment – An amount to adjust for over- or under-collection of the SIB Authorized Revenues as compared with the total SIB Surcharges collected for the preceding 12 month period. Each SIB true–up shall also analyze the cumulative over- or under-collections to include a comparison of all past SIB Authorized Revenues, total SIB Surcharge collections, and prior true-ups to be used in calculation of the SIB true-up surcharge or credit by meter size.

III. SIB RELATED FILINGS

A. Progress Reports – Once a SIB is approved in a decision, the Company must file with Docket Control semi-annual status reports delineating the status of all SIB Eligible Plant, on a project by project basis as listed in the latest Commission approved SIB Plant Table I. The initial semi-annual status report shall include only those projects from the initial SIB Plant Table I which the Company has designated as most likely to be completed in the first 12 months.

B. Reconciliation and True Up – Once a SIB Surcharge is implemented, the Company must file annually to true up its SIB Surcharge collections over the preceding twelve months with the SIB Authorized Revenue for that period and establish a surcharge or credit to true up over or under collections, regardless of whether it seeks a new surcharge. The filing dates for these annual true-ups shall be as established in the Commission's Decision approving the SIB Surcharge.

C. SIB Surcharge Requests – To obtain its SIB Surcharge the Company must file the following:

1. SIB Plant Table II[17] (with supporting information and documentation), showing the SIB eligible projects completed for which the Company seeks cost recovery. Such projects must:

   a. be projects listed in the SIB Plant Table I;

   b. have been completed by the Company;

   c. have been verified; and

   d. be actually serving customers.

2. A summary of Commission approved SIB-eligible projects contemplated for the next twelve (12)-month SIB surcharge period from SIB Plant Table I[18] from Decision No. XXXXX to allow the Commission to establish the latest SIB Plant Table I.

3. SIB Schedule A (sample attached as Exhibit 3), showing a calculation of the SIB Revenue Requirement and SIB Revenue Requirement Efficiency Credit, SIB Authorized Revenue, Gross SIB Surcharge, SIB Surcharge Efficiency Credit, and the SIB Surcharge. Schedule A shall be supported by revenue requirements schedules supporting the revenue requirements in Decision No. XXXXX and the pro-forma revenue requirements including the effects of SIB Eligible Plant.

4. Schedule B (sample attached as Exhibit 4) showing the overall SIB True-up Adjustment calculation for the prior twelve-month SIB Surcharge period, as well as the individual SIB True-up Adjustment for each meter size.

5. SIB Schedule C (sample attached as Exhibit 5) showing the effect of the SIB Surcharge on a typical residential customer bill for both median and average usage.

6. SIB Schedule D (sample attached as Exhibit 6) which shall include an analysis of the impact of completed SIB Eligible Plant projects on the fair value rate base, revenue, and the fair value rate of return. The Company shall also file the following as part of SIB D Schedule:

   a. the most current balance sheet at the time of the filing;

[17] Sample attached as Exhibit 2

[18] Beginning with its SIB Surcharge Request filing for the second 12-month surcharge period, the Company may request a change from the estimated Cost/Unit (approved in the Company's most recent rate case Decision) due to inflation using the latest calendar year Consumer Price Index (see sample attached as Exhibit 1). This may be done only if the original SIB Plant Table I unit cost did not account for inflation.

b. the most current income statement;

c. an earnings test schedule;

d. a rate review schedule (including the incremental and pro forma effects of the proposed increase);

e. an adjusted rate base schedule; and

f. a Construction Work in Progress ledger for each project showing accumulation of charges by month and paid contractor invoices including a summary page showing the calculation of the SIB eligible rate base and depreciation expense net of associated retirements.

D. The Company will maintain and provide to the Commission's Utilities Division (Staff) and the Residential Utility Consumer Office (RUCO) schedules in Microsoft Excel format (with all formulae intact) supporting the revenue requirement approved in Decision No. XXXXX, and the effects of completed SIB eligible plant for the current SIB Surcharge Request and any previously approved SIB Surcharge and SIB True-up Adjustment Requests.

E. The Company may make its initial SIB Surcharge Request through Docket Control no earlier than twelve months after the entry of Decision No. XXXXX.

F. The Company may make no more than one SIB Surcharge Request every twelve months with no more than five SIB Surcharge Requests between rate case decisions. A True-up must be filed with each SIB Surcharge Request, except the first.

G. Unless otherwise authorized by the Commission, the Company shall be required to file its next general rate case no later than Month, Day, Year, with a test year ending no later than Month, Day, Year.

H. Any SIB Surcharges that are in effect shall be reset to zero upon the date new rates become effective in the Company's next general rate case.

IV. SURCHARGE CALCULATIONS

A. Calculations of Amounts to Be Collected By the SIB Surcharge

1. The amount to be collected by the SIB Authorized Revenue shall be equal to the SIB Revenue Requirement minus the SIB Revenue Requirements Efficiency Credit plus any SIB True up Adjustment.
For purposes of calculating the SIB Revenue Requirement:

(1) The required rate of return is equal to the overall rate of return authorized in Decision No. XXXXX.

(2) The gross revenue conversion factor/tax multiplier is equal to the gross revenue conversion factor/tax multiplier approved in Decision No. XXXXX; and

(3) The applicable depreciation rate(s) is equal to the depreciation rate(s) approved in Decision No. XXXXX.

2. The SIB plant unit cost to be used in calculating the SIB Revenue Requirement shall be the lesser of the installed SIB plant unit cost listed in SIB Plant Table II or 110 percent of the SIB plant estimated unit cost listed in the latest Commission approved SIB Plant Table I.

3. The amount to be collected by each SIB Surcharge Request shall be capped annually at five percent of the revenue requirement authorized in Decision No. XXXXX.

B. Reconciliation And True-Ups

1. The revenue collected by the total SIB Surcharges over the preceding twelve months shall be trued-up and reconciled with the SIB Authorized Revenue for that period.

2. A new SIB Surcharge shall be combined with an existing SIB Surcharge such that a single SIB surcharge and SIB Efficiency Credit are shown on a customer's bill.

3. For each twelve (12) month period that a SIB surcharge is in effect, the Company shall reconcile the amounts collected by the SIB Surcharge with the SIB Authorized Revenue, for that twelve (12)-month period, consistent with Schedule B, attached hereto as Exhibit 4.

4. Any under- or over-collected SIB Authorized Revenues shall be recovered or refunded, without interest, over a twelve-month period by means of a SIB True-up Surcharge or Credit.

5. Starting with the second annual SIB Surcharge, where there are over- or under-collected balances, such over- or under-collected balances shall be carried over to the next year, and considered in the calculation of the new SIB True-up Surcharge or Credit. If, after the five-year period there remains an over- or under-collected balance, such balance shall be reset to zero, and addressed in the next rate case.

C. Earnings Test

1. Once a SIB Surcharge is in effect, the Company shall be required to perform an annual earnings test calculation for each SIB Surcharge Request to

determine whether the actual rate of return reflected by the operating income for the affected system or division for the relevant 12-month period exceeded the most recently authorized fair value rate of return for the affected system or division.

2. The earnings test shall be:

   a) based on the most recent available operating income,

   b) adjusted for any operating revenue and expense adjustments adopted in the most recent general rate case; and

   c) based on the rate base adopted in the most recent general rate case, updated to recognize changes in plant, accumulated depreciation, contributions in aid of construction, advances in aid of construction, and accumulated deferred income taxes through the most recent available financial statement (quarterly or longer).

V. ADDING PROJECTS TO SIB TABLE I UNDER EMERGENCY CIRCUMSTANCES

A. The Company may seek Commission approval to add projects in SIB Plant Table I only in the event of emergency circumstances. No such changes may be made without Commission approval.

B. Any addition to SIB Plant Table I must be plant investment that maintains or improves existing customer service, system reliability, integrity and safety. Eligible plant additions are limited to plant replacement projects. The costs of extending facilities or capacity to serve new customers are not recoverable through the SIB mechanism.

C. To be eligible for SIB treatment, a project must be SIB Eligible Plant.

D. SIB Eligible Plant must satisfy at least one of the following criteria:

1. Water loss for the system exceeds ten (10) percent, as calculated by the following formula: ((Volume of Water Produced and/ or Purchased) – (Volume of Water Sold + Volume of Water Put to Beneficial Use)) divided by (Volume of Water Produced and/or Purchased). If the Volume of Water Put to Beneficial Use is not metered, it shall be established in a reliable, verifiable manner.

2. Plant assets that have remained in service beyond their useful service lives (based on the Company's system's authorized utility plant depreciation rates) and are in need of replacement due to being worn out or in a deteriorating condition through no fault of the Company;

3. Any other engineering, operational or financial justification supporting the need for a plant asset replacement, other than the Company's negligence or improper maintenance, including, but not limited to:

   a. A documented increasing level of repairs to, or failures of, a plant asset justifying its replacement prior to reaching the end of its useful service life (e.g. black poly pipe);

   b. Assets that are required to be moved, replaced or abandoned by a governmental agency or political subdivision if the Company can show that it has made a good faith effort to seek reimbursement for all or part of the costs incurred.

VI. SIB SURCHARGE RATE DESIGN

A. The SIB Surcharge rate design shall be calculated as follows:

1. The SIB Surcharge shall be a fixed monthly surcharge containing a Gross SIB Surcharge and the SIB Surcharge Efficiency Credit as its two components.

2. The SIB Surcharge shall be calculated by dividing the SIB Authorized Revenue by the number of equivalent active 5/8-inch meters at the end of the most recent twelve (12) month period, and shall increase with meter size based on the following meter capacity multipliers:

5/8-inch x ¾-inch	1.0 times
¾-inch	1.5 times
1-inch	2.5 times
1½-inch	5 times
2-inch	8 times
3-inch	16 times
4-inch	25 times
6-inch	50 times
8-inch	80 times
10-inch & above	115 times

B. The SIB Surcharge shall apply to all of the Company's metered customers, including private fire service customers.

VII. SIB SURCHARGE NOTICE REQUIREMENTS

A. Thirty days prior to filing each application to implement a SIB Surcharge, the Company shall file a proposed form of notice to Staff for review, and a Summary of what the Company will be requesting in the application. Once the notice is approved by Staff, the Company shall provide a copy of the approved notice to its customers via newsletter or bill insert. After providing notice, the Company shall fie a copy of

the notice and a description of when and how it provided notice with each application to implement a SIB surcharge. The Summary and Notice shall include at least the following information:

1. The individual Gross SIB Surcharge, by meter size;
2. The individual SIB Surcharge Efficiency Credit, by meter size;
3. The SIB Surcharge, by meter size; and
4. Directions to where the customer may obtain a summary of the projects included in the current SIB Surcharge request, including a description of each project and its cost.

B. A SIB Surcharge shall not become effective until approved by the Commission.

C. The Company shall provide a proposed order for the Commission's consideration.

D. The Company shall notice its customers of the SIB Surcharge approved herein as soon as possible in a form acceptable to Staff and consistent with the notice requirements of Decision No. XXXXX.

E. The Company shall not implement the SIB Surcharge until 30 days after having filed documentation in Docket Control providing the date when all effected customers have been notified of the Commission approved SIB Surcharge.

ATTACHMENT 7A

Sun City Water District, PWSID No. 07-099
SIB PLANT TABLE I

Information to be included with SIB-Eligible Project Filings

Replacement Plant Description (new plant) (SIB-eligible plant)											
Project No.	NARUC Acct No./ Plant 331 T&D Mains 331 T&D Valves 333 Services 334 Meters	Units (Quantity)	Diameter/ Size	Material	Cost/Unit (estimated)[19]	Cost/Unit (estimated)[20]	Subtotal Cost (estimated)	Site (location description)	Expected In-Service Date	Project Status	1. Provide narrative why Replacement Plant is necessary - replacement of existing plant that has exceeded its designated useful life and has worn out or is in deteriorating condition due to no fault of the utility - replacement of existing plant to address excessive water loss (10% or more) - replacement of existing plant for other reasons supported by persuasive showing by utility 2. Provide narrative explaining why this segment of plant is a priority. 3. Provide narrative explaining how replacing this plant will benefit existing customers. 4. Provide affirmation that Replacement Plant does not include the costs for extending or expanding facilities to serve new customers. 5. Provide reference to related page No. in the submitted detailed Engineering Analysis supporting the need for SIB. Engineering Analysis shall also include narrative explaining the utility's systematic assessment, inspection, maintenance and repair/replacement program.
						Estimated Total Cost					

Revised 4/1/2014

[19] Per the Commission approved Initial SIB Table I.

[20] Beginning with its SIB Surcharge Request filing for Year Two, the Company may request a change from the estimated Cost/Unit (in the Commission approved Initial SIB Table I) due to inflation using the latest calendar year Consumer Price Index. This may be done only if the Initial SIB Plant Table I unit cost did not account for inflation.

ATTACHMENT 7B

Sun City Water District, PWSID No. 07-099

SIB PLANT TABLE II (Page 1a)

Information to be included with SIB-Eligible Completed Project Filings

Replacement Plant Description (installed new plant) (SIB-eligible plant)									Original Plant (Plant Being Retired)				
Project No.	NARUC Acct No./ Plant 331 T&D Mains	Description (Note any changes)	Installed Quantity	Diameter/ Size	Material	Installed Cost/Unit (actual cost)	Actual Cost (by NARUC Acct No)	In-Service Date (provide ADEQ AOC and other related approvals by state and/or federal agencies when applicable; pictures of installed plant)	Actual Retirement Date	Original In-Service Date	Original Cost	Accumulated Depreciation Reserve (as of the actual retirement date)	Net Value of Retired Plant

Revised 4/1/2014

ATTACHMENT 7C

Sun City Water District, PWSID No. 07-099

SIB PLANT TABLE II (Page 1b)

Information to be included with SIB-Eligible Completed Project Filings

Project No.	NARUC Acct. No./ Plant 331 T&D Mains	a Cost/Unit (Estimated) (from Table I)	b Cost/Unit (Installed)	c Installed Units (Quantity)	d Actual Cost (by NARUC Acct) (d)=(b) x (c)	e Is (b) less than 110% of (a)? Enter "Yes" or "No	f If (e) is "No", Calculate Allowable Installed cost: (f)=110% of (a) x (c)	g Net Value of Retired Plant	h SIB Allowed Cost (h)=(d)-(g) when Column (e) is "Yes" (h)=(f)-(g) when Column (e) is "No"

ATTACHMENT 7D

Sun City Water District, PWSID No. 07-099

SIB PLANT TABLE II (Page 2a)

Information to be included with SIB-Eligible Completed Project Filings

Replacement Plant Description (installed new plant) (SIB-eligible plant)									Original Plant (Plant Being Retired)				
Project No.	NARUC Acct No./ Plant 331 T&D Valves	Description (Note any changes)	Installed Quantity	Diameter/ Size	Material	Installed Cost/Unit (actual cost)	Actual Cost (by NARUC Acct No)	In-Service Date (provide ADEQ AOC and other related approvals by state and/or federal agencies when applicable; pictures of installed plant)	Actual Retirement Date	Original In-Service Date	Original Cost	Accumulated Depreciation Reserve (as of the actual retirement date)	Net Value of Retired Plant

ATTACHMENT 7E

Sun City Water District, PWSID No. 07-099

SIB PLANT TABLE II (Page 2b)

Information to be included with SIB-Eligible Completed Project Filings

Project No.	NARUC Acct. No./ Plant 331 T&D Valves	a Cost/Unit (Estimated) (from Table I)	b Cost/Unit (Installed)	c Installed Units (Quantity)	d Actual Cost (by NARUC Acct) (d)=(b) x (c)	e Is (b) less than 110% of (a)? Enter "Yes" or "No	f If (e) is "No", Calculate Allowable Installed cost: (f)=110% of (a) x (c)	g Net Value of Retired Plant	h SIB Allowed Cost (h)=(d)-(g) when Column (e) is "Yes" (h)=(f)-(g) when Column (e) is "No"

ATTACHMENT 7F

Sun City Water District, PWSID No. 07-099

SIB PLANT TABLE II (Page 3a)

Information to be included with SIB-Eligible Completed Project Filings

Replacement Plant Description (installed new plant) (SIB-eligible plant)									Original Plant (Plant Being Retired)				
Project No.	NARUC Acct No./ Plant 333 Services	Description (Note any changes)	Installed Quantity	Diameter/ Size	Material	Installed Cost/Unit (actual cost)	Actual Cost (by NARUC Acct No)	In-Service Date (provide ADEQ AOC and other related approvals by state and/or federal agencies when applicable; pictures of installed plant)	Actual Retirement Date	Original In-Service Date	Original Cost	Accumulated Depreciation Reserve (as of the actual retirement date)	Net Value of Retired Plant

ATTACHMENT 7G

Sun City Water District, PWSID No. 07-099

SIB PLANT TABLE II (Page 3b)

Information to be included with SIB-Eligible Completed Project Filings

Project No.	NARUC Acct. No./ Plant 333 Services	a Cost/Unit (Estimated) (from Table I)	b Cost/Unit (Installed)	c Installed Units (Quantity)	d Actual Cost (by NARUC Acct) (d)=(b) x (c)	e Is (b) less than 110% of (a)? Enter "Yes" or "No	f If (e) is "No", Calculate Allowable Installed cost: (f)=110% of (a) x (c)	g Net Value of Retired Plant	h SIB Allowed Cost (h)=(d)-(g) when Column (e) is "Yes" (h)=(f)-(g) when Column (e) is "No"

ATTACHMENT 7H

Sun City Water District, PWSID No. 07-099

SIB PLANT TABLE II (Page 4a)

Information to be included with SIB-Eligible Completed Project Filings

Replacement Plant Description (installed new plant) (SIB-eligible plant)									Original Plant (Plant Being Retired)				
Project No.	NARUC Acct No./ Plant 334 Meters	Description (Note any changes)	Installed Quantity	Diameter/ Size	Material	Installed Cost/Unit (actual cost)	Actual Cost (by NARUC Acct No)	In-Service Date (provide ADEQ AOC and other related approvals by state and/or federal agencies when applicable; pictures of installed plant)	Actual Retirement Date	Original In-Service Date	Original Cost	Accumulated Depreciation Reserve (as of the actual retirement date)	Net Value of Retired Plant

ATTACHMENT 7I

Sun City Water District, PWSID No. 07-099

SIB PLANT TABLE II (Page 4b)

Information to be included with SIB-Eligible Completed Project Filings

Project No.	NARUC Acct. No./ Plant 334 Meters	a Cost/Unit (Estimated) (from Table I)	b Cost/Unit (Installed)	c Installed Units (Quantity)	d Actual Cost (by NARUC Acct) (d)=(b) x (c)	e Is (b) less than 110% of (a)? Enter "Yes" or "No	f If (e) is "No", Calculate Allowable Installed cost: (f)=110% of (a) x (c)	g Net Value of Retired Plant	h SIB Allowed Cost (h)=(d)-(g) when Column (e) is "Yes" (h)=(f)-(g) when Column (e) is "No"

ATTACHMENT 7J

Sun City Water District, PWSID No. 07-099
SIB PLANT TABLE II- SUMMARY (Page 5)

Information to be included with SIB-Eligible Completed Project Filings

Project No.	NARUC Acct No. (SIB-eligible plant) 331 333 334	Description	1 Actual Cost (from Table II column d)	2 **SIB Allowed Cost**[21] (from Table II column h)
		Total		

[21] Total SIB Allowed Cost to be used in calculating the SIB Revenue Requirement

ATTACHMENT 7K

SIB Schedule A

EPCOR Water
Sun City Water District, PWSID No. 07-099
Decision No. XXX
Effective Date XXX

Check if

☐ Consolidated

LINE NO.	CALCULATION OF OVERALL SIB REVENUE REQUIREMENT AND EFFICIENCY CREDIT		
1	Total Authorized Revenue Requirement , Per Decision xxxxx, See Attached Schedules	TBD	
2	SIB Revenue Cap percentage	5%	Per Year
3	SIB Revenue Cap	TBD	
4	SIB Allowed Cost (Per SIB Table II, Summary page, Column 2)	TBD	
5	Total Revenue Requirement, (with pro forma SIB investments). See attached revenue requirements schedules as provided by Company.	TBD	
6	SIB Revenue Requirement (line 5 minus line 1)	TBD	
7	SIB Revenue Requirement Efficiency Credit	5%	
8	SIB True-Up Adjustment (from SIB Schedule B)	TBD	
9	SIB Authorized Revenue (line 6 plus line 7 plus line 8)	TBD	

* Number of Equivalent Meters, below		TBD
* Charge per 5/8" meter		TBD

	No. of Customers at SIB Cycle Year End	Multipliers	5/8 x 3/4-inch Equivalent Meters	Fixed Surcharge	Annual Rev by Meter Size
5/8 x 3/4-inch	TBD	1	TBD	TBD	TBD
3/4-inch	TBD	1.5	TBD	TBD	TBD
1-inch	TBD	2.5	TBD	TBD	TBD
1 1/2-inch	TBD	5	TBD	TBD	TBD
2-inch	TBD	8	TBD	TBD	TBD
3-inch	TBD	16	TBD	TBD	TBD
4-inch	TBD	25	TBD	TBD	TBD
6 -inch	TBD	50	TBD	TBD	TBD
8 -inch	TBD	80	TBD	TBD	TBD
10-inch	TBD	115	TBD	TBD	TBD
Totals	TBD		TBD		TBD

ATTACHMENT 7L

EPCOR Water
Sun City Water District, PWSID No. 07-099
Decision No. XXX
Effective Date XXX

SIB Schedule B

CALCULATION OF SIB TRUE-UP REVENUE REQUIREMENTS ADJUSTMENT	SIB Filing Sequence				
	SIB year 1*	SIB year 2	SIB year 3	SIB year 4	SIB year 5
SIB Authorized Revenue , Per SIB Schedule A	TBD	TBD	TBD	TBD	TBD
Total SIB Surcharges collections for Period	TBD	TBD	TBD	TBD	TBD
SIB True-Up Adjustment	TBD	TBD	TBD	TBD	TBD

Note: The Company shall also provide an analysis of cumulative over or under collections and a net amount to be included in the SIB True-up Adjustment

*SIB year 1 is one year after effective date

ATTACHMENT 7M

EPCOR Water
Sun City Water District, PWSID No. 07-099
Decision No. XXX
Effective Date XXX

SIB Schedule C

TYPICAL BILL IMPACTS
5/8 -Inch Customers

		Step 1			Step 2			Step 3			Step 4			Step 5		
Gallons	Per Dec. No. XXXXX(no SIB Surcharge)	Total Bill w/ SIB Year 1 *	SIB Inc.	Cumulative % Increase	Total Bill w/ SIB Year 2 *	SIB Inc.	Cumulative % Increase	Total Bill w/ SIB Year 3 *	SIB Inc.	Cumulative % Increase	Total Bill w/ SIB Year 4 *	SIB Inc.	Cumulative % Increase	Total Bill w/ SIB Year 5 *	SIB Inc.	Cumulative % Increase
0	TBD	TBD	TBD	TBD	TBD	TBD	TBD	TBD	TBD	TBD	TBD	TBD	TBD	TBD	TBD	TBD
1000	TBD	TBD	TBD	TBD	TBD	TBD	TBD	TBD	TBD	TBD	TBD	TBD	TBD	TBD	TBD	TBD
2000	TBD	TBD	TBD	TBD	TBD	TBD	TBD	TBD	TBD	TBD	TBD	TBD	TBD	TBD	TBD	TBD
3000	TBD	TBD	TBD	TBD	TBD	TBD	TBD	TBD	TBD	TBD	TBD	TBD	TBD	TBD	TBD	TBD
4000	TBD	TBD	TBD	TBD	TBD	TBD	TBD	TBD	TBD	TBD	TBD	TBD	TBD	TBD	TBD	TBD
5000	TBD	TBD	TBD	TBD	TBD	TBD	TBD	TBD	TBD	TBD	TBD	TBD	TBD	TBD	TBD	TBD
6000	TBD	TBD	TBD	TBD	TBD	TBD	TBD	TBD	TBD	TBD	TBD	TBD	TBD	TBD	TBD	TBD
7000	TBD	TBD	TBD	TBD	TBD	TBD	TBD	TBD	TBD	TBD	TBD	TBD	TBD	TBD	TBD	TBD
8000	TBD	TBD	TBD	TBD	TBD	TBD	TBD	TBD	TBD	TBD	TBD	TBD	TBD	TBD	TBD	TBD
9000	TBD	TBD	TBD	TBD	TBD	TBD	TBD	TBD	TBD	TBD	TBD	TBD	TBD	TBD	TBD	TBD
10000	TBD	TBD	TBD	TBD	TBD	TBD	TBD	TBD	TBD	TBD	TBD	TBD	TBD	TBD	TBD	TBD
11000	TBD	TBD	TBD	TBD	TBD	TBD	TBD	TBD	TBD	TBD	TBD	TBD	TBD	TBD	TBD	TBD
12000	TBD	TBD	TBD	TBD	TBD	TBD	TBD	TBD	TBD	TBD	TBD	TBD	TBD	TBD	TBD	TBD
13000	TBD	TBD	TBD	TBD	TBD	TBD	TBD	TBD	TBD	TBD	TBD	TBD	TBD	TBD	TBD	TBD
14000	TBD	TBD	TBD	TBD	TBD	TBD	TBD	TBD	TBD	TBD	TBD	TBD	TBD	TBD	TBD	TBD
15000	TBD	TBD	TBD	TBD	TBD	TBD	TBD	TBD	TBD	TBD	TBD	TBD	TBD	TBD	TBD	TBD
20000	TBD	TBD	TBD	TBD	TBD	TBD	TBD	TBD	TBD	TBD	TBD	TBD	TBD	TBD	TBD	TBD
25000	TBD	TBD	TBD	TBD	TBD	TBD	TBD	TBD	TBD	TBD	TBD	TBD	TBD	TBD	TBD	TBD
Median (Cite Usage)	TBD	TBD	TBD	TBD	TBD	TBD	TBD	TBD	TBD	TBD	TBD	TBD	TBD	TBD	TBD	TBD
Mean (Cite Usage)	TBD	TBD	TBD	TBD	TBD	TBD	TBD	TBD	TBD	TBD	TBD	TBD	TBD	TBD	TBD	TBD

*: Bills in Years 1 -5 are net of

ATTACHMENT 7N

EPCOR Water
Sun City Water District, PWSID No. 07-099
Decision No. XXX
Effective Date XXX

SIB Schedule D

Fair Value Rate Base, Revenue & Rate of Return - Decision No. _____

	Per Dec. No XXXXXX	SIB Step 1	SIB Step 2	SIB Step 3	SIB Step 4	SIB Step 5	Total Pro-forma with SIB
Total Operating Revenue *	TBD	TBD	TBD	TBD	TBD	TBD	TBD
Operating Expenses	TBD	TBD	TBD	TBD	TBD	TBD	TBD
Operations & Maintenance	TBD	TBD	TBD	TBD	TBD	TBD	TBD
Depreciation & Amortizaiton	TBD	TBD	TBD	TBD	TBD	TBD	TBD
Taxes Other than Income	TBD	TBD	TBD	TBD	TBD	TBD	TBD
Income Taxes	TBD	TBD	TBD	TBD	TBD	TBD	TBD
Total Operating Expenses	TBD	TBD	TBD	TBD	TBD	TBD	TBD
Operating Income	TBD	TBD	TBD	TBD	TBD	TBD	TBD
Rate Base	TBD	TBD	TBD	TBD	TBD	TBD	TBD
Rate of Return on Rate Base	TBD	TBD	TBD	TBD	TBD	TBD	TBD
Authorized Rate of Return on Rate Base	TBD	TBD	TBD	TBD	TBD	TBD	TBD

*: SIB Revenues in Years 1 -5 are net of 5% Efficiency Credit

ATTACHMENT 7O

EPCOR Water

Sun City Water District, PWSID No. 07-099

Decision No. XXX

Schedule D	Fair Value Rate Base, Revenue & Rate of Return
	Rate Review
	Balance Sheet
	Income Statement
	Earnings Test
	Rate Base
	Construction Work in Progerss (CWIP) Ledger
	Calculation of Corporate Allocation Factor

EXHIBIT MST-4

ENGINEERING REPORT FOR EPCOR WATER ARIZONA, INC.,

TUBAC WATER DISTRICT

BY MICHAEL THOMPSON

JANUARY 20, 2015

ENGINEERING REPORT FOR
EPCOR Water Arizona Inc.
Tubac Water District

Docket No. WS-01303A-14-0010 (Rates)

By Michael Thompson, P. E.

December 31, 2014

EXECUTIVE SUMMARY

CONCLUSIONS

1. The Arizona Corporation Commission ("ACC" or "Commission") Utilities Division Staff ("Utilities Staff" or "Staff") concludes that the Tubac Water District ("Tubac" or "District") water system, does not have adequate storage capacity to serve the present customer base and any reasonable growth.

2. The Arizona Department of Environmental Quality ("ADEQ") Compliance Status Report ("CSR"), indicates that the District water system is currently delivering water that meets water quality standards required by 40 CFR 141 (National Primary Drinking Water Regulations) and Arizona Administrative Code, Title 18, Chapter 4.

3. The District's water system service area is located within the Arizona Department of Water Resources ("ADWR") Santa Cruz Active Management Area ("AMA").

4. ADWR's Water Provider Compliance Reports, dated June 6, 2014, indicate that the District's water system is currently in compliance with departmental requirements governing water providers and/or community water systems.

5. According to the Commissions Utilities Division Compliance Section database the District currently has no delinquent Commission compliance items.

6. The District has approved Cross-Connection/Backflow Prevention and Curtailment Tariffs on file with the Commission.

7. The District has ten (10) Best Management Practices ("BMPs") on file with the Commission.

8. Well No. 2 produced water containing arsenic concentrations above the Environmental Protection Agency ("EPA") standard. The well is located a significant distance from the Arsenic Removal Facility ("ARF"). Based on a cost analysis study, it was determined to be cost prohibitive to install a transmission main from Well No. 2 to the ARF. Consequently, the well was disconnected from the District water system and is currently inactive. Well No. 2 is considered not used and useful to the District's provision of service.

9. EPCOR Water Arizona, Inc. ("EWAZ") has not requested any District Post-Test Year Capital Investment Projects ("IPs") be included as Post Test Year Plant Additions.

10. Staff concludes that the media replacement cost of $101,712 to be appropriate and reasonable.

RECOMMENDATIONS

1. Staff recommends an annual water testing expense, for the District, of $2,108 be used for the purposes of this application.

2. Staff recommends the depreciation rates listed under "Staff's Recommended Rates" in Table F be adopted.

3. Staff has no objections to the continued use of the currently authorized meter and service installation charges, as proposed by the District, and recommends the charges listed under "Staff's Recommendations" in Table G be adopted.

4. EWAZ filed a proposed change to the Meter Repair and/or Replacement Tariff ("BMP 4.2"). In the proposed change, EWAZ requested that paragraph 3 of the BMP tariff, which refers to the inspection of meters, be modified such that pulling a meter for inspection would no longer be required and therefore be stricken from the tariff. Staff recommends approval of the modification in BMP 4.2, as proposed by EWAZ.

5. Staff recommends the District install, at a minimum, an additional 100,000 gallons of storage capacity. Staff further recommends that the District file with Docket Control, as a compliance item in this docket by December 31, 2015, a copy of the ADEQ Approval to Construct ("ATC") for the additional storage capacity.

TABLE OF CONTENTS

PAGE

A. INTRODUCTION AND LOCATION OF COMPANY 5

B. DESCRIPTION OF THE WATER SYSTEM 5

C. WATER USE 7

(1) *WATER SOLD* 7
(2) *NON-ACCOUNTED FOR WATER* 8
(3) *WATER SYSTEM ANALYSIS* 8

D. GROWTH 9

E. ARIZONA DEPARTMENT OF ENVIRONMENTAL QUALITY ("ADEQ") COMPLIANCE 10

(1) *COMPLIANCE STATUS* 10
(2) *WATER MONITORING AND TESTING EXPENSES* 10

F. ARIZONA DEPARTMENT OF WATER RESOURCES ("ADWR") COMPLIANCE 11

G. ARIZONA CORPORATION COMMISSION COMPLIANCE 11

H. DEPRECIATION RATES 11

I. OTHER ISSUES 13

(1) *SERVICE LINE AND METER INSTALLATION CHARGES* 13
(2) *CURTAILMENT TARIFF* 14
(3) *CROSS-CONNECTION/BACKFLOW PREVENTION TARIFF* 14
(4) *BEST MANAGEMENT PRACTICES ("BMP") TARIFF* 14
(5) *TUBAC WATER DISTRICT POST TEST YEAR PLANT ADDITIONS – USED AND USEFUL (JULY ~~2103~~ 2013 – JUNE 30, 2014)* 15
(6) *ARSENIC REMOVAL FACILITY VESSEL MEDIA COST RECOVERY* 15

FIGURES

PAGE

FIGURE 1. SANTA CRUZ COUNTY MAP 17

FIGURE 2. TUBAC WATER DISTRICT CERTIFIED AREA 18

FIGURES 3A – 3C. TUBAC WATER SYSTEM SCHEMATICE DIAGRAMS 19-21

FIGURE 3A. WELL SITE NO. 4 & PALO PARADO BOOSTER PUMP STATION 19
FIGURE 3B. WELL SITE NO. 2 & 3 20
FIGURE 3C. WELL SITE NO. 5 & ARSENIC REMOVAL FACILITY ("ARF") 21

FIGURE 4. TUBAC WATER SYSTEM WATER CONSUMPTION GRAPH 22

FIGURE 5. TUBAC WATER DISTRICT ACTUAL & PROJECTED GROWTH GRAPH 23

ATTACHMENT

METER REPAIR AND/OR REPLACEMENT TARIFF – BMP 4.2 ..... *1*

A. INTRODUCTION AND LOCATION OF COMPANY

On March 7, 2014, EPCOR Arizona Water Company, Inc. ("EWAZ" or "Company") filed an application with the Arizona Corporation Commission ("ACC" or "Commission") for approval of a rate increase in (Docket No. WS-01303A-14-0010) for its Tubac Water District ("Tubac" or "District"). Tubac's current rates were approved in Commission Decision No. 71410, dated December 8, 2009.

The District water system, Public Water System ("PWS") No. 04-12-001, provides public utility water service to approximately 600 metered connections[1] in the town of Tubac, in Santa Cruz County. The location of the District and the area covered by its Certificate of Convenience and Necessity ("CC&N"), which covers approximately 4,222 acres (6.59 square miles), are shown in Figures 1 and 2, respectively. The original CC&N area was transferred from Arizona-American Water Company to EWAZ in Commission Decision No. 72668 dated November 17, 2011.

B. DESCRIPTION OF THE WATER SYSTEM[2]

The District water system was visited on June 5, 2014, by Staff member Michael Thompson. Mr. Thompson was accompanied by Ms. Phan Tsan (Staff Public Utilities Analysts), Ms. Sheryl Hubbard, CPA (EWAZ Director, Regulatory & Rates), Mr. Roland Tanner (EWAZ Manager, Rates & Regulation), Mr. John Lulewicz (EWAZ Operations Manager), Mr. Joe Cornejo (EWAZ Operations Manager), Mr. Paul Taylor (EWAZ Operations Supervisor), and Mr. Jesse Mailloux (EWAZ Operator). Mr. Jesse Mailloux is the District's lead certified operator of record.[3]

The District water system consists of three (3) active wells, one (1) inactive well, an Arsenic Removal Facility ("ARF"), two (2) booster pumps, one (1) storage tank, and two (2) emergency generators.

The distribution system consists of three (3) pressure zones. Well No. 3 pumps directly to Zone 1 and the Palo Parado Booster Pump Station located in Zone 3. Zone 3 is fed from the booster pump station and Well No. 3. Well No. 3 arsenic concentrations are well below the Environmental Protection Agency ("EPA") standard. Well Nos. 4 and 5 feed Zone 2 via the ARF.

Well No. 2 produced water containing arsenic concentrations above the EPA standard. The well is located a significant distance from the ARF. Based on a cost analysis study, it was determined to be cost prohibitive to install a transmission main from Well No. 2 to the ARF. Consequently, the well was disconnected from the District water system and is currently inactive. Well No. 2 is considered not used and useful to the District's provision of service.

---

[1] Metered connections are included in the water use data submitted with the application.

[2] The description of the water system is based on one, or a combination of, the following sources: 1) Company's Application, 2) Direct Testimony of Shawn Bradford, dated March 7, 2014, 3) Information contained in the Company's Response to Staff Data Requests and, 4) Information collected during Staff's site visit.

[3] Mr. Mailloux has certifications with the State of Arizona as a Grade 1 Wastewater Collection System Operator, Grade 4 Water Distribution System Operator, and a Grade 3 Water Treatment Plant Operator. ADEQ Operator Identification No. OP022882, expiration date November 30, 2016.

The ARF, located at Well Site No. 5, consists of two (2) 9-foot diameter Severn Trent Granular Iron Media ("GIM") arsenic removal vessels. Each vessel contains approximately 95.5 cubic feet ("ft^3") of gravel, and approximately 171.5 ft^3 of Bayoxide E-33 media[4]. The ARF began operating in December of 2009. The GIM vessels are capable of treating 500 gallons per minute ("GPM") of water from either Well No. 4 or Well No. 5. In other words, the ARF is capable of treating only one well at a time. However, the ARF is designed to blend water from Well No. 4 with treated water from Well No. 5. The vessels are operated in a lead/lag configuration, where one vessel operates in the lead position, while the other vessel is in the standby or lag position. Once the lead vessel media has expired the lag vessel then becomes the lead. Media in Vessel No. 1 was replaced in July of 2012, and media in Vessel No. 2 was replaced in July of 2013. Water from Well Nos. 4 and 5 contain arsenic levels of approximately 36 and 17 parts per billion ("PPB"), respectively. The targeted arsenic level discharged from the vessels to the distribution system is 8 ppb.

The water system consists of one (1) 50,000 gallon storage tank, which is located at the booster pump station in Zone 3. Zone 1 and 2 do not have storage tanks.

Emergency generators are located at both Well No. 4 and Well No. 5. Well No. 3 does not have an emergency generator.

The in-service plant facilities (i.e., wells, tanks, pumps, and visible pipe) within the District's water system service area appeared to be in proper working order, properly maintained, and in excellent condition. Staff did not observe any leaks at the plant facilities, or in the distribution system.

Detailed listings of the plant facilities are included in Table A. Schematics of the service area are illustrated in Figures 3A through ~~3F~~. 3C

Table A. Tubac Water System Plant Facilities Summary

Well Data – Active Wells							
Well ID	ADWR Well ID	Pump (hp)[1]	Pump Yield (gpm)[2]	Casing Depth (feet)	Casing Diameter (inches)	Meter Size (inches)	Year Drilled
(T) Well No. 3	55-604371	40	130 – 160	140	12	4	1965
(T) Well No. 4	55-505043	75	350	650	16	8	1983
(T) Well No. 5	55-632901	75	450 – 500	302	12	6	1977

(T) signifies Turbine Pump Well.
[1] hp signifies horsepower.
[2] gpm signifies gallons per minute.

[4] Bayoxide E-33 media is a granular iron media manufactured by Severn Trent.

Well Data – Inactive Well							
Well ID	ADWR Well ID	Pump (hp)[1]	Pump Yield (gpm)[2]	Casing Depth (feet)	Casing Diameter (inches)	Meter Size (inches)	Year Drilled
(T) Well No. 2	55-604370	25	180	204	12	3	1965

Water Treatment Facility				
Site	Media Vessels (Cubic Feet)	Pressure Tanks (Gallons)	Wells	Emergency Back-up Generator
Arsenic Removal Facility (ARF)	171.5 – Granular Iron 95.5 - Gravel	1 – 5,000	Well No. 5	Yes

Water Storage, Pressure Tanks, & Booster Pump Stations				
Site	Storage Tank (Gallons)	Pressure Tanks (Gallons)	Booster Pumps	Emergency Back-up Generator
Well Site No. 3	None	5,000	None	No
Well Site No. 4	None	5,400	None	Yes
Well Site No. 5 & ARF	None	5,000	None	Yes
Palo Parado Booster Pump Station	50,000	1 – 2,000 1 – 5,000	2 – 5hp	No

Service Area Distribution Mains		
Diameter (inches)	Material	Length (feet)
1	Various	427
2	Various	1,021
3	Various	5,083
4	Various	17,153
6	Various	68,450
8	Various	37,029
12	Various	4,041
Undetermined	Various	4,782
Total Length		**137,986**

Service Area Meters	
Size (inches)	Quantity
5/8 x 3/4	561
3/4	0
1	45
1 ½	2
2	14
3	6
Total Quantity	**628**

Fire Hydrants	
Size/Description	**Quantity**
Standard Wet Barrel	**91**

C. WATER USE

(1) Water Sold

Figure 4 represents the water consumption data, in graphical form, for the District's water system during the 12 month period for the test year, July 2012 through June 2013. The water consumption graph is located in the Figure Section of this report. Table B represents the high, low, and average water consumption for the District's water system.

Table B. Tubac Water District Water System Water Usage
Test Year July 2012 – June 2013

High & Low Water Consumption (Gallons/Day/Connection)	
Water Usage	**Sun City Water System**
High Usage Month	June - 2013
Highest Daily Average Usage	495
Low Usage Month	March – 2013
Lowest Daily Average Usage	226
Test Year Average Usage	350

(2) Non-Accounted For Water

Non-accounted for water should be 10 percent or less and never more than 15 percent. It is important to be able to reconcile the difference between water sold and the water produced by the source. A water balance will allow a water company to identify water and revenue losses due to leakage and any non-metered water use such as construction, firefighting, and line flushing. The water loss percentage within the District's water system during the test year (fiscal year) was calculated to be 9.88 percent. Water loss percentages for the District's water system from the District's 2011 through 2013 annual reports are listed in the Table C below.

Table C. Tubac Water District Water System Water Loss

Water Loss	
Tubac Water System	
2011 Water Loss (%)	9.99
2012 Water Loss (%)	11.70
2013 Water Loss (%)	8.18

(3) Water System Analysis

The District water system has three (3) active drinking water wells with a combined total production capacity of approximately 1,300 gpm (1,872,000 gallons per day ("GPD")). However, since the ARF is capable of treating water from only one well at a time, from Well No.4 or Well No. 5, the actual total production capacity is approximately 680 gpm (979,200 gpd). The water system has one (1) storage tank with a total storage capacity of approximately 50,000 gallons located in Zone 3. Zone 1 and 2 do not have storage tanks. During the peak month, June 2013, the water system was serving 602 connections when EWAZ reported 8,934,000 gallons of water sold. Average daily demand for the month of June 2013 was determined to be 297,800 gpd. Staff concludes that the water system does not have adequate storage capacity to serve the present customer base and any reasonable growth. Therefore, Staff recommends the District install a minimum of 100,000 gallons of storage capacity. Staff further recommends that the District file

with Docket Control, as a compliance item in this docket by December 31, 2015, a copy of the ADEQ Approval to Construct ("ATC") for the additional storage capacity.

D. GROWTH[5]

Table D and Figure 5 show the District's customer growth based on service connection data contained in the EWAZ Enterprise Customer Information System ("eCIS") data base. Accordingly, Table D and Figure 5 indicate that the District's growth from 2008 to 2009 was relatively flat. The District experienced a slight increase in growth, approximately 2.72 percent (a gain of 16 customers), from 2010 to 2013.

With respect to future growth, EWAZ is projecting a positive trend in growth from 2014 through 2019. The EWAZ growth projections, which are updated each year in April, are based on data obtained from the eCIS data base, local economists, and local developers. In general, EWAZ is projecting the District's growth to increase a total of 5.14 percent (projected gain of 31 customers) from 2014 through 2019.

Table D. Tubac Water District Actual and Projected Growth

Year	Number of Customers	
2008	588	eCIS
2009	587	eCIS
2010	589	eCIS
2011	589	eCIS
2012	591	eCIS
2013	603	eCIS
2014	609	Projected
2015	616	Projected
2016	621	Projected
2017	626	Projected
2018	630	Projected
2019	634	Projected

[5] Staff's historical growth figures are based on the data reported by EWAZ from its Enterprise Customer Information System ("eCIS") data base. Projected growth figures are based on EWAZ projections from its eCIS data base, local economists, and local developers.

E. ARIZONA DEPARTMENT OF ENVIRONMENTAL QUALITY ("ADEQ") COMPLIANCE

(1) Compliance Status

ADEQ Compliance Status Reports ("CSR") indicates that the Tubac Water System (PWS No. 04-12-001) is currently in full compliance with its requirements and is currently delivering water that meets water quality standards required by 40 CFR 141 (National Primary Drinking Water Regulations) and Arizona Administrative Code, Title 18, Chapter 4[6].

(2) Water Monitoring and Testing Expenses

The District reported water testing expenses of $2,041 during the test year. In addition to Total Coliform, Lead & Copper, Disinfectant-By-Products, Arsenic, and Total Organic Carbon testing, the Tubac Water System is also subject to mandatory participation in the Monitoring Assistance Program ("MAP").[7] The monitoring and testing expenses that were reviewed, evaluated, and recalculated by Staff are represented in Table E. The total estimated annual water testing expense for the water system is $2,108. Staff recommends, for the District, an annual water testing expense of $2,108, as tabulated in Table E, be used for the purposes of this application.

Table E. Water Testing Costs – Tubac Water District (PWS No. 04-12-001)

Compliance Analysis Testing	Cost per Test	Quantity of Tests per Three Year Period	Cost per Three Year Period	Annual Costs
Total Coliform	$ 11	108	$ 1,188	$ 396
Lead & Copper	$ 30	10	$ 300	$ 100
Arsenic	$ 14	30	$ 420	$ 140
Disinfection By-Products (TTHM)[1]	$ 70	6	$ 420	$ 140
Disinfection By-Products (HAA5)[1]	$ 160	6	$ 960	$ 320
IOCs, Nitrate, Nitrite, SOCs, VOCs, Radiochemicals (RADs), & Asbestos	MAP	MAP	$ 5,337	$ 1,779
Process Analysis Testing	**Cost per Test**	**Quantity of Tests per Three Year Period**	**Cost Per Three Year Period**	**Annual Costs**
Arsenic (Wells)	$ 14	36	$ 504	$ 168
Arsenic (ARF Vessels)[2]	$ 14	72	$ 1,008	$ 336
Arsenic (EPDS)[3]	$ 14	24	$ 336	$ 112
Total Coliform (Wells)	$ 11	108	$ 1,188	$ 396
Total Annual Water Testing Costs			**$ 6,324**	**$ 2,108**

[1] TTHM is the initialism for Total Trihalomethanes and HAA5 is the initialism for Haloacetic Acids. [2] ARF is the acronym for Arsenic Removal Facility. [3] EPDS if the initialism for Entry Point Distribution System.

[6] ADEQ CSR dated August 6, 2014.
[7] The MAP is mandatory for water systems which serve less than 10,000 persons (approximately 3,300 service connections).

F. ARIZONA DEPARTMENT OF WATER RESOURCES ("ADWR") COMPLIANCE

The District's water system service area is located within the ADWR Santa Cruz Active Management Area ("AMA"). ADWR's Water Provider Compliance Reports, dated June 6, 2014, indicate that the District's Water System is currently in compliance with departmental requirements governing water providers and/or community water systems.

G. ARIZONA CORPORATION COMMISSION COMPLIANCE

A check of the Utilities Division Compliance Section database showed that there are no delinquent Commission compliance items for the District.[8]

H. DEPRECIATION RATES

EWAZ proposed only a few changes to the current District depreciation rates, which are shown in the District's Proposed Rates column in Table F. Staff recommends the depreciation rates listed under "Staff's Recommended Rates" in Table F be adopted.

Table F. Depreciation Rate Table – Tubac Water District

NARUC Account Numbers	EWAZ Account Numbers	Depreciable Plant	District Current Rates (%) Decision No. 71410	District Proposed Rates (%)	Staff's Typical Rates (%)	Staff Recommended Rates (%)
301	301000	**Organization**	0.00	0.00	0.00	0.00
302	302000	**Franchises**	0.00	0.00	0.00	0.00
303		**Land & Land Rights**				
	303200	Land & Land Rights – SS	0.00	0.00	0.00	0.00
	303300	Land & Land Rights – Pumping	0.00	0.00	0.00	0.00
	303400	Land & Land Rights – Treatment	0.00	0.00	0.00	0.00
	303500	Land & Land Rights – T&D	0.00	0.00	0.00	0.00
	303600	Land & Land Rights – AG	0.00	0.00	0.00	0.00
304		**Structures & Improvements**				
	304100	Structure & Improvement – Source of Supply	2.21	2.50	3.33	2.50
	304200	Structure & Improvement – Pumping	2.21	2.00	3.33	2.00
	304300	Structure & Improvement – Water Treatment Equipment	2.21	2.00	3.33	2.00
	304400	Structure & Improvement – T & D	2.21	2.00	3.33	2.00
	304500	Structure & Improvement – General Plant	0.00	2.50	3.33	2.50
	304600	Structure & Improvement – Offices	2.21	2.50	3.33	2.50
	304620	Structure & Improvement – Leasehold	0.00	2.50	3.33	2.50
	304700	Structure & Improvement – Store, Shop & Garage	0.00	2.00	3.33	2.00
	304800	Structure & Improvement – Miscellaneous	0.00	0.00	3.33	0.00
305	305000	**Collection & Impounding Reservoirs – Source & Pumping**	0.00	0.00	2.50	0.00
306	306000	**Lake & River Intakes**	0.00	0.00	2.50	0.00
307	307000	**Wells & Springs – Source & Pumping**	3.08	2.50	3.33	2.50
308	308000	**Infiltration Galleries – Source & Pumping**	0.00	0.00	6.67	0.00

[8] Per Compliance Section email, dated August 8, 2014.

309	309000	**Supply Mains – Source & Pumping**	0.00	0.00	2.00	0.00
310		**Power Generation Equipment – S & P**				
	310000	Power Production Equipment	0.00	3.33	5.00	3.33
	310100	Power Generation Equipment - Other	4.24	0.00	5.00	0.00
311		**Pumping Equipment**				
	311000	Pump Equipment – Steam	0.00	0.00	12.5	0.00
	311200	Pump Equipment – Electric	4.24	4.00	12.5	4.00
	311300	Pump Equipment – Diesel	4.24	4.00	12.5	4.00
	311400	Pump Equipment – Hydraulic	0.00	0.00	12.5	0.00
	311500	Pump Equipment – Other	4.24	4.00	12.5	4.00
	311530	Pump Equipment – Water Treatment	0.00	0.00	12.5	0.00
	311540	Pump Equipment – Transmission & Distribution	0.00	0.00	12.5	0.00
	311600	Pump Equipment – Source & Pumping	0.00	0.00	12.5	0.00
320		**Water Treatment Equipment**				
	320000	Water Treatment Equipment – Purification Equip.	0.00	0.00	3.33	0.00
320.1	320100	Water Treatment Equipment – Non-Media	7.06	5.00	3.33	5.00
	320200	Water Treatment Equipment – Filter Media	5.00	10.00	20.00	10.00
	320300	Water Treatment Equipment – Sludge Disposal Equipment (Arsenic Removal)	5.00	0.00	10.00	0.00
330		**Distribution Reservoirs & Standpipes**				
	330000	Distribution Reservoirs & Standpipes	1.62	1.54	2.22	1.54
330.1	330100	Elevated Tanks & Standpipes	2.22	0.00	2.22	0.00
	330200	Ground Level Tanks	5.00	0.00	2.22	0.00
330.2	330300	Below Ground Tanks	0.00	0.00	2.22	0.00
	330400	Clearwell	0.00	0.00	2.22	0.00
331		**Transmission and Distribution**				
	331000	TD Mains – Water Treatment Equipment	0.00	0.00	2.00	0.00
	331001	TD Mains – Not Classified by Size	1.97	2.00	2.00	2.00
	331100	TD mains – 4-inch & less	1.97	1.43	2.00	1.43
	331200	TD mains – 6-inch to 8-inch	1.97	1.43	2.00	1.43
	331300	TD mains – 10-inch to 16-inch	2.34	1.43	2.00	1.43
	331400	TD Mains – 18-inch and Greater	0.00	0.00	2.00	0.00
332	332000	**Fire mains**	0.00	0.00		0.00
333		**Services**				
	333000	Services	2.45	2.50	3.33	2.50
	333100	Services – Water Treatment Equipment	0.00	0.00	3.33	0.00
334		**Meters**				
	334100	Meters	2.42	8.33	8.33	8.33
	334200	Meter installations	2.42	2.50	8.33	2.50
	334300	Meter Vaults	0.00	0.00	8.33	0.00
335	335000	**Hydrants**	1.97	2.00	2.00	2.00
336	336000	**Backflow Prevention Devices**	6.67	0.00	6.67	6.67
339		**Other Plant & Miscellaneous Equipment**				
	339000	Other Plant/Miscellaneous Equipment – TD Plant	0.00	0.00	6.67	0.00
	339100	Other Plant/Miscellaneous Equipment - Intangible	0.00	0.00	6.67	0.00
	339200	Other Plant/Miscellaneous Equipment - Supply	0.00	0.00	6.67	0.00
	339500	Other Plant/Miscellaneous Equipment – T & D	0.00	0.00	6.67	0.00
	339600	Other Plant/Miscellaneous Equipment – CPS	0.00	3.33	6.67	3.33
340		**Office Furniture & Equipment**				
	340000	Office Furniture & Equipment – General Plant	0.00	0.00	6.67	0.00
	340100	Office Furniture & Equipment	3.28	4.50	6.67	4.50
	340200	Computer & Peripheral Equipment	10.00	10.00	20.00	10.00
	340300	Computer Software	25.00	20.00	20.00	20.00
	340310	Computer Software – Mainframe	0.00	0.00	20.00	0.00
	340325	Computer Software – Customized	0.00	0.00	20.00	0.00
	340330	Computer Software – Other	0.00	0.00	20.00	0.00
	340400	Date Handling Equipment – General Plant	0.00	0.00	20.00	0.00
	340500	Office Equipment – Other	0.00	0.00	6.67	0.00

341		**Transportation Equipment**				
	341000	Transportation Equipment – General Plant	0.00	0.00	20.00	0.00
	341100	Transportation Equipment – Light Duty Trucks	20.00	20.00	20.00	20.00
	341200	Transportation Equipment – Heavy Duty Trucks	15.00	0.00	20.00	0.00
	341300	Transportation Equipment – Autos	0.00	0.00	20.00	0.00
	341400	Transportation Equipment – Other	16.67	0.00	20.00	0.00
342	342000	**Stores Equipment**	3.59	0.00	4.00	0.00
343	343000	**Tools, Shop & Garage Equipment**	3.59	4.00	5.00	4.00
344	344000	**Laboratory Equipment**	0.00	4.00	10.00	4.00
345	345000	**Power Operated Equipment**	4.64	0.00	5.00	0.00
346		**Communication Equipment**				
	346000	Communication Equipment – General Plant	0.00	0.00	10.00	0.00
	346100	Communication Equipment – Non-Telephone	5.03	10.00	10.00	10.00
	346190	Remote Control & Instrument	0.00	10.00	10.00	10.00
	346200	Communication Equipment – Telephone	0.00	10.00	10.00	10.00
	346300	Communication Equipment – Other	4.93	10.00	10.00	10.00
347	347000	**Miscellaneous Equipment**	0.00	6.25	10.00	6.25

I. OTHER ISSUES

(1) Service Line and Meter Installation Charges

EWAZ did not propose any changes to the District's existing service line and meter installation charges.[9] The proposed charges are refundable advances, and are similar to the Staff's typical range of charges for service line and meter installations. Since the District may at times install meters on existing service lines, it would be appropriate for some customers to only be charged for the meter installation.

Staff has no objections to the continued use of the currently authorized meter and service installation charges, as proposed by EWAZ, and recommends the charges listed under "Staff's Recommendations" in Table G be adopted.

[9] The Company's current charges were approved in Decision No. 73145, effective May 1, 2012.

Table G. Service Line and Meter Installation Charges – Tubac Water District

	Company Current/Proposed			Staff's Recommendations		
Meter Size	Service Line Charge	Meter Charge	Total Charge	Service Line Charge	Meter Charge	Total Charge
5/8 x 3/4-inch	$445	$155	$600	$445	$155	$600
3/4-inch	$445	$255	$700	$445	$255	$700
1-inch	$495	$315	$810	$445	$315	$810
1-1/2-inch	$550	$525	$1,075	$550	$525	$1,075
2-inch Turbine	$830	$1,045	$1,875	$830	$1,045	$1,875
2-inch Compound	$830	$1,890	2,720	$830	$1,890	$2,720
3-inch Turbine	ICB*	ICB*	ICB*	ICB*	ICB*	ICB*
3-inch Compound	ICB*	ICB*	ICB*	ICB*	ICB*	ICB*
4-inch Turbine	ICB*	ICB*	ICB*	ICB*	ICB*	ICB*
4-inch Compound	ICB*	ICB*	ICB*	ICB*	ICB*	ICB*
6-inch Turbine	ICB*	ICB*	ICB*	ICB*	ICB*	ICB*
6-inch Compound	ICB*	ICB*	ICB*	ICB*	ICB*	ICB*
8-inch or Larger	ICB*	ICB*	ICB*	ICB*	ICB*	ICB*

ICB* Indicates Individual Case Basis at Actual Cost.

(2) Curtailment Tariff

The District has an approved Curtailment Tariff on file with the Commission. This tariff became effective October 24, 2007.

(3) Cross-Connection/Backflow Prevention Tariff

The District has an approved Cross-Connection/Backflow Prevention Tariff on file with the Commission. This tariff became effective June 16, 2013.

(4) Best Management Practices ("BMP") Tariff

The District has ten (10) BMP's on file with the Commission. The BMP tariff became effective January 20, 2012.

EWAZ filed a proposed change to the Meter Repair and/or Replacement Tariff (BMP 4.2). In the proposed change, EWAZ requested that paragraph 3 of the BMP tariff, which refers to the inspection of meters, be modified such that pulling a meter for inspection would no longer be required and therefore be stricken from the tariff. Staff concludes that the request to modify BMP 4.2 is appropriate and relevant. Staff recommends approval of the modification in BMP 4.2, attached hereto as Attachment 1.

(5) Tubac Water District Post Test Year Plant Additions – Post-Test Year Investment Projects ("IPs") Used and Useful (July ~~2103~~ 2013 – June 30, 2014)

EWAZ has not requested any District Post-Test Year Capital Investment Projects ("IPs") be included as Post-Test Year Plant Additions.

(6) Arsenic Removal Facility Vessel Media Cost Recovery

EWAZ is requesting recovery of costs associated with deferred and on-going media replacement costs in ARF Vessels No. 1 and No. 2. Media was replaced in Vessel No. 1 in July 2012 at a cost of $55,412, and replaced in Vessel No. 2 in July of 2013 at a cost of $46,300. Total media replacement costs for the two vessels amounted to $101,712. Staff concludes these costs are appropriate and reasonable.

FIGURES

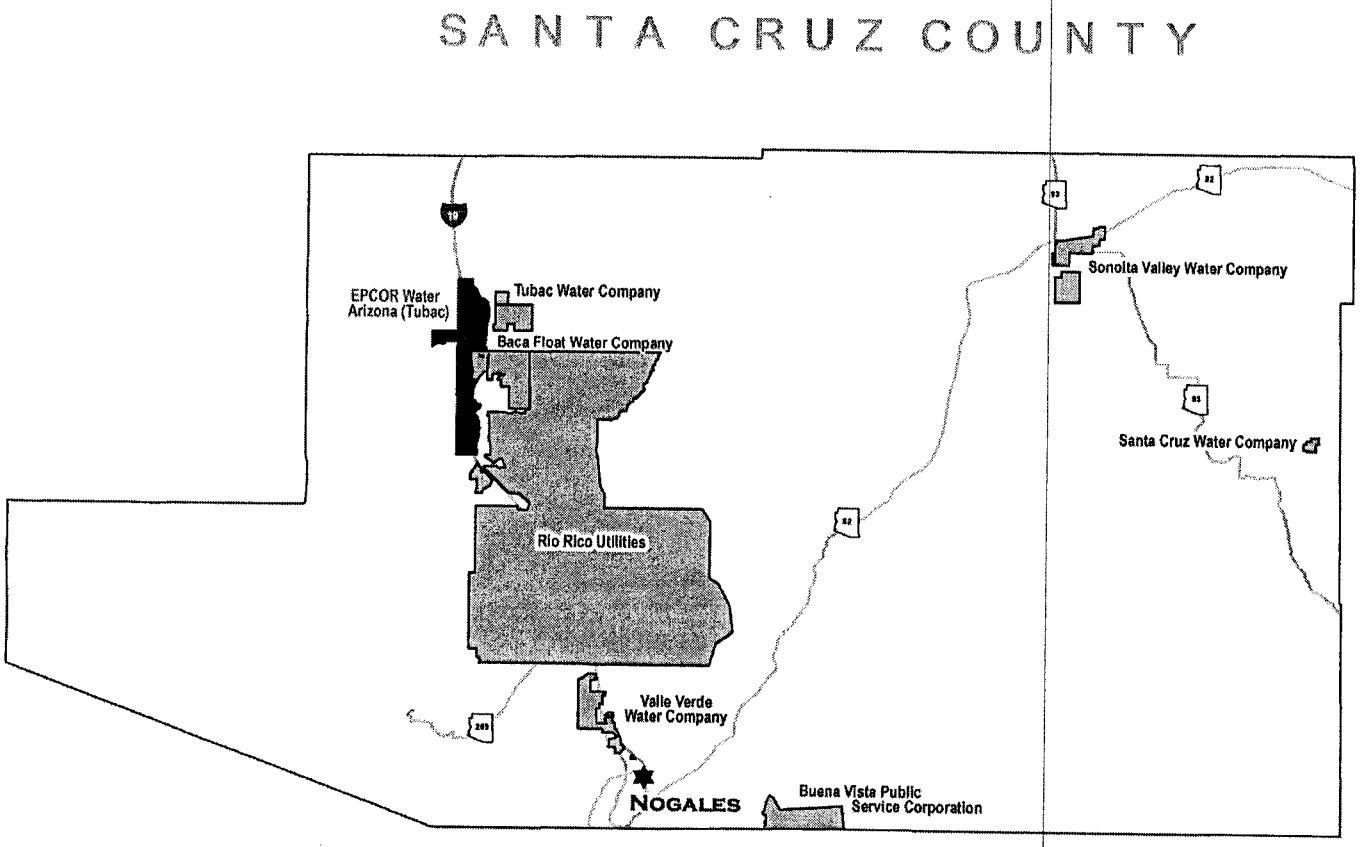

FIGURE 1 – SANTA CRUZ COUNTY MAP

EPCOR Water Arizona, Inc. (Tubac)

Santa Cruz County

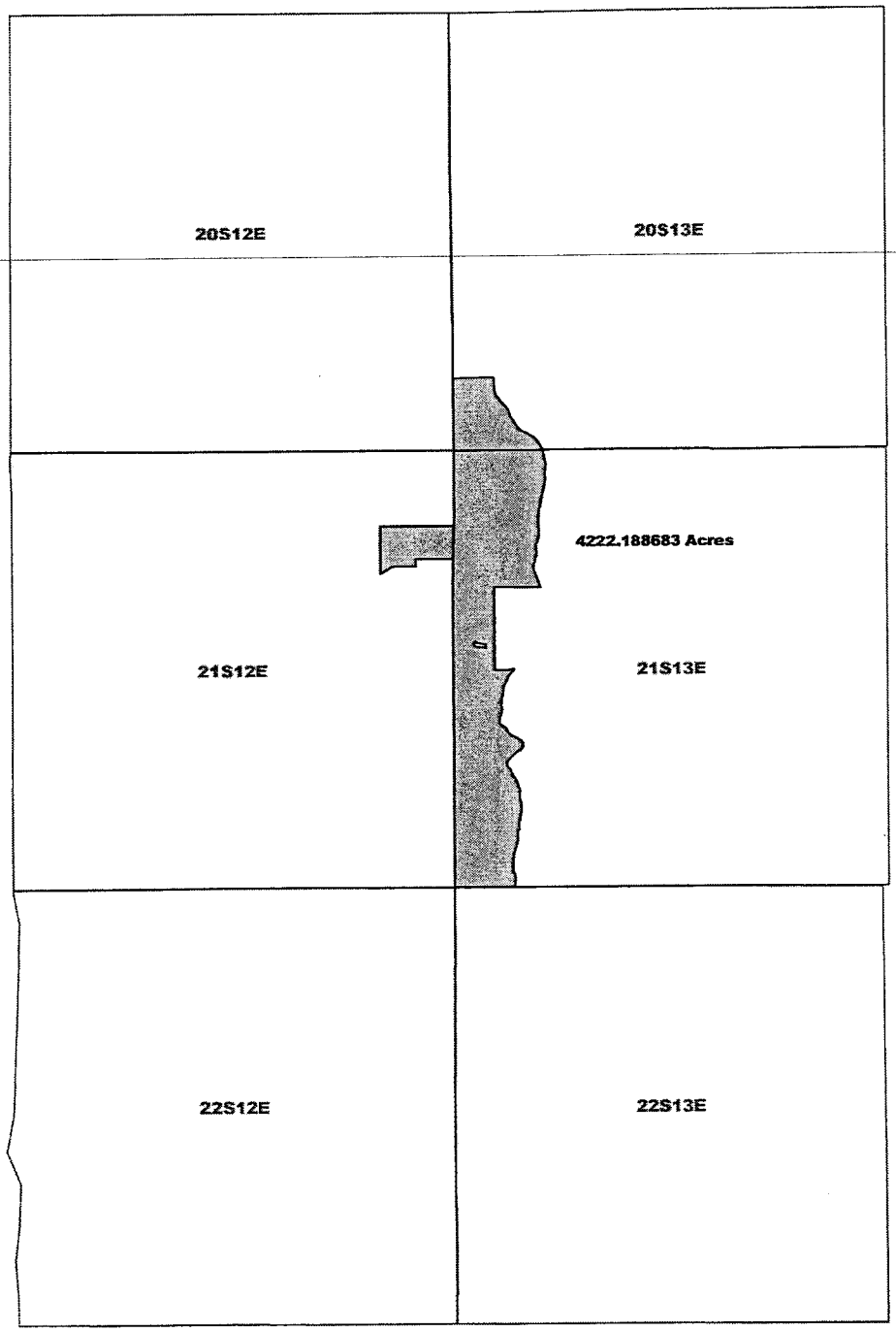

FIGURE 2 – CERTIFICATED AREA

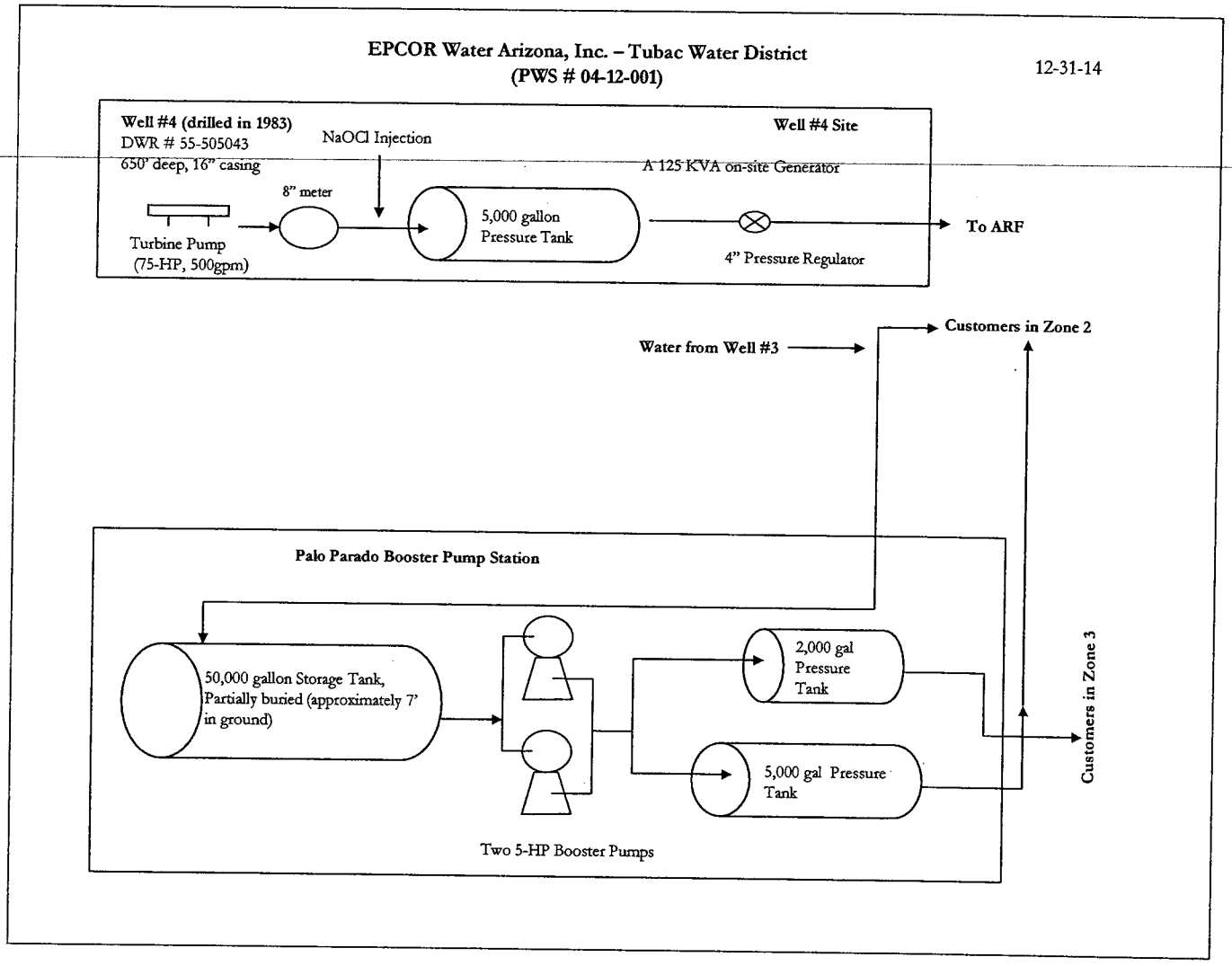

FIGURE 3A

TUBAC WATER DISTRICT – TUBAC WATER SYSTEM (PWS No. 04-12-001)

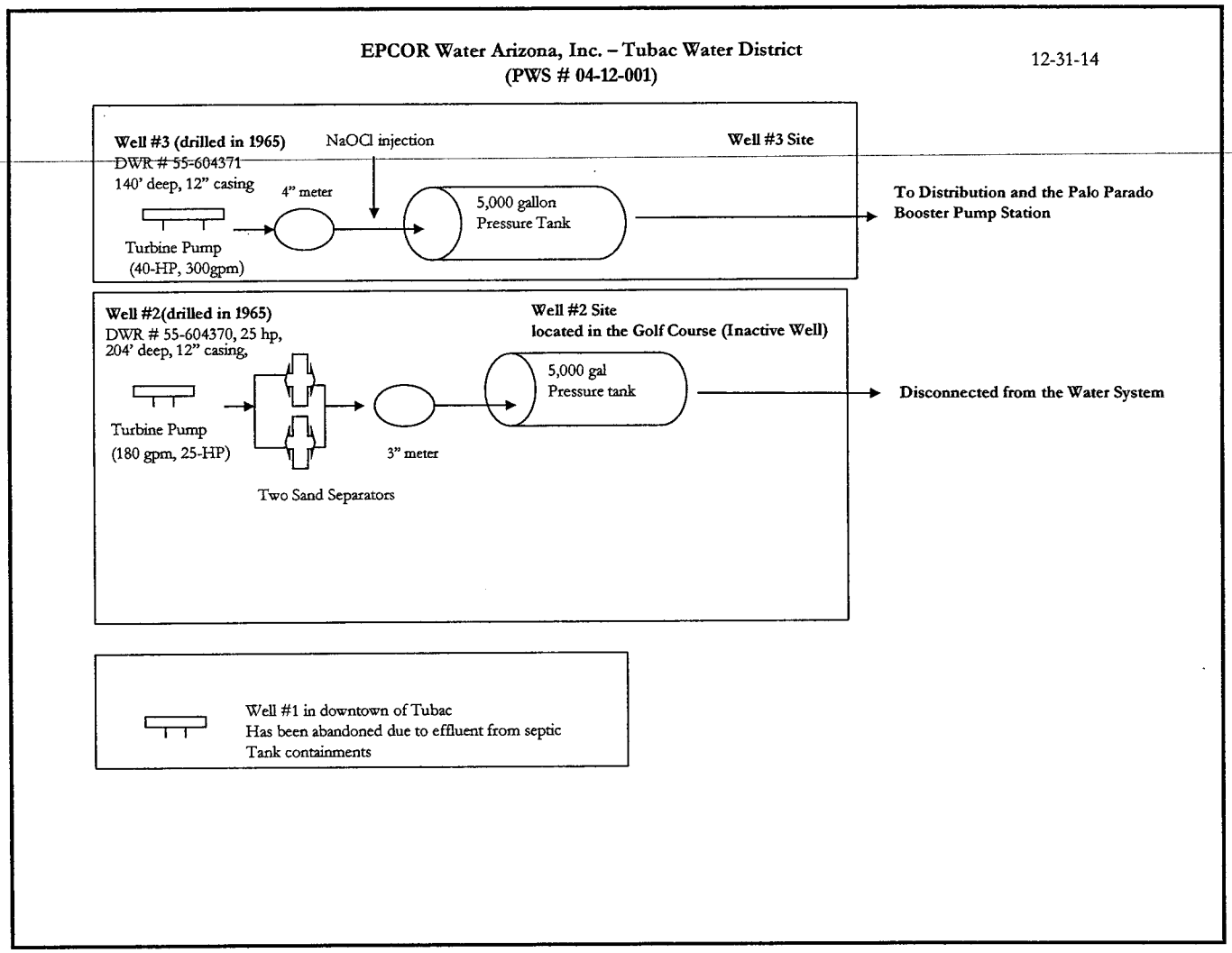

FIGURE 3B

TUBAC WATER DISTRICT – TUBAC WATER SYSTEM (PWS No. 04-12-001)

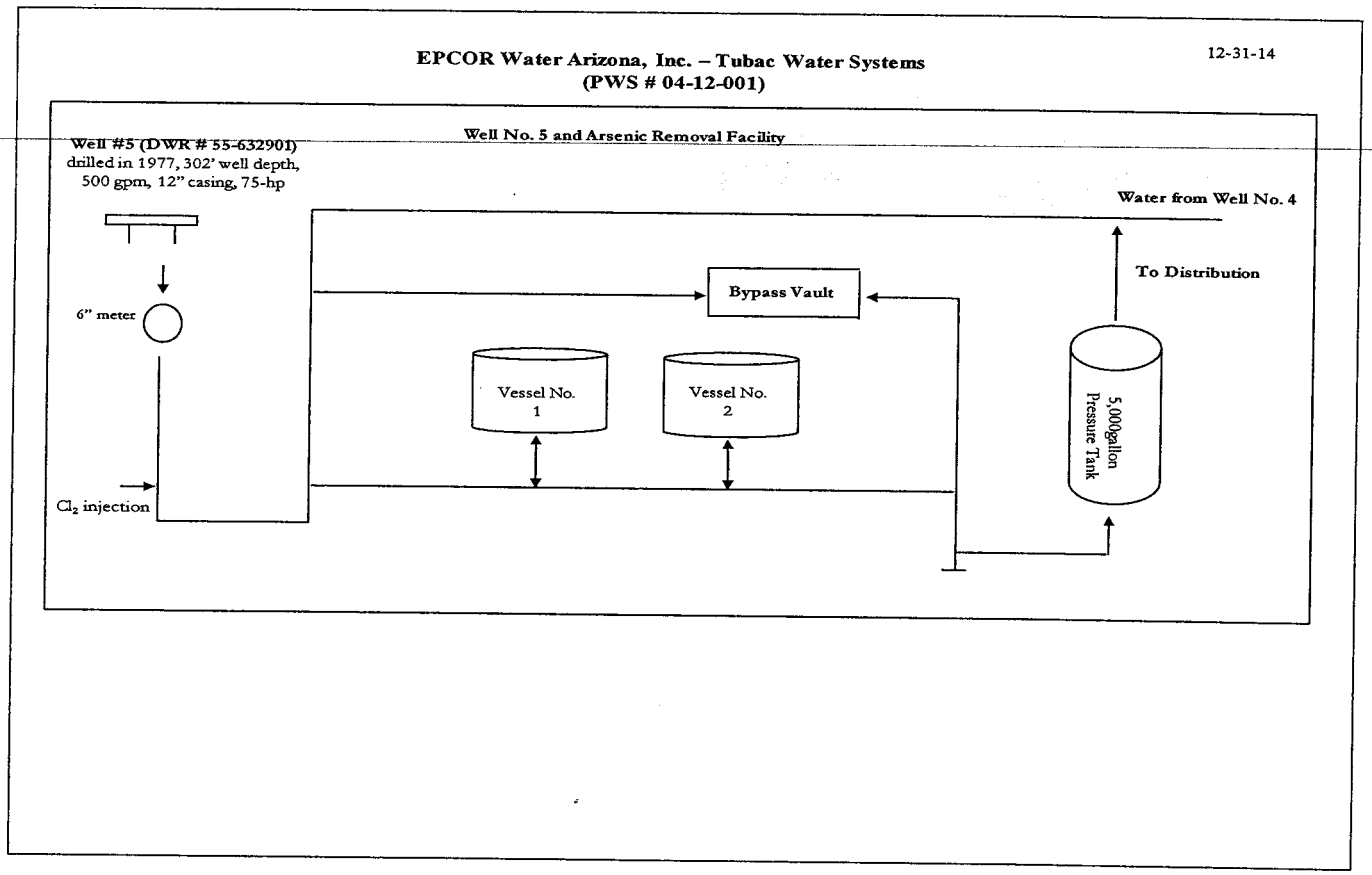

FIGURE 3C

TUBAC WATER DISTRICT – TUBAC WATER SYSTEM (PWS No. 04-12-001)

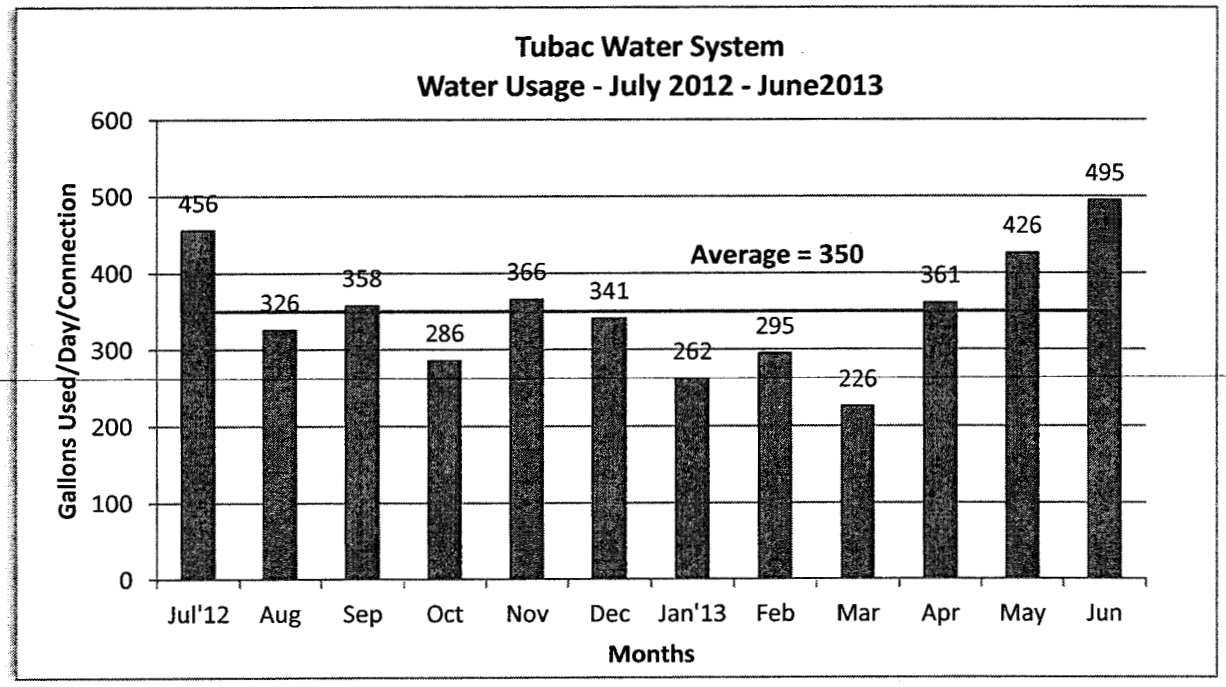

FIGURE 4 – TUBAC WATER SYSTEM WATER CONSUMPTION

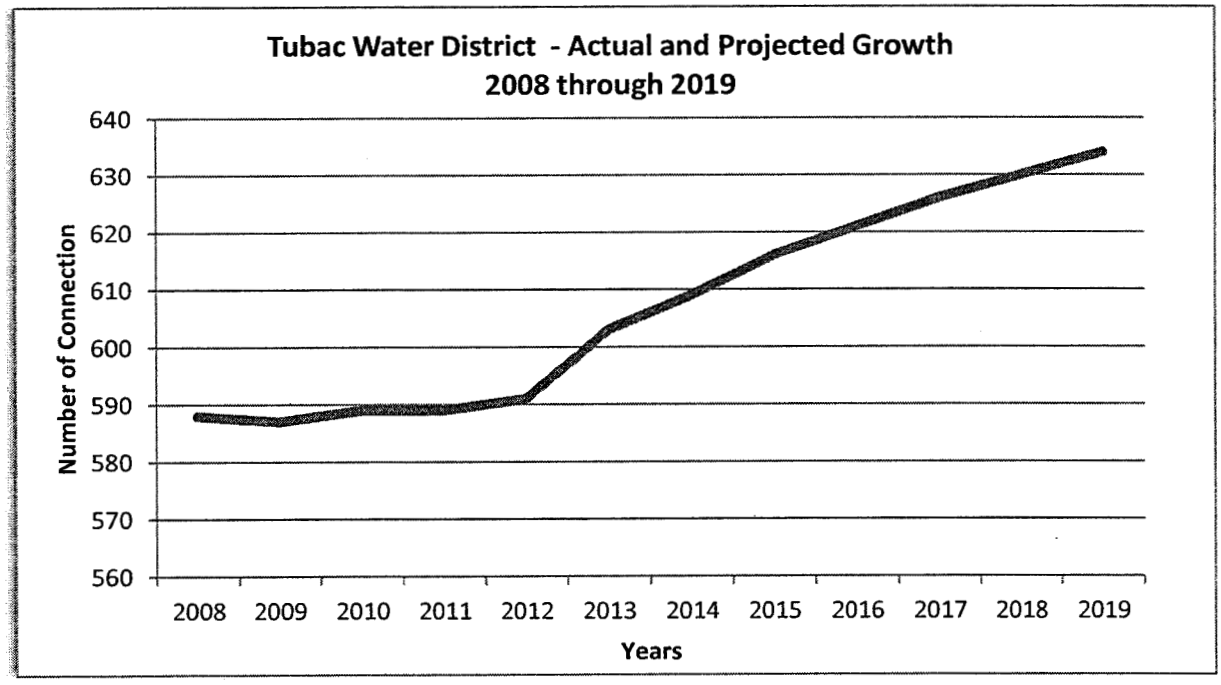

FIGURE 5 – SUN CITY WATER DISTRICT ACTUAL & PROJECTED GROWTH

ATTACHMENT

ATTACHMENT 1

Meter Repair and/or Replacement Tariff – BMP 4.2

PURPOSE

A program for the Company to systematically assess all in-service water meters (including Company production meters) in its water service area to identify under-registering meters for repair or replacement (Modified Non-Per Capita Conservation Program Best Management Practice Category 4: Physical System Evaluation and Improvement 4.2 Meter Repair and/or Replacement Program).

REQUIREMENTS

The requirements of this tariff are governed by Rules of the Arizona Corporation Commission and were adapted from the Arizona Department of Water Resources' Required Public Education Program and Best Management Practices in the Modified Non-Per Capita Conservation Program.

1. On a systematic basis, the Company will inspect 100 percent of its 1-inch and smaller in-service water meters at least once every ten years for one of the following reasons (whichever occurs first):
    a. A meter reading complaint is filed with the Company by a customer or Arizona Corporation Commission Staff,
    b. A meter has registered 1,000,000 gallons of usage,
    c. A meter has been in service for ten years.

2. Meters larger than 1-inch shall be inspected for one of the following reasons:
    a. A meter reading complaint is filed with the Company by a customer or Arizona Corporation Commission Staff,
    b. A meter has been in service for five years.

3. The inspection will be accomplished by having a Company Technician physically inspect each meter and its fittings for leaks, registers which may have become loose or are not properly attached to the meter and could be under-registering or other broken parts which need repair. In addition, meters shall be randomly selected for flow testing to identify potentially under-registering meters.

4. The Company shall also replace or reprogram any water meters that do not register in gallons. Upon the effective date of this tariff, the Company shall install all replacement meters with new:
    a. 1-inch and smaller meters that register in 1 gallon increments,
    b. 1-1/2-inch through 4-inch meters that register in 10 gallon increments, and
    c. 6-inch and larger meters that register in 100 gallon increments.

5. The Company shall keep records of all inspected and replacement meters and make this information available to the Commission upon request.

EXHIBIT MST-5

ENGINEERING REPORT FOR EPCOR WATER ARIZONA, INC.,

MOHAVE WASTEWATER DISTRICT

BY MICHAEL THOMPSON

JANUARY 20, 2015

ENGINEERING REPORT FOR
EPCOR Water Arizona, Inc.
Mohave Wastewater District

Docket No. WS-01303A-14-0010 (Rates)

By Michael Thompson, P. E.

January 5, 2015

EXECUTIVE SUMMARY

CONCLUSIONS

1. The Arizona Corporation Commission ("ACC" or "Commission") Utilities Division Staff ("Utilities Staff" or "Staff") concludes that the Mohave Wastewater District ("Mohave Wastewater" or "District") wastewater systems have adequate capacity to serve the present customer base and any reasonable growth.

2. According to the Arizona Department of Environmental Quality ("ADEQ") Compliance Status Reports ("CSRs"), dated August 5, 2014, ADEQ has determined that the District's Wastewater Treatment Plants ("WWTP") are currently in compliance.

3. According to the Commissions Utilities Division Compliance Section database the District currently has no delinquent Commission compliance items.

4. EPCOR Water Arizona, Inc. ("EWAZ") has not requested any District Post-Test Year Capital Investment Projects ("IPs") be included as Post Test Year Plant Additions.

RECOMMENDATIONS

1. Staff recommends an annual wastewater testing expense, for the District, of $11,889 be used for the purposes of this application.

2. Staff recommends the depreciation rates listed under "Staff's Recommended Rates" in Table G be adopted.

TABLE OF CONTENTS

PAGE

A. INTRODUCTION AND LOCATION OF COMPANY 4

B. DESCRIPTION OF THE WASTEWATER SYSTEMS 4

(1) *ARIZONA GATEWAY WASTEWATER SYSTEM* 4
(2) *WISHING WELL WASTEWATER SYSTEM* 5

C. WASTEWATER USE 7

(1) *ARIZONA GATEWAY WASTEWATER FLOWS* 7
(2) *WISHING WELL WASTEWATER FLOWS* 7

D. GROWTH 8

E. ARIZONA DEPARTMENT OF ENVIRONMENTAL QUALITY ("ADEQ") COMPLIANCE 8

(1) *ARIZONA GATEWAY COMPLIANCE STATUS* 8
(2) *WISHING WELL COMPLIANCE STATUS* 9
(3) *WASTEWATER MONITORING AND TESTING EXPENSES* 9

F. ARIZONA CORPORATION COMMISSION COMPLIANCE 12

G. DEPRECIATION RATES 12

H. OTHER ISSUES 14

(1) *MOHAVE WASTEWATER DISTRICT POST TEST YEAR PLANT ADDITIONS – POST TEST YEAR INVESTMENT PROJECTS ("IPS") USED AND USEFUL (JULY ~~2103~~ 2013 – JUNE 30, 2014)* 14

FIGURES

PAGE

FIGURE 1 MOHAVE COUNTY MAP 15

FIGURE 2 MOHAVE WASTEWATER DISTRICT CERTIFIED AREA 16

FIGURES 3A - 3E MOHAVE WASTEWATER DISTRICT SYSTEM SCHEMATIC DIAGRAMS 17-19

FIGURE 3A. Arizona Gateway Wastewater Treatment Plant Site 17
FIGURE 3B. Wishing Well Wastewater Treatment Plant Site 19

FIGURE 4A ARIZONA GATEWAY WASTEWATER FLOW GRAPH 20

FIGURE 4B WISHING WELL WASTEWATER FLOW GRAPH 20

FIGURE 5 MOHAVE WATER DISTRICT ACTUAL & PROJECTED GROWTH GRAPH 21

A. INTRODUCTION AND LOCATION OF COMPANY

On March 7, 2014, EPCOR Arizona Water Company, Inc. ("EWAZ" or "Company") filed an application with the Arizona Corporation Commission ("ACC" or "Commission") for approval of a rate increase in (Docket No. WS-01303A-14-0010) for its Mohave Wastewater District ("Mohave Wastewater" or "District"). Mohave Wastewater's current rates were approved in Commission Decision No. 71410, dated December 8, 2009.

The District provides public utility wastewater service to two (2) separate areas, the Arizona Gateway and Fort Mohave service areas. The Arizona Gateway service area, covering approximately 179 acres (0.28 square miles), is located approximately 12 miles north of Lake Havasu City at the intersection of Highway 95 and Interstate 40. The Fort Mohave service area, covering approximately 2,363 acres (3.69 square miles), is located approximately 10 miles south of Bullhead City. The District serves approximately 1,425 connections[1] in its Certificate of Convenience and Necessity ("CC&N") service areas. The location of the District's two (2) wastewater systems and the area covered by its CC&N are shown in Figures 1 and 2, respectively. The original CC&N area was transferred from Arizona-American Water Company to EWAZ in Commission Decision No. 72668 dated November 17, 2011.

B. DESCRIPTION OF THE WASTEWATER SYSTEMS[2]

The District owns and operates two (2) wastewater treatment plants ("WWTP"). The Fort Mohave service area is served by the Wishing Well WWTP, and the Arizona Gateway service area is served by the Arizona Gateway WWTP. Both facilities were visited on June 24, 2014, by Staff member Michael Thompson. Mr. Thompson was accompanied by Teresa Hunsaker (Staff Public Utilities Analyst III), Mr. Jeffrey Stuck (EWAZ Director of Operation, Eastern Division), Mr. Roland Tanner (EWAZ Manager, Rates & Regulation), and Mr. David Evans (EWAZ Operations Manager, Mohave Water District). Mr. Evans is responsible for the day-to-day operations of the District, and is also the lead certified operator of record.[3] Mr. Evans currently supervises twenty one (21) employees, which includes customer service and field operations.

(1) Arizona Gateway Wastewater System

The Arizona Gateway WWTP is a 112,000 gallon per day ("GPD") extended aeration plant, manufactured by Santec Corporation, that serves a collection system for an undeveloped subdivision (currently no homes/residents) and a commercial development block which includes a truck stop, fast food chains, gas station, and storage facility. The underground-treatment plant consists of a flow equalization basin, aeration reactors, a clarifier, a sludge holding tank, and a chlorine contact

---

[1] Per water use data submitted with the application.

[2] The description of the water systems is based on one, or a combination of, the following sources: 1) Company's Application, 2) Direct Testimony of Jeff Stuck, dated March 7, 2014, 3) Information contained in the Company's Response to Staff Data Requests and, 4) Information collected during Staff's site visit. Check other footnotes should all be the same.

[3] Mr. Evans is certified with the Arizona Department of Environmental Quality ("ADEQ") as a Grade 4 Water Distribution System Operator, a Grade 4 Treatment Plant Operator, a Grade 4 Wastewater Treatment Plant Operator, and a Grade 4 Wastewater Collection System Operator. ADEQ Operator Identification No. OP000655, expiration date April 30, 2017.

chamber. Treated effluent is disposed of into a two (2) cell unlined evaporation pond located within the treatment plant site. Currently, the WWTP is serving only 8 connections which include the truck stop, fast food chains, gas stations, and storage facility.

The in-service plant facilities (i.e., tanks, pumps, and visible pipe) appeared to be in proper working order, properly maintained, and in excellent condition. Staff did not observe any leaks at the plant facilities, or in the collection system.

Detailed listings of the plant facilities are included in Table A. A schematic of the wastewater treatment plant is illustrated in Figure 3A.

Table A. Arizona Gateway Wastewater System Plant Facilities Summary

Lift Station				
Location	Quantity of Pumps	Pump Horsepower (hp)	Pump Capacity (gpm)[1]	Wet Well Capacity (gpm)
WWTP	1	1.4	70	N/A

[1] gpm signifies gallons per minute

Collection Mains		
Diameter	Material	Length (feet)
8-inch	Various	2,019
15-inch	Various	150
	Total	**2,169**

Service Laterals		
Diameter	Material	Length (feet)
6-inch	PVC	16

Manholes	
Type	Quantity
Standard	37

(2) Wishing Well Wastewater System

The Fort Mohave area is served by the Wishing Well WWTP. The WWTP is a 400,000 gpd extended aeration treatment plant.[1] The treatment process consists of the headworks which includes a grit basin and fine screen, Parshall flume meter, aeration and anoxic basins with nitrification and denitrification capacity, clarifiers, multi-media filters, sludge digester and sludge press (dewatering unit), and a chlorine contact basin.

The WWTP was originally designed to treat an influent capacity of 250,000 gpd and produce Class B quality treated effluent. In 2008, the plant capacity was increased to 500,000 gpd to accommodate increased flow received from the service area due to increased growth. The treated effluent from the WWTP was delivered to the Desert Lakes Golf Course for irrigation of the golf course.

In June of 2012, Desert Lakes Golf Course notified and cancelled its effluent agreement with the District. This prompted the District to identify other potential customers to purchase the WWTP effluent. Buena Vista Homeowners Association ("BVHA") representing a tract of homes that surrounds a manmade lake known as Lakes at Los Lagos, and adjacent to the WWTP, agreed to utilize the WWTP effluent for the lakes. However, in order for BVHA to switch from groundwater, effluent from the WWTP had to be upgraded from Class B quality to Class A+ quality. In order to produce Class A+ quality effluent, operational modifications were made to the WWTP. Additionally, a 6-inch force main was constructed to deliver the effluent from the WWTP to the lakes. The operational modifications resulted in a reduction of the WWTP capacity from 500,000 gpd to 400,000 gpd. The operational capacity and treatment capability (A+ effluent requirements) are reflected in the WWTP's Arizona Department of Environmental Quality ("ADEQ") Aquifer Protection Permit ("APP") No. 102181.

The in-service plant facilities (i.e., tanks, pumps, and visible pipe) appeared to be in proper working order, properly maintained, and in excellent condition. Staff did not observe any leaks at the plant facilities, or in the collection system.

Detailed listings of the plant facilities are included in Table B. A schematic of the wastewater treatment plant is illustrated in Figure 3B.

Table B. Wishing Well Wastewater System Plant Facilities Summary

Lift Stations				
Location	Quantity of Pumps	Pump Horsepower (hp)	Pump Capacity (gpm)	Wet Well Capacity (gpm)
Mountain View Drive	2	7.5	114	2,100
Lago Cove	2	3	17	1,000
Greens @ Los Lagos	2	15	326	4,650

Collection Mains		
Diameter	Material	Length (feet)
6-inch	Various	6,458
8-inch	Various	118,325
10-inch	Various	1,712
15-inch	Various	6,075
	Total	**132,570**

Force Mains		
Diameter	Material	Length (feet)
4-inch	PVC	3,210
6-inch	PVC	8,157
	Total	**11,367**

Service Laterals		
Diameter	Material	Length (feet)
4-inch	PVC	1,511
8-inch	PVC	2

Manholes	
Type	Quantity
Standard	501

Cleanouts	
Type	Quantity
N/A	24

C. WASTEWATER USE[4]

(1) Arizona Gateway Wastewater Flows

Figure 4A represents the wastewater flow data, in graphical form, for wastewater flow to the Arizona Gateway WWTP during the 12 month period for the test year, July 2012 through June 2013. Customer wastewater flow included a high monthly flow of 1,024 gpd per connection (8 connections) in May 2013, and a low flow of 867 gpd per connection (8 connections) in December 2012. The average daily wastewater flow during the twelve-month period was approximately 951 gpd per connection. The District reported 2,777,000 gallons of wastewater discharged to the treatment plant during the test year.

(2) Wishing Well Wastewater Flows

Figure 4B represents the wastewater flow data, in graphical form, for wastewater flow to the Wishing Well WWTP during the 12 month period for the test year, July 2012 through June 2013. Customer wastewater flow included a high monthly flow of 160 gpd per connection (1,455 connections) in February 2013, and a low flow of 133 gpd per connection (1,417 connections) in June 2013. The average daily wastewater flow during the twelve-month period was approximately 151 gpd per connection. The District reported 78,344,000 gallons of wastewater discharged to the treatment plant during the test year.

[4] Wastewater flows during the test year are based on the monthly data from the wastewater treatment plant meter reads as submitted in the EWAZ Rate Application.

D. GROWTH[5]

Table C and Figure 5 show the District's customer growth based on service connection data contained in the EWAZ Enterprise Customer Information System ("eCIS") data base. Accordingly, Table C and Figure 5 indicate that the District experienced positive growth from 2008 through 2013, with a net gain of 181 customers (14.3 percent increase).

With respect to future growth, EWAZ is projecting a positive trend in growth from 2014 through 2019. The EWAZ growth projections, which are updated each year in April, are based on data obtained from the eCIS data base, local economists, and local developers. In general, EWAZ is projecting the District's growth to increase a total of 5.25 percent (projected gain of 76 customers) from 2013 through 2019.

Table C. Mohave Water District Actual and Projected Growth

Year	Number of Customers	
2008	1,266	eCIS
2009	1,340	eCIS
2010	1,387	eCIS
2011	1,403	eCIS
2012	1,447	eCIS
2013	1,447	eCIS
2014	1,503	Projected
2015	1,511	Projected
2016	1,516	Projected
2017	1,519	Projected
2018	1,521	Projected
2019	1,523	Projected

E. ARIZONA DEPARTMENT OF ENVIRONMENTAL QUALITY ("ADEQ") COMPLIANCE

(1) Arizona Gateway Compliance Status

ADEQ inspected the Arizona Gateway wastewater system on March 13, 2009. During the inspection no major deficiencies were found in the operation, maintenance, or certified operator status of the wastewater system.

ADEQ regulates the Arizona Gateway wastewater system under APP Inventory No. 105010, and APP No. 36949 issued on April 23, 2007. According to ADEQ Wastewater Compliance Status Report ("CSR"), dated August 5, 2014, ADEQ has determined that the Arizona Gateway WWTP is currently in compliance.

[5] Staff's historical growth figures are based on the data reported by EWAZ from its Enterprise Customer Information System ("eCIS") data base. Projected growth figures are based on EWAZ projections from its eCIS data base, local economists, and local developers.

(2) Wishing Well Compliance Status

ADEQ inspected the Wishing Well wastewater system on March 13, 2009. During the inspection no major deficiencies were found in the operation, maintenance, or certified operator status of the wastewater system.

ADEQ regulates the Wishing Well wastewater system under APP Inventory No. 102181, and APP No. 56330 issued on September 7, 2012. According to ADEQ Wastewater Compliance Status Report ("CSR"), dated August 5, 2014, ADEQ has determined that the Arizona Gateway WWTP is currently in compliance.

(3) Wastewater Monitoring and Testing Expenses

District wastewater sampling for monitoring and testing is divided into two (2) categories, Compliance Analysis and Process Analysis. Compliance sampling is conducted, as required by ADEQ, on influent (untreated wastewater), finished/treated wastewater (effluent), and wastewater in the collection system. Process sampling is conducted on effluent, and at various stages of a treatment process. Process sampling essentially provides timely data to 1) ensure that a Plant is operating as expected in producing effluent that meets regulatory limits; 2) adjust plant operations based on changes to influent and effluent quality; and, 3) adjust chemical additions (volume and type).

a) Arizona Gateway Wastewater System

The District proposed a total of $2,282 for the Arizona Gateway wastewater system annual wastewater testing expense. Table D represents the monitoring and testing expenses that were reviewed, evaluated, and recalculated by Staff. The estimated annual wastewater testing expense for the Arizona Gateway wastewater system was determined to be $2,282. Staff recommends, for the District, an annual wastewater testing expense of $2,282, as tabulated in Table D, be used for the purposes of this application.

Table D. Wastewater Monitoring & Testing Costs – Arizona Gateway Wastewater System

Compliance Analysis Testing	Cost per Test	Quantity of Tests per Three Year Period	Cost per Three Year Period	Annual Costs
Fecal Coliform	$ 18.00	36	$ 648.20	$ 216.00
Total Nitrogen	$ 59.00	36	$ 2,124.00	$ 708.00
Antimony	$ 14.40	12	$ 172.80	$ 57.60
Arsenic	$ 14.40	12	$ 172.80	$ 57.60
Barium	$ 9.60	12	$ 115.20	$ 38.40
Beryllium	$ 9.60	12	$ 115.20	$ 38.40
Cadmium	$ 14.00	12	$ 168.00	$ 56.00
Chromium	$ 9.00	12	$ 108.00	$ 36.00
Lead	$ 14.00	12	$ 168.00	$ 56.00
Nickel	$ 9.00	12	$ 108.00	$ 36.00
Selenium	$ 14.00	12	$ 172.80	$ 57.60
Thallium	$ 14.00	12	$ 168.00	$ 56.00
Method 624 Volatile Organic Compounds (VOC's)	$ 160.00	12	$ 1,920.00	$ 640.00
Fluoride	$ 16.00	12	$ 192.00	$ 64.00
Cyanide (as free)	$ 41.00	12	$ 492.00	$ 164.00
Method 625 Synthetic Organic Compounds (SOC's)	$ 300.00	12	$ 3,600.00	$ 1,200.00
Mercury by 245.1	$ 32.00	12	$ 384.00	$ 128.00
ICP/MS Digest	$ 16.00	12	$ 192.00	$ 64.00
Total Annual Wastewater Testing Costs				**$ 2,282.00**

[1] TTHM means Total Trihalomethanes.

b) Wishing Well Wastewater System

The District proposed a total of $9,607 for the Wishing Well wastewater system annual wastewater testing expenses. The monitoring and testing expenses that were reviewed, evaluated, and recalculated by Staff are represented in Table E. The estimated annual wastewater testing expense for the Wishing Well wastewater system was determined to be $9,607. Staff recommends, for the District, an annual wastewater expense of $9,607, as tabulated in Table E, be used for the purposes of this application.

Table E. Wastewater Monitoring & Testing Costs – Wishing Well Wastewater System

Compliance Analysis Testing	Cost per Test	Quantity of Tests per Three Year Period	Cost per Three Year Period	Annual Costs
E-coli	$ 27.00	780	$ 21,060	$ 7,020.00
Total Nitrogen	$ 59.00	36	$ 2,124	$ 708.00
Antimony	$ 14.40	3	$ 43	$ 14.40
Barium	$ 9.60	3	$ 29	$ 9.60
Beryllium	$ 9.60	3	$ 29	$ 9.60
Cadmium	$ 14.00	3	$ 42	$ 14.00
Chromium	$ 9.00	3	$ 27	$ 9.00
Lead	$ 14.00	3	$ 42	$ 14.00
Nickel	$ 9.00	3	$ 27	$ 9.00
Selenium	$ 14.00	3	$ 43	$ 14.40
Thallium	$ 14.00	3	$ 42	$ 14.00
Method 624 Volatile Organic Compounds (VOC's)	$ 160.00	3	$ 480	$ 160.00
Fluoride	$ 16.00	3	$ 48	$ 16.00
Cyanide (as free)	$ 41.00	3	$ 123	$ 41.00
Method 625 Synthetic Organic Compounds (SOC's)	$ 300.00	3	$ 900	$ 300.00
Mercury by 245.1	$ 32.00	3	$ 96	$ 32.00
ICP/MS Digest	$ 16.00	3	$ 48	$ 16.00
Process Analysis Testing	**Cost per Test**	**Quantity of Tests per Three Year Period**	**Cost Per Three Year Period**	**Annual Costs**
Total Nitrogen	$ 59.00	18	$ 1,062	$ 354.00
TTHM's[1]	$ 90.00	12	$ 1,080	$ 360.00
Biological Oxygen Demand$_5$ (BOD$_5$)	$ 30.00	60	$ 1,800	$ 600.00
Total Suspended Solids	$ 12.00	60	$ 720	$ 240.00
Total Annual Wastewater Testing Costs				**$ 9,607.00**

[1] TTHM means Total Trihalomethanes.

c) *Mohave Wastewater District*

The District proposed a total of $11,889 for wastewater testing expenses. The combined monitoring and testing expenses of the District, expressed in Table F, totals $11,889. Staff recommends an annual wastewater testing expense, for the District, of $11,889 be used for the purposes of this application.

Table F. Wastewater Monitoring & Testing Costs – Mohave Wastewater District

Mohave Wastewater District Wastewater Systems	Costs Per Three Year Period	Annual Costs
Arizona Gateway	$6,845	$2,282
Wishing Well	$28,821	$9,607
Total Wastewater Testing Costs	**$35,666**	**$11,889**

F. ARIZONA CORPORATION COMMISSION COMPLIANCE

A check of the Utilities Division Compliance Section database showed that there are no delinquent Commission compliance items for District.[6]

G. DEPRECIATION RATES

EWAZ proposed only a few changes to the current District depreciation rates, which are shown in the District's Proposed Rates column in Table G. Staff recommends the depreciation rates listed under "Staff's Recommended Rates" in Table G be adopted.

Table G. Depreciation Rate Table – Mohave Wastewater District

NARUC Account Numbers	EWAZ Account Numbers	Depreciable Plant	District Current Rates (%)	District Proposed Rates (%)	Staff Typical Rates (%)	Staff Recommended Rate (%)
304		**Structures & Improvements**				
	304500	Structures & Improvements – General	0.00	2.50	3.33	2.50
	304620	Structures & Improvements - Leasehold	0.00	2.50	3.33	2.50
334	334100	**Meters**	0.00	8.33	8.33	8.33
339	339600	**Other Plant & Miscellaneous Equipment – CPS**	0.00	3.33	6.67	3.33
340		**Office Furniture & Equipment**				
	340100	Office Furniture & Equipment	0.00	4.50	4.50	4.50
	340200	Computer & Peripheral Equipment	0.00	10.00	10.00	10.00
	340300	Computer Software	0.00	20.00	20.00	20.00
344	344000	**Laboratory Equipment**	0.00	4.00	10.00	4.00
346		**Communication Equipment**				
	346100	Communication Equipment – Non-Telephone	0.00	10.00	10.00	10.00
	346190	Remote Control & Instrument	0.00	10.00	10.00	10.00
	346200	Communication Equipment – Telephone	0.00	10.00	10.00	10.00
	346300	Communication Equipment – Other	0.00	10.00	10.00	10.00
347	347000	**Miscellaneous Equipment**	0.00	6.25	10.00	6.25
351	351000	**Wastewater ("WW") Organization**	0.00	0.00	0.00	0.00
352	352000	**WW Franchise**	0.00	0.00	0.00	0.00
353	353200	**Land & Land Rights**	0.00	0.00	0.00	0.00
354		**Structures & Improvements**				
	354200	Structures & Improvements – Collection	2.80	3.33	3.33	3.33

[6] Per Compliance Section email, dated August 8, 2014.

	354300	Structures & Improvements	0.00	0.00	3.33	0.00
	354400	Structures & Improvements – Treatment	2.80	2.00	3.33	2.00
	354500	Structures & Improvements	0.00	0.00	3.33	0.00
355		**Power Generation Equipment**				
	355000	Power Generation Equipment	5.00	0.00	5.00	0.00
	355300	Power Generation Equipment	0.00	0.00	5.00	0.00
	355400	Power Generation Equipment – Treatment	0.00	2.00	5.00	2.00
	355500	Power Generation Equipment – RWTP	0.00	0.00	5.00	0.00
360	360000	**Collection Sewers – Force Mains**	2.00	1.43	2.00	1.43
361		**Collection Sewers – Gravity**				
	361000	Collection Sewers – Gravity	0.00	0.00	2.00	0.00
	361100	WW Collecting Mains	2.00	1.43	2.00	1.43
362	362000	**Special Collection Structures**	2.00	3.33	2.00	3.33
363	363000	**Sewer Services to Customers**	2.04	2.00	2.00	2.00
364	364000	**Flow Measuring Devices**	10.00	6.67	10.00	6.67
365	365000	**Flow Measuring Installations**	5.00	0.00	10.00	0.00
370	370000	**Receiving Well**	5.00	0.00	3.33	0.00
371		**Pumping Equipment**				
	371000	Pumping Equipment	0.00	0.00	12.50	0.00
	371100	Pumping Equipment – Electric	5.42	5.00	12.50	5.00
	371200	Pumping Equipment – Other Power	0.00	0.00	12.50	0.00
374	374000	**Reuse Distribution Reservoir**	0.00	0.00	2.50	0.00
375	375000	**Reuse Transmission and Distribution System**	0.00	0.00	2.50	0.00
380		**Treatment & Disposal Equipment**				
	380000	Treatment & Disposal Equipment	0.00	5.00	5.00	5.00
	380050	Treatment & Disposal Equipment – Grit Removal	0.00	5.00	5.00	5.00
	380100	Treatment & Disposal Equipment - Sedimentation tanks/ACC	3.60	5.00	5.00	5.00
	380200	Treatment & Disposal Equipment	0.00	0.00	5.00	0.00
	380300	Treatment & Disposal Equipment – Sludge Dry/Filter	5.00	5.00	5.00	5.00
	380400	Treatment & Disposal Equipment	0.00	0.00	5.00	0.00
	380500	Treatment & Disposal Equipment – Treatment Plant				
		Treatment & Disposal Equipment – Other disposal	5.00	5.00	5.00	5.00
	380600	Treatment & Disposal Equipment – General	5.00	5.00	5.00	5.00
	380625	Treatment				
		Treatment & Disposal Equipment	0.00	5.00	5.00	5.00
	380650		0.00	0.00	5.00	0.00
381	381000	**Plant Sewers**	5.00	0.00	5.00	0.00
382	382000	**Outfall Sewer Lines**	4.00	0.00	3.33	0.00
389		**WW Other Plant & Miscellaneous Equipment**				
	389100	Other Plant & Miscellaneous Equipment	6.67	0.00	6.67	0.00
	389600	Other Plant & Miscellaneous Equipment – CPS	0.00	0.00	6.67	0.00
390		**Office Furniture & Equipment**				
	390000	Office Furniture	6.67	0.00	6.67	0.00
	390200	Computers	0.00	10.00	10.00	10.00
	390300	Computer Software	0.00	0.00	10.00	0.00
391	391000	**Transportation Equipment**	15.00	0.00	20.00	0.00
392	392000	**Stores Equipment**	4.00	0.00	4.00	0.00
393	393000	**Tools, Shop, Garage Equipment**	4.47	4.00	5.00	4.00
394	394000	**Laboratory Equipment**	3.71	4.00	10.00	4.00
395	N/A	**Power Operated Equipment**	5.00	5.00	5.00	5.00
396	396000	**Communication Equipment**	10.30	10.00	10.00	10.00

397	397000	**Miscellaneous Equipment**	5.10	6.67	10.00	6.67
398	39800	**Other plants**	0.00	0.00	N/A	0.00

H. OTHER ISSUES

(1) Mohave Wastewater District Post Test Year Plant Additions – Post Test Year Investment Projects ("IPs") Used and Useful (July ~~2103~~ 2013 – June 30, 2014)

EWAZ has not requested any District Post-Test Year Capital Investment Projects ("IPs") be included as Post-Test Year Plant Additions.

FIGURES

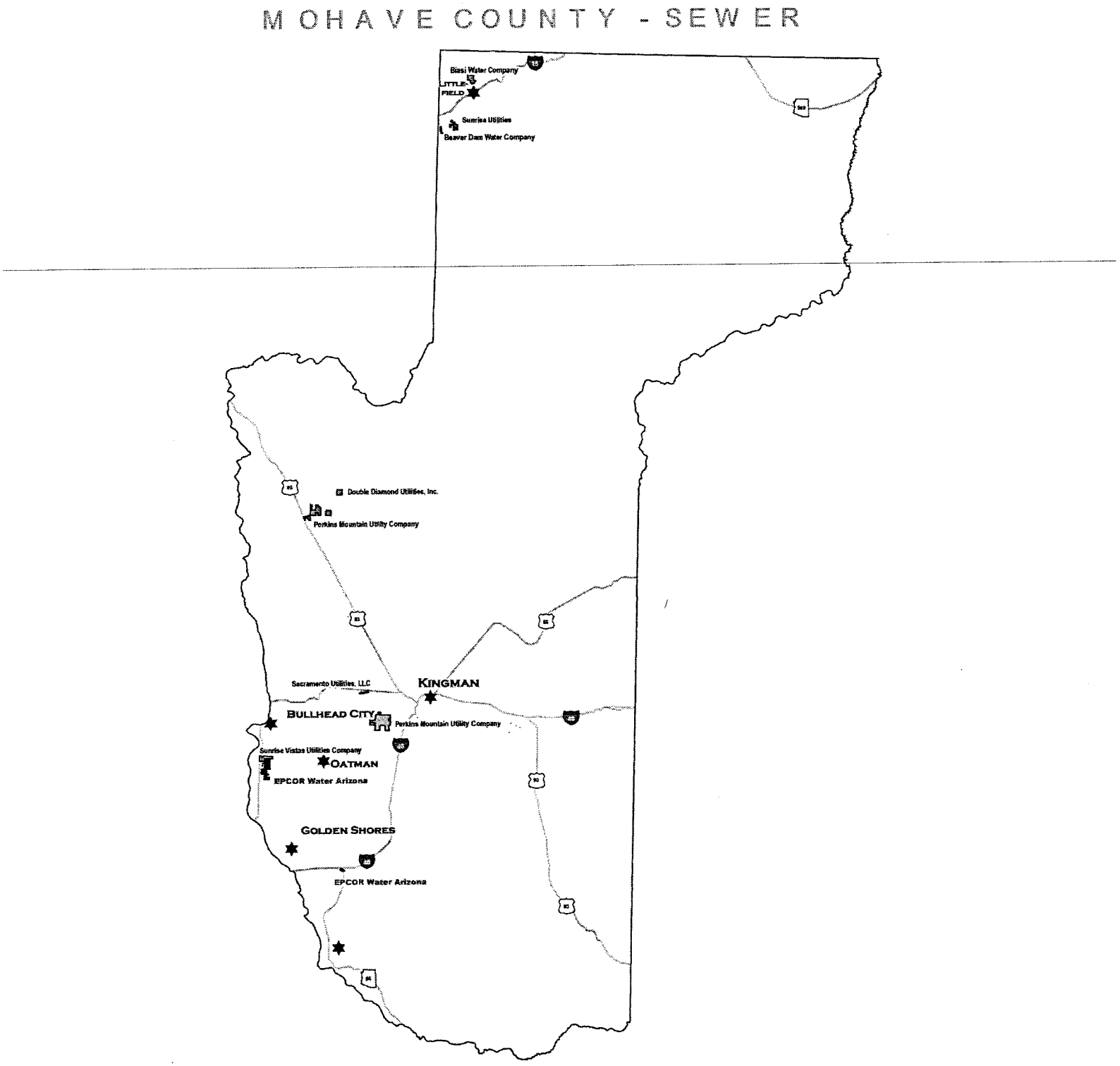

FIGURE 1 – MOHAVE COUNTY MAP

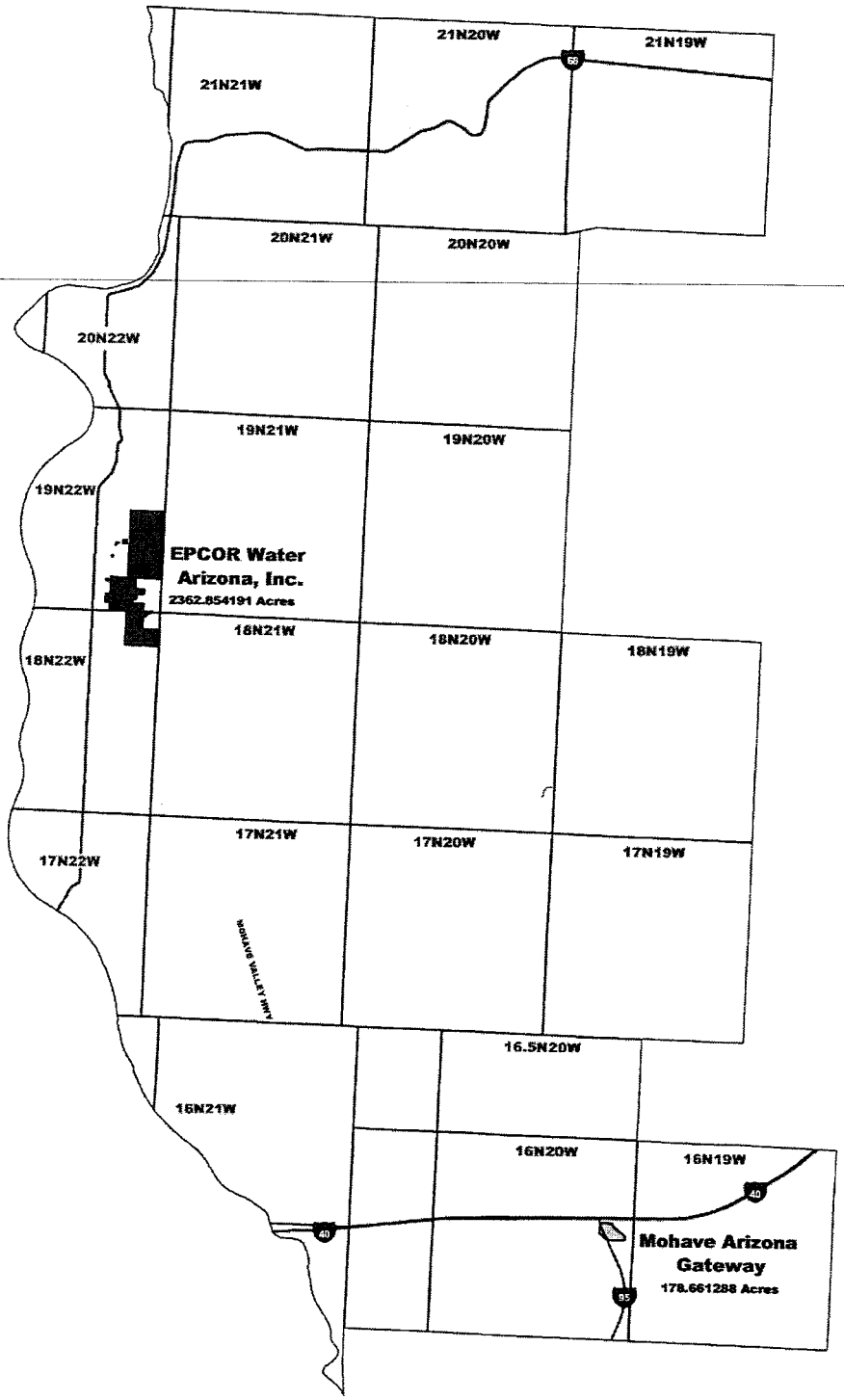

FIGURE 2 – CERTIFICATED AREA

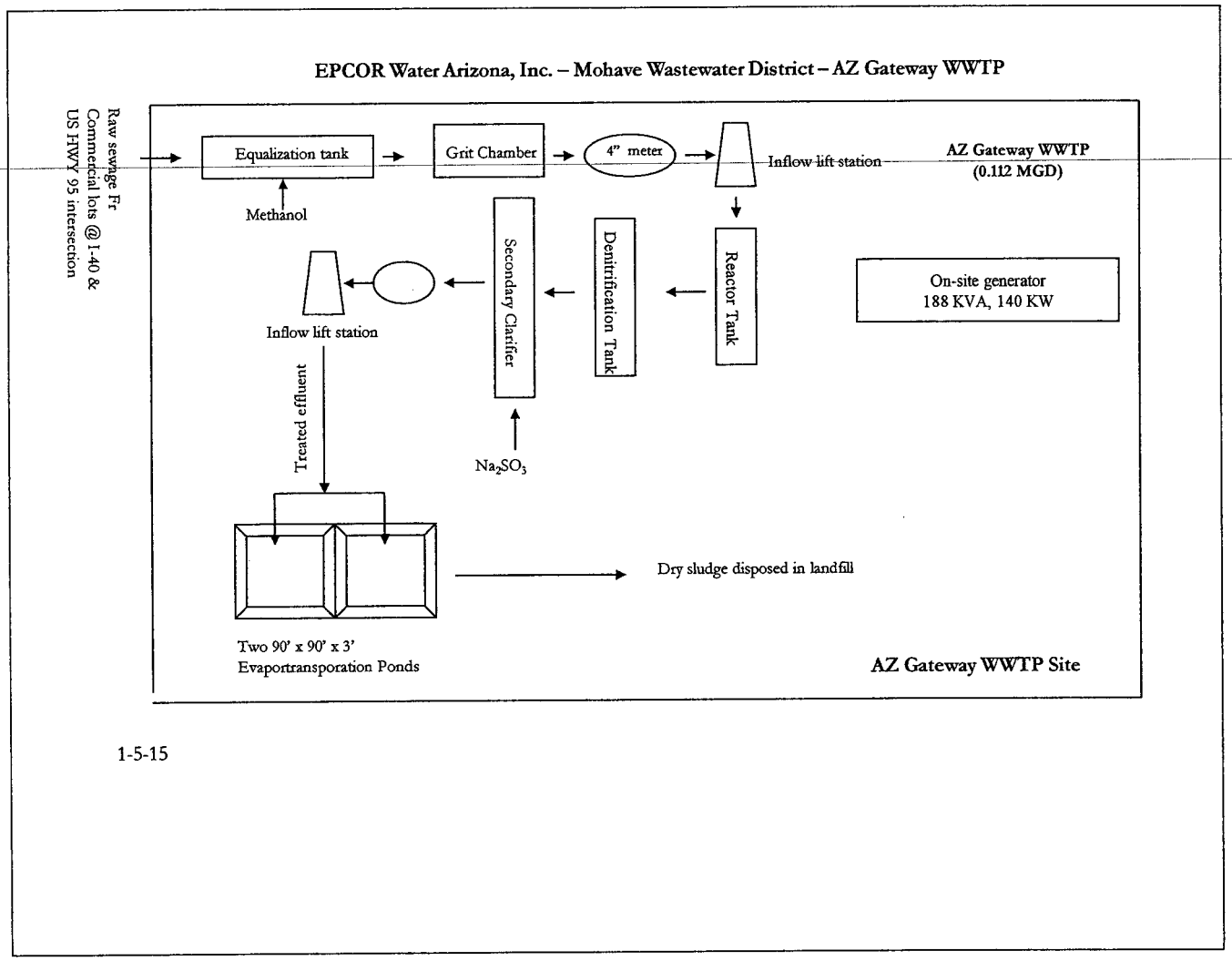

FIGURE 3A

MOHAVE WASTEWATER DISTRICT – ARIZONA GATEWAY WASTEWATER TREATMENT PLANT

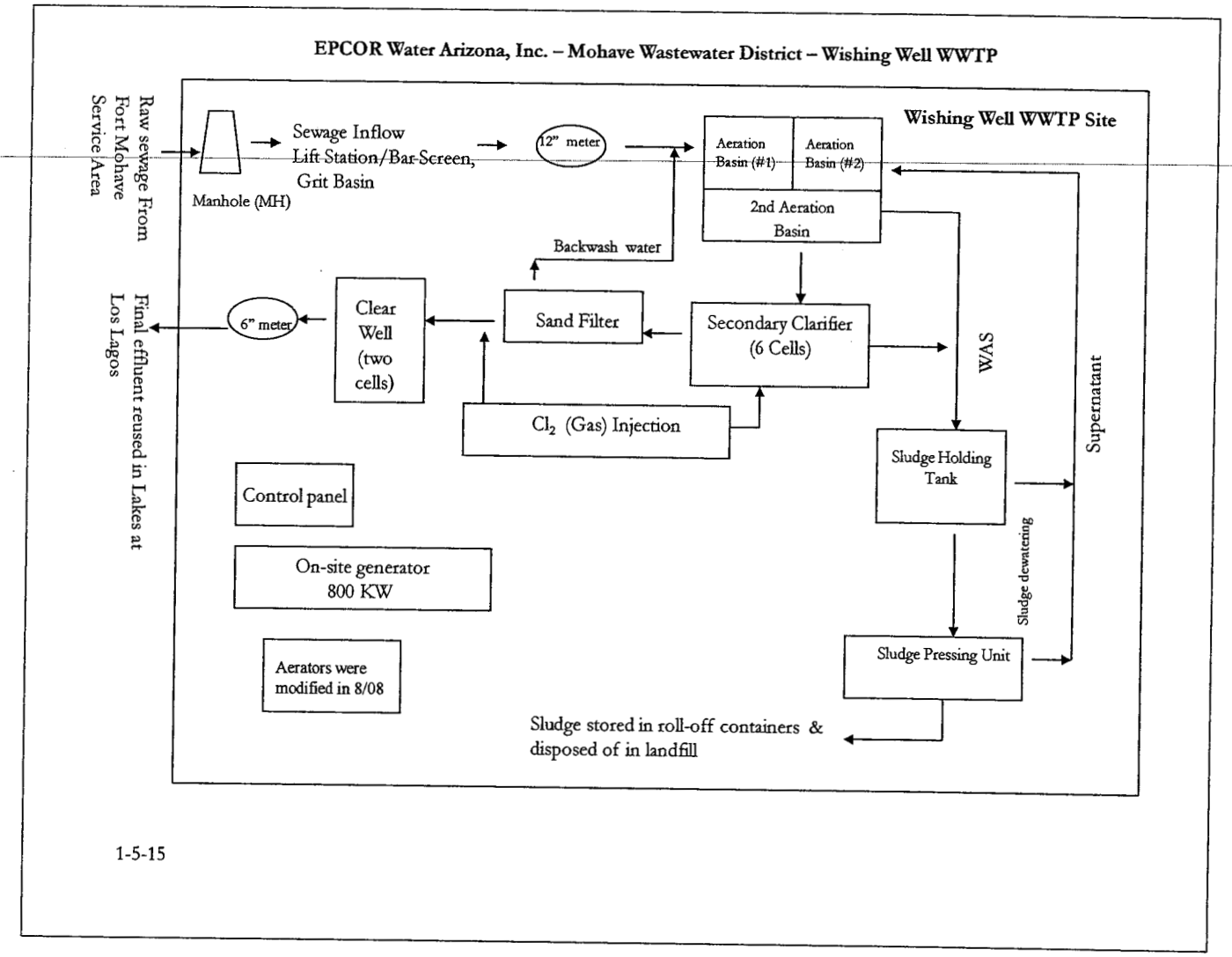

FIGURE 3B

MOHAVE WASTEWATER DISTRICT – WISHING WELL WASTEWATER TREATMENT PLANT

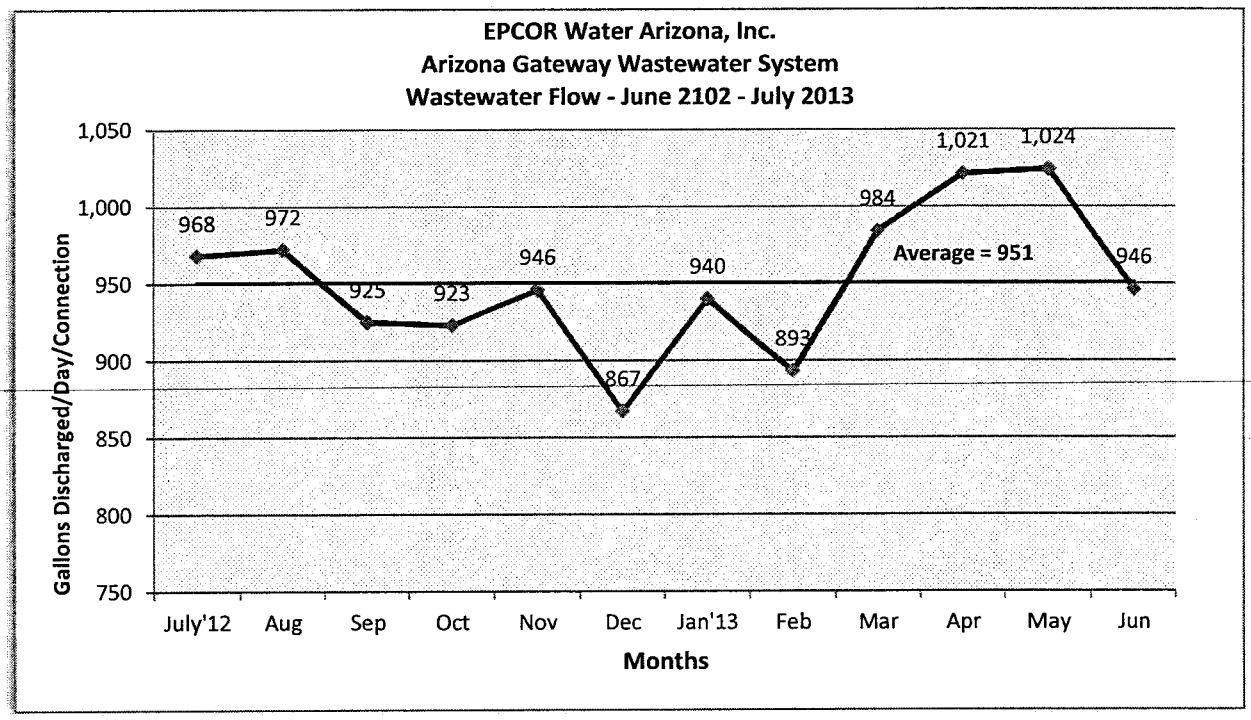

FIGURE 4A – ARIZONA GATEWAY WASTEWATER FLOW

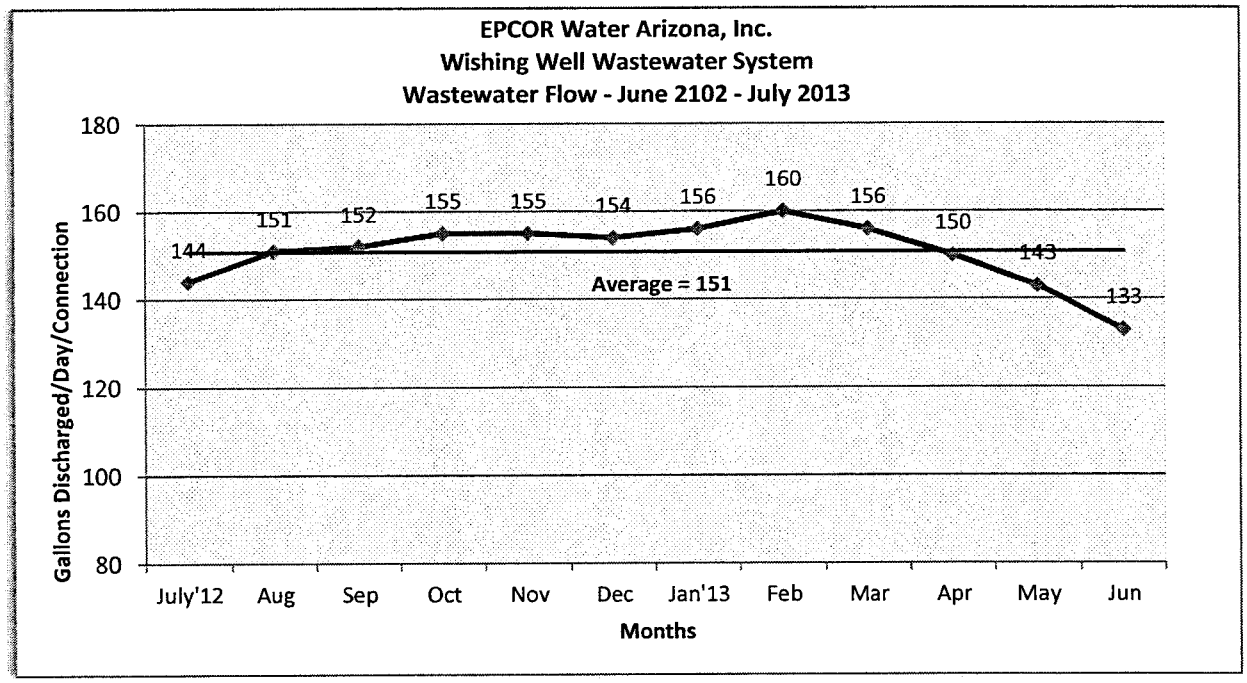

FIGURE 4B – CAMP MOHAVE WATER SYSTEM WATER CONSUMPTION

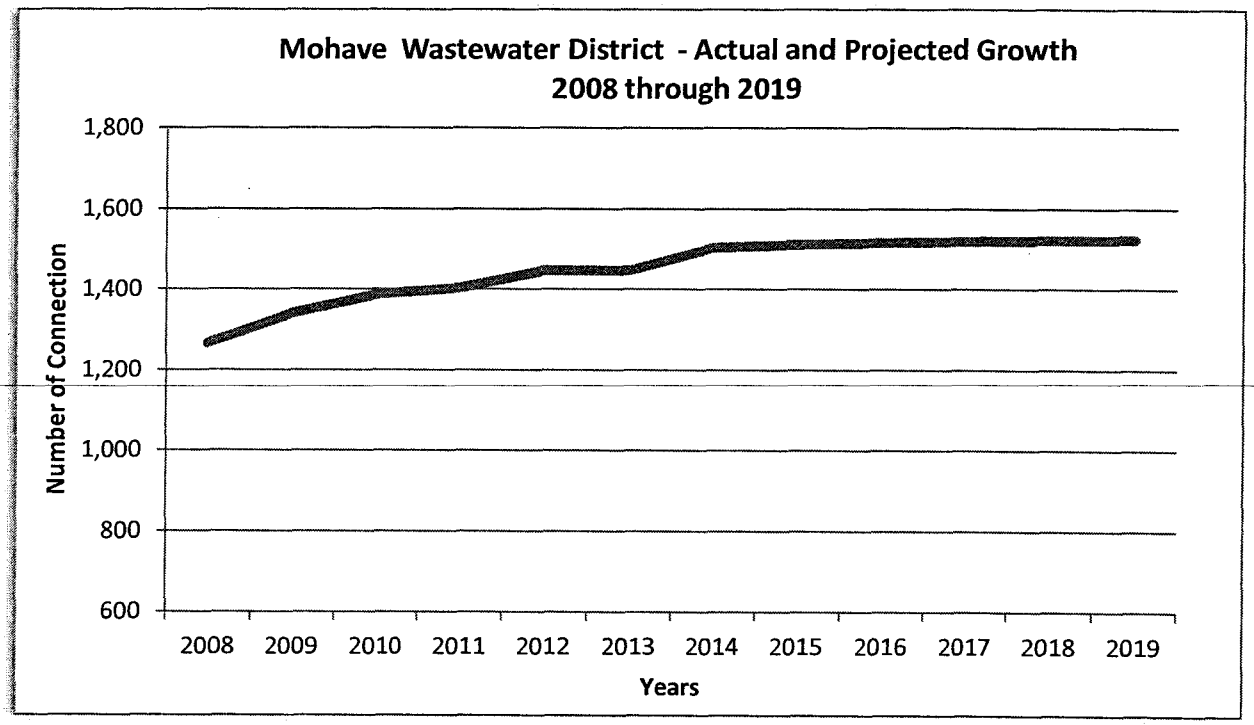

FIGURE 5 – MOHAVE WASTEWATER DISTRICT ACTUAL & PROJECTED GROWTH

BEFORE THE ARIZONA CORPORATION COMMISSION

EXHIBIT
S-2
ADMITTED

SUSAN BITTER SMITH
Chairman
BOB STUMP
Commissioner
BOB BURNS
Commissioner
DOUG LITTLE
Commissioner
TOM FORESE
Commissioner

IN THE MATTER OF THE APPLICATION OF EPCOR WATER ARIZONA, INC., AN ARIZONA CORPORATION, FOR A DETERMINATION OF THE CURRENT FAIR VALUE OF ITS UTILITY PLANT AND PROPERTY AND FOR INCREASES IN ITS RATES AND CHARGES FOR UTILITY SERVICE BY ITS MOHAVE WATER DISTRICT, PARADISE VALLEY WATER DISTRICT, SUN CITY WATER DISTRICT, TUBAC WATER DISTRICT, AND MOHAVE WASTEWATER DISTRICT.	DOCKET NO WS-01303A-14-0010

DIRECT

TESTIMONY

OF

MICHAEL THOMPSON, P. E.

UTILITIES ENGINEER

UTILITIES DIVISION

ARIZONA CORPORATION COMMISSION

FEBRUARY 2, 2015

TABLE OF CONTENTS

Page

I. INTRODUCTION 1

II. COST OF SERVICE STUDY – REVIEW PROCESS 3

III. CONCLUSIONS AND RECOMMENDATIONS 5

EXHIBITS

Cost of Service Summaries – Present Rates ..... Schedule G-1

Cost of Service Summaries – Proposed Rates ..... Schedule G-2

EXECUTIVE SUMMARY
EPCOR WATER ARIZONA, INC.
DOCKET NO. WS-01303A-14-0010

Michael Thompson's testimony discusses Utilities Division Staff's ("Staff") review of EPCOR Water Arizona, Inc.'s ("EWAZ" or "Company") Cost of Service Study ("COSS") for the rate case filed with the Arizona Corporation Commission ("Commission"), and presents the results of Staff's analysis.

Based on its review of EWAZ's COSS, Staff's conclusions and recommendations are as follows:

1. It is Staff's conclusion that EWAZ performed the COSS consistent with the methodology generally accepted in the industry, and developed all of the allocation factors appropriately.

2. Staff further concludes that, based on the evaluation of the COSS model utilized by EWAZ, the results of the COSS are satisfactory.

3. Staff recommends that EWAZ's COSS cost allocation factors, and cost allocations modified by Staff as included under G Schedules, be accepted as reasonable in the pending case. The revised Schedules G-1 and G-2 are attached in Exhibit 1.

I. INTRODUCTION

Q. Please state your name, place of employment and job title.

A. My name is Michael Thompson. My place of employment is the Arizona Corporation Commission ("Commission"), Utilities Division, 1200 West Washington Street, Phoenix, Arizona 85007. My job title is Water/Wastewater Engineer.

Q. How long have you been employed by the Commission?

A. I have been employed by the Commission since June 2013.

Q. Please list your duties and responsibilities.

A. As a Utilities Engineer, specializing in water and wastewater engineering, I inspect and evaluate water and wastewater systems, obtain data, prepare reports, suggest corrective action, provide technical recommendations on water and wastewater system deficiencies, and provide written and oral testimony on rate and other cases before the Commission.

Q. How many cases have you analyzed for the Utilities Division?

A. To date I have analyzed 14 cases covering various responsibilities for the Utilities Division.

Q. What is your educational background?

A. I graduated from the SUNY College of Environmental Science and Forestry ("ESF") at Syracuse, New York, and Syracuse University ("SU") at Syracuse, New York. I have a Bachelor of Science Degree in Pulp and Paper Engineering from ESF and Chemical Engineering from SU. I am registered as a Professional Engineer (Civil) in the State of Arizona, and a Grade 2 Certified Water Treatment Plant Operator, and a Grade 3 Certified Water Distribution System Operator.

Q. Briefly describe your pertinent work experience.

A. Prior to my employment with the Commission, I was the Operations Engineer, from 2009 to 2012, for the Southwest and Central Districts of Golden State Water Company ("GSWC"), located in Gardena and Santa Fe Springs, California, respectively. As the Operations Engineer, I provided technical assistance and support to the districts' operations departments with primary focus on resolving operational problems and optimizing the efficiency of the water system operations. Prior to my employment with GSWC, I was employed with Chaparral City Water Company ("Chaparral"), from 2002 to 2009 as District Operations Engineer. While at Chaparral, I performed all capital, new business, and water quality activities within the district. I served as field engineer/construction manager for all capital and new business projects under construction. I also managed all water quality activities including monitoring, sampling, and reporting as required by 40 CFR (National Primary Drinking Water Regulations) and Arizona Administrative Code, Title 18, Chapter 4.

From 2000 to 2002, I was employed with the Fountain Hills Sanitary District as Engineering Assistant. I performed plan review of all commercial and residential projects in the Town of Fountain Hills, and managed the district's construction projects.

From 1996 to 2000, I was employed as an Environmental Engineering Specialist with the Arizona Department of Environmental Quality ("ADEQ"). During that time period, I performed operations and maintenance site inspections of public water systems in Gila, LaPaz, Mohave, and Southwestern Yavapai Counties.

Prior to working for ADEQ, I began my career in the pulp and paper industry as a process engineer in 1979. During my 16 year career in the pulp and paper industry, I worked for 3

different paper companies (Temple-Eastex, Bowater, Inc., and Champion International), where I advanced from a process engineer to Technical Manager.

Q. Did Staff perform an analysis of the application that is the subject of this proceeding?

A. Yes, Staff reviewed the Company's Cost of Service Study ("COSS").

Q. What is the purpose of this Direct Testimony?

A. The purpose is to discuss Staff's review of EWAZ's COSS for the rate case, and present the results of this review for the Mohave Water District, Paradise Valley Water District, Sun City Water District, Tubac Water District, and the Mohave Wastewater District.

II. COST OF SERVICE STUDY – REVIEW PROCESS

Q. What does the COSS signify?

A. There are three steps in performing the COSS. They are: 1) Functionalization; 2) Classification; and 3) Allocation. First, the COSS enables us to determine the system cost of service by classifying the utility's costs (investments and expenses) by function, such as commodity-related, demand-related, customer-related, and Direct Fire-related functions. Customer-related functions are further broken down into customers and customer services. Second, the study breaks down these costs by customer classes to reflect as closely as possible the cost causation by respective customer classes. Third, the results of the COSS provide a benchmark for the revenues needed from each customer category by allocating the revenue requirement for each customer class.

Q. Is there a standard COSS Model?

A. There is no standard methodology for designing a COSS, but it is generally advisable to follow a range of alternatives to identify which allocations are more reasonable than others. For that reason, the COSS should be used as a general guide only and as one of many considerations in designing rates.

Q. Did Staff conduct a separate independent COSS?

A. No, Staff did not conduct a separate independent COSS.

Q. What was the process Staff used in reviewing the Company's COSS?

A. Staff reviewed the Company's overall COSS methodology, which is the Commodity-Demand methodology as outlined in the American Water Works Association Manual M1, "Principles of Water Rates, Fees, and Charges". The Commodity-Demand Method breaks down the costs of providing water service into four primary cost components: commodity costs (costs that tend to vary with the amount of water used by the customers), demand costs (costs associated with peak use/demand), customers costs (costs not associated with water use, such as billing), and direct fire protection costs. Staff then reviewed the Cost of Service Schedules ("G Schedules") reflecting various allocation factors (for Commodity, Demand, Customer, and Direct Private Fire) in the COSS. Next, Staff reviewed the test year ("FYE June 30, 2013") and incorporated its rate base, revenues, and expense adjustments in its filing of January 23, 2015. Staff adjustments to rate base, revenues, and expenses are incorporated in the appropriate G Schedules in this filing. The modified G Schedules G-1 and G-2 are attached under Exhibit 1 for each District. The G-1 Schedules represent present rates using Staff's adjusted test year amounts, and the G-2 Schedules include the impacts of Staff's recommended revenue increase.

III. CONCLUSIONS AND RECOMMENDATIONS

Q. Based upon your testimony, what are Staff's conclusions and recommendations regarding the Cost of Service Study?

A. Based on the review of EWAZ's COSS, Staff's conclusions and recommendations are as follows:

1. It is Staff's conclusion that EWAZ performed the COSS consistent with the methodology generally accepted in the industry, and developed the allocation factors appropriately, in accordance with the Staff recommended and Commission approved allocation factors in the Arizona Water Company's rate case (Docket No. WS-01303A-14-0010).

2. Staff further concludes that, based on the evaluation of the COSS model utilized by EWAZ, the results of the COSS are satisfactory.

3. Staff recommends that EWAZ's COSS allocations and factors as modified by Staff, be accepted as reasonable in the pending case. The G-schedules G-1 and G-2 are listed under the attached exhibit 1.

Staff's conclusions are limited to the specific facts of this case and do not create any precedent regarding Cost of Service Studies generally. Staff may make different recommendations in other cases.

Q. Does this conclude your Direct Testimony?

A. Yes, it does.

Mohave Water District
Test Year Ended June 30, 2013
Cost of Service Study, Using Commodity-Demand Method
Returns at Present Rates by Class

Exhibit
Schedule G-1
Page 1
Witness: Thompson

Line No.		Totals	Residential	Apartment	Commercial	Other Public Auth.
1	Water Revenues	$ 6,250,422	$ 4,294,925	$ 491,092	$ 1,231,245	$ 233,159
2	Fire Service Revenues	$ 35,756	33,151	603	1,821	180
3	Revenue Annualizations	(1,235)	(743)	(45)	(450)	3
4	Declining Usage	(114,235)	(79,100)	(8,987)	(22,531)	(4,265)
5	Misc. Revenues[1]	221,297	205,177	3,734	11,273	1,114
6	Reconciliation H-1 to C-1[1]	(2,229)	(2,067)	(38)	(114)	(11)
7	Total Revenues	$ 6,389,776	$ 4,451,342	$ 486,360	$ 1,221,245	$ 230,179
8						
9	Operating Expenses[2]	$ 4,353,528	$ 3,483,474	$ 188,684	$ 543,616	$ 137,754
10	Depreciation and					
11	Amortization[2]	1,270,161	940,097	76,008	200,885	53,170
12	Property Tax[3]	164,282	114,445	12,504	31,398	5,918
13	Income Tax[4]	7,752	(189,598)	64,406	130,427	2,277
14	Total Operating Expenses	$ 5,795,723	$ 4,348,417	$ 341,604	$ 906,327	$ 199,119
15	Operating Income	$ 594,052	$ 102,925	$ 144,757	$ 314,918	$ 31,060
16	Interest Expense[5]	581,384	412,770	39,503	101,772	27,339
17	Net Income	$ 12,668	$ (309,845)	$ 105,254	$ 213,146	$ 3,721
18	Rate Base[6]	$ 22,360,920	$ 15,875,754	$ 1,519,355	$ 3,914,303	$ 1,051,509
19	Return on Rate Base[7]	2.66%	0.65%	9.53%	8.05%	2.95%
20						
21	**Percent of Total Customers**		92.72%	1.69%	5.09%	0.50%
22						
23						
24						
25						
26						
27						

28 [1] Allocated based on customer counts.
29 [2] Operating Expenses and Depreciation computations are shown on Schedule G-4, Page 1.
30 [3] Property Taxes allocation based on Revenues.
31 [4] Income Tax from Schedule C-1, at present rates. Income Taxes allocated based on taxable income.
32 [5] Interest Synchronized Interest Expense. Allocation based on Rate Base
33 [6] Rate Base computations are shown on Schedule G-3, Page 1
34 [7] Operating Income Divided by Rate Base

Mohave Water District
Test Year Ended June 30, 2013
Cost of Service Study, Using Commodity-Demand Method
Returns at Proposed Rates by Class

Line No.		Totals	Residential	Apartment	Commercial	Other Public Auth.
1	Water Revenues	$ 7,486,289	$ 5,126,543	$ 591,599	$ 1,490,771	$ 277,376
2	Fire Service Revenues	43,048	39,912	726	2,193	217
3	Revenue Annualizations					
4	Declining Usage					
5	Misc. Revenues[1]	221,297	205,177	3,734	11,273	1,114
6	Reconciliation H-1 to C-1[1]	-	-	-	-	-
7	Total Revenues	$ 7,750,634	$ 5,371,632	$ 596,059	$ 1,504,237	$ 278,706
8						
9	Operating Expenses[2]	$ 4,353,528	$ 3,483,474	$ 188,684	$ 543,616	$ 137,754
10	Depreciation and					
11	Amortization[2]	1,270,161	940,097	76,008	200,885	53,170
12	Property Tax[3]	175,862	121,882	13,525	34,131	6,324
13	Income Tax[4]	519,910	156,922	105,652	236,794	20,542
14	Total Operating Expenses	$ 6,319,461	$ 4,702,375	$ 383,869	$ 1,015,427	$ 217,790
15	Operating Income	$ 1,431,173	$ 669,257	$ 212,190	$ 488,810	$ 60,916
16	Interest Expense[5]	581,384	412,770	39,503	101,772	27,339
17	Net Income	$ 849,789	$ 256,487	$ 172,687	$ 387,038	$ 33,577
18	Rate Base[6]	$ 22,360,920	$ 15,875,754	$ 1,519,355	$ 3,914,303	$ 1,051,509
19	Return on Rate Base[7]	6.40%	4.22%	13.97%	12.49%	5.79%
20						
21	**Percent of Total Customers**		92.72%	1.69%	5.09%	0.50%
22						
23	**Indicated Monthly Minimums and Single-Tier Commody Rates for 5/8 x3/4 Inch Meter**					
24		Sched. G-8, pg 4A	Sched. G-8, pg 4B	Sched. G-8, pg 4C	Sched. G-8, pg 4D	Sched. G-8, pg 4E
25		All Classes	Residential	Apartment	Commercial	Other Public Auth.
26	Monthly Minimums	**$ 14.79**	$ 14.58	$ 12.54	$ 16.16	$ 19.25
27	Single-Tier Commodity Rate	**$ 2.247**	$ 2.337	$ 2.108	$ 2.075	$ 1.991
28						
29						

30 [1] Allocated based on customer counts.
31 [2] Operating Expenses and Depreciation computations are shown on Schedule G-4, Page 2.
32 [3] Property Taxes allocation based on Revenues
33 [4] Income Tax from Schedule C-1, at proposed rates. Income Taxes allocated based on taxable income
34 [5] Interest Synchronized Interest Expense. Allocation based on Rate Base
35 [6] Rate Base computations are shown on Schedule G-3, Page 1
36 [7] Operating Income Divided by Rate Base

Paradise Valley Water District
Test Year Ended June 30, 2013
Cost of Service Study, Using Commodity-Demand Method
Returns at Present Rates by Class

Exhibit
Schedule G-1
Page 1
Witness: Thompson

Line No.		Totals	Residential	Turf	Commercial	Other Public Auth.
1	Water Revenues	$ 9,613,561	$ 7,360,312	$ 442,429	$ 1,789,884	$ 20,936
2	Fire Service Revenues	9,349	8,672	12	644	21
3	Revenue Annualizations	(1,333)	(3,299)	-	1,966	-
4	Declining Usage	(36,002)	(27,561)	(1,656)	(6,707)	(78)
5	Misc. Revenues[1]	58,978	54,709	74	4,060	135
6	Reconciliation H-1 to C-1[1]	3,698	3,430	5	255	8
7	Total Revenues	$ 9,648,251	$ 7,396,264	$ 440,863	$ 1,790,100	$ 21,023
8						
9	Operating Expenses[2]	$ 4,533,680	$ 3,453,169	$ 313,470	$ 759,271	$ 7,769
10	Depreciation and					
11	Amortization[2]	1,527,745	1,100,189	131,423	293,040	3,093
12	Property Tax[3]	335,846	257,457	15,346	62,312	732
13	Income Tax[4]	867,427	722,300	(41,467)	183,703	2,891
14	Total Operating Expenses	$ 7,264,698	$ 5,533,115	$ 418,772	$ 1,298,326	$ 14,485
15	Operating Income	$ 2,383,553	$ 1,863,149	$ 22,091	$ 491,775	$ 6,538
16	Interest Expense[5]	965,874	682,659	89,862	191,540	1,813
17	Net Income	$ 1,417,679	$ 1,180,490	$ (67,771)	$ 300,235	$ 4,725
18	Rate Base[6]	$ 37,148,992	$ 26,256,112	$ 3,456,236	$ 7,366,920	$ 69,725
19	Return on Rate Base[7]	6.42%	7.10%	0.64%	6.68%	9.38%
20						
21	**Percent of Total Customers**		92.76%	0.13%	6.88%	0.23%
22						
23						
24						
25						
26						
27						

28 [1] Allocated based on customer counts.
29 [2] Operating Expenses and Depreciation computations are shown on Schedule G-4, Page 1.
30 [3] Property Taxes allocation based on Revenues.
31 [4] Income Tax from Schedule C-1, at present rates. Income Taxes allocated based on taxable income.
32 [5] Interest Synchronized Interest Expense. Allocation based on Rate Base
33 [6] Rate Base computations are shown on Schedule G-3, Page 1
34 [7] Operating Income Divided by Rate Base

Paradise Valley Water District
Test Year Ended June 30, 2013
Cost of Service Study, Using Commodity-Demand Method
Returns at Proposed Rates by Class

Line No.		Totals	Residential	Turf	Commercial	Other Public Auth.
1	Water Revenues	$ 9,613,561	$ 7,360,312	$ 442,429	$ 1,789,884	$ 20,936
2	Fire Service Revenues	$ 9,349	$ 8,672	$ 12	$ 644	$ 21
3	Revenue Annualizations	$ (1,333)	$ (3,299)	$ -	$ 1,966	$ -
4	Declining Usage	$ (36,002)	$ (27,561)	$ (1,656)	$ (6,707)	$ (78)
5	Misc. Revenues[1]	$ 58,978	$ 54,709	$ 74	$ 4,060	$ 135
6	Reconciliation H-1 to C-1[1]	$ 3,698	$ 3,430	$ 5	$ 255	$ 8
7	Total Revenues (no increase or decrease)	$ 9,648,251	$ 7,396,264	$ 440,863	$ 1,790,100	$ 21,023
8						
9	Operating Expenses[2]	$ 4,533,680	$ 3,453,169	$ 313,470	$ 759,271	$ 7,769
10	Depreciation and					
11	Amortization[2]	1,527,745	1,100,189	131,423	293,040	3,093
12	Property Tax[3]	335,723	257,362	15,340	62,289	732
13	Income Tax[4]	863,744	719,230	(41,286)	182,922	2,879
14	Total Operating Expenses	$ 7,260,892	$ 5,529,950	$ 418,947	$ 1,297,522	$ 14,473
15	Operating Income	$ 2,387,359	$ 1,866,314	$ 21,916	$ 492,579	$ 6,551
16	Interest Expense[5]	965,874	682,659	89,862	191,540	1,813
17	Net Income	$ 1,421,485	$ 1,183,655	$ (67,946)	$ 301,039	$ 4,738
18	Rate Base[6]	$ 37,148,992	$ 26,256,112	$ 3,456,236	$ 7,366,920	$ 69,725
19	Return on Rate Base[7]	6.43%	7.11%	0.63%	6.69%	9.39%
20						
21	**Percent of Total Customers**		92.76%	0.13%	6.88%	0.23%
22						
23	**Indicated Monthly Minimums and Single-Tier Commody Rates for 3/4 Inch Meter**					
24		Sched. G-8, pg 4A	Sched. G-8, pg 4B	Sched. G-8, pg 4C	Sched. G-8, pg 4D	Sched. G-8, pg 4E
25		All Classes	Residential	Turf	Commercial	Other Public Auth.
26	Monthly Minimums	$ 29.16	$ 27.52	$ 205.81	$ 28.82	$ 13.00
27	Single-Tier Commodity Rate	$ 1.794	$ 1.869	$ 1.538	$ 1.645	$ 2.369
28						
29						

30 [1] Allocated based on customer counts.
31 [2] Operating Expenses and Depreciation computations are shown on Schedule G-4, Page 2.
32 [3] Property Taxes allocation based on Revenues
33 [4] Income Tax from Schedule C-1, at proposed rates. Income Taxes allocated based on taxable income
34 [5] Interest Synchronized Interest Expense. Allocation based on Rate Base
35 [6] Rate Base computations are shown on Schedule G-3, Page 1
36 [7] Operating Income Divided by Rate Base

Sun City Water District
Test Year Ended June 30, 2013
Cost of Service Study, Using Commodity-Demand Method
Returns at Present Rates by Class

Exhibit
Schedule G-1
Page 1
Witness: Thompson

Line No.		Totals	Residential	Commercial	Other
1	Water Revenues	$ 10,276,050	$ 8,273,583	$ 1,867,458	$ 135,008
2	Fire Service Revenues	21,074	20,219	851	4
3	Revenue Annualizations	(4,369)	7,070	(11,438)	-
4	Declining Usage	(121,071)	(97,927)	(21,906)	(1,593)
5	Misc. Revenues[1]	162,387	155,799	6,560	28
6	Revenue Difference Com to Res Trnsfers	(24,880)	(23,871)	(1,005)	(4)
7	Reconciliation H-1 to C-1[1]	(13,528)	(12,979)	(546)	(2)
8	Total Revenues	$ 10,295,663	$ 8,321,894	$ 1,839,974	$ 133,440
9					
10	Operating Expenses[2]	$ 6,672,602	$ 5,660,758	$ 820,543	$ 191,300
11	Depreciation and				
12	Amortization[2]	1,679,019	1,414,315	210,979	53,725
13	Property Tax[3]	435,418	351,945	77,815	5,643
14	Income Tax[4]	328,005	135,318	249,495	(56,808)
15	Total Operating Expenses	$ 9,115,044	$ 7,562,335	$ 1,358,833	$ 193,861
16	Operating Income	$ 1,180,619	$ 759,559	$ 481,140	$ (60,420)
17	Interest Expense[5]	676,078	551,552	97,622	26,904
18	Net Income	$ 504,541	$ 208,007	$ 383,518	$ (87,324)
19	Rate Base[6]	$ 24,790,108	$ 20,224,051	$ 3,579,570	$ 986,488
20	Return on Rate Base[7]	4.76%	3.76%	13.44%	-6.12%
21					
22	**Percent of Total Customers**		95.94%	4.04%	0.02%
23					
24					
25					
26					
27					
28					

29 [1] Allocated based on customer counts.
30 [2] Operating Expenses and Depreciation computations are shown on Schedule G-4, Page 1.
31 [3] Property Taxes allocation based on Revenues.
32 [4] Income Tax from Schedule C-1, at present rates. Income Taxes allocated based on taxable income.
33 [5] Interest Synchronized Interest Expense. Allocation based on Rate Base
34 [6] Rate Base computations are shown on Schedule G-3, Page 1
35 [7] Operating Income Divided by Rate Base

Sun City Water District
Test Year Ended June 30, 2013
Cost of Service Study, Using Commodity-Demand Method
Returns at Proposed Rates by Class

Schedule G-2
Page 1
Witness: Thompson

Line No.		Totals	Residential	Commercial	Other
1	Water Revenues	$ 10,773,545	$ 8,590,450	$ 2,022,031	$ 161,064
2	Fire Service Revenues	23,413	22,463	946	4
3	Revenue Annualizations				
4	Declining Usage				
5	Misc. Revenues[1]	162,387	155,799	6,560	28
6	Revenue Difference Com to Res Trnsfers	-	-	-	-
7	Reconciliation H-1 to C-1[1]		-	-	-
8	Total Revenues	$ 10,959,345	$ 8,768,713	$ 2,029,537	$ 161,096
9					
10	Operating Expenses[2]	$ 6,672,602	$ 5,660,758	$ 820,543	$ 191,300
11	Depreciation and				
12	Amortization[2]	1,679,019	1,414,315	210,979	53,725
13	Property Tax[3]	444,766	355,863	82,365	6,538
14	Income Tax[4]	576,390	400,635	187,343	(11,587)
15	Total Operating Expenses	$ 9,372,777	$ 7,831,571	$ 1,301,231	$ 239,975
16	Operating Income	$ 1,586,568	$ 937,142	$ 728,306	$ (78,880)
17	Interest Expense[5]	676,078	551,552	97,622	26,904
18	Net Income	$ 910,490	$ 385,590	$ 630,684	$ (105,783)
19	Rate Base[6]	$ 24,790,108	$ 20,224,051	$ 3,579,570	$ 986,488
20	Return on Rate Base[7]	6.40%	4.63%	20.35%	-8.00%
21					
22	**Percent of Total Customers**		95.94%	4.04%	0.02%
23					
24	**Indicated Monthly Minimums and Single-Tier Commody Rates for 5/8x3/4 Inch Meter**				
25		Sched. G-8, pg 4A	Sched. G-8, pg 4B	Sched. G-8, pg 4C	Sched. G-8, pg 4D
26		All Classes	Residential	Commercial	Other
27	Monthly Minimums	**$ 10.06**	$ 10.72	$ 10.64	$ 141.05
28	Single-Tier Commodity Rate	**$ 1.566**	$ 1.542	$ 1.210	$ 1.821
29					
30					

31 [1] Allocated based on customer counts.
32 [2] Operating Expenses and Depreciation computations are shown on Schedule G-4, Page 2.
33 [3] Property Taxes allocation based on Revenues
34 [4] Income Tax from Schedule C-1, at proposed rates. Income Taxes allocated based on taxable income
35 [5] Interest Synchronized Interest Expense. Allocation based on Rate Base
36 [6] Rate Base computations are shown on Schedule G-3, Page 1
37 [7] Operating Income Divided by Rate Base

Tubac Water District
Test Year Ended June 30, 2013
Cost of Service Study, Using Commodity-Demand Method
Returns at Present Rates by Class

Exhibit
Schedule G-1
Page 1
Witness: Thompson

Line No.		Totals	Residential	Commercial
1	Water Revenues	$ 600,443	$ 408,280	$ 192,163
2	Fire Service Revenues	-	-	-
3	Revenue Annualizations	(4,914)	(3)	(4,911)
4	Declining Usage	(20,841)	(14,288)	(6,553)
5	Misc. Revenues[1]	4,990	4,268	722
6	Reconciliation H-1 to C-1[1]	(484)	(414)	(70)
7	Total Revenues	$ 579,194	$ 397,843	$ 181,351
8				
9	Operating Expenses[2]	$ 428,919	$ 346,034	$ 82,885
10	Depreciation and			
11	Amortization[2]	180,392	142,247	38,145
12	Property Tax[3]	30,238	20,770	9,468
13	Income Tax[4]	(35,463)	(51,827)	16,364
14	Total Operating Expenses	$ 604,086	$ 457,225	$ 146,861
15	Operating Income	$ (24,892)	$ (59,381)	$ 34,489
16	Interest Expense[5]	33,066	25,320	7,746
17	Net Income	$ (57,958)	$ (84,701)	$ 26,743
18	Rate Base[6]	$ 1,437,665	$ 1,100,874	$ 336,793
19	Return on Rate Base[7]	-1.73%	-5.39%	10.24%
20				
21	**Percent of Total Customers**		85.53%	14.47%
22				
23				
24				
25				
26				
27				

28 [1] Allocated based on customer counts.
29 [2] Operating Expenses and Depreciation computations are shown on Schedule G-4, Page 1.
30 [3] Property Taxes allocation based on Revenues.
31 [4] Income Tax from Schedule C-1, at present rates. Income Taxes allocated based on taxable income.
32 [5] Interest Synchronized Interest Expense. Allocation based on Rate Base
33 [6] Rate Base computations are shown on Schedule G-3, Page 1
34 [7] Operating Income Divided by Rate Base

Tubac Water District
Test Year Ended June 30, 2013
Cost of Service Study, Using Commodity-Demand Method
Returns at Proposed Rates by Class

Schedule G-2
Page 1
Witness: Thompson

Line No.		Totals	Residential	Commercial
1	Water Revenues	$ 761,248	$ 520,058	$ 241,190
2	Fire Service Revenues	-	-	-
3	Revenue Annualizations			
4	Declining Usage			
5	Misc. Revenues[1]	4,990	4,268	722
6	Reconciliation H-1 to C-1[1]			
7	Total Revenues	$ 766,238	$ 524,326	$ 241,912
8				
9	Operating Expenses[2]	$ 428,919	$ 346,034	$ 82,885
10	Depreciation and			
11	Amortization[2]	180,392	142,247	38,145
12	Property Tax[3]	33,493	22,919	10,574
13	Income Tax[4]	34,307	(4,629)	38,936
14	Total Operating Expenses	$ 677,111	$ 506,571	$ 170,540
15	Operating Income	$ 89,127	$ 17,755	$ 71,372
16	Interest Expense[5]	33,066	25,320	7,746
17	Net Income	$ 56,061	$ (7,565)	$ 63,625
18	Rate Base[6]	$ 1,437,665	$ 1,100,874	$ 336,793
19	Return on Rate Base[7]	6.20%	1.61%	21.19%
20				
21	**Percent of Total Customers**		85.53%	14.47%
22				
23	**Indicated Monthly Minimums and Single-Tier Commody Rates for 5/8x3/4 Inch Meter**			
24		Sched. G-8, pg 4A	Sched. G-8, pg 4B	Sched. G-8, pg 4C
25		All Classes	Residential	Commercial
26	Monthly Minimums	**$ 39.14**	$ 41.21	$ 33.89
27	Single-Tier Commodity Rate	**$ 5.150**	$ 5.307	$ 4.744
28				
29				

30 [1] Allocated based on customer counts.
31 [2] Operating Expenses and Depreciation computations are shown on Schedule G-4, Page 2.
32 [3] Property Taxes allocation based on Revenues
33 [4] Income Tax from Schedule C-1, at proposed rates. Income Taxes allocated based on taxable income
34 [5] Interest Synchronized Interest Expense. Allocation based on Rate Base
35 [6] Rate Base computations are shown on Schedule G-3, Page 1
36 [7] Operating Income Divided by Rate Base

Mohave Wastewater District
Test Year Ended June 30, 2013
Cost of Service Study, Using Commodity-Demand Method
Returns at Present Rates by Class

Exhibit
Schedule G-1
Page 1
Witness: Thompson

Line No.		Totals	Residential	Commercial	Other Public Auth.
1	Sewer Revenues	$ 1,007,825	$ 974,526	$ 24,477	$ 8,822
2	Effluent Revenues	44,578	43,547	637	394
3	Revenue Annualizations	-	-	-	-
4					
5	Misc. Revenues[1]	3,629	3,602	25	3
6	Reconciliation H-1 to C-1[1]	(193)	(192)	(1)	(0)
7	Total Revenues	$ 1,055,840	$ 1,021,484	$ 25,137	$ 9,218
8					
9	Operating Expenses[2]	$ 645,764	$ 638,442	$ 4,327	$ 2,996
10	Depreciation and				
11	Amortization[2]	245,779	242,474	1,698	1,607
12	Property Tax[3]	53,660	51,914	1,278	468
13	Income Tax[4]	(3,737)	(11,447)	6,428	1,282
14	Total Operating Expenses	$ 941,466	$ 921,383	$ 13,730	$ 6,353
15	Operating Income	$ 114,374	$ 100,101	$ 11,407	$ 2,866
16	Interest Expense[5]	120,520	118,928	835	757
17	Net Income	$ (6,146)	$ (18,827)	$ 10,573	$ 2,108
18	Rate Base[6]	$ 4,635,456	$ 4,574,225	$ 32,102	$ 29,129
19	Return on Rate Base[7]	2.47%	2.19%	35.53%	9.84%
20					
21	**Percent of Total Customers**		99.24%	0.69%	0.07%
22					
23					
24					
25					
26					
27					

28 [1] Allocated based on customer counts.
29 [2] Operating Expenses and Depreciation computations are shown on Schedule G-4, Page 1.
30 [3] Property Taxes allocation based on Revenues.
31 [4] Income Tax from Schedule C-1, at present rates. Income Taxes allocated based on taxable income.
32 [5] Interest Synchronized Interest Expense. Allocation based on Rate Base
33 [6] Rate Base computations are shown on Schedule G-3, Page 1
34 [7] Operating Income Divided by Rate Base

Mohave Wastewater District
Test Year Ended June 30, 2013
Cost of Service Study, Using Commodity-Demand Method
Returns at Proposed Rates by Class

Exhibit
Schedule G-2
Page 1
Witness: Thompson

Line No.		Totals	Residential	Commercial	Other Public Auth.
1	Sewer Revenues	$ 1,306,419	$ 1,263,179	$ 31,805	$ 11,435
2	Effluent Revenues	44,578	44,240	308	31
3	Revenue Annualizations	-	-	-	-
4					
5	Misc. Revenues[1]	3,629	3,602	25	3
6	Reconciliation H-1 to C-1[1]				
7	Total Revenues	$ 1,354,627	$ 1,311,021	$ 32,138	$ 11,468
8					
9	Operating Expenses[2]	$ 645,764	$ 638,442	$ 4,327	$ 2,996
10	Depreciation and				
11	Amortization[2]	245,779	242,474	1,698	1,607
12	Property Tax[3]	58,681	56,792	1,392	497
13	Income Tax[4]	107,776	96,577	9,069	2,130
14	Total Operating Expenses	$ 1,058,000	$ 1,034,285	$ 16,485	$ 7,230
15	Operating Income	$ 296,627	$ 276,736	$ 15,653	$ 4,239
16	Interest Expense[5]	120,520	118,928	835	757
17	Net Income	$ 176,107	$ 157,808	$ 14,818	$ 3,481
18	Rate Base[6]	$ 4,635,456	$ 4,574,225	$ 32,102	$ 29,129
19	Return on Rate Base[7]	6.40%	6.05%	48.76%	14.55%
20					
21	**Percent of Total Customers**		99.24%	0.69%	0.07%
22					
23					
24					
25					
26					
27					
28					
29					

30 [1] Allocated based on customer counts.
31 [2] Operating Expenses and Depreciation computations are shown on Schedule G-4, Page 2.
32 [3] Property Taxes allocation based on Revenues
33 [4] Income Tax from Schedule C-1, at proposed rates. Income Taxes allocated based on taxable income
34 [5] Interest Synchronized Interest Expense. Allocation based on Rate Base
35 [6] Rate Base computations are shown on Schedule G-3, Page 1
36 [7] Operating Income Divided by Rate Base

BEFORE THE ARIZONA CORPORATION COMMISSION

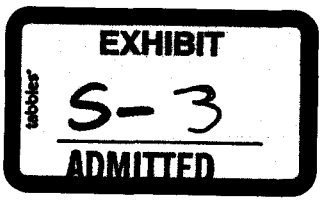

SUSAN BITTER SMITH
Chairman
BOB STUMP
Commissioner
BOB BURNS
Commissioner
DOUG LITTLE
Commissioner
TOM FORESE
Commissioner

IN THE MATTER OF THE APPLICATION OF EPCOR WATER ARIZONA, INC., AN ARIZONA CORPORATION, FOR A DETERMINATION OF THE CURRENT FAIR VALUE OF ITS UTILITY PLANT AND PROPERTY AND FOR INCREASES IN ITS RATES AND CHARGES FOR UTILITLY SERVICE BY ITS MOHAVE WATER DISTRICT, PARADISE VALLEY WATER DISTRICT, SUN CITY WATER DISTRICT, TUBAC WATER DISTRICT, AND MOHAVE WASTEWATER DISTRICT.	)	DOCKET NO. WS-01303A-14-0010

SURREBUTTAL

TESTIMONY

OF

MICHAEL S. THOMPSON, P. E.

UTILITIES ENGINEER

UTILITIES DIVISION

ARIZONA CORPORATION COMMISSION

FEBRUARY 26, 2015

TABLE OF CONTENTS

PAGE

INTRODUCTION 1

PURPOSE OF TESTIMONY 1

PARADISE VALLEY WATER DISTRICT TANK MAINTENANCE EXPENSE 1

EXHIBIT

Paradise Valley Water District Storage Tank Maintenance Costs MST-1

INTRODUCTION

Q. Please state your name and business address.

A. My name is Michael Thompson. My business address is 1200 West Washington Street, Phoenix, Arizona 85007.

Q. By whom and in what position are you employed?

A. I am employed by the Arizona Corporation Commission ("Commission" or "ACC") as a Utilities Engineer - Water/Wastewater in the Utilities Division.

Q. Did you submit Direct Testimony on behalf of the ACC Utilities Division Staff ("Staff") in this case?

A. Yes.

PURPOSE OF TESTIMONY

Q. What is the purpose of your Surrebuttal Testimony?

A. To respond to the Rebuttal Testimony filed by Jeffrey W. Stuck on behalf of EPCOR Water Arizona, Inc. ("EWAZ"). My testimony addresses Mr. Stuck's comments regarding the Paradise Valley Water District Tank Maintenance Expense.

PARADISE VALLEY WATER DISTRICT TANK MAINTENANCE EXPENSE

Q. Did Staff exclude the exterior coating of the Stone Canyon tank?

A. Yes. However, the exterior of the Stone Canyon tank was coated on May 12, 2012 at a cost of $8,784. Since the tank had recently been coated, it was excluded from Staff's original tank maintenance estimate and remains as such.

Q. Has Staff revised its original estimated tank maintenance expense?

A. Yes. Staff revised the exterior ladder replacement estimates of four (4) of the Paradise Valley Water District storage tanks. Storage tank photos taken during the site inspection were reviewed. Based on the review, it was determined that the ladders on four (4) of the nine (9) storage tanks should be replaced. The four (4) tanks included with the expense revisions are the Club Estates, Country Club No. 1, Country Club No.2, and the Racquet Club tanks.

Q. Has Staff made other revisions to its estimated tank maintenance expense?

A. No. However, Mr. Stuck included the exterior coating expense of $15,000 of the Clearwater Hill No. 2 tank in his expense spreadsheet, Exhibit JWS-1, submitted with his Rebuttal Testimony. The exterior of the Clearwater Hill No. 2 tank was coated on May 8, 2013 at a cost of $10,988.75. Due to the recent exterior coating of the tank, the expense was excluded from Staff's original tank maintenance estimate and remains as such.

Q. What is the effect of the adjustments on Staff's original tank maintenance expense?

A. Staff's original estimate totaled $1,707,208 for a fourteen (14) year period, or $121,943 annually. The total revised cost for the fourteen (14) year period is $1,731,208 or $123,658 annually. Staff's revised tank maintenance expense spreadsheet, attached to this testimony, is shown on Exhibit MST-1.

Q. Does this conclude your Surrebuttal Testimony?

A. Yes, it does.

Paradise Valley Water District

Storage Tank Maintenance Costs (Staff Revised Estimate)

February 23, 2015

	Tank Name	60th Street	Clearwater Hills #1	Clearwater Hills #2	Clearwater Hills #3	Club Estates	Country Club #1	Country Club #2	Racquet Club	Stone Canyon	Total
	Tank Capacity (Gallons)	200,000	102,000	100,000	20,000	30,000	500,000	360,000	102,000	90,000	
No.	Item										
	Clean & Paint Exterior:										
1	Epoxy/Polyurethane System	$24,100	$15,800	$0	$6,100	$7,300	$43,700	$35,000	$15,800	$0	$147,800
2	Containment (Lead)	$40,100	$26,200	$0	$10,200	$12,200	$72,800	$58,300	$26,200	$0	$246,000
	Clean & Paint Interior:										
3	3 - Coat Epoxy System	$92,800	$37,200	$55,800	$13,000	$24,100	$126,000	$96,700	$37,200	$35,200	$518,000
4	**Cathodic Protection**	$10,000	$9,000	$9,000	$6,000	$6,000	$12,000	$11,000	$9,000	$8,000	$80,000
5	**Miscellaneous Chipping & Grinding**	$0	$0	$0	$0	$0	$0	$0	$0	$0	$0
6	**Seam Sealing**	$0	$0	$0	$0	$0	$0	$0	$0	$0	$0
7	**Pit Repair**	$17,100	$5,800	$8,700	$2,300	$3,100	$28,000	$20,100	$5,800	$5,400	$96,300
8	**Exterior Flexible Piping Connections (2)**	$12,000	$6,120	$6,000	$1,200	$1,800	$30,000	$21,600	$6,120	$5,400	$90,240
9	**Overflow Pipe & Install Check Valve**	$12,000	$6,120	$6,000	$1,200	$1,800	$30,000	$21,600	$6,120	$5,400	$90,240
10	**Exterior Ladder Well Removal**	$0	$0	$0	$0	$0	$0	$0	$0	$0	$0
11	**Exterior Ladder Replacement**	$0	$0	$0	$0	$6,000	$6,000	$6,000	$6,000	$0	$24,000
12	**Exterior Ladder Safe-Climbing Device**	$2,000	$2,000	$2,000	$2,000	$2,000	$2,000	$2,000	$2,000	$2,000	$18,000
13	**Vandal Deterent - Safety Cage Door**	$1,000	$1,000	$1,000	$1,000	$1,000	$1,000	$1,000	$1,000	$1,000	$9,000
14	**Additional Roof Safety Railing Installation**	$4,000	$4,000	$4,000	$4,000	$4,000	$4,000	$4,000	$4,000	$4,000	$36,000
15	**Existing Roof Safety Railing Modifications**	$2,000	$2,000	$2,000	$2,000	$2,000	$2,000	$2,000	$2,000	$2,000	$18,000
16	**Additional Shell Manhole**	$15,000	$15,000	$15,000	$15,000	$15,000	$15,000	$15,000	$15,000	$15,000	$135,000
17	**Additional Roof Manhole**	$0	$0	$0	$0	$0	$0	$0	$0	$0	$0
18	**Clog-Resistant Vent Installation**	$7,500	$7,500	$7,500	$7,500	$7,500	$7,500	$7,500	$7,500	$7,500	$67,500
18	**Contingency Items**	$23,960	$13,774	$11,700	$7,150	$8,780	$37,400	$29,500	$13,774	$9,090	$155,128
	Total Cost (Each Storage Tank)	$263,560	$151,514	$128,700	$78,650	$102,580	$417,400	$331,300	$157,514	$99,990	**$1,731,208**

EXHIBIT
S-4
ADMITTED

J Regul Econ (2011) 40:261–278
DOI 10.1007/s11149-011-9160-5

ORIGINAL ARTICLE

New approach to estimating the cost of common equity capital for public utilities

Pauline M. Ahern · Frank J. Hanley · Richard A. Michelfelder

Published online: 26 August 2011
© Springer Science+Business Media, LLC 2011

Abstract The regulatory process for setting public utilities' allowed rate of return on common equity has generally used the Gordon DCF, CAPM and Risk Premium specifications to estimate the cost of common equity. Despite the widely known problems with these models, there has been little movement to adopt more recently developed asset pricing models to provide additional evidence for estimating the cost of capital. This paper presents, validates empirically and applies a general yet simple consumption-based asset pricing specification to model the risk-return relationship for stocks and estimate the cost of common equity for public utilities. The model is not necessarily superior to other models in its practical results, yet these results do indicate that it should be used to provide additional estimates of the cost of common equity. Additionally, the model raises doubts as to whether assets such as utility stocks are a consumption (business cycle) hedge.

Keywords Public utilities · Cost of capital · GARCH · Consumption asset pricing model

JEL Classification G12 · L94 · L95

P. M. Ahern · F. J. Hanley
AUS Consultants, Mt. Laurel, NJ 08054, USA
e-mail: pahern@ausinc.com

F. J. Hanley
e-mail: Fhanley@ausinc.com

R. A. Michelfelder (✉)
School of Business, Rutgers University,
Camden, NJ 08102-1656, USA
e-mail: richmich@rutgers.edu

1 Introduction

Following electricity deregulation with the National Energy Policy Act of 1992, the estimation of the cost of common equity capital remains a critical component of the utility rate-of-return regulatory process. Since the cost of common equity is not observable in capital markets, it must be inferred from asset pricing models. The models that are commonly applied in regulatory proceedings are the Gordon (1974) Discounted Cash Flow (DCF), the Capital Asset Pricing (CAPM) and Risk Premium Models. There are other tools used to estimate the cost of common equity such as comparable earnings or earnings-to-price ratios, but they are not asset pricing models. The empirical literature on the CAPM is vast {Fama and French (2004)} and the CAPM is used by a number of US regulatory jurisdictions. The DCF model has not been empirically tested to the same extent as the CAPM, yet it is considered by many US regulatory jurisdictions.

The purpose of this paper is to present, test empirically and apply a recently developed general consumption-based asset pricing model that estimates the risk-return relationship directly from asset pricing data and, when estimated with recently developed time series methods, produces a prediction of the equity risk premium that is driven by its predicted volatility. The predicted risk premium is then added to a risk-free rate of return to provide an estimate of the cost of common equity. We predict two forms of the equity risk premium with the model, the risk premium net of the risk-free rate and the equity-to-debt risk premium (equity risk premium net of the relevant bond yield for the company's stock). Either can be applied to predict the common equity cost of capital for a public utility. Although the model is tested and applied to public utilities for rate of return regulation, it can be used to estimate the cost of capital for any stock. Section 2 reviews the asset pricing models typically used in public utility rate cases and the generalized consumption asset pricing model we propose to estimate the cost of common equity. Section 3 discusses the data and the empirical testing of the consumption asset pricing model. Section 4 reviews the application of the model and compares it with the DCF and CAPM results. Section 5 is the conclusion.

2 DCF, CAPM and consumption asset pricing model

2.1 DCF and CAPM approaches

The standard DCF model frequently used in estimative the cost rate of common equity in regulatory proceedings is defined by the following equation:

$$k = D_0 (1 + g) / P_0 + g,$$

where k is the expected return on common equity; D_0 is the current dividend per share; g is the expected dividend per share growth rate; and P_0 is the current market price.

The DCF was developed by Gordon (1974) specifically for regulatory purposes. Underlying the DCF model is the theory that the present value of an expected future stream of net cash flows during the investment holding period can be determined

by discounting those cash flows at the cost of capital, or the investors' capitalization rate. DCF theory indicates that an investor buys a stock for an expected total return rate which is derived from cash flows received in the form of dividends plus appreciation in market price (the expected growth rate) over the investment holding period. Mathematically, the expected dividend yield $(D_0(1+g)/P_0)$ on market price plus an expected growth rate equals the capitalization rate, i.e., the expected return on common equity.

The standard DCF contains several restrictive assumptions, the most contentious of which during utility cost of capital proceedings is typically that dividends per share (DPS), book value per share (BVPS), earnings per share (EPS) as well as market price grow at the same rate in perpetuity. There is also considerable contention over the proper proxy for g, prospective or historical growth in DPS, BVPS, EPS and market price and over what time period. In addition, although the standard DCF described above is a single stage annual growth model, there is considerable discussion over the use of multiple stage growth models during regulatory proceedings. Some analysts use the discrete version and others use the continuous version of the DCF model. Solving these models for k, the cost of common equity, results in differing equations to solve for k. The equation above is from the discrete version. The continuous version uses the current dividend yield and is not adjusted by g, which results in a lower estimate for k. Because of these and other restrictive assumptions that require numerous subjective judgments in application, it is often difficult for regulatory commissions to reconcile the frequently large disparities in rates of return on common equity recommended by various parties in a public utility rate case.

The CAPM model is defined by the following equation:

$$k = R_f + \beta\left(R_m - R_f\right),$$

where k is the expected return on common equity; R_f is the expected risk-free rate of return; β is the expected beta; and R_m is the expected market return.

CAPM theory defines risk as the co-variability of a security's returns with the market's returns or β, also known as systematic or market risk, with the market beta being defined as 1.0. Because CAPM theory assumes that all investors hold perfectly diversified portfolios, they are presumed to be exposed only to systematic risk and the market (according to the model) will not reward them a risk premium for unsystematic or non-market risk. In other words, the CAPM presumes that investors require compensation only for systematic or market risks which are due to macroeconomic and other events that affect the returns on all assets. Mathematically, the CAPM is applied by adding a forward-looking risk-free rate of return to an expected market equity risk premium adjusted proportionately by the expected beta to reflect the systematic risk.

As with the DCF, there is considerable contention during regulatory cost of capital proceedings as to the proper proxies for all components of the CAPM: the R_f, the R_m, as well as β. In addition, the CAPM assumption that the market will only reward investors for systematic or market risk is extremely restrictive when estimating the expected return on common equity for a single asset such as a single jurisdictional regulated operating utility. Additionally, this assumption requires that the investor have a perfectly diversified portfolio, that is, one with no unsystematic risk. Since

this assumption is not applicable, estimating the cost of common equity capital for a single utility's common equity undoubtedly will not reflect the risk actually faced by the imperfectly diversified investor.

As will be discussed in the next section, our application of the risk premium approach, the consumption asset pricing model and GARCH[1] rest on minimal assumptions and restrictions and therefore requires considerably less judgment in its application.

2.2 Risk premium approach, consumption asset pricing models, and GARCH

A widely used model to estimate the cost of common equity capital for public utilities is the risk premium approach. This approach often estimates the expected rate of return as the long-term historic mean of the realized risk premium above an historic yield plus the current yield of the relevant bond applicable to a specific utility or peer group of utilities. Litigants in public utility rate proceedings debate the choice of inputs to estimate the risk premium as well as how far back to reach into history to collect data for calculating an average that is representative of a forward-looking premium.

It is surprising that, as popular as the risk premium method is in public utility rate cases, the intuitively appealing general consumption-based asset pricing model, with its minimal assumptions and strong theoretical foundation, has not been applied to estimate the cost of common equity capital for public utilities. The model provides projections of the conditional expected risk premium on an asset based on its relation to its predicted conditional volatility. This model generalizes the well known special case asset pricing models such as the Merton (1973) intertemporal capital asset pricing model, Campbell (1993) intertemporal asset pricing model, and the habit-persistence model of Campbell and Cochrane (1999), which are special cases of the general model. The relation of the model to their specialized cases can be found in Cochrane (2006) and Cochrane (2007). The approach of consumption asset pricing models is to make investment decisions that maximize investors' utility from the consumption that they ultimately desire, not returns.

Even if the model is not used to project directly the expected risk premium, it can, at a minimum, be used to verify that the risk premia data chosen for estimating the cost of capital is empirically validated by fitting the model well. The model can be used to predict the equity risk premia net of the risk-free rate (equity risk premium) or to predict the equity-to-debt risk premium for a firm. We perform both of these empirical tests in this paper. The general consumption-based asset pricing model developed in Michelfelder and Pilotte (2011) and based on Cochrane (2004) provides the relationship of the ex ante risk premium to an asset's own volatility in return:

$$E_t[R_{i,t+1}] - R_{f,t} = -\frac{vol_t[M_{t+1}]}{E_t\left[M_{t+1}\right]} vol_t[R_{i,t+1}] corr_t[M_{t+1}, R_{i,t+1}]. \qquad (1)$$

[1] GARCH refers to the generalized autoregressive conditional heteroskedasticity regression model which is discussed below.

where vol_t is the conditional volatility, $corr_t$ is the conditional correlation, and M_{t+1} is the stochastic discount factor (SDF).

The SDF is the intertemporal marginal rate of substitution in consumption, or, $M_{t+1} = \beta \frac{U_{c,t+1}}{U_{c,t}}$, where the U_c's are the marginal utilities of consumption in the next period, $t+1$, and the current period, t, and β is the discount factor for period t to $t+1$. Equation 1 shows that the algebraic sign of the relation between the expected risk premium and the conditional volatility of an asset's risk premium is determined by the correlation between the asset's return and the SDF. That is, the direction of the relation between the asset return and the ratio of intertemporal marginal utilities in consumption inversely determines the relation between the expected risk premium and conditional volatility. When the correlation is equal to negative one, the asset's conditional expected risk premium is perfectly positively correlated with its conditional volatility. A positive relation between the conditionally expected risk premium and volatility obtains when $-1 < corr_t < 0$. A negative relation obtains when $0 < corr_t < 1$. For an asset that represents a perfect hedge against shocks to the marginal utility of consumption, with $corr_t = 1$, there will be a perfect negative correlation between the conditionally expected risk premium and its volatility.[2] Therefore, estimates of the relation between the first two conditional moments of a public utility stock's returns provide a direct test of the effectiveness of a public utility stock, or any asset, as a consumption hedging asset. In Eq. 1, $vol_t[M_{t+1}]/E_t[M_{t+1}]$ is the slope of the mean-variance frontier. If this slope changes over time, the estimated relation between the stock's risk and return will vary over time. This model can also be viewed simplistically as the projected expected risk premium as a function of its own projected risk, given information available at time t.

Note that the model allows for the expected risk premium to be negative if the asset hedges shocks to the marginal utility of consumption. Investors are willing to accept an expected rate of return lower than the risk-free rate of return if the pattern of volatility is such that returns are expected to rise with expected reductions in consumption. Simply, investors are willing to *pay* a premium for a higher level of returns volatility that has the desired pattern of returns. These desired returns patterns have a tendency to offset drops in consumption. Therefore, this model shows that investors may not be averse to volatility, but rather to the timing of expected changes in returns.

Summarizing, several conclusions can be drawn from the general model of asset pricing. First, the sign of the relation between a stock's risk premium and conditional volatility depends on the extent to which the stock serves as an intertemporal hedge against shocks to the marginal utility of consumption. Second, the relation between stock risk and return may be time-varying depending on changes in the slope of the mean-variance frontier. Third, hedging assets have desired patterns of volatility that result in expected rates of return that are less than the risk-free rate. We do not expect

[2] A hedging asset is one that has a positive increase in returns that is coincident with a positive shock in the ratio of intertemporal marginal utilities of consumption. Note that if we assume a concave utility function in consumption, as consumption declines, the marginal utility of consumption rises relative to last period marginal utility. If we think of a decline in consumption as a contraction in the business cycle, the hedging asset delivers positive changes in returns when the business cycle is moving into a contraction, and therefore the asset is a business cycle hedge.

that public utility stocks serve as a hedging asset as they are not viewed as defensive stocks (they do not rise in value during downturns in the stock market) due to asymmetric regulation and returns as discussed in detail in Kolbe and Tye (1990). Under asymmetric regulation, utility regulators have a tendency to allow the return on equity to fall below the allowed return during downturns in the business cycle and to reduce the return should it rise above the allowed return during expansions. Therefore we expect that the parameter estimates of the return-risk relationship to be positive as utility stocks are hypothesized to not be hedges.

We use the GARCH model to estimate the general asset pricing model since the GARCH model accommodates ARCH effects that improve the efficiency of the parameter estimates. It also provides a volatility forecasting model for the conditional volatility of the asset's risk premium. The conditional volatility projection is used, in turn to predict the expected risk premium. We also use the GARCH-in-Mean model (GARCH-M) since it specifies that the conditional expected risk premium is a linear function of its conditional volatility. There is a vast body of literature that estimates asset pricing models with the GARCH and GARCH-M methods and therefore we will not attempt to summarize them here.

The GARCH-M model was initially developed and tested by Engle et al. (1987) to estimate the relationship between US Treasury and corporate bond risk premia and their expected volatilities. The GARCH-M model is specified as:

$$R_{t+1} - R_{f,t+1} = \alpha\sigma_{t+1}^2 + \varepsilon_{t+1} \tag{2}$$

$$\sigma_{t+1}^2 = \beta_0 + \beta_1\sigma_t^2 + \beta_2\varepsilon_t^2 + \eta_{t+1} \tag{3}$$

$$\varepsilon_t \,|\psi_{t-1} \sim T(0, \sigma_t^2) \tag{4}$$

where R_{t+1} is the expected total return on the public utility stock index or individual utility stock; $R_{f,t+1}$ is the risk-free rate of return or the yield on an index of public utility bonds of a specified bond rating for the equity-to-debt premium; σ_{t+1}^2 is the conditional or predicted variance of the risk premium that is conditioned on past information (ψ_{t-1}); and ε_t is the error term that is conditional on ψ_{t-1}.

The conditional distribution of the error term is specified as the non-unitary variance T-distribution due to the thick-tailed distribution of the risk premia data. If the error distribution is thick-tailed, using an approximating distribution that accommodates thick tails improves the efficiency of the estimates. The parameter, α, is the return-to-risk coefficient as specified in Eq. 1 as:

$$\alpha = -\frac{vol_t[M_{t+1}]}{E_t\left[M_{t+1}\right]} corr_t[M_{t+1}, R_{i,t+1}] \tag{5}$$

Note that the coefficient will be positive if the conditional correlation between the SDF and the asset return is negative, indicating that the stock is not a hedging asset. Recall that the SDF is the ratio of intertemporal marginal utilities. Assuming a concave utility function, an upward shock in the ratio implies falling consumption, therefore an associated rise (positive correlation) in the return (R_i) would offset the reduction

in consumption, thereby causing the sign of α to be negative. The parameter, α, is also the ratio of risk premium to variance, or, the Sharpe ratio.

The intercept in Eq. 2 is restricted to zero as specified by the general asset pricing model specification. The restriction on the intercept equal to zero has been found to be robust in producing consistently positive and significant relationships between equity risk premia and risk in GARCH-M models. This is discussed in Lanne and Saikkonen (2006) and Lanne and Luoto (2007). We have found the same results in our modeling in this paper, although we have excluded these results for brevity (available upon request). Therefore we specify the prior assumption that the intercept or the "excess" return, i.e., the return not associated with risk to be equal to zero and drop the intercept from the model.

The consumption asset pricing model is estimated in the empirical section of the paper and applied in the applications section of the paper. The model is tested to (1) determine if equity-to-debt risk premium indices for utilities of differing risk specified by differing bond ratings are validated by the asset pricing model and therefore have some empirical support for risk premium prediction and application to utility cost of capital estimation, (2) determine whether equity risk premia can be predicted and fit the model and therefore be used to estimate the cost of common equity, (3) empirically test the consumption asset pricing model, and (4) ascertain whether utility stocks are assets that hedge shocks to the marginal utility of consumption.

If utility stocks are hedging assets then the cost of common equity should reflect a downward adjustment to a specified risk-free rate to reflect investors' preferences for a hedge and the compensation that they are willing to pay for it.

3 Data and empirical results

We use portfolios as represented by public utility stock and bond indices to estimate the conditional return-risk relationship for the equity-to-debt premium. The equity-to-debt risk premium data employed for estimating Eq. 1 with the GARCH-M conditional return-risk regressions are monthly total returns on the Standard and Poor's Public Utilities Stock Index (utility portfolio), and the monthly Moody's Public Utility Aa, A, and Baa yields for the debt cost. We also obtained equity risk premia for the utility portfolio using the Fama-French specified risk-free rate of return, which is the holding period return on a 1-month US Treasury Bill. The data range from January 1928 to December 2007 with 960 observations. The return-risk relationships for the equity-to-debt premia are risk-differentiated by their own bond rating.

As a check, we also estimate Eq. 1 with the GARCH-M for large common stock returns using the monthly Ibbotson Large Company Common Stocks Portfolio total returns and the Ibbotson US Long-Term Government income returns as the risk-free rate. Additionally, as another check, we do the same for the University of Chicago's Center for Research in Security Prices value-weighted stock index (CRSP) using the Fama-French risk-free rate. This is the Fama-French specification of the market equity risk premium. The data range from January 1926 to December 2007 with 984 observations for the Large Company Common Stock estimation and the data ranges

Table 1 Descriptive statistics: public utility and large company common stocks equity-to-debt and equity risk premia

Utility bond rating	Mean	Std. Dev.	Skewness	Kurtosis	JB
Aa	0.0037	0.0568	0.0744	10.07	2,001.2***
A	0.0035	0.0568	0.0632	10.06	1,991.8***
Baa	0.0031	0.0568	0.0375	10.02	1,973.6***
Ibbotson					
Large common stocks	0.0054	0.0554	0.4300	12.84	3,954.7***
CRSP value-weighted stock index	0.0062	0.0544	0.2309	10.92	2,519.1***

The public utility equity-to-debt risk premia monthly time series is from January 1928 to December 2007 with 960 observations. The equity risk premium monthly time series for the Large Common Stocks and the CRSP index are January 1926 to December 2007 with 984 observations, and January 1926 to December 2007 with 984 observations, respectively. The public utility stocks equity-to-debt risk premia are calculated as the total return on the S&P Public Utilities Index of stocks minus the Moody's Public Utility Aa, A, and Baa Indices yields to maturity. The Large Company Common Stock equity risk premia are the monthly total returns on the Ibbotson Large Company Common Stocks Portfolio minus the Ibbotson Long-Term US Government Bonds Portfolio income yield. The CRSP equity risk premia, or the Fama-French market risk premia are the CRSP total returns on the value-weighted equity index minus the 1-month holding period return on a 1 month Treasury Bill. The Jarque-Bera (JB) statistic is a goodness-of-fit measure of the departure of the distribution of a data series from normality, based on the levels of skewness and excess kurtosis. The JB statistic is χ^2 distributed with 2° of freedom. *** Significant at 0.01 level, one-tailed test

from January 1928 to January 2007 with 960 observations (same as the utilities) for the CRSP estimation.

Table 1 displays the descriptive statistics for these data. We have estimated the mean, standard deviation, skewness and kurtosis parameters, as well as the Jarque-Bera (JB) statistic to test the distribution of the data. The means of the utility equity-to-debt risk premia fall as the risk (bond rating) declines. This is consistent with the notion that larger yields are subtracted from stock returns the lower the bond rating. Intertemporally, there is an inverse relationship between risk premia and interest rates (See Brigham et al. (1985) and Harris et al. (2003)). The mean for risk premia will have a tendency to be larger during low interest rate periods.

Not surprisingly, large company common stocks have the highest mean risk premia as the majority of these firms are not rate-of-return regulated firms with a ceiling on their ROE's close to their cost of capital. Interestingly, the standard deviations of the utility stock returns are similar and slightly higher than large company common stocks. Skewness coefficients are small and positive except for Ibbotson large company common stock returns and CRSP returns that have large positive skewness. This suggests that large unregulated stocks have a tendency to have more and larger positive shocks in returns than do utilities that are rate of return regulated. The kurtosis values show that all of the risk premia are thick-tail distributed. This is also found in the significant JB statistics that test the null hypothesis that the data are normally distributed. The null hypothesis is rejected for all assets. The high kurtosis, low skewness, and significant JB statistics show that the risk premia data are substantially thick-tailed, except for non-utility stocks that are both skewed and thick-tailed. Therefore, robust estimation methods are required to produce efficient regression estimates with non-normal data. Additionally, although not shown but available upon request, the serial correlation and

ARCH Lagrange Multiplier tests show that residuals from OLS regressions of risk premia on volatilities follow an ARCH process. Therefore, the GARCH-M method will improve the efficiency of the estimates. We specify the regression error distribution as a non-unitary variance T-distribution so that thick-tails could be accommodated in the estimation and therefore produce increasingly efficient parameter estimates.

We used maximum likelihood estimation with the likelihood function specified with the non-unitary-variance T-distribution as the approximating distribution of the residuals to accommodate the thick-tailed nature of the error distribution. The equations are estimated as a system using the Marquardt iterative optimization algorithm. The chosen software for estimating the model was EViews© version 6.0 (2007).

Table 2 shows the GARCH-M estimations for the consumption asset pricing Eq. 1. We have estimated Eq. 1 for the utility equity risk premia using the Fama-French risk-free rate in addition to the equity-to-debt risk premia risk-differentiated by bond ratings and the two measures of the market equity risk premium. The chosen measure of volatility is the variance of risk premium (in contrast to other such measures such as the standard deviation or the log of variance. Although these results are not shown for brevity, they are robust to these other measures of volatility). The slope, which is the predicted return-to-predicted risk coefficient and Sharpe ratio, is positive and significant at the 99% level for all assets except the utility stock returns with Baa bonds, which is significant at the 95% level. Given that all slopes are positive, public utility stocks are not found to hedge shocks to the marginal utility of consumption. Note that the reward-to-risk slope rises as bond rating rises. This suggests that lower risk utility stocks provide a higher incremental risk-premium for an increase in conditional volatility. This is consistent with other studies that find that lower risk assets, such as shorter maturity bonds, have higher Sharpe Ratios than long-term bonds and stocks. See Pilotte and Sterbenz (2006) and Michelfelder and Pilotte (2011).

The variance equation shows that all GARCH coefficients (β's) are significant at the 1% level and the sums of β_1 and β_2 are close to, but less than 1.0, indicating that the residuals of the risk premium equation follow a GARCH process and that the persistence of a volatility shock on returns and stock prices for utility stocks is temporary. The estimates of the non-unitary variance T-distribution degrees of freedom parameter are low and statistically significant, indicating that the residuals are well approximated by the T. Similar values for the log-likelihood functions (Log-L) show that each of the regressions has a similar goodness-of-fit. Chi-squared distributed likelihood ratio tests (not shown but available upon request) that compare the goodness of fit among the T and normal specifications of the likelihood function of the GARCH-M regressions show that the T has a significantly better fit than the normal distribution.

The GARCH-M results for the large company common stocks portfolio are similar to those of the utility stocks. Not surprisingly, large company common stocks do not hedge shocks to the marginal utility of consumption and volatility shocks temporarily affect their valuations. The exception is that the return-risk slope is substantially higher than utility stock slopes. This is partially due to the risk-free nature of the risk-free rates used with the non-utility equity risk premia compared to the

Table 2 Estimation of return-risk relation: public utility and large company common stocks

Utility bond rating	α	β_0	β_1	β_2	Log-L	T dist. D.F.
Aa	1.5183*** (0.5308)	0.0000** (0.0000)	0.8791*** (0.0230)	0.1031*** (0.0219)	1,604.4	9.9254*** (3.0272)
A	1.4536*** (0.5308)	0.0000** (0.0000)	0.8790*** (0.0230)	0.1033*** (0.0220)	1,605.0	9.9381*** (3.0408)
Baa	1.3318** (0.5303)	0.0000** (0.0000)	0.8789*** (0.0229)	0.1040*** (0.0220)	1,605.2	10.0*** (3.0540)
Fama-French R_f	2.1428*** (0.5318)	0.0000** (0.0000)	0.8811*** (0.0232)	0.0979*** (0.0212)	1,601.0	9.8773*** (2.9700)
Ibbotson						
Large company common stocks	2.7753*** (0.5513)	0.0001*** (0.0000)	0.8381*** (0.0269)	0.1186*** (0.0332)	1,620.8	8.8457*** (2.1613)
CRSP value-weighted stock index	3.3873*** (0.5673)	0.0001*** (0.0000)	0.8330*** (0.0270)	0.1149*** (0.0358)	1,598.9	8.8571*** (1.9505)

The results below are the GARCH-in-Mean regressions for the risk premium $(R_{t+1} - R_{f,t+1})$ on the conditional variance of the risk premium (σ^2_{t+1}) in the mean equation. The intercept in the mean equation is restricted to be equal to zero. The public utility equity-to-debt risk premia monthly time series is from January 1928 to December 2007 with 960 observations. The equity risk premium monthly time series for the Large Company Common Stocks and the CRSP index are January 1926 to December 2007 with 984 observations, and January 1926 to December 2007 with 984 observations, respectively. The public utility stocks equity-to-debt risk premia are calculated as the total return on the S&P Public Utilities Index of stocks minus the Moody's Public Utility Aa, A, and Baa Indices yields to maturity. The Large Company Common Stock equity risk premia are the monthly total returns on the Ibbotson Large Company Common Stocks Portfolio minus the Ibbotson Long-Term US Government Bonds Portfolio income yield. The CRSP equity risk premia, or the Fama-French market risk premia are the CRSP total returns on the value-weighted equity index minus the 1-month holding period return on a 1 month Treasury Bill. The estimated model is:

$$R_{t+1} - R_{f,t+1} = \alpha\sigma^2_{t+1} + \varepsilon_{t+1} \text{ where } \alpha = -\frac{vol_t[M_{t+1}]}{E_t[M_{t+1}]} corr_t[M_{t+1}, R_{i,t+1}]$$

$$\sigma^2_{t+1} = \beta_0 + \beta_1\sigma^2_t + \beta_2\varepsilon^2_t + \eta_{t+1}$$

The conditional distribution of the error term is the non-unitary variance T-distribution to accommodate the kurtosis of the risk premia and error term. Standard errors are in parentheses. ***, **, * denote significance at the 0.01, 0.05, and 0.10 levels, respectively for two-tail tests

utility bond yields that reflect risk. The utility stocks slope value of 2.1428 using the Fama-French risk-free rate is closer to the higher CRSP value of 3.3873 that is also based on the Fama-French risk-free rate. This is inconsistent with previous results herein and in other papers that find that Sharpe Ratios are lower for higher risk assets unless this finding can be interpreted as utility stocks having more risk than non-regulated stocks. The standard deviations on Table 1 suggest that utility stock return volatilities are as high as the stock returns of non-regulated firms. However, similar model estimates of portfolios of common stocks yield unstable results, such as negative as well as positive return-risk slopes when the intercept is not restricted to zero. See Campbell (1987), Glosten et al. (1993), Harvey (2001), and Whitelaw (1994).

Stock market results are highly sensitive to empirical model specification. Many studies do not consider the impact of a zero-intercept prior restriction on the stability of their results. This simple innovation has led to more consistent results in modeling stock market risk-return relationships, and therefore we have included it in this paper.

The estimation of the consumption asset pricing model for utility stock equity-debt risk premia shows that the use of bond-rating risk-differentiated risk premia are validated as their risk-return relationships are well-fitted by theoretical and empirical models of risk and return. Therefore, these data impound good representations of the risk and reward relationship.

One concern is the intertemporal stability of the alphas. Figure 1 plots the utility stock portfolio alpha (using the Fama-French R_f to calculate the premium) and its standard error for 240 month rolling regressions of the model estimated with GARCH-M in the same manner as described above to review the intertemporal stability of the alpha. A 20-year period was used for each estimation to trade off timeliness with sufficient observation of up and down stock market regimes and business cycles. This resulted in 720 estimated alphas from 1947 to 2007. The results show that the utility alpha is stable to the extent that the algebraic sign is always positive and generally significant, therefore the nature of utility stocks are assets that are not and have never been hedges during the second half of the twentieth century up to the present. The value of the alpha does change substantially. The mean of the alpha is 4.40 with a range from −0.11 (insignificantly different from 0) to 11.66. As a comparison, the alpha for the CRSP value-weighted stock index was also estimated with rolling regressions in the same manner and for the same time period. Figure 2 is a plot of the CRSP alpha and standard error. Note that the general stock market alpha is similar to that of utility stocks. They are all positive and almost all statistically significant and follow a strikingly similar cycle. Figure 3 plots both the utility and stock market alphas and demonstrates the similarity. The correlation coefficient between the utility and stock market alphas is 0.88. Recalling that the alpha is a Sharpe Ratio, we see that return to risk ratio does change substantially. This is consistent with the results in Pilotte and Sterbenz (2006).

One other interesting observation is that the standard errors of the alphas are highly stable over the study period and are very similar in magnitude regardless of the size of the corresponding alpha. Whereas the alpha follows a cyclical pattern, the volatility in alpha is highly stationary around a constant, long-run mean.

The GARCH-M model estimations of the consumption asset pricing model were specified with variance as the measure of volatility. We also performed the same model estimations with alternative specifications of volatility such as the standard deviation and the log of variance and the results were not sensitive to this specification.

4 Application

We apply the model in this section to compare the cost of common equity capital estimates with the DCF and CAPM models. Using EViews© Version 6.0, we estimated the model coefficients (α, $\beta's$) over rolling 24 month periods ending December 2008.

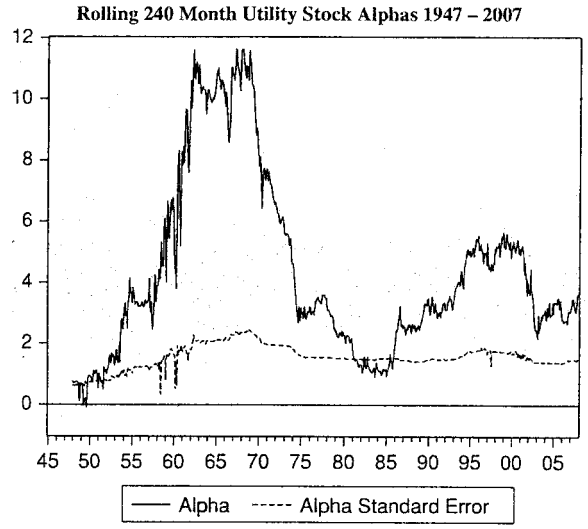

Fig. 1 Rolling 240 month utility stock alphas 1947–2007

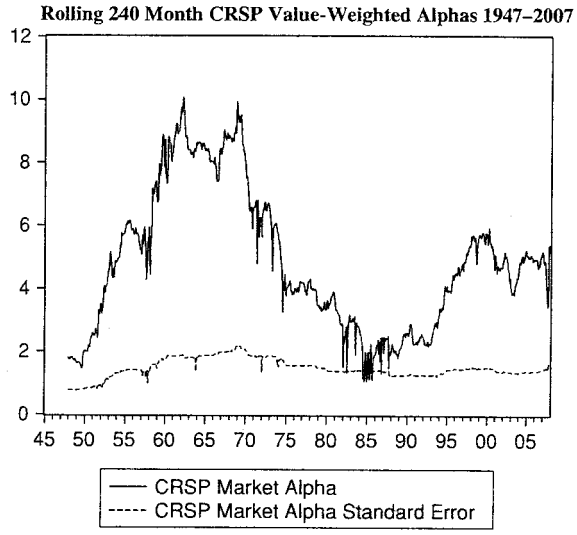

Fig. 2 Rolling 240 month CRSP value-weighted alphas 1947–2007

We repeated the estimation over 5, 10, 15, 20 and 79 year periods.[3] Predicted monthly variances (σ^2_{t+1}) were generated from these estimations to produce predicted risk premiums that were calculated by multiplying the predicted variance by the "α" slope

[3] We did not include the results of the 10 and 15 year estimations to abbreviate the amount of empirical results presented since they added no material insights beyond those already presented.

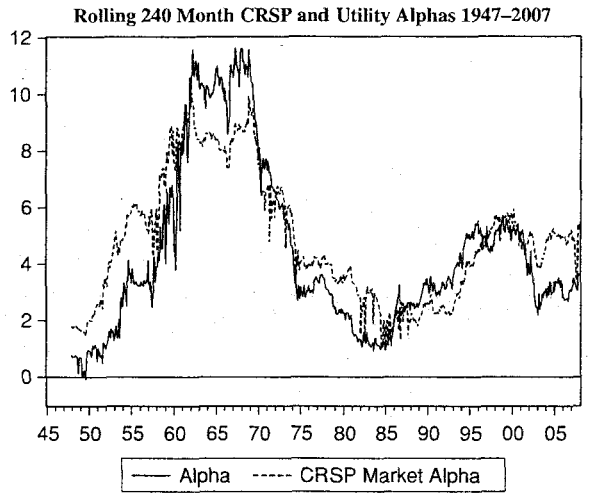

Fig. 3 Rolling 240 month CRSP and utility alphas 1947–2007

Table 3 Estimates of expected risk premia

	Mean (%)		Range (%)		Standard deviation (%)	
	Average	Spot	Average	Spot	Average	Spot
Ibbotson Associates data						
79-years	9.59	5.76	8.74–9.96	2.62–22.60	0.32	5.24
20-years	6.77	6.94	4.99–8.50	2.24–28.95	0.95	6.88
5-years	4.20	10.25	−98.49–11.62	−100.00–39.65	22.00	26.61
S&P Utility Index						
79-years	5.28	2.90	4.30–5.28	1.65–8.15	0.32	1.60
20-years	3.93	3.51	2.78–5.03	2.18–6.88	0.57	1.11
5-years	31.82	326.63	7.77–156.97	6.12–6465.74	31.47	1283.51

coefficient. To test the stability of the predicted risk premia over time, the predicted risk premia were calculated using either the predicted variance over each entire time period or the last monthly (spot) predicted variance. Table 3 presents the mean predicted risk premia, the range of predicted premia and the standard deviations for each time period. It is clear from the results that the risk premia are more stable over the rolling 24 month period when calculated using the average predicted variance compared with using the spot variance. Secondly, the 20 and 79 year means are substantially more stable and reasonable in magnitude than the 5 year means.

Next, given the lessons from the analyses above, we apply the model to mechanically[4] estimate the cost of common equity for 8 utility companies using the model and

[4] The term "mechanically" in this context means that the resulting values have been developed in a consistent manner with the same inputs across all utility stocks but no subjective judgment was used to develop final values for each specific utility stock application.

the DCF and CAPM as comparisons. We also calculated the realized market return for comparison. Two publicly-traded electric, electric and gas combination, gas, and water utilities respectively were chosen for the application. The Gordon (1974) DCF and CAPM models are used in many utility regulatory jurisdictions in the US.

The DCF was applied using a dividend yield, D_0/P_0, derived by dividing the year-end indicated dividend per share (D_0) by the year-end spot market price (P_0). The dividend yield is grown by the year-end I/B/E/S five year projected earnings per share growth rate (g) to derive $D_0(1+g)/P_0$. The one-year predicted dividend yield is then added to the I/B/E/S five-year projected EPS growth rate to obtain the DCF estimate of the cost of common equity capital, k. This study was conducted for the 5 years ending 2008.

The CAPM was applied by multiplying the Value Line beta (β) available at year-end for each company by the long-term historic arithmetic mean market risk premium ($R_m - R_f$). $R_m - R_f$ is derived as the spread of the total return of large company common stocks over the income return on long-term government bonds from the Ibbotson SBBI 2009 Valuation Yearbook. The resulting company-specific market equity risk premium is then added to a projected consensus estimate of the yield on 30-year U.S. Treasury rate provided by Blue Chip Financial Forecasts as the risk-free rate (R_f) to obtain the CAPM result. This study was also conducted over the 5 years ending 2008.

Figures 4–11 show the histograms of the cost of common equity capital estimations for each of the eight public utility stocks and the realized market returns in the forthcoming year. The consumption asset pricing model appears to track more consistently with the CAPM than with the DCF which seems to produce generally lower values than the other methods. The consumption asset pricing model results are similar to the CAPM. The model and the CAPM compete as the best predictor of the rate of return on the book value of common equity (not shown but available upon request), but none of the expected returns were good predictors of market returns. That does not infer that they were not good predictors of *expected* market returns. These results are an initial indicator that the consumption asset pricing model provides reasonable and stable results. This paper does not suggest at this early juncture that the consumption asset pricing model is superior to the CAPM or DCF, although it is based on far less restrictive assumptions than these other models. For example, both the DCF and CAPM assume that markets are efficient. Many assume that the DCF requires that the market-to-book ratio to always equal one, whereas the long-term value for the Standard and Poor's 500 is equal to 2.34. The CAPM assumes that investors demand higher returns for higher volatility and that the minimum required return is the risk-free rate, whereas the consumption asset pricing model allows for investors to require returns less than the risk-free rate for stocks that may have relatively higher volatility but are hedging assets that have desirable return fluctuation patterns that offset downturns in the business cycle. Unlike the CAPM, the model prices the risk to which investors are actually exposed, whether it's systematic risk or not. Some investors are diversified and some are not; the model prices whatever risk to which the aggregate of investors of the specific stock is exposed.

We find that the consumption asset pricing model should be used in combination with other cost of common equity pricing models as additional information in the devel-

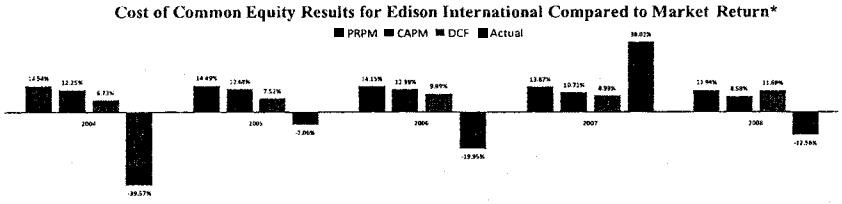

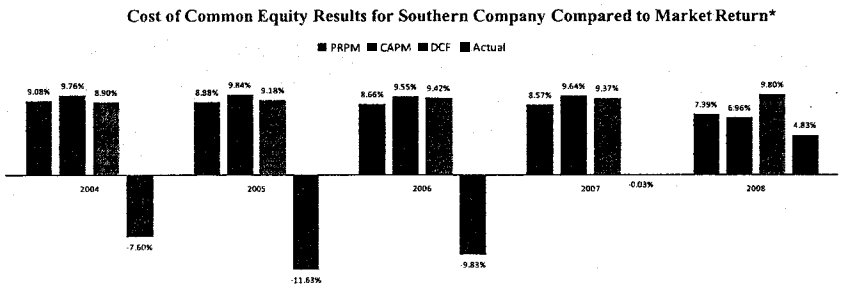

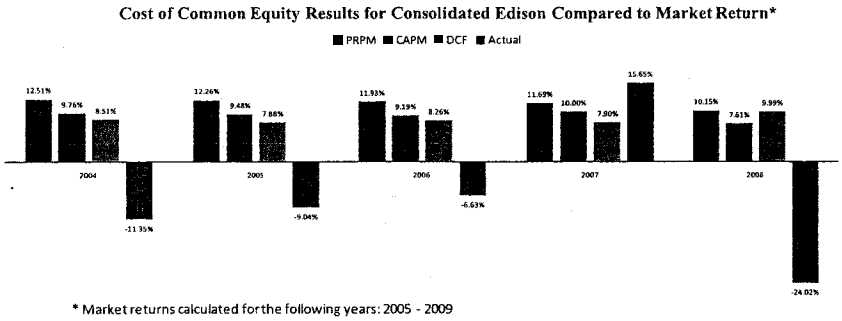

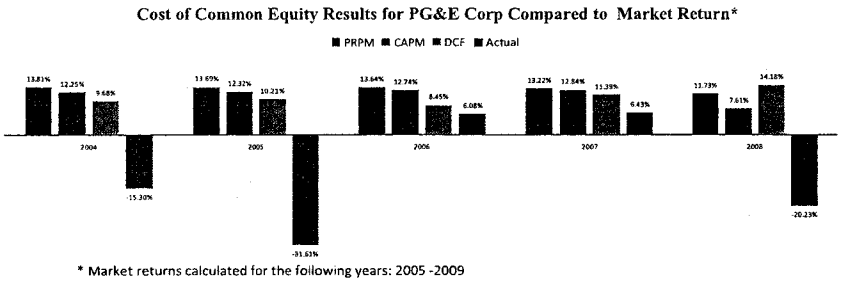

Figs. 4–11 Comparison of the cost of common equity estimates and market

opment of a cost of common equity capital recommendation. Practitioners may find the modeling methods and the use of relatively advanced econometric methods rather cumbersome. The software for performing these estimations is readily available from EViews© and SAS©; two commonly available software packages at utilities, consult-

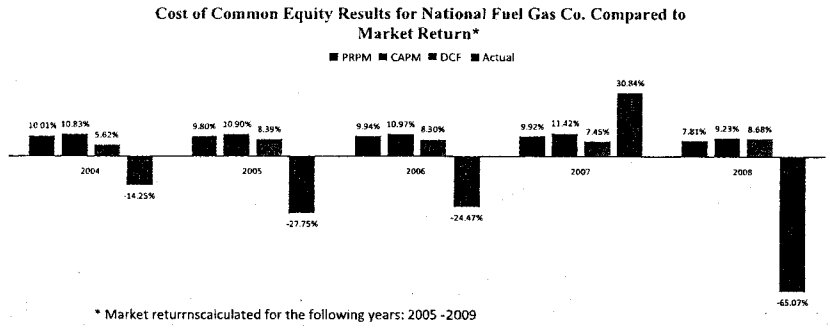

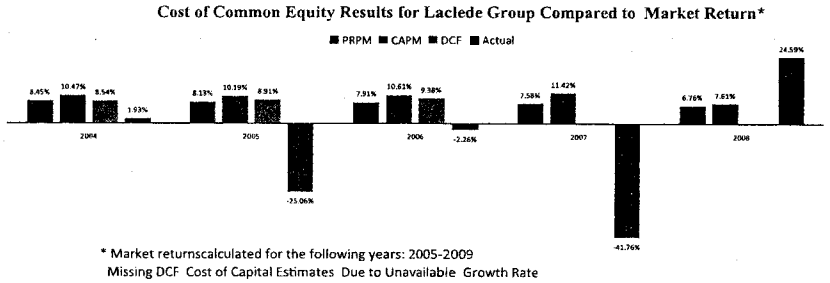

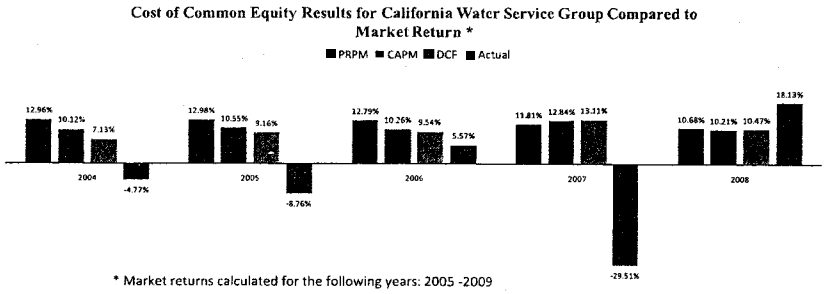

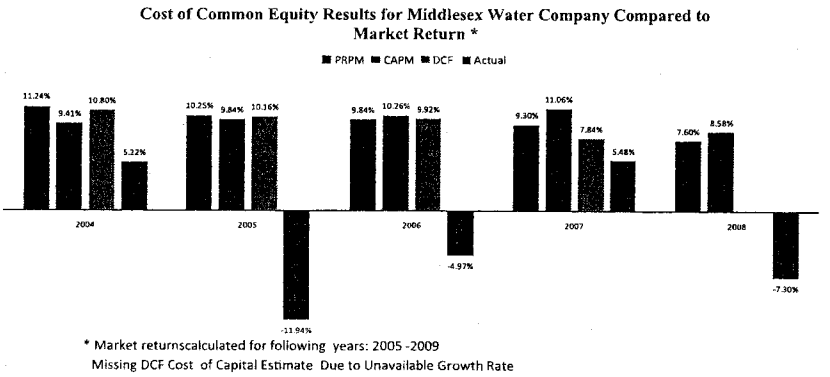

Figs. 4–11 continued

ing firms and financial firms. Recent Ph.D. and M.S. holding members of research departments of investment and consulting firms have ready access to the model and methods discussed in this paper, although it will require years for these tools, like any "new" technology, to diffuse into standard use. Another problem is that the model requires a substantial time series history on stock returns data to develop stable estimates of risk premia This is problematic especially for the electric and gas utility industries that have consolidated with many mergers in the recent past. This problem can be addressed by developing and predicting the value-weighted risk premium of a portfolio of similar stocks such as electric utilities that have nuclear generating assets. The specific stock in question would be included in the returns index with a weight based on market capitalization that would go to 0 when the stock price history is no longer existent reaching back into the past.

5 Conclusion

The purpose of this paper is to introduce, test empirically and apply a general consumption based asset pricing model that is based on a minimum of assumptions and restrictions that can be used to predict the risk premium to be applied in estimating the cost of common equity for public utilities in regulatory proceedings. The results support the simple consumption-based asset pricing model that predicts the ex ante risk premium with a conditionally predicted volatility in risk premium. The estimates of the cost of common equity from the consumption asset pricing model compare well with rates of return on the book value of common equity and with the CAPM, although both the model and the CAPM results are substantially higher than the DCF. This is quite common in the practice of the cost of common equity in the utility industry. The results of the model are stable and consistent over time. Therefore the model should be considered as it provides additional evidence on the cost of common equity in general and specifically in public utility regulatory proceedings. Secondly, the use of bond-rated yields to predict risk differentiated equity-to-debt risk premia is supported by the empirical evidence and therefore should be applied in estimating the cost of common equity. Finally, the robust empirical evidence on the positive risk-return relationship also shows that utility stocks are not a consumption hedge and are not good hedging securities against contractions in the economy. The model and estimation methodology presented in this paper provide a relatively simple tool to determine whether any asset is a hedge to adverse changes in the business cycle through the level of consumption in the economy.

Acknowledgments We would like to thank Dylan D'Ascendis, Sal Giunta, Selby Jones, III and Alison McVicker for highly capable research assistance, participants at the Center for Research in Regulated Industries Eastern Conferences and the Society of Utility Regulatory and Financial Analysts Annual Financial Forum, two anonymous reviewers and the editor for helpful comments.

References

Brigham, E. F., Shome, D. K., & Vinson, S. R. (1985). The risk premium approach to measuring a utility's cost of capital. *Financial Management, 14*, 33–45.

Campbell, J. Y. (1987). Stock returns and the term structure. *Journal of Financial Economics, 18*, 373–399.

Campbell, J. Y. (1993). Intertemporal asset pricing without consumption data. *American Economic Review, 83*, 487–512.

Campbell, J. Y., & Cochrane, J. H. (1999). By force of habit: A consumption-based explanation of aggregate stock market behavior. *Journal of Political Economy, 107*, 205–251.

Cochrane, J. H. (2004). *Asset pricing*. Revised Edition. Princeton, NJ: Princeton University Press.

Cochrane, J. H. (2006). Financial markets and the real economy. NBER Working Paper.

Cochrane, J. H. (2007). *Portfolio theory. Manuscript*. University of Chicago.

Engle, R. F., Lilein, D., & Robins, R. (1987). Estimation of time varying risk premia in the term structure: The ARCH-M model. *Econometrica, 55*, 391–407.

EViews©. (2007). Version 6.0. Quantitative Micro Software, LLC.

Fama, E., & French, K. (2004). The capital asset pricing model: Theory and evidence. *Journal of Economic Perspectives, 18*, 25–46.

Glosten, L. R., Jaganathan, R., & Runkle, D. E. (1993). Relationship between the expected value and the volatility of the nominal excess returns on stocks. *Journal of Finance, 48*, 1779–1801.

Gordon, M. (1974). *The cost of capital to a public utility*. East Lansing, MI: MSU Public Utility Studies.

Harris, R. S., Marston, F. C., Mishra, D. R., & O'Brien, T. J. (2003). Ex ante cost of equity estimate of S&P 500 firms: The choice between global and domestic CAPM. *Financial Management, 32*, 51–66.

Harvey, C. R. (2001). The specification of conditional expectations. *Journal of Empirical Finance, 8*, 573–637.

Kolbe, A. L., & Tye, W. B. (1990). The *Duquense* opinion: How much "Hope" is there for investors in regulated firms. *Yale Journal on Regulation, 8*, 113–157.

Lanne, M., & Luoto, J. (2007). Robustness of risk-return relationship in the U.S. stock market. Helsinki Center of Economic Research, Discussion Paper No. 168.

Lanne, M., & Saikkonen, P. (2006).Why is it so difficult to uncover the risk-return tradeoff in stock returns? *Economic Letters, 92*, 118–125.

Merton, R. C. (1973).An intertemporal capital asset pricing model. *Econometrica, 41*, 867–887.

Michelfelder, R. A., & Pilotte, E. A. (2011). Treasury bond risk and return, the implications for the hedging of consumption and lessons for asset pricing. *Journal of Economics and Business* (forthcoming).

Pilotte, E., & Sterbenz, F. (2006).Sharpe and treynor ratios on treasury bonds. *Journal of Business, 79*, 149–180.

Whitelaw, R. W. (1994).Time-variation and covariations in the expectation and volatility of stock market returns. *Journal of Finance, 49*, 515–541.

EXHIBIT
S-5
ADMITTED

Comparative Evaluation of the Predictive Risk Premium Model™, the Discounted Cash Flow Model and the Capital Asset Pricing Model for Estimating the Cost of Common Equity

Richard A. Michelfelder, Ph.D.
Clinical Associate Professor of Finance
Rutgers University
School of Business, Camden
(corresponding author)

Pauline M. Ahern, CRRA
Principal
AUS Consultants, Inc.

Dylan W. D'Ascendis, CRRA
Principal
AUS Consultants, Inc.
Principal

Frank J. Hanley, CRRA
Principal
AUS Consultants, Inc.

March 2013

P. M. Ahern, Principal & Director
D. W. D'Ascendis, Principal
F. J. Hanley, Principal
155 Gaither Drive, Suite A
Mount Laurel, NJ 08054
pahern@ausinc.com
ddascendis@ausinc.com
fhanley@ausinc.com
856.234.9200 (office)

Dr. R. A. Michelfelder, Clinical Associate Professor
Rutgers University, School of Business, Camden
227 Penn Street
Camden, NJ 08102
richmich@rutgers.edu
856.225.6919 (office)
609.214.0986 (mobile)

The authors wish to thank Selby P. Jones, III, Associate, AUS Consultants, for his technical assistance.

Abtract

The regulatory process for setting a utility's allowed rate of return on common equity has generally relied upon the Discounted Cash Flow Model and Capital Asset Pricing Model. Despite the widely known problems with these models, there has been little initiative to adopt more recently developed asset pricing models which have fewer limiting assumptions and require less subjective judgment. The December 2011 issue of the *Journal of Regulatory Economics* published the article "New Approach to Estimating the Cost of Common Equity Capital for Public Utilities",[i] and introduced the Predictive Risk Premium Model™. The model is a general, yet simple, consumption-based asset pricing model of the risk / return relationship for common stocks which can be used to estimate the cost of common equity. The model produces stable, consistent and expectational results. This article presents in summary form exhaustive empirical testing of the PRPM™ for utilities by industry. The empirical testing confirms the *Journal of Regulatory Economics* article conclusion: the PRPM™ produces stable, consistent, and reasonable results for each of the electric, electric and gas, gas local distribution, and water utility industries.

Introduction

The lead article in the July 2008 issue of this *Journal*, "Integrating Renewables into the US Grid: Is it Sustainable," by Professors Peter Mark Jansson and Richard A. Michelfelder[ii], called for the reregulation of the electric utility industry and putting the planning of generation assets, whether renewable or not, back in the hands of the experts and those ultimately responsible for reliability, the electric utilities. During the last ten years or so, states have been backpedalling on deregulation and therefore methods for estimating the cost of common equity and the allowed rate of return have generated new interest as regulating rate of return is not going away as once thought.

The regulatory process for setting a public utility's allowed rate of return on common equity has generally relied upon the familiar Gordon Discounted Cash Flow Model (DCF) and Capital Asset Pricing Model (CAPM). Despite the widely known problems with these models, there has been little initiative to adopt more recently developed asset pricing models which have fewer limiting assumptions and require less subjective judgment than these traditional models. In December 2011, the article "New Approach to Estimating the Cost of Common Equity Capital for Public Utilities",[iii] published in *The Journal of Regulatory Economics* introduced the Predictive Risk Premium Model™ (PRPM™). The PRPM™ is a general, yet simple, consumption-based asset pricing model of the risk / return relationship for common stocks which can be used to estimate the cost rate of common equity (ROE). The stability and consistency of the results of PRPM™

and the ex ante, i.e., expectational, nature of those results indicate that the model should be used to provide additional input into the process of determining an allowed rate of return on common equity for public utilities.

Since publication, more exhaustive empirical testing of the PRPM™ was conducted for the four utility industry groups which comprise the AUS Utility Reports©[iv] universe of publicly traded utilities: an electric utility group; a combination electric and natural gas distribution utility group; a natural gas distribution utility group; and, a water utility group. The empirical testing confirms the conclusion of the original *Journal of Regulatory Economics* article: the PRPM™ produces stable results which are consistent over time.

Development of the PRPM™

The cost rate of common equity is not directly observable in the capital markets and must be inferred using various financial models. The most commonly used cost of common equity models in the regulatory arena are the aforementioned DCF and the CAPM. Since these models are based upon many restrictive assumptions, they involve a significant amount of analyst subjectivity in their application, resulting in much debate over the application and results of these models.

The empirical approach to the PRPM™ is based upon the work of Robert F. Engle, Ph.D.[v] who shared the Nobel Prize in Economics in 2003 "for methods of analyzing economic *time series* with time-varying volatility (*ARCH*)"[vi], with "ARCH" standing for autoregressive conditional heteroskedasticity. In other

words, volatility (variance) changes over time and is related to itself from one period to the next, especially in financial markets. Engle discovered that the volatility (usually measured by variance) in prices and returns clusters over time. Therefore, volatility is highly predictable and can be used to predict future levels of risk. The theoretical asset pricing model was recently developed in the *Journal of Economics and Business* in December 2011 by Rutgers University professors Richard Michelfelder and Eugene Pilotte[vii].

In this study, the PRPM™ estimates the risk / return relationship directly using the outcomes of investors' historical pricing decisions and actual long-term U.S. Treasury security yields, with the predicted equity risk premium generated by the prediction of volatility, i.e., the risk, based upon the volatility of past equity risk premiums for the AUS Utility Reports universe of companies.

Estimation Method

The statistical details of the estimation method of the PRPM™ can be found in the original article in the *Journal of Regulatory Economics*, "New Approach to Estimating the Cost of Common Equity Capital for Public Utilities". Essentially, there are two steps to the application of the PRPM™. First, predicted volatility, i.e., risk, is derived based upon previous volatility plus previous prediction error, because volatility is highly predictable and correlated over time. Second, the predicted volatility can then be used to generate the predicted equity risk premium (ERP) by multiplying it by the GARCH coefficient,

i.e., the slope of the predicted volatility. A risk-free rate is then added to the ERP to estimate the ROE, i.e., the market based cost of common equity.

Application of the PRPM™ to Publicly Traded Utility Companies

The PRPM™ was applied to the companies comprising the AUS Utility Reports©' utility industry groups: the electric, combination electric and natural gas distribution, natural gas distribution and water groups. The PRPM™ variances were calculated monthly for each individual utility beginning with the first available monthly data included for each individual utility in the University of Chicago Booth School of Business' Center for Research in Security Prices (CRSP®) and corresponding monthly long-term U.S. Treasury bond yields from Morningstar's *Ibbotson® SBBI® – 2012 Valuation Yearbook – Market Results for Stocks, Bonds, Bills and Inflation – 1926-2011 (SBBI)* through 72 month ending periods, i.e., January 2006 through December 2011.

Using EViews© Version 7.2, the PRPM™ coefficients and predicted monthly variances were estimated as described in the *JRE* article for each time series of equity risk premiums. Consistent with the conclusion drawn in the *JRE* article, the predicted equity risk premiums were calculated using the averaged predicted volatilities (variances) over the entire time period for which CRSP data were available for each utility, multiplied by the GARCH, or slope, coefficient generated through EViews® for each time series. To calculate the PRPM™ cost rate of common equity for each utility, the average predicted utility specific equity risk premium through each month ending from January 2006 through December 2011 was then added to the projected consensus forecast of the expected yields

on 30-year U.S. Treasury bonds for the next six quarters by the reporting economists in the concurrent *Blue Chip Financial Forecasts (Blue Chip).*

The DCF was applied in a simple manner, using a dividend yield, D_0 / P_0, derived by dividing the month-end indicated dividend per share (D_0) by the month-end closing market price (P_0) for each utility. The dividend yield was then grown by the month-end I/B/E/S consensus five-year projected earnings per share (EPS) growth rate (g) to derive (D_0 (1 + g) / P_0). The one-month predicted dividend yield was then added to the concurrent month's I/B/E/S consensus five-year average projected EPS growth rate to obtain the DCF estimate of the cost of common equity capital, k. The DCF estimates were also calculated for each month from January 2006 through December 2011.

The CAPM was applied by multiplying *Value Line Inc.'s* beta (β)[viii], for each utility, by the long-term historical arithmetic mean market equity risk premium ($R_m - R_f$) through the previous year. ($R_m - R_f$) was derived as the spread of the total return of large company common stocks over the income return on long-term government bonds from the annual <u>*SBBI Valuation Yearbooks*</u> for the years ending 2005 through 2010. The resulting utility-specific equity risk premium was then added to the same projected consensus forecast of the expected yields on 30-year U.S. Treasury bonds for the next six quarters by the reporting economists in the concurrent *Blue Chip* discussed above, to obtain the CAPM estimate of the cost of common equity capital, k. The CAPM estimates were also calculated for each month from January 2006 through December 2011.

Finally, the results for each of the models, the PRPM™, DCF, and CAPM, were averaged for each utility group[ix]. Chart 1 presents the average PRPM™ results for each of the AUS Utility Reports© utility groups for each month from January 2006 through December 2011.

Chart 1

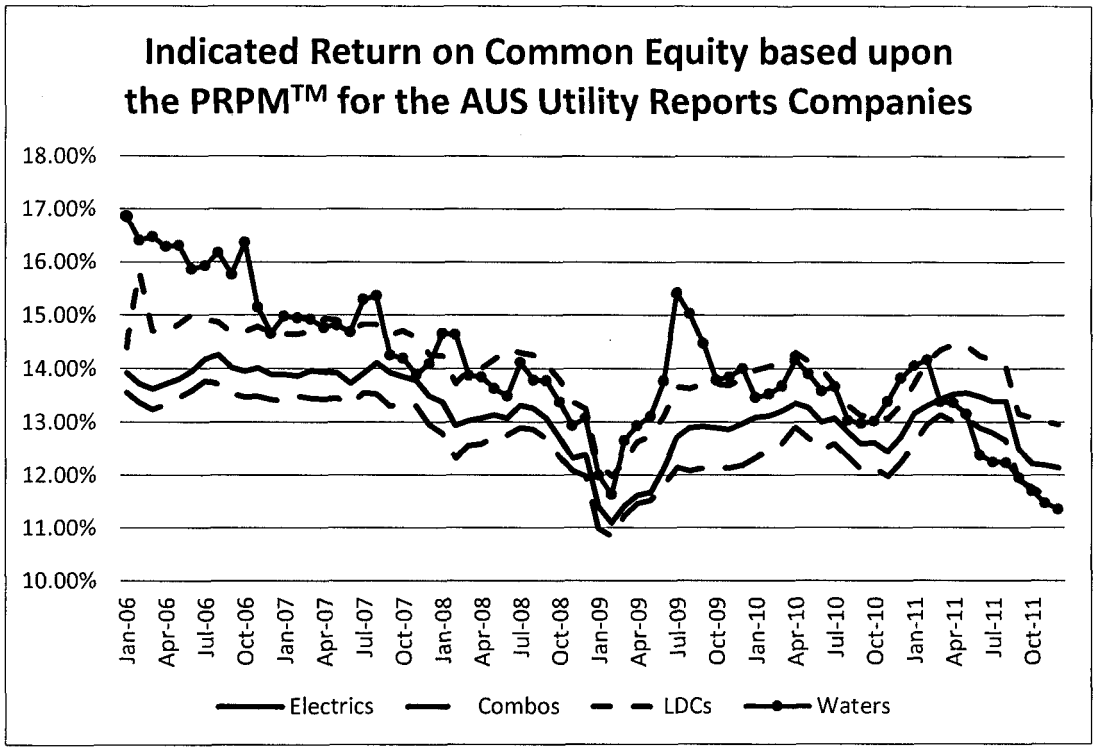

Chart 1 shows that indicated ROEs derived from the PRPM™ were stable for all utility groups until the global financial crisis of 2008 – 2009. During 2008 and 2009, the PRPM™ derived ROEs decline, which in the authors' opinion, was a result of a "flight to quality" by investors, i.e., the willingness of an investor to accept a lower, but more certain, return during financial downturns. Chart 1 also indicates that the PRPM™ derived ROEs for the electric, combination electric and natural gas distribution and natural gas distribution utility groups follow a

nearly identical pattern throughout the 72-month period, with the water utility group following a similar, but more volatile pattern.

Charts 2 through 5 present a comparison of the average PRPM™, DCF, and CAPM cost of common equity estimates for each AUS Utility Reports© utility industry group, i.e., the electric utility group; the combination electric and natural gas distribution utility group; the natural gas distribution utility group; and, the water utility group for each month from January 2006 through December 2011.

Chart 2

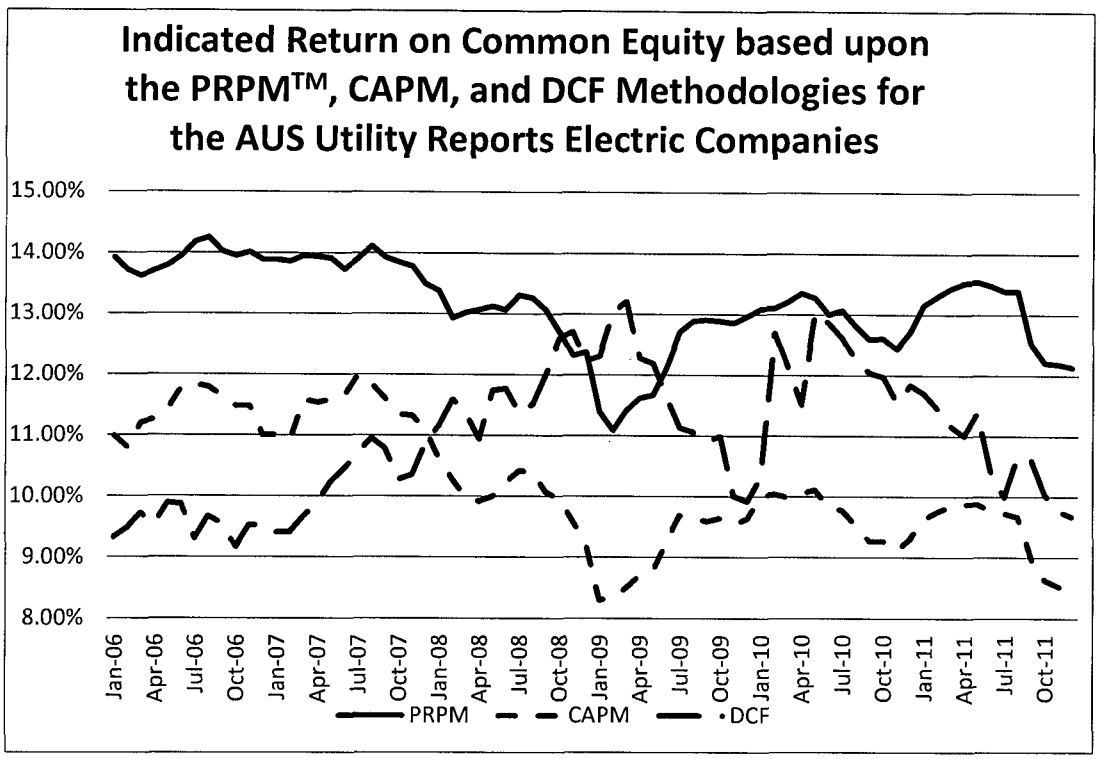

Chart 3

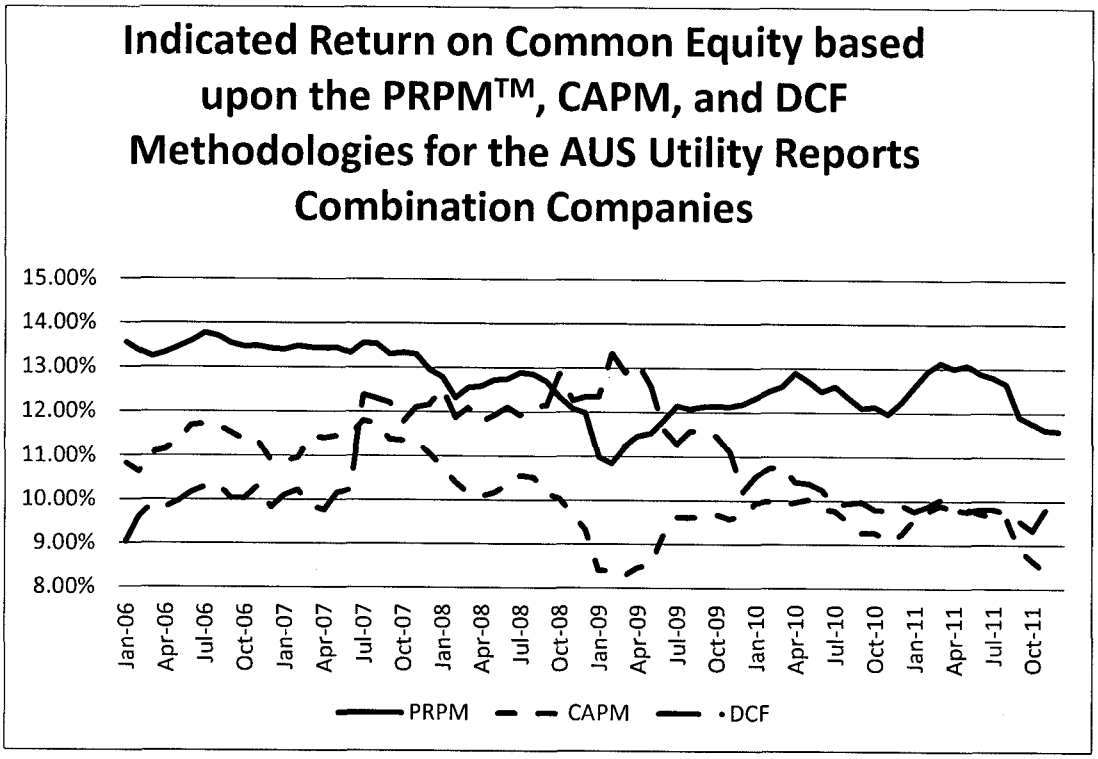

Chart 4

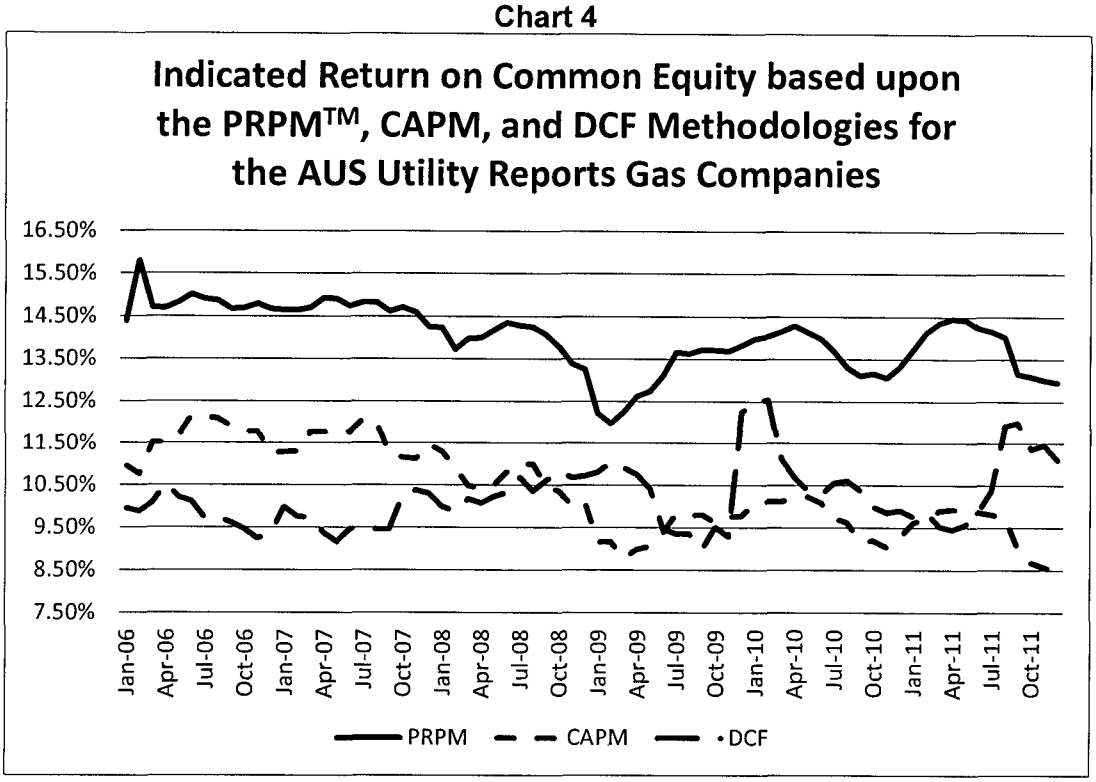

Chart 5

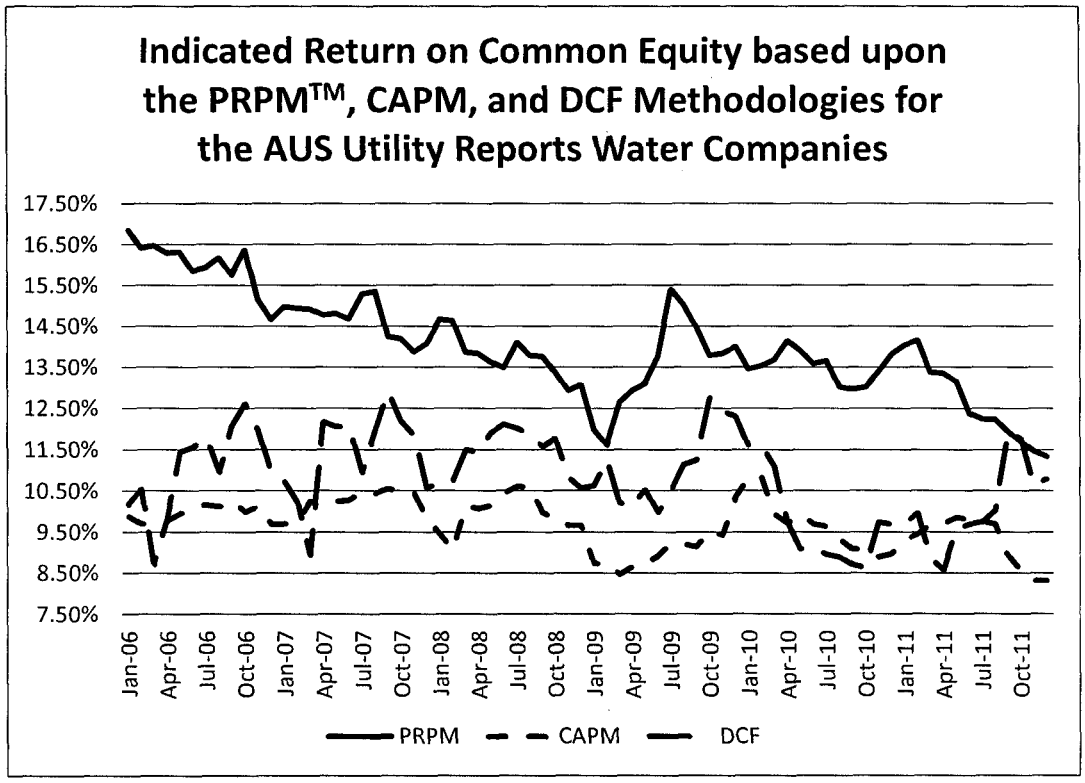

Charts 2 through 5 clearly show that, for the most part, the PRPM™ produces a higher average indicated ROE than both the DCF and CAPM. This is due to the fact that the PRPM™ prices <u>all</u> of the risk which investors actually face collectively. In contrast, the CAPM prices systematic risk (that investors face only if they have a perfectly diversified portfolio, which does not exist) and the DCF uses accounting, not market, based I/B/E/S consensus five-year projected EPS growth rates.

Conclusion

In the authors' opinion, the PRPM™ benefits ratemaking with an additional model to estimate ROE. To that end, the Principals of AUS Consultants have been including the PRPM™ in their rate of return testimonies and the model has been presented publicly in several venues.[x]

Its results are stable and consistent over time. It is not based upon restrictive assumptions, as are the DCF and CAPM. The PRPM™ is also not based upon an estimate of investor behavior, but rather, upon a statistical analysis of actual investor behavior by evaluating the results of that behavior, i.e., the volatility (variance) of historical equity risk premiums. In contrast, subjective decisions surround the choice of the inputs to both the DCF and CAPM, from the choice of the time period over which to measure the dividend yield for the DCF, the choice of the DCF growth rate (e.g., historical or projected, earnings per share or dividends per share, and the like), to the selection of the appropriate beta (e.g., adjusted or unadjusted), market equity risk premium (e.g., historical or projected) and the appropriate risk-free rate (e.g., historical or projected and/or long v. short term) for the CAPM. In addition, as previously discussed, the CAPM exclusively prices systematic risk. In contrast, the PRPM™ prices all of the risk actually faced collectively by investors, because the model does not assume that investors' portfolios are perfectly diversified containing no unsystematic risk.

In addition, the inputs to the PRPM™ are widely available. The GARCH coefficient is calculated with the relatively inexpensive EViews©, or other statistical, software, based upon the realized ERP, i.e., total returns minus the

risk-free rate. The only subjective decisions to be made when applying the PRPM™ relate to which risk-free rate to use, e.g., long-term or short-term, and over what time period to estimate the PRPM™ derived ROEs.

For all of these reasons, the authors conclude that the PRPM™ should be considered as appropriate additional evidence to measure the cost of common equity in regulatory rate setting for public utilities.

---

i Ahern, Pauline M., Hanley, Frank J. and Michelfelder, Richard A., "New Approach to Estimating the Cost of Common Equity Capital for Public Utilities," *Journal of Regulatory Economics* (2011) 40:261-278.

ii Jansson, Peter Mark, Michelfelder, Richard A., "Integrating Renewables into the US Grid: Is It Sustainable," The Electricity Journal (2008, July) 21: 9-21.

iii Ahern, Pauline M., Hanley, Frank J. and Michelfelder, Richard A., "New Approach to Estimating the Cost of Common Equity Capital for Public Utilities," *Journal of Regulatory Economics* (2011) 40:261-278.

iv AUS Monthly Utility Reports is a monthly pocket reference book covering the electricity, combination electricity & natural gas distribution, natural gas distribution, and water companies which have publicly traded common stock. The monthly reports provide comprehensive information on key ratios and industry rankings based upon the financial statistics presented in the report.

v Professor Emeritus, University of California, San Diego and currently the Michael Armellino Professor in Management of Financial Services at New York University, Stern School of Business.

vi www.nobelprize.org.

vii Michelfelder, Richard, and Pilotte, Eugene, "Treasury Bond Risk and Return, the Implications for the Hedging of Consumption and Lessons for Asset Pricing," *Journal of Economics and Business* (2011) 63, 605-637.

viii Using a proprietary data base available at mid-March, June, September, and December at the end of each year, from 2006 – 2011 from Value Line, Inc.

ix The results shown in the accompanying charts represent AUS Utility group averages of only those utilities in each group for which it was possible to estimate all three models in any given month. For example, if ABC Utility did not have the I/B/E/S consensus growth rate necessary to calculate the DCF in a given month, that utility's PRPM™ and CAPM were not included in the group average for that month.

x Edison Electric Institute Cost of Capital Working Group (Webinar 10/12); NARUC Staff Subcommittee on Accounting & Finance (9/12 & 3/10); National Association of Water Companies Finance/Accounting/Taxation and Rates & Regulations Committees (3/12); NARUC Water Committee (2/12); Wall St. Utility Group (12/11); IN Utility Regulatory Commission Cost of Capital Task Force (9/10); Financial Research Inst. of the Univ. of Missouri Hot Topic Hotline Webinar (12/10); and Center for Research in Regulated Industries Annual Eastern Conference (5/10 & 5/09).

Author Biographies

Dr. Richard A. Michelfelder is Clinical Associate Professor of Finance at Rutgers University, School of Business, Camden. He earlier held a number of entrepreneurial and executive positions in the public utility industry, some of which the application of renewable and energy efficiency resources in utility planning and regulation. He was CEO and chairperson of the board of Quantum Consulting, Inc., a national energy efficiency and utility consulting firm, and Quantum Energy Services and Technologies, LLC, an energy services company that he co-founded. He also helped to co-found and build Comverge, Inc., currently one of the largest demand–response firms in the world that "IPOed" in 2006 on the NASDAQ. He was also an executive at Atlantic Energy, Inc. and Chief Economist at Associated Utilities Services, where he testified on the cost of capital for public utilities in a number of state jurisdictions and before the FERC. He holds a Ph.D. in Economics from Fordham University and has published numerous articles in academic journals.

Pauline M. Ahern is a Principal and Director with AUS Consultants located in Mount Laurel, New Jersey. She has served investor-owned and municipal utilities and authorities for nearly 25 years. A Certified Rate of Return Analyst (CRRA), she is responsible for the development of rate of return analyses, including the development of ratemaking capital structure ratios, senior capital cost rates and the cost rate of common equity and related issues for regulated public utilities. She has testified as an expert witness before 29 regulatory commissions in the U.S. and Canada. In addition, she supervises the production of the various AUS Utility Reports publications and maintains the benchmark index against which the American Gas Association's Mutual Fund performance is measured. She holds an MBA in finance from Rutgers University and a Bachelor of Arts Degree in Economics/Econometrics from Clark University. She has co-authored the article "A New Approach for Estimating the Equity Risk Premium for Public Utilities", co-authored with Frank J. Hanley and Richard A. Michelfelder, Ph.D. published *The Journal of Regulatory Economics* in December 2011.

Dylan W. D'Ascendis is Principal at AUS Consultants, located in Mt. Laurel, NJ. He is responsible for preparing fair rate of return studies for AUS Consultants' rate of return expert witnesses and assists in every aspect of the rate case procedural process. He is also a Certified Rate of Return Analyst (CRRA). Mr. D'Ascendis has testified before in rate cases in South Carolina and Pennsylvania relative to capital structure issues. Mr. D'Ascendis is the Editor of AUS Utility Reports and is responsible for the data collection and production of the AUS Monthly Utility Report, which provides comprehensive information on key ratios and industry rankings based upon financial statistics presented in the report for the electric, gas and water industries. He also assists in the calculation and production of the AGA Index, a market capitalization weighted index of the common stocks of the approximately 70 corporate members of the AGA. Mr. D'Ascendis also served as Research Assistant in the preparation of "New

Approach for Estimating the Cost of Common Equity Capital for Public Utilities" co-authored by AUS Consultants' colleagues Pauline M. Ahern, Frank J. Hanley and Richard A. Michelfelder, published in the *Journal of Regulatory Economics.* Mr. D'Ascendis is a member of the Society of Utility and Regulatory Financial Analysts and the National Association of Water Companies. He holds an M.B.A. in both Finance and International Business from Rutgers University and a Bachelor of Arts Degree in Economic History from the University of Pennsylvania.

Frank J. Hanley is a Principal of AUS Consultants located in Mt. Laurel, NJ. He joined the firm in 1971 as Vice President, was elected Senior Vice President in 1975, and President of the Utility Services Group in 1989. Mr. Hanley has testified on cost of capital and related financial issues in more than three hundred cases before thirty-three state regulatory commissions, the District of Columbia Public Service Commission, the Public Services Commission of the U.S. Virgin Islands, the Federal Energy Regulatory Commission, a U.S. District Court, a U.S. Bankruptcy Court and the U.S. Tax Court. He has represented a number of electric, natural gas distribution and transmission companies, oil pipeline companies, as well as steam heating, telephone, water and wastewater companies. Mr. Hanley is a graduate of Drexel University and is a Certified Rate of Return Analyst (CRRA). He is a member of the Society of Utility and Regulatory Financial Analysts. He is an Associate Member of the American Gas Association as well as a member of its Rate Committee; and an Associate Member of the Energy Association of Pennsylvania. Also, he is a member of the Executive Advisory Council of the Rutgers University School of Business at Camden as well as a member of the Advisory Council of New Mexico State University's Center for Public Utilities.

About Us
Advertise
Contact Us

My Account
Lost Password/User ID

Legal
Terms of Use
Privacy Policy
Disclaimer

Investment Ideas
Growth Investing
Income & Dividends
Value Investing
Options & Derivatives
Commodities & Precious Metals
Mutual Funds & ETFs

Education Center
Financial Dictionary
Investing Education
Personal Finance
Calculators

Launched in 2009, InvestingAnswers' mission is to help individual investors build and protect their wealth by providing 100% unbiased investment ideas and education.

We've invested millions of dollars to create hundreds of free articles and the industry's most investor-friendly financial dictionary on the web, making InvestingAnswers one of the premier resources for thousands of investors around the world.

Click for Review

Copyright © 2001-2015. InvestingAnswers, Inc. All Right Reserved.

EXHIBIT
S-6
ADMITTED

COMPANY: EPCOR Water Arizona Inc.
DOCKET NO: WS-01303A-14-0010

Response provided by: Pauline M. Ahern, CRRA
Title: Managing Principal, AUS Consultants

Address: 155 Gaither Drive, Suite A
Mt. Laurel, NJ 08054

Company Response Number: STF JAC 13.5

Q: Exhibit PMA-DT1 of Ms. Ahern's testimony provides a listing of the utilities for which she has sponsored testimony on fair rate of return and related issues.

With this in mind, please respond to the following:

a) List the regulatory proceedings in which Ms. Ahern has testified as a cost of capital witness;

b) Among the regulatory proceedings in which Ms. Ahern has testified as a cost of capital witness, specify those in which she has presented estimates derived from the PRPM™ model; and

c) Among the regulatory proceedings in which Ms. Ahern has presented estimates derived from the PRPM™ model, provide the docket number and regulatory jurisdiction in which Ms. Ahern's PRPM™ cost of equity recommendations were adopted.

A: a) Please see Attachment STF JAC 13.5 (a).

b) Please see Attachment STF JAC 13.5 (b).

C ~~d~~) To the best of Ms. Ahern's knowledge Ms. Ahern's PRPM™ cost of equity recommendations have not been specifically adopted in a regulatory proceeding. To the best of Ms. Ahern's knowledge the only proceeding in which they were specifically rejected was Docket No. 2013-003362 before the Maine Public Service Commission (MPSC) on behalf of Maine Water Company. In rejecting the PRPM™, the MPSC noted "we are not prepared to incorporate the results of the analysis using the PRPM™ inputs into our determination of an appropriate ROE in this case. This does not however preclude us from future reliance once the model is fully vetted by academia and other regulatory bodies."

Pauline M. Ahern, CRRA
Managing Principal, AUS Consultatnts
Testimonies Filed March 1995 - June 2014

Client	Jurisdiction	Date of Filing	Docket No.	Subject	Case No.
Alpena Power Company	Michigan Public Service Commission	5/8/09	Case No. U-15935	Fair Rate of Return	13-0201
Alpena Power Company	Michigan Public Service Commission	4/2/07	Case No. U-15250	Fair Rate of Return	13-0147
Alpena Power Company	Michigan Public Service Commission	7/27/99	Case No. U-12000	Capital Structure & Fixed Capital Cost Rate	412R9
Apple Canyon Utilities, Co. / Lake Wildwood Utiliites Corp.	Illinois Commerce Commission	4/1/10	09-0548 / 0549	Fair Rate of Return - Rebuttal	13-0242
Applied Wastewater Management Inc.	New Jersey Board of Public Utilities	8/1/08		Fair Rate of Return	13-0169
Aqua Ilinois - Kankakee	Illinois Commerce Commission	2/28/06	06-0285	Common Equity Cost Rate	13-0117
Aqua Illinois - Woodhaven	Illinois Commerce Commission	12/22/04	05-0071	Common Equity Cost Rate	50-1117
Aqua Illinois - Oak Run	Illinois Commerce Commission	12/22/04	05-0072	Common Equity Cost Rate	50-1118
Aqua Illinois - Vermilion Division	Illinois Commerce Commission	5/28/04 10/6/04 11/4/04	04-0442	Common Equity Cost Rate Rebuttal Surrebuttal	50-1093
Aqua New Jersey, Inc.	New Jersey Board of Public Utilities	1/16/14	WR14010019	Fair Rate of Return	13-0331
Aqua New Jersey, Inc.	New Jersey Board of Public Utilities	12/7/11	WR11120859	Fair Rate of Return	13-0284
Aqua New Jersey, Inc.	New Jersey Board of Public Utilities	12/18/09	WR-09121005	Fair Rate of Return	13-0230
Aqua New Jersey, Inc.	New Jersey Board of Public Utilities	12/21/07	WR-07120955	Fair Rate of Return	13-0163
Aqua New Jersey, Inc.	New Jersey Board of Public Utilities	12/8/05 6/16/06	WR-05121022	Fair Rate of Return Rebuttal	13-0113
Aqua North Carolina, Inc.	North Carolina Utilities Commission	12/13/13 1/22/14	W-218, Sub 363	Fair Rate of Return Supplemental Direct	13-0314
Aqua North Carolina, Inc.	North Carolina Utilities Commission	5/2/11 6/3/11	W-218, Sub 319	Fair Rate of Return Rebuttal	13-0273
Aqua Ohio, Inc.	Public Utility Commission of Ohio	12/16/13	13-2124-WW-AIR	Common Equity Cost Rate Supplemental	13-0324
Aqua Virginia, Inc.	Virginia State Corporation Commission	10/27/11	PUE-2011-00130	Common Equity Cost Rate	13-0281
Aqua Virginia, Inc. (Land'Or Utility Company)	Virginia State Corporation Commission	12/21/06 8/24/07	PUE-2006-00128	Common Equity Cost Rate Rebuttal	13-0126
Aqua Virginia, Inc. (Monticello)	Virginia State Corporation Commission	9/27/05 5/15/06	PUE-2005-00080	Common Equity Cost Rate Rebuttal	13-0109
Aquarion Water Company	Public Utilities Regulatory Authority - Connecticut	3/28/13	13-02-30	Common Equity Cost Rate	13-0306
Aquarion Water Company	Connecticut - Department of Public Utility Control	3/15/10	10-02-13	Common Equity Cost Rate	13-0232
Aquarion Water Company of New Hampshire	New Hampshire Public Utilities Commission	3/6/2013	DW 12-085	Common Equity Cost Rate	13-0311
Arizona Water Company - Eastern Group	Arizona Corporation Commission	4/10/12 10/31/13	W-01445A-11-0310	DSIC Mechanism - Credit Quality Rebuttal Rebuttal - Rehearing	13-0292 13-0225
Arizona Water Company - Northern Group	Arizona Corporation Commission	8/1/12	W-01445A-12-0348	Common Equity Cost Rate	13-0297
Arkansas-Western Gas Co. ANG Division - Arkansas	Arkansas Public Service Commission	2/3/97 9/2/97	97-019-U	Capital Structure Rebuttal	949R7
Arkansas-Western Gas Co. ANG Division - Missouri	Missouri Public Service Commission	3/13/97 8/6/97	GR-97-272	Capital Structure Rebuttal	948R7
Arkansas Western Gas Co.	Arkansas Public Service Commission	2/9/96 6/12/96	96-030-U	Capital Structure Ratios Rebuttal	899R6
Artesian Water Company	Delaware Public Service Commission	4/11/14	14-132	Fair Rate of Return	13-0332
Artesian Water Company	Delaware Public Service Commission	4/29/11	11-207	Fair Rate of Return	13-0261
Artesian Water Company	Delaware Public Service Commission	4/22/08	08-96	Fair Rate of Return	13-0167

Pauline M. Ahern, CRRA
Managing Principal, AUS Consultatnts
Testimonies Filed March 1995 - June 2014

Client	Jurisdiction	Date of Filing	Docket No.	Subject	Case No.
		10/16/08		Rebuttal	
Audubon Water Company	Pennsylvania Public Utility Commission	4/02	R-00027104	Fair Rate of Return	50-1044
Bermuda Water Company	Arizona Corporation Commission	9/11	W-01812A-10-0521	Fair Rate of Return	13-0283
Borough of Hanover, PA	Pennsylvania Public Utility Commission	8/30/02	R-00027522	Fair Rate of Return	50-0145
Carolina Pines Utilities, Inc.	North Carolina Utilities Commission	4/2/04	W-1151	Common Equity Cost Rate	50-1072
Carolina Water Service of NC	North Carolina Utilities Commission	10/21/13	W-354 Sub 336	Fair Rate of Return	13-0313
Carolina Water Service of NC	North Carolina Utilities Commission	10/25/10	W-354 Sub 324 & Sub 327	Fair Rate of Return	13-0248
Carolina Water Service of SC	Public Service Commission of South Carolina	8/3/11 8/24/11	2011-47-WS	Fair Rate of Return Rebuttal	13-0269
Carolina Water Service of SC	Public Service Commission of South Carolina	6/8/06	2006-92-WS	Fair Rate of Return	13-0115
Carolina Water Service of SC	Public Service Commission of South Carolina	4/6/05 4/27/05	2004-357-W/S	Fair Rate of Return Rebuttal	50-1114
Carolina Water Service of SC	Public Service Commission of South Carolina	6/13/01 7/5/01	2000-0207-W/S	Fair Rate of Return Rebuttal	50-1026
Chaparral City Water Company	Arizona Corporation Commission	4/26/13 1/20/14	W-02113A-13-	Common Equity Cost Rate Rebuttal	13-0210
The Columbia Water Company	Pennsylvania Public Utility Commission	12/19/08 1/20/09	R-2008-2045157	Common Equity Cost Rate Rebuttal	13-0190
Connecticut Water Company	Connecticut - Department of Public Utility Control	1/6/10	9/12/2011	Commpany Equity Cost Rate	13-0220
Consumers Illinois Water Co.	Illinois Commerce Commission	5/21/03 10/20/03 12/5/03	03-0403	Fair Rate of Return Rebuttal Surrebuttal	50-1055
Consumers Illinois Water Co.	Illinois Commerce Commission	4/10/00 9/29/00	00-0337, 0338 00-0389	Common Equity Cost Rate Rebuttal	50-1005
Consumers Maine Company	Maine Public Utility Commission	5/31/00	2000-96 and 2000-175	Fair Rate of Return	50-1010
Consumers NJ Water Company	New Jersey Board of Public Utilities	12/4/03	WR-03120974	Common Equity Cost Rate	50-1085
Consumers NJ Water Company	New Jersey Board of Public Utilities	3/1/02	WR-02030133	Common Equity Cost Rate	50-1039
Consumers NJ Water Company	New Jersey Board of Public Utilities	3/28/00 10/3/00	BPU WR-00030174 OAL PUCRS 04524-00S	Common Equity Cost Rate Rebuttal	50-0727 (727R9)
Corix Multy-Utility Services, Inc.	British Columbia Utilities Commission	8/3/12 7/10/13	Generic Cost of Capital Proceeding	Direct Phase 2	13-0296
Dubois, City of	Pennsylvania Public Utility Commission	4/4/06	R-00050671	Fair Rate of Return	13-0120
Elizabethtown Water Company	New Jersey Board of Public Utilities	7/10/03 12/17/03	WR-03070510 OAL PUCRL07281-2003N	Fair Rate of Return Rebuttal	50-1068
Elizabethtown Water Company	New Jersey Board of Public Utilities	4/2/01	WR-01040205	Overall Fair Rate of Return	50-1021
Emporium Water Company	Pennsylvania Public Utility Commission	6/23/06	R-00061297	Fair Rate of Return	50-1163
Emporium Water Company	Pennsylvania Public Utility Commission	9/18/00 10/26/00	R-00005050	Fair Rate of Return Rebuttal	50-1015
EPCOR Water Arizona, Inc.	Arizona Corporation Commission	3/10/14	W-01303A-14-	Common Equity Cost Rate	13-0323
Fairbanks Natural Gas LLC	Regulatory Commission of Alaska	6/30/14		Fair Rate of Return	13-0333
Green Ridge Utilities, Inc.	Maryland Public Service Commission	5/16/03 8/20/03	Case No. 8962	Fair Rate of Return Rebuttal	50-1077
GTE Hawaiian Telephone	Hawaii Public Utility Commission	10/1/96	95-0051	Self-Insurance Property	857M5

Pauline M. Ahern, CRRA
Managing Principal, AUS Consultatnts
Testimonies Filed March 1995 - June 2014

Client	Jurisdiction	Date of Filing	Docket No.	Subject	Case No.
				Damage Reserve-Ratepayer Responsibility	
GTE Hawaiian Telephone (Rebuttal)	Hawaii Public Utility Commission	6/21/96	94-0298	Common Equity Cost, Capital Structure and Storm Damage Cost Recovery (Hurricane Iniki)	857R5
Illinois American Water Company	Illinois Commerce Commission	10/27/11 3/29/12		Common Equiy Cost Rate Rebuttal	13-0280
Illinois American Water Company	Illinois Commerce Commission	5/29/09 10/21/09 10/23/09 11/25/09	09-0319	Common Equiy Cost Rate Rebuttal - Staff Rebuttal - Intervenors Surrebuttal	13-0194
Illinois American Water Company	Illinois Commerce Commission	8/31/07 2/11/08	07-0507	Common Equity Cost Rate Rebuttal	13-0158
Indiana-American Water Company	Indiana Utility Regulatory Commission	1/24/14	44450	Common Equity Cost Rate	13-0329
Iowa-American Water Company	Iowa Utilities Board	4/29/11 9/29/11	RPU-2011-0001	Common Equity Cost Rate Rebuttal	13-0263
Iowa-American Water Company	Iowa Utilities Board	4/30/09	RPU-2009-0004	Common Equity Cost Rate	13-0192
Iowa-American Water Company	Iowa Utilities Board	8/30/07	RPU-07-3	Common Equity Cost Rate	13-0149
Jersey Cenral Power & Light Company	New Jersey Board of Public Utilities	11/20/12 8/7/13	ER12111052	Common Equity Cost Rate Rebutta	
Long Island American Water Company	New York State Public Service Commission	5/3/11 10/3/11	11-W-200	Common Equity Cost Rate Rebuttal	13-0262
Long Neck Water Company	Delaware Public Service Commission	1/29/99 7/13/99	99-31	Overall Rate of Return Rebuttal	973M9
Louisiana Water Service, Inc.	Louisiana Public Service Commission	3/31/08	U-30553	Fair Rate of Return	13-0176
Maine Water Company	Maine Public Service Commission	12/13/13	2013-00362	Common Equity Cost Rate	13-0330
Massanutten Public Service Corp.	Virginia State Corporation Commission	9/16/09	PUE- 2009-00041	Common Equity Cost Rate	13-0206
Massanutten Public Service Corp.	Virginia State Corporation Commission	12/20/06	Case No. PUE-2006-00126	Common Equity Cost Rate	13-0142
Middlesex Water Company	New Jersey Board of Public Utilities	11/8/13	WR13111059	Common Equity Cost Rate	13-0308
Middlesex Water Company	New Jersey Board of Public Utilities	1/10/2012	WR12010027 / PUC 1653-2012	Fair Rate of Return	13-0274
Middlesex Water Company	New Jersey Board of Public Utilities	8/17/2009	WR0908066	Fair Rate of Return	13-0209
Middlesex Water Company	New Jersey Board of Public Utilities	4/17/07	PUCRL 05663-2007N	Fair Rate of Return	13-0148
Middlesex Water Company	New Jersey Board of Public Utilities	5/18/05	WR-05050451	Fair Rate of Return	50-1126
Middlesex Water Company	New Jersey Board of Public Utilities	11/5/03	WR-03110900	Fair Rate of Return	50-1080
Middlesex Water Company (Pinelands Water)	New Jersey Board of Public Utilities	6/23/00	WR-000-60362	Fair Rate of Return	50-1008 50-1008A
Middlesex Water Company	New Jersey Board of Public Utilities	9/18/98	98-090795	Fair Rate of Return	032R8
Middlesex Water Company	New Jersey Board of Public Utilities	11/29/96	96-110818	Overall Rate of Return	032R7
Missouri American Water Company	Public Service Commission of Missouri	6/30/11 1/19/12 2/2/12	WR-2011-0337 / SR-2011-0338	Fair Rate of Return Rebuttal Surrebuttal	13-0256
Missouri American Water Company	Public Service Commission of Missouri	10/30/09 4/15/10 5/6/10	WR-2010-0131	Common Equity Cost Rate Rebuttal Surrebuttal	13-0215
Missouri American Water Company	Public Service Commission of Missouri	3/31/08	WR-2008-0311 /	Common Equity Cost Rate	13-0172

Pauline M. Ahern, CRRA
Managing Principal, AUS Consultatnts
Testimonies Filed March 1995 - June 2014

Client	Jurisdiction	Date of Filing	Docket No.	Subject	Case No.
		9/30/08 10/31/08	SR-2008-0312	Rebuttal Surrebuttal	
Missouri American Water Company	Public Service Commission of Missouri	12/15/06 7/13/07 7/31/07	Case No. WR-2007-0216 Case No. WR-2007-0217	Common Equity Cost Rate Rebuttal Surrebuttal	13-0143
Missouri American Water Co.	Missouri Public Service Commission	5/19/03 11/10/03 12/5/03	WR-2003-0500 WC-2004-0168	Fair Rate of Return Rebuttal-Rate of Return on Equity Surrebuttal	50-1062
Missouri Gas Energy	Missouri Public Service Commission	9/16/13 3/4/14 4/4/14	GR-2014-0007	Common Equity Cost Rate Rebuttal Surrebuttal	13-0322
Mt. Holly Water Company	New Jersey Public Utility Commission	7/10/03 12/17/03	WR03070509 OAL #PUCRL - 07280 - 2003N	Fair Rate of Return Rebuttal	50-1069
Nero Utilities	North Carolina Utilities Commission	4/6/04	W-1152	Common Equity Cost Rate	50-1074
New Jersey American Water Co.	New Jersey Board of Public Utilities	7/10/03 12/17/03	WR-03070511 OAL #PUCRL - 07279 - 2003N	Fair Rate of Return Rebuttal	50-1067
New Jersey Utilities Association	New Jersey Board of Public Utilities	10/21/11	OAL PUC 07146-09 W009020148	Common Equity Cost Rate / Risk	13-0282
The Newtown Artesian Water Company	Pennsylvania Public Utility Commission	11/26/08	R-2008-2042293	Fair Rate of Return	13-0188
NRG Energy Center Harrisburg	Pennsylvania Public Utility Commission	3/31/08	R-2008-2028395	Fair Rate of Return	
NRG Energy Center Pittsburgh	Pennsylvania Public Utility Commission	6/29/06	R-00061435	Fair Rate of Return	13-0119
Ohio-American Water Company	Public Utility Commission of Ohio	8/15/12 2/29/12	11-4161-WS-AIR	Fair Rate of Return Supplemental Testimony	13-0272
Ohio-American Water Company	Public Utility Commission of Ohio	6/22/09 1/4/10	Case No. 09-391 WS-AIR	Fair Rate of Return Supplemental Testimony	13-0193
Ohio-American Water Company	Public Utility Commission of Ohio	10/26/06	Case No. 06-433 WS-AIR	Fair Rate of Return	13-0112
Ohio-American Water Company	Public Utility Commission of Ohio	11/1/04	Case No. 03-2390-WS-AIR	Cost Rate of Common Equity & Response to Staff Audit	50-1061
Penn Estates Utilities	Pennsylvania Public Utility Commission	12/16/11		Common Equity Cost Rate	13-0271
Penn Estates Utilities	Pennsylvania Public Utility Commission	9/16/09 10/29/09	R-2009-2117532 (Water) R-2009-2117740 (Sewer)	Fair Rate of Return Rebuttal	13-0204
Penn Estates Utilities	Pennsylvania Public Utility Commission	1/10/00	R-00005031	Fair Rate of Return	50-1012
PG Energy	Pennsylvania Public Utility Commission	3/16/98 7/22/98	00984280	Capital Structure and Embedded Fixed Capital Cost Rate Rebuttal	045R8
PG Energy	Pennsylvania Public Utility Commission	5/29/96 10/10/96	00963612	Capital Structure and Embedded Fixed Capital Cost Rates Rebuttal	045R6
Pinelands Water Company	New Jersey Board of Public Utilities	8/10/12	WR12080735	Common Equity Cost Rate	13-0300
Pinelands Water Company	New Jersey Board of Public Utilities	4/29/08	WR08040282	Common Equity Cost Rate	13-0148
Pinelands Water Company	New Jersey Board of Public Utilities	5/18/05	WR-05080681	Common Equity Cost Rate	50-1126
Pinelands Water Company	New Jersey Board of Public Utilities	12/30/03	WR-031201016	Common Equity Cost Rate	50-1080
Pinelands Water Company	New Jersey Board of Public Utilities	4/29/08	WR08040283	Common Equity Cost Rate	13-0148

Pauline M. Ahern, CRRA
Managing Principal, AUS Consultatnts
Testimonies Filed March 1995 - June 2014

Client	Jurisdiction	Date of Filing	Docket No.	Subject	Case No.
Pinelands Wastewater Company	New Jersey Board of Public Utilities	8/10/12	WR12080734	Common Equity Cost Rate	13-0300
Pinelands Wastewater Co.	New Jersey Board of Public Utilities	5/18/05	WR-05080680	Common Equity Cost Rate	50-1126
Pinelands Wastewater Co.	New Jersey Board of Public Utilities	12/30/03	WR-031201017	Common Equity Cost Rate	50-1080
Pioneer Water LLC	Indiana Utility Regulatory Commission	10/3/13	4434	Common Equity Cost Rate Rebuttal	13-0326
Pittsburgh Thermal, L.P.	Pennsylvania Public Utility Commission	10/26/99	R-00994641	Fair Rate of Return Rebuttal	50-0983 (983RO)
San Gabriel Valley Water Company	California Public Utilities Commission	5/1/12 9/21/12	12-05-002	Direct Rebuttal	13-0288
San Jose Water Company	California Public Utilities Commission	8/1/12 9/21/12	12-15-002	Common Equity Cost Rate Rebuttal	13-0288
San Jose Water Company	California Public Utilities Commission	5/2/11 9/22/11	U-168-W	Common Equity Cost Rate Rebuttal	13-0264
San Jose Water Company	California Public Utilities Commission	5/1/09 6/24/09	U-168-W	Common Equity Cost Rate Rebuttal	13-0191
Southland Utilities, Inc.	Public Service Commission of South Carolina	9/14/07	2007-244-W	Fair Rate of Return	13-0159
Spring Creek Utilities Co.	Public Service Commission of Nevada	6/30/08 11/25/08	08-06036	Fair Rate of Return Rebuttal	13-0178
Spring Creek Utilities Co.	Public Service Commission of Nevada	12/30/05	06-01002	Fair Rate of Return	13-0110
Sussex Shores Water Co.	Delaware Public Service Commission	11/12/99	99-576	Fair Rate of Return	979M9
Sussex Shores Water Co.	Delaware Public Service Commission	10/15/07	07-278	Fair Rate of Return	13-0154
Tega Cay Water Service, Inc.	Public Service Commission of South Carolina	11/19/12 12/14/12	2012-177-WS	Fair Rate of Return Rebuttal	13-0294
Tega Cay Water Service, Inc.	Public Service Commission of South Carolina	4/26/10	2009-473-WS	Fair Rate of Return	13-0244
Tega Cay Water Service, Inc.	Public Service Commission of South Carolina	7/5/06 7/26/06	2006-97-WS	Common Equity Cost Rate Rebuttal	13-0123
Thames RWE	New Jersey Public Utility Commission	8/14/02	WM01120833	Capital Structure Rebuttal (NJ American)	50-1043
Thames RWE	California Public Utility Commission	5/17/02 7/02	02-01-036	Credit Quality Supp.Dir.Test (CA American)	50-1043
The Atlantic City Sewerage Company	New Jersey Public Utility Commission	4/29/11	WR11040247	Fiar Rate of Return	13-0268
The Atlantic City Sewerage Company	New Jersey Public Utility Commission	11/13/09	WR09110940	Fair Rate of Return	13-0223
The Atlantic City Sewerage Company	New Jersey Public Utility Commission	11/13/07	WR-0007110866	Fair Rate of Return	13-0161
Tidewater Utilities	Delaware Public Service Commission	11/25/13 6/26/14	13-466	Common Equity Cost Rate Rebuttal	13-0309
Tidewater Utilities	Delaware Public Service Commission	9/15/11	PSC-11-397	Fair Rate of Return	13-0275
Tidewater Utilities	Delaware Public Service Commission	1/26/09 7/1/09	09-29	Fair Rate of Return Rebuttal	13-0185
Tidewater Utilities	Delaware Public Service Commission	4/28/06 10/20/06	06-145	Fair Rate of Return Rebuttal	13-0116
Tidewater Utilities	Delaware Public Service Commission	4/26/04 8/17/04	04-152	Fair Rate of Return Rebuttal	50-1088
Tidewater Utilities	Delaware Public Service Commission	1/25/02	02-28	Fair Rate of Return	50-1032
Tidewater Utilities	Delaware Public Service Commission	9/17/99	99-466	Fair Rate of Return	776M9
Total Environmental Solutions, Inc. - Treaure Lake Sewer Division	Pennsylvania Public Utility Commission	2/15/08	R-00072495	Fair Rate of Return	13-0173

Pauline M. Ahern, CRRA
Managing Principal, AUS Consultatnts
Testimonies Filed March 1995 - June 2014

Client	Jurisdiction	Date of Filing	Docket No.	Subject	Case No.
Total Environmental Solutions, Inc. - Treaure Lake Water Division	Pennsylvania Public Utility Commission	2/15/08	R-00072493	Fair Rate of Return	13-0173
Transylvania Utilities, Inc.	North Carolina Utilities Commission	5/15/06	W-1012,Sub 7	Fair Rate of Return	50-1140
Transylvania Utilities, Inc.	North Carolina Utilities Commission	4/5/04	W-1012	Common Equity Cost Rate	50-1075
	Pennsylvania Public Utility Commission	6/26/09	R-2009-2111011	Fair Rate of Return	13-0207
Twin Lakes Utilities, Inc.	Indiana Utility Regulatory Commission	11/13/06 6/12/07	Cause No. 43128	Fair Rate of Return Rebuttal	13-0140
Twin Lakes Utilities, Inc.	Indiana Utility Regulatory Commission	9/29/03 2/3/04	42488	Fair Rate of Return Rebuttal	50-1076
Valley Energy, Inc.	Pennsylvania Public Utility Commission	10/20/04 12/3/04	R-00049345	Fair Rate of Return Rebuttal	50-1099
United Utility Companies, Inc.	Public Service Commission of South Carolina	9/12/13 10/3/13	2013-199-WS	Capital Structure Rebuttal	13-0317
United Utility Companies, Inc.	Public Service Commission of South Carolina	2/16/10	2009-479-W/S	Fair Rate of Return	13-0225
United Utility Companies, Inc.	Public Service Commission of South Carolina	7/17/06 8/7/06	2006-107-WS	Fair Rate of Return Rebuttal	13-0124
United Utility Companies, Inc.	Public Service Commission of South Carolina	1/9/02	2000-0210-W/S	Fair Rate of Return	50-1035
United Water Arkansas, Inc.	Arkansas Public Service Commission	3/2/10 8/10/10	09-130-U	Fair Rate of Return Rebutta	13-0227
United Water Arkansas, Inc.	Arkansas Public Service Commission	12/21/09	06-160-U	Fair Rate of Return	13-0145
United Water Arkansas, Inc.	Arkansas Public Service Commission	9/29/03 4/27/04	03-161-U	Fair Rate of Return Rebuttal	50-1081
United Water Arlington Hills, Inc.	New Jersey Board of Public Utilities	9/30/08	WR08100929	Fair Rate of Return	13-0184
United Water Connecticut, Inc.	Connecticut - Department of Public Utility Control	9/29/10	9-29-10	Fair Rate of Return	13.0252
United Water Connecticut, Inc.	Connecticut - Department of Public Utility Control	5/31/07	07-05-44	Fair Rate of Return	13-0151
United Water Delaware, Inc.	Delaware Public Service Commission	12/6/10	10-421	Fair Rate of Return	13-0254
United Water Delaware, Inc.	Delaware Public Service Commission	2/13/09 6/23/09	09-60	Fair Rate of Return Rebuttal	13-0189
United Water Delaware, Inc.	Delaware Public Service Commission	5/26/06 11/21/06	06-174	Fair Rate of Return Rebuttal	13-0121
United Water Delaware, Inc.	Delaware Public Service Commission	3/11/98	98-98	Cost Rate of Common Equity Capital	918R8
United Water Delaware, Inc.	Delaware Public Service Commission	8/23/96 3/7/97	96-164	Capital Structure and Fixed Capital Cost Rates Rebuttal	918R6
United Water Great Gorge, Inc. / United Water Vernon Sewerage, Inc.	New Jersey Board of Public Utilities	10/22/10	WR10100785	Fair Rate of Return	13-0251
United Water Idaho, Inc.				State Property Tax Study	13-0291
United Water Idaho, Inc.	Idaho Public Utility Commission	8/1/11	UWI-W-11-02	Fair Rate of Return	13-0266
United Water Idaho, Inc.	Idaho Public Utility Commission	11/30/04 3/22/05	UWI-W-04-04	Fair Rate of Return Rebuttal	50-1111
United Water New Jersey, Inc.	New Jersey Board of Public Utliites	3/8/13	WR13030210	Fiar Rate of Return	13-0305
United Water New Jersey, Inc.	New Jersey Board of Public Utliites	7/18/11	WR11070428	Fiar Rate of Return	13-0278
United Water New Jersey, Inc.	New Jersey Board of Public Utliites	12/9/09	WR09120987	Fair Rate of Return	13-0228
United Water New Jersey, Inc.	New Jersey Board of Public Utilities	9/5/08	WR08090710	Fair Rate of Return	13-0179
United Water New Jersey, Inc.	New Jersey Board of Public Utilities	2/23/07	WR07020135	Fair Rate of Return	13-0146

Pauline M. Ahern, CRRA
Managing Principal, AUS Consultatnts
Testimonies Filed March 1995 - June 2014

Client	Jurisdiction	Date of Filing	Docket No.	Subject	Case No.
		8/3/07		Rebuttal	
United Water New Rochelle, Inc. / United Water West Chester, Inc.	New York State Public Service Commission	11/27/13		Fair Rate of Return	13-0327
United Water New Rochelle, Inc.	New York State Public Service Commission	11/24/09 5/7/10	09-W-0824	Fair Rate of Return Rebuttal	13-0219
United Water New Rochelle, Inc.	New York State Public Service Commission	9/29/04	Case 04-W-1221	Fair Rate of Return	50-1110
United Water New York, Inc.	New York State Public Service Commission	7/2/13 12/6/13	Case No. 13-W-0295	Fair Rate of Return Rebuttal	13-0303
United Water New York, Inc.	New York State Public Service Commission	9/25/09	Case No. 09-W-0731	Fair Rate of Return	13-0214
United Water New York, Inc. United Water South County, Inc.	New York State Public Service Commission	1/30/06	Cases 06-W-0131 and 06-W-0244	Fair Rate of Return	13-0114
United Water Owego/Nichols	New York State Public Service Commission	2/25/11 7/25/11	11-W-0082	Fair Rate of Return Rebuttal	13-0260
United Water Owego/Nichols	New York State Public Service Commission	5/31/07 11/15/07	07-W-0639 / 07-W 0872	Fair Rate of Return Rebuttal	13-0152
United Water Pennsylvania, Inc.	Pennsylvania Public Utility Commission	5/9/11 8/31/11	R-2011-2232985	Fair Rate of Return Rebuttal	13-0265
United Water Pennsylvania, Inc.	Pennsylvania Public Utility Commission	9/16/09	R-2009-2122887	Fair Rate of Return	13-0212
United Water Pennsylvania, Inc.	Pennsylvania Public Utility Commission	1/30/06	R-00051186	Fair Rate of Return	50-1121
United Water Rhode Island, Inc.	Rhode Island Public Utilities Commission	8/12/13 3/3/14	4434	Fair Rate of Return Rebuttal	13-0318
United Water Rhode Island, Inc.	Rhode Island Public Utilities Commission	6/3/11	4255	Fair Rate of Return Rebuttal	13-0267
United Water Toms River, Inc.	New Jersey Board of Public Utilities	9/19/12	WR12090830	Fair Rate of Return	13-0299
United Water Toms River, Inc.	New Jersey Board of Public Utilities	11/18/09	WR09110934	Fair Rate of Return	13-0213
United Water Toms River, Inc.	New Jersey Board of Public Utilities	3/6/08	WR08030139	Fair Rate of Return	13-0168
United Water West Lafayette, Inc. and United Water Indiana, Inc.	Indiana Utility Regulatory Commission	1/24/97 6/29/98	41046 & 41047	Overall Cost of Capital Rebuttal	958R7
United Water West Milford, Inc.	New Jersey Board of Public Utilities	9/30/08	WR08100928	Fair Rate of Return	13-0184
United Water Westchester, Inc.	New York State Public Service Commission	11/23/09 6/25/10	09-W-0828	Fair Rate of Return Rebuttal	13-0218
United Water Virginia, Inc.	Virginia State Corporation Commission	10/20/97	PUE970544	Fair Rate of Return	954R7
Utilities, Inc. of Central Nevada	Public Service Commission of Nevada	12/28/09 5/15/10	09-12017	Fair Rate of Return Rebuttal	13-0217
Utilities, Inc. of Central Nevada	Public Service Commission of Nevada	12/22/06	06-12023	Fair Rate of Return	13-0141
Utilities, Inc. of Florida	Florida Public Service Commission	8/1/08	08006-WS	Fair Rate of Return Rebuttal	13-0180
Utilities, Inc. of Florida	Florida Public Service Commission	6/30/03 9/15/08	020071-WS	Fair Rate of Return Rebuttal	50-1079
Utilities, Inc. of Nevada	Public Service Commission of Nevada	6/30/09	0906037	Fair Rate of Return	13-0210
Utilities, Inc. of Pennsylvania	Pennsylvania Public Utility Commission	9/16/09 10/29/09	R-2009-2117402	Fair Rate of Return Rebuttal	13-0203
Utilities, Inc. - Westgate	Pennsylvania Public Utility Commission	9/16/09 10/29/09	R-2009-2117389	Fair Rate of Return Rebuttal	13-0202
Utilities Services of South Carolina	Public Service Commission of South Carolina	9/19/13 10/16/13	2013-201-WS	Capital Structure Rebuttal	13-0316
Utilities Services of South Carolina	Public Service Commission of South Carolina	9/14/07	2007-286-WS	Fair Rate of Return	13-0160

Pauline M. Ahern, CRRA
Managing Principal, AUS Consultatnts
Testimonies Filed March 1995 - June 2014

Client	Jurisdiction	Date of Filing	Docket No.	Subject	Case No.
Utilities Services of South Carolina	Public Service Commission of South Carolina	11/3/05	2005-217-WS	Fair Rate of Return	50-1133
Utility Center, Inc.	Indiana Utility Regulatory Commission	3/26/10	Cause No. 43874	Fair Rate of Return	13-0229
Utility Center, Inc.	Indiana Utility Regulatory Commission	8/24/07	Cause No. 43331	Fair Rate of Return	13-0118
Washington Natural Gas Co.	Washington Utilities & Transportation Comm.	3/3/95	UG-950278	Capital Structure Ratios - Fixed Capital Cost Rates	885R4
Water Services Corporation of Kentucky	Kentucky Public Service Commission	3/5/09	2008-00563	Fair Rate of Return	13-0196
Water Services Corporation of Kentucky	Kentucky Public Service Commission	11/8/05	2005-00325	Fair Rate of Return	13-0111
Wellsboro Electric Company	Pennsylvania Public Utility Commission	10/4/01 11/19/01	R-00016356	Fair Rate of Return Rebuttal	50-1023
Western Utilities, Inc.	Pennsylvania Public Utility Commission	8/25/97	R-00963856	Fair Rate of Return Rebuttal	961M7

Use of Predictive Risk Premium Model (PRPM™) by Ms. Ahern
in Rate of Return Testimony

Company	Jurisdiction	Date of Testimony Submission	Docket Number
Arizona Water Company - Eastern Group	Arizona Corporation Commission	10-Apr-2012	W-01445A-11-0310
San Gabriel Valley Water Company	California Public Utilities Commission	1-May-2012	12-05-002
Arizona Water Company - Northern Group	Arizona Corporation Commission	1-Aug-2012	W-01445A-12-0348
Pinelands Water Company	New Jersey Board of Public Utilities	10-Aug-2012	WR12080735
Pinelands Wastewater Company	New Jersey Board of Public Utilities	10-Aug-2012	WR12080734
Pluris, LLC	North Carolina Utility Commission	13-Aug-2012	W-1282, SUB 8
United Water Toms River, Inc.	New Jersey Board of Public Utilities	19-Sep-2012	WR12080830
Tega Cay Water Services Inc.	Public Service Commission of South Carolina	19-Nov-2012	2012-177-WS
Jersey Central Power Light Company	New Jersey Board of Public Utilities	30-Nov-2012	ER12111052
Aquarion Water Co. of New Hampshire,	New Hampshire Public Utilities Commission	6-Mar-2013	DW 12-085
United Water New Jersey, Inc.	New Jersey Board of Public Utilities	8-Mar-2013	WR13030210
Aquarion Water Co. of Connecticut	Public Utilities Regulatory Authority - CT	28-Mar-2013	13-02-30
Arizona Water Company - Northern Group	Arizona Corporation Commission	12-Apr-2013	W-01445A-12-0348
Chaparral City Water Company	Arizona Corporation Commission	26-Apr-2013	W-02113A-13-0118
United Water New York, Inc	New York State Public Service Commission	2-Jul-2013	13-W-0295
Jersey Central Power Light Company	New Jersey Board of Public Utilities	7-Aug-2013	ER12111052
United Water Rhode Island, Inc.	Rhode Island Public Utilities Commission	12-Aug-2013	4434
Missouri Gas Energy	Missouri Public Service Commission	16-Sep-2013	GR-2014-0007
Pioneer Water LLC	Indiana Utility Regulatory Commission	3-Oct-2013	44309-U
Carolina Water Service, Inc. of NC.	North Carolina Utility Commission	21-Oct-2013	W-354 SUB 336
Middlesex Water Company	New Jersey Board of Public Utilities	8-Nov-2013	WR13111059
United Water New Rochelle / United Waster W	New York State Public Service Commission	27-Nov-2013	13-W-0539/13-W-564
Tidewater Utilities, Inc.	Delaware Public Service Commission	30-Nov-2013	13-466
United Water New York, Inc	New York State Public Service Commission	6-Dec-2013	13-W-0295
Maine Water Company	Maine Public Service Commission	13-Dec-2013	2013-00362
Aqua North Carolina, Inc.	North Carolina Utility Commission	13-Dec-2013	W-218, Sub 363
Aqua Ohio, Inc.	Public Utility Commission of Ohio	16-Dec-2014	13-2124-WW-AIR
Aqua New Jersey, Inc.	New Jersey Board of Public Utilities	16-Jan-2014	NA
Indiana American Water Company	Indiana Utility Regulatory Commission	24-Jan-2014	44450
EPCOR Water Arizona, Inc.	Arizona Corporation Commission	10-Mar-2014	W-01303A-14-
Artesian Water Company	Delaware Public Service Commission	11-Apr-2014	NA
Fairbanks Natural Gas LLC	Regulatory Commission of Alaska	30-Jun-2014	14-132

EXHIBIT
S-7
ADMITTED

STATE OF MAINE
PUBLIC UTILITIES COMMISSION

Docket No. 2013-00362

March 25, 2014

MAINE WATER COMPANY-CAMDEN & ROCKLAND DIVISION
Request for Approval of Rate Change

ORDER APPROVING STIPULATION AND SETTING RETURN ON EQUITY

WELCH, Chairman, LITTEL and VANNOY, Commissioners

I. SUMMARY

In this Order, we approve a stipulation between the Office of the Public Advocate, the Maine Water Company, FMC Corporation, and the City of Rockland. Additionally, we set a return on equity of 9.50% for use in calculating the revenue required by the Maine Water Company - Camden & Rockland Division for the provision of water service. We also make a determination as to the appropriate treatment of rate case expenses by the Company.

II. BACKGROUND

On June 25, 2013, the Maine Water Company (Maine Water, MWC or the Company) filed notice with the Commission, pursuant to 35-A M.R.S. § 307, of a proposed change in the rates for water service charged to customers of the Company's Camden & Rockland Division. The Company seeks a rate increase of 7.81% resulting in an increase of annual revenue of $447,338. The need for increased revenue is, according to MWC, driven generally by the costs of ongoing infrastructure replacement, declining revenue, and increased expenses. The Commission granted petitions to intervene as parties in this proceeding filed by Office of the Public Advocate (OPA), the City of Rockland (Rockland), and FMC Corporation (FMC). Following an initial period of discovery and a technical conference, the parties engaged in a series of discussions seeking to arrive at a stipulated resolution of the matter. The parties reached agreement on all rate case issues with the exception of what return on equity (ROE) should be applied to calculate the Company's revenue requirement. Consequently, the only issues submitted for decision by the Commission are determination of the ROE and the proper treatment of rate case expenses. On February 21, 2014, the Hearing Examiner issued an Examiner's Report addressing the ROE and recovery of rate case expenses. On March 11, 2014, Maine Water, the OPA and FMC all filed exceptions.

On March 11, 2014, the parties filed a Stipulation on All Issues Other than ROE and Rate Case Expense Normalization.

III. STIPULATION

The filed Stipulation includes the following provisions:

1. The parties agree that the Camden & Rockland Divisions operations and maintenance costs, excluding rate case normalization, will be $2,268,698 and that Other Taxes, Depreciation, rate base, present revenue level, the capital structure and the cost of debt are as presented in the original filing of the Company.

2. The amount of the Company's rate case expense in this proceeding is $52,750.

3. That the increase will be allocated equally to all classes of customers; and

4. As part of the Order approving this Stipulation, the Commission will require the Company to file a cost of service study by the earlier of: (1) October 1, 2017, or (2) its next application for a general increase in rates in the Camden & Rockland Division.

IV. SUMMARY OF EVIDENCE AND POSITIONS OF THE PARTIES

A. Testimony of Pauline Ahern

Although the Company's initial June 25, 2013 filing, made pursuant to Chapter 120, reflected a proposed ROE of 10%, the testimony submitted by Pauline Ahern on behalf of Maine Water advocates for an ROE of 10.85%. Critical to Ms. Ahern's recommendation of this figure is her application of a propriety risk model developed by the consulting firm of which she is a member branded as the Predictive Risk Premium Model (PRPM™). Ms. Ahern used outputs generated by the PRPM™ to refine her analysis of traditional Capital Asset Pricing Model (CAPM), Risk Premium Model (RPM) methodologies and her evaluation of a Market Cost of Equity Model for comparable risk/non-price regulated firms. The innovation of the PRPM™, as described by Ms. Ahern, is that it "estimates the risk/return relationship directly by analyzing the actual results of investor behavior rather than using subjective judgment as to the inputs required for the application of other cost of common equity models." Ahern Pref. Test. at 35. Ms. Ahern's Discounted Cash Flow (DCF) analysis did not, however, rely on inputs generated by the PRPM™. The mean value of the results of the several models employed by Ms. Ahern suggests an "indicated" cost of equity of 10.15%. To this figure, Ms. Ahern applied proposed adjustments to account for her view that Maine Water presents a greater credit business risk relative to the proxy group. Adjustment was also made to reflect floatation costs. The results of Ms. Ahern's analysis are presented in Table 1 below:

Table 1

	Proxy Group of Nine Water Companies
Discounted Cash Flow Model	8.30%
Risk Premium Model	11.29%
Capital Asset Pricing Model	9.80%
Cost of Equity Models Applied to Comparable Risk, Non-Price Regulated Companies	10.50%
Indicated Common Equity Cost Rate	10.15%
Credit Risk Adjustment	0.17%
Business Risk Adjustment	0.40%
Flotation Cost Adjustment	0.14%
Indicated Common Equity Cost Rate	10.86%
Recommended Common Equity Cost Rate	10.85%

Ahern Pref. Test. at 53.

B. Testimony of Stephen G. Hill

Stephen G. Hill, testifying on behalf of the OPA, recommends the application of an ROE of 8.70%. His analysis relies upon the DCF, CAPM, models and also a Modified Earnings Price Ratio (MEPR) model and a Market to Book (MTB) ratio model. In running these models, Mr. Hill used inputs derived from current and 3-5 year projected earnings of sample groups consisting of price-regulated water companies and price-regulated gas distribution utilities. The results of Mr. Hill's analysis (with those based upon projected future earnings shown in parentheses) are summarized in Table 2 below:

Table 2

Method	Water Companies	Gas Distribution Companies
Discounted Cash Flow Model	8.79%	8.97%
Capital Asset Pricing Model	7.90%	7.87%
Modified Earnings-Price Ratio	7.22% (7.50%)	7.76% (8.35%)
Market to Book Ratio	8.91% (9.03%)	8.71% (8.84%)

Hill Dir. Test. at 39.

The DCF analysis performed by Mr. Hill indicates a cost of capital of 8.79% with respect to the water company sample, and 8.97% for the gas companies. The other models generate an average range of 8.01% to 8.14% for the water company cohort and 8.11% to 8.35% for the gas distribution companies. Consideration of the outputs of all of the models indicates, in Mr. Hill's view, a cost of capital for Maine Water that falls within the range of 8.50% to 9.25% with a mid-point of 8.875%. Mr. Hill also observes that the capital structure of the Camden & Rockland Division, as presented by Maine Water, has a higher percentage of common equity than is observed in both the water company and gas company proxy groups which, therefore, implies a lower financial risk. He also observes that some members of the proxy group are engaged in "riskier" unregulated activities which would tend to increase the cost of their equity above that of a firm engaged in only regulated utility business activities. As a result, Mr. Hill suggests a downward adjustment -- to 8.70% -- of the indicated ROE to reflect the lower risk profile of the Company as compared to the proxy group.

C. Position of the Company

In its brief, Maine Water continues to propose an ROE of 10.00%, notwithstanding the recommendation of Ms. Ahern of a return of 10.85%. The Company states that the OPA's downward adjustment to the return on equity should be rejected because the Camden & Rockland Division does not actually have an independent capital structure and does not issue shares of common stock. Maine Water states that its overall common equity ratio is 50%, slightly lower than the industry average of 51%. Individual divisions of the Company have different capital structures which have been in place and used for setting rates for over 10 years. The Company states that three divisions have artificially low common-equity ratios resulting from the sensitivity to increased rates in the small, rural communities served by these divisions. These constrained equity ratios in certain divisions result in a higher equity ratio for the other divisions, including Camden & Rockland. If rates were set in those divisions with

lower equity ratios based upon the Company's overall actual capital structure, rates would be substantially higher and many of the Company's customers would not be able to afford to purchase water. Because the lower rates in those three divisions do not reflect the actual cost of capital for important reasons of public policy, it would be unfair to adjust the return on equity downward in the Camden- Rockland Division based on its higher than average equity ratio when the equity used to set rates is higher for those very same public policy reasons.

In its brief, Maine Water continues to support Ms. Ahern's inclusion of a floatation cost adjustment, stating that there is no evidence in the record contrary to allowing the 14 basis point upward adjustment. Additionally, Maine Water states that since the market-to-book ratios in the peer group are greater than 1.0, the traditionally structured DCF analysis alone will understate of the cost of equity for the sample group. Maine Water references the Commission's decision in Docket No. 2000-175, that recognized this factor as a reason for using an ROE that was significantly above the indicated midpoint to account for any downward bias that might exist in the DCF results. *Consumers Maine Water Company – Camden/Rockland, Proposed Rate Change (5.88% Increase in Revenue),* Docket No. 2000-175, Order (September 26, 2000).

Maine Water notes that there are a number of risk factors that support a higher ROE, including an assessment by Ms. Ahern that the credit rating that would apply to Maine Water based on its parent's credit rating would be lower than the average credit rating of the proxy group. In addition, the Company cites its small size compared to the peer group, the effect of infrastructure replacement needs, declining consumption in the residential and industrial classes and the reliance on one large industrial customer, FMC, whose consumption has dropped 17% since 2010. Maine Water also states that it remains very well-managed and continues to contribute to the greater good of the water industry in Maine. It also manages a number of water systems, in addition to the ones that it owns, at the request of communities that do not have the in-house expertise that Maine Water can offer.

In its reply brief, Maine Water notes that the Commission has always determined an ROE on a Company-wide basis, referring to the Commission's Order in Docket No. 2000-175 and noting that there is no discussion in the Order suggesting that one Company division has a different ROE than any other. Maine Water also addresses the issue of whether the current models used to calculate ROE attract sufficient capital. To support its position that a 10% ROE may not be sufficient to attract needed capital investment it points to Biddeford & Saco Water Company (BSWC), a water company essentially equal in size to Maine Water Company and much larger than Camden & Rockland Division. In 2010, BSWC failed in its efforts to sell 35,000 shares of common stock to increase its equity by $2.1 million. Rather, the company was able to generate net proceeds of only $858,312. Maine Water acknowledges that it is stronger financially overall than BSWC but that the BSWC experience demonstrates that an ROE of 10% for Maine Water Company is necessary to meet infrastructure demands in the coming years.

Maine Water also notes that it continues to play the role of good steward to other water utilities in Maine and that service supports an upward adjustment in ROE in 2014 just as it did in 2000.

In its exceptions, Maine Water asserts that the Examiner's ROE of 9.50% does not go far enough in setting a reasonable rate of return on equity for Maine Water Company. The Company notes that the Examiner's upward adjustment of 50 basis points was 20 basis points less than the upward adjustment applied by the Commission in Docket No. 2000-175. Maine Water goes on to discuss points referenced in that Order that the Examiner did not address in the current case, including: that the market-to-book ratios are greater than 1.0; that the relative small size of the water utility peer group and the reasonable ROE range within the group was wide; and that Maine Water remains very well-managed and continues to contribute to the greater good of the water utility industry in Maine.

D. Position of the OPA

In its brief, the OPA state that, because it is based on a series of incorrect assumptions, the Predictive Risk Premium Model™ consistently produces a higher average indicated ROE than both the DCF and CAPM models and is inherently unreasonable. The OPA notes that no other Commission has relied on this model, that the model is only used by members of Ms. Ahern's AUS consulting group and that it is difficult for others to analyze or verify the model because its complexity requires that data entered into it is subject to a "black box" treatment. In its brief, the OPA identifies a set of assumptions it says are reflected in the structure of the PRPM™ that it disagrees with, specifically: that utility stocks are not defensive stocks; that the market risk premium is greater than 9%; that monthly buying and selling of stock reflects actual investor behavior; that conditional variances determine stock price movements; and that consumption volatility is closely related to stock market volatility

The OPA states that the PRPM™ model consistently produces a higher average indicated ROE than both the DCF and CAPM and, therefore, cannot be reliable. The OPA states that the capital attraction table and graphs provided in response to ODR 07-001 demonstrate that the utility industry has been successful in attracting capital over the past five years because the industry's book value has been steadily increasing, a development that would not occur if it were not earning a reasonable cost of capital.

The OPA's brief states that the three risk adjustments (credit risk, business risk, and flotation costs) are unreasonable and not supported either theoretically or by the record. The OPA states that Ms. Ahern argued that the upward credit risk adjustment was necessary because Maine Water was riskier than the proxy group but that the numbers do not support this adjustment, as the common equity ratio of the Camden & Rockland Division is substantially above the water industry average common equity ratio, the average for Ms. Ahern's proxy group and the Camden & Rockland Division's common equity ratio over the last five years. The OPA states that the higher common equity ratio signifies lower financial risk for the Camden & Rockland Division and therefore, a credit risk adjustment is both unnecessary and unreasonable.

Additionally, the OPA disagrees with the proposed business risk adjustment, arguing that it is unnecessary, and opposes the inclusion of a flotation cost adjustment.

In its reply brief, the OPA notes the similar results of the DCF analysis presented by both its witness and the Company's witness and recommends that the Commission give full weight to these DCF results. Additionally, the OPA continues to support a downward adjustment for the higher equity layer at the Camden & Rockland division, stating that the Commission is not setting rates or determining the return on equity for Maine Water as a whole, but for the Camden & Rockland division. Because it is currently capitalized with a higher than average 55% common-equity ratio, Camden & Rockland's financial risk will be lower no matter what the consolidated capitalization of the parent may be.

In its exceptions, the OPA questions the Examiner's calculation of the capital structure percentages noted in the Examiner's Report and continues to state that a downward ROE adjustment is called for. The OPA also states that the risk adjustment made by the Examiner is not necessary, as the risks cited would be reflected in the DCF calculation. Lastly, the OPA continues to state that the adjustment for flotation costs is not necessary.

E. Position of Rockland

The City of Rockland did not file direct testimony in this proceeding but did file both a brief and reply brief. In its brief, Rockland states that MWC did not support the 10% ROE used in its initial filing and that the Commission should not adopt Ms. Ahern's proposed cost of equity of 10.85% because it rests upon her flawed model. Rockland supports the ROE proposed by the OPA's witness, Mr. Hill who recommends the use of an ROE of 8.70%.

Rockland states that Ms. Ahern's PRPM™ model is flawed and notes that it has not been accepted by any commission. Rockland also notes that only consultants in Ms. Ahern's firm of AUS use the PRPM™ model. Rockland notes that the PRPM™ model is grounded on a formula using a multiplier and that the derivation of that multiplier is not made available to other parties for verification. Since the methodology cannot be verified, the results of the PRPM™ model should not be used.

Rockland recommends that the Commission set the ROE based on the results of the DCF and Capital Asset Pricing Methods. Rockland notes that both Ms. Ahern and Mr. Hill calculated the ROE using more traditional DCF measures with similar results, noting that Mr. Hill believes that the DCF is somewhat overstated for MWC. Rockland disagrees with Ms. Ahern's upward adjustments for business and credit risk citing Maine Water's high level of common equity.

In its reply brief, Rockland noted that MWC justified its high level of common equity on the fact that the common equity level for its other divisions was low, reflecting past decisions of the Commission. Rockland states that the Commission should decline MW's invitation to force ratepayers in the Camden & Rockland Division to subsidize – through ROE – the cost of water elsewhere in the state. Rockland states that such an approach is fundamentally unfair to Camden & Rockland ratepayers, is

inconsistent with the regulatory distinction between the divisions for ratemaking purposes and would implement an unauthorized redistribution between Maine communities that only the Legislature could possibly impose. Rockland states that the City of Rockland and its residents already bear a considerable expense for their water supplies and should not have to pay part of the cost of water in Bucksport, Hartland and Kezar Falls.[1]

F. FMC Corporation

In its exceptions to the Examiner's Report, FMC notes a contradiction in the Examiner's Report in regard to whether an adjustment is necessary for business and credit risk. FMC also notes that these risks are already reflected in the results of the DCF model. FMC requested that the Commission adopt an ROE of 8.85% before flotation costs. FMC supported the OPA in its position that flotation costs were not necessary but noted that if the Commission were to allow these costs, the overall ROE would be no more than 9.00%.

V. ANALYSIS AND DECISION

A. Stipulation Between the Parties

The Commission has established the following three-part test for reviewing stipulations and will approve stipulations when the following conditions are met:

1. the parties joining the stipulation represent a sufficiently broad spectrum of interests that the Commission can be sure that there is no appearance or reality of disenfranchisement;

2. the process that led to the stipulation was fair to all parties; and

3. the stipulated result is reasonable and not contrary to legislative mandate.

Chapter 110 § 8(D)(7).

We find that the first prong of the test is met. The Parties to the Stipulation are the OPA, FMC, Rockland, and the Company. The OPA represents the customers of the Company in aggregate, while FMC and Rockland represent the interests of municipalities and large consumers. We find these parties to represent a sufficiently broad spectrum of interests to meet the requirements of Chapter 110 §8(D)(7). We consider the agreement of the OPA to be especially relevant to the determination of whether consumer interests are sufficiently represented, and the OPA's agreement weighs in favor of finding that the first prong is satisfied.

[1] FMC Corporation did not file a brief stating its position on the litigated issue.

The second prong of the test requires us to find that the process that led to the Stipulation was fair to all parties. We see nothing in the process leading to the Stipulation in this case that excluded any party, or prevented any party from participating in any aspect of the case or the settlement discussions. All parties had ample opportunity to participate in discovery, present their case, and join negotiations. Thus, we conclude that the second prong is met as well.

This Stipulation was brought to us after the submission of several rounds of testimony and technical conferences allowed the parties to obtain a better understanding of the other parties' positions. Thus we have the benefit of comparing the views of the parties concerning revenue requirement and rate design issues, and also the benefit of our own Staff's Bench Analysis.

We find that the Stipulation meets the third prong of our test and provides a reasonable resolution to the matters that it addresses consistent with our prior treatment of these matters. Additionally, it resolves these issues without the need for further litigation and the costs associated with such litigation.

B. Rate of Return Analysis

The only issues absent from the Stipulation of the parties are the proper rate of return to be collected through rates for water service by the Company and the proper treatment of rate case expenses. We address both in turn below. While parties, in particular the OPA, questioned the Company's capital structure in exceptions to the Examiner's Report, we accept the stipulation between the parties regarding the Company's capital structure and therefore do not address those arguments.

1. Credit Risk and Business Risk Adjustments

Ms. Ahern proposes to add 40 basis points to the return on common equity to reflect the Company's greater business risk as compared to the proxy group and 17 basis points to reflect the Company's greater credit risk as compared to the proxy group. Ms. Ahern describes business risk to all utilities to include the quality of management, the regulatory environment, customer mix and concentration of customers, service territory growth, capital intensity and size, which have a direct bearing on earnings. She further states that the water industry has additional risk as it is the only utility product which is intended for customers to ingest and its quality is of paramount importance to the health and well-being of customers. The water industry, therefore, is subject to additional and increasingly strict health and safety regulations. Ms. Ahern goes on to further describe the water utility operating and regulatory environment. When questioned regarding the specific 40 basis point upward adjustment, Ms. Ahern stated that it is "strictly based on the small size of Maine Water relative to the size of the proxy companies." January 14, 2014 Tr. at 46.

Ms. Ahern also recommends an upward adjustment of 17 basis points based on a comparison of the average bond rating of the proxy group of water companies to that of the parent of Maine Water, and, by extension, to Maine Water. Ms. Ahern states the bond rating for Maine Water would likely be A/A- by S&P and A2/A3 by Moody's, compared to an average bond rating of the proxy group of A1/A2 by

Moody's. She then applies an upward adjustment equal to one-third of the recent average spread between Moody's A and Baa rated public utility bonds.

The OPA disagrees with Ms. Ahern's assessment of the necessity to increase the indicated return for business risk, credit risk or flotation costs.

While we concur that the evidence does support an upward adjustment to the return on equity based on the business risk and credit risk presented by Maine Water, we do not adopt the specific values assigned to those risks as recommended by Ms. Ahern. The business and credit risks identified by the Company are differentiating factors relative to the proxy groups used by Mr. Hill and Ms. Ahern that support such an upward adjustment beyond the mid-point of the range offered by the witnesses. Each consultant has provided testimony deriving an indicated return on equity using the Commission's preferred DCF model[2] and other widely used models and based on a proxy group of market-traded water companies. The general industry risks that Ms. Ahern identifies in her testimony are common to all the companies in the proxy group and therefore would already be reflected in the market based equity return analysis provided. We do note, however, that there are other specific considerations that support an upward adjustment. Current interest rates remain at historically low levels and the outlook for future increases in interest rates may have an effect on capital costs. We also note that Maine Water is a small company compared to the proxy groups used by the witnesses and does have a significant reliance on one specific industrial customer, FCM. We once again note that Maine Water is exceptionally helpful to the water industry in Maine and its customer satisfaction is good. While we cannot put a quantitative value on these points, the Commission must use its judgment to set a final ROE for utilities it regulates.

Finally, while Maine Water and the water industry as a whole, is capital intensive, we do not necessarily agree that it is more capital intensive than all other utility industries. Although the financial pressures resulting from the need to make infrastructure investments can be challenging, the Legislature and the Commission recently provided water utilities in Maine with the opportunity to file for a temporary surcharge to allow for recovery of infrastructure investment without filing a full rate case. See Chapter 675 of the Commission's Rules. This will reduce the regulatory lag for recovery of costs related to the investment in infrastructure and reduces the need for any additional adjustments to the allowed return on equity to account for the capital intensity of the industry.

C. Cost of Equity

Both the Company witness and the OPA witness presented cost of capital testimony based on DCF analysis and provided corroborating analyses using the CAPM

[2] See *Consumers Maine Water Company – Camden/Rockland, Proposed Rate Change (5.88% Increase in Revenue),* Docket No. 2000-175, Order, Pt. 2 at 30 (September 26, 2000). ("We prefer the DCF model to other models because it is the one model that requires equity investors to "put their money where their mouths are," in that it requires the use of a current stock price.")

model and various risk premium models. Mr. Hill recommends a cost of equity of 8.70% and Ms. Ahern recommends a cost of equity of 10.85%. As noted, this Commission has preferred the DCF model and looks to the results of other models as a check on the discounted cash flow results and continues to do so herein. In this case, the DCF model results presented in the testimony are remarkably similar. Although Mr. Hill and Ms. Ahern take slightly different approaches to the specific application of the model and use slightly different water proxy groups and Mr. Hill includes uses a gas distribution proxy group, the indicated equity returns are in the same range. Mr. Hill derives an indicated return using the DCF model of 8.79% for the water companies and 8.97% for the gas companies. The average ROE derived by Ms. Ahern using the DCF model for the utility comparable sample is 8.87%.

The testimony provided by the Company and OPA consultants in this case diverges, however, when the results of the corroborating analyses are considered. Ms. Ahern derives an indicated cost of equity using alternative models and incorporating results from her PRPM™ model to support a recommended cost of equity of 10.15%, before adding her recommended adjustments for credit risk, business risk and floatation costs. As provided in response to an OPA data request, Ms. Ahern recalculated her indicated ROE excluding PRPM™ results and derived a somewhat lower range of results as shown in Table 3 below.[3]

Table 3.

	Proxy Group of Nine Water Companies (with PRPM™)	**Proxy Group of Nine Water Companies (without PRPM™)**
Discounted Cash Flow Model	8.30%	8.30%
Risk Premium Model	11.29%	9.11%
Capital Asset Pricing Model	9.80%	8.71%
Cost of Equity Models Applied to Comparable Risk, Non-Price Regulated Companies	10.50%	9.81%

OPA-003-010 Attachment 10

We are not convinced that we should accept results based on a newly derived analytical model that has not yet been rigorously vetted. As acknowledged by Ms. Ahern, the PRPM™ model is one that was developed by her consulting firm Associated Utility Services (AUS) and has been used only by AUS cost of equity consultants since 2012. January 14, 2014 Tr. at 37. To the best of Ms. Ahern's

[3] The result shown under the DCF model is the median result as reported by Ms. Ahern, the average is 8.87%.

knowledge, no other utility cost of capital consultants uses the PRPM™ methodology and no state commission has adopted it. January 14, 2014 Tr. at 39-40. As stated by Mr. Hill, the model does not easily lend itself to analysis and independent verification of accuracy. At this point, we are not prepared to incorporate the results of the analysis using the PRPM™ inputs into our determination of an appropriate ROE in this case. This does not however preclude us from future reliance once the model is fully vetted by academia and other regulatory bodies.

We are, therefore, presented with expert testimony that establishes an overall range of indicated ROE from 7.87% to 9.81% with a mid-point of 8.85%. In determining a return on equity in this case, we conclude that it is appropriate to choose a point that is higher than the midpoint of the reasonable ROE range because of various risk factors identified by the Company. Specifically, we conclude that the Company does present a higher risk profile than the proxy groups used in the analysis because the water utility peer group appears to have a somewhat higher credit rating than Camden & Rockland. Additionally, the Company does have a single, large industrial customer that has shown declining consumption over the past several years, a risk factor that is commonly recognized in the utility industry. Finally, the Company has also seen declining consumption in the residential class over recent years, at a time when it, as well as other water utilities, are facing significant infrastructure replacement needs. As we noted in Docket 2000-175 , "We have not attempted to assign a particular value in basis points to any of the factors noted above, and would caution the parties against trying to do so in future rate cases." Docket No. 2000-175, Sept. 29, 2000 Order at 29. As then, we simply state here that the risk factors contribute to our decision to allow a 9.35% return on equity (before floatation costs) that rests in the upper quartile of the range suggested by the analysis.

D. Floatation Costs

The Company has proposed a return on equity of 10% which would include a floatation cost adjustment. In her testimony, Ms. Ahern describes the academic literature supporting a floatation cost adjustment and provides an example demonstrating the need for an upward adjustment to ROE to account for floatation cost. Ahern Pref. Test. at 57-60. She then recommends a specific adjustment of 14 basis points derived by modifying her DCF calculations to provide a dividend yield that would reimburse investors for issuance costs in accordance with the cited literature. The flotation cost adjustment recognizes the costs of issuing equity that were incurred by the parent of Maine Water since 2003.

We have recognized the need for and allowed a floatation cost adjustment for Maine Water in the past.[4] We find the calculations provided by Ms. Ahern acceptable and agree that a floatation cost adder of 14 basis points in this case is appropriate. Thus, we conclude that a 9.50% overall ROE is appropriate.

---

[4] *Consumers Maine Water Company – Camden/Rockland, Proposed Rate Change (5.88% Increase in Revenue),* Docket No. 2000-175, Order, Pt. 2 at 14 (September 26, 2000).

E. Summary and Revenue Effect

The evidence in the record supports an overall equity return of 9.50% (including floatation costs). Applying this ROE to the rate base in the Company's original filing and agreed to by the parties results in a required return of $1,618,420.

VI. Rate Case Expense

In its initial filing, MWC estimated the total rate case expense to be $12,570 and proposed to normalize this cost over three years, for an annual normalized amount of $4,190. The test year included rate case expenses of $8,580 so MWC proposed an adjustment that would reduce the test year rate case expense by $4,390, thereby reducing the revenue requirements. We agree that this initial component of rate case expense should be normalized over three years for purposes of calculating revenue requirement.

In its Reply Brief, MWC estimated that actual rate case expenses are currently $45,232, an increase of $32,662. The stipulation agreed to a level of rate case expenses of $52,750, an additional increase of $7,338 for a total increase of $40,000. MWC did not include a proposal for how it would reflect these increased costs in its rates. If MWC were to use the same methodology as included in its initial filing and amortize the total amount over three years, the annual normalized amount reflected in rates for rate case expense would increase by $13,393, from $4,190 to $17,583. As it appears that this increase in rate case expense stems largely from litigating the return on equity aspect of this case, we do not believe that this increase in rate case expense should be normalized over three years. The last time return on equity was litigated was in Docket No. 2000-175, approximately 14 years ago. Therefore, we believe that a normalization period of ten years is more representative of the period of time between cases in which the return on equity is litigated. Thus, the rate case expense consists of the initial $12,570 normalized over a three year period, or $4,190 annually, plus the incremental rate case expense associated with the litigation of ROE of $40,000 normalized over a ten year period, or $4,000. The resultant total normalized annual rate case expense reflected in rates would be $8,190, assuming that costs remain as indicated in the Reply Brief.

VII. CONCLUSION

A. Stipulation

We find that the Stipulation filed on March 11, 2014 meets all the requirements of Stipulations and therefore approve it setting operation and maintenance expenses, except for rate case expenses at $2,268,698.

B. Return on Equity and Rate Case Expenses

We find the appropriate ROE for the Company to be 9.50% and the rate case expense of $8,190 calculated as noted above.

Therefore, we

ORDER

1. The Stipulation filed on March 11, 2014 is approved;
2. The Company's ROE is set at 9.50%;
3. The Company's rate case expense to be included in rates as described above is $8,190; and
4. The Company shall make a compliance filing, including revised tariff sheets, reflecting the decisions in this Order.

Dated at Hallowell, Maine, this 25th day of March, 2014.

BY ORDER OF THE COMMISSION

/s/Harry Lanphear

Harry Lanphear
Administrative Director

COMMISSIONERS VOTING FOR: Welch
Littell
Vannoy

NOTICE OF RIGHTS TO REVIEW OR APPEAL

5 M.R.S. § 9061 requires the Public Utilities Commission to give each party to an adjudicatory proceeding written notice of the party's rights to review or appeal of its decision made at the conclusion of the adjudicatory proceeding. The methods of review or appeal of PUC decisions at the conclusion of an adjudicatory proceeding are as follows:

1. Reconsideration of the Commission's Order may be requested under Section 11(D) of the Commission's Rules of Practice and Procedure (65-407 C.M.R. 110) within **20** days of the date of the Order by filing a petition with the Commission stating the grounds upon which reconsideration is sought. Any petition not granted within **20** days from the date of filing is denied.

2. Appeal of a final decision of the Commission may be taken to the Law Court by filing, within **21** days of the date of the Order, a Notice of Appeal with the Administrative Director of the Commission, pursuant to 35-A M.R.S. § 1320(1)-(4) and the Maine Rules of Appellate Procedure.

3. Additional court review of constitutional issues or issues involving the justness or reasonableness of rates may be had by the filing of an appeal with the Law Court, pursuant to 35-A M.R.S. § 1320(5).

Note: The attachment of this Notice to a document does not indicate the Commission's view that the particular document may be subject to review or appeal. Similarly, the failure of the Commission to attach a copy of this Notice to a document does not indicate the Commission's view that the document is not subject to review or appeal.

BEFORE THE ARIZONA CORPORATION COMMISSION

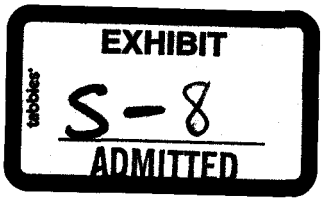

SUSAN BITTER SMITH
Chairman
BOB STUMP
Commissioner
BOB BURNS
Commissioner
DOUG LITTLE
Commissioner
TOM FORESE
Commissioner

IN THE MATTER OF THE APPLICATION OF EPCOR WATER ARIZONA INC., AN ARIZONA CORPORATION, FOR A DETERMINATION OF THE CURRENT FAIR VALUE OF ITS UTILITY PLANT AND PROPERTY AND FOR INCREASES IN ITS RATES AND CHARGES FOR UTILITY SERVICE BY ITS MOHAVE WATER DISTRICT, PARADISE VALLEY WATER DISTRICT, SUN CITY WATER DISTRICT, TUBAC WATER DISTRICT, AND MOHAVE WASTEWATER DISTRICT.	DOCKET NO. WS-01303A-14-0010

DIRECT

TESTIMONY

OF

JOHN A. CASSIDY

PUBLIC UTILITIES ANALYST

UTILITIES DIVISION

ARIZONA CORPORATION COMMISSION

JANUARY 23, 2015

TABLE OF CONTENTS

PAGE

I. INTRODUCTION 1

Summary of Testimony and Recommendations 2
EPCOR's Proposed Overall Rate of Return 5

II. THE WEIGHTED AVERAGE COST OF CAPITAL 6

III. CAPITAL STRUCTURE 7

Background 7
EPCOR's Proposed Capital Structure 8
Staff's Recommended Capital Structure 15

IV. COST OF DEBT 16

V. COST OF EQUITY 18

Background 18
Risk 21

VI. ESTIMATING THE COST OF EQUITY 23

Introduction 23
Discounted Cash Flow Model Analysis 24
The Constant-Growth DCF Model 25
The Multi-Stage DCF 34

VII. SUMMARY OF STAFF'S COST OF EQUITY ANALYSIS 36

VIII. FINAL COST OF EQUITY ESTIMATES FOR EWAZ 37

IX. RATE OF RETURN RECOMMENDATION 40

X. STAFF RESPONSE TO COMPANY'S COST OF CAPITAL WITNESS MS. PAULINE M. AHERN 40

Ms. Ahern's DCF Analysis 43
Ms. Ahern's Risk Premium Analysis 52
Ms. Ahern's Risk Premium Model Using a Total Market Approach 74
Ms. Ahern's CAPM and ECAPM Analyses 77
Ms. Ahern's Proposed Credit Risk and Business Risk Adjustments 81

XI. CONCLUSION 84

SCHEDULES

Capital Structure and Weighted Cost of Capital JAC-1

Intentionally Left Blank JAC-2

Final Cost of Equity Estimates for Sample Water Utilities JAC-3

Average Capital Structure of Sample Water Utilities JAC-4

Growth in Earnings & Dividends of Sample Water Utilities JAC-5

Sustainable Growth for Sample Water Utilities JAC-6

Selected Financial Data of Sample Water Utilities JAC-7

Calculation of Expected Infinite Annual Growth in Dividends JAC-8

Multi-Stage DCF Estimates JAC-9

EXHIBITS

Staff Restatement No. 1 to Ahern Exhibit PMA-DT 2, Schedule 5 (Page 1) ..... JAC - A

Staff Restatement No. 2 to Ahern Exhibit PMA-DT 2, Schedule 5 (Page 1) ..... JAC - B

Restatement of Ms. Ahern's Exhibit PMA-DT 2, Schedule 7 (Page 1 of 11) ..... JAC – C

Historical Data on the Common Stock of Ms. Ahern's Nine Company Proxy Group ..... JAC – D

ATTACHMENTS

Company Response to Staff Data Request JAC 9.1 ..... Attachment JAC - A

Company Response to Staff Data Request JAC 9.3 ..... Attachment JAC - B

Company Response to Staff Data Request JAC 9.8 ..... Attachment JAC - C

Company Response to Staff Data Request JAC 9.9 ..... Attachment JAC - D

Company Response to Staff Data Request JAC 13.1 ..... Attachment JAC - E

Company Response to Staff Data Request JAC 13.5 ..... Attachment JAC - F

Company Response to Staff Data Request JAC 13.6 ..... Attachment JAC - G

Company Response to Staff Data Request JAC 13.8 ..... Attachment JAC - H

Company Response to Staff Data Request JAC 13.9 ..... Attachment JAC - I

EXECUTIVE SUMMARY
EPCOR WATER ARIZONA, INC.
DOCKET NO. WS-01303A-14-0010

The direct testimony of Staff witness John A. Cassidy addresses the following issues:

Capital Structure – For four EPCOR Water Arizona, Inc. ("Company") districts (Mohave Water, Mohave Wastewater, Paradise Valley Water and Sun City Water) in this proceeding, Staff recommends that the Commission adopt a capital structure consisting of 59.76 percent debt and 40.24 percent equity. For the Tubac Water district, Staff recommends that the Commission adopt a capital structure consisting of 58.53 percent debt and 41.47 percent equity.

Cost of Equity – Staff recommends that the Commission adopt a 9.5 percent cost of equity for the Company. Staff's estimated cost of equity for the Company is based on the 8.9 percent average of its discounted cash flow method ("DCF") cost of equity methodology estimates for the sample companies of 8.6 percent for the constant-growth DCF model and 9.2 percent for the multi-stage DCF model. Staff's recommended cost of equity includes an upward economic assessment adjustment of 60 basis points (0.6 percent).

Cost of Debt – Staff recommends that the Commission adopt a 4.3 percent cost of debt for the Mohave Water, Mohave Wastewater, Paradise Valley Water and Sun City Water districts, and a 4.0 percent cost of debt for the Tubac Water district.

Overall Rate of Return – Staff recommends that the Commission adopt a 6.4 percent overall rate of return for the Mohave Water, Mohave Wastewater, Paradise Valley Water and Sun City Water districts, and a 6.2 percent overall rate of return for the Tubac Water district.

Ms. Ahern's Testimony – The Commission should reject the Company's proposed 10.7 percent return on equity ("ROE") for the following reasons:

Ms. Ahern's primary cost of equity estimation model is the Predictive Risk Premium Model™ ("PRPM™"), and PRPM™ derived cost of equity metrics permeate her entire analysis. Cost of equity estimates obtained from the PRPM™ model overstate the market cost of equity; thus, use of PRPM™ derived metrics in Ms. Ahern's Risk Premium Model using an Adjusted Total Market Approach, Capital Asset Pricing Model ("CAPM") and Empirical Capital Asset Pricing Model ("ECAPM") overstates cost of equity estimates obtained from these models, as well. No weight should be given to cost of equity estimates obtained from the PRPM™ model as (i) the critical values input into the model have been hardcoded into the excel file, and (ii) Ms. Ahern makes an invalid assumption concerning the date the common stock of at least five of her nine sample companies initially became publicly traded. In Ms. Ahern's CAPM and ECAPM models, use of a forecasted risk free rate overstates the cost of equity. In Ms. Ahern's Risk Premium Model using a Total Market Approach, use of a forecasted 'Aaa' corporate bond yield overstates the cost of equity. Ms. Ahern's ECAPM cost of equity results should be given no weight, as they are overstated by means of an unnecessary and redundant beta adjustment. Ms. Ahern's proposed 10.7 percent cost of equity is inflated by means of a 44 basis point upward credit risk adjustment and a 30 basis point upward business risk adjustment.

I. INTRODUCTION

Q. Please state your name, occupation, and business address.

A. My name is John A. Cassidy. I am a Public Utilities Analyst employed by the Arizona Corporation Commission ("Commission") in the Utilities Division ("Staff"). My business address is 1200 West Washington Street, Phoenix, Arizona 85007.

Q. Briefly describe your responsibilities as a Public Utilities Analyst.

A. I am responsible for the examination of financial and statistical information included in utility rate applications and other financial matters, including studies to estimate the cost of capital component in rate filings used to determine the overall revenue requirement, and for preparing written reports, testimonies and schedules to present Staff's recommendations to the Commission on these matters.

Q. Please describe your educational background and professional experience.

A. I hold a Bachelor of Arts degree in History from Arizona State University, a Master of Library Science degree from the University of Arizona, and a Master of Business Administration degree with an emphasis in Finance from Arizona State University. While pursuing my MBA degree, I was inducted into Beta Gamma Sigma, the National Business Honor Society. I have passed the CPA exam, but opted not to pursue certification. I have worked professionally as a librarian, financial consultant and tax auditor and served as Staff's cost of capital witness in rate case evidentiary proceedings in my current as well as in a past tenure as a Commission employee.

Q. What is the scope of your testimony in this case?

A. My testimony provides Staff's recommended capital structure, cost of debt, cost of equity, and overall rate of return ("ROR") for establishing the revenue requirements for EPCOR

Water Arizona, Inc. ("EPCOR," "EWAZ," or "Company") in the Company's pending rate application.

Q. Please provide a brief description of EPCOR.

A. Collectively, EWAZ is a Class "A" public service corporation engaged in providing water and wastewater utility service in several different parts of Arizona, pursuant to Certificates of Convenience and Necessity granted by the Commission. During the test year ended June 30, 2013, the Company served approximately 44,529 water and 1,448 wastewater service connections in the districts included in this rate filing.[1]

Summary of Testimony and Recommendations

Q. Briefly summarize how Staff's cost of capital testimony is organized.

A. Staff's cost of capital testimony is presented in eleven sections. Section I is this introduction. Section II discusses the concept of weighted average cost of capital ("WACC"). Section III presents the concept of capital structure and presents Staff's recommended capital structure for EWAZ in this proceeding. Section IV presents Staff's cost of debt for the Company. Section V discusses the concepts of cost of equity and risk. Section VI presents the methods employed by Staff to estimate EWAZ's cost of equity. Section VII presents the findings of Staff's cost of equity analysis. Section VIII presents Staff's final cost of equity estimates for EWAZ. Section IX presents Staff's ROR recommendation. Section X presents Staff's comments on the direct testimony of the Company's witness, Ms. Pauline M. Ahern. Finally, Section XI presents Staff's conclusions.

[1] Mohave Water District: 16,067 connections; Paradise Valley Water District: 4,862 connections; Sun City Water District: 23,004 connections; Tubac Water District: 596 connections; and Mohave Wastewater District: 1,448 connections.

Q. Have you prepared any exhibits to accompany your testimony?

A. Yes. I prepared nine Schedules (JAC-1 to JAC-9), two Exhibits (JAC-A to JAC-B), and nine Attachments (Attachment A – Attachment I) which support Staff's cost of capital analysis.

Q. What is Staff's recommended ROR for EPCOR?

A. On a consolidated basis, Staff recommends a 6.4 percent overall ROR for the Company's Mohave Water, Mohave Wastewater, Paradise Valley Water and Sun City Water districts, as shown in Schedule JAC-1. Staff's ROR recommendation for these four districts is based on the following: (1) a capital structure composed of 59.76 percent debt and 40.24 percent equity; (2) a cost of debt of 4.3 percent; and (3) a cost of equity of 9.5 percent, calculated as the simple average of the two cost of equity estimates for the sample companies derived from Staff's discounted cash flow ("DCF") estimation methodologies (8.6 percent from Staff's constant growth DCF model and 9.2 percent from Staff's multi-stage DCF model), plus the adoption of a 60 basis point upward economic assessment adjustment.

On a standalone basis, Staff recommends a 6.2 percent overall ROR for the Company's Tubac Water district, as shown in Schedule JAC-1. Staff's ROR recommendation for this EWAZ district is based on the following: (1) a capital structure composed of 58.53 percent debt and 41.47 percent equity; (2) a cost of debt of 4.0 percent; and (3) a cost of equity of 9.5 percent, calculated as the simple average of the two cost of equity estimates for the sample companies derived from Staff's DCF estimation methodologies (8.6 percent from Staff's constant growth DCF model and 9.2 percent from Staff's multi-stage DCF model), plus the adoption of a 60 basis point upward economic assessment adjustment.

Staff continues to develop and analyze the indicated cost of equity estimates derived from the two capital asset pricing model ("CAPM") estimation methodologies historically considered

and relied upon by Staff. However, at the present time Staff is recommending that the Commission place less emphasis on CAPM results due to the continuing divergence of the CAPM-indicated cost of equity results relative to those derived by the DCF model.

Q. Mr. Cassidy, briefly explain why the cost of equity estimates derived from the CAPM have become problematic in today's economic environment.

A. In an effort to recover from the economic recession of 2008, the United States Federal Reserve ("The Fed") initiated a monetary policy intended to stimulate economic growth and reduce unemployment by keeping the federal funds rate at a level between 0 to ¼ percent.[2] The federal funds rate is the central bank's key tool to spur the economy and a low rate is thought to encourage spending by making it cheaper to borrow money. In addition, in an effort to put downward pressure on longer-term interest rates, the Fed initiated a policy of quantitative easing[3] wherein the U.S. central bank would purchase U.S. Treasury mortgage-backed securities by reinvesting the principal payments from its holdings of agency debt and agency mortgage-backed securities, and of rolling over maturing Treasury securities at auction.[4] As a consequence, the low interest rate environment engineered by the Fed has compelled investors to seek out higher yields on investment wherever they may be found, resulting in the equity markets having recently achieved new all-time highs,[5] and forecasted

[2] The federal funds rate is the interest rate charged to banks by the Fed for overnight transfers of funds.

[3] Quantitative easing is an unconventional monetary policy in which a central bank purchases government securities or other securities from the market in order to lower interest rates and increase the money supply. Quantitative easing increases the money supply by flooding financial institutions with capital in an effort to promote increased lending and liquidity. Quantitative easing is considered when short-term interest rates are at or approaching zero, and does not involve the printing of new banknotes.

[4] In a Press Release issued October 29, 2014, the Fed announced that it would conclude its asset purchase program, thereby putting an end to its use of quantitative easing (i.e., adding to its holdings of agency mortgage-backed securities at a pre-determined monthly rate) as a monetary policy instrument. In making the announcement, the Fed indicated that there had been substantial improvement in the outlook for the labor market since the inception of its current asset purchase program effective program, and that it continued to see sufficient strength in the broader economy to support ongoing progress toward maximum employment in a context of price stability. The Fed indicated, however, that it would maintain its existing policy of reinvesting principal payments from its holdings of agency debt and agency mortgage-backed securities in agency mortgage-backed securities and of rolling over maturing Treasury securities at auction. (http://www.federalreserve.gov/newsevents/press/monetary/20141029a.htm)

[5] On November 24, 2014, the Dow Jones Industrial Average reached a new all-time closing high of 17,817.90, and an all-time intra-day high of 17,894.83 on November 21, 2014. Similarly, the S&P 500 Index reached a new all-time closing

dividend yields continuing to remain at low levels.[6] At present, these factors, in combination with one another, have led to unusually low cost of equity estimates being obtained from the CAPM model. Accordingly, in Staff's judgment the cost of equity estimates derived from the CAPM should not be given their traditional weighting for purposes of setting rates until such time that market conditions change.[7]

EPCOR's Proposed Overall Rate of Return

Q. Briefly summarize EPCOR's proposed consolidated capital structure, cost of debt, cost of equity, and overall ROR for this proceeding.

A. Table 1 summarizes the Company's proposed consolidated capital structure, cost of debt, cost of equity and overall ROR in this proceeding:

Table 1

	Weight	Cost	Weighted Cost
Long-term Debt	59.76%	4.29%	2.56%
Common Equity	40.24%	10.70%	4.31%
Cost of Capital/ROR			**6.87%**

EWAZ is proposing an overall ROR of 6.87 percent.

high of 2,069.41 on November 24, 2014, and an all-time intra-day high of 2,074.21 on November 25, 2014 (Source: Yahoo! Finance).

[6] As reported in the *Value Line Investment Survey, Summary & Index*, the median estimated dividend yield (next 12 months) of all dividend paying stocks under its review is currently at 2.0 percent (*Value Line*, November 28, 2014 issue).

[7] Recently, there has been much speculation that the Fed might signal a change in monetary policy, and on the eve of the release of the Fed's most recent policy statement, many anticipated that the words, "considerable time," might be removed from the guidance it provides as to when a change in the federal funds rate might take place. In a press release issued on December 17, 2014, however, these words had not been removed from the guidance provided by the Fed. (http://www.federalreserve.gov/newsevents/press/monetary/20141217a.htm)

II. THE WEIGHTED AVERAGE COST OF CAPITAL

Q. Briefly explain the cost of capital concept.

A. The cost of capital is the opportunity cost of choosing one investment over others with equivalent risk. In other words, the cost of capital is the return that stakeholders expect for investing their financial resources in a determined business venture over another business venture.

Q. What is the overall cost of capital?

A. The cost of capital to a company issuing a variety of securities (i.e., stock and indebtedness) is an average of the cost rates on all issued securities adjusted to reflect the relative amounts for each security in the company's entire capital structure. Thus, the overall cost of capital to a firm is its weighted average cost of capital ("WACC").

Q. How is the WACC calculated?

A. The WACC is calculated by adding the weighted expected returns of a firm's securities. The WACC formula is:

Equation 1.

$$WACC = \sum_{i=1}^{n} W_i * r_i$$

In this equation, W_i is the weight given to the ith security (the proportion of the ith security relative to the portfolio) and r_i is the expected return on the ith security.

Q. Can you provide an example demonstrating application of Equation 1?

A. Yes. For this example, assume that an entity has a capital structure composed of 60 percent debt and 40 percent equity. Also, assume that the embedded cost of debt is 5.0 percent and

the expected return on equity, i.e., the cost of equity, is 10.0 percent. Calculation of the WACC is as follows:

WACC = (60% * 5.0%) + (40% * 10.0%)

WACC = 3.0% + 4.0%

WACC = 7.0%

The weighted average cost of capital in this example is 7.0 percent. The entity in this example would need to earn an overall rate of return of 7.0 percent to cover its cost of capital.

III. CAPITAL STRUCTURE

Background

Q. Please explain the capital structure concept.

A. The capital structure of a firm is the relative proportions of each type of security: short-term debt, long-term debt (including capital leases), preferred stock and common stock that are used to finance the firm's assets.

Q. How is the capital structure expressed?

A. The capital structure of a company is expressed as the percentage of each component of the capital structure (capital leases, short-term debt, long-term debt, preferred stock and common stock) relative to the entire capital structure. As an example, the capital structure for an entity that is financed by $20,000 of short-term debt, $85,000 of long-term debt (including capital leases), $15,000 of preferred stock and $80,000 of common stock is shown in Table 2.

Table 2

Component			%
Short-Term Debt	$20,000	($20,000/$200,000)	10.0%
Long-Term Debt	$85,000	($85,000/$200,000)	42.5%
Preferred Stock	$15,000	($15,000/$200,000)	7.5%
Common Stock	$80,000	($80,000/$200,000)	40.0%
Total	$200,000		100%

The capital structure in this example is composed of 10.0 percent short-term debt, 42.5 percent long-term debt, 7.5 percent preferred stock and 40.0 percent common equity.

EPCOR's Proposed Capital Structure

Q. What capital structure does EWAZ propose for purposes of this proceeding?

A. As shown in the Company's Revised D-1 (page 2) Schedules, EPCOR proposes a projected test-year end capital structure composed of 59.76 percent long-term debt and 40.24 percent common equity for its Mohave Water, Mohave Wastewater, Paradise Valley Water and Sun City Water districts. For its Tubac Water district, the Company proposes a projected test-year end capital structure composed of 59.84 percent long-term debt and 40.16 percent common equity.

Q. Ms. Sheryl L. Hubbard is the company witness sponsoring the D Schedules in this docket. Does the narrative of her direct testimony include a discussion of the Company proposed capital structure in this proceeding?

A. No, Ms. Hubbard's direct testimony makes no reference to capital structure.[8]

[8] *See* Hubbard Direct, pp. 21-22.

Q. In light of the above, does Staff have reason to believe that for purposes of this proceeding EPCOR wishes to have the rates of its five EWAZ districts established based upon a consolidated capital structure?

A. Yes, it would appear so. In her direct testimony, Ms. Hubbard states that the "Schedule D-2 displays an average cost of long term debt of 4.29 percent.[9] Additionally, the executive summary of her testimony asserts that "EWAZ's cost of capital is not less than 6.87%. The average cost of long-term debt is 4.29% and the cost of equity is 10.70%."[10] Thus, implicit in these statements is the suggestion that each of the five EWAZ districts in this proceeding has the same capital structure, as well as the same cost of service.

Q. Why does the Company exclude the balance of short-term debt reported for each of the five EWAZ districts as of the June 30, 2013 test-year end from the Company-proposed projected test-year end capital structures for each district?

A. The Company's application is silent on this point.[11] However, as shown in the Company's 2013 Annual Report filed with the Commission, the $8,560,000 short-term debt reported on a total company basis in Schedule D-1 Revised (Page 1) was due to mature on January 15, 2014.[12]

Q. Why does EWAZ propose a capital structure for its Tubac Water district different from that of the other four districts in this proceeding?

A. Unlike the other four EWAZ districts, the debt component in the Tubac Water district capital structure is comprised, in part, of long-term debt obtained from the Water

---

[9] *See* Hubbard Direct, p. 21, line 23. It should be noted that the long-term debt balances shown in the Company's Schedule D-2 Revised as of the June 30, 2013 test-year end reflect the balances of long-term debt outstanding at the parent level, and *not* at the district level.
[10] *See* Hubbard Direct (Executive Summary), p. iii, lines 3-4.
[11] *See* Hubbard Direct, pp. 21-22.
[12] *See* 2013 EWAZ Annual Report, Page 12 attachment (Description of debt).

Infrastructure Financing Authority of Arizona ("WIFA").[13] This low-cost debt was obtained to finance the construction of an arsenic treatment facility in 2009, prior to the time the utility was acquired by EPCOR from Arizona-American Water Company ("Arizona-American").[14] In response to Staff data request JAC 9-3, the Company indicated that the capital structures for each of its five districts in this proceeding had been allocated on the basis of rate base, with the debt component being comprised of replacement debt issued to facilitate the acquisition of its EWAZ properties from Arizona-American.[15] As further noted in the Company's response, the Tubac Water district represented an exception to this general practice, as the low-cost WIFA debt was reserved for inclusion in the Tubac Water district capital structure "to provide the benefit of this low cost financing to the customers for which the financing was incurred."[16] Thus, it is the presence of low-cost WIFA debt in the Tubac Water district capital structure explains why the Company-proposed capital structure for this district is different from that of the other four EWAZ districts in this proceeding.

Q. Does Ms. Hubbard discuss this WIFA loan debt in her direct testimony?

A. No.

Q. As of the June 30, 2013 test-year end, what was the balance of outstanding long-term WIFA debt reserved for inclusion in the Tubac Water district capital structure?

A. As shown in Schedule D-2 Revised (Page 1), as of the June 30, 2013 test-year end, the Tubac Water district had outstanding WIFA debt of $761,134.[17]

---

[13] The Commission approved this WIFA loan debt in Decision No. 71168, dated June 16, 2009 (Docket No. WS-01303A-09-0152).

[14] The acquisition, by EPCOR, of its EWAZ properties from Arizona-American was approved by the Commission in Decision No. 72668, dated November 17, 2011 (Docket No. W-01303A-11-0101).

[15] Authority to issue this long-term replacement debt was granted by the Commission in Decision No. 72668.

[16] See attached Company response to Staff Data Request JAC 9-3.

[17] As shown in this same Schedule D-2 Revised (Page 1), the Company's projected test year end capital structure for Tubac Water gives no recognition to amortization of WIFA debt principal, as the reported balance of outstanding WIFA loan debt remains unchanged at $761,134.

Q. And as of this same June 30, 2013 test-year end, what dollar amount of long-term EPCOR replacement debt did the Company allocate to the Tubac Water district on the basis of rate base?

A. As shown in Schedule D-1 Revised (Page 2), the Tubac Water district had total long-term debt of $941,304 as of the June 30, 2013 test-year end. Thus, on the basis of rate base, the Company allocated a total of $180,170 of long-term EPCOR replacement debt to the Tubac Water district, computed as total long-term debt less the WIFA debt component ($941,304-$761,134 = $180,170).

Q. You indicated that for each district, the Company proposes a projected test-year end capital structure. Does Staff have concerns regarding the manner in which EWAZ computes the dollar value of reported long-term debt and common equity in the projected test-year end capital structure for each district in this proceeding?

A. Yes. As shown in the Company's Schedule D-1 Revised (Page 2) filed for each district, the reported June 30, 2013 test-year end capital structure is comprised of long-term debt, short-term debt, and stockholders' equity, while the projected test-year end capital structure for each district consists only of long-term debt and stockholders' equity. However, despite the absence of short-term debt in the projected test-year end capital structure, for each district the total combined dollar amount of debt and equity capital reported is the same in both the June 30, 2013 test-year end and projected test-year end capital structures. EWAZ achieves this by making a pro rata allocation of short-term debt reported in the test-year end capital structure to the long-term debt and stockholders' equity balances reported in that same test-year end capital structure, and in so doing artificially inflates the carrying value of both long-term debt and common equity in its proposed projected test-year end capital structure for each district.

Q. Does the methodology employed by EWAZ to compute the dollar value of reported long-term debt and common equity in the projected test-year end capital structure overstate the Company-proposed weighted cost of debt for any EWAZ district in this proceeding?

A. Yes, for the Tubac Water district, due to the presence of low-cost WIFA debt in the capital structure; for the other four EWAZ districts, no.

Q. Please describe how the methodology employed by EWAZ overstates its proposed weighted cost of debt for the Tubac Water district in this proceeding.

A. As shown in the Tubac Water Schedule D-1 Revised (Page 2), the June 30, 2013 test-year end capital structure reports total capital of $1,607,775, consisting of $941,304 in long-term debt, $34,767 in short-term debt, and $631,704 of common equity. Exclusive of short-term debt, total capital in this June 30, 2013 test-year end capital structure falls to $1,573,008, comprised solely of the reported test-year end balances of long-term debt and common equity ($941,304 + $631,704 = $1,573,008). As noted earlier, as of the test-year end the Tubac Water district had outstanding WIFA debt of $761,134. Thus, in percentage terms, as of the June 30, 2013 test-year end Tubac Water district's WIFA debt comprised 80.86 percent of total long-term debt ($761,134/$941,304 = 0.8086), and 48.39 percent of total capital ($761,134/$1,573,008 = 0.4839). However, given the methodology (i.e., pro rata allocation of short-term debt) employed by EWAZ to compute the projected test-year end capital structure for its Tubac Water district, as shown in Schedule D-1 Revised (Page 2), long-term debt increases from $941,304 to $962,109 (a $20,805 increase), and common equity increases from $631,704 to $645,666 (a $13,962 increase), for total capital of $1,607,775 ($962,109 + $645,666).[18] As a consequence, in percentage terms the WIFA debt component falls to 79.11 percent of total

[18] Collectively, the increase in reported long-term debt and stockholders' equity increases total projected test-year end capital by $34,767 ($20,805 + $13,962), a figure equating to the dollar amount of short-term debt reported in the June 30, 2013 test-year end capital structure presented in Schedule D-1 Revised (Page 2).

long-term debt ($761,134/$962,109 = 0.7911), and 47.34 percent of total capital ($761,134/$1,607,775 = 0.4734). Thus, by overstating the dollar amount of long-term debt and common equity reported in the Company-proposed projected test-year end capital structure for its Tubac Water district, the relative weighting and influence of low-cost WIFA debt within the capital structure is diminished, resulting in an overstatement to the weighted cost of debt.

Q. Could the Company have achieved the same proposed capital structure for each of its five EWAZ districts had the computation been based upon dollar balances of long-term debt and stockholders' equity reported in the June 30, 2013 test-year end capital structure for each district?

A. Yes, and had EPCOR computed its recommended capital structure in this fashion, there would have been no overstatement to the Company-proposed weighted cost of debt for the Tubac Water district.

Q. In closing on this point, what is the cost rate associated with the short-term debt reported in the June 30, 2013 test-year end capital structure for each EWAZ district in this proceeding?

A. As shown in Schedule D-1 Revised (Page 2), the cost rate of the short-term debt reported in the June 30, 2013 test-year end capital structure for each EWAZ district is 0.31 percent per annum.[19]

[19] In the Company's 2013 Annual Report, the cost rate associated with this short-term debt is reported to be 0.270% per annum.

Q. In light of the above, this would suggest that the Company's methodology inflates the higher-cost long-term debt and common equity balances reported in the Company-proposed projected test-year end capital structures for each EWAZ district with what had formerly been low cost short-term debt, correct?

A. Yes. Effectively, the Company's methodology fundamentally alters the character of what is reported as short-term debt capital in the June 30, 2013 test-year end capital structure to long-term debt and common equity capital in the Company-proposed projected test-year end capital structure for each EWAZ district; this, despite the short-term debt having already matured.

Q. Does Staff consider it appropriate for a regulated public utility to propose a capital structure based upon carrying values of long-term debt and common equity which have been artificially inflated?

A. No. An increase in the reported balance of long-term debt is proper only when evidenced by the issuance of additional long-term debt, while an increase in the reported balance of common equity is proper when evidenced either by an equity infusion by the parent, or an increase in retained earnings. While there may be occasions when a pro forma adjustment might appropriately be made to the capital account balances in order to give recognition to a known and measurable change expected to be made prospectively, in the instant docket such was not the case.

Q. How do the two EWAZ proposed capital structures compare to capital structures of publicly-traded water utilities?

A. Schedule JAC-4 shows the capital structures of seven publicly-traded water utility companies ("sample water companies" or "sample water utilities") as of December 2013. The average

capital structure for the sample water utilities is comprised of approximately 47.6 percent debt and 52.4 percent common equity.

Staff's Recommended Capital Structure

Q. What is Staff's recommended capital structure for EWAZ?

A. Staff recommends that two capital structures be used for purposes of setting rates in this docket. For the Company's Mohave Water, Mohave Wastewater, Paradise Valley Water and Sun City Water districts, Staff recommends a consolidated June 30, 2013 test-year end capital structure consisting of 59.76 percent debt and 40.24 percent common equity. Staff determined that each of these four EWAZ districts, individually, had the same capital structure.[20] For the Tubac Water district, Staff recommends a June 30, 2013 test year end capital structure consisting of 58.53 percent debt and 41.47 percent common equity, updated to reflect amortization of WIFA loan debt principal through December 31, 2014.[21] For each district, Staff's recommended capital structure is based upon the long-term debt and common equity balances reported at the district level as of the June 30, 2013 test-year end, as shown in the Company's Schedule D-1 Revised (Page 2). Staff excludes the short-term debt reported at the district level in the Company's Schedule D-1 Revised (Page 2) as of the June 30, 2013 test-year end from its recommended capital structure for each district, as this short-term debt matured on January 15, 2014.

[20] It should be noted that Staff's recommended June 30, 2013 test-year end capital structure for these four districts is identical to that proposed by the Company using a projected test-year end capital structure.

[21] Staff determined the outstanding principal balance of WIFA debt to be $711,467 as of December 31, 2014. Staff's determination is based upon information provided in the Company's 2013 Annual Report (Page 12 attachment), which reports a December 31, 2013 balance outstanding of $744,470, and a current year portion of WIFA debt principal of $33,003 ($744,470 - $33,003 = $711,467). As of the June 30, 2013 test-year end, this WIFA debt principal balance was $761,134, as shown in the Company's Schedule D-2 Revised (Page 1).

Q. Why did Staff confine its update only to the WIFA debt component within the Tubac Water district capital structure?

A. Because WIFA loan debt is amortizing debt, while the replacement long-term debt allocated to the Tubac Water district is non-amortizing debt. Amortizing loans are obligations requiring scheduled periodic payments (i.e., monthly) of both principal and interest, and as such the outstanding principal balance of an amortizing loan decreases from one month to the next as debt service payments are made. In contrast, non-amortizing debt is an obligation having an interest-only payment feature, thereby necessitating a balloon payment of the entire principal balance at maturity. Thus, while appropriate for Staff to give recognition to the known and measurable change resulting from amortization of WIFA debt principal subsequent to the test-year end, no update was needed for the remaining long-term debt, as the outstanding principal balance of this non-amortizing debt continues at the level reported as of the June 30, 2013 test-year end.

IV. COST OF DEBT

Q. What is the cost of debt proposed by the Company in this proceeding?

A. As shown in Schedule D-2 Revised (Page 1), at the parent level the Company proposes an overall cost of debt of 4.29 percent. At the district level, EWAZ proposes this same 4.29 percent cost of debt for each of the five districts in this proceeding, as shown in Schedule D-1 Revised (Page 2) for each district.

Q. Given the presence of low cost WIFA debt in the Tubac Water district capital structure, does Staff agree with the Company that the cost of debt for the Tubac Water district is the same as that of the other four EWAZ districts in this proceeding?

A. No. The long-term debt component in the capital structures of the other four EWAZ districts (Mohave Water, Mohave Wastewater, Paradise Valley Water and Sun City Water)

consists entirely (i.e., 100%) of higher cost, replacement debt allocated to each on the basis of rate base for purposes of this rate proceeding. In contrast, as noted earlier WIFA debt comprised 80.86 percent ($761,134/$941,304) of total long-term debt in the Tubac Water district capital structure as of the June 30, 2013 test-year end; thus, higher cost replacement debt allocated on the basis of rate base represents only 19.14 percent (1.0 - .8086 = .1914) of total long-term debt in the Tubac Water capital structure.

Q. Please provide a description of the long-term replacement debt which has been allocated to the capital structures of the five EWAZ districts in this proceeding.

A. As shown in Schedule D-2 Revised, at the parent level the long-term replacement debt allocated to each of the five EWAZ districts in this proceeding consists of proceeds from a $133,000,000 10-year, non-amortizing EPCOR Water USA Note, having an effective interest rate of 3.77 percent per annum, and proceeds from a $98,000,000 30-year, non-amortizing EPCOR Water USA Note, having an effective interest rate of 5.02 percent per annum.[22]

Q. Did Staff compute the cost of the replacement long-term debt allocated to each of the five EWAZ districts, as reported at the parent level in the Company's Schedule D-2 Revised?

A. Yes. Based upon the annual cost figures presented in the Company's Schedule D-2 Revised, at the parent level Staff determined the weighted cost of this long-term replacement debt to be 4.2910 percent.[23]

---

[22] As shown in the Company's 2013 Annual Report filed with the Commission, the 10-year Note was issued February 1, 2012, and is due to mature December 15, 2021, while the 30-year Note was issued February 1, 2012, and is due to mature December 15, 2041. Further, the coupon rate on the 10-year Note is reported to be 3.740%, while the coupon rate on the 30-year Note is 5.000%.

[23] Based on information provided in the Company's response to Staff data request JAC 9.5, Staff confirmed the accuracy of the annual cost figures presented for each of the two long-term EPCOR Notes; for the 10-year note, the effective interest rate reflects annual amortization of debt issuance costs of $30,590, while the effective interest rate on the 30-year note reflects annual amortization of debt issuance costs of $7,513. However, as presented in the Company's Schedule D-2 Revised, the reported effective interest rate for the two Epcor Notes has been fractionally overstated; when carried out

Q. What is the cost rate associated with the WIFA loan debt in the Tubac Water district capital structure?

A. As shown in the Company's Schedule D-2 Revised for the Tubac Water district, the interest rate on the WIFA loan is reported to be 3.94 percent per annum. However, Staff determined the actual combined interest and fee rate on the Company's WIFA loan debt to be 3.938 percent.[24]

Q. In light of the above, what cost of debt does Staff recommended for EPCOR in this proceeding?

A. For the Company's Mohave Water, Mohave Wastewater, Paradise Valley Water and Sun City Water districts, Staff recommends a cost of debt of 4.3 percent. For the Company's Tubac Water district, Staff recommends a cost of debt of 4.0 percent. Staff's recommended cost of debt for the Tubac Water district is based upon the actual carrying values of long-term debt within the Tubac Water district as of the June 30, 2013 test-year end, updated to reflect the outstanding principal balance of WIFA loan debt as of December 31, 2014.[25]

V. COST OF EQUITY

Background

Q. Please define the term "cost of equity capital."

A. The cost of equity is the rate of return that investors expect to earn on their investment in a business entity given its risk. In other words, the cost of equity to the entity is the investors'

---

to four digits, Staff determined the effective interest rate on the 10-year note to be 3.7630%, and the effective interest rate on the 30-year note to be 5.0077%.

[24] *See* Compliance filing made by Arizona-American Water Company in Docket No. WS-01303A-09-0152, dated December 9, 2009 (Exhibit A of Loan Agreement). Additionally, as reported in the Company's 2013 Annual Report filed with the Commission, the interest rate on the WIFA loan is shown to be 3.938%.

[25] Staff's recommended 4.0 percent cost of debt for the Tubac Water district represents a weighted average cost, computed by applying the 3.938 percent WIFA loan cost rate to the outstanding principal balance of WIFA debt as of December 31, 2014 ($711,467), and applying the 4.291 percent replacement debt cost rate to the dollar balance of long-term replacement debt ($180,170) allocated to the Tubac Water district on the basis of rate base.

expected rate of return on other investments of similar risk. As investors have a wide selection of stocks to choose from, they will choose stocks with similar risks but higher returns. Therefore, the market determines the entity's cost of equity.

Q. Is there a correlation between interest rates and the cost of equity?

A. Yes, there is a positive correlation between interest rates and the cost of equity, as the two tend to move in the same direction.

Q. What has been the general trend of interest rates in recent years?

A. A chronological chart of interest rates is a good tool to show interest rate history and identify trends. Chart 1 graphs intermediate U.S. treasury rates from January 1, 2005 - October 31, 2014.

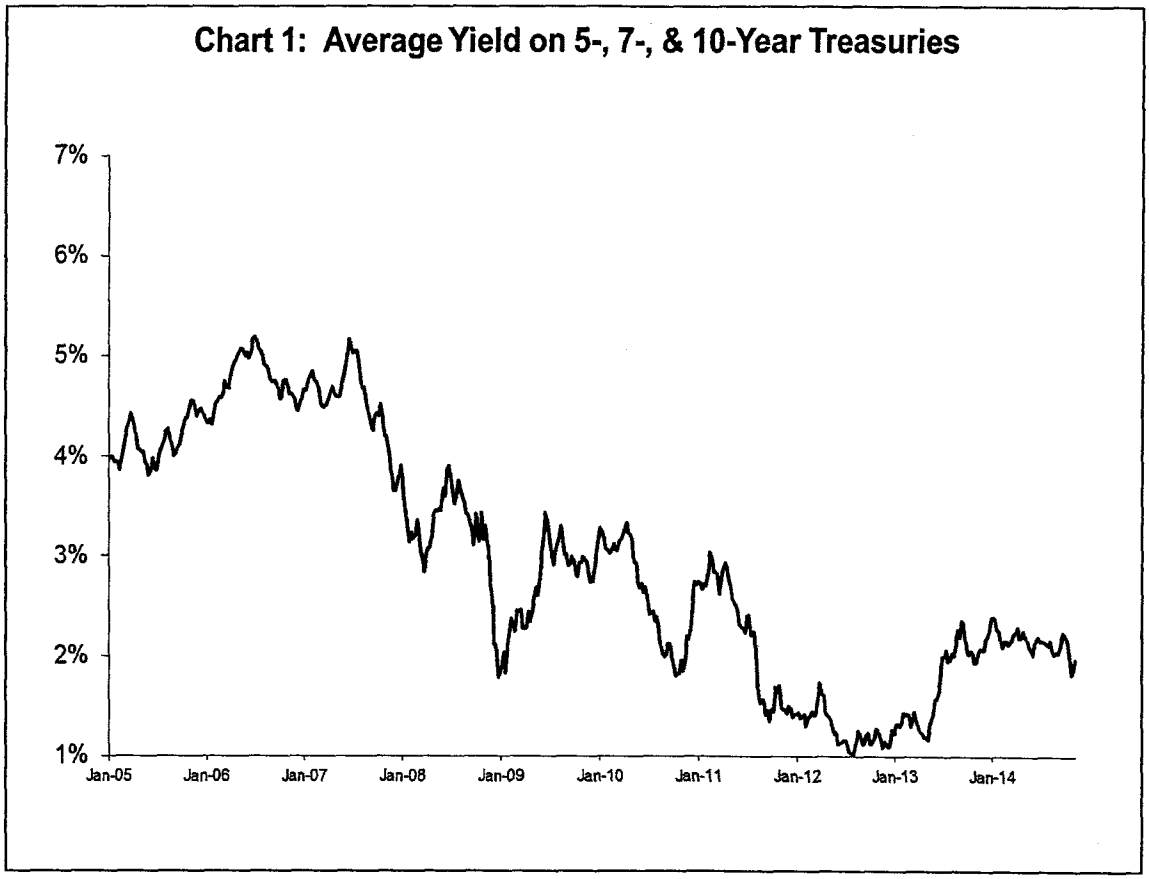

As shown in Chart 1, intermediate-term interest rates generally trended upward from 2005 to mid-2007, then trended downward until late-2012, and have trended upward since that time.

Q. What has been the general trend in interest rates longer term?

A. U.S. Treasury rates from January 1965 - October 2014 are shown in Chart 2. The chart shows that interest rates trended upward through the mid-1980s and have trended downward since that time.

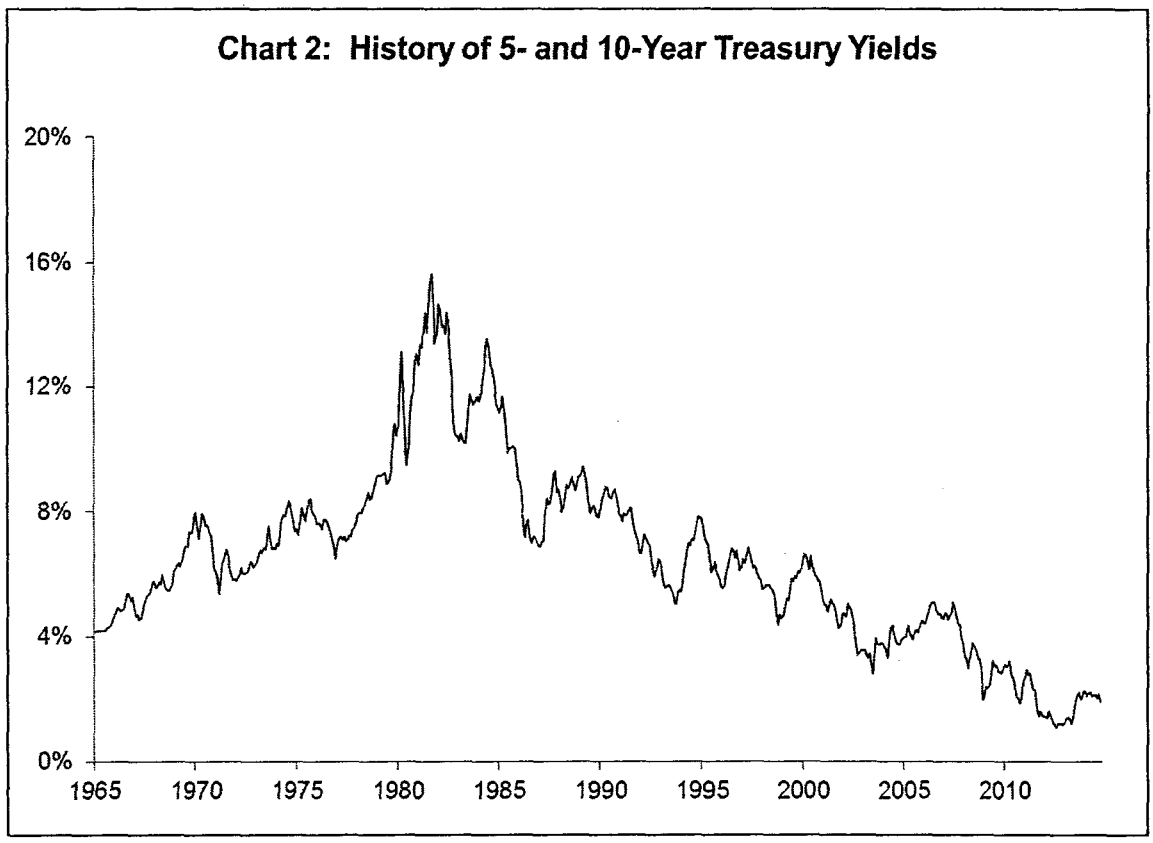

Source: Federal Reserve

Q. Do these trends have relevance to the cost of equity?

A. Yes. As previously noted, interest rates and the cost of equity tend to move in the same direction; therefore, it can be concluded that the cost of equity has also declined over the past 30 years.

Q. Do actual returns represent the cost of equity?

A. No. The cost of equity represents investors' *expected* returns and not realized returns.

Risk

Q. Please define risk as it relates to an equity security investment.

A. Risk, as it relates to an equity security investment, is defined as the variability or uncertainty of the returns associated with that particular security. Investors are risk averse and require a greater potential return to invest in relatively greater risk opportunities, i.e., investors require compensation for taking on additional risk. Risk is generally separated into two components: market risk (systematic risk) which is non-diversifiable, and non-market risk (unsystematic risk or firm-specific risk) which is diversifiable.

Q. What is market risk?

A. Market risk, or systematic risk, is the risk associated with an investment that cannot be reduced through diversification. Market risk stems from factors that affect all securities, such as recessions, war, inflation and high interest rates. These factors affect the entire market. However, market risk does not impact each security to the same degree.

Q. What is non-market risk?

A. Non-market risk, or unsystematic risk, is risk which is unique to the firm and is capable of being diversified away. Examples of unsystematic risk include losses caused by labor problems, nationalization of assets, loss of a big client or adverse weather conditions. Investors can eliminate firm-specific risk by holding a diverse portfolio; thus, it is not of concern to diversified investors.

Q. Is the cost of equity affected by firm-specific risk?

A. No. Since firm-specific risk can be eliminated through diversification, it does not affect the cost of equity.

Q. Can investors expect additional returns for firm-specific risk?

A. No. Investors who hold diversified portfolios can effectively eliminate firm-specific risk and, consequently, do not require any additional return. Since investors who choose to be less than fully-diversified must compete in the market with fully-diversified investors, the former cannot expect to be compensated for unique risk.

Q. Is a firm subject to any other risk?

A. Yes. Firms are also subject to business risk and to financial risk.

Q. Please define business risk.

A. Business risk is the fluctuation of earnings inherent in a firm's operations and environment, such as competition and adverse economic conditions, which may impair its ability to provide returns on investment. Companies in the same or similar line of business tend to experience the same fluctuations in business cycles.

Q. Please define financial risk.

A. Financial risk is the fluctuation of earnings inherent in the use of debt financing that may impair a firm's ability to provide adequate returns; the higher the percentage of debt in a company's capital structure, the greater its exposure to financial risk.

Q. Do business risk and financial risk affect the cost of equity?

A. Yes.

Q. How does EPCOR's financial risk exposure compare to that of Staff's sample group of water companies?

A. Schedule JAC-4 shows the capital structures of the seven sample water companies as of December 2013, and EPCOR's two proposed capital structures as of the June 30, 2013 test-year end. As shown, the sample water utilities were capitalized with approximately 47.6 percent debt and 52.4 percent equity, while the Company-proposed capital structure for its Mohave Water, Mohave Wastewater, Paradise Valley Water and Sun City Water districts consists of 59.76 percent debt and 40.24 percent equity, and, on a standalone basis, the proposed capital structure of its Tubac Water district consists of 59.84 percent debt and 40.16 percent equity. Thus, relative to Staff's sample companies, EPCOR has greater exposure to financial risk.

VI. ESTIMATING THE COST OF EQUITY

Introduction

Q. Did Staff directly estimate the cost of equity for EPCOR?

A. No. Since EWAZ is not a publicly-traded company, Staff is unable to directly estimate its cost of equity due to the lack of firm-specific market data. Instead, Staff estimated the Company's cost of equity indirectly, using a representative sample group of publicly-traded water utilities as a proxy, taking the average of the sample group to reduce the sample error resulting from random fluctuations in the market at the time the information is gathered.

Q. What sample companies did Staff select as proxies for EPCOR?

A. Staff's sample consists of the following seven publicly-traded water utilities: American States Water, California Water, Aqua America, Connecticut Water Service, Middlesex Water, SJW Corporation and York Water. Staff selected these companies because they are publicly-

traded, receive the majority of their earnings from regulated operations, and are followed by the *Value Line Investment Survey.*

Q. What models did Staff employ to estimate the Company's cost of equity?

A. Staff used two variations of the DCF model, both of which are market-based, to estimate the cost of equity for EWAZ: the constant-growth DCF model and the multi-stage DCF model.

Q. Please explain why Staff chose the DCF model.

A. Staff chose to use the DCF model because it is a widely-recognized market-based model and has been used extensively to estimate the cost of equity. For the reasons noted earlier, Staff does not incorporate estimates derived from the CAPM into its cost of equity analysis for EPCOR. An explanation of the DCF model is provided below.

Discounted Cash Flow Model Analysis

Q. Please provide a brief summary of the theory upon which the DCF method of estimating the cost of equity is based.

A. The DCF method of stock valuation is based on the theory that the value of an investment is equal to the sum of the future cash flows generated from the aforementioned investment discounted to the present time. This method uses expected dividends, market price and dividend growth rate to calculate the cost of capital. Professor Myron Gordon pioneered the DCF method in the 1960s. The DCF method has become widely used to estimate the cost of equity for public utilities due to its theoretical merit and its simplicity. Staff used the financial information for the relevant seven sample companies in the DCF model and averaged the results to determine an estimated cost of equity for the sample companies.

Q. Does Staff use more than one version of the DCF model?

A. Yes. Staff uses two versions of the DCF model: the constant-growth DCF and the multi-stage or non-constant growth DCF. The constant-growth DCF assumes that an entity's dividends will grow indefinitely at the same rate. The multi-stage growth DCF model assumes the dividend growth rate will change at some point in the future.

The Constant-Growth DCF Model

Q. What is the mathematical formula used in Staff's constant-growth DCF analysis?

A. The constant-growth DCF formula used in Staff's analysis is:

Equation 2:

$$K = \frac{D_1}{P_0} + g$$

where:

K = the cost of equity
D_1 = the expected annual dividend
P_0 = the current stock price
g = the expected infinite annual growth rate of dividends

Equation 2 assumes that the entity has a constant earnings retention rate and that its earnings are expected to grow at a constant rate. According to Equation 2, a stock with a current market price of $10 per share, an expected annual dividend of $0.45 per share and an expected dividend growth rate of 3.0 percent per year has a cost of equity to the entity of 7.5 percent reflected by the sum of the dividend yield ($0.45/ $10 = 4.5 percent) and the 3.0 percent annual dividend growth rate.

Q. How did Staff calculate the expected dividend yield (D_1/P_0) component of the constant-growth DCF formula?

A. Staff calculated the expected yield component of the DCF formula by dividing the expected annual dividend (D_1) by the spot stock price (P_0) after the close of market on December 17, 2014, as reported by *MSN Money*.

Q. Why did Staff use the December 17, 2014, spot price rather than a historical average stock price to calculate the dividend yield component of the DCF formula?

A. The current, rather than historic, market price is used in order to be consistent with financial theory. In accordance with the Efficient Market Hypothesis, the current stock price is reflective of all available information on a stock, and as such reveals investors' expectations of future returns.

Q. How did Staff estimate the dividend growth (g) component of the constant-growth DCF model represented by Equation 2?

A. The dividend growth component used by Staff is determined by the average of six different estimation methods, as shown in Schedule JAC-8. Staff calculated historical and projected growth estimates on dividend-per-share ("DPS"),[26] earnings-per-share ("EPS")[27] and sustainable growth bases.

Q. Why did Staff examine EPS growth to estimate the dividend growth component of the constant-growth DCF model?

A. Historic and projected EPS growth are used because dividends are related to earnings. Dividend distributions may exceed earnings in the short run, but cannot continue indefinitely. In the long term, dividend distributions are dependent on earnings.

---

[26] Derived from information provided by *Value Line*.
[27] Derived from information provided by *Value Line*.

Q. How did Staff estimate historical DPS growth?

A. Staff estimated historical DPS growth by calculating a compound annual DPS growth rate for each of its sample companies over the 10-year period, 2004-2013. As shown in Schedule JAC-5, the average historical DPS growth rate for the sample was 3.7 percent.

Q. How did Staff estimate projected DPS growth?

A. Staff calculated an average of the projected DPS growth rates for the sample water utilities from *Value Line* through the period, 2017-2019. The average projected DPS growth rate is 6.2 percent, as shown in Schedule JAC-5.

Q. How did Staff estimate historical EPS growth rate?

A. Staff estimated historical EPS growth by calculating a compound annual EPS growth rate for each of its sample companies over the 10-year period, 2004-2013. As shown in Schedule JAC-5, the average historical EPS growth rate for the sample was 6.5 percent.

Q. How did Staff estimate projected EPS growth?

A. Staff calculated an average of the projected EPS growth rates for the sample water utilities from *Value Line* through the period, 2017-2019. The average projected EPS growth rate is 6.2 percent, as shown in Schedule JAC-5.

Q. How does Staff calculate its historical and projected sustainable growth rates?

A. Historical and projected sustainable growth rates are calculated by adding their respective retention growth rate terms (br) to their respective stock financing growth rate terms (vs), as shown in Schedule JAC-6.

Q. What is retention growth?

A. Retention growth is the growth in dividends due to the retention of earnings. The retention growth concept is based on the theory that dividend growth cannot be achieved unless the company retains and reinvests a portion of its earnings. The retention growth rate is used in Staff's calculation of sustainable growth shown in Schedule JAC-6.

Q. What is the formula for the retention growth rate?

A. The retention growth rate is the product of the retention ratio and the book/accounting return on equity. The retention growth rate formula is:

Equation 3:

$$\text{Retention Growth Rate} = br$$

where: b = the retention ratio (1 – dividend payout ratio)
r = the accounting/book return on common equity

Q. How did Staff calculate the average historical retention growth rate (br) for the sample water utilities?

A. Staff calculated the mean of the 10-year average historical retention rate for each sample company over the period, 2004-2013. As shown in Schedule JAC-6, the historical average retention (br) growth rate for the sample is 2.8 percent.

Q. How did Staff estimate its projected retention growth rate (br) for the sample water utilities?

A. Staff used the retention growth projections for the sample water utilities for the period, 2017-2019, from *Value Line*. As shown in Schedule JAC-6, the projected average retention growth rate for the sample companies is 4.3 percent.

Q. When can retention growth provide a reasonable estimate of future dividend growth?

A. The retention growth rate is a reasonable estimate of future dividend growth when the retention ratio is reasonably constant and the entity's market price to book value ("market-to-book ratio") is expected to be 1.0. The average retention ratio has been reasonably constant in recent years. However, the market-to-book ratio for the sample water utilities is 2.3, notably higher than 1.0, as shown in Schedule JAC-7.

Q. Is there any financial implication of a market-to-book ratio greater than 1.0?

A. Yes. A market-to-book ratio greater than 1.0 implies that investors expect an entity to earn an accounting/book return on its equity that exceeds its cost of equity. The relationship between required returns and expected cash flows is readily observed in the fixed securities market. For example, assume an entity contemplating issuance of bonds with a face value of $10 million at either 6 percent or 8 percent and, thus, paying annual interest of $600,000 or $800,000, respectively. Regardless of investors' required return on similar bonds, investors will be willing to pay more for the bonds if issued at 8 percent than if the bonds are issued at 6 percent. For example, if the current interest rate required by investors is 6 percent, then they would bid $10 million for the 6 percent bonds and more than $10 million for the 8 percent bonds. Similarly, if equity investors require a 9 percent return and expect an entity to earn accounting/book returns of 13 percent, the market will bid up the price of the entity's stock to provide the required return of 9 percent.

Q. How has Staff generally recognized a market-to-book ratio exceeding 1.0 in its cost of equity analyses in recent years?

A. Staff has assumed that investors expect the market-to-book ratio to remain greater than 1.0. Given that assumption, Staff has added a stock financing growth rate (vs) term to the retention ratio (br) term to calculate its historical and projected sustainable growth rates.

Q. Do the historical and projected sustainable growth rates Staff uses to develop its DCF cost of equity in this case continue to include a stock financing growth rate term?

A. Yes.

Q. What is stock financing growth?

A. Stock financing growth is the increase in an entity's dividends attributable to the sale of stock by that entity. Stock financing growth is a concept derived by Myron Gordon and discussed in his book *The Cost of Capital to a Public Utility.*[28] Stock financing growth is the product of the fraction of the funds raised from the sale of stock that accrues to existing shareholders (v) and the fraction resulting from dividing the funds raised from the sale of stock by the existing common equity (s).

Q. What is the mathematical formula for the stock financing growth rate?

A. The mathematical formula for stock financing growth is:

Equation 4:

$$\text{Stock Financing Growth} = vs$$

where: v = Fraction of the funds raised from the sale of stock that accrues to existing shareholders

s = Funds raised from the sale of stock as a fraction of the existing common equity

Q. How is the variable *v* presented above calculated?

A. Variable *v* is calculated as follows:

[28] Gordon, Myron J. *The Cost of Capital to a Public Utility.* MSU Public Utilities Studies, Michigan, 1974, pp. 31-35.

Equation 5:

$$v = 1 - \left(\frac{book\ value}{market\ value} \right)$$

For example, assume that a share of stock has a $30 book value and is selling for $45. Then, to find the value of *v*, the formula is applied:

$$v = 1 - \left(\frac{30}{45} \right)$$

In this example, *v* is equal to 0.33.

Q. How is the variable *s* presented above calculated?

A. Variable *s* is calculated as follows:

Equation 6:

$$s = \frac{\text{Funds raised from the issuance of stock}}{\text{Total existing common equity before the issuance}}$$

For example, assume that an entity has $150 in existing equity, and it sells $30 of stock. Then, to find the value of *s*, the formula is applied:

$$s = \left(\frac{30}{150} \right)$$

In this example, *s* is equal to 20.0 percent.

Q. What is the *vs* term when the market-to-book ratio is equal to 1.0?

A. A market-to-book ratio of 1.0 reflects that investors expect an entity to earn a book/accounting return on their equity investment equal to the cost of equity. When the market-to-book ratio is equal to 1.0, none of the funds raised from the sale of stock by the entity accrues to the benefit of existing shareholders, i.e., the term *v* is equal to zero (0.0). Consequently, the *vs* term is also equal to zero (0.0). When stock financing growth is zero, dividend growth depends solely on the *br* term.

Q. What is the effect of the *vs* term when the market-to-book ratio is greater than 1.0?

A. A market-to-book ratio greater than 1.0 reflects that investors expect an entity to earn a book/accounting return on their equity investment greater than the cost of equity. Equation 5 shows that, when the market-to-book ratio is greater than 1.0, the *v* term is also greater than zero. The excess by which new shares are issued and sold over book value per share of outstanding stock is a contribution that accrues to existing stockholders in the form of a higher book value. The resulting higher book value leads to higher expected earnings and dividends. Continued growth from the *vs* term is dependent upon the continued issuance and sale of additional shares at a price that exceeds book value per share.

Q. What *vs* estimate did Staff calculate from its analysis of the sample water utilities?

A. Staff estimated an average stock financing growth of 2.6 percent for the sample water utilities, as shown in Schedule JAC-6.

Q. What would occur if an entity had a market-to-book ratio greater than 1.0 as a result of investors expecting earnings to exceed its cost of equity, and subsequently experienced newly-authorized rates equal only to its cost of equity?

A. Holding all other factors constant, one would expect market forces to move the company's stock price lower, closer to a market-to-book ratio of 1.0, to reflect investor expectations of reduced expected future cash flows.

Q. If the average market-to-book ratio of Staff's sample water utilities were to fall to 1.0 due to authorized ROEs equaling their cost of equity, would inclusion of the vs term be necessary to Staff's constant-growth DCF analysis?

A. No. As discussed above, when the market-to-book ratio is equal to 1.0, none of the funds raised from the sale of stock by the entity accrues to the benefit of existing shareholders because the *v* term equals to zero and, consequently, the *vs* term also equals zero. When the market-to-book ratio equals 1.0, dividend growth depends solely on the *br* term. Staff's inclusion of the *vs* term assumes that the market-to-book ratio continues to exceed 1.0 and that the water utilities will continue to issue and sell stock at prices above book value with the effect of benefitting existing shareholders.

Q. What are Staff's historical and projected sustainable growth rates?

A. Staff's estimated historical sustainable growth rate is 5.4 percent based on an analysis of earnings retention for the sample water companies. Staff's projected sustainable growth rate is 6.9 percent based on retention growth projected by *Value Line*. Schedule JAC-6 presents Staff's estimates of the sustainable growth rate.

Q. What is Staff's expected infinite annual growth rate in dividends?

A. Staff's expected dividend growth rate (g) is 5.8 percent, which is the average of historical and projected DPS, EPS, and sustainable growth estimates. Staff's calculation of the expected infinite annual growth rate in dividends is shown in Schedule JAC-8.

Q. What is Staff's constant-growth DCF estimate for the sample utilities?

A. Staff's constant-growth DCF estimate is 8.6 percent, as shown in Schedule JAC-3.

The Multi-Stage DCF

Q. Why did Staff implement the multi-stage DCF model to estimate EPCOR's cost of equity?

A. Staff generally uses the multi-stage DCF model to consider the assumption that dividends may not grow at a constant rate. The multi-stage DCF uses two stages of growth; the first stage (near-term) having a duration of four years, followed by a second stage (long-term) of constant growth.

Q. What is the mathematical formula for the multi-stage DCF?

A. The multi-stage DCF formula is shown in the following equation:

Equation 7:

$$P_0 = \sum_{t=1}^{n} \frac{D_t}{(1+K)^t} + \frac{D_n(1+g_n)}{K-g_n}\left[\frac{1}{(1+K)}\right]^n$$

Where: P_0 = current stock price
D_t = dividends expected during stage 1
K = cost of equity
n = years of non – constant growth
D_n = dividend expected in year n
g_n = constant rate of growth expected after year n

Q. What steps did Staff take to implement its multi-stage DCF cost of equity model?

A. First, Staff projected future dividends for each of the sample water utilities using near-term and long-term growth rates. Second, Staff calculated the rate (cost of equity) which equates the present value of the forecasted dividends to the current stock price for each of the sample water utilities. Lastly, Staff calculated an overall sample average cost of equity estimate.

Q. How did Staff calculate near-term (stage-1) growth?

A. The stage-1 growth rate is based on *Value Line*'s projected dividends for the next twelve months, when available, and on the average dividend growth (g) rate of 5.8 percent, calculated in Staff's constant DCF analysis for the remainder of the stage.

Q. How did Staff estimate long-term (stage-2) growth?

A. Staff calculated the stage-2 growth rate using the arithmetic mean rate of growth in Gross Domestic Product ("GDP") from 1929 to 2013.[29] Using the GDP growth rate assumes that the water utility industry is expected to grow at the same rate as the overall economy.

[29] www.bea.doc.gov.

Q. What is the historical GDP growth rate that Staff used to estimate stage-2 growth?

A. Staff used 6.5 percent to estimate the stage-2 growth rate.

Q. What is Staff's multi-stage DCF estimate for the sample utilities?

A. Staff's multi-stage DCF estimate is 9.2 percent, as shown in Schedule JAC-3.

Q. What is Staff's overall DCF estimate for the sample utilities?

A. Staff's overall DCF estimate is 8.9 percent. Staff calculated the overall DCF estimate by averaging the constant growth DCF (8.6%) and multi-stage DCF (9.2%) estimates, as shown in Schedule JAC-3.

VII. SUMMARY OF STAFF'S COST OF EQUITY ANALYSIS

Q. What is the result of Staff's constant-growth DCF analysis to estimate the cost of equity for the sample water utilities?

A. Schedule JAC-3 shows the result of Staff's constant-growth DCF analysis. The result of Staff's constant-growth DCF analysis is as follows:

$$k = 2.8\% + 5.8\%$$

$$k = \mathbf{8.6\%}$$

Staff's constant-growth DCF estimate of the cost of equity for the sample water utilities is 8.6 percent.

Q. What is the result of Staff's multi-stage DCF analysis to estimate of the cost of equity for the sample utilities?

A. Schedule JAC-9 shows the result of Staff's multi-stage DCF analysis. The result of Staff's multi-stage DCF analysis is:

Company	Equity Cost Estimate (k)
American States Water	8.9%
California Water	9.2%
Aqua America	8.9%
Connecticut Water	9.4%
Middlesex Water	10.0%
SJW Corp	8.8%
York Water	9.0%
Average	**9.2%**

Staff's multi-stage DCF estimate of the cost of equity for the sample water utilities is 9.2 percent.

Q. What is Staff's overall DCF estimate of the cost of equity for the sample utilities?

A. Staff's overall DCF estimate of the cost of equity for the sample utilities is 8.9 percent. Staff calculated an overall DCF cost of equity estimate by averaging Staff's constant growth DCF (8.6 percent) and Staff's multi-stage DCF (9.2 percent) estimates, as shown in Schedule JAC-3.

VIII. FINAL COST OF EQUITY ESTIMATES FOR EWAZ

Q. Please compare EPCOR's capital structure to that of Staff's seven sample companies.

A. The average capital structure for the sample water utilities is composed of 47.6 percent debt and 52.4 percent equity, as shown in Schedule JAC-4. In contrast, the Company-proposed consolidated capital structure for EPCOR's Mohave Water, Mohave Wastewater, Paradise

Valley Water and Sun City Water districts is composed of 59.76 percent debt and 40.24 percent equity, while that of its Tubac Water district on a standalone basis is comprised of 59.84 percent debt and 40.16 percent equity. Thus, because the capital structures of the Company's five EWAZ districts are more highly leveraged than that of Staff's sample average water utility, EPCOR stockholders bear more financial risk than do equity shareholders of the sample utilities.

Q. Does Staff recommend that an upward adjustment be made to the Company's cost of equity to give recognition to its increased exposure to financial risk?

A. No. Staff considers a capital structure lying within the range of 60 percent debt / 40 percent equity to be reasonably well balanced and economically efficient. As noted above, each of the two Company-proposed capital structures in this docket meet this criterion; therefore, Staff does not recommend that an upward financial risk adjustment be made to the Company's cost of equity in this proceeding.

Q. Does Staff feel there are additional considerations as to why no upward financial risk adjustment should be made to the Company's cost of equity in this proceeding?

A. Yes. As noted earlier, the long-term replacement debt allocated to each of the five EWAZ districts in this proceeding is non-amortizing debt, and as such the outstanding principal balance of this debt will remain unchanged until maturity. Assuming for a moment this were not the case, and that instead the Company's long-term debt were comprised of amortizing debt; in this scenario, the equity component within the capital structure of each EWAZ district would be expected to rise over time,[30] as the outstanding principal balance of long-term debt would fall with each debt service payment made, thus reducing the Company's

[30] In the instant docket, this is evidenced by Staff's recommended capital structure for the Tubac Water district being higher (41.47 percent) than that proposed by the Company (40.16 percent), due to Staff updating its recommended capital structure to give recognition to amortization of WIFA debt principal through December 31, 2014.

exposure to financial risk. Capital budgeting decisions made by EPCOR management, however, effectively preclude this scenario from happening, as the long-term debt used to fund its EWAZ utility properties is almost exclusively non-amortizing debt.[31] Accordingly, it is Staff's position that an election on the part of EPCOR to finance its utility plant investment with non-amortizing debt should not serve as justification for an upward financial risk adjustment being made to the Company's cost of equity in this proceeding, as exposure to financial risk can be mitigated through the use of amortizing debt.

Q. Did Staff consider factors other than the results of its technical models in its cost of equity analysis?

A. Yes. In consideration of the relatively uncertain status of the economy and the market that currently exists, Staff is proposing an upward economic assessment adjustment to the cost of equity. In this case, Staff recommends a 60 basis point (0.6 percent) upward economic assessment adjustment, as shown in Schedule JAC-3.

Q. What is Staff's recommended cost of equity for EPCOR?

A. Staff recommends a cost of equity of 9.5 percent for the Company, based on cost of equity estimates for the sample companies of 8.6 percent for the constant-growth DCF model and 9.2 percent for the multi-stage DCF model. Staff recommends adoption of a 60 basis point upward economic assessment adjustment, resulting in a 9.5 percent Staff-recommended cost of equity, as shown in Schedule JAC-3.

[31] As shown in the Company's Schedule D-2 Revised, at the parent level EPCOR's EWAZ utility properties were funded by long-term debt of $231,761,134 as of the June 30, 2013 test-year end. Of this total, $231,000,000 consists of non-amortizing replacement debt, with the remaining $761,134 comprised of amortizing WIFA loan debt. Thus, non-amortizing debt comprises 99.67% of total Epcor long-term debt ($231,000,000/$231,761,134), while amortizing debt comprises only 0.33% ($761,134/$231,761,134).

IX. RATE OF RETURN RECOMMENDATION

Q. What overall rate of return did Staff determine for EPCOR?

A. Staff determined a consolidated 6.4 percent ROR for the Company's Mohave Water, Mohave Wastewater, Paradise Valley Water and Sun City Water districts, as shown in Schedule JAC-1 and the following table:

Four Districts - Consolidated

	Weight	Cost	Weighted Cost
Long-term Debt	59.76%	4.3%	2.6%
Common Equity	40.24%	9.5%	3.8%
Overall ROR			**6.4%**

For the Company's Tubac Water district, on a standalone basis Staff determined a 6.2 percent ROR, as shown in Schedule JAC-1 and the following table:

Tubac Water District – Stand Alone Basis

	Weight	Cost	Weighted Cost
Long-term Debt	58.53%	4.0%	2.3%
Common Equity	41.47%	9.5%	3.9%
Overall ROR			**6.2%**

X. STAFF RESPONSE TO COMPANY'S COST OF CAPITAL WITNESS MS. PAULINE M. AHERN

Q. Please summarize Ms. Ahern's analyses and recommendations.

A. Ms. Ahern recommends a 10.7 percent cost of equity based on estimates derived from the single-stage constant growth DCF model, two risk premium ("RPM") models (the Predictive Risk Premium Model™ ("PRPM™") and a Risk Premium Model using an Adjusted Total

Market Approach), and two CAPM models (the Traditional CAPM and the Empirical CAPM) for a proxy group of nine sample companies. Ms. Ahern derives an estimated median cost of common equity of 8.37 percent from her DCF model, an estimated cost of common equity of 11.25 percent from her two RPM models, and an estimated cost of common equity of 9.93 percent from her two CAPM models. She concludes that the indicated cost of common equity to her sample group of companies before adjustments for risk is 9.95 percent, based upon the results obtained from her DCF, RPM and CAPM models. To this 9.95 percent indicated cost of equity figure, Ms. Ahern adds an upward 44 basis point credit risk adjustment and an upward 30 basis point business risk adjustment, thus arriving at an indicated cost of common equity of 10.69 percent. Ms. Ahern recommends a cost of common equity of 10.70 percent for EPCOR. Her overall recommended rate of return for the Company is 6.87 percent.

For purposes of her single-stage constant growth DCF analysis, Ms. Ahern (i) relies exclusively on analysts' forecasts for EPS growth to estimate the dividend growth (g) component (See Exhibit PMA-DT 2, Schedule 5, p. 1), (ii) utilizes a 60-day average stock price (P_0) to calculate an average dividend (D_0/P_0) yield (See Exhibit PMA-DT 2, Schedule 5, p. 1, Note 1), and (iii) makes a semi-annual ~~compounding~~ adjustment to the expected dividend yield (D_1/P_0) component to reflect the periodic payment of dividends (See Exhibit PMA- DT 2, Schedule 5, p. 1, Note 4).

For purposes of her CAPM, ECAPM and PRPM™ analyses, Ms. Ahern employs an inflated risk free (R_f) rate of 4.31 percent; a figure representing the forecasted average of 30-year U.S. Treasury Note yields obtained from *Blue Chip Financial Forecasts* covering (i) the 18-month period, Q4 2013 – Q1 2015, (ii) the five year period, 2015-2019, and (iii) the six year period, 2020-2025 (See Exhibit PMA-DT 2, Schedule 8, Page 2, Note 2).

Q. You stated that based upon the results obtained from her DCF, RPM and CAPM models, Ms. Ahern concludes that the indicated cost of common equity to her sample group of companies before adjustments for risk is 9.95 percent. As presented in her summary cost of equity schedule, does this 9.95 percent cost estimate represent the arithmetic mean of her DCF, RPM and CAPM cost of equity estimates?

A. No. As presented in Exhibit PMA-DT 2, Schedule 1, Ms. Ahern's indicated cost of common equity is shown to be 9.95 percent, based upon cost of equity estimates of 8.37 percent, 11.25 percent and 9.93 percent from her DCF, RPM and CAPM models, respectively. However, the arithmetic mean of these three individual cost of equity estimates equates to an indicated cost figure of 9.85 percent ((.0837 + .1125 + .0993)/3 = .0985), not the 9.95 percent figure reported by Ms. Ahern. Thus, Ms. Ahern's indicated cost of common equity prior to consideration of adjustments for credit/business risk has been *overstated* by 10 basis points.

Q. Did Staff inquire as to how Ms. Ahern arrived at her 9.95 percent pre-adjustment indicated cost of common equity for the Company?

A. Yes. Staff issued two separate data requests to the Company requesting an explanation as to how the results of each cost of common equity model employed by Ms. Ahern had been weighted for purposes of arriving at this 9.95 percent pre-adjustment cost rate, and the reason(s) Ms. Ahern believed the relative weightings accorded each model were appropriate. On each occasion, however, as shown in Attachment JAC- A and Attachment JAC- E, the Company's response proved to be non-responsive to the question asked.[32]

[32] Staff's initial data request was issued as STF JAC 9.1; after failing to be responsive to Staff's initial data request, a second data request was issued the Company, as STF JAC 13.1. The Company's response to each is contained in Attachments JAC – A and JAC - E.

Ms. Ahern's DCF Analysis

Q. Does Staff have any comments on Ms. Ahern's sole reliance on analysts' forecasts of EPS growth rates to estimate dividend growth rate (g) in her DCF analysis?

A. Yes. Exclusive reliance on analysts' forecasts of earnings growth to forecast DPS is inappropriate because it assumes that investors do not give consideration to other relevant information such as historical dividend and earnings growth. Generally, analysts' forecasts are known to be overly optimistic. Sole use of analysts' forecasts to calculate the expected dividend growth rate, (g), serves to inflate that component of the DCF model and, consequently, the estimated cost of equity. The appropriate growth rate to use in the DCF model is the dividend growth rate expected by *investors*, not by analysts. Investors are assumed to be rational, and as such will want to take into consideration all relevant available information prior to making an investment decision. Therefore, it is reasonable to assume that investors would consider both historical measures of past growth, as well as analysts' forecasts of future growth, similar to the balanced approach used by Staff when estimating the dividend growth (g) rate in Staff's constant-growth DCF model.

Q. Does Staff have evidence to support its assertion that exclusive reliance on analysts' forecasts of earnings growth in the DCF model would result in inflated cost of equity estimates?

A. Yes. Experts in the financial community have commented on the optimism in analysts' forecasts of future earnings.[33] A study cited by David Dreman in his book *Contrarian Investment Strategies: The Next Generation* found that *Value Line* analysts were optimistic in their forecasts by 9 percent annually, on average for the 1987 – 1989 period. Another study

[33] Seigel, Jeremy J. Stocks for the Long Run. 2002. McGraw-Hill. New York. p. 100. Dreman, David. *Contrarian Investment Strategies: The Next Generation*. 1998. Simon & Schuster. New York. pp. 97-98. Malkiel, Burton G. *A Random Walk Down Wall Street*. 2003. W.W. Norton & Co. New York. p. 175.
Testimony of Professors Myron J. Gordon and Lawrence I. Gould, consultant to the Trial Staff (Common Carrier Bureau), FCC Docket 79-63, p. 95.

conducted by David Dreman found that between 1982 and 1997, analysts overestimated the growth of earnings of companies in the S&P 500 by 188 percent.

Burton Malkiel, of Princeton University, conducted a study of the 1- and 5-year earnings forecasts made by some of the most respected names in the investment business. His results showed that when compared with actual earnings growth rates, the 5-year forecasts made by professional analysts were far less accurate than estimates derived from several naïve forecasting models, such as the long-run growth rate in national income. In the following excerpt from his book, A Random Walk Down Wall Street, Professor Malkiel discusses the results of his study:

> When confronted with the poor record of their five-year growth estimates, *the security analysts honestly, if sheepishly, admitted that five years ahead is really too far in advance to make reliable projections.* They protested that although long-term projections are admittedly important, they really ought to be judged on their ability to project earnings changes one year ahead. Believe it or not, it turned out that their one-year forecasts were even worse than their five-year projections.
>
> The analysts fought back gamely. They complained that it was unfair to judge their performance on a wide cross section of industries, because earnings for high-tech firms and various "cyclical" companies are notoriously hard to forecast. *"Try us on utilities," one analyst confidently asserted. At the time they were considered among the most stable group of companies because of government regulation. So we tried it and they didn't like it. Even the forecasts for the stable utilities were far off the mark.*[34] (Emphasis added)

Q. Are investors aware of the overestimation problems associated with analysts' forecasts?

A. Yes. In addition to books, there are numerous published articles appearing in *The Wall Street Journal* and other financial publications that cast doubt on the accuracy of research analysts'

[34] Malkiel, Burton G. A Random Walk Down Wall Street. 2003. W.W. Norton & Co. New York. p. 175

forecasts.[35] Investors, being keenly aware of these inherent biases in forecasts, will use other methods to assess future growth.

Q. Should DPS growth be considered in a DCF analysis?

A. Yes. As previously stated in Section VI of this testimony, the current market price of a stock is equal to the present value of all expected future dividends, not future earnings. Professor Jeremy Siegel from the Wharton School of Finance stated:

> Note that the price of the stock is always equal to the present value of all future *dividends* and not the present value of future earnings. Earnings not paid to investors can have value only if they are paid as dividends or other cash disbursements at a later date. Valuing stock as the present discounted value of future earnings is manifestly wrong and greatly overstates the value of the firm.[36]

For valuation purposes, therefore, earnings paid out in the form of a dividend have paramount relevancy to investors. Dividends, unlike earnings, cannot be manipulated or overstated. Thus, historical DPS growth should receive appropriate consideration when estimating the market cost of equity in the DCF model.

Q. Does Staff consider Ms. Ahern's use of a 60-day average stock price to be appropriate for purposes of calculating the current dividend (D_0/P_0) yield in the constant growth DCF model?

A. No. The current dividend yield (D_0/P_0) component in the DCF model is best reflected by use of a current spot price, not an historical average stock price. Use of average stock prices

---

[35] Smith, Randall & Craig, Suzanne. "Big Firms Had Research Ploy: Quiet Payments Among Rivals." *The Wall Street Journal.* April 30, 2003. Brown, Ken. "Analysts: Still Coming Up Rosy." *The Wall Street Journal.* January 27, 2003. p. C1. Karmin, Craig. "Profit Forecasts Become Anybody's Guess." *The Wall Street Journal.* January 21, 2003. p. C1. Gasparino, Charles. "Merrill Lynch Investigation Widens." *The Wall Street Journal.* April 11, 2002. p. C4. Elstein, Aaron. "Earnings Estimates Are All Over the Map." *The Wall Street Journal.* August 2, 2001. p. C1. Dreman, David. "Don't Count on those Earnings Forecasts." *Forbes.* January 26, 1998. p. 110.

[36] Seigel, Jeremy J. Stocks for the Long Run. 2002. McGraw-Hill. New York. P. 93.

to calculate the current dividend yield employs stale information and is not reflective of current investor expectations.

Q. How does Staff respond to Ms. Ahern's assertion that "it is more imperative than ever to not give exclusive, primary or even simply greater reliance to the DCF analysis at this time?"[37]

A. Staff respectfully disagrees with this assertion. As noted in her direct testimony, Ms. Ahern openly acknowledges that the DCF model is market based, stating that "market prices are utilized in developing the dividend yield component of the model."[38] While it is true that equity valuations have risen in the capital markets over the last several years, resulting in a consequential decline in dividend yields, this circumstance is reflective of the market cost of equity having fallen. Unlike other cost of equity estimation models, the DCF intrinsically links the price investors are willing to pay for a security to the return yielded on that investment. Thus, to disregard cost of equity estimates derived from the DCF at this time would be to ignore the fact that in today's marketplace investors must pay more for a given unit of return.

Q. Does Staff agree with Ms. Ahern that cost of equity estimates derived from the DCF model should not be relied upon due to the market value of utility company common stock exceeding book value (i.e., market-to-book ratio greater than 1.0), and the prospect that they will continue to do so?

A. No. As discussed in Staff's direct testimony, Staff's constant growth DCF model includes a stock financing growth (*vs*) term, giving recognition to the circumstance where a sample company's market-to-book ratio exceeds 1.0. As shown in Schedule JAC-6, Staff's sample average *vs* term is 2.6 percent, and is a component of both Staff's historical- and projected

[37] Ahern Direct, p. 26, lines 13-15.
[38] Ahern Direct, p. 19, lines 9-10.

sustainable dividend growth estimates. Furthermore, as shown in Schedule JAC-8, Staff's 6.9 percent projected sustainable growth estimate is the *highest* among the six measures used to estimate dividend growth in Staff's constant growth DCF model.

Q. Does the inclusion of a stock financing growth (*vs*) term in Staff's constant growth DCF model render moot the market-to-book ratio issue raised by Ms. Ahern in her testimony?

A. Yes, as inclusion of the *vs* term in Staff's constant growth DCF model assumes the average market-to-book ratio for Staff's sample group of companies is expected to remain above 1.0.

Q. You stated earlier that for purposes of computing a DCF indicated cost of equity, for each sample company Ms. Ahern made a semi-annual adjustment to the expected dividend yield (D_1/P_0) component to reflect the periodic payment of dividends (See Exhibit PMA- DT 2, Schedule 5, p. 1, Note 4). What is Ms. Ahern's stated justification for making such an adjustment?

A. In her testimony,[39] Ms. Ahern states that because dividends are paid on a quarterly basis, "*an adjustment must be made to the dividend yield* (emphasis added)." Ms. Ahern acknowledges that DCF theory calls for use of the "full growth rate" (i.e., the expected dividend, D_1) in the dividend yield component, but expresses concerns that the dividend yield might be *overstated* without such a semi-annual adjustment. Accordingly, in order to be "*conservative*" (emphasis added) in approach, Ms. Ahern elects to utilize only "one-half the annual dividend growth rate in the dividend yield component, or $D_{1/2}$."

[39] Ahern Direct, p. 20, lines 14-25.

Q. Had Ms. Ahern not made such a semi-annual adjustment, would her sample average (8.86 percent) and sample median (8.37 percent) DCF cost of equity estimates have been higher, or lower?

A. Had she not made this adjustment, both Ms. Ahern's sample average and sample median DCF cost of equity estimates would have been *higher*.

Q. Did Staff prepare a restatement of Ahern Exhibit PMA- DT 2, Schedule 5 (Page 1) to demonstrate how use of a semi-annual adjustment to the expected dividend yield causes a reduction to Ms. Ahern's sample average and sample median DCF cost of equity estimates in this proceeding?

A. Yes. As shown in Exhibit JAC-A, Staff Restatement No. 1 to Exhibit PMA- DT 2, Schedule 5 (Page 1) presents Ms. Ahern's DCF cost of equity methodology with a semi-annual adjustment made to the expected dividend ($D_{1/2}/P_0$) yield in columns [A] - [F], while columns [G] – [K] present the same calculation utilizing an unadjusted expected dividend (D_1/P_0) yield. As can be seen, had no semi-annual adjustment been made to the expected dividend yield, Ms. Ahern's average DCF indicated cost of equity would have been 8.94 percent (8 basis points higher than her 8.86 percent DCF average cost estimate), while her median DCF indicated cost of equity would have been 8.45 percent (8 basis points higher than her 8.37 percent DCF median cost estimate).

Q. Does Staff agree with Ms. Ahern that a semi-annual adjustment "must be made to the dividend yield?"

A. No. Ms. Ahern's use of such an adjustment is an election on her part, as DCF theory does not require that such an adjustment be made.

Q. In Staff's judgment, does Ms. Ahern appear similarly "conservative" in approach when obtaining cost of equity estimates from her other cost of equity estimation models in this proceeding?

A. No, she does not.

Q. For purposes of her proposed DCF cost of equity estimate in this proceeding, Ms. Ahern relies on the median 8.37 percent estimate rather than the higher 8.86 percent sample average estimate, correct?

A. Yes.[40] As shown in Exhibit PMA- DT 2, Schedule 5 (Page 1), Ms. Ahern elected to adopt the lower 8.37 percent sample median estimate rather than the higher 8.86 percent sample average estimate as her proposed DCF cost of equity estimate in this proceeding. Had Ms. Ahern instead elected to adopt the sample average estimate, her proposed DCF cost of equity estimate would have been 49 basis points *higher* (.0886 - .0837 = .0049).

Q. Does Staff have reason to believe that Ms. Ahern's DCF methodology significantly *understates* the 8.37 percent median DCF cost of equity she relies upon in this proceeding, and if so, how?

A. Yes, Ms. Ahern's DCF methodology significantly understates the median cost of equity estimate derived from her constant growth DCF model. In accordance with DCF theory, the dividend growth (g) rate in the constant growth DCF model is assumed to continue into infinity. However, a review of Exhibit PMA- DT 2, Schedule 5 (Page 1) indicates that Ms. Ahern utilizes a five-year projected EPS growth rate obtained for each sample company as the infinite dividend growth rate used to compute a DCF indicated cost of equity for each sample company. Column 6 of Exhibit PMA- DT 2, Schedule 5 (Page 1) presents the dividend growth (g) rates used by Ms. Ahern in her DCF analysis and as can be seen, among

[40] Ahern Direct, pp. 21-22, 23:7.

her sample companies the highest five-year projected EPS growth rate obtained was for SJW Corporation (10.75 percent) and the lowest was for American States Water (3.00 percent). Not surprisingly, as shown in column 8 of Exhibit PMA- DT 2, Schedule 5 (Page 1), the highest indicated cost of equity obtained from Ms. Ahern's DCF model was for SJW Corporation (13.53 percent) while the lowest was for American States Water (5.98 percent), which equates to a range of estimates of 755 basis points (.1353 - .0598 = .0755). For obvious reasons, when computing a sample average and a sample median from a range of values varying to this degree, the sample median can be expected to be lower than the sample average. Had Ms. Ahern instead utilized an overall sample average dividend growth (g) rate in the computation of her DCF indicated cost of equity for each sample company, her sample median DCF estimate would have been significantly *higher*.

Q. Is use of a sample average dividend growth (g) rate in the constant growth DCF model consistent with DCF theory?

A. Yes, because the dividend growth rate used in the constant growth DCF model is assumed to remain constant into infinity. Therefore, use of a sample average dividend growth rate to compute the estimated DCF cost of equity for each sample company better reflects a dividend growth rate that might reasonably be expected to continue into infinity, as opposed to the unreasonably high (10.75 percent) and low (3.00 percent) growth rates utilized by Ms. Ahern for SJW Corporation and American States Water, respectively, in her DCF analysis.

Q. What is Ms. Ahern's sample average DCF dividend growth (g) rate?

A. Although not presented in Exhibit PMA- DT 2, Schedule 5 (Page 1), Staff determined Ms. Ahern's sample average dividend growth rate to be 5.75 percent, as shown in column [B] of Staff Exhibit JAC-A.

Q. Did Staff prepare a restatement of Ahern Exhibit PMA- DT 2, Schedule 5 (Page 1) to demonstrate how use of this 5.75 percent sample average dividend growth (g) rate would have increased the sample median DCF estimate Ms. Ahern relies upon in this proceeding?

A. Yes. As shown in Exhibit JAC-B, Staff prepared a second restatement to Exhibit PMA- DT 2, Schedule 5 (Page 1) utilizing her 5.75 percent overall sample average dividend growth (g) rate in the computation of a DCF indicated cost of equity estimate for each sample company. As can be seen, Columns [A]-[F] present Staff's restatement to Ms. Ahern's DCF methodology with a semi-annual adjustment made to the expected dividend ($D_{1/2}/P_0$) yield. As shown, when applying the 5.75 percent sample average dividend growth rate to each company, there is *no change* to Ms. Ahern's 8.86 percent sample average DCF indicated cost of equity (i.e., it remains at the level reported in column 8 of Exhibit PMA- DT 2, Schedule 5 (Page 1)); however, Ms. Ahern's sample median DCF indicated cost of equity rises to a level of 8.78 percent, a figure *41 basis points higher* than the 8.37 percent sample median estimate she relies upon for purposes of her DCF analysis. As shown, columns [G]-[K] of Exhibit JAC-B present the same calculation, but utilizing an unadjusted expected dividend (D_1/P_0) yield. As can be seen, had no semi-annual adjustment been made to the expected dividend yield and a 5.75 percent sample average dividend growth (g) rate been applied to each sample company, Ms. Ahern's average DCF indicated cost of equity would have been 8.95 percent (9 basis points higher than the 8.86 percent DCF average cost estimate reported in column 8 of Exhibit PMA- DT 2, Schedule 5 (Page 1)), while her median DCF indicated cost of equity would have *increased* to 8.86 percent, a figure equal to her original average DCF cost of equity estimate and *49 basis points higher* than the 8.37 percent sample median estimate she relies upon for purposes of her DCF analysis in this proceeding.

Q. In light of the above, would it be unreasonable to conclude that Ms. Ahern may intentionally be trying to keep her DCF estimated cost of equity low to enhance her assertion that cost of equity estimates derived from the DCF model not be relied upon in this proceeding?

A. No. I believe a reasonable observer might draw that conclusion.[41]

Ms. Ahern's Risk Premium Analysis

Q. Please discuss Ms. Ahern's Risk Premium cost of equity methodology.

A. Ms. Ahern's risk premium methodology incorporates estimates derived from two risk premium models, using a proxy group of nine publicly-traded water companies. Ms. Ahern's primary risk premium model is the Predictive Risk Premium Model™ ("PRPM™"), which produces a median estimated cost of equity of 11.68 percent, as shown in Exhibit PMA-DT 2, Schedule 7 (Page 2). Her secondary model is a Risk Premium Model using an Adjusted Total Market Approach, which produces an estimated cost of equity of 9.96 percent, as shown in Exhibit PMA-DT 2, Schedule 7 (Page 3). Using the results derived from these two risk premium models, Ms. Ahern's risk premium methodology generates an "average" estimated cost of equity of 11.25 percent, as shown in Exhibit PMA-DT 2, Schedule 7 (Page 1).

Q. Does Ms. Ahern's 11.25 percent "average" risk premium cost of equity estimate represent the arithmetic mean (i.e., simple average) of the cost of equity estimates derived from her two risk premium models?

A. No, it does not. Ms. Ahern's 11.25 percent risk premium estimate is an unbalanced weighted average cost, with the cost of equity results obtained from her PRPM™ model assigned a **75**

[41] As shown in Exhibit PMA-DT 2, Schedule 8 (Page 1), for purposes of her CAPM and ECAPM analyses Ms. Ahern again relies on the sample median, rather than the sample average, indicated cost of equity estimate; however, for these cost of equity estimation models the 9.93 percent sample median estimate *exceeds* by 8 basis points the 9.85 percent sample average estimate.

percent weight, and those from her Risk Premium Model using an Adjusted Total Market Approach assigned a **25 percent weight**. Had Ms. Ahern given equal weight (i.e., 50 percent) to the results of her two risk premium models, her risk premium cost of equity estimate would have been 10.82 percent, a figure 43 basis points *lower* than her unbalanced 11.25 percent weighted average estimate (.1125 - .1082 = .0043).

Q. What is the range of estimates for the cost of equity obtained from Ms. Ahern's PRPM™ model for her proxy group of companies?

A. As shown in Exhibit PMA-DT 2, Schedule 7 (Page 2), the cost of equity estimates obtained from Ms. Ahern's PRPM™ model range from a high of 21.76 percent for American Water Works to a low of 10.42 percent for Connecticut Water. These cost of equity results equate to a total range of 1,134 basis points (.2176 - .1042 = .1134). As shown, Ms. Ahern's PRPM™ sample average (i.e., arithmetic mean) cost of equity estimate is 13.67 percent, while her PRPM™ sample median estimate is 11.68 percent.

Q. What is Ms. Ahern's stated reason for relying on the median 11.68 percent PRPM™ cost of equity estimate in her risk premium analysis, rather than the higher 13.67 percent PRPM™ arithmetic mean estimate?

A. Ms. Ahern states that she relies on the median estimate due to the wide range of results obtained from the PRPM™ model, and her desire not to give undue weight to any high or low outliers.[42]

[42] *See* Ahern Direct, pp. 28-29, 24:1.

Q. Does Staff find Ms. Ahern's risk premium methodology to be consistent with her stated desire not to give undue weight to any high or low cost of equity outliers obtained from the PRPM™ model?

A. No. In fact, Ms. Ahern is very inconsistent with regards to this statement. Given the magnitude of the range of estimates obtained from the PRPM™ model, and in view of Ms. Ahern assigning a 75 percent weight to the median cost of equity results obtained therefrom, her risk premium methodology gives significant weight to the PRPM™ cost of equity estimates which exceed her 11.68 percent sample median PRPM™ estimate. A review of Ahern Exhibit PMA-DT 2, Schedule 7 (Page 2), indicate these would include the PRPM™ cost of equity estimates for American Water Works (21.76 percent), Aqua America (17.82 percent), York Water (15.71 percent), and Artesian Resources (12.33 percent).

Q. In light of the above noted inconsistency, did Staff quantify the effective PRPM™ cost of equity cost rate used by Ms. Ahern in arriving at her 11.25 percent estimated risk premium cost of equity?

A. Yes. As shown in Exhibit JAC-C, Staff prepared a restatement of Ms. Ahern's Exhibit PMA-DT 2, Schedule 7 (Page 1), which presents a summary of her risk premium results. Scenario [A] presents Ms. Ahern's actual weighted average risk premium cost of equity calculation, which assigns a 75 percent weight to her median 11.68 percent PRPM™ cost of equity estimate to arrive at her overall 11.25 percent risk premium estimate. As shown in scenario [B], however, Ms. Ahern's effective PRPM™ cost of equity estimate is shown to be 12.54 percent. In solving for this effective cost rate, Staff's calculation assigns a 50 percent weight to the cost of equity results obtained from each risk premium model, and assumes that the average (i.e., arithmetic mean) risk premium cost of equity remains at 11.25 percent. As shown, this 12.54 percent effective PRPM™ cost rate *exceeds* by 86 basis points the 11.68

percent median PRPM™ cost rate Ms. Ahern purports to rely upon in her risk premium methodology (.1254 - .1168 = .0086).

Q. Please provide a general discussion of Ms. Ahern's PRPM™ model.

A. As described in her direct testimony,[43] Ms. Ahern's PRPM™ model borrows upon the work of Robert F. Engle, a Nobel Prize winning economist for his 'methods of analyzing economic time series with time-varying volatility ("ARCH")', with ARCH standing for autoregressive conditional heteroskedasticity. When explaining the PRPM™, Ms. Ahern states that in financial markets, "volatility changes over time and is related from one period to the next," and that Engle discovered that "volatility in prices and returns also clusters over time, making it highly predictable and available to predict future levels of risk and risk premiums." Ms. Ahern goes on to say that the PRPM™ model "estimates the risk/return relationship directly by analyzing the actual results of investor behavior," thus eliminating the need for "*subjective judgments* as to the *inputs* required for the application of other cost of common equity models" (emphasis added). In closing on this point, Ms. Ahern states that the PRPM™ is based not upon "an <u>estimate</u> of investor behavior, but rather upon the evaluation of the results of that behavior, i.e., the variance of historical equity risk premiums, in other words, the predicted equity risk premium is generated by the prediction of volatility (risk)."

Q. What are the inputs to Ms. Ahern's PRPM™ model?

A. As noted in her testimony,[44] the inputs to the PRPM™ model are the historical [monthly] returns on the common shares of each company in the proxy group minus the historical

[43] Ahern Direct, pp. 27-28, 14:7.
[44] Ahern Direct, p. 28, lines 11- 20.

monthly yield on long-term U.S. Treasury securities through September 2013,[45] and a forecasted 4.31 percent risk-free rate.

Q. In the derivation of her PRPM™ equity risk premiums, does Ms. Ahern give equal weight to all historical periods in the time series through September 2013?

A. Apparently not. In her testimony, Ms. Ahern states that, "*greater weight is given to more recent time periods, in contrast to reliance upon the arithmetic mean premium which gives equal weight to each observed premium* (emphasis added)."[46]

Q. As described in her testimony, how does Ms. Ahern compute a PRPM™ derived equity risk premium for each of her nine sample companies?

A. As noted in her testimony[47], Ms. Ahern states that "using a generalized form of ARCH, known as GARCH [i.e., Generalized Autoregressive Conditional Heteroskedasticity], each water company's projected equity risk premium was determined using Eviews© statistical software."

Q. Is it accurate to say that among the cost of equity estimation models employed by Ms. Ahern in this docket, she relies most heavily on cost of equity estimates derived from the PRPM™ model?

A. Yes. Not only is the PRPM™ model Ms. Ahern's primary cost of equity estimation model in this proceeding, but PRPM™ derived cost of equity metrics permeate her entire analysis. As will be discussed, with the exception of her single-stage constant growth DCF model, Ms. Ahern's cost of equity methodology incorporates PRPM™ derived metrics in both her

[45] A review of the work papers supporting Ms. Ahern's Exhibit PMA-DT 2, Schedule 7 (Page 2) reveal that these inputs are used in the determination of the monthly variances calculated for each of her nine sample companies through September 2013; however, the narrative of Ms. Ahern's direct testimony makes no mention of this.
[46] Ahern Direct, p. 28, lines 7 - 10.
[47] Ahern Direct, p. 28, 13-15.

secondary RPM model (i.e., Risk Premium Model using an Adjusted Total Market Approach) as well as her CAPM and ECAPM models; the result on each occasion being an *increase* to Ms. Ahern's estimated cost of equity derived therefrom.

Q. In view of the importance of the PRPM™ to her cost of equity analysis in this proceeding, did Staff find the explanation of the PRPM™ model provided in Ms. Ahern's testimony to be meaningful/satisfactory?

A. No. Ms. Ahern's explanation of the PRPM™ covers less than two pages (pp. 27-28), and fails to adequately describe in a meaningful way the methodology employed to determine a PRPM™ derived equity risk premium for each of her nine sample companies.[48] Furthermore, while a review of the work papers supporting Ahern Exhibit PMA-DT 2, Schedule 7 (Page 2) provides insights into Ms. Ahern's PRPM™ cost of equity methodology, the critical values used to determine her PRPM™ derived equity risk premiums for each sample company have been **hardcoded** into the Excel spreadsheet, thus precluding any sort of independent analysis or verification as to their calculation.

Q. Is Staff aware of any cost of capital analysts who, when filing testimony before other regulatory jurisdictions, have similarly been critical of Ms. Ahern for failing to adequately explain the PRPM™ model and/or provide support for her cost of equity estimates derived therefrom?

A. Yes. Staff conducted research on the internet to identify dockets in other regulatory jurisdictions in which Ms. Ahern filed testimony employing cost of equity estimates derived from the PRPM™ model. In doing so, Staff located several dockets in which the analyst charged with the responsibility of responding to Ms. Ahern's PRPM™ cost of equity testimony was critical of both her explanation of the PRPM™ model and lack of support for

[48] In explaining the PRPM™, Ms. Ahern uses the expression, "*in other words*," (emphasis added) on two separate occasions.

her PRPM™ cost of equity results. In one such docket, a consultant testifying on behalf of the Division of Rate Council for the State of New Jersey was particularly blunt in his assessment of Ms. Ahern's PRPM™ analysis. In response to the question, "How were the PRPM™ estimates calculated?," Mr. Matthew I. Kahal responded as follows: "I cannot determine how these values or estimates were calculated, either from the testimony description or schedules. It appears to be a 'black box' method."[49]

Q. Based upon Staff's review of the work papers supporting Exhibit PMA-DT 2, Schedule 7 (Page 2), please describe the methodology used by Ms. Ahern to determine a PRPM™ derived equity risk premium for each sample company.

A. As shown in Ahern Exhibit PMA-DT 2, Schedule 7 (Page 2), for each of her nine sample companies Ms. Ahern's PRPM™ derived equity risk premium is determined as a function of a GARCH coefficient calculated utilizing Eviews© proprietary statistical software, and an average variance value. A review of the work papers indicates that for each sample company, the average variance value represents the arithmetic mean of all observed monthly variances in the time series, with the monthly variances input into the model representing the realized monthly return on the common stock of each sample company minus the historical yield on long-term U.S. Treasury securities for that same month.[50] As shown in Note 1 of Exhibit PMA-DT 2, Schedule 7 (Page 2), each company's estimated variance is "calculated from first available trading month through September 2013." For each sample company, Ms. Ahern then computes a PRPM™ derived equity risk premium by multiplying the GARCH

[49] *See* Direct Testimony of Matthew I. Kahal (OAL Docket No. PUC 16310-2012N; and BPU Docket No. ER12111052), in the *Matter of the Verified Petition of Jersey Central Power & Light Company for Review and Approval of Increases in and Other Adjustments to its Rates and Charges for Electric Service, and for Approval of other Proposed Tariff Revisions in Connection therewith; and for Approval of an Accelerated Reliability Enhancement Program ("2012 Base Rate Filing")*, filed June 14, 2013, p. 51. http://www.state.nj.us/rpa/docs/ER12111052_JCP&L_Base_Rate_Case_Matt_Kahal_Direct_Testimony.pdf

[50] As shown in the work papers, Ms. Ahern's average variance time series incorporates a period spanning a total of 1,052 months, the period, January 1926 – September 2013.

coefficient and average variance values together, adding one (1) to that quantity, and then annualizing that figure by raising it to the 12th power and subtracting one (1).[51]

Q. For each sample company, how does Ms. Ahern arrive at her PRPM™ derived indicated cost of common equity?

A. As shown in Exhibit PMA-DT 2, Schedule 7 (Page 2), for each sample company Ms. Ahern arrives at her PRPM™ indicated cost of equity by adding a forecasted 4.31 percent risk-free (R_f) rate to the PRPM™ derived equity risk premium.

Q. Does Staff consider use of a forecasted risk-free rate to be appropriate for purposes of estimating the market cost of equity?

A. No. The appropriate risk-free interest rate to be used is the current rate borne by investors in the marketplace. Ms. Ahern's use of a forecasted risk-free rate serves to overstate the estimated market cost of equity derived from her PRPM™, CAPM and ECAPM models. At present, the current 30-year long-term spot Treasury yield is 2.74 percent,[52] which suggests that Ms. Ahern's cost of equity estimates derived from each of these three models has been *overstated* by 157 basis points (.0431 - .0274 = .0157).[53]

---

[51] To illustrate this calculation for American Water Works, Ms. Ahern multiplies the GARCH coefficient (4.769091604) by the average monthly variance (0.0028), which equates to a quantity (rounded) of 0.013491 ((4.769091604 * 0.0028) = 0.013491). To this figure she adds one (i.e., 1.013491), and annualizes that figure by raising it to the 12th power (1.013491^12), resulting in the quantity 1.174456. By subtracting one from that quantity (1.174456 – 1), Ms. Ahern obtains a 17.45 percent (rounded) PRPM™ derived equity risk premium for American Water Works, as shown in Exhibit PMA-DT 2, Schedule 7 (Page 2).

[52] As of Staff's December 17, 2014 spot-price date, the yield on the 30-year U.S. Treasury security was 2.74 percent.

[53] As will be discussed, Ms. Ahern employs this same 4.31 percent forecasted risk free rate in her CAPM and ECAPM models.

Q. Is there anything else Staff found troublesome with Ms. Ahern's proposed 4.31 percent forecasted risk-free rate?

A. Yes. In this docket three of the five EWAZ districts (i.e., Mohave Water, Paradise Valley Water and Sun City Water) are seeking authorization for a System Improvement Benefit ("SIB") mechanism which, if approved, would require each district to file another rate case after five years (i.e. in 2020). However, the 4.31 percent forecasted risk-free rate proposed by Ms. Ahern incorporates forecasts of 30-year U.S. Treasury Note yields obtained from *Blue Chip Financial Forecasts* which extend well beyond this five year period of time. Thus, as shown in Exhibit PMA-DT 2, Schedule 8, (Page 2), Note 2, Ms. Ahern needlessly inflates the forecasted risk-free rate used in her analysis, as she includes interest rate forecasts extending out to the six year period, 2020-2025.

Q. Earlier you pointed out that in the derivation of her PRPM™ equity risk premiums, Ms. Ahern assigns "*greater weight*" to "*more recent time periods*," rather than relying on "the arithmetic mean premium which gives equal weight to each observed premium," correct?

A. Yes.

Q. Yet based upon Staff's review of the work papers supporting Exhibit PMA-DT 2, Schedule 7 (Page 2), it appears Ms. Ahern gives "*equal weight*" to all observed monthly variances in the PRPM™ time series, as the average variance for each sample company is computed as an arithmetic mean value, true?

A. Yes. As noted earlier, when reviewing the work papers supporting Exhibit PMA-DT 2, Schedule 7 (Page 2), Staff determined that the average variance shown for each sample company was computed as the arithmetic mean of all monthly variances displayed in the PRPM™ time series for that company.

Q. In her testimony, does Ms. Ahern explain how she effectuates giving "greater weight" to more recent time periods?

A. No, she does not.

Q. In her testimony, does Ms. Ahern define what is meant by the expression, "more recent time periods?"

A. No, she does not.

Q. In light of the above, does Staff have knowledge or information which would shed light on this issue?

A. Yes. Pursuant to information obtained in a data request, Staff learned of an **assumption** made by Ms. Ahern concerning the date the common stock each of her sample companies initially became publicly traded. As will be discussed, in making this assumption the "*first available trading month*"[54] employed by Ms. Ahern in her PRPM™ time series for each sample company effectively excludes from consideration all historical monthly return data on the common stock of her sample companies which pre-dates the initial monthly variances input into the PRPM™ time series. It is in this manner that Ms. Ahern effectuates giving "*greater weight to more recent time periods*" in the derivation of her PRPM™ equity risk premiums.

Q. Please continue with your discussion of the data request prepared by Staff, and Ms. Ahern's response.

A. As shown in Note 1 of Exhibit PMA-DT 2, Schedule 7 (Page 2), for each sample company Ms. Ahern's PRPM™ derived equity risk premium is calculated based upon a time series of monthly variances obtained from "first available trading month through September 2013." Staff issued data request JAC 13.8(a-d) to inquire of Ms. Ahern as to what was meant by the

[54] See Exhibit PMA-DT 2, Schedule 7 (Page 2), Note 1.

expression, "*first available trading month*," and to elicit information as to the date each of her nine sample companies initially went public in order to determine if the PRPM™ time series used for each sample company conformed to the period over which its common stock had been publicly traded. Ms. Ahern's response to Staff Data Request JAC 13.8 is attached as Attachment JAC-8. As can be seen, Ms. Ahern responded by stating that for each of her nine sample companies, the words '*first available trading month*' refers to "the first month of data provided by the Center for Research in Securities Prices ("CRSP®") from the University of Chicago Booth School of Business." Ms. Ahern goes on to say that she "***assumes***" (emphasis added) the first month of data provided by CRSP® to be "the month in which the water companies stock initially went public." In closing, Ms. Ahern justifies use of CRSP® data for purposes of her PRPM™ time series on grounds that, "[i]n any event, the data provided by CRSP® is the longest available series of market data for these companies."

Q. Did Ms. Ahern provide Staff with the information requested concerning the date each of her nine sample companies initially went public?

A. No, she did not.

Q. In light of the above, does Staff have reason to believe that the PRPM™ time series utilized by Ms. Ahern for each company in her proxy group may not conform to the period over which its common stock has been publicly traded?

A. Yes.

Q. After reviewing the work papers supporting Ahern Exhibit PMA-DT 2, Schedule 7 (Page 2), does Staff believe that cost of equity estimates derived from Ms. Ahern's PRPM™ model should be relied upon for purposes of setting rates in this docket?

A. No, and for two reasons. First, the critical values used by Ms. Ahern in her PRPM™ analysis (i.e., the GARCH coefficient and the monthly variances input into the model for each sample company) have been **hardcoded** into the Excel file, effectively precluding any independent verification as to their calculation. Second, the **assumption** made by Ms. Ahern concerning "*first available trading month*," is invalid. As will be demonstrated, the monthly inputs to her PRPM™ time series for at least five of her nine sample companies do not conform to the period over which the common stock of those companies has been publicly traded. The most glaring example of this circumstance relates to York Water Company ("York"), an investor-owned going concern whose stock has been publicly-traded since the year of the company's founding in 1816,[55] for which Ms. Ahern's PRPM™ time series does not begin until February 2001.[56]

Q. Does Staff believe it to be important that the PRPM™ historical time series used by Ms. Ahern for each proxy company conform to the period over which its common stock has been publicly traded?

A. Yes, because the PRPM™ is predicated on the notion that a market risk premium for each sample company can be obtained from a historical time series of market prices and returns. In her testimony, Ms. Ahern identifies the inputs necessary to obtain a PRPM™ derived

[55] Staff sent an e-mail to York's chief financial officer inquiring as to the date the company's common shares first became publicly-traded. In a response e-mail received from York dated October 8, 2014, Staff was informed that York's shares have been publicly traded since 1816.

[56] In checking the U. S. Security and Exchange Commission's Edgar website, Staff found that the earliest Form 10-K filing by York Water Company still available on-line was for the year 1995. Exhibit 13 of the 10-K filing for that year contained York Water's 1995 Annual Report to Shareholders, and among the highlights noted in the letter to York shareholders written by the Company's President and Chief Executive Officer was that in 1995 York celebrated both its 180th anniversary of doing business, and the issuance of its 500th consecutive dividend to shareholders. http://www.sec.gov/Archives/edgar/data/108985/0000108985-96-000012.txt

equity risk premium as (i) "the historical [monthly] returns on the common shares of each company in the proxy group" and (ii) "the historical monthly yield on long-term U.S. Treasury securities through September 2013."[57] It stands to reason, therefore, that a PRPM™ derived equity risk premium obtained for each sample company should properly give recognition to the *full* period (i.e., time series) over which its common shares have been publicly traded. To do otherwise (i.e., use a shorter, more abbreviated time period) would call into question the very thing which Ms. Ahern identifies as being a strength of the PRPM™ relative to other cost of common equity models; namely, its ability to eliminate the need for "*subjective judgments* as to the *inputs* required" (emphasis added).[58]

Q. What is Ms. Ahern's PRPM™ cost of equity estimate for York?

A. As shown in Ahern Exhibit PMA-DT 2, Schedule 7 (Page 2), the PRPM™ derived cost of equity estimate for York is 15.71 percent. This cost of equity figure exceeds Ms. Ahern's sample average PRPM™ cost of equity estimate by 204 basis points (.1571 - .1367 = .0204), and her sample median PRPM™ cost of equity estimate by 403 basis points (.1571 - .1168 = .0403). Furthermore, a review of Exhibit PMA-DT 2, Schedule 7 (Page 2) reveals that among her nine sample companies, only American Water Works (21.76 percent) and Aqua America (17.82 percent) have higher estimated PRPM™ cost of equity estimates.

Q. Did Staff's review of the work papers shed light as to why Ms. Ahern's PRPM™ cost of equity estimate for York was high relative to her proxy group as a whole?

A. Yes. As shown in Exhibit PMA-DT 2, Schedule 7 (Page 2), Ms. Ahern's PRPM™ model generated an average variance value of 0.46% for York (among her sample companies, only Aqua America had a higher average variance, 0.48%). Upon reviewing the work papers, Staff found that the initial monthly variance figures hardcoded into Ms. Ahern's PRPM™ model

[57] Ahern Direct, p. 28, lines 11-13.
[58] Ahern Direct, p. 28, lines 3-4.

for York were significantly higher than those of the other eight sample companies. In fact, the initial month (i.e., February 2001) variance for York exceeded that of the other eight sample companies by a factor of 11.495 (2.73% vs 0.2375%), while York's initial year (i.e., first 12 months) average monthly variance exceeded that of the other sample companies by a factor of 6.834 (1.70% vs 0.24875%).

Q. Did Staff inquire of Ms. Ahern as to why the initial PRPM™ monthly variances for York were not representative of her proxy group, and if so, what was her response?

A. Yes. Staff issued data request JAC 13.9(a) requesting that she explain why the initial monthly variances for York were not representative of her sample, and to identify all factors which would explain the significant disparities between York and the other eight sample companies. Ms. Ahern's response to Staff Data Request JAC 13.9(a) is attached as Attachment JAC-I. As can be seen, Ms. Ahern acknowledges that "York's early predicted variances appear out of line relative to those of the other water companies," but provides no insight as to the factors explaining this significant disparity. Instead, she chooses not to "speculate" as to the reasons why York's "early predicted variances differ from those of the other eight water companies in her proxy group."

Q. Does Staff find Ms. Ahern's characterization of PRPM™ predicted variances obtained from a time series beginning February 2001 for York as, "early," to be appropriate?

A. No, because York's common shares have been publicly traded for almost 200 years (since 1816). In view of this fact, any predicted variances for York derived from a PRPM™ time series beginning in February 2001 should more properly be considered, "very recent."

Q. Was Staff able to locate a time series of daily historical stock prices for York on the internet which preceded that of Ms. Ahern's February 2001 PRPM™ time series?

A. Yes. Staff located a time series of historical stock prices for York on the Yahoo! Finance website covering the period, May, 3, 1999 to present.[59] This historical time series precedes by 21 months the February 2001 CRISP® time series utilized in Ms. Ahern's PRPM™ time series. For each trading day, the historical market data provided on the Yahoo! Finance website includes York's opening stock price, intraday high and low stock prices, closing stock price, trading volume, and adjusted closing stock price. Additionally, the Yahoo! Finance website displays the date and amount of all quarterly dividends distributed to York shareholders on a per share basis, and records all stock splits.

Q. How far back does Staff believe Ms. Ahern's PRPM™ historical time series for York should extend?

A. At a bare minimum, Ms. Ahern's PRPM™ time series for York should reasonably be expected to extend back to January 1926. This is the date her time series begins for the calculation of her 10.32 percent PRPM™ market equity risk premium (i.e., January 1926 - September 2013),[60] and the date her time series begins for purposes of calculating a PRPM™ average variance for each of her nine sample companies, as shown in the work papers supporting Ahern Exhibit PMA-DT 2, Schedule 7 (Page 2). While a time series of market data for York going back to January 1926 may not yet have been compiled by CRSP®, that circumstance does not serve as justification for Ms. Ahern to arbitrarily exclude the monthly

[59] http://finance.yahoo.com/q/hp?s=YORW&a=4&b=3&c=1999&d=0&e=2&f=2013&g=d&z=66&y=3432
[60] Ahern Exhibit PMA-DT 2, Schedule 8 (Page 2), Note 1. As will be discussed, Ms. Ahern employs this 10.32 percent PRPM™ derived market risk premium to obtain the 7.61 percent market risk premium used in her CAPM and ECAPM models.

variances for York which precede the start of her February 2001 PRPM™ time series. As noted, York had the third highest (15.41 percent) PRPM™ estimated cost of equity among Ms. Ahern's sample group of companies, and she, herself, acknowledges that her "early" predictive variances for York are not representative of the sample. To the extent Ms. Ahern chooses to estimate the cost of equity utilizing the PRPM™ model, Staff believes it incumbent upon her to access the requisite historical data needed to do so, and for York this would necessitate a time series extending back at least to January 1926.[61]

Q. As noted above, the time series employed by Ms. Ahern for the calculation of her 10.32 percent PRPM™ market equity risk premium covers the period, January 1926 - September 2013. Does use of a time series extending back to January 1926 for purposes of calculating a PRPM™ market equity risk premium serve to increase, or decrease, Ms. Ahearn's PRPM™ cost of equity estimates in this proceeding?

A. It serves to *increase* her PRPM™ derived cost of equity estimates. A review of Ms. Ahern's work papers supporting Ahern Exhibit PMA-DT 2, Schedule 8 (Page 2) indicate that the highest market equity risk premiums were observed during the 1930s (i.e., Great Depression); thus, by extending the time series back to January 1926, Ms. Ahern obtains a higher calculated market equity risk premium.

[61] It should be noted that a PRPM™ time series for York beginning in January 1926 effectively excludes the first 110 years of market data for the company, as York's common stock has been publicly traded since the year 1816.

Q. Please identify the other sample companies in Ms. Ahern's proxy group which Staff has reason to believe the PRPM™ time series utilized by Ms. Ahearn may be problematic.

A. As shown in Exhibit JAC-D, for each sample company in Ms. Ahern's proxy group, Staff conducted research to determine the following: year of founding, shown in column [A]; year common shares first publicly traded, shown in column [B]; date of initial stock split, shown in column [C]; year initial common stock dividend paid to shareholders, shown in column [D]; and period over which common stock dividend has been consecutively paid, shown in column [E]. Column [F] presents the initial month/year of Ms. Ahern's PRPM™ time series for each sample company. Based upon its findings, Staff believes that in addition to York, there is good reason to question Ms. Ahern's PRPM™ time series for American States Water ("AWR"), California Water ("CWT"), Middlesex Water ("MSEX"), and SJW Corporation ("SJW"), as the common shares of these four companies appear to have been publicly traded well in advance of the initial month/year of Ms. Ahearn's PRPM™ time series for each. Specifically, as shown in Column [B], the common stock of American States Water went public in 1936, while the common stock of SJW Corporation did so in 1945; nevertheless, as shown in column [F], Ms. Ahern's PRPM™ time series for these companies does not begin until January 1973 and March 1972, respectively. As shown in column [C], the common stock of California Water experienced an initial stock split in the year 1940, while the common shares of Middlesex Water experienced a stock split on October 31, 1927; however, as shown in column [F], for each of these companies, Ms. Ahearn's PRPM™ time series does not begin until January 1973.

Q. What is a stock split, and why is it evidence that a company's common shares are publicly traded?

A. A stock split is typically announced by a company only after the company's common shares have experienced a substantial run-up/increase in market price, the purpose of the stock split being to make the Company's shares seem more affordable to small investors.[62] Although the number of outstanding shares increases and the price per share decreases, the market capitalization (i.e., value) of the company following a stock split does not change. For obvious reasons, therefore, the announcement of a stock split is evidence that a company's common shares are *currently* publicly traded, as the stock split is intended to enhance marketability and liquidity *after* a substantial increase in market price has taken place.

Q. Does this suggest that the common shares of California Water and SJW Corporation were publicly traded *prior* to the date of the initial stock split shown for each in column [C] of Staff Exhibit JAC-D?

A. Yes.

Q. Does Staff concur with the PRPM™ time series utilized by Ms. Ahern for the remaining four companies in her proxy group (i.e., American Water Works, Aqua America, Artesian Resources and Connecticut Water)?

A. Staff concurs with Ms. Ahern's PRPM™ time series for American Water Works[63] and Aqua America.[64] For Ms. Ahern's remaining two sample companies, Artesian Resources and

---

[62] http://www.investopedia.com/ask/answers/113.asp

[63] Founded in 1886, American Water Works was a publicly-traded entity for many years, but was eventually acquired by the German conglomerate, RWE AG. On March 24, 2006, RWE AG announced its intent to pursue an initial public

Connecticut Water, as shown in Exhibit JAC-D Staff was unable to determine when the common shares of these companies first became publicly-traded.

Q. Would Staff care to comment on Ms. Ahern's PRPM™ derived equity risk premium for American Water Works?

A. Yes. As shown in Ahern Exhibit PMA-DT 2, Schedule 7 (Page 2), among Ms. Ahern's nine sample companies American Water Works has the highest PRPM™ derived equity risk premium, 17.45 percent. Based on the figures provided in Exhibit PMA-DT 2, Schedule 7 (Page 2), Staff determined Ms. Ahern's overall sample average (i.e., arithmetic mean) PRPM™ derived equity risk premium to be 9.36 percent.[65] Thus, in absolute terms the 17.45 percent PRPM™ derived equity risk premium for American Water exceeds that of her proxy group by 809 basis points (.1745 - .0936 = .0809), while in relative terms the PRPM™ derived equity risk premium for American Water exceeds that of the sample by 86.47% ((.1745 /.0936) – 1 = .8647).

---

offering ("IPO") in the U.S. for the shares of American Water, and in so doing once again returned American Water to its status as a publicly-traded entity. http://waterindustry.org/New%20Projects/American-18.htm
The IPO of American Water Works common stock took place on April 23, 2008.
http://finance.yahoo.com/q/hp?a=&b=&c=&d=0&e=2&f=2013&g=d&s=awk&ql=1

[64] Based upon its research, Staff determined that the common shares of the company now known as Aqua America, Inc. initially went public in 1971. At the time of the 1971 initial public offering, however, the company name was Philadelphia Suburban Corporation (NYSE ticker symbol: PSC). The company changed its name in order to reflect Philadelphia Suburban's transition from a regional company in Philadelphia to one which served 2.5 million water and wastewater customers in 15 states. The name change took effect October 10, 2003, with the company's NYSE ticker symbol changing from PSC to WTR. http://waterindustry.org/Water-Facts/PSC.htm

[65] Had Ms. Ahern excluded American Water Works from her proxy group, the overall sample average PRPM™ derived equity risk premium for the remaining eight publicly traded companies in her sample would have fallen to 8.34 percent.

Q. What PRPM™ time series did Ms. Ahern use when calculating the above 17.45 percent PRPM™ derived equity risk premium for American Water Works?

A. The PRPM™ times series used by Ms. Ahern to calculate the above noted PRPM™ derived equity risk premium for American Water extended from, May 2008 – September 2013, a period covering 65 months.

Q. Does Staff have any way of knowing what Ms. Ahern's PRPM™ derived equity risk premium for American Water Works would have been had she based her calculations on a PRPM™ time series extending through August 2013 (i.e., a 64 month period) rather than September 2013?

A. Yes. In direct testimony filed on behalf of Tidewater Utilities, Inc. before the Delaware Public Utilities Commission, Ms. Ahern's PRPM™ derived equity risk premium for American Water Works was reported to be 22.38 percent, utilizing a PRPM™ time series extending through August 2013.[66] This figure exceeds by 493 basis points Ms. Ahern's 17.45 percent PRPM™ derived equity risk premium calculated for American Water in the instant docket (.2238 - .1745 = .0493).

Q. In the above referenced Tidewater Utilities docket, did the analyst charged with the responsibility of responding to Ms. Ahern's testimony provide an assessment of her PRPM™ analysis?

A. Yes. Mr. Charles W. King, an expert witness testifying on behalf of the Staff of the Delaware Public Service Commission, assessed it as follows: "Based on the foregoing, I submit that Ms.

Ahern's PRPM™ analysis is both conceptually and computationally so flawed that it should be given no weight whatever in determining Tidewater's required return on equity."[67]

Q. Does Staff have any way of knowing what Ms. Ahern's PRPM™ derived equity risk premium for American Water Works would have been had she based her calculations on a PRPM™ time series extending through October 2013 (i.e., a 66 month period) rather than September 2013?

A. Yes. In direct testimony filed on behalf of the Maine Water Company before the Maine Public Utilities Commission, Ms. Ahern's PRPM™ derived equity risk premium for American Water Works was reported to be 21.60 percent, utilizing a PRPM™ time series extending through October 2013.[68] This figure exceeds by 415 basis points Ms. Ahern's 17.45 percent PRPM™ derived equity risk premium calculated for American Water in the instant docket (.2160 - .1745 = .0415).

---

[66] *See* Direct testimony of Pauline M. Ahern, Prepared on Behalf of Tidewater Utilities, Inc., *In the Matter of the Application of Tidewater Utilities, Inc. for a General Rate Increase* (Docket No. 13-466) dated November 2013, Exhibit No. T-6, Schedule 7 (Page 2 of 11). http://depsc.delaware.gov/water/13-466%20AUS%20Consultants.pdf

[67] *See* Direct testimony of Charles W. King, Submitted on Behalf of the Staff of the Public Service Commission, State of Delaware, before the Delaware Public Service Commission, *In the Matter of the Application of Tidewater Utilities, Inc. for a General Rate Increase* (Docket No. 13-466) dated May 20, 2014, p.25, lines 7-9. http://depsc.delaware.gov/water/13-466%20King.pdf

[68] *See* Direct testimony of Pauline M. Ahern, Prepared on behalf of the Maine Water Company, *In the Matter of the Application of the Maine Water Company Camden/Rockland for a Rate Increase*, Maine Public Utilities Commission (Docket No. 2013-00362), filed December 13, 2013, Schedule PMA-6 (Page 2 of 11). https://mpuc-cms.maine.gov/CQM.Public.WebUI/MatterManagement/MatterFilingItem.aspx?FilingSeq=79876&CaseNumber=2013-00362

Q. In view of the significant month to month fluctuations to Ms. Ahern's PRPM™ derived equity risk premium for American Water, does Staff believe this to be an additional reason why cost of equity estimates obtained from the PRPM™ should be given no weight in this proceeding?

A. Yes.

Q. Does Staff know of other cost of capital analysts who use the PRPM™ as a cost of equity estimation model?

A. The PRPM™ is a relatively new cost of equity estimation model, which to date has only been used by Ms. Ahern and her associates at AUS Consultants.[69]

Q. To Staff's knowledge, have cost of equity estimates derived from the PRPM™ previously been adopted in a rate proceeding?

A. No. To date, cost of equity estimates derived from the PRPM™ have not been adopted in a rate proceeding.[70] In fact, PRPM™ derived cost of equity estimates proposed by Ms. Ahern were specifically rejected by the Maine Public Utilities Commission, which found as follows:

> We are not convinced that we should accept results based on a newly derived analytical model that has not yet been rigorously vetted. As acknowledged by Ms. Ahern, the PRPM™ model is one that was developed by her consulting firm Associated Utility Services (AUS) and has been used only by AUS cost of equity consultants since 2012. January 14, 2014 Tr. at 37. To the best of Ms. Ahern's knowledge, no other utility cost of capital consultants uses the PRPM™ methodology and no state commission has adopted it. January 14, 2014 Tr. at 39-40. As stated by Mr. Hill, the model does not easily lend itself to analysis and independent verification of accuracy. At this point, we are not prepared to incorporate the results of the analysis using the PRPM™ inputs into our determination of an appropriate ROE in this case. This does not

[69] Information provided in response to Staff Data Request JAC 13.6.
[70] Information provided in response to Staff Data Request JAC 13.5.

however preclude us from future reliance once the model is fully vetted by academia and other regulatory bodies.[71]

Ms. Ahern's Risk Premium Model Using a Total Market Approach

Q. Please describe the cost of equity methodology used by Ms. Ahern in the computation of her 9.96 percent estimated cost of equity derived from the Risk Premium Model Using a Total Market Approach.

A. As shown in Exhibit PMA-DT 2, Schedule 7 (Page 3), Ms. Ahern's estimated 9.96 percent cost of equity is computed as the sum of a 5.27 percent adjusted prospective bond yield and a 4.69 percent equity risk premium (.0527 + .0469 = .0996). Ms. Ahern's estimated 4.69 percent equity risk premium is computed as the arithmetic mean of two different equity risk premiums; one derived using a beta approach (4.67 percent) and the other using a holding period return approach (4.70 percent), as shown in Exhibit PMA-DT 2, Schedule 7 (Page 7). Details of Ms. Ahern's beta approach calculation are provided in Exhibit PMA-DT 2, Schedule 7 (Page 8), while details of her holding period return approach are presented in Exhibit PMA-DT 2, Schedule 7 (Page 11).

As shown in Exhibit PMA-DT 2, Schedule 7 (Page 3), Ms. Ahern's adjusted 5.27 percent prospective bond yield is based upon a prospective 5.08 percent Aaa rated corporate bond yield, adjusted for yield spread (0.23 percent) and bond rating (<0.04 percent>) differences (.0508 + .0023 - .0004 = .0527). As shown in Exhibit PMA-DT 2, Schedule 7 (Page 8, Note 3), Ms. Ahern's 5.08 percent prospective bond yield is derived from consensus forecasts of 'Aaa' rated corporate bonds covering (i) the 18-month period, Q4 2013 – Q1 2015, (ii) the five year period, 2015-2019, and (iii) the five year period, 2020-2024. Details of the

[71] *See* Maine Water Company-Camden & Rockland Division, Maine Public Utilities Commission (Docket No. 2013-00362), Final Order, pp. 11-12.

adjustments Ms. Ahern makes to this 5.08 percent prospective bond yield are provided in Exhibits PMA-DT 2, Schedule 7 (Page 6) and PMA-DT 2, Schedule 7 (Page 7).

Q. Does Ms. Ahern employ PRPM™ derived metrics in the computation of the 4.69 percent equity risk premium obtained from her Risk Premium Model Using a Total Market Approach?

A. Yes. Ms. Ahern employs PRPM™ derived metrics when computing an equity risk premium utilizing both her beta approach and holding period approach methodologies.

Q. Please describe how use of PRPM™ derived metrics in Ms. Ahern's beta approach methodology overstates the equity risk premium.

A. As shown in Exhibit PMA-DT 2, Schedule 7 (Page 8, Lines 1-4), Ms. Ahern's beta approach incorporates three different equity risk premium estimates in the computation of a 6.67 percent average (i.e., arithmetic mean) equity risk premium: a 5.60 percent Ibbotson Equity Risk Premium, a 9.22 percent Ibbotson Equity Risk Premium based on PRPM™, and a 5.19 percent equity risk premium based on Value Line Summary and Index. As can be seen, Ms. Ahern's 9.22 percent PRPM™ based Ibbotson risk premium estimate *exceeds* by 362 basis points the 5.60 percent market-based Ibbotson risk premium estimate (.0922 - .0560 = .0362). When excluding this 9.22 percent PRPM™ based Ibbotson risk premium from consideration, the average risk premium in Ms. Ahern's beta approach methodology falls to 5.395 percent,[72] a figure 127.5 basis points *lower* than the 6.67 percent risk premium obtained by Ms. Ahern. Finally, as shown in Exhibit in PMA-DT 2, Schedule 7 (Page 8, Lines 5-6), Ms. Ahern arrives at her 4.67 percent beta adjusted equity risk premium by making a beta adjustment to her average 6.67 percent equity risk premium. Staff determined that had this same beta adjustment been made to the 5.395 percent average risk premium (i.e., a value computed

[72] Computed as the average of the 5.60 percent Ibbotson and 5.19 percent Value Line Summary and Index equity risk premium values ((.0560 + .0519)/2 = .05395).

exclusive of PRPM™ derived metrics), Ms. Ahern's beta adjusted equity risk premium falls to 3.78 percent,[73] a figure 89 basis points *lower* than her 4.67 percent beta adjusted equity risk premium (.0467 - .0378 = .0089).

Q. Please describe how use of PRPM™ derived metrics in Ms. Ahern's holding period return approach methodology overstates the equity risk premium.

A. As shown in Exhibit PMA-DT 2, Schedule 7 (Page 11, lines 1-3), Ms. Ahern begins by obtaining a 4.16 percent historical equity risk premium based on an average 10.69 percent holding period return on Standard & Poor's Utility Index covering the period 1928-2012 and an average 6.53 percent yield on Moody's 'A' rated Public Utility Bonds over the same 1928-2012 period (.1069 - .0653 = .0416). Ms. Ahern then incorporates a 5.24 percent forecasted equity risk premium based on the PRPM™ into her analysis. As shown, Ms. Ahern derives a 4.70 percent risk premium based upon holding period returns by computing the arithmetic mean of her 4.16 percent historical equity risk premium and 5.24 percent forecasted equity risk premium based on the PRPM™ ((4.16% + 5.24%)/2 = 4.70%). As can be seen, Ms. Ahern's 5.24 percent PRPM™ derived forecasted equity risk premium *exceeds* by 108 basis points her 4.16 percent market-based historical equity risk premium (.0524 - .0416 = .0108). In view of the methodology employed by Ms. Ahern in deriving an equity risk premium based on holding period returns, if one were to exclude the 5.24 percent forecasted equity risk premium derived from the use of PRPM™ metrics from consideration, Ms. Ahern's holding period return equity risk premium would equate to the 4.16 percent estimate obtained from her historical equity risk premium, a figure 54 basis points *lower* than the 4.70 percent figure derived in her holding period return analysis (.0470 - .0416 = .0054).

[73] Calculated as follows: ((.05395 * 0.70) = .037765), or 3.78 percent (rounded).

Q. As shown in Ahern Exhibit PMA-DT 2, Schedule 7 (Page 3, line 1), does Staff believe the 5.08 percent prospective yield on 'Aaa' rated corporate bonds employed in Ms. Ahern's Risk Premium Model Using a Total Market Approach to be appropriate?

A. No, and for reasons similar to those discussed earlier regarding Ms. Ahern's use of a forecasted risk-free in her PRPM™, CAPM and ECAPM cost of equity analysis. As shown in Note 3 of Exhibit PMA-DT 2, Schedule 7 (Page 8), for purposes of arriving at this 5.08 percent figure Ms. Ahern incorporates forecasted consensus estimates of 'Aaa' rated corporate bonds extending out to the five year period, 2015-2019, as well as the five year period, 2020-2024. For obvious reasons, these forecasts extend well beyond the period in which the rates to be established in this proceeding will be operative. Accordingly, Staff believes use of this 5.08 percent prospective yield figure to be inappropriate, as it further overstates cost of equity estimates derived from Ms. Ahern's equity risk premium model using a total market approach.

Ms. Ahern's CAPM and ECAPM Analyses

Q. Please describe the cost of equity methodology used by Ms. Ahern in the computation of her 9.93 percent median estimated cost of equity derived from her CAPM and ECAPM cost of equity estimation models.

A. As shown in Exhibit PMA-DT 2, Schedule 8 (Page 1), for each sample company Ms. Ahern obtains a CAPM and ECAPM estimated cost of equity utilizing a market risk premium of 7.61 percent, a forecasted risk-free rate of 4.31 percent, and an adjusted beta coefficient obtained from *Value Line* for each company. Cost of equity estimates derived from the traditional CAPM are computed by multiplying a *Value Line* adjusted beta to the 7.61 percent market risk premium, and to that quantity Ms. Ahern adds a 4.31 percent forecasted risk free rate. For purposes of her ECAPM analysis, Ms. Ahern makes an additional adjustment to the beta coefficient. In doing so, she effectively assigns a 75 percent weight to the *Value Line*

beta, but augments (i.e., increases) the *Value Line* beta with a 25 percent weight assigned to the market risk premium component.[74] As shown, Ms. Ahern computes both a sample average and sample median estimate from her CAPM and ECAPM models. Ms. Ahern's sample average CAPM estimate is 9.55 percent, while her sample average ECAPM estimate is 59 basis points higher, 10.14 percent (.1014 - .0955 = .0059). Ms. Ahern's sample median CAPM estimate is 9.64 percent, while her sample median ECAPM estimate is 57 basis points higher, 10.21 percent (.1021 - .0964 = .0057). As shown in column 6 of Exhibit PMA-DT 2, Schedule 8 (Page 1), Ms. Ahern then derives an overall average CAPM/ECAPM indicated cost of equity of 9.85 percent, computed as the arithmetic mean of her average CAPM and ECAPM estimates ((.0955 + .1014)/2 = .0985); Ms. Ahern's overall median CAPM/ECAPM indicated cost of equity is 9.93 percent, computed as the arithmetic mean of her median CAPM and ECAPM estimates ((.0964 + .1021)/2 = .0993). For purposes of her testimony in this proceeding, Ms. Ahern adopts the *higher* 9.93 percent CAPM/ECAPM median indicated cost of equity estimate,[75] as shown in Exhibit PMA-DT 2, Schedule 1.

Q. How does Ms. Ahern compute the 7.61 percent market risk premium used in her CAPM and ECAPM analyses?

A. As shown in Note 1 of Exhibit PMA-DT 2, Schedule 8 (Page 2), Ms. Ahern's 7.61 percent equity risk premium represents the arithmetic mean of three different market risk premium measures. These include (i) a 5.96 percent estimate derived utilizing *Value Line's* 3-5 year median price appreciation estimate and median forecasted (next 12 months) dividend yield, (ii) a 10.32 percent PRPM™ derived market risk premium obtained by applying the PRPM™ to the monthly equity risk premium of large company common stocks over the income return on long-term U.S. government securities from January 1926 – September 2013, and (iii) a 6.55

[74] To illustrate Ms. Ahern's ECAPM methodology, using the inputs presented in Exhibit PMA-DT 2, Schedule 8 (Page 1) for American States Water, the 10.21 percent ECAPM cost rate is computed as follows: (0.75 * (0.70 * .0761)) + (0.25 * .0761) + .0431; which simplifies to: .03995 + .019025 + .0431 = .1021, or 10.21 percent.
[75] Ahern Direct, p. 40, lines 18-25.

percent market risk premium derived from Morningstar (Ibbotson Associates) data covering the period 1926-2012, computed as the total market return less the arithmetic mean return on long-term U.S. government securities. Thus, by taking the average of these three market risk premium estimates Ms. Ahern obtains the 7.61 percent market risk premium used in her CAPM/ECAPM analysis ((.0596 + .1032 + .0655)/3 = .0761).

Q. Does Staff believe the 7.61 percent market risk premium employed by Ms. Ahern in her CAPM and ECAPM analysis to be overstated?

A. Yes, and once again this is due to Ms. Ahern incorporating PRPM™ derived metrics into the computation. As noted above, Ms. Ahern's 7.61 percent market risk premium is computed as the arithmetic mean of three different market risk premium measures, only two of which can rightly be considered, 'market-based.' Had Ms. Ahern obtained a market risk premium based on the arithmetic mean of the 5.96 percent estimate obtained from *Value Line* data and the 6.55 percent estimate obtained from Morningstar (Ibbotson Associates) data, her CAPM/ECAPM market risk premium would have been 6.26 percent (rounded) ((.0596 + .0655)/2 = .06255). In absolute terms, Ms. Ahern's 10.32 percent PRPM™ derived market risk premium *exceeds* this 6.26 percent market-based figure by 406 basis points (.1032 - .0626 = .0406), while in relative terms it exceeds it by 64.86 percent (((.1032 / .0626) – 1) = .6486). Thus, by employing a 10.32 percent PRPM™ derived market risk premium in the computation of her 7.61 percent CAPM/ECAPM market risk premium, Ms. Ahern has effectively *overstated* the market risk premium by 135 basis points (.0761 - .0626 = .0135).

Q. Does Staff agree with Ms. Ahern's use of a forecasted risk-free (R_f) interest rate in her CAPM and E-CAPM analyses?

A. No. For the reasons noted earlier, use of a forecasted risk-free rate serves to overstate the estimated market cost of equity. The appropriate risk-free (R_f) interest rate to be used in the

CAPM is the current rate borne by investors in the market. The current yield on the 30-year U.S. Treasury Note is 2.74 percent;[76] thus, Ms. Ahern's forecasted 4.31 percent risk-free rate has been overstated by 157 basis points (.0431 - .0274 = .0157), effectively rendering her CAPM and ECAPM cost of equity estimates not to be, market-based.

Q. Does Staff believe that it is appropriate to rely on cost of equity estimates derived from the ECAPM model?

A. No. The ECAPM modification to the traditional CAPM is predicated on the notion that cost of equity estimates derived from the CAPM are biased downward for companies having a beta coefficient less than 1.0, and biased upward for companies having a beta coefficient greater than 1.0. Use of an adjusted beta increases the beta coefficient for companies with a beta less than 1.0 and decreases beta coefficient for companies with a beta greater than 1.0. For purposes of her CAPM and ECAPM cost of equity analyses, Ms. Ahern utilizes beta coefficients obtained from *Value Line*. However, because *Value Line* betas have already been adjusted,[77] the ECAPM beta adjustment is a redundancy which overstates the cost of equity. As shown in Exhibit PMA-DT 2, Schedule 8 (Page 1), the difference between Ms. Ahern's 9.64 percent median CAPM estimate and her 10.21 percent median ECAPM estimate (a 57 basis point differential) is entirely attributable to this redundancy. For this reason, Staff believes that cost of equity estimates obtained from the ECAPM should not be relied upon.

[76] Staff obtained spot market prices for use in its constant growth DCF model on December 17, 2014. As of the close of market on that day, the yield on the 30-year U.S. Treasury Note was 2.74 percent.
[77] *Value Line* adjusts its raw beta utilizing the following formula: Adjusted beta = (raw beta * 0.67) + 0.35.

Ms. Ahern's Proposed Credit Risk and Business Risk Adjustments

Q. Please describe Ms. Ahern's stated rationale for an upward 44 basis point credit risk adjustment being made to the Company's cost of equity in this proceeding.

A. Ms. Ahern expresses the *opinion* that because EWAZ's ultimate parent, EPCOR Utilities, Inc. ("EUI") has been assigned a 'BBB+' credit rating by Standard & Poor's ("S&P"), that this would necessarily imply that EWAZ's long-term debt would be assigned a lower credit rating, thus giving rise for the need for an upward credit risk adjustment being made to the Company's cost of equity. As justification for this opinion, Ms. Ahern states that "bond rating agencies, **specifically S&P**, link the bond/credit ratings of subsidiaries with those of their parent holding companies (emphasis added)," and later quotes from a S&P publication affirming her position in this regard.[78]

Q. As noted above, Ms. Ahern makes reference to a 'BBB+' credit rating assigned to EUI by S&P. Was this the S&P credit rating assigned to EUI at the time Ms. Ahern filed her direct testimony in this proceeding?

A. Yes.

Q. To Staff's knowledge, has there been a subsequent change to the S&P credit rating assigned EUI?

A. Yes. In a credit report issued September 26, 2014,[79] S&P **raised** EUI's long-term corporate credit and senior unsecured debt ratings to 'A-' from 'BBB+,' and determined EUI's outlook to be stable. The upgrade reflects S&P's assessment that EUI has made progress on its business risk profile, citing "a decrease in the company's ownership of Capital Power L.P. and its continued focus on regulated electricity and water businesses." The stable outlook reflects

[78] Ahern Direct, p. 16, lines 8-9; and p. 42, lines 20-24.
[79] Standard and Poor's Rating Service, *Research Update: EPCOR Utilities, Inc. Upgraded To 'A-' From 'BBB+' on Strengthening Business Risk Profile; Outlook Stable*, dated September 26, 2014.

S&P's view that EUI's "high degree of regulated water and electricity utilities businesses will continue to provide stable and predictable cash flows." The stated rationale for the S&P upgrade to EUI's credit rating reads, in part, as follows:

> "Based on our criteria, we assess industry risk for regulated utilities as very low risk. All of the Company's operations are in Canada or the U.S., which we assess as having a very low risk. Based on this and the very low country risk, we have assigned a corporate industry and country risk assessment (CIRCA) score of 1. Combined with a 'strong' competitive position, this results in an 'excellent' business risk profile."

Q. In light of the above, does Staff believe Ms. Ahern's proposed credit risk adjustment to the Company's cost of equity in this proceeding is without merit?

A. Yes, and particularly in view of Ms. Ahern's stated rationale for such an adjustment.

Q. Ms. Ahern similarly proposes that a 30 basis point upward business risk adjustment be made to the Company's cost of equity in this proceeding. Does Staff believe there to be justification for such an adjustment?

A. No, as evidenced by the above noted optimistic assessment made by S&P of EUI's "'excellent' business risk profile," and the "very low risk" associated with its regulated utility operations in the United States.

Q. As justification for her proposed 30 basis point business risk adjustment, Ms. Ahern raises the issue of EWAZ's small size relative to her proxy group of publicly traded companies.[80] How does Staff respond?

A. While Staff would agree with the general proposition that smaller companies may be riskier than larger companies, empirical research has demonstrated that a small company risk premium adjustment to the cost of equity is unwarranted for regulated utilities. Annie Wong,

[80] Ahern Direct, pp. 43-44, 17:23.

of Western Connecticut State University, conducted a study on utility stocks to determine if the so-called size effect exists in the utility industry, and she writes as follows:

> The fact that the two samples show different, though weak, results indicates that utility and industrial stocks do not share the same characteristics. First, given firm size, utility stocks are consistently less risky than industrial stocks. Second, industrial betas tend to decrease with firm size but utility betas do not. These findings may be attributed to the fact that all public utilities operate in an environment with regional monopolistic power and regulated financial structure. As a result, the business and financial risks are very similar among the utilities regardless of their size. Therefore, utility betas would not necessarily be expected to be related to firm size.
>
> The object of this study is to examine if the size effect exists in the utility industry. After controlling for equity values, there is some weak evidence that firm size is a missing factor from the CAPM for the industrial but not for the utility stocks. *This implies that although the size phenomenon has been strongly documented for industrials, the findings suggest that there is no need to adjust for the firm size in utility regulations.* [emphasis added].[81]

To underscore this point, Paschall and Hawkins write as follows:

> A size premium does not automatically apply in every case. Each privately held company should be analyzed to determine if a size premium is appropriate in its particular case. There can be unusual circumstances where a small company has risk characteristics that make it far less risky than the average company, warranting the use of a very low equity risk premium. One possible example of this is a private water utility (monopoly situation, very low risk, near-guarantee of payments).[82]

---

[81] Annie Wong, "Utility Stock and the Size Effect: An Empirical Analysis," *Journal of the Midwest Finance Association*, (1993), p.98.

[82] Michael A. Paschall and George B. Hawkins, "Do Smaller Companies Warrant a Higher Discount Rate for Risk?: The 'Size Effect' Debate," *CCH Business Valuation Alert*, Vol. 1, Issue No. 2, December 1999.

Q. Has the Commission previously ruled on the issue of firm size and whether it warrants a risk premium adjustment to the cost of equity?

A. Yes. The Commission previously ruled in Decision No. 64282[83] for Arizona Water that firm size does not warrant recognition of a risk premium stating, "We do not agree with the Company's proposal to assign a risk premium to Arizona Water based on its size relative to other publicly traded water utilities…." The Commission confirmed its previous ruling in Decision No. 64727[84] for Black Mountain Gas agreeing with Staff that "the 'firm size phenomenon' does not exist for regulated utilities, and that therefore there is no need to adjust for risk for small firm size in utility regulation." All companies have firm-specific risks; therefore, the existence of unique risks for a company does not lead to the conclusion that its total risk is greater than other entities. Moreover, as previously discussed, investors cannot expect compensation for firm-specific risk since it can be eliminated through diversification.

XI. CONCLUSION

Q. Please summarize Staff's recommendations.

A. For the four EWAZ districts (Mohave Water, Mohave Wastewater, Paradise Valley Water and Sun City Water) Staff recommends that the Commission adopt a consolidated 6.4 percent overall ROR for the Company based on a capital structure composed of 59.76 percent debt and 40.24 percent equity, Staff's 8.9 percent average DCF cost of equity estimate, and Staff's 60 basis point (0.60 percent) upward economic assessment adjustment. For the Company's Tubac Water district, Staff recommends that the Commission adopt a 6.2 percent overall ROR for the Company based on a capital structure composed of 58.53 percent debt and 41.47 percent equity, Staff's 8.9 percent average DCF cost of equity estimate, and Staff's 60 basis point (0.60 percent) upward economic assessment adjustment.

---

[83] Dated December 28, 2001.
[84] Dated April 17, 2002.

Q. Does this conclude your direct testimony?

A. Yes, it does.

EPCOR Water Arizona, Inc. Cost of Capital Calculation
Capital Structure
And Weighted Average Cost of Capital
Staff Recommended and Company Proposed

[A]	[B]	[C]	[D]
Description	Weight (%)	Cost	Weighted Cost
Staff Recommended Structures			
Four Districts - Consolidated			
Debt	59.76%	4.3%	2.6%
Common Equity	40.24%	9.5%	3.8%
Weighted Average Cost of Capital			**6.4%**
Tubac Water - Stand Alone Basis			
Debt	58.53%	4.0%	2.3%
Common Equity	41.47%	9.5%	3.9%
Weighted Average Cost of Capital			**6.2%**
Company Proposed Structure			
Debt	59.76%	4.29%	2.56%
Common Equity	40.24%	10.70%	4.31%
Weighted Average Cost of Capital			**6.87%**
Mohave Wastewater			
Debt	59.76%	4.29%	2.56%
Common Equity	40.24%	10.70%	4.31%
Weighted Average Cost of Capital			**6.87%**
Mohave Water			
Debt	59.76%	4.29%	2.56%
Common Equity	40.24%	10.70%	4.31%
Weighted Average Cost of Capital			**6.87%**
Paradise Valley Water			
Debt	59.76%	4.29%	2.56%
Common Equity	40.24%	10.70%	4.31%
Weighted Average Cost of Capital			**6.87%**
Sun City Water			
Debt	59.76%	4.29%	2.56%
Common Equity	40.24%	10.70%	4.31%
Weighted Average Cost of Capital			**6.87%**
Tubac Water			
Debt	59.84%	4.29%	2.57%
Common Equity	40.16%	10.70%	4.30%
Weighted Average Cost of Capital			**6.86%**

[D] : [B] x [C]
Supporting Schedules: JAC-3 and JAC-4.

Intentionally left blank

EPCOR Water Arizona, Inc. Cost of Capital Calculation
Final Cost of Equity Estimates
Sample Water Utilities

[A]	[B]	[C]	[D]		[E]
DCF Method		D_1/P_0 [1]	+ g [2]	=	k
Constant Growth DCF Estimate		2.8%	+ 5.8%	=	8.6%
Multi-Stage DCF Estimate				=	9.2%
Average DCF Estimate					**8.9%**
		Staff's Estimated Cost of Equity			**8.9%**
		Economic Assessment Adjustment			0.6%
		Sub-Total			**9.5%**
		Financial Risk Adjustment			0.0%
		Total			**9.5%**

1 MSN Money and Value Line
2 Schedule JAC-8

EPCOR Water Arizona, Inc. Cost of Capital Calculation
Average Capital Structure of Sample Water Utilities

[A]	[B]	[C]	[D]
Company	Debt	Common Equity	Total
American States Water	40.8%	59.2%	100.0%
California Water	47.2%	52.8%	100.0%
Aqua America	52.0%	48.0%	100.0%
Connecticut Water	48.4%	51.6%	100.0%
Middlesex Water	45.9%	54.1%	100.0%
SJW Corp	54.7%	45.3%	100.0%
York Water	44.2%	55.8%	100.0%
Average Sample Water Utilities	**47.6%**	**52.4%**	**100.0%**
EWAZ - Four Districts (Consolidated)	**59.76%**	**40.24%**	**100.0%**
EWAZ - Tubac Water (Stand Alone)	**59.84%**	**40.16%**	**100.0%**

Source:
Sample Water Companies from Value Line

EPCOR Water Arizona, Inc. Cost of Capital Calculation
Growth in Earnings and Dividends
Sample Water Utilities

[A]	[B]	[C]	[D]	[E]
Company	Dividends Per Share 200~~7~~4 to 2013 DPS[1]	Dividends Per Share Projected DPS[1]	Earnings Per Share 200~~7~~4 to 2013 EPS[1]	Earnings Per Share Projected EPS[1]
American States Water	5.6%	7.7%	15.2%	3.4%
California Water	1.3%	8.0%	4.9%	8.9%
Aqua America	7.6%	9.0%	9.7%	6.0%
Connecticut Water	1.7%	4.1%	3.7%	4.8%
Middlesex Water	1.5%	2.0%	5.4%	3.9%
SJW Corp	4.1%	6.5%	2.1%	8.7%
York Water	4.1%	6.3%	4.8%	8.0%
Average Sample Water Utilities	**3.7%**	**6.2%**	**6.5%**	**6.2%**

1 Value Line

EPCOR Water Arizona, Inc. Cost of Capital Calculation
Sustainable Growth
Sample Water Utilities

[A]	[B]	[C]	[D]	[E]	[F]
Company	Retention Growth 2009 to 2013 br	Retention Growth Projected br	Stock Financing Growth vs	Sustainable Growth 2009 to 2013 br + vs	Sustainable Growth Projected br + vs
American States Water	4.1%	5.4%	1.7%	5.9%	7.1%
California Water	2.6%	3.8%	3.0%	5.6%	6.8%
Aqua America	4.2%	6.0%	1.8%	6.0%	7.8%
Connecticut Water	2.1%	4.4%	3.0%	5.1%	7.4%
Middlesex Water	1.3%	3.2%	3.1%	4.4%	6.3%
SJW Corp	3.2%	3.3%	1.0%	4.2%	4.3%
York Water	2.2%	4.1%	4.7%	6.8%	8.7%
Average Sample Water Utilities	**2.8%**	**4.3%**	**2.6%**	**5.4%**	**6.9%**

[B]: Value Line
[C]: Value Line
[D]: Value Line, MSN Money, and Form 10-Ks filed with the Securities and Exchange Commission (http://www.sec.gov/)
[E]: [B]+[D]
[F]: [C]+[D]

EPCOR Water Arizona, Inc. Cost of Capital Calculation
Selected Financial Data of Sample Water Utilities

[A]	[B]	[C]	[D]	[E]	[F]	[G]
Company	Symbol	Spot Price 12/17/2014	Book Value	Mkt To Book	*Value Line* Beta *b*	Raw Beta *braw*
American States Water	AWR	**34.44**	12.92	2.7	**0.70**	0.52
California Water	CWT	**23.54**	12.41	1.9	**0.70**	0.52
Aqua America	WTR	**25.87**	8.69	3.0	**0.70**	0.52
Connecticut Water	CTWS	**34.93**	19.37	1.8	**0.65**	0.45
Middlesex Water	MSEX	**22.16**	12.18	1.8	**0.70**	0.52
SJW Corp	SJW	**32.25**	15.75	2.0	**0.85**	0.75
York Water	YORW	**21.94**	8.39	2.6	**0.70**	0.52
Average				**2.3**	**0.71**	**0.54**

[C]: Msn Money
[D]: Value Line
[E]: [C] / [D]
[F]: Value Line
[G]: (-0.35 + [F]) / 0.67

EPCOR Water Arizona, Inc. Cost of Capital Calculation
Calculation of Expected Infinite Annual Growth in Dividends
Sample Water Utilities

[A]	[B]
Description	g
DPS Growth - Historical[1]	3.7%
DPS Growth - Projected[1]	6.2%
EPS Growth - Historical[1]	6.5%
EPS Growth - Projected[1]	6.2%
Sustainable Growth - Historical[2]	5.4%
Sustainable Growth - Projected[2]	6.9%
Average	**5.8%**

1 Schedule JAC-5
2 Schedule JAC-6

EPCOR Water Arizona, Inc. Cost of Capital Calculation
Multi-Stage DCF Estimates
Sample Water Utilities

[A]	[B]	[C]	[D]	[E]	[F]	[G]	[H]
Company	Current Mkt. Price (P_o)[1] 12/17/2014	Projected Dividends[2] (Stage 1 growth) (D_t) d_1	d_2	d_3	d_4	Stage 2 growth[3] (g_n)	Equity Cost Estimate (K)[4]
American States Water	34.4	0.86	0.91	0.96	1.01	6.5%	8.9%
California Water	23.5	0.66	0.70	0.74	0.78	6.5%	9.2%
Aqua America	25.9	0.65	0.69	0.73	0.77	6.5%	8.9%
Connecticut Water	34.9	1.04	1.10	1.17	1.24	6.5%	9.4%
Middlesex Water	22.2	0.80	0.85	0.90	0.95	6.5%	10.0%
SJW Corp	32.3	0.76	0.80	0.85	0.90	6.5%	8.8%
York Water	21.9	0.58	0.61	0.64	0.68	6.5%	9.0%
						Average	9.2%

$$P_0 = \sum_{t=1}^{n} \frac{D_t}{(1+K)^t} + \frac{D_n(1+g_n)}{K-g_n}\left[\frac{1}{(1+K)}\right]^n$$

Where : P_0 = current stock price
D_t = dividends expected during stage 1
K = cost of equity
n = years of non – constant growth
D_n = dividend expected in year n
g_n = constant rate of growth expected after year n

1 [B] see Schedule JAC-7
2 Derived from Value Line Information
3 Average annual growth in GDP 1929 - 2012 in current dollars.
4 Internal Rate of Return of Projected Dividends

Staff Restatement No. 1
to Ahern Exibit PMA-DT 2, Schedule 5 (Page 1)

	Ahern DCF Methodology With a Semi-Annual Adjustment made to the Expected Dividend ($D_{1/2}/P_0$) Yield						Staff Restatement to Ahern DCF Methodology utilizing an Unadjusted Expected Dividend (D_1/P_0) Yield				
	[A]	[B]	[C]	[D]	[E]	[F]	[G]	[H]	[I]	[J]	[K]
Ahern Sample Companies	Average Dividend Yield (P_0)	Projected Dividend Growth Rate (g)	Adjusted Semi-Annual Dividend Growth Rate (g/2)	(g/2) Plus 1	Ahern Adjusted Expected Dividend Yield ($D_{1/2}/P_0$)	Ahern DCF Indicated Cost of Equity (K)	Average Dividend Yield (P_0)	Projected Dividend Growth Rate (g)	(g) Plus 1	Unadjusted Expected Dividend Yield (D_1/P_0)	DCF Indicated Cost of Equity (K)
American States Water	2.94%	3.00%	1.50%	1.0150	2.98%	5.98%	2.94%	3.00%	1.0300	3.03%	6.03%
American Water Works	2.73%	8.29%	4.15%	1.0415	2.84%	11.13%	2.73%	8.29%	1.0829	2.96%	11.25%
Aqua America	2.46%	6.63%	3.32%	1.0332	2.54%	9.17%	2.46%	6.63%	1.0663	2.62%	9.25%
Artesian Resources	3.76%	4.00%	2.00%	1.0200	3.84%	7.84%	3.76%	4.00%	1.0400	3.91%	7.91%
California Water	3.14%	6.17%	3.09%	1.0309	3.24%	9.41%	3.14%	6.17%	1.0617	3.33%	9.50%
Connecticut Water	3.16%	5.13%	2.57%	1.0257	3.24%	8.37%	3.16%	5.13%	1.0513	3.32%	8.45%
Middlesex Water	3.65%	3.35%	1.68%	1.0168	3.71%	7.06%	3.65%	3.35%	1.0335	3.77%	7.12%
SJW Corporation	2.64%	10.75%	5.38%	1.0538	2.78%	13.53%	2.64%	10.75%	1.1075	2.92%	13.67%
York Water	2.70%	4.45%	2.23%	1.0223	2.76%	7.21%	2.70%	4.45%	1.0445	2.82%	7.27%
Average	3.02%	5.75%			3.10%	8.86%	3.02%	5.75%		3.19%	8.94%
Median		5.13%				8.37%		5.13%			8.45%

Note: The sample average and/or sample median estimates shown in Columns [A], [B], [E], [G], [H] and [J] are presented for informational purposes.

[A]: From Column 1 of Ahern Exibit PMA-DT 2, Schedule 5 (Page 1)
[B]: From Column 6 of Ahern Exibit PMA-DT 2, Schedule 5 (Page 1)
[C]: [B] / 2
[D]: [C] + 1
[E]: [A] * [D]
[F]: [B] + [E]
[G]: From Column 1 of Ahern Exibit PMA-DT 2, Schedule 5 (Page 1)
[H]: From Column 6 of Ahern Exibit PMA-DT 2, Schedule 5 (Page 1)
[I]: [H] + 1
[J]: [G] * [I]
[K]: [H] + [J]

Staff Restatement No. 2
to Ahern Exibit PMA-DT 2, Schedule 5 (Page 1)

	Staff Restatement to Ahern DCF Methodology with a Semi-Annual Adjustment made to the Expected Dividend ($D_{1/2}/P_0$) Yield, Computed using the Sample Average Dividend Growth (g) Rate						Staff Restatement of Ahern DCF Methodology utilizing an Unadjusted Expected Dividend (D_1/P_0) Yield, Computed using the Sample Average Dividend Growth (g) Rate				
	[A]	[B]	[C]	[D]	[E]	[F]	[G]	[H]	[I]	[J]	[K]
Ahern Sample Companies	Average Dividend Yield (P_0)	Ahern Sample Average Dividend Growth Rate (g)	Adjusted Sample Average Dividend Growth Rate (g/2)	(g/2) Plus 1	Ahern Adjusted Expected Dividend Yield ($D_{1/2}/P_0$)	DCF Indicated Cost of Equity (K)	Average Dividend Yield (P_0)	Ahern Sample Average Dividend Growth Rate (g)	(g) Plus 1	Unadjusted Expected Dividend Yield (D_1/P_0)	DCF Indicated Cost of Equity (K)
American States Water	2.94%	5.75%	2.88%	1.0288	3.02%	8.78%	2.94%	5.75%	1.0575	3.11%	8.86%
American Water Works	2.73%	5.75%	2.88%	1.0288	2.81%	8.56%	2.73%	5.75%	1.0575	2.89%	8.64%
Aqua America	2.46%	5.75%	2.88%	1.0288	2.53%	8.28%	2.46%	5.75%	1.0575	2.60%	8.35%
Artesian Resources	3.76%	5.75%	2.88%	1.0288	3.87%	9.62%	3.76%	5.75%	1.0575	3.98%	9.73%
California Water	3.14%	5.75%	2.88%	1.0288	3.23%	8.98%	3.14%	5.75%	1.0575	3.32%	9.07%
Connecticut Water	3.16%	5.75%	2.88%	1.0288	3.25%	9.00%	3.16%	5.75%	1.0575	3.34%	9.09%
Middlesex Water	3.65%	5.75%	2.88%	1.0288	3.75%	9.51%	3.65%	5.75%	1.0575	3.86%	9.61%
SJW Corporation	2.64%	5.75%	2.88%	1.0288	2.72%	8.47%	2.64%	5.75%	1.0575	2.79%	8.54%
York Water	2.70%	5.75%	2.88%	1.0288	2.78%	8.53%	2.70%	5.75%	1.0575	2.86%	8.61%
Average	3.02%	5.75%			3.11%	8.86%	3.02%	5.75%		3.19%	8.95%
Median		5.75%				8.78%		5.75%			8.86%

Note: The sample average and/or sample median estimates shown in Columns [A], [B], [E], [G], [H] and [J] are presented for informational purposes.

[A]: From Column 1 of Ahern Exibit PMA-DT 2, Schedule 5 (Page 1)
[B]: Arithmetic mean of individual dividend growth rates reported in Column 6 of Ahern Exibit PMA-DT 2, Schedule 5 (Page 1)
[C]: [B] / 2
[D]: [C] + 1
[E]: [A] * [D]
[F]: [B] + [E]
[G]: From Column 1 of Ahern Exibit PMA-DT 2, Schedule 5 (Page 1)
[H]: Arithmetic mean of individual dividend growth rates reported in Column 6 of Ahern Exibit PMA-DT 2, Schedule 5 (Page 1)
[I]: [H] + 1
[J]: [G] * [I]
[K]: [H] + [J]

Restatement of Ms. Ahern's Exhibit PMA-DT 2, Schedule 7 (Page 1 of 11)
Summary of Risk Premium Models for the Proxy Group of Nine Water Companies

	[A] Ahern Weighted Average - Actual (PRPM™ assigned a 75% weight)			[B] Ahern Average - Restated (Effective PRPM™ cost rate of 12.54%)		
Ahern Risk Premium Models	Cost Rate	Weight Factor	Weighted Average Cost	Cost Rate	Weight Factor	Weighted Average Cost
Predictive Risk Premium Model™ (PRPM™)	11.68%	75%	8.76%	12.54%	50%	6.27%
Risk Premium Using Adjusted Total Market Approach	9.96%	25%	2.49%	9.96%	50%	4.98%
Average Risk Premium Cost of Equity			11.25%			11.25%

[A] For purposes of arriving at her 11.25 percent "average" risk premium cost of equity using a median 11.68% PRPM™ estimate, Ms. Ahern assigns a 75% weight to her PRPM™ results and only a 25% weight to the results derived from her Risk Premium using an Adjusted Total Market Approach methodology.

[B] Ahern effective PRPM™ cost rate shown to be 12.54% when assigning a 50% weight to each model to arrive at an 11.25% average risk premium cost of equity estimate. This 12.54% effective PRPM™ cost rate is *86 basis points higher* than the 11.68% median PRPM™ estimate shown in [A] (.1254 - .1168 = .0086).

Historical Data on the Common Stock of Ms. Ahern's Nine Company Proxy Group
as Contrasted with Ms. Ahern's PRPM ™ Time Series

		[A]	[B]	[C]	[D]	[E]	[F]
Company	Ticker	Year Founded[1]	Year First Publicly Traded[2]	Date of Initial Stock Split[3]	Year Initial Common Stock Dividend Paid[4]	Common Stock Dividend Paid Consecutively Since[4]	Initial Month/Year of Ahern PRPM™ Monthly Variance[5]
1 American States Water	AWR	1929	1936	6-Oct-93	1931	1954	Jan-73
2 American Water Works	AWK	1886	2008	N/A	2008	2008	May-08
3 Aqua America	WTR	1886	1971	18-Jun-96	Undetermined	1945	Aug-71
4 Artesian Resources	ARTNA	1905	Undetermined	1-Jul-03	1931	1993	Jun-96
5 California Water	CWT	1926	Undetermined	1940	1945	1945	Jan-73
6 Connecticut Water	CTWS	1956	Undetermined	16-Sep-98	1956	1956	Jul-75
7 Middlesex Water	MSEX	1897	Undetermined	31-Oct-27	1912	1973	Jan-73
8 SJW Corporation	SJW	1866	1945	24-Jul-85	Undetermined	1944	Mar-72
9 York Water Company	YORW	1816	1816	Unknown	1816	1816	Feb-01

[1] Year of Founding

AWR http://finance.yahoo.com/q/pr?s=AWR
AWK http://www.amwater.com/about-us/corporate-information/company-history.html
WTR https://www.aquaamerica.com/about-aqua/overview.aspx
ARTNA http://finance.yahoo.com/q/pr?s=ARTNA
CWT https://www.calwatergroup.com/faq/
CTWS http://www.globalwaterintel.com/pinsent-masons-yearbook/2012-2013/part-iii/company-analysis-local-regional-players/united-states-america/10/
MSEX http://www.middlesexwater.com/about-us/corporate-profile
SJW http://www.fundinguniverse.com/company-histories/sjw-corporation-history/
YORW http://www.yorkwater.com/our-history

[2] Year First Publicly Traded

AWR http://media.corporate-ir.net/media_files/IROL/87/87080/reports/ar98.pdf
AWK http://www.amwater.com/about-us/corporate-information/company-history.html
WTR http://www.fundinguniverse.com/company-histories/philadelphia-suburban-corporation-history/
ARTNA
CWT
CTWS
MSEX
SJW http://www.fundinguniverse.com/company-histories/sjw-corporation-history/
YORW E-Mail Correspondence received from York Water Company, dated October 8, 2014.

[3] Stock Split Sources

AWR: http://www.splithistory.com/awr/
AWK: *Value Line*
WTR: http://ir.aquaamerica.com/
ARTNA:
CWT: http://ir.calwatergroup.com/Stockholder-Tools/StockSplit-History
CTWS: http://www.splithistory.com/ctws/
MSEX: http://www.snl.com/irweblinkx/GenPage.aspx?IID=4104374&GKP=1073742984
SJW: http://performance.morningstar.com/stock/performance-return.action?p=dividend_split_page&t=SJW&region=USA
YORW:

[4] Common Stock Dividend

AWR http://www.marketwatch.com/story/american-states-water-company-141-dividend-increase-and-2-for-1-stock-split-effective-on-september-3rd-2013-09-04
AWK *Value Line*
WTR http://files.shareholder.com/downloads/WTR/3512672958x0x523435/E18E662A-43F2-4630-BBB0-B86BE595A1A6/AQUA_Presentation_8-8-14_.pdf
ARTNA http://www.artesianwater.com/investor-relations/dividends
CWT https://www.calwatergroup.com/faq/
CTWS http://www.ctwater.com/en/Investors/~/media/Files/Investor/CTWS%20AR%20and%2010-K%20Webpdf.pdf
MSEX http://seekingalpha.com/article/2455995-middlesex-water-a-little-known-dividend-aristocrat
SJW http://www.sjwcorp.com/files/documents/SJW_Annual_Report_2013.PDF
YORW http://www.yorkwater.com/AnnualReport2013.pdf
http://theconservativeincomeinvestor.com/2013/06/08/the-glory-of-investing-in-utility-stocks/

[5] Initial Month/Year of Ahearn PRPM ™ Monthly Variance

Source: Work papers supporting Ahearn Exhibit PMA-DT 2, Schedule 7 (Page 2)

ATTACHMENTS

COMPANY: EPCOR Water Arizona Inc.
DOCKET NO: WS-01303A-14-0010

Response provided by: Pauline Ahern
Title: Cost of Capital Witness

Address: 2355 W. Pinnacle Peak Road, Suite 300
Phoenix, AZ 85027

Company Response Number: STF JAC 9.1

Q: As presented in Exhibit PMA-DT 2, Schedule 1 (Brief Summary of Common Equity Cost Rate) of Ms. Ahern's direct testimony, the indicated cost of equity cost rate before consideration of adjustments for credit/business risk is 9.95%. Ms. Ahern arrives at this 9.95% cost rate utilizing estimates derived from three different cost of equity methodologies: Discounted Cash Flow (8.37%), Risk Premium Model (11.25%), and Capital Asset Pricing Model (9.93%). However, the arithmetic mean of these three estimates equate to a cost of equity of 9.85% ((8.37% + 11.25% + 9.93%) / 3 = 9.85%), a figure 10 basis points lower than her indicated 9.95% cost rate. In light of this fact, please respond to the following:

a) Provide a detailed explanation as to how each cost of common equity estimation model (i.e., Discounted Cash Flow, Risk Premium Model, and Capital Asset Pricing Model) employed by Ms. Ahern is weighted for purposes of arriving at her 9.95% pre-adjustment cost rate, and the reason(s) why Ms. Ahern believes the relative weightings she accords each model is appropriate.

A: The 9.95% indicated pre-risk-adjusted common equity cost rate is the approximate median of the results of the Discounted Cash Flow Model (8.37%), Risk Premium Model (11.25%) and Capital Asset Pricing Model (9.93%).

COMPANY: EPCOR Water Arizona Inc.
DOCKET NO: WS-01303A-14-0010

Response provided by: Sheryl L. Hubbard
Title: Director, Regulatory & Rates

Address: 2355 W. Pinnacle Peak Road, Suite 300
Phoenix, AZ 85027

Company Response Number: STF JAC 9.3

Q. A review of the D-1 Schedules (pages 1 and 2) filed in this docket indicate that approximately 24.42% of Total Company - EPCOR Water Arizona long-term debt ($231,000,000), short-term debt (8,560,000), and common equity ($155,533,624) have been allocated proportionately to the capital structures of the five EPCOR Water Arizona operating subsidiaries (Sun City Water, Paradise Valley Water, Mohave Water, Mohave Wastewater and Tubac Water) at the District Level. In view of this fact, please respond to the following:

a) Provide a detailed explanation of the methodology used by EPCOR to allocate long-term debt, short-term debt and common equity from the Total Company – EPCOR Water Arizona direct parent level to the operating subsidiary District Level;

b) Provide a listing of all EPCOR Water Arizona operating subsidiaries, including those which are not a party to this docket, and indicate the proportionate share of current Total Company - EPCOR Water Arizona long-term debt ($231,000,000), short-term debt (8,560,000), and common equity ($155,533,624) allocated to each at the District Level.

A. a) EPCOR Water Arizona's capital structure was allocated on the basis of rate base for each of the districts in this proceeding. Generally, the long-term debt and short-term debt refinanced as a result of the purchase of the Arizona American Water Company by EPCOR and still outstanding at the end of the test year was included in the calculation of the total company capital structure. The balance in the equity accounts at the end of the test year, adjusted for the net income for the six months ended June 30, 2013 was also included in the total company capital structure.

The only instance from which this practice was deviated is in the case of the debt obtained from the Water Infrastructure Financing Authority of Arizona (WIFA) for the arsenic treatment facility in the Tubac Water district which in the last rate case was reserved for inclusion in the calculation of Tubac Water's capital structure only to provide the benefit of this low cost financing to the customers for which the financing was incurred.

b) EPCOR Water Arizona does not have any operating subsidiaries but rather each of its operating entities are districts of EPCOR Water Arizona Inc. EPCOR Water Arizona Inc. is a subsidiary of EPCOR Water USA as is Chaparral City Water Company.

The allocation of the capital structure components, long-term debt, short-term debt, and common equity to each of the individual districts of EPCOR Water

Response provided by: Sheryl L. Hubbard
Title: Director, Regulatory & Rates

Address: 2355 W. Pinnacle Peak Road, Suite 300
Phoenix, AZ 85027

Arizona Inc. is only performed in the context of a general rate case in which rate base consisting of the test year elements for net plant, advances, contributions, customer deposits, deferred income taxes, cash working capital, materials & supplies, prepayments, and deferred regulatory assets and liabilities is calculated for each district. This exercise has not been performed for the other districts of EPCOR Water Arizona Inc.

COMPANY: EPCOR Water Arizona Inc.
DOCKET NO: WS-01303A-14-0010

Response provided by: Pauline Ahern
Title: Cost of Capital Witness

Address: 2355 W. Pinnacle Peak Road, Suite 300
Phoenix, AZ 85027

Company Response Number: STF JAC 9.8

Q: In her direct testimony (pp. 42-43), Ms. Ahern proposes that an upward 44 basis point (0.44%) credit risk adjustment be made to the cost of equity for EPCOR Water Arizona. Ms. Ahern expresses the opinion that if EPCOR Water Arizona's debt were rated, it would be assigned a Baa1/BBB+ credit rating by Moody's and S&P, a rating *lower* than the BBB+ rating assigned by Standard & Poor's to the debt of EPCOR Water Arizona's ultimate parent, EPCOR Utilities Inc. To support her position, Ms. Ahern cites a report issued by S&P (Methodology: Differentiating the Issuer. Credit Ratings of a Utility Subsidiary and Its Parent, March 11, 2010) which links the credit rating of 'a wholly owned or substantially controlled utility subsidiary... to the quality of its parent.' In light of the above, please respond to the following:

a) For the 10-year period, 2004-2013, provide a history of the credit ratings assigned to EPCOR Utilities, Inc., by (i) Standard & Poor's ("S&P") and (ii) Dominion Bond Rating Service ("DBRS"). In doing so, provide a breakout, by year, of the date(s) that these credit rating agencies either raised or lowered EPCOR's credit rating, and the stated reason for the change; and
b) Provide copies of all credit reports (i.e., credit upgrades/downgrades, trend watches, stability changes, etc.) issued by (i) S&P and (ii) DBRS which relate to the credit quality of EPCOR Arizona Water's ultimate parent, EPCOR Utilities Inc., for the period January 1, 2009 – Present.

A: a) See attachment labeled "JAC 9.8a S&P Credit Rating.pdf" for Standard & Poor's ("S&P") history of the credit ratings assigned to EPCOR Utilities, Inc. for the years 2002 to date, which encompasses the years 2004.

The DBRS and S&P credit ratings that the Company has in its files for the period 2004-2013 are attached and labeled as follows:

- JAC 9.8a DBRS 2003 Report.pdf
- JAC 9.8a DBRS 2005 Report.pdf
- JAC 9.8a DBRS RR May 9 2006.pdf
- JAC 9.8a DBRS Sep 11 2007.pdf
- JAC 9.8a S&P Report Apr 1 2008.pdf

Response provided by: Pauline Ahern
Title: Cost of Capital Witness

Address: 2355 W. Pinnacle Peak Road, Suite 300
Phoenix, AZ 85027

b) See the following credit reports attached as:

- JAC 9.8b EPCOR Utilities DBRS RR July 7 2010.pdf
- JAC 9.8b EPCOR confirm PR FINAL July 9-09.pdf
- JAC 9.8b EPCOR Utilities DBRS RR FINAL Nov 21-08.pdf
- JAC 9.8b EPCOR Utilities DBRS RR FINAL September 19 2012.pdf
- JAC 9.8b EPCOR Utilities DBRS RR July 19-11.pdf
- JAC 9.8b EPCOR Utilities DBRS RR October 18, 2013.pdf
- JAC 9.8b S&P Aug 27 2010.pdf
- JAC 9.8b S&P Full Report Dec 20, 2011.pdf
- JAC 9.8b S&P Full Report EPCOR Dec 20,2012.pdf
- JAC 9.8b SA EPCOR Util 28-Jan-2014.pdf

COMPANY: EPCOR Water Arizona Inc.
DOCKET NO: WS-01303A-14-0010

Response provided by: Pauline Ahern
Title: Cost of Capital Witness

Address: 2355 W. Pinnacle Peak Road, Suite 300
Phoenix, AZ 85027

Company Response Number: STF JAC 9.9

Q: As noted, Ms. Ahern's proposed 44 basis point credit risk adjustment is predicated on the assumption that the credit quality of a wholly-owned subsidiary is "linked" to that of its parent. With this in mind, provide justification for Ms. Ahern's credit risk adjustment in light of the following:

a) As of mid-2009, EPCOR Utilities, Inc. held a 72% position in Capital Power Corporation (Symbol: CPX) traded on the Toronto Stock Exchange. Although currently divesting itself of its electric generation holdings in Capital Power, EPCOR has significant influence in Capital Power and therefore uses the equity method to account for its investment in the company. As a consequence, over the last three years EPCOR has recorded the following realized losses on its investment in Capital Power:
   1) For the year ended December 31, 2011, EPCOR recorded a loss on the sale of investment in Capital Power of $24 million;
   2) For the year ended December 31, 2012, EPCOR held a 29% ownership stake in Capital Power, and recorded a loss on the sale of investment in Capital Power of $36 million as well as a pre-tax impairment charge of $124 million ($124 million after-tax); and
   3) For the year ended December 31, 2013, EPCOR held a 19% ownership stake in Capital Power, and recorded a loss on the sale of investment in Capital Power of $16 million as well as a pre-tax impairment charge of $43 million ($43 million after-tax).

b) EPCOR's stated intent/strategic direction to "*de-risk*" (emphasis added) by continuing to divest itself of its Capital Power holdings and exposure to generation (*See* EPCOR Utilities Inc., "Investor Presentation," (March 18, 2014) p. 12. (a copy of which is available on the EPCOR web site); and

c) EPCOR Utilities, Inc. holdings in Capital Power <u>pre-date</u> the January 31, 2012 acquisition, from Arizona-American Water Company, of the five EPCOR Water Arizona operating subsidiaries presently seeking a rate increase in this docket.

A: The justification for Ms. Ahern's adjustment is discussed in detail on page 4, line 7 through page 5, line 5, page 17, lines 10 – 24 and page 42, line 20 through page 43, line 13. Her opinion is unchanged, in light of items a) through c) above.

COMPANY: EPCOR Water Arizona Inc.
DOCKET NO: WS-01303A-14-0010

Response provided by: Pauline M. Ahern, CRRA
Title: Managing Principal, AUS Consultants

Address: 155 Gaither Drive, Suite A
Mt. Laurel, NJ 08054

Company Response Number: STF JAC 13.1

Q: In responding to Staff Data Request JAC 9.1, Ms. Ahern was not fully responsive to the question asked. When asked to provide a detailed explanation as to how the results from each of Ms. Ahern's cost of common equity estimation models (i.e., Discounted Cash Flow Model (8.37%), Risk Premium Model (11.25%), and Capital Asset Pricing Model (9.93%)) were weighted in arriving at her 9.95% pre-adjustment cost rate, and the reason(s) why Ms. Ahern believes the relative weightings she accords each model is appropriate, she responded with the following statement:

> The 9.95% indicated pre-risk adjusted common equity cost rate is the *approximate median* (emphasis added) of the results of the Discounted Cash Flow Model (8.37%) Risk Premium Model (11.25%) and Capital Asset Pricing Model (9.93%).

Because the above response sheds no light on either Ms. Ahern's (i) weighting allocation or (ii) the reason(s) for said weighting allocation, Staff respectfully requests that Ms. Ahern be fully responsive to the question asked in Staff data request JAC 9.1, which reads as follows:

As presented in Exhibit PMA-DT 2, Schedule 1 (Brief Summary of Common Equity Cost Rate) of Ms. Ahern's direct testimony, the indicated cost of equity cost rate before consideration of adjustments for credit/business risk is 9.95%. Ms. Ahern arrives at this 9.95% cost rate utilizing estimates derived from three different cost of equity methodologies: Discounted Cash Flow (8.37%), Risk Premium Model (11.25%), and Capital Asset Pricing Model (9.93%). However, the arithmetic mean of these three estimates equate to a cost of equity of 9.85% ((8.37% + 11.25% + 9.93%) / 3 = 9.85%), a figure 10 basis points lower than her indicated 9.95% cost rate. In light of this fact, please respond to the following:

Provide a detailed explanation as to how each cost of common equity estimation model (i.e., Discounted Cash Flow, Risk Premium Model, and Capital Asset Pricing Model) employed by Ms. Ahern is weighted for purposes of arriving at her 9.95% pre-adjustment cost rate, and the reason(s) why Ms. Ahern believes the relative weightings she accords each model is appropriate.

A: As Ms. Ahern stated in response to Staff Data Request JAC 9.1, the 9.95% indicated pre-risk adjusted common equity cost rate is the *approximate median* of the results of the Discounted Cash Flow Model (8.37%) Risk Premium Model (11.25%) and Capital Asset Pricing Model (9.93%). Therefore, weights were not given to the results of the specific models. The median of the indicated pre-risk adjusted common equity cost rates resulting from the DCF, RPM and CAPM is 9.93%, which when rounded to 9.95% is Ms. Ahern's recommended common equity cost rate. To paraphrase Ms. Ahern's direct testimony, at page 22, lines 2 – 17, she relies upon the median due to the wide range of results as well as the continuing volatile capital market conditions in light of the continuing fragile economic recovery, and to not give undue weight to outliers on either the high or the low side. In her opinion, the median is a more accurate and reliable measure of central tendency, and provides recognition of all of the cost of common equity cost rate model results.

COMPANY: EPCOR Water Arizona Inc.
DOCKET NO: WS-01303A-14-0010

Response provided by: Pauline M. Ahern, CRRA
Title: Managing Principal, AUS Consultants

Address: 155 Gaither Drive, Suite A
Mt. Laurel, NJ 08054

Company Response Number: STF JAC 13.5

Q: Exhibit PMA-DT1 of Ms. Ahern's testimony provides a listing of the utilities for which she has sponsored testimony on fair rate of return and related issues.

With this in mind, please respond to the following:

a) List the regulatory proceedings in which Ms. Ahern has testified as a cost of capital witness;

b) Among the regulatory proceedings in which Ms. Ahern has testified as a cost of capital witness, specify those in which she has presented estimates derived from the PRPM™ model; and

c) Among the regulatory proceedings in which Ms. Ahern has presented estimates derived from the PRPM™ model, provide the docket number and regulatory jurisdiction in which Ms. Ahern's PRPM™ cost of equity recommendations were adopted.

A: a) Please see Attachment STF JAC 13.5 (a).

b) Please see Attachment STF JAC 13.5 (b).

d) To the best of Ms. Ahern's knowledge Ms. Ahern's PRPM™ cost of equity recommendations have not been specifically adopted in a regulatory proceeding. To the best of Ms. Ahern's knowledge the only proceeding in which they were specifically rejected was Docket No. 2013-003362 before the Maine Public Service Commission (MPSC) on behalf of Maine Water Company. In rejecting the PRPM™, the MPSC noted "we are not prepared to incorporate the results of the analysis using the PRPM™ inputs into our determination of an appropriate ROE in this case. This does not however preclude us from future reliance once the model is fully vetted by academia and other regulatory bodies."

COMPANY: EPCOR Water Arizona Inc.
DOCKET NO: WS-01303A-14-0010

Response provided by: Pauline M. Ahern, CRRA
Title: Managing Principal, AUS Consultants

Address: 155 Gaither Drive, Suite A
Mt. Laurel, NJ 08054

Company Response Number: STF JAC 13.6

Q: Excepting her associates at AUS Consultants, is Ms. Ahern aware of other cost of equity consulting professionals who incorporate estimates derived from the PRPM™ model when testifying at regulatory proceedings?

A. No, to the best of Ms. Ahern's knowledge. However, please see Attachment STF JAC 13-6 which shows the many venues in which the PRPM™ or research based upon the PRPM™ has been presented, ranging from regulatory commission task forces; to Wall Street; to NARUC; to the Rutgers University's Center for Research in Regulatory Industries; to the Financial Research Institutes – University of Missouri's Hot Topic Hotline; and, elsewhere. In addition, the co-authors have granted permission for the PRPM™ to be included in Roger A. Morin's next edition of New Regulatory Finance. It will also be included in Cost of Capital: Applications and Examples (5th Ed.), Wiley & Sons, Shannon Pratt and Roger Grabowski (editors) and The Lawyers' Guide to Cost of Capital, ABA Publishing, Shannon Pratt and Roger Grabowski (editors), both of which are to be published in 2015.

COMPANY: EPCOR Water Arizona Inc.
DOCKET NO: WS-01303A-14-0010

Response provided by: Pauline M. Ahern, CRRA
Title: Managing Principal, AUS Consultants

Address: 155 Gaither Drive, Suite A
Mt. Laurel, NJ 08054

Company Response Number: STF JAC 13.8

Q: Footnote 1 at the bottom of Exhibit PMA-DT2 Schedule 7 (p. 2 of 11) reads as follows: "PRPM™ calculated from first available trading month through September 2013." A review of Ms. Ahern's work papers for this same schedule indicates that the average variance calculation for each of her nine sample companies was based on monthly variances over time, with the time series variance calculation for Aqua America covering the longest period of time (August 1971-September 2013) and that of American Water Works the shortest (May 2008- September 2013). In light of this fact, please respond to the following:

a) Define what is meant by the expression "first available trading month;"
b) For each of Ms. Ahern's nine sample companies, indicate the date (month and year) in which the company's common stock initially went public;
c) For each of Ms. Ahern's nine sample companies, indicate the date (month and year) in which she initiated her time series variance analysis; and
d) To the extent that the dates of Ms. Ahern's time series variance analysis do not conform to the period over which the common stock of each of her nine sample companies has actually been publicly traded, for each sample company provide an explanation as to why her "first available trading month" differs from the 'actual first trading month.'

A: a) The "first available trading month" is the first month of data provided by the Center for Research in Securities Prices (CRSP®) from The University of Chicago Booth School of Business for each of the nine water companies.

b) Ms. Ahern assumes that the month in which the water companies stock initially went public to be the first month of data provided by CRSP®. In any event, the data provided by CRSP® is the longest available series of market data for these companies.

c) See tab Sch 7 p 2 of Ms. Ahern's electronic exhibit.

d) Please see Ms. Ahern's response to parts a) through c), above.

COMPANY: EPCOR Water Arizona Inc.
DOCKET NO: WS-01303A-14-0010

Response provided by: Pauline M. Ahern, CRRA
Title: Managing Principal, AUS Consultants

Address: 155 Gaither Drive, Suite A
Mt. Laurel, NJ 08054

Company Response Number: STF JAC 13.9

Q: A review of Exhibit PMA-DT2 Schedule 7 (p. 2 of 11) indicates that among Ms. Ahern's nine sample companies, York Water Company has the second highest average variance (0.46%), the third highest PRPM™ derived risk premium (11.40%) and the third highest indicated cost of common equity (15.71%). Upon review of Ms. Ahern's work papers supporting that schedule, Staff found that the initial monthly variance figures assigned to York Water appeared to be disproportionately higher than those of the other water companies in her sample. The table below depicts both the initial month variance assigned to each of her nine sample companies, as well as Staff's calculation of the initial year average variance based upon Ms. Ahern's monthly variance figures. As shown, the initial month variance for York Water (2.73%) exceeded the average of the other eight companies (0.2375%) by a factor of 11.495, while the initial year average variance for York Water (1.70%) exceeded the average of the other eight companies (0.24875%) by a factor of 6.834.

	Initial Month Variance	Initial Year Average Variance
American States Water	0.25 %	0.23 %
American Water Works	0.76 %	0.52 %
Aqua America	0.25 %	0.35 %
Artesian Resources	0.10 %	0.16 %
California Water	0.09 %	0.16 %
Connecticut Water	0.28 %	0.27 %
Middlesex Water	0.07 %	0.14 %
SJW Corporation	0.10 %	0.16 %
Eight Company Average	0.2375 %	0.24875 %
York Water	2.73 %	1.70 %
Magnitude Greater	11.495 x	6.834 x

In light of the above, please respond to the following:

a) Provide an explanation as to why the monthly variances for York Water are not representative of the monthly variances of the other eight companies in Ms. Ahern's proxy group, making sure to identify all factors which would explain the significant disparities depicted above;

b) Because the monthly variance figures in Ms. Ahern's work papers have been "hard coded" into the Excel spreadsheet, their calculation is not subject to independent verification by Staff. Please identify an independent source(s) where the calculation of the monthly variance figures for each of Ms. Ahern's nine sample companies can be verified;

c) If no such independent source is available, please provide Staff with a copy of the work papers containing Ms. Ahern's calculations of the monthly variance figures for each of her nine sample companies.

A: a) Ms. Ahern cannot speculate as to why York Water Company's early predicted variances differ from those of the other eight water companies in her proxy group. While York's early predicted variances appear out of line relative to those of the other water companies, they are the predicted variances based upon York's actual market returns / equity risk premiums.

b) Ms. Ahern used the independent commercial Eviews statistical package to derive the predicted monthly variances for each company. She can be made available in person or via webinar to demonstrate how to derive the predicted variances using Eviews.

c) Please see Ms. Ahern's response to part B above.

BEFORE THE ARIZONA CORPORATION COMMISSION

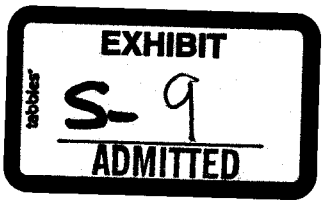

SUSAN BITTER SMITH
Chairman
BOB STUMP
Commissioner
BOB BURNS
Commissioner
DOUG LITTLE
Commissioner
TOM FORESE
Commissioner

IN THE MATTER OF THE APPLICATION OF EPCOR WATER ARIZONA INC., AN ARIZONA CORPORATION, FOR A DETERMINATION OF THE CURRENT FAIR VALUE OF ITS UTILITY PLANT AND PROPERTY AND FOR INCREASES IN ITS RATES AND CHARGES FOR UTILITY SERVICE BY ITS MOHAVE WATER DISTRICT, PARADISE VALLEY WATER DISTRICT, SUN CITY WATER DISTRICT, TUBAC WATER DISTRICT, AND MOHAVE WASTEWATER DISTRICT.	DOCKET NO. WS-01303A-14-0010

SURREBUTTAL

TESTIMONY

OF

JOHN A. CASSIDY

PUBLIC UTILITIES ANALYST

UTILITIES DIVISION

ARIZONA CORPORATION COMMISSION

FEBRUARY 26, 2015

TABLE OF CONTENTS

Page

I. INTRODUCTION 1

II. STAFF RESPONSE TO COMPANY'S COST OF CAPITAL WITNESS MS. PAULINE M. AHERN 2

III. CONCLUSION 15

SURREBUTTAL SCHEDULES

Capital Structure and Weighted Cost of Capital JAC-1

Intentionally Left Blank JAC-2

Final Cost of Equity Estimates for Sample Water Utilities ..... JAC -3

Average Capital Structure of Sample Water Utilities ..... JAC -4

Growth in Earnings & Dividends of Sample Water Utilities ..... JAC -5

Sustainable Growth for Sample Water Utilities ..... JAC -6

Selected Financial Data of Sample Water Utilities ..... JAC -7

Calculation of Expected Infinite Annual Growth in Dividends ..... JAC -8

Multi-Stage DCF Estimates ..... JAC -9

EXHIBITS

Pro Forma Restatement of Surrebuttal Schedule JAC 3 ..... JAC–A

Monthly Variances in the PRPM™ Time Series for York Water ..... JAC–B

Comparison of First 12-Months of Monthly Variances in the PRPM™ Time Series for each of Ms. Ahern's Sample Companies ..... JAC–C

EXECUTIVE SUMMARY
EPCOR WATER ARIZONA, INC.
DOCKET NO. WS-01303A-14-0010

The surrebuttal testimony of Staff witness John A. Cassidy addresses the following issues:

Capital Structure – For four of the EPCOR Water Arizona, Inc. ("Company") districts (Mohave Water, Mohave Wastewater, Paradise Valley Water and Sun City Water) in this proceeding, Staff continues to recommend that the Commission adopt a capital structure mix consisting of 59.76 percent debt and 40.24 percent equity. For the Tubac Water district, Staff continues to recommend that the Commission adopt a capital structure mix consisting of 58.53 percent debt and 41.47 percent equity.

Cost of Equity – Staff continues to recommend that the Commission adopt a 9.5 percent cost of equity for the Company.

Cost of Debt – Staff recommends that the Commission adopt a 4.3 percent cost of debt for the Mohave Water, Mohave Wastewater, Paradise Valley Water and Sun City Water districts, and a 4.0 percent cost of debt for the Tubac Water district.

Overall Rate of Return – Staff continues to recommend that the Commission adopt a 6.4 percent overall rate of return for the Mohave Water, Mohave Wastewater, Paradise Valley Water and Sun City Water districts, and a 6.2 percent overall rate of return for the Tubac Water district.

Ms. Ahern's Testimony – The Commission should reject the Company's proposed 10.55 percent return on equity ("ROE") for the following reasons:

Ms. Ahern's primary cost of equity estimation model is the Predictive Risk Premium Model™ ("PRPM™"), and the PRPM™ derived cost of equity metrics permeate her entire analysis. Cost of equity estimates obtained from the PRPM™ model overstate the market cost of equity; thus, use of PRPM™ derived metrics in Ms. Ahern's Risk Premium Model using an Adjusted Total Market Approach, Capital Asset Pricing Model ("CAPM") and Empirical Capital Asset Pricing Model ("ECAPM") overstate cost of equity estimates obtained from these models, as well. No weight should be given to cost of equity estimates obtained from the PRPM™ model as (i) the critical values input into Ms. Ahern's model have been hardcoded into the excel file, and (ii) Ms. Ahern makes an invalid assumption concerning the date the common stock of at least five of her nine sample companies initially became publicly traded. In Ms. Ahern's CAPM and ECAPM models the cost of equity is overstated by use of a forecasted risk free rate. In Ms. Ahern's Risk Premium Model using a Total Market Approach, the cost of equity is overstated by use of a forecasted 'Aaa' corporate bond yield. Ms. Ahern's ECAPM cost of equity results should be given no weight as they are overstated by means of an unnecessary and redundant beta adjustment. Further, Ms. Ahern's proposed 10.55 percent cost of equity is inflated by means of both a 24 basis point upward credit risk adjustment and a 30 basis point upward business risk adjustment.

I. INTRODUCTION

Q. Please state your name, occupation, and business address.

A. My name is John A. Cassidy. I am a Public Utilities Analyst employed by the Arizona Corporation Commission ("Commission") in the Utilities Division ("Staff"). My business address is 1200 West Washington Street, Phoenix, Arizona 85007.

Q. Are you the same John A. Cassidy who filed direct testimony in this case?

A. Yes, I am.

Q. What is the purpose of your surrebuttal testimony in this rate proceeding?

A. The purpose of my surrebuttal testimony is to report on Staff's updated cost of capital analysis for EPCOR Water Arizona, Inc. ("EPCOR," "EWAZ," or "Company"), and to respond to the cost of capital rebuttal testimony of Company witness, Pauline M. Ahern ("Ms. Ahern's Rebuttal").

Q. Did Staff's updated cost of capital analysis for the Company result in a change to the 9.5 percent cost of equity recommended by Staff in direct testimony?

A. No. As shown in Surrebuttal Schedule JAC-3, Staff continues to recommend a cost of equity for the Company of 9.5 percent, based on an 8.9 percent average (i.e., arithmetic mean) cost of equity estimate obtained from Staff's two discounted cash flow ("DCF") cost of equity estimation models, combined with an upward 60 basis point (0.6 percent) economic assessment adjustment.[1]

---

[1] It should be noted that while the cost of equity estimate obtained from Staff's updated constant growth DCF model—8.6 percent—remained unchanged from the level in direct testimony, there was a downward change to the cost of equity estimate obtained from Staff's multi-stage DCF model. Specifically, as shown in Surrebuttal Schedule JAC-3, Staff's updated multi-stage cost of equity estimate is 9.1 percent, 10 basis points *lower* than the 9.2 percent multi-stage DCF cost of equity estimate in Staff's direct testimony (*See* Cassidy Direct, Schedule JAC-3). For purposes of its cost of equity recommendations, Staff rounds to a single digit (i.e., to the tenth, rather than the hundredth place), and it is for this reason that Staff's updated recommended cost of equity for EWAZ remained unchanged ((8.6% + 9.1%)/2 = 8.85%; or 8.9% when rounded).

Q. Please explain how Staff's surrebuttal testimony is organized.

A. Staff's surrebuttal testimony is presented in three sections. Section I is this introduction. Section II presents Staff's comments on the rebuttal testimony of the Company's cost of capital witness, Ms. Ahern. Lastly, Section III presents Staff's recommendations.

II. STAFF RESPONSE TO COMPANY'S COST OF CAPITAL WITNESS MS. PAULINE M. AHERN

Q. For purposes of her rebuttal testimony, did Ms. Ahern update her proposed cost of equity and overall rate of return for the Company?

A. Yes. In rebuttal testimony, Ms. Ahern now proposes a cost of equity for EWAZ of 10.55 percent. Ms. Ahern's updated cost of equity for the Company is 9.72 percent, based on cost of equity estimates obtained from her DCF (8.52 percent), Risk Premium Model ("RPM") (10.97 percent) and Capital Asset Pricing Model ("CAPM") (9.72 percent) models. To this 9.72 percent indicated cost of equity Ms. Ahern adds an upward 24 basis point credit risk adjustment and an upward 30 basis point business risk adjustment. Ms. Ahern's recommended cost of equity is 10.25 percent. To this cost of equity cost rate she adds a 60 basis point economic assessment adjustment, for a range of 10.25 percent to 10.85 percent. Ms. Ahern's proposed 10.55 percent cost of equity represents the mid-point of this range.

Q. In Rebuttal (pp. 2-3, lines 23:2), Ms. Ahern cites to pages 29-33 and 46-52 of Staff's direct testimony, stating that Mr. Cassidy, "believes that there is a direct relationship between earned returns on book common equity, the allowed return on book common equity and market-to-book ratios." How does Staff respond?

A. Ms. Ahern's assertion is unwarranted. A review of pages 29-33 my direct testimony demonstrates that I lay the foundation for why Staff incorporates a stock financing growth rate (vs) term into its constant growth DCF model. Staff acknowledges that market-to-book

("M:B") ratios for Staff's sample companies continues to remain above 1.0, and with the expectation that M:B ratios for publicly traded water companies will remain above 1.0, Staff has included a vs term into its sustainable growth DCF analysis.

Q. In Rebuttal (p. 11, lines 10-22), Ms. Ahern states that use of multiple common equity cost rate models adds reliability when arriving at a recommended common equity cost rate. She points out that in direct testimony, Mr. Cassidy agreed with the need to reduce "the sample error resulting from random fluctuations in the market at the time the information is gathered," yet did not apply this concept when relying exclusively on the DCF model. How does Staff respond?

A. Ms. Ahern is mistaken as regards the gathering of data used in Staff's cost of equity estimation models.[2] While it is true that Staff's recommended cost of equity is based on estimates derived from its constant growth DCF and multi-stage DCF models, when gathering the input data used in those models Staff also gathers inputs for use in Staff's historical- and current market risk premium CAPM models. For reasons noted in Staff's direct testimony,[3] Staff has determined that cost of equity estimates derived from the CAPM should not be given their traditional weighting for purposes of setting rates, as estimates derived from the CAPM continue at unusually low levels.

Q. Has Staff prepared an exhibit which would demonstrate why Staff believes reliance upon cost of equity estimates obtained from the CAPM are not appropriate for purposes of setting rates at this time?

A. Yes. Staff has prepared a pro forma restatement of Surrebuttal Schedule JAC-3 for this purpose. As shown in Surrebuttal Exhibit JAC-A, Staff presents the cost of equity estimates for the Company as if they were derived from estimates obtained from Staff's two DCF

[2] *See* Cassidy Direct, pp. 3-4, 25:1.
[3] *See* Cassidy Direct, pp. 4-5, 5:5.

models and Staff's two CAPM models. As can be seen, Staff's average DCF cost of equity estimate for the Company is 8.9 percent, while Staff's average CAPM cost of equity estimate for the Company is 7.1 percent; a figure 180 basis points *lower* than Staff's 8.9 percent DCF estimate. Had Staff incorporated its CAPM estimates into its analysis utilizing its traditional weighting allocations (i.e., 50 percent DCF/50 percent CAPM), doing so would have resulted in an arithmetic mean estimated cost of equity for EWAZ of 8.0 percent ((8.9 percent + 7.1 percent)/2 = 8.0 percent); a figure 90 basis points *lower* than Staff's 8.9 percent DCF estimate. Finally, after making provision for Staff's upward 60 basis point economic assessment adjustment, Staff's overall recommended cost of equity for the Company would be 8.6 percent; once again, a figure 90 basis points *lower* than Staff's recommended 9.5 percent cost of equity estimate for EWAZ and based upon cost of equity estimates derived from Staff's two DCF models.

Q. In light of the above, does Staff believe the assertion made by Ms. Ahern that Staff has relied exclusively on the results of its DCF models for purposes of its recommended cost of equity for the Company to be without merit?

A. Yes, as Staff obtained cost of equity estimates from its two CAPM models simultaneous to having obtained cost of equity estimates from its two DCF models. However, after having obtained its CAPM cost of equity estimates, Staff determined that it would be inappropriate to incorporate those estimates into its recommended cost of equity for EWAZ.

Q. In Rebuttal (p. 18, footnote 14), in regard to the historical and projected dividends per share ("DPS") and earnings per share ("EPS") estimates presented in Schedule JAC-5 filed in Staff's direct testimony, Ms. Ahern asserts that, "[a]lthough sourced as coming from *Value Line*, Mr. Cassidy did not use the historical and projected growth rates published for each water company in its *Value Line* Ratings & Report, but rather calculated them himself." How does Staff respond?

A. Ms. Ahern's assertion is without merit. While Staff does compute the growth rates used in its historical and projected DPS and EPS estimates presented in Schedule JAC-5, it does so utilizing data obtained from *Value Line,* as sourced. Specifically, in the computation of its historical 10-year DPS and EPS growth rates for each sample company, Staff utilizes the historical DPS and EPS *values* for each sample company as reported by *Value Line* Ratings & Reports. For example, as shown in Schedule JAC-5, Staff determined the 10-year historical DPS growth rate for American States Water over the period, 2003-2013, to be 5.6 percent. Staff's calculation of this growth rate involved dividing the 2013 DPS *value* ($0.76) by the 2003 DPS *value* ($0.44), raising that quantity to the 1/10 power, and subtracting 1.[4] As for the calculation of Staff's projected DPS and EPS estimates for the sample companies, Staff once again utilizes actual per share *values* made available by *Value Line.* For example, as shown in Schedule JAC-5, for American States Water Staff determined the 5-year projected dividend growth rate to be 8.6 percent over the period, 2013-2018. This was done by dividing Value Line's projected DPS *value* ($1.15) for the period 2017-2019 by the reported 2013 DPS *value* ($0.76), raising that quantity to the 1/5 power, and subtracting 1.[5] Staff believes the methodology it employs in the computation of historical and projected measures of DPS and EPS growth in its constant growth DCF model to be appropriate, as it incorporates the actual historical/projected DPS and EPS *values* reported by *Value Line*, thereby allowing for greater precision in the Value Line sourced estimate obtained.

---

[4] $(((.76/.44)^{1/10})-1) = 5.6\%$ (rounded).
[5] $(((1.15/.76)^{1/5})-1) = 8.6\%$ (rounded).

Q. In Rebuttal (p. 25, lines 3-24), Ms. Ahern again raises the issue of Staff electing to calculate DPS, EPS and sustainable growth rates in its DCF cost of equity analysis rather than adopting the growth rates published by *Value Line*. How does Staff respond?

A. Staff responds by citing to the discussion noted above.

Q. The historical price and dividend input data used by Ms. Ahern in the PRPM™ is provided by the Center for Research in Securities Prices ("CRSP®"). In Rebuttal (pp. 48, lines 2-4), Ms. Ahern justifies use of CRSP® data on grounds that it is "a well-known and well respected data source widely used in peer-reviewed academic financial research." How does Staff respond?

A. Staff has every confidence that the historical market data made available by CRSP® is worthy of the respect and high regard Ms. Ahern ascribes to it in rebuttal testimony. That said, the question as to whether the CRSP® data used by Ms. Ahern in the PRPM™ is highly regarded is *not* the relevant issue. As noted in Staff's direct testimony,[6] the relevant concern relates to whether historical market data has been excluded from Ms. Ahern's PRPM™ time series for the sample companies by virtue of the data not yet having been made available by CRSP®. As was further noted in Staff's direct testimony,[7] this appears to be the case for at least five of her nine sample companies: York Water, American States Water, SJW Corporation, California Water and Middlesex Water.

[6] *See* Cassidy Direct, pp. 66-67, lines 19:7.
[7] *See* Cassidy Direct, pp. 68-69, lines 1:10; and Exhibit JAC-D.

Q. In Rebuttal (p. 48, lines 4-7), Ms. Ahern states that CRSP® makes available historical market data on approximately eighty publicly-traded utilities and, "to the best of [her] knowledge, covered the trading history which CRSP® deemed appropriate." How does Staff respond?

A. As a cost of capital witness filing testimony in this proceeding, Ms. Ahern has elected to utilize CRSP® historical market data in her PRPM™ cost of equity analysis. Accordingly, Staff believes that it is Ms. Ahern, and not CRSP®, who should determine whether the data made available by CRSP® is deemed to be appropriate for that purpose.

Q. The nine publicly traded utilities included in Ms. Ahern's proxy group are listed either on the New York Stock Exchange ("NYSE") or the National Association of Securities Dealers Automated Quotations ("NASDAQ").[8] For the publicly traded stocks listed on these exchanges, when does the historical market data provided by CRSP® begin?

A. All CRSP® data series for NYSE exchange listed securities begins on December 31, 1925, while all data series for NASDAQ exchange listed securities begins on December 14, 1972.[9]

Q. This would suggest that had York Water been listed on the NASDAQ exchange as of December 14, 1972, historical market trading data for the common shares of York water would be available from CRSP® going back to that date, correct?

A. Yes, and had this been the case, there is every reason to believe that Ms. Ahern would have incorporated that historical market data into her PRPM™ time series for York Water. As noted in Staff's direct testimony,[10] a review of the work papers supporting Ahern Exhibit PMA-DT 2, Schedule 7 (Page 2) indicated that Ms. Ahern gave *equal weight* to all observed

---

[8] The NYSE listed companies in Ms. Ahern's sample include American States Water, American Water Works, Aqua America, California Water and SJW Corporation; the NASDAQ listed companies in her sample include Artesian Resources, Connecticut Water, Middlesex Water and York Water.

[9] http://www.crsp.com/products/research-products/crsp-us-stock-databases

[10] *See* Cassidy Direct, p. 60, lines 19-26.

monthly variances in the time series, as the average variance for each sample company represented the arithmetic mean of all monthly variances in the time series. Thus, Staff found no evidence of Ms. Ahern having excluded from her PRPM™ time series any historical monthly trading data made available by CRSP®. Instead, the historical market data excluded from Ms. Ahern's PRPM™ analysis is that which predates the data made available by CRSP® for York Water, American States Water, SJW Corporation, California Water and Middlesex Water.

Q. When was York Water listed on the NASDAQ exchange?

A. The common shares of York Water were listed on the NASDAQ exchange on January 16, 2001. Prior to that date, York's common stock was traded over-the-counter.[11]

Q. And this explains why the PRPM™ time series for York Water in Ms. Ahern's analysis does not begin until February 2001, correct?

A. Yes.

[11] York Water Company, 2001 Form 10-K filed with the U.S. Securities and Exchange Commission http://www.sec.gov/Archives/edgar/data/108985/000010898502000007/yr2001.txt

Q. When explaining the PRPM™ in direct testimony, Ms. Ahern noted that the PRPM™ was developed from the work of Mr. Robert F. Engle, a Nobel Prize winning economist. Specifically, she states that "Engle discovered that the volatility in prices and returns also clusters over time, *making it highly predictable and available to predict future levels of risk and risk premiums* (emphasis added)."[12] In reviewing the work papers supporting Ahern Exhibit PMA-DT 2 Schedule 7 (Page 2) relating to York Water, did Staff find evidence which appears to contradict the above statement?

A. Yes. Utilizing the monthly variance values from the PRPM™ time series for York Water contained in the work papers supporting Ahern Exhibit PMA-DT 2 Schedule 7 (Page 2), Staff has prepared an analysis to show what the average annual monthly variance figures would be from one year to the next covering a full 12-year period (plus eight months of an additional thirteenth year) from, February 2001 – September 2013. As shown in Surrebuttal Exhibit JAC-B, the highest average annual monthly variance for York Water (1.70 percent) occurred in year 1 (the period February 2001-January 2002), with the second and third highest average annual monthly variance figures coming in years two (0.63 percent) and three (0.46 percent). Since that time, the annual average variance figures in Ms. Ahern's PRPM™ analysis have gone down fairly consistently from year to year, reaching a low of 0.25 percent in year 12 (the period February 2012-January 2013). As can further be seen, over the first three years, Ms. Ahern's average annual variance for York was 0.93 percent, while the average annual variance for years 4-13 was much lower, 0.32 percent. Nevertheless, due to the annual variance figures for York being much higher in years 1-3, the overall average variance used in Ms. Ahern's PRPM™ analysis has been skewed upward to 0.46 percent. Thus, rather than being **predictive** of "future levels of risk and risk premiums," the early (i.e., years 1-3, February 2001 – January 2004) predicted variances obtained in Ms. Ahern's PRPM™ analysis

[12] See Ahern Direct, pp. 27-28, lines 18:1.

for York appear to exceed those obtained over the most recent 9-year plus period (i.e., years 4-13, February 2004 – September 2013) by a factor of 2.9 (0.93 percent/0.32 percent = 2.9).

Q. Did Staff perform an analysis to determine if York's 1.70 percent annual average monthly variance in the first 12-months (i.e., February 2001-January 2002) of PRPM™ time series data was representative of that of the other eight utilities in Ms. Ahern's proxy group of sample companies?

A. Yes. Staff prepared such an analysis, and determined that the monthly variances reported for York in the first 12-months were clearly **not** representative of those of the other sample companies in the comparable first 12-month period. As shown in Surrebuttal Exhibit JAC-C, the average annual monthly variance for all nine sample companies in the first 12-months of PRPM™ time series data was 0.41 percent. However, when excluding York Water from the computation, the average annual monthly variance for the other eight sample companies was shown to be 0.25 percent. What this suggests is that York's 1.70 percent initial 12-month average PRPM™ monthly variance exceeds that of the other eight sample companies by a factor of 6.8 (1.70 percent/0.25 percent = 6.8).

Q. Does Staff have reason to believe that this 1.70 percent average annual monthly variance is an aberration which serves to significantly overstate Ms. Ahern's PRPM™ derived cost of equity estimate for York Water?

A. Yes. As shown in Surrebuttal Exhibit JAC-C, among the monthly variances reported in York's initial 12-month PRPM™ time series (i.e., February 2001-January 2002), the variances in the first four months all exceeded 2.0 percent (the 2.73 percent monthly variance for February 2001 being the highest), followed by six consecutive months with variances in excess of 1.0 percent, with the final two months having variances above 0.90 percent. Furthermore, in reviewing the work papers supporting Ahern Exhibit PMA-DT 2 Schedule 7

(Page 2), Staff determined that no other sample company had even one monthly variance in excess of 2.0 percent, with the single highest reported monthly variance among Ms. Ahern's other eight sample companies being a 1.40 percent monthly variance for Aqua America. As can be seen in Surrebuttal Exhibit JAC-C, however, the monthly variances in each of the first seven months of York's initial 12-month PRPM™ time series all exceed this 1.40 percent level.

Q. In light of the above, does Staff believe this to be an additional reason why historical market trading data for York Water should not be excluded from Ms. Ahern's PRPM™ time series?

A. Yes.

Q. In Rebuttal (p. 48, lines 11-16), Ms. Ahern acknowledges that Yahoo! Finance makes available a historical time series of market return data for York Water dating back to May, 1999. However, she appears to dismiss the significance of this market data on grounds that York's shares are thinly traded. Specifically, Ms. Ahern states that upon close review of that return data, it showed that "York Water was not traded every day, and sometimes not traded for several days in a row. *It is my understanding that the CRSP® return data only contained data on continuously publicly traded stocks* (emphasis added)." How does Staff respond?

A. Staff conducted a review of the 21-month period of market return data (i.e., May 3, 1999-January 31, 2001) available on the Yahoo! Finance website predating that used in Ms. Ahern's PRPM™ time series for York. Staff determined average daily trading volume in York common shares over this 21-month period to be 4,183 shares, and that there were both individual days and consecutive days in which there was no trading volume in York common shares. Staff then conducted a review of the market return data for York Water on this same

Yahoo! Finance website covering the initial 12-month period included in Ms. Ahern's PRPM™ time series for York Water (i.e., February 1, 2001-January 31, 2002). In doing so, Staff determined average daily trading volume in York common stock over this 12-month period to be 6,509 shares, and that there were both individual days and consecutive days in which there was no trading volume in York common shares. Thus, Ms. Ahern's stated understanding that CRSP® return data is provided only for "continuously publicly traded stocks" appears to be inaccurate.

Q. In closing on this point, in Rebuttal (page 48, lines 16-24) Ms. Ahern states that "[s]ince the PRPM™ is a predicted variance model, equities that are not frequently traded produce distorted volatility because of the infrequency of trading. This distorted actual volatility would translate into distorted predicted volatility, which would produce inaccurate predicted equity risk premiums. Thus, the lack of the entire trading histories of the stocks when they are infrequently traded would not adversely affect the results of the PRPM™." How does Staff respond?

A. First, as evidenced by the above, Ms. Ahern clearly acknowledges/implies that she has excluded a portion of the historical market trading data from her PRPM™ analysis. Second, the above statement gives rise to the question as to whether the PRPM™ can rightly be considered a "market-based" model. This issue is particularly significant in view of the fact that in direct testimony,[13] Ms. Ahern identified "the historical [monthly] returns on the common shares of each company in the proxy group" as a necessary input to obtain a PRPM™ derived equity risk premium. Third, the above statement suggests that the potential exists for the PRPM™ to obtain distorted and/or inaccurate predicted equity risk premiums. For the reasons noted above, Staff believes this to be an additional reason why cost of equity estimates derived from the PRPM™ should be given no weight in this proceeding.

[13] *See* Ahern Direct, p. 28, lines 11-12.

Q. In Rebuttal, Ms. Ahern proposes a 24 basis point upward credit risk adjustment to the cost of equity. How does Staff respond?

A. Ms. Ahern's proposed credit risk adjustment has no merit, as a 1994 study by S. Brooks Marshall which investigated the relationship between equity risk and bond risk concluded that bond ratings fail to explain a large portion of total equity risk (defined as equity risk premiums and beta). Specifically, the author concluded:

> "These data show that using a bond rating as the sole measure for selecting a set of comparable companies for a cost-of-equity determination will not necessarily produce a group of companies that have similar equity risk. Most of this risk is explained by characteristics other than bond ratings."[14]

Accordingly, the proposed 24 basis point credit risk adjustment should be denied.

Q. Is Staff aware of an additional consideration as to why it would be inappropriate to provide an upward credit risk adjustment to the cost of equity for the Company?

A. Yes. In conducting research on EWAZ and its ultimate parent, EPCOR Utilities, Inc., Staff located a news release issued by the Reuters news service relating to a Standard & Poor's credit downgrade of EPCOR Power L.P. which took place on May 7, 2007.[15] In that news release, it was reported that a positive outlook or rating uplift for EPCOR Power L.P. by S&P was "unlikely, given the non-amortizing nature of the company's long-term debt." As noted in Staff's direct testimony,[16] EWAZ has total long-term debt of $231,761,134, and of this total 99.67 percent ($231,000,000) is non-amortizing debt. Thus, it appears that credit rating agencies take into consideration the nature of the long-term debt used to fund a utility's assets, with the presence of non-amortizing debt in the capital structure being viewed

---

[14] Marshall, S. Brooks. "Bond Ratings: A Poor Predictor of Equity Risk," *Public Utilities Fortnightly*, Oct. 15, 1994, pp. 27-28.

[15] http://uk.reuters.com/article/2007/05/07/idUKWNA262020070507

[16] *See* Cassidy Direct, p. 39, footnote 31.

unfavorably, rather than favorably. For this reason, Staff believes the provision of an upward credit risk adjustment to the Company's cost of equity is unwarranted due to the significant presence of non-amortizing debt in the EWAZ capital structure.

Q. But don't many of the publicly traded utilities in Staff's proxy group of companies utilize non-amortizing debt to fund their assets?

A. Yes, they do. However, by virtue of being publicly traded entities these utilities have access to the equity capital markets, whereas EWAZ and its ultimate parent, EPCOR Utilities, Inc., do not. In response to data requests issued by Staff, the Company provided credit rating reports issued by both S&P and the Dominion Bond Rating Service ("DBRS"), the two credit rating agencies who issue credit ratings for EPCOR Utilities, Inc. In reviewing the credit reports issued by DBRS, that rating agency has consistently identified the lack of access to the equity markets as being a credit weakness for the company. EPCOR Utilities, Inc. is a closely held entity, with its entire three shares of outstanding common stock being owned by the City of Edmonton. Thus, unlike the publicly traded utilities in Staff's sample group of companies who do have access to the equity capital markets and an additional source of capital to service its obligations on maturing long-term non-amortizing debt, EWAZ and its ultimate parent do not.

Q. In Rebuttal, Ms. Ahern continues to advocate for a 30 basis point upward business risk adjustment to the cost of equity. How does Staff respond?

A. For the reasons noted in Staff's direct testimony,[17] it is Staff's position that there is no justification for such an adjustment.

[17] *See* Cassidy Direct, pp. 82-84, 16:12.

III. CONCLUSION

Q. Please summarize Staff's recommendations.

A. For the four EWAZ districts (Mohave Water, Mohave Wastewater, Paradise Valley Water and Sun City Water) Staff recommends that the Commission adopt a consolidated 6.4 percent overall rate of return ("ROR") for the Company based on a capital structure composed of 59.76 percent debt and 40.24 percent equity, Staff's 8.9 percent average DCF cost of equity estimate, and Staff's 60 basis point (0.60 percent) upward economic assessment adjustment. For the Company's Tubac Water district, Staff recommends that the Commission adopt a 6.2 percent overall rate of return ("ROR") for the Company based on a capital structure composed of 58.53 percent debt and 41.47 percent equity, Staff's 8.9 percent average DCF cost of equity estimate, and Staff's 60 basis point (0.60 percent) upward economic assessment adjustment.

Q. Does this conclude your surrebuttal testimony?

A. Yes, it does.

EPCOR Water Arizona, Inc. Cost of Capital Calculation
Capital Structure
And Weighted Average Cost of Capital
Staff Recommended and Company Proposed

[A]	[B]	[C]	[D]
Description	Weight (%)	Cost	Weighted Cost
Staff Recommended Structures			
Four Districts - Consolidated			
Debt	59.76%	4.3%	2.6%
Common Equity	40.24%	9.5%	3.8%
Weighted Average Cost of Capital			**6.4%**
Tubac Water - Stand Alone Basis			
Debt	58.53%	4.0%	2.3%
Common Equity	41.47%	9.5%	3.9%
Weighted Average Cost of Capital			**6.2%**
Company Proposed Structure			
Debt	59.76%	4.29%	2.56%
Common Equity	40.24%	10.55%	4.24%
Weighted Average Cost of Capital			**6.81%**
Mohave Wastewater			
Debt	59.76%	4.29%	2.56%
Common Equity	40.24%	10.55%	4.25%
Weighted Average Cost of Capital			**6.81%**
Mohave Water			
Debt	59.76%	4.29%	2.56%
Common Equity	40.24%	10.55%	4.25%
Weighted Average Cost of Capital			**6.81%**
Paradise Valley Water			
Debt	59.76%	4.29%	2.56%
Common Equity	40.24%	10.55%	4.25%
Weighted Average Cost of Capital			**6.81%**
Sun City Water			
Debt	59.76%	4.29%	2.56%
Common Equity	40.24%	10.55%	4.25%
Weighted Average Cost of Capital			**6.81%**
Tubac Water			
Debt	59.84%	4.29%	2.57%
Common Equity	40.16%	10.55%	4.24%
Weighted Average Cost of Capital			**6.80%**

[D] : [B] x [C]
Supporting Schedules: JAC-3 and JAC-4.

Intentionally left blank

EPCOR Water Arizona, Inc. Cost of Capital Calculation
Final Cost of Equity Estimates
Sample Water Utilities

[A]	[B]	[C]	[D]		[E]
DCF Method		D_1/P_0 [1]	+	g [2]	=	k
Constant Growth DCF Estimate		2.7%	+	5.9%	=	8.6%
Multi-Stage DCF Estimate					=	9.1%
Average DCF Estimate						**8.9%**
		Staff's Estimated Cost of Equity				**8.9%**
		Economic Assessment Adjustment				0.6%
		Sub-Total				**9.5%**
		Financial Risk Adjustment				0.0%
		Total				**9.5%**

1 MSN Money and Value Line
2 Schedule JAC-8

EPCOR Water Arizona, Inc. Cost of Capital Calculation
Average Capital Structure of Sample Water Utilities

[A]	[B]	[C]	[D]
Company	Debt	Common Equity	Total
American States Water	40.8%	59.2%	100.0%
California Water	47.2%	52.8%	100.0%
Aqua America	52.0%	48.0%	100.0%
Connecticut Water	48.4%	51.6%	100.0%
Middlesex Water	45.9%	54.1%	100.0%
SJW Corp	54.7%	45.3%	100.0%
York Water	44.2%	55.8%	100.0%
Average Sample Water Utilities	**47.6%**	**52.4%**	**100.0%**
EWAZ - Four Districts (Consolidated)	**59.76%**	**40.24%**	**100.0%**
EWAZ - Tubac Water (Stand Alone)	**59.84%**	**40.16%**	**100.0%**

Source:
Sample Water Companies from Value Line

EPCOR Water Arizona, Inc. Cost of Capital Calculation
Growth in Earnings and Dividends
Sample Water Utilities

[A]	[B]	[C]	[D]	[E]
Company	Dividends Per Share 2007 to 2013 DPS[1]	Dividends Per Share Projected DPS[1]	Earnings Per Share 2007 to 2013 EPS[1]	Earnings Per Share Projected EPS[1]
American States Water	5.6%	8.6%	15.2%	4.4%
California Water	1.3%	8.2%	4.9%	8.9%
Aqua America	7.6%	9.0%	9.7%	6.0%
Connecticut Water	1.7%	4.1%	3.7%	5.3%
Middlesex Water	1.5%	2.0%	5.4%	3.9%
SJW Corp	4.1%	6.5%	2.1%	8.7%
York Water	4.1%	6.3%	4.8%	8.0%
Average Sample Water Utilities	**3.7%**	**6.4%**	**6.5%**	**6.5%**

1 Value Line

EPCOR Water Arizona, Inc. Cost of Capital Calculation
Sustainable Growth
Sample Water Utilities

[A]	[B]	[C]	[D]	[E]	[F]
Company	Retention Growth 200~~7~~4 to 2013 br	Retention Growth Projected br	Stock Financing Growth vs	Sustainable Growth 200~~7~~4 to 2013 br + vs	Sustainable Growth Projected br + vs
American States Water	4.1%	5.4%	1.8%	6.0%	7.3%
California Water	2.6%	3.5%	3.0%	5.7%	6.6%
Aqua America	4.2%	6.0%	1.8%	6.0%	7.8%
Connecticut Water	2.1%	4.5%	3.1%	5.2%	7.6%
Middlesex Water	1.3%	3.2%	3.1%	4.4%	6.3%
SJW Corp	3.2%	3.3%	1.0%	4.3%	4.4%
York Water	2.2%	4.1%	4.8%	6.9%	8.8%
Average Sample Water Utilities	**2.8%**	**4.3%**	**2.7%**	**5.5%**	**7.0%**

[B]: Value Line
[C]: Value Line
[D]: Value Line, MSN Money, and Form 10-Ks filed with the Securities and Exchange Commission (http://www.sec.gov/)
[E]: [B]+[D]
[F]: [C]+[D]

EPCOR Water Arizona, Inc. Cost of Capital Calculation
Selected Financial Data of Sample Water Utilities

[A]	[B]	[C]	[D]	[E]	[F]	[G]
Company	Symbol	Spot Price 2/11/2015	Book Value	Mkt To Book	*Value Line* Beta *b*	Raw Beta *braw*
American States Water	AWR	**39.06**	13.01	3.0	**0.70**	0.52
California Water	CWT	**24.12**	12.48	1.9	**0.70**	0.52
Aqua America	WTR	**26.19**	8.75	3.0	**0.70**	0.52
Connecticut Water	CTWS	**36.11**	19.55	1.8	**0.65**	0.45
Middlesex Water	MSEX	**22.20**	12.23	1.8	**0.70**	0.52
SJW Corp	SJW	**32.93**	15.81	2.1	**0.85**	0.75
York Water	YORW	**22.80**	8.44	2.7	**0.65**	0.45
Average				**2.3**	**0.71**	**0.53**

[C]: Msn Money
[D]: Value Line
[E]: [C] / [D]
[F]: Value Line
[G]: (-0.35 + [F]) / 0.67

EPCOR Water Arizona, Inc. Cost of Capital Calculation
Calculation of Expected Infinite Annual Growth in Dividends
Sample Water Utilities

[A]	[B]
Description	g
DPS Growth - Historical[1]	3.7%
DPS Growth - Projected[1]	6.4%
EPS Growth - Historical[1]	6.5%
EPS Growth - Projected[1]	6.5%
Sustainable Growth - Historical[2]	5.5%
Sustainable Growth - Projected[2]	7.0%
Average	**5.9%**

1 Schedule JAC-5
2 Schedule JAC-6

EPCOR Water Arizona, Inc. Cost of Capital Calculation
Multi-Stage DCF Estimates
Sample Water Utilities

[A]	[B]	[C]	[D]	[E]	[F]	[G]	[H]
Company	Current Mkt. Price (P_o)[1] 2/11/2015	Projected Dividends[2] (Stage 1 growth) (D_t) d_1	d_2	d_3	d_4	Stage 2 growth[3] (g_n)	Equity Cost Estimate (K)[4]
American States Water	39.1	0.86	0.91	0.96	1.02	6.5%	8.6%
California Water	24.1	0.69	0.73	0.77	0.82	6.5%	9.3%
Aqua America	26.2	0.65	0.69	0.73	0.78	6.5%	8.9%
Connecticut Water	36.1	1.04	1.10	1.17	1.24	6.5%	9.3%
Middlesex Water	22.2	0.80	0.84	0.89	0.95	6.5%	10.0%
SJW Corp	32.9	0.79	0.84	0.89	0.94	6.5%	8.8%
York Water	22.8	0.60	0.64	0.68	0.72	6.5%	9.1%

Average **9.1%**

$$P_0 = \sum_{t=1}^{n} \frac{D_t}{(1+K)^t} + \frac{D_n(1+g_n)}{K-g_n}\left[\frac{1}{(1+K)}\right]^n$$

Where : P_0 = current stock price
D_t = dividends expected during stage 1
K = cost of equity
n = years of non – constant growth
D_n = dividend expected in year n
g_n = constant rate of growth expected after year n

1 [B] see Schedule JAC-7
2 Derived from Value Line Information
3 Average annual growth in GDP 1929 - 2012 in current dollars.
4 Internal Rate of Return of Projected Dividends

Consumer Price Index History, 1913 - 2014

Annual Historical Rates of Inflation as measured by the Consumer Price Index (CPI)

(1982-84=100, unless otherwise noted)

Year	Annual Change to CPI Index	Annual Rate of Inflation as measured by CPI	Average Inflation in 5-Year Increments
1913	9.9 %	- %	
1914	10.0	1.00	
1915	10.1	2.00	
1916	10.9	13.00	
1917	12.8	18.00	
1918	15.1	20.00	
1919	17.3	15.00	
			13.60 %
1920	20.0	3.00	
1921	17.7	1.10	
1922	16.8	-2.30	
1923	17.1	2.40	
1924	17.1	0.00	
			0.84 %
1925	17.5	3.50	
1926	17.7	-1.10	
1927	17.4	-2.30	
1928	17.1	-1.20	
1929	17.1	0.60	
			-0.10 %
1930	16.7	-6.40	
1931	15.2	-9.30	
1932	13.7	-10.30	
1933	13.0	0.80	
1934	13.4	1.50	
			-4.74 %
1935	13.7	3.00	
1936	13.9	1.40	
1937	14.4	2.90	
1938	14.1	-2.80	
1939	13.9	0.00	
			0.90 %
1940	14.0	0.70	
1941	14.7	9.90	
1942	16.3	9.00	
1943	17.3	3.00	
1944	17.6	2.30	
			4.98 %
1945	18.0	2.20	
1946	19.5	18.10	
1947	22.3	8.80	
1948	24.1	3.00	
1949	23.8	-2.10	
			6.00 %
1950	24.1	5.90	
1951	26.0	6.00	
1952	26.5	0.80	
1953	26.7	0.70	
1954	26.9	-0.70	
			2.54 %
1955	26.8	0.40	
1956	27.2	3.00	
1957	28.1	2.90	
1958	28.9	1.80	
1959	29.1	1.70	
			1.96 %
1960	29.6	1.40	
1961	29.9	0.70	
1962	30.2	1.30	
1963	30.6	1.60	
1964	31.0 %	1.00 %	
			1.20 %

Average annual rate of inflation (CPI), 1914-1964 **2.68 %**

Average rate of inflation, 1915-1964, in 5-year increments **2.72 %**

Year	Annual Change to CPI Index	Annual Rate of Inflation as measured by CPI	Average Inflation in 5-Year Increments
1965	31.5 %	1.90 %	
1966	32.4	3.50	
1967	33.4	3.00	
1968	34.8	4.70	
1969	36.7	6.20	
			3.86 %
1970	38.8	5.60	
1971	40.5	3.30	
1972	41.8	3.40	
1973	44.4	8.70	
1974	49.3	12.30	
			6.66 %
1975	53.8	6.90	
1976	56.9	4.90	
1977	60.6	6.70	
1978	65.2	9.00	
1979	72.6	13.30	
			8.16 %
1980	82.4	12.50	
1981	90.9	8.90	
1982	96.5	3.80	
1983	99.6	3.80	
1984	103.9	3.90	
			6.58 %
1985	107.6	3.80	
1986	109.6	1.10	
1987	113.6	4.40	
1988	118.3	4.40	
1989	124.0	4.60	
			3.66 %
1990	130.7	6.10	
1991	136.2	3.10	
1992	140.3	2.90	
1993	144.5	2.70	
1994	148.2	2.70	
			3.50 %
1995	152.4	2.50	
1996	156.9	3.30	
1997	160.5	1.70	
1998	163.0	1.60	
1999	166.6	2.70	
			2.36 %
2000	172.2	3.40	
2001	177.1	1.60	
2002	179.9	2.40	
2003	184.0	1.90	
2004	188.9	3.30	
			2.52 %
2005	195.3	3.40	
2006	201.6	2.50	
2007	207.342	4.10	
2008	215.303	0.10	
2009	214.537	2.70	
			2.56 %
2010	218.056	1.50	
2011	224.939	3.00	
2012	229.594	1.70	
2013	232.957	1.50	
2014	236.736 %	0.80 %	
			1.70 %

Average annual rate of inflation (CPI), 1965-2014 **4.16 %**

Average rate of inflation, 1965 - 2014, in 5-year increments **4.16 %**

Average annual rate of inflation in the United States (CPI), 1914 - 2014 **3.41 %**

Source: Table 24. Historical Consumer Price Index for All Urban Consumers (CPI-U): U. S. city average, U.S. Department of Labor, Bureau of Labor Statistics
http://www.bls.gov/cpi/cpid1412.pdf

Monthly Variances in the PRPM™ Time Series for York Water
As Presented in the Work Papers Supporting Ahern Exhibit PMA-DT 2 Schedule 7 (Page 2 of 11)
Arranged in Twelve Month (i.e., Annual) Increments beginning February 2001 through September 2013

Month	Year 1 Feb. 2001 - Jan. 2002	Year 2 Feb. 2002 - Jan. 2003	Year 3 Feb. 2003 - Jan. 2004	Year 4 Feb. 2004 - Jan. 2005	Year 5 Feb. 2005 - Jan. 2006	Year 6 Feb. 2006 - Jan. 2007	Year 7 Feb. 2007 - Jan. 2008	Year 8 Feb. 2008 - Jan. 2009	Year 9 Feb. 2009 - Jan. 2010	Year 10 Feb. 2010 - Jan. 2011	Year 11 Feb. 2011 - Jan. 2012	Year 12 Feb. 2012 - Jan. 2013	Year 13 Feb. 2013 - Sept. 2013
February	2.73%	0.85%	0.56%	0.33%	0.34%	0.45%	0.35%	0.26%	0.33%	0.40%	0.31%	0.27%	0.26%
March	2.41%	0.76%	0.51%	0.32%	0.32%	0.42%	0.33%	0.25%	0.32%	0.37%	0.29%	0.26%	0.26%
April	2.60%	0.68%	0.46%	0.30%	0.30%	0.39%	0.32%	0.25%	0.34%	0.35%	0.28%	0.26%	0.25%
May	2.27%	0.72%	0.49%	0.29%	0.30%	0.36%	0.31%	0.26%	0.34%	0.33%	0.27%	0.25%	0.25%
June	1.96%	0.64%	0.54%	0.28%	0.30%	0.35%	0.30%	0.28%	0.33%	0.33%	0.26%	0.25%	0.24%
July	1.70%	0.64%	0.49%	0.30%	0.28%	0.45%	0.29%	0.27%	0.36%	0.35%	0.27%	0.26%	0.24%
August	1.48%	0.61%	0.48%	0.29%	0.39%	0.47%	0.28%	0.26%	0.41%	0.34%	0.26%	0.25%	0.28%
September	1.31%	0.59%	0.44%	0.29%	0.38%	0.45%	0.27%	0.27%	0.42%	0.32%	0.26%	0.25%	0.31%
October	1.14%	0.53%	0.41%	0.28%	0.41%	0.41%	0.27%	0.34%	0.48%	0.31%	0.30%	0.25%	
November	1.02%	0.49%	0.40%	0.28%	0.46%	0.38%	0.26%	0.33%	0.44%	0.30%	0.29%	0.26%	
December	0.90%	0.45%	0.37%	0.38%	0.51%	0.40%	0.28%	0.34%	0.41%	0.29%	0.29%	0.25%	
January	0.93%	0.56%	0.35%	0.35%	0.47%	0.37%	0.27%	0.35%	0.38%	0.32%	0.28%	0.25%	
Average Annual Monthly Variance	1.70%	0.63%	0.46%	0.31%	0.37%	0.41%	0.29%	0.29%	0.38%	0.33%	0.28%	0.25%	0.26%

Annual Monthly Variance - Average of First 3-Years	0.93%
Annual Monthly Variance - Average of All Remaining Years (Years 4-13)	0.32%
Annual Monthly Variance - Average of All 13 Years	0.46%

Source: Monthly variances for York Water Company as reported in the work papers supporting Ahern Exhibit PMA-DT 2 Schedule 7 (Page 2 of 11).

Comparison of First 12-Months of Monthly Variances in the PRPM™ Times Series for each of Ms. Ahern's Sample Companies
As Presented in the Work Papers Supporting Ahern Exhibit PMA-DT 2 Schedule 7 (Page 2 of 11)

York Water		American States Water		American Water Works		Aqua America		Artesian Resources		California Water		Connecticut Water		Middlesex Water		SJW Corporation	
Time Period	Monthly Variance	Time Period	Monthly Variance	Time Period	Monthly Variance	Time Period	Monthly Variance	Time Period	Monthly Variance	Time Period	Monthly Variance	Time Period	Monthly Variance	Time Period	Monthly Variance	Time Period	Monthly Variance
2001M02	2.73%	1973M01	0.14%	2008M05	0.76%	1971M08	0.25%	1996M06	0.10%	1973M01	0.09%	1975M07	0.28%	1973M01	0.07%	1972M03	0.10%
2001M03	2.41%	1973M02	0.17%	2008M06	0.78%	1971M09	0.25%	1996M07	0.11%	1973M02	0.10%	1975M08	0.26%	1973M02	0.09%	1972M04	0.12%
2001M04	2.60%	1973M03	0.18%	2008M07	0.82%	1971M10	0.25%	1996M08	0.12%	1973M03	0.11%	1975M09	0.28%	1973M03	0.10%	1972M05	0.13%
2001M05	2.27%	1973M04	0.19%	2008M08	0.64%	1971M11	0.24%	1996M09	0.14%	1973M04	0.13%	1975M10	0.36%	1973M04	0.11%	1972M06	0.14%
2001M06	1.96%	1973M05	0.20%	2008M09	0.46%	1971M12	0.24%	1996M10	0.15%	1973M05	0.13%	1975M11	0.31%	1973M05	0.12%	1972M07	0.15%
2001M07	1.70%	1973M06	0.21%	2008M10	0.43%	1972M01	0.23%	1996M11	0.16%	1973M06	0.15%	1975M12	0.39%	1973M06	0.12%	1972M08	0.17%
2001M08	1.48%	1973M07	0.22%	2008M11	0.40%	1972M02	0.54%	1996M12	0.16%	1973M07	0.16%	1976M01	0.32%	1973M07	0.13%	1972M09	0.18%
2001M09	1.31%	1973M08	0.23%	2008M12	0.42%	1972M03	0.50%	1997M01	0.18%	1973M08	0.20%	1976M02	0.26%	1973M08	0.14%	1972M10	0.19%
2001M10	1.14%	1973M09	0.25%	2009M01	0.44%	1972M04	0.46%	1997M02	0.18%	1973M09	0.21%	1976M03	0.23%	1973M09	0.17%	1972M11	0.19%
2001M11	1.02%	1973M10	0.28%	2009M02	0.45%	1972M05	0.43%	1997M03	0.20%	1973M10	0.21%	1976M04	0.22%	1973M10	0.18%	1972M12	0.20%
2001M12	0.90%	1973M11	0.28%	2009M03	0.34%	1972M06	0.40%	1997M04	0.20%	1973M11	0.21%	1976M05	0.20%	1973M11	0.19%	1973M01	0.20%
2002M01	0.93%	1973M12	0.41%	2009M04	0.35%	1972M07	0.40%	1997M05	0.20%	1973M12	0.23%	1976M06	0.20%	1973M12	0.21%	1973M02	0.20%
Average	1.70%		0.23%		0.52%		0.35%		0.16%		0.16%		0.27%		0.14%		0.16%

Average Monthly Variance for All 9 Sample Companies -- First 12-Months	0.41%
Average Monthly Variance when Excluding York Water -- First 12-Months	0.25%

Source: Monthly variances as reported in the work papers supporting Ahern Exhibit PMA-DT 2 Schedule 7 (Page 2 of 11).

EXHIBIT S-10 ADMITTED

Pro Forma Restatement of Surrebuttal Schedule JAC-3
As if Staff's Updated Cost of Equity Estimates for EPCOR Water Arizona
Were Based upon Cost of Equity Estimates Obtained from Staff's DCF and CAPM Models
For the Sample Water Utilities
Utilizing Staff's Traditional Weighting Allocations (50% DCF and 50% CAPM)

[A]	[B]		[C]		[D]		[E]
DCF Method			D_1/P_0 [1]	+	g [2]	=	**k**
Constant Growth DCF Estimate			2.7%	+	5.9%	=	8.6%
Multi-Stage DCF Estimate						=	9.1%
Average DCF Estimate							**8.9%**
CAPM Method	**Rf**	+	***b*** [5]	x	**(Rp)**	=	**k**
Historical Market Risk Premium[3]	1.8%	+	0.71	x	7.5% [6]	=	7.1%
Current Market Risk Premium[4]	2.6%	+	0.71	x	6.2% [7]	=	7.0%
Average CAPM Estimate							**7.1%**
			Staff's Estimated Cost of Equity				**8.0%**
			Economic Assessment Adjustment				0.6%
			Sub-Total				**8.6%**
			Financial Risk Adjustment				0.0%
			Total				**8.6%**

1 MSN Money and Value Line
2 Schedule JAC-8
3 Risk-free rate (Rf) for 5, 7, and 10 year Treasury rates from the U.S. Treasury Department at www.ustreas.gov
4 Risk-free rate (Rf) for 30 Year Treasury bond rate from the U.S. Treasury Department at www.ustreas.gov
5 Value Line
6 Historical Market Risk Premium (Rp) calculated from 2014 Ibbotson SBBI Classic Yearbook data
7 Current Market Risk Premium (Rp) computed using data from Value Line Summary & Index (February 13, 2015)

EXHIBIT
S-

Pro Forma Restatement of Surrebuttal Schedule JAC-3
As if Staff's Updated Cost of Equity Estimates for EPCOR Water Arizona
Were Based upon Cost of Equity Estimates Obtained from Staff's DCF and CAPM Models
For the Sample Water Utilities
Utilizing Staff's Traditional Weighting Allocations (50% DCF and 50% CAPM)

[A]	[B]		[C]		[D]		[E]
DCF Method			D_1/P_0 [1]	+	g [2]	=	k
Constant Growth DCF Estimate			2.7%	+	5.9%	=	8.6%
Multi-Stage DCF Estimate						=	9.1%
Average DCF Estimate							**8.9%**
CAPM Method	Rf	+	b [5]	x	(Rp)	=	k
Historical Market Risk Premium [3]	1.8%	+	0.71	x	7.5% [6]	=	7.1%
Current Market Risk Premium [4]	2.6%	+	0.71	x	6.2% [7]	=	7.0%
Average CAPM Estimate							**7.1%**
			Staff's Estimated Cost of Equity				**8.0%**
			Economic Assessment Adjustment				0.6%
			Sub-Total				**8.6%**
			Financial Risk Adjustment				0.0%
			Total				**8.6%**

1 MSN Money and Value Line
2 Schedule JAC-8
3 Risk-free rate (Rf) for 5, 7, and 10 year Treasury rates from the U.S. Treasury Department at www.ustreas.gov
4 Risk-free rate (Rf) for 30 Year Treasury bond rate from the U.S. Treasury Department at www.ustreas.gov
5 Value Line
6 Historical Market Risk Premium (Rp) calculated from 2014 Ibbotson SBBI Classic Yearbook data
7 Current Market Risk Premium (Rp) computed using data from Value Line Summary & Index (February 13, 2015)

EXHIBIT S-

Pro Forma Restatement of Surrebuttal Schedule JAC-3
As if Staff's Updated Cost of Equity Estimates for EPCOR Water Arizona
Were Based upon Cost of Equity Estimates Obtained from Staff's DCF and CAPM Models
For the Sample Water Utilities
Utilizing Staff's Traditional Weighting Allocations (50% DCF and 50% CAPM)

[A]	[B]		[C]		[D]		[E]
DCF Method			D_1/P_0 [1]	+	g [2]	=	k
Constant Growth DCF Estimate			2.7%	+	5.9%	=	8.6%
Multi-Stage DCF Estimate						=	9.1%
Average DCF Estimate							**8.9%**
CAPM Method	Rf	+	b [5]	x	(Rp)	=	k
Historical Market Risk Premium [3]	1.8%	+	0.71	x	7.5% [6]	=	7.1%
Current Market Risk Premium [4]	2.6%	+	0.71	x	6.2% [7]	=	7.0%
Average CAPM Estimate							**7.1%**
			Staff's Estimated Cost of Equity				**8.0%**
			Economic Assessment Adjustment				0.6%
			Sub-Total				**8.6%**
			Financial Risk Adjustment				0.0%
			Total				**8.6%**

1 MSN Money and Value Line
2 Schedule JAC-8
3 Risk-free rate (Rf) for 5, 7, and 10 year Treasury rates from the U.S. Treasury Department at www.ustreas.gov
4 Risk-free rate (Rf) for 30 Year Treasury bond rate from the U.S. Treasury Department at www.ustreas.gov
5 Value Line
6 Historical Market Risk Premium (Rp) calculated from 2014 Ibbotson SBBI Classic Yearbook data
7 Current Market Risk Premium (Rp) computed using data from Value Line Summary & Index (February 13, 2015)

EXHIBIT
S-

Pro Forma Restatement of Surrebuttal Schedule JAC-3
As if Staff's Updated Cost of Equity Estimates for EPCOR Water Arizona
Were Based upon Cost of Equity Estimates Obtained from Staff's DCF and CAPM Models
For the Sample Water Utilities
Utilizing Staff's Traditional Weighting Allocations (50% DCF and 50% CAPM)

[A]	[B]		[C]		[D]		[E]
DCF Method			D_1/P_0 [1]	+	g [2]	=	k
Constant Growth DCF Estimate			2.7%	+	5.9%	=	8.6%
Multi-Stage DCF Estimate						=	9.1%
Average DCF Estimate							**8.9%**
CAPM Method	Rf	+	*b* [5]	x	(Rp)	=	k
Historical Market Risk Premium [3]	1.8%	+	0.71	x	7.5% [6]	=	7.1%
Current Market Risk Premium [4]	2.6%	+	0.71	x	6.2% [7]	=	7.0%
Average CAPM Estimate							**7.1%**
			Staff's Estimated Cost of Equity				**8.0%**
			Economic Assessment Adjustment				0.6%
			Sub-Total				**8.6%**
			Financial Risk Adjustment				0.0%
			Total				**8.6%**

1 MSN Money and Value Line
2 Schedule JAC-8
3 Risk-free rate (Rf) for 5, 7, and 10 year Treasury rates from the U.S. Treasury Department at www.ustreas.gov
4 Risk-free rate (Rf) for 30 Year Treasury bond rate from the U.S. Treasury Department at www.ustreas.gov
5 Value Line
6 Historical Market Risk Premium (Rp) calculated from 2014 Ibbotson SBBI Classic Yearbook data
7 Current Market Risk Premium (Rp) computed using data from Value Line Summary & Index (February 13, 2015)

EXHIBIT
S-

Pro Forma Restatement of Surrebuttal Schedule JAC-3
As if Staff's Updated Cost of Equity Estimates for EPCOR Water Arizona
Were Based upon Cost of Equity Estimates Obtained from Staff's DCF and CAPM Models
For the Sample Water Utilities
Utilizing Staff's Traditional Weighting Allocations (50% DCF and 50% CAPM)

[A]	[B]		[C]		[D]		[E]
DCF Method			D_1/P_0 [1]	+	g [2]	=	k
Constant Growth DCF Estimate			2.7%	+	5.9%	=	8.6%
Multi-Stage DCF Estimate						=	9.1%
Average DCF Estimate							**8.9%**
CAPM Method	Rf	+	*b* [5]	x	(Rp)	=	k
Historical Market Risk Premium[3]	1.8%	+	0.71	x	7.5% [6]	=	7.1%
Current Market Risk Premium[4]	2.6%	+	0.71	x	6.2% [7]	=	7.0%
Average CAPM Estimate							**7.1%**
					Staff's Estimated Cost of Equity		**8.0%**
					Economic Assessment Adjustment		0.6%
					Sub-Total		**8.6%**
					Financial Risk Adjustment		0.0%
					Total		**8.6%**

1 MSN Money and Value Line
2 Schedule JAC-8
3 Risk-free rate (Rf) for 5, 7, and 10 year Treasury rates from the U.S. Treasury Department at www.ustreas.gov
4 Risk-free rate (Rf) for 30 Year Treasury bond rate from the U.S. Treasury Department at www.ustreas.gov
5 Value Line
6 Historical Market Risk Premium (Rp) calculated from 2014 Ibbotson SBBI Classic Yearbook data
7 Current Market Risk Premium (Rp) computed using data from Value Line Summary & Index (February 13, 2015)

ORIGINAL

0000146559

RECEIVED

2013 JUL 19 P 4: 01

AZ CORP COMMISSION
DOCKET CONTROL

EXHIBIT
S-11
ADMITTED

BEFORE THE ARIZONA CORPORATION COMMISSION

BOB STUMP, CHAIRMAN
BRENDA BURNS, Commissioner
GARY PIERCE, Commissioner
SUSAN BITTER SMITH, Commissioner
ROBERT BURNS, Commissioner

IN THE MATTER OF THE APPLICATION OF LITCHFIELD PARK SERVICE COMPANY, AN ARIZONA CORPORATION, FOR A DETERMINATION OF THE FAIR VALUE OF ITS UTILITY PLANTS AND PROPERTY AND FOR INCREASES IN ITS WASTEWATER RATES AND CHARGES FOR UTILITY SERVICE BASED THEREON.	Docket No. SW-01428A-13-0042
IN THE MATTER OF THE APPLICATION OF LITCHFIELD PARK SERVICE COMPANY, AN ARIZONA CORPORATION, FOR A DETERMINATION OF THE FAIR VALUE OF ITS UTILITY PLANTS AND PROPERTY AND FOR INCREASES IN ITS WATER RATES AND CHARGES FOR UTILITY SERVICE BASED THEREON.	Docket No. W-01427A-13-0043 **NOTICE OF FILING CERTIFICATION OF PUBLICATION AND PROOF OF MAILING**

Pursuant to the Procedural Orders dated April 12, 2013 and May 13, 2013, Litchfield Park Service Company dba Liberty Utilities (the "Company") hereby files this Notice of Filing Certification of Publication and Proof of Mailing in the above-captioned matter.

On June 11, 2013, notice regarding the hearing set for December 9, 2013 was published in the *West Valley View*. The affidavit of Elliott Freireich, Publisher of the *West Valley View*, is attached hereto as **Exhibit 1**.

...

...

Arizona Corporation Commission
DOCKETED
JUL 19 2013

DOCKETED BY

On June 11, 2013, June 19, 2013, June 28, 2013 and July 17, 2013 the Company mailed notification to customers. Confirmation letters from Susan Walter and Stephanie Roberts, Account Services of Data Management Center, are attached hereto as **Exhibit 2**, along with a copy of the notice. Please note that despite the Company's best efforts, some customers received notice after the June 28, 2013 date contemplated by the Procedural Order. The Company would not oppose extending the intervention by two weeks from August 28, 2013 to September 11, 2013.

DATED this 19th day of July, 2013.

By _____ 7/19/13

Christopher D. Krygier
Litchfield Park Service Company. dba
Liberty Utilities
12725 W. Indian School Road
Suite D101
Avondale, Arizona 85392

Jay L. Shapiro
FENNEMORE CRAIG
A Professional Corporation
2394 E. Camelback Road, Suite 600
Phoenix, Arizona 85016
Attorneys for Litchfield Park Service Company

ORIGINAL and 13 copies
of the foregoing were
delivered this 19th day of
July, 2013, to:

Docket Control
Arizona Corporation Commission
1200 W. Washington St.
Phoenix, AZ 85007

COPY of the foregoing was
hand-delivered this 19th day of
July, 2013 to:

Teena Jibilan, Esq.
Administrative Law Judge
Hearing Division
Arizona Corporation Commission
1200 W. Washington Street
Phoenix, Arizona 85007

Robin Mitchell, Esq.
Matthew Laudone, Esq.
Legal Division
Arizona Corporation Commission
1200 W. Washington Street
Phoenix, Arizona 85007

Michelle Wood, Esq.
Residential Utility Consumer Office
1110 W. Washington
Suite 220
Phoenix, Arizona 85007

Trish Meeter
Consumer Services
Utilities Division
Arizona Corporation Commission
1200 West Washington Street
Phoenix, Arizona 85007

By: _____ 7/19/13
8323928.1/060199 0028

EXHIBIT

1

WEST VALLEY BUSINESS

1050 E. Riley Dr., Avondale, AZ 85323 ❖ (623) 535-8439 ❖ Fax: (623) 935-2103

AFFIDAVIT OF PUBLICATION

State of Arizona

County of Maricopa

I, Elliott Freireich, publisher of West Valley View and West Valley Business, newspapers of general circulation in Avondale, Buckeye, Goodyear, Litchfield Park and Tolleson, Arizona, attest that the legal advertisement for

Liberty Utilities
Public notice of Hearing on Application for Increase in its water and wastewater utility Service rates and charges by Litchfield Park Service Company dba Liberty Utilities (Docket No. SW-01428A-13-0042 ET AL.)

will be / has been published on June 11, 2013

Elliott Freireich
President, West Valley View Inc.

June 11, 2013
Date

SUBSCRIBED AND SWORN TO BEFORE ME ON THE 11 DAY OF June (Month), 2013 (YEAR)

NOTARY SIGNATURE: Rose LeeAnn Hartmann

Rose LeeAnn Hartmann
Notary Public – ARIZONA
MARICOPA COUNTY
Commission No. 467166
My Commission Expires 9/30/2015

W:\WV_BIZ\WVBiz Content\SBAFFIDAV.INDD

Wanted To Buy 95

Animals And Farm Equipment 120

Will the same horse be your partner for life?

Public Notice

Legal text continued from Page 13

Public Notice

ARTICLES OF ORGANIZATION HAVE BEEN FILED IN THE OFFICE OF THE ARIZONA CORPORATION COMMISSION FOR:

Name: COPPER STREET PROPERTIES, LLC

Public Notice

ARTICLES OF ORGANIZATION HAVE BEEN FILED IN THE OFFICE OF THE ARIZONA CORPORATION COMMISSION FOR:

Name: [illegible]

EXHIBIT

2

DATA MANAGEMENT CENTER

Critical Document Delivery

188 Internationale Boulevard
Glendale Heights, IL 60139

Phone: 630-384-0900
Fax: 630-384-0901
Email: info@dmcilink.com
Web: www.dmcilink.com

June 29th, 2013

To Whom It May Concern:

The Litchfield Park 2013 Water Quality Report inserts and the Public Notice inserts were included in the following mailing runs:

Litchfield Park 3544 packages; received 06/08/13 at 01:39 PM CST, mailed 06/11/13
Litchfield Park 5144 packages; received 06/18/13 at 10:25 AM CST, mailed 06/19/13
Litchfield Park 4017 packages; received 06/27/13 at 10:24 AM CST, mailed 06/28/13

Please contact the Account Services Department at Data Management Center if you have any questions.

Sincerely,

Susan Walter
Account Services, Supervisor
Data Management Center

DATA MANAGEMENT CENTER
Critical Document Delivery

188 Internationale Boulevard
Glendale Heights, IL 60139

Fax: 630-384-0901
Email: info@dmcilink.com
Web: www.dmcilink.com

July 17, 2013

To Whom It May Concern:

The LPSCO Rate Increase inserts were included in the following special mailing runs:

The LPSCO Rate Increase special mailing; received 07/12/13 at 06:08 PM CST, 3113 packages mailed 07/16/13.

Please contact the Account Services Department at the Data Management Center if you have any questions.

Sincerely,

Stephanie Roberts

Stephanie Roberts
Account Services
Data Management Center

PUBLIC NOTICE OF HEARING ON APPLICATION FOR INCREASES IN ITS WATER AND WASTEWATER UTILITY SERVICE RATES AND CHARGES BY LITCHFIELD PARK SERVICE COMPANY DBA LIBERTY UTILITIES

(DOCKET NO. SW-01428A-13-0042 ET AL.)

On February 28, 2013, Litchfield Park Service Company dba Liberty Utilities ("LPSCO" or "Company") filed with the Arizona Corporation Commission ("Commission") applications for increases in its rates for wastewater and water utility service. The applications have been consolidated so that the Commission may consider them together. More information on the Company's request can be found at www.libertyutilities.com/LPSCOratecase.

Wastewater Service – LPSCO requests a gross revenue increase of approximately $659,088, or 6.36 percent over current revenues, for the provision of wastewater service within the Company's authorized service area in Arizona. According to the Company's filing, its proposed rates would increase a residential wastewater customer's bill by $2.63, from $38.99 per month to $41.62 per month, or 6.75 percent.

Water Service - LPSCO requests a gross revenue increase of approximately $2,257,160, or approximately 20.15 percent over current revenues, for the provision of water service within the Company's authorized service area in Arizona. According to the Company's filing, its proposed rates would increase an average usage (8,827 gallons/month) residential water customer's bill by $4.82, from $24.33 per month to $29.15 per month, or 19.83 percent.

The Commission's Utilities Division ("Staff") is in the process of reviewing and analyzing the application and has not yet made a recommendation regarding LPSCO's requests. The Commission will issue a Decision regarding LPSCO's application following consideration of testimony and evidence presented at an evidentiary hearing. **THE COMMISSION IS NOT BOUND BY THE PROPOSALS MADE BY LPSCO, STAFF, OR ANY INTERVENORS, AND THE FINAL RATES APPROVED BY THE COMMISSION MAY BE HIGHER OR LOWER THAN THE RATES PROPOSED BY LPSCO OR BY OTHER PARTIES.**

How You Can View or Obtain a Copy of the Rate Proposal

Copies of the applications and the proposed tariffs are available from LPSCO at its office **12725 W. Indian School Road, Suite D101, Avondale, AZ 85392, 623-298-3769** and at the Commission's Docket Control Center at 1200 West Washington, Phoenix, Arizona, for public inspection during regular business hours, and on the Internet via the Commission's website (www.azcc.gov) using the e-Docket function, located at the bottom of the web page.

Arizona Corporation Commission Public Hearing Information

The Commission will hold a hearing on this matter beginning **December 9, 2013, at 10:00 a.m. in Hearing Room No.1,** at the Commission's offices, 1200 West Washington Street, Phoenix, Arizona, 85007.

An interested person may participate in this matter by (1) providing written or oral public comment; or (2) filing for intervention and becoming a formal party to the proceeding.

How to Make Public Comment

Oral public comments will be taken on the first day of the hearing. Written public comments may be submitted by mailing a letter referencing **Docket No. SW-01428A-13-0042 et al.** to Arizona Corporation

Commission, Consumer Services Section, 1200 West Washington Street, Phoenix, AZ 85007. You may also file your written comments electronically through http://www.azcc.gov/Divisions/Utilities/forms/PublicCommentForm2013PDFEmail.pdf. If you require assistance, you may contact the Commission's Consumer Services Section at 602-542-4251 or 1-800-222-7000.

If you do not intervene, you will receive no further notice of the proceedings in this docket. **However, all documents filed in this docket are available online** (usually within 24 hours after docketing) at the Commission's website www.azcc.gov using the e-Docket function, located at the bottom of the website homepage. RSS feeds are also available through e-Docket.

About Intervention

You do not need to intervene if you want to appear at the hearing and provide public comment on the application, or if you want to file written comments in the record of the case. Any interested person may file written public comments regarding the Company's applications in **Docket No. SW-01428A-13-0042 et al.** at any time.

Any person or entity entitled by law to intervene and having a direct and substantial interest in the matter will be permitted to intervene. The granting of intervention entitles a party to present sworn evidence at hearing and to cross-examine other parties' witnesses. **If you wish to intervene, you must file an original and 13 copies of a written motion to intervene with the Commission's Docket Control Center no later than August 28, 2013, and send a copy of the motion to LPSCO or its counsel and to all parties of record.** Contact information for LPSCO and parties of record may be obtained using the Commission's e-Docket *Function and Docket No. SW-01428A-13-0042 et al. Your motion to intervene must contain the following:*

1. Your name, address, and telephone number, and the name, address, and telephone number of any party upon whom service of documents is to be made, if not yourself;

2. A short statement of your interest in the proceeding (e.g., a customer of LPSCO, a shareholder of LPSCO, etc.); and

3. A statement certifying that you have mailed a copy of the motion to intervene to LPSCO or its counsel and to all parties of record in the case.

The granting of motions to intervene is governed by A.A.C. R14-3-105, except that all motions to intervene must be filed on or before August 28, 2013. For a sample intervention request form, go to http://www.azcc.gov/divisions/utilities/forms/interven.pdf. All parties must comply with Arizona Supreme Court Rules 31 and 38 and A.R.S. 40-243 with respect to the practice of law.

If you do not intervene, and wish to present direct testimony and associated exhibits at hearing, you must, on or before September 25, 2013: (1) reduce your direct testimony and associated exhibits to writing, (2) file the original and 13 copies with the Commission's Docket Control Center by 4:00p.m., and (3) mail a copy to each party.

ADA/Equal Access Information

The Commission does not discriminate on the basis of disability in admission to its public meetings. Persons with a disability may request a reasonable accommodation such as a sign language interpreter, as well as request this document in an alternative format, by contacting the ADA Coordinator, Shaylin Bernal, e-mail SAbernal@azcc.gov, voice phone number 602-542-3931. Requests should be made as early as possible to allow time to arrange the accommodation.