0000152444

RECEIVED

2014 APR 14 P 2:46

AZ CORP COMMISSION
DOCKET CONTROL

Transcript Exhibit(s)

Docket #(s): W-01944A-13-0215

Part 2 of 2

for part 1 see

barcode 0000152443

Arizona Corporation Commission
DOCKETED

APR 14 2014

DOCKETED BY

Exhibit #: A-8 through A-10,

S-1A, S-1B, S-1C, S-2A, S-2B,

S-3A, S-3B, S-3C, S-4

FENNEMORE CRAIG
A Professional Corporation
Jay L. Shapiro (No. 014650)
2394 East Camelback Road, Suite 600
Phoenix, Arizona 85016
Telephone (602) 916-5000

Attorneys for Lago del Oro Water Company

BEFORE THE ARIZONA CORPORATION COMMISSION

IN THE MATTER OF THE APPLICATION OF LAGO DEL ORO WATER COMPANY, AN ARIZONA CORPORATION, FOR A DETERMINATION OF THE FAIR VALUE OF ITS UTILITY PLANTS AND PROPERTY AND FOR INCREASES IN ITS WATER RATES AND CHARGES FOR UTILITY SERVICE BASED THEREON.	DOCKET NO: W-01944A-13-0215

REBUTTAL TESTIMONY OF

THOMAS J. BOURASSA

COST OF CAPITAL

February 18, 2014

EXHIBIT
A-8
ADMITTED

TABLE OF CONTENTS

I. Introduction and Qualification 1

II. Summary Of Rebuttal Testimony And The Proposed Cost Of Capital For The Company 1

A. Summary of Company's Rebuttal Recommendation 1

B. Summary of the Staff Recommendations 3

C. Rebuttal to the Cost of Equity Recommendations of Staff 4

D. Responses to Staff's Criticisms of the Company's Cost of Capital Analysis 11

8906617.1/058113.0008

I. INTRODUCTION AND QUALIFICATION

Q. PLEASE STATE YOUR NAME AND ADDRESS.

A. My name is Thomas J. Bourassa. My business address is 139 W. Wood Drive, Phoenix, Arizona 85029.

Q. ON WHOSE BEHALF ARE YOU TESTIFYING IN THIS PROCEEDING?

A. I am testifying on behalf of Lago Del Oro Water Company's ("LDO" or "the Company"). My direct testimony was filed in support of the Company's application for new rates. One volume addressed rate base, income statement and rate design, and the other addressed cost of capital.

Q. HAVE YOU ALSO PREPARED REBUTTAL TESTIMONY ON RATE BASE ISSUES IN THIS DOCKET?

A. Yes, my rebuttal testimony on rate base, income statement, revenue requirement and rate design is being filed in a separate volume concurrently with this testimony. In this volume, I present my cost of capital rebuttal testimony.

Q. WHAT IS THE PURPOSE OF THIS PORTION OF YOUR REBUTTAL TESTIMONY?

A. I will provide updates of my cost of capital analysis and recommended rate of return using more recent financial data. I also will provide rebuttal responses as appropriate to the direct testimony of Staff witness Mr. John Cassidy

II. SUMMARY OF REBUTTAL TESTIMONY AND THE PROPOSED COST OF CAPITAL FOR THE COMPANY

A. Summary of Company's Rebuttal Recommendation

Q. WHAT IS YOUR RECOMMENDED COST OF CAPITAL?

A. Based on my updated cost of capital analysis, I am continuing to recommend a cost of equity of 10.5 percent. The Company is adopting Staff's recommended cost of debt of 4.6 percent and capital structure consisting of 29 percent debt and

71 percent common equity. Based on the foregoing, the Company's weighted average cost of capital ("WACC") is 8.79 percent, as shown on Rebuttal Schedule D-1.

	Capital Structure	Cost	Wtd Cost
Equity	71.00%	10.50%	7.46%
Debt	29.00%	4.60%	1.33%
Total	100.00%		8.79%

Q. HAS THE INDICATED RETURN ON EQUITY CHANGED SINCE THE DIRECT FILING WAS MADE?

A. Yes, it is somewhat higher. In my direct testimony, the mid-point of my cost of equity estimates was 9.9 percent.[1] The mid-point of my rebuttal cost of equity results is 10.2 percent. The table below summarizes the results of my updated analysis:

Method	Midpoint
Range DCF Constant Growth Estimates	9.0%
Range of CAPM Estimates	9.1%
Range of Build Up Method	11.4%
Average of DCF and CAPM midpoint estimates	10.2%
Recommended Cost of Equity	**10.5%**

[1] Direct Testimony of Thomas J. Bourassa – Cost of Capital, ("Bourassa COC Dt.") at 47.

The schedules containing my updated cost of capital analysis are attached to this rebuttal testimony.

After a consideration of the risks associated with LDO compared to the publicly traded utility companies, I conclude the required cost of equity is above the median of 10.2 percent and that 10.5 percent is very conservative. My recommended 10.5 percent return on equity ("ROE") recommendation balances my judgment about the degree of financial and business risk associated with an investment in LDO.

B. <u>Summary of the Staff Recommendations</u>

Q. PLEASE SUMMARIZE THE RECOMMENDATIONS OF STAFF FOR THE RATE OF RETURN ON FAIR VALUE RATE BASE.

A. Staff is recommending a capital structure consisting of 21.0 percent debt and 79.0 percent equity.[2] Staff is also recommending a cost of equity of 9.3 percent based on the average cost of equity produced by its DCF models, a financial risk adjustment, and an economic assessment adjustment (EAA).[3] Staff is also recommending a cost of debt of 4.6 percent.[4] Staff used a sample of seven publicly traded water utilities; six of which are the same as those I used in my analysis.[5] Staff did not consider firm size or firm-specific risks in its analysis. Based on its capital structure recommendation, Staff determined the WACC for LDO to be 7.9 percent.[6]

---

[2] Direct Testimony of John A. Cassidy ("Cassidy Dt.") at 10.
[3] Cassidy Dt. 32.
[4] Cassidy Dt. 11.
[5] Staff has added York Water (YORW) to its proxy group.
[6] Cassidy Dt. at 43.

C. Rebuttal to the Cost of Equity Recommendations of Staff

Q. STAFF ONLY USED THE DCF MODEL TO ESTIMATE THE COST OF EQUITY?

A. Yes. Staff uses two versions of the DCF model - a constant growth DCF and a multi-stage DCF. For unexplained reasons, Staff has not incorporated estimates derived from it CAPM.[7]

Q. IS THE USE OF ONLY ONE METHODOLOGY TO ESTIMATE THE COST OF EQUITY APPROPRIATE?

A. No. As Dr. Morin states:

> Each methodology requires the exercise of considerable judgment on the reasonableness of the assumptions underlying the methodology and on the reasonableness of the proxies used to validate a theory. *The inability of the DCF model to account for changes in relative market valuation, discussed below, is a vivid example of the potential shortcomings of the DCF model when applied to a given company.* Similarly, the inability of the CAPM to account for variables that affect security returns other than beta tarnishes its use. (emphasis added.)
>
> No one individual method provides the necessary level of precision for determining a fair return, but each method provides useful evidence to facilitate the exercise of an informed judgment. Reliance on any single method or preset formula is inappropriate when dealing with investor expectations because of possible measurement difficulties and vagaries in individual companies' market data
>
> When measuring equity costs, which essentially deals with the measurement of investor expectations, no single methodology provides a foolproof panacea. Each methodology requires the exercise of considerable judgment on the reasonableness of the assumptions underlying the methodology and on the reasonableness of the proxies used to validate the theory. It follows that more than one methodology should be employed in arriving at a judgment on the cost of equity and that these methodologies should be applied across a series of comparable risk companies.[8]

---

[7] Cassidy Dt. at 18.

[8] Roger A. Morin. *New Regulatory Finance*, Public Utility Reports, Inc., 2006, at 428-429.

Q. IS THE DCF A SUPERIOR METHODOLOGY?

A. No. Again, I concur with Dr. Morin who states:

> While it is certainly appropriate to use the DCF methodology to estimate the cost of equity, there is no proof that the DCF produces a more accurate estimate of the cost of equity than other methodologies. Sole reliance on the DCF model ignores the capital market evidence and financial theory formalized in the CAPM and other risk premium methods. The DCF model is one of many tools to be employed in conjunction with other methods to estimate the cost of equity. *It is not a superior methodology that supplants other financial theory and market evidence. The broad usage of the DCF methodology in regulatory proceedings in contrast to its virtual disappearance in academic textbooks does not make it superior to other methods. The same is true of the Risk Premium and CAPM methodologies.* (emphasis added.)[9]

Q. DOES THE DCF TEND TO UNDERSTATE THE INVESTORS' REQUIRED RETURN?

A. Yes, when the market value of assets is significantly higher or lower than book value, a market-based DCF cost rate applied to the book value of common equity will not produce investors' expected returns. Dr. Morin also provides an explanation for this flaw in the DCF:

> The third reason and perhaps most important for caution and skepticism is that application of the DCF model produces estimates of common equity cost that are consistent with investors' expected return only when stock price and book value are reasonably similar, that is when the market-to-book ratio (M/B) is close to unity. As shown below, application of the standard DCF model to utility stocks understates the investor's expected return when the M/B ratio of a given stock exceeds unity. This was particularly relevant in the capital market environment of the 1990s and 2000s where utility stocks were trading at M/B ratios well above unity and have been for nearly two decades. The converse is also true, that is the DCF model overstates the investor's return when the M/B ratio is less than unity. The reason for the distortion is that the DCF market return is applied to a book value rate base by the regulator, that is, a

[9] Morin at 431.

> utility's earnings are limited to earnings on a book value rate base.[10]

The understatement/overstatement of investors' required return associated with the application of the market price-based DCF model to the book value of common equity clearly illustrates why reliance upon a single common equity cost rate model should be avoided.

Q. PLEASE COMMENT ON MR. CASSIDY'S DISCUSSION (AT PAGE 26 OF HIS DIRECT TESTIMONY) REGARDING THE FINANCIAL IMPLICATIONS OF A MARKET-TO-BOOK RATIO OF GREATER THAN 1.0.

A. There are a number of reasons investors may bid up market prices for stocks above book values, other than an expectation that a water utility will earn more than its cost of equity. One reason is that investors may expect a city or some other public entity to condemn all or part of a water utility, meaning the municipality will acquire the assets at the fair market value. Water utilities typically have assets that have a value based on reproduction cost that is well in excess of book value, and investors would be aware that a condemnation award could be well in excess of book values, even if the utility earns no more than its cost of equity.

Second, investors may anticipate a merger or acquisition that produces premium prices. With such anticipated sale prices well above book values, a water utility would also be priced above book value even if the water utility made no more than its cost of equity. There are other reasons as well. These include: (1) public utility commissions do not issues orders simultaneously in all jurisdictions, (2) not all of a company's earnings are regulated, (3) regulatory

[10] Morin at 434.

expenses, revenue and rate base adjustments may cause accounting returns to differ from those calculated on a rate case basis, (4) actual sales do not equal sales assumed in a rate case, (5) market expected ROEs change frequently while rate-case authorized ROEs do not, and (6) regulated subsidiaries constitute only a piece of a holding company pie.

The argument that utilities are earning more than their cost of capital because the market-to-book ratio is greater than 1.0 is superficial. There is ample evidence that for at least a decade now, regulated water utilities in Arizona have not been earning their costs of service, let alone over earning. Mr. Cassidy's claim - that one would expect market forces to move the stock price lower, close to a market-to-book ratio of 1.0, to reflect investor expectations of reduced expected future cash flows, is also flawed. Mr. Cassidy has ignored many of the things of importance to investors and why it is reasonable to expect market-to-book ratios to exceed 1.0 even if water utilities are expected to earn no more than their costs of equity. If regulators were to force the market-to-book ratios to 1.0 by intentionally lowering the allowed returns, such action would place utilities at a disadvantage in competing for investment capital with industrials and other unregulated companies, whose stock trades well above book value.

Q. PLEASE COMMENT ON STAFF'S ECONOMIC RISK ASSESSMENT, OR EAA.

A. I can't, at least not in any meaningful way. Staff does not really explain the basis for this adjustment in its testimony except to say that its EAA reflects the uncertain status of the economy and the market.[11] But Staff provides no analysis, study or authoritative reference upon which Mr. Cassidy's judgment rests for me to

[11] Cassidy Dt. at 32.

consider. Of course, I agree with Staff that the current economic environment supports increased ROEs. Interest rates have risen in the past year and are expected to increase as the FED curtails its easy money policies. That said, I have just never seen an adjustment of this type from Staff or anyone else until recently. When economic conditions were far worse a few years ago, Staff never advanced an EAA. I am left a bit perplexed by the whole thing, but my skepticism, and the fact that the EAA has popped into existence out of nowhere, leads me to conclude that it is an ill-considered band-aid to cover up an unreasonably low ROE. Recall that without the EAA, Staff's ROE model would be only 8.7 percent (9.3 percent average of Staff's models less EAA of 60 basis points).[12]

Q. HOW DOES STAFF'S RECOMMENDATION COMPARE TO OTHER FORECASTS OF COMMON EQUITY RETURNS AND CURRENTLY AUTHORIZED RETURNS?

A. It is much lower. *Value Line,* a reputable publication used by cost of capital witnesses for both parties, publishes forecasts of returns on common equity for larger publicly traded companies. Six water utilities are included in my sample group while Staff includes seven. Staff has recently added York Water (YORW) to its proxy group. *Value Line* (January 17, 2014) shows projected returns on equity for those water utilities:

...

...

...

...

...

[12] Cassidy Dt. at 32.

Company	2013	2014	2016-18
American States Water (AWR)	12.0%	12.5%	11.5%
Aqua America (WTR)	13.0%	13.0%	12.5%
California Water (CWT)	7.5%	9.0%	9.5%
Connecticut Water (CTWS)	9.5%	9.5%	9.0%
Middlesex Water (MSEX)	8.5%	8.5%	9.0%
SJW Corp. (SJW)	8.5%	8.5%	8.5%
York Water. (YORW)	9.5%	11.5%	11.0%
Averages	9.8%	10.4%	10.1%

Furthermore, the currently *authorized* ROE's for the sample water utility companies as reported by AUS Utility Reports (January 2014) average 10.03 percent. They are as follows:

Company	
American States Water (AWR)	9.99%
Aqua America (WTR)	10.29%
California Water (CWT)	9.99%
Connecticut Water (CTWS)	9.75%
Middlesex Water (MSEX)	10.15%
SJW Corp. (SJW)	9.99%
York Water. (YORW)	NM
Average	**10.03%**

Q. WHAT CONCLUSIONS CAN BE DRAWN FROM THE RETURN DATA YOU JUST PRESENTED, MR. BOURASSA?

A. For one, they are all much higher than the Staff returns produced by their models, before any consideration of financial risk or other risks. For another, since we are applying a return to a book value rate base, book equity returns have relevance. In fact, if we are to meet the comparable earnings standards set forth in *Hope* and *Bluefield,* then a comparison to book returns is an essential element. These utilities rates will be in effect during approximately the same time period as LDO. Yet, if the Staff ROE is adopted, LDO will be allowed to earn much less, failing the *Hope and Bluefield* standard.

Q. IS IT YOUR VIEW THAT LDO'S ROE IS HIGHER THAN THE PUBLICLY TRADED UTILITIES?

A. Yes. My recommendation in the instant case is 30 basis points higher than the mid-point of my cost of equity estimates. LDO has 5 times more business risk than the publicly traded water utilities, has a much higher operating leverage, is less diverse, and has limited financially flexibility.[13] Further, since LDO is not publicly traded, an investment in LDO is illiquid compared to an investment in a publicly traded company and therefore has greater liquidity risk and a higher cost of capital. The 30 basis points difference is actually conservative given the risks associated with an investment in LDO.

...

...

...

...

[13] Bourassa COC Dt. at 25-27.

D. Responses to Staff's Criticisms of the Company's Cost of Capital Analysis

Q. MR. CASSIDY ALSO CRITICIZES YOU (ON PAGE 34 OF HIS DIRECT TESTIMONY) FOR RELYING EXCLUSIVELY ON ANALYSTS FORECASTS OF EPS GROWTH IN THE DCF MODEL. IS THIS TRUE?

A. No. I rely on both historical growth rates *and* forecasts of growth. For the historical growth rates, I use historical per share price growth, historical BVPS growth, historical EPS growth, and historical DPS growth.[14] For the forecast growth rate, I used long-term analyst estimates of EPS growth.[15] I just give more weight to the analyst forecasts of growth. It is important to note that Mr. Cassidy disagrees with the additional weight I give the analyst forecasts, but he is not saying these forecasts have no merit, nor did I rely solely on analyst forecasts of growth. The dispute between Mr. Cassidy and me comes down to something between 50 percent and my "greater" emphasis. In my direct testimony I explained why a weight greater than 50 percent should be given to analysts' estimates.[16]

Q. ARE ANALYSTS' FORECASTS OF GROWTH "OVERLY OPTIMISTIC" FOR UTILITIES?

A. Not according to Gordon, Gordon and Gould who found that analyst estimates are the best proxies for DCF growth when estimating the cost of equity for utilities using the DCF.[17] But the level of accuracy of analysts' forecasts is an after-the-fact evaluation with little relevance to the issues at hand here. As Dr. Morin explains:

---

[14] Bourassa COC Dt. at 35.
[15] *Id.*
[16] Bourassa COC Dt. at 31.
[17] Bourassa COC Dt. at 30 – 31.

> Because of the dominance of institutional investors and their influence on individual investors, analysts' forecasts of long-run growth rates provide a sound basis for estimating required returns. Financial analysts exert a strong influence on the expectations of many investors who do not possess the resources to make their own forecasts, that is, they are a cause of g. *The accuracy of these forecasts in the sense of whether they turn out to be correct is not at issue here, as long as they reflect widely held expectations.* As long as the forecasts are typical and/or influential in that they are consistent with current stock price levels, they are relevant. The use of analysts' forecasts in the DCF model is sometimes denounced on the grounds that it is difficult to forecast earnings and dividends for only one year, let alone for longer time periods. *This objection is unfounded, however, because it is present investor expectations that are being priced; it is the consensus forecast that is embedded in price and therefore in required return, and not the future as it will turn out to be.* (emphasis added.)[18]

What really matters is that analysts' forecasts strongly influence investors and hence the market prices they are willing to pay for stocks. Analysts' growth rates influence the prices investors will pay for stocks and thus impact the dividend yields. The dividend yields change until the sum of the dividend yield plus the growth rate equals investors' perceived cost of equity. Had the growth forecasts been lower – as Mr. Cassidy suggests they should be – the stock prices would be lower and dividend yields would be higher. But there would not necessarily be any difference in the ultimate estimate of the cost of equity.

Q. HAS MR. CASSIDY OFFERED ANY EVIDENCE THAT INVESTORS DO NOT RELY ON ANALYST ESTIMATES?

A. No. Nor does he offer any evidence of the extent investors rely on historical growth or on analyst estimates of future growth. Mr. Cassidy offers no quantitative or conceptual argument to rebut the conclusions of Gordon, Gordon, and Gould (cited in my direct[19]), and offers no evidence that any of the measures of past

[18] Morin at 298.

[19] Bourassa COC Dt. at 35.

growth he has used – historical EPS, historical DPS, historical sustainable growth – provide a better forecast of future growth for utilities than analysts' estimates of growth.

Q. DO YOU HAVE EVIDENCE THAT THE GROWTH FORECASTS USED BY STAFF ARE SIGNIFICANTLY UNDERSTATED?

A. Yes. The 3-year historical annualized total return for the water utility stocks reported by *Value Line* (February 7, 2014) is 11.9 percent.[20] This indicated return would imply a growth rate for the DCF model of 9.0 percent.[21] Compare this to Staff's 5.2 percent growth rate as shown on Staff Schedule JAC-3. Even the growth rate based on analyst estimates that I use – 6.07 percent as shown on Schedule D-4.8 – falls far short of the implied growth rate investors have realized over the past 3 years. What this shows is that when using forecasts of earnings growth, the indicated cost of equity can vastly understate the cost of equity.

Q. PLEASE RESPOND TO MR. CASSIDY'S TESTIMONY (ON PAGE 39 OF HIS DIRECT) THAT USE OF THE HISTORICAL STOCK PRICE GROWTH IS INAPPROPRIATE PROXY FOR THE GROWTH RATE IN THE DCF MODEL.

A. As I explained in my direct testimony at page 33, using the average historical growth in the stock price is reasonable because investors know that, in equilibrium, common stock prices, book value per share ("BVPS"), earnings per share ("EPS") and dividends per share ("DPS") will all grow at the same rate. Investors would take information about changes in stock prices into account when they price

[20] A stock's total return is the percentage increase in the value of a shareholder's investment, assuming reinvestment of all dividends and adjusted for any stock splits.

[21] Solving the DCF model as set forth in Mr. Bourassa's Direct Testimony at page 31 yields $g = k - D_1/P_0$. Substituting Staff's dividend yield of 2.9 for D1/P0 and the 11.8 percent for k we get: $g = 9.0 = 11.8 - 2.9$.

utilities' stocks. The traditional DCF model assumes that the stock price, book value, dividends, and earnings all grow at the same rate. This has not been historically true for the sample water utility companies.[22] So, using the historical growth in stock prices is an appropriate proxy measure for growth.

Q. DOESN'T STAFF TYPICALLY USE 3-5 YEAR PRICE APPRECIATION POTENTIAL AS A GROWTH PROXY FOR THE DCF WHEN ESTIMATING THE CURRENT MARKET RISK PREMIUM FOR THE CAPM?

A. Yes, in my experience. Staff has used the Value Line projected 3-5 year per share growth, which is Value Line's 3-5 year stock price appreciation in estimating the current market risk premium for the CAPM.[23] Mr. Cassidy is criticizing me for something Staff has done on a regular basis in the past.

Q. PLEASE COMMENT ON MR. CASSIDY'S TESTIMONY (AT PAGE 41) CRITICIZING YOU FOR CONSIDERING THE DIFFERENCES IN RISK DUE TO THE SIZE OF LDO COMPARED TO THE PUBLICLY TRADED SAMPLE UTILITIES.

A. I have not made a specific size adjustment for LDO, rather, I have pointed out the differences in risk stemming from LDO's higher business risk, operating leverage, and liquidity. My 30 basis point "premium" is conservative given the risks of an investment in LDO. That said, Mr. Cassidy does not dispute that smaller companies are more risky than larger companies.[24]

---

[22] Bourassa COC Dt. at 31.

[23] *See Rio Rico Utilities, Inc.*, Docket No. WS-02676A-12-02196; *Litchfield Park Service Company*, Docket No. SW-01428A-13-0042, et al.; *Payson Water Co., Inc.*, W-03514A-13-0111.

[24] Cassidy Dt. at 41.

Q. TO REBUT ANY IMPACT OF SIZE, MR. CASSIDY REFERENCES A STUDY BY ANNIE WONG (AT PAGE 41). ARE YOU FAMILIAR WITH THIS STUDY?

A. I sure am. Over the past 10 plus years or so Staff's witnesses have repeatedly trotted out this one study to refute the notion that utilities like LDO are more risky than the proxy companies because they are considerably and significantly smaller. Mr. Cassidy has done so at least one other time, and in that case, he admitted on cross examination that he had never read Ms. Wong's actual paper, wasn't even sure what kind of paper it was (he thought it might be her doctoral thesis), and did not know whether it had ever been published.[25] Mr. Cassidy also stated that he was unaware of any other person that had published a similar conclusion.[26] I do not know what else Ms. Wong has done since, but I suspect this item of Ms. Wong's work, and its questionable conclusions, have found no greater audience than at public utility commissions where some party is trying to justify an unreasonably low ROE for a utility that is not publicly traded.

Q. HAS MS. WONG DISPROVED THE EXISTENCE OF A SIZE PREMIUM FOR SMALL UTILITY STOCKS?

A. No. Actually, Ms. Wong's study has been criticized soundly: "[her] weak evidence provides little support for a small firm effect existing or not existing in <u>either</u> the industrial <u>or</u> the utility sector."[27] Dr. Zepp found that Ms. Wong's empirical results were not strong enough to conclude that beta risk of utilities is unrelated to size; he found that her use of monthly, weekly, and daily data may be the cause of her inability to find a relationship; and he found other studies that show trading

[25] Transcript from March 28, 2013 hearing at 237:18 – 239:8, *Rio Rico Utilities, Inc.*
[26] *Id.* 238:13-20
[27] Thomas M. Zepp, "Utility Stocks and the Size Effect – Revisited," The Quarterly Review Economics and Finance, Vol. 43, Issue 3, Autumn 2003, 578-582.

infrequency to be a powerful cause of bias in beta risk when time intervals of a month or less are used to estimate beta's for small stocks.[28] The studies relied on in Mr. Zepp's published paper found, "when a stock is thinly traded, its stock price does not reflect the movement of the market, which drives down the covariance with the market and creates an artificially low beta estimate."[29] Thus, Ms. Wong's weak results were due to a flawed analysis.

Q. DON'T PASCHALL AND HAWKINS (QUOTED BY MR. CASSIDY ON PAGE 42) SUPPORT MS. WONG AND MR. CASSIDY'S VIEW THAT SMALLER WATER UTILITIES ARE NOT MORE RISKY THAN LARGER WATER UTILITIES?

A. No, the authors do not argue against a small company risk premium for small water utilities. Instead, they merely suggest that the small company risk premium may be lower than the average company for the reasons they state.[30] A very low risk premium for LDO compared to the average company is exactly what I recommend in this case.

According to the empirical financial market data provided by Morningstar, the indicated size premium for a company the size of LDO would be 11.77 percent over the average company the size of LDO.[31] A size premium analysis provided in **Exhibit TJB-COC-RB1** indicates a size premium in the range of 99 to 377 basis points over the water proxy group. My recommended risk premium is just 30 basis points, which is about 2.5 percent of the indicated small company risk premium for an average company the size of LDO based on Morningstar data, and well below

[28] *Id.* at 579.

[29] *Id.*

[30] Micheal A. Paschall and George B. Hawkins, "Do Smaller Companies Warrant a Higher Discount Rate for Risk": The Size Effect' Debate," *CCH Business Valuation Alert*, Vol 1, Issue No. 2, December 1999.

[31] Morningstar *Ibbotson SBBI 2013 Valuation Yearbook.* Table 7-8, Decile 10z.

the bottom end of the range of the indicated additional risk premium over my water proxy group. Therefore, I think Paschall and Hawkins support my analysis not Mr. Cassidy's. That's true with respect to both, whether size matters, and, whether my recommended 10.5 is conservative.

Q. DO YOU FIND ANY FURTHER SUPPORT IN PASCHALL AND HAWKINS?

A. Yes, as a matter of fact, I do. One of the main points of the authors' discussion was that the use of small company risk premium without consideration of the specific risks of the subject company could be subject to challenge. Recognition of the additional risk associated with an investment in LDO compared to his water proxy group is something Mr. Cassidy fails to do.

That said, a great deal of my direct testimony and parts of my rebuttal testimony were devoted to comparing the differences between the large publicly traded company and LDO that would reflect differences in risk, which is exactly what the authors would recommend. As Paschall and Hawkins conclude:

> Failing to consider the additional risk associated with most smaller companies, however, is to fail to acknowledge reality. Measured properly, small company stocks have proven to be more risky over a long period of time than have larger company stock. This makes sense due to the various advantages that larger companies have over smaller companies. Investors looking to purchase a riskier company will require a greater return on investment to compensate for that risk.[32]

...

...

...

[32] Paschall *supra.*

Q. DO PASCHALL AND HAWKINS REFERENCE ANY STUDIES TO SUPPORT THE PROPOSITION THAT A PRIVATELY HELD SMALL WATER UTILITY HAS THE SAME RISK AS A LARGE PUBLICLY TRADED UTILITY?

A. No.

Q. ARE THERE ANY STUDIES THAT CONTRADICT MS. WONG'S FINDINGS?

A. Yes, besides basic business sense, I am aware of two other studies that support the conclusion that small utilities are more risky than larger utilities. The first, a study conducted by the California Public Utilities Commission ("CPUC") looked at 58 water utilities.[33] Based on that study, the CPUC Staff concluded that smaller water utilities are more risky and required higher equity returns than larger water utilities. This position was adopted by the CPUC.[34] A second study, conducted by Dr. Zepp, showed that on average, the smaller water utilities in his study had a 99 basis point higher cost of equity.[35] In short, Ms. Wong's now 20 year-old study of unknown providence, should be given little to no weight in these proceedings.

Q. DOES THAT CONCLUDE YOUR REBUTTAL TESTIMONY ON COST OF CAPITAL?

A. Yes.

---

[33] *Id.* at 580.
[34] Zepp, *supra.*
[35] *Id.*

EXHIBIT
TJB-COC-RB1

Lago Del Oro Water Company
Size Premium[1]

Exhibit

Line No.		Beta(β)	Size Premium	Risk Premium for Small Water Utilities[7]
6	Mid-Cap Companies[2]	1.19	1.51%	
8	Low-Cap Companies[3]	1.30	2.31%	
10	Micro-Cap Companies[4]	1.43	4.36%	
12	Decile 10[5]	1.48	6.63%	3.77%

		Risk Premium for Small Water Utilities
20	Estimated Risk Premium for small water utilities[6]	0.99%

[1] Data from Table 7-10 of Morningstar, *Ibbotson SBBI 2013 Valuation Yearbook.*
[2] Mid-Cap companies includes companies with market capitalization between $1,912 million and $7,687 million.
[3] Low-Cap companies includes companies with market capitalization between $514 million and $1,909 million.
[4] Micro-Cap companies includes companies with market capitalization less than $514 million.
[5] Decile 10 includes companies with market capitalization between $1.14 million and $254 million.
[6] From Table 2, Thomas M. Zepp, "Utility Stocks and the Size Effect Revisited," *The Quarterly Review of Economics and Finance*, 43 (2003), 578-582.
[7] Computed as the weighted differences between the Decile 10 risk premium and the inidicated risk premiums for the sample water utlities as shown below. Excludes risk due to differences in beta.

		Market Cap. (Millions)	Class	Size Premium	Difference to Decile 1	Weight	Weighted Size Premium
1.	American States	$ 1,084	Low-Cap	2.31%	4.32%	0.166666667	0.72%
2.	Aqua America	$ 4,150	Mid-Cap	1.51%	5.12%	0.166666667	0.85%
3.	California Water	$ 939	Low-Cap	2.31%	4.32%	0.166666667	0.72%
4.	Connecticut Water	$ 371	Micro-Cap	4.36%	2.27%	0.166666667	0.38%
5.	Middlesex	$ 328	Micro-Cap	4.36%	2.27%	0.166666667	0.38%
6.	SJW Corp.	$ 526	Low-Cap	2.31%	4.32%	0.166666667	0.72%
			Average	2.86%	Wghtd Size Prem. for Small Utilities		3.77%

D SCHEDULES

Lago Del Oro Water Company
Test Year Ended December 31, 2012
Summary of Cost of Capital

Exhibit
Rebuttal Schedule D-1
Page 1
Witness: Bourassa

Proforma Capital Structure

Line No.	Item of Capital	Dollar Amount	Percent of Total	Cost Rate	Weighted Cost
1	Long-Term Debt	$ 2,751,411	29.00%	4.60%	1.33%
2					
3	Stockholder's Equity	6,740,138	71.00%	10.50%	7.46%
4					
5	Totals	$ 9,491,549	100.00%		8.79%
6					
7					
8					
9					
10					
11					
12					
13					
14					
15					
16					
17					
18					
19					
20					
21					
22	SUPPORTING SCHEDULES:				
23	D-1				
24	D-3				
25	D-4				
26	E-1				
27	Testimony				
28					
29					
30					

Lago Del Oro Water Company
Test Year Ended December 31, 2012
Cost of Common Equity

Exhibit
Rebuttal Schedule D-4
Page 1
Witness: Bourassa

Line No.		
1		
2	The Company is proposing a cost of common equity of	10.50% .
3		
4		
5		
6		
7		
8		
9		
10		
11		
12		
13		
14		
15		
16		
17	SUPPORTING SCHEDULES:	RECAP SCHEDULES:
18	E-1	D-1
19	D-4.1 to D-4.16	
20		

Lago Del Oro Water Company
Summary of Results

Exhibit
Rebuttal Schedule D-4.1
Witness: Bourassa

Line No.	Method	Median Result
6	DCF Constant Growth Estimates[1]	9.0%
8	Historical CAPM Estimates[2]	8.6%
10	Build-up Method Estimates[3]	11.4%
12	Mid-point	10.2%
16	Recommended Cost of Equity[4]	10.5%

[1] See Rebuttal Schedule D-4-8
[2] See Rebuttal Schedule D-4.12
[3] See Rebuttal Schedule D-4.18
[4] Testimony

Lago Del Oro Water Company
Selected Characteristics of Sample Group of Water Utilities

Exhibit
Rebuttal Schedule D-4.2
Witness: Bourassa

Line No.	Company[1]	% Water Revenues	Operating Revenues (millions)	Net Plant (millions)	S&P Bond Rating	Moody's Bond Rating	Allowed ROE (%)
4	1. American States	60%	$ 474.6	$ 968.5	A+	A2	9.99
5	2. Aqua America	89%	$ 767.5	$ 4,090.4	AA-	NR	10.29
6	3. California Water	100%	$ 571.9	$ 1,505.2	AA-	NR	9.99
7	4. Connecticut Water	97%	$ 89.4	$ 461.8	A	NR	9.75
8	5. Middlesex	89%	$ 114.5	$ 442.8	A	NR	10.15
9	6. SJW Corp.	96%	$ 272.1	$ 860.4	A	NR	9.99
11	Average	89%	$ 381.7	$ 1,388.2			10.03
13	Lago Del Oro Water Company (Adjusted as of December 31, 2012)	100%	$ 1.9	$ 9.4	NR	NR	

[1]AUS Utility Reports (January 2014).

Lago Del Oro Water Company
Capital Structures

Exhibit
Rebuttal Schedule D-4.3
Witness: Bourassa

No.	Company	Book Value[1] Long-Term Debt	Book Value[1] Common Equity	Market Value[1] Long-Term Debt	Market Value[1] Common Equity
1	1. American States	42.3%	57.7%	23.5%	76.5%
2	2. Aqua America	52.7%	47.3%	27.1%	72.9%
3	3. California Water	47.8%	52.2%	31.6%	68.4%
4	4. Connecticut Water	49.2%	50.8%	32.5%	67.5%
5	5. Middlesex	42.0%	58.0%	28.6%	71.4%
6	6. SJW Corp.	55.0%	45.0%	38.9%	61.1%
7					
8	Average	48.2%	51.8%	30.4%	69.6%
9					
10	Lago Del Oro Water Company (Proforma)	21.0%	79.0%	N/A	N/A

[1] Value Line Analyzer Data (February 7, 2014)
[2] Adjusted Per Rebuttal Schedule D-1

Lago Del Oro Water Company
Comparisons of Past and Future Estimates of Growth

Exhibit
Rebuttal Schedule D-4.4
Witness: Bourassa

Line No.		[1]	[2]	[3]	[4]	[5]	[6]	[7]
								Average of Future and Historical Growth
		Five-year historical average annual changes					Average Future	
	Company	Price[1]	Book Value[2]	EPS[2]	DPS[2]	Average Col 1-4	Growth[3]	Col 5-6
1.	American States	9.12%	5.50%	11.50%	4.50%	7.66%	3.33%	5.49%
2.	Aqua America	5.40%	6.00%	7.50%	7.50%	6.60%	7.13%	6.87%
3.	California Water	2.03%	4.50%	5.50%	1.50%	3.38%	6.33%	4.86%
4.	Connecticut Water	7.90%	4.50%	6.50%	2.00%	5.23%	5.50%	5.36%
5.	Middlesex	4.56%	4.00%	2.50%	1.50%	3.14%	3.35%	3.24%
6.	SJW Corp.	5.14%	3.50%	NMF	4.00%	4.21%	10.75%	7.48%
	GROUP AVERAGE	5.69%	4.67%	6.70%	3.50%	5.04%	6.07%	5.55%
	GROUP MEDIAN	5.27%	4.50%	6.50%	3.00%	4.72%	5.92%	5.43%

[1] Average of changes in annual stock prices ending on December 31 through 2012. Data from Yahoo Finance website.
[2] Value Line Analyzer Data, February 7, 2014
[3] See Rebuttal Schedule D-4.6.

Lago Del Oro Water Company
Comparisons of Past and Future Estimates of Growth

Exhibit
Rebuttal Schedule D-4.5
Witness: Bourassa

Line No.		[1]	[2]	[3]	[4]	[5]	[6]	[7]
1								
2								
3								Average of Future and Historical Growth
4		**Ten-year historical average annual changes**					Average Future	
5			Book			Average		
6	Company	Price[1]	Value[2]	EPS[2]	DPS[2]	Col 1-4	Growth[3]	Col 5-6
7	1. American States	10.41%	5.00%	6.50%	3.00%	6.23%	3.33%	4.78%
8	2. Aqua America	7.70%	8.50%	7.00%	7.50%	7.68%	7.13%	7.40%
9	3. California Water	6.27%	5.00%	5.00%	1.00%	4.32%	6.33%	5.33%
10	4. Connecticut Water	4.80%	4.50%	1.50%	1.50%	3.07%	5.50%	4.29%
11	5. Middlesex	5.14%	4.50%	3.50%	1.50%	3.66%	3.35%	3.50%
12	6. SJW Corp.	6.99%	5.50%	4.00%	5.00%	5.37%	10.75%	8.06%
13								
14								
15	GROUP AVERAGE	6.88%	5.50%	4.58%	3.25%	5.05%	6.07%	5.56%
16	GROUP MEDIAN	6.63%	5.00%	4.50%	2.25%	4.84%	5.92%	5.05%
17								
18								
19								

20 [1] Average of changes in annual stock prices ending December 31, 2012. Data from Yahoo Finance website.
21 [2] Value Line Analyzer Data, February 7, 2014.
22 [3] See Rebuttal Schedule D-4.6.
23
24
25
26
27
28

Lago Del Oro Water Company
Analysts Forecasts of Earnings Per Share Growth

Exhibit
Rebuttal Schedule D-4.6
Witness: Bourassa

Line No.		[1]	[2]	[3]	[4]
		ESTIMATES OF EARNINGS GROWTH			Average Growth (G)
	Company	Yahoo[1]	Zacks[1]	Value Line[1]	(Cols 1-3)[2]
1	1. American States	1.00%	2.00%	7.00%	3.33%
2	2. Aqua America	5.80%	5.60%	10.00%	7.13%
3	3. California Water	6.00%	6.00%	7.00%	6.33%
4	4. Connecticut Water	5.00%	5.00%	6.50%	5.50%
5	5. Middlesex	2.70%		4.00%	3.35%
6	6. SJW Corp.	14.00%		7.50%	10.75%
7	GROUP AVERAGE	5.75%	4.65%	7.00%	6.07%
8	GROUP MEDIAN				5.92%

[1] Data as of February 7, 2014

[2] Where no data available or single estimate, average of other utilities assumed to estimate for utility.

Lago Del Oro Water Company
Current Dividend Yields for Water Utility Sample Group

Exhibit
Rebuttal Schedule D-4.7
Witness: Bourassa

Line No.	Company	Average Stock Price (P_0)[1]	Current Dividend (D_0)[1]	Current Dividend Yield (D_0/P_0)[1]	Average Annual Dividend Yield (D_0/P_0)[1,2]
1	1. American States	$ 28.16	$ 0.86	3.05%	3.15%
2	2. Aqua America	$ 23.66	$ 0.64	2.71%	2.80%
3	3. California Water	$ 22.35	$ 0.68	3.04%	3.36%
4	4. Connecticut Water	$ 34.06	$ 0.99	2.91%	3.62%
5	5. Middlesex	$ 20.75	$ 0.76	3.66%	3.96%
6	6. SJW Corp.	$ 28.15	$ 0.75	2.66%	2.95%
7	Average			3.01%	3.31%
8	Median			2.97%	3.26%

[1] Yahoo Finance. 60 day average of stock prices as of February 7, 2014.

[2] Average Annual Dividend is dividends declared per share for a year divided by the average annual price of the stock in the same year, expressed as a percentage. For comparison purposes only.

Lago Del Oro Water Company
Discounted Cash Flow Analysis
DCF Constant Growth

Exhibit
Rebuttal Schedule D-4.8
Witness: Bourassa

Line No.		[1]	[2]	[3]	[4]
		Dividend Yield (D_0/P_0)[1]	Expected Dividend Yield (D_1/P_0)[2]	Growth (g)	Indicated Cost of Equity k=Div Yld + g (Cols 2+3)
8	DCF - Past and Future Growth	3.01%	3.17%	5.55% [3]	8.7%
10	DCF - Future Growth	3.01%	3.19%	6.07% [4]	9.3%
13	Average	3.01%	3.18%	5.81%	9.0%
15	Median	3.01%	3.18%	5.81%	9.0%

1 Spot Dividend Yield = D0/P0. See Rebuttal Schedule D-4.7.
[2] Expected Dividend Yield = $D_1/P_0 = D_0/P_0 * (1+g)$.
[3] Growth rate (g). Average of Past and Future Growth. See Rebuttal Schedule D-4.4, column 7
[4] Growth rate (g). Average of Analyst Estimates Future Growth. See Rebuttal Schedule D-4.6.

Lago Del Oro Water Company
Market Betas

Exhibit
Rebuttal Schedule D-4.9
Witness: Bourassa

Line No.	Company	Beta (β)[1]
1		
2	1. American States	0.65
3	2. Aqua America	0.60
4	3. California Water	0.60
5	4. Connecticut Water	0.75
6	5. Middlesex	0.75
7	6. SJW Corp.	0.85
8		
9	Average	**0.70**
10		
11		
12		
13	[1] Value Line Investment Analyzer data (February 7, 2014)	
14	Note: Beta is a relative measure of the historical sensitivity of a stock's price to overall fluctuations	
15	in the New York Stock Exchange Composite Index. A Beta of 1.50 indicates a stock tends to rise	
16	(or fall) 50% more than the New York Stock Exchange Composite Index. The "Beta coefficient" is	
17	derived from a regression analysis of the relationship between weekly percent-age changes in the	
18	price of a stock and weekly percentage changes in the NYSE Index over a period of five years. In	
19	the case of shorter price histories, a smaller time period is used, but two years is the minimum.	
20	The Betas are adjusted for their long-term tendency to converge toward 1.00.	

Lago Del Oro Water Company
Forecasts of Long-Term Interest Rates

Exhibit
Rebuttal Schedule D-4.10
Witness: Bourassa

Line No.	Description	Fed Reserve Average Jan 14	2015	2016	Average
1					
2					
3					
4					
5					
6	Blue Chip Consensus Forecasts[1]	3.77%	4.30%	4.40%	4.20%
7					
8	Value Line[2]	3.77%	4.30%	4.70%	4.30%
9					
10	Average				4.25%
11					
12					
13					
14					
15	[1] Dec 2013 Blue Chip Financial Forecasts consensus long-term forecast of 30 Year U.S.Treasury				
16	[2] Value Line Quarterly forecast, dated Nov 22, 2013, Long-term Treasury				
17					
18					
19					
20					
21					
22					
23					
24					

Lago Del Oro Water Company
Computation of Current Market Risk Premium

Exhibit
Rebuttal Schedule D-4.11
Witness: Bourassa

Line No.	Month	Dividend Yield (D_0/P_0)[1]	Expected Dividend Yield (D_1/P_0)[2]	+	Growth (g)[3]	=	Expected Market Return (k)	-	Monthly Average 30 Year Treasury Rate[4]	=	Market Risk Premium (MRP)
1											
2											
3											
4	Dec 2011	2.27%	2.60%	+	14.52%	=	17.12%	-	2.98%	=	14.14%
5	Jan 2012	2.19%	2.45%	+	11.76%	=	14.21%	-	3.03%	=	11.18%
6	Feb	2.18%	2.46%	+	12.82%	=	15.28%	-	3.11%	=	12.17%
7	Mar	2.24%	2.54%	+	13.51%	=	16.05%	-	3.28%	=	12.77%
8	April	2.19%	2.47%	+	12.99%	=	15.46%	-	3.18%	=	12.28%
9	May	2.41%	2.78%	+	15.26%	=	18.04%	-	2.93%	=	15.11%
10	June	2.37%	2.70%	+	14.02%	=	16.72%	-	2.70%	=	14.02%
11	July	2.45%	2.82%	+	15.18%	=	18.00%	-	2.59%	=	15.41%
12	Aug	2.35%	2.67%	+	13.51%	=	16.18%	-	2.77%	=	13.41%
13	Sept	2.29%	2.57%	+	12.29%	=	14.86%	-	2.88%	=	11.98%
14	Oct	2.36%	2.67%	+	13.16%	=	15.83%	-	2.90%	=	12.93%
15	Nov	2.31%	2.59%	+	12.29%	=	14.88%	-	2.80%	=	12.08%
16	Dec 2012	2.22%	2.45%	+	10.48%	=	12.93%	-	2.88%	=	10.05%
17	Jan 2013	2.16%	2.37%	+	9.92%	=	12.29%	-	3.08%	=	9.21%
18	Feb	2.24%	2.49%	+	11.22%	=	13.71%	-	3.17%	=	10.54%
19	Mar	2.17%	2.39%	+	9.92%	=	12.31%	-	3.16%	=	9.15%
20	April	2.11%	2.31%	+	9.44%	=	11.75%	-	2.93%	=	8.82%
21	May	2.07%	2.26%	+	8.97%	=	11.22%	-	3.11%	=	8.11%
22	June	2.14%	2.35%	+	9.73%	=	12.08%	-	3.40%	=	8.68%
23	July	2.02%	2.18%	+	7.79%	=	9.97%	-	3.61%	=	6.36%
24	Aug	2.14%	2.33%	+	8.97%	=	11.30%	-	3.76%	=	7.54%
25	Sept	2.10%	2.27%	+	8.00%	=	10.27%	-	3.79%	=	6.48%
26	Oct	2.00%	2.14%	+	7.19%	=	9.33%	-	3.68%	=	5.65%
27	Nov	1.99%	2.13%	+	6.98%	=	9.11%	-	3.80%	=	5.31%
28	Dec 2013	1.93%	2.05%	+	6.16%	=	8.21%	-	3.89%	=	4.32%
29	Jan 2014	2.01%	2.15%	+	6.78%	=	8.93%	-	3.77%	=	5.16%
30											
31											
32	Recommended	2.03%	2.18%	+	7.35%	=	9.52%	-	3.78%	=	5.74%
33											
34	Short-term Trends										
35	Recent Twelve Months Avg	2.08%	2.25%	+	8.43%	=	10.68%	-	3.51%	=	7.18%
36	Recent Nine Months Avg	2.04%	2.21%	+	7.84%	=	10.05%	-	3.65%	=	6.40%
37	Recent Six Months Avg	2.03%	2.18%	+	7.35%	=	9.52%	-	3.78%	=	5.74%
38	Recent Three Months Avg	1.98%	2.11%	+	6.64%	=	8.75%	-	3.82%	=	4.93%
39											
40											

41 [1] Median Current Dividend Yield (D_0/P_0) of dividend paying stocks. Data from Value Line Investment Analyzer Software Data - Value Line 1700 Stocks
42 [2] Expected Dividend Yield (D_1/P_0) equals average current dividend yield (D_0/P_0) times one plus growth rate(g).
43 [3] Median 3-5 year price appreciation (annualized). Data from Value Line Investment Analyzer Software Data - Value Line 1700 Stocks
44 [4] Monthly average 30 year U.S. Treasury. Federal Reserve.
45

Lago Del Oro Water Company
Traditional Capital Asset Pricing Model (CAPM)

Exhibit
Rebuttal Schedule D-4.12
Witness: Bourassa

Line No.		Rf[1]	+	beta[2]	x	RP_M		+	=	k
1										
2										
3	Historical Market Risk Premium CAPM	4.25%	+	0.70	x	6.70%	[3]	+	=	8.9%
4										
5	Current Market Risk Premium CAPM	4.25%	+	0.70	x	5.74%	[4]	+	=	8.3%
6										
7	Average									8.6%
8										
9	Median									8.6%
10										
11										

12 [1] Forecasts of long-term treasury yields. See Rebuttal Schedule D-4.10.
13 [2] Value Line Investment Analyzer data. See Rebuttal Schedule D-4.9.
14 [3] Historical Market Risk Premium from (Rp) MorningStar SBBI 2013 Valuation Yearbook Table A-1 Long-Horizon ERP 1926-2012.
15 [4] Computed using DCF constant growth method to determine current market return onValue Line 1700 stocks
16 and CAPM with beta of 1.0 to compute Current Market Risk Premium (Rp). See Rebuttal Schedule D-4.11.
17
18
19
20

Lago Del Oro Water Company
COST OF EQUITY (COE) USING RISK PREMIUM BUILD-UP METHOD
Based on *Duff and Phelps* Risk Premium Study Data

Exhibit
Rebuttal Schedule D.4.13
Witness: Bourassa

	Company	Symbol	Measures of size (Millions) MV Equity[1]	Book Equity[1]	MVIC[1]	5 Yr Avg. Net Income	Total Assets[2]	5 Yr Avg. EBITDA[3]
1.	American States	AWR	$ 1,084	$ 454	$ 1,417	$ 37	$ 1,281	$ 130
2.	Aqua America	WTR	$ 4,150	$ 1,386	$ 5,694	$ 133	$ 4,859	$ 422
3.	California Water	CWT	$ 939	$ 474	$ 1,373	$ 41	$ 1,996	$ 140
4.	Connecticut Water	CTWS	$ 371	$ 185	$ 550	$ 11	$ 579	$ 24
5.	Middlesex	MSEX	$ 328	$ 181	$ 459	$ 13	$ 562	$ 38
6.	SJW Corp.	SJW	$ 526	$ 275	$ 862	$ 21	$ 1,087	$ 89
	Lago Del Oro Water Company	Proforma	NA	$ 9.5	NA	$ 0.1	$ 11.1	$ 0.4

[1] From Zacks Investment Research data
[2] From Zacks Investment Research. From E-1 for subject utility.
[3] Net Income. From Zacks Investment Research and Company ACC reports

Net Income Data ($ millions)

Company	Symbol	2012	2011	2010	2009	2008	Average
American States	AWR	$ 54.0	$ 45.9	$ 33.2	$ 29.5	$ 22.0	$ 36.9
Aqua America	WTR	$ 197.0	$ 143.1	$ 124.0	$ 104.4	$ 97.9	$ 133.3
California Water	CWT	$ 49.0	$ 37.7	$ 37.7	$ 40.6	$ 39.8	$ 40.9
Connecticut Water	CTWS	$ 14.0	$ 11.3	$ 9.8	$ 10.2	$ 9.4	$ 10.9
Middlesex	MSEX	$ 14.0	$ 13.4	$ 14.3	$ 10.0	$ 12.2	$ 12.8
SJW Corp.	SJW	$ 22.0	$ 20.9	$ 24.4	$ 15.2	$ 21.5	$ 20.8
Lago Del Oro Water Company		$ (0.0)	$ 0.1	$ 0.1	$ 0.2	$ 0.1	$ 0.1

Net Income data for publicly traded water utilities from Zacks Investment Research and/or Yahoo Finance

[4] Earnings before Interest, Taxes, Depreciation and Amortization (EBITDA). From Zacks Investment Research and Company ACC reports.

EBITDA Data ($ millions)

Company	Symbol	2012	2011	2010	2009	2008	Average
American States	AWR	$ 154.0	$ 133.3	$ 134.4	$ 122.6	$ 105.9	$ 130.0
Aqua America	WTR	$ 439.0	$ 397.8	$ 473.2	$ 415.2	$ 384.7	$ 422.0
California Water	CWT	$ 151.0	$ 143.3	$ 155.7	$ 125.5	$ 122.1	$ 139.5
Connecticut Water	CTWS	$ 30.0	$ 24.2	$ 22.5	$ 20.3	$ 21.1	$ 23.6
Middlesex	MSEX	$ 39.0	$ 34.6	$ 43.3	$ 34.6	$ 38.6	$ 38.0
SJW Corp.	SJW	$ 90.0	$ 87.1	$ 75.4	$ 93.5	$ 99.7	$ 89.1
Lago Del Oro Water Company		$ (0.1)	$ 0.2	$ 0.2	$ 1.0	$ 0.9	$ 0.4

EBITDA data for publicly traded water utilities from Zacks Investment Research and/or Yahoo Finance
EBITDA data for subject utility from E-1 and/or ACC reports

Lago Del Oro Water Company
COST OF EQUITY (COE) USING RISK PREMIUM BUILD-UP METHOD
Based on *Duff and Phelps* Risk Premium Study Data

Exhibit
Rebuttal Schedule D.4.14
Witness: Bourassa

MRP_{m+s} Estimates Using Duff & Phelps Study (Unlevered)
Assumes 100% Equity and 0% debt
Data Smoothing with Regression Analysis
Smoothed Premium (RP_{m+s}) = Constant + X Coefficients * Log(Relevent Metric)

$RP_{unrelevered} = RP_{levered} - W_d/W_e*(\beta_u-\beta_d)*RP_{market}$
Where β_u = unlevered portfolio beta
β_d = debt beta, assumed to be 0.1
W_d = percentage of debt in capital structure
W_e = percentage of equity in capital structure
$RP_{levered}$ = levered realized risk premium

	MV Equity (Table C-1)	Book Equity (Table C-2)	MVIC (Table C-4)	5 Yr Avg. Net Income (Table C-3)	Total Assets (Table C-5)	5 Yr Avg. EBITDA (Table C-6)
Constant	18.448%	15.453%	18.701%	13.312%	17.363%	14.836%
X Coefficient(s)	-3.193%	-2.533%	-3.173%	-2.600%	-2.793%	-2.717%

MRP_{m+s} (unlevered)

	Company	Symbol	MV Equity	Book Equity	MVIC	5 Yr Avg. Net Income	Total Assets	5 Yr Avg. EBITDA	Average
1.	American States	AWR	8.76%	8.72%	8.70%	9.24%	8.68%	9.09%	8.87%
2.	Aqua America	WTR	6.90%	7.50%	6.79%	7.79%	7.07%	7.70%	7.29%
3.	California Water	CWT	8.96%	8.68%	8.74%	9.12%	8.15%	9.01%	8.78%
4.	Connecticut Water	CTWS	10.24%	9.71%	10.01%	10.61%	9.65%	11.11%	10.22%
5.	Middlesex	MSEX	10.42%	9.73%	10.25%	10.43%	9.68%	10.54%	10.18%
6.	SJW Corp.	SJW	9.76%	9.27%	9.39%	9.89%	8.88%	9.54%	9.45%
	Average (unlevered)		9.17%	8.94%	8.98%	9.51%	8.68%	9.50%	9.13%
	Lago Del Oro Water Company		NA	12.98%	NA	15.87%	14.44%	15.80%	14.77%

Lago Del Oro Water Company
COST OF EQUITY (COE) USING RISK PREMIUM BUILD-UP METHOD
Based on *Duff and Phelps* Risk Premium Study Data

Unlevered Portfilio Beta
(from 2012 Duff & Phelps RP Study - Table C)

Exhibit
Rebuttal Schedule D.4.15
Witness: Bourassa

	Company	Symbol	Unlevered Portfolio Beta (β_u)						
			(Table C-1)	(Table C-2)	(Table C-4)	(Table C-3)	(Table C-5)	(Table C-6)	Average
1.	American States	AWR	0.94	0.96	0.95	0.95	0.97	0.95	0.95
2.	Aqua America	WTR	0.87	0.89	0.86	0.88	0.83	0.82	0.86
3.	California Water	CWT	0.98	0.96	0.95	0.95	0.94	0.96	0.96
4.	Connecticut Water	CTWS	0.96	0.98	0.97	0.97	0.99	1.03	0.98
5.	Middlesex	MSEX	0.96	1.00	0.98	0.97	0.99	0.99	0.98
6.	SJW Corp.	SJW	0.98	0.98	0.98	0.99	0.97	0.95	0.98
	Average		0.95	0.96	0.95	0.95	0.95	0.95	0.95
	Lago Del Oro Water Company		NA	0.98	NA	1.01	1.05	1.03	1.02

Lago Del Oro Water Company
COST OF EQUITY (COE) USING RISK PREMIUM BUILD-UP METHOD
Based on *Duff and Phelps* Risk Premium Study Data

Exhibit
Rebuttal Schedule D.4.16
Witness: Bourassa

MRP Estimates Using Duff & Phelps Study (Relevered)
Relevered Realized Risk Premium

$RP_{relevered} = RP_{unlevered} + W_d/W_e*(\beta_u-\beta_d)*RP_{market}$

Where β_u = unlevered portfolio beta

β_d = debt beta, assumed to be 0.1

W_d = percentage of debt in capital structure

W_e = percentage of equity in capital structure

$RP_{unlevered}$ = unlevered realized risk premium from Table 2

RP_{market} = general equity risk premium for the market since 1963.

			MRP_{m+s} (Relevered)							
	Company	Symbol	W_d/W_e	MV Equity	Book Equity	MVIC	5 Yr Avg. Net Income	Total Assets	5 Yr Avg. EBITDA	Average
1.	American States	AWR	30.7%	9.92%	9.91%	9.88%	10.41%	9.88%	10.27%	10.04%
2.	Aqua America	WTR	37.2%	8.18%	8.82%	8.06%	9.09%	8.29%	8.91%	8.56%
3.	California Water	CWT	46.3%	10.79%	10.47%	10.51%	10.89%	9.89%	10.80%	10.56%
4.	Connecticut Water	CTWS	48.1%	12.10%	11.62%	11.89%	12.49%	11.57%	13.12%	12.13%
5.	Middlesex	MSEX	40.1%	11.97%	11.36%	11.84%	12.00%	11.29%	12.15%	11.77%
6.	SJW Corp.	SJW	63.7%	12.28%	11.80%	11.91%	12.44%	11.38%	11.98%	11.96%
	Average MRP (Relevered)		44.35%	10.87%	10.66%	10.68%	11.22%	10.38%	11.20%	10.84%
	Lago Del Oro Water Company		12.18%	NA	13.46%	NA	16.36%	14.96%	16.31%	15.27%

Lago Del Oro Water Company
COST OF EQUITY (COE) USING RISK PREMIUM BUILD-UP METHOD
Based on *Duff and Phelps* Risk Premium Study Data

Exhibit
Rebuttal Schedule D.4.17
Witness: Bourassa

Equity Risk Premium Adjustment and Other meterics used in Build-up Method

[1] Estimate of Current Market Risk Premium (RP_{market})	**5.00%**	<<<< Current Duff and Phelps recommendation
[2] Risk Premium Assumed in Duff & Phelps Study (1963-2012)[1]	4.50%	
[3] Equity Risk Premium Adjustment ([1] - [2])	0.50%	
[4] Average MRP (relevered) for publicly traded water companies (from Rebuttal Schedule D-4.16)	10.84%	
[5] MRP (relevered) for publicly traded water companies (RP_{m+s}) ([3] + [4])	11.34%	
[6] Equity Risk Premium Adjustment ([3])	0.50%	
[7] Average MRP (relevered) for subject utility company (from Table 4)	15.27%	
[8] MRP (relevered) for subject utility company (RP_{m+s}) ([6] + [7])	15.77%	
[9] Industry Risk Premium (From *Ibbotson* for SIC 494 Water Supply Industry Table 3-5)	-4.92%	
[10] Adjustment Factor to Industry Risk Premium ([2] / 6.7%[1])	0.7463	
[11] Adjusted Industry Risk Premium (R_i) ([9] x [10])	-3.67%	
[12] Risk Free Rate (R_f)[2]	3.42%	

[1] From Duff and Phelps Risk Premium Report 2013.
[2] Yield on 20 Yr U.S. Treasury Feb 6, 2014 (Federal Reserve)

Lago Del Oro Water Company
COST OF EQUITY (COE) USING RISK PREMIUM BUILD-UP METHOD
Based on *Duff and Phelps* Risk Premium Study Data

Exhibit
Rebuttal Schedule D.4.18
Witness: Bourassa

Cost of Equity (COE) Estimate using Build-up Method

$E(R_i) = R_f + RP_{m+s} + RP_i + RP_u$

Where:

$E(R_i)$ = Expected (indicated) rate of return
Rf = Risk-free rate of return. See Rebuttal Schedule D-4.17.
RPm+s = Market risk premium including size premium. See Rebuttal Schedule D-4.16.
RPi = Industry risk premium (adjusted). See Rebuttal Schedule D-4-17.
RP_u = Company-specific risk premium

	Sample Publicly Traded Water Utilities	Lago Del Oro Water Company
R_f =	3.42%	3.42%
RP_{m+s} =	See Sched. D-4.16	
RP_i =	-3.67%	-3.67%
RP_u =	0.00%	0.00%

			Indicated COE $E(R_i)$						
	Company	Symbol	MV Equity	Book Equity	MVIC	5 Yr Avg. Net Income	Total Assets	5 Yr Avg. EBITDA	Average
1.	American States	AWR	10.16%	10.16%	10.12%	10.66%	10.13%	10.51%	10.29%
2.	Aqua America	WTR	8.43%	9.07%	8.31%	9.34%	8.54%	9.16%	8.81%
3.	California Water	CWT	11.04%	10.72%	10.76%	11.14%	10.14%	11.05%	10.81%
4.	Connecticut Water	CTWS	12.35%	11.86%	12.14%	12.74%	11.82%	13.37%	12.38%
5.	Middlesex	MSEX	12.22%	11.60%	12.09%	12.25%	11.54%	12.40%	12.02%
6.	SJW Corp.	SJW	12.53%	12.05%	12.16%	12.69%	11.63%	12.22%	12.21%
	Average COE estimate		11.12%	10.91%	10.93%	11.47%	10.63%	11.45%	11.09%
	Median COE Estimate		11.63%	11.16%	11.43%	11.70%	10.84%	11.64%	11.41%
	Lago Del Oro Water Company		NA	13.71%	NA	16.61%	15.21%	16.56%	15.52%

FENNEMORE CRAIG
A Professional Corporation
Jay L. Shapiro (No. 014650)
2394 East Camelback Road, Suite 600
Phoenix, Arizona 85016
Telephone (602) 916-5000

Attorneys for Lago Del Oro Water Company

BEFORE THE ARIZONA CORPORATION COMMISSION

IN THE MATTER OF THE APPLICATION OF LAGO DEL ORO WATER COMPANY, AN ARIZONA CORPORATION, FOR A DETERMINATION OF THE FAIR VALUE OF ITS UTILITY PLANTS AND PROPERTY AND FOR INCREASES IN ITS WATER RATES AND CHARGES FOR UTILITY SERVICE BASED THEREON.	DOCKET NO: W-01944A-13-0215

REJOINDER TESTIMONY OF

THOMAS J. BOURASSA

RATE BASE, INCOME STATEMENT, REVENUE REQUIREMENT AND RATE DESIGN

March 21, 2014

EXHIBIT
A-9
ADMITTED

TABLE OF CONTENTS

I. INTRODUCTION AND QUALIFICATION 1
II. SUMMARY OF THE COMPANY'S REJOINDER POSITION 1
III. RATE BASE (B SCHEDULES) 2
A. Plant-in-Service (PIS) 3
B. Accumulated Depreciation (A/D) 3
C. Advances-in-aid of Construction (AIAC) 7
D. Contributions-in-aid of Construction (CIAC) and Accumulated Amortization (AA) 7
E. Accumulated Deferred Income Taxes (ADIT) 7
IV. INCOME STATEMENT (C SCHEDULES) 10
A. Contractual Services – Annual Audit 10
V. Rate Design (H Schedules) 11

8997565.1/058113.0008

I. INTRODUCTION AND QUALIFICATION

Q. PLEASE STATE YOUR NAME AND ADDRESS.

A. My name is Thomas J. Bourassa. My business address is 139 W. Wood Drive, Phoenix, Arizona 85029.

Q. ON WHOSE BEHALF ARE YOU TESTIFYING IN THIS PROCEEDING?

A. I am testifying in this proceeding on behalf of the applicant, Lago Del Oro Water Company ("LDO" or "Company").

Q. HAVE YOU PREVIOUSLY SUBMITTED DIRECT AND REBUTTAL TESTIMONY IN THE INSTANT CASE?

A. Yes, my direct and rebuttal testimonies were submitted in support of the initial application in this docket. There were two volumes at each stage, one addressing rate base, income statement and rate design, and the other addressing cost of capital. Each of those testimonies included my associated schedules.

Q. WHAT WILL YOU ADDRESS IN THIS REJOINDER TESTIMONY?

A. I will provide rejoinder testimony in response to the surrebuttal filing by Staff. More specifically, this first volume of my rejoinder testimony relates to rate base, income statement and rate design for LDO. My cost of capital rejoinder is contained in a second, separate volume.

II. SUMMARY OF THE COMPANY'S REJOINDER POSITION

Q. WHAT IS THE REVENUE INCREASE THE COMPANY IS PROPOSING IN THIS REJOINDER TESTIMONY?

A. The Company proposes a total revenue requirement of $3,030,491, which constitutes an increase in revenues of $1,148,253, or 61.00 percent over adjusted test year revenues.

Q. HOW DOES THIS COMPARE WITH THE COMPANY'S REBUTTAL FILING?

A. It is the same.

Q. WHAT ARE THE PROPOSED REVENUE REQUIREMENTS AND RATE INCREASES FOR THE COMPANY AND STAFF AT THIS STAGE OF THE PROCEEDING?

A. The proposed revenue requirements and proposed rate increases are as follows:

	Revenue Requirement	Revenue Incr.	% Increase
Company–Rebuttal	$3,030,491	$1,148,253	61.00%
Staff–Surrebuttal	$2,911,453	$1,029,215	54.86%
Company–Rejoinder	$3,030,491	$1,148,253	61.00%

III. RATE BASE (B SCHEDULES)

Q. WOULD YOU PLEASE IDENTIFY THE PARTIES' RESPECTIVE RATE BASE RECOMMENDATIONS.

A. Yes, the rate bases proposed by the Company and Staff are as follows:

	OCRB	FVRB
Company–Rebuttal	$ 7,363,846	$ 7,363,846
Staff–Surrebuttal	$ 7,366,456	$ 7,366,456
Company–Rejoinder	$ 7,363,846	$ 7,363,846

Q. WOULD YOU PLEASE DISCUSS THE COMPANY'S PROPOSED ORIGINAL COST RATE BASE.

A. Yes. The Company's rejoinder rate base adjustments OCRB are detailed on rebuttal schedules B-2, pages 3 through 7. Rejoinder Schedule B-2, pages 1 and 2, summarize the Company's proposed adjustments and the rejoinder OCRB. The Company is not proposing any changes to its rebuttal adjustments or any

additional rejoinder adjustments to rate base. The adjustments to rate base are discussed in my rebuttal testimony.[1]

A. Plant-in-Service (PIS)

Q. PLEASE SUMMARIZE THE RECOMMENDED PIS BALANCES OF THE PARTIES AND THE DIFFERENCES, IF ANY.

A. The Company and Staff now agree on the PIS balance is $18,200,199.[2] Both the Company and Staff agree that plant purchased from an affiliate should reflect the $3,887,998 original cost and $1,136,587 of accumulated depreciation.[3]

B. Accumulated Depreciation (A/D)

Q. WHAT ARE THE RECOMMENDED A/D BALANCES OF THE PARTIES?

A. The Company recommends an A/D balance of $9,977,386, while Staff recommends an A/D balance of $9,606,122, a difference of $371,264. The $371,264 difference represents Staff's reduction to the A/D balance stemming from its reconstruction of A/D using a vintage group procedure, including identification of fully depreciated plant that Staff stops depreciating once the vintage group is fully depreciated.[4]

Q. PLEASE RESPOND TO MS. RIMBACK'S SURREBUTTAL TESTIMONY (ON PAGE 7) THAT THE COMPANY'S RECOMMENDED A/D BALANCE DOES NOT PROPERLY REFLECTED FULLY DEPRECIATED PLANT?

A. There is no fully depreciated plant as of the end of the test year under the broad group procedure employed by the Company for its depreciation accounting.[5]

---

[1] Rebuttal Testimony of Thomas J. Bourassa ("Bourassa Rb.") at 3-16.

[2] *See* Company Rejoinder Schedule B-2, page 2 and Staff Surrebuttal Schedule MJR-W3.

[3] Surrebuttal Testimony of Mary J. Rimback ("Rimback Sb.") at 5.

[4] Rimback Sb. at 7.

[5] *See* Company Rejoinder Schedule B-2, page 3.29. There are no plant accounts in which

Staff's fully depreciated plant amounts are the result of Staff applying a vintage group procedure.[6]

Q. DOES THIS MEAN THE VINTAGE GROUP PROCEDURE IS SUPERIOR TO THE BROAD GROUP PROCEDURE?

A. No. The broad group procedure is no less accurate than the vintage group procedure.[7] When breaking down a broad group into vintage groups some vintage groups will be determined to be fully depreciated. It would not be surprising to find vintage year subgroups within a broad group (plant account) that appear to be fully depreciated. This is because under the broad group concept the group is expected have an average life. Some plant in the group will last <u>longer</u> the average useful life, some plant will last <u>exactly</u> the average useful life, and some plant will last <u>less</u> than the average useful life.

Q. PLEASE RESPOND TO THE STAFF'S SURREBUTTAL TESTIMONY ON THE COMPANY'S REASONS FOR RETAINING THE BROAD GROUP PROCEDURE.

A. I can't. I have discussed the many reasons why the Company opposes the imposition of the vintage group procedure in my rebuttal testimony and will not repeat those here.[8] But, Staff has not provided any response to my rebuttal testimony.

---

the A/D balance equals the Original Cost balance.

[6] Rimback Sb. at 7.

[7] Bourassa Rb. at 11.

[8] Bourassa Rb. at 10-13.

Q. IN YOUR REBUTTAL TESTIMONY (ON PAGE 11) YOU EXPLAINED THAT THE STAFF RECOMMENDED A/D BALANCE REFLECTS ANOMALIES SUCH AS STRANDED A/D BALANCES. DID STAFF ADDRESS THESE ISSUES?

A. No. I examined the Staff surrebuttal work papers and continue to find vintage groups with a zero plant balance and a corresponding negative A/D balance. I referred to these circumstances as stranded negative A/D balances in my rebuttal testimony because when the plant balance is zero or negative, Staff stops computing depreciation.[9] The negative A/D balance remains and becomes a permanent balance.

Q. DO YOU HAVE AN EXHIBIT SHOWING THE STRANDED NEGATIVE A/D BALANCES INCLUDED IN THE STAFF RECOMMENDED A/D BALANCE.

A. Yes. Included as **Exhibit TJB-RB-RJ1** is a copy of the Staff plant and A/D reconstruction schedule (2012 only) contained in the Staff work papers. There are several vintage groups that have zero plant balances along with corresponding negative A/D balances. For example, there are zero plant balances and negative A/D balances for vintage groups under accounts 310 – Power Generation Equipment, 311 – Pumping equipment, 320.2 – Chemical Solution Feeders, 340 – Office Furniture and Equipment, 341 – Transportation Equipment, 345 – Power Operated Equipment, and 347 – Miscellaneous Equipment. More specifically, for example, for account 311 – Pumping Equipment and vintage year group 1994, the plant balance is zero and the A/D balance is a negative 58,169 (net book value of a positive $58,169). These zero plant balances with corresponding negative A/D

[9] Bourassa Rb. at 11-12.

balances make no sense.

Q. WHY NOT?

A. The vintage group balances essentially become permanent balances because Staff stops depreciating the vintage group once the plant balances are zero. In the vintage group example discussed above, the depreciation expense is zero. The net book value of a positive $58,169 is permanent rate base.

Q. DID YOU ASK STAFF TO EXPLAIN THESE ZERO PLANT BALANCES AND CORRESPONDING NEGATIVE ACCUMULATED DEPRECIATION BALANCES?

A. Yes. I have attached the Staff response to Lago Data request 1.1 as **Exhibit TJB-RB-RJ2**. This response does not address the issues created as a result of Staff's application of the vintage group procedure. Instead, Staff avoids answering the data request by pointing to the total plant balance and A/D balance for each plant account, avoiding addressing the underlying vintage group detail. But avoiding these issues is problematic. In practical terms, the Company is left with nonsensical vintage group plant balances that will not only result in plant depreciation accounting issues for the Company going forward, but also permanent negative A/D balances (and permanent positive net book values), as well as create plant and A/D balance reconstruction issues in the next rate case.

Q. IS THE COMPANY DEPRECIATING ITS PLANT BEYOND ITS EXPECTED USEFUL LIFE?

A. No, and I do not know why Ms. Rimback claims the Company is doing this.[10] Under the broad group procedure there is no fully depreciated plant for the Company. While Staff may have created fully depreciated vintage groups in its

[10] Rimback Sb. at 7.

application of the vintage group procedure, it does not mean the Company is depreciating plant beyond the expected average useful life of its plant.

C. **Advances-in-aid of Construction (AIAC)**

Q. DO THE COMPANY AND STAFF AGREE ON THE AIAC BALANCE?

A. Yes. Both are proposing AIAC balance of $297,640.[11]

D. **Contributions-in-aid of Construction (CIAC) and Accumulated Amortization (AA)**

Q. PLEASE DISCUSS THE PARTIES' RECOMMENDATIONS FOR CIAC AND AA.

A. The Company continues to propose CIAC and AA balances of $852,693 and $469,879, respectively. Staff continues to propose CIAC and AA balances of $753,535 and $282,997, respectively.[12] The Company's proposed balance is based upon a broad group procedure consistent with its depreciation accounting, whereas Staff's proposed balances are based upon a vintage group procedure. I explained the positions of the parties in more detail in my rebuttal testimony.[13]

E. **Accumulated Deferred Income Taxes (ADIT)**

Q. PLEASE DISCUSS THE PARTIES' ADIT BALANCE RECOMMENDATIONS.

A. The Company is proposing an ADIT balance of $66,658, whereas Staff proposes an ADIT balance of $347,588.[14] As I pointed out in my rebuttal testimony, the Staff recommended ADIT does not properly reflect the change in ADITs resulting

---

[11] *See* Staff Surrebuttal Schedule RJM-W3

[12] *See id.*

[13] Bourassa Rb. at 14.

[14] *See* Staff Surrebuttal Schedule RJM-W3.

from the change in the tax value of plant and is overstated.[15]

Q. MS. RIMBACK'S SURREBUTTAL TESTIMONY (ON PAGE 8) CONCLUDES THAT THE CHANGE IN BONUS DEPRECIATION IS IRRELEVANT TO THE ADIT COMPUTATION. DO YOU AGREE?

A. No, the special bonus depreciation used in the ADIT computation of the net tax value of PIS has a direct impact on the ADIT balance. In the Company's initial filing the bonus depreciation was computed on the plant acquired from an affiliate in 2012 equal to a net book value of $3,887,998 times 50 percent (or $1,943,999). In its rebuttal filing, the Company proposed to reduce the book value of this plant by the depreciation the Company would have recorded if the plant were booked at the time the plant was placed into service. The net book value changed from $3,888,998 to $2,751,411. As a result, the Company's net tax value and the basis for computing bonus depreciation is no longer $3,887,998, but rather the net book value of this plant or $2,751,411 ($3,887,998 minus $1,136,587).[16] Accordingly, the maximum amount of bonus depreciation on this plant for tax purposes is reduced by $568,293, from $1,943,999 to $1,375,706 ($2,751,411 times 50%).[17] To use more than $1,375,706 for bonus depreciation results in an overstatement of ADITs.[18]

Q. WOULDN'T THE BONUS DEPRECIATION HAVE BEEN TAKEN IN THE YEARS THE ASSETS WERE PLACED INTO SERVICE, NOT 2012?

A. No. The bonus depreciation arises in 2012, and only 2012, because this is when

---

[15] Bourassa Rb. at 15-16.

[16] Rimback Sb. at 5.

[17] Bourassa Rb. at 15.

[18] Bourassa Rb. at 16.

the Company actually acquired the plant and the first year special bonus depreciation was available as a tax deduction. The Company could not have taken any special bonus depreciation deduction for tax purposes prior to acquisition as it did not own the plant. Moreover, any book-tax timing difference (ADIT) arising from any assumed past special bonus depreciation is meaningless because the Company never realized any past tax deductions for special bonus depreciation on this plant. In other words, there is no ADIT associated with this plant for years prior to 2012.

Even if one assumes Ms. Rimback is correct – that prior special bonus was actually realized by the Company in prior years, the simple fact is that special bonus depreciation was not available in all the years the plant would have been placed into service.[19] Consequently, the special bonus depreciation of $1,943,500 used in the Staff ADIT computation is incorrect and overstated, meaning Staff's recommended ADIT balance is also incorrect and overstated.

Q. DID YOU MENTION THE TAX BONUS DEPRECIATION IN THE COMPANY'S ORIGINAL APPLICATION?

A. No, and I normally would not have. The tax value computation that reflects special bonus depreciation was included in the work papers provided to Staff. It is common for many details of a utility's filing to be found in the work papers. That said, my rebuttal testimony detailed the issue, yet Staff decided the bonus depreciation issue was "irrelevant."[20] I strongly disagree with Staff's position. The bottom line is that if the correct bonus depreciation amount is not used and

[19] Special bonus depreciation was not available in 1997, 2005, 2006, and 2007 when some of the plant purchased from an affiliate was originally placed into service.

[20] Rimback Sb. at 8.

Staff's proposed ADIT balance is adopted, the ratepayer will receive an unjustified windfall as a result of an overstated ADIT balance (which is a reduction to rate base).

IV. INCOME STATEMENT (C SCHEDULES)

Q. WOULD YOU PLEASE DISCUSS THE COMPANY'S PROPOSED ADJUSTMENTS TO REVENUES?

A. The Company rejoinder adjustments to revenues and/or expenses are detailed on Rebuttal Schedule C-2, pages 1-8. The rejoinder income statement with adjustments is summarized on Rejoinder Schedule C-1, page 1-2. The Company is not proposing any changes to the adjustments it proposed in its rebuttal testimony. These adjustments were discussed in my rebuttal testimony.[21]

A. Contractual Services – Annual Audit

Q. PLEASE COMMENT ON MS. RIMBACK'S SURREBUTTAL TESTIMONY (ON PAGE 9) REGARDING THE COMPANY'S PROPOSED ADJUSTMENT TO CONTRACTUAL SERVICES FOR ANNUAL AUDIT COSTS.

A. I have a few comments. First, Ms. Rimback testifies that the Company did not provide support for the $8,000 of annual audit costs. In response, the Company is providing copies of an annual audit engagement letter from Barry & Moore PC, CPAs for the 2013 audit. *See* **Exhibit TJB-RJ3**. Second, Ms. Rimback also testifies that the term sheet provided in the Company's financing application did not include a requirement for an annual audit. The term sheet may not state that an audit is requirement, but my understanding from the Company is that the bank intends to require an annual audit and this requirement will be contained within the

[21] Bourassa Rb. at 16-18.

final loan documents.

V. **RATE DESIGN (H SCHEDULES).**

Q. **WHAT ARE THE COMPANY'S PROPOSED RATES?**

A. The Company's rejoinder proposed rates are:

MONTHLY SERVICE CHARGES (All Classes, except Golf Course Irrigation and Construction/Hydrant)

5/8" x 3/4" Meter	$ 14.88
3/4" Meter	$ 14.88
1" Meter	$ 24.80
1 1/2" Meter	$ 49.60
2" Meter	$ 79.36
3" Meter	$158.72
4" Meter	$248.00
5" Meter	Remove
6" Meter	$496.00
8" Meter	$793.60

MONTHLY SERVICE CHARGES (Golf Course Irrigation and Construction/Hydrant)

Golf Course Irrigation	$200.00
Construction/Hydrant	$0.00
Gallons in minimum (all classes, except golf course irrigation)	0
Gallons in minimum (golf course irrigation)	0

COMMODITY RATES

5/8"X3/4" Meter – Res.	1 to 4,000	$ 1.80
	4,001 to 10,000	$ 2.98
	Over 10,000	$ 4.16

5/8"X3/4" Meter – Com., Irr.*	1 to 10,000	$ 2.98
	Over 10,000	$ 4.16
3/4" Meter – Res.	1 to 4,000	$ 1.80
	4,001 to 10,000	$ 2.98
	Over 10,000	$ 4.16
3/4" Meter – Com., Irr.*	1 to 10,000	$ 2.98
	Over 10,000	$ 4.16
1" Meter – Res., Com., Irr. *	1 to 17,000	$ 2.98
	Over 17,000	$ 4.16
1 ½" Meter – Res., Com., Irr.*	1 to 34,000	$ 2.98
	Over 34,000	$ 4.16
2" Meter – Res., Com., Irr.*	1 to 54,000	$ 2.98
	Over 54,000	$ 4.16
3" Meter – Res., Com., Irr.*	1 to 107,000	$ 2.98
	Over 107,000	$ 4.16
4" Meter – Res., Com., Irr.*	1 to 167,000	$ 2.98
	Over 167,000	$ 4.16
6" Meter – Res., Com., Irr.*	1 to 334,000	$ 2.98
	Over 334,000	$ 4.16
8" Meter – Res., Com., Irr.*	1 to 534,000	$ 2.98
	Over 534,000	$ 4.16

*Except Golf Course Irrigation

Golf Course Irrigation	All gallons	$ 0.85
Construction/Hydrant	All gallons	$ 4.16

Q. WHAT WILL BE THE AVERAGE 5/8X3/4 INCH METERED CUSTOMER AVERAGE MONTHLY BILL UNDER THE NEW RATES?

A. As shown on Schedule H-2, page 1, the average monthly bill under proposed rates for a 5/8x3/4 inch metered customer using an average 7,047 gallons is $31.15 – a $9.66 increase over the present monthly bill or a 44.98 percent increase.

Q. DO YOU HAVE ANY COMMENTS ON THE STAFF RATE DESIGN?

A. Yes. The Staff proposed rates do not produce the Staff revenue requirement. It is short by about $11,000. I have spoken with Staff about this issue and my understanding is that Staff will fix their rates.

Q. DOES THIS CONCLUDE YOUR REJOINDER TESTIMONY?

A. Yes.

EXHIBIT
TJB-RJ1

Lago Del Oro Water Company
Test Year Ended December 31, 2012
Reconciliation of Plant Additions, Retirements and Accumulated Depreciation

Exhibit
Schedule B-2
Page 3.29

Line No.	Current G/L No.	NARUC Account No.	Description		Allowed Deprec. Rate	2012 Plant Additions	Plant Adjustments	Adjusted Plant Additions	Plant Retirements	Unbooked Plant Retirements	Adjusted Plant Retirements	Ridgeview Plant Sharing Adj.	Salvage A/D Only	Deprecation (Calculated)	Plant Balance	Accum. Deprec.	Net Plant
1		301	Organization Cost		0.00%	-	-	-	-	-	-			-	-	-	-
2		302	Franchise Cost		0.00%	-	-	-	-	-	-			-	-	-	-
3		303	Land and Land Rights		0.00%	-	-	-	-	-	-			-	42,608	-	42,608
4		304	Structures & Improvements		5.00%	-	-	-	-	-	-	-	-	-	-	-	-
				1988	5.00%	-	-	-	-	-	-	-	-	-	11,667	11,667	-
				1995	5.00%									103	2,061	1,803	258
				1998	5.00%			-			-			2,397	47,933	34,751	13,182
				1999	5.00%			-			-			355	7,094	4,788	2,306
				2001	5.00%			-			-			3,710	74,199	42,664	31,535
				2002	5.00%			-			-			565	11,304	5,935	5,369
				2003	5.00%			-			-			249	4,988	2,369	2,619
				2004	5.00%			-			-			890	17,805	7,567	10,238
				2005	5.00%			-			-			1,598	31,960	11,985	19,975
				2008	5.00%			-			-			714	14,275	3,212	11,063
				2009	5.00%			-			-			540	10,800	1,890	8,910
				2010	5.00%			-			-			144	2,872	359	2,513
				2012	5.00%	144,358	-	144,358			-	(21,634)	(11,240)	3,609	122,724	(7,631)	130,355
						144,358	-	144,358	-	-	-	(21,634)	(11,240)	14,874	359,682	121,361	238,321
5		305	Collecting & Impounding Reservoirs		5.00%	-	-	-	-	-	-			-	-	-	-
6		306	Lake, River, Canal Intakes		5.00%	-	-	-	-	-	-			-	-	-	-
7		307	Wells & Springs		5.00%	-	-	-	-	-	-			-	69,732	69,732	-
				1992	5.00%			-			-			1,625	64,993	64,993	-
				1996	5.00%			-			-			1,048	20,950	17,284	3,666
				1998	5.00%			-			-			52,408	1,048,166	759,920	288,246
				2000	5.00%			-			-			21,995	439,906	274,941	164,965
				2002	5.00%			-			-			1,207	24,135	12,671	11,464
				2009	5.00%									-	-	-	-
				2012	5.00%	496,541	-	496,541			-			12,414	496,541	12,414	484,127
						496,541	-	496,541	-	-	-	-	-	90,696	2,164,423	1,211,955	952,468
8		308	Infiltration Galleries		5.00%	-	-	-	-	-	-			-	-	-	-
9		309	Raw Water Supply Mains		5.00%	-	-	-	-	-	-			-	-	-	-
10		310	Power Generation Equipment		5.00%	-	-	-	-	-	-	-	-	-	-	-	-
				1996	5.00%			-			-			-	-	(17,297)	17,297
				2001	5.00%			-			-			4,322	86,449	10,867	75,582
				2009	5.00%			-			-			206	4,126	722	3,404
				2010	5.00%			-			-			344	6,871	859	6,012
				2012	5.00%	62,481	-	62,481			-	27,937	12,389	1,562	90,418	13,951	76,467
						62,481	-	62,481	-	-	-	27,937	12,389	6,434	187,864	9,102	178,762
11		311	Pumping Equipment		5.00%	-	-	-	-	-	-	-	-	-	-	(49,820)	49,820
				1988	5.00%	-	-	-	-	-	-	-	-	-	-	(246)	246
				1990	5.00%			-			-			-	-	(475)	475
				1991	5.00%			-			-			-	-	(799)	799
				1994	5.00%			-			-			-	-	(58,169)	58,169
				1996	5.00%			-			-			-	-	(4,694)	4,694
				1997	5.00%					25,468	25,468			637	-	(13,364)	13,364
				1998	5.00%			-		24,379	24,379			56,055	1,108,903	404,882	704,021

Staff Work Paper File: WP FEB26.xlsx Tab: Plant FDADJ

Lago Del Oro Water Company
Test Year Ended December 31, 2012
Reconciliation of Plant Additions, Retirements and Accumulated Depreciation

Exhibit
Schedule B-2
Page 3.29

Line No.	Current G/L No.	NARUC Account No.	Description		Allowed Deprec. Rate	2012 Plant Additions	Plant Adjustments	Adjusted Plant Additions	Plant Retirements	Unbooked Plant Retirements	Adjusted Plant Retirements	Ridgeview Plant Sharing Adj.	Salvage A/D Only	Deprecation (Calculated)	Plant Balance	Accum. Deprec.	Net Plant
				1999	5.00%			-			-			3,099	61,977	41,834	20,143
				2000	5.00%			-			-			9,363	187,269	117,043	70,226
				2001	5.00%			-			-			39,288	785,764	451,814	333,950
				2002	5.00%			-			-			6,993	139,863	73,428	66,435
				2003	5.00%			-			-			1,842	36,838	17,498	19,340
				2004	5.00%			-			-			8,171	163,427	69,456	93,971
				2005	5.00%			-			-			1,731	34,628	12,986	21,643
				2006	5.00%			-			-			178	3,555	1,155	2,400
				2007	5.00%			-			-			1,943	38,863	10,687	28,176
				2008	5.00%			-			-			1,127	22,544	5,072	17,472
				2009	5.00%			-			-			17,018	340,364	59,564	280,800
				2010	5.00%			-			-			2,770	55,402	6,925	48,477
				2011	5.00%			-			-			1,064	21,287	1,597	19,690
				2012	5.00%	579,179	-	579,179			-	5,797	107,517	14,479	584,976	121,996	462,980
						579,179	-	579,179	-	49,847	49,847	5,797	107,517	165,760	3,585,660	1,268,372	2,317,288
13		320.0	Water Treatment Plants		5.00%	-	-	-	-	-	-			-	-	-	-
12		320.1	Water Treatment Equipment		5.00%	-	-	-	-	-	-			-	-	-	-
				1998	5.00%			-			-			-	500,188	268,851	231,337
				2000	5.00%			-			-			-	117,195	47,367	69,828
				2001	5.00%			-			-			-	7,687	2,883	4,804
				2006	5.00%			-			-			-	-	-	-
				2007	5.00%			-			-			-	(625,070)	(319,101)	(305,969)
						-	-	-	-	-	-	-	-	-	-	(0)	0
14		320.2	Solution Chemical Feeders		5.00%	-	-	-	-	-	-		-	-	-	-	-
				1988	5.00%	-	-	-	-	-	-	-	-	-	-	(616)	616
				1998	5.00%			-	-	-	-			-	-	(600)	600
				1999	5.00%			-	-	524	524			13	-	(225)	225
				2000	5.00%			-		1,069	1,069			52	511	(108)	619
				2004	5.00%			-			-			239	4,778	2,031	2,747
				2011	5.00%			-			-			203	4,055	304	3,751
				2012	5.00%	15,295		15,295			-		557	382	15,295	939	14,356
						15,295	-	15,295	-	1,593	1,593	-	557	889	24,639	1,724	22,915
15		330	Distribution Reservoirs & Standpipes		5.00%	-	-	-	-	-	-			-	-	-	-
16		330.1	Storage Tanks		5.00%	-	-	-	-	-	-	-	-	-	212,474	212,474	-
				1989	5.00%	-	-	-	-	-	-	-	-	-	3,425	3,425	-
				1990	5.00%			-			-			-	7,071	7,071	-
				1997	5.00%			-			-			95	1,895	1,469	426
				1998	5.00%			-			-	-	-	38,647	772,936	560,379	212,557
				2001	5.00%			-			-			9,500	190,000	109,250	80,750
				2004	5.00%			-			-			42	836	355	481
				2008	5.00%			-			-			3,620	72,390	16,288	56,102
				2009	5.00%			-			-			10,955	219,099	38,342	180,757
				2011	5.00%			-			-			902	18,040	1,353	16,687
				2012	5.00%	323,184	-	323,184			-	(63,175)	(47,211)	8,080	260,009	(39,131)	299,140

Staff Work Paper File: WP FEB26.xlsx Tab: Plant FDADJ

Lago Del Oro Water Company
Test Year Ended December 31, 2012
Reconciliation of Plant Additions, Retirements and Accumulated Depreciation

Exhibit
Schedule B-2
Page 3.29

Line No.	Current G/L No.	NARUC Account No.	Description		Allowed Deprec. Rate	2012 Plant Additions	Plant Adjustments	Adjusted Plant Additions	Plant Retirements	Unbooked Plant Retirements	Adjusted Plant Retirements	Ridgeview Plant Sharing Adj.	Salvage A/D Only	Deprecation (Calculated)	Plant Balance	Accum. Deprec.	Net Plant
						323,184	-	323,184	-	-	-	(63,175)	(47,211)	71,839	1,758,175	911,274	846,901
17		330.2	Pressure Tanks		5.00%	-	-	-	-	-	-	-	-	-	-	(3,428)	3,428
				1994	5.00%			-			-			210	4,204	2,431	1,773
				1997	5.00%			-			-			904	18,089	14,019	4,070
				1998	5.00%			-			-			6,302	126,048	91,385	34,663
				2000	5.00%			-			-			2,093	41,865	26,166	15,699
				2001	5.00%			-			-			1,863	37,264	21,427	15,837
				2003	5.00%			-			-			58	1,152	547	605
				2004	5.00%			-			-			58	1,155	491	664
				2009	5.00%									-	-	-	-
				2011	5.00%			-			-			71	1,414	106	1,308
				2012	5.00%	93,850	-	93,850			-	(3,071)	(1,855)	2,346	90,779	491	90,288
						93,850	-	93,850	-	-	-	(3,071)	(1,855)	13,906	321,970	153,634	168,336
18		331	Transmission & Distribution Mains		5.00%	-	-	-	-	-	-			-	328,100	328,100	-
198				1988	5.00%	-	-	-	-	-	-	-	-	-	77,666	77,666	-
				1989	5.00%			-			-			-	28,263	28,263	-
				1991	5.00%			-			-			-	1,149	1,149	-
				1992	5.00%			-			-			9,251	370,040	370,040	-
				1994	5.00%			-			-			4,186	83,727	77,447	6,280
				1995	5.00%			-			-			4,073	81,453	71,271	10,182
				1996	5.00%			-			-			2,157	43,142	35,592	7,550
				1997	5.00%			-			-			5,891	117,822	91,312	26,510
				1998	5.00%			-			-			49,354	987,078	715,632	271,446
				1999	5.00%			-			-			551	11,019	7,438	3,581
				2000	5.00%			-			-			30,260	605,208	378,255	226,953
				2001	5.00%			-			-			18,530	370,594	213,092	157,502
				2002	5.00%			-			-			25,084	501,684	263,384	238,300
				2003	5.00%			-			-			4,863	97,257	46,197	51,060
				2004	5.00%			-			-			4,578	91,568	38,916	52,652
				2005	5.00%			-			-			6,346	126,917	47,594	79,323
				2006	5.00%			-			-			13,141	262,829	85,419	177,410
				2007	5.00%			-			-			1,448	28,961	7,964	20,997
				2008	5.00%			-			-			4,020	80,393	18,088	62,305
				2009	5.00%									-	-	-	-
				2011	5.00%			-			-			449	8,972	673	8,299
				2012	5.00%	1,779,965	-	1,779,965			-			44,499	1,779,965	44,499	1,735,466
						1,779,965	-	1,779,965	-	-	-	-	-	228,681	6,083,807	2,947,993	3,135,814
19		333	Services		5.00%	-	-	-	-	-	-			-	90,890	90,890	-
				1988	5.00%	-	-	-	-	-	-	-	-	-	32,530	32,530	-
				1989	5.00%			-			-			-	13,120	13,120	-
				1990	5.00%			-			-			-	15,030	15,030	-
				1991	5.00%			-			-			-	17,125	17,125	-
				1992	5.00%			-			-			1,959	78,350	78,350	-
				1993	5.00%			-			-			1,264	25,276	24,644	632
				1994	5.00%			-			-			1,513	30,258	27,989	2,269

Staff Work Paper File: WP FEB26.xlsx Tab: Plant FDADJ

Lago Del Oro Water Company
Test Year Ended December 31, 2012
Reconciliation of Plant Additions, Retirements and Accumulated Depreciation

Exhibit
Schedule B-2
Page 3.29

Line No.	Current G/L No.	NARUC Account No.	Description		Allowed Deprec. Rate	2012 Plant Additions	Plant Adjustments	Adjusted Plant Additions	Plant Retirements	Unbooked Plant Retirements	Adjusted Plant Retirements	Ridgeview Plant Sharing Adj.	Salvage A/D Only	Deprecation (Calculated)	Plant Balance	Accum. Deprec.	Net Plant
				1995	5.00%			-			-			907	18,139	15,872	2,267
				1996	5.00%			-			-			669	13,370	11,030	2,340
				1997	5.00%			-			-			533	10,660	8,262	2,399
				1998	5.00%			-			-			7,085	141,700	102,733	38,968
				1999	5.00%			-			-			320	6,400	4,320	2,080
				2000	5.00%			-			-			19,225	384,501	229,494	155,007
				2002	5.00%			-			-			7,052	141,040	74,046	66,994
				2003	5.00%			-			-			4,967	99,345	47,189	52,156
				2004	5.00%			-			-			4,591	91,824	39,025	52,799
				2005	5.00%			-			-			2,797	55,939	20,977	34,962
				2006	5.00%			-			-			5,087	101,731	33,063	68,668
				2007	5.00%			-			-			2,088	41,767	11,486	30,281
				2008	5.00%			-			-			2,632	52,633	11,842	40,791
				2009	5.00%			-			-			2,967	59,333	10,383	48,950
				2010	5.00%			-			-			1,657	33,135	4,142	28,993
				2011	5.00%			-			-			1,296	25,911	1,943	23,968
				2012	5.00%	308,734	-	308,734			-			7,718	308,734	7,718	301,016
						308,734	-	308,734	-	-	-	-	-	76,325	1,888,741	933,203	955,538
20		334	Meters		5.00%	-	-	-	-	-	-			-	23,128	23,128	-
				1988	5.00%	-	-	-	-	-	-	-	-	-	14,928	14,928	-
				1989	5.00%			-			-			-	7,249	7,249	-
				1990	5.00%			-			-			-	16,524	16,524	-
				1991	5.00%			-			-			-	9,268	9,268	-
				1992	5.00%			-			-			223	8,927	8,927	-
				1993	5.00%			-			-			700	13,997	13,647	350
				1994	5.00%			-			-			686	13,711	12,683	1,028
				1995	5.00%			-			-			455	9,109	7,970	1,139
				1996	5.00%			-			-			1,224	24,481	20,197	4,284
				1997	5.00%			-			-			1,185	23,704	18,371	5,333
				1998	5.00%			-			-			1,268	25,364	18,389	6,975
				1999	5.00%			-			-			1,900	37,998	25,649	12,349
				2000	5.00%			-			-			1,125	22,499	14,062	8,437
				2001	5.00%			-			-			1,060	21,192	12,185	9,007
				2002	5.00%			-			-			1,758	35,151	18,454	16,697
				2003	5.00%			-			-			2,225	44,490	21,133	23,357
				2004	5.00%			-			-			2,052	41,042	17,443	23,599
				2005	5.00%			-			-			2,628	52,551	19,707	32,844
				2006	5.00%			-			-			1,089	21,777	7,078	14,699
				2009	5.00%			-			-			824	16,486	4,127	12,359
				2010	5.00%			-			-			314	6,275	784	5,491
				2012	5.00%	14,470		14,470			-			362	14,470	362	14,108
						14,470	-	14,470	-	-	-	-	-	21,076	504,321	312,264	192,057
21		335	Hydrants		5.00%	-	-	-	-	-	-			-	28,000	28,000	-
				1988	5.00%	-	-	-	-	-	-	-	-	-	32,327	32,327	-
				1989	5.00%			-			-			-	4,707	4,707	-
				1992	5.00%			-			-			2,075	83,000	83,000	-

Staff Work Paper File: WP FEB26.xlsx Tab: Plant FDADJ

Lago Del Oro Water Company
Test Year Ended December 31, 2012
Reconciliation of Plant Additions, Retirements and Accumulated Depreciation

Exhibit
Schedule B-2
Page 3.29

Line No.	Current G/L No.	NARUC Account No.	Description		Allowed Deprec. Rate	2012 Plant Additions	Plant Adjustments	Adjusted Plant Additions	Plant Retirements	Unbooked Plant Retirements	Adjusted Plant Retirements	Ridgeview Plant Sharing Adj.	Salvage A/D Only	Deprecation (Calculated)	Plant Balance	Accum. Deprec.	Net Plant
				1993	5.00%			-			-			135	2,695	2,628	67
				1995	5.00%			-			-			47	943	825	118
				1997	5.00%			-			-			129	2,570	1,992	578
				1998	5.00%			-			-			5,138	102,750	74,494	28,256
				2000	5.00%			-			-			7,037	140,740	87,963	52,778
				2001	5.00%			-			-			2,068	41,350	23,776	17,574
				2002	5.00%			-			-			2,592	51,840	27,216	24,624
				2003	5.00%						-			462	9,240	4,389	4,851
				2005	5.00%									-	-	-	-
				2006	5.00%			-			-			1,437	28,732	9,338	19,394
				2007	5.00%									-	-	-	-
				2008	5.00%									-	-	-	-
				2012	5.00%	189,964	-	189,964			-			4,749	189,964	4,749	185,215
						189,964	-	189,964	-	-	-	-	-	25,867	718,858	385,403	333,455
22		336	Backflow Prevention Devices		5.00%	-	-	-	-	-	-			-	-	-	-
23		339	Other Plant & Misc Equipment		5.00%	-	-	-	-	-	-			-	-	-	-
				2001	5.00%			-			-			-	-	-	-
						-	-	-	-	-	-	-	-	-	-	-	-
24		340	Office Furniture & Equipment		5.00%	-	-	-	-	-	-			-	-	-	-
				1989	5.00%			-			-			-	-	(1,415)	1,415
				1990	5.00%			-			-			-	-	(119)	119
				1998	5.00%			-			-			-	-	(1,509)	1,509
				2000	5.00%			-			-			87	1,737	(671)	2,408
				2001	5.00%			-			-			74	1,483	927	556
				2002	5.00%			-			-			646	12,926	7,432	5,494
				2004	5.00%			-			-			210	4,193	2,201	1,992
				2008	5.00%			-			-			127	2,532	1,076	1,456
				2011	5.00%			-			-			343	6,862	1,707	5,155
				2012	5.00%	5,920		5,920			-			55	1,106	83	1,023
						5,920	-	5,920	-	-	-	-	-	148	5,920	148	5,772
25		340.1	Computers & Software		5.00%	-	-	-	-	-	-			1,690	36,759	9,861	26,898
26		341	Transportation Equipment		5.00%	-	-	-	-	-	-			-	-	-	-
				1990	5.00%			-			-			-	-	-	-
				1994	5.00%			-			-			-	-	(2,550)	2,550
				1996	5.00%			-			-			-	-	(12,891)	12,891
				1997	5.00%			-			-			-	-	(13,786)	13,786
				1998	5.00%			-			-			-	-	(14,031)	14,031
				1999	5.00%			-			-			(1)	(10)	(11,915)	11,905
				2000	5.00%			-			-			-	-	(913)	913
				2001	5.00%			-			-			748	14,953	8,442	6,511
				2002	5.00%			-			-			270	5,408	3,110	2,298
				2003	5.00%			-			-			782	15,645	8,214	7,431
				2004	5.00%			-			-			32	640	304	336
				2012	5.00%	23,118		23,118			-			1,361	27,217	11,567	15,650
						23,118	-	23,118	-	-	-	-	-	708	25,718	1,293	24,425
27		342	Stores Equipment		5.00%	-	-	-	-	-	-			3,901	89,571	(23,157)	112,728
														-	-	-	-

Staff Work Paper File: WP FEB26.xlsx Tab: Plant FDADJ

Lago Del Oro Water Company
Test Year Ended December 31, 2012
Reconciliation of Plant Additions, Retirements and Accumulated Depreciation

Exhibit
Schedule B-2
Page 3.29

Line No.	Current G/L No.	NARUC Account No.	Description		Allowed Deprec. Rate	2012 Plant Additions	Plant Adjustments	Adjusted Plant Additions	Plant Retirements	Unbooked Plant Retirements	Adjusted Plant Retirements	Ridgeview Plant Sharing Adj.	Salvage A/D Only	Deprecation (Calculated)	Plant Balance	Accum. Deprec.	Net Plant
28		343	Tools, Shop & Garage Equipment		5.00%	-	-	-	-	-	-			-	-	-	-
29		344	Laboratory Equipment		5.00%	-	-	-	-	-	-			-	-	-	-
30		345	Power Operated Equipment		5.00%	-	-	-	-	-	-			-	-	(428)	428
				1994	5.00%			-			-			2,101	42,029	38,580	3,449
				1996	5.00%			-			-			37	742	612	130
				2002	5.00%			-			-			512	10,235	5,373	4,862
				2010	5.00%			-			-			139	2,780	348	2,433
31		346	Communication Equipment		5.00%	-	-	-	-	-	-	-	-	2,789	55,786	44,485	11,301
				1997	5.00%			-			-	-	-	-	-	-	-
				1998	5.00%			-			-	-	-	10,282	205,637	159,369	46,268
				1999	5.00%			-			-			98	1,956	1,418	538
				2000	5.00%			-			-			579	11,575	7,813	3,762
				2001	5.00%			-			-			47	939	587	352
				2002	5.00%			-			-			261	5,229	3,007	2,222
				2003	5.00%			-			-			241	4,821	2,531	2,290
				2004	5.00%			-			-			108	2,154	1,023	1,131
				2005	5.00%			-			-			68	1,357	577	780
				2008	5.00%			-			-			97	1,940	728	1,213
				2009	5.00%			-			-			113	2,254	507	1,747
				2010	5.00%			-			-			68	1,368	239	1,129
				2011	5.00%			-			-			984	19,686	2,461	17,225
				2012	5.00%	53,658	-	53,658			-	(3,460)	(1,575)	2,105	42,104	3,158	38,946
32		347	Miscellaneous Equipment		5.00%	53,658	-	53,658	-	-	-	(3,460)	(1,575)	1,341	50,198	(234)	50,432
				1992	5.00%	-	-	-	-	-	-			16,392	351,218	183,183	168,035
				1993	5.00%			-			-			-	-	(808)	808
				1994	5.00%			-			-			-	-	(692)	692
				1996	5.00%			-			-			-	-	(697)	697
				1997	5.00%			-			-			-	-	(3,929)	3,929
				1999	5.00%			-		1,834	1,834			-	-	(1,617)	1,617
				2000	5.00%			-		2,603	2,603			46	-	(847)	847
				2001	5.00%			-			-			92	544	(544)	1,088
				2002	5.00%			-			-			80	1,600	1,000	600
				2005	5.00%			-			-			185	3,693	2,123	1,570
				2008	5.00%			-			-			36	729	383	346
				2012	5.00%	2,796		2,796			-			222	4,437	1,664	2,773
33		348	Other Tangible Plant			2,796	-	2,796	-	4,437	4,437	-	-	616	12,324	2,773	9,551
34					5.00%	-	-	-	-	-	-			70	2,796	70	2,726
				2001	5.00%									1,347	26,123	(1,122)	27,245
35			Staff			-	-	-	-	-	-	-	-	-	-	-	-
36			Company			4,093,513	-	4,093,513	-	55,877	55,877	(57,606)	58,582	742,468	18,200,205	8,469,535	9,730,670
						4,093,511	-	4,093,511	-	55,877	55,877	(57,606)	58,580	809,819	18,200,199	8,840,798	9,359,401
														67,351		371,263	

Staff Work Paper File: WP FEB26.xlsx Tab: Plant FDADJ

EXHIBIT
TJB-RJ2

ARIZONA CORPORATION COMMISSION STAFF'S RESPONSES TO
LAGO DEL ORO WATER COMPANY'S
FIRST SET OF DATA REQUESTS
DOCKET NO. W-01944A-13-0215
MARCH 19, 2014

1.1: Please explain and justify the assets balances contained in the attached Staff work papers which reflect zero original cost and negative accumulated depreciation balances, or negative original cost and negative accumulated depreciation balances. As part of your response, please clarify how these negative balances are not permanent under the Staff method of depreciation as reflected in the Staff work papers.

RESPONSE: Staff reviewed the workpaper which shows the 2012 plant balances, accumulated depreciation and net plant (plant balance less accumulated depreciation). The actual balance is the last line for each plant account. Other calculations show how the balance is computed. Staff and the Company are in agreement as to the Plant Balance of $18,200,199 as shown on MJR W-4.

a) The only account with a -0- plant balance is account 320.2. This is not a balance that Staff adjusted. It was included on schedule B-2 of the application at a -0- amount.

b) Staff does not see any negative plant balances.

c) Both Staff and the Company calculations reflect some accumulated depreciation with debit balances. The entry for depreciation is debit expense, credit accumulated depreciation. Accumulated depreciation would generally show a credit balance. One reason for a debit instead of a credit balance is related to the treatment of plant retirements. Both Staff and the Company used this treatment.

RESPONDENT: Mary Rimback, Public Utilities Analyst, Utilities Division, Arizona Corporation Commission, 1200 West Washington Street, Phoenix, Arizona 85007

EXHIBIT
TJB-RJ3

BARRY & MOORE, P.C.

CERTIFIED PUBLIC ACCOUNTANTS

February 11, 2014

Mr. James Hubbard, Treasurer
Lago Del Oro Water Company
9532 East Riggs Road
Sun Lakes, AZ 85248

Dear Jim:

We are pleased to confirm our understanding of the services we are to provide for the year ended December 31, 2013 for the Lago Del Oro Water Company.

We will audit the financial statements of Lago Del Oro Water Company, which comprise the balance sheet as of December 31, 2013, and the related statements of income, capitalization, and cash flows for the year then ended, and the related notes to the financial statements.

Audit Objective

The objective of our audit is the expression of an opinion about whether your financial statements are fairly presented, in all material respects, in conformity with U.S. generally accepted accounting principles. Our audit will be conducted in accordance with auditing standards generally accepted in the United States of America and will include tests of your accounting records and other procedures we consider necessary to enable us to express such opinions. We cannot provide assurance that an unmodified opinion will be expressed. Circumstances may arise in which it is necessary for us to modify our opinion or add an emphasis-of-matter or other-matter paragraph. If our opinion is other than unmodified, we will discuss the reasons with you in advance. If, for any reason, we are unable to complete the audit or are unable to form or have not formed an opinion, we may decline to express an opinion or to issue a report as a result of this engagement

Audit Procedures

Our procedures will include tests of documentary evidence supporting the transactions recorded in the accounts, tests of the physical existence of inventories, and direct confirmation of certain assets and liabilities by correspondence with selected customers, creditors, and financial institutions. We will also request written representations from your attorneys as part of the engagements. At the conclusion of our audit, we will require certain written representations from you about the financial statements and related matters.

2198 East Camelback, Suite 370 • Phoenix, Arizona 85016 • (602) 277-5463 FAX (602) 248-9074

An audit includes examining, on a test basis, evidence supporting the amounts and disclosures in the financial statements; therefore, our audit will involve judgment about the number of transactions to be examined and the areas to be tested. An audit also includes evaluating the appropriateness of accounting policies used and the reasonableness of significant accounting estimates made by management, as well as evaluating the overall presentation of the financial statements. We will plan and perform the audit to obtain reasonable assurance about whether the financial statements are free of material misstatement, whether from (1) errors, (2) fraudulent financial reporting, (3) misappropriation of assets, or (4) violations of laws or governmental regulations that are attributable to the entities or to acts by management or employees acting on behalf of the entities.

Because of the inherent limitations of an audit, combined with the inherent limitations of internal control, and because we will not perform a detailed examination of all transactions, there is a risk that material misstatements may exist and not be detected by us, even though the audit are properly planned and performed in accordance with U.S. generally accepted auditing standards. In addition, an audit is not designed to detect immaterial misstatements or violations of laws or governmental regulations that do not have a direct and material effect on the financial statements. However, we will inform the appropriate level of management of any material errors, fraudulent financial reporting, or misappropriation of assets that comes to our attention. We will also inform the appropriate level of management of any violations of laws or governmental regulations that come to our attention, unless clearly inconsequential. Our responsibility as auditors is limited to the period covered by our audit and does not extend to any later periods for which we are not engaged as auditors.

Our audit will include obtaining an understanding of the entities and their environments, including internal control, sufficient to assess the risks of material misstatement of the financial statements and to design the nature, timing, and extent of further audit procedures. An audit is not designed to provide assurance on internal control or to identify deficiencies in internal control. However, during the audit, we will communicate to you and those charged with governance internal control related matters that are required to be communicated under professional standards.

Management Responsibilities

You agree to assume all management responsibilities for the tax services and any other nonattest services we provide; oversee the services by designating an individual, preferably from senior management, with suitable skill, knowledge, or experience; evaluate the adequacy and results of the services; and accept responsibility for them.

You are responsible for establishing and maintaining internal controls, including monitoring ongoing activities; for the selection and application of accounting principles; and for the fair presentation of the financial statements in conformity with U.S. generally accepted accounting principles. You are also responsible for making all financial records and related information available to us and for the accuracy and completeness of that information. You are also responsible for providing us with (1) access to all information of which you are aware that is relevant to the preparation and fair presentation of the financial statements, (2) additional

information that we may request for the purpose of the audit, and (3) unrestricted access to persons within the company from whom we determine it necessary to obtain audit evidence.

Your responsibilities include adjusting the financial statements to correct material misstatements and confirming to us in the management representation letters that the effects of any uncorrected misstatements aggregated by us during the current engagements and pertaining to the latest period presented are immaterial, both individually and in the aggregate, to the financial statements taken as a whole.

You are responsible for the design and implementation of programs and controls to prevent and detect fraud, and for informing us about all known or suspected fraud affecting the company involving (1) management, (2) employees who have significant roles in internal control, and (3) others where the fraud could have a material effect on the financial statements. Your responsibilities include informing us of your knowledge of any allegations of fraud or suspected fraud affecting the company received in communications from employees, former employees, regulators, or others. In addition, you are responsible for identifying and ensuring that the entities comply with applicable laws and regulations.

Engagement Administration, Fees, and Other

We understand that your employees will prepare all cash, accounts receivable, and other confirmations we request and will locate any documents selected by us for testing.

Bernie Barry is the engagement partner and is responsible for supervising the engagements and signing the reports.

Our fees for the audit will be at our regular per diem rates, plus out-of-pocket costs, if any. We estimate that our fees will be approximately $8,000. Billings will be rendered monthly and are payable upon presentation.

During the course of the audit, we may observe opportunities for economy in, or improved controls over, your operations. We will bring such matters to the attention of the appropriate level of management, either orally or in writing.

We appreciate the opportunity to be of service to you and believe this letter accurately summarizes the significant terms of our engagements. If you have any questions, please let us know. If you agree with the terms of our engagements as described in this letter, please indicate your agreement by signing below and returning a scanned copy to us.

Sincerely,

Barry – Moore, P.C.

Barry & Moore, P.C.

LAGO DEL ORO WATER COMPANY | JPMorgan Chase Bank, N.A. | Stub 1 of 1 | Check No. 314221 Date 11/08/13

Invoice Number	Inv Date	Payment Advice	Gross	Discount	Net
107	100513	2012 AUDIT	12,400.00		12,400.00
			12,400.00		12,400.00

Vendor No.	Name	Address
71644	BARRY & MOORE P C	2198 E CAMELBACK RD #370 PHOENIX AZ 85016-4716

314221 13/11/08

JPMorgan Chase Bank, N.A.
201 N Central Ave Dept 383
Phoenix, AZ 85038

91-2/1221

314221

LAGO DEL ORO WATER COMPANY
9532 E Riggs Rd
Sun Lakes, AZ 85248-7411

Date	Amount
11/08/13	$***12,400.00

Pay

TWELVE THOUSAND FOUR HUNDRED AND 00/100 **********
Dollars

To The Order Of
BARRY & MOORE,P.C.
2198 E CAMELBACK RD #370
PHOENIX AZ 85016-4716

⑈314221⑈ ⑆122100024⑆ 0969 1135⑈

LAGO DEL ORO WATER COMPANY | JPMorgan Chase Bank, N.A. | Stub 1 of 1 | Check No. 314221 Date 11/08/13

Invoice Number	Inv Date	Payment Advice	Gross	Discount	Net
107	100513	2012 AUDIT	12,400.00		12,400.00
			12,400.00		12,400.00

Vendor No.	Name
71644	BARRY & MOORE P C

apcheck

BARRY & MOORE, P.C.

CERTIFIED PUBLIC ACCOUNTANTS

INVOICE

TO: Lago Del Oro Water Company
9532 E. Riggs Rd.
Sun Lakes, AZ 85248

Client #:12100
Invoice #: 107
Date: October 5, 2013

For Professional Services Rendered:

Examination of December 31, 2012 financial statements.	$ 7,100
Initial audit procedures required for December 31, 2011 balances.	2,400
Review of historical book/tax differences and provide assistance in calculating deferred taxes.	2,150
Review of 2012 company prepared income tax returns.	750
Total	$ 12,400

Please include client number and invoice number on check.

Current: $12,400.00 | Over 30: $0.00 | Over 60: $0.00 | Over 90: $0.00 | Over 120: $0.00 | Total: $12,400.00

7100.00 8405.116 A 1581881
7100.00 8405.116 A 1581881
7100.00 8405.116 A 1581896

7,100 2012 Audit
2,400 Beginning Balance Audit
2,150 Deferred Tax Audit
750 2012 Taxes

RECEIVED
OCT 31 2013
JRH

2198 East Camelback Road, Suite 370 • Phoenix, Arizona 85016 • (602) 277-5463 FAX (602) 248-9074 • www.barryandmoore.com

RATE BASE SCHEDULES

Lago Del Oro Water Company
Test Year Ended December 31, 2012
Computation of Increase in Gross Revenue
Requirements As Adjusted

Exhibit
Rejoinder Schedule A-1
Page 1
Witness: Bourassa

Line No.		
1	Fair Value Rate Base	$ 7,363,846
2		
3	Adjusted Operating Income	(54,838)
4		
5	Current Rate of Return	-0.74%
6		
7	Required Operating Income	$ 647,208
8		
9	Required Rate of Return on Fair Value Rate Base	8.79%
10		
11	Operating Income Deficiency	$ 702,046
12		
13	Gross Revenue Conversion Factor	1.6356
14		
15	Increase in Gross Revenue	
16	Requirement	$ 1,148,253
17		
18	Adjusted Test Year Revenues	$ 1,882,238
19	Increase in Gross Revenue Revenue Requirement	$ 1,148,253
20	Proposed Revenue Requirement	$ 3,030,491
21	% Increase	61.00%
22		

23	Customer		Present	Proposed	Dollar	Percent
24	Classification		Rates	Rates	Increase	Increase
25	5/8x3/4 Inch	Residential	$ 1,576,999	$ 2,419,025	$ 842,026	53.39%
26	3/4 Inch	Residential	35,011	57,126	22,114	63.16%
27	1 Inch	Residential	20,819	36,336	15,518	74.54%
28	1 1/2 Inch	Residential	1,651	2,999	1,348	81.61%
29	2 Inch	Residential	9,934	19,649	9,715	97.79%
30						
31	5/8x3/4 Inch	Commercial	$ -	$ -	$ -	0.00%
32	3/4 Inch	Commercial	6,728	10,623	3,895	57.89%
33	1 Inch	Commercial	25,016	54,114	29,098	116.32%
34	1 1/2 Inch	Commercial	6,996	12,890	5,894	84.25%
35	2 Inch	Commercial	37,067	75,211	38,144	102.91%
36	3 Inch	Commercial	5,924	12,538	6,614	111.66%
37	6 Inch	Commercial	30,305	72,585	42,279	139.51%
38						
39	5/8x3/4 Inch	Irrigation	$ -	$ -	$ -	0.00%
40	3/4 Inch	Irrigation	2,052	3,517	1,465	71.38%
41	1 Inch	Irrigation	1,370	2,559	1,189	86.79%
42	1 1/2 Inch	Irrigation	410	789	379	92.51%
43	2 Inch	Irrigation	37,490	75,232	37,743	100.67%
44	3 Inch	Irrigation	4,044	8,329	4,285	105.98%
45	4 Inch	Irrigation	1,047	3,106	2,059	196.71%
46	Golf Course	Irrigation	59,823	142,232	82,409	137.75%
47						
48	5/8x3/4 Inch	Construction	$ 1,750	$ 2,611	861	49.21%
49					-	0.00%
50	Revenue Annualization		$ 386	$ 1,563	1,177	305.15%
51	**Subtotal**		$ 1,864,821	$ 3,013,034	$ 1,148,212	61.57%
52						
53	Other Water Revenues		$ 17,117	$ 17,117	$ -	0.00%
54	Reconciling Amount		299	340	41	13.71%
55	Rounding				-	0.00%
56	**Total of Water Revenues**		$ 1,882,237	$ 3,030,491	$ 1,148,253	61.00%
57						
58						
59	SUPPORTING SCHEDULES:					
60	B-1					
61	C-1					
62	C-3					
63	H-1					

Lago Del Oro Water Company
Test Year Ended December 31, 2012
Summary of Rate Base

Exhibit
Rejoinder Schedule B-1
Page 1
Witness: Bourassa

Line No.		Original Cost Rate base	Fair Value Rate Base
1			
2	Gross Utility Plant in Service	$ 18,200,198	$ 18,200,198
3	Less: Accumulated Depreciation	9,977,386	9,977,386
4			
5	Net Utility Plant in Service	$ 8,222,812	$ 8,222,812
6			
7	Less:		
8	Advances in Aid of Construction	297,640	297,640
9			
10	Contributions in Aid of Construction	852,693	852,693
11			
12	Accumulated Amortization of CIAC	(469,879)	(469,879)
13			
14	Customer Meter Deposits	111,854	111,854
15	Custmer Security Deposits	-	-
16	Accumulated Deferred Income Tax	66,658	66,658
17			
18			
19	Plus:		
20			
21	Deferred Regulatory Assets TCE Plume	-	-
22	Deferred Tax Assets	-	-
23	Allowance for Working Capital	-	-
24			
25			
26	Total Rate Base	$ 7,363,846	$ 7,363,846
27			
28			
29			
30			
31			
32			
33			
34			
35			
36			
37			
38			
39			
40			
41	SUPPORTING SCHEDULES:		
42	B-2		
43	B-3		
44	B-5		
45	E-1		
46			
47			
48			
49			
50			

Lago Del Oro Water Company
Test Year Ended December 31, 2012
Original Cost Rate Base Proforma Adjustments

Exhibit
Rejoinder Schedule B-2
Page 1
Witness: Bourassa

Line No.		Adjusted at End of Test Year	Proforma Adjustment	Proposed Adjusted at end of Test Year
1	Gross Utility			
2	Plant in Service	$ 18,200,198	-	$ 18,200,198
3				
4	**Less:**			
5	Accumulated			
6	Depreciation	8,840,798	1,136,588	9,977,386
7				
8				
9	Net Utility Plant			
10	in Service	$ 9,359,400		$ 8,222,812
11				
12	**Less:**			
13	Advances in Aid of			
14	Construction	297,640	-	297,640
15				
16	Contributions in Aid of			
17	Construction - Gross	852,693	-	852,693
18				
19	Accumulated Amortization of CIAC	(469,879)	-	(469,879)
20				
21	Customer Meter Deposits	111,854	-	111,854
22	Custmer Security Deposits	-	-	-
23	Accumulated Deferred Income Tax	279,359	(212,701)	66,658
24				-
25				-
26				
27	**Plus:**			
28				
29	Deferred Regulatory Assets TCE Plume	-		-
30	Prepayments	-		-
31	Materials and Supplies	-		-
32	Working capital	-	-	-
33				-
34				
35	Total	$ 8,287,733		$ 7,363,846
36				
37				
38				
39				
40				
41				
42				
43				
44				
45				
46	SUPPORTING SCHEDULES:			RECAP SCHEDULES:
47	B-2, pages 2			B-1
48	E-1			
49				
50				
51				

Lago Del Oro Water Company
Test Year Ended December 31, 2012
Original Cost Rate Base Proforma Adjustments

Exhibit
Rejoinder Schedule B-2
Page 2
Witness: Bourassa

Line No.		Adjusted at End of Test Year	Proforma Adjustments 1 Plant-in-Service	2 Accumulated Depreciation	3 CIAC	4 AIAC	5 ADIT	Proposed Adjusted at end of Test Year
1	Gross Utility							
2	Plant in Service	$ 18,200,198	-					$ 18,200,198
3								
4	**Less:**							
5	Accumulated							
6	Depreciation	8,840,798		1,136,588				9,977,386
7								
8								
9	Net Utility Plant							
10	in Service	$ 9,359,400	$ -	$ (1,136,588)	$ -	$ -	$ -	$ 8,222,812
11								
12	**Less:**							
13	Advances in Aid of							
14	Construction	297,640				-		297,640
15								
16	Contributions in Aid of							
17	Construction (CIAC)	852,693			-			852,693
18								
19	Accumulated Amort of CIAC	(469,879)			-			(469,879)
20								
21	Customer Meter Deposits	111,854						111,854
22	Customer Security Deposits	-						-
23	Accumulated Deferred Income Taxes	279,359					(212,701)	66,658
24								
25								
26	**Plus:**							
27								
28	Deferred Regulatory Assets	-						-
29	Prepayments							
30	Materials and Supplies							
31	Allowance for Cash Working Capital	-						-
32								
33	Total	$ 8,287,733	$ -	$ (1,136,588)	$ -	$ -	$ 212,701	$ 7,363,846
34								
35								
36								
37	SUPPORTING SCHEDULES:						RECAP SCHEDULES:	
38	B-2, pages 3-5						B-1	
39	E-1							
40								
41								

Lago Del Oro Water Company
Test Year Ended December 31, 2012
Original Cost Rate Base Proforma Adjustments
Adjustment Number 1

Exhibit
Rejoinder Schedule B-2
Page 3
Witness: Bourassa

Plant-in-Service

Line No.	Acct. No.	Description	Adjusted Orginal Cost	A Intentionally Left Blank	B Intentionally Left Blank	C Adjustments to Reconcile Plant to Reconstruction	D Intentionally Left Blank	E Intentionally Left Blank	Proposed Adjusted Original Cost
6	301	Organization Cost	$ -	$ -	$ -	$ -			$ -
7	302	Franchise Cost	-	-	-	-			-
8	303	Land and Land Rights	42,608	-	-	-			42,608
9	304	Structures and Improvements	359,681	-	-	-			359,681
10	305	Collecting and Impounding Res.	-	-	-	-			-
11	306	Lake River and Other Intakes	-	-	-	-			-
12	307	Wells and Springs	2,164,423	-	-	-			2,164,423
13	308	Infiltration Galleries and Tunnels	-	-	-	-			-
14	309	Supply Mains	-	-	-	-			-
15	310	Power Generation Equipment	187,864	-	-	-			187,864
16	311	Electric Pumping Equipment	3,585,660	-	-	-			3,585,660
17	320	Water Treatment Equipment	-	-	-	-			-
18	320.1	Water Treatment Plant	-	-	-	-			-
19	320.2	Chemical Solution Feeders	24,640	-	-	-			24,640
20	330	Dist. Reservoirs & Standpipe	-	-	-	-			-
21	330.1	Storage tanks	1,758,175	-	-	-			1,758,175
22	330.2	Pressure Tanks	321,969	-	-	-			321,969
23	331	Trans. and Dist. Mains	6,083,805	-	-	-			6,083,805
24	333	Services	1,888,741	-	-	-			1,888,741
25	334	Meters	504,321	-	-	-			504,321
26	335	Hydrants	718,857	-	-	-			718,857
27	336	Backflow Prevention Devices	-	-	-	-			-
28	339	Other Plant and Misc. Equip.	-	-	-	-			-
29	340	Office Furniture and Fixtures	36,758	-	-	-			36,758
30	340.1	Computers and Software	-	-	-	-			-
31	341	Transportation Equipment	89,569	-	-	-			89,569
32	342	Stores Equipment	-	-	-	-			-
33	343	Tools and Work Equipment	-	-	-	-			-
34	344	Laboratory Equipment	-	-	-	-			-
35	345	Power Operated Equipment	55,787	-	-	-			55,787
36	346	Communications Equipment	351,219	-	-	-			351,219
37	347	Miscellaneous Equipment	26,122	-	-	-			26,122
38	348	Other Tangible Plant	-	-	-	-			-
39			-						-
40		TOTALS	$ 18,200,199	$ -	$ -	$ -	$ -	$ -	$ 18,200,199
41									
42	Adjusted Plant-in-Service per Direct								$ 18,200,199
43									
44	Increase (decrease) in Plant-in-Service								$ -
45									
46	Adjustment to Plant-in-Service								$ -
47									
48	SUPPORTING SCHEDULES								
49	B-2 pages 3.1, 3.2 and 3.3								
50									

Lago Del Oro Water Company
Test Year Ended December 31, 2012
Original Cost Rate Base Proforma Adjustments
Adjustment Number 1 - A

Exhibit
Rejoinder Schedule B-2
Page 3.1
Witness: Bourassa

Line No.	
1	INTENTIONALLY LEFT BLANK
2	
3	
4	
5	
6	
7	
8	
9	
10	
11	
12	
13	
14	
15	
16	
17	
18	
19	
20	
21	
22	
23	
24	
25	
26	
27	
28	
29	
30	
31	
32	
33	
34	
35	
36	
37	
38	
39	
40	
41	
42	
43	
44	
45	

Lago Del Oro Water Company
Test Year Ended December 31, 2012
Original Cost Rate Base Proforma Adjustments
Adjustment Number 1 - B

Exhibit
Rejoinder Schedule B-2
Page 3.2
Witness: Bourassa

Line No.		
1	INTENTIONALLY LEFT BLANK	
2		
3		
4		
5		
6		
7		
8		
9		
10		
11		
12		
13		
14		
15		
16		
17		
18		
19		
20		
21		
22		
23		
24		
25		
26		
27		
28		
29		
30		
31		
32		
33		
34		
35		
36		
37		
38		
39		
40		$ -
41		
42		
43		
44		
45		

Lago Del Oro Water Company
Test Year Ended December 31, 2012
Original Cost Rate Base Proforma Adjustments
Adjustment Number 1 - C

Exhibit
Rejoinder Schedule B-2
Page 3.3
Witness: Bourassa

Line No.

1 Reconciliation of Plant to Plant Reconstruction

Line No.	Acct. No.	Description	Adjusted Orginal Cost	B-2 Adjustments	Rebuttal Adjusted Orginal Cost	Plant Per Reconstruction	Proposed Plant Adjustment
6	301	Organization Cost	-	-	-	-	-
7	302	Franchise Cost	-	-	-	-	-
8	303	Land and Land Rights	42,608	-	42,608	42,608	-
9	304	Structures and Improvements	359,681	-	359,681	359,681	-
10	305	Collecting and Impounding Res.	-	-	-	-	-
11	306	Lake River and Other Intakes	-	-	-	-	-
12	307	Wells and Springs	2,164,423	-	2,164,423	2,164,423	-
13	308	Infiltration Galleries and Tunnels	-	-	-	-	-
14	309	Supply Mains	-	-	-	-	-
15	310	Power Generation Equipment	187,864	-	187,864	187,864	-
16	311	Electric Pumping Equipment	3,585,660	-	3,585,660	3,585,660	-
17	320	Water Treatment Equipment	-	-	-	-	-
18	320.1	Water Treatment Plant	-	-	-	-	-
19	320.2	Chemical Solution Feeders	24,640	-	24,640	24,640	-
20	330	Dist. Reservoirs & Standpipe	-	-	-	-	-
21	330.1	Storage tanks	1,758,175	-	1,758,175	1,758,175	-
22	330.2	Pressure Tanks	321,969	-	321,969	321,969	-
23	331	Trans. and Dist. Mains	6,083,805	-	6,083,805	6,083,805	-
24	333	Services	1,888,741	-	1,888,741	1,888,741	-
25	334	Meters	504,321	-	504,321	504,321	-
26	335	Hydrants	718,857	-	718,857	718,857	-
27	336	Backflow Prevention Devices	-	-	-	-	-
28	339	Other Plant and Misc. Equip.	-	-	-	-	-
29	340	Office Furniture and Fixtures	36,758	-	36,758	36,758	-
30	340.1	Computers and Software	-	-	-	-	-
31	341	Transportation Equipment	89,569	-	89,569	89,569	-
32	342	Stores Equipment	-	-	-	-	-
33	343	Tools and Work Equipment	-	-	-	-	-
34	344	Laboratory Equipment	-	-	-	-	-
35	345	Power Operated Equipment	55,787	-	55,787	55,787	-
36	346	Communications Equipment	351,219	-	351,219	351,219	-
37	347	Miscellaneous Equipment	26,122	-	26,122	26,122	-
38	348	Other Tangible Plant	-	-	-	-	-
39		Plant Held for Future Use	-				-
40		TOTALS	$ 18,200,199	$ -	$ 18,200,199	$ 18,200,199	$ -

43 SUPPORTING SCHEDULE
44 B-2, pages 3.1 through 3.2
45 B-2, pages 3.4 through 3.29

Lago Del Oro Water Company
Test Year Ended December 31, 2012
Reconciliation of Plant Additions, Retirements and Accumulated Depreciation

Exhibit
Rejoinder Schedule B-2
Page 3.4
Witness: Jones/Bourassa

Line No.	NARUC Account No.	Description	Allowed Deprec. Rate	Per Decision No. 56464 - 04/26/1989 [1] Book Plant at 4/30/1988	[2] Dec. 56464 Adjust-ments	[3] Adjusted Plant at 4/30/1988 [1]+[2]	[4] Dec. 65134 Accum Depr 4/30/1988	[5] Net Plant 4/30/1988 [3]-[4]	Current Books [6] Book Plant[1] at 4/30/1988	[7] Allocated Accum Depr 4/30/1988	[8] Net Plant 4/30/1988 [6]-[7]
1	301	Organization Cost	0.00%	275		275			-	-	-
2	302	Franchise Cost	0.00%	-		-			-	-	-
3	303	Land and Land Rights	0.00%	3,200		3,200			3,200	-	3,200
4	304	Structures & Improvements	5.00%	-		-			-	-	-
5	305	Collecting & Impounding Reservoirs	5.00%	-		-			-	-	-
6	306	Lake, River, Canal Intakes	5.00%	-		-			-	-	-
7	307	Wells & Springs	5.00%	106,318		106,318			84,804	14,812	69,992
8	308	Infiltration Galleries	5.00%	-		-			-	-	-
9	309	Raw Water Supply Mains	5.00%	-		-			-	-	-
10	310	Power Generation Equipment	5.00%	-		-			-	-	-
11	311	Pumping Equipment	5.00%	220,818		220,818			164,378	28,711	135,667
12	320	Water Treatment Equipment	5.00%	-		-			-	-	-
13	320.1	Water Treatment Plants	5.00%	-		-			-	-	-
14	320.2	Solution Chemical Feeders	5.00%	-		-			-	-	-
15	330	Distribution Reservoirs & Standpipes	5.00%	116,880		116,880			-	-	-
16	330.1	Storage Tanks	5.00%	-		-			212,474	37,112	175,362
17	330.2	Pressure Tanks	5.00%	-		-			10,509	1,836	8,673
18	331	Transmission & Distribution Mains	5.00%	452,026		452,026			328,100	57,308	270,792
19	333	Services	5.00%	2,943		2,943			90,890	15,875	75,015
20	334	Meters	5.00%	25,131		25,131			23,128	4,040	19,088
21	335	Hydrants	5.00%	-		-			28,000	4,891	23,109
22	336	Backflow Prevention Devices	5.00%	-		-			-	-	-
23	339	Other Plant & Misc Equipment	5.00%	-		-			-	-	-
24	340	Office Furniture & Equipment	5.00%	1,240		1,240			5,227	913	4,314
25	340.1	Computers & Software	5.00%	-		-			-	-	-
26	341	Transportation Equipment	5.00%	-		-			-	-	-
27	342	Stores Equipment	5.00%	-		-			-	-	-
28	343	Tools, Shop & Garage Equipment	5.00%	-		-			-	-	-
29	344	Laboratory Equipment	5.00%	-		-			-	-	-
30	345	Power Operated Equipment	5.00%	-		-			1,165	203	962
31	346	Communication Equipment	5.00%	-		-			-	-	-
32	347	Miscellaneous Equipment	5.00%	-		-			2,200	384	1,816
33	348	Other Tangible Plant	5.00%	25,243		25,243			-	-	-
34											
35		TOTAL		954,074	-	954,074	166,085	787,989	954,075	166,085	787,990
36											

Lago Del Oro Water Company
Test Year Ended December 31, 2012
Reconciliation of Plant Additions, Retirements and Accumulatec

Exhibit
Rejoinder Schedule B-2
Page 3.5
Witness: Jones/Bourassa

[From 5-1-1988 through 12-31-1998]

Line No.	NARUC Account No.	Description	Allowed Deprec. Rate	1988 Plant Additions	Plant Adjustments	Adjusted Plant Additions	Plant Retirements	Unbooked Plant Retirements	Adjusted Plant Retirements	Salvage A/D Only	Deprecation (Calculated)	Plant Balance	Accum. Deprec.	Net Plant
1	301	Organization Cost	0.00%	-	-	-	-	-	-		-	-	-	-
2	302	Franchise Cost	0.00%	-	-	-	-	-	-		-	-	-	-
3	303	Land and Land Rights	0.00%	-	-	-	-	-	-		-	3,200	-	3,200
4	304	Structures & Improvements	5.00%	11,895	-	11,895	-	-	-		198	11,895	198	11,697
5	305	Collecting & Impounding Reservoirs	5.00%	-	-	-	-	-	-		-	-	-	-
6	306	Lake, River, Canal Intakes	5.00%	-	-	-	-	-	-		-	-	-	-
7	307	Wells & Springs	5.00%	-	-	-	-	-	-		2,827	84,804	17,639	67,165
8	308	Infiltration Galleries	5.00%	-	-	-	-	-	-		-	-	-	-
9	309	Raw Water Supply Mains	5.00%	-	-	-	-	-	-		-	-	-	-
10	310	Power Generation Equipment	5.00%	-	-	-	-	-	-		-	-	-	-
11	311	Pumping Equipment	5.00%	685	-	685	-	-	-		5,491	165,063	34,202	130,861
12	320	Water Treatment Equipment	5.00%	-	-	-	-	-	-		-	-	-	-
13	320.1	Water Treatment Plants	5.00%	-	-	-	-	-	-		-	-	-	-
14	320.2	Solution Chemical Feeders	5.00%	1,212	-	1,212	-	-	-		20	1,212	20	1,192
15	330	Distribution Reservoirs & Standpipes	5.00%	-	-	-	-	-	-		-	-	-	-
16	330.1	Storage Tanks	5.00%	-	-	-	-	-	-		7,082	212,474	44,194	168,280
17	330.2	Pressure Tanks	5.00%	-	-	-	-	-	-		350	10,509	2,186	8,323
18	331	Transmission & Distribution Mains	5.00%	77,666	-	77,666	-	-	-		12,231	405,766	69,539	336,227
19	333	Services	5.00%	32,530	-	32,530	-	-	-		3,572	123,420	19,447	103,973
20	334	Meters	5.00%	14,928	-	14,928	-	-	-		1,020	38,056	5,060	32,996
21	335	Hydrants	5.00%	32,327	-	32,327	-	-	-		1,472	60,327	6,363	53,964
22	336	Backflow Prevention Devices	5.00%	-	-	-	-	-	-		-	-	-	-
23	339	Other Plant & Misc Equipment	5.00%	-	-	-	-	-	-		-	-	-	-
24	340	Office Furniture & Equipment	5.00%	-	-	-	-	-	-		174	5,227	1,087	4,140
25	340.1	Computers & Software	5.00%	-	-	-	-	-	-		-	-	-	-
26	341	Transportation Equipment	5.00%	-	-	-	-	-	-		-	-	-	-
27	342	Stores Equipment	5.00%	-	-	-	-	-	-		-	-	-	-
28	343	Tools, Shop & Garage Equipment	5.00%	-	-	-	-	-	-		-	-	-	-
29	344	Laboratory Equipment	5.00%	-	-	-	-	-	-		-	-	-	-
30	345	Power Operated Equipment	5.00%	-	-	-	-	-	-		39	1,165	242	923
31	346	Communication Equipment	5.00%	-	-	-	-	-	-		-	-	-	-
32	347	Miscellaneous Equipment	5.00%	-	-	-	-	-	-		73	2,200	457	1,743
33	348	Other Tangible Plant	5.00%	-	-	-	-	-	-		-	-	-	-
34														
35		TOTAL		171,243	-	171,243	-	-	-	-	34,550	1,125,318	200,635	924,683
36														

Lago Del Oro Water Company
Test Year Ended December 31, 2012
Reconciliation of Plant Additions, Retirements and Accumulatec

Exhibit
Rejoinder Schedule B-2
Page 3.6
Witness: Jones/Bourassa

Line No.	NARUC Account No.	Description	Allowed Deprec. Rate	1989 Plant Additions	Plant Adjustments	Adjusted Plant Additions	Plant Retirements	Unbooked Plant Retirements	Adjusted Plant Retirements	Salvage A/D Only	Deprecation (Calculated)	Plant Balance	Accum. Deprec.	Net Plant
1	301	Organization Cost	0.00%	-	-	-	-	-	-		-	-	-	-
2	302	Franchise Cost	0.00%	-	-	-	-	-	-		-	-	-	-
3	303	Land and Land Rights	0.00%	-	-	-	-	-	-		-	3,200	-	3,200
4	304	Structures & Improvements	5.00%	-	-	-	-	-	-		595	11,895	793	11,102
5	305	Collecting & Impounding Reservoirs	5.00%	-	-	-	-	-	-		-	-	-	-
6	306	Lake, River, Canal Intakes	5.00%	-	-	-	-	-	-		-	-	-	-
7	307	Wells & Springs	5.00%	-	-	-	-	-	-		4,240	84,804	21,879	62,925
8	308	Infiltration Galleries	5.00%	-	-	-	-	-	-		-	-	-	-
9	309	Raw Water Supply Mains	5.00%	-	-	-	-	-	-		-	-	-	-
10	310	Power Generation Equipment	5.00%	-	-	-	-	-	-		-	-	-	-
11	311	Pumping Equipment	5.00%	-	-	-	-	-	-		8,253	165,063	42,455	122,608
12	320	Water Treatment Equipment	5.00%	-	-	-	-	-	-		-	-	-	-
13	320.1	Water Treatment Plants	5.00%	-	-	-	-	-	-		-	-	-	-
14	320.2	Solution Chemical Feeders	5.00%	-	-	-	-	-	-		61	1,212	81	1,131
15	330	Distribution Reservoirs & Standpipes	5.00%	-	-	-	-	-	-		-	-	-	-
16	330.1	Storage Tanks	5.00%	3,425	-	3,425	-	-	-		10,709	215,899	54,904	160,995
17	330.2	Pressure Tanks	5.00%	-	-	-	-	-	-		525	10,509	2,712	7,797
18	331	Transmission & Distribution Mains	5.00%	28,263	-	28,263	-	-	-		20,995	434,029	90,534	343,495
19	333	Services	5.00%	13,120	-	13,120	-	-	-		6,499	136,540	25,946	110,594
20	334	Meters	5.00%	7,249	-	7,249	-	-	-		2,084	45,305	7,144	38,161
21	335	Hydrants	5.00%	4,707	-	4,707	-	-	-		3,134	65,034	9,497	55,537
22	336	Backflow Prevention Devices	5.00%	-	-	-	-	-	-		-	-	-	-
23	339	Other Plant & Misc Equipment	5.00%	-	-	-	-	-	-		-	-	-	-
24	340	Office Furniture & Equipment	5.00%	297	-	297	-	-	-		269	5,524	1,356	4,168
25	340.1	Computers & Software	5.00%	-	-	-	-	-	-		-	-	-	-
26	341	Transportation Equipment	5.00%	-	-	-	-	-	-		-	-	-	-
27	342	Stores Equipment	5.00%	-	-	-	-	-	-		-	-	-	-
28	343	Tools, Shop & Garage Equipment	5.00%	-	-	-	-	-	-		-	-	-	-
29	344	Laboratory Equipment	5.00%	-	-	-	-	-	-		-	-	-	-
30	345	Power Operated Equipment	5.00%	-	-	-	-	-	-		58	1,165	300	865
31	346	Communication Equipment	5.00%	-	-	-	-	-	-		-	-	-	-
32	347	Miscellaneous Equipment	5.00%	-	-	-	-	-	-		110	2,200	567	1,633
33	348	Other Tangible Plant	5.00%	-	-	-	-	-	-		-	-	-	-
34														
35		TOTAL		57,061	-	57,061	-	-	-	-	57,532	1,182,379	258,167	924,212
36														

Lago Del Oro Water Company
Test Year Ended December 31, 2012
Reconciliation of Plant Additions, Retirements and Accumulatec

Exhibit
Rejoinder Schedule B-2
Page 3.7
Witness: Jones/Bourassa

Line No.	NARUC Account No.	Description	Allowed Deprec. Rate	1990 Plant Additions	Plant Adjustments	Adjusted Plant Additions	Plant Retirements	Unbooked Plant Retirements	Adjusted Plant Retirements	Salvage A/D Only	Deprecation (Calculated)	Plant Balance	Accum. Deprec.	Net Plant
1	301	Organization Cost	0.00%	-	-	-	-	-	-		-	-	-	-
2	302	Franchise Cost	0.00%	-	-	-	-	-	-		-	-	-	-
3	303	Land and Land Rights	0.00%	-	-	-	-	-	-		-	3,200	-	3,200
4	304	Structures & Improvements	5.00%	-	-	-	-	-	-		595	11,895	1,388	10,507
5	305	Collecting & Impounding Reservoirs	5.00%	-	-	-	-	-	-		-	-	-	-
6	306	Lake, River, Canal Intakes	5.00%	-	-	-	-	-	-		-	-	-	-
7	307	Wells & Springs	5.00%	-	-	-	-	-	-		4,240	84,804	26,119	58,685
8	308	Infiltration Galleries	5.00%	-	-	-	-	-	-		-	-	-	-
9	309	Raw Water Supply Mains	5.00%	-	-	-	-	-	-		-	-	-	-
10	310	Power Generation Equipment	5.00%	-	-	-	-	-	-		-	-	-	-
11	311	Pumping Equipment	5.00%	1,055	-	1,055	-	-	-		8,280	166,118	50,734	115,383
12	320	Water Treatment Equipment	5.00%	-	-	-	-	-	-		-	-	-	-
13	320.1	Water Treatment Plants	5.00%	-	-	-	-	-	-		-	-	-	-
14	320.2	Solution Chemical Feeders	5.00%	-	-	-	-	-	-		61	1,212	141	1,071
15	330	Distribution Reservoirs & Standpipes	5.00%	-	-	-	-	-	-		-	-	-	-
16	330.1	Storage Tanks	5.00%	7,071	-	7,071	-	-	-		10,972	222,970	65,876	157,094
17	330.2	Pressure Tanks	5.00%	-	-	-	-	-	-		525	10,509	3,237	7,272
18	331	Transmission & Distribution Mains	5.00%	-	-	-	-	-	-		21,701	434,029	112,235	321,794
19	333	Services	5.00%	15,030	-	15,030	-	-	-		7,203	151,570	33,149	118,421
20	334	Meters	5.00%	16,524	-	16,524	-	-	-		2,678	61,829	9,822	52,007
21	335	Hydrants	5.00%	-	-	-	-	-	-		3,252	65,034	12,749	52,285
22	336	Backflow Prevention Devices	5.00%	-	-	-	-	-	-		-	-	-	-
23	339	Other Plant & Misc Equipment	5.00%	-	-	-	-	-	-		-	-	-	-
24	340	Office Furniture & Equipment	5.00%	3,354	-	3,354	-	-	-		360	8,878	1,716	7,162
25	340.1	Computers & Software	5.00%	-	-	-	-	-	-		-	-	-	-
26	341	Transportation Equipment	5.00%	4,250	-	4,250	-	-	-		106	4,250	106	4,144
27	342	Stores Equipment	5.00%	-	-	-	-	-	-		-	-	-	-
28	343	Tools, Shop & Garage Equipment	5.00%	-	-	-	-	-	-		-	-	-	-
29	344	Laboratory Equipment	5.00%	-	-	-	-	-	-		-	-	-	-
30	345	Power Operated Equipment	5.00%	-	-	-	-	-	-		58	1,165	358	807
31	346	Communication Equipment	5.00%	-	-	-	-	-	-		-	-	-	-
32	347	Miscellaneous Equipment	5.00%	-	-	-	-	-	-		110	2,200	677	1,523
33	348	Other Tangible Plant	5.00%	-	-	-	-	-	-		-	-	-	-
34														
35		TOTAL		47,284	-	47,284	-	-	-	-	60,141	1,229,663	318,308	911,354
36														

Lago Del Oro Water Company
Test Year Ended December 31, 2012
Reconciliation of Plant Additions, Retirements and Accumulatec

Exhibit
Rejoinder Schedule B-2
Page 3.8
Witness: Jones/Bourassa

Line No.	NARUC Account No.	Description	Allowed Deprec. Rate	1991 Plant Additions	Plant Adjustments	Adjusted Plant Additions	Plant Retirements	Unbooked Plant Retirements	Adjusted Plant Retirements	Salvage A/D Only	Deprecation (Calculated)	Plant Balance	Accum. Deprec.	Net Plant
1	301	Organization Cost	0.00%	-	-	-	-	-	-		-	-	-	-
2	302	Franchise Cost	0.00%	-	-	-	-	-	-		-	-	-	-
3	303	Land and Land Rights	0.00%	-	-	-	-	-	-		-	3,200	-	3,200
4	304	Structures & Improvements	5.00%	-	-	-	-	-	-		595	11,895	1,983	9,913
5	305	Collecting & Impounding Reservoirs	5.00%	-	-	-	-	-	-		-	-	-	-
6	306	Lake, River, Canal Intakes	5.00%	-	-	-	-	-	-		-	-	-	-
7	307	Wells & Springs	5.00%	-	-	-	-	-	-		4,240	84,804	30,359	54,445
8	308	Infiltration Galleries	5.00%	-	-	-	-	-	-		-	-	-	-
9	309	Raw Water Supply Mains	5.00%	-	-	-	-	-	-		-	-	-	-
10	310	Power Generation Equipment	5.00%	-	-	-	-	-	-		-	-	-	-
11	311	Pumping Equipment	5.00%	1,598	-	1,598	-	-	-		8,346	167,716	59,080	108,636
12	320	Water Treatment Equipment	5.00%	-	-	-	-	-	-		-	-	-	-
13	320.1	Water Treatment Plants	5.00%	-	-	-	-	-	-		-	-	-	-
14	320.2	Solution Chemical Feeders	5.00%	-	-	-	-	-	-		61	1,212	202	1,010
15	330	Distribution Reservoirs & Standpipes	5.00%	-	-	-	-	-	-		-	-	-	-
16	330.1	Storage Tanks	5.00%	-	-	-	-	-	-		11,149	222,970	77,024	145,946
17	330.2	Pressure Tanks	5.00%	-	-	-	-	-	-		525	10,509	3,763	6,746
18	331	Transmission & Distribution Mains	5.00%	1,149	-	1,149	-	-	-		21,730	435,178	133,966	301,212
19	333	Services	5.00%	17,125	-	17,125	-	-	-		8,007	168,695	41,155	127,540
20	334	Meters	5.00%	9,268	-	9,268	-	-	-		3,323	71,097	13,145	57,952
21	335	Hydrants	5.00%	-	-	-	-	-	-		3,252	65,034	16,001	49,033
22	336	Backflow Prevention Devices	5.00%	-	-	-	-	-	-		-	-	-	-
23	339	Other Plant & Misc Equipment	5.00%	-	-	-	-	-	-		-	-	-	-
24	340	Office Furniture & Equipment	5.00%	-	-	-	-	-	-		444	8,878	2,160	6,718
25	340.1	Computers & Software	5.00%	-	-	-	-	-	-		-	-	-	-
26	341	Transportation Equipment	5.00%	-	-	-	-	-	-		213	4,250	319	3,931
27	342	Stores Equipment	5.00%	-	-	-	-	-	-		-	-	-	-
28	343	Tools, Shop & Garage Equipment	5.00%	-	-	-	-	-	-		-	-	-	-
29	344	Laboratory Equipment	5.00%	-	-	-	-	-	-		-	-	-	-
30	345	Power Operated Equipment	5.00%	-	-	-	-	-	-		58	1,165	417	748
31	346	Communication Equipment	5.00%	-	-	-	-	-	-		-	-	-	-
32	347	Miscellaneous Equipment	5.00%	-	-	-	-	-	-		110	2,200	787	1,413
33	348	Other Tangible Plant	5.00%	-	-	-	-	-	-		-	-	-	-
34														
35		TOTAL		29,140	-	29,140	-	-	-	-	62,052	1,258,803	380,360	878,443
36														

Lago Del Oro Water Company
Test Year Ended December 31, 2012
Reconciliation of Plant Additions, Retirements and Accumulatec

Exhibit
Rejoinder Schedule B-2
Page 3.9
Witness: Jones/Bourassa

Line No.	NARUC Account No.	Description	Allowed Deprec. Rate	1992 Plant Additions	Plant Adjustments	Adjusted Plant Additions	Plant Retirements	Unbooked Plant Retirements	Adjusted Plant Retirements	Salvage A/D Only	Deprecation (Calculated)	Plant Balance	Accum. Deprec.	Net Plant
1	301	Organization Cost	0.00%	-	-	-	-	-	-		-	-	-	-
2	302	Franchise Cost	0.00%	-	-	-	-	-	-		-	-	-	-
3	303	Land and Land Rights	0.00%	39,408	-	39,408	-	-	-		-	42,608	-	42,608
4	304	Structures & Improvements	5.00%	-	-	-	-	-	-		595	11,895	2,577	9,318
5	305	Collecting & Impounding Reservoirs	5.00%	-	-	-	-	-	-		-	-	-	-
6	306	Lake, River, Canal Intakes	5.00%	-	-	-	-	-	-		-	-	-	-
7	307	Wells & Springs	5.00%	64,993	-	64,993	-	-	-		5,865	149,797	36,224	113,573
8	308	Infiltration Galleries	5.00%	-	-	-	-	-	-		-	-	-	-
9	309	Raw Water Supply Mains	5.00%	-	-	-	-	-	-		-	-	-	-
10	310	Power Generation Equipment	5.00%	-	-	-	-	-	-		-	-	-	-
11	311	Pumping Equipment	5.00%	-	-	-	-	-	-		8,386	167,716	67,466	100,250
12	320	Water Treatment Equipment	5.00%	-	-	-	-	-	-		-	-	-	-
13	320.1	Water Treatment Plants	5.00%	-	-	-	-	-	-		-	-	-	-
14	320.2	Solution Chemical Feeders	5.00%	-	-	-	-	-	-		61	1,212	263	949
15	330	Distribution Reservoirs & Standpipes	5.00%	-	-	-	-	-	-		-	-	-	-
16	330.1	Storage Tanks	5.00%	-	-	-	-	-	-		11,149	222,970	88,173	134,797
17	330.2	Pressure Tanks	5.00%	-	-	-	-	-	-		525	10,509	4,288	6,221
18	331	Transmission & Distribution Mains	5.00%	370,040	-	370,040	-	-	-		31,010	805,218	164,976	640,242
19	333	Services	5.00%	78,350	-	78,350	-	-	-		10,394	247,045	51,549	195,496
20	334	Meters	5.00%	8,927	-	8,927	-	-	-		3,778	80,024	16,923	63,101
21	335	Hydrants	5.00%	83,000	-	83,000	-	-	-		5,327	148,034	21,327	126,707
22	336	Backflow Prevention Devices	5.00%	-	-	-	-	-	-		-	-	-	-
23	339	Other Plant & Misc Equipment	5.00%	-	-	-	-	-	-		-	-	-	-
24	340	Office Furniture & Equipment	5.00%	-	-	-	-	-	-		444	8,878	2,604	6,274
25	340.1	Computers & Software	5.00%	-	-	-	-	-	-		-	-	-	-
26	341	Transportation Equipment	5.00%	-	-	-	-	-	-		213	4,250	531	3,719
27	342	Stores Equipment	5.00%	-	-	-	-	-	-		-	-	-	-
28	343	Tools, Shop & Garage Equipment	5.00%	-	-	-	-	-	-		-	-	-	-
29	344	Laboratory Equipment	5.00%	-	-	-	-	-	-		-	-	-	-
30	345	Power Operated Equipment	5.00%	-	-	-	-	-	-		58	1,165	475	690
31	346	Communication Equipment	5.00%	-	-	-	-	-	-		-	-	-	-
32	347	Miscellaneous Equipment	5.00%	1,384	-	1,384	-	-	-		145	3,584	932	2,652
33	348	Other Tangible Plant	5.00%	-	-	-	-	-	-		-	-	-	-
34														
35		TOTAL		646,102	-	646,102	-	-	-	-	77,948	1,904,905	458,308	1,446,597
36														

Lago Del Oro Water Company
Test Year Ended December 31, 2012
Reconciliation of Plant Additions, Retirements and Accumulatec

Exhibit
Rejoinder Schedule B-2
Page 3.10
Witness: Jones/Bourassa

Line No.	NARUC Account No.	Description	Allowed Deprec. Rate	1993 Plant Additions	Plant Adjustments	Adjusted Plant Additions	Plant Retirements	Unbooked Plant Retirements	Adjusted Plant Retirements	Salvage A/D Only	Deprecation (Calculated)	Plant Balance	Accum. Deprec.	Net Plant
1	301	Organization Cost	0.00%	-	-	-	-	-	-		-	-	-	-
2	302	Franchise Cost	0.00%	-	-	-	-	-	-		-	-	-	-
3	303	Land and Land Rights	0.00%	-	-	-	-	-	-		-	42,608	-	42,608
4	304	Structures & Improvements	5.00%	-	-	-	-	-	-		595	11,895	3,172	8,723
5	305	Collecting & Impounding Reservoirs	5.00%	-	-	-	-	-	-		-	-	-	-
6	306	Lake, River, Canal Intakes	5.00%	-	-	-	-	-	-		-	-	-	-
7	307	Wells & Springs	5.00%	-	-	-	-	-	-		7,490	149,797	43,714	106,083
8	308	Infiltration Galleries	5.00%	-	-	-	-	-	-		-	-	-	-
9	309	Raw Water Supply Mains	5.00%	-	-	-	-	-	-		-	-	-	-
10	310	Power Generation Equipment	5.00%	-	-	-	-	-	-		-	-	-	-
11	311	Pumping Equipment	5.00%	-	-	-	-	-	-		8,386	167,716	75,852	91,864
12	320	Water Treatment Equipment	5.00%	-	-	-	-	-	-		-	-	-	-
13	320.1	Water Treatment Plants	5.00%	-	-	-	-	-	-		-	-	-	-
14	320.2	Solution Chemical Feeders	5.00%	-	-	-	-	-	-		61	1,212	323	889
15	330	Distribution Reservoirs & Standpipes	5.00%	-	-	-	-	-	-		-	-	-	-
16	330.1	Storage Tanks	5.00%	-	-	-	-	-	-		11,149	222,970	99,321	123,649
17	330.2	Pressure Tanks	5.00%	-	-	-	-	-	-		525	10,509	4,814	5,695
18	331	Transmission & Distribution Mains	5.00%	-	-	-	-	-	-		40,261	805,218	205,236	599,982
19	333	Services	5.00%	25,276	-	25,276	-	-	-		12,984	272,321	64,533	207,788
20	334	Meters	5.00%	13,997	-	13,997	-	-	-		4,351	94,021	21,274	72,747
21	335	Hydrants	5.00%	2,695	-	2,695	-	-	-		7,469	150,729	28,796	121,933
22	336	Backflow Prevention Devices	5.00%	-	-	-	-	-	-		-	-	-	-
23	339	Other Plant & Misc Equipment	5.00%	-	-	-	-	-	-		-	-	-	-
24	340	Office Furniture & Equipment	5.00%	-	-	-	-	-	-		444	8,878	3,048	5,830
25	340.1	Computers & Software	5.00%	-	-	-	-	-	-		-	-	-	-
26	341	Transportation Equipment	5.00%	-	-	-	-	-	-		213	4,250	744	3,506
27	342	Stores Equipment	5.00%	-	-	-	-	-	-		-	-	-	-
28	343	Tools, Shop & Garage Equipment	5.00%	-	-	-	-	-	-		-	-	-	-
29	344	Laboratory Equipment	5.00%	-	-	-	-	-	-		-	-	-	-
30	345	Power Operated Equipment	5.00%	-	-	-	-	-	-		58	1,165	533	632
31	346	Communication Equipment	5.00%	-	-	-	-	-	-		-	-	-	-
32	347	Miscellaneous Equipment	5.00%	1,394	-	1,394	-	-	-		214	4,978	1,146	3,832
33	348	Other Tangible Plant	5.00%	-	-	-	-	-	-		-	-	-	-
34														
35		TOTAL		43,362	-	43,362	-	-	-	-	94,199	1,948,267	552,506	1,395,760
36														

Lago Del Oro Water Company
Test Year Ended December 31, 2012
Reconciliation of Plant Additions, Retirements and Accumulatec

Exhibit
Rejoinder Schedule B-2
Page 3.11
Witness: Jones/Bourassa

Line No.	NARUC Account No.	Description	Allowed Deprec. Rate	1994 Plant Additions	Plant Adjustments	Adjusted Plant Additions	Plant Retirements	Unbooked Plant Retirements	Adjusted Plant Retirements	Salvage A/D Only	Deprecation (Calculated)	Plant Balance	Accum. Deprec.	Net Plant
1	301	Organization Cost	0.00%	-	-	-	-	-	-		-	-	-	-
2	302	Franchise Cost	0.00%	-	-	-	-	-	-		-	-	-	-
3	303	Land and Land Rights	0.00%	-	-	-	-	-	-		-	42,608	-	42,608
4	304	Structures & Improvements	5.00%	-	-	-	-	-	-		595	11,895	3,767	8,128
5	305	Collecting & Impounding Reservoirs	5.00%	-	-	-	-	-	-		-	-	-	-
6	306	Lake, River, Canal Intakes	5.00%	-	-	-	-	-	-		-	-	-	-
7	307	Wells & Springs	5.00%	-	-	-	-	2,550	2,550		7,426	147,247	48,590	98,657
8	308	Infiltration Galleries	5.00%	-	-	-	-	-	-		-	-	-	-
9	309	Raw Water Supply Mains	5.00%	-	-	-	-	-	-		-	-	-	-
10	310	Power Generation Equipment	5.00%	-	-	-	-	-	-		-	-	-	-
11	311	Pumping Equipment	5.00%	96,869	-	96,869	-	36,655	36,655		9,891	227,930	49,088	178,842
12	320	Water Treatment Equipment	5.00%	-	-	-	-	-	-		-	-	-	-
13	320.1	Water Treatment Plants	5.00%	-	-	-	-	-	-		-	-	-	-
14	320.2	Solution Chemical Feeders	5.00%	-	-	-	-	-	-		61	1,212	384	828
15	330	Distribution Reservoirs & Standpipes	5.00%	-	-	-	-	-	-		-	-	-	-
16	330.1	Storage Tanks	5.00%	-	-	-	-	-	-		11,149	222,970	110,470	112,500
17	330.2	Pressure Tanks	5.00%	7,087	-	7,087	-	-	-		703	17,596	5,516	12,080
18	331	Transmission & Distribution Mains	5.00%	83,727	-	83,727	-	-	-		42,354	888,945	247,590	641,355
19	333	Services	5.00%	30,258	-	30,258	-	-	-		14,373	302,579	78,905	223,674
20	334	Meters	5.00%	13,711	-	13,711	-	-	-		5,044	107,732	26,318	81,414
21	335	Hydrants	5.00%	-	-	-	-	-	-		7,536	150,729	36,333	114,396
22	336	Backflow Prevention Devices	5.00%	-	-	-	-	-	-		-	-	-	-
23	339	Other Plant & Misc Equipment	5.00%	-	-	-	-	-	-		-	-	-	-
24	340	Office Furniture & Equipment	5.00%	-	-	-	-	-	-		444	8,878	3,492	5,386
25	340.1	Computers & Software	5.00%	-	-	-	-	-	-		-	-	-	-
26	341	Transportation Equipment	5.00%	16,114	-	16,114	-	-	-		615	20,364	1,359	19,005
27	342	Stores Equipment	5.00%	-	-	-	-	-	-		-	-	-	-
28	343	Tools, Shop & Garage Equipment	5.00%	-	-	-	-	-	-		-	-	-	-
29	344	Laboratory Equipment	5.00%	-	-	-	-	-	-		-	-	-	-
30	345	Power Operated Equipment	5.00%	42,771	-	42,771	-	-	-		1,128	43,936	1,661	42,275
31	346	Communication Equipment	5.00%	-	-	-	-	-	-		-	-	-	-
32	347	Miscellaneous Equipment	5.00%	7,858	-	7,858	-	-	-		445	12,836	1,591	11,245
33	348	Other Tangible Plant	5.00%	-	-	-	-	-	-		-	-	-	-
34														
35		TOTAL		298,396	-	298,396	-	39,205	39,205	-	101,783	2,207,457	615,064	1,592,393
36														

Lago Del Oro Water Company
Test Year Ended December 31, 2012
Reconciliation of Plant Additions, Retirements and Accumulatec

Exhibit
Rejoinder Schedule B-2
Page 3.12
Witness: Jones/Bourassa

Line No.	NARUC Account No.	Description	Allowed Deprec. Rate	1995 Plant Additions	Plant Adjustments	Adjusted Plant Additions	Plant Retirements	Unbooked Plant Retirements	Adjusted Plant Retirements	Salvage A/D Only	Deprecation (Calculated)	Plant Balance	Accum. Deprec.	Net Plant
1	301	Organization Cost	0.00%	-	-	-	-	-	-		-	-	-	-
2	302	Franchise Cost	0.00%	-	-	-	-	-	-		-	-	-	-
3	303	Land and Land Rights	0.00%	-	-	-	-	-	-		-	42,608	-	42,608
4	304	Structures & Improvements	5.00%	2,061	-	2,061	-	-	-		646	13,956	4,413	9,543
5	305	Collecting & Impounding Reservoirs	5.00%	-	-	-	-	-	-		-	-	-	-
6	306	Lake, River, Canal Intakes	5.00%	-	-	-	-	-	-		-	-	-	-
7	307	Wells & Springs	5.00%	-	-	-	-	-	-		7,362	147,247	55,953	91,294
8	308	Infiltration Galleries	5.00%	-	-	-	-	-	-		-	-	-	-
9	309	Raw Water Supply Mains	5.00%	-	-	-	-	-	-		-	-	-	-
10	310	Power Generation Equipment	5.00%	-	-	-	-	-	-		-	-	-	-
11	311	Pumping Equipment	5.00%	-	-	-	-	1,979	1,979		11,347	225,951	58,456	167,495
12	320	Water Treatment Equipment	5.00%	-	-	-	-	-	-		-	-	-	-
13	320.1	Water Treatment Plants	5.00%	-	-	-	-	-	-		-	-	-	-
14	320.2	Solution Chemical Feeders	5.00%	-	-	-	-	-	-		61	1,212	444	768
15	330	Distribution Reservoirs & Standpipes	5.00%	-	-	-	-	-	-		-	-	-	-
16	330.1	Storage Tanks	5.00%	-	-	-	-	-	-		11,149	222,970	121,618	101,352
17	330.2	Pressure Tanks	5.00%	-	-	-	-	1,979	1,979		830	15,617	4,368	11,250
18	331	Transmission & Distribution Mains	5.00%	81,453	-	81,453	-	-	-		46,484	970,398	294,074	676,324
19	333	Services	5.00%	18,139	-	18,139	-	-	-		15,582	320,718	94,488	226,230
20	334	Meters	5.00%	9,109	-	9,109	-	-	-		5,614	116,841	31,933	84,908
21	335	Hydrants	5.00%	943	-	943	-	-	-		7,560	151,672	43,893	107,779
22	336	Backflow Prevention Devices	5.00%	-	-	-	-	-	-		-	-	-	-
23	339	Other Plant & Misc Equipment	5.00%	-	-	-	-	-	-		-	-	-	-
24	340	Office Furniture & Equipment	5.00%	-	-	-	-	-	-		444	8,878	3,936	4,942
25	340.1	Computers & Software	5.00%	-	-	-	-	-	-		-	-	-	-
26	341	Transportation Equipment	5.00%	-	-	-	-	-	-		1,018	20,364	2,377	17,987
27	342	Stores Equipment	5.00%	-	-	-	-	-	-		-	-	-	-
28	343	Tools, Shop & Garage Equipment	5.00%	-	-	-	-	-	-		-	-	-	-
29	344	Laboratory Equipment	5.00%	-	-	-	-	-	-		-	-	-	-
30	345	Power Operated Equipment	5.00%	-	-	-	-	-	-		2,197	43,936	3,857	40,079
31	346	Communication Equipment	5.00%	-	-	-	-	-	-		-	-	-	-
32	347	Miscellaneous Equipment	5.00%	-	-	-	-	-	-		642	12,836	2,233	10,603
33	348	Other Tangible Plant	5.00%	-	-	-	-	-	-		-	-	-	-
34														
35		TOTAL		111,704	-	111,704	-	3,958	3,958	-	110,936	2,315,203	722,042	1,593,161
36														

Lago Del Oro Water Company
Test Year Ended December 31, 2012
Reconciliation of Plant Additions, Retirements and Accumulatec

Exhibit
Rejoinder Schedule B-2
Page 3.13
Witness: Jones/Bourassa

Line No.	NARUC Account No.	Description	Allowed Deprec. Rate	1996 Plant Additions	Plant Adjustments	Adjusted Plant Additions	Plant Retirements	Unbooked Plant Retirements	Adjusted Plant Retirements	Salvage A/D Only	Deprecation (Calculated)	Plant Balance	Accum. Deprec.	Net Plant
1	301	Organization Cost	0.00%	-	-	-	-	-	-		-	-	-	-
2	302	Franchise Cost	0.00%	-	-	-	-	-	-		-	-	-	-
3	303	Land and Land Rights	0.00%	-	-	-	-	-	-		-	42,608	-	42,608
4	304	Structures & Improvements	5.00%	-	-	-	-	-	-		698	13,956	5,111	8,845
5	305	Collecting & Impounding Reservoirs	5.00%	-	-	-	-	-	-		-	-	-	-
6	306	Lake, River, Canal Intakes	5.00%	-	-	-	-	-	-		-	-	-	-
7	307	Wells & Springs	5.00%	20,950	-	20,950	-	-	-		7,886	168,197	63,839	104,358
8	308	Infiltration Galleries	5.00%	-	-	-	-	-	-		-	-	-	-
9	309	Raw Water Supply Mains	5.00%	-	-	-	-	-	-		-	-	-	-
10	310	Power Generation Equipment	5.00%	31,449	-	31,449	-	-	-		786	31,449	786	30,662
11	311	Pumping Equipment	5.00%	7,824	-	7,824	-	-	-		11,493	233,775	69,949	163,826
12	320	Water Treatment Equipment	5.00%	-	-	-	-	-	-		-	-	-	-
13	320.1	Water Treatment Plants	5.00%	-	-	-	-	-	-		-	-	-	-
14	320.2	Solution Chemical Feeders	5.00%	-	-	-	-	-	-		61	1,212	505	707
15	330	Distribution Reservoirs & Standpipes	5.00%	-	-	-	-	-	-		-	-	-	-
16	330.1	Storage Tanks	5.00%	-	-	-	-	-	-		11,149	222,970	132,767	90,203
17	330.2	Pressure Tanks	5.00%	-	-	-	-	-	-		781	15,617	5,148	10,469
18	331	Transmission & Distribution Mains	5.00%	43,142	-	43,142	-	-	-		49,598	1,013,539	343,672	669,867
19	333	Services	5.00%	13,370	-	13,370	-	-	-		16,370	334,088	110,858	223,230
20	334	Meters	5.00%	24,481	-	24,481	-	-	-		6,454	141,322	38,387	102,936
21	335	Hydrants	5.00%	-	-	-	-	-	-		7,584	151,672	51,476	100,195
22	336	Backflow Prevention Devices	5.00%	-	-	-	-	-	-		-	-	-	-
23	339	Other Plant & Misc Equipment	5.00%	-	-	-	-	-	-		-	-	-	-
24	340	Office Furniture & Equipment	5.00%	-	-	-	-	-	-		444	8,878	4,379	4,499
25	340.1	Computers & Software	5.00%	-	-	-	-	-	-		-	-	-	-
26	341	Transportation Equipment	5.00%	16,519	-	16,519	-	-	-		1,431	36,883	3,808	33,074
27	342	Stores Equipment	5.00%	-	-	-	-	-	-		-	-	-	-
28	343	Tools, Shop & Garage Equipment	5.00%	-	-	-	-	-	-		-	-	-	-
29	344	Laboratory Equipment	5.00%	-	-	-	-	-	-		-	-	-	-
30	345	Power Operated Equipment	5.00%	742	-	742	-	-	-		2,215	44,678	6,073	38,605
31	346	Communication Equipment	5.00%	-	-	-	-	-	-		-	-	-	-
32	347	Miscellaneous Equipment	5.00%	3,164	-	3,164	-	-	-		721	16,000	2,954	13,046
33	348	Other Tangible Plant	5.00%	-	-	-	-	-	-		-	-	-	-
34														
35		TOTAL		161,640	-	161,640	-	-	-	-	117,671	2,476,844	839,713	1,637,131
36														

Lago Del Oro Water Company
Test Year Ended December 31, 2012
Reconciliation of Plant Additions, Retirements and Accumulatec

Exhibit
Rejoinder Schedule B-2
Page 3.14
Witness: Jones/Bourassa

Line No.	NARUC Account No.	Description	Allowed Deprec. Rate	1997 Plant Additions	Plant Adjustments	Adjusted Plant Additions	Plant Retirements	Unbooked Plant Retirements	Adjusted Plant Retirements	Salvage A/D Only	Deprecation (Calculated)	Plant Balance	Accum. Deprec.	Net Plant
1	301	Organization Cost	0.00%	-	-	-	-	-	-		-	-	-	-
2	302	Franchise Cost	0.00%	-	-	-	-	-	-		-	-	-	-
3	303	Land and Land Rights	0.00%	-	-	-	-	-	-		-	42,608	-	42,608
4	304	Structures & Improvements	5.00%	-	-	-	-	-	-		698	13,956	5,809	8,147
5	305	Collecting & Impounding Reservoirs	5.00%	-	-	-	-	-	-		-	-	-	-
6	306	Lake, River, Canal Intakes	5.00%	-	-	-	-	-	-		-	-	-	-
7	307	Wells & Springs	5.00%	-	-	-	-	4,392	4,392		8,300	163,805	67,747	96,058
8	308	Infiltration Galleries	5.00%	-	-	-	-	-	-		-	-	-	-
9	309	Raw Water Supply Mains	5.00%	-	-	-	-	-	-		-	-	-	-
10	310	Power Generation Equipment	5.00%	-	-	-	-	-	-		1,572	31,449	2,359	29,090
11	311	Pumping Equipment	5.00%	46,060	-	46,060	-	-	-		12,840	279,835	82,789	197,046
12	320	Water Treatment Equipment	5.00%	-	-	-	-	-	-		-	-	-	-
13	320.1	Water Treatment Plants	5.00%	-	-	-	-	-	-		-	-	-	-
14	320.2	Solution Chemical Feeders	5.00%	-	-	-	-	-	-		61	1,212	566	646
15	330	Distribution Reservoirs & Standpipes	5.00%	-	-	-	-	-	-		-	-	-	-
16	330.1	Storage Tanks	5.00%	1,895	-	1,895	-	-	-		11,196	224,865	143,962	80,903
17	330.2	Pressure Tanks	5.00%	18,089	-	18,089	-	-	-		1,233	33,706	6,381	27,324
18	331	Transmission & Distribution Mains	5.00%	117,822	-	117,822	-	-	-		53,623	1,131,361	397,295	734,066
19	333	Services	5.00%	10,660	-	10,660	-	-	-		16,971	344,748	127,829	216,919
20	334	Meters	5.00%	23,704	-	23,704	-	-	-		7,659	165,027	46,045	118,981
21	335	Hydrants	5.00%	2,570	-	2,570	-	-	-		7,648	154,242	59,124	95,117
22	336	Backflow Prevention Devices	5.00%	-	-	-	-	-	-		-	-	-	-
23	339	Other Plant & Misc Equipment	5.00%	-	-	-	-	-	-		-	-	-	-
24	340	Office Furniture & Equipment	5.00%	-	-	-	-	2,557	2,557		380	6,321	2,202	4,119
25	340.1	Computers & Software	5.00%	-	-	-	-	-	-		-	-	-	-
26	341	Transportation Equipment	5.00%	21,562	-	21,562	-	-	-		2,383	58,444	6,192	52,252
27	342	Stores Equipment	5.00%	-	-	-	-	-	-		-	-	-	-
28	343	Tools, Shop & Garage Equipment	5.00%	-	-	-	-	-	-		-	-	-	-
29	344	Laboratory Equipment	5.00%	-	-	-	-	-	-		-	-	-	-
30	345	Power Operated Equipment	5.00%	-	-	-	-	1,165	1,165		2,205	43,513	7,113	36,400
31	346	Communication Equipment	5.00%	205,637	-	205,637	-	-	-		5,141	205,637	5,141	200,496
32	347	Miscellaneous Equipment	5.00%	2,541	-	2,541	-	2,200	2,200		809	16,341	1,563	14,779
33	348	Other Tangible Plant	5.00%	-	-	-	-	-	-		-	-	-	-
34														
35		TOTAL		450,538	-	450,538	-	10,314	10,314	-	132,717	2,917,068	962,116	1,954,951
36														

Lago Del Oro Water Company
Test Year Ended December 31, 2012
Reconciliation of Plant Additions, Retirements and Accumulatec

Exhibit
Rejoinder Schedule B-2
Page 3.15
Witness: Jones/Bourassa

Line No.	NARUC Account No.	Description	Allowed Deprec. Rate	1998 Plant Additions	Plant Adjustments	Adjusted Plant Additions	Plant Retirements	Unbooked Plant Retirements	Adjusted Plant Retirements	Salvage A/D Only	Deprecation (Calculated)	Plant Balance	Accum. Deprec.	Net Plant
1	301	Organization Cost	0.00%	-	-	-	-	-	-		-	-	-	-
2	302	Franchise Cost	0.00%	-	-	-	-	-	-		-	-	-	-
3	303	Land and Land Rights	0.00%	-	-	-	-	-	-		-	42,608	-	42,608
4	304	Structures & Improvements	5.00%	47,933	-	47,933	-	228	228		1,890	61,661	7,471	54,190
5	305	Collecting & Impounding Reservoirs	5.00%	-	-	-	-	-	-		-	-	-	-
6	306	Lake, River, Canal Intakes	5.00%	-	-	-	-	-	-		-	-	-	-
7	307	Wells & Springs	5.00%	1,048,166	-	1,048,166	-	3,662	3,662		34,303	1,208,309	98,388	1,109,921
8	308	Infiltration Galleries	5.00%	-	-	-	-	-	-		-	-	-	-
9	309	Raw Water Supply Mains	5.00%	-	-	-	-	-	-		-	-	-	-
10	310	Power Generation Equipment	5.00%	-	-	-	-	-	-		1,572	31,449	3,931	27,518
11	311	Pumping Equipment	5.00%	1,739,780	-	1,739,780	-	24,558	24,558		56,872	1,995,057	115,104	1,879,953
12	320	Water Treatment Equipment	5.00%	500,188	-	500,188	-	-	-		18,757	500,188	18,757	481,431
13	320.1	Water Treatment Plants	5.00%	-	-	-	-	-	-		-	-	-	-
14	320.2	Solution Chemical Feeders	5.00%	1,501	-	1,501	-	1,212	1,212		68	1,501	(579)	2,080
15	330	Distribution Reservoirs & Standpipes	5.00%	-	-	-	-	-	-		-	-	-	-
16	330.1	Storage Tanks	5.00%	772,936	-	772,936	-	-	-		30,567	997,801	174,529	823,272
17	330.2	Pressure Tanks	5.00%	126,048	-	126,048	-	7,731	7,731		4,643	152,023	3,293	148,729
18	331	Transmission & Distribution Mains	5.00%	987,078	-	987,078	-	-	-		81,245	2,118,439	478,540	1,639,899
19	333	Services	5.00%	141,700	-	141,700	-	-	-		20,780	486,447	148,609	337,839
20	334	Meters	5.00%	25,364	-	25,364	-	-	-		8,885	190,390	54,931	135,460
21	335	Hydrants	5.00%	102,750	-	102,750	-	-	-		10,281	256,992	69,405	187,587
22	336	Backflow Prevention Devices	5.00%	-	-	-	-	-	-		-	-	-	-
23	339	Other Plant & Misc Equipment	5.00%	-	-	-	-	-	-		-	-	-	-
24	340	Office Furniture & Equipment	5.00%	5,597	-	5,597	-	-	-		456	11,918	2,658	9,260
25	340.1	Computers & Software	5.00%	-	-	-	-	-	-		-	-	-	-
26	341	Transportation Equipment	5.00%	21,440	-	21,440	29,675	-	29,675		2,716	50,209	(20,767)	70,976
27	342	Stores Equipment	5.00%	-	-	-	-	-	-		-	-	-	-
28	343	Tools, Shop & Garage Equipment	5.00%	-	-	-	-	-	-		-	-	-	-
29	344	Laboratory Equipment	5.00%	-	-	-	-	-	-		-	-	-	-
30	345	Power Operated Equipment	5.00%	-	-	-	-	-	-		2,176	43,513	9,288	34,225
31	346	Communication Equipment	5.00%	1,956	-	1,956	-	-	-		10,331	207,593	15,472	192,121
32	347	Miscellaneous Equipment	5.00%	-	-	-	-	-	-		817	16,341	2,380	13,962
33	348	Other Tangible Plant	5.00%	-	-	-	-	-	-		-	-	-	-
34														
35		TOTAL		5,522,437	-	5,522,437	29,675	37,391	67,066	-	286,360	8,372,438	1,181,410	7,191,029
36														

Lago Del Oro Water Company
Test Year Ended December 31, 2012
Reconciliation of Plant Additions, Retirements and Accumulatec

Exhibit
Rejoinder Schedule B-2
Page 3.16
Witness: Jones/Bourassa

Line No.	NARUC Account No.	Description	Allowed Deprec. Rate	1999 Plant Additions	Plant Adjustments	Adjusted Plant Additions	Plant Retirements	Unbooked Plant Retirements	Adjusted Plant Retirements	Salvage A/D Only	Deprecation (Calculated)	Plant Balance	Accum. Deprec.	Net Plant
1	301	Organization Cost	0.00%	-	-	-	-	-	-		-	-	-	-
2	302	Franchise Cost	0.00%	-	-	-	-	-	-		-	-	-	-
3	303	Land and Land Rights	0.00%	-	-	-	-	-	-		-	42,608	-	42,608
4	304	Structures & Improvements	5.00%	7,094	-	7,094	-	-	-		3,260	68,755	10,731	58,023
5	305	Collecting & Impounding Reservoirs	5.00%	-	-	-	-	-	-		-	-	-	-
6	306	Lake, River, Canal Intakes	5.00%	-	-	-	-	-	-		-	-	-	-
7	307	Wells & Springs	5.00%	-	-	-	-	-	-		60,415	1,208,309	158,803	1,049,506
8	308	Infiltration Galleries	5.00%	-	-	-	-	-	-		-	-	-	-
9	309	Raw Water Supply Mains	5.00%	-	-	-	-	-	-		-	-	-	-
10	310	Power Generation Equipment	5.00%	-	-	-	-	-	-		1,572	31,449	5,504	25,945
11	311	Pumping Equipment	5.00%	61,977	-	61,977	-	10,113	10,113		101,049	2,046,921	206,040	1,840,881
12	320	Water Treatment Equipment	5.00%	-	-	-	-	-	-		25,009	500,188	43,766	456,421
13	320.1	Water Treatment Plants	5.00%	-	-	-	-	-	-		-	-	-	-
14	320.2	Solution Chemical Feeders	5.00%	616	-	616	-	-	-		90	2,117	(488)	2,605
15	330	Distribution Reservoirs & Standpipes	5.00%	-	-	-	-	-	-		-	-	-	-
16	330.1	Storage Tanks	5.00%	-	-	-	-	-	-		49,890	997,801	224,419	773,382
17	330.2	Pressure Tanks	5.00%	-	-	-	-	-	-		7,601	152,023	10,894	141,128
18	331	Transmission & Distribution Mains	5.00%	11,019	-	11,019	-	-	-		106,197	2,129,458	584,737	1,544,720
19	333	Services	5.00%	6,400	-	6,400	-	-	-		24,482	492,847	173,091	319,756
20	334	Meters	5.00%	37,998	-	37,998	-	-	-		10,469	228,388	65,400	162,988
21	335	Hydrants	5.00%	-	-	-	-	-	-		12,850	256,992	82,255	174,737
22	336	Backflow Prevention Devices	5.00%	-	-	-	-	-	-		-	-	-	-
23	339	Other Plant & Misc Equipment	5.00%	-	-	-	-	-	-		-	-	-	-
24	340	Office Furniture & Equipment	5.00%	-	-	-	-	-	-		596	11,918	3,254	8,664
25	340.1	Computers & Software	5.00%	-	-	-	-	-	-		-	-	-	-
26	341	Transportation Equipment	5.00%	2,283	-	2,283	-	-	-		2,568	52,492	(18,200)	70,692
27	342	Stores Equipment	5.00%	-	-	-	-	-	-		-	-	-	-
28	343	Tools, Shop & Garage Equipment	5.00%	-	-	-	-	-	-		-	-	-	-
29	344	Laboratory Equipment	5.00%	-	-	-	-	-	-		-	-	-	-
30	345	Power Operated Equipment	5.00%	-	-	-	-	-	-		2,176	43,513	11,464	32,049
31	346	Communication Equipment	5.00%	11,575	-	11,575	-	-	-		10,669	219,168	26,141	193,027
32	347	Miscellaneous Equipment	5.00%	3,147	-	3,147	-	-	-		896	19,488	3,275	16,213
33	348	Other Tangible Plant	5.00%	-	-	-	-	-	-		-	-	-	-
34														
35		TOTAL		142,109	-	142,109	-	10,113	10,113	-	419,791	8,504,434	1,591,088	6,913,346
36														

Lago Del Oro Water Company
Test Year Ended December 31, 2012
Reconciliation of Plant Additions, Retirements and Accumulatec

Exhibit
Rejoinder Schedule B-2
Page 3.17
Witness: Jones/Bourassa

Line No.	NARUC Account No.	Description	Allowed Deprec. Rate	2000 Plant Additions	Plant Adjustments	Adjusted Plant Additions	Plant Retirements	Unbooked Plant Retirements	Adjusted Plant Retirements	Salvage A/D Only	Deprecation (Calculated)	Plant Balance	Accum. Deprec.	Net Plant
1	301	Organization Cost	0.00%	-	-	-	-	-	-		-	-	-	-
2	302	Franchise Cost	0.00%	-	-	-	-	-	-		-	-	-	-
3	303	Land and Land Rights	0.00%	-	-	-	-	-	-		-	42,608	-	42,608
4	304	Structures & Improvements	5.00%	-	-	-	-	-	-		3,438	68,755	14,169	54,586
5	305	Collecting & Impounding Reservoirs	5.00%	-	-	-	-	-	-		-	-	-	-
6	306	Lake, River, Canal Intakes	5.00%	-	-	-	-	-	-		-	-	-	-
7	307	Wells & Springs	5.00%	439,906	-	439,906	-	-	-		71,413	1,648,215	230,216	1,417,999
8	308	Infiltration Galleries	5.00%	-	-	-	-	-	-		-	-	-	-
9	309	Raw Water Supply Mains	5.00%	-	-	-	-	-	-		-	-	-	-
10	310	Power Generation Equipment	5.00%	-	-	-	-	-	-		1,572	31,449	7,076	24,373
11	311	Pumping Equipment	5.00%	187,269	-	187,269	-	85,000	85,000		104,903	2,149,191	225,943	1,923,247
12	320	Water Treatment Equipment	5.00%	117,195	-	117,195	-	-	-		25,498	617,383	69,264	548,119
13	320.1	Water Treatment Plants	5.00%	-	-	-	-	-	-		-	-	-	-
14	320.2	Solution Chemical Feeders	5.00%	1,580	-	1,580	-	-	-		145	3,697	(343)	4,040
15	330	Distribution Reservoirs & Standpipes	5.00%	-	-	-	-	-	-		-	-	-	-
16	330.1	Storage Tanks	5.00%	-	-	-	-	-	-		49,890	997,801	274,309	723,492
17	330.2	Pressure Tanks	5.00%	41,865	-	41,865	-	-	-		8,648	193,887	19,542	174,345
18	331	Transmission & Distribution Mains	5.00%	605,208	-	605,208	-	-	-		121,603	2,734,665	706,340	2,028,325
19	333	Services	5.00%	168,120	-	168,120	-	-	-		28,845	660,967	201,936	459,030
20	334	Meters	5.00%	22,499	-	22,499	-	-	-		11,982	250,887	77,382	173,505
21	335	Hydrants	5.00%	140,740	-	140,740	-	-	-		16,368	397,732	98,623	299,109
22	336	Backflow Prevention Devices	5.00%	-	-	-	-	-	-		-	-	-	-
23	339	Other Plant & Misc Equipment	5.00%	-	-	-	-	-	-		-	-	-	-
24	340	Office Furniture & Equipment	5.00%	1,483	-	1,483	-	619	619		617	12,782	3,253	9,529
25	340.1	Computers & Software	5.00%	-	-	-	-	-	-		-	-	-	-
26	341	Transportation Equipment	5.00%	16,960	-	16,960	-	-	-		3,049	69,451	(15,151)	84,603
27	342	Stores Equipment	5.00%	-	-	-	-	-	-		-	-	-	-
28	343	Tools, Shop & Garage Equipment	5.00%	-	-	-	-	-	-		-	-	-	-
29	344	Laboratory Equipment	5.00%	-	-	-	-	-	-		-	-	-	-
30	345	Power Operated Equipment	5.00%	-	-	-	-	-	-		2,176	43,513	13,639	29,873
31	346	Communication Equipment	5.00%	939	-	939	-	-	-		10,982	220,107	37,123	182,984
32	347	Miscellaneous Equipment	5.00%	1,600	-	1,600	-	-	-		1,014	21,088	4,290	16,799
33	348	Other Tangible Plant	5.00%	-	-	-	-	-	-		-	-	-	-
34														
35		TOTAL		1,745,362	-	1,745,362	-	85,619	85,619	-	462,143	10,164,177	1,967,612	8,196,565
36														

Lago Del Oro Water Company
Test Year Ended December 31, 2012
Reconciliation of Plant Additions, Retirements and Accumulatec

Exhibit
Rejoinder Schedule B-2
Page 3.18
Witness: Jones/Bourassa

Line No.	NARUC Account No.	Description	Allowed Deprec. Rate	2001 Plant Additions	Plant Adjustments	Adjusted Plant Additions	Plant Retirements	Unbooked Plant Retirements	Adjusted Plant Retirements	Salvage A/D Only	Deprecation (Calculated)	Plant Balance	Accum. Deprec.	Net Plant
1	301	Organization Cost	0.00%	-	-	-	-	-	-		-	-	-	-
2	302	Franchise Cost	0.00%	-	-	-	-	-	-		-	-	-	-
3	303	Land and Land Rights	0.00%	-	-	-	-	-	-		-	42,608	-	42,608
4	304	Structures & Improvements	5.00%	74,199	-	74,199	-	-	-		5,293	142,954	19,462	123,492
5	305	Collecting & Impounding Reservoirs	5.00%	-	-	-	-	-	-		-	-	-	-
6	306	Lake, River, Canal Intakes	5.00%	-	-	-	-	-	-		-	-	-	-
7	307	Wells & Springs	5.00%	-	-	-	-	-	-		82,411	1,648,215	312,627	1,335,588
8	308	Infiltration Galleries	5.00%	-	-	-	-	-	-		-	-	-	-
9	309	Raw Water Supply Mains	5.00%	-	-	-	-	-	-		-	-	-	-
10	310	Power Generation Equipment	5.00%	135,000	-	135,000	-	-	-		4,947	166,449	12,023	154,425
11	311	Pumping Equipment	5.00%	785,764	-	785,764	-	50,419	50,419		125,843	2,884,536	301,368	2,583,168
12	320	Water Treatment Equipment	5.00%	7,687	-	7,687	-	-	-		31,061	625,070	100,325	524,744
13	320.1	Water Treatment Plants	5.00%	-	-	-	-	-	-		-	-	-	-
14	320.2	Solution Chemical Feeders	5.00%	-	-	-	-	-	-		185	3,697	(158)	3,855
15	330	Distribution Reservoirs & Standpipes	5.00%	-	-	-	-	-	-		-	-	-	-
16	330.1	Storage Tanks	5.00%	190,000	-	190,000	-	-	-		54,640	1,187,801	328,949	858,852
17	330.2	Pressure Tanks	5.00%	37,264	-	37,264	-	-	-		10,626	231,151	30,168	200,983
18	331	Transmission & Distribution Mains	5.00%	370,594	-	370,594	-	-	-		145,998	3,105,259	852,339	2,252,921
19	333	Services	5.00%	216,381	-	216,381	-	-	-		38,458	877,348	240,394	636,954
20	334	Meters	5.00%	21,192	-	21,192	-	-	-		13,074	272,079	90,456	181,623
21	335	Hydrants	5.00%	41,350	-	41,350	-	-	-		20,920	439,082	119,543	319,539
22	336	Backflow Prevention Devices	5.00%	-	-	-	-	-	-		-	-	-	-
23	339	Other Plant & Misc Equipment	5.00%	-	-	-	-	-	-		-	-	-	-
24	340	Office Furniture & Equipment	5.00%	12,926	-	12,926	-	5,702	5,702		820	20,005	(1,630)	21,635
25	340.1	Computers & Software	5.00%	-	-	-	-	-	-		-	-	-	-
26	341	Transportation Equipment	5.00%	5,408	-	5,408	11,275	-	11,275		3,326	63,584	(23,101)	86,685
27	342	Stores Equipment	5.00%	-	-	-	-	-	-		-	-	-	-
28	343	Tools, Shop & Garage Equipment	5.00%	-	-	-	-	-	-		-	-	-	-
29	344	Laboratory Equipment	5.00%	-	-	-	-	-	-		-	-	-	-
30	345	Power Operated Equipment	5.00%	-	-	-	-	-	-		2,176	43,513	15,815	27,698
31	346	Communication Equipment	5.00%	5,229	-	5,229	-	-	-		11,136	225,336	48,259	177,077
32	347	Miscellaneous Equipment	5.00%	3,693	-	3,693	-	-	-		1,147	24,782	5,437	19,345
33	348	Other Tangible Plant	5.00%	-	-	-	-	-	-		-	-	-	-
34														
35		TOTAL		1,906,688	-	1,906,688	11,275	56,121	67,396	-	552,061	12,003,469	2,452,277	9,551,192
36														

Lago Del Oro Water Company
Test Year Ended December 31, 2012
Reconciliation of Plant Additions, Retirements and Accumulatec

Exhibit
Rejoinder Schedule B-2
Page 3.19
Witness: Jones/Bourassa

Line No.	NARUC Account No.	Description	Allowed Deprec. Rate	2002 Plant Additions	Plant Adjustments	Adjusted Plant Additions	Plant Retirements	Unbooked Plant Retirements	Adjusted Plant Retirements	Salvage A/D Only	Deprecation (Calculated)	Plant Balance	Accum. Deprec.	Net Plant
1	301	Organization Cost	0.00%	-	-	-	-	-	-		-	-	-	-
2	302	Franchise Cost	0.00%	-	-	-	-	-	-		-	-	-	-
3	303	Land and Land Rights	0.00%	-	-	-	-	-	-		-	42,608	-	42,608
4	304	Structures & Improvements	5.00%	11,304	-	11,304	-	-	-		7,430	154,258	26,892	127,366
5	305	Collecting & Impounding Reservoirs	5.00%	-	-	-	-	-	-		-	-	-	-
6	306	Lake, River, Canal Intakes	5.00%	-	-	-	-	-	-		-	-	-	-
7	307	Wells & Springs	5.00%	24,135	-	24,135	-	-	-		83,014	1,672,350	395,641	1,276,709
8	308	Infiltration Galleries	5.00%	-	-	-	-	-	-		-	-	-	-
9	309	Raw Water Supply Mains	5.00%	-	-	-	-	-	-		-	-	-	-
10	310	Power Generation Equipment	5.00%	-	-	-	-	-	-		8,322	166,449	20,346	146,103
11	311	Pumping Equipment	5.00%	139,863	-	139,863	-	28,437	28,437		147,012	2,995,962	419,943	2,576,019
12	320	Water Treatment Equipment	5.00%	-	-	-	-	-	-		31,253	625,070	131,579	493,491
13	320.1	Water Treatment Plants	5.00%	-	-	-	-	-	-		-	-	-	-
14	320.2	Solution Chemical Feeders	5.00%	-	-	-	-	-	-		185	3,697	27	3,670
15	330	Distribution Reservoirs & Standpipes	5.00%	-	-	-	-	-	-		-	-	-	-
16	330.1	Storage Tanks	5.00%	-	-	-	-	-	-		59,390	1,187,801	388,339	799,462
17	330.2	Pressure Tanks	5.00%	-	-	-	-	-	-		11,558	231,151	41,726	189,425
18	331	Transmission & Distribution Mains	5.00%	501,684	-	501,684	-	-	-		167,805	3,606,944	1,020,144	2,586,800
19	333	Services	5.00%	141,040	-	141,040	-	-	-		47,393	1,018,388	287,788	730,600
20	334	Meters	5.00%	35,151	-	35,151	-	-	-		14,483	307,230	104,939	202,291
21	335	Hydrants	5.00%	51,840	-	51,840	-	-	-		23,250	490,922	142,793	348,128
22	336	Backflow Prevention Devices	5.00%	-	-	-	-	-	-		-	-	-	-
23	339	Other Plant & Misc Equipment	5.00%	-	-	-	-	-	-		-	-	-	-
24	340	Office Furniture & Equipment	5.00%	4,193	-	4,193	-	-	-		1,105	24,198	(524)	24,723
25	340.1	Computers & Software	5.00%	-	-	-	-	-	-		-	-	-	-
26	341	Transportation Equipment	5.00%	15,645	-	15,645	-	-	-		3,570	79,229	(19,531)	98,759
27	342	Stores Equipment	5.00%	-	-	-	-	-	-		-	-	-	-
28	343	Tools, Shop & Garage Equipment	5.00%	-	-	-	-	-	-		-	-	-	-
29	344	Laboratory Equipment	5.00%	-	-	-	-	-	-		-	-	-	-
30	345	Power Operated Equipment	5.00%	10,235	-	10,235	-	-	-		2,432	53,748	18,247	35,502
31	346	Communication Equipment	5.00%	4,821	-	4,821	-	-	-		11,387	230,157	59,646	170,511
32	347	Miscellaneous Equipment	5.00%	729	-	729	-	1,384	1,384		1,223	24,127	5,275	18,851
33	348	Other Tangible Plant	5.00%	-	-	-	-	-	-		-	-	-	-
34														
35		TOTAL		940,639	-	940,639	-	29,821	29,821	-	620,814	12,914,288	3,043,270	9,871,018
36														

Lago Del Oro Water Company
Test Year Ended December 31, 2012
Reconciliation of Plant Additions, Retirements and Accumulatec

Exhibit
Rejoinder Schedule B-2
Page 3.20
Witness: Jones/Bourassa

Line No.	NARUC Account No.	Description	Allowed Deprec. Rate	2003 Plant Additions	Plant Adjustments	Adjusted Plant Additions	Plant Retirements	Unbooked Plant Retirements	Adjusted Plant Retirements	Salvage A/D Only	Deprecation (Calculated)	Plant Balance	Accum. Deprec.	Net Plant
1	301	Organization Cost	0.00%	-	-	-	-	-	-		-	-	-	-
2	302	Franchise Cost	0.00%	-	-	-	-	-	-		-	-	-	-
3	303	Land and Land Rights	0.00%	-	-	-	-	-	-		-	42,608	-	42,608
4	304	Structures & Improvements	5.00%	4,988	-	4,988	-	-	-		7,838	159,246	34,730	124,516
5	305	Collecting & Impounding Reservoirs	5.00%	-	-	-	-	-	-		-	-	-	-
6	306	Lake, River, Canal Intakes	5.00%	-	-	-	-	-	-		-	-	-	-
7	307	Wells & Springs	5.00%	-	-	-	-	-	-		83,618	1,872,350	479,259	1,193,091
8	308	Infiltration Galleries	5.00%	-	-	-	-	-	-		-	-	-	-
9	309	Raw Water Supply Mains	5.00%	-	-	-	-	-	-		-	-	-	-
10	310	Power Generation Equipment	5.00%	-	-	-	-	-	-		8,322	166,449	28,668	137,780
11	311	Pumping Equipment	5.00%	36,838	-	36,838	-	14,798	14,798		150,349	3,018,002	555,494	2,462,508
12	320	Water Treatment Equipment	5.00%	-	-	-	-	-	-		31,253	625,070	162,832	462,237
13	320.1	Water Treatment Plants	5.00%	-	-	-	-	-	-		-	-	-	-
14	320.2	Solution Chemical Feeders	5.00%	-	-	-	-	-	-		185	3,697	212	3,485
15	330	Distribution Reservoirs & Standpipes	5.00%	-	-	-	-	-	-		-	-	-	-
16	330.1	Storage Tanks	5.00%	-	-	-	-	-	-		59,390	1,187,801	447,729	740,072
17	330.2	Pressure Tanks	5.00%	1,152	-	1,152	-	1,132	1,132		11,558	231,171	52,152	179,019
18	331	Transmission & Distribution Mains	5.00%	97,257	-	97,257	-	-	-		182,779	3,704,201	1,202,922	2,501,278
19	333	Services	5.00%	99,345	-	99,345	-	-	-		53,403	1,117,733	341,191	776,542
20	334	Meters	5.00%	44,490	-	44,490	-	-	-		16,474	351,720	121,413	230,307
21	335	Hydrants	5.00%	9,240	-	9,240	-	-	-		24,777	500,162	167,570	332,591
22	336	Backflow Prevention Devices	5.00%	-	-	-	-	-	-		-	-	-	-
23	339	Other Plant & Misc Equipment	5.00%	-	-	-	-	-	-		-	-	-	-
24	340	Office Furniture & Equipment	5.00%	-	-	-	-	-	-		1,210	24,198	685	23,513
25	340.1	Computers & Software	5.00%	-	-	-	-	-	-		-	-	-	-
26	341	Transportation Equipment	5.00%	640	-	640	7,700	-	7,700		3,785	72,169	(23,446)	95,614
27	342	Stores Equipment	5.00%	-	-	-	-	-	-		-	-	-	-
28	343	Tools, Shop & Garage Equipment	5.00%	-	-	-	-	-	-		-	-	-	-
29	344	Laboratory Equipment	5.00%	-	-	-	-	-	-		-	-	-	-
30	345	Power Operated Equipment	5.00%	-	-	-	-	-	-		2,687	53,748	20,934	32,814
31	346	Communication Equipment	5.00%	2,154	-	2,154	-	-	-		11,562	232,311	71,208	161,103
32	347	Miscellaneous Equipment	5.00%	-	-	-	-	1,394	1,394		1,171	22,733	5,053	17,680
33	348	Other Tangible Plant	5.00%	-	-	-	-	-	-		-	-	-	-
34														
35		TOTAL		296,104	-	296,104	7,700	17,324	25,024	-	650,361	13,185,368	3,668,606	9,516,761
36														

Lago Del Oro Water Company
Test Year Ended December 31, 2012
Reconciliation of Plant Additions, Retirements and Accumulatec

Exhibit
Rejoinder Schedule B-2
Page 3.21
Witness: Jones/Bourassa

Line No.	NARUC Account No.	Description	Allowed Deprec. Rate	2004 Plant Additions	Plant Adjustments	Adjusted Plant Additions	Plant Retirements	Unbooked Plant Retirements	Adjusted Plant Retirements	Salvage A/D Only	Deprecation (Calculated)	Plant Balance	Accum. Deprec.	Net Plant
1	301	Organization Cost	0.00%	-	-	-	-	-	-		-	-	-	-
2	302	Franchise Cost	0.00%	-	-	-	-	-	-		-	-	-	-
3	303	Land and Land Rights	0.00%	-	-	-	-	-	-		-	42,608	-	42,608
4	304	Structures & Improvements	5.00%	17,805	-	17,805	-	-	-		8,407	177,051	43,137	133,914
5	305	Collecting & Impounding Reservoirs	5.00%	-	-	-	-	-	-		-	-	-	-
6	306	Lake, River, Canal Intakes	5.00%	-	-	-	-	-	-		-	-	-	-
7	307	Wells & Springs	5.00%	-	-	-	4,468	-	4,468		83,506	1,667,882	558,296	1,109,586
8	308	Infiltration Galleries	5.00%	-	-	-	-	-	-		-	-	-	-
9	309	Raw Water Supply Mains	5.00%	-	-	-	-	-	-		-	-	-	-
10	310	Power Generation Equipment	5.00%	-	-	-	-	-	-		8,322	166,449	36,991	129,458
11	311	Pumping Equipment	5.00%	163,427	-	163,427	11,819	166,408	178,227		150,530	3,003,203	527,797	2,475,405
12	320	Water Treatment Equipment	5.00%	-	-	-	-	-	-		31,253	625,070	194,086	430,984
13	320.1	Water Treatment Plants	5.00%	-	-	-	-	-	-		-	-	-	-
14	320.2	Solution Chemical Feeders	5.00%	4,778	-	4,778	-	-	-		304	8,475	516	7,959
15	330	Distribution Reservoirs & Standpipes	5.00%	-	-	-	-	-	-		-	-	-	-
16	330.1	Storage Tanks	5.00%	836	-	836	-	-	-		59,411	1,188,637	507,140	681,497
17	330.2	Pressure Tanks	5.00%	1,155	-	1,155	2,550	-	2,550		11,524	229,776	61,125	168,651
18	331	Transmission & Distribution Mains	5.00%	91,568	-	91,568	-	-	-		187,499	3,795,769	1,390,422	2,405,347
19	333	Services	5.00%	91,824	-	91,824	-	-	-		58,182	1,209,557	399,373	810,184
20	334	Meters	5.00%	41,042	-	41,042	-	-	-		18,612	392,762	140,025	252,737
21	335	Hydrants	5.00%	-	-	-	-	-	-		25,008	500,162	192,578	307,583
22	336	Backflow Prevention Devices	5.00%	-	-	-	-	-	-		-	-	-	-
23	339	Other Plant & Misc Equipment	5.00%	-	-	-	-	-	-		-	-	-	-
24	340	Office Furniture & Equipment	5.00%	2,532	-	2,532	-	-	-		1,273	26,730	1,959	24,771
25	340.1	Computers & Software	5.00%	-	-	-	-	-	-		-	-	-	-
26	341	Transportation Equipment	5.00%	27,217	-	27,217	-	-	-		4,289	99,386	(19,157)	118,543
27	342	Stores Equipment	5.00%	-	-	-	-	-	-		-	-	-	-
28	343	Tools, Shop & Garage Equipment	5.00%	-	-	-	-	-	-		-	-	-	-
29	344	Laboratory Equipment	5.00%	-	-	-	-	-	-		-	-	-	-
30	345	Power Operated Equipment	5.00%	-	-	-	-	-	-		2,687	53,748	23,622	30,127
31	346	Communication Equipment	5.00%	1,357	-	1,357	-	-	-		11,649	233,668	82,857	150,811
32	347	Miscellaneous Equipment	5.00%	-	-	-	-	7,858	7,858		940	14,874	(1,865)	16,740
33	348	Other Tangible Plant	5.00%	-	-	-	-	-	-		-	-	-	-
34														
35		TOTAL		443,542	-	443,542	18,837	174,266	193,103	-	663,399	13,435,806	4,138,902	9,296,904
36														

Lago Del Oro Water Company
Test Year Ended December 31, 2012
Reconciliation of Plant Additions, Retirements and Accumulatec

Exhibit
Rejoinder Schedule B-2
Page 3.22
Witness: Jones/Bourassa

Line No.	NARUC Account No.	Description	Allowed Deprec. Rate	2005 Plant Additions	Plant Adjustments	Adjusted Plant Additions	Plant Retirements	Unbooked Plant Retirements	Adjusted Plant Retirements	Salvage A/D Only	Deprecation (Calculated)	Plant Balance	Accum. Deprec.	Net Plant
1	301	Organization Cost	0.00%	-	-	-	-	-	-		-	-	-	-
2	302	Franchise Cost	0.00%	-	-	-	-	-	-		-	-	-	-
3	303	Land and Land Rights	0.00%	-	-	-	-	-	-		-	42,608	-	42,608
4	304	Structures & Improvements	5.00%	31,960	-	31,960	-	-	-		9,652	209,011	52,789	156,222
5	305	Collecting & Impounding Reservoirs	5.00%	-	-	-	-	-	-		-	-	-	-
6	306	Lake, River, Canal Intakes	5.00%	-	-	-	-	-	-		-	-	-	-
7	307	Wells & Springs	5.00%	-	-	-	-	-	-		83,394	1,667,882	641,691	1,026,191
8	308	Infiltration Galleries	5.00%	-	-	-	-	-	-		-	-	-	-
9	309	Raw Water Supply Mains	5.00%	-	-	-	-	-	-		-	-	-	-
10	310	Power Generation Equipment	5.00%	-	-	-	80,000	-	80,000		6,322	86,449	(36,687)	123,136
11	311	Pumping Equipment	5.00%	34,628	-	34,628	380,000	8,411	388,411		141,316	2,649,420	280,702	2,368,718
12	320	Water Treatment Equipment	5.00%	-	-	-	-	-	-		31,253	625,070	225,339	399,730
13	320.1	Water Treatment Plants	5.00%	-	-	-	-	-	-		-	-	-	-
14	320.2	Solution Chemical Feeders	5.00%	-	-	-	-	-	-		424	8,475	940	7,535
15	330	Distribution Reservoirs & Standpipes	5.00%	-	-	-	-	-	-		-	-	-	-
16	330.1	Storage Tanks	5.00%	-	-	-	-	-	-		59,432	1,188,637	566,572	622,065
17	330.2	Pressure Tanks	5.00%	-	-	-	-	-	-		11,489	229,776	72,614	157,162
18	331	Transmission & Distribution Mains	5.00%	126,917	-	126,917	-	-	-		192,961	3,922,686	1,583,383	2,339,303
19	333	Services	5.00%	55,939	-	55,939	-	-	-		61,876	1,265,496	461,249	804,247
20	334	Meters	5.00%	52,551	-	52,551	-	-	-		20,952	445,313	160,977	284,337
21	335	Hydrants	5.00%	-	-	-	-	-	-		25,008	500,162	217,586	282,575
22	336	Backflow Prevention Devices	5.00%	-	-	-	-	-	-		-	-	-	-
23	339	Other Plant & Misc Equipment	5.00%	-	-	-	-	-	-		-	-	-	-
24	340	Office Furniture & Equipment	5.00%	-	-	-	-	-	-		1,337	26,730	3,295	23,435
25	340.1	Computers & Software	5.00%	-	-	-	-	-	-		-	-	-	-
26	341	Transportation Equipment	5.00%	-	-	-	-	-	-		4,969	99,386	(14,187)	113,574
27	342	Stores Equipment	5.00%	-	-	-	-	-	-		-	-	-	-
28	343	Tools, Shop & Garage Equipment	5.00%	-	-	-	-	-	-		-	-	-	-
29	344	Laboratory Equipment	5.00%	-	-	-	-	-	-		-	-	-	-
30	345	Power Operated Equipment	5.00%	-	-	-	-	-	-		2,687	53,748	26,309	27,440
31	346	Communication Equipment	5.00%	1,940	-	1,940	-	-	-		11,732	235,608	94,589	141,019
32	347	Miscellaneous Equipment	5.00%	4,437	-	4,437	-	707	707		837	18,604	(1,736)	20,339
33	348	Other Tangible Plant	5.00%	-	-	-	-	-	-		-	-	-	-
34														
35		TOTAL		308,372	-	308,372	460,000	9,118	469,118	-	665,641	13,275,060	4,335,425	8,939,635
36														

Lago Del Oro Water Company
Test Year Ended December 31, 2012
Reconciliation of Plant Additions, Retirements and Accumulatec

Exhibit
Rejoinder Schedule B-2
Page 3.23
Witness: Jones/Bourassa

Line No.	NARUC Account No.	Description	Allowed Deprec. Rate	2006 Plant Additions	Plant Adjustments	Adjusted Plant Additions	Plant Retirements	Unbooked Plant Retirements	Adjusted Plant Retirements	Salvage A/D Only	Deprecation (Calculated)	Plant Balance	Accum. Deprec.	Net Plant
1	301	Organization Cost	0.00%	-	-	-	-	-	-		-	-	-	-
2	302	Franchise Cost	0.00%	-	-	-	-	-	-		-	-	-	-
3	303	Land and Land Rights	0.00%	-	-	-	-	-	-		-	42,608	-	42,608
4	304	Structures & Improvements	5.00%	-	-	-	-	-	-		10,451	209,011	63,239	145,771
5	305	Collecting & Impounding Reservoirs	5.00%	-	-	-	-	-	-		-	-	-	-
6	306	Lake, River, Canal Intakes	5.00%	-	-	-	-	-	-		-	-	-	-
7	307	Wells & Springs	5.00%	-	-	-	-	-	-		83,394	1,667,882	725,085	942,797
8	308	Infiltration Galleries	5.00%	-	-	-	-	-	-		-	-	-	-
9	309	Raw Water Supply Mains	5.00%	-	-	-	-	-	-		-	-	-	-
10	310	Power Generation Equipment	5.00%	-	-	-	-	-	-		4,322	86,449	(32,364)	118,813
11	311	Pumping Equipment	5.00%	3,555	-	3,555	-	4,431	4,431		132,449	2,648,544	408,721	2,239,824
12	320	Water Treatment Equipment	5.00%	-	-	-	-	-	-		31,253	625,070	256,593	368,477
13	320.1	Water Treatment Plants	5.00%	-	-	-	-	-	-		-	-	-	-
14	320.2	Solution Chemical Feeders	5.00%	-	-	-	-	-	-		424	8,475	1,364	7,111
15	330	Distribution Reservoirs & Standpipes	5.00%	-	-	-	-	-	-		-	-	-	-
16	330.1	Storage Tanks	5.00%	-	-	-	-	-	-		59,432	1,188,637	626,004	562,633
17	330.2	Pressure Tanks	5.00%	-	-	-	-	-	-		11,489	229,776	84,103	145,673
18	331	Transmission & Distribution Mains	5.00%	262,829	-	262,829	-	-	-		202,705	4,185,515	1,786,088	2,399,427
19	333	Services	5.00%	101,731	-	101,731	-	-	-		65,818	1,367,228	527,067	840,160
20	334	Meters	5.00%	21,777	-	21,777	-	-	-		22,810	467,090	183,787	283,303
21	335	Hydrants	5.00%	28,732	-	28,732	-	-	-		25,726	528,893	243,313	285,581
22	336	Backflow Prevention Devices	5.00%	-	-	-	-	-	-		-	-	-	-
23	339	Other Plant & Misc Equipment	5.00%	-	-	-	-	-	-		-	-	-	-
24	340	Office Furniture & Equipment	5.00%	-	-	-	-	-	-		1,337	26,730	4,632	22,098
25	340.1	Computers & Software	5.00%	-	-	-	-	-	-		-	-	-	-
26	341	Transportation Equipment	5.00%	-	-	-	20,165	7,233	27,398		4,284	71,988	(37,301)	109,289
27	342	Stores Equipment	5.00%	-	-	-	-	-	-		-	-	-	-
28	343	Tools, Shop & Garage Equipment	5.00%	-	-	-	-	-	-		-	-	-	-
29	344	Laboratory Equipment	5.00%	-	-	-	-	-	-		-	-	-	-
30	345	Power Operated Equipment	5.00%	-	-	-	-	742	742		2,669	53,006	28,236	24,771
31	346	Communication Equipment	5.00%	-	-	-	-	-	-		11,780	235,608	106,369	129,238
32	347	Miscellaneous Equipment	5.00%	-	-	-	-	3,164	3,164		851	15,440	(4,049)	19,488
33	348	Other Tangible Plant	5.00%	-	-	-	-	-	-		-	-	-	-
34														
35		TOTAL		418,623	-	418,623	20,165	15,569	35,734	-	671,195	13,657,949	4,970,886	8,687,063
36														

Lago Del Oro Water Company
Test Year Ended December 31, 2012
Reconciliation of Plant Additions, Retirements and Accumulatec

Exhibit
Rejoinder Schedule B-2
Page 3.24
Witness: Jones/Bourassa

Line No.	NARUC Account No.	Description	Allowed Deprec. Rate	2007 Plant Additions	Plant Adjustments	Adjusted Plant Additions	Plant Retirements	Unbooked Plant Retirements	Adjusted Plant Retirements	Salvage A/D Only	Deprecation (Calculated)	Plant Balance	Accum. Deprec.	Net Plant
1	301	Organization Cost	0.00%	-	-	-	-	-	-		-	-	-	-
2	302	Franchise Cost	0.00%	-	-	-	-	-	-		-	-	-	-
3	303	Land and Land Rights	0.00%	-	-	-	-	-	-		-	42,608	-	42,608
4	304	Structures & Improvements	5.00%	-	-	-	-	-	-		10,451	209,011	73,690	135,321
5	305	Collecting & Impounding Reservoirs	5.00%	-	-	-	-	-	-		-	-	-	-
6	306	Lake, River, Canal Intakes	5.00%	-	-	-	-	-	-		-	-	-	-
7	307	Wells & Springs	5.00%	-	-	-	-	-	-		83,394	1,667,882	808,479	859,403
8	308	Infiltration Galleries	5.00%	-	-	-	-	-	-		-	-	-	-
9	309	Raw Water Supply Mains	5.00%	-	-	-	-	-	-		-	-	-	-
10	310	Power Generation Equipment	5.00%	-	-	-	-	-	-		4,322	86,449	(28,042)	114,491
11	311	Pumping Equipment	5.00%	38,863	-	38,863	-	5,094	5,094		133,271	2,682,313	536,898	2,145,415
12	320	Water Treatment Equipment	5.00%	-	(337,223)	(337,223)	287,846	-	287,846		31,254	-	-	-
13	320.1	Water Treatment Plants	5.00%	-	-	-	-	-	-		-	-	-	-
14	320.2	Solution Chemical Feeders	5.00%	-	-	-	-	-	-		424	8,475	1,787	6,688
15	330	Distribution Reservoirs & Standpipes	5.00%	-	-	-	-	-	-		-	-	-	-
16	330.1	Storage Tanks	5.00%	-	-	-	-	-	-		59,432	1,188,637	685,436	503,201
17	330.2	Pressure Tanks	5.00%	-	-	-	-	-	-		11,489	229,776	95,592	134,184
18	331	Transmission & Distribution Mains	5.00%	28,961	-	28,961	-	-	-		210,000	4,214,476	1,996,088	2,218,388
19	333	Services	5.00%	41,767	-	41,767	-	-	-		69,406	1,408,995	596,473	812,522
20	334	Meters	5.00%	12,424	-	12,424	-	-	-		23,665	479,514	207,452	272,062
21	335	Hydrants	5.00%	-	-	-	-	-	-		26,445	528,893	269,757	259,136
22	336	Backflow Prevention Devices	5.00%	-	-	-	-	-	-		-	-	-	-
23	339	Other Plant & Misc Equipment	5.00%	-	-	-	-	-	-		-	-	-	-
24	340	Office Furniture & Equipment	5.00%	3,262	-	3,262	-	-	-		1,418	29,992	6,050	23,942
25	340.1	Computers & Software	5.00%	-	-	-	-	-	-		-	-	-	-
26	341	Transportation Equipment	5.00%	2,600	-	2,600	-	-	-		3,664	74,588	(33,636)	108,225
27	342	Stores Equipment	5.00%	-	-	-	-	-	-		-	-	-	-
28	343	Tools, Shop & Garage Equipment	5.00%	-	-	-	-	-	-		-	-	-	-
29	344	Laboratory Equipment	5.00%	-	-	-	-	-	-		-	-	-	-
30	345	Power Operated Equipment	5.00%	-	-	-	-	-	-		2,650	53,006	30,886	22,120
31	346	Communication Equipment	5.00%	-	-	-	-	-	-		11,780	235,608	118,150	117,458
32	347	Miscellaneous Equipment	5.00%	-	-	-	-	-	-		772	15,440	(3,277)	18,716
33	348	Other Tangible Plant	5.00%	-	-	-	-	-	-		-	-	-	-
34														
35		TOTAL		127,876	(337,223)	(209,347)	287,846	5,094	292,941	-	683,837	13,155,661	5,361,782	7,793,879
36														

Lago Del Oro Water Company
Test Year Ended December 31, 2012
Reconciliation of Plant Additions, Retirements and Accumulatec

Exhibit
Rejoinder Schedule B-2
Page 3.25
Witness: Jones/Bourassa

Line No.	NARUC Account No.	Description	Allowed Deprec. Rate	2008 Plant Additions	Plant Adjustments	Adjusted Plant Additions	Plant Retirements	Unbooked Plant Retirements	Adjusted Plant Retirements	Salvage A/D Only	Deprecation (Calculated)	Plant Balance	Accum. Deprec.	Net Plant
1	301	Organization Cost	0.00%	-	-	-	-	-	-		-	-	-	-
2	302	Franchise Cost	0.00%	-	-	-	-	-	-		-	-	-	-
3	303	Land and Land Rights	0.00%	-	-	-	-	-	-		-	42,608	-	42,608
4	304	Structures & Improvements	5.00%	14,275	-	14,275	-	-	-		10,807	223,286	84,497	138,789
5	305	Collecting & Impounding Reservoirs	5.00%	-	-	-	-	-	-		-	-	-	-
6	306	Lake, River, Canal Intakes	5.00%	-	-	-	-	-	-		-	-	-	-
7	307	Wells & Springs	5.00%	-	-	-	-	-	-		83,394	1,667,882	891,873	776,009
8	308	Infiltration Galleries	5.00%	-	-	-	-	-	-		-	-	-	-
9	309	Raw Water Supply Mains	5.00%	-	-	-	-	-	-		-	-	-	-
10	310	Power Generation Equipment	5.00%	-	-	-	-	-	-		4,322	86,449	(23,720)	110,168
11	311	Pumping Equipment	5.00%	22,544	-	22,544	-	10,684	10,684		134,412	2,694,173	660,626	2,033,546
12	320	Water Treatment Equipment	5.00%	-	-	-	-	-	-		-	-	-	-
13	320.1	Water Treatment Plants	5.00%	-	-	-	-	-	-		-	-	-	-
14	320.2	Solution Chemical Feeders	5.00%	-	-	-	-	-	-		424	8,475	2,211	6,264
15	330	Distribution Reservoirs & Standpipes	5.00%	-	-	-	-	-	-		-	-	-	-
16	330.1	Storage Tanks	5.00%	72,390	-	72,390	-	-	-		61,242	1,261,027	746,677	514,350
17	330.2	Pressure Tanks	5.00%	-	-	-	-	-	-		11,489	229,776	107,081	122,696
18	331	Transmission & Distribution Mains	5.00%	80,393	-	80,393	-	-	-		212,734	4,294,869	2,208,821	2,086,048
19	333	Services	5.00%	52,633	-	52,633	-	-	-		71,766	1,461,628	668,239	793,389
20	334	Meters	5.00%	-	-	-	-	-	-		23,976	479,514	231,428	248,086
21	335	Hydrants	5.00%	-	-	-	-	-	-		26,445	528,893	296,202	232,691
22	336	Backflow Prevention Devices	5.00%	-	-	-	-	-	-		-	-	-	-
23	339	Other Plant & Misc Equipment	5.00%	-	-	-	-	-	-		-	-	-	-
24	340	Office Furniture & Equipment	5.00%	3,600	-	3,600	-	3,860	3,860		1,493	29,732	3,683	26,049
25	340.1	Computers & Software	5.00%	-	-	-	-	-	-		-	-	-	-
26	341	Transportation Equipment	5.00%	-	-	-	-	-	-		3,729	74,588	(29,907)	104,495
27	342	Stores Equipment	5.00%	-	-	-	-	-	-		-	-	-	-
28	343	Tools, Shop & Garage Equipment	5.00%	-	-	-	-	-	-		-	-	-	-
29	344	Laboratory Equipment	5.00%	-	-	-	-	-	-		-	-	-	-
30	345	Power Operated Equipment	5.00%	-	-	-	-	-	-		2,650	53,006	33,536	19,470
31	346	Communication Equipment	5.00%	2,254	-	2,254	-	-	-		11,837	237,862	129,986	107,875
32	347	Miscellaneous Equipment	5.00%	12,324	-	12,324	-	-	-		1,080	27,763	(2,196)	29,960
33	348	Other Tangible Plant	5.00%	-	-	-	-	-	-		-	-	-	-
34														
35		TOTAL		260,414	-	260,414	-	14,543	14,543	-	661,799	13,401,531	6,009,038	7,392,493
36														

Lago Del Oro Water Company
Test Year Ended December 31, 2012
Reconciliation of Plant Additions, Retirements and Accumulatec

Exhibit
Rejoinder Schedule B-2
Page 3.26
Witness: Jones/Bourassa

Line No.	NARUC Account No.	Description	Allowed Deprec. Rate	2009 Plant Additions	Plant Adjustments	Adjusted Plant Additions	Plant Retirements	Unbooked Plant Retirements	Adjusted Plant Retirements	Salvage A/D Only	Deprecation (Calculated)	Plant Balance	Accum. Deprec.	Net Plant
1	301	Organization Cost	0.00%	-	-	-	-	-	-		-	-	-	-
2	302	Franchise Cost	0.00%	-	-	-	-	-	-		-	-	-	-
3	303	Land and Land Rights	0.00%	-	-	-	-	-	-		-	42,608	-	42,608
4	304	Structures & Improvements	5.00%	10,800	-	10,800	-	-	-		11,434	234,086	95,931	138,154
5	305	Collecting & Impounding Reservoirs	5.00%	-	-	-	-	-	-		-	-	-	-
6	306	Lake, River, Canal Intakes	5.00%	-	-	-	-	-	-		-	-	-	-
7	307	Wells & Springs	5.00%	-	-	-	-	-	-		83,394	1,667,882	975,267	692,615
8	308	Infiltration Galleries	5.00%	-	-	-	-	-	-		-	-	-	-
9	309	Raw Water Supply Mains	5.00%	-	-	-	-	-	-		-	-	-	-
10	310	Power Generation Equipment	5.00%	4,126	-	4,126	-	-	-		4,426	90,575	(19,294)	109,869
11	311	Pumping Equipment	5.00%	340,364	-	340,364	6,372	33,729	40,101		142,215	2,994,435	762,741	2,231,695
12	320	Water Treatment Equipment	5.00%	-	-	-	-	-	-		-	-	-	-
13	320.1	Water Treatment Plants	5.00%	-	-	-	-	-	-		-	-	-	-
14	320.2	Solution Chemical Feeders	5.00%	-	-	-	-	-	-		424	8,475	2,635	5,840
15	330	Distribution Reservoirs & Standpipes	5.00%	-	-	-	-	-	-		-	-	-	-
16	330.1	Storage Tanks	5.00%	219,099	-	219,099	-	-	-		68,529	1,480,126	815,206	664,920
17	330.2	Pressure Tanks	5.00%	-	-	-	-	-	-		11,489	229,776	118,569	111,207
18	331	Transmission & Distribution Mains	5.00%	-	-	-	-	-	-		214,743	4,294,869	2,423,565	1,871,304
19	333	Services	5.00%	59,333	-	59,333	-	-	-		74,565	1,520,961	742,803	778,158
20	334	Meters	5.00%	4,062	-	4,062	-	-	-		24,077	483,575	255,505	228,070
21	335	Hydrants	5.00%	-	-	-	-	-	-		26,445	528,893	322,647	206,247
22	336	Backflow Prevention Devices	5.00%	-	-	-	-	-	-		-	-	-	-
23	339	Other Plant & Misc Equipment	5.00%	-	-	-	-	-	-		-	-	-	-
24	340	Office Furniture & Equipment	5.00%	-	-	-	-	-	-		1,487	29,732	5,170	24,562
25	340.1	Computers & Software	5.00%	-	-	-	-	-	-		-	-	-	-
26	341	Transportation Equipment	5.00%	-	-	-	-	-	-		3,729	74,588	(26,177)	100,766
27	342	Stores Equipment	5.00%	-	-	-	-	-	-		-	-	-	-
28	343	Tools, Shop & Garage Equipment	5.00%	-	-	-	-	-	-		-	-	-	-
29	344	Laboratory Equipment	5.00%	-	-	-	-	-	-		-	-	-	-
30	345	Power Operated Equipment	5.00%	-	-	-	-	-	-		2,650	53,006	36,187	16,820
31	346	Communication Equipment	5.00%	1,368	-	1,368	-	-	-		11,927	239,230	141,914	97,317
32	347	Miscellaneous Equipment	5.00%	-	-	-	-	-	-		1,388	27,763	(808)	28,572
33	348	Other Tangible Plant	5.00%	-	-	-	-	-	-		-	-	-	-
34														
35		TOTAL		639,152	-	639,152	6,372	33,729	40,101	-	682,922	14,000,583	6,651,859	7,348,723
36														

Lago Del Oro Water Company
Test Year Ended December 31, 2012
Reconciliation of Plant Additions, Retirements and Accumulatec

Exhibit
Rejoinder Schedule B-2
Page 3.27
Witness: Jones/Bourassa

Line No.	NARUC Account No.	Description	Allowed Deprec. Rate	2010 Plant Additions	Plant Adjustments	Adjusted Plant Additions	Plant Retirements	Unbooked Plant Retirements	Adjusted Plant Retirements	Salvage A/D Only	Deprecation (Calculated)	Plant Balance	Accum. Deprec.	Net Plant
1	301	Organization Cost	0.00%	-	-	-	-	-	-		-	-	-	-
2	302	Franchise Cost	0.00%	-	-	-	-	-	-		-	-	-	-
3	303	Land and Land Rights	0.00%	-	-	-	-	-	-		-	42,608	-	42,608
4	304	Structures & Improvements	5.00%	2,872	-	2,872	-	-	-		11,776	236,958	107,708	129,250
5	305	Collecting & Impounding Reservoirs	5.00%	-	-	-	-	-	-		-	-	-	-
6	306	Lake, River, Canal Intakes	5.00%	-	-	-	-	-	-		-	-	-	-
7	307	Wells & Springs	5.00%	-	-	-	-	-	-		83,394	1,667,882	1,058,661	609,221
8	308	Infiltration Galleries	5.00%	-	-	-	-	-	-		-	-	-	-
9	309	Raw Water Supply Mains	5.00%	-	-	-	-	-	-		-	-	-	-
10	310	Power Generation Equipment	5.00%	6,871	-	6,871	-	-	-		4,701	97,446	(14,594)	112,040
11	311	Pumping Equipment	5.00%	55,402	-	55,402	-	16,392	16,392		150,697	3,033,445	897,045	2,136,400
12	320	Water Treatment Equipment	5.00%	-	-	-	-	-	-		-	-	-	-
13	320.1	Water Treatment Plants	5.00%	-	-	-	-	-	-		-	-	-	-
14	320.2	Solution Chemical Feeders	5.00%	-	-	-	-	1,593	1,593		384	6,882	1,426	5,456
15	330	Distribution Reservoirs & Standpipes	5.00%	-	-	-	-	-	-		-	-	-	-
16	330.1	Storage Tanks	5.00%	-	-	-	-	-	-		74,006	1,480,126	889,212	590,914
17	330.2	Pressure Tanks	5.00%	-	-	-	-	-	-		11,489	229,776	130,058	99,718
18	331	Transmission & Distribution Mains	5.00%	-	-	-	-	-	-		214,743	4,294,869	2,638,308	1,656,561
19	333	Services	5.00%	33,135	-	33,135	-	-	-		76,878	1,554,096	819,680	734,416
20	334	Meters	5.00%	6,275	-	6,275	-	-	-		24,336	489,850	279,840	210,010
21	335	Hydrants	5.00%	-	-	-	-	-	-		26,445	528,893	349,091	179,802
22	336	Backflow Prevention Devices	5.00%	-	-	-	-	-	-		-	-	-	-
23	339	Other Plant & Misc Equipment	5.00%	-	-	-	-	-	-		-	-	-	-
24	340	Office Furniture & Equipment	5.00%	-	-	-	-	-	-		1,487	29,732	6,656	23,076
25	340.1	Computers & Software	5.00%	-	-	-	-	-	-		-	-	-	-
26	341	Transportation Equipment	5.00%	-	-	-	-	-	-		3,729	74,588	(22,448)	97,036
27	342	Stores Equipment	5.00%	-	-	-	-	-	-		-	-	-	-
28	343	Tools, Shop & Garage Equipment	5.00%	-	-	-	-	-	-		-	-	-	-
29	344	Laboratory Equipment	5.00%	-	-	-	-	-	-		-	-	-	-
30	345	Power Operated Equipment	5.00%	2,780	-	2,780	-	-	-		2,720	55,787	38,907	16,880
31	346	Communication Equipment	5.00%	19,686	-	19,686	-	-	-		12,454	258,916	154,367	104,549
32	347	Miscellaneous Equipment	5.00%	-	-	-	-	-	-		1,388	27,763	580	27,184
33	348	Other Tangible Plant	5.00%	-	-	-	-	-	-		-	-	-	-
34														
35		TOTAL		127,022	-	127,022	-	17,985	17,985	-	700,625	14,109,619	7,334,499	6,775,120
36														

Lago Del Oro Water Company
Test Year Ended December 31, 2012
Reconciliation of Plant Additions, Retirements and Accumulatec

Exhibit
Rejoinder Schedule B-2
Page 3.28
Witness: Jones/Bourassa

Line No.	NARUC Account No.	Description	Allowed Deprec. Rate	2011 Plant Additions	Plant Adjustments	Adjusted Plant Additions	Plant Retirements	Unbooked Plant Retirements	Adjusted Plant Retirements	Salvage A/D Only	Deprecation (Calculated)	Plant Balance	Accum. Deprec.	Net Plant
1	301	Organization Cost	0.00%	-	-	-	-	-	-		-	-	-	-
2	302	Franchise Cost	0.00%	-	-	-	-	-	-		-	-	-	-
3	303	Land and Land Rights	0.00%	-	-	-	-	-	-		-	42,608	-	42,608
4	304	Structures & Improvements	5.00%	-	-	-	-	-	-		11,848	236,958	119,555	117,402
5	305	Collecting & Impounding Reservoirs	5.00%	-	-	-	-	-	-		-	-	-	-
6	306	Lake, River, Canal Intakes	5.00%	-	-	-	-	-	-		-	-	-	-
7	307	Wells & Springs	5.00%	-	-	-	-	-	-		83,394	1,667,882	1,142,055	525,827
8	308	Infiltration Galleries	5.00%	-	-	-	-	-	-		-	-	-	-
9	309	Raw Water Supply Mains	5.00%	-	-	-	-	-	-		-	-	-	-
10	310	Power Generation Equipment	5.00%	-	-	-	-	-	-		4,872	97,446	(9,721)	107,167
11	311	Pumping Equipment	5.00%	21,287	-	21,287	-	4,200	4,200		152,099	3,050,532	1,044,945	2,005,588
12	320	Water Treatment Equipment	5.00%	-	-	-	-	-	-		-	-	-	-
13	320.1	Water Treatment Plants	5.00%	-	-	-	-	-	-		-	-	-	-
14	320.2	Solution Chemical Feeders	5.00%	4,055	-	4,055	-	-	-		446	10,937	1,872	9,066
15	330	Distribution Reservoirs & Standpipes	5.00%	-	-	-	-	-	-		-	-	-	-
16	330.1	Storage Tanks	5.00%	18,040	-	18,040	-	-	-		74,457	1,498,166	963,670	534,497
17	330.2	Pressure Tanks	5.00%	1,414	-	1,414	-	-	-		11,524	231,190	141,582	89,607
18	331	Transmission & Distribution Mains	5.00%	8,972	-	8,972	-	-	-		214,968	4,303,840	2,853,276	1,450,564
19	333	Services	5.00%	25,911	-	25,911	-	-	-		78,353	1,580,007	898,032	681,975
20	334	Meters	5.00%	-	-	-	-	-	-		24,493	489,850	304,333	185,517
21	335	Hydrants	5.00%	-	-	-	-	-	-		26,445	528,893	375,536	153,357
22	336	Backflow Prevention Devices	5.00%	-	-	-	-	-	-		-	-	-	-
23	339	Other Plant & Misc Equipment	5.00%	-	-	-	-	-	-		-	-	-	-
24	340	Office Furniture & Equipment	5.00%	1,106	-	1,106	-	-	-		1,514	30,838	8,170	22,668
25	340.1	Computers & Software	5.00%	-	-	-	-	-	-		-	-	-	-
26	341	Transportation Equipment	5.00%	-	-	-	8,137	-	8,137		3,526	66,451	(27,059)	93,511
27	342	Stores Equipment	5.00%	-	-	-	-	-	-		-	-	-	-
28	343	Tools, Shop & Garage Equipment	5.00%	-	-	-	-	-	-		-	-	-	-
29	344	Laboratory Equipment	5.00%	-	-	-	-	-	-		-	-	-	-
30	345	Power Operated Equipment	5.00%	-	-	-	-	-	-		2,789	55,787	41,696	14,091
31	346	Communication Equipment	5.00%	42,104	-	42,104	-	-	-		13,998	301,021	168,366	132,655
32	347	Miscellaneous Equipment	5.00%	-	-	-	-	-	-		1,388	27,763	1,968	25,795
33	348	Other Tangible Plant	5.00%	-	-	-	-	-	-		-	-	-	-
34														
35		TOTAL		122,888	-	122,888	8,137	4,200	12,337	-	706,114	14,220,170	8,028,276	6,191,894
36														

Lago Del Oro Water Company
Test Year Ended December 31, 2012
Reconciliation of Plant Additions, Retirements and Accumulatec

Exhibit
Rejoinder Schedule B-2
Page 3.29
Witness: Jones/Bourassa

Line No.	NARUC Account No.	Description	Allowed Deprec. Rate	2012 Plant Additions	Plant Adjustments	Adjusted Plant Additions	Plant Retirements	Unbooked Plant Retirements	Adjusted Plant Retirements	Ridgeview Plant Sharing Adj.	Salvage A/D Only	Affiliate Plant A/D Adjustment	Deprecation (Calculated)	Plant Balance	Accum. Deprec.	Net Plant
1	301	Organization Cost	0.00%	-	-	-	-	-	-				-	-	-	-
2	302	Franchise Cost	0.00%	-	-	-	-	-	-				-	-	-	-
3	303	Land and Land Rights	0.00%	-	-	-	-	-	-				-	42,608	-	42,608
4	304	Structures & Improvements	5.00%	144,358	-	144,358	-	-	-	(21,634)	(11,240)	16,508	15,457	359,681	140,281	219,401
5	305	Collecting & Impounding Reservoirs	5.00%	-	-	-	-	-	-				-	-	-	-
6	306	Lake, River, Canal Intakes	5.00%	-	-	-	-	-	-				-	-	-	-
7	307	Wells & Springs	5.00%	496,541	-	496,541	-	-	-			74,481	95,808	2,164,423	1,312,344	852,079
8	308	Infiltration Galleries	5.00%	-	-	-	-	-	-				-	-	-	-
9	309	Raw Water Supply Mains	5.00%	-	-	-	-	-	-				-	-	-	-
10	310	Power Generation Equipment	5.00%	62,481	-	62,481	-	-	-	27,937	12,389	9,372	6,434	187,864	18,474	169,390
11	311	Pumping Equipment	5.00%	579,178	-	579,178	-	49,847	49,847	5,797	107,514	82,196	165,760	3,585,660	1,350,567	2,235,093
12	320	Water Treatment Equipment	5.00%	-	-	-	-	-	-				-	-	-	-
13	320.1	Water Treatment Plants	5.00%	-	-	-	-	-	-				-	-	-	-
14	320.2	Solution Chemical Feeders	5.00%	15,295	-	15,295	-	1,593	1,593		557		889	24,640	1,726	22,914
15	330	Distribution Reservoirs & Standpipes	5.00%	-	-	-	-	-	-				-	-	-	-
16	330.1	Storage Tanks	5.00%	323,184	-	323,184	-	-	-	(63,175)	(47,211)	48,478	82,988	1,758,175	1,047,925	710,250
17	330.2	Pressure Tanks	5.00%	93,850	-	93,850	-	-	-	(3,071)	(1,855)	13,387	13,906	321,969	167,020	154,949
18	331	Transmission & Distribution Mains	5.00%	1,779,965	-	1,779,965	-	-	-			747,934	259,691	6,083,805	3,860,901	2,222,904
19	333	Services	5.00%	308,734	-	308,734	-	-	-			79,977	86,719	1,888,741	1,064,728	824,013
20	334	Meters	5.00%	14,470	-	14,470	-	-	-				24,854	504,321	329,187	175,133
21	335	Hydrants	5.00%	189,964	-	189,964	-	-	-			60,726	31,194	718,857	467,456	251,401
22	336	Backflow Prevention Devices	5.00%	-	-	-	-	-	-				-	-	-	-
23	339	Other Plant & Misc Equipment	5.00%	-	-	-	-	-	-				-	-	-	-
24	340	Office Furniture & Equipment	5.00%	5,920	-	5,920	-	-	-				1,690	36,758	9,860	26,898
25	340.1	Computers & Software	5.00%	-	-	-	-	-	-				-	-	-	-
26	341	Transportation Equipment	5.00%	23,118	-	23,118	-	-	-				3,901	89,569	(23,159)	112,728
27	342	Stores Equipment	5.00%	-	-	-	-	-	-				-	-	-	-
28	343	Tools, Shop & Garage Equipment	5.00%	-	-	-	-	-	-				-	-	-	-
29	344	Laboratory Equipment	5.00%	-	-	-	-	-	-				-	-	-	-
30	345	Power Operated Equipment	5.00%	-	-	-	-	-	-				2,789	55,787	44,485	11,301
31	346	Communication Equipment	5.00%	53,658	-	53,658	-	-	-	(3,460)	(1,575)	3,529	16,392	351,219	186,713	164,506
32	347	Miscellaneous Equipment	5.00%	2,796	-	2,796	-	4,437	4,437				1,347	26,122	(1,121)	27,244
33	348	Other Tangible Plant	5.00%	-	-	-	-	-	-				-	-	-	-
34																
35		TOTAL		4,093,511	-	4,093,511	-	55,877	55,877	(57,606)	58,580	1,136,588	809,819	18,200,199	9,977,386	8,222,813
36																

Lago Del Oro Water Company
Test Year Ended December 31, 2012
Original Cost Rate Base Proforma Adjustments
Adjustment Number 2

Exhibit
Rejoinder Schedule B-2
Page 4
Witness: Bourassa

Accumulated Depreciation

Line No.	Acct. No.	Description	Adjusted Accum. Depr.	A Purchased Plant A/D Adj.	B Intentionally Left Blank	C Adjustments to Reconcile A/D to Reconstruction	D Intentionally Left Blank	E Intentionally Left Blank	Proposed Adjusted Accum. Depr.
1	301	Organization Cost	$ -	$ -	$ -	$ -			$ -
2	302	Franchise Cost	-	-	-	-			-
3	303	Land and Land Rights	-	-	-	-			-
4	304	Structures and Improvements	123,773	16,508	-	-			140,281
5	305	Collecting and Impounding Res.	-	-	-	-			-
6	306	Lake River and Other Intakes	-	-	-	-			-
7	307	Wells and Springs	1,237,863	74,481	-	-			1,312,344
8	308	Infiltration Galleries and Tunnels	-	-	-	-			-
9	309	Supply Mains	-	-	-	-			-
10	310	Power Generation Equipment	9,102	9,372	-	-			18,474
11	311	Electric Pumping Equipment	1,268,371	82,196	-	-			1,350,567
12	320	Water Treatment Equipment	-	-	-	-			-
13	320.1	Water Treatment Plant	-	-	-	-			-
14	320.2	Chemical Solution Feeders	1,726	-	-	-			1,726
15	330	Dist. Reservoirs & Standpipe	-	-	-	-			-
16	330.1	Storage tanks	999,447	48,478	-	-			1,047,925
17	330.2	Pressure Tanks	153,633	13,387	-	-			167,020
18	331	Trans. and Dist. Mains	3,112,967	747,934	-	-			3,860,901
19	333	Services	984,751	79,977	-	-			1,064,728
20	334	Meters	329,187	-	-	-			329,187
21	335	Hydrants	406,730	60,726	-	-			467,456
22	336	Backflow Prevention Devices	-	-	-	-			-
23	339	Other Plant and Misc. Equip.	-	-	-	-			-
24	340	Office Furniture and Fixtures	9,860	-	-	-			9,860
25	340.1	Computers and Software	-	-	-	-			-
26	341	Transportation Equipment	(23,159)	-	-	-			(23,159)
27	342	Stores Equipment	-	-	-	-			-
28	343	Tools and Work Equipment	-	-	-	-			-
29	344	Laboratory Equipment	-	-	-	-			-
30	345	Power Operated Equipment	44,485	-	-	-			44,485
31	346	Communications Equipment	183,184	3,529	-	-			186,713
32	347	Miscellaneous Equipment	(1,121)	0	-	-			(1,121)
33	348	Other Tangible Plant	-	-	-	-			-
34		Loss on Plant Diposal	-	-	-	-			-
35		TOTALS	$ 8,840,798	$ 1,136,588	$ -	$ -	$ -	$ -	$ 9,977,386
36		Adjusted Accumulated Depreciation per Direct							$ 8,840,798
37		Increase (decrease) in Accumulated Depreciation							$ 1,136,588
38		Adjustment to Accumulated Depreciation							$ 1,136,588

SUPPORTING SCHEDULES
B-2 pages 4.1, 4.2 and 4.3

Lago Del Oro Water Company
Test Year Ended December 31, 2012
Original Cost Rate Base Proforma Adjustments
Adjustment Number 2 - A

Exhibit
Rejoinder Schedule B-2
Page 4.1
Witness: Bourassa

Line No.			
1	A/D on Purchased Plant		
2			
3			
4	Acct.		Orginal
5	No.	Description	Cost
6	301	Organization Cost	-
7	302	Franchise Cost	-
8	303	Land and Land Rights	-
9	304	Structures and Improvements	16,508
10	305	Collecting and Impounding Res.	-
11	306	Lake River and Other Intakes	-
12	307	Wells and Springs	74,481
13	308	Infiltration Galleries and Tunnels	-
14	309	Supply Mains	-
15	310	Power Generation Equipment	9,372
16	311	Electric Pumping Equipment	82,196
17	320	Water Treatment Equipment	-
18	320.1	Water Treatment Plant	-
19	320.2	Chemical Solution Feeders	-
20	330	Dist. Reservoirs & Standpipe	-
21	330.1	Storage tanks	48,478
22	330.2	Pressure Tanks	13,387
23	331	Trans. and Dist. Mains	747,934
24	333	Services	79,977
25	334	Meters	-
26	335	Hydrants	60,726
27	336	Backflow Prevention Devices	-
28	339	Other Plant and Misc. Equip.	-
29	340	Office Furniture and Fixtures	-
30	340.1	Computers and Software	-
31	341	Transportation Equipment	-
32	342	Stores Equipment	-
33	343	Tools and Work Equipment	-
34	344	Laboratory Equipment	-
35	345	Power Operated Equipment	-
36	346	Communications Equipment	3,529
37	347	Miscellaneous Equipment	0
38	348	Other Tangible Plant	-
39		Plant Held for Future Use	-
40		TOTALS	$1,136,588
41			
42			
43	SUPPORTING SCHEDULE		
44	B-2, pages 3.1 through 3.2		
45	B-2, pages 3.4 through 3.29		

Lago Del Oro Water Company
Test Year Ended December 31, 2012
Original Cost Rate Base Proforma Adjustments
Adjustment Number 2 - B

Exhibit
Rejoinder Schedule B-2
Page 4.2
Witness: Bourassa

Line No.	
1	INTENTIONALLY LFET BLANK
2	
3	
4	
5	
6	
7	
8	
9	
10	
11	
12	
13	
14	
15	
16	
17	
18	
19	
20	
21	
22	
23	
24	
25	
26	
27	
28	
29	
30	
31	
32	
33	
34	
35	
36	
37	
38	
39	
40	
41	
42	
43	
44	
45	

Lago Del Oro Water Company
Test Year Ended December 31, 2012
Original Cost Rate Base Proforma Adjustments
Adjustment Number 2 - C

Exhibit
Rejoinder Schedule B-2
Page 4.3
Witness: Bourassa

Line No.

1 Reconciliation of A/D to A/D Reconstruction

Line	Acct. No.	Description	Adjusted Orginal Cost	B-2 Adjustments	A/D Adjusted Orginal Cost	A/D Per Reconstruction	Proposed A/D Adjustment
6	301	Organization Cost	-	-	-	-	-
7	302	Franchise Cost	-	-	-	-	-
8	303	Land and Land Rights	-	-	-	-	-
9	304	Structures and Improvements	123,773	16,508	140,281	140,281	-
10	305	Collecting and Impounding Res.	-	-	-	-	-
11	306	Lake River and Other Intakes	-	-	-	-	-
12	307	Wells and Springs	1,237,863	74,481	1,312,344	1,312,344	-
13	308	Infiltration Galleries and Tunnels	-	-	-	-	-
14	309	Supply Mains	-	-	-	-	-
15	310	Power Generation Equipment	9,102	9,372	18,474	18,474	-
16	311	Electric Pumping Equipment	1,268,371	82,196	1,350,567	1,350,567	-
17	320	Water Treatment Equipment	-	-	-	-	-
18	320.1	Water Treatment Plant	-	-	-	-	-
19	320.2	Chemical Solution Feeders	1,726	-	1,726	1,726	-
20	330	Dist. Reservoirs & Standpipe	-	-	-	-	-
21	330.1	Storage tanks	999,447	48,478	1,047,925	1,047,925	-
22	330.2	Pressure Tanks	153,633	13,387	167,020	167,020	-
23	331	Trans. and Dist. Mains	3,112,967	747,934	3,860,901	3,860,901	-
24	333	Services	984,751	79,977	1,064,728	1,064,728	-
25	334	Meters	329,187	-	329,187	329,187	-
26	335	Hydrants	406,730	60,726	467,456	467,456	-
27	336	Backflow Prevention Devices	-	-	-	-	-
28	339	Other Plant and Misc. Equip.	-	-	-	-	-
29	340	Office Furniture and Fixtures	9,860	-	9,860	9,860	-
30	340.1	Computers and Software	-	-	-	-	-
31	341	Transportation Equipment	(23,159)	-	(23,159)	(23,159)	-
32	342	Stores Equipment	-	-	-	-	-
33	343	Tools and Work Equipment	-	-	-	-	-
34	344	Laboratory Equipment	-	-	-	-	-
35	345	Power Operated Equipment	44,485	-	44,485	44,485	-
36	346	Communications Equipment	183,184	3,529	186,713	186,713	-
37	347	Miscellaneous Equipment	(1,121)	0	(1,121)	(1,121)	-
38	348	Other Tangible Plant	-	-	-	-	-
39		Loss on Plant Diposal	-		-	-	-
40		TOTALS	$ 8,840,798	$ 1,136,588	$ 9,977,386	$ 9,977,386	$ -

43 SUPPORTING SCHEDULE
44 B-2, pages 4.1 through 4.2
45 B-2, pages 3.4 through 3.29

Lago Del Oro Water Company
Test Year Ended December 31, 2012
Original Cost Rate Base Proforma Adjustments
Adjustment 3

Exhibit
Rejoinder Schedule B-2
Page 5
Witness: Bourassa

Contributions-in-Aid of Construction (CIAC) and Accumulated Amortization

Line No.		Gross CIAC	Accumulated Amortization
1			
2			
3			
4			
5	Computed balance at 12/31/2012	$ 852,693	$ 469,879
6			
7	Book balance at 12/31/2012	$ 852,693	$ 469,879
8			
9	Increase (decrease)	$ -	$ -
10			
11			
12	Adjustment to CIAC/AA CIAC	$ -	$ -
13	Label	3a	3b
14			
15			
16			
17			
18			
19	SUPPORTING SCHEDULES		
20	E-1		
21	B-2, page 5.1 to 5.4		
22			
23			
24			
25			
26			
27			
28			
29			
30			
31			
32			
33			
34			
35			
36			
37			
38			
39			
40			

Lago Del Oro Water Company
Test Year Ended December 31, 2012
Original Cost Rate Base Proforma Adjustments
Contributions-in-aid of Construction and Amortization
Adjustment 4

Exhibit
Rejoinder Schedule B-2
Page 5.1
Witness: Bourassa

Line No.		Balance 4/30/1988 Decision No. 56464	1988 (5-1-88 to 12-31-88)		1989		1990		1991	
			Additions	Balance	Additions	Balance	Additions	Balance	Additions	Balance
7	CIAC	99,158	-	99,158	-	99,158	-	99,158	-	99,158
9	Amortization Rate			5.00%		5.00%		5.00%		5.00%
10	Amortization (1/2 yr convention)			3,305		4,958		4,958		4,958
11	Accumulated Amortization	64,588		67,893		72,851		77,809		82,767
13	Net CIAC	34,570	-	31,265	-	26,307	-	21,349	-	16,391

		1992		1993		1994		1995		1996	
		Additions	Balance	Additions	Balance	Additions	Balance	Additions	Balance	Additions	Balance
22	CIAC	-	99,158	-	99,158	-	99,158	7,301	106,459	21,693	128,152
23			-		-		-		-		-
24	Amortization Rate		5.00%		5.00%		5.00%		5.00%		5.00%
25	Amortization (1/2 yr convention)		4,958		4,958		4,958		5,140		5,865
26	Accumulated Amortization		87,725		92,683		97,641		102,781		108,646
28	Net CIAC	-	11,433	-	6,475	-	1,517	7,301	3,678	21,693	19,506

Lago Del Oro Water Company
Test Year Ended December 31, 2012
Original Cost Rate Base Proforma Adjustments
Contributions-in-aid of Construction and Amortization
Adjustment 4

Exhibit
Rejoinder Schedule B-2
Page 5.2
Witness: Bourassa

Line No.		1997		1998		1999		2000		2001	
		Additions	Balance	Additions	Balance	Additions	Balance	Additions	Balance	Additions	Balance
8	CIAC	18,197	146,350	165,194	311,544	11,769	323,314	-	323,314	900	324,213
9			-		-		-		-		-
10	Amortization Rate		5.00%		5.00%		5.00%		5.00%		5.00%
11	Amortization (1/2 yr convention)		6,863		11,447		15,871		16,166		16,188
12	Accumulated Amortization		115,509		126,956		142,828		158,993		175,182
13											
14	Net CIAC	18,197	30,841	165,194	184,588	11,769	180,486	-	164,320	900	149,032
15											
16											
17		2002		2003		2004		2005		2006	
18		Additions	Balance	Additions	Balance	Additions	Balance	Additions	Balance	Additions	Balance
19											
20											
21											
22	CIAC	10,504	334,718	32,815	367,533	31,092	398,625	61,018	459,643	61,018	520,662
23			-		-		-		-		-
24	Amortization Rate		5.00%		5.00%		5.00%		5.00%		5.00%
25	Amortization (1/2 yr convention)		16,473		17,556		19,154		21,457		24,508
26	Accumulated Amortization		191,655		209,211		228,365		249,822		274,329
27											
28	Net CIAC	10,504	143,063	32,815	158,322	31,092	170,260	61,018	209,821	61,018	246,332
29											

Lago Del Oro Water Company
Test Year Ended December 31, 2012
Original Cost Rate Base Proforma Adjustments
Contributions-in-aid of Construction and Amortization
Adjustment 4

Exhibit
Rejoinder Schedule B-2
Page 5.3
Witness: Bourassa

Line No.		2007		2008		2009		2010		2011	
		Additions	Balance	Additions	Balance	Additions	Balance	Additions	Balance	Additions	Balance
8	CIAC	82,849	603,511	-	603,511	8,876	612,387	-	612,387	180,132	792,519
9			-		-		-		-		-
10	Amortization Rate		5.00%		5.00%		5.00%		5.00%		5.00%
11	Amortization (1/2 yr convention)		28,104		30,176		30,397		30,619		35,123
12	Accumulated Amortization		302,434		332,609		363,007		393,626		428,749
13											
14	Net CIAC	82,849	301,077	-	270,902	8,876	249,381	-	218,761	180,132	363,770

		2012	
		Additions	Balance
22	CIAC	60,174	852,693
23			-
24	Amortization Rate		5.00%
25	Amortization (1/2 yr convention)		41,130
26	Accumulated Amortization		469,879
27			
28	Net CIAC	60,174	382,814

Lago Del Oro Water Company
Test Year Ended December 31, 2012
Original Cost Rate Base Proforma Adjustments
Adjustment 4
Advances-in-Aid of Construction (AIAC)

Exhibit
Rejoinder Schedule B-2
Page 6
Witness: Bourassa

Line No.			
1			
2			
3			
4	Computed balance	$	297,640
5			
6	Adjusted balance at per Direct	$	297,640
7			
8	Increase (decrease)	$	-
9			
10			
11			
12			
13			
14			
15			
16			
17			
18			
19	SUPPORTING SCHEDULES		
20	E-1		
21	Work papers		
22			
23			
24			
25			
26			
27			
28			
29			
30			
31			
32			
33			
34			
35			

Lago Del Oro Water Company
Test Year Ended December 31, 2012
Original Cost Rate Base Proforma Adjustments
Adjustment 5

Exhibit
Rejoinder Schedule B-2
Page 7.0
Witness: Bourassa

Deferred Income Tax as of December 31, 2012

Line No.			Water & Sewer Adjusted Book Value	Water & Sewer Tax Value	Probability of Realization of Future Tax Benefit	Deductible TD (Taxable TD) Expected to be Realized	Effective Tax Rate	Future Tax Asset Current	Future Tax Asset Non Current	Future Tax Liability Current	Future Tax Liability Non Current
6		Plant-in-Service	$ 18,200,198 [1]								
7		Accum. Deprec.	(9,977,386) [1]								
8		CIAC	(591,162) [3]								
9	Fed.	Fixed Assets	$ 7,631,650	$ 6,887,424 [2]	100.0%	$ (744,227)	31.30%		-		(232,913)
11	State	Fixed Assets	$ 7,631,650	$ 9,019,802 [2]	100.0%	$ 1,388,151	6.50%		90,230		-
13	Fed &State	AIAC		201,146 [4]	100.0%	$ 201,146 [4]	37.80%		$ 76,025		
15								$ -	$ 166,255	$ -	$ (232,913)
17		Net Asset (Liability)						$ (66,658)			
20		Adjusted DIT Asset (Liability) per Direct						$ (279,359)			
22		Adjustment to DIT						$ (212,701)			

29 Footnotes - See page 7.1

Lago Del Oro Water Company
Test Year Ended December 31, 2012
Original Cost Rate Base Proforma Adjustments
Adjustment 5

Exhibit
Rejoinder Schedule B-2
Page 7.1
Witness: Bourassa

Line No.		FEDERAL			STATE		
1	[1] **Per adjusted book balances**						
2	**2 Computation of Net Tax Value December 31, 2012**						
3	Based on 2012 Tax Depreciation report (December 31, 2012)						
4	Unadjusted Cost at December 31, 2012 per federal and state tax depr. report	$ 18,184,849			$ 18,184,849		
5	Reconciling Items not on tax report:						
6	Proposed Retirements per Direct	(620,248)			(620,248)		
7	Rebuttal proposed purchased plant adjustment	(1,136,588)			(1,136,588)		
8					-		
9					-		
10					-		
11	Net Unadjusted Cost tax Basis at December 31, 2012			$ 16,428,014			$ 16,428,014
12							
13	Reductions						
14	Basis Reduction 2012 and Prior Years per federal and state tax depr. report	$ (4,114,801)			$ (1,676,786)		
15	Accumulated Depreciation 2012 and prior per federal and state tax depr. report	$ (6,614,331)			$ (6,919,967)		
16	Proposed Retirements per Direct	620,248			620,248		
17	Bonus Depreciation adjustment related to rebuttal adjusted purchased plant	568,294			568,294		
18					-		
19					-		
20							
21				(9,540,590)			(7,408,212)
22	Net Reductions through December 31, 2012			$ 6,887,424			$ 9,019,802
23	Net tax value of plant-in-service at December 31. 2012						
24							
25	[3] **CIAC (including impact of change to probability of realization)**						
26	Gross CIAC per adjusted book balances		$ 852,693				
27	CIAC reductions/addtions						
28	A.A per adjusted book balances	$ (469,879)					
29		-					
30			(469,879)				
31	Net CIAC before unrealized AIAC			$ 382,814			
32							
33	Unrealized AIAC Component						
34	AIAC per adjusted book balances		$ 297,640				
35	Adjusted Net AIAC (see footnote 5 below)		70.0%				
36	Unrealized AIAC Component % (1-Realized AIAC Component)			$ 208,348			
37				$ 591,162			
38	Total realizable CIAC						
39							
40	[4] **AIAC (including impact of change in probability of realization)**						
41	AIAC per adjusted book balances			$ 297,640			
42	Less: Unrealized AIAC (from Note 3, above)			$ (208,348)			
43							
44	Subtotal			$ 89,292			
45	Meter and Service Line Installation Charges per adjusted book balances			111,854			
46	Total realizable AIAC			$ 201,146			
47							

Lago Del Oro Water Company
Test Year Ended December 31, 2012
Computation of Working Capital

Exhibit
Rejoinder Schedule B-5
Page 1
Witness: Bourassa

Line No.			
1	Cash Working Capital (1/8 of Allowance		
2	Operation and Maintenance Expense)	$	78,175
3	Pumping Power (1/24 of Pumping Power)		-
4	Purchased Water (1/24 of Purchased Water)		18,451
5	Prepaid Expenses		
6			
7			
8			
9	Total Working Capital Allowance	$	96,626
10			
11			
12	Working Capital Requested	$	-
13			
14			
15			
16			
17			Adjusted Test Year
18	Total Operating Expense	$	1,937,076
19	Less:		
20	Income Tax	$	(85,942)
21	Property Tax		93,667
22	Depreciation		861,127
23	Purchased Water		442,823
24	Pumping Power		-
25	Allowable Expenses	$	625,401
26	1/8 of allowable expenses	$	78,175
27			
28			
29	SUPPORTING SCHEDULES:	RECAP SCHEDULES:	
30	E-1	B-1	
31			
32			
33			
34			
35			
36			
37			
38			
39			
40			

Lago Del Oro Water Company
Test Year Ended December 31, 2012
Income Statement

Exhibit
Rejoinder Schedule C-1
Page 1
Witness: Bourassa

Line No.		Test Year Adjusted Results	Adjustment	Rejoinder Test Year Adjusted Results	Proposed Rate Increase	Rejoinder Adjusted with Rate Increase
1	**Revenues**					
2	Metered Water Revenues	$ 1,865,121	$ -	$ 1,865,121	$ 1,148,253	$ 3,013,374
3	Unmetered Water Revenues	-	-	-		-
4	Other Water Revenues	17,117	-	17,117		17,117
5		$ 1,882,238	$ -	$ 1,882,238	$ 1,148,253	$ 3,030,491
6	**Operating Expenses**					
7	Salaries and Wages	$ 169,991	-	$ 169,991		$ 169,991
8	Employee Pensions and Benefits	35,228	-	35,228		35,228
9	Purchased Water	-	-	-		-
10	Purchased Power	442,823	-	442,823		442,823
11	Fuel For Power Production	-	-	-		-
12	Chemicals	21,969	-	21,969		21,969
13	Materials and Supplies	80,299	-	80,299		80,299
14	Office Supplies and Expense	66,431	-	66,431		66,431
15	Contractual Services - Engineering	-	-	-		-
16	Contractual Services - Accounting	533	8,000	8,533		8,533
17	Contractual Services - Legal	166	-	166		166
18	Contractual Services - Other	57,785	-	57,785		57,785
19	Contractual Services - Testing	22,433	5,392	27,825		27,825
20	Rents	9,435	-	9,435		9,435
21	Transportation Expenses	42,440	-	42,440		42,440
22	Insurance - Vehicle	5,165	-	5,165		5,165
23	Insurance - General Liability	20,083	-	20,083		20,083
24	Reg. Comm. Exp. - Other	855	-	855		855
25	Reg. Comm. Exp. - Rate Case	55,000	-	55,000		55,000
26	Bad Debt Expense	4,922	-	4,922		4,922
27	Miscellaneous Expense	19,274	-	19,274		19,274
28	Depreciation and Amortization Expense	861,127	-	861,127		861,127
29	Taxes Other Than Income	-	-	-		-
30	Property Taxes	98,597	(4,930)	93,667	19,635	113,302
31	Income Tax	(128,849)	42,906	(85,942)	426,572	340,629
32			-	-		-
33	**Total Operating Expenses**	$ 1,885,708	$ 51,368	$ 1,937,076	$ 446,207	$ 2,383,283
34	**Operating Income**	$ (3,470)	$ (51,368)	$ (54,838)	$ 702,046	$ 647,208
35	**Other Income (Expense)**					
36	Interest Income	-	-	-		-
37	Other income	-	-	-		-
38	Interest Expense	(204,322)	106,088	(98,234)		(98,234)
39	Other Expense	-	-	-		-
40		-	-	-		-
41	**Total Other Income (Expense)**	$ (204,322)	$ 106,088	$ (98,234)	$ -	$ (98,234)
42	**Net Profit (Loss)**	$ (207,792)	$ 54,720	$ (153,072)	$ 702,046	$ 548,975
43						
44	SUPPORTING SCHEDULES:				RECAP SCHEDULES:	
45	C-1, page 2				A-1	
46	E-2					
47						

Lago Del Oro Water Company
Test Year Ended December 31, 2012
Income Statement

Exhibit
Rejoinder Schedule C-1
Page 2.1
Witness: Bourassa

Line No.		LABEL>>>>> Test Year Adjusted Results	1 Depreciation	2 Property Taxes	3 Staff Water Testing Adjustment	4 Financial Audit Costs	5 Water Testing
1	**Revenues**						
2	Metered Water Revenues	$ 1,865,121					
3	Unmetered Water Revenues	-					
4	Other Water Revenues	17,117					
5		$ 1,882,238	$ -	$ -	$ -	$ -	$ -
6	**Operating Expenses**						
7	Salaries and Wages	$ 169,991					
8	Employee Pensions and Benefits	35,228					
9	Purchased Water	-					
10	Purchased Power	442,823					
11	Fuel For Power Production	-					
12	Chemicals	21,969					
13	Materials and Supplies	80,299					
14	Office Supplies and Expense	66,431					
15	Contractual Services - Engineering	-					
16	Contractual Services - Accounting	533				8,000	
17	Contractual Services - Legal	166					
18	Contractual Services - Other	57,785					
19	Contractual Services - Testing	22,433			(548)		5,940
20	Rents	9,435					
21	Transportation Expenses	42,440					
22	Insurance - Vehicle	5,165					
23	Insurance - General Liability	20,083					
24	Reg. Comm. Exp. - Other	855					
25	Reg. Comm. Exp. - Rate Case	55,000					
26	Bad Debt Expense	4,922					
27	Miscellaneous Expense	19,274					
28	Depreciation and Amortization Expense	861,127	-				
29	Taxes Other Than Income	-					
30	Property Taxes	98,597		(4,930)			
31	Income Tax	(128,849)					
32							
33	**Total Operating Expenses**	$ 1,885,708	$ -	$ (4,930)	$ (548)	$ 8,000	$ 5,940
34	**Operating Income**	$ (3,470)	$ -	$ 4,930	$ 548	$ (8,000)	$ (5,940)
35	**Other Income (Expense)**						
36	Interest Income	-					
37	Other income	-					
38	Interest Expense	(204,322)					
39	Other Expense	-					
40		-					
41	**Total Other Income (Expense)**	$ (204,322)	$ -	$ -	$ -	$ -	$ -
42	**Net Profit (Loss)**	$ (207,792)	$ -	$ 4,930	$ 548	$ (8,000)	$ (5,940)
43							
44	SUPPORTING SCHEDULES:						
45	C-2						
46	E-2						

Lago Del Oro Water Company
Test Year Ended December 31, 2012
Income Statement

Exhibit
Rejoinder Schedule C-1
Page 2.2
Witness: Bourassa

Line No.		6 Interest Synch.	7 Income Taxes	8 Intentionally Left Blank	9 Intentionally Left Blank	10 Intentionally Left Blank	Rebuttal Test Year Adjusted Results	Proposed Rate Increase	Rejoinder Adjusted with Rate Increase
1	**Revenues**								
2	Metered Water Revenues						$ 1,865,121	$ 1,148,253	$ 3,013,374
3	Unmetered Water Revenues						-		-
4	Other Water Revenues						17,117		17,117
5		$ -	$ -	$ -	$ -	$ -	$ 1,882,238	$ 1,148,253	$ 3,030,491
6	**Operating Expenses**								
7	Salaries and Wages						$ 169,991		$ 169,991
8	Employee Pensions and Benefits						35,228		35,228
9	Purchased Water						-		-
10	Purchased Power						442,823		442,823
11	Fuel For Power Production						-		-
12	Chemicals						21,969		21,969
13	Materials and Supplies						80,299		80,299
14	Office Supplies and Expense						66,431		66,431
15	Contractual Services - Engineering						-		-
16	Contractual Services - Accounting						8,533		8,533
17	Contractual Services - Legal						166		166
18	Contractual Services - Other						57,785		57,785
19	Contractual Services - Testing						27,825		27,825
20	Rents						9,435		9,435
21	Transportation Expenses						42,440		42,440
22	Insurance - Vehicle						5,165		5,165
23	Insurance - General Liability						20,083		20,083
24	Reg. Comm. Exp. - Other						855		855
25	Reg. Comm. Exp. - Rate Case						55,000		55,000
26	Bad Debt Expense						4,922		4,922
27	Miscellaneous Expense						19,274		19,274
28	Depreciation and Amortization Expense						861,127		861,127
29	Taxes Other Than Income						-		-
30	Property Taxes						93,667	19,635	113,302
31	Income Tax		42,906				(85,942)	426,572	340,629
32									
33	**Total Operating Expenses**	$ -	$ 42,906	$ -	$ -	$ -	$ 1,937,076	$ 446,207	$ 2,383,283
34	**Operating Income**	$ -	$ (42,906)	$ -	$ -	$ -	$ (54,838)	$ 702,046	$ 647,208
35	**Other Income (Expense)**								
36	Interest Income						-		-
37	Other income						-		-
38	Interest Expense	106,088					(98,234)		(98,234)
39	Other Expense						-		-
40							-		-
41	**Total Other Income (Expense)**	$ 106,088	$ -	$ -	$ -	$ -	$ (98,234)	$ -	$ (98,234)
42	**Net Profit (Loss)**	$ 106,088	$ (42,906)	$ -	$ -	$ -	$ (153,072)	$ 702,046	$ 548,975
43									
44	SUPPORTING SCHEDULES:								RECAP SCHEDULES:
45	C-2								C-1, page 1
46	E-2								

Lago Del Oro Water Company
Test Year Ended December 31, 2012
Adjustments to Revenues and Expenses

Exhibit
Rejoinder Schedule C-2
Page 1
Witness: Bourassa

Adjustments to Revenues and Expenses

Line No.		1 Depreciation	2 Property Taxes	3 Water Testing Expense	4 Outside Financial Audit Costs	5 Additional Water Testing Expense	6 Interest Synch.	Subtotal
1								
2								
3								
4	Revenues					-	-	-
5								
6	Expenses	-	(4,930)	(548)	8,000	5,940	-	8,462
7								
8	Operating							
9	Income	-	4,930	548	(8,000)	(5,940)	-	(8,462)
10								
11	Interest							
12	Expense						106,088	106,088
13	Other							
14	Income /							
15	Expense							-
16								
17	Net Income	-	4,930	548	(8,000)	(5,940)	106,088	97,626
18								
19								

Adjustments to Revenues and Expenses

		7 Income Taxes	8 Intentionally Left Blank	9 Intentionally Left Blank	10 Intentionally Left Blank	11 Intentionally Left Blank	12 Intentionally Left Blank	Subtotal
20								
21								
22								
23								
24								
25	Revenues							-
26								
27	Expenses	42,906	-	-	-	-	-	51,368
28								
29	Operating							
30	Income	(42,906)	-	-	-	-	-	(51,368)
31								
32	Interest							
33	Expense	-						106,088
34	Other							
35	Income /							
36	Expense							-
37								
38	Net Income	(42,906)	-	-	-	-	-	54,720
39								
40								

Lago Del Oro Water Company
Test Year Ended December 31, 2012
Adjustments to Revenues and Expenses
Adjustment Number 1

Exhibit
Rejoinder Schedule C-2
Page 2
Witness: Bourassa

Depreciation Expense

Line No.	Acct. No.	Description	Original Cost	Non-Depr. or Fully Depr. Plant	Adjusted Original Cost	Proposed Rates	Depreciation Expense
1							
2							
5	301	Organization Cost	$ -		$ -	0.00%	$ -
6	302	Franchise Cost	-		-	0.00%	-
7	303	Land and Land Rights	42,608	(42,608)	-	0.00%	-
8	304	Structures and Improvements	359,681		359,681	3.33%	11,977
9	305	Collecting and Impounding Res.	-		-	2.50%	-
10	306	Lake River and Other Intakes	-		-	2.50%	-
11	307	Wells and Springs	2,164,423		2,164,423	3.33%	72,075
12	308	Infiltration Galleries and Tunnels	-		-	6.67%	-
13	309	Supply Mains	-		-	2.00%	-
14	310	Power Generation Equipment	187,864		187,864	5.00%	9,393
15	311	Electric Pumping Equipment	3,585,660		3,585,660	12.50%	448,207
16	320	Water Treatment Equipment	-		-	3.33%	-
17	320.1	Water Treatment Plant	-		-	3.33%	-
18	320.2	Chemical Solution Feeders	24,640		24,640	20.00%	4,928
19	330	Dist. Reservoirs & Standpipe	-		-	2.22%	-
20	330.1	Storage tanks	1,758,175		1,758,175	2.22%	39,031
21	330.2	Pressure Tanks	321,969		321,969	5.00%	16,098
22	331	Trans. and Dist. Mains	6,083,805		6,083,805	2.00%	121,676
23	333	Services	1,888,741		1,888,741	3.33%	62,895
24	334	Meters	504,321		504,321	8.33%	42,010
25	335	Hydrants	718,857		718,857	2.00%	14,377
26	336	Backflow Prevention Devices	-		-	6.67%	-
27	339	Other Plant and Misc. Equip.	-		-	6.67%	-
28	340	Office Furniture and Fixtures	36,758		36,758	6.67%	2,452
29	340.1	Computers and Software	-		-	20.00%	-
30	341	Transportation Equipment	89,569		89,569	20.00%	17,914
31	342	Stores Equipment	-		-	4.00%	-
32	343	Tools and Work Equipment	-		-	5.00%	-
33	344	Laboratory Equipment	-		-	10.00%	-
34	345	Power Operated Equipment	55,787		55,787	5.00%	2,789
35	346	Communications Equipment	351,219		351,219	10.00%	35,122
36	347	Miscellaneous Equipment	26,122		26,122	10.00%	2,612
37	348	Other Tangible Plant	-		-	10.00%	-
38		TOTALS	$ 18,200,199	$ (42,608)	$ 18,157,591		$ 903,558
39							
40					Gross CIAC	Amort. Rate	
41	Less: Amortization of Contributions				$ 852,693	4.9762%	$ (42,432)
42							-
43							-
44					$ -		$ (42,432)
45	Total Depreciation Expense						$ 861,127
46							
47	Adjusted Test Year Depreciation Expense						861,127
48							
49	Increase (decrease) in Depreciation Expense						$ -
50							
51	Adjustment to Revenues and/or Expenses						$ -
52							
53	SUPPORTING SCHEDULE						
54	B-2, page 3				*Fully Depreciated/Amortized		

Lago Del Oro Water Company
Test Year Ended December 31, 2012
Adjustment to Revenues and Expenses
Adjustment Number 2

Exhibit
Rejoinder Schedule C
Page 3
Witness: Bourassa

Property Taxes

Line No.	DESCRIPTION	Test Year as adjusted	Company Recommended
1	Company Adjusted Test Year Revenues	$ 1,882,238	$ 1,882,238
2	Weight Factor	2	2
3	Subtotal (Line 1 * Line 2)	3,764,476	3,764,476
4	Company Recommended Revenue	1,882,238	3,030,491
5	Subtotal (Line 4 + Line 5)	5,646,713	6,794,967
6	Number of Years	3	3
7	Three Year Average (Line 5 / Line 6)	1,882,238	2,264,989
8	Department of Revenue Mutilplier	2	2
9	Revenue Base Value (Line 7 * Line 8)	3,764,476	4,529,978
10	Plus: 10% of CWIP (intentionally excluded)	-	-
11	Less: Net Book Value of Licensed Vehicles	112,728	112,728
12	Full Cash Value (Line 9 + Line 10 - Line 11)	3,651,748	4,417,250
13	Assessment Ratio	19.0%	19.0%
14	Assessment Value (Line 12 * Line 13)	693,832	839,278
15	Composite Property Tax Rate - Obtained from ADOR	13.5000%	13.5000%
16	Test Year Adjusted Property Tax Expense (Line 14 * Line 15)	$ 93,667	$ 113,302
17	Tax on Parcels	-	-
18	Total Property Taxes (Line 16 + Line 17)	$ 93,667	
19	Test Year Property Taxes	$ 98,597	
20	Adjustment to Test Year Property Taxes (Line 18 - Line 19)	**$ (4,930)**	
21			
22	Property Tax on Company Recommended Revenue (Line 16 + Line 17)		$ 113,302
23	Company Test Year Adjusted Property Tax Expense (Line 18)		$ 93,667
24	Increase in Property Tax Due to Increase in Revenue Requirement		**$ 19,635**
25			
26	Increase in Property Tax Due to Increase in Revenue Requirement (Line 24)		$ 19,635
27	Increase in Revenue Requirement		$ 1,148,253
28	Increase in Property Tax Per Dollar Increase in Revenue (Line 26 / Line 27)		1.71000%
29			
30			
31			
32			
33			
34			
35			
36			
37			
38			
39			
40			

Lago Del Oro Water Company
Test Year Ended December 31, 2012
Adjustment to Revenues and Expenses
Adjustment Number 3

Exhibit
Rejoinder Schedule C-2
Page 4
Witness: Bourassa

Water Testing Expense

Line No.			
1			
2			
3	Staff Recommended Water Testing Expense	$	21,885
4			
5	Adjusted Texst Year Water Testing Expense	$	22,433
6	Increase(decrease) Rate Case Expense	$	(548)
7			
8	Adjustment to Revenue and/or Expense	$	(548)
9			
10			
11			
12			
13			
14			
15			
16			
17			
18			
19	Reference		
20	Staf Adjustment 1		

Lago Del Oro Water Company
Test Year Ended December 31, 2012
Adjustment to Revenues and Expenses
Adjustment Number 4

Exhibit
Rejoinder Schedule C-2
Page 5
Witness: Bourassa

Outside Audit Costs

Line No.			
1			
2			
3			
4	Costs for required annual audits related to debt financing	$	8,000
5			
6			
7			
8	Adjustment to Contractual Services - Accounting	$	8,000
9			
10			
11	Adjustment to Revenue and/or Expense	$	8,000
12			
13	SUPPORTING SCHEDULES		
14	Testimony		
15			
16			
17			
18			
19			
20			

Lago Del Oro Water Company
Test Year Ended December 31, 2012
Adjustment to Revenues and Expenses
Adjustment Number 5

Exhibit
Rejoinder Schedule C-2
Page 6
Witness: Bourassa

Water Testing Expense

Line No.			
1			
2			
3			
4	EPA Unregulated Contaminant Monitoring Required Testing Rule 3	$	32,280
5			
6	LDO allocattion		92.00%
7			
8	LDO allocated share of costs	$	29,698
9			
10	Amortization period (years)		5
11			
12	Annual Amortization of Testing Expoense	$	5,940
13			
14			
15	Adjustment to Revenue and/or Expense	$	5,940
16			
17	SUPPORTING SCHEDULES		
18	Testimony		
19			
20			

Lago Del Oro Water Company
Test Year Ended December 31, 2012
Adjustment to Revenues and Expenses
Adjustment Number 6

Exhibit
Rejoinder Schedule C-2
Page 7
Witness: Bourassa

Interest Synchronization

Line No.				
1				
2				
3				
4	Fair Value Rate Base	$ 7,363,846		
5	Weighted Cost of Debt		1.33%	
6	Interest Expense			$ 98,234
7				
8	Test Year Interest Expense			$ 204,322
9				
10	Increase (decrease) in Interest Expense			(106,088)
11				
12				
13				
14	Adjustment to Revenue and/or Expense			$ 106,088
15				
16				
17	Weighted Cost of Debt Computation			
18				Weighted
19		Percent	Cost	Cost
20	Debt	29.00%	4.60%	1.33%
21	Equity	71.00%	10.50%	7.46%
22	Total	100.00%		8.79%
23				
24				
25				
26				
27				
28				
29				
30				

Lago Del Oro Water Company
Test Year Ended December 31, 2012
Adjustment to Revenues and/or Expenses
Adjustment Number 7

Exhibit
Rejoinder Schedule C-2
Page 8
Witness: Bourassa

Line No.		Test Year at Present Rates	Test Year at Proposed Rates
1	Income Taxes		
2			
3			
4	Computed Income Tax	$ (85,942)	$ 340,629
5	Test Year Income tax Expense	(128,849)	(85,942)
6	Adjustment to Income Tax Expense	$ 42,906	$ 426,572
7			
8			
9			
10			
11			
12			
13	SUPPORTING SCHEDULE		
14	C-3, page 2		
15			
16			
17			
18			
19			
20			
21			
22			
23			
24			
25			
26			
27			
28			
29			
30			

Lago Del Oro Water Company
Test Year Ended December 31, 2012
Computation of Gross Revenue Conversion Factor

Exhibit
Rejoinder Schedule C-3
Page 1
Witness: Bourassa

Line No.	Description	Percentage of Incremental Gross Revenues
1	Combined Federal and State Effective Income Tax Rate	37.796%
2		
3	Property Taxes	1.064%
4		
5		
6	Total Tax Percentage	38.860%
7		
8	Operating Income % = 100% - Tax Percentage	61.140%
9		
10		
11		
12		
13	1 = Gross Revenue Conversion Factor	
14	Operating Income %	1.6356
15		
16		
17		
18		
19		
20		
21		
22		
23		
24		
25	SUPPORTING SCHEDULES:	RECAP SCHEDULES:
26	C-3, page 2	A-1
27		
28		
29		
30		
31		
32		
33		
34		
35		
36		
37		
38		
39		
40		

Lago Del Oro Water Company
Test Year Ended December 31, 2012

Exhibit
Rejoinder Schedule C-3
Page 2
Witness: Bourassa

GROSS REVENUE CONVERSION FACTOR

Line No.	Description	(A)	(B)	(C)	(D)	[E]	[F]
	Calculation of Gross Revenue Conversion Factor:						
1	Revenue	100.0000%					
2	Uncollectible Factor (Line 11)	0.0000%					
3	Revenues (L1 - L2)	100.0000%					
4	Combined Federal and State Income Tax and Property Tax Rate (Line 23)	38.8596%					
5	Subtotal (L3 - L4)	61.1404%					
6	**Revenue Conversion Factor (L1 / L5)**	1.635580					
	Calculation of Uncollectible Factor:						
7	Unity	100.0000%					
8	Combined Federal and State Tax Rate (L17)	37.7959%					
9	One Minus Combined Income Tax Rate (L7 - L8)	62.2041%					
10	Uncollectible Rate	0.0000%					
11	Uncollectible Factor (L9 * L10)		0.0000%				
	Calculation of Effective Tax Rate:						
12	Operating Income Before Taxes (Arizona Taxable Income)	100.0000%					
13	Arizona State Income Tax Rate	6.5000%					
14	Federal Taxable Income (L12 - L13)	93.5000%					
15	Applicable Federal Income Tax Rate (L55 Col F)	33.4716%					
16	Effective Federal Income Tax Rate (L14 x L15)	31.2959%					
17	Combined Federal and State Income Tax Rate (L13 +L16)		37.7959%				
	Calculation of Effective Property Tax Factor						
18	Unity	100.0000%					
19	Combined Federal and State Income Tax Rate (L17)	37.7959%					
20	One Minus Combined Income Tax Rate (L18-L19)	62.2041%					
21	Property Tax Factor	1.7100%					
22	Effective Property Tax Factor (L20*L21)		1.0637%				
23	Combined Federal and State Income Tax and Property Tax Rate (L17+L22)			38.8596%			
24	Required Operating Income	$ 647,208					
25	AdjustedTest Year Operating Income (Loss)	$ (54,838)					
26	Required Increase in Operating Income (L24 - L25)		$ 702,046				
27	Income Taxes on Recommended Revenue (Col. (F), L52)	$ 340,629					
28	Income Taxes on Test Year Revenue (Col. (C), L52)	$ (85,942)					
29	Required Increase in Revenue to Provide for Income Taxes (L27 - L28)		$ 426,572				
30	Recommended Revenue Requirement	$ 3,030,491					
31	Uncollectible Rate (Line 10)	0.0000%					
32	Uncollectible Expense on Recommended Revenue (L24 * L25)	$ -					
33	Adjusted Test Year Uncollectible Expense	$ -					
34	Required Increase in Revenue to Provide for Uncollectible Exp.		$ -				
35	Property Tax with Recommended Revenue	$ 113,302					
36	Property Tax on Test Year Revenue	$ 93,667					
37	Increase in Property Tax Due to Increase in Revenue (L35-L36)		$ 19,635				
38	Total Required Increase in Revenue (L26 + L29 + L37)		$ 1,148,253				

		(A)	(B)	(C)	(D)	[E]	[F]
		Test Year			Company Recommended		
	Calculation of Income Tax:	Total Water		Water	Total Water		Water
39	Revenue	$ 1,882,238		$ 1,882,238	$ 3,030,491		$ 3,030,491
40	Operating Expenses Excluding Income Taxes	2,023,018		2,023,018	2,042,653		2,042,653
41	Synchronized Interest (L47)	98,234		98,234	98,234		98,234
42	Arizona Taxable Income (L39 - L40 - L41)	$ (239,014)		$ (239,014)	$ 889,605		$ 889,604
43	Arizona State Effective Income Tax Rate (see work papers)	6.5000%		6.5000%	6.5000%		6.5000%
44	Arizona Income Tax (L42 x L43)	$ (15,536)		$ (15,536)	$ 57,824		$ 57,824
45	Federal Taxable Income (L42- L44)	$ (223,478)		$ (223,478)	$ 831,781		$ 831,780
46							
47	Federal Tax on First Income Bracket ($1 - $50,000) @ 15%	$ (7,500)		$ (7,500)	$ 7,500		$ 7,500
48	Federal Tax on Second Income Bracket ($50,001 - $75,000) @ 25%	$ (6,250)		$ (6,250)	$ 6,250		$ 6,250
49	Federal Tax on Third Income Bracket ($75,001 - $100,000) @ 34%	$ (8,500)		$ (8,500)	$ 8,500		$ 8,500
50	Federal Tax on Fourth Income Bracket ($100,001 - $335,000) @ 39%	$ (48,156)		$ (48,156)	$ 91,650		$ 91,650
51	Federal Tax on Fifth Income Bracket ($335,001 -$10,000,000) @ 34%	$ -		$ -	$ 168,905		$ 168,905
52							
53	Total Federal Income Tax	$ (70,406)		$ (70,406)	$ 282,805		$ 282,805
54	Combined Federal and State Income Tax (L35 + L42)	$ (85,942)		$ (85,942)	$ 340,630		$ 340,629

55	COMBINED Applicable Federal Income Tax Rate [Col. [D], L53 - Col. [A], L53 / [Col. [D], L45 - Col. [A], L45]	33.4716%		
56	WASTEWATER Applicable Federal Income Tax Rate [Col. [E], L53 - Col. [B], L53] / [Col. [E], L45 - Col. [B], L45]		0.0000%	
57	WATER Applicable Federal Income Tax Rate [Col. [F], L53 - Col. [C], L53] / [Col. [F], L45 - Col. [C], L45]			33.4716%

	Calculation of Interest Synchronization:	Water
58	Rate Base	$ 7,363,846
59	Weighted Average Cost of Debt	1.3340%
60	Synchronized Interest (L59 X L60)	$ 98,234

Lago Del Oro Water Company
Revenue Summary
Test Year Ended December 31, 2012

Exhibit
Rebuttal Schedule H-1
Page 1
Witness: Bourassa

Line No.	Meter Size	Classification	Total Revenues at Present Rates	Total Revenues at Proposed Rates	Dollar Change	Percent Change	Percent of Present Water Revenues	Percent of Proposed Water Revenues
1	5/8x3/4 Inch	Residential	$ 1,576,999	$ 2,419,025	$ 842,026	53.39%	83.78%	79.82%
2	3/4 Inch	Residential	35,011	57,126	22,114	63.16%	1.86%	1.89%
3	1 Inch	Residential	20,819	36,336	15,518	74.54%	1.11%	1.20%
4	1 1/2 Inch	Residential	1,651	2,999	1,348	81.61%	0.09%	0.10%
5	2 Inch	Residential	9,934	19,649	9,715	97.79%	0.53%	0.65%
6								
7	5/8x3/4 Inch	Commercial	$ -	$ -	$ -	0.00%	0.00%	0.00%
8	3/4 Inch	Commercial	6,728	10,623	3,895	57.89%	0.36%	0.35%
9	1 Inch	Commercial	25,016	54,114	29,098	116.32%	1.33%	1.79%
10	1 1/2 Inch	Commercial	6,996	12,890	5,894	84.25%	0.37%	0.43%
11	2 Inch	Commercial	37,067	75,211	38,144	102.91%	1.97%	2.48%
12	3 Inch	Commercial	5,924	12,538	6,614	111.66%	0.31%	0.41%
13	6 Inch	Commercial	30,305	72,585	42,279	139.51%	1.61%	2.40%
14								
15	5/8x3/4 Inch	Irrigation	$ -	$ -	$ -	0.00%	0.00%	0.00%
16	3/4 Inch	Irrigation	2,052	3,517	1,465	71.38%	0.11%	0.12%
17	1 Inch	Irrigation	1,370	2,559	1,189	86.79%	0.07%	0.08%
18	1 1/2 Inch	Irrigation	410	789	379	92.51%	0.02%	0.03%
19	2 Inch	Irrigation	37,490	75,232	37,743	100.67%	1.99%	2.48%
20	3 Inch	Irrigation	4,044	8,329	4,285	105.98%	0.21%	0.27%
21	4 Inch	Irrigation	1,047	3,106	2,059	196.71%	0.06%	0.10%
22								
23	Golf Course	Irrigation	$ 59,823	$ 142,232	$ 82,409	137.75%	3.18%	4.69%
24								
25	5/8x3/4 Inch	Hydrant/Construction	$ 1,750	$ 2,611	$ 861	49.21%	0.09%	0.09%
26								
27	**Subtotals of Revenues**		$ 1,864,436	$ 3,011,471	$ 1,147,035	61.52%	99.05%	99.37%
28								
29	**Revenue Annualizations:**							
30	5/8x3/4 Inch	Residential	$ (3,372)	$ (4,912)	$ (1,540)	45.68%	-0.18%	-0.16%
31	3/4 Inch	Residential	655	995	340	51.83%	0.03%	0.03%
32	1 Inch	Residential	(172)	(290)	(118)	68.91%	-0.01%	-0.01%
33	1 1/2 Inch	Residential	-	-	-	0.00%	0.00%	0.00%
34	2 Inch	Residential	(1,736)	(3,332)	(1,596)	91.97%	-0.09%	-0.11%
35								
36	5/8x3/4 Inch	Commercial	$ -	$ -	$ -	0.00%	0.00%	0.00%
37	3/4 Inch	Commercial	735	1,232	497	67.59%	0.04%	0.04%
38	1 Inch	Commercial	(489)	(1,017)	(527)	107.78%	-0.03%	-0.03%
39	1 1/2 Inch	Commercial	-	-	-	0.00%	0.00%	0.00%
40	2 Inch	Commercial	3,740	6,999	3,259	87.16%	0.20%	0.23%
41	3 Inch	Commercial	-	-	-	0.00%	0.00%	0.00%
42	6 Inch	Commercial	-	-	-	0.00%	0.00%	0.00%
43								
44	5/8x3/4 Inch	Irrigation	$ -	$ -	$ -	0.00%	0.00%	0.00%
45	3/4 Inch	Irrigation	165	276	111	67.06%	0.01%	0.01%
46	1 Inch	Irrigation	859	1,611	752	87.62%	0.05%	0.05%
47	1 1/2 Inch	Irrigation	-	-	-	0.00%	0.00%	0.00%
48	2 Inch	Irrigation	-	-	-	0.00%	0.00%	0.00%
49	3 Inch	Irrigation	-	-	-	0.00%	0.00%	0.00%
50	4 Inch	Irrigation	-	-	-	0.00%	0.00%	0.00%
51								
52	**Subtotal Revenue Annualization**		$ 386	$ 1,563	$ 1,177	305.15%	0.02%	0.08%
53								
54	**Total Revenues w/ Annualization**		$ 1,864,821	$ 3,013,034	$ 1,148,212	61.57%	99.07%	99.42%
55	**Misc Revenues**		17,117	17,117	-	0.00%	0.91%	0.56%
56	**Reconciling Amount**		299	340	41	13.71%	0.02%	0.01%
57	**Total Revenues**		$ 1,882,237	$ 3,030,491	$ 1,148,253	61.00%	100.00%	100.00%
58								
59								

Lago Del Oro Water Company
Analysis of Revenue by Detailed Class
Test Year Ended December 31, 2012

Exhibit
Rebuttal Schedule H-2
Page 1
Witness: Bourassa

Line No.	Customer Classification and/or Meter Size		Average Number of Customers at 12/31/2012	Average Consumption	Average Bill Present Rates	Average Bill Proposed Rates	Proposed Increase Dollar Amount	Proposed Increase Percent Amount	Percent of Customers
1	5/8x3/4 Inch	Residential	6,050	7,047	$ 21.49	$ 31.16	$ 9.68	45.03%	95.07%
2	3/4 Inch	Residential	114	9,164	$ 25.30	$ 37.47	$ 12.17	48.13%	1.79%
3	1 Inch	Residential	53	10,034	32.46	54.70	22.24	68.51%	0.83%
4	1 1/2 Inch	Residential	2	24,667	68.80	123.11	54.31	78.93%	0.03%
5	2 Inch	Residential	12	17,330	67.59	131.00	63.41	93.81%	0.19%
6									
7	5/8x3/4 Inch	Commercial	-	-	$ 12.40	14.88	2.48	20.00%	0.00%
8	3/4 Inch	Commercial	35	3,360	14.85	24.89	10.04	67.65%	0.55%
9	1 Inch	Commercial	16	62,289	126.52	263.86	137.34	108.55%	0.26%
10	1 1/2 Inch	Commercial	12	13,327	48.39	89.31	40.93	84.58%	0.19%
11	2 Inch	Commercial	20	65,310	153.96	287.33	133.37	86.63%	0.31%
12	3 Inch	Commercial	2	104,675	246.82	470.65	223.84	90.69%	0.03%
13	6 Inch	Commercial	4	280,698	629.66	1,332.48	702.82	111.62%	0.06%
14									
15	5/8x3/4 Inch	Irrigation	-	-	$ 12.40	$ 14.88	$ 2.48	20.00%	0.00%
16	3/4 Inch	Irrigation	8	6,090	19.76	33.03	13.27	67.13%	0.13%
17	1 Inch	Irrigation	3	15,063	41.51	69.69	28.17	67.87%	0.04%
18	1 1/2 Inch	Irrigation	1	5,417	34.15	65.74	31.59	92.51%	0.02%
19	2 Inch	Irrigation	22	58,544	141.78	259.18	117.40	82.81%	0.35%
20	3 Inch	Irrigation	2	61,159	168.49	340.97	172.49	102.38%	0.03%
21	4 Inch	Irrigation	1	3,625	86.93	258.80	171.88	197.73%	0.02%
22									
23	Golf Course	Irrigation	2	6,736,875	$ 2,492.64	$ 5,926.34	3,433.70	137.75%	0.03%
24									
25	5/8x3/4 Inch	Hydrant/Construction	5	10,823	28.28	45.02	16.74	59.20%	0.08%
26									
27									
28									
29	Totals		6,363						100.00%
30									
31	Actual Year End Number								
32	of Customers:		6,356						
33									
34									
35									
36									

Lago Del Oro Water Company
Analysis of Revenue by Detailed Class
Test Year Ended December 31, 2012

Exhibit
Rebuttal Schedule H-2
Page 2
Witness: Bourassa

Line No.	Customer Classification and/or Meter Size		Average Number of Customers at 12/31/2012	Median Consumption	Median Bill Present Rates	Median Bill Proposed Rates	Proposed Increase Dollar Amount	Proposed Increase Percent Amount	Percent of Customers
1	5/8x3/4 Inch	Residential	6,050	5,500	$ 18.70	$ 26.55	$ 7.85	41.98%	95.07%
2	3/4 Inch	Residential	114	6,500	$ 20.50	$ 29.53	$ 9.03	44.05%	1.79%
3	1 Inch	Residential	53	6,500	$ 26.10	$ 44.17	$ 18.07	69.23%	0.83%
4	1 1/2 Inch	Residential	2	22,500	$ 64.90	$ 116.65	$ 51.75	79.74%	0.03%
5	2 Inch	Residential	12	3,500	$ 42.70	$ 89.79	$ 47.09	110.28%	0.19%
6									
7	5/8x3/4 Inch	Commercial	-	-	$ 12.40	$ 14.88	$ 2.48	20.00%	0.00%
8	3/4 Inch	Commercial	35	1,500	$ 12.40	$ 19.35	$ 6.95	56.05%	0.55%
9	1 Inch	Commercial	16	3,500	$ 20.70	$ 35.23	$ 14.53	70.19%	0.26%
10	1 1/2 Inch	Commercial	12	12,000	$ 46.00	$ 85.36	$ 39.36	85.57%	0.19%
11	2 Inch	Commercial	20	37,500	$ 103.90	$ 191.11	$ 87.21	83.94%	0.31%
12	3 Inch	Commercial	2	86,850	$ 214.73	$ 417.53	$ 202.80	94.45%	0.03%
13	6 Inch	Commercial	4	500	$ 128.00	$ 497.49	$ 369.49	288.66%	0.06%
14									
15	5/8x3/4 Inch	Irrigation	-	-	$ 12.40	$ 14.88	$ 2.48	20.00%	0.00%
16	3/4 Inch	Irrigation	8	2,500	13.30	22.33	9.03	67.89%	0.13%
17	1 Inch	Irrigation	3	1,500	18.00	29.27	11.27	62.61%	0.04%
18	1 1/2 Inch	Irrigation	1	5,500	34.30	65.99	31.69	92.39%	0.02%
19	2 Inch	Irrigation	22	32,500	94.90	176.21	81.31	85.68%	0.35%
20	3 Inch	Irrigation	2	70,000	184.40	367.32	182.92	99.20%	0.03%
21	4 Inch	Irrigation	1	3,500	86.70	258.43	171.73	198.07%	0.02%
22									
23	Golf Course	Irrigation	2	5,511,000	$ 2,039.07	$ 4,884.35	2,845.28	139.54%	0.03%
24									
25	5/8x3/4 Inch	Hydrant/Construction	5	500	12.40	2.08	(10.32)	-83.23%	0.08%
26									
27									
28									
29	Totals		6,363						100.00%
30									
31	Actual Year End Number								
32	of Customers:		6,356						
33									
34									
35									
36									

Lago Del Oro Water Company
Test Year Ended December 31, 2012
Present and Proposed Rates

Exhibit
Rebuttal Schedule H-3
Page 1

Line No.	Monthly Usage Charge for:	Present Rates	Proposed Rates	Change	Percent Change
1	Meter Size (All Classes):				
2	5/8x3/4 Inch	$ 12.40	$ 14.88	$ 2.48	20.00%
2	3/4 Inch	12.40	14.88	2.48	20.00%
3	1 Inch	18.00	24.80	6.80	37.78%
4	1 1/2 Inch	28.00	49.60	21.60	77.14%
5	2 Inch	40.00	79.36	39.36	98.40%
6	3 Inch	62.00	158.72	96.72	156.00%
7	4 Inch	84.00	248.00	164.00	195.24%
8	5 Inch	106.00	Remove	NM	NM
9	6 Inch	128.00	496.00	368.00	287.50%
10	8 Inch	150.00	793.60	643.60	429.07%
11	Golf Course Irrigation	-	200.00	200.00	NM
12	Construction/Hydrant	NT	-	-	NM
13					
14	Gallons In Minimum (all classes, except golf course irrigation)	2,000	-		
15					
16	Gallons In Minimum (golf course irrigation)	-	-		
17					
18					
19					
20					

	Commodity Rates (per 1,000 gallons)	Block	Present Rate	Proposed Rate
21				
22				
23	5/8x3/4 Inch (all classes, except golf course irrigation)	Over Minimum	$ 1.80	
24				
25	5/8x3/4 Inch - Residential	1 gallons to 4,000 gallons		$ 1.80
26		4,001 gallons to 10,000 gallons		$ 2.98
27		over 10,000 gallons		$ 4.16
28				
29	5/8x3/4 Inch - Commercial, Irrigation (except golf course irrigation)	1 gallons to 10,000 gallons		$ 2.98
30		over 10,000 gallons		$ 4.16
31				
32	3/4 Inch Meter (all classes, except golf course irrigation)	Over Minimum	$ 1.80	
33				
34	3/4 Inch Meter - Residential	1 gallons to 4,000 gallons		$ 1.80
35		4,001 gallons to 10,000 gallons		$ 2.98
36		over 10,000 gallons		$ 4.16
37				
38	3/4 Inch Meter - Commercial, Irrigation (except golf course irrigation)	1 gallons to 10,000 gallons		$ 2.98
39		over 10,000 gallons		$ 4.16
40				
41				
42				
43				
44				
45	NM = not meaningful			
46	NT = No Tariff			
47				

Lago Del Oro Water Company
Test Year Ended December 31, 2012
Present and Proposed Rates

Exhibit
Rebuttal Schedule H-3
Page 2

Line No.	Commodity Rates (per 1,000 gallons)	Block	Present Rate	Proposed Rate
4	1 Inch Meter (all classes, except golf course irrigation)	Over Minimum	$ 1.80	
6	1 Inch Meter (all classes, except golf course irrigation, hydrant)	1 gallons to 17,000 gallons		$ 2.98
7		over 17,000 gallons		$ 4.16
9	1.5 Inch Meter (all classes, except golf course irrigation)	Over Minimum	$ 1.80	
11	1.5 Inch Meter - (all classes, except golf course irrigation, hydrant)	1 gallons to 34,000 gallons		$ 2.98
12		over 34,000 gallons		$ 4.16
14	2 Inch Meter (all classes, except golf course irrigation)	Over Minimum	$ 1.80	
16	2 Inch Meter - (all classes, except golf course irrigation, hydrant)	1 gallons to 54,000 gallons		$ 2.98
17		over 54,000 gallons		$ 4.16
19	3 Inch Meter (all classes, except golf course irrigation)	Over Minimum	$ 1.80	
21	3 Inch Meter - (all classes, except golf course irrigation, hydrant)	1 gallons to 107,000 gallons		$ 2.98
22		over 107,000 gallons		$ 4.16
24	4 Inch Meter (all classes, except golf course irrigation)	Over Minimum	$ 1.80	
26	4 Inch Meter (all classes, except golf course irrigation, hydrant)	1 gallons to 167,000 gallons		$ 2.98
27		over 167,000 gallons		$ 4.16
29	5 Inch Meter (all classes, except golf course irrigation)	Over Minimum	$ 1.80	
31	5 Inch Meter (all classes, except golf course irrigation, hydrant)			Remove
33	6 Inch Meter (all classes, except golf course irrigation)	Over Minimum	$ 1.80	
35	6 Inch Meter - (all classes, except golf course irrigation, hydrant)	1 gallons to 334,000 gallons		$ 2.98
36		over 334,000 gallons		$ 4.16
38	8 Inch Meter (all classes, except golf course irrigation)	Over Minimum	$ 1.80	
40	8 Inch Meter - (all classes, except golf course irrigation, hydrant)	1 gallons to 534,000 gallons		$ 2.98
41		over 534,000 gallons		$ 4.16
44	Golf Course Irrigation	All gallons	$ 0.37	$ 0.85
46	Hydrant/Construction	All gallons	NT	$ 4.16
48	NT = No Tariff			

Lago Del Oro Water Company
Present and Proposed Rates
Test Year Ended December 31, 2012

Exhibit
Rebuttal Schedule H-3
Page 3
Witness: Bourassa

Line No.

1 Meter and Service Line Charges

	Present Service Line Charge	Present Meter Install-ation Charge	Total Present Charge	Proposed Service Line Charge[1]	Proposed Meter Install-ation Charge[1]	Total Proposed Charge[1]
5/8 x 3/4 Inch			$ 250.00	$ 385.00	$ 135.00	$ 520.00
3/4 Inch			$ 275.00	415.00	205.00	620.00
1 Inch			$ 300.00	465.00	265.00	730.00
1 1/2 Inch			$ 450.00	520.00	475.00	995.00
2 Inch			$ 625.00			
2 Inch Turbo			NT	800.00	995.00	1,795.00
2 Inch, Compound			NT	800.00	1,840.00	2,640.00
3 Inch			$ 800.00			
3 Inch Turbo			NT	1,015.00	1,620.00	2,635.00
3 Inch, compound			NT	1,135.00	2,495.00	3,630.00
4 Inch			$ 975.00			
4 Inch Turbo			NT	1,430.00	2,570.00	4,000.00
4 Inch, compound			NT	1,610.00	3,545.00	5,155.00
5 Inch			$ 1,150.00			
6 inch			$ 1,325.00			
6 Inch Turbo			NT	2,150.00	4,925.00	7,075.00
6 Inch, compound			NT	2,270.00	6,820.00	9,090.00
8 Inch			$ 1,500.00			
8 Inch or Larger			NT	Cost	Cost	Cost

[1] Based on ACC Staff Engineering Memo dated Feburary 21, 2008
NT = No Tariff

Other Charges:

	Present	Proposed
Establishment	$ 25.00	$ 25.00
Reestablishment After Hours	$ 30.00	NT
Reestablishment within 12 months	*	*
Reconnection/Delinguent	$ 25.00	$ 25.00
Meter Test (if correct)	$ 30.00	$ 30.00
Meter Re-read (if correct)	$ 15.00	$ 15.00
Deposit	**	**
Deposit Interest	**	**
NSF Check	$ 10.00	$ 10.00
Deferred Payment, per month	15% per annum	1.5% per month
Late Payment Fee (per month)	NT	1.5% per month
After hours service charge	NT	$ 30.00

*Number of months off the system times the monthly minimum.
** Per Rule R14-2-403.B

NT = No Tariff

FENNEMORE CRAIG
A Professional Corporation
Jay L. Shapiro (No. 014650)
2394 East Camelback Road, Suite 600
Phoenix, Arizona 85016
Telephone (602) 916-5000

Attorneys for Lago Del Oro Water Company

BEFORE THE ARIZONA CORPORATION COMMISSION

IN THE MATTER OF THE APPLICATION OF LAGO DEL ORO WATER COMPANY, AN ARIZONA CORPORATION, FOR A DETERMINATION OF THE FAIR VALUE OF ITS UTILITY PLANTS AND PROPERTY AND FOR INCREASES IN ITS WATER RATES AND CHARGES FOR UTILITY SERVICE BASED THEREON.	DOCKET NO: W-01944A-13-0215

REJOINDER TESTIMONY OF

THOMAS J. BOURASSA

(COST OF CAPITAL)

March 21, 2014

EXHIBIT
A-10
ADMITTED

TABLE OF CONTENTS

I. INTRODUCTION AND QUALIFICATION 1

I. SUMMARY OF REJOINDER TESTIMONY AND THE PROPOSED COST OF CAPITAL FOR THE COMPANY 1

A. Summary of Company's Rejoinder Recommendation 1

B. Summary of the Recommendations of Staff 2

C. Responses to Staff's Surrebuttal Testimony 3

8998845.1/058113.0008

I. INTRODUCTION AND QUALIFICATION

Q. PLEASE STATE YOUR NAME AND ADDRESS.

A. My name is Thomas J. Bourassa. My business address is 139 W. Wood Drive, Phoenix, Arizona 85029.

Q. ON WHOSE BEHALF ARE YOU TESTIFYING IN THIS PROCEEDING?

A. I am testifying in this proceeding on behalf of the applicant, Lago Del Oro Water Company ("LDO" or "Company").

Q. ARE YOU THE SAME THOMAS J. BOURASSA THAT FILED DIRECT AND REBUTTAL TESTIMONY ON RATE BASE, INCOME STATEMENT, REVENUE REQUIREMENT AND RATE DESIGN IN THIS DOCKET?

A. Yes.

Q. DID YOU ALSO PREPARE DIRECT AND REBUTTAL TESTIMONY ON COST OF CAPITAL ON BEHALF OF LDO IN THIS CASE?

A. Yes.

Q. DID YOU ALSO PREPARE REJOINDER TESTIMONY ON INCOME STATEMENT, REVENUE REQUIREMENT AND RATE DESIGN IN THIS DOCKET?

A. Yes, my rejoinder testimony on rate base, income statement, revenue requirement and rate design is being filed in a separate volume at the same time as this testimony. In this volume, I present my cost of capital rejoinder testimony

I. SUMMARY OF REJOINDER TESTIMONY AND THE PROPOSED COST OF CAPITAL FOR THE COMPANY

A. Summary of Company's Rejoinder Recommendation

Q. HAVE YOU UPDATED YOUR COST OF CAPITAL ANALYSIS?

A. No. I updated my cost of capital analysis on my rebuttal testimony filed on February 14, 2014. I updated my cost of capital in my rebuttal testimony because

of the significant period of time between the Company's direct filing and its rebuttal filing. I did not feel the need to provide an additional update at this time because my rebuttal update is less than 1 month old.

Q. PLEASE SUMMARIZE YOUR RECOMMENDED REJOINDER COST OF DEBT AND EQUITY, AND YOUR RECOMMENDED REJOINDER RATE OF RETURN ON RATE BASE.

A. I continue to recommend a cost of equity of 10.50 percent based on my most recent cost of capital analysis. The results of my cost of capital analysis can be found in my rebuttal testimony.[1] The Company's recommended capital structure consists of 29 percent debt and 71 percent common equity as shown on Rejoinder Schedule D-1. The Company's recommended cost of debt is 4.6 percent. Based the Company's recommended cost of equity, cost of debt and capital structure, the Company's weighted cost of capital ("WACC") is 8.79 percent, as shown on Rejoinder Schedule D-1.

B. <u>Summary of the Recommendations of Staff</u>

Q. PLEASE SUMMARIZE THE COST OF DEBT AND EQUITY RECOMMENDED BY STAFF, AND THE STAFF RECOMMENDATIONS FOR THE RATE OF RETURN ON FAIR VALUE RATE BASE.

A. Staff has updated its cost of capital analysis in its surrebuttal testimony and recommends a cost of equity of 9.7 percent based on the average cost of equity produced by its DCF models and a 60 basis point economic assessment adjustment.[2] This is a 60 basis point increase over Staff's direct. Staff also

[1] *See* Rebuttal Testimony of Thomas J. Bourassa – Cost of Capital ("Bourassa COC Rb.") at 1-2.

[2] *See* Surrebuttal Testimony of John A. Cassidy ("Cassidy Sb.") at 6.

recommends a capital structure consisting of 29 percent debt and 71 percent equity.[3] Based on Staff's recommended capital structure, Staff determined the WACC for Pima to be 8.2 percent.[4]

C. <u>Responses to Staff's Surrebuttal Testimony</u>

Q. PLEASE RESPOND TO MR. CASSIDY'S SURREBUTTAL TESTIMONY (ON PAGE 4) THAT REALIZED HISTORICAL RETURNS DO NOT RELFECT THE COST OF EQUITY.

A. I find Mr. Cassidy's testimony perplexing. Mr. Cassidy's DCF growth rates are heavily dependent on historical information. He uses 10 year historical measures of growth to develop his prospective (forward looking) cost of equity estimates.[5] Looking at past realized returns is no different. Mr. Cassidy simply cannot have it both ways. If historical growth rates are relevant to developing investor expectations of the future, historical returns (what investors actually realized) are no less relevant. Accordingly, Mr. Cassidy's complaints (on page 3 of his surrebuttal testimony) about my analysis of the implied growth rate of 9.0 percent using 3-year historical total returns are unfounded. Investors look at all available information (both historical and prospective) when developing their expectations of the future.

Q. DO YOU HAVE ANY COMMENT REGARDING MR. CASSIDY'S SURREBUTTAL TESTIMONY (ON PAGE 5) REGARDING THE LOWER CURRENT MARKET RISK PREMIUM FOR YOUR CAPM MODEL?

---

[3] *Id.*
[4] *Id.*
[5] *Id.*

A. I have a few comments. First, I do not dispute that my analysis of the current market risk premium ("MRP") used in my current MRP CAPM indicates that the MRP is lower than when I estimated it for my direct testimony. I have pointed out that even my approach to estimating the current MRP is subject to volatility, but less so than the approach Staff has used in the past for estimating the current MRP.[6]

Second, I would note that Staff has abandoned the CAPM in this case and exclusively relies on its DCF models to estimate the cost of equity. Staff can offer its own explanation, but it sure looks like the CAPM has been abandoned by Staff because of the unreasonably low results being produced.

Third, despite my lower current MRP estimate, my over-all cost of equity results have increase from 9.9 percent in my direct testimony to 10.2 percent in my rebuttal testimony. Staff's cost of equity estimated has also increased, from 9.3 percent in its direct testimony to 9.7 percent in it surrebuttal testimony. So, at least both parties agree that the indicated cost of equity has increased.

Fourth and finally, my recommendation of 10.5 percent for LDO, which has remained the same throughout this case, is well within the range of the cost of equity estimates of 9.0 percent to 11.4 percent developed using three different approaches to the cost of equity rather than just one approach as Staff has done. Further, a 10.5 percent return is conservative given the higher business risks associated with LDO.[7]

Q. DOES THIS CONCLUDE YOUR REJOINDER TESTIMONY?

A. Yes.

---

[6] Direct Testimony of Thomas J. Bourassa – Cost of Capital at 40-41.

[7] Bourassa COC Rb. at 3, 10.

D SCHEDULES

Lago Del Oro Water Company
Test Year Ended December 31, 2012
Summary of Cost of Capital

Exhibit
Rejoinder Schedule D-1
Page 1
Witness: Bourassa

Proforma Capital Structure

Line No.	Item of Capital	Dollar Amount	Percent of Total	Cost Rate	Weighted Cost
1	Long-Term Debt	$ 2,751,411	29.00%	4.60%	1.33%
2					
3	Stockholder's Equity	6,740,138	71.00%	10.50%	7.46%
4					
5	Totals	$ 9,491,549	100.00%		8.79%
6					
7					
8					
9					
10					
11					
12					
13					
14					
15					
16					
17					
18					
19					
20					
21					
22	SUPPORTING SCHEDULES:				
23	D-1				
24	D-3				
25	D-4				
26	E-1				
27	Testimony				
28					
29					
30					

Lago Del Oro Water Company
Test Year Ended December 31, 2012
Cost of Long Term Debt

Exhibit
Rejoinder Schedule D-2
Page 1
Witness: Bourassa

Line No.	Description of Debt	End of Test Year Amount Outstanding	Annual Interest	Effective Interest Rate	Weighted Cost	End of Projected Year Amount Outstanding	Annual Interest	Effective Interest Rate	Weighted Cost
1									
2			-	0.00%	0.00%	-	-	0.00%	0.00%
3			-	0.00%	0.00%	-	-	0.00%	0.00%
4			-	0.00%	0.00%		-	0.00%	0.00%
5			-	0.00%	0.00%		-	0.00%	0.00%
6			-	0.00%	0.00%		-	0.00%	0.00%
7			-	0.00%	0.00%		-	0.00%	0.00%
8			-	0.00%	0.00%		-	0.00%	0.00%
9			-	0.00%	0.00%		-	0.00%	0.00%
10			-	0.00%	0.00%		-	0.00%	0.00%
11									
12									
13	Totals	$ -	-		0.00%	$ -	-		0.00%
14									
15									
16	Supporting Schdules:								
17	E-1								
18	E-2								
19									
20									
21									
22									
23									
24									
25									
26									
27									
28									
29									
30									

Lago Del Oro Water Company
Test Year Ended December 31, 2012
Cost of Preferred Stock

Exhibit
Rejoinder Schedule D-3
Page 1
Witness: Bourassa

Line No.		End of Test Year			End of Projected Year		
1							
2							
3	Description	Shares		Dividend	Shares		Dividend
4	of Issue	Outstanding	Amount	Requirement	Outstanding	Amount	Requirement
5							
6							
7	NOT APPLICABLE, NO PREFERRED STOCK ISSUED OR OUTSTANDING						
8							
9							
10							
11							
12							
13							
14							
15							
16							
17							
18							
19							
20							
21	SUPPORTING SCHEDULES:			RECAP SCHEDULES:			
22	E-1			D-1			
23							
24							
25							
26							
27							
28							
29							
30							
31							
32							
33							
34							
35							
36							
37							
38							
39							
40							

Lago Del Oro Water Company
Test Year Ended December 31, 2012
Cost of Common Equity

Exhibit
Rejoinder Schedule D-4
Page 1
Witness: Bourassa

Line No.		
1		
2	The Company is proposing a cost of common equity of	10.50% .
3		
4		
5		
6		
7		
8		
9		
10		
11		
12		
13		
14		
15		
16		
17	SUPPORTING SCHEDULES:	RECAP SCHEDULES:
18	E-1	D-1
19	D-4.1 to D-4.16	
20		

Lago Del Oro Water Company
Summary of Results

Exhibit
Rejoinder Schedule D-4.1
Witness: Bourassa

Line No.	Method	Median Result
6	DCF Constant Growth Estimates[1]	9.0%
8	CAPM Estimates[2]	9.1%
10	Build-up Method Estimates[3]	11.4%
12	Mid-point	10.2%
16	Recommended Cost of Equity[4]	10.5%

19 1 See Rejoinder Schedule D-4-8
20 2 See Rejoinder Schedule D-4.12
21 3 See Rejoinder Schedule D-4.18
22 [4] Testimony

Lago Del Oro Water Company
Selected Characteristics of Sample Group of Water Utilities

Exhibit
Rejoinder Schedule D-4.2
Witness: Bourassa

Line No.	Company[1]	% Water Revenues	Operating Revenues (millions)	Net Plant (millions)	S&P Bond Rating	Moody's Bond Rating	Allowed ROE (%)
4	1. American States	60%	$ 474.6	$ 968.5	A+	A2	9.99
5	2. Aqua America	89%	$ 767.5	$ 4,090.4	AA-	NR	10.29
6	3. California Water	100%	$ 571.9	$ 1,505.2	AA-	NR	9.99
7	4. Connecticut Water	97%	$ 89.4	$ 461.8	A	NR	9.75
8	5. Middlesex	89%	$ 114.5	$ 442.8	A	NR	10.15
9	6. SJW Corp.	96%	$ 272.1	$ 860.4	A	NR	9.99
11	Average	89%	$ 381.7	$ 1,388.2			10.03
13	Lago Del Oro Water Company (Adjusted as of December 31, 2012)	100%	$ 1.9	$ 9.4	NR	NR	

[1]AUS Utility Reports (January 2014).

Lago Del Oro Water Company
Capital Structures

Exhibit
Rejoinder Schedule D-4.3
Witness: Bourassa

No.	Company	Book Value[1] Long-Term Debt	Book Value[1] Common Equity	Market Value[1] Long-Term Debt	Market Value[1] Common Equity
1	American States	42.3%	57.7%	23.5%	76.5%
2	Aqua America	52.7%	47.3%	27.1%	72.9%
3	California Water	47.8%	52.2%	31.6%	68.4%
4	Connecticut Water	49.2%	50.8%	32.5%	67.5%
5	Middlesex	42.0%	58.0%	28.6%	71.4%
6	SJW Corp.	55.0%	45.0%	38.9%	61.1%
7					
8	Average	48.2%	51.8%	30.4%	69.6%
9					
10	Lago Del Oro Water Company (Proforma)	41.1%	58.9%	N/A	N/A

[1] Value Line Analyzer Data (February 7, 2014)
2 Adjusted Per Rejoinder Schedule D-1

Lago Del Oro Water Company
Comparisons of Past and Future Estimates of Growth

Exhibit
Rejoinder Schedule D-4.4
Witness: Bourassa

Line No.	Company	[1] Price[1]	[2] Book Value[2]	[3] EPS[2]	[4] DPS[2]	[5] Average Col 1-4	[6] Average Future Growth[3]	[7] Average of Future and Historical Growth Col 5-6
		Five-year historical average annual changes						
8	1. American States	9.12%	5.50%	11.50%	4.50%	7.66%	3.33%	5.49%
9	2. Aqua America	5.40%	6.00%	7.50%	7.50%	6.60%	7.13%	6.87%
10	3. California Water	2.03%	4.50%	5.50%	1.50%	3.38%	6.33%	4.86%
11	4. Connecticut Water	7.90%	4.50%	6.50%	2.00%	5.23%	5.50%	5.36%
12	5. Middlesex	4.56%	4.00%	2.50%	1.50%	3.14%	3.35%	3.24%
13	6. SJW Corp.	5.14%	3.50%	NMF	4.00%	4.21%	10.75%	7.48%
16	GROUP AVERAGE	5.69%	4.67%	6.70%	3.50%	5.04%	6.07%	5.55%
17	GROUP MEDIAN	5.27%	4.50%	6.50%	3.00%	4.72%	5.92%	5.43%

[1] Average of changes in annual stock prices ending on December 31 through 2012. Data from Yahoo Finance website.
[2] Value Line Analyzer Data, February 7, 2014
3 See Rejoinder Schedule D-4.6.

Lago Del Oro Water Company
Comparisons of Past and Future Estimates of Growth

Exhibit
Rejoinder Schedule D-4.5
Witness: Bourassa

Line No.	Company	[1] Price[1]	[2] Book Value[2]	[3] EPS[2]	[4] DPS[2]	[5] Average Col 1-4	[6] Average Future Growth[3]	[7] Average of Future and Historical Growth Col 5-6
		Ten-year historical average annual changes						
7	1. American States	10.41%	5.00%	6.50%	3.00%	6.23%	3.33%	4.78%
8	2. Aqua America	7.70%	8.50%	7.00%	7.50%	7.68%	7.13%	7.40%
9	3. California Water	6.27%	5.00%	5.00%	1.00%	4.32%	6.33%	5.33%
10	4. Connecticut Water	4.80%	4.50%	1.50%	1.50%	3.07%	5.50%	4.29%
11	5. Middlesex	5.14%	4.50%	3.50%	1.50%	3.66%	3.35%	3.50%
12	6. SJW Corp.	6.99%	5.50%	4.00%	5.00%	5.37%	10.75%	8.06%
15	GROUP AVERAGE	6.88%	5.50%	4.58%	3.25%	5.05%	6.07%	5.56%
16	GROUP MEDIAN	6.63%	5.00%	4.50%	2.25%	4.84%	5.92%	5.05%

[1] Average of changes in annual stock prices ending December 31, 2012. Data from Yahoo Finance website.
[2] Value Line Analyzer Data, February 7, 2014.
3 See Rejoinder Schedule D-4.6.

Lago Del Oro Water Company
Analysts Forecasts of Earnings Per Share Growth

Exhibit
Rejoinder Schedule D-4.6
Witness: Bourassa

Line No.	Company	[1] Yahoo[1]	[2] Zacks[1]	[3] Value Line[1]	[4] Average Growth (G) (Cols 1-3)[2]
		ESTIMATES OF EARNINGS GROWTH			
1	1. American States	1.00%	2.00%	7.00%	3.33%
2	2. Aqua America	5.80%	5.60%	10.00%	7.13%
3	3. California Water	6.00%	6.00%	7.00%	6.33%
4	4. Connecticut Water	5.00%	5.00%	6.50%	5.50%
5	5. Middlesex	2.70%		4.00%	3.35%
6	6. SJW Corp.	14.00%		7.50%	10.75%
7	GROUP AVERAGE	5.75%	4.65%	7.00%	6.07%
8	GROUP MEDIAN				5.92%

[1] Data as of February 7, 2014

[2] Where no data available or single estimate, average of other utilities assumed to estimate for utility.

Lago Del Oro Water Company
Current Dividend Yields for Water Utility Sample Group

Exhibit
Rejoinder Schedule D-4.7
Witness: Bourassa

Line No.	Company	Average Stock Price (P_0)[1]	Current Dividend (D_0)[1]	Current Dividend Yield (D_0/P_0)[1]	Average Annual Dividend Yield (D_0/P_0)[1,2]
6	1. American States	$ 28.16	$ 0.86	3.05%	3.15%
7	2. Aqua America	$ 23.66	$ 0.64	2.71%	2.80%
8	3. California Water	$ 22.35	$ 0.68	3.04%	3.36%
9	4. Connecticut Water	$ 34.06	$ 0.99	2.91%	3.62%
10	5. Middlesex	$ 20.75	$ 0.76	3.66%	3.96%
11	6. SJW Corp.	$ 28.15	$ 0.75	2.66%	2.95%
13	Average			3.01%	3.31%
14	Median			2.97%	3.26%

[1] Yahoo Finance. 60 day average of stock prices as of February 7, 2014.

[2] Average Annual Dividend is dividends declared per share for a year divided by the average annual price of the stock in the same year, expressed as a percentage. For comparison purposes only.

Lago Del Oro Water Company
Discounted Cash Flow Analysis
DCF Constant Growth

Exhibit
Rejoinder Schedule D-4.8
Witness: Bourassa

Line No.		[1]	[2]	[3]	[4]
		Dividend Yield (D_0/P_0)[1]	Expected Dividend Yield (D_1/P_0)[2]	Growth (g)	Indicated Cost of Equity k=Div Yld + g (Cols 2+3)
8	DCF - Past and Future Growth	3.01%	3.17%	5.55% [3]	8.7%
10	DCF - Future Growth	3.01%	3.19%	6.07% [4]	9.3%
13	Average	3.01%	3.18%	5.81%	9.0%
15	Median	3.01%	3.18%	5.81%	9.0%

1 Spot Dividend Yield = D0/P0. See Rejoinder Schedule D-4.7.
[2] Expected Dividend Yield = $D_1/P_0 = D_0/P_0 * (1+g)$.
3 Growth rate (g). Average of Past and Future Growth. See Rejoinder Schedule D-4.4, column 7
4 Growth rate (g). Average of Analyst Estimates Future Growth. See Rejoinder Schedule D-4.6.

Lago Del Oro Water Company
Market Betas

Exhibit
Rejoinder Schedule D-4.9
Witness: Bourassa

Line No.	Company	Beta (β)[1]
1		
2	1. American States	0.65
3	2. Aqua America	0.60
4	3. California Water	0.60
5	4. Connecticut Water	0.75
6	5. Middlesex	0.75
7	6. SJW Corp.	0.85
8		
9	Average	**0.70**
10		
11		
12		
13	[1] Value Line Investment Analyzer data (February 7, 2014)	
14	Note: Beta is a relative measure of the historical sensitivity of a stock's price to overall fluctuations	
15	in the New York Stock Exchange Composite Index. A Beta of 1.50 indicates a stock tends to rise	
16	(or fall) 50% more than the New York Stock Exchange Composite Index. The "Beta coefficient" is	
17	derived from a regression analysis of the relationship between weekly percent-age changes in the	
18	price of a stock and weekly percentage changes in the NYSE Index over a period of five years. In	
19	the case of shorter price histories, a smaller time period is used, but two years is the minimum.	
20	The Betas are adjusted for their long-term tendency to converge toward 1.00.	

Lago Del Oro Water Company
Forecasts of Long-Term Interest Rates

Exhibit
Rejoinder Schedule D-4.10
Witness: Bourassa

Line No.	Description	Fed Reserve Average Jan 14	2015	2016	Average
6	Blue Chip Consensus Forecasts[1]	3.77%	4.30%	4.40%	4.20%
8	Value Line[2]	3.77%	4.30%	4.70%	4.30%
10	Average				4.25%

[1] Dec 2013 Blue Chip Financial Forecasts consensus long-term forecast of 30 Year U.S.Treasury
[2] Value Line Quarterly forecast, dated Nov 22, 2013, Long-term Treasury

Lago Del Oro Water Company
Computation of Current Market Risk Premium

Exhibit
Rejoinder Schedule D-4.11
Witness: Bourassa

Line No.	Month	Dividend Yield (D_0/P_0)[1]	Expected Dividend Yield (D_1/P_0)[2]	+	Growth (g)[3]	=	Expected Market Return (k)	-	Monthly Average 30 Year Treasury Rate[4]	=	Market Risk Premium (MRP)
4	Dec 2011	2.27%	2.60%	+	14.52%	=	17.12%	-	2.98%	=	14.14%
5	Jan 2012	2.19%	2.45%	+	11.76%	=	14.21%	-	3.03%	=	11.18%
6	Feb	2.18%	2.46%	+	12.82%	=	15.28%	-	3.11%	=	12.17%
7	Mar	2.24%	2.54%	+	13.51%	=	16.05%	-	3.28%	=	12.77%
8	April	2.19%	2.47%	+	12.99%	=	15.46%	-	3.18%	=	12.28%
9	May	2.41%	2.78%	+	15.26%	=	18.04%	-	2.93%	=	15.11%
10	June	2.37%	2.70%	+	14.02%	=	16.72%	-	2.70%	=	14.02%
11	July	2.45%	2.82%	+	15.18%	=	18.00%	-	2.59%	=	15.41%
12	Aug	2.35%	2.67%	+	13.51%	=	16.18%	-	2.77%	=	13.41%
13	Sept	2.29%	2.57%	+	12.29%	=	14.86%	-	2.88%	=	11.98%
14	Oct	2.36%	2.67%	+	13.16%	=	15.83%	-	2.90%	=	12.93%
15	Nov	2.31%	2.59%	+	12.29%	=	14.88%	-	2.80%	=	12.08%
16	Dec 2012	2.22%	2.45%	+	10.48%	=	12.93%	-	2.88%	=	10.05%
17	Jan 2013	2.16%	2.37%	+	9.92%	=	12.29%	-	3.08%	=	9.21%
18	Feb	2.24%	2.49%	+	11.22%	=	13.71%	-	3.17%	=	10.54%
19	Mar	2.17%	2.39%	+	9.92%	=	12.31%	-	3.16%	=	9.15%
20	April	2.11%	2.31%	+	9.44%	=	11.75%	-	2.93%	=	8.82%
21	May	2.07%	2.26%	+	8.97%	=	11.22%	-	3.11%	=	8.11%
22	June	2.14%	2.35%	+	9.73%	=	12.08%	-	3.40%	=	8.68%
23	July	2.02%	2.18%	+	7.79%	=	9.97%	-	3.61%	=	6.36%
24	Aug	2.14%	2.33%	+	8.97%	=	11.30%	-	3.76%	=	7.54%
25	Sept	2.10%	2.27%	+	8.00%	=	10.27%	-	3.79%	=	6.48%
26	Oct	2.00%	2.14%	+	7.19%	=	9.33%	-	3.68%	=	5.65%
27	Nov	1.99%	2.13%	+	6.98%	=	9.11%	-	3.80%	=	5.31%
28	Dec 2013	1.93%	2.05%	+	6.16%	=	8.21%	-	3.89%	=	4.32%
29	Jan 2014	2.01%	2.15%	+	6.78%	=	8.93%	-	3.77%	=	5.16%
32	Recommended	2.03%	2.18%	+	7.35%	=	9.52%	-	3.78%	=	7.18%
34	Short-term Trends										
35	Recent Twelve Months Avg	2.08%	2.25%	+	8.43%	=	10.68%	-	3.51%	=	7.18%
36	Recent Nine Months Avg	2.04%	2.21%	+	7.84%	=	10.05%	-	3.65%	=	6.40%
37	Recent Six Months Avg	2.03%	2.18%	+	7.35%	=	9.52%	-	3.78%	=	5.74%
38	Recent Three Months Avg	1.98%	2.11%	+	6.64%	=	8.75%	-	3.82%	=	4.93%

41 [1] Median Current Dividend Yield (D_0/P_0) of dividend paying stocks. Data from Value Line Investment Analyzer Software Data - Value Line 1700 Stocks
42 [2] Expected Dividend Yield (D_1/P_0) equals average current dividend yield (D_0/P_0) times one plus growth rate(g).
43 [3] Median 3-5 year price appreciation (annualized). Data from Value Line Investment Analyzer Software Data - Value Line 1700 Stocks
44 [4] Monthly average 30 year U.S. Treasury. Federal Reserve.

Lago Del Oro Water Company
Traditional Capital Asset Pricing Model (CAPM)

Exhibit
Rejoinder Schedule D-4.12
Witness: Bourassa

Line No.		Rf[1]	+	beta[2]	x	RP_M		+	=	k
1										
2										
3	Historical Market Risk Premium CAPM	4.25%	+	0.70	x	6.70%	[3]	+	=	8.9%
4										
5	Current Market Risk Premium CAPM	4.25%	+	0.70	x	7.18%	[4]	+	=	9.3%
6										
7	Average									9.1%
8										
9	Median									9.1%
10										
11										
12	1 Forecasts of long-term treasury yields. See Rejoinder Schedule D-4.10.									
13	2 Value Line Investment Analyzer data. See Rejoinder Schedule D-4.9.									
14	3 Historical Market Risk Premium from (Rp) MorningStar SBBI 2013 Valuation Yearbook Table A-1 Long-Horizon ERP 1926-2012.									
15	4 Computed using DCF constant growth method to determine current market return onValue Line 1700 stocks									
16	and CAPM with beta of 1.0 to compute Current Market Risk Premium (Rp). See Rejoinder Schedule D-4.11.									
17										
18										
19										
20										

Lago Del Oro Water Company
COST OF EQUITY (COE) USING RISK PREMIUM BUILD-UP METHOD
Based on *Duff and Phelps* Risk Premium Study Data

Exhibit
Rejoinder Schedule D.4.13
Witness: Bourassa

			Measures of size (Millions)					
	Company	Symbol	MV Equity[1]	Book Equity[1]	MVIC[1]	5 Yr Avg. Net Income	Total Assets[2]	5 Yr Avg. EBITDA[3]
1.	American States	AWR	$ 1,084	$ 454	$ 1,417	$ 37	$ 1,281	$ 130
2.	Aqua America	WTR	$ 4,150	$ 1,386	$ 5,694	$ 133	$ 4,859	$ 422
3.	California Water	CWT	$ 939	$ 474	$ 1,373	$ 41	$ 1,996	$ 140
4.	Connecticut Water	CTWS	$ 371	$ 185	$ 550	$ 11	$ 579	$ 24
5.	Middlesex	MSEX	$ 328	$ 181	$ 459	$ 13	$ 562	$ 38
6.	SJW Corp.	SJW	$ 526	$ 275	$ 862	$ 21	$ 1,087	$ 89
	Lago Del Oro Water Company	Proforma	NA	$ 9.5	NA	$ 0.1	$ 11.1	$ 0.4

[1] From Zacks Investment Research data
[2] From Zacks Investment Research. From E-1 for subject utility.
[3] Net Income. From Zacks Investment Research and Company ACC reports

Net Income Data ($ millions)

Company	Symbol	2012	2011	2010	2009	2008	Average
American States	AWR	$ 54.0	$ 45.9	$ 33.2	$ 29.5	$ 22.0	$ 36.9
Aqua America	WTR	$ 197.0	$ 143.1	$ 124.0	$ 104.4	$ 97.9	$ 133.3
California Water	CWT	$ 49.0	$ 37.7	$ 37.7	$ 40.6	$ 39.8	$ 40.9
Connecticut Water	CTWS	$ 14.0	$ 11.3	$ 9.8	$ 10.2	$ 9.4	$ 10.9
Middlesex	MSEX	$ 14.0	$ 13.4	$ 14.3	$ 10.0	$ 12.2	$ 12.8
SJW Corp.	SJW	$ 22.0	$ 20.9	$ 24.4	$ 15.2	$ 21.5	$ 20.8
Lago Del Oro Water Company		$ (0.0)	$ 0.1	$ 0.1	$ 0.2	$ 0.1	$ 0.1

Net Income data for publicly traded water utilities from Zacks Investment Research and/or Yahoo Finance

[4] Earnings before Interest, Taxes, Depreciation and Amortization (EBITDA). From Zacks Investment Research and Company ACC reports.

EBITDA Data ($ millions)

Company	Symbol	2012	2011	2010	2009	2008	Average
American States	AWR	$ 154.0	$ 133.3	$ 134.4	$ 122.6	$ 105.9	$ 130.0
Aqua America	WTR	$ 439.0	$ 397.8	$ 473.2	$ 415.2	$ 384.7	$ 422.0
California Water	CWT	$ 151.0	$ 143.3	$ 155.7	$ 125.5	$ 122.1	$ 139.5
Connecticut Water	CTWS	$ 30.0	$ 24.2	$ 22.5	$ 20.3	$ 21.1	$ 23.6
Middlesex	MSEX	$ 39.0	$ 34.6	$ 43.3	$ 34.6	$ 38.6	$ 38.0
SJW Corp.	SJW	$ 90.0	$ 87.1	$ 75.4	$ 93.5	$ 99.7	$ 89.1
Lago Del Oro Water Company		$ (0.1)	$ 0.2	$ 0.2	$ 1.0	$ 0.9	$ 0.4

EBITDA data for publicly traded water utilities from Zacks Investment Research and/or Yahoo Finance
EBITDA data for subject utility from E-1 and/or ACC reports

Lago Del Oro Water Company
COST OF EQUITY (COE) USING RISK PREMIUM BUILD-UP METHOD
Based on *Duff and Phelps* Risk Premium Study Data

Exhibit
Rejoinder Schedule D.4.14
Witness: Bourassa

MRP_{m+s} Estimates Using Duff & Phelps Study (Unlevered)
Assumes 100% Equity and 0% debt
Data Smoothing with Regression Analysis
Smoothed Premium (RP_{m+s}) = Constant + X Coefficients * Log(Relevent Metric)

$RP_{unrelevered} = RP_{levered} - W_d/W_e*(\beta_u-\beta_d)*RP_{market}$
Where β_u = unlevered portfolio beta
β_d = debt beta, assumed to be 0.1
W_d = percentage of debt in capital structure
W_e = percentage of equity in capital structure
$RP_{levered}$ = levered realized risk premium

	MV Equity (Table C-1)	Book Equity (Table C-2)	MVIC (Table C-4)	5 Yr Avg. Net Income (Table C-3)	Total Assets (Table C-5)	5 Yr Avg. EBITDA (Table C-6)
Constant	18.448%	15.453%	18.701%	13.312%	17.363%	14.836%
X Coefficient(s)	-3.193%	-2.533%	-3.173%	-2.600%	-2.793%	-2.717%

MRP_{m+s} (unlevered)

	Company	Symbol	MV Equity	Book Equity	MVIC	5 Yr Avg. Net Income	Total Assets	5 Yr Avg. EBITDA	Average
1.	American States	AWR	8.76%	8.72%	8.70%	9.24%	8.68%	9.09%	8.87%
2.	Aqua America	WTR	6.90%	7.50%	6.79%	7.79%	7.07%	7.70%	7.29%
3.	California Water	CWT	8.96%	8.68%	8.74%	9.12%	8.15%	9.01%	8.78%
4.	Connecticut Water	CTWS	10.24%	9.71%	10.01%	10.61%	9.65%	11.11%	10.22%
5.	Middlesex	MSEX	10.42%	9.73%	10.25%	10.43%	9.68%	10.54%	10.18%
6.	SJW Corp.	SJW	9.76%	9.27%	9.39%	9.89%	8.88%	9.54%	9.45%
	Average (unlevered)		9.17%	8.94%	8.98%	9.51%	8.68%	9.50%	9.13%
	Lago Del Oro Water Company		NA	12.98%	NA	15.87%	14.44%	15.80%	14.77%

Lago Del Oro Water Company
COST OF EQUITY (COE) USING RISK PREMIUM BUILD-UP METHOD
Based on *Duff and Phelps* Risk Premium Study Data

Exhibit
Rejoinder Schedule D.4.15
Witness: Bourassa

Unlevered Portfolio Beta
(from 2012 Duff & Phelps RP Study - Table C)

	Company	Symbol	Unlevered Portfolio Beta (β_u) (Table C-1)	(Table C-2)	(Table C-4)	(Table C-3)	(Table C-5)	(Table C-6)	Average
1.	American States	AWR	0.94	0.96	0.95	0.95	0.97	0.95	0.95
2.	Aqua America	WTR	0.87	0.89	0.86	0.88	0.83	0.82	0.86
3.	California Water	CWT	0.98	0.96	0.95	0.95	0.94	0.96	0.96
4.	Connecticut Water	CTWS	0.96	0.98	0.97	0.97	0.99	1.03	0.98
5.	Middlesex	MSEX	0.96	1.00	0.98	0.97	0.99	0.99	0.98
6.	SJW Corp.	SJW	0.98	0.98	0.98	0.99	0.97	0.95	0.98
	Average		0.95	0.96	0.95	0.95	0.95	0.95	0.95
	Lago Del Oro Water Company		NA	0.98	NA	1.01	1.05	1.03	1.02

Lago Del Oro Water Company
COST OF EQUITY (COE) USING RISK PREMIUM BUILD-UP METHOD
Based on *Duff and Phelps* Risk Premium Study Data

Exhibit
Rejoinder Schedule D.4.16
Witness: Bourassa

MRP Estimates Using Duff & Phelps Study (Relevered)
Relevered Realized Risk Premium

$RP_{relevered} = RP_{unlevered} + W_d/W_e*(\beta_u-\beta_d)*RP_{market}$

Where β_u = unlevered portfolio beta

β_d = debt beta, assumed to be 0.1

W_d = percentage of debt in capital structure

W_e = percentage of equity in capital structure

$RP_{unlevered}$ = unlevered realized risk premium from Table 2

RP_{market} = general equity risk premium for the market since 1963.

			MRP_{m+s} (Relevered)							
	Company	Symbol	W_d/W_e	MV Equity	Book Equity	MVIC	5 Yr Avg. Net Income	Total Assets	5 Yr Avg. EBITDA	Average
1.	American States	AWR	30.7%	9.92%	9.91%	9.88%	10.41%	9.88%	10.27%	10.04%
2.	Aqua America	WTR	37.2%	8.18%	8.82%	8.06%	9.09%	8.29%	8.91%	8.56%
3.	California Water	CWT	46.3%	10.79%	10.47%	10.51%	10.89%	9.89%	10.80%	10.56%
4.	Connecticut Water	CTWS	48.1%	12.10%	11.62%	11.89%	12.49%	11.57%	13.12%	12.13%
5.	Middlesex	MSEX	40.1%	11.97%	11.36%	11.84%	12.00%	11.29%	12.15%	11.77%
6.	SJW Corp.	SJW	63.7%	12.28%	11.80%	11.91%	12.44%	11.38%	11.98%	11.96%
	Average MRP (Relevered)		44.35%	10.87%	10.66%	10.68%	11.22%	10.38%	11.20%	10.84%
	Lago Del Oro Water Company		12.18%	NA	13.46%	NA	16.36%	14.96%	16.31%	15.27%

Lago Del Oro Water Company
COST OF EQUITY (COE) USING RISK PREMIUM BUILD-UP METHOD
Based on *Duff and Phelps* Risk Premium Study Data

Exhibit
Rejoinder Schedule D.4.17
Witness: Bourassa

Equity Risk Premium Adjustment and Other meterics used in Build-up Method

[1] Estimate of Current Market Risk Premium (RP_{market})	**5.00%**	<<<< Current Duff and Phelps recommendation
[2] Risk Premium Assumed in Duff & Phelps Study (1963-2012)[1]	4.50%	
[3] Equity Risk Premium Adjustment ([1] - [2])	0.50%	
[4] Average MRP (relevered) for publicly traded water companies (from Rejoinder Schedule D-4.16)	10.84%	
[5] MRP_{m+s} (relevered) for publicly traded water companies (RP_{m+s}) ([3] + [4])	11.34%	
[6] Equity Risk Premium Adjustment ([3])	0.50%	
[7] Average MRP (relevered) for subject utility company (from Table 4)	15.27%	
[8] MRP (relevered) for subject utility company (RP_{m+s}) ([6] + [7])	15.77%	
[9] Industry Risk Premium (From *Ibbotson* for SIC 494 Water Supply Industry Table 3-5)	-4.92%	
[10] Adjustment Factor to Industry Risk Premium ([2] / 6.7%[1])	0.7463	
[11] Adjusted Industry Risk Premium (R_i) ([9] x [10])	-3.67%	
[12] Risk Free Rate (R_f)[2]	3.42%	

[1] From Duff and Phelps Risk Premium Report 2013.
[2] Yield on 20 Yr U.S. Treasury Feb 6, 2014 (Federal Reserve)

Lago Del Oro Water Company
COST OF EQUITY (COE) USING RISK PREMIUM BUILD-UP METHOD
Based on *Duff and Phelps* Risk Premium Study Data

Exhibit
Rejoinder Schedule D.4.18
Witness: Bourassa

Cost of Equity (COE) Estimate using Build-up Method

$E(R_i) = R_f + RP_{m+s} + RP_i + RP_u$

Where:

$E(R_i)$ = Expected (indicated) rate of return
Rf = Risk-free rate of return. See Rejoinder Schedule D-4.17.
RP_{m+s} = Market risk premium including size premium. See Rejoinder Schedule D-4.17.
RP_i = Industry risk premium (adjusted). See Rejoinder Schedule D-4-17.
RP_u = Company-specific risk premium

	Sample Publicly Traded Water Utilities	Lago Del Oro Water Company
R_f =	3.42%	3.42%
RP_{m+s} =	See Sched. D-4.16	
RP_i =	-3.67%	-3.67%
RP_u =	0.00%	0.00%

	Company	Symbol	Indicated COE $E(R_i)$ MV Equity	Book Equity	MVIC	5 Yr Avg. Net Income	Total Assets	5 Yr Avg. EBITDA	Average
1.	American States	AWR	10.16%	10.16%	10.12%	10.66%	10.13%	10.51%	10.29%
2.	Aqua America	WTR	8.43%	9.07%	8.31%	9.34%	8.54%	9.16%	8.81%
3.	California Water	CWT	11.04%	10.72%	10.76%	11.14%	10.14%	11.05%	10.81%
4.	Connecticut Water	CTWS	12.35%	11.86%	12.14%	12.74%	11.82%	13.37%	12.38%
5.	Middlesex	MSEX	12.22%	11.60%	12.09%	12.25%	11.54%	12.40%	12.02%
6.	SJW Corp.	SJW	12.53%	12.05%	12.16%	12.69%	11.63%	12.22%	12.21%
	Average COE estimate		11.12%	10.91%	10.93%	11.47%	10.63%	11.45%	11.09%
	Median COE Estimate		11.63%	11.16%	11.43%	11.70%	10.84%	11.64%	11.41%
	Lago Del Oro Water Company		NA	13.71%	NA	16.61%	15.21%	16.56%	15.52%

BEFORE THE ARIZONA CORPORATION COMMISSION

BOB STUMP
Chairman
GARY PIERCE
Commissioner
BRENDA BURNS
Commissioner
BOB BURNS
Commissioner
SUSAN BITTER SMITH
Commissioner

IN THE MATTER OF THE APPLICATION OF LAGO DEL ORO WATER COMPANY, AN ARIZONA CORPORATION FOR A DETERMINATION OF THE FAIR VALUE OF ITS UTILITY PLANT AND PROPERTY AND FOR INCREASES IN ITS WATER RATES AND CHARGES FOR UTILITY SERVICE BASED THEREON	)	DOCKET NO W-01944A-13-0215

EXHIBIT
S-7A
ADMITTED

DIRECT

TESTIMONY

OF

MARY J. RIMBACK

PUBLIC UTILITIES ANALYST

UTILITIES DIVISION

ARIZONA CORPORATION COMMISSION

JANUARY 17, 2014

0000150890

BEFORE THE ARIZONA CORPORATIO.

COMMISSIONERS

BOB STUMP, CHAIRMAN
GARY PIERCE
BRENDA BURNS
BOB BURNS
SUSAN BITTER SMITH

RECEIVED

2014 JAN 17 P 4: 06

AZ CORP COMMISSION
DOCKET CONTROL

EXHIBIT

ORIGINAL

IN THE MATTER OF THE APPLICATION OF LAGO DEL ORO WATER COMPANY, AN ARIZONA CORPORATION, FOR A DETERMINATION OF THE FAIR VALUE OF ITS UTLITY PLANT AND PROPERTY AND FOR INCREASES IN ITS WATER RATES AND CHARGES FOR UTILITY SERVICE BASED THEREON.	DOCKET NO. W-01944A-13-0215 **STAFF'S NOTICE OF FILING DIRECT TESTIMONY**

The Utilities Division ("Staff") of the Arizona Corporation Commission ("Commission") hereby files the Direct Testimony of Staff witnesses Mary Rimback, Michael Thompson, and John Cassidy, in the above-captioned matter.

RESPECTFULLY SUBMITTED this 17th day of January, 2014.

Arizona Corporation Commission
DOCKETED
JAN 17 2014
DOCKETED BY

Robin R. Mitchell
Attorney, Legal Division
Arizona Corporation Commission
1200 West Washington Street
Phoenix, Arizona 85007
(602) 542-3402

Original and thirteen (13) copies of the foregoing filed this 17th day of January, 2014, with:

Docket Control
Arizona Corporation Commission
1200 West Washington Street
Phoenix, Arizona 85007

Copy of the foregoing mailed and/or emailed on the 17th day of January, 2014, to:

Jay L. Shapiro
FENNEMORE CRAIG
2394 East Camelback Road, Suite 600
Phoenix, AZ 85016
Attorneys for Lago Del Oro Water Co.

Steven Soriano
Vice President and General Manager
Lago Del Oro Water Company
9532 East Riggs Road
Sun Lakes, AZ 85248

Monica A. Martinez

TABLE OF CONTENTS

Page

I. INTRODUCTION 1

II. BACKGROUND 2

III. CONSUMER SERVICE 4

IV. COMPLIANCE 4

V. RATE APPLICATION 5

VI. SUMMARY OF PROPOSED REVENUES 5

VII. RATE BASE 7

Fair Value Rate Base 7
Rate Base Summary 7
Rate Base Adjustment No. 1 – Staff adjusted value of plant purchased from an affiliate in 2012. 8
Rate Base Adjustment No. 2 – Accumulated depreciation for fully depreciated plant. 10
Rate Base Adjustment No. 3 – CIAC and amortization of CIAC 11
Rate Base Adjustment No. 4 – Accumulated deferred income tax ("ADIT") 12

VIII. OPERATING INCOME 12

Operating Income Summary 12
Operating Income Adjustment No. 1 – Water Testing expense 12
Operating Income Adjustment No. 2 – Depreciation expense 13
Operating Income Adjustment No. 3 – Property tax expense 13
Operating Income Adjustment No. 4 – Income tax expense 14

SCHEDULES

Revenue Requirement MJR-1

Gross Revenue Conversion Factor MJR-2

Rate Base – Original Cost MJR-3

Summary of Original Cost Rate Base Adjustments MJR-4

Rate Base Adjustment No. 1 – Adjust plant purchased from Affiliate MJR-5

Rate Base Adjustment No. 2 – Accumulated depreciation on fully depreciated plant MJR-6

Rate Base Adjustment No. 3 – CIAC and amortization of CIAC MJR-7

Rate Base Adjustment No. 4 – Accumulated deferred income taxes MJR-8

Operating Income Statement – Test Year and Staff Recommended MJR-9

Summary of Operating Income Statement Adjustments – Test Year MJR-10

Operating Income Adjustment No. 1 Water testing expense MJR-11

Operating Income Adjustment No. 2 – Depreciation Expense MJR-12

Operating Income Adjustment No. 3 – Property tax expense MJR-13

Operating Income Adjustment No. 4 – Income tax Expense MJR-14

EXECUTIVE SUMMARY
LAGO DEL ORO WATER COMPANY
DOCKET NO. W-01944A-13-0215

Lago Del Oro Water Company ("LDO" or "Company") is an Arizona C-corporation and a for-profit Class B public service corporation providing water service to approximately 6,350 customers in the master planned community of Saddlebrooke in Pinal County, the community of Catalina in Pima County, and a smaller residential community, surrounded by Saddlebrooke, known as Loma Serena.

On June 27, 2013, the Company filed a rate increase application. On July 24, 2013, the Company docketed a revised Schedule H-3 regarding commodity rates. On July 26, 2013, Staff filed a letter declaring the Company's rate application sufficient.

RATE APPLICATION:

The Company-proposed rates, as filed, produce total operating revenue of $3,075,271, an $1,193,033 (63.38 percent) increase over the test year revenue of $1,882,238, to provide a $716,971 operating income and an 8.65 percent rate of return on a proposed $8,287,733 fair value rate base ("FVRB") which is also the proposed original cost rate base ("OCRB"). The rate application shows that LDO incurred a $3,470 operating loss for the test year ending December 31, 2012.

The Utilities Division ("Staff") recommends total operating revenue of $2,829,778, a $947,540 (50.34 percent) increase over the $1,882,238 test year revenue, to provide a $580,094 operating income and a 7.9 percent rate of return on the $7,342,962 Staff-adjusted OCRB.

Staff further recommends that the rates not become effective until the Company is in compliance with ADWR.

I. INTRODUCTION

Q. Please state your name, occupation, and business address.

A. My name is Mary J. Rimback. I am a Public Utilities Analyst with the Arizona Corporation Commission ("ACC" or "Commission") in the Utilities Division ("Staff"). My business address is 1200 West Washington Street, Phoenix, Arizona 85007.

Q. Briefly describe your responsibilities as a Public Utilities Analyst.

A. In my capacity as a Public Utilities Analyst, I analyze and examine accounting, financial, statistical and other information included in utility rate, financing and other applications. In addition, I prepare written reports based on my analyses and present Staff's recommendations to the Commission on utility revenue requirements, rate design, and other issues.

Q. Please describe your educational background and professional experience.

A. I graduated from Arizona State University with a Bachelor of Science in Accounting and I am a Certified Public Accountant with the Arizona State Board of Accountancy. I began employment with the Arizona Corporation Commission in June of 2012. I have participated in rate, financing and other regulatory proceedings since joining the Commission. I attended the National Association of Regulatory Utility Commissioners ("NARUC") Utilities Rate School.

Q. What is the scope of your testimony in this case?

A. I am presenting Staff's analysis and recommendations regarding Lago Del Oro Water Company's ("LDO" or "Company") application for a rate increase. I am presenting testimony and schedules addressing rate base, operating revenues and expenses, revenue requirement and rate design. Mr. John Cassidy is presenting the Staff's analysis and

recommendation for the cost of capital. Mr. Michael Thompson is presenting Staff's engineering analysis and related recommendations.

Q. What is the basis of your testimony in this case?

A. I performed a regulatory audit of the Company's application and records. The regulatory audit consisted of examining and testing financial information, accounting records, and other supporting documentation and verifying that the accounting principles applied were in accordance with the Commission-adopted NARUC Uniform System of Accounts ("USOA").

Q. How is your testimony organized?

A. My testimony is presented in eight Sections. Section I is this introduction. Section II provides a background of the Company. Section III is a summary of consumer service issues. Section IV presents compliance status. Section V is a summary of proposed revenues. Section VI is a summary of Staff's rate base and operating income adjustments. Section VII presents Staff's rate base recommendations. Section VIII presents Staff's operating income recommendations.

II. BACKGROUND

Q. Please review the pertinent background information associated with the Company's application for a rate increase.

A. LDO is an affiliate of Robson Communities, Inc. ("Robson"). Robson is best known as a developer of master planned retirement communities in Arizona and Texas. The ownership of LDO is comprised of a number of shareholders; each shareholder is in the form of a trust. As of the filing, there were 20 shareholders/trusts of LDO, each with various ownership percentages. The LDO water system serves the unincorporated master planned community of SaddleBrooke ("SaddleBrooke"), the unincorporated community

of Catalina ("Catalina"), and a smaller residential community, surrounded by SaddleBrooke, known as Loma Serena. The three (3) communities are located off State Route 77 ("SR-77") approximately 25 miles north of the City of Tucson in Pinal and Pima Counties, Arizona. SaddleBrooke Development Company ("SDC") developed the master planned community of SaddleBrooke, which is also a Robson affiliate.

In addition to LDO, the Robson affiliates include the following water and wastewater utilities:

Ridgeview Utility Company
SaddleBrooke Utility Company
Quail Creek Water Company, Inc.
Picacho Water Company
Picacho Sewer Company
Pima Utility Company
Mountain Pass Utility Company
Santa Rosa Water Company
Santa Rosa Utility Company

The Company is also seeking a debt financing approval in a separate application, Docket No. W-01944A-13-0242, filed July 10, 2013. The proposed financing seeks authority to issue evidence of indebtedness in an amount not to exceed $3,900,000 and to encumber its real property and utility plant as security for the indebtedness. The financing application is not consolidated with this rate case. However, certain elements of the financing application have relevance in this rate application as discussed later.

LDO's current rates were established in Decision No. 56464 effective May 1, 1989, with the exception of separate irrigation rates which were established in Decision No. 57766, effective March 16, 1992. The Company had 700 connections as of the date of Decision No. 56464. Over the years, the Company has added major plant to accommodate the current connections. The Company used SDC to construct and initially fund the water facilities. In 2012, LDO purchased from SDC, a significant portion of the system at a cost of $3,887,000. Prior to the purchase, LDO plant in service was $14,313,198.

Q. What test year did LDO use for the rate application?

A. LDO's rate filing is based on the twelve months that ended December 31, 2012.

III. CONSUMER SERVICE

Q. Please provide a brief summary of customer complaints received by the Commission regarding LDO.

A. Staff reviewed the Commission Consumer Service records for the period of January 1, 2011 through December 13, 2013, and found the following:

2011 – No complaints

2012 – No complaints

2013 – Two complaints – One Rates & Tariffs, One Billing

All complaints are resolved and closed.

Nine Opinions – All opposed to the proposed rate increase

IV. COMPLIANCE

Q. Please provide a summary of the compliance status of the Company.

A. A review of the Utilities Division Compliance Section's database as of August 27, 2013, showed no delinquent compliance items for LDO.

V. RATE APPLICATION

Q. What is the primary reason for the Company's requested permanent rate increase?

A. The Company states that it is not earning an adequate rate of return on its investment.

VI. SUMMARY OF PROPOSED REVENUES

Q. Please summarize the Company's rate application.

A. The Company-proposed rates, as filed, produce total operating revenue of $3,075,271, a $1,193,033 (63.38 percent) increase, over the test year revenue of $1,882,238, to provide a $716,971 operating income and an 8.65 percent rate of return on a proposed $8,287,733 fair value rate base ("FVRB") which is also the proposed original cost rate base ("OCRB"). The rate application indicates that LDO incurred a $3,470 operating loss for the test year ending December 31, 2012.

Q. Please summarize Staff's recommendations.

A. Staff recommends total operating revenue of $2,829,778, a 947,540 (50.34 percent) increase over the $1,882,238 test year revenue, to provide a $580,094 operating income and a 7.9 percent rate of return on the $7,342,962 Staff-adjusted FVRB and OCRB.

Q. Please summarize Staff's rate base and operating income adjustments.

A. My testimony addresses the following issues:

<u>Staff adjusted value of plant purchased from affiliated company</u> – The plant LDO purchased from SDC had an original cost of $3,887,998. The plant was purchased in 2012, but some of the purchased assets were placed in service as early as 1997. No consideration was given to the level of accumulated depreciation that would have been recorded between the time the plant was placed in service and the time the plant was

actually purchased by LDO. Staff believes the decrease in the useful economic life of these assets, represented by accumulated depreciation, should be given consideration. Staff removed $1,136,587 from the original cost of these facilities and $28,415 from accumulated depreciation relating to the half year of depreciation in test year 2012 in order to assure that the value attributable this purchased plant properly reflects only LDO's net investment in these transferred facilities.

Accumulated Depreciation—Fully Depreciated Plant – This adjustment removes the amount of $371,263 from accumulated depreciation to recognize plant that is fully depreciated.

Contributions In Aid of Construction ("CIAC") – Adjust for fully amortized CIAC, net increase to CIAC of $87,724.

Accumulated Deferred Income Taxes ("ADIT") – Adjusts deferred income taxes as a result of adjustments 1, 2 and 3 to increase the deferred income tax liability by $120,138 to $399,497.

Contract Services-Engineering Services Water Testing Expense – This adjustment reduces water testing expense to $21,885, a decrease of $548.

Depreciation Expense - This adjustment decreases depreciation expense by $76,505 to reflect application of Staff's recommended depreciation rates to Staff recommended plant amounts.

Property Taxes - This adjustment decreases property taxes by $4,929 to reflect application of the modified version of the Arizona Department of Revenue's property tax methodology which the Commission has consistently adopted. This adjustment is based on a 19 percent assessment ratio as opposed to the 20 percent assessment ratio proposed by the Company.

Test Year Income Taxes - This adjustment increases income tax expense from a negative $128,849 to a negative $45,891 an increase of $82,958 to reflect Staff proposed operating income.

VII. RATE BASE

Fair Value Rate Base

Q. Does LDO's application include schedules with elements of a Reconstruction Cost New Rate Base?

A. No. The Company's application does not request recognition of a Reconstruction Cost New Rate Base. Accordingly, Staff has treated the Company's original cost rate base as its fair value rate base.

Rate Base Summary

Q. Please summarize Staff's rate base recommendation.

A. Staff recommends $7,342,962 for a rate base, a decrease of $944,771 from the Company's proposed $8,287,733 rate base. Staff's recommendation results from the four rate base adjustments below.

Rate Base Adjustment No. 1 – Staff adjusted value of plant purchased from an affiliate in 2012.

Q. What value did the Company propose for plant purchased from the affiliated company, Saddlebrooke Development Company, in 2012?

A. The Company proposed a cost of $3,887,998 for these assets.

Q. Did the Company provide the details of this transaction?

A. Yes.

Q. Describe the details provided.

A. The Company provided general ledger transactions by NARUC account and by project and a detailed listing of plant values. Further, in response to a Staff engineering data request, the Company provided the dates the various projects were placed in service.

Q. From the information provided by the Company, was Staff able to determine the year that the various projects were placed in service by NARUC account?

A. Yes, the Company indicated that the assets involved were placed in service at various times beginning in 1997 and continuing through 2009.

Q. For ratemaking purposes, did Staff adjust the amount of gross plant purchased from the affiliated company?

A. Yes.

Q. Please explain.

A. As referenced in the Engineering Report Section J, the assets were placed in service as follows:

1997 Phase 2 – Offsite Water Mains	$537,979
2002 Unit 46 – Desert Reflections	$228,171
2005 Unit 47 – Desert Vista	$323,381
2006 Unit 48 – Desert Views and	
Unit 48 – A Hidden Vista	$227,131
2007 Transmission Mains	$261,625
2007 Unit 46 – A Fairway Valley	$ 7,386
2008 Unit 49 – Sun Ridge Hills	$501,861
2009 Water Plant #5	$983,357
2009 Well #22	$817,107

Staff requested several documents pertaining to the above transactions and noted that these documents did not reflect any depreciation being taken on these assets since the time the assets were placed in service.

Since the assets were placed in service in the prior years of 1997, 2002, 2005, 2006, 2007, 2008, and 2009, the original gross plant investment levels are not the appropriate values to be addressed for ratemaking purposes in 2012. Plant investments begin depreciating as of

the date the plant is placed in service, or capable of providing needed service. Depreciation expense represents the decrease in future deliverable economic value that results as assets are employed in the provision of service or otherwise consumed in the development of units of production. As a result, Staff adjusted the original plant values to reflect the level of accumulated depreciation that would have been booked assuming that a depreciation rate of 5 percent had applied to these assets. The 5 percent annual depreciation rate aligns with the rate in effect since the last rate case. Details of this adjustment by NARUC account are shown on Schedule MJR-W5.

Rate Base Adjustment No. 2 – Accumulated depreciation for fully depreciated plant.

Q. What did the Company propose for accumulated depreciation?

A. The Company's application proposes $8,840,798 for Accumulated Depreciation.

Q. How did the Company calculate the accumulated depreciation in the application?

A. The Company began with its last rate case, Decision No. 56464, effective May 1, 1989. The test year for its last rate case ended April 30, 1988. The Company detailed changes in plant and accumulated depreciation from May 1, 1988 through December 31, 2012, a period of over twenty-four years. Plant was depreciated at 5 percent per year using a half-year convention.

Q. Does Staff recommend an adjustment to this calculation?

A. Yes

Q. Why is Staff recommending an adjustment to accumulated depreciation?

A. Those items that were in gross plant twenty-four years ago and were never removed from service, if depreciated at 5 percent per year, were fully depreciated at twenty years.

Q. Did Staff adjust the amounts proposed for accumulated depreciation?

A. Yes

Q. How did Staff calculate the adjustment?

A. Staff re-calculated each year's depreciation expenses by NARUC account taking into account additions and retirements with information provided by the Company. Staff stopped depreciating plant still in service with over 20 years of depreciation.

Q. What amount of adjustment to accumulated depreciation is Staff recommending?

A. Staff recommends an adjustment to accumulated depreciation downward in the amount of $371,263, which had the effect of increasing rate base by $371,263 as shown on schedule MJR-W6.

Rate Base Adjustment No. 3 – CIAC and amortization of CIAC

Q. Did the Company provide a schedule of CIAC since the last rate case?

A. Yes. The Company provided a schedule showing CIAC added since the last rate case and amortization of CIAC since the last rate case.

Q. Did Staff recalculate an amount for CIAC and CIAC amortization?

A. Yes, Staff calculated the CIAC balance for the end of the test year using schedules provided by the Company including the balance of accumulated amortization of CIAC.

Q. Did Staff's calculations match the Company's proposed net CIAC?

A. No, Staff found that the Company calculations continued to amortize CIAC that was completely amortized in 1995.

Q. What is Staff recommendation?

A. Staff recommends decreasing gross CIAC by $99,158 and decreasing CIAC amortization by $186,882 a net increase of $87,524 as shown on MJR-W7.

Rate Base Adjustment No. 4 – Accumulated deferred income tax ("ADIT")

Q. Did Staff adjust the ADIT calculation based on the adjustment of plant purchased from an affiliate, removal of accumulated depreciation on fully depreciated plant, and CIAC?

A. Yes, Staff increased the amount of ADIT by $120,138, from $279,359 to $399,497 as shown on Schedule MJR-W8.

VIII. OPERATING INCOME

Operating Income Summary

Q. What are the results of Staff's analysis of test year revenues, expenses, and operating income?

A. As shown in Schedules MJR-9 and MJR-10, Staff's analysis resulted in test year revenues of $1,882,238, expenses of $1,886,683 and operating loss of $4,445. The Company's application shows test year revenues of $1,882,238, expenses of $1,885,708 and an operating loss of $3,470. Staff's recommendation results from the four operating income adjustments discussed below.

Operating Income Adjustment No. 1 – Water Testing expense

Q. What is the Company proposing for Water Testing expense?

A. The Company is proposing $22,433 for Water Testing expense in the test year.

Q. What is Staff's Recommendation?

A. Staff recommends an annual amount of $21,885 for Water Testing expenses (See Staff engineering testimony of Michael Thompson), a decrease of $548. The adjustment to water testing expense is on Schedule MJR-W11.

Operating Income Adjustment No. 2 – Depreciation expense

Q. What is LDO proposing for depreciation expense?

A. LDO proposes $861,127 for depreciation expense.

Q. What is Staff's recommendation?

A. Staff recommends $784,622 for depreciation expense as reflected on Schedule MJR-W12.

Q. What are the components of the adjustment?

A. As previously discussed, rate base adjustments to purchased plant and accumulated depreciation were used to arrive at the depreciable plant amounts. Amortization of CIAC was adjusted to recommended CIAC amounts. Staff used recommended depreciation rates shown in Table E, Section H of the Engineering report.

Operating Income Adjustment No. 3 – Property tax expense

Q. What is LDO proposing for test year property taxes?

A. LDO is proposing $98,597 for test year property tax expense.

Q. Did the Company use the modified ADOR calculation for property tax expense?

A. For the most part Staff and the Company used the same methodology to calculate the property taxes with one exception. The Company proposes an assessment ratio of 20

percent; Staff is recommending a 19 percent assessment ratio in keeping with Arizona Revised Statutes ("ARS") § 42-15001.

Q. What is Staff recommending for test year Property Tax Expense?

A. Staff recommends $93,668 for test year property tax expense, a $4,929 decrease to the Company's proposed amount, as shown in Schedule MJR-13.

Operating Income Adjustment No. 4 – Income tax expense

Q. What is LDO proposing for income tax expense?

A. LDO proposes a negative amount of $128,849 for test year income taxes.

Q. Did Staff make an adjustment to test year Income Tax Expense?

A. Yes.

Q. What was the basis of Staff's adjustment to income taxes?

A. Staff applied the statutory state and federal income tax rates to Staff's test year taxable income. Income tax expenses for the test year and recommended revenues are shown in MJR-2.

Q. Did the Company and Staff use the same methodology to calculate income taxes?

A. For the most part, however Staff calculated the State tax rate using 6.5 percent corporate income tax rate rather that the Company proposed State corporate tax rate of 6.968 percent.

Q. Why the difference in state corporate income tax rates?

A. Staff refers to ARS§ 43-1111 to determine the tax rate to use for State Corporate taxes.

Q. What adjustment does Staff recommend for test year income tax expense for the Company?

A. Staff recommends an adjustment of $82,958 from ($128,849) to ($45,891) as shown in Schedule MJR –W14.

Q. Does this conclude your testimony?

A. Yes, it does.

Lago Del Oro Water Company
Docket No. W-01944A-13-0215
Test Year Ended December 31, 2012

Direct Testimony of Mary J. Rimback

TABLE OF CONTENTS TO SCHEDULES

SCH #	TITLE
MJR-W 1	REVENUE REQUIREMENT
MJR-W 2	GROSS REVENUE CONVERSION FACTOR
MJR-W 3	RATE BASE - ORIGINAL COSTS
MJR-W 4	SUMMARY OF ORIGINAL COST RATE BASE ADJUSTMENTS
MJR-W 5	RATE BASE ADJUSTMENT NO. 1 - STAFF ADJUSTED VALUE OF PLANT PURCHASED FROM AFFILIATED COMPANY
MJR-W 6	ORIGINAL COST RATE BASE ADJUSTMENT # 2 - ACCUMULATED DEPRECIATION - FULLY DEPRECIATED PLANT
MJR-W 7	ORIGINAL COST RATE BASE ADJUSTMENT # 3 - CIAC AND ACCUMULATED AMORTIZATION OF CIAC
MJR-W 8	ORIGINAL COST RATE BASE ADJUSTMENT # 1 - ACCUMULATED DEFERRED INCOME TAXES
MJR-W 9	OPERATING INCOME STATEMENT - ADJUSTED TEST YEAR AND STAFF RECOMMENDED
MJR-W 10	SUMMARY OF OPERATING INCOME STATEMENT ADJUSTMENTS - TEST YEAR
MJR-W 11	OPERATING INCOME ADJUSTMENT # 1 - WATER TESTING EXPENSE
MJR-W 12	OPERATING INCOME ADJUSTMENT # 3 - DEPRECIATION EXPENSE
MJR-W 13	OPERATING INCOME- ADJUSTMENT #4 - PROPERTY TAX EXPENSE
MJR-W 14	OPERATING INCOME ADJUSTMENT # 5 - INCOME TAX EXPENSE

Lago Del Oro Water Company
Docket No. W-01944A-13-0215
Test Year Ended December 31, 2012

Schedule MJR-W1

REVENUE REQUIREMENT

LINE NO.	DESCRIPTION	(A) COMPANY FAIR VALUE	(B) STAFF FAIR VALUE
1	Adjusted Rate Base	$ 8,287,733	$ 7,342,962
2	Adjusted Operating Income (Loss)	$ (3,470)	$ (4,445)
3	Current Rate of Return (L2 / L1)	-0.04%	-0.06%
4	Required Rate of Return	8.65%	7.90%
5	Required Operating Income (L4 • L1)	$ 716,971	$ 580,094
6	Operating Income Deficiency (L5 - L2)	$ 720,441	$ 584,539
7	Gross Revenue Conversion Factor	1.6560	1.6210
8	Required Revenue Increase (L7 • L6)	$ 1,193,033	**$ 947,540**
9	Adjusted Test Year Revenue	$ 1,882,238	$ 1,882,238
10	Proposed Annual Revenue	$ 3,075,271	$ 2,829,778
11	Required Increase in Revenue (%)	63.38%	50.34%

References:
Column (A): Company Schedule A-1
Column (B): Staff Schedules MJR-W3 and MJR-W9

Lago Del Oro Water Company
Docket No. W-01944A-13-0215
Test Year Ended December 31, 2012

Schedule MJR-W2

GROSS REVENUE CONVERSION FACTOR

LINE NO.	DESCRIPTION	(A)	(B)	(C)	(D)
	Calculation of Gross Revenue Conversion Factor:				
1	Revenue	100.0000%			
2	Uncollecible Factor	0.0000%			
3	Revenues (L1 - L2)	100.0000%			
4	Combined Federal and State Income Tax and Property Tax Rate (Line 18)	38.2965%			
5	Subtotal (L3 - L4)	61.7035%			
6	**Revenue Conversion Factor (L1 / L5)**	1.620655			
	Calculation of Uncollecttible Factor:				
7	Unity	100.0000%			
8	Combined Federal and State Tax Rate (Line 17)	37.2231%			
9	One Minus Combined Income Tax Rate (L7 - L8)	62.7769%			
10	Uncollectible Rate	0.0000%			
11	Uncollectible Factor (L9 * L10)	0.0000%			
	Calculation of Effective Tax Rate:				
12	Operating Income Before Taxes (Arizona Taxable Income)	100.0000%			
13	Arizona State Income Tax Rate	6.5000%			
14	Federal Taxable Income (L12 - L13)	93.5000%			
15	Applicable Federal Income Tax Rate (Line 48)	32.8589%			
16	Effective Federal Income Tax Rate (L9 x L10)	30.7231%			
17	Combined Federal and State Income Tax Rate (L13 +L16)		37.2231%		
	Calculation of Effective Property Tax Factor				
18	Unity	100.0000%			
19	Combined Federal and State Income Tax Rate (L17)	37.2231%			
20	One Minus Combined Income Tax Rate (L13-L14)	62.7769%			
21	Property Tax Factor (MJR-W13, L27)	1.7099%			
22	Effective Property Tax Factor (L20*L21)		1.0734%		
23	Combined Federal and State Income Tax and Property Tax Rate (L17+L22)			38.2965%	
24	Required Operating Income (Schedule MJR-W1, Line 5)	$ 580,094			
25	AdjustedTest Year Operating Income (Loss) (MJR-W10, L40	(4,445)			
26	Required Increase in Operating Income (L24 - L25)		$ 584,539		
27	Income Taxes on Recommended Revenue (Col. [C], L52)	$ 300,707			
28	Income Taxes on Test Year Revenue (Col. [C], L52)	(45,891)			
29	Required Increase in Revenue to Provide for Income Taxes (L27 - L28)		346,597		
30	Recommended Revenue Requirement (Schedule MJR-W1, Line 10)	$ 2,829,778			
31	Uncollectible Rate	0.0000%			
32	Uncolllectible Expense on Recommended Revenue (L30*L31)	$ -			
33	Adjusted Test Year Uncollectible Expense	$ -			
34	Required Increase in Revenue to Provide for Uncollectible Exp. (L32-L33)		-		
35	Property Tax with Recommended Revenue (Schedule MJR-W18, L21)	$ 109,870			
36	Property Tax on Test Year Revenue (Schedule MJR-W13, Line 17)	93,668			
37	Increase in Property Tax Due to Increase in Revenue (L30-31)		16,202		
38	Total Required Increase in Revenue (L21 + L24 + L29 + L32)		$ 947,338		

	Calculation of Income Tax:	Test Year		Staff Recommended
39	Revenue (Schedule MJR-W1, Col. [B], Line 9 & Sch. MJR-W1, Col. [B] Line 10)	$ 1,882,238	$ 947,540	$ 2,829,778
40	Operating Expenses Excludirg Income Taxes	$ 1,932,574		$ 1,948,776
41	Synchronized Interest (L57)	$ 95,459		$ 95,459
42	Arizona Taxable Income (L34 - L35 - L36)	$ (145,794)		$ 785,543
43	Arizona State Income Tax Rate	6.5000%		6.5000%
44	Arizona Income Tax (L37 x L38)	$ (9,477)		$ 51,060
45	Federal Taxable Income (L37- L39)	$ (136,318)		$ 734,483
46	Federal Tax on First Income Bracket ($1 - $50,000) @ 15%	$ (7,500)		$ 7,500
47	Federal Tax on Second Income Bracket ($51,001 - $75,000) @ 25%	$ (6,250)		$ 6,250
48	Federal Tax on Third Income Bracket ($75,001 - $100,000) @ 34%	$ (8,500)		$ 8,500
49	Federal Tax on Fourth Income Bracket ($100,001 - $335,000) @ 39%	$ (14,164)		$ 91,650
50	Federal Tax on Fifth Income Bracket ($335,001 -$10,000,000) @ 34%	$ -		$ 135,824
51	Total Federal Income Tax	$ (36,414)		$ 249,724
52	Combined Federal and State Income Tax (L43 + L51)	$ (45,891)		$ 300,785

53 Applicable Federal Income Tax Rate [Col. [C], L51 - Col. [A], L51] / [Col. [C], L45 - Col. [A], L45] 32.8592%

54	Synchronized Interest Calculation	
55	Rate Base	$ 7,342,962
56	Weighted Average Cost of Debt	1.30%
57	*Synchronized Interest*	$ 95,459

Lago Del Oro Water Company
Docket No. W-01944A-13-0215
Test Year Ended December 31, 2012

Schedule MJR-W3

RATE BASE - ORIGINAL COST

LINE NO.		(A) COMPANY AS FILED	(B) STAFF ADJUSTMENTS	(C) STAFF AS ADJUSTED
1	Plant in Service	$ 18,200,198	$ (1,136,586)	$ 17,063,612
2	Less: Accumulated Depreciation	8,840,798	(399,678)	8,441,120
3	Net Plant in Service	$ 9,359,400	$ (736,908)	$ 8,622,492
	LESS:			
4	Contributions in Aid of Construction (CIAC)	$ 852,693	$ (99,158)	$ 753,535
5	Less: Accumulated Amortization	469,879	(186,882)	$ 282,997
6	Net CIAC	$ 382,814	$ 87,724	$ 470,538
7	Advances in Aid of Construction (AIAC)	297,640	-	297,640
8	Customer Deposits	111,854	-	111,854
9	Accumulated Deferred Income Tax	279,359	120,138	399,497
	ADD:			
10	Working Capital Allowance	-		-
11	Defered Regulatory Assets	-		-
12	**Original Cost Rate Base**	$ 8,287,733	$ (944,771)	$ 7,342,962

References:
Column [A]: Company Application Schedule B-1
Column [B]: Testimony MJR
Column [C]: Column [A] + Column [B]

Lago Del Oro Water Company
Docket No. W-01944A-13-0215
Test Year Ended December 31, 2012

SUMMARY OF ORIGINAL COST RATE BASE ADJUSTMENTS

LINE NO.	ACCT. NO.	DESCRIPTION	[A] COMPANY AS FILED	[B] ADJ #1 2012 Affiliate Purchase Ref: Sch MJR-W5	[C] ADJ #2 Accum Deprec Fully Deprec Plant Ref: Sch MJR-W6	[D] ADJ #3 CIAC and Accum Ammort of CIAC Ref: Sch MJR-W7	[E] ADJ #4 ADIT Accum Def Inc Txs Ref: Sch MJR-W8	[F] STAFF ADJUSTED
1	*PLANT IN SERVICE:*							
2	301.0	Organization Cost	$ -	$ -	$ -	$ -	$ -	$ -
3	302.0	Franchise Cost	-	-	-	-	-	-
4	303.0	Land and Land Rights	42,608	-	-	-	-	42,608
5	304.0	Structures and Improvements	359,681	(16,508)	-	-	-	343,173
6	305.0	Collecting and Impounding Res.	-	-	-	-	-	-
7	306.0	Lake River and Other Intakes	-	0	-	-	-	0
8	307.0	Wells and Springs	2,164,423	(74,481)	-	-	-	2,089,942
9	308.0	Infiltration Galleries and Tunnels	-	-	-	-	-	-
10	309.0	Supply Mains	-	-	-	-	-	-
11	310.0	Power Generation Equipment	187,864	(9,372)	-	-	-	178,492
12	311.0	Electric Pumping Equipment	3,585,660	(82,196)	-	-	-	3,503,464
13	320.0	Water Treatment Equipment	-	-	-	-	-	-
14	320.2	Chemical Solution Feeders	24,640	-	-	-	-	24,640
15	330.0	Distribution Reservoirs & Standpipe	-	-	-	-	-	-
16	330.1	Storage Tanks	1,758,175	(48,478)	-	-	-	1,709,697
17	330.2	Pressure Tanks	321,969	(13,387)	-	-	-	308,582
18	331.0	Transmission and Distribution Mains	6,083,805	(747,934)	-	-	-	5,335,871
19	333.0	Services	1,888,741	(79,977)	-	-	-	1,808,764
20	334.0	Meters	504,321	-	-	-	-	504,321
21	335.0	Hydrants	718,857	(60,726)	-	-	-	658,131
22	336.0	Backflow Prevention Devices	-	-	-	-	-	-
23	339.0	Other Plant and Miscellaneous Equipment	-	-	-	-	-	-
24	340.0	Office Furniture and Fixtures	36,758	-	-	-	-	36,758
25	340.1	Computers and Software	-	-	-	-	-	-
26	341.0	Transportation Equipment	89,569	-	-	-	-	89,569
27	342.0	Stores Equipment	-	-	-	-	-	-
28	343.0	Tools and Work Equipment	-	-	-	-	-	-
29	344.0	Laboratory Equipment	-	-	-	-	-	-
30	345.0	Power Operated Equipment	55,787	-	-	-	-	55,787
31	346.0	Communications Equipment	351,219	(3,529)	-	-	-	347,690
32	347.0	Miscellaneous Equipment	26,122	-	-	-	-	26,122
33	348.0	Other Tangible Plant	-	-	-	-	-	-
34	Total Plant in Service - Actual		$ 18,200,198	-	-	-	-	$ 17,063,612
35		Post Test-Year Plant	-	-	-	-	-	-
36	Total Plant in Service		$ 18,200,198	$ (1,136,587)	$ -	$ -	$ -	$ 17,063,612
37	Less: Accumulated Depreciation		8,840,798	(28,415)	(371,263)	-	-	8,441,120
38			-	-	-	-	-	-
39	Net Plant in Service		$ 9,359,400	$ (1,108,172)	$ 371,263	$ -	$ -	$ 8,622,492
40								
41	*LESS:*							
42	Contributions in Aid of Construction (CIAC)		$ 852,693	$ -	$ -	$ (99,158)	$ -	753,535
43	Less: Accumulated Amortization		469,879	-	-	(186,882)	-	282,997
44	Net CIAC (L42 - L43)		$ 382,814	-	-	$ 87,724	-	$ 470,538
45	Advances in Aid of Construction (AIAC)		297,640	-	-	-	-	297,640
46	Customer Meter Deposits		111,854	-	-	-	-	111,854
47	Deferred Income Tax		279,359	-	-	-	120,138	399,497
48			-		-	-	-	-
49								
50	*ADD:*							
51	Working Capital Allowance		-	-	-	-	-	-
52	Defered Regulatory Assets		-	-	-	-	-	-
53								
54	Original Cost Rate Base		$ 8,287,733	$ (1,108,172)	$ 371,263	$ (87,724)	$ (120,138)	$ 7,342,962

Lago Del Oro Water Company
Docket No. W-01944A-13-0215
Test Year Ended December 31, 2012

Schedule MJR-W5

RATE BASE ADJUSTMENT NO. 1 - Staff adjusted value of plant purchased from affiliated company

LINE NO.	DESCRIPTION	[A] STAFF AS ADJ NO. 1	[B] STAFF ADJUSTMENTS	[C] STAFF AS ADJUSTED
1	304 Structures and Improvements	$ 110,051	$ (16,508)	$ 93,543
2	307 Wells and Springs	496,541	(74,481)	422,060
3	310 Power Generation Equipment	62,481	(9,372)	53,109
4	311 Electric Pumping Equipment	547,976	(82,196)	465,779
5	330.1 Storage Tanks	323,184	(48,478)	274,706
6	330.2 Pressure Tanks	89,247	(13,387)	75,860
7	331 Transmission and Distribution Mains	1,774,780	(747,934)	1,026,846
8	333 Services	270,250	(79,977)	190,273
9	335 Hydrants	189,964	(60,726)	129,238
10	346 Communications Equipment	23,525	(3,529)	19,996
11				
12	Subtotal	$ 3,887,998	$ (1,136,587)	$ 2,751,411
13				
14	Accumulated Depreciation	$ 97,200	$ (28,415)	$ 68,785

References:
Column [A]: Company Schedule B-2, Page 3.29
Column [B]: Testimony MJR
Column [C]: Column [A] + Column [B]

Lago Del Oro Water Company
Docket No. W-01944A-13-0215
Test Year Ended December 31, 2012

Schedule MJR-W6

RATE BASE ADJUSTMENT NO. 1 - Accumulated depreciation - fully depreciated plant

LINE NO.	DESCRIPTION	[A] COMPANY AS FILED	[B] STAFF ADJUSTMENTS	[C] STAFF AS ADJUSTED
1	Accumulated Depreciation	$ 8,840,798	$ (371,263)	$ 8,469,535

References:
Column [A]: Company Schedule B-2, Page 3.29
Column [B]: Testimony MJR
Column [C]: Column [A] + Column [B]

Lago Del Oro Water Company
Docket No. W-01944A-13-0215
Test Year Ended December 31, 2012

Schedule MJR-W7

RATE BASE ADJUSTMENT NO. 3 - CIAC and accumulated amortization of CIAC

LINE NO.	DESCRIPTION	[A] COMPANY AS FILED	[B] STAFF ADJUSTMENTS	[C] STAFF AS ADJUSTED
1	CIAC	$ 852,693	$ (99,158)	$ 753,535
2	AMORTIZATION OF CIAC	469,879	(186,882)	282,997
3	NET CIAC	$ 382,814	$ 87,724	$ 470,538

References:
Columns [A]: Company Schedule B-2, Page 5.1 thru 5.3
Column [B]: Column [C] less Column [A]
Column [C]: Testimony MJR

Lago Del Oro Water Company
Docket No. W-01944A-13-0215
Test Year Ended December 31, 2012

Schedule MJR-W8

RATE BASE ADJUSTMENT NO. 4 - Adit adjustment

LINE NO.	DESCRIPTION	[A] COMPANY AS FILED	[B] STAFF ADJUSTMENTS	[C] STAFF AS ADJUSTED
1	ADIT	$ 279,359	$ 120,138	$ 399,497

References:
Column [A]: Company Schedule B.1, Page 1
Column [B]: Column [C] less Column [A]
Column [C]: Column [A] + Column [B]

Lago Del Oro Water Company
Docket No. W-01944A-13-0215
Test Year Ended December 31, 2012

Schedule MJR-W9

OPERATING INCOME STATEMENT - ADJUSTED TEST YEAR AND STAFF RECOMMENDED

LINE NO.	DESCRIPTION	[A] COMPANY ADJUSTED TEST YEAR AS FILED	[B] STAFF TEST YEAR ADJUSTMENTS	[C] STAFF TEST YEAR AS ADJUSTED	[D] STAFF PROPOSED CHANGES	[E] STAFF RECOMMENDED
1	*REVENUES:*					
2	Metered Water Sales	$ 1,865,121	$ -	$ 1,865,121	$ 947,540	$ 2,812,661
3	Water Sales-Unmetered	-	-	-	-	-
4	Other Water Revenue	17,117	-	17,117	-	17,117
5	Intentionally Left Blank	-	-	-	-	-
6	**Total Operating Revenues**	$ 1,882,238	$ -	$ 1,882,238	$ 947,540	$ 2,829,778
7			##			
8	*OPERATING EXPENSES:*					
9	Salaries and Wages	$ 169,991	$ -	$ 169,991	$ -	$ 169,991
10	Employee Benefits and Pensions	35,228	-	35,228	-	35,228
11	Purchased Water	-	-	-	-	-
12	Purchased Power	442,823	-	442,823	-	442,823
13	Fuel for Power Production	-	-	-	-	-
14	Chemicals	21,969	-	21,969	-	21,969
15	Materials and Supplies	80,299	-	80,299	-	80,299
16	Office Supplies and Expense	66,431	-	66,431	-	66,431
17	Contractual Services-Engineering	-	-	-	-	-
18	Contractual Services -Accounting	533	-	533	-	533
19	Contractual Services- Legal	166	-	166	-	166
20	Contractual Services-Other	57,785	-	57,785	-	57,785
21	Contractual Services-Testing	22,433	(548)	21,885	-	21,885
22	Rents	9,435	-	9,435	-	9,435
23	Rents-Equipment	-	-	-	-	-
24	Transportation Expenses	42,440	-	42,440	-	42,440
25	Insurance - Vehicle	5,165	-	5,165	-	5,165
26	Insurance - General Liability	20,083	-	20,083	-	20,083
27	Regulatory Commission Expense-Other	855	-	855	-	855
28	Regulatory Commission Expense - Rate Case	55,000	-	55,000	-	55,000
29	Bad Debt Expense	4,922	-	4,922	-	4,922
30	Miscellaneous Expense	19,274	-	19,274	-	19,274
31	Depreciation and Amortization Expense	861,127	(76,505)	784,622	-	784,622
33	Taxes Other than Income	-	-	-	-	-
34	Property Taxes	98,597	(4,929)	93,668	16,202	109,870
35	Income Taxes	(128,849)	82,958	(45,891)	346,597	300,707
36	Interest on Customer Deposits	-	-	-	-	-
37	**Total Operating Expenses**	$ 1,885,708	$ 976	$ 1,886,683	$ 362,799	$ 2,249,482
38	**Operating Income (Loss)**	$ (3,470)	$ (976)	$ (4,445)	$ 584,741	$ 580,295
39						
40	**Other Income(Expense)**					
	Interest Income	$ -	$ -	$ -		-
	Other Income(Expense)	-	-	-		-
	Interest Expense	(204,322)	-	(204,322)		(204,322)
	Other Expense		-	-		-
	Total Other Income (Expense)	$ (204,322)	$ -	$ (204,322)		$ (204,322)
	Net Profit (Loss)	$ (207,792)	$ (976)	$ (208,767)		$ 375,973

References:
Column (A): Company Schedule C-1
Column (B): Schedule MJR-W10
Column (C): Column (A) + Column (B)
Column (D): Schedules MJR-W1, MJR-W2 and MJR-W13
Column (E): Column (C) + Column (D)

Lago Del Oro Water Company
Docket No. W-01944A-13-0215
Test Year Ended December 31, 2012

Schedule MJR-W10

SUMMARY OF OPERATING INCOME STATEMENT ADJUSTMENTS - TEST YEAR

LINE NO.	DESCRIPTION	[A] COMPANY AS FILED	[B] Water Testing Expenses ADJ #1 Ref: Sch MJR-W11	[C] Depreciation Expense ADJ #2 Ref: Sch MJR-W12	[D] Property Tax Expense ADJ #3 Ref: Sch MJR-W13	[E] Income Tax Expense ADJ #4 Ref: Sch MJR-W14	[F] STAFF ADJUSTED
1	*REVENUES:*						
2	Metered Water Sales	$ 1,865,121	$ -	$ -	$ -	$ -	$ 1,865,121
3	Water Sales-Unmetered	-	-	-	-	-	-
4	Other Water Revenue	17,117	-	-	-	-	17,117
5	Intentionally Left Blank	-	-	-	-	-	-
6	**Total Operating Revenues**	$ 1,882,238	$ -	$ -	$ -	$ -	$ 1,882,238
7							
8	*OPERATING EXPENSES:*		0				
9	Salaries and Wages	$ 169,991	$ -	$ -	$ -	$ -	$ 169,991
	Employee Benefits and Pensions	$ 35,228					35,228
10	Purchased Water	-	-	-	-	-	-
11	Purchased Power	442,823	-	-	-	-	442,823
12	Fuel for Power Production	-	-	-	-	-	-
13	Chemicals	21,969	-	-	-	-	21,969
14	Materials and Supplies	80,299	-	-	-	-	80,299
15	Office Supplies and Expense	66,431	-	-	-	-	66,431
16	Contractual Services-Engineering	-	-	-	-	-	-
17	Contractual Services -Accounting	533	-	-	-	-	533
18	Contractual Services- Legal	166	-	-	-	-	166
19	Contractual Services-Other	57,785	-	-	-	-	57,785
20	Contractual Services-Testing	22,433	(548)	-	-	-	21,885
24	Rents	9,435	-	-	-	-	9,435
25	Rents-Equipment	-	-	-	-	-	-
26	Transportation Expenses	42,440	-	-	-	-	42,440
27	Insurance - Vehicle	5,165	-	-	-	-	5,165
28	Insurance - General Liability	20,083	-	-	-	-	20,083
29	Regulatory Commission Expense-Other	855	-	-	-	-	855
30	Regulatory Commission Expense - Rate Case	55,000	-	-	-	-	55,000
31	Bad Debt Expense	4,922	-	-	-	-	4,922
32	Miscellaneous Expense	19,274	-	-	-	-	19,274
33	Depreciation and Amortization Expense	861,127	-	(76,505)	-	-	784,622
35	Taxes Other than Income	-	-	-	-	-	-
36	Property Taxes	98,597	-	-	(4,929)	-	93,668
37	Income Taxes	(128,849)	-	-	-	82,958	(45,891)
38	Interest on Customer Deposits	-	-	-	-	-	-
39	**Total Operating Expenses**	$ 1,885,708	$ (548)	$ (76,505)	$ (4,929)	$ 82,958	$ 1,886,683
40	**Operating Income (Loss)**	$ (3,470)	$ 548	$ 76,505	$ 4,929	$ (82,958)	$ (4,445)
	Other Income(Expense)						
	Interest Income	$ -					-
	Other Income(Expense)	-					-
	Interest Expense	(204,322)					(204,322)
	Other Expense	-					-
	Total Other Income (Expense)	$ (204,322)	$ -	$ -	$ -	$ -	(204,322)
	Net Profit (Loss)	$ (207,792)	$ 548	$ 76,505	$ 4,929	$ (82,958)	(208,767)

Lago Del Oro Water Company
Docket No. W-01944A-13-0215
Test Year Ended December 31, 2012

Schedule MJR-W11

OPERATING ADJUSTMENT NO. 1 - Water testing expense

Line No.	Description	[A] COMPANY PROPOSED	[B] STAFF ADJUSTMENTS	[C] STAFF RECOMMENDED
1	Contractual Services-Testing	$ 22,433	$ (548)	$ 21,885
2				
3		$ 22,433	$ (548)	$ 21,885

References:
Column [A]: Company Schedule C-1, Page 1
Column [B]: Testimony Staff Engineering Testimony
Column [C]: Column [A] + Column [B]

Lago Del Oro Water Company
Docket No. W-01944A-13-0215
Test Year Ended December 31, 2012

Schedule MJR-W12

OPERATING ADJUSTMENT NO. 3 - Depreciation expense

LINE NO.	ACCT NO.	DESCRIPTION	[A] PLANT In SERVICE Per Staff	[B] NonDepreciable or Fully Depreciated PLANT	[C] DEPRECIABLE PLANT (Col A - Col B)	[D] DEPRECIATION RATE	[E] DEPRECIATION EXPENSE (Col C x Col D)
1	301.0	Organization Cost	$ -	$ -	$ -	0.00%	$ -
2	302.0	Franchise Cost	-	-	-	0.00%	-
3	303.0	Land and Land Rights	42,608	42,608	-	0.00%	-
4	304.0	Structures and Improvements	343,173	11,667	331,506	3.33%	11,039
5	305.0	Collecting and Impounding Res.	-	-	-	2.50%	-
6	306.0	Lake River and Other Intakes	0	-	0	2.50%	0
7	307.0	Wells and Springs	2,089,942	134,725	1,955,217	3.33%	65,109
8	308.0	Infiltration Galleries and Tunnels	-	-	-	6.67%	-
9	309.0	Supply Mains	-	-	-	2.00%	-
10	310.0	Power Generation Equipment	178,492	-	178,492	5.00%	8,925
11	311.0	Electric Pumping Equipment	3,503,464	-	3,503,464	12.50%	437,933
12	320.1	Water Treatment Equipment	-	-	-	3.33%	-
13	320.2	Chemical Solution Feeders	24,640	-	24,640	20.00%	4,928
14	330.0	Distribution Reservoirs & Standpipe	-	-	-	2.22%	-
15	330.1	Storage Tanks	1,709,697	222,970	1,486,727	2.22%	33,005
16	330.2	Pressure Tanks	308,582	-	308,582	5.00%	15,429
17	331.0	Transmission and Distribution Mains	5,335,871	805,218	4,530,653	2.00%	90,613
18	333.0	Services	1,808,764	247,045	1,561,719	3.33%	52,005
19	334.0	Meters	504,321	80,024	424,297	8.33%	35,344
20	335.0	Hydrants	658,131	148,034	510,097	2.00%	10,202
21	336.0	Backflow Prevention Devices	-	-	-	6.67%	-
22	339.0	Other Plant and Miscellaneous Equipment	-	-	-	6.67%	-
23	340.0	Office Furniture and Fixtures	36,758	-	36,758	6.67%	2,452
24	340.1	Computers and Software	-	-	-	20.00%	-
25	341.0	Transportation Equipment	89,569	-	89,569	20.00%	17,914
26	342.0	Stores Equipment	-	-	-	4.00%	-
27	343.0	Tools and Work Equipment	-	-	-	5.00%	-
28	344.0	Laboratory Equipment	-	-	-	10.00%	-
29	345.0	Power Operated Equipment	55,787	-	55,787	5.00%	2,789
30	346.0	Communications Equipment	347,690	-	347,690	10.00%	34,769
31	347.0	Miscellaneous Equipment	26,122	-	26,122	10.00%	2,612
32	348.0	Other Tangible Plant	-	-	-	10.00%	-
33		Total Plant	$ 17,063,612	$ 1,692,291	$ 15,371,321		$ 825,068

38	CIAC = Depreciation Expense/Depreciable Plant	5.37%
39	CIAC Balance	$ 753,535
40	Depreciation Expense Before Amortization of CIAC:	$ 825,068
41	Less Amortization of CIAC:	$ 40,447
42	**Test Year Depreciation Expense - Staff:**	**$ 784,622**
43	Depreciation Expense - Company:	$ 861,127
44	**Staff's Total Adjustment:**	**$ (76,505)**

Note:

- Indicates items that were fully depreciated per Company Schedule C-2.

References:
Column [A]: Schedule MJR-W4
Column [B]: Testimony MJR From Column [A]
Column [C]: Column [A] - Column [B]
Column [D]: Staff Engineering Testimony
Column [E]: Column [C] x Column [D]

Lago Del Oro Water Company
Docket No. W-01944A-13-0215
Test Year Ended December 31, 2012

Schedule MJR-W13

OPERATING INCOME ADJUSTMENT NO. 4- Property tax expense

LINE NO.	Property Tax Calculation	[A] STAFF AS ADJUSTED	[B] STAFF RECOMMENDED
1	Staff Adjusted Test Year Revenues	$ 1,882,238	$ 1,882,238
2	Weight Factor	2	2
3	Subtotal (Line 1 * Line 2)	3,764,476	$ 3,764,476
4	Staff Recommended Revenue, Per Schedule MJR-1	1,882,238	$ 2,829,778
5	Subtotal (Line 4 + Line 5)	5,646,714	6,594,254
6	Number of Years	3	3
7	Three Year Average (Line 5 / Line 6)	1,882,238	$ 2,198,085
8	Department of Revenue Mutilplier	2	2
9	Revenue Base Value (Line 7 * Line 8)	3,764,476	$ 4,396,169
10	Plus: 10% of CWIP -	-	-
11	Less: Net Book Value of Licensed Vehicles	112,728	$ 112,728
12	Full Cash Value (Line 9 + Line 10 - Line 11)	3,651,748	$ 4,283,441
13	Assessment Ratio	19.0%	19.0%
14	Assessment Value (Line 12 * Line 13)	693,832	$ 813,854
15	Composite Property Tax Rate (Per Company Schedule)	13.5000%	13.5000%
16			$ -
17	Staff Test Year Adjusted Property Tax (Line 14 * Line 15)	$ 93,668	
18	Company Proposed Property Tax	98,597	
19			
20	Staff Test Year Adjustment (Line 17-Line 18)	**$ (4,929)**	
21	Property Tax - Staff Recommended Revenue (Line 14 * Line 15)		$ 109,870
22	Staff Test Year Adjusted Property Tax Expense (Line 17)		$ 93,668
23	Increase in Property Tax Expense Due to Increase in Revenue Requirement		$ 16,202
24			
25	Increase to Property Tax Expense		**$ 16,202**
26	Increase in Revenue Requirement		947,540
27	Increase to Property Tax per Dollar Increase in Revenue (Line 25/Line 26)		**1.709894%**

References:
Column [A]: Company Schedule C-2, Page 3
Column [B]: Testimony MJR
Column [C]: Column [A] + Column [B]

Lago Del Oro Water Company
Docket No. W-01944A-13-0215
Test Year Ended December 31, 2012

Schedule MJR-W14

MENT NO. 5 - Test year income taxesRATE BASE ADJUSTMENT NO. 1 - Staff adjusted value of plant purc

LINE NO.	DESCRIPTION	[A] COMPANY TEST YEAR	[B] STAFF ADJUSTMENTS	[C] STAFF RECOMMENDED
1	Income Tax Expense	$ (128,849)	$ 82,958	$ (45,891)

References:
Column (A): Company Schedule C-1
Column (B): Column [C] - Column [A]
Column (C): Schedule MJR-W2

BEFORE THE ARIZONA CORPORATION COMMISSION

BOB STUMP
Chairman
GARY PIERCE
Commissioner
BRENDA BURNS
Commissioner
BOB BURNS
Commissioner
SUSAN BITTER SMITH
Commissioner

IN THE MATTER OF THE APPLICATION OF LAGO DEL ORO WATER COMPANY FOR AN INCREASE IN ITS WATER RATES	))))	DOCKET NO. W-01944A-13-0215

DIRECT TESTIMONY

OF

MICHAEL THOMPSON, P. E.

UTILITIES ENGINEER

UTILITIES DIVISION

ARIZONA CORPORATION COMMISSION

JANUARY 17, 2014

BEFORE THE ARIZONA CORPORATION COMMISSION

BOB STUMP
Chairman
GARY PIERCE
Commissioner
BRENDA BURNS
Commissioner
BOB BURNS
Commissioner
SUSAN BITTER SMITH
Commissioner

IN THE MATTER OF THE APPLICATION OF LAGO DEL ORO WATER COMPANY FOR AN INCREASE IN ITS WATER RATES	))))	DOCKET NO. W-01944A-13-0215

DIRECT TESTIMONY

OF

MICHAEL THOMPSON, P. E.

UTILITIES ENGINEER

UTILITIES DIVISION

ARIZONA CORPORATION COMMISSION

EXHIBIT
S-1B
ADMITTED

JANUARY 17, 2014

EXECUTIVE SUMMARY
LAGO DEL ORO WATER COMPANY
DOCKET NO. W-01944A-13-0215

CONCLUSIONS

1. The Arizona Corporation Commission ("ACC" or "Commission") Utilities Division Staff ("Utilities Staff" or "Staff") concludes that the Lago Del Oro Water Company, Inc. ("LDO" or "Company") water system has adequate production and storage capacity to serve the present customer base and any reasonable growth.

2. According to the Arizona Department of Environmental Quality ("ADEQ") Compliance Status Report ("CSR"), dated January 7, 2014, the CSR indicates that the LDO water system is currently delivering water that meets water quality standards required by 40 CFR 141 (National Primary Drinking Water Regulations) and Arizona Administrative Code, Title 18, Chapter 4.

3. The Arizona Department of Water Resources ("ADWR") has reported that LDO is currently non-compliant with departmental requirements governing water providers and/or community water systems regarding the non-submittal of its Water System Plan.

4. LDO's service area is located within ADWR's Tucson Active Management Area ("TAMA").

5. According to the Utilities Division Compliance Section database LDO currently has no delinquent Commission compliance items.

6. LDO has approved Curtailment and Backflow Tariffs on file with the Commission.

7. Staff concludes that the costs associated with the installation of the plant infrastructure and backbone, listed in Table H, are reasonable. Staff further concludes that the costs do not appear to consider accumulated depreciation. (See Page 20, Section J Financing).

8. Staff estimates that LDO's total cost associated with the sampling and testing of the Unregulated Contaminant Monitoring Rule 3 contaminants required by the Environmental Protections Agency amounts to $32,280, as illustrated in Table G.

9. Staff concludes that the plant infrastructure and backbone, listed in Table H, are currently in operation and considered used and useful. (See Page 20, Section J Financing).

RECOMMENDATIONS

1. Staff recommends an annual water testing expense of $21,885 presented in Table D be used for purposes of this application (See Page 15, Section E ADEQ Compliance).

2. Staff recommends that LDO use the depreciation rates presented in Table E (See Page 16, Section H Depreciation Rates).

3. Staff recommends that the meter and installation charges listed under "Staff's Recommendation" in Table F be adopted (See Page 17, Section I Other Issues).

4. Staff recommends that LDO file with Docket Control, as a compliance item in this docket and within 90 days of the effective date of a decision in this proceeding, at least seven (7) BMPs in the form of tariffs that substantially conform to the templates created by Staff for Commission's review and consideration. The templates created by Staff are available on the Commission's website at http://www.azcc.gov/Divisions/Utilities/forms.asp. LDO may request cost recovery of the actual costs associated with the BMPs implemented in its next general rate application.

5. Staff recommends that LDO revise its Volatile Organic Compound ("VOC") sampling and testing schedule to conform to ADEQ's schedule.

6. Staff recommends that LDO revise its Radiochemical ("RAD") sampling and testing schedule to conform to ADEQ's schedule.

7. Staff recommends that any increase in rates approved by the Commission not become effective until ADWR has determined that LDO is in compliance with departmental requirements governing water providers and/or community water systems.

TABLE OF CONTENTS

Page

INTRODUCTION 1

PURPOSE OF TESTIMONY 3

ENGINEERING REPORT 3

EXHIBITS

Engineering Report for Lago Del Oro Water Company MT-1

INTRODUCTION

Q. Please state your name and business address.

A. My name is Michael Thompson. My business address is 1200 West Washington Street, Phoenix, Arizona 85007.

Q. By whom and in what position are you employed?

A. I am employed by the Arizona Corporation Commission ("Commission" or "ACC") as a Utilities Engineer - Water/Wastewater in the Utilities Division.

Q. How long have you been employed by the Commission?

A. I have been employed by the Commission since June 2013.

Q. What are your responsibilities as a Utilities Engineer - Water/Wastewater?

A. As a Utilities Engineer, specializing in water and wastewater engineering, my responsibilities include: the inspection, investigation, and evaluation of water and wastewater systems; obtaining data, and preparing investigative reports; providing technical recommendations and suggesting corrective action for water and wastewater systems; and providing written and oral testimony in rate cases and other cases before the Commission.

Q. How many companies have you analyzed for the Utilities Division?

A. I have analyzed 8 companies covering various responsibilities for the Utilities Division Staff ("Staff").

Q. Have you previously testified before this Commission?

A. Yes, I have testified before this Commission.

Q. What is your educational background?

A. I graduated from the SUNY College of Environmental Science and Forestry (ESF) at Syracuse, New York, and Syracuse University (SU) at Syracuse, New York. I have a Bachelor of Science Degree in Pulp and Paper Engineering from ESF and Chemical Engineering from SU.

Q. Briefly describe your pertinent work experience.

A. Prior to my employment with the Commission, I was the Operations Engineer, from 2009 to 2012, for the Southwest and Central Districts of Golden State Water Company ("GSWC"), located in Gardena and Santa Fe Springs, California, respectively. As the Operations Engineer, I provided technical assistance and support to the districts' operations departments with primary focus on resolving operational problems and optimizing the efficiency of the water system operations. Prior to my employment with GSWC, I was employed with Chaparral City Water Company ("Chaparral"), from 2002 to 2009 as District Operations Engineer. While at Chaparral, I performed all capital, new business, and water quality activities within the district. I served as field engineer/construction manager for all capital and new business projects under construction. I also managed all water quality activities including monitoring, sampling, and reporting as required by 40 CFR (National Primary Drinking Water Regulations) and Arizona Administrative Code, Title 18, Chapter 4.

From 2000 to 2002, I was employed with the Fountain Hills Sanitary District as Engineering Assistant. I performed plan review of all commercial and residential projects in the Town of Fountain Hills, and managed the district's construction projects.

From 1996 to 2000, I was employed as an Environmental Engineering Specialist with the Arizona Department of Environmental Quality ("ADEQ"). During that time period, I performed operations and maintenance site inspections of public water systems in Gila, LaPaz, Mohave, and Southwestern Yavapai Counties.

Q. Please state your professional membership, registrations, and licenses.

A. I am registered as a Professional Engineer (Civil) in the State of Arizona, and a Grade 2 Certified Water Treatment Plant Operator, and a Grade 3 Certified Water Distribution System Operator. I am a member of the American Water Works Association and Arizona Water Association.

PURPOSE OF TESTIMONY

Q. What was your assignment in this rate proceeding?

A. My assignment was to provide Staff's engineering evaluations for the Lago Del Oro Water Company ("LDO") rate proceedings.

Q. What is the purpose of your testimony in this proceeding?

A. To present the findings of Staff's engineering evaluation of the operations for LDO. I visited the LDO water system on October 24, 2013. The findings are contained in the Engineering Report that I have prepared for this proceeding. The report is included as Exhibit MT-1 to this pre-filed testimony.

ENGINEERING REPORT

Q. Please describe the attached Engineering Report, Exhibit MT-1?

A. Exhibit MT-1 presents the details and Staff's analysis and findings for LDO's water system, and is attached to the direct testimony. Exhibit MT-1 contains the following

major topics: 1) Introduction and Location of LDO, 2) Description of the Water System, 2) Water Use, 3) Growth, 4) Compliance Status with ADEQ, the Arizona Department of Water Resources, and the Commission, 5) Depreciation Rates, 6) Other Issues, and 7) Financing. The Conclusions and Recommendations from the Engineering Report are contained in the "Executive Summary".

Q. Does this conclude your Direct Testimony?

A. Yes, it does.

ENGINEERING REPORT FOR
Lago Del Oro Water Company

Docket No. W-01944A-13-0215 (Rates)

By Michael Thompson, P. E.

January 8, 2014

EXECUTIVE SUMMARY

CONCLUSIONS

1. The Arizona Corporation Commission ("ACC" or "Commission") Utilities Division Staff ("Utilities Staff" or "Staff") concludes that the Lago Del Oro Water Company, Inc. ("LDO" or "Company") water system has adequate production and storage capacity to serve the present customer base and any reasonable growth.

2. According to the Arizona Department of Environmental Quality ("ADEQ") Compliance Status Report ("CSR"), dated January 7, 2014, the CSR indicates that the LDO water system is currently delivering water that meets water quality standards required by 40 CFR 141 (National Primary Drinking Water Regulations) and Arizona Administrative Code, Title 18, Chapter 4.

3. The Arizona Department of Water Resources ("ADWR") has reported that LDO is currently non-compliant with departmental requirements governing water providers and/or community water systems regarding the non-submittal of its Water System Plan.

4. LDO's service area is located within ADWR's Tucson Active Management Area ("TAMA").

5. According to the Utilities Division Compliance Section database LDO currently has no delinquent Commission compliance items.

6. LDO has approved Curtailment and Backflow Tariffs on file with the Commission.

7. Staff concludes that the costs associated with the installation of the plant infrastructure and backbone, listed in Table H, are reasonable. Staff further concludes that the costs do not appear to consider accumulated depreciation. (See Page 20, Section J Financing).

8. Staff estimates that LDO's total cost associated with the sampling and testing of the Unregulated Contaminant Monitoring Rule 3 contaminants required by the Environmental Protections Agency amounts to $32,280, as illustrated in Table G.

9. Staff concludes that the plant infrastructure and backbone, listed in Table H, are currently in operation and considered used and useful. (See Page 20, Section J Financing).

RECOMMENDATIONS

1. Staff recommends an annual water testing expense of $21,885 presented in Table D be used for purposes of this application (See Page 15, Section E ADEQ Compliance).

2. Staff recommends that LDO use the depreciation rates presented in Table E (See Page 16, Section H Depreciation Rates).

3. Staff recommends that the meter and installation charges listed under "Staff's Recommendation" in Table F be adopted (See Page 17, Section I Other Issues).

4. Staff recommends that LDO file with Docket Control, as a compliance item in this docket and within 90 days of the effective date of a decision in this proceeding, at least seven (7) BMPs in the form of tariffs that substantially conform to the templates created by Staff for Commission's review and consideration. The templates created by Staff are available on the Commission's website at http://www.azcc.gov/Divisions/Utilities/forms.asp. LDO may request cost recovery of the actual costs associated with the BMPs implemented in its next general rate application.

5. Staff recommends that LDO revise its Volatile Organic Compound ("VOC") sampling and testing schedule to conform to ADEQ's schedule.

6. Staff recommends that LDO revise its Radiochemical ("RAD") sampling and testing schedule to conform to ADEQ's schedule.

7. Staff recommends that any increase in rates approved by the Commission not become effective until ADWR has determined that LDO is in compliance with departmental requirements governing water providers and/or community water systems.

TABLE OF CONTENTS

PAGE

A. INTRODUCTION AND LOCATION OF COMPANY 4

B DESCRIPTION OF THE WATER SYSTEM 4

C. WATER USE 13

WATER SOLD *13*
NON-ACCOUNTED FOR WATER *13*
SYSTEM ANALYSIS *14*

D. GROWTH 14

E. ADEQ COMPLIANCE 14

COMPLIANCE *14*
WATER MONITORING AND TESTING *15*
WATER TESTING EXPENSE *16*

F. ARIZONA DEPARTMENT OF WATER RESOURCES ("ADWR") COMPLIANCE 18

G. ACC COMPLIANCE 18

H. DEPRECIATION RATES 19

I. OTHER ISSUES 20

1. SERVICE LINE AND METER INSTALLATION CHARGES *20*
2. CURTAILMENT TARIFF *21*
3. BACKFLOW PREVENTION TARIFF *21*
4. BEST MANAGEMENT PRACTICES ("BMP") TARIFF *21*
5. UNREGULATED CONTAMINANT MONITORING *21*

J. FINANCING (DOCKET NO. W-01944A-13-0242) 22

A. INTRODUCTION AND LOCATION OF COMPANY

On June 27, 2013, Lago Del Oro Water Company, Inc. ("LDO" or "Company") filed an application with the Arizona Corporation Commission ("ACC" or "Commission") to increase its rates (Docket No. W-01944A-13-0215). LDO's current rates were approved in Commission Decision No. 56464, dated April 26, 1989.

On July 10, 2013, LDO filed a financing application (Docket No. W-01944A-13-0242) requesting approval to borrow $3,900,000 from the most likely lender, Wells Fargo Bank ("Wells Fargo"). The purpose for the loan is to fund significant asset purchases (water infrastructure and plant facilities in the Saddlebrooke service area) from Saddlebrooke Development. The request was amended on October 9, 2013, to reflect updated loan terms and conditions by the likely lender, Wells Fargo.

The ACC Utilities Division Staff ("Utilities Staff" or "Staff") engineering review and analysis of the pending rate and financing applications are presented in this report.

LDO is a Class B water utility company that provides public utility water service to approximately 6,348 metered connections.[1] The LDO water system serves the unincorporated master planned community of Saddlebrooke ("Saddlebrooke"), the unincorporated community of Catalina ("Catalina"), and a smaller residential community, surrounded by Saddlebrooke, known as Loma Serena. The three (3) communities are located off State Route 77 ("SR-77") approximately 25 miles north of the City of Tucson in Pinal and Pima Counties, Arizona. The LDO water system is a groundwater-based system bisected by the county line between Pinal and Pima Counties. The Saddlebrooke and Loma Serena service areas of the LDO water system are located in Pinal County and the Catalina service area of the LDO water system is located in Pima County. Saddlebrooke is a two (2) phased development consisting of approximately forty nine (49) sub-divisions ("Units"), and two (2) golf courses. Loma Serena is a separate residential community unaffiliated with Saddlebrooke. Catalina is a larger and older developed community than Saddlebrooke. The location of LDO and the area covered by its Certificate of Convenience and Necessity ("CC&N"), which covers approximately 11,125 acres, are shown in Figures 1 and 2, respectively. The original CC&N was granted in Commission Decision No. 35472 dated November 6, 1964.

B. DESCRIPTION OF THE WATER SYSTEM[2]

The LDO water system was visited on October 24, 2013, by Staff member Michael Thompson. Mr. Thompson was accompanied by Mr. Edward E. MacMeans. Mr. MacMeans is the LDO superintendent that currently handles the day-to-day operations of the water system,

---

[1] Per plant data submitted with the application.

[2] The description of the water system is based on one, or a combination of, the following sources: 1) Company's Application, 2) Direct Testimony of Ray Jones, dated June 27, 2013, 3) Direct Testimony of Steven Soriano, dated June 27, 2013, 4) Information contained in the Company's Response to Staff Data Requests and, 5) Information collected during Staff's site visit.

and is also the certified operator.[3] Mr. MacMeans currently supervises twelve (12) employees, which consist of one (1) secretary and eleven (11) operators.

The LDO water system is comprised of two (2) interconnected service areas; Saddlebrooke and Catalina. The Saddlebrooke service area consists of four (4) water plant sites, seven (7) wells, and a looped distribution system with six (6) pressure zones. The Catalina service area consists of one (1) water plant site, four (4) well/storage and booster pump station sites, three (3) independent booster pump stations, nine (9) wells, and a looped distribution system with three (3) pressure zones.

The Saddlebrooke and Catalina service area distribution systems consist of 5,943 linear feet ("lf") of 2-inch poly vinyl chloride ("PVC") water main pipe, 20,497 lf of 3-inch PVC water main pipe, 86,007 lf of 4-inch PVC water main pipe, 163,648 lf of 6-inch PVC water main pipe, 122,222 lf of 8-inch PVC water main pipe, 23,676 lf of 10-inch PVC water main pipe, and 4,903 lf of 12-inch PVC water main pipe which currently serve approximately 6,350 metered connections. The Saddlebrooke and Catalina service area distribution systems include a total of 391 standard fire hydrants, with a designed fire flow of 1,250 gallons per minute ("gpm").

The in-service plant facilities (i.e., wells, tanks, pumps, and visible pipe) within the Saddlebrooke and Catalina service areas appeared to be in proper working order, properly maintained, and in excellent condition. Staff did not observe any leaks at the water plants, well sites, or in the distribution system.

Saddlebrooke Service Area

Water Plants #1, #2, #3, & #4 contain storage tanks, hydro-pneumatic pressure tanks, and electric powered booster pumps. In addition, Water Plants #2 and #4 have backup generators and Water Plants #1, #2 & #3 also have diesel powered booster pumps; all of which were designed to provide reliable and uninterrupted service. The four (4) water plants pump water to an interconnected and looped distribution system, designed to provide system reliability and consistent water quality, which serves Saddlebrooke and Loma Serena.

The water plant sites are fed by seven (7) wells (Well #4, #15, #16, #17, #18 & #19). Well #4 pumps water, via a transmission main, to Water Plant #2, and also pumps water directly to the Saddlebrooke Phase I Golf Course Lake. Well #16, located at Water Plant #2, pumps directly to the two (2) 250,000 gallon storage tanks located at the plant site. Well #15, #17, #18, & #19 pump water, via transmission mains, to Water Plant #1, #3, & #4 and also directly to the Saddlebrooke Phase II Golf Course and irrigation customers.

[3] Mr. MacMean is a Certified Grade 4 Water Distribution System Operator, a Grade 4 Treatment Plant Operator, a Grade 4 Wastewater Treatment Plant Operator, and a Grade 3 Wastewater Collection System Operator. ADEQ Operator Identification No. OP025081.

The facilities located at Water Plant #2 are shared by LDO, and an affiliated company, Ridgeview Utility Company ("RUC").[4] RUC provides service to The Preserve at Saddlebrooke and The Preserve Golf & Country Club, which are immediately adjacent to and located northeast of Saddlebrooke Phase I. Water Plant #2 also pumps water to a small booster station (Unit #14 Booster Pump Station) that serves residential customers located in a small isolated area within Saddlebrooke Phase I known as Unit #14.

Catalina Service Area

The Catalina service area has nine (9) wells (Well #1, #3, #5, #6, #7, #8, #11, #13 and #22). Five (5) of the wells feed the water plant and the well/storage & booster pump stations, with the remaining four (4) feeding directly to the distribution system.

Water Plant #5, which is located off a cul-de-sac on Border Rock Road in the southwest section of Saddlebrooke Phase II, contains a storage tank, a hydro-pneumatic pressure tank, booster pumps, and a backup generator. Well #22 pumps water, via a transmission main, directly to Water Plant #5. Although located in the Saddlebrooke service area, Water Plant #5 provides water to the Catalina service area and not Saddlebrooke.

Well/Storage & Booster Pump Station #1, #3, and #7 contain storage tanks, hydro-pneumatic pressure tanks, electric powered booster pumps, and wells. Well #1, #3, and #7 are located at their respective well/storage & booster pump stations. Well #11 pumps directly to Well/Storage & Booster Pump Station #3.

Well #5, #6 and #13, Water Plant #5, and the well/storage & booster pump stations pump water to an interconnected and looped distribution system that serves the majority of Catalina.

Well #8 supplies water to Booster Pump Stations #9 and #10, which in turn pump water to an isolated distribution system within Catalina that is independent of the interconnected and looped distribution system.

A detailed listing of the Saddlebrooke and Catalina plant facilities are included in Table A, and a schematic of the Saddlebrooke and Catalina service areas are illustrated in Figure 3 and 4, respectively.

[4] According to Ray Jones Direct Testimony, dated June 27, 2013, LDO and RUC entered into a Water Facilities Sharing Agreement ("Sharing Agreement") on November 27, 2000. The Sharing Agreement has a term of 50 years.

Table A. Saddlebrooke & Catalina Plant Facilities Summary[5]

Well Data – Saddlebrooke Serve area								
Well ID	ADEQ POE*	ADWR Well ID	Pump (hp)	Pump Yield (gpm)	Casing Depth (feet)	Casing Diameter (inches)	Meter Size (inches)	Year Drilled
4	004	55-613454	150	350	800	16	8	1963
14	014	55-518207	200	1,385	800	16	8	1987
15	015	55-526451	200	1,000	804	16	8	1990
16	004	55-547494	300	1,300	959	16	10	1996
17	017	55-548874	200	1,100	1,100	16	10	1995
18	017	55-548873	100	330	1,109	16	6	1996
19	019	55-573651	150	490	1,200	20	6	1999

***POE signifies Point of Entry into the distribution system.**

Well Data – Catalina Service Area								
Well ID	ADEQ POE	ADWR Well ID	Pump (hp)	Pump Yield (gpm)	Casing Depth (feet)	Casing Diameter (inches)	Meter Size (inches)	Year Drilled
1	001	55-613452	75	560	804	16	6	1963
3	003	55-613459	2	15	241	8	1	1973
5	005	55-613455	15	75	300	10	3	1972
6	006	55-613456	30	120	450	8	3	1973
7	007	55-613460	10	25	495	8	2	1972
8	008	55-613457	8	120	225	8	3	1972
11	003	55-613458	3	35	609	8	1	1981
13	013	55-623397	15	70	310	10	2	1971
22	019	55-206036	250	1,200	1,340	16	10	2005

Water Storage, Booster Systems, & Structures – Saddlebrooke Service Area					
Location	Storage Tanks (Gallons)	Pressure Tanks (Gallons)	Booster Pumps	Wells	Emergency Back-up Generator
Plant #1	1 – 286,000	1 – 2,500 1 – 200	5 – Electric 1 – Diesel	Well #14	None
Plant #2**	2 – 250,000	1 – 7,000	6 – Electric 1 – Diesel	Well #16	1
Plant #3	1 – 500,000	1 – 10,000	4 – Electric 1 – Diesel	None	None
Plant #4	2 – 200,000	1 – 15,000	4 – Electric	Well #19	1
Unit #14 BPS	None	1 – 60	2 – Electric	None	None

*BPS signifies Booster Pump Station.
**Water Plant #2 is shared by LDO, and affiliated water company, Ridgeview Utility Company.

[5] The information listed was based on one, or a combination of, the following sources: 1) Company's Application, 2) Commission Annual Reports, 3) Arizona Department of Water Resources Records, 4) Information contained in the Company's response to a Staff Data Requests and, 5) Information collected during Staff's site visit.

Water Storage, Booster Systems, & Structures – Catalina Service area					
Location*	Storage Tanks (Gallons)	Pressure Tanks (Gallons)	Booster Pumps*	Wells	Emergency Back-up Generator
Plant #5	1 – 500,000	1 – 7,000	3 – Electric	None	1
Well #1 BPS	1 – 100,000	1 – 6,000	3 – Electric	Well #1	None
Well #3 BPS	2 – 12,000	1 – 1,000	4 – Electric	Well #3	None
Well #5 BPS	None	1 – 1,500	2 – Electric	Well #5	None
Well #6	None	1 – 2,000	None	Well #6	None
Well #7 BPS	2 – 12,000	1 – 2,000	4 – Electric	Well #19	None
Well #8	None	1 – 2,000	None	Well #8	None
BPS #9	None	1 – 1,000	1 - Electric	None	None
BPS #10	None	1 – 1,000	1 - Electric	None	None
Well #13	None	1 – 2,000	None	Well #13	None

*Plant #5 is located within the Saddlebrooke development, but serves the Catalina water system. BPS signifies Booster Pump Station.

Saddlebrooke and Catalina Service Areas Distribution Mains		
Diameter (inches)	Material	Length (feet)
2	PVC – C900	5,943
3	PVC – C900	20,497
4	PVC – C900	86,007
6	PVC – C900	163,648
8	PVC – C900	122,222
10	PVC – C900	23,676
12	PVC – C900	4,903
	Total Length	426,896

Note: PVC is poly vinyl chloride pipe used in water distribution systems and in general construction.

Saddlebrooke and Catalina Service Areas Meters	
Size	Quantity
3/4 inch	6,199
1	71
1 ½	15
2	54
3 Compound	4
4 Compound	1
6 Compound	4
Total Quantity	6,348

Saddlebrooke and Catalina Service Area Fire Hydrants	
Size/Description	Quantity
Standard	391

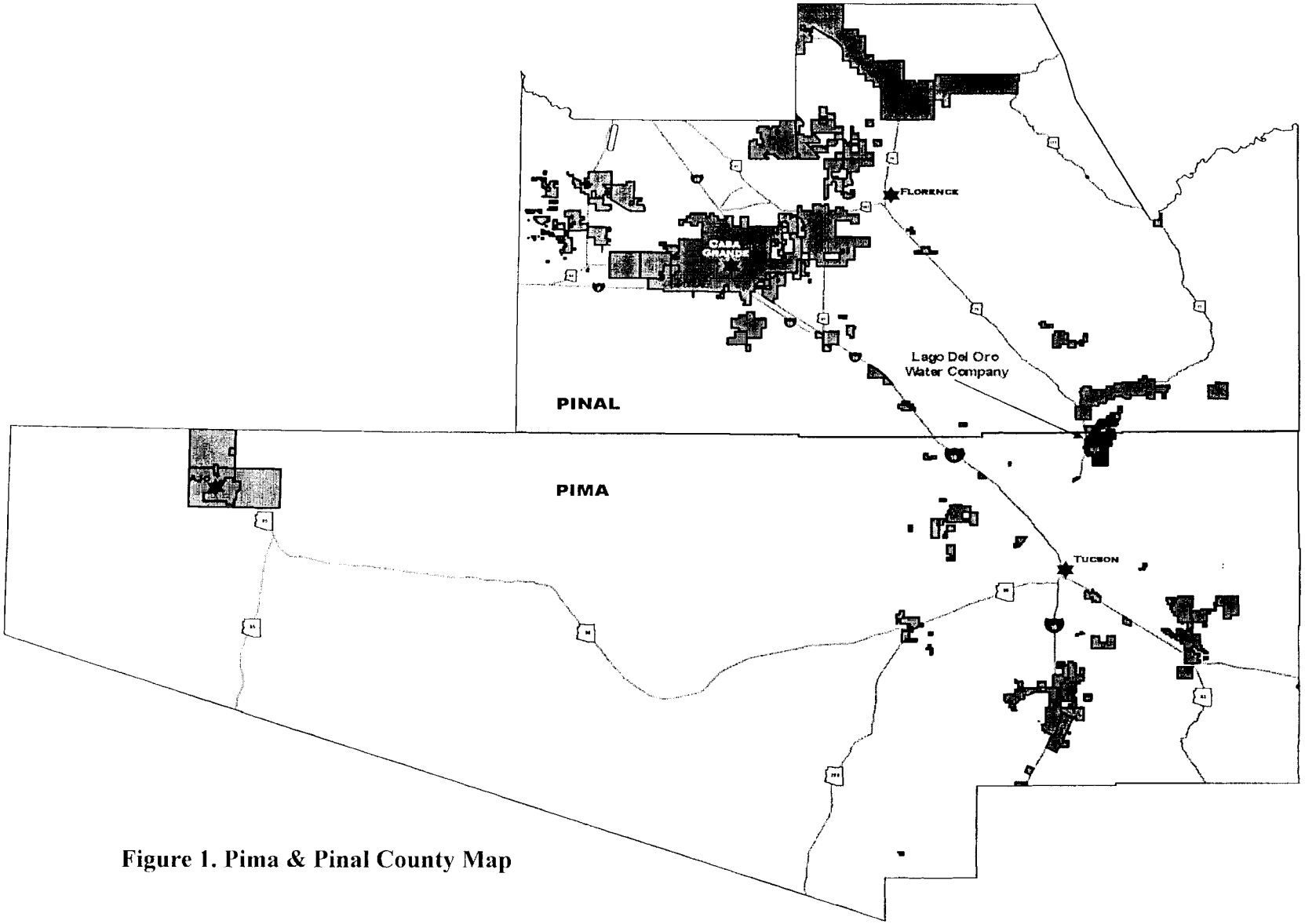

Figure 1. Pima & Pinal County Map

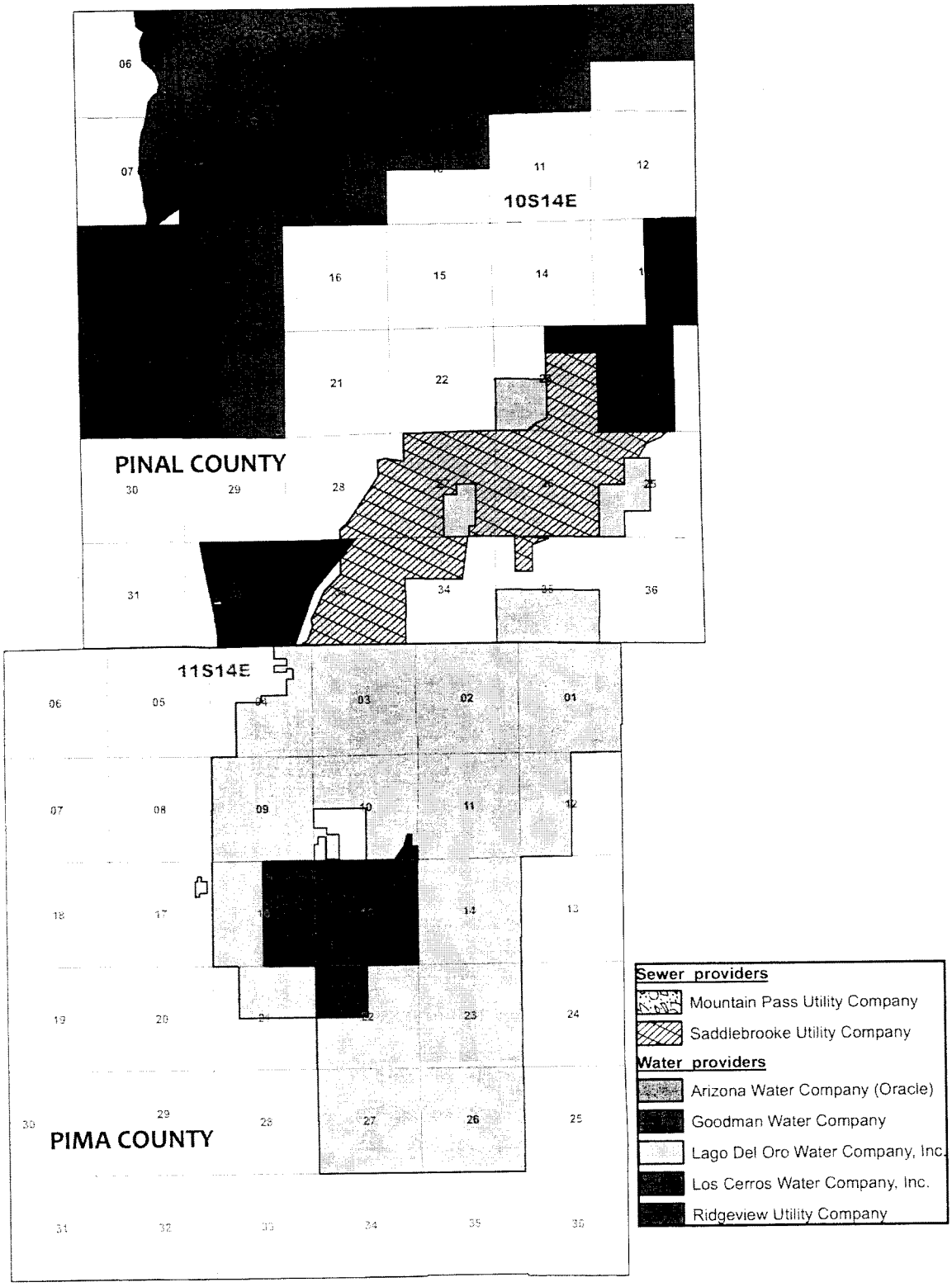

Figure 2. Certificated Area

Saddlebrooke Service Area

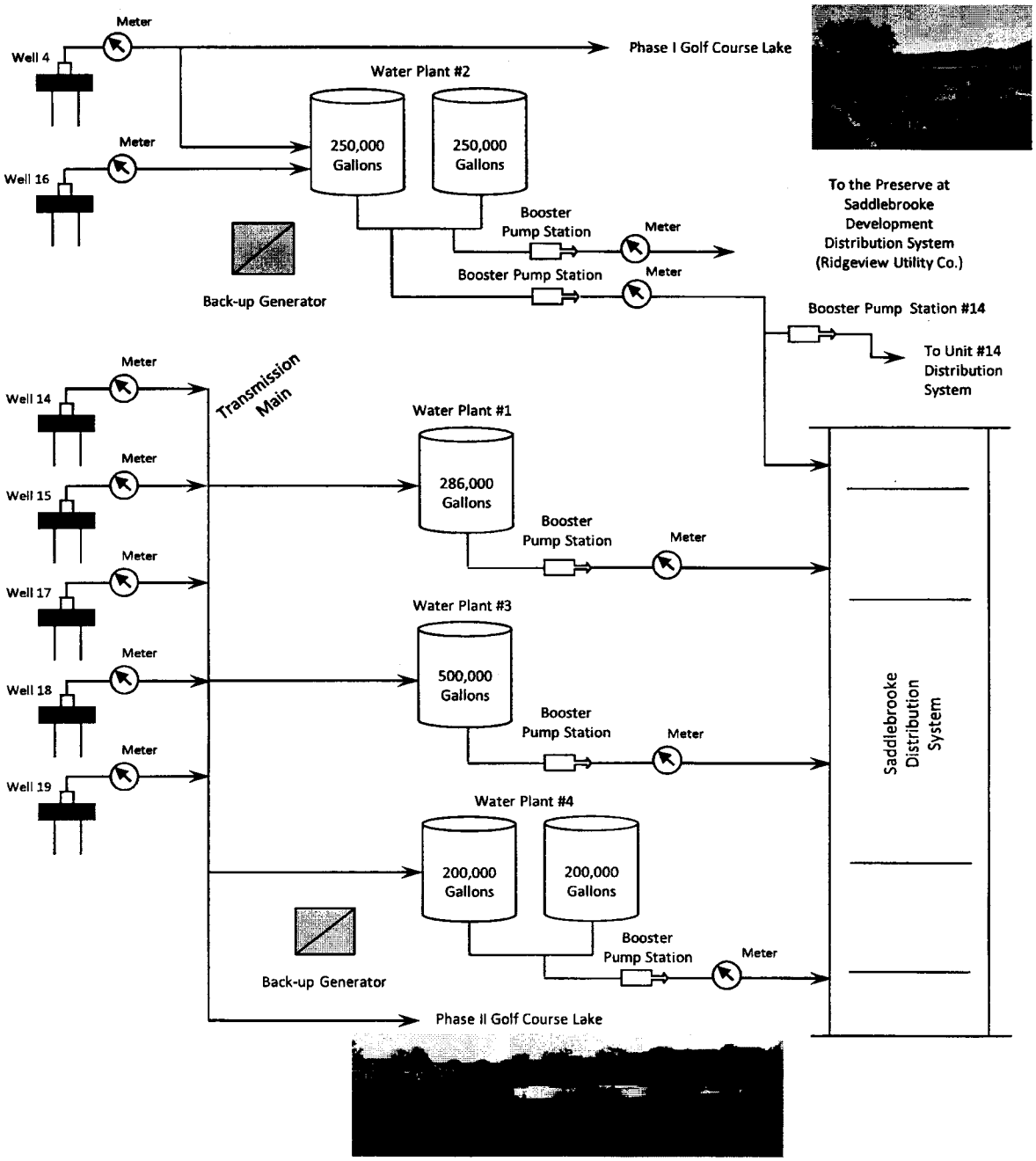

Figure 3. Saddlebrooke Service Area Schematic

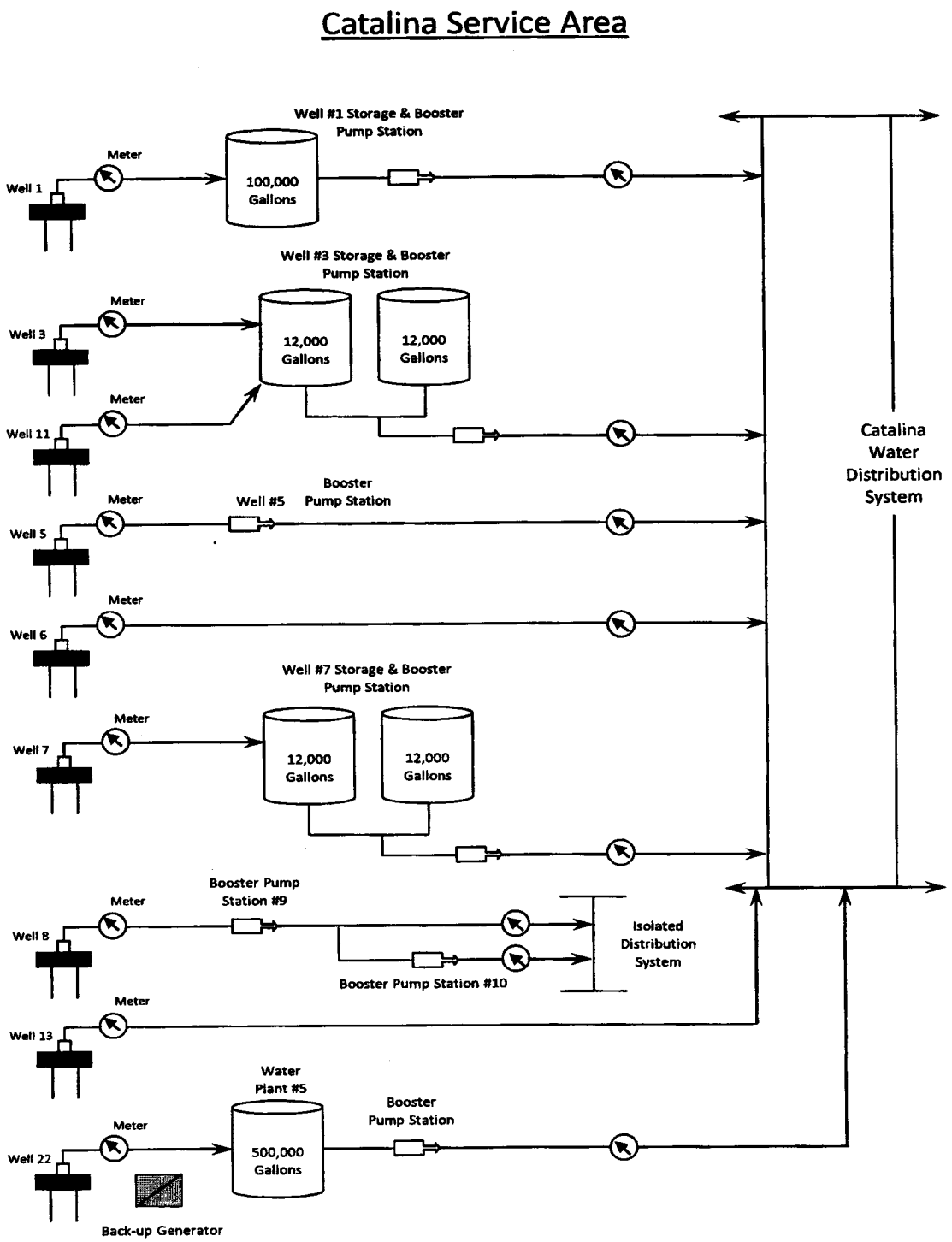

Figure 4. Catalina Service Area Schematic

C. WATER USE

Water Sold

Figure 4 represents the water consumption data, for the unincorporated master planned community of Saddlebrooke, Loma Serena, and the unincorporated community of Catalina, provided by LDO for the test year ending December 31, 2012. Customer consumption included a high monthly water use of 449 gallons per day ("gpd") per connection (6,327 connections) in June, and the low water use of 184 gpd per connection (6,326 connections) in February. The average daily demand during the twelve-month period was approximately 272 gpd per connection. LDO reported 629,606,059 gallons of water sold during the test year.[6]

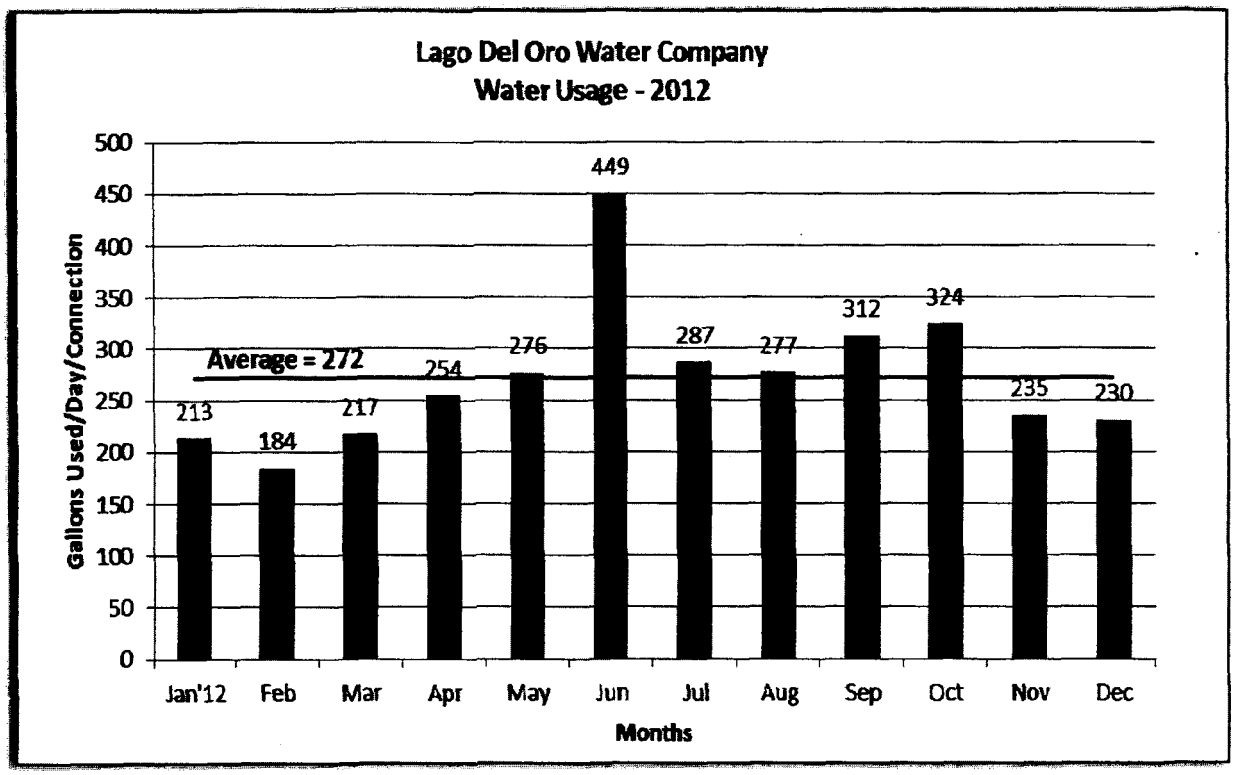

Figure 4. Water Use

Non-accounted For Water

LDO reported 676,207,050 gallons of water pumped and 629,606,059 gallons of water sold, during the test year ending December, 2012, resulting in a water loss of 6.89%, which is within acceptable limits.

[6] Total water sold during the test year is based on the monthly data from the meter reads as reported in the LDO 2012 Water Statistics.

System Analysis

The total well production capacity of the sixteen (16) LDO wells is approximately 8,175 gpm (11,772,000 gpd). The LDO water system, which includes the Saddlebrooke and Catalina service areas, has a total of twelve (12) storage tanks providing a total storage capacity of 1,834,000 gallons. There are 391 fire hydrants in the distribution systems. The fire flow requirement is 1,250 gpm with a minimum duration of 2 hours.

During the peak month, June 2012, the water system was serving 6,327 connections when LDO reported 85,309,769 gallons of water sold. Average daily demand for the month of June 2012 was determined to be 2,843,659 gpd. Staff concludes that the LDO water systems have adequate production and storage capacity to serve the current customer base and reasonable growth.

D. GROWTH[7]

LDO experienced steady growth from 1992 to 2012. LDO reported 1,417 metered connections served in 1992 and 6,348 metered connections served in 2012; an increase of 4,931 metered connections. On average, metered connections have increased approximately 247 per year. The greatest growth occurred between 1992 and 2006, where the number of metered connections increased by a total of 4,629. From 2008 to 2012, LDO has experienced a moderate, but steady increase in growth.

Currently, the Saddlebrooke service area is close to build-out, with approximately 120 to 140 lots remaining to be developed. Should the economy continue to stabilize, LDO anticipates modest growth in the Saddlebrooke and Catalina service areas.

E. ARIZONA DEPARTMENT OF ENVIRONMENTAL QUALITY ("ADEQ") COMPLIANCE

Compliance

ADEQ regulates the LDO and RUC water systems under ADEQ Public Water System Identification ("PWS ID") No. 11-117. ADEQ inspected the LDO water system on December 17, 2010. During the inspection no major deficiencies were found in the operation, maintenance, or certified operator status of the water system.

According to ADEQ Compliance Status Report ("CSR"), dated January 7, 2014, the CSR indicates that the LDO water system is currently delivering water that meets water quality standards required by 40 CFR 141 (National Primary Drinking Water Regulations) and Arizona Administrative Code, Title 18, Chapter 4.

[7] Staff's historical growth figures are based on the data reported by LDO in their annual reports submitted to the commission.

Water Monitoring and Testing

Table B provides a comparison of ADEQ's and LDO's monitoring for various contaminants within the LDO and RUC distribution systems and entry points to the distribution systems. Samples to be tested for the various contaminants are collected from both LDO and RUC distribution systems.

Table B. Comparison of ADEQ and LDO/RUC Monitoring Schedules[8]

Monitoring	LDO and RUC Sampling Schedule		ADEQ Sampling Schedule		Sample Locations
	Sample Frequency	Number of Samples	Sample Frequency	Number of Samples	
Total Coliform	Monthly	20	Monthly	20	Distribution
Lead & Copper	Every 3 Years	30	Every 3 Years	30	Distribution
Disinfection By-Products (TTHMs)	Annually	11	Annually	9	Distribution
Disinfection By-Products (HAA5s)	Annually	11	Annually	9	Distribution
Asbestos	Every 9 Years	11	Every 9 Years	11	All Entry Points
Nitrate	Annually	11	Annually	11	All Entry Points
Nitrite	Every 9 Years	11	Every 9 Years	11	All Entry Points
Inorganic Compounds (IOCs)	Every 3 Years	11	Every 3 Years	11	All Entry Points
Synthetic Organic Compounds (SOCs)	Every 3 Years	22	Every 3 Years	22	All Entry Points
Volatile Organic Compounds (VOCs)[2]	Every 9 Years	11	Every 6 Years	10	All Entry Points
Volatile Organic Compounds (VOCs)	Annually	0	Annually	1	[1]EPDS022
Radiochemicals (RADs)	Every 9 Years	0	Every 9 Years	2	EPDS001 & EPDS017
Radiochemicals (RADs)[3]	Every 4 Years	11	Every 6 Years	8	All Entry Points
Radiochemicals (RADs)	Annually	0	Annually	4	EPDS022
Sulfate[4]	Every 5 Years	11	-	11	All Entry Points
UCMR3 (Required by the EPA)	2014[5]	22	2014[5]	22	All Entry Points
UCMR3 (Required by the EPA)	2014[5]		2014[5]		Distribution

[1]EPDS is the abbreviation for Entry Point Distribution System. [2]Includes all entry points with the exception of EPDS022. [3]Includes all entry points with the exception of EPDS001, EPDS017, and EPDS022. [4]Sulfate is an unregulated contaminant that ADEQ required of LDO, which LDO continues to monitor. [5]The Unregulated Contaminant Monitoring Rule 3 (UCMR3) required by the Environmental Protection Agency (EPA) begins in 2014. Samples to be tested for the presence of UCMR3 contaminants are to be taken twice from all entry points within one (1) consecutive twelve month period. (See Page 18, Section I Other Issues, 4. Unregulated Contaminant Monitoring).

[8] The information listed was based on one, or a combination of, the following sources: 1) Company's Application, 2) Commission Annual Reports, 3) Arizona Department of Water Resources Records, 4) Information contained in the Company's response to a Staff Data Requests and, 5) Information collected during Staff's site visit.

Samples that are to be tested for the presence of Total Coliform, Total Trihalomethanes (TTHM), and Haloacetic Acids (HAA5) are taken from within the LDO distribution system.

Samples that are to be tested for the presence of Asbestos, Nitrate/Nitrite, Inorganic Compounds (IOC), Synthetic Compounds (SOC), Volatile Compounds (VOC), Radiochemicals (RAD), and Sulfate are taken from all entry points into the LDO distribution system. All samples are submitted to and tested by Legend Technical Services, Inc.

As indicated in Table B, LDO is following ADEQ's Contaminant Sampling Schedule, with the exception of VOCs, and RADs. According to the ADEQ Sampling Schedule, and illustrated in Table B, LDO is required to:

1) Sample and test the distribution system entry points for VOCs every six (6) years, with the exception of entry point EPDS022, which is currently required to be sampled and tested each quarter annually. LDO has chosen to sample and test each entry point for VOCs every nine (9) years. Since ADEQ requirements take precedence, Staff recommends that LDO revise its VOC sampling and testing schedule to conform to ADEQ's schedule.

2) Sample and test the distribution system entry points for RADs every six (6) years, with the exception of entry points EPDS001, EPDS017, and EPDS022. EPDS001 and EPDS017 are currently required to be sampled and tested every nine (9) years, and EPDS022 is required to be sampled and tested each quarter annually. Since ADEQ requirements take precedence, Staff recommends that LDO revise its RAD sampling and testing schedule to conform to ADEQ's schedule.

Water Testing Expenses

LDO reported water testing expenses of $50,082.00 during the test year. Approximately $2,740 of the expenses was for testing of samples from the RUC distribution system and the LDO & RUC shared facilities at Water Plant #2 in Saddlebrooke. Accordingly, water testing expenses during the test year for LDO were $47,342.

The monitoring and testing expenses, that were reviewed, evaluated, and recalculated by Staff, are represented in Tables C and D.

The costs indicated in Table C are reflective of ADEQ sampling requirements for both LDO and RUC. The total annual water testing costs, which includes the combined expenses for LDO and RUC, amounts to $23,820.

LDO and RUC are each assigned an allocation for each of the monitored contaminants. For example, there are a total of twenty (20) Total Coliform samples collected each month (total of 240 per year) from the LDO and RUC distribution systems. Ten (10) percent, or two (2), of the Total Coliform samples are allocated from RUC. The remaining ninety (90) percent, or eighteen (18), Total Coliform samples are allocated from LDO.

Table C. LDO/RUC Water Testing Costs

Monitoring	Testing Cycle	Cost per Test	Quantity of Tests taken during the Testing Cycle	LDO Cost per Testing Cycle	LDO & RUC Annual Costs
Total Coliform[1]	Annually	$16	240	$3,840	$3,840
Lead & Copper	Once/3 Years	$34	30	$1,020	$340
Disinfection By-Products (TTHMs)	Annually	$80	11	$880	$880
Disinfection By-Products (HAA5s)	Annually	$200	11	$2,200	$2,200
Asbestos	Once/9 Years	$160	11	$1,760	$196
Nitrate & Nitrite[2]	Annually	$32	11	$352	$352
Inorganic Compounds (IOCs)	Once/3 Years	$217	11	$2,387	$796
Synthetic Organic Compounds (SOCs)	Once/3 Years	$1,794	22	$39,468	$13,156
Volatile Organic Compounds (VOCs)	Once/6 Years	$176	10	$1,760	$294
Volatile Organic Compounds (VOCs)	Annually	$176	1	$176	$176
Radiochemicals (RADs)	Once/6 Years	$280	8	$2,240	$373
Radiochemicals (RADs)[3]	Once/9 years	$280	2	$560	$62
Radiochemicals (RADs)[4]	Annually	$280	4	$1,120	$1,120
Sulfate	Once/5 Years	$16	11	$176	$35
Total Annual Water Testing Costs					**$23,820**

[1]Eighteen (18) samples are taken from within the LDO distribution system and two (2) are taken from within the RUC distribution system each month for Total Coliform testing (240 per year). [2]This sample is first analyzed to determine the concentration of Total Nitrogen, and then analyzed for the concentration of Nitrite. The Nitrite concentration is then subtracted from the concentration of Total Nitrogen to obtain the concentration of Nitrate present in the sample. According to the ADEQ Sampling Schedule, Nitrite is required once every nine (9) years. However, since Nitrite is needed to determine Nitrate, Nitrite is included in the Annual results. [3]According to the ADEQ Sampling Schedule, one (1) sample is to be taken from Entry Point EPDS001 and EPDS017 (Well #1 & #17) once every nine (9) years. [4]According to the ADEQ Sampling Schedule, one (1) sample is to be taken from Entry Point EPDS022 (Well #22) each quarter during the annual testing cycle.

LDO's proposed annual water testing expenses, as presented in its rate application, totaled $22,433. However, RUC's water testing expenses were also included in the proposed testing expenses. In response to a Staff Data Request, LDO provided an updated annual water testing cost of $21,613, which excluded the water testing expenses for RUC.[9]

Table D provides a comparison of LDO's and RUC's adjusted total annual water testing costs as per the allocations. Based on the total annual water testing cost of $23,280, RUC's allocated share of the total costs is $1,935, with the remaining balance of $21,885 being allocated to LDO. Staff recommends an annual water testing expense of $21,885, for LDO, be used for purposes of this application.

[9] The updated annual water testing expenses were provided in response to a Staff Data Request MST-2 email, dated December 13, 2013.

Table D. LDO & RUC Adjusted Water Testing Costs

Monitoring	LDO & RUC Costs	RUC Costs	LDO Costs	RUC Allocation
Total Coliform[1]	$3,840	$384	$3,456	1
Lead & Copper	$340	$102	$238	3
Disinfection By-Products (TTHMs)	$880	$40	$840	2
Disinfection By-Products (HAA5s)	$2,200	$100	$2,100	2
Asbestos	$196	$9	$187	2
Nitrate & Nitrite[2]	$352	$16	$336	2
Inorganic Compounds (IOCs)	$796	$36	$760	2
Synthetic Organic Compounds (SOCs)	$13,156	$598	$12,558	2
Volatile Organic Compounds (VOCs)	$294	$0	$294	2
Volatile Organic Compounds (VOCs)[3]	$176	$88	$88	2
Radiochemicals (RADs)	$62	$0	$62	2
Radiochemicals (RADs)	$373	$0	$373	2
Radiochemicals (RADs)	$1,120	$560	$560	2
Sulfate	$35	$2	$33	2
Total Cost	$23,820	$1,935	$21,885	-

[1]Two (2) samples per month are allocated to RUC (10%). [2]There are a total of 11 POE's. RUC has been allocated a factor of 0.5/11 = 0.4545 for each POE. [3]Three (3) samples are allocated to RUC (10%)

F. ARIZONA DEPARTMENT OF WATER RESOURCES ("ADWR") COMPLIANCE

The LDO service area is located within ADWR's Tucson Active Management Area ("TAMA"). ADWR's Water Provider Compliance Report, dated August 28, 2013, indicates that LDO is currently non-compliant with departmental requirements governing water providers and/or community water systems, regarding the non-submittal of its Water System Plan.

Staff recommends that any increase in rates approved by the Commission not become effective until ADWR has determined that LDO is in compliance with departmental requirements governing water providers and/or community water systems.

G. ACC COMPLIANCE

A check of the Utilities Division Compliance Section database showed that there are no delinquent Commission compliance items for LDO.[10]

[10] Per Compliance Section email, dated August 27, 2013.

H. DEPRECIATION RATES

Staff's typical and customary depreciation rates, which vary by National Association of Regulatory Utility Commissioners ("NARUC") plant categories, are illustrated in Table E. These rates represent typical and customary values within a range of anticipated equipment life. Staff recommends that LDO use the depreciation rates presented in Table E.

Table E. Depreciation Rate Table for Water Companies

NARUC Acct. No.	Depreciable Plant	Average Service Life (Years)	Annual Accrual Rate (%)
304	Structures & Improvements	30	3.33
305	Collecting & Impounding Reservoirs	40	2.50
306	Lake, River, Canal Intakes	40	2.50
307	Wells & Springs	30	3.33
308	Infiltration Galleries	15	6.67
309	Raw Water Supply Mains	50	2.00
310	Power Generation Equipment	20	5.00
311	Pumping Equipment	8	12.5
320	Water Treatment Equipment		
320.1	Water Treatment Plants	30	3.33
320.2	Solution Chemical Feeders	5	20.00
320.3	Point-of-Use Treatment Devices	10	10.00
330	Distribution Reservoirs & Standpipes		
330.1	Storage Tanks	45	2.22
330.2	Pressure Tanks	20	5.00
331	Transmission & Distribution Mains	50	2.00
333	Services	30	3.33
334	Meters	12	8.33
335	Hydrants	50	2.00
336	Backflow Prevention Devices	15	6.67
339	Other Plant & Misc Equipment	15	6.67
340	Office Furniture & Equipment	15	6.67
340.1	Computers & Software	5	20.00
341	Transportation Equipment	5	20.00
342	Stores Equipment	25	4.00
343	Tools, Shop & Garage Equipment	20	5.00
344	Laboratory Equipment	10	10.00
345	Power Operated Equipment	20	5.00
346	Communication Equipment	10	10.00
347	Miscellaneous Equipment	10	10.00
348	Other Tangible Plant	---	------

I. OTHER ISSUES

1. Service Line and Meter Installation Charges

LDO has proposed to increase its existing service line and meter installation charges.[11] The proposed charges are refundable advances, and are similar to the Staff's typical range of charges for service line and meter installations. Since LDO may at times install meters on existing service lines, it would be appropriate for some customers to only be charged for the meter installation. Those charges are included in Table D listed under "Staff's Recommendations".

Staff recommends that meter sizes 8-inches and larger be priced on an individual case basis ("ICB") at cost. Staff further recommends that the charges listed under "Staff's Recommendation" in Table F be adopted.

Table F. Service Line and Meter Installation Charges

		Company Proposed			Staff's Recommendation		
Meter Size	Company Current Tariff	Service Line Charge	Meter Charge	Total Charge	Service Line Charge	Meter Charge	Total Charge
5/8 x 3/4-inch	$250	$385	$135	$520	$415	$105	$520
3/4-inch	$275	$415	$205	$620	$415	$205	$620
1-inch	$300	$465	$265	$730	$465	$265	$730
1-1/2-inch	$450	$520	$475	$995	$520	$475	$995
2-inch	$625	-	-	-	-	-	-
2-inch Turbine	-	$800	$995	$1,795	$800	$995	$1,795
2-inch Compound	-	$800	$1,840	$2,640	$800	$1,840	$2,640
3-inch	$800	-	-	-	-	-	-
3-inch Turbine	-	$1,015	$1,620	$2,635	$1,015	$1,620	$2,635
3-inch Compound	-	$1,135	$2,495	$3,630	$1,135	$2,495	$3,630
4-inch	$975	-	-	-	-	-	-
4-inch Turbine	-	$1,430	$2,570	$4,000	$1,430	$2,570	$4,000
4-inch compound	-	$1,610	$3,545	$5,155	$1,610	$3,545	$5,155
5-inch	$1,150	-	-	-	-	-	-
6-inch	$1,325	-	-	-	-	-	-
6-inch Turbine	-	$2,150	$4,925	$7,075	$2,150	$4,925	$7,075
6-inch Compound	-	$2,270	$6,820	$9,090	$2,270	$6,820	$9,090
8-inch	$1,500	-	-	-	-	-	-
8-inch or Larger	-	ICB*	ICB*	ICB*	ICB*	ICB*	ICB*

ICB* Indicates Individual Case Basis at Cost.

[11] The Company's current charges were approved in Decision No. 56464 & 56478, effective May 1, 1989.

2. *Curtailment Tariff*

LDO has an approved Curtailment Tariff on file with the Commission. This tariff became effective November 6, 2013.

3. *Backflow Prevention Tariff*

LDO has an approved Backflow Prevention Tariff on file with the Commission. This tariff became effective November 12, 2013.

4. *Best Management Practices ("BMP") Tariff*

LDO is regulated, by ADWR, under the modified Non-per Capita Conservation Program (MNPCCP) and is required to implement a basic public education program plus five (5) additional best management practices ("BMPs).[12] On August 24, 2009, ADWR approved LDO's Public Education Program and the five (5) BMPs. The BMPs include:

1) Customer Inquiry Resolution for High Consumption (BMP #3.6)
2) High Consumption Notification for Customers (BMP #3.7)
3) Water Waste Investigations and Information (BMP #3.8)
4) Leak Detection Program (BMP #4.1)
5) Meter Repair and Replacement (BMP #4.2)

For the Public Education Program, LDO provides water conservation tips and ideas in the customer water bill each month. LDO also distributes Water Wise pamphlets at all clubhouses in Saddlebrooke and the LDO Office. Customers who request pamphlets are instructed to pick them up at one of the clubhouses or the LDO Office. If requested by a customer, LDO will mail a pamphlet.

Staff recommends that LDO file with Docket Control, as a compliance item in this docket and within 90 days of the effective date of a decision in this proceeding, seven (7) BMP's (five that are listed above and two (2) additional) in the form of tariffs that substantially conform to the templates created by Staff for Commission's review and consideration. The templates created by Staff are available on the Commission's website at http://www.azcc.gov/Divisions/Utilities/forms.asp. LDO may request cost recovery of the actual costs associated with the BMPs implemented in its next general rate application.

4. *Unregulated Contaminant Monitoring*

On May 2, 2012, the Environmental Protection Agency ("EPA") revised and implemented the Unregulated Contaminant Monitoring Rule 3 ("UCMR3"). ADEQ does not regulate the UCMR3 program. The purpose of the UCMR3 (monitoring and sampling assessment) is for water systems to collect occurrence data for contaminants suspected to be

[12] Information provided by Ray Jones Direct Testimony, dated June 27, 2013, and ADWR via email, dated December 23, 2013.

present in drinking water, but that do not have health-based standards set under the Safe Drinking Water Act ("SDWA"). The UCMR3 program is the primary source of drinking water contaminant occurrence data used by the EPA in regulatory determinations. The UCMR3 program requires water systems to perform the monitoring and sampling assessment only once during the time frame between January 2013 – December 2015.

Beginning in 2014, LDO is required by the EPA to conduct assessment monitoring and sampling for the presence of UCMR3 contaminants. Samples to be tested for the presence of twenty one (21) of the UCMR3 contaminants are to be taken twice (2) from each EPDS within one (1) consecutive twelve (12) month period. Samples to be tested for the presence of seven (7) of the UCMR3 contaminants are to be taken twice (2) from the distribution system maximum residence time sampling locations within the same consecutive twelve (12) month period. Each sampling event must occur five (5) to seven (7) months apart. Sampling can span more than one calendar year, as long as the sampling is conducted during a twelve (12) month period. Currently, LDO is scheduled to conduct sampling in March and November, 2014.

Staff estimates that LDO's total cost associated with the sampling and testing of the UCMR3 contaminants, required by the EPA, amounts to $32,280, as illustrated in Table G. LDO was not made aware of the UCMR3 monitoring, sampling, and testing requirements until after its submittal of the rate application. Therefore, the costs were not included in the application.

Table G. EPA Mandated UCMR3

Sample Locations	Number of Samples	Sample Frequency	Total Samples	Cost Per Sample	Total Cost
Distribution System	12	Twice	24	$300	$7,200
Point of Entry (POE)	11	Twice	22	$1,140	$25,080
					$32,280

J. FINANCING

On July 10, 2013, LDO filed with the Commission a financing application requesting authority to incur indebtedness in an amount not to exceed $3,900,000 to fund asset purchases (water infrastructure and plant facilities in the Saddlebrooke service area) from Saddlebrooke Development. The financing application was amended on October 9, 2013, to reflect updated loan terms and conditions by the likely lender, Wells Fargo.

1. Project Cost Information

Table H provides in-service dates and installation costs for the assets purchased from Saddlebrooke Development. The purchased assets, infrastructure and backbone, are primarily located in the southwestern section of Saddlebrooke Phase 2, with the exception of the Phase 2 Offsite Water Mains. The Phase 2 Offsite Water Mains run from the intersection of saddlebrooke Boulevard and Mountain View Boulevard, located in the northern section of Saddlebrooke Phase 2, down Mountain View Boulevard to Lago Del Oro Parkway, and then runs

north on Lago Del Oro Parkway until it ties-in with Water Plant #1 located in the southwestern section of Saddlebrooke Phase 1.

Table H. Capital Costs to be Financed[13]

Asset Description - Infrastructure	In-Service Date	Installation Cost
Unit 46 – Desert Reflections	June 2002	$ 228,171
Unit 46-A – Fairway Valley	June 2007	$ 7,386
Unit 47 – Desert Vista	June 2005	$ 323,381
Unit 48 – Desert Views and Unit 48- A – Hidden Vistas	June 2006	$ 227,131
Unit 49 – Sun Ridge Hills	June 2008	$ 501,861
Subtotal – Infrastructure Costs		$ 1,287,930
Asset Description - Backbone		
Water Plant #5	September 2009	$ 983,357
Well #22	September 2009	$ 817,107
Phase 2 – Offsite Water Mains	December 1997	$ 537,979
Transmission Mains	December 2007	$ 261,625
Subtotal – Backbone Costs		$ 2,600,068
Total Cost – Infrastructure and Backbone Costs		$ 3,887,998

Staff concludes that the costs associated with the installation of the plant infrastructure and backbone are reasonable. However, the costs do not appear to consider accumulated depreciation.

Based on the October 24, 2013 site visit and inspection of the LDO water system, Staff concluded that the plant infrastructure and backbone, listed in Table H, are currently in operation and considered used and useful. The plant infrastructure and backbone are included in the Saddlebrooke and Catalina Plant Facilities Summary, Table A.

[13] Installation and asset descriptions included in the Financing Application, dated July 10, 2013. In-service dates provided from a response to Staff Data Request MST-8 email, dated December 20, 2013.

BEFORE THE ARIZONA CORPORATION COMMISSION

BOB STUMP
Chairman
GARY PIERCE
Commissioner
BRENDA BURNS
Commissioner
SUSAN BITTER SMITH
Commissioner
BOB BURNS
Commissioner

IN THE MATTER OF THE APPLICATION OF LAGO DEL ORO WATER COMPANY, AN ARIZONA CORPORATION, FOR A DETERMINATION OF THE FAIR VALUE OF ITS UTILITY PLANT AND PROPERTY AND FOR INCREASES IN ITS WATER RATES AND CHARGES FOR UTILITY SERVICE BASED THEREON.	)	DOCKET NO. W-01944A-13-0215

DIRECT

TESTIMONY

OF

JOHN A. CASSIDY

PUBLIC UTILITIES ANALYST

UTILITIES DIVISION

ARIZONA CORPORATION COMMISSION

EXHIBIT
S-1C
ADMITTED

JANUARY 17, 2014

TABLE OF CONTENTS

PAGE

I. INTRODUCTION 1

Summary of Testimony and Recommendations 2
LDO's Proposed Overall Rate of Return 4

II. THE WEIGHTED AVERAGE COST OF CAPITAL 5

III. CAPITAL STRUCTURE 6

Background 6
LDO's Capital Structure 7
Staff's Capital Structure 9

IV. COST OF DEBT 11

V. RETURN ON EQUITY 12

Background 12
Risk 15

VI. ESTIMATING THE COST OF EQUITY 17

Introduction 17
Discounted Cash Flow Model Analysis 18
The Constant-Growth DCF 19
The Multi-Stage DCF 28

VII. SUMMARY OF STAFF'S COST OF EQUITY ANALYSIS 30

VIII. FINAL COST OF EQUITY ESTIMATES FOR LDO 31

IX. RATE OF RETURN RECOMMENDATION 32

X. STAFF RESPONSE TO COMPANY'S COST OF CAPITAL WITNESS MR. THOMAS J. BOURASSA 33

XI. CONCLUSION 43

SCHEDULES

Capital Structure and Weighted Cost of Capital JAC-1

Intentionally Left Blank JAC-2

Final Cost of Equity Estimates for Sample Water Utilities ..... JAC -3

Average Capital Structure of Sample Water Utilities ..... JAC -4

Growth in Earnings & Dividends of Sample Water Utilities ..... JAC -5

Sustainable Growth for Sample Water Utilities ..... JAC -6

Selected Financial Data of Sample Water Utilities ..... JAC -7

Calculation of Expected Infinite Annual Growth in Dividends ..... JAC -8

Multi-Stage DCF Estimates ..... JAC -9

EXECUTIVE SUMMARY
LAGO DEL ORO WATER COMPANY
DOCKET NO. W-01944A-13-0215

The direct testimony of Staff witness John A. Cassidy addresses the following issues:

Capital Structure – Staff recommends that the Commission adopt a capital structure for Lago Del Oro Water Company ("Company") for this proceeding consisting of 29.0 percent debt and 71.0 percent equity.

Cost of Equity – Staff recommends that the Commission adopt a 9.3 percent return on equity ("ROE") for the Company. Staff's estimated ROE for the Company is based on the 8.7 percent average of its discounted cash flow method ("DCF") cost of equity methodology estimates for the sample companies of 8.1 percent for the constant-growth DCF model and 9.3 percent for the multi-stage DCF model. Staff's recommended ROE includes an upward economic assessment adjustment of 60 basis points (0.6 percent).

Cost of Debt – Staff recommends that the Commission adopt a 4.6 percent cost of debt for the Company.

Overall Rate of Return – Staff recommends that the Commission adopt a 7.9 percent overall rate of return.

Mr. Bourassa's Testimony – The Commission should reject the Company's proposed 10.5 percent ROE for the following reasons:

Mr. Bourassa's primary Future Growth DCF estimates rely exclusively on analysts' forecasts of earnings per share growth. Effectively, Mr. Bourassa's overall DCF estimate is weighted 75 percent by his Future Growth DCF estimates. The current market risk premium in Mr. Bourassa's current MRP CAPM model is not reflective of current market conditions and serves to overstate his CAPM cost of equity estimate. Mr. Bourassa's proposed ROE has been inflated by an implicit upward adjustment for financial risk and small company risk premium.

I. INTRODUCTION

Q. Please state your name, occupation, and business address.

A. My name is John A. Cassidy. I am a Public Utilities Analyst employed by the Arizona Corporation Commission ("Commission") in the Utilities Division ("Staff"). My business address is 1200 West Washington Street, Phoenix, Arizona 85007.

Q. Briefly describe your responsibilities as a Public Utilities Analyst.

A. I am responsible for the examination of financial and statistical information included in utility rate applications and other financial matters, including studies to estimate the cost of capital component in rate filings used to determine the overall revenue requirement, and for preparing written reports, testimonies and schedules to present Staff's recommendations to the Commission on these matters.

Q. Please describe your educational background and professional experience.

A. I hold a Bachelor of Arts degree in History from Arizona State University, a Master of Library Science degree from the University of Arizona, and a Master of Business Administration degree with an emphasis in Finance from Arizona State University. While pursuing my MBA degree, I was inducted into Beta Gamma Sigma, the National Business Honor Society. I have passed the CPA exam, but opted not to pursue certification. I have worked professionally as a librarian, financial consultant and tax auditor and served as Staff's cost of capital witness in rate case evidentiary proceedings in my current as well as in a past tenure as a Commission employee.

Q. What is the scope of your testimony in this case?

A. My testimony provides Staff's recommended capital structure, return on equity ("ROE") and overall rate of return ("ROR") for establishing the revenue requirements for Lago Del

Oro Water Company ("LDO" or "Company") in the Company's pending water rate application.

Q. Please provide a brief description of LDO.

A. LDO is a Class "B" public service corporation engaged in providing water utility service in portions of Pima County and Pinal County, Arizona, pursuant to a certificate of convenience and necessity granted by the Arizona Corporation Commission ("Commission"). During the test year ending December 31, 2012, the Company served approximately 6,400 water connections.

Summary of Testimony and Recommendations

Q. Briefly summarize how Staff's cost of capital testimony is organized.

A. Staff's cost of capital testimony is presented in ten sections. Section I is this introduction. Section II discusses the concept of weighted average cost of capital ("WACC"). Section III presents the concept of capital structure and presents Staff's recommended capital structure for LDO in this proceeding. Section IV presents Staff's cost of debt for LDO. Section V discusses the concepts of ROE and risk. Section VI presents the methods employed by Staff to estimate LDO's ROE. Section VII presents the findings of Staff's ROE analysis. Section VIII presents Staff's final cost of equity estimates for LDO. Section IX presents Staff's ROR recommendation. Finally, Section X presents Staff's comments on the direct testimony of the Company's witness, Mr. Thomas J. Bourassa.

Q. Have you prepared any exhibits to accompany your testimony?

A. Yes. I prepared nine schedules (JAC-1 to JAC-9) which support Staff's cost of capital analysis.

Q. What is Staff's recommended rate of return for LDO?

A. Staff recommends a 7.9 percent overall ROR, as shown in Schedule JAC-1. Staff's ROR recommendation is based on the following: (1) a capital structure composed of 29.0 percent debt and 71.0 percent equity; (2) a cost of equity of 9.3 percent, calculated as the simple average of the two cost of equity estimates for the sample companies derived from Staff's discounted cash flow ("DCF") estimation methodologies (8.1 percent from Staff's constant growth DCF model and 9.3 percent from Staff's multi-stage DCF model), plus the adoption of a 60 basis point upward economic assessment adjustment; and (3) a cost of debt of 4.6 percent.

Staff continues to develop and analyze the indicated cost of equity estimates derived from the two capital asset pricing model ("CAPM") estimation methodologies historically considered and relied upon by Staff. However, at the present time Staff is recommending that the Commission de-emphasize the CAPM driven results due to the continuing divergence of the CAPM-indicated cost of equity results relative to those derived by the DCF model.

Q. Mr. Cassidy, briefly explain why the cost of equity estimates derived from the CAPM have become problematic in today's economic environment.

A. In an effort to recover from the economic recession of 2008, the United States Federal Reserve ("The Fed") initiated a monetary policy intended to stimulate economic growth and reduce unemployment by keeping the federal funds rate at a level between 0 to ¼ percent.[1] The federal funds rate is the central bank's key tool to spur the economy and a low rate is thought to encourage spending by making it cheaper to borrow money. In addition, in an effort to put downward pressure on longer-term interest rates, the Fed

[1] The federal funds rate is the interest rate charged to banks by the Fed for overnight transfers of funds.

initiated a policy of quantitative easing[2] wherein the U.S. central bank would purchase U.S. Treasury mortgage-backed securities by reinvesting the principal payments from its holdings of agency debt and agency mortgage-backed securities, and of rolling over maturing Treasury securities at auction.[3] As a consequence, the low interest rate environment engineered by the Fed has compelled investors to seek out higher yields on investment wherever they may be found, resulting in the equity markets having recently achieved new all-time highs[4] and forecasted dividend yields falling to new lows.[5] At present, these factors, in combination with one another, have led to abnormally low cost of equity estimates being obtained from the CAPM model. Accordingly, in Staff's judgment the cost of equity estimates derived from the CAPM should not be given their traditional weighting for purposes of setting rates until such time that market conditions change.

LDO's Proposed Overall Rate of Return

Q. Briefly summarize LDO's proposed capital structure, cost of debt, ROE and overall ROR for this proceeding.

A. Table 1 summarizes the Company's proposed capital structure, cost of debt, ROE and overall ROR in this proceeding:

[2] Quantitative easing is an unconventional monetary policy in which a central bank purchases government securities or other securities from the market in order to lower interest rates and increase the money supply. Quantitative easing increases the money supply by flooding financial institutions with capital in an effort to promote increased lending and liquidity. Quantitative easing is considered when short-term interest rates are at or approaching zero, and does not involve the printing of new banknotes.

[3] At present, the Fed purchases $40 billion of agency mortgage-backed securities per month and $45 billion of longer-term Treasury securities per month. (http://www.federalreserve.gov/newsevents/press/monetary/20131030a.htm)

[4] The Dow Jones Industrial Average closed above 16,000 for the first time ever on November 27, 2013 (16,097.33), and reached an all-time intra-day high of 16,588.25 on December 31, 2013. Similarly, the S&P 500 Index recently reached a new all-time high of 1,849.44, and closed at 1837.88 on January 7, 2014 (Source: CNNMoney).

[5] As reported in the *Value Line Investment Survey, Summary & Index*, the median estimated dividend yield (next 12 months) of all dividend paying stocks under its review fell to 2.0 percent on November 1, 2013, and has since fallen to a level of 1.9 percent (*Value Line*, January 3, 2014 issue).

Table 1

	Weight	Cost	Weighted Cost
Long-term Debt	41.09%	6.00%	2.47%
Common Equity	58.91%	10.50%	6.19%
Cost of Capital/ROR			**8.65%**

LDO is proposing an overall rate of return of 8.65 percent.

II. THE WEIGHTED AVERAGE COST OF CAPITAL

Q. Briefly explain the cost of capital concept.

A. The cost of capital is the opportunity cost of choosing one investment over others with equivalent risk. In other words, the cost of capital is the return that stakeholders expect for investing their financial resources in a determined business venture over another business venture.

Q. What is the overall cost of capital?

A. The cost of capital to a company issuing a variety of securities (i.e., stock and indebtedness) is an average of the cost rates on all issued securities adjusted to reflect the relative amounts for each security in the company's entire capital structure. Thus, the overall cost of capital to a firm is its weighted average cost of capital ("WACC").

Q. How is the WACC calculated?

A. The WACC is calculated by adding the weighted expected returns of a firm's securities. The WACC formula is:

Equation 1.

$$WACC = \sum_{i=1}^{n} W_i * r_i$$

In this equation, W_i is the weight given to the ith security (the proportion of the ith security relative to the portfolio) and r_i is the expected return on the ith security.

Q. Can you provide an example demonstrating application of Equation 1?

A. Yes. For this example, assume that an entity has a capital structure composed of 60 percent debt and 40 percent equity. Also, assume that the embedded cost of debt is 6.0 percent and the expected return on equity, i.e., the cost of equity, is 10.5 percent. Calculation of the WACC is as follows:

$$WACC = (60\% * 6.0\%) + (40\% * 10.5\%)$$

$$WACC = 3.60\% + 4.20\%$$

$$WACC = 7.80\%$$

The weighted average cost of capital in this example is 7.80 percent. The entity in this example would need to earn an overall rate of return of 7.80 percent to cover its cost of capital.

III. CAPITAL STRUCTURE

<u>Background</u>

Q. Please explain the capital structure concept.

A. The capital structure of a firm is the relative proportions of each type of security:-short-term debt, long-term debt (including capital leases), preferred stock and common stock that are used to finance the firm's assets.

Q. How is the capital structure expressed?

A. The capital structure of a company is expressed as the percentage of each component of the capital structure (capital leases, short-term debt, long-term debt, preferred stock and common stock) relative to the entire capital structure.

As an example, the capital structure for an entity that is financed by $20,000 of short-term debt, $85,000 of long-term debt (including capital leases), $15,000 of preferred stock and $80,000 of common stock is shown in Table 2.

Table 2

Component			%
Short-Term Debt	$20,000	($20,000/$200,000)	10.0%
Long-Term Debt	$85,000	($85,000/$200,000)	42.5%
Preferred Stock	$15,000	($15,000/$200,000)	7.5%
Common Stock	$80,000	($80,000/$200,000)	40.0%
Total	$200,000		100%

The capital structure in this example is composed of 10.0 percent short-term debt, 42.5 percent long-term debt, 7.5 percent preferred stock and 40.0 percent common stock.

<u>LDO's Capital Structure</u>

Q. What was LDO's actual capital structure as of the test year ending December 31, 2012?

A. As of the December 31, 2012 test-year end, the Company's capital structure consisted of 0.0 percent debt and 100 percent equity.

Q. What capital structure does LDO propose for purposes of this proceeding?

A. The Company proposes a pro forma capital structure composed of 41.09 percent debt and 58.91 percent common equity.

Q. Why is LDO proposing a pro forma capital structure in this rate proceeding rather than its actual capital structure as of the December 31, 2012 test-year end?

A. LDO's proposed pro forma capital structure gives recognition to events expected to take place subsequent to the Company's December 31, 2012, test year end which would render use of its actual capital structure as of that date to be inappropriate for purposes of this proceeding. Specifically, on July 10, 2013, the Company filed a financing application[6] seeking authority to issue evidence of indebtedness in an amount not to exceed $3,900,000. In December 2012, the Company purchased a significant portion of its water system from an affiliate[7], and as contemplated in the financing application LDO plans to repay shareholders for this asset purchase by means of a capital structure rebalancing wherein $3.9 million of equity capital is to be replaced with $3.9 million of debt financing through a loan with Wells Fargo at an interest rate not to exceed 6.0 percent. LDO's proposed financing is beneficial to ratepayers, as the cost of debt is less than the cost of equity, and a rebalancing of the Company's equity-rich capital structure will serve to lower the equity component in the capital structure.

Q. Has the Company requested formal consolidation of its financing application and its rate application?

A. No. The Company has requested that the two dockets not be consolidated.

---

[6] Docket No. W-01944A-13-0242.

[7] The assets were purchased from Saddlebrooke Development, an LDO affiliate, at a price of $3,887,998 (*See* LDO Financing Application, Exhibit 2 (Docket No. W-01994A-13-0242)).

Q. Does Staff anticipate recommending approval of the Company's proposed financing?

A. Yes, but with certain modifications. As proposed, the $3.9 million financing reflects the original cost of the assets purchased by the LDO affiliate. However, the purchased plant had been placed in service in prior years by the affiliate, and LDO's proposed financing gave no consideration to the level of accumulated depreciation that would, or should, have been recorded in a contra account between the time the various plant assets were originally placed in service and subsequently purchased by LDO. Accordingly, Staff expects to recommend approval of the financing but in the amount of $2,751,411, a figure which reflects the original cost of the assets ($3,887,998), net of accumulated depreciation ($1,136,587). Details of Staff's adjustment to plant may be found in the direct testimony filed by Staff witness, Mary Rimback.

Q. How does Staff's recommended pro forma capital structure for LDO compare to capital structures of publicly-traded water utilities?

A. Schedule JAC-4 shows the capital structures of seven publicly-traded water companies ("sample water companies" or "sample water utilities") as of December 2012. The average capital structure for the sample water utilities is comprised of approximately 50.3 percent debt and 49.7 percent equity.

<u>Staff's Capital Structure</u>

Q. Does Staff favor the use of a pro forma capital structure in this proceeding?

A. Yes. Staff considers the use of a pro forma capital structure to be appropriate in this rate proceeding, as it gives recognition to the prospective events noted above, and as such better reflects the Company's on-going capital costs.

Q. What is Staff's recommended capital structure for LDO?

A. Staff recommends a pro forma capital structure composed of 29.0 percent debt and 71.0 percent equity. Staff's recommended pro forma capital structure is reflective of a debt component of $2,751,411 and an equity component of $6,740,138.[8]

Q. For purposes of setting rates in this proceeding, what are the implications associated with Staff's recommended pro forma capital structure relative to the pro forma capital structure proposed by the Company?

A. As noted above, the debt component in Staff's recommended pro forma capital structure reflects the net book value of the assets purchased from the LDO affiliate, and not the original cost of the assets as proposed by the Company. As a consequence, the debt component in Staff's recommended pro forma capital structure (i.e., 29.0 percent) is less than that proposed by LDO (i.e., 41.09 percent), with the equity component recommended by Staff necessarily being higher (i.e., 71.0 percent) than that proposed by the Company (i.e., 58.91 percent). Equity capital is more costly than debt capital; thus, Staff's recommended pro forma capital structure allows LDO to earn an equity return on a higher equity component in the capital structure. Conversely, however, Staff's recommended pro forma capital structure would necessarily be applied to a lower rate base than that proposed by the Company, as Staff's recommended rate base is computed on the net book value of the assets purchased from the affiliate, and not their original cost as proposed by the Company.

[8] As shown in Company Schedule D-1, as of the December 31, 2012 test-year end, LDO had equity of $9,699,341. As shown in LDO's projected capital structure, the Company anticipated a net operating loss of $207,792 in the coming year, as the equity balance had fallen to $9,491,549. Thus, Staff's $6,740,138 equity component represents this $9,491,549 figure less the $2,751,411 debt component.

IV. COST OF DEBT

Q. What is the cost of debt proposed by the Company in this proceeding?

A. As shown in Company Schedule D-1, LDO proposes a cost of debt of 6.0 percent. This is the same cost of debt proposed by the Company in its financing application.

Q. Did the Company subsequently amend its financing application, and if so, why?

A. Yes. LDO filed an amendment to its financing application on October 9, 2013. The reason for the amended filing concerned LDO's request that the financing docket not be consolidated with the rate docket; however, the loan terms as originally proposed by the Company precluded this due to the debt service coverage ratio ("DSC") being insufficient to allow for non-consolidation. Accordingly, LDO met with its lender to arrange for new lending terms, and the Company filed its amendment to propose new financing terms sufficient to generate a DSC high enough to allow for non-consolidation.[9]

Q. In light of the above, what cost of debt does Staff recommend for LDO in this proceeding?

A. Staff recommends a cost of debt of 4.6 percent. Staff's recommended cost of debt was obtained pursuant to a data request issued the Company subsequent to LDO's amended filing. Because the final loan terms are unknown at this time, Staff may find it necessary to change its recommended cost of debt and, if necessary, is prepared to do so when filing surrebuttal testimony based upon input from the Company.

---

[9] In the financing docket, Staff's initial DSC calculations were predicated on the understanding that the loan principal was to be $3.9 million. Pursuant to a data request issued by Staff Engineering, details as to when the assets purchased by LDO from an affiliate were first placed into service were not obtained until late December 2013. If Staff had made its initial DSC calculations based upon the understanding that the loan principal would have been the lower net book value figure, there would have been no need for the Company to amend its financing application as the original loan terms when applied to that lower principal would have generated a DSC sufficient to allow for non-consolidation.

V. RETURN ON EQUITY

Background

Q. Please define the term "cost of equity capital."

A. The cost of equity is the rate of return that investors expect to earn on their investment in a business entity given its risk. In other words, the cost of equity to the entity is the investors' expected rate of return on other investments of similar risk. As investors have a wide selection of stocks to choose from, they will choose stocks with similar risks but higher returns. Therefore, the market determines the entity's cost of equity.

Q. Is there a correlation between interest rates and the cost of equity?

A. Yes, there is a positive correlation between interest rates and the cost of equity, as the two tend to move in the same direction.

Q. What has been the general trend of interest rates in recent years?

A. A chronological chart of interest rates is a good tool to show interest rate history and identify trends. Chart 1 graphs intermediate U.S. treasury rates from January 4, 2002, to May 31, 2013.

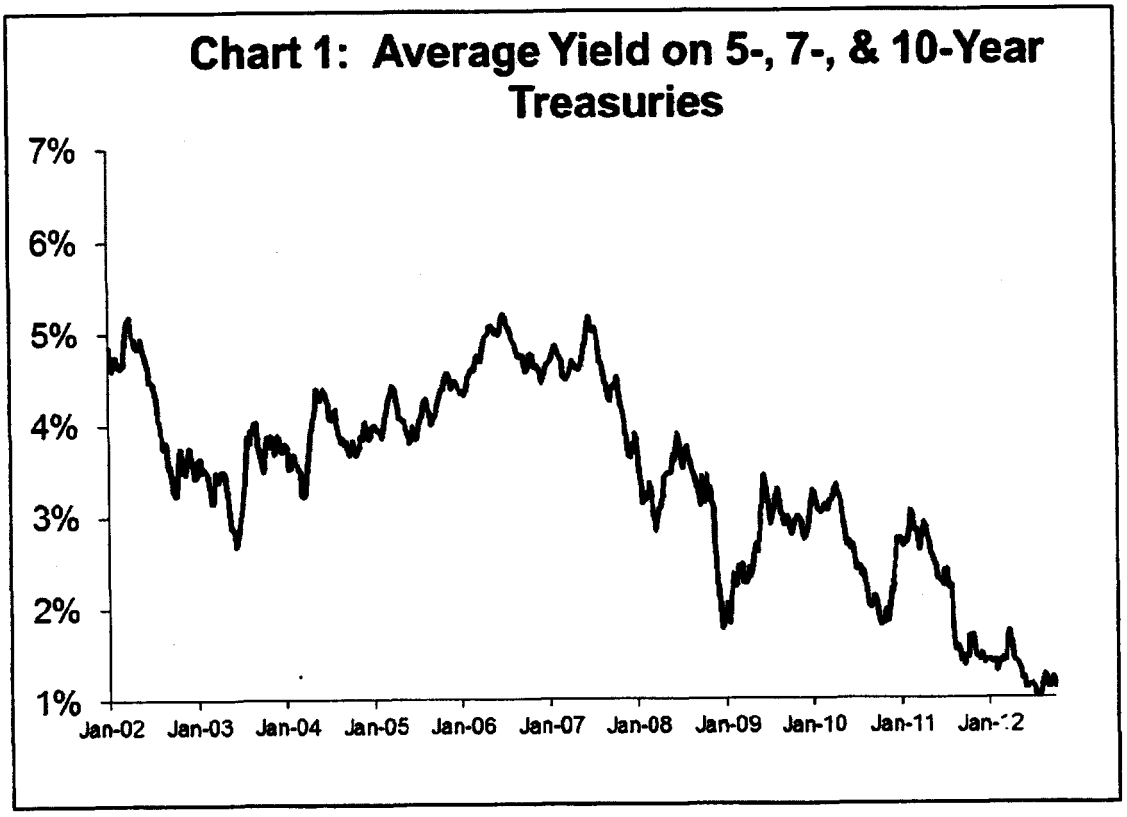

As shown in Chart 1, intermediate-term interest rates trended downward from 2002 to mid-2003, trended upward through mid-2007, and have generally trended downward since that time.

Q. What has been the general trend in interest rates longer term?

A. U.S. Treasury rates from January 1962- May 2013 are shown in Chart 2. The chart shows that interest rates trended upward through the mid-1980s and have trended downward since that time.

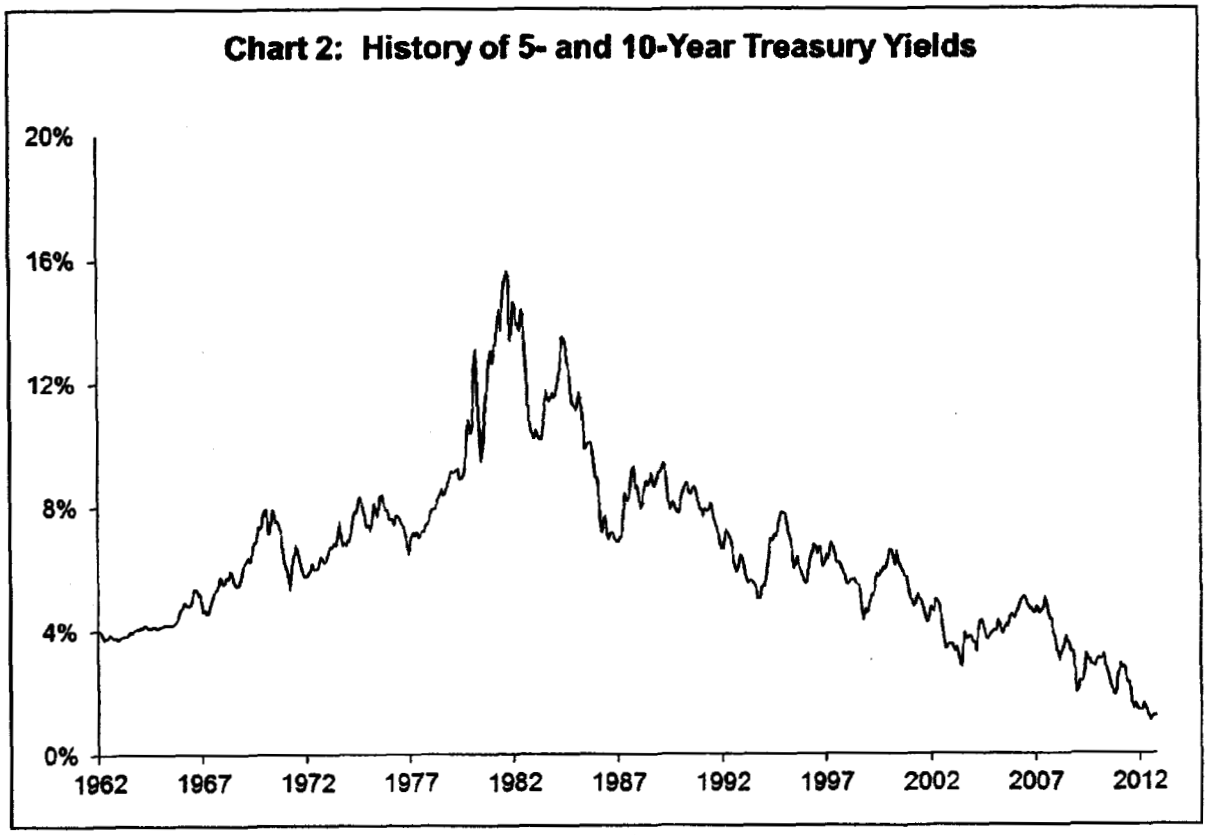

Source: Federal Reserve

Q. Do these trends have relevance to the cost of equity?

A. Yes. As previously noted, interest rates and the cost of equity tend to move in the same direction; therefore, it can be concluded that the cost of equity has also declined over the past 25 years.

Q. Do actual returns represent the cost of equity?

A. No. The cost of equity represents investors' *expected* returns and not realized returns.

Risk

Q. Please define risk in relation to cost of capital.

A. Risk, as it relates to an investment, is the variability or uncertainty of the returns on a particular security. Investors are risk averse and require a greater potential return to invest in relatively greater risk opportunities, i.e., investors require compensation for taking on additional risk. Risk is generally separated into two components. Those components are market risk (systematic risk) and non-market risk (diversifiable risk or firm-specific risk).

Q. What is market risk?

A. Market risk, or systematic risk, is the risk associated with an investment that cannot be reduced through diversification. Market risk stems from factors that affect all securities, such as recessions, war, inflation and high interest rates. These factors affect the entire market. However, market risk does not impact each security to the same degree.

Q. Please define business risk.

A. Business risk is the fluctuation of earnings inherent in a firm's operations and environment, such as competition and adverse economic conditions, which may impair its ability to provide returns on investment. Companies in the same or similar line of business tend to experience the same fluctuations in business cycles.

Q. Please define financial risk.

A. Financial risk is the fluctuation of earnings inherent in the use of debt financing that may impair a firm's ability to provide adequate returns; the higher the percentage of debt in a company's capital structure, the greater its exposure to financial risk.

Q. Do business risk and financial risk affect the cost of equity?

A. Yes.

Q. Is a firm subject to any other risk?

A. Yes. Firms are also subject to unsystematic or firm-specific risk. Examples of unsystematic risk include losses caused by labor problems, nationalization of assets, loss of a big client or weather conditions. However, investors can eliminate firm-specific risk by holding a diverse portfolio; thus, it is not of concern to diversified investors.

Q. How does LDO's financial risk exposure compare to that of Staff's sample group of water companies?

A. JAC-4 shows the capital structures of the seven sample water companies as of December 2012, and LDO's capital structure as of the test year ending December 31, 2012. As shown, the sample water utilities were capitalized with approximately 50.3 percent debt and 49.7 percent equity, while LDO's capital structure consists of 29.0 percent debt and 71.0 percent equity. Thus, compared to Staff's sample companies, LDO has significantly less exposure to financial risk.

Q. Is the cost of equity affected by firm-specific risk?

A. No. Since firm-specific risk can be eliminated through diversification, it does not affect the cost of equity.

Q. Can investors expect additional returns for firm-specific risk?

A. No. Investors who hold diversified portfolios can effectively eliminate firm-specific risk and, consequently, do not require any additional return. Since investors who choose to be

less than fully-diversified must compete in the market with fully-diversified investors, the former cannot expect to be compensated for unique risk.

VI. ESTIMATING THE COST OF EQUITY

Introduction

Q. Did Staff directly estimate the cost of equity for LDO?

A. No. Since LDO is not a publicly-traded company, Staff is unable to directly estimate its cost of equity due to the lack of firm-specific market data. Instead, Staff estimated the Company's cost of equity indirectly, using a representative sample group of publicly-traded water utilities as a proxy, taking the average of the sample group to reduce the sample error resulting from random fluctuations in the market at the time the information is gathered.

Q. What sample companies did Staff select as proxies for LDO?

A. Staff's sample consists of the following seven publicly-traded water utilities: American States Water, California Water, Aqua America, Connecticut Water Service, Middlesex Water, SJW Corporation and York Water. Staff selected these companies because they are publicly-traded and receive the majority of their earnings from regulated operations.

Q. What models did Staff implement to estimate LDO's cost of equity?

A. Staff used two variations of the DCF model, both of which are market-based, to estimate the cost of equity for LDO: the constant-growth DCF model and the multi-stage DCF model.

Q. Please explain why Staff chose the DCF model.

A. Staff chose to use the DCF model because it is a widely-recognized market-based model and has been used extensively to estimate the cost of equity. For the reasons noted earlier, Staff has not incorporated estimates derived from the CAPM into its cost of equity analysis for LDO. An explanation of the DCF model is provided below.

Discounted Cash Flow Model Analysis

Q. Please provide a brief summary of the theory upon which the DCF method of estimating the cost of equity is based.

A. The DCF method of stock valuation is based on the theory that the value of an investment is equal to the sum of the future cash flows generated from the aforementioned investment discounted to the present time. This method uses expected dividends, market price and dividend growth rate to calculate the cost of capital. Professor Myron Gordon pioneered the DCF method in the 1960s. The DCF method has become widely used to estimate the cost of equity for public utilities due to its theoretical merit and its simplicity. Staff used the financial information for the relevant seven sample companies in the DCF model and averaged the results to determine an estimated cost of equity for the sample companies.

Q. Does Staff use more than one version of the DCF?

A. Yes. Staff uses two versions of the DCF model: the constant-growth DCF and the multi-stage or non-constant growth DCF. The constant-growth DCF assumes that an entity's dividends will grow indefinitely at the same rate. The multi-stage growth DCF model assumes the dividend growth rate will change at some point in the future.

The Constant-Growth DCF

Q. What is the mathematical formula used in Staff's constant-growth DCF analysis?

A. The constant-growth DCF formula used in Staff's analysis is:

Equation 2:

$$K = \frac{D_1}{P_0} + g$$

where:

K	=	the cost of equity
D_1	=	the expected annual dividend
P_0	=	the current stock price
g	=	the expected infinite annual growth rate of dividends

Equation 2 assumes that the entity has a constant earnings retention rate and that its earnings are expected to grow at a constant rate. According to Equation 2, a stock with a current market price of $10 per share, an expected annual dividend of $0.45 per share and an expected dividend growth rate of 3.0 percent per year has a cost of equity to the entity of 7.5 percent reflected by the sum of the dividend yield ($0.45/ $10 = 4.5 percent) and the 3.0 percent annual dividend growth rate.

Q. How did Staff calculate the expected dividend yield (D_1/P_0) component of the constant-growth DCF formula?

A. Staff calculated the expected yield component of the DCF formula by dividing the expected annual dividend (D_1) by the spot stock price (P_0) after the close of market on December 18, 2013, as reported by *MSN Money*.

Q. Why did Staff use the December 18, 2013, spot price rather than a historical average stock price to calculate the dividend yield component of the DCF formula?

A. The current, rather than historic, market price is used in order to be consistent with financial theory. In accordance with the Efficient Market Hypothesis, the current stock price is reflective of all available information on a stock, and as such reveals investors' expectations of future returns.

Q. How did Staff estimate the dividend growth (g) component of the constant-growth DCF model represented by Equation 2?

A. The dividend growth component used by Staff is determined by the average of six different estimation methods, as shown in Schedule JAC-8. Staff calculated historical and projected growth estimates on dividend-per-share ("DPS"),[10] earnings-per-share ("EPS")[11] and sustainable growth bases.

Q. Why did Staff examine EPS growth to estimate the dividend growth component of the constant-growth DCF model?

A. Historic and projected EPS growth are used because dividends are related to earnings. Dividend distributions may exceed earnings in the short run, but cannot continue indefinitely. In the long term, dividend distributions are dependent on earnings.

Q. How did Staff estimate historical DPS growth?

A. Staff estimated historical DPS growth by calculating a compound annual DPS growth rate for each of its sample companies over the 10-year period, 2002-2012. As shown in Schedule JAC-5, the average historical DPS growth rate for the sample was 3.6 percent.

---

[10] Derived from information provided by *Value Line*.
[11] Derived from information provided by *Value Line*.

Q. How did Staff estimate projected DPS growth?

A. Staff calculated an average of the projected DPS growth rates for the sample water utilities from *Value Line* through the period, 2016-2018. The average projected DPS growth rate is 5.5 percent, as shown in Schedule JAC-5.

Q. How did Staff estimate historical EPS growth rate?

A. Staff estimated historical EPS growth by calculating a compound annual EPS growth rate for each of its sample companies over the 10-year period, 2002-2012. As shown in Schedule JAC-5, the average historical EPS growth rate for the sample was 5.1 percent.

Q. How did Staff estimate projected EPS growth?

A. Staff calculated an average of the projected EPS growth rates for the sample water utilities from *Value Line* through the period, 2016-2018. The average projected EPS growth rate is 5.6 percent, as shown in Schedule JAC-5.

Q. How does Staff calculate its historical and projected sustainable growth rates?

A. Historical and projected sustainable growth rates are calculated by adding their respective retention growth rate terms (br) to their respective stock financing growth rate terms (vs), as shown in Schedule JAC-6.

Q. What is retention growth?

A. Retention growth is the growth in dividends due to the retention of earnings. The retention growth concept is based on the theory that dividend growth cannot be achieved unless the company retains and reinvests a portion of its earnings. The retention growth is used in Staff's calculation of sustainable growth shown in Schedule JAC-6.

Q. What is the formula for the retention growth rate?

A. The retention growth rate is the product of the retention ratio and the book/accounting return on equity. The retention growth rate formula is:

Equation 3:

$$\text{Retention Growth Rate} = br$$

where: b = the retention ratio (1 – dividend payout ratio)
r = the accounting/book return on common equity

Q. How did Staff calculate the average historical retention growth rate (br) for the sample water utilities?

A. Staff calculated the mean of the 10-year average historical retention rate for each sample company over the period, 2002-2012. As shown in Schedule JAC-6, the historical average retention (br) growth rate for the sample is 2.7 percent.

Q. How did Staff estimate its projected retention growth rate (br) for the sample water utilities?

A. Staff used the retention growth projections for the sample water utilities for the period, 2016-2018, from *Value Line.* As shown in Schedule JAC-6, the projected average retention growth rate for the sample companies is 3.8 percent.

Q. When can retention growth provide a reasonable estimate of future dividend growth?

A. The retention growth rate is a reasonable estimate of future dividend growth when the retention ratio is reasonably constant and the entity's market price to book value ("market-

to-book ratio") is expected to be 1.0. The average retention ratio has been reasonably constant in recent years. However, the market-to-book ratio for the sample water utilities is 2.3, notably higher than 1.0, as shown in Schedule JAC-7.

Q. Is there any financial implication of a market-to-book ratio greater than 1.0?

A. Yes. A market-to-book ratio greater than 1.0 implies that investors expect an entity to earn an accounting/book return on its equity that exceeds its cost of equity. The relationship between required returns and expected cash flows is readily observed in the fixed securities market. For example, assume an entity contemplating issuance of bonds with a face value of $10 million at either 6 percent or 8 percent and, thus, paying annual interest of $600,000 or $800,000, respectively. Regardless of investors' required return on similar bonds, investors will be willing to pay more for the bonds if issued at 8 percent than if the bonds are issued at 6 percent. For example, if the current interest rate required by investors is 6 percent, then they would bid $10 million for the 6 percent bonds and more than $10 million for the 8 percent bonds. Similarly, if equity investors require a 9 percent return and expect an entity to earn accounting/book returns of 13 percent, the market will bid up the price of the entity's stock to provide the required return of 9 percent.

Q. How has Staff generally recognized a market-to-book ratio exceeding 1.0 in its cost of equity analyses in recent years?

A. Staff has assumed that investors expect the market-to-book ratio to remain greater than 1.0. Given that assumption, Staff has added a stock financing growth rate (vs) term to the retention ratio (br) term to calculate its historical and projected sustainable growth rates.

Q. Do the historical and projected sustainable growth rates Staff uses to develop its DCF cost of equity in this case continue to include a stock financing growth rate term?

A. Yes.

Q. What is stock financing growth?

A. Stock financing growth is the increase in an entity's dividends attributable to the sale of stock by that entity. Stock financing growth is a concept derived by Myron Gordon and discussed in his book *The Cost of Capital to a Public Utility.*[12] Stock financing growth is the product of the fraction of the funds raised from the sale of stock that accrues to existing shareholders (v) and the fraction resulting from dividing the funds raised from the sale of stock by the existing common equity (s).

Q. What is the mathematical formula for the stock financing growth rate?

A. The mathematical formula for stock financing growth is:

Equation 4:

$$\text{Stock Financing Growth} = vs$$

where: v = Fraction of the funds raised from the sale of stock that accrues to existing shareholders

s = Funds raised from the sale of stock as a fraction of the existing common equity

Q. How is the variable *v* presented above calculated?

A. Variable *v* is calculated as follows:

[12] Gordon, Myron J. *The Cost of Capital to a Public Utility*. MSU Public Utilities Studies, Michigan, 1974. pp 31-35.

Equation 5:

$$v = 1 - \left(\frac{book\ value}{market\ value} \right)$$

For example, assume that a share of stock has a $30 book value and is selling for $45. Then, to find the value of *v*, the formula is applied:

$$v = 1 - \left(\frac{30}{45} \right)$$

In this example, *v* is equal to 0.33.

Q. How is the variable *s* presented above calculated?

A. Variable *s* is calculated as follows:

Equation 6:

$$s = \frac{\text{Funds raised from the issuance of stock}}{\text{Total existing common equity before the issuance}}$$

For example, assume that an entity has $150 in existing equity, and it sells $30 of stock. Then, to find the value of *s*, the formula is applied:

$$s = \left(\frac{30}{150} \right)$$

In this example, *s* is equal to 20.0 percent.

Q. What is the *vs* term when the market-to-book ratio is equal to 1.0?

A. A market-to-book ratio of 1.0 reflects that investors expect an entity to earn a book/accounting return on their equity investment equal to the cost of equity. When the

market-to-book ratio is equal to 1.0, none of the funds raised from the sale of stock by the entity accrues to the benefit of existing shareholders, i.e., the term *v* is equal to zero (0.0). Consequently, the *vs* term is also equal to zero (0.0). When stock financing growth is zero, dividend growth depends solely on the *br* term.

Q. What is the effect of the *vs* term when the market-to-book ratio is greater than 1.0?

A. A market-to-book ratio greater than 1.0 reflects that investors expect an entity to earn a book/accounting return on their equity investment greater than the cost of equity. Equation 5 shows that, when the market-to-book ratio is greater than 1.0, the *v* term is also greater than zero. The excess by which new shares are issued and sold over book value per share of outstanding stock is a contribution that accrues to existing stockholders in the form of a higher book value. The resulting higher book value leads to higher expected earnings and dividends. Continued growth from the *vs* term is dependent upon the continued issuance and sale of additional shares at a price that exceeds book value per share.

Q. What *vs* estimate did Staff calculate from its analysis of the sample water utilities?

A. Staff estimated an average stock financing growth of 2.4 percent for the sample water utilities, as shown in Schedule JAC-6.

Q. What would occur if an entity had a market-to-book ratio greater than 1.0 as a result of investors expecting earnings to exceed its cost of equity, and subsequently experienced newly-authorized rates equal only to its cost of equity?

A. Holding all other factors constant, one would expect market forces to move the company's stock price lower, closer to a market-to-book ratio of 1.0, to reflect investor expectations of reduced expected future cash flows.

Q. If the average market-to-book ratio of Staff's sample water utilities were to fall to 1.0 due to authorized ROEs equaling their cost of equity, would inclusion of the vs term be necessary to Staff's constant-growth DCF analysis?

A. No. As discussed above, when the market-to-book ratio is equal to 1.0, none of the funds raised from the sale of stock by the entity accrues to the benefit of existing shareholders because the *v* term equals to zero and, consequently, the *vs* term also equals zero. When the market-to-book ratio equals 1.0, dividend growth depends solely on the *br* term. Staff's inclusion of the *vs* term assumes that the market-to-book ratio continues to exceed 1.0 and that the water utilities will continue to issue and sell stock at prices above book value with the effect of benefitting existing shareholders.

Q. What are Staff's historical and projected sustainable growth rates?

A. Staff's estimated historical sustainable growth rate is 5.1 percent based on an analysis of earnings retention for the sample water companies. Staff's projected sustainable growth rate is 6.2 percent based on retention growth projected by *Value Line.* Schedule JAC-6 presents Staff's estimates of the sustainable growth rate.

Q. What is Staff's expected infinite annual growth rate in dividends?

A. Staff's expected dividend growth rate (g) is 5.2 percent, which is the average of historical and projected DPS, EPS, and sustainable growth estimates. Staff's calculation of the expected infinite annual growth rate in dividends is shown in Schedule JAC-8.

Q. What is Staff's constant-growth DCF estimate for the sample utilities?

A. Staff's constant-growth DCF estimate is 8.1 percent, as shown in Schedule JAC-3.

The Multi-Stage DCF

Q. Why did Staff implement the multi-stage DCF model to estimate LDO's cost of equity?

A. Staff generally uses the multi-stage DCF model to consider the assumption that dividends may not grow at a constant rate. The multi-stage DCF uses two stages of growth; the first stage (near-term) having a duration of four years, followed by a second stage (long-term) of constant growth.

Q. What is the mathematical formula for the multi-stage DCF?

A. The multi-stage DCF formula is shown in the following equation:

Equation 7:

$$P_0 = \sum_{t=1}^{n} \frac{D_t}{(1+K)^t} + \frac{D_n(1+g_n)}{K-g_n}\left[\frac{1}{(1+K)}\right]^n$$

Where:
P_0 = current stock price
D_t = dividends expected during stage 1
K = cost of equity
n = years of non – constant growth
D_n = dividend expected in year n
g_n = constant rate of growth expected after year n

Q. What steps did Staff take to implement its multi-stage DCF cost of equity model?

A. First, Staff projected future dividends for each of the sample water utilities using near-term and long-term growth rates. Second, Staff calculated the rate (cost of equity) which equates the present value of the forecasted dividends to the current stock price for each of the sample water utilities. Lastly, Staff calculated an overall sample average cost of equity estimate.

Q. How did Staff calculate near-term (stage-1) growth?

A. The stage-1 growth rate is based on *Value Line*'s projected dividends for the next twelve months, when available, and on the average dividend growth (g) rate of 5.2 percent, calculated in Staff's constant DCF analysis for the remainder of the stage.

Q. How did Staff estimate long-term (stage-2) growth?

A. Staff calculated the stage-2 growth rate using the arithmetic mean rate of growth in Gross Domestic Product ("GDP") from 1929 to 2012.[13] Using the GDP growth rate assumes that the water utility industry is expected to grow at the same rate as the overall economy.

Q. What is the historical GDP growth rate that Staff used to estimate stage-2 growth?

A. Staff used 6.5 percent to estimate the stage-2 growth rate.

Q. What is Staff's multi-stage DCF estimate for the sample utilities?

A. Staff's multi-stage DCF estimate is 9.3 percent, as shown in Schedule JAC-3.

Q. What is Staff's overall DCF estimate for the sample utilities?

A. Staff's overall DCF estimate is 8.7 percent. Staff calculated the overall DCF estimate by averaging the constant growth DCF (8.1%) and multi-stage DCF (9.3%) estimates, as shown in Schedule JAC-3.

[13] www.bea.doc.gov.

VII. SUMMARY OF STAFF'S COST OF EQUITY ANALYSIS

Q. What is the result of Staff's constant-growth DCF analysis to estimate the cost of equity for the sample water utilities?

A. Schedule JAC-3 shows the result of Staff's constant-growth DCF analysis. The result of Staff's constant-growth DCF analysis is as follows:

k = 2.9% + 5.2%

k = **8.1%**

Staff's constant-growth DCF estimate of the cost of equity for the sample water utilities is 8.1 percent.

Q. What is the result of Staff's multi-stage DCF analysis to estimate of the cost of equity for the sample utilities?

A. Schedule JAC-9 shows the result of Staff's multi-stage DCF analysis. The result of Staff's multi-stage DCF analysis is:

Company	**Equity Cost Estimate (k)**
American States Water	9.1%
California Water	9.3%
Aqua America	8.9%
Connecticut Water	9.4%
Middlesex Water	10.3%
SJW Corp	9.0%
York Water	9.2%
Average	**9.3%**

Staff's multi-stage DCF estimate of the cost of equity for the sample water utilities is 9.3 percent.

Q. What is Staff's overall DCF estimate of the cost of equity for the sample utilities?

A. Staff's overall DCF estimate of the cost of equity for the sample utilities is 8.7 percent. Staff calculated an overall DCF cost of equity estimate by averaging Staff's constant growth DCF (8.1 percent) and Staff's multi-stage DCF (9.3 percent) estimates, as shown in Schedule JAC-3.

VIII. FINAL COST OF EQUITY ESTIMATES FOR LDO

Q. Please compare LDO's capital structure to that of Staff's seven sample companies.

A. The average capital structure for the sample water utilities is composed of 50.3 percent debt and 49.7 percent equity, as shown in Schedule JAC-4. In contrast, LDO's capital structure is composed of 29.0 percent debt and 71.0 percent equity. Since the Company's capital structure is less highly leveraged than that of the average sample water utility, LDO's stockholders bear *less* financial risk than do equity shareholders of the sample utilities.

Q. Is Staff recommending a downward financial risk adjustment to the Company's cost of equity to recognize its lower financial risk?

A. No. Staff normally applies two criteria in assessing whether application of a downward financial risk adjustment is appropriate. The first consideration is whether the utility has a reasonably economical capital structure. Staff considers a capital structure composed of no more than 60 percent equity to meet this condition. If equity exceeds 60 percent, as it does for LDO, Staff considers application of a downward financial risk adjustment to be appropriate if the utility meets the second criteria. The second condition is whether the

utility has access to the capital markets. Although LDO's equity exceeds 60 percent, it does not have access to the capital markets; accordingly, Staff is not recommending a downward financial risk adjustment to the Company's cost of equity. Staff's methodology for applying a downward financial risk adjustment encourages a utility with access to the capital markets to use that access to manage its capital structure with economic efficiency and encourages a utility that lacks access to the capital markets to maintain a healthy capital structure.

Q. Did Staff consider factors other than the results of its technical models in its cost of equity analysis?

A. Yes. In consideration of the relatively uncertain status of the economy and the market that currently exists, Staff is proposing an upward economic assessment adjustment to the cost of equity. In this case, Staff recommends a 60 basis point (0.6 percent) upward economic assessment adjustment, as shown in Schedule JAC-3.

Q. What is Staff's ROE estimate for LDO?

A. Staff determined an ROE estimate of 8.7 percent for LDO based on cost of equity estimates for the sample companies of 8.1 percent for the constant-growth DCF model and 9.3 percent for the multi-stage DCF model. Staff recommends adoption of a 60 basis point upward economic assessment adjustment, resulting in a 9.3 percent Staff-recommended cost of equity, as shown in Schedule JAC-3.

IX. RATE OF RETURN RECOMMENDATION

Q. What overall rate of return did Staff determine for LDO?

A. Staff determined an 8.0 percent ROR for the Company, as shown in Schedule JAC-1 and the following table:

Table 3

	Weight	Cost	Weighted Cost
Long-term Debt	29.0%	4.6%	1.3%
Common Equity	71.0%	9.3%	6.6%
Overall ROR			**7.9%**

X. STAFF RESPONSE TO COMPANY'S COST OF CAPITAL WITNESS MR. THOMAS J. BOURASSA

Q. Please summarize Mr. Bourassa's analyses and recommendations.

A. Mr. Bourassa recommends a 10.50 percent ROE based on estimates derived from two constant growth DCF analyses (median estimate 8.7%), two CAPM analyses (median estimate 9.5%), and two Build-up risk premium models (median estimate 11.1%) designed as a check for reasonableness to his DCF and CAPM results, using a proxy sample of six publicly-traded water companies. He proposes a pro forma capital structure consisting of 41.09 percent debt and 58.91 percent equity; his proposed cost of debt is 6.00 percent. Mr. Bourassa determined that the cost of equity for publicly traded water utilities lies within the range of 8.7 percent to 11.1 percent, with the mid-point of his range being 9.9 percent. Mr. Bourassa makes no explicit adjustments to his 9.9 percent mid-point cost of equity estimate; however, in arriving at his recommended 10.5 percent cost of equity figure he gives consideration to (a) prospective economic conditions, (b) LDO's exposure to financial risk, (c) LDO's small size, and (d) LDO's business risk relative to his sample companies.[14] His overall recommended rate of return for the Company is 8.65 percent.

For purposes of his constant growth DCF analyses, Mr. Bourassa gives a 50 percent weight to the estimates derived from his Future Growth DCF model and a 50 percent

[14] *See* Bourassa Direct, p. 4, lines 4-13)

weight to the estimates derived from his Past and Future Growth DCF Model. In his primary Future Growth DCF model, Mr. Bourassa relies exclusively on analysts' forecasts of EPS growth to estimate the dividend growth (g) component (See TJB Schedule D-4.6). In his Past and Future Growth DCF model, Mr. Bourassa estimates his dividend growth (g) rate by giving 50 percent weight to historical measures of growth in annual share price, book value, EPS and DPS over a five-year period, and 50 percent weight to the dividend growth rate obtained from his primary Future Growth DCF model (See TJB Schedule D-4.4). Thus, for purposes of the overall dividend growth (g) rate used in his constant growth DCF analyses, Mr. Bourassa effectively gives a 75 percent weight to the results obtained from analysts forecasts' for EPS growth and only a 25 percent weight to the results obtained from historical measures of dividend growth (See TJB Schedule D-4.8). In each of his two constant growth DCF analyses, Mr. Bourassa uses a 60-day average stock price to calculate the current dividend yield (D_0/P_0) (See TJB Schedule D-4.7).

For purposes of his CAPM analyses, Mr. Bourassa presents estimates based upon both historical and current market risk premia. In both, he uses a 3.80 percent forecasted risk free (R_f) rate based, in part, upon estimates from Value Line and Blue Chip Consensus Forecasts for the 30-year long-term Treasury yield covering the period, 2013-2015 (See TJB Schedule D-4.10).

Q. Does Staff have any comments on Mr. Bourassa's sole reliance on analysts' forecasts of EPS growth rates to estimate dividend growth rate (g) in his Future Growth DCF analysis?

A. Yes. Exclusive reliance on analysts' forecasts of earnings growth to forecast DPS is inappropriate because it assumes that investors do not look at other relevant information such as historical dividend and earnings growth. Generally, analysts' forecasts are known

to be overly optimistic. Sole use of analysts' forecasts to calculate the expected dividend growth rate, (g), serves to inflate that component of the DCF model and, consequently, the estimated cost of equity. The appropriate growth rate to use in the DCF model is the dividend growth rate expected by *investors*, not by analysts. Investors are assumed to be rational, and as such will want to take into consideration all relevant available information prior to making an investment decision. Therefore, it is reasonable to assume that investors would consider both historical measures of past growth, as well as analysts' forecasts of future growth.

Q. Does the narrative of Mr. Bourassa's direct testimony state that he relies exclusively on analysts' forecasts of EPS growth to estimate the expected dividend growth rate (g) in his Future Growth DCF model?

A. No. Mr. Bourassa states only that "I have used analyst growth forecasts, where available,"[15] and that "I use analysts' forecasts of growth as a primary estimate of growth."[16] Only when referring to TJB Schedule D-4.6 does one learn that he has relied exclusively on analysts' forecasts of EPS growth to estimate the dividend growth (g) rate in his Future Growth DCF model.

Q. Does Staff have evidence to support its assertion that exclusive reliance on analysts' forecasts of earnings growth in the DCF model would result in inflated cost of equity estimates?

A. Yes. Experts in the financial community have commented on the optimism in analysts' forecasts of future earnings.[17] A study cited by David Dreman in his book *Contrarian*

---

[15] *See* Bourassa Direct, page 34, lines 16-17.
[16] *See* Bourassa Direct, page 35, lines 4-5.
[17] Seigel, Jeremy J. Stocks for the Long Run. 2002. McGraw-Hill. New York. p. 100. Dreman, David. *Contrarian Investment Strategies: The Next Generation*. 1998. Simon & Schuster. New York. pp. 97-98. Malkiel, Burton G. *A Random Walk Down Wall Street*. 2003. W.W. Norton & Co. New York. p. 175.

Investment Strategies: The Next Generation found that *Value Line* analysts were optimistic in their forecasts by 9 percent annually, on average for the 1987 – 1989 period. Another study conducted by David Dreman found that between 1982 and 1997, analysts overestimated the growth of earnings of companies in the S&P 500 by 188 percent.

Burton Malkiel, of Princeton University, conducted a study of the 1- and 5-year earnings forecasts made by some of the most respected names in the investment business. His results showed that when compared with actual earnings growth rates, the 5-year forecasts made by professional analysts were far less accurate than estimates derived from several naïve forecasting models, such as the long-run growth rate in national income. In the following excerpt from his book, A Random Walk Down Wall Street, Professor Malkiel discusses the results of his study:

> When confronted with the poor record of their five-year growth estimates, *the security analysts honestly, if sheepishly, admitted that five years ahead is really too far in advance to make reliable projections*. They protested that although long-term projections are admittedly important, they really ought to be judged on their ability to project earnings changes one year ahead. Believe it or not, it turned out that their one-year forecasts were even worse than their five-year projections.
>
> The analysts fought back gamely. They complained that it was unfair to judge their performance on a wide cross section of industries, because earnings for high-tech firms and various "cyclical" companies are notoriously hard to forecast. *"Try us on utilities," one analyst confidently asserted. At the time they were considered among the most stable group of companies because of government regulation. So we tried it and they didn't like it. Even the forecasts for the stable utilities were far off the mark.*[18] (Emphasis added)

Testimony of Professors Myron J. Gordon and Lawrence I. Gould, consultant to the Trial Staff (Common Carrier Bureau), FCC Docket 79-63, p. 95.

.[18] Malkiel, Burton G. A Random Walk Down Wall Street. 2003. W.W. Norton & Co. New York. p. 175

Q. Are investors aware of the problems related to analysts' forecasts?

A. Yes. In addition to books, there are numerous published articles appearing in *The Wall Street Journal* and other financial publications that cast doubt on the accuracy of research analysts' forecasts.[19] Investors, being keenly aware of these inherent biases in forecasts, will use other methods to assess future growth.

Q. Should DPS growth be considered in a DCF analysis?

A. Yes. As previously stated in section VI of this testimony, the current market price of a stock is equal to the present value of all expected future dividends, not future earnings. Professor Jeremy Siegel from the Wharton School of Finance stated:

> Note that the price of the stock is always equal to the present value of all future *dividends* and not the present value of future earnings. Earnings not paid to investors can have value only if they are paid as dividends or other cash disbursements at a later date. Valuing stock as the present discounted value of future earnings is manifestly wrong and greatly overstates the value of the firm.[20]

For valuation purposes, therefore, earnings paid out in the form of a dividend have paramount relevancy to investors. Dividends, unlike earnings, cannot be manipulated or overstated. Thus, historical DPS growth should receive appropriate consideration when estimating the market cost of equity in the DCF model.

---

[19] Smith, Randall & Craig, Suzanne. "Big Firms Had Research Ploy: Quiet Payments Among Rivals." *The Wall Street Journal*. April 30, 2003. Brown, Ken. "Analysts: Still Coming Up Rosy." *The Wall Street Journal*. January 27, 2003. p. C1. Karmin, Craig. "Profit Forecasts Become Anybody's Guess." *The Wall Street Journal*. January 21, 2003. p. C1. Gasparino, Charles. "Merrill Lynch Investigation Widens." *The Wall Street Journal*. April 11, 2002. p. C4. Elstein, Aaron. "Earnings Estimates Are All Over the Map." *The Wall Street Journal*. August 2, 2001. p. C1. Dreman, David. "Don't Count on those Earnings Forecasts." *Forbes*. January 26, 1998. p. 110.

[20] Seigel, Jeremy J. Stocks for the Long Run. 2002. McGraw-Hill. New York. P. 93.

Q. How does Mr. Bourassa calculate the expected dividend growth (g) rate used in his Past and Future Growth DCF model?

A. As shown in TJB Schedule D-4.4, Mr. Bourassa estimates the expected dividend growth (g) rate in his Past and Future Growth DCF model[21] by providing a 50 percent weight[22] to historical measures of growth in average annual share price, book value, EPS and DPS for his sample companies over a five-year period[23] and a 50 percent weight[24] to the average of analysts' forecasts for EPS growth derived from his Future Growth DCF model.

Q. For purposes of his overall DCF estimate, what percentage weight does Mr. Bourassa allocate to the dividend growth (g) component derived from analysts' forecasts of EPS growth in his Future Growth DCF model?

A. Effectively, for purposes of his overall DCF estimate Mr. Bourassa allocates a 75 percent weight to the results derived from analysts' forecasts of EPS growth in his Future Growth DCF Model. As noted above, TJB Schedule D-4.4 presents the results of Mr. Bourassa's Past and Future Growth DCF model, which provides for an equal weighting (i.e., 50 percent) between historical and projected measures of dividend growth. However, as shown in TJB Schedule D-4.8, for purposes of his overall dividend growth (g) estimate,[25] Mr. Bourassa combines the average of his Past and Future Growth DCF estimate[26] with his average Future Growth DCF estimate.[27] In so doing, Mr. Bourassa effectively gives a 75 percent weight to the dividend growth (g) estimate derived from analysts' forecasts of EPS growth in his Future Growth DCF model and only a 25 percent weight to the

[21] *See* TJB Schedule D-4.4, Column 7.
[22] *See* TJB Schedule D-4.4, Column 5.
[23] In TJB Schedule D-4.5, Mr. Bourassa presents this same dividend growth information over a ten-year period, but elects not to use it for purposes of his recommended cost of equity.
[24] *See* TJB Schedule D-4.4, Column 6.
[25] *See* TJB Schedule D-4.8, Column 3.
[26] *See* TJB Schedule D-4.8, Line 8.
[27] *See* TJB Schedule D-4.8, Line 10.

dividend growth estimate derived from historical measures of growth in his Past and Future Growth DCF model.

Q. Does Staff have any comment on Mr. Bourassa's use of growth in average annual share price to estimate the expected dividend growth (g) component in his Past and Future Growth DCF model?

A. Yes. In and of itself, share price appreciation is not a determinant of dividend growth, and for this reason Staff considers its use as a growth parameter to be inappropriate. However, as Mr. Bourassa has utilized it as a growth parameter by which to estimate dividend growth, Staff would point out that in both his five- and ten-year historical growth DCF analyses, share price growth has exceeded that of dividend growth. Specifically, in his five-year historical growth analysis (See TJB Schedule D-4.4), average share price growth (5.69%) exceeds average DPS growth (3.33%) by 71 percent (((.0569/.0333) – 1) = 71%), and in his ten-year historical growth analysis (See TJB Schedule D-4.5), average share price growth (6.88%) exceeds average DPS growth (3.25%) by 112 percent (((.0688/.0325) – 1) = 112%).

Q. As it relates to the cost of equity, what is the significance of Mr. Bourassa's sample water companies having experienced share price growth in excess of DPS growth over both the last five- and ten-year periods?

A. Simply stated, it is an indication that the cost of equity for publicly-traded water utilities has fallen over each of the last 5- and 10-year periods. When the market price per share of common stock for a given firm rises faster than does the dividend paid on a per share basis, the dividend yield falls. As dividend yields fall, investors pay more for an equivalent unit of return on their investment, resulting in a lower cost of equity. Markets are efficient, and because prices for publicly traded stocks can rise only if investors are

willing to bid up the share price, when share price growth exceeds DPS growth over a five- or ten-year period, the willingness of investors to continue to bid up share prices is reflective of investor expectations that market returns have fallen. Thus, Mr. Bourassa's use of share price growth increases his cost of equity estimate at a time when share price growth actually reflects a decrease in cost of equity. This incongruous outcome is the result of choosing an inappropriate parameter for dividend growth in the DCF model.

Q. Turning to Mr. Bourassa's CAPM analyses, in view of the recent strength in the U.S. equity markets, does Staff consider the 9.31 percent[28] current market risk premium component in his current MRP CAPM model to be reflective of current market conditions?

A. No. As an input into his current market risk premium CAPM model, Mr. Bourassa employs *Value Line's* median 3-5 year price appreciation potential estimate to compute the market risk premium (MRP) component.[29] As shown in TJB Schedule D-4.11, Mr. Bourassa presents historical data covering the period December 2011 - May 2013, and for purposes of his recommended 9.31 current MRP value, elects to use a 6-month average estimate covering the period, December 2012-May 2013.[30] Staff conducted a check of *Value Line* data and found that during the 6-month period, December 2012 – May 2013, the *Value Line* median 3-5 year price appreciation potential estimate averaged 50.0 percent. However, given the strength in the equity markets, over the next 6-month period (i.e., June 2013 - November 2013) *Value Line's* price appreciation potential estimate fell to an average of 38.1 percent, and over the last 11-week period (November 1, 2013 – January 10, 2014), has remained at a level of 30.0 percent. Thus, given the methodology

[28] *See* TJB Schedule D-4.12, line 5.
[29] *See* TJB Schedule D-4.11, footnote 3.
[30] *See* TJB Schedule D-4.11, lines 23 and 28.

employed by Mr. Bourassa, the 9.31 percent market risk premium in his current MRP CAPM model is not reflective of current market conditions.

Q. Although Mr. Bourassa makes no explicit adjustments to his 9.9 percent midpoint cost of equity estimate in arriving at his recommended 10.5 percent ROE, does Staff have any comment on the implicit upward adjustments he makes for financial risk and small size?

A. Yes. First, it is Staff's position that LDO's exposure to financial risk is minimal, and thus does not warrant an upward financial risk adjustment. As noted earlier, Staff's recommended pro forma capital structure comprised of 29.0 percent debt and 71.0 percent equity is considerably less leveraged than that of Staff's sample average capital structure, and relatively equity rich by comparison.

Second, while Staff would agree with the general proposition that smaller companies are riskier than larger companies, empirical research has demonstrated that a small company risk premium adjustment to the cost of equity is unwarranted for regulated utilities. Annie Wong, of Western Connecticut State University, conducted a study on utility stocks to determine if the so-called size effect exists in the utility industry, and she writes as follows:

> The fact that the two samples show different, though weak, results indicates that utility and industrial stocks do not share the same characteristics. First, given firm size, utility stocks are consistently less risky than industrial stocks. Second, industrial betas tend to decrease with firm size but utility betas do not. These findings may be attributed to the fact that all public utilities operate in an environment with regional monopolistic power and regulated financial structure. As a result, the business and financial risks are very similar among the utilities regardless

> of their size. Therefore, utility betas would not necessarily be expected to be related to firm size.
>
> The object of this study is to examine if the size effect exists in the utility industry. After controlling for equity values, there is some weak evidence that firm size is a missing factor from the CAPM for the industrial but not for the utility stocks. *This implies that although the size phenomenon has been strongly documented for industrials, the findings suggest that there is no need to adjust for the firm size in utility regulations.* [emphasis added].[31]

To underscore this point, Paschall and Hawkins write as follows:

> A size premium does not automatically apply in every case. Each privately held company should be analyzed to determine if a size premium is appropriate in its particular case. There can be unusual circumstances where a small company has risk characteristics that make it far less risky than the average company, warranting the use of a very low equity risk premium. One possible example of this is a private water utility (monopoly situation, very low risk, near-guarantee of payments).[32]

Q. Has the Commission previously ruled on the issue of firm size and whether it warrants a risk premium adjustment to the cost of equity?

A. Yes. The Commission previously ruled in Decision No. 64282[33] for Arizona Water that firm size does not warrant recognition of a risk premium stating, "We do not agree with the Company's proposal to assign a risk premium to Arizona Water based on its size relative to other publicly traded water utilities…." The Commission confirmed its previous ruling in Decision No. 64727[34] for Black Mountain Gas agreeing with Staff that "the 'firm size phenomenon' does not exist for regulated utilities, and that therefore there is no need to adjust for risk for small firm size in utility regulation." All companies have firm-specific risks; therefore, the existence of unique risks for a company does not lead to

---

[31] Annie Wong, "Utility Stock and the Size Effect: An Empirical Analysis," *Journal of the Midwest Finance Association*, (1993), p.98.
[32] Michael A. Paschall and George B. Hawkins, "Do Smaller Companies Warrant a Higher Discount Rate for Risk?: The 'Size Effect' Debate," *CCH Business Valuation Alert*, Vol. 1, Issue No. 2, December 1999.
[33] Dated December 28, 2001.
[34] Dated April 17, 2002.

the conclusion that its total risk is greater than other entities. Moreover, as previously discussed, investors cannot expect compensation for firm-specific risk since it can be eliminated through diversification.

XI. CONCLUSION

Q. Please summarize Staff's recommendations.

A. Staff recommends that the Commission adopt a 7.9 percent overall rate of return for the Company based on a capital structure composed of 29.0 percent debt and 71.0 percent equity, Staff's 4.6 percent cost of debt, Staff's 8.7 percent cost of equity estimate, and Staff's 60 basis point (0.60 percent) upward economic assessment adjustment.

Q. Does this conclude your direct testimony?

A. Yes, it does.

Lago Del Oro Water Company Cost of Capital Calculation
Capital Structure
And Weighted Average Cost of Capital
Staff Recommended and Company Proposed

[A]	[B]	[C]	[D]
Description	Weight (%)	Cost	Weighted Cost
Staff Recommended Structure			
Debt	29.0%	4.6%	1.3%
Common Equity	71.0%	9.3%	6.6%
Weighted Average Cost of Capital			7.9%
Company Proposed Structure			
Debt	41.09%	6.00%	2.47%
Common Equity	58.91%	10.50%	6.19%
Weighted Average Cost of Capital			8.65%

[D] : [B] x [C]

Supporting Schedules: JAC-2, JAC-3 and JAC-4.

Intentionally left blank

Lago Del Oro Water Company Cost of Capital Calculation
Final Cost of Equity Estimates
Sample Water Utilities

[A]	[B]	[C]	[D]	[E]
DCF Method		D_1/P_0 [1] +	g [2] =	k
Constant Growth DCF Estimate		2.9% +	5.2% =	8.1%
Multi-Stage DCF Estimate			=	9.3%
Average DCF Estimate				**8.7%**
		Staff's Estimated Cost of Equity		**8.7%**
		Economic Assessment Adjustment		0.6%
		Sub-Total		**9.3%**
		Financial Risk Adjustment		0.0%
		Total		**9.3%**

1 MSN Money and Value Line

2 Schedule JAC-8

Lago Del Oro Water Company Cost of Capital Calculation
Average Capital Structure of Sample Water Utilities

[A]	[B]	[C]	[D]
Company	Debt	Common Equity	Total
American States Water	43.3%	56.7%	100.0%
California Water	54.2%	45.8%	100.0%
Aqua America	55.2%	44.8%	100.0%
Connecticut Water	55.3%	44.7%	100.0%
Middlesex Water	43.1%	56.9%	100.0%
SJW Corp	56.2%	43.8%	100.0%
York Water	45.0%	55.0%	100.0%
Average Sample Water Utilities	**50.3%**	**49.7%**	**100.0%**
Lago Del Oro - Actual Capital Structure	**29.0%**	**71.0%**	**100.0%**

Source:
Sample Water Companies from Value Line

Lago Del Oro Water Company Cost of Capital Calculation
Growth in Earnings and Dividends
Sample Water Utilities

[A]	[B]	[C]	[D]	[E]
Company	Dividends Per Share 2002 to 2012 DPS[1]	Dividends Per Share Projected DPS[1]	Earnings Per Share 2002 to 2012 EPS[1]	Earnings Per Share Projected EPS[1]
American States Water	3.9%	8.4%	7.7%	3.8%
California Water	1.2%	7.4%	5.0%	5.8%
Aqua America	7.7%	9.7%	7.3%	10.7%
Connecticut Water	1.7%	2.9%	3.2%	3.3%
Middlesex Water	1.6%	1.6%	2.1%	5.0%
SJW Corp	4.4%	4.9%	4.2%	6.3%
York Water	4.4%	3.8%	6.1%	4.6%
Average Sample Water Utilities	**3.6%**	**5.5%**	**5.1%**	**5.6%**

1 Value Line

Lago Del Oro Water Company Cost of Capital Calculation
Sustainable Growth
Sample Water Utilities

[A]	[B]	[C]	[D]	[E]	[F]
Company	Retention Growth 2002 to 2012 br	Retention Growth Projected br	Stock Financing Growth vs	Sustainable Growth 2002 to 2012 br + vs	Sustainable Growth Projected br + vs
American States Water	3.8%	5.2%	1.6%	5.4%	6.8%
California Water	2.4%	3.2%	1.7%	4.1%	4.9%
Aqua America	3.9%	5.3%	1.9%	5.8%	7.2%
Connecticut Water	2.0%	3.3%	4.2%	6.2%	7.5%
Middlesex Water	1.2%	2.8%	2.9%	4.2%	5.7%
SJW Corp	3.5%	3.8%	0.1%	3.6%	3.9%
York Water	2.2%	2.8%	4.6%	6.8%	7.5%
Average Sample Water Utilities	**2.7%**	**3.8%**	**2.4%**	**5.1%**	**6.2%**

[B]: Value Line
[C]: Value Line
[D]: Value Line, MSN Money, and Form 10-Ks filed with the Securities and Exchange Commission (http://www.sec.gov/)
[E]: [B]+[D]
[F]: [C]+[D]

Lago Del Oro Water Company Cost of Capital Calculation
Selected Financial Data of Sample Water Utilities

[A]	[B]	[C]	[D]	[E]	[F]	[G]
Company	Symbol	Spot Price 12/18/2013	Book Value	Mkt To Book	*Value Line* Beta β	Raw Beta βraw
American States Water	AWR	**28.60**	11.94	2.4	**0.70**	0.52
California Water	CWT	**22.37**	11.75	1.9	**0.65**	0.45
Aqua America	WTR	**23.76**	8.05	3.0	**0.60**	0.37
Connecticut Water	CTWS	**34.33**	14.06	2.4	**0.75**	0.60
Middlesex Water	MSEX	**20.28**	12.11	1.7	**0.70**	0.52
SJW Corp	SJW	**28.89**	15.35	1.9	**0.85**	0.75
York Water	YORW	**20.98**	8.25	2.5	**0.70**	0.52
Average				**2.3**	**0.71**	**0.53**

[C]: Msn Money
[D]: Value Line
[E]: [C] / [D]
[F]: Value Line
[G]: (-0.35 + [F]) / 0.67

Lago Del Oro Water Company Cost of Capital Calculation
Calculation of Expected Infinite Annual Growth in Dividends
Sample Water Utilities

[A]	[B]
Description	g
DPS Growth - Historical[1]	3.6%
DPS Growth - Projected[1]	5.5%
EPS Growth - Historical[1]	5.1%
EPS Growth - Projected[1]	5.6%
Sustainable Growth - Historical[2]	5.1%
Sustainable Growth - Projected[2]	6.2%
Average	**5.2%**

1 Schedule JAC-5

2 Schedule JAC-6

Lago Del Oro Water Company Cost of Capital Calculation
Multi-Stage DCF Estimates
Sample Water Utilities

[A]	[B]	[C]	[D]	[E]	[F]	[G]	[H]
Company	Current Mkt. Price (P_o)[1] 12/18/2013	Projected Dividends[2] (Stage 1 growth) (D_t) d_1	d_2	d_3	d_4	Stage 2 growth[3] (g_n)	Equity Cost Estimate (K)[4]
American States Water	28.6	0.76	0.80	0.84	0.89	6.5%	9.1%
California Water	22.4	0.65	0.68	0.71	0.75	6.5%	9.3%
Aqua America	23.8	0.59	0.62	0.66	0.69	6.5%	8.9%
Connecticut Water	34.3	1.01	1.07	1.12	1.18	6.5%	9.4%
Middlesex Water	20.3	0.79	0.83	0.87	0.92	6.5%	10.3%
SJW Corp	28.9	0.73	0.77	0.81	0.85	6.5%	9.0%
York Water	21.0	0.58	0.61	0.64	0.68	6.5%	9.2%
						Average	9.3%

$$P_0 = \sum_{t=1}^{n} \frac{D_t}{(1+K)^t} + \frac{D_n(1+g_n)}{K-g_n}\left[\frac{1}{(1+K)}\right]^n$$

Where : P_0 = current stock price
D_t = dividends expected during stage 1
K = cost of equity
n = years of non – constant growth
D_n = dividend expected in year n
g_n = constant rate of growth expected after year n

1 [B] see Schedule JAC-7
2 Derived from Value Line Information
3 Average annual growth in GDP 1929 - 2012 in current dollars.
4 Internal Rate of Return of Projected Dividends

BEFORE THE ARIZONA CORPORATION COMMISSION

BOB STUMP
Chairman
GARY PIERCE
Commissioner
BRENDA BURNS
Commissioner
BOB BURNS
Commissioner
SUSAN BITTER SMITH
Commissioner

IN THE MATTER OF THE APPLICATION OF LAGO DEL ORO WATER COMPANY, AN ARIZONA CORPORATION FOR A DETERMINATION OF THE FAIR VALUE OF ITS UTILITY PLANT AND PROPERTY AND FOR INCREASES IN ITS WATER RATES AND CHARGES FOR UTILITY SERVICE BASED THEREON	)	DOCKET NO W-01944A-13-0215

DIRECT

TESTIMONY

OF

MARY J. RIMBACK

PUBLIC UTILITIES ANALYST

UTILITIES DIVISION

ARIZONA CORPORATION COMMISSION

JANUARY 24, 2014

0000151003

BEFORE THE ARIZONA CORPORATION COMMISSION

RECEIVED
AZ CORP COMMISSION
DOCKET CONTROL
2014 JAN 24 PM 3 01

COMMISSIONERS

BOB STUMP, CHAIRMAN
GARY PIERCE
BRENDA BURNS
BOB BURNS
SUSAN BITTER SMITH

ORIGINAL

IN THE MATTER OF THE APPLICATION OF LAGO DEL ORO WATER COMPANY, AN ARIZONA CORPORATION, FOR A DETERMINATION OF THE FAIR VALUE OF ITS UTILITY PLANT AND PROPERTY AND FOR INCREASES IN ITS WATER RATES AND CHARGES FOR UTILITY SERVICE BASED THEREON.	DOCKET NO. W-01944A-13-0215 **STAFF'S NOTICE OF FILING DIRECT TESTIMONY**

The Utilities Division ("Staff") of the Arizona Corporation Commission ("Commission") hereby files the Direct Testimony of Staff witnesses Mary J. Rimback (rate design) and Michael Thompson (cost of service) in the above-captioned matter.

RESPECTFULLY SUBMITTED this 24th day of January, 2014.

Robin R. Mitchell
Attorney, Legal Division
Arizona Corporation Commission
1200 West Washington Street
Phoenix, Arizona 85007
(602) 542-3402

Original and thirteen (13) copies of the foregoing filed this 24th day of January, 2014, with:

Docket Control
Arizona Corporation Commission
1200 West Washington Street
Phoenix, Arizona 85007

Arizona Corporation Commission
DOCKETED
JAN 24 2014
DOCKETED BY

Copy of the foregoing mailed and/or emailed on the 24th day of January, 2014, to:

Jay L. Shapiro
FENNEMORE CRAIG
2394 East Camelback Road, Suite 600
Phoenix, AZ 85016
Attorneys for Lago Del Oro Water Co.

Steven Soriano
Vice President and General Manager
Lago Del Oro Water Company
9532 East Riggs Road
Sun Lakes, AZ 85248

EXHIBIT
Witness S-2

TABLE OF CONTENTS

		Page
I.	INTRODUCTION	1
II.	BACKGROUND	1
III.	RATE DESIGN	2

SCHEDULES

Rate Design	MJR-W1
Typical Bill Analysis	MJR-W2

EXECUTIVE SUMMARY
LAGO DEL ORO WATER COMPANY
DOCKET NO. W-01944A-13-0215

Lago Del Oro Water Company ("LDO" or "Company") is an Arizona for-profit C-corporation, that is a Class B public service corporation serving potable water to approximately 6,350 customers. The LDO system provides water service to the unincorporated master planned community of Saddlebrooke, the unincorporated community of Catalina, and a smaller residential community surrounded by Saddlebrooke, known as Loma Serena. The three communities are located off State Route 77, approximately 25 miles north of the City of Tucson in Pinal and Pima Counties, Arizona.

The Company-proposed rates would increase the monthly bill for a typical 5/8 x 3/4-inch meter residential customer, with a median usage of 5,500 gallons, by $7.94 (42.43 percent), from $18.70 to $26.64. Under the Staff-recommended rate design for permanent rates, the monthly bill for a typical 5/8 x 3/4-inch residential customer with a median usage of 5,500 gallons would increase by $5.61 (29.97 percent), from $18.70 to $24.31.

Staff recommends approval of its recommended rates and charges as shown on the attached schedules.

I. INTRODUCTION

Q. Please State your name, occupation, and business address.

A. My name is Mary J. Rimback. I am a Public Utilities Analyst employed by the Arizona Corporation Commission ("ACC" or "Commission") in the Utilities Division ("Staff"). My business address is 1200 West Washington Street, Phoenix, Arizona 85007.

Q. Are you the same Mary J. Rimback who previously filed testimony pertaining to rate base, operating revenues and expenses and revenue requirement on behalf of Staff in this docket for Lago Del Oro Water Company's ("LDO" or "Company") permanent rate application?

A. Yes.

Q. What is the basis of your testimony?

A. Based on adjustments and revenue requirements recommended by Staff, I am presenting Staff's recommended rate design.

II. BACKGROUND

Q. Please review the background of these applicants.

A. LDO is an affiliate of Robson Communities, Inc. ("Robson"). Robson is best known as a developer of master planned retirement communities in Arizona and Texas. The ownership of LDO is comprised of a number of shareholders; each shareholder is in the form of a trust. As of the filing, there were 20 shareholders/trusts of LDO, each with various ownership percentages. The LDO water system serves the unincorporated master planned community of SaddleBrooke ("SaddleBrooke"), the unincorporated community of Catalina ("Catalina"), and a smaller residential community, surrounded by SaddleBrooke, known as Loma Serena. The three (3) communities are located off State Route 77 ("SR-

77"), approximately 25 miles north of the City of Tucson in Pinal and Pima Counties, Arizona. SaddleBrooke Development Company developed the master planned community of Saddlebrooke, which is also a Robson affiliate. The Company's current rates have been in effect since 1989 with the exception of a commodity rate for Saddlebrooke Golf Course, which has been in effect since March 16, 1992.

III. RATE DESIGN

Q. Did Staff prepare a summary of the present, Company's proposed, and Staff-recommended rates and charges?

A. Yes, see attached Schedule MJR W1.

Q. Please summarize the Company's present rate design.

A. The present rate design is based on minimum monthly charges that increase by meter size as follows: 5/8 x 3/4-inch $12.40; 3/4-inch $12.40; 1-inch $18.00; 1 1/2inch $28.00; 2-inch $40.00; 3-inch $62.00; 4-inch $84.00; 5-inch $106.00; 6-inch $128.00; and 8-inch $150.00. With the exception of Saddlebrooke Golf Course, there is a single commodity charge to all meter sizes of $1.80 per 1,000 gallons excess of 2,000 gallons. 2,000 gallons are included in the minimum charge. A separate tariff, effective March 16, 1992, charges $.37 per 1,000 gallons for irrigation provided to Saddlebrooke Golf Course. There are currently five meter sizes serving residential customers, six meter sizes serving commercial customers, seven serving irrigation customers (including Saddlebrooke Golf Course).

Q. Please summarize the Company's proposed rate design.

A. The Company proposes a three-tiered rate design for 5/8 x 3/4-inch and 3/4-inch residential meters, a two-tiered rate design for all others except for the Saddlebrooke Golf

Course irrigation and hydrants/construction. The Company proposes a single tier for Saddlebrooke Golf Course and hydrant/construction. Minimum Charges increase by meter size as follows: 5/8 x 3/4-inch $14.80; 3/4-inch $14.80; 1-inch $24.67; 1 1/2inch $49.33; 2-inch $78.93; 3-inch $157.87; 4-inch $246.67; 5-inch removed; 6-inch $493.33; and 8-inch $789.33. The Company added a minimum monthly charge of $200.00 for the Saddlebrooke Golf Course. Zero gallons are to be included in the monthly minimum charge going forward. The Company proposes a 3-tier inverted residential commodity rate for the 5/8 x 3/4-inch and the 3/4-inch customer of $1.80 per thousand for zero to 4,000 gallons, $3.09 per thousand gallons for 4,001 to 10,000 gallons, and $4.38 per thousand for over 10,000 gallons.

Q. Please summarize Staff's recommended rate design.

A. Staff recommends the rates and charges presented in Schedule MJR-W1. Staff's recommended monthly minimum charges by meter size are as follows: 5/8 x 3/4-inch $14.00; 3/4-inch $14.00; 1-inch $23.34; 1 1/2inch $46.66; 2-inch $74.66; 3-inch $149.34; 4-inch $233.34; 5-inch removed; 6-inch $466.66; 8-inch $746.66, and a minimum monthly charge of $200.00 for the Saddlebrooke Golf Course. For residential customers with a 5/8 x 3/4-inch and 3/4-inch meters, Staff recommends an inverted tier rate design that consists of three tiers with commodity rates of $1.50 per thousand gallons for 0-4,000 gallons, $2.87 per thousand gallons for 4,001 to 10,000 gallons, and $3.85 per thousand gallons for any consumption over 10,000 gallons. Staff recommends a two-tier inverted block rate structure for all other residential, commercial and irrigation customers. The recommended break-over point for two-tier customers increases with meter size, as shown in Schedule MJR-W1. Under the recommended rate design, the monthly bill at any usage level is higher for a larger meter than for a smaller meter.

Q. Did Staff prepare a typical bill analysis for a 5/8 x 3/4 inch residential customer?

A. Yes. See Schedule MJR-W2

Q. What is the rate impact on a 5/8 x 3/4-inch meter residential customer using a median consumption of 5,500 gallons?

A. Under Staff's recommended rates, a residential 5/8 x 3/4-inch meter customer consuming the median usage of 5,500 gallons per month will pay $24.31, which is $5.61 more than the current $18.70 for a 29.97 percent increase. By comparison, a residential 5/8 x 3/4-inch meter customer consuming the median usage of 5,500 gallons per month under the Company's proposed rates would be billed $26.64, which is $7.94 more than the current $18.70 for a 43.43 percent increase.

Q. What does Staff recommend for other service charges?

A. The Company proposes and Staff recommends removal of service charges for Reestablishment (After Hours) $30.00 and addition of a single After Hours service charge of $30.00 for all service calls after hours. The Company's current tariff does not include a late payment charge. The Company proposes and Staff recommends inclusion of a late payment charge of 1.5 percent per month. Recommended service charges are presented in Schedule MJR-W1.

Q. What is Staff's recommendation for the water system service line and meter installation charges?

A. Staff recommends accepting service line and meter installation charges as determined by Staff witness, Michael Thompson, and reflected in the Engineering Report for LDO.

Q. Does this conclude your direct testimony for the rate design for LDO?

A. Yes, it does.

Monthly Usage Charge	Present	Company Proposed Rates	Staff Recommended Rates [1]
Meter Size (All Classes):			
5/8 x 3/4 Inch	12.40	14.80	14.00
3/4 Inch	12.40	14.80	14.00
1 Inch	18.00	24.67	23.34
1 1/2 Inch	28.00	49.33	46.66
2 Inch	40.00	78.93	74.66
3 Inch	62.00	157.87	149.34
4 Inch	84.00	246.67	233.34
5 Inch	106.00	Remove	NT
6 Inch	128.00	493.33	466.66
8 Inch	150.00	789.33	746.66
Golf Course Irrigation	-	200.00	200.00
Construction Hydrant	NT	NT	NT
Gallons in Minimum	2,000	-	-
Commodity Charge - Per 1,000 Gallons All Classes			
5/8" x 3/4" Meter			
All classes over Minimum	1.80	N/A	N/A
First 4,000 gallons	N/A	1.80	1.50
4,001 to 10,000 gallons	N/A	3.09	2.87
Over 10,000 gallons	N/A	4.38	3.85
Commercial, Irrigation (except golf course irrigation)			
First 10,000 gallons			
Over 10,000 gallons			
3/4" Meter			
All classes over Minimum	1.80	N/A	N/A
Residential:			
First 4,000 gallons	N/A	1.80	1.50
4,001 to 10,000 gallons	N/A	3.09	2.87
Over 10,000 gallons	N/A	4.38	3.85
Commercial, Irrigation (except golf course irrigation)			
First 10,000 gallons	N/A	3.09	2.87
Over 10,000 gallons	N/A	4.38	3.85
1" Meter			
All classes over Minimum	1.80	N/A	N/A
All Classes except golf course irrigation, hydrant			
First 17,000 gallons	N/A	3.09	2.87
Over 17,000 gallons	N/A	4.38	3.85
1 1/2" Meter			
All classes over Minimum	1.80	N/A	N/A
All Classes except golf course irrigation, hydrant			
First 34,000 gallons	N/A	3.09	2.87
Over 34,000 gallons	N/A	4.38	3.85
2" Meter			
All classes over Minimum	1.80	N/A	N/A
All Classes except golf course irrigation, hydrant			
First 54,000 gallons	N/A	3.09	2.87
Over 54,000 gallons	N/A	4.38	3.85
3" Meter			
All classes over Minimum	1.80	N/A	N/A
All Classes except golf course irrigation, hydrant			
First 107,000 gallons	N/A	3.09	2.87
Over 107,000 gallons	N/A	4.38	3.85
4" Meter			
All classes over Minimum	1.80	N/A	N/A
All Classes except golf course irrigation, hydrant			
First 167,000 gallons	N/A	3.09	2.87
Over 167,000 gallons	N/A	4.38	3.85
6" Meter	1.80	N/A	N/A
All classes over Minimum			
All Classes except golf course irrigation, hydrant	N/A	3.09	2.87
First 334,000 gallons	N/A	4.38	3.85

Over 334,000 gallons			
8" Meter	1.80	N/A	N/A
All classes over Minimum			
All Classes except golf course irrigation, hydrant	N/A	3.09	2.87
First 534,000 gallons	N/A	4.38	3.85
Over 534,000 gallons			
Golf Course Irrigation	0.37	0.85	0.85
All Gallons			
Hydrant/Construction	NT	4.38	3.85
All Gallons			
Monthly Service Charge for Fire Sprinkler			
Up to 8"	NT	NT	Per Rule*

*2% of monthly minimum for a comparable size meter connection, but no less than $10.00 per month. The service charge for fire sprinklers is only applicable for service lines separate and distinct for the primary water service line.

Other Service Charges:

Establishment	$ 25.00	$ 25.00	$ 25.00
Establishment (After Hours)	$ 30.00	N/T	N/T
Reconnection (Delinquent)	$ 25.00	$ 25.00	$ 25.00
Meter Reread(If Correct)	$ 15.00	$ 15.00	$ 15.00
Meter Test (If Correct)	$ 30.00	$ 30.00	$ 30.00
Deposit	**	**	**
Deposit Interest	**	***	***
Reestablishment (within 12 months)	***	***	***
NSF Check	$ 10.00	$ 10.00	$ 10.00
Late Payment Penalty	N/T	1.5% per month	1.5% per month
Deferred Payment	15% per annum	15% per annum	15% per annum
Moving Meter at Customer Request	N/T	N/T	N/T
Service Calls - Per Hour/After Hours(a)	N/T	N/T	N/T
After Hours Service Charge			30.00

* Per Commission Rule A.A.C. R-14-2-403(B)
** Per Commission Rule A.A.C. R-14-2-403(B)
*** Per Commission Rule A.A.C. R-14-2-403(D) - Months off the system times the monthly minimum.

(a) No charge for service calls during normal working hours.

In addition to the collection of regular rates, the utility will collect from its customers a proportionate share of any privilege, sales, use, and franchise tax. Per commission rule 14-2-409D(5).

Service and Meter Installation Charges

	Total Present Charge	Proposed Service Line	Proposed Meter	Total Proposed Charge	Recommended Service Line	Recommended Meter Insallation	Total Recommended
5/8 x 3/4-inch	$ 250.00	$ 385.00	$ 135.00	$ 520.00	$ 415.00	$ 155.00	$ 570.00
3/4-inch	$ 275.00	$ 415.00	$ 205.00	$ 620.00	$ 415.00	$ 205.00	$ 620.00
1-inch	$ 300.00	$ 465.00	$ 265.00	$ 730.00	$ 465.00	$ 265.00	$ 730.00
1-1/2-inch	$ 450.00	520.00	475.00	995.00	520.00	475.00	995.00
2-inch	625.00	-		-	-	-	-
2-inch Turbine	-	$ 800.00	995.00	$ 1,795.00	$ 800.00	$ 995.00	$ 1,795.00
2-inch Compound	$ -	800.00	1,840.00	2,640.00	800.00	1,840.00	2,640.00
3-inch	800.00	-	-	-	-	-	-
3-inch Turbine	-	$ 1,015.00	$ 1,620.00	$ 2,635.00	$ 1,015.00	$ 1,620.00	$ 2,635.00
3-inch Compound	$ -	1,135.00	2,495.00	3,630.00	1,135.00	2,495.00	3,630.00
4-inch	975.00	-	-	-	-	-	-
4-inch Turbine	-	$ 1,430.00	$ 2,570.00	$ 4,000.00	$ 1,430.00	$ 2,570.00	$ 4,000.00
4-inch Compound	$ -	1,610.00	3,545.00	5,155.00	1,610.00	3,545.00	5,155.00
5-inch	$ 1,150.00	-	-	-	-	-	-
6-inch	1,325.00	-	-	-	-	-	-
6-inch Turbine	-	2150	$ 4,925.00	$ 7,075.00	$ 2,150.00	4925	$ 7,075.00
6-inch Compound	$ -	2,270.00	6,820.00	9,090.00	2,270.00	6,820.00	9,090.00
8-inch	-						
8-inch or Larger	$ 1,500.00	ICB*	ICB*	ICB*	ICB*	ICB*	ICB*

*ICB Indicates Individual Case Basis Cost.

Lago Del Oro Water Company
Docket No. W-01944A-13-0215
Test Year Ended December 31, 2012

Final Schedule MJR-W2

Typical Bill Analysis
General Service 5/8 x 3/4-Inch Meter

Company Proposed	Gallons	Present Rates	Proposed Rates	Dollar Increase	Percent Increase
Average Usage	7,024	$ 21.44	$ 31.34	$ 9.90	46.17%
Median Usage	5,500	18.70	26.64	$ 7.94	42.43%
Staff Recommended					
Average Usage	7,024	$ 21.44	$ 28.68	$ 7.24	33.74%
Median Usage	5,500	18.70	24.31	$ 5.61	29.97%

Present & Proposed Rates (Without Taxes)
General Service 5/8 x 3/4-Inch Meter

Gallons Consumption	Present Rates	Company Proposed Rates	% Increase	Staff Recommended Rates	% Increase
-	$ 12.40	$ 14.80	19.35%	$ 14.00	12.90%
1,000	12.40	16.60	33.87%	15.50	25.00%
2,000	12.40	18.40	48.39%	17.00	37.10%
3,000	14.20	20.20	42.25%	18.50	30.28%
4,000	16.00	22.00	37.50%	20.00	25.00%
5,000	17.80	25.09	40.96%	22.87	28.48%
5,500	18.70	26.64	42.43%	24.31	29.97%
6,500	20.50	29.73	45.00%	27.18	32.56%
7,500	22.30	32.82	47.15%	30.05	34.73%
8,500	24.10	35.91	48.98%	32.92	36.58%
7,024	21.44	31.34	46.17%	28.68	33.74%
9,500	25.90	39.00	50.56%	35.79	38.17%
10,500	27.70	42.73	54.26%	39.15	41.32%
11,500	29.50	47.11	59.69%	43.00	45.75%
12,500	31.30	51.49	64.50%	46.85	49.66%
13,500	33.10	55.87	68.79%	50.70	53.16%
14,500	34.90	60.25	72.64%	54.55	56.29%
15,500	36.70	64.63	76.10%	58.40	59.11%
16,500	38.50	69.01	79.25%	62.25	61.68%
17,500	40.30	73.39	82.11%	66.10	64.01%
18,500	42.10	77.77	84.73%	69.95	66.14%
19,500	43.90	82.15	87.13%	73.80	68.10%
20,500	45.70	86.53	89.34%	77.65	69.90%
25,500	54.70	108.43	98.23%	96.90	77.14%
30,500	63.70	130.33	104.60%	116.15	82.33%
35,500	72.70	152.23	109.39%	135.40	86.24%
40,500	81.70	174.13	113.13%	154.65	89.28%
45,500	90.70	196.03	116.13%	173.90	91.73%
50,500	99.70	217.93	118.59%	193.15	93.73%
75,500	144.70	327.43	126.28%	289.40	100.00%
100,500	189.70	436.93	130.33%	385.65	103.29%

BEFORE THE ARIZONA CORPORATION COMMISSION

BOB STUMP
Chairman
GARY PIERCE
Commissioner
BRENDA BURNS
Commissioner
BOB BURNS
Commissioner
SUSAN BITTER SMITH
Commissioner

EXHIBIT
S-2B
ADMITTED

IN THE MATTER OF THE APPLICATION OF LAGO DEL ORO WATER COMPANY, AN ARIZONA CORPORATION FOR A DETERMINATION OF THE FAIR VALUE OF ITS UTILITY PLANT AND PROPERTY AND FOR INCREASES IN ITS WATER RATES AND CHARGES FOR UTILITY SERVICE BASED THEREON	)	DOCKET NO W-01944A-13-0215

DIRECT

TESTIMONY

OF

MICHAEL THOMPSON

UTILITIES ENGINEER

UTILITIES DIVISION

ARIZONA CORPORATION COMMISSION

JANUARY 24, 2014

TABLE OF CONTENTS

		Page
I.	INTRODUCTION	1
II.	COST OF SERVICE STUDY – REVIEW PROCESS	3
III.	CONCLUSIONS AND RECOMMENDATIONS	5

EXHIBITS

Cost of Service Summary – Present Rates ..... Schedule G-1

Cost of Service Summary – Proposed Rates ..... Schedule G-2

EXECUTIVE SUMMARY
LAGO ORO WATER COMPANY
DOCKET NO. W-01944A-13-0215

Michael Thompson's testimony discusses Utilities Division Staff's ("Staff") review of Lago Del Oro Water Company's ("Lago Del Oro" or "Company") Cost of Service Study ("COSS") for the rate case filed with the Arizona Corporation Commission ("Commission"), and presents the results of Staff's analysis.

Based on its review of Lago Del Oro's COSS, Staff's conclusions and recommendations are as follows:

1. It is Staff's conclusion that Lago Del Oro performed the COSS consistent with the methodology generally accepted in the industry, and developed all of the allocation factors appropriately.

2. Staff further concludes that, based on the evaluation of the COSS model utilized by Lago Del Oro, the results of the COSS are satisfactory.

3. Staff recommends that Lago Del Oro's COSS cost allocation factors, and cost allocations modified by Staff as included under G Schedules, be accepted as reasonable in the pending case. The revised Schedules G-1 and G-2 are attached in Exhibit 1.

I. INTRODUCTION

Q. Please state your name, place of employment and job title.

A. My name is Michael Thompson. My place of employment is the Arizona Corporation Commission ("Commission"), Utilities Division, 1200 West Washington Street, Phoenix, Arizona 85007. My job title is Water/Wastewater Engineer.

Q. How long have you been employed by the Commission?

A. I have been employed by the Commission since June 2013.

Q. Please list your duties and responsibilities.

A. As a Utilities Engineer, specializing in water and wastewater engineering, I inspect and evaluate water and wastewater systems, obtain data, prepare reports, suggest corrective action, provide technical recommendations on water and wastewater system deficiencies, and provide written and oral testimony on rate and other cases before the Commission.

Q. How many cases have you analyzed for the Utilities Division?

A. To date I have analyzed 8 cases covering various responsibilities for the Utilities Division.

Q. What is your educational background?

A. I graduated from the SUNY College of Environmental Science and Forestry ("ESF") at Syracuse, New York, and Syracuse University ("SU") at Syracuse, New York. I have a Bachelor of Science Degree in Pulp and Paper Engineering from ESF and Chemical Engineering from SU. I am registered as a Professional Engineer (Civil) in the State of Arizona, and a Grade 2 Certified Water Treatment Plant Operator, and a Grade 3 Certified Water Distribution System Operator.

Q. Briefly describe your pertinent work experience.

A. Prior to my employment with the Commission, I was the Operations Engineer, from 2009 to 2012, for the Southwest and Central Districts of Golden State Water Company ("GSWC"), located in Gardena and Santa Fe Springs, California, respectively. As the Operations Engineer, I provided technical assistance and support to the districts' operations departments with primary focus on resolving operational problems and optimizing the efficiency of the water system operations. Prior to my employment with GSWC, I was employed with Chaparral City Water Company ("Chaparral"), from 2002 to 2009 as District Operations Engineer. While at Chaparral, I performed all capital, new business, and water quality activities within the district. I served as field engineer/construction manager for all capital and new business projects under construction. I also managed all water quality activities including monitoring, sampling, and reporting as required by 40 CFR (National Primary Drinking Water Regulations) and Arizona Administrative Code, Title 18, Chapter 4.

From 2000 to 2002, I was employed with the Fountain Hills Sanitary District as Engineering Assistant. I performed plan review of all commercial and residential projects in the Town of Fountain Hills, and managed the district's construction projects.

From 1996 to 2000, I was employed as an Environmental Engineering Specialist with the Arizona Department of Environmental Quality ("ADEQ"). During that time period, I performed operations and maintenance site inspections of public water systems in Gila, LaPaz, Mohave, and Southwestern Yavapai Counties.

Prior to working for ADEQ, I began my career in the pulp and paper industry as a process engineer in 1979. During my 16 year career in the pulp and paper industry, I worked for 3

different paper companies (Temple-Eastex, Bowater, Inc., and Champion International), where I advanced from a process engineer to Technical Manager.

Q. Did Staff perform an analysis of the application that is the subject of this proceeding?

A. Yes, Staff's review of the Company's cost of service study was performed by Staff Engineer Prem Bahl who recently retired.

Q. Is your testimony herein based on Mr. Bahl's analysis?

A. Yes, it is.

Q. What is the purpose of this Direct Testimony?

A. The purpose is to discuss Staff's review of Lago Del Oro's COSS for the rate case, and present the results of this review.

II. COST OF SERVICE STUDY – REVIEW PROCESS

Q. What does the COSS signify?

A. There are three steps in performing the COSS. They are: 1) Functionalization; 2) Classification; and 3) Allocation. First, the COSS enables us to determine the system cost of service by classifying the utility's costs (investments and expenses) by function, such as commodity-related, demand-related, customer-related, and Direct Fire-related functions. Customer-related functions are further broken down into customers and customer services. Second, the study breaks down these costs by customer classes to reflect as closely as possible the cost causation by respective customer classes. Third, the results of the COSS provide a benchmark for the revenues needed from each customer category by appropriately allocating the revenue requirement for each customer class.

Q. Is there a standard COSS Model?

A. There is no standard methodology for designing a COSS, but it is generally advisable to follow a range of alternatives to identify which allocations are more reasonable than others. For that reason, the COSS should be used as a general guide only and as one of many considerations in designing rates.

Q. Did Staff conduct a separate independent COSS?

A. No, Staff did not conduct a separate independent COSS.

Q. What was the process Staff used in reviewing the Company's COSS?

A. Staff reviewed the Company's overall COSS methodology, which is the Commodity-Demand methodology as outlined in the American Water Works Association Manual M1, "Principles of Water Rates, Fees, and Charges". The Commodity-Demand Method breaks down the costs of providing water service into four primary cost components: commodity costs (costs that tend to vary with the amount of water used by the customers), demand costs (costs associated with peak use/demand), customers costs (costs not associated with water use, such as billing), and direct fire protection costs. Staff then reviewed the G Schedules reflecting various allocation factors (for Commodity, Demand, Customer, and Direct Private Fire) in COSS. Next, staff reviewed the Test Year ("FYE December 31, 2012") rate base, revenues, and expenses in the filed rate case. Staff adjustments to rate base, revenues, and expenses were incorporated in the appropriate G Schedules. The modified G Schedules G-1 and G-2 are attached under Exhibit 1.

III. CONCLUSIONS AND RECOMMENDATIONS

Q. Based upon your testimony, what are Staff's conclusions and recommendations regarding the Cost of Service Study?

A. Based on the review of Lago Del Oro's COSS, Staff's conclusions and recommendations are as follows:

1. It is Staff's conclusion that Lago Del Oro performed the COSS consistent with the methodology generally accepted in the industry, and developed the allocation factors appropriately, in accordance with the Staff recommended and Commission approved allocation factors in the Arizona Water Company's rate case (Docket No. W-01444A-08-0440).

2. Staff further concludes that, based on the evaluation of the COSS model utilized by Lago Del Oro, the results of the COSS are satisfactory.

3. Staff recommends that Lago Del Oro's COSS allocations and factors be accepted as reasonable in the pending case. The G-schedules G-1 and G-2 are listed under the attached exhibit 1.

Staff's conclusions are limited to the specific facts of this case and do not create any precedent regarding Cost of Service Studies generally. Staff may make different recommendations in other cases.

Q. Does this conclude your Direct Testimony?

A. Yes, it does.

Lago Del Oro Water Company
Test Year Ended December 31, 2012
Cost of Service Study, Using Commodity-Demand Method
Returns at Present Rates by Class

Line No.		Totals	Residential	Commercial	Irrigation	Hydrant
1	Water Revenues	$ 1,864,436	$ 1,644,415	$ 112,036	$ 106,235	$ 1,750
2	Revenue Annualization	386	(4,624)	3,985	1,024	-
3	Misc. Revenues[1]	17,117	12,773	1,169	3,160	15
4	Reconciliation H-1 to C-1[1]	299	223	20	55	0
5	Total Revenues	$ 1,882,237	$ 1,652,788	$ 117,210	$ 110,474	$ 1,765
6						
7	Operating Expenses[2]	$ 1,054,284	$ 888,004	$ 55,015	$ 110,478	$ 787
8	Depreciation and					
9	Amortization[2]	784,622	682,973	56,997	44,197	456
10	Property Tax[3]	93,668	82,250	5,833	5,498	88
11	Income Tax[4]	(45,891)	(32,123)	(2,806)	(11,019)	57
12	Total Operating Expenses	$ 1,886,684	$ 1,621,531	$ 115,077	$ 149,236	$ 1,388
13	Operating Income	$ (4,446)	$ 31,257	$ 2,133	$ (38,762)	$ 378
14	Interest Expense[5]	95,459	83,056	6,976	5,371	55
15	Net Income	$ (99,905)	$ (146,518)	$ (12,799)	$ (50,258)	$ 259
16						
17	Rate Base[6]	$ 7,342,965	$ 6,388,903	$ 536,651	$ 413,166	$ 4,246
18	Return on Rate Base[7]	-0.06%	0.49%	0.40%	-9.38%	8.89%
19						
20	**Percent of Total Customers**		97.80%	1.49%	0.65%	0.06%
21						
22						
23						
24						
25						
26						
27	[1] Allocated based on customer counts.					
28	[2] Operating Expenses and Depreciation computations are shown on Schedule MJR-W1 Rev Req.					
29	[3] Property Taxes allocation based on Revenues					
30	[4] Income Tax from Schedule MJR-W9, at present rates. Income Taxes allocated based on taxable income					
31	[5] Interest Synchronized Interest Expense. Allocation based on Rate Base					
32	[6] Rate Base computations are shown on Schedule MJR-W3.					
33	[7] Operating Income Divided by Rate Base					
34						
35						

Lago Del Oro Water Company
Test Year Ended December 31, 2012
Cost of Service Study, Using Commodity-Demand Method
Returns at Proposed Rates by Class

Line No.		Totals	Residential	Commercial	Irrigation	Hydrant
1	Water Revenues	$ 2,812,678	$ 2,342,668	$ 234,203	$ 233,390	$ 2,417
2	Revenue Annualizations	-	-	-	-	-
3	Misc. Revenues[1]	17,117	16,740	256	110	11
4	Reconciliation H-1 to C-1[1]	$ -	-	-	-	-
5	Total Revenues	$ 2,829,795	$ 2,359,408	$ 234,459	$ 233,500	$ 2,428
6						
7	Operating Expenses[2]	$ 1,054,284	$ 888,004	$ 55,015	$ 110,478	$ 787
8	Depreciation and					
9	Amortization[2]	784,622	682,973	56,997	44,197	456
10	Property Tax[3]	109,870	91,607	9,103	9,066	94
11	Income Tax[4]	300,707	161,423	40,348	21,524	424
12	Total Operating Expenses	$ 2,249,484	$ 1,815,966	$ 161,685	$ 184,885	$ 1,766
13	Operating Income	$ 580,311	$ 511,091	$ 98,244	$ 55,940	$ 994
14	Interest Expense[5]	95,459	83,056	6,976	5,371	55
15	Net Income	$ 484,852	$ 333,316	$ 83,311	$ 44,443	$ 876
16						
17	Rate Base[6]	$ 7,342,965	$ 6,388,903	$ 536,651	$ 413,166	$ 4,246
18	Return on Rate Base[7]	7.90%	8.00%	18.31%	13.54%	23.41%
19						
20	**Percent of Total Customers**		97.80%	1.49%	0.65%	0.06%
21						
22	**Indicated Monthly Minimums and Single-Tier Commody Rates for 5/8 Inch Meter**					
23		Sched. G-8, pg 4A	Sched. G-8, pg 4B	Sched. G-8, pg 4C	Sched. G-8, pg 4D	
24		All Classes	Residential	Commercial	Irrigation	Hydrant
25	Monthly Minimums	$ 13.41	$ 14.28	$ 14.13	$ 14.36	$ 18.62
26	Single-Tier Commodity Rate	$ 2.289	$ 2.659	$ 2.580	$ 1.322	$ 2.132
27						
28						

29 [1] Allocated based on customer counts.
30 [2] Operating Expenses and Depreciation computations are shown on Schedule MJR-W1 Rev Req.
31 [3] Property Taxes allocation based on Revenues
32 [4] Income Tax from Schedule MJR-W9, at proposed rates. Income Taxes allocated based on taxable income
33 [5] Interest Synchronized Interest Expense. Allocation based on Rate Base
34 [6] Rate Base computations are shown on Schedule MJR-W3.
35 [7] Operating Income Divided by Rate Base
36

BEFORE THE ARIZONA CORPORATION COMMISSION

BOB STUMP
Chairman
GARY PIERCE
Commissioner
BRENDA BURNS
Commissioner
BOB BURNS
Commissioner
SUSAN BITTER SMITH
Commissioner

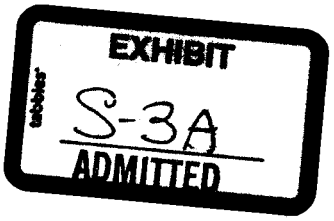

IN THE MATTER OF THE APPLICATION OF LAGO DEL ORO WATER COMPANY, AN ARIZONA CORPORATION FOR A DETERMINATION OF THE FAIR VALUE OF ITS UTILITY PLANT AND PROPERTY AND FOR INCREASES IN ITS WATER RATES AND CHARGES FOR UTILITY SERVICE BASED THEREON	)	DOCKET NO W-01944A-13-0215

SURREBUTTAL

TESTIMONY

OF

MARY J. RIMBACK

PUBLIC UTILITIES ANALYST

UTILITIES DIVISION

ARIZONA CORPORATION COMMISSION

MARCH 7, 2014

0000151646

BEFORE THE ARIZONA CORPORATION COMMISSION

RECEIVED

2014 MAR -7 P 4: 12

AZ CORP COMMISSION
DOCKET CONTROL

Arizona Corporation Commission
DOCKETED
MAR 07 2014

DOCKETED BY

COMMISSIONERS

BOB STUMP, CHAIRMAN
GARY PIERCE
BRENDA BURNS
BOB BURNS
SUSAN BITTER SMITH

IN THE MATTER OF THE APPLICATION OF LAGO DEL ORO WATER COMPANY, AN ARIZONA CORPORATION, FOR A DETERMINATION OF THE FAIR VALUE OF ITS UTILITY PLANT AND PROPERTY AND FOR INCREASES IN ITS WATER RATES AND CHARGES FOR UTILITY SERVICE BASED THEREON.

DOCKET NO. W-01944A-13-0215

STAFF'S NOTICE OF FILING SURREBUTTAL TESTIMONY

The Utilities Division ("Staff") of the Arizona Corporation Commission ("Commission") hereby files the Surrebuttal Testimony of Staff witnesses Mary J. Rimback, John A. Cassidy and Michael Thompson in the above-captioned matter.

RESPECTFULLY SUBMITTED this 7th day of March, 2014.

Robin R. Mitchell
Attorney, Legal Division
Arizona Corporation Commission
1200 West Washington Street
Phoenix, Arizona 85007
(602) 542-3402

Original and thirteen (13) copies of the foregoing filed this 7th day of March, 2014, with:

Docket Control
Arizona Corporation Commission
1200 West Washington Street
Phoenix, Arizona 85007

ORIGINAL

Copy of the foregoing mailed and/or emailed on the 7th day of March, 2014, to:

Jay L. Shapiro
FENNEMORE CRAIG
2394 East Camelback Road, Suite 600
Phoenix, AZ 85016
Attorneys for Lago Del Oro Water Co.

Steven Soriano
Vice President and General Manager
Lago Del Oro Water Company
9532 East Riggs Road
Sun Lakes, AZ 85248

EXHIBIT
Witness S-3

TABLE OF CONTENTS

Page

I. INTRODUCTION 1

II. PURPOSE OF THE SURREBUTTAL TESTIMONY 1

III. SUMMARY OF RECOMMENDATIONS 2

IV. RESPONSE TO REBUTTAL TESTIMONY OF MR. THOMAS J. BOURASSA 3

Plant-in-Service ("PIS") and accumulated depreciation of plant purchased from affiliate 3
Fully Depreciated Plant 6
Contributions in Aid of Construction ("CIAC") 8
Accumulated Deferred Income Taxes ("ADIT") 8
Contractual Services Testing for water testing costs 8
Contractual Services Annual Audit 9
Rate Design 9

SURREBUTTAL SCHEDULES

Revenue Requirement MJR-W1

Gross Revenue Conversion Factor MJR-W2

Rate Base – Original Cost MJR-W3

Summary of Original Cost Rate Base Adjustments MJR-W4

Rate Base Adjustment No. 1 – Adjust plant purchased from Affiliate MJR-W5

Rate Base Adjustment No. 2 – Accumulated depreciation on fully depreciated plant. MJR-W6

Rate Base Adjustment No. 3 – CIAC and amortization of CIAC MJR-W7

Rate Base Adjustment No. 4 – Accumulated deferred income taxes MJR-W8

Operating Income Statement – Test Year and Staff Recommended MJR-W9

Summary of Operating Income Statement Adjustments – Test Year MJR-W10

Operating Income Adjustment No. 1 Water testing expense MJR-W11

Operating Income Adjustment No. 2 – Depreciation Expense MJR-W12

Operating Income Adjustment No. 3 – Property tax expense MJR-W13

Operating Income Adjustment No. 4 – Income tax Expense MJR-W14

Rate Design MJR-W15

Typical Bill Analysis MJR-W16

EXECUTIVE SUMMARY
LAGO DEL ORO WATER COMPANY
DOCKET NO. W-01944A-13-0215

The surrebuttal testimony of Staff witness Mary J. Rimback addresses the issues of rate base, operating income, revenue requirement and rate design for Lago Del Oro Water Company ("LDO" or "Company").

The Company's rebuttal testimony requests an increase in revenue of $1,148,253 (61.00 percent) over test year revenue of $1,882,238. The total annual revenue of $3,030,491 produces operating income of $647,208 to provide an 8.79 percent rate of return ("ROR") on a proposed $7,363,846 fair value rate base ("FVRB") which is also the proposed original cost rate base ("OCRB").

The Utilities Division ("Staff") recommends an increase in revenue of $1,029,215 (54.68 percent) over test year revenue of $1,882,238. The total annual revenue of $2,911,453 produces operating income of $604,049 to provide an 8.20 percent ROR on the Staff adjusted OCRB of $7,366,456.

I. INTRODUCTION

Q. Please state your name, occupation, and business address.

A. My name is Mary J. Rimback. I am a Public Utilities Analyst with the Arizona Corporation Commission ("ACC" or "Commission") in the Utilities Division ("Staff"). My business address is 1200 West Washington Street, Phoenix, Arizona 85007.

Q. Are you the same Mary J. Rimback who previously submitted direct testimony in this case?

A. Yes, I am.

Q. How is your testimony organized?

A. My testimony is presented in four Sections. Section I is this introduction. Section II provides the purpose of the testimony. Section III is a summary of recommendations. Section IV presents Staff's response to the rebuttal testimony of Mr. Thomas J. Bourassa ("Bourassa Rebuttal").

II. PURPOSE OF THE SURREBUTTAL TESTIMONY

Q. What is the purpose of your surrebuttal testimony in this proceeding?

A. The purpose of my surrebuttal testimony in this proceeding is to respond, on behalf of Staff, to the rebuttal testimony of Mr. Thomas J. Bourassa and to present Staff's surrebuttal position regarding rate base, operating income, revenue requirement and rate design issues.

Q. Do you attempt to address every issue raised by the Company in its rebuttal testimony?

A. No. My silence on any particular issue raised in the Company's rebuttal testimony does not indicate that Staff agrees with the Company's rebuttal position on that issue. I rely on my direct testimony unless modified by this surrebuttal testimony.

Q. What issues will you address?

A. My surrebuttal addresses the following issues.

1) Plant-in-Service ("PIS") and Accumulated Depreciation on Plant Purchased from Affiliate
2) Fully Depreciated Plant
3) Contributions-in Aid of Construction ("CIAC")
4) Accumulated Deferred Income Taxes
5) Contractual Services Water Testing
6) Contractual Services annual audit costs
7) Rate Design

III. SUMMARY OF RECOMMENDATIONS

Q. What rebuttal revenue requirement is LDO proposing?

A. The Company's rebuttal testimony requests total operating revenue of $3,030,491 a $1,148,253 (61.00 percent) increase over the test year revenue of $1,882,238. This provides a $647,208 operating income and an 8.79 percent ROR on a proposed $7,363,846 fair value rate base ("FVRB") which is also the proposed original cost rate base ("OCRB").

Q. Please summarize Staff's recommended revenue requirement.

A. Staff recommends total operating revenue of $2,911,453, a $1,029,215 (54.68 percent) increase over the test year revenue of $1,882,238. This provides a $604,049 operating income and an 8.20 percent ROR on an OCRB of $7,366,456. (In Staff's direct testimony, Staff recommended total operating revenue of $2,829,778, a $947,540 or 50.34 percent increase over the test year revenue of $1,882,238 to provide a $580,094 operating income and a 7.9 percent ROR on an OCRB of $7,342,962.)

Q. Has the ROR used to develop the revenue requirement in Staff's surrebuttal testimony changed from the ROR in Staff's direct testimony?

A. Yes. Staff's recommended ROR is increased from the 7.90 percent reflected in my direct testimony filed on January 17, 2014, to 8.20 percent in this filing. The ROR change is supported by Staff witness Mr. John Cassidy.

IV. RESPONSE TO REBUTTAL TESTIMONY OF MR. THOMAS J. BOURASSA

Plant-in-Service ("PIS") and accumulated depreciation of plant purchased from affiliate

Q. Is the Company disputing the Staff adjustment to the value of PIS included for ratemaking purposes?

A. Yes. The Company cites in its rebuttal testimony the National Association of Regulatory Commissioners Uniform System of Accounts ("NARUC USOA") Accounting Instruction No. 21, subsection B(1) which requires purchased plant to be recorded at its original cost and subsection B(2) which requires that accumulated depreciation associated with the original cost be recorded for utility plant, purchased or sold.

Q. Did the Company, in its original application follow instruction No. 21?

A. No, the Company valued the assets at original cost but recognized depreciation as if the assets were placed in service at the beginning of 2012. The assets were actually placed in service over a period beginning in 1997 and continuing on through 2009. The depreciation recognized by the Company did not reflect the reduction in useful life of the assets.

Q. What was the value placed on this purchased plant in the Company's original application?

A. The Company valued the transaction at the original cost of the underlying asset without regard to the reduction in useful life of the assets that has occurred since this plant was first placed into service. The original cost was $3,887,998. This value was utilized in both the rate application and the related financing application.

Q. Did Staff effectively adjust this $3,887,998 downward, recognizing the loss in economic value associated with accumulated depreciation?

A. Yes, Staff originally valued these assets at $2,751,411. This was the remaining economic value of these assets at the point in time when they were transferred to LDO.

Q. Did the Company accept Staff's valuation of plant transferred in the financing docket?

A. Yes, the Company has agreed to Staff's recommendation that the financing be limited to the remaining economic value of these assets or $2,751,411.

Q. Has the value of plant to be recognized for purposes of the rate application been in dispute by the Company?

A. Yes. The Company has argued that these assets should be recorded in a manner that makes clear both the original cost and accumulated depreciation from the point the assets were first devoted to utility service. Effectively this would be accomplished by recording the assets at the original $3,887,998 value and also recognize an accumulated depreciation reserve on these assets of $1,233,787. The Company has made a compelling argument, since it is important to acknowledge that these assets have been providing utility service for a number of years.

Q. Does Staff now agree with the position advocated by LDO?

A. Yes, Staff recommends recognition of the original cost of the assets of $3,887,998 and also recognition of an additional accumulated depreciation reserve of $1,136,587. The net of these two entries is $2,751,411.

Q. Did the Company include an accumulated depreciation reserve adjustment of $97,200 in its original application?

A. Yes, the Company reflected one-half year's depreciation on these assets being purchased.

Q. What adjustment to accumulated depreciation is still needed for the assets purchased from an affiliate?

A. The required adjustment is $1,136,587, which is the net of the $1,233,787 discussed above less the $97,200 adjustment already in the Company's application.

Fully Depreciated Plant

Q. Do Staff and the Company dispute the amount of fully depreciated plant?

A. Yes, the Company states that all fully depreciated plant has been properly included in its original application. Staff continues to disagree with this Company position.

Q. Did Staff review the Company- provided information as to additions, retirements and adjustments?

A. Yes.

Q. Did Staff record retirements as stated in the Company's rebuttal testimony? [1]

A. No, Staff did not record retirements, Staff performed an audit analysis of the plant and accumulated depreciation balances presented by the Company. Plant is considered retired when it is removed from service, not when the recordkeeping reflects that it is fully depreciated. Property retired is defined by both NARUC USoA and the Arizona Administrative Code ("AAC"):

1) According to the NARUC USoA definition No. 12, "Property retired," as applied to utility plant, means property which has been removed, sold, abandoned, destroyed, or which for any cause has been permanently withdrawn from service.

2) According to the AAC R-14-2-102 Subsection A(7) "Property retired" means assets which have been removed, sold, abandoned, destroyed, or which for any cause have been withdrawn from service and books of account.

Q. Did Staff adjust accumulated depreciation values and modify the Company's on-going depreciation expense based on this analysis?

A. Yes.

---

[11] Company Rebuttal of Thomas J. Bourassa "(Bourassa Rt." at 11

Q. Please explain the basis of Staff's depreciation adjustments.

A. The Company presented the application as required by the Commission, that is the plant balances were traced from the last rate case, additions, retirements and adjustments were shown for each of the twenty-four years since the last rate case. Staff analyzed the year-by-year transactions and notes that once the original cost of the plant was fully expensed for depreciation, some plant continued to be depreciated.

Q. Does Staff take issue with this practice?

A. Yes, as stated in AAC R14-2-102 (3) "Depreciation" means an accounting process which will permit the recovery of the original cost of an asset less its net salvage over the service life". As such recovering beyond the original cost of the plant in service does not comply with AAC R14-2-103 (3).

Q. Does the accumulated depreciation reserve adjustment proposed by Staff increase the Company's rate base by $371,263 as shown in Surrebuttal Schedule MJR-W6?

A. Yes, continuing to depreciate PIS beyond the original cost negatively impacts rate base, so reversing this depreciation reserve item increases rate base.

Q. Does this adjustment affect any other ratemaking calculations?

A. Yes, this removes fully depreciated plant from the going forward calculation of depreciation expense.

Contributions in Aid of Construction ("CIAC")

Q. Does Staff's position with regards to vintage year depreciation impact the Company's CIAC balance as proposed in the Company's rebuttal[2]?

A. No, Staff notes that the CIAC balances in the last rate case were fully amortized by 1995. Staff found that the Company provided calculations in the rate application (Schedule B-2 page 5.1) which continued to amortize CIAC that was completely amortized in 1995.

Accumulated Deferred Income Taxes ("ADIT")

Q. Did Staff adjust the ADIT calculation based on the Company's calculation of the effects of not taking bonus depreciation on the entire $3,887,000 of plant purchased from an affiliate?

A. No. Staff does not understand the rebuttal points raised by the Company regarding bonus depreciation. No mention of bonus depreciation was included in the original rate application. The plant purchased from an affiliate was placed in service over a period of many years. If applicable, bonus depreciation would have been an issue for the affiliate in the years the various assets were placed in service. These would not have resulted in bonus depreciation implications only in 2012, as the Company seems to be suggesting. Staff believes this rebuttal point is irrelevant and should be disregarded.

Contractual Services Testing for water testing costs

Q. Does Staff accept the adjustment for mandated water testing costs of $5,940?

A. Yes, this represents one-fifth of 92.0 percent of the total costs of $32,280, allowing the Company to recover the LDO portion over five years.

[2] Bourassa Rt at 14

Contractual Services Annual Audit

Q. Does Staff recommend inclusion of $8,000 to prepare annual financial audits as a condition of its proposed new debt?

A. No. No support has been given for this $8,000 amount, and both the amount of any ultimate auditing costs and the timing regarding when any such auditing costs will be incurred are not known and measurable at the present time. Further, Staff notes there are a number of specific requirements included in the term sheet provided in the financing application and an additional annual audit was not one of the terms of the loan.

Rate Design

Q. Did Staff change the rate design from its direct testimony?

A. No, Staff left the fundamental rate design as in its direct testimony, adjusting for the change in recommended revenues.

Q. Did Staff include the rate design and typical bill analysis in surrebuttal schedules?

A. Yes.

Q. Does this conclude your testimony?

A. Yes, it does.

Lago Del Oro Water Company
Docket No. W-01944A-13-0215
Test Year Ended December 31, 2012

Surrebuttal Schedule MJR-W1

REVENUE REQUIREMENT

LINE NO.	DESCRIPTION	(A) COMPANY FAIR VALUE	(B) STAFF FAIR VALUE
1	Adjusted Rate Base	$ 8,287,733	$ 7,366,456
2	Adjusted Operating Income (Loss)	$ (3,470)	$ (28,182)
3	Current Rate of Return (L2 / L1)	-0.04%	-0.38%
4	Required Rate of Return	8.65%	8.20%
5	Required Operating Income (L4 * L1)	$ 716,971	$ 604,049
6	Operating Income Deficiency (L5 - L2)	$ 720,441	$ 632,232
7	Gross Revenue Conversion Factor	1.6560	1.6279
8	Required Revenue Increase (L7 • L6)	$ 1,193,033	**$ 1,029,215**
9	Adjusted Test Year Revenue	$ 1,882,238	$ 1,882,238
10	Proposed Annual Revenue	$ 3,075,271	$ 2,911,453
11	Required Increase in Revenue (%)	63.38%	54.68%

References:
Column (A): Company Schedule A-1
Column (B): Staff Schedules MJR-W3 and MJR-W9

Lago Del Oro Water Company
Docket No. W-01944A-13-0215
Test Year Ended December 31, 2012

Surrebuttal Schedule MJR-W2

GROSS REVENUE CONVERSION FACTOR

LINE NO.	DESCRIPTION	(A)	(B)	(C)	(D)
	Calculation of Gross Revenue Conversion Factor:				
1	Revenue	100.0000%			
2	Uncollecible Factor	0.0000%			
3	Revenues (L1 - L2)	100.0000%			
4	Combined Federal and State Income Tax and Property Tax Rate (Line 18)	38.5714%			
5	Subtotal (L3 - L4)	61.4286%			
6	**Revenue Conversion Factor (L1 / L5)**	1.627907			
	Calculation of Uncollecttible Factor:				
7	Unity	100.0000%			
8	Combined Federal and State Tax Rate (Line 17)	37.5028%			
9	One Minus Combined Income Tax Rate (L7 - L8)	62.4972%			
10	Uncollectible Rate	0.0000%			
11	Uncollectible Factor (L9 * L10)	0.0000%			
	Calculation of Effective Tax Rate:				
12	Operating Income Before Taxes (Arizona Taxable Income)	100.0000%			
13	Arizona State Income Tax Rate	6.5000%			
14	Federal Taxable Income (L12 - L13)	93.5000%			
15	Applicable Federal Income Tax Rate (Line 48)	33.1581%			
16	Effective Federal Income Tax Rate (L9 x L10)	31.0028%			
17	Combined Federal and State Income Tax Rate (L13 +L16)		37.5028%		
	Calculation of Effective Property Tax Factor				
18	Unity	100.0000%			
19	Combined Federal and State Income Tax Rate (L17)	37.5028%			
20	One Minus Combined Income Tax Rate (L13-L14)	62.4972%			
21	Property Tax Factor (MJR-W13, L27)	1.7099%			
22	Effective Property Tax Factor (L20*L21)		1.0686%		
23	Combined Federal and State Income Tax and Property Tax Rate (L17+L22)			38.5714%	
24	Required Operating Income (Schedule MJR-W1, Line 5)	$ 604,049			
25	AdjustedTest Year Operating Income (Loss) (MJR-W10, L40	(28,182)			
26	Required Increase in Operating Income (L24 - L25)		$ 632,232		
27	Income Taxes on Recommended Revenue (Col. [C], L52)	$ 315,382			
28	Income Taxes on Test Year Revenue (Col. [C], L52)	(64,002)			
29	Required Increase in Revenue to Provide for Income Taxes (L27 - L28)		379,384		
30	Recommended Revenue Requirement (Schedule MJR-W1, Line 10)	$ 2,911,453			
31	Uncollectible Rate	0.0000%			
32	Uncollectible Expense on Recommended Revenue (L30*L31)	$ -			
33	Adjusted Test Year Uncollectible Expense	$ -			
34	Required Increase in Revenue to Provide for Uncollectible Exp. (L32-L33)		-		
35	Property Tax with Recommended Revenue (Schedule MJR-W18, L21)	$ 111,267			
36	Property Tax on Test Year Revenue (Schedule MJR-W13, Line 17)	93,668			
37	Increase in Property Tax Due to Increase in Revenue (L30-31)		17,599		
38	Total Required Increase in Revenue (L21 + L24 + L29 + L32)		$ 1,029,215		

	Calculation of Income Tax:	Test Year		Staff Recommended
39	Revenue (Schedule MJR-W1, Col. [B], Line 9 & Sch. MJR-W1, Col. [B] Line 10)	$ 1,882,238	$ 1,029,215	$ 2,911,453
40	Operating Expenses Excluding Income Taxes	$ 1,974,422		$ 1,992,021
41	Synchronized Interest (L57)	$ 95,764		$ 95,764
42	Arizona Taxable Income (L34 - L35 - L36)	$ (187,948)		$ 823,668
43	Arizona State Income Tax Rate	6.5000%		6.5000%
44	Arizona Income Tax (L37 x L38)	$ (12,217)		$ 53,536
45	Federal Taxable Income (L37- L39)	$ (175,732)		$ 770,130
46	Federal Tax on First Income Bracket ($1 - $50,000) @ 15%	$ (7,500)		$ 7,500
47	Federal Tax on Second Income Bracket ($51,001 - $75,000) @ 25%	$ (6,250)		$ 6,250
48	Federal Tax on Third Income Bracket ($75,001 - $100,000) @ 34%	$ (8,500)		$ 8,500
49	Federal Tax on Fourth Income Bracket ($100,001 - $335,000) @ 39%	$ (29,535)		$ 91,650
50	Federal Tax on Fifth Income Bracket ($335,001 -$10,000,000) @ 34%	$ -		$ 147,944
51	Total Federal Income Tax	$ (51,785)		$ 261,844
52	Combined Federal and State Income Tax (L43 + L51)	$ (64,002)		$ 315,382

53	Applicable Federal Income Tax Rate [Col. [C], L51 - Col. [A], L51] / [Col. [C], L45 - Col. [A], L45]	33.1581%

54	Synchronized Interest Calculation	
55	Rate Base	$ 7,366,456
56	Weighted Average Cost of Debt	1.30%
57	*Synchronized Interest*	$ 95,764

Lago Del Oro Water Company
Docket No. W-01944A-13-0215
Test Year Ended December 31, 2012

Surrebuttal Schedule MJR-W3

RATE BASE - ORIGINAL COST

LINE NO.		(A) COMPANY AS FILED	(B) STAFF ADJUSTMENTS	(C) STAFF AS ADJUSTED
1	Plant in Service	$ 18,200,198	$ 1	$ 18,200,199
2	Less: Accumulated Depreciation	8,840,798	765,324	9,606,122
3	Net Plant in Service	$ 9,359,400	$ (765,323)	$ 8,594,077
	LESS:			
4	Contributions in Aid of Construction (CIAC)	$ 852,693	$ (99,158)	$ 753,535
5	Less: Accumulated Amortization	469,879	(186,882)	$ 282,997
6	Net CIAC	$ 382,814	$ 87,724	$ 470,538
7	Advances in Aid of Construction (AIAC)	297,640	-	297,640
8	Customer Deposits	111,854	-	111,854
9	Accumulated Deferred Income Tax	279,359	68,229	347,588
	ADD:			
10	Working Capital Allowance	-		-
11	Defered Regulatory Assets	-		-
12	**Original Cost Rate Base**	$ 8,287,733	$ (921,277)	$ 7,366,456

References:
Column [A]: Company Application Schedule B-1
Column [B]: Testimony MJR
Column [C]: Column [A] + Column [B]

Lago Del Oro Water Company
Docket No. W-01944A-13-0215
Test Year Ended December 31, 2012

SUMMARY OF ORIGINAL COST RATE BASE ADJUSTMENTS

LINE NO.	ACCT. NO.	DESCRIPTION	[A] COMPANY AS FILED	[B] ADJ #1 2012 Affiliate Purchase Ref: Sch MJR-W5	[C] ADJ #2 Accum Deprec Fully Deprec Plant Ref: Sch MJR-W6	[D] ADJ #3 CIAC and Accum Ammort of CIAC Ref: Sch MJR-W7	[E] ADJ #4 ADIT Accum Def Inc Txs Ref: Sch MJR-W8	[F] STAFF ADJUSTED
1		*PLANT IN SERVICE:*						
2	301.0	Organization Cost	$ -	$ -	$ -	$ -	$ -	$ -
3	302.0	Franchise Cost	-	-	-	-	-	-
4	303.0	Land and Land Rights	42,608	-	-	-	-	42,608
5	304.0	Structures and Improvements	359,681	-	-	-	-	359,681
6	305.0	Collecting and Impounding Res.	-	-	-	-	-	-
7	306.0	Lake River and Other Intakes	-	0	-	-	-	0
8	307.0	Wells and Springs	2,164,423	-	-	-	-	2,164,423
9	308.0	Infiltration Galleries and Tunnels	-	-	-	-	-	-
10	309.0	Supply Mains	-	-	-	-	-	-
11	310.0	Power Generation Equipment	187,864	-	-	-	-	187,864
12	311.0	Electric Pumping Equipment	3,585,660	-	-	-	-	3,585,660
13	320.0	Water Treatment Equipment	-	-	-	-	-	-
14	320.2	Chemical Solution Feeders	24,640	-	-	-	-	24,640
15	330.0	Distribution Reservoirs & Standpipe	-	-	-	-	-	-
16	330.1	Storage Tanks	1,758,175	-	-	-	-	1,758,175
17	330.2	Pressure Tanks	321,969	-	-	-	-	321,969
18	331.0	Transmission and Distribution Mains	6,083,805	-	-	-	-	6,083,805
19	333.0	Services	1,888,741	-	-	-	-	1,888,741
20	334.0	Meters	504,321	-	-	-	-	504,321
21	335.0	Hydrants	718,857	-	-	-	-	718,857
22	336.0	Backflow Prevention Devices	-	-	-	-	-	-
23	339.0	Other Plant and Miscellaneous Equipment	-	-	-	-	-	-
24	340.0	Office Furniture and Fixtures	36,758	-	-	-	-	36,758
25	340.1	Computers and Software	-	-	-	-	-	-
26	341.0	Transportation Equipment	89,569	-	-	-	-	89,569
27	342.0	Stores Equipment	-	-	-	-	-	-
28	343.0	Tools and Work Equipment	-	-	-	-	-	-
29	344.0	Laboratory Equipment	-	-	-	-	-	-
30	345.0	Power Operated Equipment	55,787	-	-	-	-	55,787
31	346.0	Communications Equipment	351,219	-	-	-	-	351,219
32	347.0	Miscellaneous Equipment	26,122	-	-	-	-	26,122
33	348.0	Other Tangible Plant	-	-	-	-	-	-
34		Total Plant in Service - Actual	$ 18,200,198	-	-	-	-	$ 18,200,199
35		Post Test-Year Plant	-		-	-	-	-
36		Total Plant in Service	$ 18,200,198	$ 0	$ -	$ -	$ -	$ 18,200,199
37		Less: Accumulated Depreciation	8,840,798	1,136,587	(371,263)	-	-	9,606,122
38			-	-	-	-	-	-
39		Net Plant in Service	$ 9,359,400	$ (1,136,587)	$ 371,263	$ -	$ -	$ 8,594,077
40								
41		*LESS:*						
42		Contributions in Aid of Construction (CIAC)	$ 852,693	$ -	$ -	$ (99,158)	$ -	753,535
43		Less: Accumulated Amortization	469,879	-	-	(186,882)	-	282,997
44		Net CIAC (L42 - L43)	$ 382,814	-	-	$ 87,724	-	$ 470,538
45		Advances in Aid of Construction (AIAC)	297,640	-	-	-	-	297,640
46		Customer Meter Deposits	111,854	-	-	-	-	111,854
47		Deferred Income Tax	279,359	-	-	-	68,229	347,588
48			-		-	-	-	-
49								
50		*ADD:*						
51		Working Capital Allowance	-	-	-	-	-	-
52		Defered Regulatory Assets	-	-	-	-	-	-
53								
54		Original Cost Rate Base	$ 8,287,733	$ (1,136,587)	$ 371,263	$ (87,724)	$ (68,229)	$ 7,366,456

Lago Del Oro Water Company
Docket No. W-01944A-13-0215
Test Year Ended December 31, 2012

Surrebuttal Schedule MJR-W5

RATE BASE ADJUSTMENT NO. 1 - Staff adjusted value of plant purchased from affiliated company

LINE NO.	DESCRIPTION	[A] STAFF AS ADJ NO. 1	[B] STAFF ADJUSTMENTS	[C] STAFF AS ADJUSTED
1	304 Structures and Improvements	$ 110,051	$ -	$ 110,051
2	307 Wells and Springs	496,541	-	496,541
3	310 Power Generation Equipment	62,481	-	62,481
4	311 Electric Pumping Equipment	547,976	-	547,976
5	330.1 Storage Tanks	323,184	-	323,184
6	330.2 Pressure Tanks	89,247	-	89,247
7	331 Transmission and Distribution Mains	1,774,780	-	1,774,780
8	333 Services	270,250	-	270,250
9	335 Hydrants	189,964	-	189,964
10	346 Communications Equipment	23,525	-	23,525
11				
12	Subtotal	$ 3,887,998	$ -	$ 3,887,998
13				
14	Accumulated Depreciation	$ 97,200	$ 1,136,587	$ 1,233,787

References:
Column [A]: Company Schedule B-2, Page 3.29
Column [B]: Testimony MJR
Column [C]: Column [A] + Column [B]

Lago Del Oro Water Company
Docket No. W-01944A-13-0215
Test Year Ended December 31, 2012

Surrebuttal Schedule MJR-W6

RATE BASE ADJUSTMENT NO. 1 - Accumulated depreciation - fully depreciated plant

LINE NO.	DESCRIPTION	[A] COMPANY AS FILED	[B] STAFF ADJUSTMENTS	[C] STAFF AS ADJUSTED
1	Accumulated Depreciation	$ 8,840,798	$ (371,263)	$ 8,469,535

References:
Column [A]: Company Schedule B-2, Page 3.29
Column [B]: Testimony MJR
Column [C]: Column [A] + Column [B]

Lago Del Oro Water Company
Docket No. W-01944A-13-0215
Test Year Ended December 31, 2012

Surrebuttal Schedule MJR-W7

RATE BASE ADJUSTMENT NO. 3 - CIAC and accumulated amortization of CIAC

LINE NO.	DESCRIPTION	[A] COMPANY AS FILED	[B] STAFF ADJUSTMENTS	[C] STAFF AS ADJUSTED
1	CIAC	$ 852,693	$ (99,158)	$ 753,535
2	AMORTIZATION OF CIAC	469,879	(186,882)	282,997
3	NET CIAC	$ 382,814	$ 87,724	$ 470,538

References:
Columns [A]: Company Schedule B-2, Page 5.1 thru 5.3
Column [B]: Column [C] less Column [A]
Column [C]: Testimony MJR

Lago Del Oro Water Company
Docket No. W-01944A-13-0215
Test Year Ended December 31, 2012

Surrebuttal Schedule MJR-W8

RATE BASE ADJUSTMENT NO. 4 - Adit adjustment

LINE NO.	DESCRIPTION	[A] COMPANY AS FILED	[B] STAFF ADJUSTMENTS	[C] STAFF AS ADJUSTED
1	ADIT	$ 279,359	$ 68,229	$ 347,588

References:
Column [A]: Company Schedule B.1, Page 1
Column [B]: Column [C] less Column [A]
Column [C]: Column [A] + Column [B]

Lago Del Oro Water Company
Docket No. W-01944A-13-0215
Test Year Ended December 31, 2012

Surrebuttal Schedule MJR-W9

OPERATING INCOME STATEMENT - ADJUSTED TEST YEAR AND STAFF RECOMMENDED

LINE NO.	DESCRIPTION	[A] COMPANY ADJUSTED TEST YEAR AS FILED	[B] STAFF TEST YEAR ADJUSTMENTS	[C] STAFF TEST YEAR AS ADJUSTED	[D] STAFF PROPOSED CHANGES	[E] STAFF RECOMMENDED
1	*REVENUES:*					
2	Metered Water Sales	$ 1,865,121	$ -	$ 1,865,121	$ 1,029,215	$ 2,894,336
3	Water Sales-Unmetered	-	-	-	-	-
4	Other Water Revenue	17,117	-	17,117	-	17,117
5	Intentionally Left Blank	-	-	-	-	-
6	**Total Operating Revenues**	$ 1,882,238	$ -	$ 1,882,238	$ 1,029,215	$ 2,911,453
7				##		
8	*OPERATING EXPENSES:*					
9	Salaries and Wages	$ 169,991	$ -	$ 169,991	$ -	$ 169,991
10	Employee Benefits and Pensions	35,228	-	35,228	-	35,228
11	Purchased Water	-	-	-	-	-
12	Purchased Power	442,823	-	442,823	-	442,823
13	Fuel for Power Production	-	-	-	-	-
14	Chemicals	21,969	-	21,969	-	21,969
15	Materials and Supplies	80,299	-	80,299	-	80,299
16	Office Supplies and Expense	66,431	-	66,431	-	66,431
17	Contractual Services-Engineering	-	-	-	-	-
18	Contractual Services -Accounting	533	-	533	-	533
19	Contractual Services- Legal	166	-	166	-	166
20	Contractual Services-Other	57,785	-	57,785	-	57,785
21	Contractual Services-Testing	22,433	5,392	27,825	-	27,825
22	Rents	9,435	-	9,435	-	9,435
23	Rents-Equipment	-	-	-	-	-
24	Transportation Expenses	42,440	-	42,440	-	42,440
25	Insurance - Vehicle	5,165	-	5,165	-	5,165
26	Insurance - General Liability	20,083	-	20,083	-	20,083
27	Regulatory Commission Expense-Other	855	-	855	-	855
28	Regulatory Commission Expense - Rate Case	55,000	-	55,000	-	55,000
29	Bad Debt Expense	4,922	-	4,922	-	4,922
30	Miscellaneous Expense	19,274	-	19,274	-	19,274
31	Depreciation and Amortization Expense	861,127	(40,597)	820,530	-	820,530
33	Taxes Other than Income	-	-	-	-	-
34	Property Taxes	98,597	(4,929)	93,668	17,599	111,267
35	Income Taxes	(128,849)	64,847	(64,002)	379,384	315,382
36	Interest on Customer Deposits	-	-	-	-	-
37	**Total Operating Expenses**	$ 1,885,708	$ 24,713	$ 1,910,420	$ 396,983	$ 2,307,403
38	**Operating Income (Loss)**	$ (3,470)	$ (24,713)	$ (28,182)	$ 632,232	$ 604,049
39						
40	**Other Income(Expense)**					
	Interest Income	$ -	$ -	$ -		-
	Other Income(Expense)	-	-	-		-
	Interest Expense	(204,322)	108,558	(95,764)		(95,764)
	Other Expense		-	-		-
	Total Other Income (Expense)	$ (204,322)	$ 108,558	$ (95,764)		$ (95,764)
	Net Profit (Loss)	$ (207,792)	$ 83,845	$ (123,946)		$ 508,285

References:
Column (A): Company Schedule C-1
Column (B): Schedule MJR-W10
Column (C): Column (A) + Column (B)
Column (D): Schedules MJR-W1, MJR-W2 and MJR-W13
Column (E): Column (C) + Column (D)

Lago Del Oro Water Company
Docket No. W-01944A-13-0215
Test Year Ended December 31, 2012

Surrebuttal Schedule MJR-W10

SUMMARY OF OPERATING INCOME STATEMENT ADJUSTMENTS - TEST YEAR

LINE NO.	DESCRIPTION	[A] COMPANY AS FILED	[B] Water Testing Expenses ADJ #1 Ref: Sch MJR-W11	[C] Depreciation Expense ADJ #2 Ref: Sch MJR-W12	[D] Property Tax Expense ADJ #3 Ref: Sch MJR-W13	[E] Income Tax Expense ADJ #4 Ref: Sch MJR-W14	[F] STAFF ADJUSTED
1	*REVENUES:*						
2	Metered Water Sales	$ 1,865,121	$ -	$ -	$ -	$ -	$ 1,865,121
3	Water Sales-Unmetered	-	-	-	-	-	-
4	Other Water Revenue	17,117	-	-	-	-	17,117
5	Intentionally Left Blank	-	-	-	-	-	-
6	**Total Operating Revenues**	$ 1,882,238	$ -	$ -	$ -	$ -	$ 1,882,238
7							
8	*OPERATING EXPENSES:*		0				
9	Salaries and Wages	$ 169,991	$ -	$ -	$ -	$ -	$ 169,991
	Employee Benefits and Pensions	$ 35,228					35,228
10	Purchased Water	-	-	-	-	-	-
11	Purchased Power	442,823	-	-	-	-	442,823
12	Fuel for Power Production	-	-	-	-	-	-
13	Chemicals	21,969	-	-	-	-	21,969
14	Materials and Supplies	80,299	-	-	-	-	80,299
15	Office Supplies and Expense	66,431	-	-	-	-	66,431
16	Contractual Services-Engineering	-	-	-	-	-	-
17	Contractual Services -Accounting	533	-	-	-	-	533
18	Contractual Services- Legal	166	-	-	-	-	166
19	Contractual Services-Other	57,785	-	-	-	-	57,785
20	Contractual Services-Testing	22,433	5,392	-	-	-	27,825
24	Rents	9,435	-	-	-	-	9,435
25	Rents-Equipment	-	-	-	-	-	-
26	Transportation Expenses	42,440	-	-	-	-	42,440
27	Insurance - Vehicle	5,165	-	-	-	-	5,165
28	Insurance - General Liability	20,083	-	-	-	-	20,083
29	Regulatory Commission Expense-Other	855	-	-	-	-	855
30	Regulatory Commission Expense - Rate Case	55,000	-	-	-	-	55,000
31	Bad Debt Expense	4,922	-	-	-	-	4,922
32	Miscellaneous Expense	19,274	-	-	-	-	19,274
33	Depreciation and Amortization Expense	861,127	-	(40,597)	-	-	820,530
35	Taxes Other than Income	-	-	-	-	-	-
36	Property Taxes	98,597	-	-	(4,929)	-	93,668
37	Income Taxes	(128,849)	-	-	-	64,847	(64,002)
38	Interest on Customer Deposits	-	-	-	-	-	-
39	**Total Operating Expenses**	$ 1,885,708	$ 5,392	$ (40,597)	$ (4,929)	$ 64,847	$ 1,910,420
40	**Operating Income (Loss)**	$ (3,470)	$ (5,392)	$ 40,597	$ 4,929	$ (64,847)	$ (28,182)
	Other Income(Expense)						-
	Interest Income	$ -					-
	Other Income(Expense)	-					(95,764)
	Interest Expense	(204,322)					-
	Other Expense	-					(95,764)
	Total Other Income (Expense)	$ (204,322)	$ -	$ -	$ -	$ -	(123,946)
	Net Profit (Loss)	$ (207,792)	$ (5,392)	$ 40,597	$ 4,929	$ (64,847)	

Lago Del Oro Water Company
Docket No. W-01944A-13-0215
Test Year Ended December 31, 2012

Surrebuttal Schedule MJR-W11

OPERATING ADJUSTMENT NO. 1 - Water testing expense

Line No.	Description		[A] COMPANY PROPOSED	[B] STAFF ADJUSTMENTS	[C] STAFF RECOMMENDED
1	Contractual Services-Testing		$ 22,433	$ (548)	$ 21,885
2	UCMR 3	[1]	$ -	$ 5,940	$ 5,940
3			$ 22,433	$ 5,392	$ 27,825

[1] Unregulated Contaminant Monitoring Rules

References:
Column [A]: Company Schedule C-1, Page 1 and Company Rebuttal Testimony
Column [B]: Testimony Staff Engineering Testimony
Column [C]: Column [A] + Column [B]

Lago Del Oro Water Company
Docket No. W-01944A-13-0215
Test Year Ended December 31, 2012

Surrebuttal Schedule MJR-W12

OPERATING ADJUSTMENT NO. 3 - Depreciation expense

LINE NO.	ACCT NO.	DESCRIPTION	[A] PLANT In SERVICE Per Staff	[B] NonDepreciable or Fully Depreciated PLANT	[C] DEPRECIABLE PLANT (Col A - Col B)	[D] DEPRECIATION RATE	[E] DEPRECIATION EXPENSE (Col C x Col D)
1	301.0	Organization Cost	$ -	$ -	$ -	0.00%	$ -
2	302.0	Franchise Cost	-	-	-	0.00%	-
3	303.0	Land and Land Rights	42,608	42,608	-	0.00%	-
4	304.0	Structures and Improvements	359,681	11,667	348,014	3.33%	11,589
5	305.0	Collecting and Impounding Res.	-	-	-	2.50%	-
6	306.0	Lake River and Other Intakes	0	-	0	2.50%	0
7	307.0	Wells and Springs	2,164,423	134,725	2,029,698	3.33%	67,589
8	308.0	Infiltration Galleries and Tunnels	-	-	-	6.67%	-
9	309.0	Supply Mains	-	-	-	2.00%	-
10	310.0	Power Generation Equipment	187,864	-	187,864	5.00%	9,393
11	311.0	Electric Pumping Equipment	3,585,660	-	3,585,660	12.50%	448,208
12	320.1	Water Treatment Equipment	-	-	-	3.33%	-
13	320.2	Chemical Solution Feeders	24,640	-	24,640	20.00%	4,928
14	330.0	Distribution Reservoirs & Standpipe	-	-	-	2.22%	-
15	330.1	Storage Tanks	1,758,175	222,970	1,535,205	2.22%	34,082
16	330.2	Pressure Tanks	321,969	-	321,969	5.00%	16,098
17	331.0	Transmission and Distribution Mains	6,083,805	805,218	5,278,587	2.00%	105,572
18	333.0	Services	1,888,741	247,045	1,641,696	3.33%	54,668
19	334.0	Meters	504,321	80,024	424,297	8.33%	35,344
20	335.0	Hydrants	718,857	148,034	570,823	2.00%	11,416
21	336.0	Backflow Prevention Devices	-	-	-	6.67%	-
22	339.0	Other Plant and Miscellaneous Equipment	-	-	-	6.67%	-
23	340.0	Office Furniture and Fixtures	36,758	-	36,758	6.67%	2,452
24	340.1	Computers and Software	-	-	-	20.00%	-
25	341.0	Transportation Equipment	89,569	-	89,569	20.00%	17,914
26	342.0	Stores Equipment	-	-	-	4.00%	-
27	343.0	Tools and Work Equipment	-	-	-	5.00%	-
28	344.0	Laboratory Equipment	-	-	-	10.00%	-
29	345.0	Power Operated Equipment	55,787	-	55,787	5.00%	2,789
30	346.0	Communications Equipment	351,219	-	351,219	10.00%	35,122
31	347.0	Miscellaneous Equipment	26,122	-	26,122	10.00%	2,612
32	348.0	Other Tangible Plant	-	-	-	10.00%	-
33		Total Plant	$ 18,200,199	$ 1,692,291	$ 16,507,908		$ 859,776

38	CIAC = Depreciation Expense/Depreciable Plant	5.21%
39	CIAC Balance	$ 753,535
40	Depreciation Expense Before Amortization of CIAC:	$ 859,776
41	Less Amortization of CIAC:	$ 39,246
42	**Test Year Depreciation Expense - Staff:**	**$ 820,530**
43	Depreciation Expense - Company:	$ 861,127
44	**Staff's Total Adjustment:**	**$ (40,597)**

Note:

* Indicates items that were fully depreciated per Company Schedule C-2.

References:
Column [A]: Schedule MJR-W4
Column [B]: Testimony MJR From Column [A]
Column [C]: Column [A] - Column [B]
Column [D]: Staff Engineering Testimony
Column [E]: Column [C] x Column [D]

Lago Del Oro Water Company
Docket No. W-01944A-13-0215
Test Year Ended December 31, 2012

Surrebuttal Schedule MJR-W13

OPERATING INCOME ADJUSTMENT NO. 4- Property tax expense

LINE NO.	Property Tax Calculation	[A] STAFF AS ADJUSTED	[B] STAFF RECOMMENDED
1	Staff Adjusted Test Year Revenues	$ 1,882,238	$ 1,882,238
2	Weight Factor	2	2
3	Subtotal (Line 1 * Line 2)	3,764,476	$ 3,764,476
4	Staff Recommended Revenue, Per Schedule MJR-1	1,882,238	$ 2,911,453
5	Subtotal (Line 4 + Line 5)	5,646,714	6,675,929
6	Number of Years	3	3
7	Three Year Average (Line 5 / Line 6)	1,882,238	$ 2,225,310
8	Department of Revenue Mutilplier	2	2
9	Revenue Base Value (Line 7 • Line 8)	3,764,476	$ 4,450,619
10	Plus: 10% of CWIP -	-	-
11	Less: Net Book Value of Licensed Vehicles	112,728	$ 112,728
12	Full Cash Value (Line 9 + Line 10 - Line 11)	3,651,748	$ 4,337,891
13	Assessment Ratio	19.0%	19.0%
14	Assessment Value (Line 12 • Line 13)	693,832	$ 824,199
15	Composite Property Tax Rate (Per Company Schedule)	13.5000%	13.5000%
16			$ -
17	Staff Test Year Adjusted Property Tax (Line 14 • Line 15)	$ 93,668	
18	Company Proposed Property Tax	98,597	
19			
20	Staff Test Year Adjustment (Line 17-Line 18)	**$ (4,929)**	
21	Property Tax - Staff Recommended Revenue (Line 14 * Line 15)		$ 111,267
22	Staff Test Year Adjusted Property Tax Expense (Line 17)		$ 93,668
23	Increase in Property Tax Expense Due to Increase in Revenue Requirement		$ 17,599
24			
25	Increase to Property Tax Expense		**$ 17,599**
26	Increase in Revenue Requirement		1,029,215
27	Increase to Property Tax per Dollar Increase in Revenue (Line 25/Line 26)		**1.709903%**

References:
Column [A]: Company Schedule C-2, Page 3
Column [B]: Testimony MJR
Column [C]: Column [A] + Column [B]

Lago Del Oro Water Company
Docket No. W-01944A-13-0215
Test Year Ended December 31, 2012

Surrebuttal Schedule MJR-W14

'MENT NO. 5 - Test year income taxesRATE BASE ADJUSTMENT NO. 1 - Staff adjusted value of plant purc

LINE NO.	DESCRIPTION	[A] COMPANY TEST YEAR	[B] STAFF ADJUSTMENTS	[C] STAFF RECOMMENDED
1	Income Tax Expense	$ (128,849)	$ 64,847	$ (64,002)

References:
Column (A): Company Schedule C-1
Column (B): Column [C] - Column [A]
Column (C): Schedule MJR-W2

Monthly Usage Charge	Present	Company Proposed Rates	Staff Recommended Rates
Meter Size (All Classes):			
5/8 x 3/4 Inch	12.40	14.80	14.15
3/4 Inch	12.40	14.80	14.15
1 Inch	18.00	24.67	23.59
1 1/2 Inch	28.00	49.33	47.16
2 Inch	40.00	78.93	75.46
3 Inch	62.00	157.87	150.94
4 Inch	84.00	246.67	235.84
5 Inch	106.00	Remove	NT
6 Inch	128.00	493.33	471.66
8 Inch	150.00	789.33	754.66
Golf Course Irrigation	-	200.00	200.00
Construction Hydrant	NT	NT	NT
Gallons in Minimum	2,000	-	-
Commodity Charge - Per 1,000 Gallons All Classes			
5/8" x 3/4" Meter			
All classes over Minimum	1.80	N/A	N/A
First 4,000 gallons	N/A	1.80	1.55
4,001 to 10,000 gallons	N/A	3.09	3.00
Over 10,000 gallons	N/A	4.38	4.08
Commercial, Irrigation (except golf course irrigation)			
First 10,000 gallons			
Over 10,000 gallons			
3/4" Meter			
All classes over Minimum	1.80	N/A	N/A
Residential:			
First 4,000 gallons	N/A	1.80	1.55
4,001 to 10,000 gallons	N/A	3.09	3.00
Over 10,000 gallons	N/A	4.38	4.08
Commercial, Irrigation (except golf course irrigation)			
First 10,000 gallons	N/A	3.09	3.00
Over 10,000 gallons	N/A	4.38	4.08
1" Meter			
All classes over Minimum	1.80	N/A	N/A
All Classes except golf course irrigation, hydrant			
First 17,000 gallons	N/A	3.09	3.00
Over 17,000 gallons	N/A	4.38	4.08
1 1/2" Meter			
All classes over Minimum	1.80	N/A	N/A
All Classes except golf course irrigation, hydrant			
First 34,000 gallons	N/A	3.09	3.00
Over 34,000 gallons	N/A	4.38	4.08
2" Meter			
All classes over Minimum	1.80	N/A	N/A
All Classes except golf course irrigation, hydrant			
First 54,000 gallons	N/A	3.09	3.00
Over 54,000 gallons	N/A	4.38	4.08
3" Meter			
All classes over Minimum	1.80	N/A	N/A
All Classes except golf course irrigation, hydrant			
First 107,000 gallons	N/A	3.09	3.00
Over 107,000 gallons	N/A	4.38	4.08
4" Meter			
All classes over Minimum	1.80	N/A	N/A
All Classes except golf course irrigation, hydrant			
First 167,000 gallons	N/A	3.09	3.00
Over 167,000 gallons	N/A	4.38	4.08
6" Meter			
All classes over Minimum	1.80	N/A	N/A
All Classes except golf course irrigation, hydrant			
First 334,000 gallons	N/A	3.09	3.00

Over 334,000 gallons	N/A	4.38	4.08
8" Meter			
All classes over Minimum	1.80	N/A	N/A
All Classes except golf course irrigation, hydrant			
First 534,000 gallons	N/A	3.09	3.00
Over 534,000 gallons	N/A	4.38	4.08
Golf Course Irrigation			
All Gallons	0.37	0.85	0.85
Hydrant/Construction			
All Gallons	N/T	4.38	4.08
Monthly Service Charge for Fire Sprinkler			
Up to 8"	NT	NT	Per Rule*

*2% of monthly minimum for a comparable size meter connection, but no less than $10.00 per month. The service charge for fire sprinklers is only applicable for service lines separate and distinct for the primary water service line.

Other Service Charges:

Establishment	$ 25.00	$ 25.00	$ 25.00
Establishment (After Hours)	$ 30.00	N/T	N/T
Reconnection (Delinquent)	$ 25.00	$ 25.00	$ 25.00
Meter Reread(If Correct)	$ 15.00	$ 15.00	$ 15.00
Meter Test (If Correct)	$ 30.00	$ 30.00	$ 30.00
Deposit	**	**	**
Deposit Interest	**	***	***
Reestablishment (within 12 months)	***	***	***
NSF Check	$ 10.00	$ 10.00	$ 10.00
Late Payment Penalty	N/T	1.5% per month	1.5% per month
Deferred Payment	1.5% per month	1.5% per month	1.5% per month
Moving Meter at Customer Request	N/T	N/T	N/T
Service Calls - Per Hour	N/T	N/T	N/T
After Hours Service Charge	N/T	$ 30.00	30.00

* Per Commission Rule A.A.C. R-14-2-403(B)
** Per Commission Rule A.A.C. R-14-2-403(B)
*** Per Commission Rule A.A.C. R-14-2-403(D) - Months off the system times the monthly minimum.

(a) No charge for service calls during normal working hours.

In addition to the collection of regular rates, the utility will collect from its customers a proportionate share of any privilege, sales, use, and franchise tax. Per commission rule 14-2-409D(5).

Service and Meter Installation Charges

	Total Present Charge	Proposed Service Line	Proposed Meter	Total Proposed Charge	Recommended Service Line	Recommended Meter Insallation	Total Recommended
5/8 x 3/4-inch	$ 250.00	$ 385.00	$ 135.00	$ 520.00	$ 415.00	$ 155.00	$ 570.00
3/4-inch	$ 275.00	$ 415.00	$ 205.00	$ 620.00	$ 415.00	$ 205.00	$ 620.00
1-inch	$ 300.00	$ 465.00	$ 265.00	$ 730.00	$ 465.00	$ 265.00	$ 730.00
1-1/2-inch	$ 450.00	520.00	475.00	995.00	520.00	475.00	995.00
2-inch	625.00	-		-	-	-	-
2-inch Turbine	-	$ 800.00	995.00	$ 1,795.00	$ 800.00	$ 995.00	$ 1,795.00
2-inch Compound	$ -	800.00	1,840.00	2,640.00	800.00	1,840.00	2,640.00
3-inch	800.00	-	-	-	-	-	-
3-inch Turbine	-	$ 1,015.00	$ 1,620.00	$ 2,635.00	$ 1,015.00	$ 1,620.00	$ 2,635.00
3-inch Compound	$ -	1,135.00	2,495.00	3,630.00	1,135.00	2,495.00	3,630.00
4-inch	975.00	-	-	-	-	-	-
4-inch Turbine	-	$ 1,430.00	$ 2,570.00	$ 4,000.00	$ 1,430.00	$ 2,570.00	$ 4,000.00
4-inch Compound	$ -	1,610.00	3,545.00	5,155.00	1,610.00	3,545.00	5,155.00
5-inch	$ 1,150.00	-	-	-	-	-	-
6-inch	1,325.00	-	-	-	-	-	-
6-inch Turbine	-	2150	$ 4,925.00	$ 7,075.00	$ 2,150.00	4925	$ 7,075.00
6-inch Compound	$ -	2,270.00	6,820.00	9,090.00	2,270.00	6,820.00	9,090.00
8-inch	-						
8-inch or Larger	$ 1,500.00	ICB*	ICB*	ICB*	ICB*	ICB*	ICB*

*ICB Indicates Individual Case Basis Cost.

Lago Del Oro Water Company
Docket No. W-01944A-13-0215
Test Year Ended December 31, 2012

Surrebuttal Schedule MJR-W16

Typical Bill Analysis
General Service 5/8 x 3/4-Inch Meter

Company Proposed	Gallons	Present Rates	Proposed Rates	Dollar Increase	Percent Increase
Average Usage	7,024	$ 21.44	$ 31.34	$ 9.90	46.17%
Median Usage	5,500	18.70	26.64	$ 7.94	42.43%
Staff Recommended					
Average Usage	7,024	$ 21.44	$ 29.42	$ 7.98	37.21%
Median Usage	5,500	18.70	24.85	$ 6.15	32.89%

Present & Proposed Rates (Without Taxes)
General Service 5/8 x 3/4-Inch Meter

Gallons Consumption	Present Rates	Company Proposed Rates	% Increase	Staff Recommended Rates	% Increase
-	$ 12.40	$ 14.80	19.35%	$ 14.15	14.11%
1,000	12.40	16.60	33.87%	15.70	26.61%
2,000	12.40	18.40	48.39%	17.25	39.11%
3,000	14.20	20.20	42.25%	18.80	32.39%
4,000	16.00	22.00	37.50%	20.35	27.19%
5,000	17.80	25.09	40.96%	23.35	31.18%
5,500	18.70	26.64	42.43%	24.85	32.89%
6,500	20.50	29.73	45.00%	27.85	35.85%
7,024	21.44	31.34	46.17%	29.42	37.21%
7,500	22.30	32.82	47.15%	30.85	38.34%
8,000	23.20	34.36	48.10%	32.35	39.44%
8,500	24.10	35.91	48.98%	33.85	40.46%
9,500	25.90	39.00	50.56%	36.85	42.28%
10,500	27.70	42.73	54.26%	40.39	45.81%
11,500	29.50	47.11	59.69%	44.47	50.75%
12,500	31.30	51.49	64.50%	48.55	55.11%
13,500	33.10	55.87	68.79%	52.63	59.00%
14,500	34.90	60.25	72.64%	56.71	62.49%
15,500	36.70	64.63	76.10%	60.79	65.64%
16,500	38.50	69.01	79.25%	64.87	68.49%
17,500	40.30	73.39	82.11%	68.95	71.09%
18,500	42.10	77.77	84.73%	73.03	73.47%
19,500	43.90	82.15	87.13%	77.11	75.65%
20,500	45.70	86.53	89.34%	81.19	77.66%
25,500	54.70	108.43	98.23%	101.59	85.72%
30,500	63.70	130.33	104.60%	121.99	91.51%
35,500	72.70	152.23	109.39%	142.39	95.86%
40,500	81.70	174.13	113.13%	162.79	99.25%
45,500	90.70	196.03	116.13%	183.19	101.97%
50,500	99.70	217.93	118.59%	203.59	104.20%
75,500	144.70	327.43	126.28%	305.59	111.19%
100,500	189.70	436.93	130.33%	407.59	114.86%

BEFORE THE ARIZONA CORPORATION COMMISSION

BOB STUMP
Chairman
GARY PIERCE
Commissioner
BRENDA BURNS
Commissioner
SUSAN BITTER SMITH
Commissioner
BOB BURNS
Commissioner

IN THE MATTER OF THE APPLICATION OF LAGO DEL ORO WATER COMPANY, AN ARIZONA CORPORATION, FOR A DETERMINATION OF THE FAIR VALUE OF ITS UTILITY PLANT AND PROPERTY AND FOR INCREASES IN ITS WATER RATES AND CHARGES FOR UTILITY SERVICE BASED THEREON.	)	DOCKET NO. W-01944A-13-0215

SURREBUTTAL

TESTIMONY

OF

JOHN A. CASSIDY

PUBLIC UTILITIES ANALYST

UTILITIES DIVISION

ARIZONA CORPORATION COMMISSION

EXHIBIT
S-3B
ADMITTED

MARCH 7, 2014

TABLE OF CONTENTS

		PAGE
I.	INTRODUCTION	1
II.	STAFF RESPONSE TO COMPANY'S COST OF CAPITAL WITNESS MR. THOMAS J. BOURASSA	2
III.	STAFF RECOMMENDATIONS	5

SURREBUTTAL SCHEDULES

Capital Structure and Weighted Cost of Capital JAC-1

Intentionally Left Blank JAC-2

Final Cost of Equity Estimates for Sample Water Utilities ..... JAC -3

Average Capital Structure of Sample Water Utilities ..... JAC -4

Growth in Earnings & Dividends of Sample Water Utilities ..... JAC -5

Sustainable Growth for Sample Water Utilities ..... JAC -6

Selected Financial Data of Sample Water Utilities ..... JAC -7

Calculation of Expected Infinite Annual Growth in Dividends ..... JAC -8

Multi-Stage DCF Estimates ..... JAC -9

EXECUTIVE SUMMARY
LAGO DEL ORO WATER COMPANY
DOCKET NO. W-01944A-13-0215

The surrebuttal testimony of Staff witness John A. Cassidy addresses the following issues:

Capital Structure – Staff continues to recommend that the Commission adopt a capital structure for Lago Del Oro Water Company ("Company") for this proceeding consisting of 29.0 percent debt and 71.0 percent equity.

Cost of Equity – Staff recommends that the Commission adopt a 9.7 percent return on equity ("ROE") for the Company, which is an increase from the 9.3 percent ROE Staff recommended in its direct testimony. Staff's estimated ROE for the Company is based on the 9.1 percent average of its discounted cash flow method ("DCF") cost of equity methodology estimates for the sample companies of 8.7 percent for the constant-growth DCF model and 9.5 percent for the multi-stage DCF model. Staff's recommended ROE includes an upward economic assessment adjustment of 60 basis points (0.6 percent).

Cost of Debt – Staff continues to recommend that the Commission adopt a 4.6 percent cost of debt for the Company.

Overall Rate of Return – Staff recommends that the Commission adopt an 8.2 percent overall rate of return. In direct testimony, Staff had recommended an overall rate of return of 7.9 percent.

Mr. Bourassa's Testimony – The Commission should reject the Company's proposed 10.5 percent ROE for the following reasons:

Mr. Bourassa's primary Future Growth DCF estimates rely exclusively on analysts' forecasts of earnings per share growth. Effectively, Mr. Bourassa's overall DCF estimate is weighted 75 percent by his Future Growth DCF estimates. Mr. Bourassa's proposed ROE has been inflated by an implicit upward adjustment for financial risk and small company risk premium.

I. INTRODUCTION

Q. Please state your name, occupation, and business address.

A. My name is John A. Cassidy. I am a Public Utilities Analyst employed by the Arizona Corporation Commission ("Commission") in the Utilities Division ("Staff"). My business address is 1200 West Washington Street, Phoenix, Arizona 85007.

Q. Are you the same John A. Cassidy who filed direct testimony in this case?

A. Yes, I am.

Q. What is the purpose of your surrebuttal testimony in this rate proceeding?

A. The purpose of my surrebuttal testimony is to update Staff's cost of capital recommendations and to respond to the cost of capital rebuttal testimony of Lago Del Oro Water Company ("LDO" or "Company") witness, Thomas J. Bourassa ("Mr. Bourassa's Rebuttal").

Q. Please explain how Staff's surrebuttal testimony is organized.

A. Staff's surrebuttal testimony is presented in three sections. Section I is this introduction. Section II presents Staff's comments on the rebuttal testimony of the Company's cost of capital witness, Mr. Bourassa. Lastly, Section III presents Staff's recommendations.

II. STAFF RESPONSE TO COMPANY'S COST OF CAPITAL WITNESS MR. THOMAS J. BOURASSA

Q. Please summarize the capital structure, cost of debt, cost of equity, and overall rate of return proposed in Mr. Bourassa's rebuttal.

A. In his rebuttal testimony, Mr. Bourassa has adopted Staff's recommended 29.0 percent debt / 71.0 percent equity capital structure, and Staff's recommended 4.6 percent cost of debt. Mr. Bourassa continues to recommend a 10.5 percent cost of equity for the Company. Mr. Bourassa's cost of capital recommendations result in an overall rate of return ("ROR") for LDO of 8.79 percent.

Q. Mr. Cassidy, in his rebuttal testimony Mr. Bourassa suggests that your direct testimony criticized him for relying exclusively on analysts' forecasts of earnings per share ("EPS") growth in the discounted cash flow ("DCF") model.[1] Do you consider this to be a proper characterization of your criticism of his DCF methodology?

A. No. In direct testimony, I fully acknowledge that while Mr. Bourassa's primary Future Growth DCF model relies exclusively on analysts' forecasts of EPS growth to estimate the dividend growth (g) component, his secondary Past and Future Growth DCF model does *not* so rely (instead, it gives a 50 percent weighting to historical measures of growth and a 50 percent weight to the dividend growth rate obtained from his primary Future Growth DCF model).[2] My criticism of his exclusive reliance on analysts' forecasts of EPS growth in the DCF model relates solely to his primary Future Growth DCF model. It is worth repeating, however, that Mr. Bourassa's

[1] *See* Bourassa Rebuttal, p.11, lines 3-5.
[2] *See* Cassidy Direct, pp. 33-34, lines 22:8.

overall DCF estimate effectively gives a 75 percent weight to analysts' forecasts of EPS growth.[3]

Q. In his rebuttal testimony,[4] Mr. Bourassa employs a recent 3-year historical total return statistic for the water utility industry as "evidence" that the dividend growth (g) rates used in Staff's constant growth DCF model are significantly understated. How does Staff respond?

A. Mr. Bourassa's assertion is without merit, as the "evidence" he provides is predicated on logic which erroneously assumes that realized, historical returns represent the cost of equity (K) in the constant growth DCF model. Specifically, Mr. Bourassa presents a calculation based upon a realized 11.9 percent 3-year historical annualized total return for water utility stocks, as reported by *Value Line*. Using the constant growth DCF equation (i.e., $K = (D_1/P_0) + g$), he then solves for the dividend growth (g) rate by mistakenly assuming the 11.9 percent total return figure to be the estimated cost of equity (K), and substituting Staff's 2.9 percent expected dividend yield as the value for (D_1/P_0). Based upon this calculation, Mr. Bourassa states "[t]his indicated return would *imply* a [dividend] growth rate for the DCF model of 9.0 percent (emphasis added)."[5] To demonstrate that Staff's DCF dividend growth (g) rate is "significantly understated," Mr. Bourassa then compares his *implied* 9.0 percent growth rate to Staff's actual 5.2 percent dividend growth rate.

[3] *See* Cassidy Direct, p. 34, lines 8-11.
[4] *See* Bourassa Rebuttal, p. 13, lines 4-13.
[5] *See* Bourassa Rebuttal, p. 13, lines 7-8; and p.13, footnote 21.

Q. Does Mr. Bourassa employ this same logic in his effort to justify his use of analysts' forecasts of EPS growth as a proxy for the dividend growth (g) component in the constant growth DCF model?

A. Yes. In doing so, he points out that even his 6.07 percent dividend growth rate derived from analysts' forecasts of EPS growth used in his primary Future Growth DCF model "falls far short of the implied [9.0 percent] growth rate investors have realized over the last three years." Mr. Bourassa concludes with the observation, "[w]hat this shows is that when using forecasts of earnings growth, the indicated cost of equity can vastly understate the cost of equity."[6]

Q. Do realized returns represent the cost of equity?

A. No, as stated in my direct testimony, the cost of equity represents investors' expected returns.[7] As such, the cost of equity is prospective (i.e., forward looking) in nature, whereas realized returns represent historical (i.e., backward looking) measures of performance.

Q. In light of the above, and given Mr. Bourassa's discussion in this regard, does his rebuttal testimony provide support for a conclusion that reliance on analysts' forecasts of EPS growth in the DCF model can vastly understate the cost of equity?

A. No, it does not.

[6] *See* Bourassa Rebuttal, p. 13, lines 12-13.
[7] *See* Cassidy Direct, p. 14, line 22.

Q. Mr. Cassidy, in his rebuttal testimony Mr. Bourassa takes exception to comments made by Staff in direct testimony concerning the market risk premium ("MRP") employed by Mr. Bourassa in his Current Market Risk Premium CAPM analysis. How does Staff respond?

A. In direct testimony, I pointed out that due to strength in the equity markets, *Value Line's* 3-5 year stock price appreciation estimate had fallen considerably since the filing of Mr. Bourassa's direct testimony, and that as a consequence the 9.31 percent MRP utilized in his Current MRP CAPM model was no longer reflective of current market conditions.[8] As evidenced by the filing of Mr. Bourassa's rebuttal testimony, Staff's observation in this regard has proven correct, for as shown in TJB Rebuttal Schedule D-4.12, Mr. Bourassa now reports the updated MRP in his current MRP CAPM to be 5.74 percent, a figure 357 basis points *lower* than that used in his direct testimony (9.31% - 5.74% = 3.57%). Coincidentally, this change has resulted in Mr. Bourassa's Current MRP CAPM estimated cost of equity (K) falling from 10.4 percent in direct testimony (*See* TJB Schedule D-4.12) to 8.3 percent in rebuttal (*See* TJB Rebuttal Schedule D-4.12).

III. STAFF RECOMMENDATIONS

Q. In updating its cost of capital analysis for the Company, did Staff's recommended ROE and overall ROR change from the levels recommended by Staff in direct testimony?

A. Yes. Staff now recommends a ROE of 9.7 percent instead of 9.3 percent. As a consequence of this change, Staff's recommended overall ROR increased from 7.9 percent in direct testimony to 8.2 percent in surrebuttal.

[8] *See* Cassidy Direct, pp. 40-41, lines 8:2.

Q. What factors contributed to this upward change to Staff's estimated cost of equity for LDO?

A. On January 17, 2014, *Value Line* issued its quarterly update for the publicly-traded water utility companies under its review, providing annual financial data for each of Staff's seven sample companies through the year ending December 31, 2013. Utilizing this information, Staff updated its model in order to calculate historical measures of growth in dividends per share ("DPS"), EPS and Sustainable Growth over the 10-year period, 2003-2013. As a consequence, Staff's overall average DCF cost of equity estimate increased from 8.7 percent in direct testimony to an updated 9.1 percent in surrebuttal. The increases to Staff's DCF cost of equity estimates are due, in part, to a change in the 10-year period over which historical measures of growth are calculated and, in part, to the expected dividend yield (D_1/P_0) component in Staff's constant growth DCF model having risen from 2.9 percent in direct testimony to 3.1 percent in surrebuttal.

Q. Based on Staff's review of Mr. Bourassa's rebuttal testimony, and given its updated cost of capital analysis, what are Staff's recommendations for the Company?

A. Staff recommends the following for LDO's cost of capital:

1. A capital structure of 29.0 percent debt and 71.0 percent equity.
2. A 4.6 percent cost of debt.
3. A 9.7 percent return on equity (a figure which includes an upward 60 basis point (0.6 percent) economic assessment adjustment).
4. An 8.2 percent overall rate of return.

Q. Does this conclude your surrebuttal testimony?

A. Yes, it does.

Lago Del Oro Water Company Cost of Capital Calculation
Capital Structure
And Weighted Average Cost of Capital
Staff Recommended and Company Proposed

[A]	[B]	[C]	[D]
Description	Weight (%)	Cost	Weighted Cost
Staff Recommended Structure			
Debt	29.0%	4.6%	1.3%
Common Equity	71.0%	9.7%	6.9%
Weighted Average Cost of Capital			8.2%
Company Proposed Structure			
Debt	29.0%	4.6%	1.33%
Common Equity	71.0%	10.50%	7.46%
Weighted Average Cost of Capital			8.79%

[D] : [B] x [C]

Supporting Schedules: JAC-2, JAC-3 and JAC-4.

Intentionally left blank

Lago Del Oro Water Company Cost of Capital Calculation
Final Cost of Equity Estimates
Sample Water Utilities

[A]	[B]	[C]	[D]	[E]
DCF Method	D_1/P_0 [1]	+	g [2]	=	k
Constant Growth DCF Estimate	3.1%	+	5.6%	=	8.7%
Multi-Stage DCF Estimate				=	9.5%
Average DCF Estimate					**9.1%**
			Staff's Estimated Cost of Equity		**9.1%**
			Economic Assessment Adjustment		0.6%
			Sub-Total		**9.7%**
			Financial Risk Adjustment		0.0%
			Total		**9.7%**

1 MSN Money and Value Line

2 Schedule JAC-8

Lago Del Oro Water Company Cost of Capital Calculation
Average Capital Structure of Sample Water Utilities

[A]	[B]	[C]	[D]
Company	Debt	Common Equity	Total
American States Water	43.3%	56.7%	100.0%
California Water	54.2%	45.8%	100.0%
Aqua America	55.2%	44.8%	100.0%
Connecticut Water	55.3%	44.7%	100.0%
Middlesex Water	43.1%	56.9%	100.0%
SJW Corp	56.2%	43.8%	100.0%
York Water	45.0%	55.0%	100.0%
Average Sample Water Utilities	**50.3%**	**49.7%**	**100.0%**
Chaparral City - Actual Capital Structure	**29.0%**	**71.0%**	**100.0%**

Source:
Sample Water Companies from Value Line

Lago Del Oro Water Company Cost of Capital Calculation
Growth in Earnings and Dividends
Sample Water Utilities

[A]	[B]	[C]	[D]	[E]
Company	Dividends Per Share 2003 to 2013 DPS[1]	Dividends Per Share Projected DPS[1]	Earnings Per Share 2003 to 2013 EPS[1]	Earnings Per Share Projected EPS[1]
American States Water	5.6%	7.1%	14.8%	3.8%
California Water	1.3%	8.9%	4.5%	10.2%
Aqua America	7.6%	10.2%	9.6%	6.0%
Connecticut Water	1.7%	3.4%	3.7%	2.9%
Middlesex Water	1.5%	1.5%	5.1%	3.6%
SJW Corp	4.1%	5.4%	2.8%	7.5%
York Water	4.1%	6.1%	4.8%	8.8%
Average Sample Water Utilities	**3.7%**	**6.1%**	**6.5%**	**6.1%**

1 Value Line

Lago Del Oro Water Company Cost of Capital Calculation
Sustainable Growth
Sample Water Utilities

[A]	[B]	[C]	[D]	[E]	[F]
Company	Retention Growth 2002 to 2012 br	Retention Growth Projected br	Stock Financing Growth vs	Sustainable Growth 2002 to 2012 br + vs	Sustainable Growth Projected br + vs
American States Water	3.8%	5.2%	1.5%	5.3%	6.8%
California Water	2.6%	3.4%	1.6%	4.2%	5.1%
Aqua America	4.0%	5.2%	1.8%	5.8%	7.1%
Connecticut Water	2.0%	3.6%	4.0%	6.0%	7.6%
Middlesex Water	1.3%	2.8%	2.7%	4.0%	5.5%
SJW Corp	3.3%	3.8%	0.1%	3.5%	3.9%
York Water	2.2%	3.7%	4.4%	6.6%	8.2%
Average Sample Water Utilities	**2.7%**	**4.0%**	**2.3%**	**5.1%**	**6.3%**

[B]: Value Line
[C]: Value Line
[D]: Value Line, MSN Money, and Form 10-Ks filed with the Securities and Exchange Commission (http://www.sec.gov/)
[E]: [B]+[D]
[F]: [C]+[D]

Lago Del Oro Water Company Cost of Capital Calculation
Selected Financial Data of Sample Water Utilities

[A]	[B]	[C]	[D]	[E]	[F]	[G]
Company	Symbol	Spot Price 2/5/2014	Book Value	Mkt To Book	*Value Line* Beta β	Raw Beta βraw
American States Water	AWR	**27.15**	12.01	2.3	**0.65**	0.45
California Water	CWT	**21.93**	11.81	1.9	**0.60**	0.37
Aqua America	WTR	**23.31**	8.10	2.9	**0.60**	0.37
Connecticut Water	CTWS	**32.04**	14.10	2.3	**0.75**	0.60
Middlesex Water	MSEX	**19.51**	12.17	1.6	**0.75**	0.60
SJW Corp	SJW	**27.92**	15.41	1.8	**0.85**	0.75
York Water	YORW	**19.76**	8.30	2.4	**0.70**	0.52
Average				**2.2**	**0.70**	**0.52**

[C]: Msn Money
[D]: Value Line
[E]: [C] / [D]
[F]: Value Line
[G]: (-0.35 + [F]) / 0.67

Lago Del Oro Water Company Cost of Capital Calculation
Calculation of Expected Infinite Annual Growth in Dividends
Sample Water Utilities

[A]	[B]
Description	g
DPS Growth - Historical[1]	3.7%
DPS Growth - Projected[1]	6.1%
EPS Growth - Historical[1]	6.5%
EPS Growth - Projected[1]	6.1%
Sustainable Growth - Historical[2]	5.1%
Sustainable Growth - Projected[2]	6.3%
Average	**5.6%**

1 Schedule JAC-5

2 Schedule JAC-6

Lago Del Oro Water Company Cost of Capital Calculation
Multi-Stage DCF Estimates
Sample Water Utilities

[A]	[B]	[C]	[D]	[E]	[F]	[G]	[H]
Company	Current Mkt. Price (P_o)[1] 2/5/2014	Projected Dividends[2] (Stage 1 growth) (D_t) d_1	d_2	d_3	d_4	Stage 2 growth[3] (g_n)	Equity Cost Estimate (K)[4]
American States Water	27.2	0.78	0.82	0.87	0.92	6.5%	9.3%
California Water	21.9	0.68	0.71	0.75	0.80	6.5%	9.5%
Aqua America	23.3	0.60	0.63	0.67	0.71	6.5%	9.0%
Connecticut Water	32.0	1.01	1.06	1.12	1.19	6.5%	9.6%
Middlesex Water	19.5	0.78	0.83	0.88	0.92	6.5%	10.4%
SJW Corp	27.9	0.77	0.81	0.86	0.91	6.5%	9.2%
York Water	19.8	0.58	0.61	0.65	0.68	6.5%	9.4%
						Average	**9.5%**

$$P_0 = \sum_{t=1}^{n} \frac{D_t}{(1+K)^t} + \frac{D_n(1+g_n)}{K-g_n}\left[\frac{1}{(1+K)}\right]^n$$

Where : P_0 = current stock price
D_t = dividends expected during stage 1
K = cost of equity
n = years of non – constant growth
D_n = dividend expected in year n
g_n = constant rate of growth expected after year n

1 [B] see Schedule JAC-7

2 Derived from Value Line Information

3 Average annual growth in GDP 1929 - 2012 in current dollars.

4 Internal Rate of Return of Projected Dividends

BEFORE THE ARIZONA CORPORATION COMMISSION

BOB STUMP
Chairman
GARY PIERCE
Commissioner
BRENDA BURNS
Commissioner
BOB BURNS
Commissioner
SUSAN BITTER SMITH
Commissioner

IN THE MATTER OF THE APPLICATION OF LAGO DEL ORO WATER COMPANY FOR, AN ARIZONA CORPORATION, FOR A DETERMINATION OF THE FAIR VALUE OF ITS UTILITY PLANT AND PROPERTY AND FOR INCREASES IN ITS WATER RATES AND CHARGES FOR UTILITY SERVICE BASED THEREON.	)	DOCKET NO. W-01944A-13-0215

EXHIBIT
S-3C
ADMITTED

SURREBUTTAL TESTIMONY

OF

MICHAEL THOMPSON, P. E.

UTILITIES ENGINEER

UTILITIES DIVISION

ARIZONA CORPORATION COMMISSION

MARCH 7, 2014

SURREBUTTAL TESTIMONY
LAGO DEL ORO WATER COMPANY
DOCKET NO. W-01944A-13-0215

RECOMMENDATIONS

1. Staff recommends that Lago Del Oro Water Company ("LDO" or "Company") file with Docket Control, as a compliance item in this docket and within 90 days of the effective date of a decision in this proceeding, at least seven (7) BMPs in the form of tariffs that substantially conform to the templates created by Staff for Commission's review and consideration. The templates created by Staff are available on the Commission's website at http://www.azcc.gov/Divisions/Utilities/forms.asp. LDO may request cost recovery of the actual costs associated with the BMPs implemented in its next general rate application.

2. Staff recommends that any increase in rates approved by the Commission not become effective until ADWR has determined that LDO is in compliance with departmental requirements governing water providers and/or community water systems.

TABLE OF CONTENTS

Page

INTRODUCTION 1

PURPOSE OF TESTIMONY 1

ADWR COMPLIANCE STATUS 1

BMPs 2

INTRODUCTION

Q. Please state your name and business address.

A. My name is Michael Thompson. My business address is 1200 West Washington Street, Phoenix, Arizona 85007.

Q. By whom and in what position are you employed?

A. I am employed by the Arizona Corporation Commission ("Commission" or "ACC") as a Utilities Engineer - Water/Wastewater in the Utilities Division.

Q. Did you submit Direct Testimony on behalf of the Utilities Division in this case?

A. Yes.

PURPOSE OF TESTIMONY

Q. What is the purpose of your Surrebuttal Testimony?

A. To respond to the Rebuttal Testimony filed by Ray L. Jones on behalf of LDO. My testimony addresses LDO's compliance status with ADWR, and LDO's position on Best Management Practices ("BMPs").

ADWR COMPLIANCE STATUS

Q. Does ADWR consider LDO to be in compliance with respect to LDO's Water System Plan?

A. Yes. Prior to my direct testimony, LDO had not submitted its Water System Plan to ADWR for approval. Therefore, ADWR considered LDO to be non-compliant with departmental requirements governing water providers and/or community water systems at that time. Staff recommended that any increase in rates approved by the Commission not

become effective until ADWR has determined that LDO is in compliance with departmental requirements governing water providers and/or community water systems. Since my direct testimony, LDO has submitted its Water System Plan to ADWR and ADWR currently considers LDO to be in compliance with respect to its Water System Plan.

Q. Is LDO currently in compliance with ADWR with regards to its Well Permits?

A. No. Since my direct testimony, a recent ADWR Water Provider Compliance Report, dated January 14, 2014, indicates that LDO is now non-compliant with departmental requirements governing water providers and/or community water systems for a different reason. LDO's well No. 55-573651 (LDO Well No. 19) has not been permitted as a service well by ADWR.

Q. Does Staff have a recommendation regarding LDO's current Compliance Status?

A. Yes. Because of the recent non-compliance regarding LDO Well No. 19, Staff continues to recommend that any increase in rates approved by the Commission not become effective until ADWR has determined that LDO is in compliance with departmental requirements governing water providers and/or community water systems.

BMPS

Q. What is LDO's position on BMPs?

A. Mr. Jones stated that LDO does not agree with Staff's recommendation because it is excessive and duplicative, taking LDO beyond what is required by the Arizona Department of Water Resources' ("ADWR"). Mr. Jones also stated the Company is already enrolled with ADWR's Modified Non-Per Capita Conservation Program

("Modified NPCCP") that requires LDO to implement the Public Education Program ("PEP") and one additional BMP. Staff recommends that LDO file at least seven BMPs in the form of tariffs that substantially conform to the templates created by Staff for Commission review and approval.

Q. First, could you provide a brief background of the BMPs?

A. Yes. In 2008, ADWR added a new regulatory program for the ADWR Third Management Plan for Active Management Areas ("AMAs"). The new program, called Modified NPCCP, addresses large municipal water providers (cities, towns and private water companies serving more than 250 acre-feet per year) and was developed in conjunction with stakeholders from all AMAs. Participation in the program is required for all large municipal water providers in AMAs that do not have a Designation of Assured Water Supply and that are not regulated as a large untreated water provider or an institutional provider.

The Modified NPCCP is a performance-based program that requires participating providers to implement water conservation measures that result in water use efficiency in their service areas. A water provider regulated under the program must implement a required PEP and choose one or more additional BMPs based on its size, as defined by its total number of water service connections. The provider must select the additional BMPs from the list included in the Modified NPCCP Program. The BMPs are a mix of technical, policy, and information conservation efforts.

Although the implementation of the Modified NPCCP is required of large municipal water providers within an AMA, the Staff has recommended adoption of the BMPs for implementation by Commission-regulated water companies.

Q. Could you also provide a background on how Staff decided on the number of BMPs it is recommending in this case?

A. Yes. In April of 2011, Staff had in-house discussions regarding the implementation of BMPs. Based on the knowledge of ADWR's requirements to implement the Modified NPCCP (a PEP and one or more additional BMPs based on the customer base size) and the understanding of some Commissioners' desire for additional BMPs above a water company's ADWR requirements, it was decided by the Utilities Director to recommend the number of BMPs based on the size of a water utility as follows:

Class A – 10 BMPs

Class B – 7 BMPs

Class C – 5 BMPs

Class D & E – 3 BMPs

With the adoption of this guideline, Staff was primarily looking for consistency when recommending the number of BMPs to be implemented for a water utility.

Q. Do you agree that filing the BMPs with the Commission is duplication of State regulatory oversight?

A. No, I do not. Basically, the difference between the ADWR and ACC filing is the ACC requires the BMPs to be filed in tariff form. The ACC requires the BMPs be filed in tariff form for implementation, notification of water company/customer requirements,

and notification of steps for service termination, if needed. The ADWR filing does not address these issues. Having ACC approved BMP tariffs gives water companies more tools to prevent water loss, at a little to no extra cost to the Company. BMPs also assist customers in using water more efficiently and not wasting it, thereby preventing excessively high bills.

Q. Are you aware of another State regulation under the terms of which the Commission requires water utilities to file a tariff with the ACC for implementation?

A. Yes, the Backflow Prevention Tariff. The backflow prevention program falls under the Arizona Department of Environment Quality ("ADEQ") regulation and, if a water utility is to implement this ADEQ requirement, the water utility must file this Backflow Prevention Tariff for implementation, notification of water company/customer requirements, and notification of steps for service termination, if needed.

Q. Based on the Company's Rebuttal Testimony, has Staff's recommendation regarding the BMPs changed?

A. No. Staff still recommends that the Company file with Docket Control, as a compliance item in this docket, within 90 days of the effective date of a decision in this proceeding, at least seven BMPs in the form of tariffs that substantially conform to the templates created by Staff for Commission review and approval. These BMP templates are available on the Commission's website. The Company may submit the two approved ADWR BMPs as part of the seven and may request recovery of the actual costs associated with the implemented BMPs in its next general rate application.

Q. Does this conclude your Surrebuttal Testimony?

A. Yes, it does.

EXHIBIT
S-4
ADMITTED

Monthly Usage Charge	Present	Company Proposed Rates	Staff Recommended Rates [1]
Meter Size (All Classes):			
5/8 x 3/4 Inch	12.40	14.80	14.15
3/4 Inch	12.40	14.80	14.15
1 Inch	18.00	24.67	23.59
1 1/2 Inch	28.00	49.33	47.16
2 Inch	40.00	78.93	75.46
3 Inch	62.00	157.87	150.94
4 Inch	84.00	246.67	235.84
5 Inch	106.00	Remove	NT
6 Inch	128.00	493.33	471.66
8 Inch	150.00	789.33	754.66
Golf Course Irrigation	-	200.00	200.00
Construction Hydrant	NT	NT	NT
Gallons in Minimum	2,000	-	-
Commodity Charge - Per 1,000 Gallons All Classes			
5/8" x 3/4" Meter			
All classes over Minimum	1.80	N/A	N/A
First 4,000 gallons	N/A	1.80	1.55
4,001 to 10,000 gallons	N/A	3.09	3.06
Over 10,000 gallons	N/A	4.38	4.08
Commercial, Irrigation (except golf course irrigation)			
First 10,000 gallons			
Over 10,000 gallons			
3/4" Meter			
All classes over Minimum	1.80	N/A	N/A
Residential:			
First 4,000 gallons	N/A	1.80	1.55
4,001 to 10,000 gallons	N/A	3.09	3.06
Over 10,000 gallons	N/A	4.38	4.08
Commercial, Irrigation (except golf course irrigation)			
First 10,000 gallons	N/A	3.09	3.06
Over 10,000 gallons	N/A	4.38	4.08
1" Meter			
All classes over Minimum	1.80	N/A	N/A
All Classes except golf course irrigation, hydrant			
First 17,000 gallons	N/A	3.09	3.06
Over 17,000 gallons	N/A	4.38	4.08
1 1/2" Meter			
All classes over Minimum	1.80	N/A	N/A
All Classes except golf course irrigation, hydrant			
First 34,000 gallons	N/A	3.09	3.06
Over 34,000 gallons	N/A	4.38	4.08
2" Meter			
All classes over Minimum	1.80	N/A	N/A
All Classes except golf course irrigation, hydrant			
First 54,000 gallons	N/A	3.09	3.06
Over 54,000 gallons	N/A	4.38	4.08
3" Meter			
All classes over Minimum	1.80	N/A	N/A
All Classes except golf course irrigation, hydrant			
First 107,000 gallons	N/A	3.09	3.06
Over 107,000 gallons	N/A	4.38	4.08
4" Meter			
All classes over Minimum	1.80	N/A	N/A
All Classes except golf course irrigation, hydrant			
First 167,000 gallons	N/A	3.09	3.06
Over 167,000 gallons	N/A	4.38	4.08
6" Meter			
All classes over Minimum	1.80	N/A	N/A
All Classes except golf course irrigation, hydrant			
First 334,000 gallons	N/A	3.09	3.06

Over 334,000 gallons	N/A	4.38	4.08
8" Meter			
All classes over Minimum	1.80	N/A	N/A
All Classes except golf course irrigation, hydrant			
First 534,000 gallons	N/A	3.09	3.06
Over 534,000 gallons	N/A	4.38	4.08
Golf Course Irrigation			
All Gallons	0.37	0.85	0.85
Hydrant/Construction			
All Gallons	N/T	4.38	4.08
Monthly Service Charge for Fire Sprinkler			
Up to 8"	NT	NT	Per Rule*

*2% of monthly minimum for a comparable size meter connection, but no less than $10.00 per month. The service charge for fire sprinklers is only applicable for service lines separate and distinct for the primary water service line.

Other Service Charges:

Establishment	$ 25.00	$ 25.00	$ 25.00
Establishment (After Hours)	$ 30.00	N/T	N/T
Reconnection (Delinquent)	$ 25.00	$ 25.00	$ 25.00
Meter Reread(If Correct)	$ 15.00	$ 15.00	$ 15.00
Meter Test (If Correct)	$ 30.00	$ 30.00	$ 30.00
Deposit	**	**	**
Deposit Interest	**	***	***
Reestablishment (within 12 months)	***	***	***
NSF Check	$ 10.00	$ 10.00	$ 10.00
Late Payment Penalty	N/T	1.5% per month	1.5% per month
Deferred Payment	1.5% per month	1.5% per month	1.5% per month
Moving Meter at Customer Request	N/T	N/T	N/T
Service Calls - Per Hour	N/T	N/T	N/T
After Hours Service Charge	N/T	$ 30.00	30.00

* Per Commission Rule A.A.C. R-14-2-403(B)
** Per Commission Rule A.A.C. R-14-2-403(B)
*** Per Commission Rule A.A.C. R-14-2-403(D) - Months off the system times the monthly minimum.

(a) No charge for service calls during normal working hours.

In addition to the collection of regular rates, the utility will collect from its customers a proportionate share of any privilege, sales, use, and franchise tax. Per commission rule 14-2-409D(5).

Service and Meter Installation Charges

	Total Present Charge	Proposed Service Line	Proposed Meter	Total Proposed Charge	Recommended Service Line	Recommended Meter Insallation	Total Recommended
5/8 x 3/4-inch	$ 250.00	$ 385.00	$ 135.00	$ 520.00	$ 415.00	$ 155.00	$ 570.00
3/4-inch	$ 275.00	$ 415.00	$ 205.00	$ 620.00	$ 415.00	$ 205.00	$ 620.00
1-inch	$ 300.00	$ 465.00	$ 265.00	$ 730.00	$ 465.00	$ 265.00	$ 730.00
1-1/2-inch	$ 450.00	520.00	475.00	995.00	520.00	475.00	995.00
2-inch	625.00	-		-	-	-	-
2-inch Turbine	-	$ 800.00	995.00	$ 1,795.00	$ 800.00	$ 995.00	$ 1,795.00
2-inch Compound	$ -	800.00	1,840.00	2,640.00	800.00	1,840.00	2,640.00
3-inch	800.00	-	-	-	-	-	-
3-inch Turbine	-	$ 1,015.00	$ 1,620.00	$ 2,635.00	$ 1,015.00	$ 1,620.00	$ 2,635.00
3-inch Compound	$ -	1,135.00	2,495.00	3,630.00	1,135.00	2,495.00	3,630.00
4-inch	975.00	-	-	-	-	-	-
4-inch Turbine	-	$ 1,430.00	$ 2,570.00	$ 4,000.00	$ 1,430.00	$ 2,570.00	$ 4,000.00
4-inch Compound	$ -	1,610.00	3,545.00	5,155.00	1,610.00	3,545.00	5,155.00
5-inch	$ 1,150.00	-	-	-	-	-	-
6-inch	1,325.00	-	-	-	-	-	-
6-inch Turbine	-	2150	$ 4,925.00	$ 7,075.00	$ 2,150.00	4925	$ 7,075.00
6-inch Compound	$ -	2,270.00	6,820.00	9,090.00	2,270.00	6,820.00	9,090.00
8-inch	-						
8-inch or Larger	$ 1,500.00	ICB*	ICB*	ICB*	ICB*	ICB*	ICB*

*ICB Indicates Individual Case Basis Cost.

Lago Del Oro Water Company
Docket No. W-01944A-13-0215
Test Year Ended December 31, 2012

REVISED Surrebuttal Schedule MJR-W16

Typical Bill Analysis
General Service 5/8 x 3/4-Inch Meter

Company Proposed	Gallons	Present Rates	Proposed Rates	Dollar Increase	Percent Increase
Average Usage	7,024	$ 21.44	$ 31.34	$ 9.90	46.17%
Median Usage	5,500	18.70	26.64	$ 7.94	42.43%
Staff Recommended					
Average Usage	7,024	$ 21.44	$ 29.60	$ 8.16	38.06%
Median Usage	5,500	18.70	24.94	$ 6.24	33.37%

Present & Proposed Rates (Without Taxes)
General Service 5/8 x 3/4-Inch Meter

Gallons Consumption	Present Rates	Company Proposed Rates	% Increase	Staff Recommended Rates	% Increase
-	$ 12.40	$ 14.80	19.35%	$ 14.15	14.11%
1,000	12.40	16.60	33.87%	15.70	26.61%
2,000	12.40	18.40	48.39%	17.25	39.11%
3,000	14.20	20.20	42.25%	18.80	32.39%
4,000	16.00	22.00	37.50%	20.35	27.19%
5,000	17.80	25.09	40.96%	23.41	31.52%
5,500	18.70	26.64	42.43%	24.94	33.37%
6,500	20.50	29.73	45.00%	28.00	36.59%
7,024	21.44	31.34	46.17%	29.60	38.06%
7,500	22.30	32.82	47.15%	31.06	39.28%
8,000	23.20	34.36	48.10%	32.59	40.47%
8,500	24.10	35.91	48.98%	34.12	41.58%
9,500	25.90	39.00	50.56%	37.18	43.55%
10,500	27.70	42.73	54.26%	40.75	47.11%
11,500	29.50	47.11	59.69%	44.83	51.97%
12,500	31.30	51.49	64.50%	48.91	56.26%
13,500	33.10	55.87	68.79%	52.99	60.09%
14,500	34.90	60.25	72.64%	57.07	63.52%
15,500	36.70	64.63	76.10%	61.15	66.62%
16,500	38.50	69.01	79.25%	65.23	69.43%
17,500	40.30	73.39	82.11%	69.31	71.99%
18,500	42.10	77.77	84.73%	73.39	74.32%
19,500	43.90	82.15	87.13%	77.47	76.47%
20,500	45.70	86.53	89.34%	81.55	78.45%
25,500	54.70	108.43	98.23%	101.95	86.38%
30,500	63.70	130.33	104.60%	122.35	92.07%
35,500	72.70	152.23	109.39%	142.75	96.35%
40,500	81.70	174.13	113.13%	163.15	99.69%
45,500	90.70	196.03	116.13%	183.55	102.37%
50,500	99.70	217.93	118.59%	203.95	104.56%
75,500	144.70	327.43	126.28%	305.95	111.44%
100,500	189.70	436.93	130.33%	407.95	115.05%