RECEIVED

2013 DEC 18 P 2: 17

AZ CORP COMMISSION
DOCKET CONTROL

0000151193

Transcript Exhibit(s)

Docket #(s): SW-01428A-13-0042

W-01427A-13-0043

Exhibit #: S1-S10, R1-R4

Part 1 of 6. FOR PART 2 SEE BARCODE 0000151194, FOR PART 3 SEE BARCODE 0000151195, FOR PART 4 SEE BARCODE 0000151196, FOR PART 5 SEE BARCODE 0000151197, FOR PART 6 SEE BARCODE 0000151198

Arizona Corporation Commission
DOCKETED
DEC 18 2013
DOCKETED BY nR

Arizona Court Reporters Association

Arizona Reporting Service, Inc.

Court Reporting & Videoconferencing Center

NCRA ETHICS FIRST

e-mail: azrs@az-reporting.com
www.az-reporting.com

Marta T. Hetzer
Administrator/Owner

Suite 502
2200 North Central Avenue
Phoenix, AZ 85004-1481
MAIN (602) 274-9944
FAX (602) 277-4264

To: Docket Control

Date: December 18, 2013

Re: Litchfield Park Service / Rates
SW-01428A-13-0042
Volumes I through II, Concluded
December 13 and 16, 2013

STATUS OF ORIGINAL EXHIBITS

FILED WITH DOCKET CONTROL

Litchfield Park Service Company (A Exhibits)

A-1 through A-24

Residential Utility Consumer Office (RUCO Exhibits)

R-1 through R-4, R-7 through R-10

Staff (S Exhibits)

S-1 through S-10

EXHIBITS RETURNED TO PARTIES

Residential Utility Consumer Office (RUCO Exhibits)

R-5	Not offered [by design or oversight]
R-6	Not offered [by design or oversight]

LATE-FILED EXHIBITS

Litchfield Park Service Company (A Exhibits)

A-25 and A-26

Copy to:

Teena Jibilian, ALJ
All parties present during the hearing

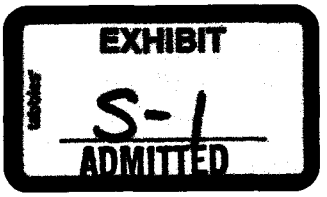

BEFORE THE ARIZONA CORPORATION COMMISSION

BOB STUMP
Chairman
GARY PIERCE
Commissioner
BRENDA BURNS
Commissioner
BOB BURNS
Commissioner
SUSAN BITTER SMITH
Commissioner

IN THE MATTER OF THE APPLICATION OF LITCHFIELD PARK SERVICE CORPORATION AN ARIZONA CORPORATION, FOR A DETERMINATION OF THE CURRENT FAIR VALUE OF ITS UTILITY PLANT AND PROPERTY AND FOR INCREASES IN ITS WASTEWATER AND CHARGES FOR UTILITY SERVICE BASED THERON	DOCKET NO. SW-01428A-13-0042
IN THE MATTER OF THE APPLICATION OF LITCHFIELD PARK SERVICE CORPORATION AN ARIZONA CORPORATION, FOR A DETERMINATION OF THE CURRENT FAIR VALUE OF ITS UTILITY PLANT AND PROPERTY AND FOR INCREASES IN ITS WATER AND CHARGES FOR UTILITY SERVICE BASED THERON	DOCKET NO. W-01427A-13-0043

DIRECT TESTIMONY

OF

JAMES R. ARMSTRONG

CHIEF OF FINANCIAL AND REGULATORY ANALYSIS

UTILITIES DIVISION

ARIZONA CORPORATION COMMISSION

DECEMBER 12, 2013

Q. Please state your name, occupation, and business address.

A. My name is James R. Armstrong. I am the Chief of Financial and Regulatory Analysis employed by the Arizona Corporation Commission ("ACC" or "Commission") in the Utilities Division ("Staff"). My business address is 1200 West Washington, Phoenix, Arizona 85007.

Q. Please describe your educational background and professional experience.

A. I hold a Bachelor of Science degree with a concentration in Finance, and a Master of Business Administration degree with a concentration in Accounting, both from Kansas State University. I am also a Certified Public Accountant. My professional experience includes serving on the staff of the Kansas Corporation Commission, the staff of the Residential Utility Consumer's Office in Arizona, and on the staff of the Oklahoma Corporation Commission. In addition, I worked as Manager of Rates for Oklahoma Natural Gas Company for approximately twelve years, and for approximately two years, I was a regulatory consultant to Westar Energy operating out of Topeka, Kansas. I joined the ACC Staff in September, 2012 as the Chief Accountant for the Utilities Division.

Q. What is the purpose of your testimony?

A. The purpose of my testimony is to address the reasons why Staff is not a signatory to the Settlement Agreement ("Agreement") between the Residential Utility Consumer Office ("RUCO") and Litchfield Park Service Company ("LPSCO" or "Company").

Q. Did Staff participate in the settlement discussions?

A. Yes, Staff participated and assisted in the drafting of certain schedules relating to rate design, however, Staff was not involved in all discussions.

Q. Will there be other Staff witnesses providing testimony in this case?

A. Yes. Dorothy Hains will testify on engineering issues relating to the Company's request for a System Improvement Benefits surcharge. Darron Carlson will testify on any remaining questions regarding the Purchase Power Adjustor Mechanism and the Declining Use Adjustment.

Q. Did Staff have an opportunity to review the Agreement?

A. Yes.

Q. Why did Staff choose not to be a signatory to the Agreement?

A. Staff has no opposition to any of the terms contained in the Agreement. At the time of the filing of the Company's rejoinder testimony, Staff had limited number of unresolved issues with the Company. Because of the narrow list of unresolved issues, Staff believes that, in time, a result very similar to the resolution reached in this Agreement could have been achieved through stipulation between the Company and Staff. Simply having Staff stipulate to the terms contained in the existing Agreement was viewed as preferable and more efficient than engaging in more negotiation because the settlement process can be complex and can take a considerable amount of time.

Q. Does Staff recommend that the Commission adopt the Agreement?

A. Yes.

Q. Does this conclude your testimony?

A. Yes, it does.

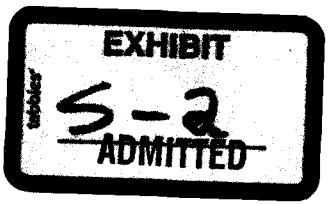

BEFORE THE ARIZONA CORPORATION COMMISSION

BOB STUMP
Chairman
GARY PIERCE
Commissioner
BRENDA BURNS
Commissioner
BOB BURNS
Commissioner
SUSAN BITTER SMITH
Commissioner

IN THE MATTER OF THE APPLICATION OF LITCHFIELD PARK SERVICE CORPORATION AN ARIZONA CORPORATION, FOR A DETERMINATION OF THE CURRENT FAIR VALUE OF ITS UTILITY PLANT AND PROPERTY AND FOR INCREASES IN ITS WASTEWATER AND CHARGES FOR UTILITY SERVICE BASED THERON	DOCKET NO. SW-01428A-13-0042
IN THE MATTER OF THE APPLICATION OF LITCHFIELD PARK SERVICE CORPORATION AN ARIZONA CORPORATION, FOR A DETERMINATION OF THE CURRENT FAIR VALUE OF ITS UTILITY PLANT AND PROPERTY AND FOR INCREASES IN ITS WATER AND CHARGES FOR UTILITY SERVICE BASED THERON	DOCKET NO. W-01428A-13-0043

DIRECT TESTIMONY

OF

DOROTHY HAINS, P. E.

UTILITIES ENGINEER

UTILITIES DIVISION

ARIZONA CORPORATION COMMISSION

SEPTEMBER 26, 2013

TABLE OF CONTENTS

	Page
INTRODUCTION	1
PURPOSE OF TESTIMONY	2
ENGINEERING REPORT	3
RECOMMENDATIONS AND CONCLUSIONS	6
LPSC-W	6
LPSC-WW	8

EXHIBITS

Engineering Report for Litchfield Park Service Company Water Division DMH-1

Engineering Report for Litchfield Park Service Company Wastewater Division DMH-2

INTRODUCTION

Q. Please state your name and business address.

A. My name is Dorothy Hains. My business address is 1200 West Washington Street, Phoenix, Arizona 85007.

Q. By whom and in what position are you employed?

A. I am employed by the Arizona Corporation Commission ("Commission" or "ACC") as a Utilities Engineer - Water/Wastewater in the Utilities Division.

Q. How long have you been employed by the Commission?

A. I have been employed by the Commission since January 1998.

Q. What are your responsibilities as a Utilities Engineer - Water/Wastewater?

A. My main responsibilities are to inspect, investigate and evaluate water and wastewater systems. This includes obtaining data, preparing reconstruction cost new and/or original cost studies, investigative reports, interpreting rules and regulations, and to suggest corrective action and provide technical recommendations on water and wastewater system deficiencies. I also provide written and oral testimony in rate cases and other cases before the Commission.

Q. How many companies have you analyzed for the Utilities Division?

A. I have analyzed more than 90 companies fulfilling these various responsibilities for Commission Utilities Division Staff ("Staff").

Q. Have you previously testified before this Commission?

A. Yes, I have testified on numerous occasions before this Commission.

Q. What is your educational background?

A. I graduated from the University of Alabama in Birmingham in 1987 with a Bachelor of Science degree in Civil Engineering.

Q. Briefly describe your pertinent work experience.

A. Before my employment with the Commission, I was an Environmental Engineer for the Arizona Department of Environmental Quality ("ADEQ") for ten years. Prior to that time, I was an Engineering Technician with C. F. Hains, Hydrology in Northport, Alabama for approximately five years.

Q. Please state your professional membership, registrations, and licenses.

A. I have been a registered Civil Engineer in Arizona since 1990. I am a member of the American Society of Civil Engineering, American Water Works Association and Arizona Water Association.

PURPOSE OF TESTIMONY

Q. What was your assignment in this rate proceeding?

A. My assignment was to provide Staff's engineering evaluations for the subject Litchfield Park Service Company rate proceedings for its Water Division ("LPSC-W") and for its Wastewater Division ("LPSC-WW").

Q. What is the purpose of your testimony in this proceeding?

A. To present the findings of Staff's engineering evaluation of the operations for LPSC –W and LPSC-WW. The findings are contained in the Engineering Reports that I have prepared for this proceeding. The reports are included as Exhibits DMH-1 and DMH-2 in this pre-filed testimony.

ENGINEERING REPORT

LPSC-W

Q. Would you briefly describe what was involved in preparing your Engineering Report for this rate proceeding?

A. After reviewing the applications for LPSC-W, I physically inspected the water system in LPSC-W to evaluate their operation and to determine if any plant items were not used and useful. I contacted the Maricopa County Department of Environmental Services ("MCDES") to determine if the water system was in compliance with the Safe Drinking Water Act water quality requirements. I also contacted the Arizona Department of Water Resources ("ADWR") to determine if the water systems were in compliance with ADWR's requirements governing water providers and/or community water systems. After I obtained information from LPSC-W regarding plant improvements, permits, chemical testing expenses, water usage data and tariff modifications, I analyzed that information. Based on all the above, I prepared the attached Engineering Report for LPSC-W.

Q. Did LPSC-W proposed a Distribution System Improvement Charge ("DSIC") mechanism for water in its application?

A. Yes.

Q. Is Staff recommending approval of a DSIC mechanism in this case?

A. No. Staff would not recommend approval of a DSIC mechanism but has been working with the Company on a System Improvement Benefits ("SIB") mechanism for LPSC-W.

Q. Is Staff recommending SIB approval for LPSC-W at this time?

A. No. LPSC-W is finalizing the documentation to support its request for a SIB mechanism which Staff expects will be docketed soon. Staff will review the documentation and file its recommendation with its rate design testimony.

Q. Please describe the information contained in your Engineering Report for LPSC-W.

A. The Reports are divided into three general sections: 1) *Executive Summary*, 2) *Engineering Report Discussion*, and 3) *Engineering Report Exhibits*. *The Engineering Report Discussion* can be further divided into eleven subsections: A) Purpose of Report; B) Location Of The Company; C) Description of System; D) Water Usage; E) Growth Projection; F) MCDES Compliance; G) ADWR Compliance; H) ACC compliance; I) Water Testing Expenses; J) Depreciation Rates; and (K) Other Issues. These subsections provide information about the water systems serving LPSC-W.

LPSC-WW

Q. Would you briefly describe what was involved in preparing your Engineering Report for this rate proceeding?

A. After reviewing the applications for LPSC-WW, I physically inspected the wastewater system in LPSC-WW to evaluate their operation and to determine if any plant items were not used and useful. I contacted ADEQ to determine if the wastewater system was in compliance with the monitoring and reporting requirements for the Aquifer Protection

Permit, Reuse Permits and Arizona Pollutant Discharge Elimination System Permit. After I obtained information from LPSC-W regarding plant improvements, permits, chemical testing expenses, inflow/effluent discharge flow data, tariff modifications and post- test year construction, I analyzed that information. Based on all the above, I prepared the attached Engineering Report for LPSC-WW.

Q. Did LPSC-WW propose a Collection System Improvement Charge ("CSIC") mechanism for wastewater in its application?

A. Yes.

Q. Is Staff recommending approval of a CSIC mechanism in this case?

A. No. Staff would not recommend approval of a CSIC mechanism but has been working with the Company on a SIB mechanism for LPSC-WW.

Q. Is Staff recommending SIB approval for LPSC-WW at this time?

A. No. LPSC-WW is finalizing the documentation to support its request for a SIB mechanism which Staff expects will be docketed soon. Staff will review the documentation and file its recommendation with its rate design testimony.

Q. Please describe the information contained in your Engineering Report for LPSC-WW.

A. The Report is divided into three general sections: 1) *Executive Summary*, 2) *Engineering Report Discussion*, and 3) *Engineering Report Exhibits*. *The Engineering Report Discussion* can be further divided into eleven subsections: A) Purpose of Report; B) Location of the LPSC-WW; C) Description of System; D) Wastewater Flow; E)

Growth Projection; F) ADEQ Compliance; G) ACC compliance; H) Wastewater Testing Expenses; I) Depreciation Rates; and J) Other Issues. These subsections provide information about the wastewater system serving LPSC-WW.

RECOMMENDATIONS AND CONCLUSIONS

Q. What are Staff's conclusions and recommendations regarding to the operations of LPSC-W and LPSC-WW?

A. Staff's conclusions and recommendations regarding the LPSC-W's and LPSC-WW's operations are listed below.

LPSC-W

Recommendations:

I. Staff recommends estimated annual water testing costs of $62,478 for LPSC-W.

II. Staff recommends the depreciation rates by individual National Association of Regulatory Utility Commissioners category, as delineated in Figure 6 in Report DMH-1.

III. Staff recommends approval of the meter and service line installation charges listed under the columns labeled "Staff Recommendation" in Table 5 in Report DMH-1.

IV. Staff recommends approval of the revised Off Site Hookup Fee Tariff for Water in Figure 7 in Report DMH-1.

V. Staff recommends that the plant items listed in Table 8 in Report DMH-1 be reclassified for accounting purposes as indicated.

VI. After discussions with Staff, the LPSC-W has agreed to implement the five BMP tariffs included in the attachment labeled Figure 8. Currently, LPSC-W has five approved BMP Tariffs on file with the Commission. With the addition of the five new BMPs, LPSC-W will have a total of ten water conservation measures. Staff recommends that LPSC-W file the five BMP tariffs included in Figure 8 with Docket Control, as a compliance item in this docket within 45 days of the effective date of the decision in this proceeding.

Conclusions:

I. A check of the Commission's Compliance Section database dated June 6, 2013, indicated that LPSC-W had no ACC delinquent compliance items.

II. LPSCO-W is in the ADWR Phoenix Active Management Area. Staff received a Compliance Status Report from ADWR for LPSC-W on March 15, 2013. In its report ADWR stated that LPSC-W is compliant with departmental requirements governing water providers and/or community water systems.

III. In a Compliance Status Report dated March 25, 2013, MCESD reported that LPSC-W had no major deficiencies and was delivering water that meets water quality standards required by 40 CFR 141 (National Primary Drinking Water Regulations) and Arizona Administrative Code, Title 18, Chapter 4.

IV. LPSCO-W has approved cross connection, curtailment and five BMP tariffs on file with the Commission.

V. LPSCO-W has adequate production and storage capacities to support its existing customer base and reasonable growth.

VI. LPSCO-W had 9.36 percent water loss during the test year which is within the allowable limit of 10 percent.

VII. The plant items and the related expenses listed in Table 6 in Report DMH-1 are future plant not currently used and useful to LPSC-W for provision of service.

VIII. The plant related expenses listed in Table 7 in Report DMH-1 were in service prior to the Company's 2009 rate case.

IX. Staff has reviewed the 2013 Litchfield Park Water and Wastewater Facilities Assessment Report. Staff found the LPSC-W proposed 5-year infrastructure replacement plan at a cost of $9,160,400 reasonable and appropriate. However, no "used and useful" determination of the proposed plant items was made, and no conclusions should be inferred for rate making or rate base purposes in the future.

LPSC-WW

Recommendations:

I. Staff recommends estimated annual water testing costs of $22,005 for LPSC-WW.

II. Staff recommends the depreciation rates by individual National Association of Regulatory Utility Commissioners category, as delineated in Figure 6 in Report DMH-2.

III. Staff recommends annual sludge testing cost of $3,410.

IV. Staff recommends that the plant items listed in Table 6 in Report DMH-2 be reclassified for accounting purposes as indicated.

V. Staff recommends denial of LPSC-WW's proposed modification to its existing Off-site Hookup Fee Tariff for wastewater.

Conclusions:

I. A check of the Commission's Compliance Section database dated June 6, 2013, indicated that LPSC-WW had no ACC delinquent compliance items.

II. In a Compliance Status Report dated April 3, 2013, ADEQ reported that LPSC-WW's Palm Valley Water Reclamation Facility ("WRF") was in total compliance with ADEQ regulations.

III. The Palm Valley WRF has adequate treatment capacity to serve the present customer base and reasonable growth.

IV. The LPSC-WW Equalization Basin Rehabilitation Project is not used and useful.

V. All expenses and capital improvement costs related to future Sarival Wastewater Treatment Plant and future final effluent recharge feasibility study are not used and useful to LPSC-WW for provision of service.

VI. Staff has reviewed the 2013 Litchfield Park Water and Wastewater Facilities Assessment Report. Staff found the LPSC-WW proposed 5-year infrastructure replacement plan at a cost of $10,337,600 reasonable and appropriate. However, no "used and useful"

determination of the proposed plant items was made, and no conclusions should be inferred for rate making or rate base purposes in the future.

Q. Does this conclude your Direct Testimony?

A. Yes, it does.

Engineering Report
Litchfield Park Service Co. - Water Division
Prepared By
Dorothy Hains, P. E.
Docket Nos. W-01428A-13-0043 (Rates)

September 25, 2013

EXECUTIVE SUMMARY

Recommendations:

1. Arizona Corporation Commission ("ACC" or "Commission") Utilities Division Staff ("Staff") recommends estimated annual water testing costs of $62,478 for Litchfield Park Service Co. – Water Division ("LPSC-W" or "Company"). (See §I and Table 4 for discussion and details.)

2. Staff recommends the depreciation rates by individual National Association of Regulatory Utility Commissioners category, as delineated in Figure 6. (See §J and Figure 6 for a discussion and a tabulation of the recommended rates.)

3. Staff recommends approval of the meter and service line installation charges listed under the columns labeled "Staff Recommendation" in Table 5. (See §K of report for discussion and details.)

4. Staff recommends approval of the revised Off Site Hookup Fee Tariff for Water in Figure 7. (See §K for discussion and details.)

5. Staff recommends that the plant items listed in Table 8 be reclassified for accounting purposes as indicated. (See §K for discussion and details.)

6. After discussions with Staff, the Company has agreed to implement the five BMP tariffs included in the attachment labeled Figure 8. Currently, the Company has five approved BMP Tariffs on file with the Commission. With the addition of the five new BMPs, LPSC-W will have a total of ten water conservation measures. Staff recommends that LPSC-W file the five BMP tariffs included in Figure 8 with Docket Control, as a compliance item in this docket within 45 days of the effective date of the decision in this proceeding. (See §K for discussion and details.)

Conclusions:

1. A check of the Commission's Compliance Section database dated June 6, 2013, indicated that LPSC-W had no ACC delinquent compliance items. (See §H of report for discussion and details.)

2. LPSCO-W is in the Arizona Department of Water Resources ("ADWR") Phoenix Active Management Area. Staff received a Compliance Status Report from ADWR for LPSC - W on March 15, 2013. In its report, ADWR stated that the Company is compliant with departmental requirements governing water providers and/or community water systems. (See §G of report for discussion and details.)

3. In a Compliance Status Report dated March 25, 2013, Maricopa County Environmental Services Department ("MCESD") reported that LPSC-W had no major deficiencies and was delivering water that meets water quality standards required by 40 CFR 141 (National Primary Drinking Water Regulations) and Arizona Administrative Code, Title 18, Chapter 4. (See §F of report for discussion and details.)

4. LPSCO-W has approved cross connection, curtailment and five BMP tariffs on file with the Commission. (See §K of report for discussion and details.)

5. LPSCO-W has adequate production and storage capacities to support its existing customer base and reasonable growth. (See §C of report for discussion and details.)

6. LPSCO-W had 9.36 percent water loss during the test year which is within the allowable limit of 10 percent. (See §F report for discussion and details.)

7. The plant items and the related expenses listed in Table 6 are future plant not currently used and useful to LPSCO-W provision of service. (See §K of report for discussion and details.)

8. The plant related expenses listed in Table 7 were in service prior to the Company's 2009 rate case. (See §K of report for discussion and details.)

9. Staff found the proposed 5-year infrastructure replacement plan at a cost of $9,160,400 to be reasonable and appropriate. However, no "used and useful" determination of the proposed plant items was made, and no conclusions should be inferred for rate making or rate base purposes in the future. (See §K for discussion and details.)

TABLE OF CONTENTS

Page

A. PURPOSE OF REPORT 1

B. LOCATION OF THE COMPANY 1

C. DESCRIPTION OF SYSTEM 1

I. System Description 1
II. System Analysis 4

D. WATER USAGE 4

I Water Sold 5
II. Non-account Water 5

E. GROWTH PROJECTION 5

F. MARICOPA COUNTY ENVIRONMENTAL SERVICES DEPARTMENT ("MCESD") COMPLIANCE 6

G. ARIZONA DEPARTMENT OF WATER RESOURCES ("ADWR") COMPLIANCE 6

H. ACC COMPLIANCE 6

I. WATER TESTING EXPENSES 7

J. DEPRECIATION RATES 8

K. OTHER ISSUES 9

I. Service Line and Meter Installation Charges 9
II. Not Used and Useful Plant Items 10
III. Plant Items Included In Previous Rate Case 10
IV. Reclassification 10
V. Curtailment Tariff 13
VI. Cross Connection or Backflow Prevention Tariff 13
VII. Off-site Hookup Fee ("OHF") Tariff 13
VIII. Best Management Practices ("BMP") Tariffs 13
IX. System Improvement Benefits ("SIB") 13

FIGURES

Figure 1: LPSC-W Water Certificate Service Area 15
Figure 2: Location of LPSC–W Water Service Area 16
Figure 3A: Systematic Drawing 17
Figure 3B: Systematic Drawing 18
Figure 3C: Systematic Drawing 19
Figure 3D: Systematic Drawing 20
Figure 3E: Systematic Drawing 21
Figure 4: Water Usage in LPSC-W Water Service Area 22
Figure 5: Actual and Projected Growth in LPSC-W Water Service Area 23
Figure 6: Depreciation Rates 24
Figure 7: Proposed Offsite Hookup Fee Tariff for LPSC-W 25
Figure 8: Additional Five Best Management Practices ("BMP") Tariffs for LPSC-W 29

ENGINEERING REPORT
LITCHFIELD PARK SERVICE WATER COMPANY - WATER DIVISION
DOCKET NO. W-01428A-13-0043 (RATES)

A. PURPOSE OF REPORT

This report was prepared in response to the application filed by Litchfield Park Service Company – Water Division ("LPSC-W" or "Company") with the Arizona Corporation Commission ("ACC" or "the Commission") to increase its water rates. The ACC Utilities Division Staff ("Staff") engineering review and analysis of the subject application is presented in this report.

An inspection of the Company's water system was conducted by Dorothy Hains, Staff Engineer, accompanied by Company Representatives, Chris Krygier (Manager), Matthew Garlick (Director), Clint Arndt (Manager) and Ed Solis (Supervisor) on May 20, 2013.

B. LOCATION OF THE COMPANY

LPSC-W is located in the west Phoenix Valley, west of the Agua Fria River and north of Interstate Highway 10. LPSC-W provides water service to communities within the City of Litchfield Park ("City"), City of Goodyear, City of Avondale, and some unincorporated areas of Maricopa County. Figure 1 shows the location of LPSC-W within Maricopa County and Figure 2 shows the approximate 21 square-miles of water certificated area.

C. DESCRIPTION OF SYSTEM

I. System Description

The operation of this water system consists of 12 wells, three arsenic treatment facilities, two storage tanks, three booster systems and a distribution system serving approximately 17,320 customers during the test year ending December 2012. LPSC-W uses a Supervisory Control and Data Acquisition ("SCADA") system to communicate and control operation of wells, arsenic treatment facilities, storage tanks and booster pump stations. A detailed plant facility description is as follows:

Table 1 Plant Facility and Well Data in LPSC-W (in PWS #07-046)

Active Drinking Water Wells

ADWR No.	Well #	Year Drilled	Casing Size (inches)	Well Depth (ft)	Well Meter Size (inches)	Pump (HP)	Pump Yield (GPM)	Location
55-611726	Airline Well #4	1962	20	1,007	8	350	1,750 (max)	63202 N El Mirage Rd
55-611729	Airline Well #9	1960	20	997	8	350	1,820 (max)	6230 N 119th Ave.
55-611727	Airline Well #5	1965	16	810	8	300	1,475 (max)	11902 Bethany Home Rd
55-611724	Airline	1964	16	800	12	250	1,200	6024 N El Mirage Rd

	Well #2							
55-214539	Airline Well #10	2007	16	700	12	150	700	N/A
55-533836	Town Well #6	1992	16	650	12	200	1,200	12660 W Indian School Rd, Litchfield Park
55-611678	Town Well #4	1966	16	685	12	150	1,200	4307 N 127th Ave, Litchfield Park
55-611677	Town Well #5	1972	16	850	12	150	1,100	4450 N 127th Ave., Litchfield Park
55-583454	Town Well #1	2001	16	740	12	200	550	13570 Plaza Circle, Avondale
55-611680	Town Well #2	1964	16	800	12	250	650	3840 N Dysart Rd., Avondale
55-611687	Well #34C	1954	14	700	8	150	1,000	1952 N Dysart Rd
55-611717	Well #20B	1962	20	1,100	10	200	1,400	15521 W Minnezona Ave

Active Storage, Pumping

Location	Structure or equipment	Capacity
Town Well Reservoir Site (4091 N Dysart Rd)		
Town Well Reservoir Site	Storage Tank	One 6.1 MG concrete underground Tank (38' deep, 160'x206')
Town Well Reservoir Site	Booster pump station	Three 200-HP (3,500 GPM/unit, electric engine) One 100-HP (1,900GPM/unit, electric engine) One 150-HP (1,200 GPM/unit natural gas engine, backup pump) Two 10" meters
Airline Reservoir (6302 N El Mirage Rd)		
Airline Reservoir Site	Storage Tank	One 4.5 MG concrete underground Tank (31.5' deep)
Airline Reservoir Site	Booster pump station	Four 250-HP (4,000 GPM/unit) One 30" meg flow meter VFD
Well #20B Arsenic Treatment Plant Site (15614 Charles Blvd)		
Well 20B ATP Site	Pressure tank	One 5,000 gal tank VFD Unit

Arsenic Treatment Facilities

	Town Well Arsenic Removal Facility		
Location	Sources	Equipment	Capacity
Town Well Reservoir Site (4091 N Dysart Rd)	Town Wells: TW1, TW2 & TW6	Arsenic Removal Treatment Plant	4.5 MGD
Town Well Reservoir Site	Town Wells: TW1, TW2 & TW6	One Carbon dioxide (gas) feeding unit	26 Tons
Town Well Reservoir Site	Town Wells: TW1, TW2 & TW6	Four 12'-Diameter pressurized arsenic removal media (granular iron media) vessels	3,200 GPM/unit
Town Well Reservoir Site	Town Wells: TW1, TW2 & TW6	On-site sodium hypochlorite generator & two storage tanks	N/A
Town Well Reservoir Site	Town Wells: TW1, TW2 & TW6	One backwash unit	N/A
Town Well Reservoir Site	Town Wells: TW1, TW2 & TW6	One concrete backwash equalization tank	63,500 gallons
	Airline Wellfield Arsenic Removal Facility		
Location	Sources	Equipment	Capacity
Airline Reservoir Site (6302 N El Mirage Rd)		Arsenic Removal Treatment Plant (coagulation-filtration)	8.4 MGD (max)
Airline Reservoir Site	Airline Wells: AL4, AL5 and AL9	On-site sodium hypochlorite generator & two storage tanks	N/A
Airline Reservoir Site	Airline Wells: AL4, AL5 and AL9	Ferric Oxide (Fe_2O_3) injection unit & two 5-HP mixing pumps	1,400 GPM
Airline Reservoir Site	Airline Wells: AL4, AL5 and AL9	One Fe_2O_3 Storage tank	5,000 gallons
Airline Reservoir Site	Airline Wells: AL4, AL5 and AL9	Three 8'-Diameter horizontal green sand filter media filter vessels	20,000 gallons/tank
Airline Reservoir Site	Airline Wells: AL4, AL5 and AL9	Backwashing Unit Two Backwash equalization tanks	12,500 gallons/tank
	Well #20B Arsenic Treatment Plant		
Location	Sources	Equipment	Capacity
Well #20B Arsenic Treatment Plant Site (15614 Charles Blvd, Goodyear)	Well 20B	Arsenic Removal Treatment Plant	1,500 GPM
Well 20B ATP Site	Well 20B	Two 12' 4"-Diameter (5' shell) pressurized arsenic removal media (filled	752.6 GPM/unit

		with 3' deep granular iron media) vessels	
Well 20B ATP Site	Well 20B	One backwash wastewater holding tank	52,000 gallons

Distribution Mains in LPSC-W CC&N Area

Diameter (inches)	Material	Length (feet)
2	Ductile Iron Pipe ("DIP")	842
3	DIP	1,739
4	DIP	19,100
6	DIP	386,182
8	DIP	487,714
10	DIP	3,435
12	DIP	158,710
16	DIP	64,043
24	DIP	79,534
30	DIP	5,290
36	DIP	255
42	DIP	325

Meters in LPSC-W CC&N Area

Size (inches)	Quantity
⅝ x ¾	63
¾	9,313
1	5,931
1½	194
2	635
3	32
4	19
8	2
10	1
Fire line	260

II. System Analysis

The water system has a total source capacity of 14,045 GPM and storage capacity of 10.6 million gallons that are adequate to serve the present customer base and reasonable growth.

D. WATER USAGE

Table 2 summarizes water usage in the LPSC-W CC&N area. Figure 4 is a graph that shows water consumption data in gallons per day per connection for the LPSC water system for the test year period of January 2012 through December 2012.

Table 2 Water Usage in Litchfield Park Service Co. - Water Division CC&N Area

Month	Number of Customers	Monthly Water Sold (in gallons)	Water pumped (in gallons)	Water purchased (in gallons)	Daily Average (in gallons per day per customer)
Jan 12	16,606	179,495,687	215,672,000	0	349
Feb 12	16,691	187,721,281	197,319,000	0	402
Mar 12	16,745	206,805,180	235,898,000	0	398
Apr 12	16,817	220,648,473	263,970,000	0	437
May 12	16,877	262,637,241	373,354,000	0	502
Jun 12	16,917	360,854,376	415,161,000	0	711
Jul 12	17,007	385,513,150	411,362,000	0	731
Aug 12	17,062	351,583,125	396,551,000	0	665
Sep 12	17,136	339,740,615	343,392,000	0	661
Oct 12	17,185	298,867,926	349,051,000	0	561
Nov 12	17,226	308,141,680	267,223,000	0	596
Dec 12	17,313	232,472,529	209,783,000	0	433
total		3,334,481,263	3,678,736,000	0	
Average					537

I. Water Sold

Based on information provided by the Company, the calculated highest use was 731 gallons per day ("GPD") per customer in July and the lowest was 349 GPD per customer in January. The average water usage was 537 GPD per customer. Water use for the test year of 2012 is presented in Figure 3.

II. Non-account Water

Non-account water should be 10 percent or less. The Company reported 3,334,481,263 gallons sold and 3,678,736,000 gallons pumped, resulting in a water loss of 9.36 percent. This 9.36 percent is within the acceptable limit of 10 percent.

E. GROWTH PROJECTION

Figure 4 depicts the customer growth using linear regression analysis. The numbers of service connections were obtained from annual reports submitted to the Commission. At the end of the test year December 2012, the Company had 17,313 customers and it is projected that this system could have approximately 19,291 customers by December 2016. The following table summarizes Staff's projected growth.

Table 3 Actual and Projected Growth (LPSC-Water)

Year	Nos. of Customers	
1999	4,724	Reported
2000	5,562	Reported
2001	6,515	Reported
2002	9,179	Reported
2003	10,786	Reported
2004	11,902	Reported
2005	12,978	Reported
2006	13,858	Reported
2007	15,949	Estimated
2008	16,023	Reported
2009	16,266	Reported
2010	16,533	Reported
2011	16,864	Reported
2012	17,313	Reported
2013	17,930	Estimated
2014	18,384	Estimated
2015	18,838	Estimated
2016	19,291	Estimated

F. MARICOPA COUNTY ENVIRONMENTAL SERVICES DEPARTMENT ("MCESD") COMPLIANCE

MCESD, acting as the formally delegated agent of the Arizona Department of Environmental Quality ("ADEQ") has reported in a Compliance Status Report dated March 25, 2013, that the Company's water system operating under public water system ("PWS") No. 10-046 had no major deficiencies and is delivering water that meets water quality standards required by 40 CFR 141 (National Primary Drinking Water Regulations) and Arizona Administrative Code, Title 18, Chapter 4.)

G. ARIZONA DEPARTMENT OF WATER RESOURCES ("ADWR") COMPLIANCE

LPSC-W is in the Phoenix Active Management Area. Staff received a Compliance Status Report from ADWR for LPSC-W on March 15, 2013. ADWR reports that LPSC-W is compliant with departmental requirements governing water providers and/or community water systems.

H. ACC COMPLIANCE

A check of the Commission's Compliance Section database dated June 6, 2013, indicated that the Company had no ACC delinquent compliance items.

I. WATER TESTING EXPENSES

LPSC-W reported its water testing expense at $33,849 for the test year; however, LPSC-W requests to adjust its water testing expense to $66,942 in the future years. Staff used ADEQ Monitoring Assistance Program ("MAP") costs to develop testing costs based on the following assumptions:

1. MAP will do baseline testing on everything except copper, lead, bacteria, and disinfection by-products.

2. The estimated water testing expenses represent a minimum cost based on no "hits" other than lead and copper, and assume compositing of well samples. If any constituents were found, then the testing costs would dramatically increase. ADEQ testing is performed in 3-year compliance cycles. Therefore, monitoring costs are estimated for a 3-year compliance period and then presented on an annualized basis.

3. Staff estimated the MAP related testing fees based on the MCESD water quality compliance status report for calendar year 2012.

4. All monitoring expenses are based on Staff's best knowledge of lab costs and methodology and one point of entry.

Staff recommends that a water testing expense of $62,478 be used for this proceeding. Table 4 shows the estimated annual monitoring expense.

Table 4 Water Testing Cost (Litchfield Park Water District - PWS #07-046)

Monitoring – Ground Water (6 POEs & 12 wells)	No. of total tests per year	Cost per test	Cost per test (Company's)	Company Reported Total Annual Test Costs	Company Requests future Total Annual Test Costs	Staff estimated annual cost ($)
Bacteriological – monthly	600	$13.50[5]	N/A	N/A	N/A	$8,100
Radiochemical – (1/ 3 yr) Gross Alpha Uranium Radium 228 Radium 226	MAP		 N/A N/A N/A N/A	 N/A N/A N/A N/A	 N/A N/A N/A N/A	MAP
Inorganics – Priority Pollutants	MAP			0		MAP
Phase II and V:						
IOCs - ⅓ year	MAP		N/A	N/A	N/A	MAP
SOCs - ⅓ year	MAP		N/A	N/A	N/A	MAP
VOCs - ⅓ year	MAP		N/A	N/A	N/A	MAP

Dioxin	MAP		N/A	N/A	N/A	MAP
Nitrites – 1/9 year	MAP		N/A	N/A	N/A	MAP
Nitrates – annual	MAP		N/A	N/A	N/A	MAP
Nitrates – quarterly[4]	18[4]	$20[5]	N/A	N/A	N/A	360
Asbestos – 1/9 year	MAP		N/A	N/A	N/A	MAP
MAP[1]	1	$31,216[1]				31,216[1]
Lead & Copper	30[2]	$19[5]	N/A	N/A	N/A	570
TTH/HHA5 – 4/year	24[2]	$275[6]	N/A	N/A	N/A	6,600
Arsenic (additional)	728[2]	$10[5]	N/A	N/A	N/A	7,280
Total Chlorine Residues	480[2]	$13.50[5]	N/A	N/A	N/A	6,480
Iron	208[3]	$9[5]	N/A	N/A	N/A	1,872
Total				**$33,849**	**$66,942**	**$62,478**

Note: 1. MAP fee calculation is based on (1) 12,049 customers stated in MCESD Report for LPSC-W (issued on March 25, 2013); (2) $2.57/customer of service fee; and (3) $250 basic charge. Therefore, MAP fee would be $31,216. ($2.57 * 12,049 + $250 = $31,216)

2. Based on the Company's Response to DR #DH1.6, LPSC-W did 24 TTHM/HAA5 sample tests during the test year. LPSC also tested a total of 728 arsenic samples during the test year that included 208 arsenic samples from Well 20B, 208 samples from Airline Wells and 312 samples from Town Wells.

3. In the Company's Response to DR #DH 1.6, LPSC-W stated that 208 iron samples had been tested during the test year.

4. Based on the Company's Response to DR #DH4.10, LPSC-W sampled its nitrates on quarterly bases at its 6 POEs. Staff adjusts it to 20 additional samples because 6 samples are covered by MAP.

5. Based on Price Quotes provided by Legend Lab.

6. Prices provided by the Company's in its Response to DR #DH1.6.

Water testing expenses should be adjusted to the annual expense amount shown in Table 4 which totals **$62,478.**

J. DEPRECIATION RATES

Staff has developed typical and customary depreciation rates within the range of anticipated equipment life. These rates are presented in Figure 6, and should be used to calculate the annual depreciation expense for the Company. Staff recommends that the depreciation rates by individual National Association of Regulatory Utility Commissioners ("NARUC") category, as delineated in Figure 6.

K. OTHER ISSUES

I. Service Line and Meter Installation Charges[1]

LPSC-W proposes to revise all existing charges per size of meter to "At Cost" in its Meter and Service Line Installation Charge tariff. Staff has no problem agreeing with the Company's proposal to charge "At Cost" for the larger, more costly meters (meters two-inches and larger). Staff however does not believe "At Cost" pricing flexibility is necessary or appropriate for the smaller more common meter sizes. The lots, terrain and soil conditions in the LPSC-W service area are typical and predictable. Therefore, Staff would not expect construction costs to vary significantly for the smaller meter sizes.[2] Staff believes that the Company's service line and meter installation charges should be in Staff's average range for these charges. Therefore, separate service line and meter charges were developed using an average charge in Staff's range of charges for meters sizes smaller than two-inches. Staff recommends approval of the meter and service line installation charges listed under the columns labeled "Staff" in Table 5.

Table 5 Service Line and Meter Installation Charges (LPSC-W)

Meter Size	Current Service Line Installation Charge	Current Meter Installation Charge	Current Total Meter & Service Line Installation Charge	Company Proposed Total Installation Charge	Staff (Meter Installation Charge)	Staff (Service Line Installation Charge)	Staff Total Charge
5/8 x 3/4-inch	$385	$135	$520	At Cost	$445	$155	$600
3/4-inch	$385	$215	$600	At Cost	$445	$255	$700
1-inch	$435	$255	$690	At Cost	$495	$315	$810
1½-inch	$470	$465	$935	At Cost	$550	$525	$1,075
2-inch (Turbine)	$630	$965	$1,598	At Cost	At Cost	At Cost	At Cost
2-inch (Compound)	$630	$1,690	$2,320	At Cost	At Cost	At Cost	At Cost
3-inch (Turbine)	$805	$1,470	$2,275	At Cost	At Cost	At Cost	At Cost
3-inch (Compound	$845	$2,265	$3,110	At Cost	At Cost	At Cost	At Cost
4-inch (Turbine)	$1,170	$2,350	$3,520	At Cost	At Cost	At Cost	At Cost
4-inch (Compound	$1,230	$3,245	$4,475	At Cost	At Cost	At Cost	At Cost
6-inch (Turbine)	$1,730	$4,545	$6,275	At Cost	At Cost	At Cost	At Cost
6-inch (Compound	$1,770	$6,280	$8,050	At Cost	At Cost	At Cost	At Cost
Over 6-inch	At Cost	At Cost	At Cost	At Cost	At Cost	At Cost	At Cost

1 Service line and meter installation charges are refundable advances.
2 Soil in the LPSC-W service area is generally soft dig and the terrain is flat with typical subdivision lot sizes.

II. Not Used and Useful Plant Items

Based on its field inspection, Staff determined that the plant items in Table 6 are not used and useful.

Table 6 Not Used and Useful Plant Items

year	Amount ($)	NARUC Account (LPSC's)	Reasons
2011	6,000.00	303 (Land & Land Right)	Two parcels are for future well development
2011	6,156.24	304 (Structure & Improvement)	Work done for LPSC-WW Palm Valley WWTP effluent deep well injection (currently effluent is disposed of via reuse permits)

III. Plant Items Included In Previous Rate Case

Based on its field inspection, Staff determined that the plant items in Table 7 had been included in the last rate case, even though they were reported as expenses incurred in 2011.

Table 7 Plant Items included in 2009 Rate Case

year	Amount ($)	NARUC Account (LPSC's)	Reasons
2011	6,000.00	303 (Land & Land Right)	Two parcels are for future well development
2011	6,156.24	304 (Structure & Improvement)	Work done for LPSC-WW Palm Valley WWTP effluent deep well injection (currently effluent is disposed of via reuse permits)
2011	26,550.00	304 (Structure & Improvement)	The plant item is used and useful prior to 2009. The expenses were for storage tank in 2007 that had been included in 2009 rate case.
	19,924.00	304 (Structure & Improvement)	The plant item is used and useful prior to 2009. The expenses were for storage tank in 2006 that had been included in 2009 rate case.
	125,378.25	304 (Structure & Improvement)	The plant item is used and useful prior to 2009. The expenses were for storage tank in 2006 that had been included in 2009 rate case.
	42,812.67	304 (Structure & Improvement)	The plant item is used and useful prior to 2009. The expenses were for storage tank in 2006 that had been included in 2009 rate case.
	57,406.79	304 (Structure & Improvement)	The plant item is used and useful prior to 2009. The expenses were for storage tank in 2007 that had been included in 2009 rate case.

IV. Reclassification

The expenses for the following plant items in Table 8 should be reclassified for accounting purposes. See Company's Response to Staff Data Request #DH6.1 for confirmation.

Table 8 Reclassification

Year	Amounts ($)	NARUC Acct (LPSC's)	NARUC Acct (Staff Recommended)	Reasons
2009	5,852.95	304 (Structure & Improvement)	307 (Well & Springs)	Expenses were for Well #AL6 that does not exist.
2009	5,245.00	304 (Structure & Improvement)	307 (Well & Springs)	Expenses were for Well #AL6 that does not exist.
2009	42,154.35	304 (Structure & Improvement)	307 (Well & Springs)	Plant item was for Well 34C
2009	41,625	304 (Structure & Improvement)	320.1 (Water Treatment Plant)	It was for Town Well Arsenic Treatment Plant
2009	141,220.76	304 (Structure & Improvement)	320.1 (Water Treatment Plant)	It was for Town Well Arsenic Treatment Plant
2009	85,478.32	304 (Structure & Improvement)	320.1 (Water Treatment Plant)	It was for Town Well Arsenic Treatment Plant
2009	648,623.90	304 (Structure & Improvement)	330.1 (Storage Tank)	Plant item was for Airline Reservoir
2009	7,995.00	304 (Structure & Improvement)	340.1 (Computer & Software)	Plant item is CAD software for designing water system
2009	15,742.00	304 (Structure & Improvement)	330.1 (Storage Tank)	Painting two 12" x 13" tanks
2009	12,667.5	304 (Structure & Improvement)	307 (Well & Springs)	Replace well pump
2009	10,851.37	304 (Structure & Improvement)	311 (Pumping Equipment)	Plant items is for Well #5 well pump & VFD
2009	7,000.00	304 (Structure & Improvement)	320.1 (Water Treatment Plant)	Painting for Vessel #C & D in Town Well Arsenic Treatment Plant
2009	12,491.86	304 (Structure & Improvement)	320.1 (Water Treatment Plant)	Plant item was media for arsenic treatment plant
2010	1,215,221.40	304 (Structure & Improvement)	320.1 (Water Treatment Plant)	Plant item is for Well 20B Arsenic Treatment Plant
2010	20,000.00	304 (Structure & Improvement)	330.1 (Storage Tank)	Plant item was for Airline Reservoir
2010	10,278.35	304 (Structure & Improvement)	311 (Pumping Equipment)	Plant item was well pump in Well #AL4
2010	6,555.27	348 (Other	340 (Office Furniture &	Plant item is a plotter that used in the

		Tangible Plant)	Equipment)	engineering office
2010	133.22	348 (Other Tangible Plant)	311 (Pumping Equipment)	Plant item was pump motor
2010	1,605.00	348 (Other Tangible Plant)	311 (Pumping Equipment)	Plant item was pump
2010	113.62	348 (Other Tangible Plant)	311 (Pumping Equipment)	Plant item was pump motor
2010	1,490.00	348 (Other Tangible Plant)	311 (Pumping Equipment)	Plant item was pump motor
2011	9,031.45	304 (Structure & Improvement)	310 (Power Generator)	Plant item is an on-site generator
2011	6,000.00	304 (Structure & Improvement)	371 (WW-Pumping Equipment)	permit fees from Maricopa Co. Department of Environmental Services for Palm Valley WWTP
2011	6,156.34	304 (Structure & Improvement)		Consultant fee for Palm Valley WWTP
2011	26,550.00	304 (Structure & Improvement)	330.1 (Storage Tank)	Plant item is for Town Well Reservoir
2011	9,079.35	304 (Structure & Improvement)	310 (Power Generator)	Plant item is an on-site generator in Town Well Reservoir
2011	190,924.9	304 (Structure & Improvement)	330.1 (Storage Tank)	Plant items are for Airline Reservoir and its pump station
2011	11,366.86	304 (Structure & Improvement)	311 (Pumping Equipment)	Plant item was well pump in Well #TW1
2011	9,617.30	304 (Structure & Improvement)	311 (Pumping Equipment)	Plant item is a 200-HP pump motor
2011	125,378.25	304 (Structure & Improvement)	320.1 (Water Treatment Plant)	Plant item was for Town Well Arsenic Treatment Plant
2011	42,812.67	304 (Structure & Improvement)	320.1 (Water Treatment Plant)	Plant item was for Town Well Arsenic Treatment Plant
2011	57,406.79	304 (Structure & Improvement)	320.1 (Water Treatment Plant)	Plant item was for Town Well Arsenic Treatment Plant
2011	19,223.00	311 (Pumping Equipment)	307 (Well & Springs)	Plant item was for Town Well #TW6
2011	22,436.48	311 (Pumping Equipment)	307 (Well & Springs)	Plant item was for Town Well #TW1
2011	27,298.36	311 (Pumping Equipment)	307 (Well & Springs)	Plant item was for Well #20B

V. Curtailment Tariff

The Company has an approved Curtailment Tariff on file with the Commission.

VI. Cross Connection or Backflow Prevention Tariff

The Company has an approved Cross Connection & Backflow Prevention Tariff on file with the Commission.

VII. Off-site Hookup Fee ("OHF") Tariff

The Company has an approved OHF Tariff for water on file with the Commission. The Company proposed several minor modifications to its OHF Tariff. Staff recommends approval of the Company's proposal to add the words "domestic only" at end of Paragraph A in Section III of the Tariff. Staff also recommends approval of the Company's request to add Hook-up Fees for meter sizes greater than 6-inch. Staff recommends the Commission approve the attached OHF Tariff which includes these minor modifications (see attachment labeled Figure 7).

VIII. Best Management Practices ("BMP") Tariffs

After discussions with Staff, the Company has agreed to implement the five BMP tariffs included in the attachment labeled Figure 8. Currently, the Company has five approved BMP Tariffs[3] on file with the Commission. With the addition of the five new BMPs, LPSC-W will have a total of ten water conservation measures. Staff recommends that LPSC-W file the five BMP tariffs included in Figure 8 with Docket Control, as a compliance item in this docket, within 45 days of the effective date of the decision in this proceeding.

IX. System Improvement Benefits ("SIB") Mechanism

The Company is seeking a SIB mechanism to address necessary distribution system infrastructure replacements and improvements to service existing customers. The proposed SIB includes an area approximately one square mile in size within the City (see Figure 1). As a supplement to its application, LPSC-W submitted the Litchfield Park Facilities Assessment Report ("Report")[4] supporting the need for the proposed five year infrastructure replacements and improvements. The Report identifies the most critical areas, estimates the quantity of distribution mains, fire hydrants, meters and service lines that need to be replaced, and estimates the associated replacement costs. In addition, the Report included a Table 7 (equivalent to Table

---

3 The Company's current list of approved BMPs include (1) BMP 2.2 (Youth Conservation Education Program Tariff; (2) BMP 3.8 (Water Waste Investigations and Information Tariff); (3) BMP 4.1 (Leak Detection Program Tariff); (4) BMP 4.2 (Meter Repair and/or Replacement Tariff); and (5) BMP 5.8 (Landscape Watering Restrictions Tariff).

4 According to the Company the distribution system in the SIB area is reaching the end of its useful service life and replacing the water distribution system at the same time the sewer collection system is replaced will be much more cost effective. The Company expects that it would incur increased costs from the City for replacing the distribution plant later on in a piecemeal fashion where the City streets must be cut multiple times over a short period of time (the City does not want LPSC tearing up the same street multiple times for pipe replacement).

I in Decision No. 73736) of SIB-eligible projects and related costs, and Tables 8 and 9 that lists annual estimated project costs by NARUC account.

A summary of the Company's proposed 5-year infrastructure replacement plan is tabulated below:

Year	2014		2015		2016		2017		2018		**5-Year Total**	
Plant	units	Cost (in $)	units	Cost (in $)	units	Cost (in $)	units	Cost (in $)	units	Cost (in $)	units	Cost (in $)
Services (NARUC Acct #333)	76	190,000	154	385,000	169	422,500	137	342,500	71	177,500	607	1,517,500
Meters (NARUC Acct #334)	76	47,600	154	96,300	169	105,700	137	85,700	71	44,400	607	379,700
Hydrants (NARUC Acct #335)	13	81,000	38	112,200	38	236,600	37	230,400	13	81,000	119	741,200
Transmission & Mains (NARUC Acct #331)	6,019	637,400	8,687	939,700	18,572	2,253,300	17,976	2,026,400	6,282	665,200	57,536	6,522,000
Total		**956,000**		**1,533,200**		**3,018,100**		**2,685,000**		**968,100**		**9,160,400**

Staff finds the proposed 5-year infrastructure replacement plan at a cost of $9,160,400 to be reasonable and appropriate. However, no "used and useful" determination of the proposed plant items was made, and no conclusions should be inferred for rate making or rate base purposes in the future.

FIGURE 1

LPSC-W Water Certificate Service Area

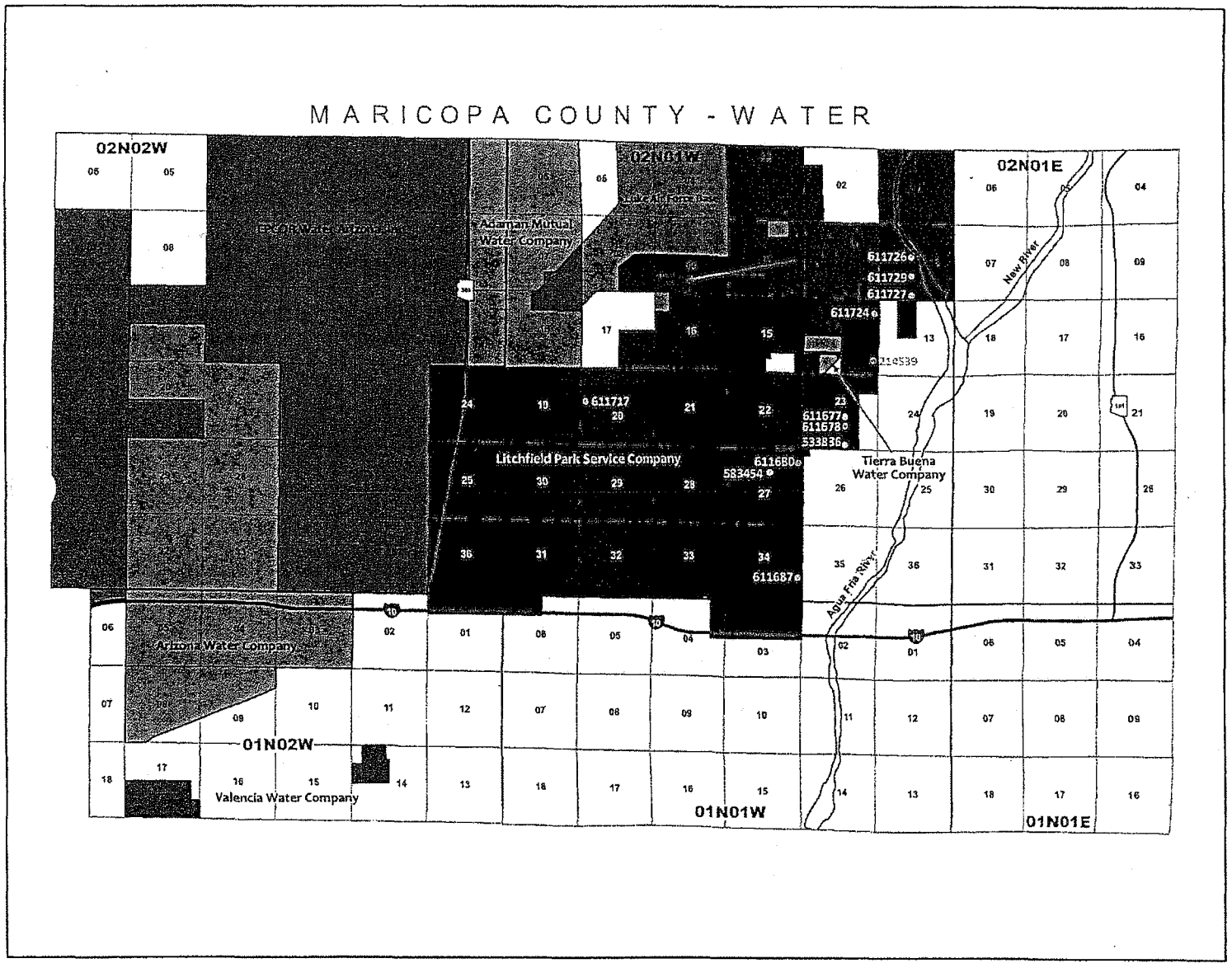

FIGURE 2.

LOCATION OF LPSC-W SERVICE AREA

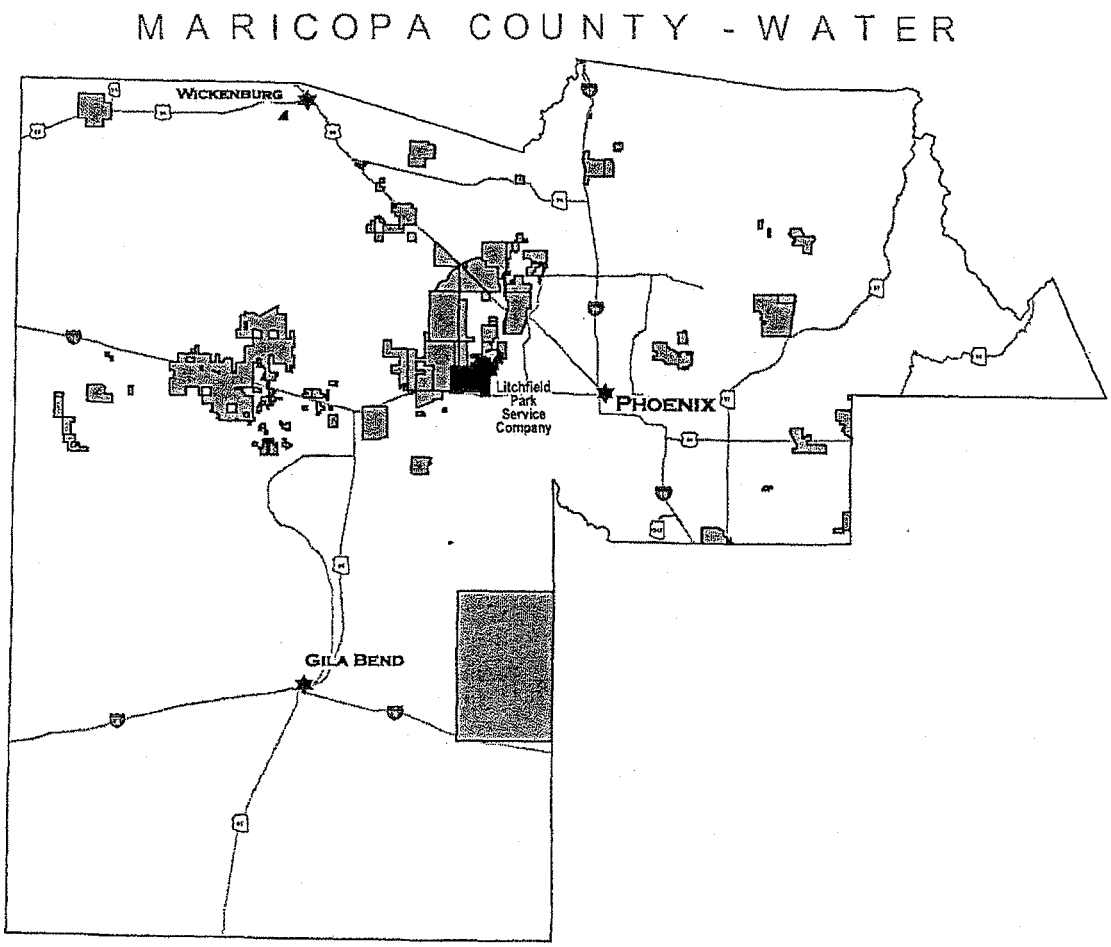

FIGURE 3A SYSTEMATIC DRAWING

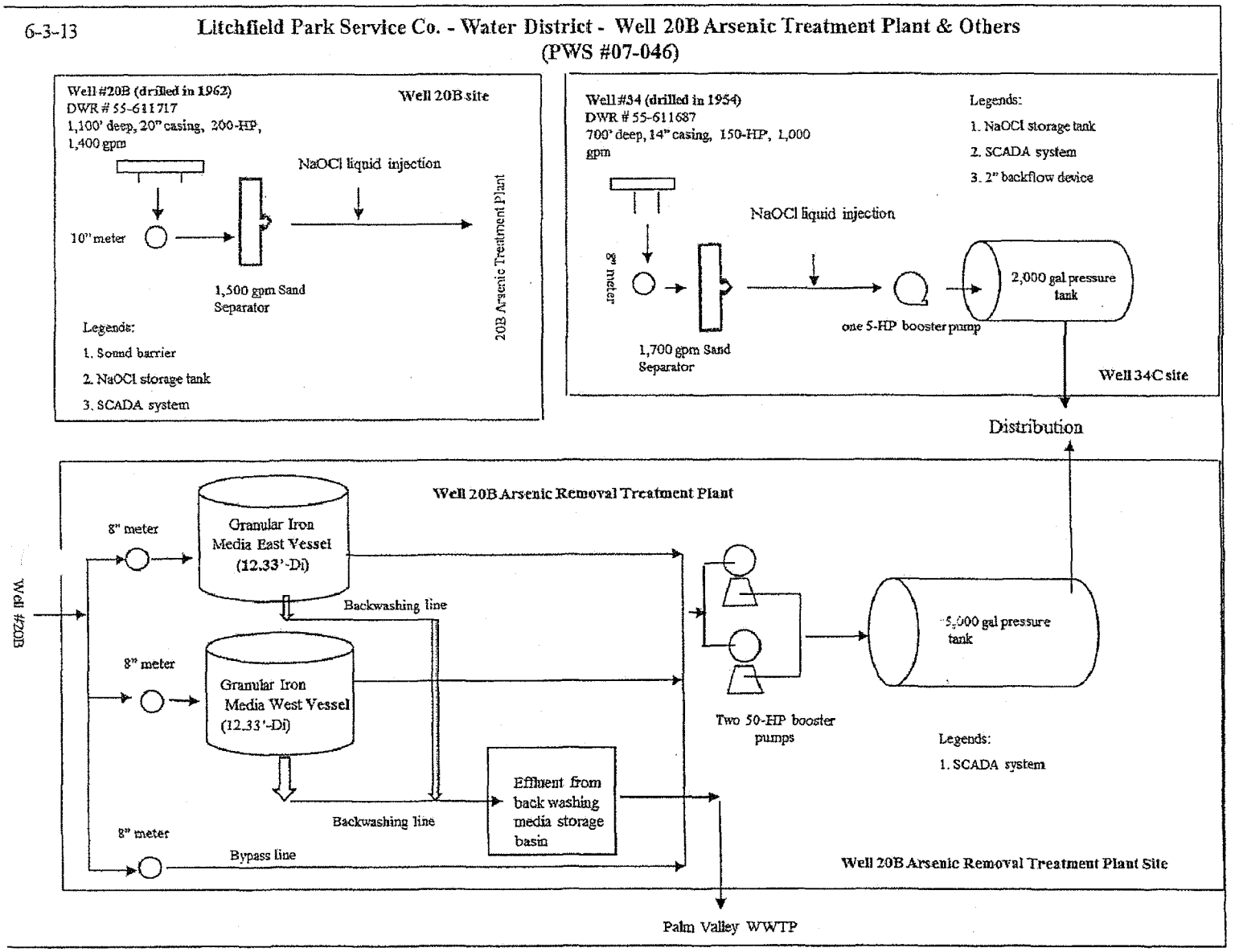

FIGURE 3B SYSTEMATIC DRAWING

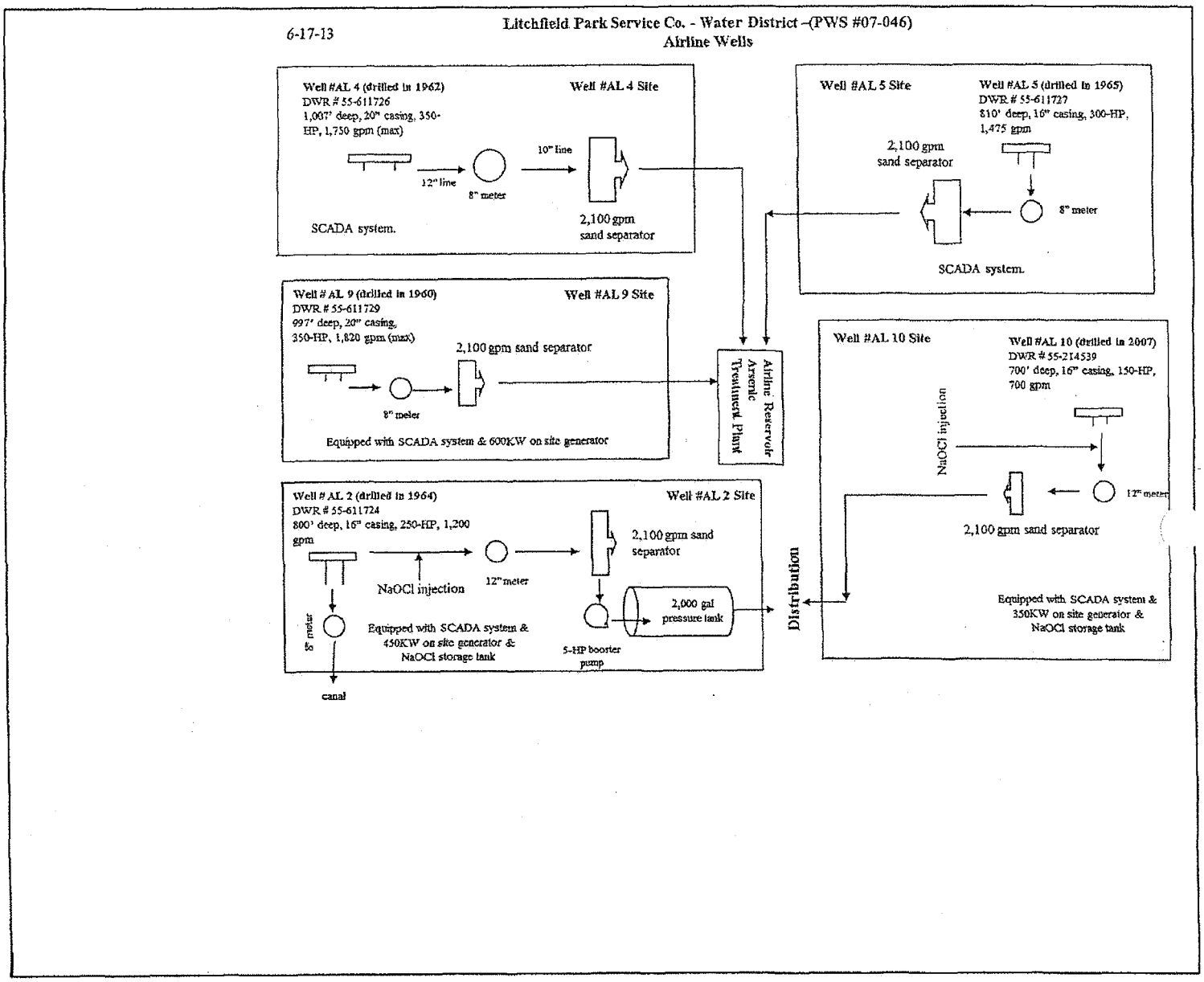

FIGURE 3C SYSTEMATIC DRAWING

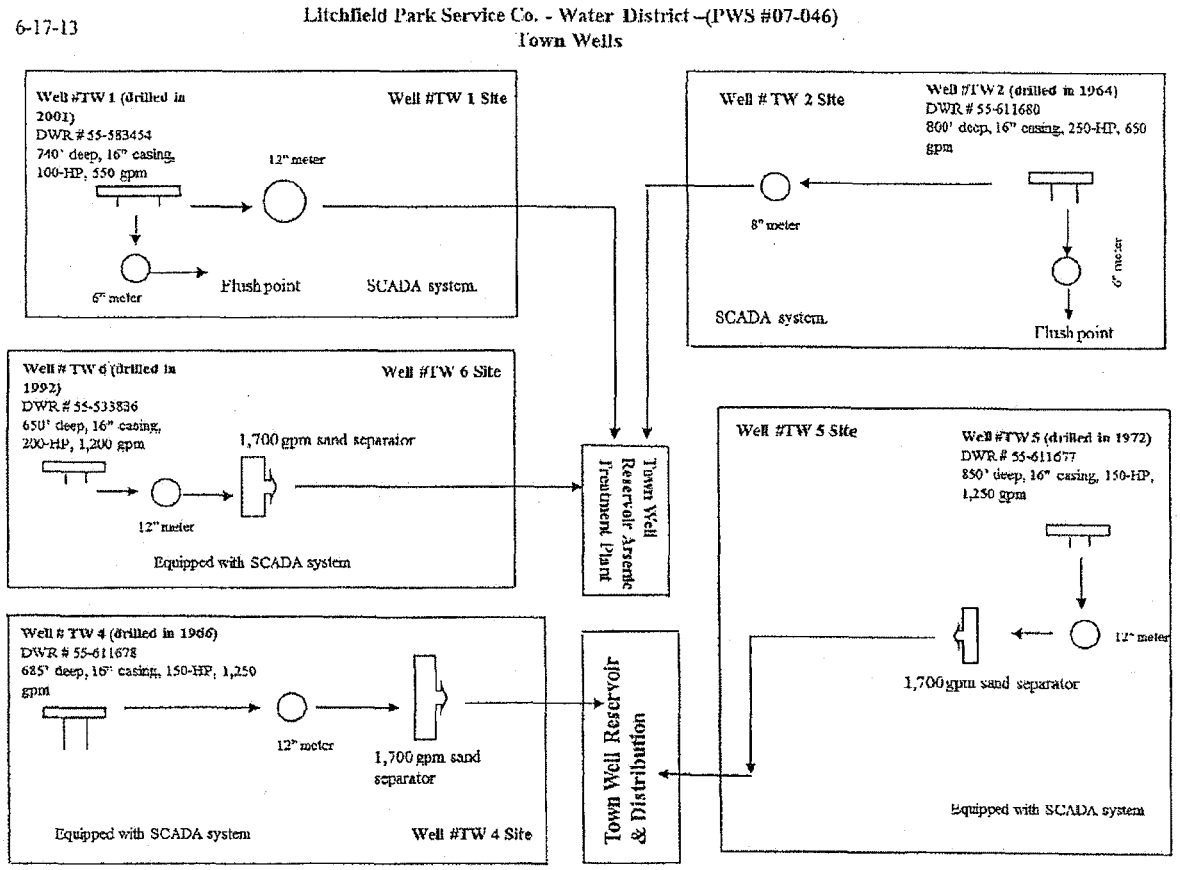

FIGURE 3D SYSTEMATIC DRAWING

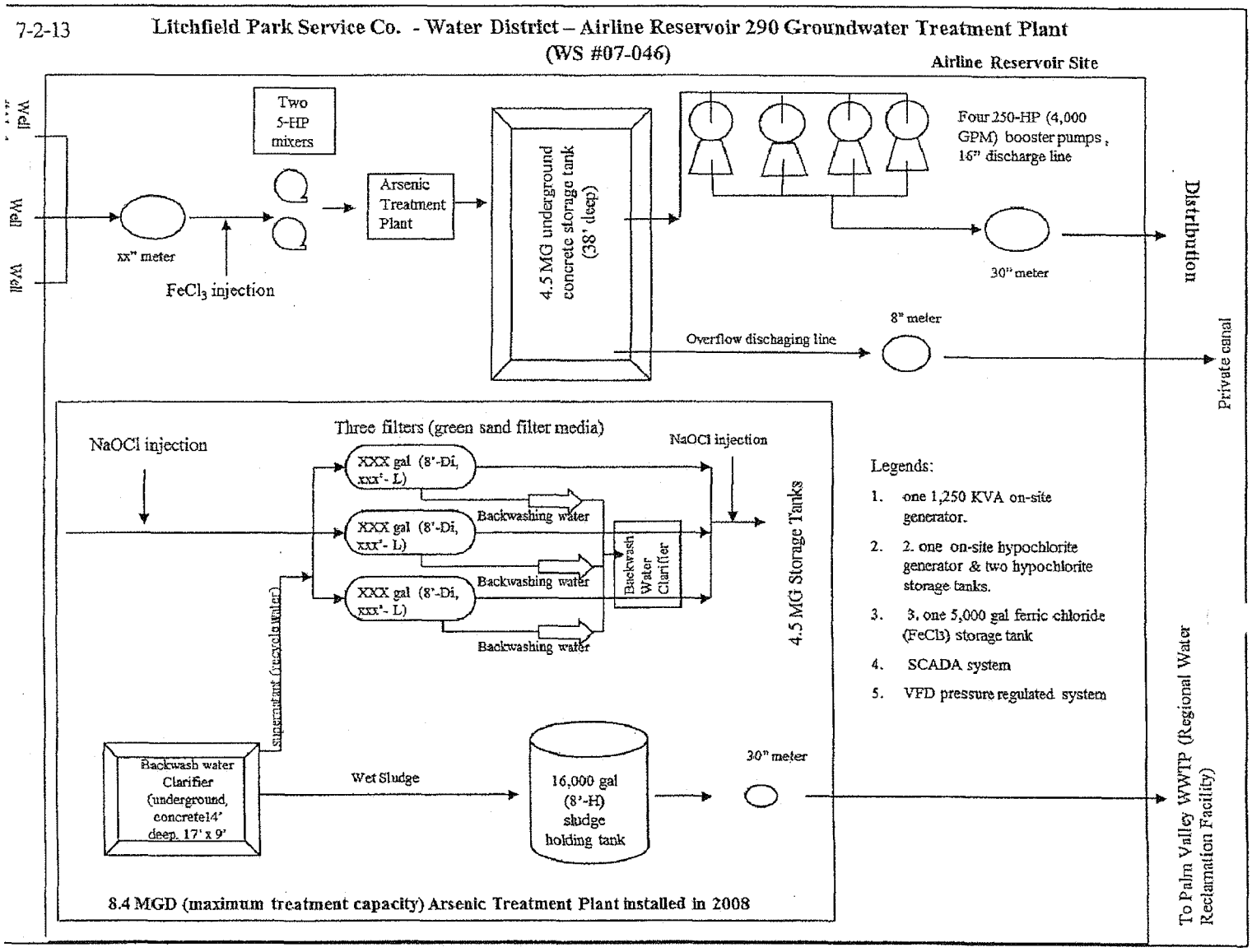

FIGURE 3E SYSTEMATIC DRAWING

7-2-13 **Litchfield Park Service Co. - Water District – Town Well Reservoir Arsenic Treatment Plant (WS #07-046)**

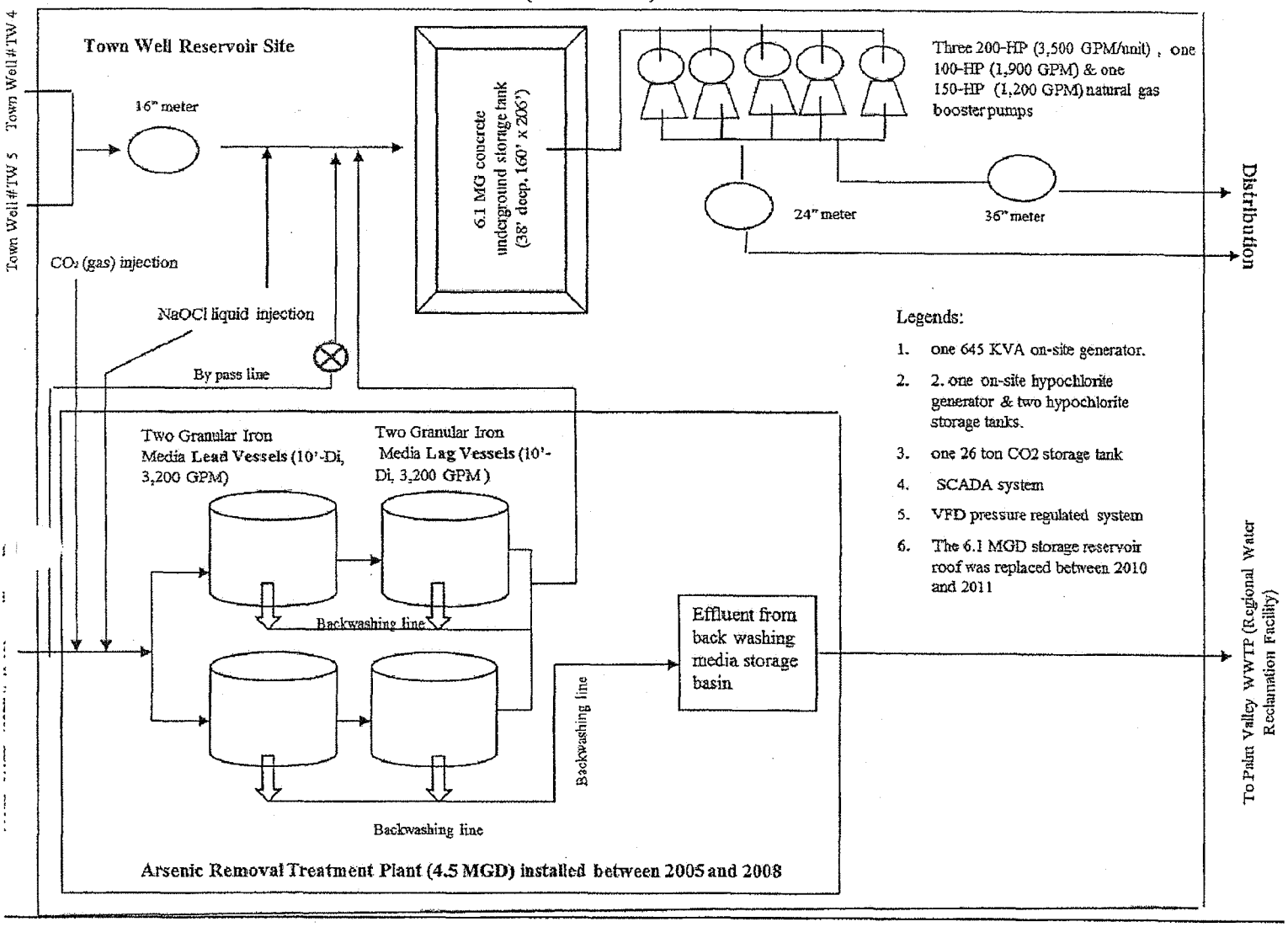

FIGURE 4

WATER USAGE IN LPSC-W WATER SERVICE AREA

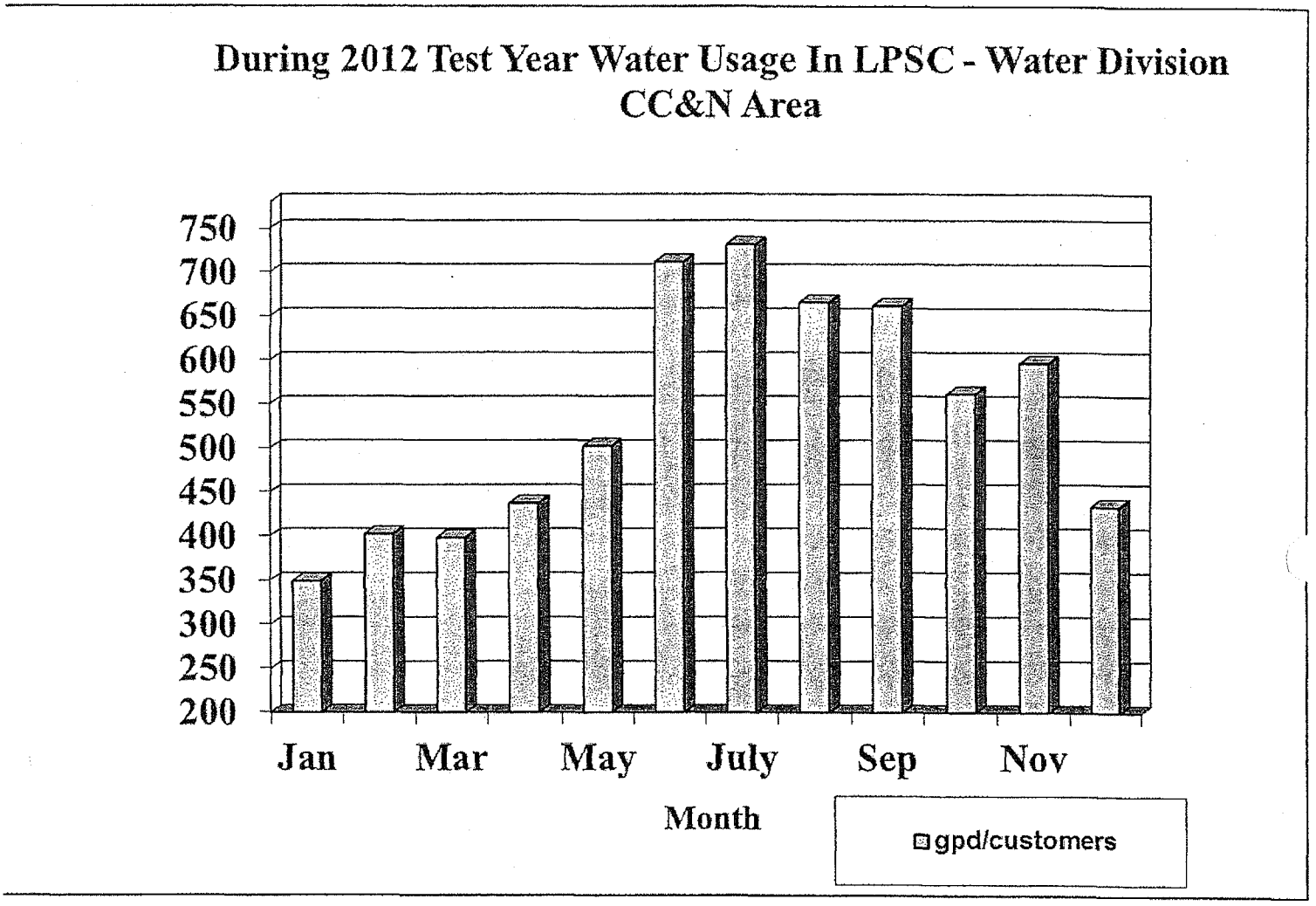

FIGURE 5

ACTUAL AND PROJECTED GROWTH IN LPSC-W WATER SERVICE AREA

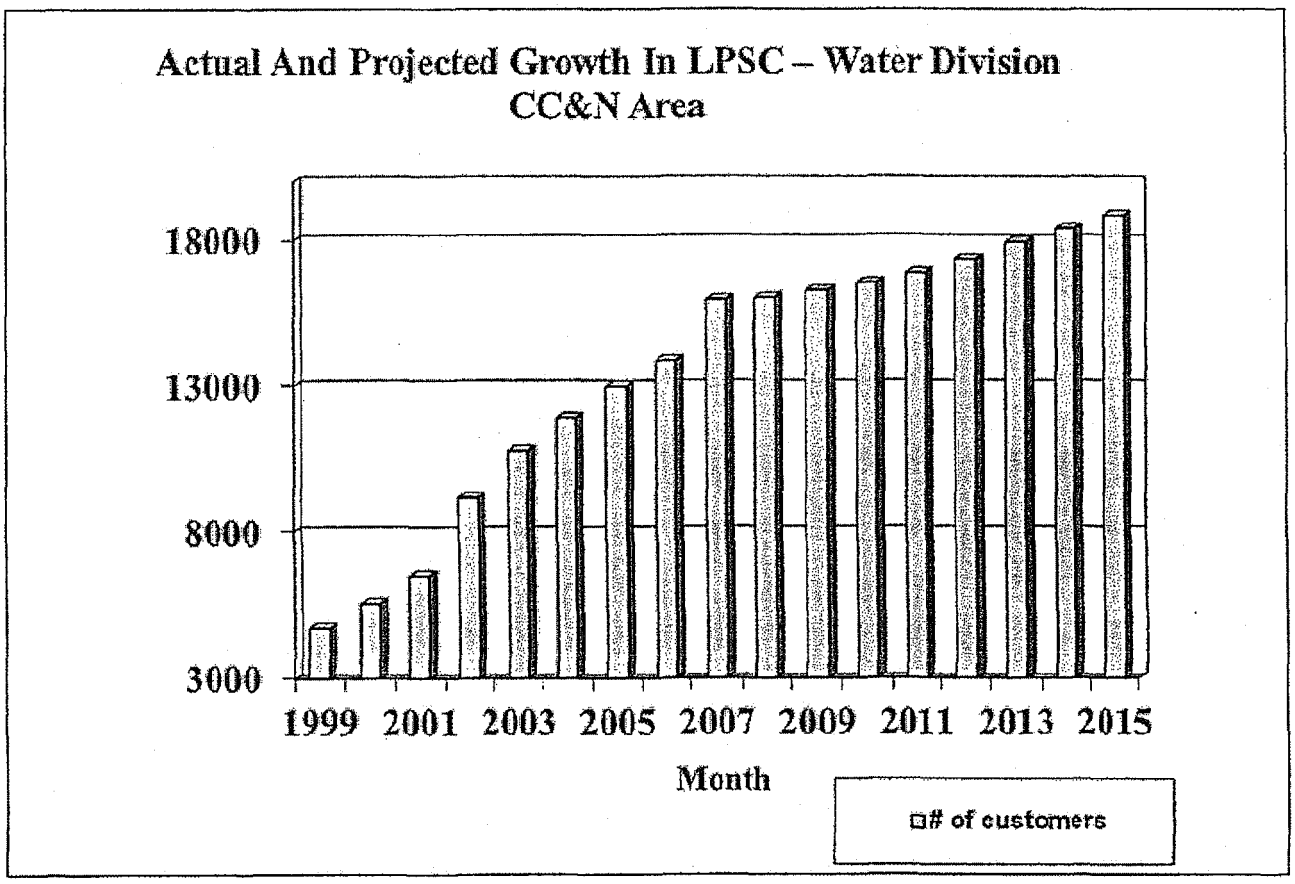

FIGURE 6

Depreciation Rates (LPSC-District)

Acct. No.	Depreciable Plant	Approved Rate (%) (Decision # 72026)	Proposed Rate (%)	Staff Recommended Rate (%)
301	Intangibles	0.00	0.00	0
303	Land & Land Rights	0.00	0.00	0
304	Structures & Improvements	3.33	3.33	3.33
305	Collecting & Impounding Reservoirs	2.50	2.50	2.50
306	Lake, River, Canal Intakes	2.50	2.50	2.50
307	Wells & Springs	3.33	3.33	3.33
308	Infiltration Galleries	6.67	6.67	6.67
309	Raw Water Supply Mains	2.00	2.00	2.00
310	Power Generation Equipment	5.00	5.00	5.00
311	Pumping Equipment	12.50	12.50	12.5
320	Water Treatment Equipment		3.33	
320.1	Water Treatment Plants	3.33	3.33	3.33
320.2	Solution Chemical Feeders	20.00	20.00	20.0
330	Distribution Reservoirs & Standpipes		2.22	
330.1	Storage Tanks	2.22	2.22	2.22
330.2	Pressure Tanks	5.00	5.00	5.00
331	Transmission & Distribution Mains	2.00	2.00	2.00
333	Services	3.33	3.33	3.33
334	Meters	8.33	8.33	8.33
335	Hydrants	2.00	2.00	2.00
336	Backflow Prevention Devices	6.67	6.67	6.67
339	Other Plant & Misc Equipment	6.67	6.67	6.67
340	Office Furniture & Equipment	6.67	6.67	6.67
340.1	Computers & Software	20.00	20.00	20.00
341	Transportation Equipment	20.00	20.00	20.00
342	Stores Equipment	4.00	4.00	4.00
343	Tools, Shop & Garage Equipment	5.00	5.00	5.00
344	Laboratory Equipment	10.00	10.00	10.00
345	Power Operated Equipment	5.00	5.00	5.00
346	Communication Equipment	10.00	10.00	10.00
347	Miscellaneous Equipment	10.00	10.00	10.00
348	Other Tangible Plant	---	10.00	10.00

FIGURE 7 Revised Off-Site Hookup Fee Tariff for LPSC -W Water
TARIFF SCHEDULE

UTILITY: **Litchfield Park Service Company - Water** DECISION NO. _____
DOCKET NO. **W-01428A-13-0043** EFFECTIVE DATE: _____

WATER HOOK-UP FEE

I. Purpose and Applicability

The purpose of the off-site hook-up fees payable to Litchfield Park Service Company - Water Division ("the Company") pursuant to this tariff is to equitably apportion the costs of constructing additional off-site facilities necessary to provide water production, delivery, storage and pressure among all new service connections. These charges are applicable to all new service connections undertaken via Main Extension Agreements or requests for service not requiring a Main Extension Agreement entered into after the effective date of this tariff. The charges are one-time charges and are payable as a condition to Company's establishment of service, as more particularly provided below.

II. Definitions

Unless the context otherwise requires, the definitions set forth in R-14-2-401 of the Arizona Corporation Commission's ("Commission") rules and regulations governing water utilities shall apply in interpreting this tariff schedule.

"Applicant" means any party entering into an agreement with Company for the installation of water facilities to serve new service connections, and may include Developers and/or Builders of new residential subdivisions and/or commercial and industrial properties.

"Company" means **Litchfield Park Service Company – Water Division.**

"Main Extension Agreement" means any agreement whereby an Applicant, Developer and/or Builder agrees to advance the costs of the installation of water facilities necessary to the Company to serve new service connections within a development, or installs such water facilities necessary to serve new service connections and transfers ownership of such water facilities to the Company, which agreement shall require the approval of the Commission pursuant to A.A.C. R-14-2-406, and shall have the same meaning as "Water Facilities Agreement" or "Line Extension Agreement."

"Off-site Facilities" means wells, storage tanks and related appurtenances necessary for proper operation, including engineering and design costs. Offsite facilities may also include booster pumps, pressure tanks, transmission mains and related appurtenances necessary for proper operation if these facilities are not for the exclusive use of the applicant and will benefit the entire water system.

"Service Connection" means and includes all service connections for single-family residential, commercial, industrial or other uses, regardless of meter size.

III. Water Hook-up Fee

For each new service connection, the Company shall collect an off-site hook-up fee derived from the following table:

OFF-SITE WATER HOOK-UP FEE TABLE		
METER SIZE	SIZE FACTOR	TOTAL FEE
5/8" x 3/4"	1	$1,800
3/4"	1.5	$2,700
1"	2.5	$4,500
1-1/2"	5	$9,000
2"	8	$14,400
3"	16	$28,800
4"	25	$45,000
6"	50	$90,000
8"	80	$144,000
10"	115	$310,500
12" or larger	215	$967,500

(A) For "Active Adult" communities with demonstrated age-restricted zoning and/or CCRs providing for age-restricted living, the Total Fee for domestic water use shall be Two-Thirds (2/3) of the Total Fee shown above, based on an ERU factor of 190 gallons per day. All non-domestic service connections shall pay the Hook-up fee per the above table.

IV. Terms and Conditions

(A) Assessment of One Time Off-Site Hook-up Fee: The off-site hook-up fee may be assessed only once per parcel, service connection, or lot within a subdivision (similar to meter and service line installation charge).

(B) Use of Off-Site Hook-up Fee: Off-site hook-up fees may only be used to pay for capital items of Off-site Facilities or for repayment of loans obtained to fund the cost of installation of off-site facilities. Off-site hook-up fees shall not be used to cover repairs, maintenance, or operational costs. The Company shall record amounts collected under the tariff as CIAC; however, such amounts shall not be deducted from rate base until such amounts have been expended for plant.

(C) Time of Payment:

1) For those requiring a Main Extension Agreement: In the event that the person or entity that will be constructing improvements ("Applicant", "Developer" or "Builder") is otherwise required to enter into a Main Extension Agreement, whereby the Applicant, Developer or Builder agrees to advance the costs of installing) mains, valves, fittings, hydrants and other on-site improvements in order to extend service in accordance with R-14-2-406(B), payment of the Hook-Up Fees required hereunder shall be made by the Applicant, Developer or Builder no later than within 15 calendar days after receipt of notification from the Company that the Utilities Division of the Arizona Corporation Commission has approved the Main Extension Agreement in accordance with R-14-2-406(M).

2) For those connecting to an existing main: In the event that the Applicant, Developer or Builder for service is not required to enter into a Main Extension Agreement, the Hook-Up Fee charges hereunder shall be due and payable at the time the meter and service line installation fee is due and payable.

(D) Off-Site Facilities Construction By Developer: Company and Applicant, Developer, or Builder may agree to construction of off-site facilities necessary to serve a particular development by Applicant, Developer or Builder, which facilities are then conveyed to Company. In that event, Company shall credit the total cost of such off-site facilities as an offset to off-site hook-up fees due under this Tariff. If the total cost of the off-site facilities constructed by Applicant, Developer or Builder and conveyed to Company is less than the applicable off-site hook-up fees under this Tariff, Applicant, Developer or Builder shall pay the remaining amount of off-site hook-up fees owed hereunder. If the total cost of the off-site facilities contributed by Applicant, Developer or Builder and conveyed to Company is more than the applicable off-site hook-up fees under this Tariff, Applicant, Developer or Builder shall be refunded the difference upon acceptance of the off-site facilities by the Company.

(E) Failure to Pay Charges; Delinquent Payments: The Company will not be obligated to make an advance commitment to provide or actually provide water service to any Developer, Builder or other applicant for service in the event that the Developer, Builder or other applicant for service has not paid in full all charges hereunder. Under no circumstances will the Company set a meter or otherwise allow service to be established if the entire amount of any payment due hereunder has not been paid.

(F) Large Subdivision Projects: In the event that the Applicant, Developer or Builder is engaged in the development of a residential subdivision containing more than 150 lots, the Company may, in its discretion, agree to payment of off-site hook-up fees in installments. Such installments may be based on the residential subdivision development's phasing, and should attempt to equitably apportion the payment of charges hereunder based on the Applicant's, Developer's or Builder's construction schedule and water service requirements. In the alternative, the Applicant, Developer, or Builder shall post an irrevocable letter of credit in favor of the Company in a commercially reasonable form, which may be drawn by the Company

consistent with the actual or planned construction and hook up schedule for the subdivision and/or development.

(G) Off-Site Hook-Up Fees Non-refundable: The amounts collected by the Company as Hook-Up Fees pursuant to the off-site hook-up fee tariff shall be non-refundable contributions in aid of construction.

(H) Use of Off-Site Hook-Up Fees Received: All funds collected by the Company as off-site hook-up fees shall be deposited into a separate interest bearing trust account and used solely for the purposes of paying for the costs of installation of off-site facilities, including repayment of loans obtained for the installation of off-site facilities that will benefit the entire water system.

(I) Off-Site Hook-up Fee in Addition to On-site Facilities: The off-site hook-up fee shall be in addition to any costs associated with the construction of on-site facilities under a Main Extension Agreement.

(J) Disposition of Excess Funds: After all necessary and desirable off-site facilities are constructed utilizing funds collected pursuant to the off-site hook-up fees, or if the off-site hook-up fee has been terminated by order of the Arizona Corporation Commission, any funds remaining in the trust shall be refunded. The manner of the refund shall be determined by the Commission at the time a refund becomes necessary.

(K) Fire Flow Requirements: In the event the applicant for service has fire flow requirements that require additional facilities beyond those facilities whose costs were included in the off-site hook-up fee, and which are contemplated to be constructed using the proceeds of the off-site hook-up Fee, the Company may require the applicant to install such additional facilities as are required to meet those additional fire flow requirements, as a non-refundable contribution, in addition to the off-site hook-up fee.

(L) Status Reporting Requirements to the Commission: The Company shall submit a calendar year Off-Site Hook-Up Fee status report each January to Docket Control for the prior twelve (12) month period, beginning January 2015, until the hook-up fee tariff is no longer in effect. This status report shall contain a list of all customers that have paid the hook-up fee tariff, the amount each has paid, the physical location/address of the property in respect of which such fee was paid, the amount of money spent from the account, the amount of interest earned on the funds within the tariff account, and a list of all facilities that have been installed with the tariff funds during the 12 month period.

FIGURE 8 Additional Five Best Management Practices ("BMP") Tariffs for LPSC -W

Company: _Liberty Utilities (Litchfield Park Water & Sewer) Corp._ Decision No.: ____TBD___

Phone: __623.935.9367_____ Effective Date: ___TBD____

Special Events/Programs and Community Presentations Tariff – BMP 1.2

PURPOSE

A program for the Company to give presentations and/or display and make available water conservation information and related material at community and special events (Modified Non-Per Capita Conservation Program BMP Category 1: Public Awareness/Public Relations 1.2: Special Events/Programs and Community Presentations).

REQUIREMENTS

The requirements of this tariff are governed by Rules of the Arizona Corporation Commission and were adapted from the Arizona Department of Water Resources' Required Public Education Program and Best Management Practices in the Modified Non-Per Capita Conservation Program.

1. The Company shall attend and staff at least three events per year in which the Company shall remind customers of the importance of water conservation measures. Events may include home and garden shows, art shows, community celebrations, environmental shows etc.
2. Information shall include water saving tips, home preparation recommendations for water systems/pipes, landscape maintenance issues for summer and winter, Xeriscape information, youth education materials and any additional pertinent topics.
3. The Company shall keep a record of the following information and make it available to the Commission upon request.
    a. A description of each special event and the date.
    b. The number of customers reached (or an estimate).
    c. A description of the written water conservation material provided free to customers.
    d. Costs of the Special Events/Programs and Community Presentations implementation.

Company: _Liberty Utilities (Litchfield Park Water & Sewer) Corp._ Decision No.: ____TBD___

Phone: __623.935.9367_____ Effective Date: ___TBD____

Landscape Consultation (Residential and/or Non-residential) Tariff – BMP 3.2

PURPOSE

A program for the Company to promote water conservation by providing landscape consultation services to residential and non-residential customers (Modified Non-Per Capita Conservation Program BMP Category 3: Outreach Services 3.2: Landscape Consultations (Residential and/or Non-residential)).

REQUIREMENTS

The requirements of this tariff are governed by Rules of the Arizona Corporation Commission and were adapted from the Arizona Department of Water Resources' Required Public Education Program and Best Management Practices in the Modified Non-Per Capita Conservation Program.

1. The Company or its designated provider shall offer landscape consultations to residential and non-residential customers. The consultations shall include, but are not limited to the following:
   a. Irrigation system evaluation.
   b. Controller programming/irrigation scheduling.
   c. Information about low water use plants, trees, and shrubs.
   d. Information about converting to xeriscape/turf conversion possibilities.
   e. Information about related programs (i.e., rebates for turf removal/ converting to xeriscape) if available will be offered during the consultation.
   f. As part of the consultation, and if requested to do so by the customer, the Company shall confirm the accuracy of the customer meter (applicable meter testing fees shall apply).

2. During the consultation, the Company or its designated provider shall provide either on-site written suggestions or on-site verbal suggestions with written follow-up.

3. The Company shall keep a record of the following information and make it available to the Commission upon request.
   a. A description of the landscape consultation information provided to customers.
   b. The number of landscape consultations provided to customers.
   c. Costs of the Landscape Consultation Program.

Company: _Liberty Utilities (Litchfield Park Water & Sewer) Corp._ Decision No.: ____TBD___

Phone: 623.935.9367 Effective Date: ___TBD____

Customer High Water Use Inquiry Resolution Tariff – BMP 3.6

PURPOSE

A program for the Company to assist its customers with their high water-use inquiries and complaints (Modified Non-Per Capita Conservation Program BMP Category 3: Outreach Services 3.6: Customer High Water Use Inquiry Resolution).

REQUIREMENTS

The requirements of this tariff are governed by Rules of the Arizona Corporation Commission and were adapted from the Arizona Department of Water Resources' Required Public Education Program and Best Management Practices in the Modified Non-Per Capita Conservation Program.

1. The Company shall handle high water use inquiries as calls are received.

2. Calls shall be taken by a customer service representative who has been trained on typical causes of high water consumption as well as leak detection procedures that customers can perform themselves.

3. Upon request by the customer or when the Company determines it is warranted, a trained Field Technician shall be sent to the customer's residence to conduct a leak detection inspection and provide the customer with water conservation measures. The leak detection inspection may consist of a meter read check for flow verification. If the on-site inspection is requested by the customer, the Commission approved meter re-read tariff fee shall apply.

4. The Company shall follow up in some way on every customer inquiry or complaint and keep a record of inquiries and follow-up activities.

Company: _Liberty Utilities (Litchfield Park Water & Sewer) Corp._ Decision No.: ____TBD___

Phone: __623.935.9367_____ Effective Date: ___TBD____

Customer High Water Use Notification Tariff – BMP 3.7

PURPOSE

A program for the Company to monitor and notify customers when water use seems to be abnormally high and provide information that could benefit those customers and promote water conservation (Modified Non-Per Capita Conservation Program BMP Category 3: Outreach Services Program 3.7: Customer High Water Use Notification).

REQUIREMENTS

The requirements of this tariff are governed by Rules of the Arizona Corporation Commission and were adapted from the Arizona Department of Water Resources' Required Public Education Program and Best Management Practices in the Modified Non-Per Capita Conservation Program.

1. The Company shall track water usage for each customer and notify the customer if water use seems excessive for that particular billing for that time of the year.
2. The Company shall identify customers with high consumption and investigate each instance to determine the possible cause.
3. The Company shall contact the high water use customers via telephone, email, by mail or in person. The Company shall contact the customer as soon as practical in order to minimize the possible loss of water. The customer will not be required to do anything to receive this notification.
4. In the notification the Company shall explain some of the most common water usage problems and common solutions and points of contact for dealing with the issues.
5. In the notification, the customer will be reminded of at least the following water-saving precautions:
   a. Check for leaks, running toilets, or valves or flappers that need to be replaced.
   b. Check landscape watering system valves periodically for leaks and keep sprinkler heads in good shape.
   c. Adjust sprinklers so only the vegetation is watered and not the house, sidewalk, or street, etc.
   d. Continue water conservation efforts with any pools such as installing covers on pools and spas and checking for leaks around pumps.
6. In the notification, the customer will also be reminded of at least the following ordinary life events that can cause a spike in water usage:
   a. More people in the home than usual taking baths and showers.
   b. Doing more loads of laundry than usual.
   c. Doing a landscape project or starting a new lawn.
   d. Washing vehicles more often than usual.
7. The Company shall provide water conservation information that could benefit the customer, such as, but not limited to, audit programs, publications, and rebate programs.
8. The Company shall assist the customer in a self-water audit and assist the customer in determining what might be causing the high water usage as well as supply

customer with information regarding water conservation and landscape watering guidelines. As part of the water audit the Company shall confirm the accuracy of the customer meter if requested to do so by the customer (applicable meter testing fees shall apply).

9. The type of notification, the timing of the notification (i.e., how long after high water use was discovered by the Company), and the criteria used for determining which customers are notified shall be recorded and made available to the Commission upon request.

Company: _____ Decision No.: _____

Phone: _____ Effective Date: _____

WATER SYSTEM TAMPERING TARIFF – BMP 5.2

PURPOSE

The purpose of this tariff is to promote the conservation of groundwater by enabling the Company to bring an action for damages or to enjoin any activity against a person who tampers with the water system.

REQUIREMENTS:

The requirements of this tariff are governed by Rules of the Arizona Corporation Commission, specifically Arizona Administrative Code ("AAC") R14-2-410 and the Arizona Department of Water Resources' Required Public Education Program and Best Management Practices in the Modified Non-Per Capita Conservation Program.

1. In support of the Company's water conservation goals, the Company may bring an action for damages or to enjoin any activity against a person who: (1) makes a connection or reconnection with property owned or used by the Company to provide utility service without the Company's authorization or consent; (2) prevents a Company meter or other device used to determine the charge for utility services from accurately performing its measuring function; (3) tampers with property owned or used by the Company; or (4) uses or receives the Company's services without the authorization or consent of the Company and knows or has reason to know of the unlawful diversion, tampering or connection. If the Company's action is successful, the Company may recover as damages three times the amount of actual damages.

2. Compliance with the provisions of this tariff will be a condition of service.

3. The Company shall provide to all its customers, upon request, a complete copy of this tariff and AAC R14-2-410. The customers shall follow and abide by this tariff.

4. If a customer is connected to the Company water system and the Company discovers that the customer has taken any of the actions listed in No. 1 above, the Company may terminate service per AAC R14-2-410.

5. If a customer believes he/she has been disconnected in error, the customer may contact the Commission's Consumer Services Section at 1-800-222-7000 to initiate an investigation.

Company: Liberty Utilities (Litchfield Park Water & Sewer) Corp. Decision No.: TBD

Phone: 623.935.9367 Effective Date: TBD

WATER SYSTEM TAMPERING TARIFF – BMP 5.2

PURPOSE

The purpose of this tariff is to promote the conservation of groundwater by enabling the Company to bring an action for damages or to enjoin any activity against a person who tampers with the water system.

REQUIREMENTS:

The requirements of this tariff are governed by Rules of the Arizona Corporation Commission, specifically Arizona Administrative Code ("AAC") R14-2-410 and the Arizona Department of Water Resources' Required Public Education Program and Best Management Practices in the Modified Non-Per Capita Conservation Program.

1. In support of the Company's water conservation goals, the Company may bring an action for damages or to enjoin any activity against a person who: (1) makes a connection or reconnection with property owned or used by the Company to provide utility service without the Company's authorization or consent; (2) prevents a Company meter or other device used to determine the charge for utility services from accurately performing its measuring function; (3) tampers with property owned or used by the Company; or (4) uses or receives the Company's services without the authorization or consent of the Company and knows or has reason to know of the unlawful diversion, tampering or connection. If the Company's action is successful, the Company may recover as damages three times the amount of actual damages.

2. Compliance with the provisions of this tariff will be a condition of service.

3. The Company shall provide to all its customers, upon request, a complete copy of this tariff and AAC R14-2-410. The customers shall follow and abide by this tariff.

4. If a customer is connected to the Company water system and the Company discovers that the customer has taken any of the actions listed in No. 1 above, the Company may terminate service per AAC R14-2-410.

5. If a customer believes he/she has been disconnected in error, the customer may contact the Commission's Consumer Services Section at 1-800-222-7000 to initiate an investigation.

Engineering Report
Litchfield Park Service Co. - Wastewater Division
Prepared By
Dorothy Hains, P. E.
Docket Nos. SW-01428A-13-0042 (Rates)

September 25, 2013

EXECUTIVE SUMMARY

Recommendations:

1. Arizona Corporation Commission ("ACC" or "Commission") Utilities Division Staff ("Staff") recommends estimated annual water testing costs of $22,005 for Litchfield Park Service Co. Wastewater Division ("LPSC-WW" or "Company") (See §I for discussion and details.)

2. Staff recommends the depreciation rates by individual National Association of Regulatory Utility Commissioners category, as delineated in Figure 6. (See §J and Figure 6 for a discussion and a tabulation of the recommended rates.)

3. Staff recommends annual sludge testing cost of $3,410. (See §J of report for discussion and details.)

4. Staff recommends that the plant items listed in Table 6 be reclassified for accounting purposes as indicated. (See §J for discussion and details.)

5. Staff recommends denial of the Company's proposed modification to its existing Off-site Hookup Fee Tariff for wastewater. (See §J of report for discussion and details.)

Conclusions:

1. A check of the Commission's Compliance Section database dated June 6, 2013, indicated that LPSC WW had no ACC delinquent compliance items. (See §G of report for discussion and details.)

2. In a Compliance Status Report dated April 3, 2013, Arizona Department of Environmental Quality ("ADEQ") reported that LPSC's Palm Valley Water Reclamation Facility ("WRF") was in compliance with ADEQ regulations. (See §F of report for discussion and details.)

3. The Palm Valley WRF has adequate treatment capacity to serve the present customer base and reasonable growth. (See §D of report for discussion and details.)

4. The LPSC-WW Equalization Basin Rehabilitation Project is not used and useful. (See §J of report for discussion and details.)

5. All expenses and capital improvement costs related to future Sarival Wastewater Treatment Plant and future final effluent recharge feasibility study are not used and useful to LPSC-WW provision of service. (See §J for discussion and details.)

6. The proposed 5-year infrastructure replacement plan at a cost of $10,337,600 is reasonable and appropriate. However, no "used and useful" determination of the proposed plant items was made, and no conclusions should be inferred for rate making or rate base purposes in the future. (See §J for discussion and details.)

TABLE OF CONTENTS

Page

A. PURPOSE OF REPORT 1

B. LOCATION OF THE LPSC-WW 1

C. DESCRIPTION OF SYSTEM 1

D. WASTEWATER FLOW 3

I. Wastewater flow 4

II. System Analysis 5

E. GROWTH PROJECTION 5

F. ARIZONA DEPARTMENT OF ENVIONMENTAL QUALITY ("ADEQ") COMPLIANCE 5

G. ACC COMPLIANCE 6

H. WASTEWATER TESTING EXPENSES 6

I. DEPRECIATION RATES 6

J. OTHER ISSUES 7

I. Not Used And Useful Plant Items 7

II. Reclassification 8

III. Off-site Hookup Fee ("OHF") Tariff 9

IV. Post Test Year Proforma 9

V. Sludge Testing Cost 9

VI. System Improvement Benefits ("SIB") 9

FIGURES

Figure 1: LPSC-WW Certificate Service Area 11
Figure 2: Location of LPSC-WW Service Area 12
Figure 3A: Systematic Drawing 13
Figure 3B: Systematic Drawing 14
Figure 4: Wastewater Flow in LPSC-WW Service Area 15
Figure 5: Actual and Projected Growth in LPSC-WW Service Area 16
Figure 6: Depreciation Rates 17

ENGINEERING REPORT
LITCHFIELD PARK SERVICE WATER COMPANY - WASTEWATER DIVISION
DOCKET NO. W-01428A-13-0042 (RATES)

A. PURPOSE OF REPORT

This report was prepared in response to the application filed by Litchfield Park Service Company - Wastewater Division ("LPSC-WW") with the Arizona Corporation Commission ("ACC" or "the Commission") to increase its wastewater rates. The ACC Utilities Division Staff ("Staff") engineering review and analysis of the subject application is presented in this report.

An inspection of the LPSC's wastewater system was conducted by Dorothy Hains, Staff Engineer, accompanied by Jeff Michlik (Staff Accountant), Company Representative, Chris Krygier (Manager), Matthew Garlick (Director), Clint Arndt (Manager), Brian Hamrick, P.E. (Project Manager) on June 19, 2013 and September 5, 2013.

B. LOCATION OF THE LPSC-WW

LPSC-WW is located in the west Phoenix Valley and provides sewer service to communities within the City of Litchfield Park ("City"), City of Goodyear, City of Avondale, and some unincorporated areas of Maricopa County. Figure 1 shows the location of LPSC-WW within Maricopa County and Figure 2 shows the approximate 21 square-miles of LPSC's wastewater certificated area.

C. DESCRIPTION OF SYSTEM

LPSC -WW operates its Palm Valley Water Reclamation Facility ("WRF"), two lift stations ("LS") and a collection system. Palm Valley WRF, is an enclosed treatment facility with two different odor control systems to eliminate odor problems. LPSC - WW expanded Palm Valley WRF treatment capacity from 4.1 million gallon per day ("MGD") to 5.1 MGD during 2012 and 2013. Palm Valley WRF consists of raw sewage inflow LS, headworks, grit removal, equalization ("EQ") basin, three sequential batch reactors ("SBR"), four tertiary disk filters, and seven UV disinfection trains and a backup disinfection system of chlorination/dechlorination unit. The headworks, raw sewerage LS and grit removal have been out of service due to rehabilitation of EQ basin. A temporary bypass of the grit and EQ basin was installed until the rehabilitation is completed. LPSC-WW uses a Supervisory Control and Data Acquisition ("SCADA") system to communicate and control each Palm Valley WRF treatment process step.

Final treated effluent is permitted for effluent reuse by Arizona Department of Environmental Quality ("ADEQ") via Arizona Aquifer Protection ("APP") Permit (Permit No. 47746 and 53068) and Reuse Permits. LPSC-WW disposes of final effluent on different reuse sites such as farm lands, golf courses and parks throughout its service area. ADEQ also allows LPSC-WW to dispose of its final treated effluent in the Roosevelt Irrigation District ("RID") Canal via Arizona Pollutant Discharge Elimination System ("AZPDES") Permit No. 45829. LPSC-WW served approximately 19,500 customers during the test year ending in December 2012. The wastewater

system schematics are shown in Figures 3A and 3B with detailed plant facility descriptions as follows:

Table 1. Plant Description

Water Reclamation Facility

Name	Plant Capacity	Location
Palm Valley WRF	5.1 MGD treatment plant consists of influent lift station, headworks with fine screens and grit removal, anoxic reactor/equalization tank and SBRs for nitrification/denitrification, disc-filters, ultraviolet disinfection system, aerobic sludge digesters, and sludge dewatering centrifuges. Odor control systems, centrifuge, ultraviolet system, effluent pumps, and chlorination/dechlorination (backup disinfection unit)	14222 West McDowell Road, Goodyear, Arizona

Lift Station ("LS") Facilities

	Connecting to which WWTP	Location	No. Pumps	Pump (in HP)	Capacity (in gallons per minute per pump)	Wet Well Capacity (in gallons)
Casitas Bonitas LS	Palm Valley WRF	6803 N Dysart Rd, Glendale	2	20	350	2,500
Sarival LS	Palm Valley WRF & Goodyear WWTP	1530 N Sarival Ave. Goodyear	2 1	33 40	1,050	30,000

Force Mains

Size (in inches)	Material	Length (in feet)
10	Poly vinyl chloride ("PVC")	17,550
12	PVC	6,100
8	Ductile Iron Pipe ("DIP")	3,550
10	DIP	3,925
12	DIP	47
16	DIP	5,200
24	DIP	6,484

Collection Mains

Size (in inches)	Material	Length (in feet)
4	Vitrified Clay Pipe ("VCP")/DIP/PVC	208,097
6	VCP/DIP/PVC	4,667
8	VCP/DIP/PVC	1,165,969
10	VCP/DIP/PVC	70,196
12	VCP/DIP/PVC	53,213

15	VCP/DIP/PVC	85,886
18	VCP/DIP/PVC	22,180
21	VCP/DIP/PVC	23,016
24	VCP/DIP/PVC	12,188
30	VCP/DIP/PVC	3,663

Manholes & Cleanouts

Type	Quantity
Standard Manhole	4,270
Drop Manhole	61
Cleanouts	172

Services

Size (in inches)	Material	Length (in feet)
4	VCP/DIP/PVC	17,906
6	VCP/DIP/PVC	700
8	VCP/DIP/PVC	2
10	VCP/DIP/PVC	4

D. WASTEWATER FLOW

I. Wastewater Flows

Based on the information provided by LPSC, wastewater flows for the test year ending in December 2012 are presented in Table 2 and Figure 4. For the average daily flows, November 2012 experienced the highest flow of 3,539,533 gallons per day ("GPD"). For the peak day flows, October 2012 had the highest flow when 4,273,000 gallons were treated in one day.

Table 2. Litchfield Park Wastewater Flow In 2012

Month	Number of Connections	Monthly Total Volumes of Treated Wastewater (gallons)	Daily Average Flow (gallons/day)	Peak Day Flow (gallons)	Daily Average Flow (gal/day/customers)
Jan	18,816	103,443,000	3,336,871	3,846,000	177
Feb	18,877	97,923,000	3,497,250	3,933,000	185
Mar	18,906	107,792,000	3,477,161	4,098,000	184
Apr	18,961	100,265,000	3,342,167	3,640,000	176
May	19,001	98,950,000	3,191,935	3,699,000	168
Jun	19,063	94,275,000	3,142,500	3,976,000	165
Jul	19,140	100,140,000	3,230,323	3,906,000	169
Aug	19,202	104,663,000	3,376,226	3,757,000	176
Sep	19,267	96,705,000	3,223,500	3,695,000	167
Oct	19,316	105,392,000	3,399,742	4,273,000	176
Nov	19,355	106,186,000	3,539,533	4,267,000	183
Dec	19,433	108,094,000	3,486,903	3,905,000	179

Average			3,353,676		175

II. *System Analysis*

Staff concludes that Palm Valley WRF has adequate treatment capacity to serve the present customer base and reasonable growth.

E. GROWTH PROJECTION

Figure 5 depicts the customer growth using linear regression analysis. The number of service connections was obtained from annual reports submitted to the Commission. At the end of the test year December 2012, the Company had 19,433 customers and it is projected that this system could have approximately 21,537 customers by December 2016. The following table summarizes Staff's projected growth.

Table 3 Actual & Projected Growth in LPSC (Wastewater) Service Area

Year	Nos. of Customers	
1999	4,245	Reported
2000	5,140	Reported
2001	5,964	Reported
2002	8,822	Reported
2003	10,728	Reported
2004	11,817	Reported
2005	12,513	Reported
2006	15,748	Reported
2007	17,661	Reported
2008	17,907	Reported
2009	18,281	Reported
2010	18,536	Reported
2011	18,791	Reported
2012	19,433	Reported
2013	20,043	Estimated
2014	20,541	Estimated
2015	21,039	Estimated
2016	21,537	Estimated

F. ARIZONA DEPARTMENT OF ENVIRONMENTAL QUALITY ("ADEQ") COMPLIANCE

In a Compliance Status Report dated April 3, 2013, ADEQ reported that LPSC's Palm Valley WRF was in total compliance with ADEQ regulations.

G. ACC COMPLIANCE

A check of the Commission's Compliance Section database dated June 6, 2013, indicated that LPSC-WW had no ACC delinquent compliance items.

H. WASTEWATER TESTING EXPENSES

LPSC-WW reported its water testing expense at $57,735 for the test year. Staff has reviewed the Company's reported expense amount and has recalculated these expenses and recommends that Staff water testing expense of $22,005 (rounded) be adopted for this proceeding.

Based on monitoring requirements in APP Permit No. 47746 and 53068 and AZPDES Permit No. 45829, Table 4 and 4A are the estimated annual testing costs for the LPSC-WW.

Table 4 Water Testing Cost for LPSC-WW (Based On AZPDES Permit # AZ0025712)

Monitoring – Discharge	No. of tests per year [1]	Cost per test ($)	Company Reported Total Costs	Staff Estimated Annual Cost
Biochemical Oxygen Demand (BOD_5) – 1/week	52	20[2]	N/A	1,040
Bacteriological – Fecal Coliform (E Coli) – 4/month	48	13.5[2]	N/A	648
Total Suspended Solids (TSS) – 1/week	52	12[2]	N/A	624
pH- 5/week	260	12[2]	N/A	3,120
Oil and grease - quarterly	4	80[2]	N/A	320
Total residual chlorine (TRC)- quarterly	4	13.5[2]	N/A	54
Ammonia (NH_3) – quarterly	4	24[2]	N/A	96
Nitrate & Nitrite (NO_3 & NO_2) - quarterly	4	32[2]	N/A	128
Total Kjeldahl Nitrogen (TKN) -quarterly	4	30[2]	N/A	120
Total Nitrogen – monthly	0	48[2]	N/A	0
Dissolved Oxygen (DO) – 1/year	1	35[3]	N/A	35
Hardness - quarterly	4	18[2]	N/A	72
Phosphorus (P) -quarterly	4	30[2]	N/A	120
Total Dissolved Solids (TDS) - quarterly	4	12[2]	N/A	48
Total Metals (including fluoride & cyanide) - quarterly -	4	271[2]	N/A	1,084
Selected Acid-extractable Compounds – 1/year	1	95[4]	N/A	95
Selected Base-neutral Compounds – 1/year	1	365[4]	N/A	365
Based on Designated Uses – 1/year	1	365[4]	N/A	365
Volatile Organic Compound (VOCs) -	1	225[3]	N/A	225

1/year				
Semi-Volatile Organic Chemicals (SVOC) 1/year	1	2,050[3]	N/A	2,050
Total			**N/A**	**10,609**

Note: 1. Total monitoring/sampling frequencies are based on requirements in AZPDES (Permit # AZ0025712).
2. Prices come from Legend Lab
3. Prices come from Aquatic Consulting & Testing, Inc.
4. Prices come from Mohave Environmental Lab.

Table 4A Water Testing Cost for LPSC-WW (Based On APP Permit # P-100310)

Monitoring – Discharge	No. of tests per year[1]	Cost per test ($)	Company Reported Total Costs	Staff Estimated Annual Cost ($)
Bacteriological – Fecal Coliform (E Coli) - daily	365	13.5[2]	N/A	4,927.5
Nitrate & Nitrite (NO_3 & NO_2) - quarterly	4	32[2]	N/A	128
Total Kjeldahl Nitrogen (TKN) -quarterly	4	30[2]	N/A	120
Total Nitrogen – monthly	12	48[2]	N/A	576
Total Metals (including fluoride & cyanide) - quarterly -	4	271[2]	N/A	1,084
Volatile Organic Compound (VOCs) -2/year	2	225[3]	N/A	450
Semi-Volatile Organic Chemicals (SVOC)- 2/year	2	2,050[3]	N/A	4,100
Total			**N/A**	**11,395.5**

Note: 1. Total monitoring/sampling frequencies are based on APP (Permit # P-100310).
2. Prices come from Legend Lab
3. Prices come from Aquatic Consulting & Testing, Inc.
4. Prices come from Mohave Environmental Lab.

Total recommended water testing cost is $22,005 (rounded sum total of Table 4 and Table 4A).

I. DEPRECIATION RATES

Staff has developed typical and customary depreciation rates within the range of anticipated equipment life. These rates are presented in Figure 6, and should be used to calculate the annual depreciation expense for the Company. Staff recommends the depreciation rates by individual National Association of Regulatory Utility Commissioners ("NARUC") category, as delineated in Figure 6.

J. OTHER ISSUES

I. Plant Not in Use

Based on its field inspection, Staff concludes that the plant related expenses listed in Table 5 below are for future plant not currently used and useful.

Table 5 Not Used and Useful Plant Items

year	Amount ($)	NARUC Account (LPSC's)	Reasons
2009	3,994.6	353 (Land & Land Right)	Work was for future Sarival WWTP
2009	1,194.2	353 (Land & Land Right)	Work was for future Sarival WWTP
2009	2,619.8	353 (Land & Land Right)	Work was for future Sarival WWTP
2009	3,408.6	353 (Land & Land Right)	Work was for future Sarival WWTP
2011	18,143.77	354 (Structures & Improvements)	Work done by Errol Montgomery & Association for future final effluent recharge feasibility study
2011	22,628.94	354 (Structures & Improvements)	Work done by Errol Montgomery & Association for future final effluent recharge feasibility study
2011	10,592.50	354 (Structures & Improvements)	Work done by Errol Montgomery & Association for future final effluent recharge feasibility study
2011	12,932	354 (Structures & Improvements)	Work done by Errol Montgomery & Association for future final effluent recharge feasibility study
2011	7,700	354 (Structures & Improvements)	Work done by Errol Montgomery & Association for future final effluent recharge feasibility study
2011	41,332	354 (Structures & Improvements)	Work done by Errol Montgomery & Association for future final effluent recharge feasibility study
Total	**124,546.4**		

II. Reclassification

The plant items listed in Table 6 below should be reclassified for accounting purposes as indicated. Staff's recommendation is based on the Company's response to Staff Data Request #DH11.2.

Table 6 Reclassification

Year	Amounts ($)	NARUC Acct (LPSC's)	NARUC Acct (Staff Recommended)	Reasons
2009	16,604.5	354 (Structure & Improvement)	380 (Wastewater Treatment & Disposal	Plant item was for Palm Valley WRF upgrade

			Equipment)	
2009	283,971.1	354 (Structure & Improvement)	380 (Wastewater Treatment & Disposal Equipment)	Plant item was for Palm Valley WRF upgrade
2009	38,926.12	354 (Structure & Improvement)	380 (Wastewater Treatment & Disposal Equipment)	Plant item was for Palm Valley WRF upgrade
2009	11,210	354 (Structure & Improvement)	380 (Wastewater Treatment & Disposal Equipment)	Plant item was for Palm Valley WRF upgrade
2009	20,231.99	354 (Structure & Improvement)	380 (Wastewater Treatment & Disposal Equipment)	Plant item was for Palm Valley WRF upgrade
2009	22,264.30	354 (Structure & Improvement)	380 (Wastewater Treatment & Disposal Equipment)	Plant item was for Palm Valley WRF upgrade
2009	24,852.40	354 (Structure & Improvement)	380 (Wastewater Treatment & Disposal Equipment)	Plant item was for Palm Valley WRF upgrade
2009	5,725	354 (Structure & Improvement)	380 (Wastewater Treatment & Disposal Equipment)	Plant item was for Palm Valley WRF upgrade
2009	41,564.37	354 (Structure & Improvement)	361 (Collection Sewer)	Emergency interconnection from Sarival Lift Station to Goodyear WWTP
2009	836.34	380 (Wastewater Treatment & Disposal Equipment))	394 (Lab equipment)	HACH test kit
2009	36,618	380 (Wastewater Treatment & Disposal Equipment))	365 (flow measuring installation)	Installation of inflow flow meter

2009	5,047.8	389 (Other Plant & Misc. Equipment)	371 (Pumping equipment)	Plant item was a blower.
2009	18,153.75	389 (Other Plant & Misc. Equipment)	380 (Wastewater Treatment & Disposal Equipment)	Plant item was for Palm Valley WRF upgrade
2009	9,368.75	389 (Other Plant & Misc. Equipment)	380 (Wastewater Treatment & Disposal Equipment)	Plant item was for Palm Valley WRF upgrade
2009	5,074.34	389 (Other Plant & Misc. Equipment)	380 (Wastewater Treatment & Disposal Equipment)	Plant item was for Palm Valley WRF upgrade
2009	5,360	389 (Other Plant & Misc. Equipment)	380 (Wastewater Treatment & Disposal Equipment)	Plant item was for Palm Valley WRF upgrade
2012	25,423	354 (Structure & Improvement)	380 (Wastewater Treatment & Disposal Equipment)	Plant item was for Palm Valley WRF upgrade(SBR #3 piping modification)
2012	5,200	354 (Structure & Improvement)	380 (Wastewater Treatment & Disposal Equipment)	Aquifer Protection Permit for Palm Valley WRF upgrading
2012	5,682.42	354 (Structure & Improvement)	371 (Pumping equipment)	Plant item was a 18-HP pump
2012	23,454.67	354 (Structure & Improvement)	371 (Pumping equipment)	Plant item was a 33-HP pump
2012	15,681.39	393 (Tools, Shop & Garage Equipment)	380 (Wastewater Treatment & Disposal Equipment)	Plant item was for filters.
2012	5,684.72	395 (Power Operated Equipment)	371 (Pumping equipment)	Plant item was a 100-HP pump.
2012	15,800	395 (Power Operated Equipment)	371 (Pumping equipment)	Plant item was a blower.

III. Off-site Hookup Fee ("OHF") Tariff

LPSC has an approved OHF Tariff for wastewater on file with the Commission. LPSC requested that the language in Section IV.C.1. related to, "Time of Payment" be modified. LPSC requested that payment by the Developer be made at the time of execution of the Main Extension Agreement. Staff does not believe this modification is necessary and recommends denial.

VI. Post-Test Year Plant Adjustment

While doing the Palm Valley WRF expansion, the contractor observed that the EQ basin was damaged by hydrogen sulfide corrosion. Maricopa County Department of Environmental Services ("MCDES") issued a Certificate of Approval To Proceed With Stipulations for EQ Basin Rehabilitation on May 17, 2013. The EQ basin was still down for rehabilitation during Staff's recent inspection on September 5, 2013. Phase I of the EQ Basin Rehabilitation Project ("Project") has been completed, Phase II of the Project which includes (1) adding three additional columns; (2) installing carbon filter linear on EQ basin inner surface to prevent from future corrosion; and (3) raising elevations of headwork pipelines by 6-inch is still under construction. LPSC-WW estimates the entire Project should be completed in November 2013. Because the Project is not completed, the EQ basin is not in service. Therefore, the related post-test year plant adjustment is not used and useful at present time. Staff concludes that the LPSC-WW EQ Basin rehabilitation Project is not used and useful at present time.

V. Sludge Testing Cost

During the wastewater treatment process sludge is generated. The sludge cannot be transported and disposed of in any landfill until the sludge is tested and passes the toxicity characteristic leaching procedure ("TCLP") and hazardous waste tests. LPSC-WW conducts one TCLP test per year and four hazardous waste tests per year. Staff estimates an annual sludge testing fee of $3,410. Table below details the testing calculation.

Monitoring	No. of tests per year [1]	Cost per sample ($)	Company Reported Total Costs	Staff Estimated Annual Cost
toxicity characteristic leaching procedure ("TCLP")– 1/week	1	318[2]	N/A	318
hazardous waste	4	773[2]	N/A	3,092
Total			N/A	**3,410**

Note: 1. Total monitoring/sampling frequencies are based on LPSC-WW verbal statement.
2. Prices come from Legend Lab.

VI. System Improvement Benefits ("SIB") Mechanism

The Company is seeking a SIB mechanism to address necessary collection system infrastructure replacements and improvements to service existing customers. The proposed SIB includes an area approximately one square mile in size within the City (see Figure 1). As a supplement to its application, LPSC-WW submitted the Litchfield Park Facilities Assessment Report ("Report") [1] supporting the need for the proposed five year infrastructure replacements and improvements. The Report identifies the most critical areas, estimates the quantity of sewer collection lines, manholes and sewer service laterals that need to be replaced, and estimates the associated replacement costs. In addition, the Report included a Table 7 (equivalent to Table I in Decision No. 73736) of SIB-eligible projects and related costs, and Tables 8 and 9 that lists annual estimated project costs by NARUC account.

A summary of the Company's proposed 5-year infrastructure replacement plan is tabulated below:

Year	2014		2015		2016		2017		2018		5-Year Total	
Plant	units	Cost (in $)	units	Cost (in $)	units	Cost (in $)	units	Cost (in $)	units	Cost (in $)	units	Cost (in $)
Services (NARUC Acc #36[illegible])	95	46,300	153	68,300	175	78,100	120	52,100	496	213,900	1,039	458,700
Manholes (NARUC Acct #363)	23	91,500	41	177,100	70	253,400	52	182,100	107	363,900	293	1,068,000
Gravity Flow Collection Sewer (NARUC Acct #361)	5,321	688,000	10,029	1,234,900	17,691	2,123,700	15,807	1,972,600	23,049	2,790,700	71,897	8,810,500
Total		825,800		1,480,300		2,455,800		2,206,800		3,368,500		**10,337,600**

Staff has reviewed the Company's Report. Staff finds the proposed 5-year infrastructure replacement plan at a cost of $10,337,600 to be reasonable and appropriate. However, no "used and useful" determination of the proposed plant items was made, and no conclusions should be inferred for rate making or rate base purposes in the future.

1 According to the Company its sewer collection lines, manholes and service laterals in this area have been severely damaged by hydrogen sulfide, a hazardous, corrosive gas commonly discovered in raw sewage.

FIGURE 1

LPSC-WW Certificate Service Area

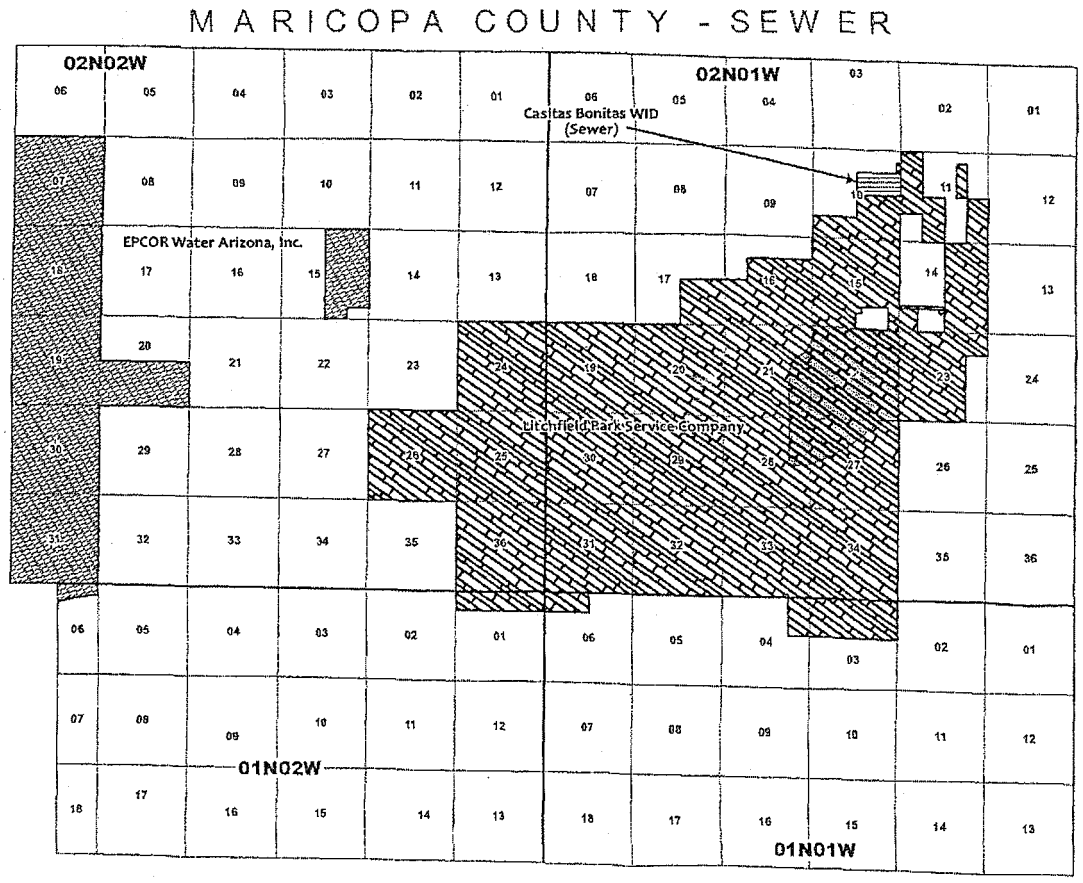

FIGURE 2.

LOCATION OF LPSC-WW SERVICE AREA

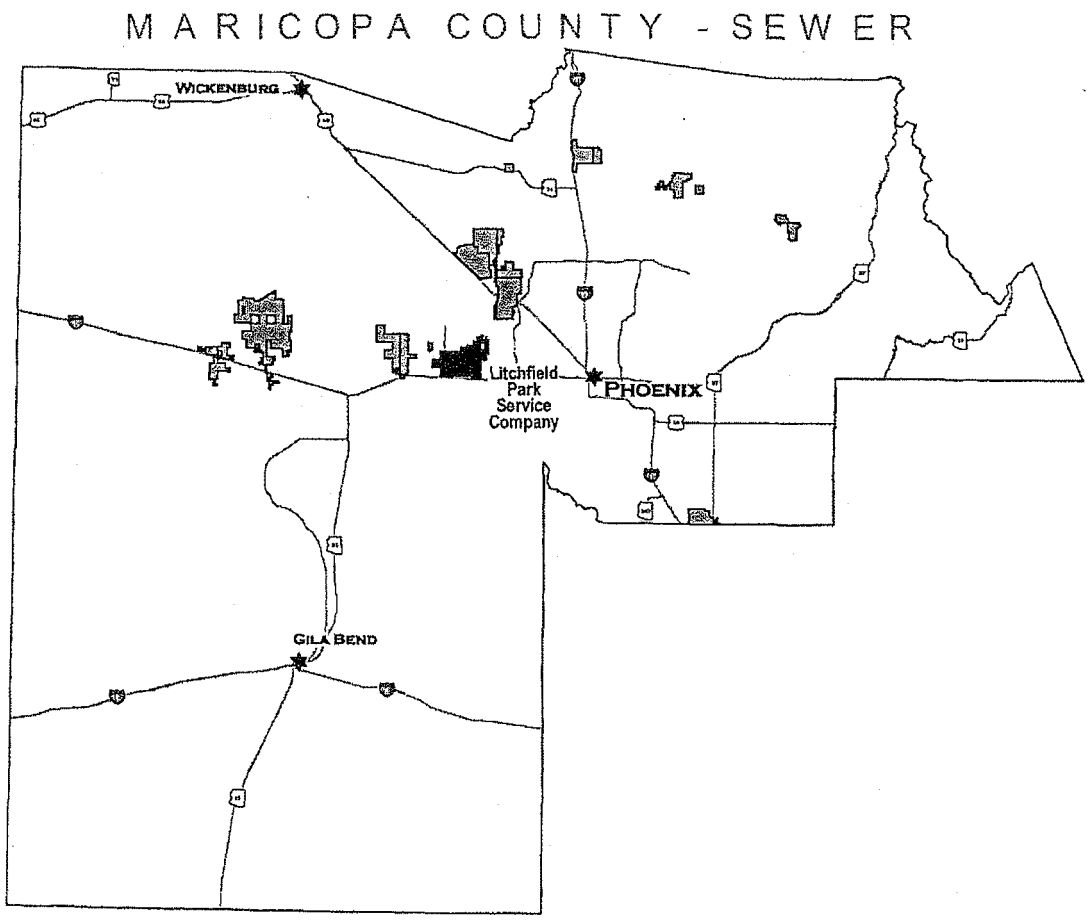

FIGURE 3A SYSTEMATIC DRAWING

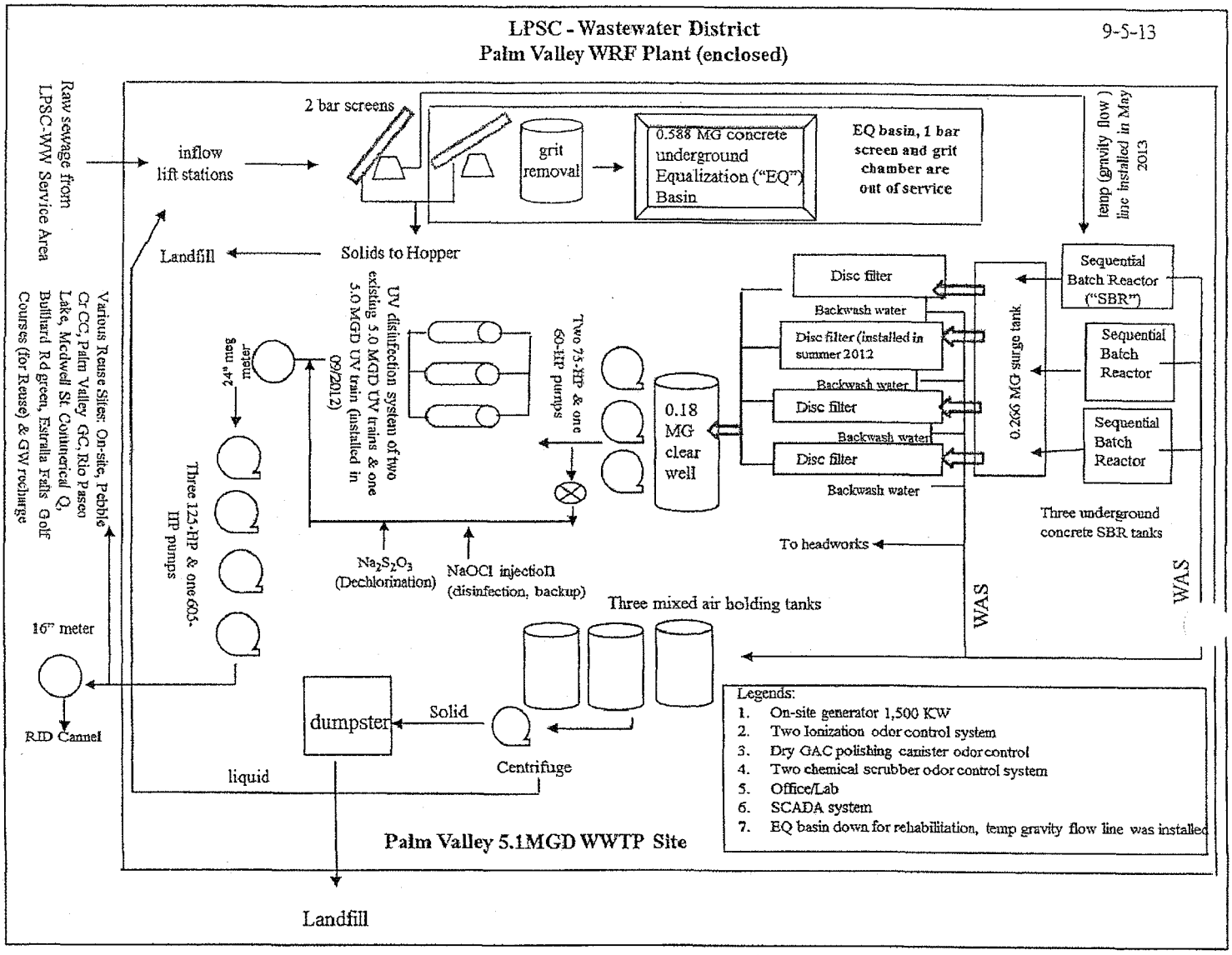

FIGURE 3B SYSTEMATIC DRAWING

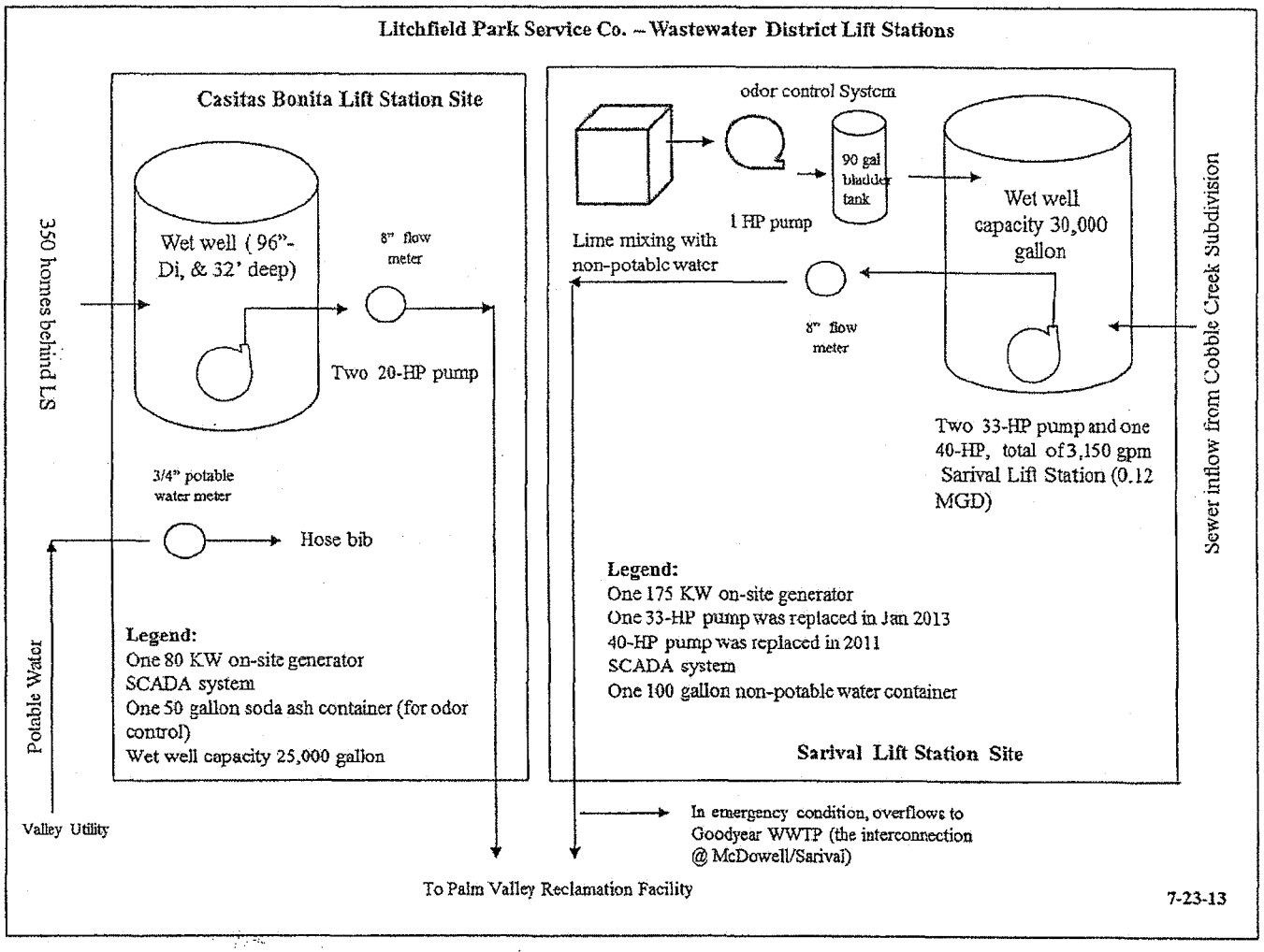

FIGURE 4

WASTEWATER FLOW IN LPSC-WW SERVICE AREA

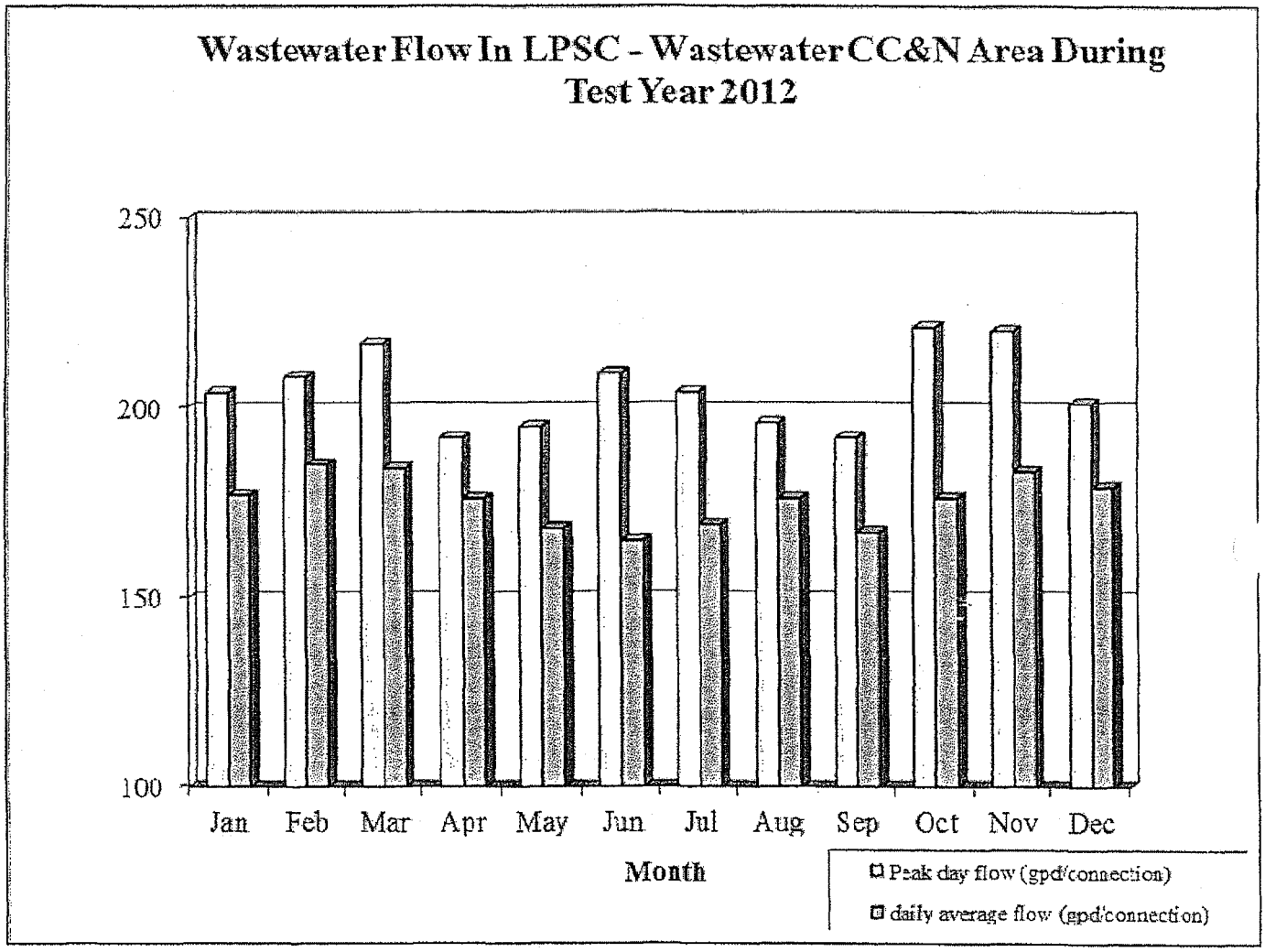

FIGURE 5

ACTUAL AND PROJECTED GROWTH IN LPSC-WW SERVICE AREA

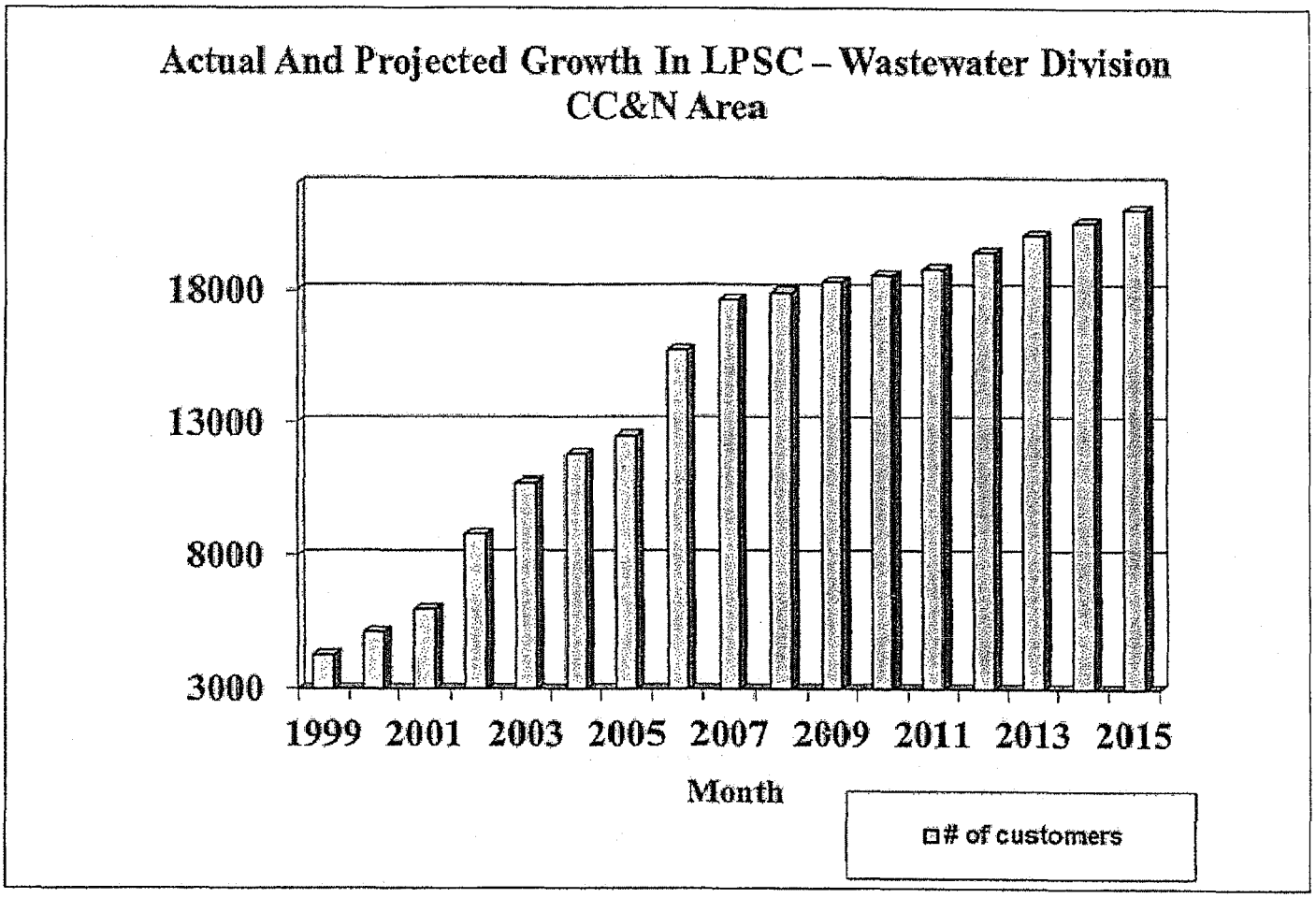

FIGURE 6

Depreciation Rates for LPSC-WW

NARUC Acct #	Depreciable Plant	Decision #72026	Co. Proposed Rate (%)	**Staff Recommended Rate (%)**
351	**Organization**	0		0
352	**Franchises**	0		0
353	**Land & Land Rights**	0		0
354	**Structure & Improvements**	3.33	3.33	3.33
355	**Power Generation Equipment**	5.00	5.00	5.00
360	**Collection Sewers - Force**	2.00	2.00	2.00
361	**Collection Sewers - Gravity**	2.00	2.00	2.00
362	**Special Collection Structures**	2.00	2.00	2.00
363	**Service to Connections**	2.00	2.00	2.00
364	**Flow Measuring Devices**	10.00	10.00	10.00
365	**Flow Measuring Installations**	10.00	N/A	10.00
366	**Reuse Services**	2.00	2.00	2.00
367	**Reuse Meters & Meter Installations**	8.33	8.33	8.33
370	**Receiving Wells**	3.33	3.33	3.33
371	**Pump Equipment**	12.50	12.50	12.50
374	**Reuse Distribution Reservoirs**	2.50	2.50	2.50
375	**Reuse Transmission and Distribution System**	2.50	2.50	2.50
380	**Treatment & Disposal Equipment**	5.00	5.00	5.00
381	**Plant Sewers**	5.00	5.00	5.00
382	**Outfall Sewer Lines**	3.33	3.33	3.33
389	**Other Plant & Misc. Equipments**	6.67	6.67	6.67
390	**Office Furniture & Equipments**	6.67	6.67	6.67
390.1	**Computer & Software**	20.00	20.00	20.00
391	**Transportation Equipments**	20.00	20.00	20.00
392	**Store Equipment**	4.00	4.00	4.00
393	**Tools, Shop, Garage Equipments**	5.00	5.00	5.00
394	**Lab Equipments**	10.00	10.00	10.00
395	**Power Operated Equipment**	5.00	5.00	5.00
396	**Communication Equipment**	10.00	10.00	10.00
397	**Miscellaneous Equipment**	10.00	N/A	10.00
398	**Other plants**	---	10.00	10.00

ATTACHMENTS

DATA RESPONSES

REFERENCED

LITCHFIELD PARK SERVICE COMPANY DBA LIBERTY UTILITIES
DOCKET NO. W-01427A-13-0043
RESPONSE TO STAFF'S FIRST SET OF DATA REQUESTS

April 19, 2013

Response provided by:	Christopher D. Krygier
Title:	Utility Rates and Regulatory Manager
Company Name:	Litchfield Park Service Company dba Liberty Utilities
Address:	12725 W. Indian School Road, Suite D101 Avondale, AZ 85392

Company Response Number: **DH – 1.6 [Supplement]**

Q. In Mr. Bourassa's Testimony, Exhibit of Schedule C-1, LPSCO Water stated that it paid $33,649 in test year for water testing and then adjusted to $66,942. Please explain why the adjustment is almost double its "book results".

ORIGINAL RESPONSE:

The Company is in a testing compliance year for its Water Division. A testing compliance year requires additional testing for more constituents than other years, necessitating a higher level of expense. The amount of $66,942 is the 2013 budget for water testing expense. LPSCO will perform an analysis comparing water testing expense year over year analyzing the differences in testing expense levels and will supplement this response.

REVISED RESPONSE:

Please see the attached file labeled "DH 1.6 - (Water Sample Costs per Test)". This file details the number of testing samples and cost per sample the Company expects for 2013.

	A	B	C	D	E	F
1	Litchfield Park Service Company dba Liberty Utilities					
2	Docket No. W-01427A-13-0043					
3	Docket No. SW-01428A-13-0042					
4	2013 Sampling Costs					
5			[1]	[2]		[1] x [2]
6			# of Annual	Cost per		
7			Samples	Sample		
8		Arsenic	24	$14		$336
9		Nitrates	24	$32		$768
10		VOC	12	$176		$2,112
11		Radiochemical	12	$280		$3,360
12		TTHM / HAA5	24	$275		$6,600
13		TCR	480	$13.50		$6,480
14						
15		Arsenic				
16		Well 20B	208	$14		$2,912
17		Airline Well	208	$14		$2,912
18		Town Well	312	$14		$4,368
19						
20		Iron				
21		Airline Well	208	$9		$1,872
22						
23						
24		Sub-Total No. 1				$31,720
25						
26		SOC	18	$1,785		$32,130
27		Asbestos	3	$160		$480
28		IOC	6	$396		$2,376
29		Lead & Copper	30	$23		$690
30						
31		Sub-Total No. 2				$35,676
32						
33		Total				$67,396
34		Requested Cost				$66,942
35		Variance				$454

LITCHFIELD PARK SERVICE COMPANY DBA LIBERTY UTILITIES
DOCKET NOS. W-01427A-13-0043 AND SW-01428A-13-0042
RESPONSE TO STAFF'S FOURTH SET OF DATA REQUESTS

June 3, 2013

Response provided by: Christopher D. Krygier

Title: Utility Rates and Regulatory Manager

Company: Litchfield Park Service Company dba Liberty Utilities

Address: 12725 W. Indian School Road, Suite D101
Avondale, AZ 85392

Company Response Number: DH – 4.10

FOLLOWING QUESTIONS ARE RELATED TO THE COMPANY'S RESPONSE TO DR # DH 1.6 & DR #DH 1.7

Q. Please provide a list of all water testing related to compliance with water quality requirements for the Safe Drinking Water. For example listed below:

Monitoring parameter	Monitoring frequency
Nitrate (NO_3)	1/year/# of POE
Asbestos	1/9 years/# of POE

RESPONSE:

Nitrates are tested quarterly from 5 EPDS/POE locations.

Asbestos is sampled once every nine years and was sampled from 3 EPDS/POE locations in 2012.

LITCHFIELD PARK SERVICE COMPANY DBA LIBERTY UTILITIES
DOCKET NOS. W-01427A-13-0043 AND SW-01428A-13-0042
RESPONSE TO STAFF'S SIXTH SET OF DATA REQUESTS

June 10, 2013

Response provided by: Christopher D. Krygier

Title: Utility Rates and Regulatory Manager

Company: Litchfield Park Service Company dba Liberty Utilities

Address: 12725 W. Indian School Road, Suite D101
Avondale, AZ 85392

Company Response Number: DH 6.1

FOLLOWING QUESTIONS ARE RELATED TO THE COMPANY'S RESPONSE TO DR # DH 1.9:

Q. After review the supporting document, Staff believes those expenses listed under 2009 NARUC account # 304 (Structure and Improvement) should be reclassified. Does the Company agree with the Staff reclassification?

ASSETINDEX	Vender	Project for	Expenses ($)	(Reclassified to) NARUC account #
4487	Archer Western Co.	Well equipment for Well 34C	42,154.35	307 (Wells)
4290	Archer Western Co.	Town Well Arsenic Treatment Plant	41,625.00	320.1 (Water Treatment Plant)
4486	Archer Western Co.	Town Well Arsenic Treatment Plant	141,220.76	320.1 (Water Treatment Plant)
4536	Archer Western Co.	Town Well Arsenic Treatment Plant	85,478.32	320.1 (Water Treatment Plant)
4551	Archer Western Co.	Airline Reservoir	648,623.90	330.1 (Storage Tank)
4723	Bentley Systems	Design water CAD software	7,995.00	340.1 (Computers & Software)
4725	Brown Tank & Steel	Repainting two 12'x13' tanks	15,742.00	330.1 (Storage Tank)
4710	CH2OICE Pump Inc.	Well work & replace well pump	12,667.50	307 (Wells)
4602	Keller Equipment Co.	Well #5 & VFD	10,851.37	311 (Pumping Equipment)
4616	Optco Painting & Industrial Coatings	Town Well Arsenic Treatment Plant Vessel C & D rehab	7,000.00	320.1 (Water Treatment Plant)

ASSETINDEX	Vender	Project for	Expenses ($)	(Reclassified to) NARUC account #
4608	Seven Trent Water Purification, Inc.	Media for arsenic treatment plant	12,491.86	320.1 (Water Treatment Plant)
4747	Southwest Ground Water Consultants, Inc.	Sampling & well log for Well #AL 6	5,852.95*	If it is invoice error, it should be reclassified to 307 (Wells)
4695	Water Works Engineers, LLC	Design and permit Well #AL 6	5,245.00*	If it is invoice error, it should be reclassified to 307 (Wells)

RESPONSE:

Yes, the Company agrees with the reclassification so long as the accumulated depreciation associated with each plant item is also reclassified.

LITCHFIELD PARK SERVICE COMPANY DBA LIBERTY UTILITIES
DOCKET NOS. W-01427A-13-0043 AND SW-01428A-13-0042
RESPONSE TO STAFF'S ELEVENTH SET OF DATA REQUESTS

July 22, 2013

Response provided by: Christopher D. Krygier

Title: Utility Rates and Regulatory Manager

Company: Litchfield Park Service Company dba Liberty Utilities

Address: 12725 W. Indian School Road, Suite D101
Avondale, AZ 85392

Company Response Number: DH 11-2

Q. The following questions are related to the Company's Response to DR # DH 1.12:

After review the supporting document, Staff believes those expenses listed below should be reclassified. The Company verbally agreed with Staff, when the subject was discussed during the June 19, 2013 meeting. Please confirm that LPSC still agrees with Staff.

A. Regarding to 2009 NARUC account # 354 (Structure and Improvement):

ASSETINDEX	Vender	Project for	Expenses ($)	**(Reclassified to) NARUC account #**
4298	DL Norton General Construction	Palm Valley WRF upgrade	16,604.5	380 (Treatment and Disposal Equipment)
4535	DL Norton General Construction	Palm Valley WRF upgrade	283,971.1	380 (Treatment and Disposal Equipment)
4291	McBride Engineering	Palm Valley WRF upgrade	38,926.12	380 (Treatment and Disposal Equipment)
4683	Water Works Engineers	Palm Valley WRF upgrade	11,210	380 (Treatment and Disposal Equipment)
4684	Water Works Engineers	Palm Valley WRF upgrade	20,231.99	380 (Treatment and Disposal Equipment)
4685	Water Works Engineers	Palm Valley WRF upgrade	22,264.30	380 (Treatment and Disposal Equipment)
4686	Water Works Engineers	Palm Valley WRF upgrade	24,852.40	380 (Treatment and Disposal Equipment)
4687	Water Works	Palm Valley WRF	5,725	380 (Treatment and Disposal

	Engineers	upgrade		Equipment)

B. Regarding to 2009 NARUC account # 380 (Treatment and Disposal Equipment):

ASSETINDEX	Vender	Project for	Expenses ($)	(Reclassified to) NARUC account #
4588	HACH Co.	Palm Valley WRF upgrade	836.34	394 (Lab Equipment)
4292	Archer Western Co.	Installation of inflow flow meter	36,618	365 (flow measuring installation)

C. Regarding to 2009 NARUC account # 389 (Other Plant & Misc. Equipment):

ASSETINDEX	Vender	Project for	Expenses ($)	(Reclassified to) NARUC account #
4573	Ludvik Elec	blower	5,047.8	371 (pumping equipment)
4561	Water Works Engineers	Palm Valley WRF upgrade	18,153.75	380 (Treatment and Disposal Equipment)
4564	Water Works Engineers	Palm Valley WRF upgrade	9,368.75	380 (Treatment and Disposal Equipment)
4566	Water Works Engineers	Palm Valley WRF upgrade	5,074.34	380 (Treatment and Disposal Equipment)
4565	Water Works Engineers	Palm Valley WRF upgrade	5,360	380 (Treatment and Disposal Equipment)

D. Referenced to 2012 NARUC account # 354 (Structure and Improvement):

ASSETINDEX	Vender	Project for	Expenses ($)	**(Reclassified to) NARUC account #**
6877	DL Norton General Construction	SBR 3 piping modification	25,423	380 (Treatment and Disposal Equipment)
6804	McBride Engineering	APP for Palm Valley WRF	5,200	380 (Treatment and Disposal Equipment)
7196	Keller Electrical	18-HP pump	5,682.42	371 (Pumping Equipment)
7197	Phoenix Pumps, Inc	ABS 150 J-CH2 PE 250/6 Pump/Motor & 33-HP pump	23,454.67	371 (Pumping Equipment)

E. Referenced to 2012 NARUC account # 393 (Tools, Shop & Garage Equipment):

ASSETINDEX	Vender	Project for	Expenses ($)	**(Reclassified to) NARUC account #**
6732	Qua-Aerobic System, Inc	Filter cloth sock-polyester pipe	15,681.39	380 (Treatment and Disposal Equipment)

F. Referenced to 2012 NARUC account # 395 (Power Operated Equipment):

ASSETINDEX	Vender	Project for	Expenses ($)	**(Reclassified to) NARUC account #**
6725	Keller Electrical	100-HP pump	5,684.72	371 (Pumping Equipment)
6726	Phoenix Pumps, Inc.	blower	15,800	371 umping Equipment)

RESPONSE:

Yes, the Company agrees with the reclassification so long as the accumulated depreciation associated with each plant item is also reclassified.

EXHIBIT
S-3
ADMITTED

BEFORE THE ARIZONA CORPORATION COMMISSION

BOB STUMP
Chairman
GARY PIERCE
Commissioner
BRENDA BURNS
Commissioner
BOB BURNS
Commissioner
SUSAN BITTER SMITH
Commissioner

IN THE MATTER OF THE APPLICATION OF LITCHFIELD PARK SERVICE CORPORATION AN ARIZONA CORPORATION, FOR A DETERMINATION OF THE CURRENT FAIR VALUE OF ITS UTILITY PLANT AND PROPERTY AND FOR INCREASES IN ITS WASTEWATER AND CHARGES FOR UTILITY SERVICE BASED THERON	DOCKET NO. SW-01428A-13-0042
IN THE MATTER OF THE APPLICATION OF LITCHFIELD PARK SERVICE CORPORATION AN ARIZONA CORPORATION, FOR A DETERMINATION OF THE CURRENT FAIR VALUE OF ITS UTILITY PLANT AND PROPERTY AND FOR INCREASES IN ITS WATER AND CHARGES FOR UTILITY SERVICE BASED THERON	DOCKET NO. W-01428A-13-0043

SURREBUTTAL TESTIMONY

OF

DOROTHY HAINS, P. E.

UTILITIES ENGINEER

UTILITIES DIVISION

ARIZONA CORPORATION COMMISSION

NOVEMBER 12, 2013

TABLE OF CONTENTS

		Page
I.	INTRODUCTION	1
II.	WATER QUALITY TEST COSTS FOR LPSC'S WASTEWATER DIVISION	1
III.	CORRECTION OF ERROR CONTAINED IN TABLE 5	4
IV.	POST-TEST YEAR PLANT ADDITIONS - EQULIZATION ("EQ") BASIN REPAIR PROJECT	5

I. INTRODUCTION

Q. Please state your name and business address.

A. My name is Dorothy Hains. My business address is 1200 West Washington Street, Phoenix, Arizona 85007.

Q. Are you the same Dorothy Hains who has previously filed testimony in this Litchfield Park Service Company ("LPSC" or "Company") Water Division and Wastewater Division rates proceeding?

A. Yes.

Q. What is the purpose of your Surrebuttal Testimony?

A. In my Surrebuttal Testimony I will respond to three items: (1) estimated water testing expenses for LPSC's Wastewater Division; (2) correction of errors contained in Table 5 of Report DMH-1; and (3) post-test year plant additions – Equalization Basin repair project.

II. WATER QUALITY TEST COSTS FOR LPSC'S WASTEWATER DIVISION

Q. What is Staff's response to the Company's argument that Staff's estimated annual E Coli testing expense of $4,928 is too low?

A. In an e-mail from Legend Lab ("Legend") to the Company dated October 18, 2013, Legend sets three tier charges for E Coli testing, the first tier charge is $28 per sample when the sample is delivered and tested on a week day, the 2nd tier charge is $56 per sample when the sample is delivered and tested on weekends and the 3rd tier charge is $84 per sample when sample is delivered and tested on holidays. Based on this new information, Staff agrees that the bacteria testing expenses for LPSC's wastewater system in Report DMH-1 were underestimated.

Q. What is Staff's recommended total water testing expense using the new bacteria testing expense information?

A. Staff's total recommended water testing expense is now $30,978. Details that support this revised water testing amount are shown in revised Table 4 and Table 4A below:

Table 4 Revised Water Testing Cost (LPSC – WW, AZPDES)

Monitoring – Discharge	No. of tests per year [1]	Cost per test ($)	Company Reported Total Costs ($)	Staff Estimated Annual Cost ($)
Biochemical Oxygen Demand (BOD_5) – 1/week	52	20[2]	N/A	1,040
Bacteriological – Fecal Coliform (E Coli) – 4/month	48	28[5]	N/A	1,344
Total Suspended Solids (TSS) – 1/week	52	12[2]	N/A	624
pH- 5/week	260	12[2]	N/A	3,120
Oil and grease - quarterly	4	80[2]	N/A	320
Total residual chlorine (TRC)- quarterly	4	13.5[2]	N/A	54
Ammonia (NH_3) – quarterly	4	24[2]	N/A	96
Nitrate & Nitrite (NO_3 & NO_2) - quarterly	4	32[2]	N/A	128
Total Kjeldahl Nitrogen (TKN) - quarterly	4	30[2]	N/A	120
Total Nitrogen – monthly	0	48[2]	N/A	0
Dissolved Oxygen (DO) – 1/year	1	35[3]	N/A	35
Hardness - quarterly	4	18[2]	N/A	72
Phosphorus (P) -quarterly	4	30[2]	N/A	120
Total Dissolved Solids (TDS) - quarterly	4	12[2]	N/A	48
Total Metals (including fluoride & cyanide) - quarterly -	4	271[2]	N/A	1,084
Selected Acid-extractable Compounds – 1/year	1	95[4]	N/A	95
Selected Base-neutral Compounds – 1/year	1	365[4]	N/A	365
Based on Designated Uses – 1/year	1	365[4]	N/A	365

Volatile Organic Compound (VOCs) -1/year	1	225[3]	N/A	225
Semi-Volatile Organic Chemicals (SVOC)	1	2,050[3]	N/A	2,050
Total			**N/A**	**10,940**

Note: 1. Total monitoring/sampling frequencies are based on requirements in Arizona Pollutant Discharge Elimination System ("AZPDES") (Permit # AZ0025712).

2. Prices come from Legend Lab.

3. Prices come from Aquatic Consulting & Testing, Inc.

4. Prices come from Mohave Environmental Lab.

5. Prices come from Legend Lab in e-mail from Legend Lab to Liberty Utilities dated October 18, 2013.

Table 4A Water Testing Cost (LPSC – WW, APP)

Monitoring – Discharge	No. of tests per year [1]	Cost per test ($)	Company Reported Total Costs ($)	Staff Estimated Annual Cost ($)
Bacteriological – Fecal Coliform (E Coli) - daily	365		N/A	
E Coli sampled on weekdays	253	28[5]	N/A	7,084
E Coli sampled on weekends	104	56[2]	N/A	5,824
E Coli sampled on holidays	8	84[2]	N/A	672
total				**13,580**
Nitrate & Nitrite (NO_3 & NO_2) - quarterly	4	32[2]	N/A	128
Total Kjeldahl Nitrogen (TKN) - quarterly	4	30[2]	N/A	120
Total Nitrogen – monthly	12	48[2]	N/A	576
Total Metals (including fluoride & cyanide) - quarterly -	4	271[2]	N/A	1,084
Volatile Organic Compound (VOCs) -1/year	2	225[3]	N/A	450
Semi-Volatile Organic Chemicals (SVOC)	2	2,050[3]	N/A	4,100
Total			**N/A**	**20,038**

Note: 1. Total monitoring/sampling frequencies are based on Aquifer Protection Permit ("APP") (Permit # P-100310).

2. Prices come from Legend Lab.

3. Prices come from Aquatic Consulting & Testing, Inc.

4. Prices come from Mohave Environmental Lab.

5. Prices come from Legend Lab in e-mail from Legend Lab to Liberty Utilities dated October 18, 2013.

Total recommended water testing expense is $30,978, the sum of $10,940 (Table 4) and $20,038 (Table 4A).

III. CORRECTION OF ERROR CONTAINED IN TABLE 5

Q. Please explain the error.

A. Two of the columns in Table 5 Service Line and Meter Installation Charges (LPSC-W) contained in Report DMH-1 were mislabeled. The mislabeled columns are "Staff (Service Line Installation Charge)" and "Staff (Meter Installation Charges)" column. The labeling of these two columns was inadvertently reversed.

Q. Has Staff prepared a corrected Table 5?

A. Yes. The corrected Table 5 is listed below:

Table 5 Service Line and Meter Installation Charges (LPSC-W)

Meter Size	Current Service Line Charges	Current Meter & Charges	Current Total Meter & Service Line Installation Charges	Proposed Service Line Charges	Proposed Meter Charges	Proposed Total installation Charge	Staff Recommended (Service Line installation charge)	Staff Recommended (Meter installation charge)	Staff Recommended total charges
5/8 x 3/4-inch	$385	$135	$520	At Cost	At Cost	At Cost	$445	$155	$600

3/4-inch	$385	$215	$600	At Cost	At Cost	At Cost	$445	$255	$700
1-inch	$435	$255	$690	At Cost	At Cost	At Cost	$495	$315	$810
1½-inch	$470	$465	$935	At Cost	At Cost	At Cost	$550	$525	$1,075
2-inch (Turbine)	$630	$965	$1,598	At Cost	At Cost	At Cost	$830	$1,045	$1,875
2-inch (Compound)	$630	$1,690	$2,320	At Cost	At Cost	At Cost	$830	$1,890	$2,720
3-inch (Turbine)	$805	$1,470	$2,275	At Cost	At Cost	At Cost	At Cost	At Cost	At Cost
3-inch (Compound)	$845	$2,265	$3,110	At Cost	At Cost	At Cost	At Cost	At Cost	At Cost
4-inch (Turbine)	$1,170	$2,350	$3,520	At Cost	At Cost	At Cost	At Cost	At Cost	At Cost
4-inch (Compound)	$1,230	$3,245	$4,475	At Cost	At Cost	At Cost	At Cost	At Cost	At Cost
6-inch (Turbine)	$1,730	$4,545	$6,275	At Cost	At Cost	At Cost	At Cost	At Cost	At Cost
6-inch (Compound)	$1,770	$6,280	$8,050	At Cost	At Cost	At Cost	At Cost	At Cost	At Cost
Over 6-inch	At Cost	At Cost	At Cost	At Cost	At Cost	At Cost	At Cost	At Cost	At Cost

IV. POST-TEST YEAR PLANT ADDITIONS - EQUALIZATION ("EQ") BASIN REPAIR PROJECT

Q. Has the EQ Basin Repair Project been completed?

A. Yes. According to an AMEC memorandum to Liberty Utilities (copy provided to Staff), both Phase I and Phase II construction work on the EQ basin repair project were completed on October 31, 2013.

Q. Did Staff conduct a field inspection to verify that the EQ basin is used and useful and in-service?

A. Not yet. At the time of this writing, Staff has not inspected the completed EQ basin.

Q. What is Staff's plan?

A. Staff received the AMEC memorandum on November 5, and a field inspection has been scheduled for November 7. After Staff's inspection of the completed plant and review of

all the supporting documentation for the EQ basin repair project, Staff will file an addendum to this testimony presenting Staff's recommendation.

Q. Does this conclude your Surrebuttal Testimony?

A. Yes, it does.

BEFORE THE ARIZONA CORPORATION COMMISSION

BOB STUMP
Chairman
GARY PIERCE
Commissioner
BRENDA BURNS
Commissioner
SUSAN BITTER SMITH
Commissioner
BOB BURNS
Commissioner

IN THE MATTER OF THE APPLICATION OF LITCHFIELD PARK SERVICE COMPANY, AN ARIZONA CORPORATION, FOR A DETERMINATION OF THE FAIR VALUE OF ITS UTILITY PLANTS AND PROPERTY AND FOR INCREASES IN ITS WASTEWATER RATES AND CHARGES FOR UTILITY SERVICE BASED THEREON.	DOCKET NO. SW-01428A-13-0042
IN THE MATTER OF THE APPLICATION OF LITCHFIELD PARK SERVICE COMPANY, AN ARIZONA CORPORATION, FOR A DETERMINATION OF THE FAIR VALUE OF ITS UTILITY PLANTS AND PROPERTY AND FOR INCREASES IN ITS WATER RATES AND CHARGES FOR UTILITY SERVICE BASED THEREON.	DOCKET NO. W-01427A-13-0043

DIRECT

TESTIMONY

OF

JOHN A. CASSIDY

PUBLIC UTILITIES ANALYST

UTILITIES DIVISION

ARIZONA CORPORATION COMMISSION

SEPTEMBER 26, 2013

TABLE OF CONTENTS

PAGE

I. INTRODUCTION 1

Summary of Testimony and Recommendations 2
LPSCO's Proposed Overall Rate of Return 3

II. THE WEIGHTED AVERAGE COST OF CAPITAL 3

III. CAPITAL STRUCTURE 5

Background 5
LPSCO's Capital Structure 6
Staff's Capital Structure 7

IV. COST OF DEBT 7

V. RETURN ON EQUITY 9

Background 9
Risk 12

VI. ESTIMATING THE COST OF EQUITY 15

Introduction 15
Discounted Cash Flow Model Analysis 16
The Constant-Growth DCF *17*
The Multi-Stage DCF *26*
Capital Asset Pricing Model 28

VII. SUMMARY OF STAFF'S COST OF EQUITY ANALYSIS 32

VIII. FINAL COST OF EQUITY ESTIMATES FOR LPSCO 35

X. STAFF RESPONSE TO COMPANY'S COST OF CAPITAL WITNESS MR. THOMAS J. BOURRASSA 38

XI. CONCLUSION 47

SCHEDULES

Capital Structure and Weighted Cost of Capital JAC-1

Intentionally Left Blank JAC-2

Final Cost of Equity Estimates for Sample Water Utilities ..... JAC -3

Average Capital Structure of Sample Water Utilities ..... JAC -4

Growth in Earnings & Dividends of Sample Water Utilities ..... JAC -5

Sustainable Growth for Sample Water Utilities ..... JAC -6

Selected Financial Data of Sample Water Utilities ..... JAC -7

Calculation of Expected Infinite Annual Growth in Dividends ..... JAC -8

Multi-Stage DCF Estimates ..... JAC -9

EXECUTIVE SUMMARY
LITCHFIELD PARK SERVICE COMPANY
DOCKET NOS. SW-01428A-13-0042, ET AL.

The direct testimony of Staff witness John A. Cassidy addresses the following issues:

Capital Structure – Staff recommends that the Commission adopt a capital structure for Litchfield Park Service Company ("Company") for this proceeding consisting of 15.9 percent debt and 84.1 percent equity.

Cost of Equity – Staff recommends that the Commission adopt an 8.4 percent return on equity ("ROE") for the Company. Staff's estimated ROE for the Company is based on the 8.4 percent average of its discounted cash flow method ("DCF") and capital asset pricing model ("CAPM") cost of equity methodology estimates for the sample companies of 8.7 percent for the DCF and 8.1 percent for the CAPM. Staff's recommended ROE includes an upward economic assessment adjustment of 60 basis points, and a downward financial risk adjustment of 60 basis points.

Cost of Debt – Staff recommends that the Commission adopt a 6.4 percent cost of debt for the Company.

Overall Rate of Return – Staff recommends that the Commission adopt an 8.1 percent overall rate of return.

Mr. Bourassa's Testimony – The Commission should reject the Company's proposed 10.0 percent ROE for the following reasons:

> Mr. Bourassa's primary Future Growth DCF estimates rely exclusively on analysts' forecasts of earnings per share growth; effectively, Mr. Bourassa's overall DCF estimate is weighted 75 percent by his Future Growth DCF estimates. Mr. Bourassa's historical dividend growth estimate in his Past and Future Growth DCF model is inflated through the use of growth in average annual share price as a proxy to estimate dividend growth. In both DCF models, Mr. Bourassa overstates the current dividend yield (D_0/P_0) by using a 12-month average stock price value for (P_0). Mr. Bourassa's CAPM estimates are inflated due to use of a forecasted risk-free rate.

I. INTRODUCTION

Q. Please state your name, occupation, and business address.

A. My name is John A. Cassidy. I am a Public Utilities Analyst employed by the Arizona Corporation Commission ("Commission") in the Utilities Division ("Staff"). My business address is 1200 West Washington Street, Phoenix, Arizona 85007.

Q. Briefly describe your responsibilities as a Public Utilities Analyst.

A. I am responsible for the examination of financial and statistical information included in utility rate applications and other financial matters, including studies to estimate the cost of capital component in rate filings used to determine the overall revenue requirement, and for preparing written reports, testimonies and schedules to present Staff's recommendations to the Commission on these matters.

Q. Please describe your educational background and professional experience.

A. I hold a Bachelor of Arts degree in History from Arizona State University, a Master of Library Science degree from the University of Arizona, and a Master of Business Administration degree with an emphasis in Finance from Arizona State University. While pursuing my MBA degree, I was inducted into Beta Gamma Sigma, the National Business Honor Society. I have passed the CPA exam, but opted not to pursue certification. I have worked professionally as a librarian, financial consultant and tax auditor and served as Staff's cost of capital witness in rate case evidentiary proceedings in my current as well as in a past tenure as a Commission employee.

Q. What is the scope of your testimony in this case?

A. My testimony provides Staff's recommended capital structure, return on equity ("ROE") and overall rate of return ("ROR") for establishing the revenue requirements for Litchfield

Park Service Company ("LPSCO" or "Company") pending water and wastewater applications.

Q. Please provide a brief description of LPSCO.

A. LPSCO is an Arizona public service corporation engaged in providing water and wastewater utility services in portions of Maricopa County, Arizona, pursuant to certificates of convenience and necessity granted by the Commission. During the test year, LPSCO served approximately 16,800 water and 16,160 sewer service connections.

Summary of Testimony and Recommendations

Q. Briefly summarize how Staff's cost of capital testimony is organized.

A. Staff's cost of capital testimony is presented in eleven sections. Section I is this introduction. Section II discusses the concept of weighted average cost of capital ("WACC"). Section III presents the concept of capital structure and presents Staff's recommended capital structure for LPSCO in this proceeding. Section IV presents Staff's cost of debt for LPSCO. Section V discusses the concepts of ROE and risk. Section VI presents the methods employed by Staff to estimate LPSCO's ROE. Section VII presents the findings of Staff's ROE analysis. Section VIII presents Staff's final cost of equity estimates for LPSCO. Section IX presents Staff's ROR recommendation. Section X presents Staff's comments on the direct testimony of the Company's witness, Mr. Thomas J. Bourassa. Finally, section XI presents the conclusions.

Q. Have you prepared any schedules to accompany your testimony?

A. Yes. I prepared nine schedules (JAC-1 to JAC-9) which support Staff's cost of capital analysis.

Q. What is Staff's recommended rate of return for LPSCO?

A. Staff recommends an 8.1 percent overall ROR, as shown in Schedule JAC-1. Staff's ROR recommendation is based on cost of equity estimates for the sample companies of 8.7 percent from the discounted cash flow ("DCF") method and 8.1 percent from the capital asset pricing model ("CAPM"). Staff recommends adoption of a 60 basis point upward economic assessment adjustment and a 60 basis point downward financial risk adjustment, resulting in an 8.1 percent overall ROR.

LPSCO's Proposed Overall Rate of Return

Q. Briefly summarize LPSCO's proposed capital structure, cost of debt, ROE and overall ROR for this proceeding.

A. Table 1 summarizes the Company's proposed capital structure, cost of debt, ROE and overall ROR in this proceeding:

Table 1

	Weight	Cost	Weighted Cost
Long-term Debt	15.87%	6.86%	1.09%
Common Equity	84.13%	10.0%	8.41%
Cost of Capital/ROR			**9.50%**

LPSCO is proposing an overall rate of return of 9.50 percent.

II. THE WEIGHTED AVERAGE COST OF CAPITAL

Q. Briefly explain the cost of capital concept.

A. The cost of capital is the opportunity cost of choosing one investment over others with equivalent risk. In other words, the cost of capital is the return that investors expect for

investing their financial resources in a determined business venture over another business venture.

Q. What is the overall cost of capital?

A. The cost of capital to a company issuing a variety of securities (i.e., stock and indebtedness) is an average of the cost rates on all issued securities adjusted to reflect the relative amounts for each security in the company's entire capital structure. Thus, the overall cost of capital is the Weighted Average Cost of Capital ("WACC").

Q. How is the WACC calculated?

A. The WACC is calculated by adding the weighted expected returns of a firm's securities. The WACC formula is:

Equation 1.

$$WACC = \sum_{i=1}^{n} W_i * r_i$$

In this equation, W_i is the weight given to the ith security (the proportion of the ith security relative to the portfolio) and r_i is the expected return on the ith security.

Q. Can you provide an example demonstrating application of Equation 1?

A. Yes. For this example, assume that an entity has a capital structure composed of 60 percent debt and 40 percent equity. Also, assume that the embedded cost of debt is 6.0 percent and the expected return on equity, i.e., the cost of equity, is 10.5 percent. Calculation of the WACC is as follows:

WACC = (60% * 6.0%) + (40% * 10.5%)

WACC = 3.60% + 4.20%

WACC = 7.80%

The weighted average cost of capital in this example is 7.80 percent. The entity in this example would need to earn an overall rate of return of 7.80 percent to cover its cost of capital.

III. CAPITAL STRUCTURE

Background

Q. Please explain the capital structure concept.

A. The capital structure of a firm is the relative proportions of each type of security:--short-term debt, long-term debt (including capital leases), preferred stock and common stock--that are used to finance the firm's assets.

Q. How is the capital structure expressed?

A. The capital structure of a company is expressed as the percentage of each component of the capital structure (capital leases, short-term debt, long-term debt, preferred stock and common stock) relative to the entire capital structure.

As an example, the capital structure for an entity that is financed by $20,000 of short-term debt, $85,000 of long-term debt (including capital leases), $15,000 of preferred stock and $80,000 of common stock is shown in Table 2.

Table 2

Component			%
Short-Term Debt	$20,000	($20,000/$200,000)	10.0%
Long-Term Debt	$85,000	($85,000/$200,000)	42.5%
Preferred Stock	$15,000	($15,000/$200,000)	7.5%
Common Stock	$80,000	($80,000/$200,000)	40.0%
Total	$200,000		100%

The capital structure in this example is composed of 10.0 percent short-term debt, 42.5 percent long-term debt, 7.5 percent preferred stock and 40.0 percent common stock.

LPSCO's Capital Structure

Q. What capital structure does LPSCO propose?

A. The Company proposes a capital structure composed of 15.87 percent debt and 84.13 percent common equity. LPSCO's proposed capital structure reflects the Company's actual capital structure as of the December 31, 2012 test-year end.

Q. How does LPSCO's proposed capital structure compare to the capital structures of publicly-traded water utilities?

A. Schedule JAC-4 shows the capital structures of seven publicly-traded water companies ("sample water companies" or "sample water utilities") as of December 2012. The average capital structure for the sample water utilities is comprised of approximately 50.3 percent debt and 49.7 percent equity.

Staff's Capital Structure

Q. What is Staff's recommended capital structure for LPSCO?

A. Staff recommends a capital structure composed of 15.9 percent debt and 84.1 percent equity. Staff's recommended capital structure reflects the Company's actual capital structure as of the December 31, 2012, test-year end.[1]

IV. COST OF DEBT

Q. What is the cost of debt proposed by the Company in this proceeding?

A. LPSCO proposes a cost of debt of 6.86 percent. This figure represents the weighted average cost of LPSCO's outstanding Industrial Development Authority ("IDA") debt based upon an effective interest rate of 6.68 percent for its Series 1999 IDA bonds and 6.95 percent for its Series 2001 IDA bonds, as shown in the Company's Schedule D-2.

Q. What cost of debt does Staff recommend for LPSCO in this proceeding?

A. Staff recommends a cost of debt of 6.4 percent. This figure represents the weighted average cost of the Company's outstanding debt based upon a blended 5.87 percent interest rate payable semiannually on LPSCO's outstanding Series 1999 IDA bonds and a blended 6.71 percent interest rate payable semiannually on LPSCO's outstanding Series

[1] Staff's recommended capital structure is the same as that proposed by the Company; however, LPSCO carries its percentage figures out two digits (i.e., hundredths), while Staff carries its percentages out to one digit (i.e., tenths).

2001 IDA bonds. Staff obtained these interest rate cost figures from the Company's audited financial statements for the years ended December 31, 2011 and 2012, which were obtained in response to a data request issued by Staff.[2]

Q. Does information reported in the 2012 Annual Reports filed by LPSCO for its water and wastewater operations serve to affirm Staff's recommended cost of debt in this proceeding?

A. Yes. Each of LPSCO's two 2012 Annual Reports (i.e., one water, one sewer) filed with the Commission affirm the cost of debt recommended by Staff in this proceeding. Specifically, in a chart entitled, "Supplemental Financial Data," in the Annual Reports, LPSCO provides detailed information on its long-term debt, and reports the interest rate on its Series 1999 IDA Bonds as 5.88 percent, and the interest rate on its Series 2001 IDA Bonds as 6.70 percent. Based on other information included in the chart, these interest rates equate to a weighted average cost of debt for LPSCO of 6.43 percent.[3] Furthermore, when calculated using the interest expense and long-term debt (including current maturities) balances reported in the financial statements included in the Annual Reports, LPSCO's weighted average cost of debt is shown to be 6.38 percent in the 2012 test-year.[4] Thus, the figures reported by LPSCO in its 2012 Annual Reports serve to affirm Staff's overall 6.4 percent cost of debt for the Company.

---

[2] Staff Data Request JAC-17.4. As stated in the notes (Note 6) to the financial statements, the carrying value of the 1999 Bonds and the 2001 Bonds have been reduced by bond issuance costs; thus, the blended 5.87% rate for the 1999 Bonds and the blended 6.71% rate for the 2001 Bonds represent the effective interest rate for each series of IDA bonds.

[3] The Supplemental Financial Data chart indicates that LPSCO had total IDA debt outstanding of $10,742,090 ($3,690,489 + $7,051,601) as of December 31, 2012, and reported current year interest of $690,708 ($214,053 + $476,655). Based on these figures, LPSCO's weighted average cost of debt is 6.43% ($690,708/$10,742,090).

[4] LPSCO reported total interest expense of $665,261 in 2012 ($349,841 + $315,420), and total long-term debt outstanding of $10,420,000 ($5,321,804 + $157,761 + $4,798,196 + $142,239) as of December 31, 2012. This equates to a weighted average cost of debt of 6.38% ($665,261/$10,420,000).

Q. Is there other evidence with which to affirm Staff's recommended 6.4 percent cost of debt in this proceeding?

A. Yes. In its previous rate filing,[5] LPSCO proposed a weighted average cost of debt of 6.39 percent, based upon a reported effective interest rate of 5.88 percent on its Series 1999 IDA Bonds and 6.70 percent on its Series 2001 IDA Bonds.[6] As in this docket, the long-term debt component of LPSCO's capital structure in the prior docket consisted exclusively of the same Series 1999 IDA Bonds and Series 2001 IDA Bonds comprising the debt component of the capital structure in this proceeding.[7]

Q. In the prior rate docket, what cost of debt did Staff recommend for LPSCO, and what cost of debt was authorized by the Commission?

A. In LPSCO's prior rate docket, Staff recommended a cost of debt of 6.4 percent, and the Commission authorized a cost of debt of 6.39 percent.[8]

V. RETURN ON EQUITY

Background

Q. Please define the term "cost of equity capital."

A. The cost of equity is the rate of return that investors expect to earn on their investment in a business entity given its risk. In other words, the cost of equity to the entity is the investors' expected rate of return on other investments of similar risk. As investors have a wide selection of stocks to choose from, they will choose stocks with similar risks but higher returns. Therefore, the market determines the entity's cost of equity.

---

[5] Docket No. SW-01428A-09-0103, et al.
[6] *See* Docket No. SW-01428A-09-0103, et al., Schedule D-2.
[7] As shown in Schedule D-2 filed in the prior rate docket, LPSCO employed a test year end of September 30, 2008; as of that date, LPSCO had total long-term debt outstanding of $11,506,844, consisting of $4,283,875 in Series 1999 IDA Bonds and $7,222,969 in Series 2001 IDA Bonds.
[8] *See* Decision No. 72026, p. 55, lines 15-18

Q. Is there a correlation between interest rates and the cost of equity?

A. Yes, there is a positive correlation between interest rates and the cost of equity, as the two tend to move in the same direction. This relationship is reflected in the CAPM formula. The CAPM is a market-based model employed by Staff for estimating the cost of equity. The CAPM is further discussed in Section VI of this testimony.

Q. What has been the general trend of interest rates in recent years?

A. A chronological chart of interest rates is a good tool to show interest rate history and identify trends. Chart 1 graphs intermediate U.S. treasury rates from January 4, 2002, to May 31, 2013.

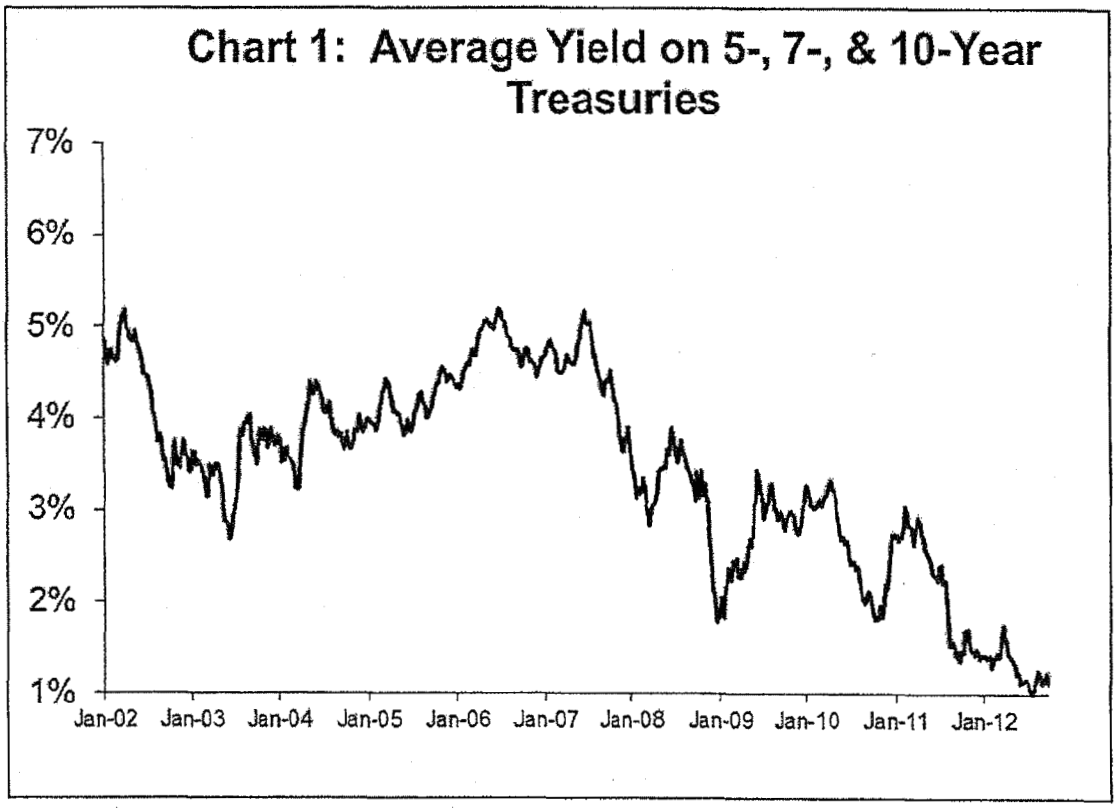

As shown in Chart 1, intermediate-term interest rates trended downward from 2002 to mid-2003, trended upward through mid-2007, and have generally trended downward since that time.

Q. What has been the general trend in interest rates longer term?

A. U.S. Treasury rates from January 1962- May 2013 are shown in Chart 2. The chart shows that interest rates trended upward through the mid-1980s and have trended downward since that time.

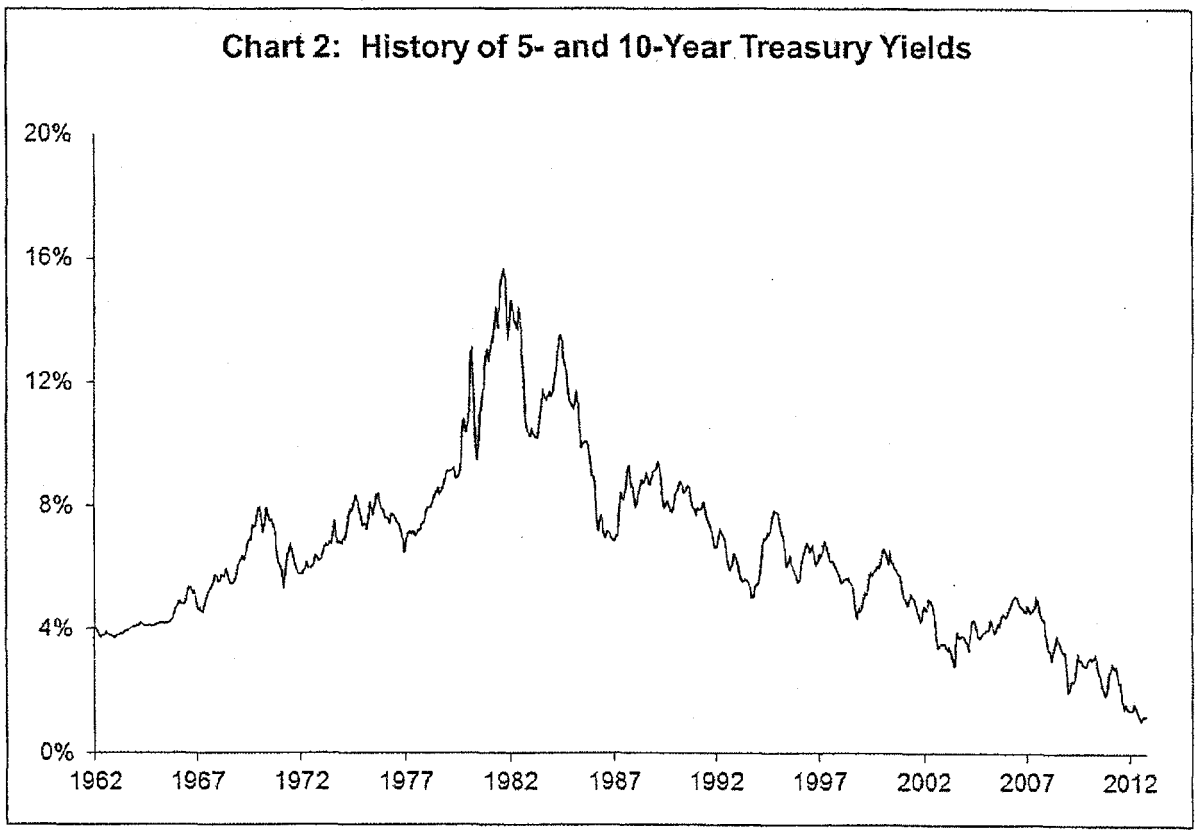

Source: Federal Reserve

Q. Do these trends suggest anything in terms of cost of equity?

A. Yes. As previously noted, interest rates and the cost of equity tend to move in the same direction; therefore, the cost of equity has declined over the past 25 years.

Q. Do actual returns represent the cost of equity?

A. No. The cost of equity represents investors' *expected* returns and not realized returns.

Q. Is there any information available that leads to an understanding of the relationship between the equity returns required for a regulated water utility and those required in the market as a whole?

A. Yes. A comparison of betas, a component of the CAPM discussed in Section VI, for the water utility industry and the market provide insight into this relationship. In theory, the market has a beta value of 1.0, with stocks bearing greater risk (less risk) than the market having beta values higher than (lower than) 1.0, respectively. Furthermore, in accordance with the CAPM, the cost of equity capital moves in the same direction as beta. Therefore, because the average beta value (0.71)[9] for a water utility is less than 1.0, the required return on equity for a regulated water utility is below that of the market as a whole.

Risk

Q. Please define risk in relation to cost of capital.

A. Risk, as it relates to an investment, is the variability or uncertainty of the returns on a particular security. Investors are risk averse and require a greater potential return to invest in relatively greater risk opportunities, i.e., investors require compensation for taking on additional risk. Risk is generally separated into two components. Those components

[9] See Schedule JAC-7.

are market risk (systematic risk) and non-market risk (diversifiable risk or firm-specific risk).

Q. What is market risk?

A. Market risk or systematic risk is the risk of an investment that cannot be reduced through diversification. Market risk stems from factors that affect all securities, such as recessions, war, inflation and high interest rates. Since these factors affect the entire market they cannot be eliminated through diversification. Market risk does not impact each security to the same degree. The degree to which a given security's return is affected by market fluctuations can be measured using Beta. Beta reflects the business risk and the financial risk of a security.

Q. Please define business risk.

A. Business risk is the fluctuation of earnings inherent in a firm's operations and environment, such as competition and adverse economic conditions that may impair its ability to provide returns on investment. Companies in the same or similar line of business tend to experience the same fluctuations in business cycles.

Q. Please define financial risk.

A. Financial risk is the fluctuation of earnings inherent in the use of debt financing that may impair a firm's ability to provide adequate returns; the higher the percentage of debt in a company's capital structure, the greater its exposure to financial risk.

Q. Do business risk and financial risk affect the cost of equity?

A. Yes.

Q. Is a firm subject to any other risk?

A. Yes. Firms are also subject to unsystematic or firm-specific risk. Examples of unsystematic risk include losses caused by labor problems, nationalization of assets, loss of a big client or weather conditions. Investors can eliminate firm-specific risk by holding a diverse portfolio; thus, it is not of concern to diversified investors.

Q. How does LPSCO's financial risk exposure compare to that of Staff's sample group of water companies?

A. JAC-4 shows the capital structures of the seven sample water companies as of December 2012, and LPSCO's adjusted capital structure as of the December 31, 2012 test year end. As shown, the sample water utilities were capitalized with approximately 50.3 percent debt and 49.7 percent equity, while LPSCO's capital structure consists of 15.9 percent debt and 84.1 percent equity. Thus, compared to Staff's sample companies, LPSCO has significantly less exposure to financial risk.

Q. Is firm-specific risk measured by beta?

A. No. Firm-specific risk is not measured by beta.

Q. Is the cost of equity affected by firm-specific risk?

A. No. Since firm-specific risk can be eliminated through diversification, it does not affect the cost of equity.

Q. Should investors expect additional returns for firm-specific risk?

A. No. Investors who hold diversified portfolios can eliminate firm-specific risk and, consequently, do not require any additional return. Since investors who choose to be less

than fully-diversified must compete in the market with fully-diversified investors, the former cannot expect to be compensated for unique risk.

VI. ESTIMATING THE COST OF EQUITY

Introduction

Q. Did Staff directly estimate the cost of equity for LPSCO?

A. No. Since LPSCO is not a publicly-traded company, Staff is unable to directly estimate its cost of equity due to the lack of firm-specific market data. Instead, Staff estimated the Company's cost of equity indirectly, using a representative sample group of publicly traded water utilities as a proxy, taking the average of the sample group to reduce the sample error resulting from random fluctuations in the market at the time the information is gathered.

Q. What companies did Staff select as proxies or comparables for LPSCO?

A. Staff's sample consists of the following seven publicly-traded water utilities: American States Water, California Water, Aqua America, Connecticut Water Service, Middlesex Water, SJW Corporation and York Water. Staff selected these companies because they are publicly-traded and receive the majority of their earnings from regulated operations.

Q. What models did Staff implement to estimate LPSCO's cost of equity?

A. Staff used two market-based models to estimate the cost of equity for LPSCO: the DCF model and the CAPM.

Q. Please explain why Staff chose the DCF and CAPM models.

A. Staff chose to use the DCF and CAPM models because they are widely-recognized market-based models and have been used extensively to estimate the cost of equity. An explanation of the DCF and CAPM models follows.

Discounted Cash Flow Model Analysis

Q. Please provide a brief summary of the theory upon which the DCF method of estimating the cost of equity is based.

A. The DCF method of stock valuation is based on the theory that the value of an investment is equal to the sum of the future cash flows generated from the aforementioned investment discounted to the present time. This method uses expected dividends, market price and dividend growth rate to calculate the cost of capital. Professor Myron Gordon pioneered the DCF method in the 1960s. The DCF method has become widely used to estimate the cost of equity for public utilities due to its theoretical merit and its simplicity. Staff used the financial information for the relevant seven sample companies in the DCF model and averaged the results to determine an estimated cost of equity for the sample companies.

Q. Does Staff use more than one version of the DCF?

A. Yes. Staff uses two versions of the DCF model: the constant-growth DCF and the multi-stage or non-constant growth DCF. The constant-growth DCF assumes that an entity's dividends will grow indefinitely at the same rate. The multi-stage growth DCF model assumes the dividend growth rate will change at some point in the future.

The Constant-Growth DCF

Q. What is the mathematical formula used in Staff's constant-growth DCF analysis?

A. The constant-growth DCF formula used in Staff's analysis is:

Equation 2:

$$K = \frac{D_1}{P_0} + g$$

where:

K	=	the cost of equity
D_1	=	the expected annual dividend
P_0	=	the current stock price
g	=	the expected infinite annual growth rate of dividends

Equation 2 assumes that the entity has a constant earnings retention rate and that its earnings are expected to grow at a constant rate. According to Equation 2, a stock with a current market price of $10 per share, an expected annual dividend of $0.45 per share and an expected dividend growth rate of 3.0 percent per year has a cost of equity to the entity of 7.5 percent reflected by the sum of the dividend yield ($0.45/ $10 = 4.5 percent) and the 3.0 percent annual dividend growth rate.

Q. How did Staff calculate the expected dividend yield (D_1/P_0) component of the constant-growth DCF formula?

A. Staff calculated the expected yield component of the DCF formula by dividing the expected annual dividend (D_1) by the spot stock price (P_0) after the close of market on August 28, 2013, as reported by *MSN Money*.

Q. Why did Staff use the August 28, 2013, spot price rather than a historical average stock price to calculate the dividend yield component of the DCF formula?

A. The current, rather than historic, market price is used in order to be consistent with financial theory. In accordance with the Efficient Market Hypothesis, the current stock price is reflective of all available information on a stock, and as such reveals investors' expectations of future returns. Use of historical average stock prices illogically discounts the most recent information in favor of less recent information. The latter is stale and is representative of underlying conditions that may have changed.

Q. How did Staff estimate the dividend growth (g) component of the constant-growth DCF model represented by Equation 2?

A. The dividend growth component used by Staff is determined by the average of six different estimation methods, as shown in Schedule JAC-8. Staff calculated historical and projected growth estimates on dividend-per-share ("DPS"),[10] earnings-per-share ("EPS")[11] and sustainable growth bases.

Q. Why did Staff examine EPS growth to estimate the dividend growth component of the constant-growth DCF model?

A. Historic and projected EPS growth are used because dividends are related to earnings. Dividend distributions may exceed earnings in the short run, but cannot continue indefinitely. In the long term, dividend distributions are dependent on earnings.

[10] Derived from information provided by *Value Line*.
[11] Derived from information provided by *Value Line*.

Q. How did Staff estimate historical DPS growth?

A. Staff estimated historical DPS growth by calculating a compound annual DPS growth rate for each of its sample companies over the 10-year period, 2002-2012. As shown in Schedule JAC-5, the average historical DPS growth rate for the sample was 3.6 percent.

Q. How did Staff estimate projected DPS growth?

A. Staff calculated an average of the projected DPS growth rates for the sample water utilities from *Value Line* through the period, 2016-2018. The average projected DPS growth rate is 5.2 percent, as shown in Schedule JAC-5.

Q. How did Staff estimate historical EPS growth rate?

Staff estimated historical EPS growth by calculating a compound annual EPS growth rate for each of its sample companies over the 10-year period, 2002-2012. As shown in Schedule JAC-5, the average historical EPS growth rate for the sample was 5.1 percent.

Q. How did Staff estimate projected EPS growth?

A. Staff calculated an average of the projected EPS growth rates for the sample water utilities from *Value Line* through the period, 2016-2018. The average projected EPS growth rate is 4.8 percent, as shown in Schedule JAC-5.

Q. How does Staff calculate its historical and projected sustainable growth rates?

A. Historical and projected sustainable growth rates are calculated by adding their respective retention growth rate terms (br) to their respective stock financing growth rate terms (vs), as shown in Schedule JAC-6.

Q. What is retention growth?

A. Retention growth is the growth in dividends due to the retention of earnings. The retention growth concept is based on the theory that dividend growth cannot be achieved unless the company retains and reinvests some of its earnings. The retention growth is used in Staff's calculation of sustainable growth shown in Schedule JAC-6.

Q. What is the formula for the retention growth rate?

A. The retention growth rate is the product of the retention ratio and the book/accounting return on equity. The retention growth rate formula is:

Equation 3:

$$\text{Retention Growth Rate} = br$$

where: b = the retention ratio (1 – dividend payout ratio)
r = the accounting/book return on common equity

Q. How did Staff calculate the average historical retention growth rate (br) for the sample water utilities?

A. Staff calculated the mean of the 10-year average historical retention rate for each sample company over the period, 2002-2012. As shown in Schedule JAC-6, the historical average retention (br) growth rate for the sample is 2.7 percent.

Q. How did Staff estimate its projected retention growth rate (br) for the sample water utilities?

A. Staff used the retention growth projections for the sample water utilities for the period, 2016-2018, from *Value Line*. As shown in Schedule JAC-6, the projected average retention growth rate for the sample companies is 3.6 percent.

Q. When can retention growth provide a reasonable estimate of future dividend growth?

A. The retention growth rate is a reasonable estimate of future dividend growth when the retention ratio is reasonably constant and the entity's market price to book value ("market-to-book ratio") is expected to be 1.0. The average retention ratio has been reasonably constant in recent years. However, the market-to-book ratio for the sample water utilities is 2.2, notably higher than 1.0, as shown in Schedule JAC-7.

Q. Is there any financial implication of a market-to-book ratio greater than 1.0?

A. Yes. A market-to-book ratio greater than 1.0 implies that investors expect an entity to earn an accounting/book return on its equity that exceeds its cost of equity. The relationship between required returns and expected cash flows is readily observed in the fixed securities market. For example, assume an entity contemplating issuance of bonds with a face value of $10 million at either 6 percent or 8 percent and, thus, paying annual interest of $600,000 or $800,000, respectively. Regardless of investors' required return on similar bonds, investors will be willing to pay more for the bonds if issued at 8 percent than if the bonds are issued at 6 percent. For example, if the current interest rate required by investors is 6 percent, then they would bid $10 million for the 6 percent bonds and more than $10 million for the 8 percent bonds. Similarly, if equity investors require a 9 percent return and expect an entity to earn accounting/book returns of 13 percent, the market will bid up the price of the entity's stock to provide the required return of 9 percent.

Q. How has Staff generally recognized a market-to-book ratio exceeding 1.0 in its cost of equity analyses in recent years?

A. Staff has assumed that investors expect the market-to-book ratio to remain greater than 1.0. Given that assumption, Staff has added a stock financing growth rate (vs) term to the retention ratio (br) term to calculate its historical and projected sustainable growth rates.

Q. Do the historical and projected sustainable growth rates Staff uses to develop its DCF cost of equity in this case continue to include a stock financing growth rate term?

A. Yes.

Q. What is stock financing growth?

A. Stock financing growth is the growth in an entity's dividends due to the sale of stock by that entity. Stock financing growth is a concept derived by Myron Gordon and discussed in his book *The Cost of Capital to a Public Utility.*[12] Stock financing growth is the product of the fraction of the funds raised from the sale of stock that accrues to existing shareholders (v) and the fraction resulting from dividing the funds raised from the sale of stock by the existing common equity (s).

[12] Gordon, Myron J. *The Cost of Capital to a Public Utility.* MSU Public Utilities Studies, Michigan, 1974. pp 31-35.

Q. What is the mathematical formula for the stock financing growth rate?

A. The mathematical formula for stock financing growth is:

Equation 4:

$$\text{Stock Financing Growth} = vs$$

where: v = Fraction of the funds raised from the sale of stock that accrues to existing shareholders

s = Funds raised from the sale of stock as a fraction of the existing common equity

Q. How is the variable *v* presented above calculated?

A. Variable v is calculated as follows:

Equation 5:

$$v = 1 - \left(\frac{book\ value}{market\ value} \right)$$

For example, assume that a share of stock has a $30 book value and is selling for $45. Then, to find the value of v, the formula is applied:

$$v = 1 - \left(\frac{30}{45} \right)$$

In this example, v is equal to 0.33.

Q. How is the variable *s* presented above calculated?

A. Variable s is calculated as follows:

Equation 6:

$$s = \frac{\text{Funds raised from the issuance of stock}}{\text{Total existing common equity before the issuance}}$$

For example, assume that an entity has $150 in existing equity, and it sells $30 of stock. Then, to find the value of *s*, the formula is applied:

$$s = \left(\frac{30}{150}\right)$$

In this example, *s* is equal to 20.0 percent.

Q. What is the *vs* term when the market-to-book ratio is equal to 1.0?

A. A market-to-book ratio of 1.0 reflects that investors expect an entity to earn a book/accounting return on their equity investment equal to the cost of equity. When the market-to-book ratio is equal to 1.0, none of the funds raised from the sale of stock by the entity accrues to the benefit of existing shareholders, i.e., the term *v* is equal to zero (0.0). Consequently, the *vs* term is also equal to zero (0.0). When stock financing growth is zero, dividend growth depends solely on the *br* term.

Q. What is the effect of the *vs* term when the market-to-book ratio is greater than 1.0?

A. A market-to-book ratio greater than 1.0 reflects that investors expect an entity to earn a book/accounting return on their equity investment greater than the cost of equity. Equation 5 shows that, when the market-to-book ratio is greater than 1.0, the *v* term is also greater than zero. The excess by which new shares are issued and sold over book value per share of outstanding stock is a contribution that accrues to existing stockholders in the form of a higher book value. The resulting higher book value leads to higher expected earnings and dividends. Continued growth from the *vs* term is dependent upon the continued issuance and sale of additional shares at a price that exceeds book value per share.

Q. What *vs* estimate did Staff calculate from its analysis of the sample water utilities?

A. Staff estimated an average stock financing growth of 2.4 percent for the sample water utilities, as shown in Schedule JAC-6.

Q. What would occur if an entity had a market-to-book ratio greater than 1.0 as a result of investors expecting earnings to exceed its cost of equity, and subsequently experienced newly-authorized rates equal only to its cost of equity?

A. Holding all other factors constant, one would expect market forces to move the company's stock price lower, closer to a market-to-book ratio of 1.0, to reflect investor expectations of reduced expected future cash flows.

Q. If the average market-to-book ratio of Staff's sample water utilities were to fall to 1.0 due to authorized ROEs equaling their cost of equity, would inclusion of the vs term be necessary to Staff's constant-growth DCF analysis?

A. No. As discussed above, when the market-to-book ratio is equal to 1.0, none of the funds raised from the sale of stock by the entity accrues to the benefit of existing shareholders because the *v* term equals to zero and, consequently, the *vs* term also equals zero. When the market-to-book ratio equals 1.0, dividend growth depends solely on the *br* term. Staff's inclusion of the *vs* term assumes that the market-to-book ratio continues to exceed 1.0 and that the water utilities will continue to issue and sell stock at prices above book value with the effect of benefitting existing shareholders.

Q. What are Staff's historical and projected sustainable growth rates?

A. Staff's estimated historical sustainable growth rate is 5.1 percent based on an analysis of earnings retention for the sample water companies. Staff's projected sustainable growth

rate is 6.0 percent based on retention growth projected by *Value Line*. Schedule JAC-6 presents Staff's estimates of the sustainable growth rate.

Q. What is Staff's expected infinite annual growth rate in dividends?

A. Staff's expected dividend growth rate (g) is 5.0 percent, which is the average of historical and projected DPS, EPS, and sustainable growth estimates. Staff's calculation of the expected infinite annual growth rate in dividends is shown in Schedule JAC-8.

Q. What is Staff's constant-growth DCF estimate for the sample utilities?

A. Staff's constant-growth DCF estimate is 8.0 percent, as shown in Schedule JAC-3.

The Multi-Stage DCF

Q. Why did Staff implement the multi-stage DCF model to estimate LPSCO's cost of equity?

A. Staff generally uses the multi-stage DCF model to consider the assumption that dividends may not grow at a constant rate. The multi-stage DCF uses two stages of growth, the first stage (near-term) having a four-year duration, followed by the second stage (long-term) of constant growth.

Q. What is the mathematical formula for the multi-stage DCF?

A. The multi-stage DCF formula is shown in the following equation:

Equation 7 :

$$P_0 = \sum_{t=1}^{n} \frac{D_t}{(1+K)^t} + \frac{D_n(1+g_n)}{K-g_n}\left[\frac{1}{(1+K)}\right]^n$$

Where : P_0 = current stock price
D_t = dividends expected during stage 1
K = cost of equity
n = years of non – constant growth
D_n = dividend expected in year n
g_n = constant rate of growth expected after year n

Q. What steps did Staff take to implement its multi-stage DCF cost of equity model?

A. First, Staff projected future dividends for each of the sample water utilities using near-term and long-term growth rates. Second, Staff calculated the rate (cost of equity) which equates the present value of the forecasted dividends to the current stock price for each of the sample water utilities. Lastly, Staff calculated an overall sample average cost of equity estimate.

Q. How did Staff calculate near-term (stage-1) growth?

A. The stage-1 growth rate is based on *Value Line*'s projected dividends for the next twelve months, when available, and on the average dividend growth (g) rate of 5.0 percent, calculated in Staff's constant DCF analysis for the remainder of the stage.

Q. How did Staff estimate long-term (stage-2) growth?

A. Staff calculated the stage-2 growth rate using the arithmetic mean rate of growth in Gross Domestic Product ("GDP") from 1929 to 2012.[13] Using the GDP growth rate assumes that the water utility industry is expected to grow at the same rate as the overall economy.

Q. What is the historical GDP growth rate that Staff used to estimate stage-2 growth?

A. Staff used 6.5 percent to estimate the stage-2 growth rate.

Q. What is Staff's multi-stage DCF estimate for the sample utilities?

A. Staff's multi-stage DCF estimate is 9.3 percent, as shown in Schedule JAC-3.

Q. What is Staff's overall DCF estimate for the sample utilities?

A. Staff's overall DCF estimate is 8.7 percent. Staff calculated the overall DCF estimate by averaging the constant growth DCF (8.0%) and multi-stage DCF (9.3%) estimates, as shown in Schedule JAC-3.

Capital Asset Pricing Model

Q. Please describe the CAPM.

A. The CAPM is used to determine the prices of securities in a competitive market. The CAPM model describes the relationship between a security's investment risk and its market rate of return. Under the CAPM, an investor requires the expected return of a security to equal the rate on a risk-free security plus a risk premium. If the investor's expected return does not meet or beat the required return, the investment is not economically justified. The model also assumes that investors will sufficiently diversify

[13] www.bea.doc.gov.

their investments to eliminate any non-systematic or unique risk.[14] In 1990, Professors Harry Markowitz, William Sharpe, and Merton Miller earned the Nobel Prize in Economic Sciences for their contribution to the development of the CAPM.

Q. Did Staff use the same sample water utilities in its CAPM and DCF cost of equity estimation analyses?

A. Yes. Staff's CAPM cost of equity estimation analysis uses the same sample water companies as its DCF cost of equity estimation analysis.

Q. What is the mathematical formula for the CAPM?

A. The mathematical formula for the CAPM is:

Equation 8:

$$K = R_f + \beta (R_m - R_f)$$

where:

R_f	=	risk free rate
R_m	=	return on market
β	=	beta
$R_m - R_f$	=	market risk premium
K	=	expected return

The equation shows that the expected return (K) on a risky asset is equal to the risk-free interest rate (R_f) plus the product of the market risk premium ($R_m - R_f$) multiplied by beta (β) where beta represents the riskiness of the investment relative to the market.

[14] The CAPM makes the following assumptions: 1) single holding period; 2) perfect and competitive securities market; 3) no transaction costs; 4) no restrictions on short selling or borrowing; 5) the existence of a risk-free rate; and 6) homogeneous expectations.

Q. What is the risk-free rate?

A. The risk-free rate is the rate of return of an investment free of default risk.

Q. What does Staff use as surrogates to represent estimations of the risk-free rates of interest in its historical and current market risk premium CAPM methods?

A. Staff uses separate parameters as surrogates for the estimations of the risk-free rates of interest for the historical market risk premium CAPM cost of equity estimation and the current market risk premium CAPM cost of equity estimation. Staff uses the average of three (5-, 7-, and 10-year) intermediate-term U.S. Treasury securities' spot rates in its historical market risk premium CAPM cost of equity estimation, and the 30-year U.S. Treasury bond spot rate in its current market risk premium CAPM cost of equity estimation. Rates on U.S. Treasuries are largely verifiable and readily available.

Q. What does beta measure?

A. Beta is a measure of a security's price volatility, or systematic risk, relative to the market as a whole. Since systematic risk cannot be diversified away, it is the only risk that is relevant when estimating a security's required return. Using a baseline market beta coefficient of 1.0, a security having a beta value less than 1.0 will be less volatile (i.e., less risky) than the market. A security with a beta value greater than 1.0 will be more volatile (i.e., more risky) than the market.

Q. How did Staff estimate LPSCO's beta?

A. Staff used the average of the *Value Line* betas for the sample water utilities as a proxy for the Company's beta. Schedule JAC-7 shows the *Value Line* betas for each of the sample water utilities. The 0.71 average beta coefficient for the sample water utilities is Staff's

estimated beta value for LPSCO. A security with a beta value of 0.71 has less volatility than the market.

Q. What is the market risk premium ($R_m - R_f$)?

A. The market risk premium is the expected return on the market, minus the risk-free rate. Simplified, it is the return an investor expects as compensation for market risk.

Q. What did Staff use for the market risk premium?

A. Staff uses separate calculations for the market risk premium in its historical and current market risk premium CAPM methods.

Q. How did Staff calculate an estimate for the market risk premium in its historical market risk premium CAPM method?

A. Staff uses the intermediate-term government bond income returns published in the Ibbotson Associates' *Stocks, Bonds, Bills, and Inflation 2013 Classic Yearbook* to calculate the historical market risk premium. Ibbotson Associates calculates the historical risk premium by averaging the historical arithmetic differences between the S&P 500 and the intermediate-term government bond income returns for the period 1926-2012. Staff's historical market risk premium estimate is 7.2 percent, as shown in Schedule JAC-3.

Q. How did Staff calculate an estimate for the market risk premium in its current market risk premium CAPM method?

A. Staff solves equation 8 above to arrive at a market risk premium using a DCF-derived expected return (K) of 10.88 (2.1 + 8.78[15]) percent using the expected dividend yield (2.1 percent over the next twelve months) and the annual per share growth rate (8.78 percent)

[15] The three to five year price appreciation is 40%. $1.40^{0.25} - 1 = 8.78\%$.

that *Value Line* projects over the next three to five years for all dividend-paying stocks under its review[16] along with the current long-term risk-free rate (30-year Treasury note at 3.75 percent) and the market's average beta of 1.0. Staff calculated the current market risk premium as 7.13 percent,[17] as shown in Schedule JAC-3.

Q. What is the result of Staff's historical market risk premium CAPM and current market risk premium CAPM cost of equity estimations for the sample utilities?

A. Staff's cost of equity estimates are 7.3 percent using the historical market risk premium CAPM and 8.8 percent using the current market risk premium CAPM.

Q. What is Staff's overall CAPM estimate for the sample utilities?

A. Staff's overall CAPM cost of equity estimate is 8.1 percent which is the average of the historical market risk premium CAPM (7.3 percent) and the current market risk premium CAPM (8.8 percent) estimates, as shown in Schedule JAC-3.

VII. SUMMARY OF STAFF'S COST OF EQUITY ANALYSIS

Q. What is the result of Staff's constant-growth DCF analysis to estimate the cost of equity for the sample water utilities?

A. Schedule JAC-3 shows the result of Staff's constant-growth DCF analysis. The result of Staff's constant-growth DCF analysis is as follows:

$$k = 3.0\% + 5.0\%$$

$$k = \mathbf{8.0\%}$$

[16] August 30, 2013 issue date.
[17] 10.88% = 3.75% + (1) (7.13%).

Staff's constant-growth DCF estimate of the cost of equity for the sample water utilities is 8.0 percent.

Q. What is the result of Staff's multi-stage DCF analysis to estimate of the cost of equity for the sample utilities?

A. Schedule JAC-9 shows the result of Staff's multi-stage DCF analysis. The result of Staff's multi-stage DCF analysis is:

Company	Equity Cost Estimate (k)
American States Water	9.1%
California Water	9.5%
Aqua America	8.7%
Connecticut Water	9.7%
Middlesex Water	10.0%
SJW Corp	9.1%
York Water	9.2%
Average	**9.3%**

Staff's multi-stage DCF estimate of the cost of equity for the sample water utilities is 9.3 percent.

Q. What is Staff's overall DCF estimate of the cost of equity for the sample utilities?

A. Staff's overall DCF estimate of the cost of equity for the sample utilities is 8.7 percent. Staff calculated an overall DCF cost of equity estimate by averaging Staff's constant growth DCF (8.0 percent) and Staff's multi-stage DCF (9.3 percent) estimates, as shown in Schedule JAC-3.

Q. What is the result of Staff's historical market risk premium CAPM analysis to estimate of the cost of equity for the sample utilities?

A. Schedule JAC-3 shows the result of Staff's CAPM analysis using the historical risk premium estimate. The result is as follows:

$$k = 2.2\% + 0.71 * 7.2\%$$

$$k = 7.3\%$$

Staff's CAPM estimate (using the historical market risk premium) of the cost of equity to the sample water utilities is 7.3 percent.

Q. What is the result of Staff's current market risk premium CAPM analysis to estimate the cost of equity for the sample utilities?

A. Schedule JAC-3 shows the result of Staff's CAPM analysis using the current market risk premium estimate. The result is:

$$k = 3.8\% + 0.71 * 7.1\%$$

$$k = 8.8\%$$

Staff's CAPM estimate (using the current market risk premium) of the cost of equity to the sample water utilities is 8.8 percent.

Q. What is Staff's overall CAPM estimate of the cost of equity for the sample utilities?

A. Staff's overall CAPM estimate for the sample utilities is 8.1 percent. Staff's overall CAPM estimate is the average of the historical market risk premium CAPM (7.3 percent) and the current market risk premium CAPM (8.8 percent) estimates, as shown in Schedule JAC-3.

Q. Please summarize the results of Staff's cost of equity analysis for the sample utilities.

A. The following table shows the results of Staff's cost of equity analysis:

Table 2

Method	Estimate
Average DCF Estimate	8.7%
Average CAPM Estimate	8.1%
Overall Average	**8.4%**

Staff's average estimate of the cost of equity to the sample water utilities is 8.4 percent.

VIII. FINAL COST OF EQUITY ESTIMATES FOR LPSCO

Q. Please compare LPSCO's capital structure to that of Staff's seven sample companies.

A. The average capital structure for the sample water utilities is composed of 50.3 percent debt and 49.7 percent equity, as shown in Schedule JAC-4. In contrast, LPSCO's capital structure is composed of 15.9 percent debt and 84.1 percent equity. Since LPSCO's capital structure is less leveraged than that of the average sample water utility, its stockholders bear less financial risk than do equity shareholders of the sample utilities.

Q. Does LPSCO's reduced financial risk exposure affect its cost of equity?

A. Yes. As previously discussed, financial risk is a component of market risk and investors require compensation for market risk. Thus, because LPSCO has less exposure to financial risk than does the sample average utility, its cost of equity is *lower* than that of the sample water utilities.

Q. Has Staff quantified the impact of LPSCO's reduced exposure to financial risk relative to that of the sample water utilities for purposes of determining the appropriate adjustment to be made to the Company's cost of equity in this proceeding?

A. Yes. Staff used the methodology developed by Professor Robert Hamada of the University of Chicago, which incorporates capital structure theory with the CAPM, to estimate the effect of LPSCO's capital structure on its cost of equity. Staff calculated a downward financial risk adjustment for LPSCO of negative 60 basis points (-0.6 percent). LPSCO's cost of equity adjusted for financial risk (7.8 percent) can be determined by subtracting this 0.6 percent financial risk adjustment from Staff's average estimate of the cost of equity to the sample water utilities (8.4 percent).

Q. Does Staff have established criteria for determining when to apply a downward financial risk adjustment?

A. Yes. Staff normally applies two criteria in assessing whether application of a downward financial risk adjustment is appropriate. The first consideration is whether the utility has a reasonably economical capital structure. Staff considers a capital structure composed of no more than 60 percent equity to meet this condition. If equity exceeds 60 percent, as it does for LPSCO, Staff considers application of a downward financial risk adjustment to be appropriate if the utility meets the second criteria. The second condition is whether the utility has access to equity capital markets. Because LPSCO's parent, Algonquin Power and Utilities Corporation, is publicly-traded, LPSCO is assumed to have access to the equity capital markets; accordingly, Staff recommends a downward financial risk adjustment to LPSCO's cost of equity. Staff's methodology for applying a downward financial risk adjustment encourages a utility with access to the equity capital markets to

use that access to manage its capital structure with economic efficiency and encourages a utility that lacks access to the equity capital markets to maintain a healthy capital structure.

Q. Did Staff consider factors other than the results of its technical models in its cost of equity analysis?

A. Yes. In consideration of the relatively uncertain status of the economy and the market that currently exists, Staff is proposing an upward economic assessment adjustment to the cost of equity. In this case, Staff recommends a 60 basis point (0.6 percent) upward economic assessment adjustment, as shown in Schedule JAC-3.

Q. What is Staff's ROE estimate for LPSCO?

A. Staff determined an ROE estimate of 8.4 percent for LPSCO based on cost of equity estimates for the sample companies of 8.7 percent for the DCF and 8.1 percent for the CAPM. Staff recommends adoption of a 60 basis point downward financial risk adjustment and a 60 basis point upward economic assessment adjustment resulting in an 8.4 percent Staff-recommended cost of equity, as shown in Schedule JAC-3.

IX. RATE OF RETURN RECOMMENDATION

Q. What overall rate of return did Staff determine for LPSCO?

A. Staff determined an 8.1 percent ROR for the Company, as shown in Schedule JAC-1 and the following table:

Table 3

	Weight	Cost	Weighted Cost
Long-term Debt	15.9%	6.4%	1.0%
Common Equity	84.1%	8.4%	7.1%
Overall ROR			**8.1%**

X. STAFF RESPONSE TO COMPANY'S COST OF CAPITAL WITNESS MR. THOMAS J. BOURRASSA

Q. Please summarize Mr. Bourassa's analyses and recommendations.

A. Mr. Bourassa recommends a 10.00 percent ROE based on estimates derived from two constant growth DCF analyses, two CAPM analyses, and two Build-up risk premium models designed as a check for reasonableness to his DCF and CAPM results, using a proxy sample of six publicly-traded water companies. He proposes a capital structure consisting of 15.87 percent long-term debt and 84.13 percent equity, with his proposed cost of debt being 6.86 percent. Mr. Bourassa's recommended ROE includes a downward 70 basis point financial risk adjustment and an upward 50 basis point small company risk premium. His overall recommended rate of return for the Company is 9.5 percent.

For purposes of his constant growth DCF analyses, Mr. Bourassa gives a 50 percent weight to the estimates derived from his Future Growth DCF model and a 50 percent weight to the estimates derived from his Past and Future Growth DCF Model. In his primary Future Growth DCF model, Mr. Bourassa relies exclusively (i.e., a 100 percent weight) on analysts' forecasts of EPS growth to estimate the dividend growth (g) component (See TJB Schedule D-4.6). In his Past and Future Growth DCF model, Mr. Bourassa estimates his dividend growth (g) rate by giving 50 percent weight to historical measures of growth in annual share price, BVPS, EPS and DPS over a five-year period,

and 50 percent weight to the dividend growth rate obtained from his primary Future Growth DCF model (See TJB Schedule D-4.4). Thus, for purposes of the overall dividend growth (g) rate used in his constant growth DCF analyses, Mr. Bourassa effectively gives a 75 percent weight to the results obtained from analysts forecasts' for EPS growth and only a 25 percent weight to the results obtained from historical measures of dividend growth (See TJB Schedule D-4.8). In each of his two constant growth DCF analyses, Mr. Bourassa uses a 12-month average stock price to calculate an average annual current dividend yield (D_0/P_0) (See TJB Schedule D-4.7).

For purposes of his CAPM analyses, Mr. Bourassa presents estimates based upon both historical and current market risk premia. In both, however, he uses a 3.9 percent forecasted risk free (R_f) rate based, in part, upon estimates from Value Line and Blue Chip Consensus Forecasts for the 30-year long-term Treasury yield covering the period, 2013-2015 (See TJB Schedule D-4.10).

Q. Does Staff have any comments on Mr. Bourassa's sole reliance on analysts' forecasts of EPS growth rates to estimate dividend growth rate (g) in his Future Growth DCF analysis?

A. Yes. Exclusive reliance on analysts' forecasts of earnings growth to forecast DPS is inappropriate because it assumes that investors do not look at other relevant information such as historical dividend and earnings growth. Generally, analysts' forecasts are known to be overly optimistic. Sole use of analysts' forecasts to calculate the expected dividend growth rate, (g), serves to inflate that component of the DCF model and, consequently, the estimated cost of equity. The appropriate growth rate to use in the DCF model is the dividend growth rate expected by *investors*, not by analysts. Investors are assumed to be rational, and as such will want to take into consideration all relevant available information

prior to making an investment decision. Therefore, it is reasonable to assume that investors would consider both historical measures of past growth, as well as analysts' forecasts of future growth.

Q. Does the narrative of Mr. Bourassa's Direct testimony state that he relies exclusively on analysts' forecasts of EPS growth to estimate the expected dividend growth rate (g) in his Future Growth DCF model?

A. No. Mr. Bourassa states only that "I have used analyst growth forecasts, where available,"[18] and that "I use analysts' forecasts of growth as a primary estimate of growth."[19] Only when referring to TJB Schedule D-4.6 does one learn that he has relied exclusively on analysts' forecasts of EPS growth to estimate the dividend growth (g) rate in his Future Growth DCF model.

Q. Does Staff have evidence to support its assertion that exclusive reliance on analysts' forecasts of earnings growth in the DCF model would result in inflated cost of equity estimates?

A. Yes. Experts in the financial community have commented on the optimism in analysts' forecasts of future earnings.[20] A study cited by David Dreman in his book *Contrarian Investment Strategies: The Next Generation* found that *Value Line* analysts were optimistic in their forecasts by 9 percent annually, on average for the 1987 – 1989 period. Another study conducted by David Dreman found that between 1982 and 1997, analysts overestimated the growth of earnings of companies in the S&P 500 by 188 percent.

---

[18] Direct testimony of Mr. Thomas J. Bourassa, page 32, lines 16-17.
[19] Direct testimony of Mr. Thomas J. Bourassa, page 33, lines 4-5.
[20] See Seigel, Jeremy J. Stocks for the Long Run. 2002. McGraw-Hill. New York. p. 100. Dreman, David. *Contrarian Investment Strategies: The Next Generation*. 1998. Simon & Schuster. New York. pp. 97-98. Malkiel, Burton G. *A Random Walk Down Wall Street*. 2003. W.W. Norton & Co. New York. p. 175.
Testimony of Professors Myron J. Gordon and Lawrence I. Gould, consultant to the Trial Staff (Common Carrier Bureau), FCC Docket 79-63, p. 95.

Burton Malkiel, of Princeton University, conducted a study of the 1- and 5-year earnings forecasts made by some of the most respected names in the investment business. His results showed that when compared with actual earnings growth rates, the 5-year forecasts made by professional analysts were far less accurate than estimates derived from several naïve forecasting models, such as the long-run growth rate in national income. In the following excerpt from his book, A Random Walk Down Wall Street, Professor Malkiel discusses the results of his study:

> When confronted with the poor record of their five-year growth estimates, *the security analysts honestly, if sheepishly, admitted that five years ahead is really too far in advance to make reliable projections*. They protested that although long-term projections are admittedly important, they really ought to be judged on their ability to project earnings changes one year ahead. Believe it or not, it turned out that their one-year forecasts were even worse than their five-year projections.
>
> The analysts fought back gamely. They complained that it was unfair to judge their performance on a wide cross section of industries, because earnings for high-tech firms and various "cyclical" companies are notoriously hard to forecast. *"Try us on utilities," one analyst confidently asserted. At the time they were considered among the most stable group of companies because of government regulation. So we tried it and they didn't like it. Even the forecasts for the stable utilities were far off the mark.*[21] (Emphasis added)

Q. Are investors aware of the problems related to analysts' forecasts?

A. Yes. In addition to books, there are numerous published articles appearing in *The Wall Street Journal* and other financial publications that cast doubt on the accuracy of research analysts' forecasts.[22] Investors, being keenly aware of these inherent biases in forecasts, will use other methods to assess future growth.

---

[21] Malkiel, Burton G. A Random Walk Down Wall Street. 2003. W.W. Norton & Co. New York. p. 175

[22] See Smith, Randall & Craig, Suzanne. "Big Firms Had Research Ploy: Quiet Payments Among Rivals." *The Wall Street Journal*. April 30, 2003. Brown, Ken. "Analysts: Still Coming Up Rosy." *The Wall Street Journal*. January 27, 2003. p. C1. Karmin, Craig. "Profit Forecasts Become Anybody's Guess." *The Wall Street Journal*. January

Q. Should DPS growth be considered in a DCF analysis?

A. Yes. As previously stated in section VI of this testimony, the current market price of a stock is equal to the present value of all expected future dividends, not future earnings. Professor Jeremy Siegel from the Wharton School of Finance stated:

> Note that the price of the stock is always equal to the present value of all future *dividends* and not the present value of future earnings. Earnings not paid to investors can have value only if they are paid as dividends or other cash disbursements at a later date. Valuing stock as the present discounted value of future earnings is manifestly wrong and greatly overstates the value of the firm.[23]

For valuation purposes, therefore, earnings paid out in the form of a dividend have paramount relevancy to investors. Dividends, unlike earnings, cannot be manipulated or overstated. Thus, historical DPS growth should receive appropriate consideration when estimating the market cost of equity in the DCF model.

Q. How does Mr. Bourassa calculate the expected dividend growth (g) rate used in his Past and Future Growth DCF model?

A. As shown in TJB Schedule D-4.4, Mr. Bourassa estimates the expected dividend growth (g) rate in his Past and Future Growth DCF model[24] by providing a 50 percent weight[25] to historical measures of growth in average annual share price, book value per share, earnings per share and dividends per share for his sample companies over a five-year period[26] and a 50 percent weight[27] to the average of analysts' forecasts for EPS growth derived from his Future Growth DCF model.

21, 2003. p. C1. Gasparino, Charles. "Merrill Lynch Investigation Widens." *The Wall Street Journal*. April 11, 2002. p. C4. Elstein, Aaron. "Earnings Estimates Are All Over the Map." *The Wall Street Journal*. August 2, 2001. p. C1. Dreman, David. "Don't Count on those Earnings Forecasts." *Forbes*. January 26, 1998. p. 110.

[23] Seigel, Jeremy J. Stocks for the Long Run. 2002. McGraw-Hill. New York. P. 93.

[24] TJB Schedule D-4.4, Column 7.

[25] TJB Schedule D-4.4, Column 5.

[26] In TJB Schedule D-4.5, Mr. Bourassa presents this same dividend growth information over a ten-year period, but elects not to use it in his analysis.

Q. For purposes of his overall DCF estimate, what weighting percentage does Mr. Bourassa allocate to the dividend growth (g) component derived from analysts' forecasts of dividend growth in his Future Growth DCF model?

A. Effectively, for purposes of his overall DCF estimate Mr. Bourassa allocates a 75 percent weighting to the results derived from analysts' forecasts of EPS growth in his Future Growth DCF Model. As noted above, TJB Schedule D-4.4 presents the results of Mr. Bourassa's Past and Future Growth DCF model, and provides for an equal weighting (i.e., 50 percent) between historical and projected measures of dividend growth. However, as shown in TJB Schedule D-4.8, for purposes of his overall dividend growth (g) estimate,[28] Mr. Bourassa combines the average of his Past and Future Growth DCF estimate[29] with his average Future Growth DCF estimate.[30] In so doing, Mr. Bourassa effectively gives a 75 percent weight to the dividend growth (g) estimate derived from analysts' forecasts of EPS growth his Future Growth DCF model and only a 25 percent weight to the dividend growth estimate derived from historical measures of growth in his Past and Future Growth DCF model.

Q. Does Staff have any comment on Mr. Bourassa's use of growth in average annual share price to estimate the expected dividend growth (g) component in his Past and Future Growth DCF model?

A. Yes. In and of itself, share price appreciation is not a determinant of dividend growth, and for this reason Staff considers its use as a growth parameter to be inappropriate. However, as Mr. Bourassa has utilized it as a growth parameter by which to estimate dividend growth, Staff would point out that in both his five- and ten-year historical growth DCF analyses, share price growth has exceeded that of dividend growth. Specifically, in his

[27] TJB Schedule D-4.4, Column 6.
[28] TJB Schedule D-4.8, Column 3.
[29] TJB Schedule D-4.8, Line 8.
[30] TJB Schedule D-4.8, Line 10.

five-year historical growth analysis (See TJB Schedule D-4.4), average share price growth (4.82%) exceeds average DPS growth (3.33%) by 45 percent (((.0482/.0333) – 1) = 45%), and in his ten-year historical growth analysis (See TJB Schedule D-4.5), average share price growth (5.82%) exceeds average DPS growth (3.08%) by 89 percent (((.0582/.0308) – 1) = 89%).

Q. As it relates to the cost of equity, what is the significance of Mr. Bourassa's sample water companies having experienced share price growth in excess of DPS growth over both the last five- and ten-year periods?

A. Simply stated, it is an indication that the cost of equity for publicly-traded water utilities has fallen over each of the last 5- and 10-year periods. When the market price per share of common stock for a given firm rises faster than does the dividend paid on a per share basis, the dividend yield falls. As dividend yields fall, investors pay more for an equivalent unit of return on their investment, resulting in a lower cost of equity. Markets are efficient, and because prices for publicly traded stocks can rise only if investors are willing to bid up the share price, when share price growth exceeds DPS growth over a five- or ten-year period, the willingness of investors to continue to bid up share prices is reflective of investor expectations that market returns have fallen. Thus, Mr. Bourassa's use of share price growth increases his cost of equity estimate at a time when share price growth actually reflects a decrease in cost of equity. This incongruous outcome is the result of choosing an inappropriate parameter for dividend growth in the DCF model.

Q. Does Staff consider Mr. Bourassa's use of a twelve-month average stock price to be an optimum choice for purposes of calculating the current dividend yield (D_0/P_0) in his two constant growth DCF models?

A. No. The current dividend yield (D_0/P_0) component in the DCF model is better reflected by using a current spot price, not an historical average stock price. Use of average stock prices to calculate the current dividend yield employs stale information and is not reflective of current investor expectations (See TJB Schedule D-4.7).[31]

Q. Turning to Mr. Bourassa's CAPM analyses, does Staff agree with his use of a forecasted risk-free interest rate?

A. No. The appropriate risk-free interest rate to be used is the current rate borne by investors in the market. Use of a forecasted risk-free rate only serves to overstate the estimated market cost of equity.

Q. What risk-free rate does Mr. Bourassa use in his CAPM analyses?

A. In both his historical- and current market risk premia CAPM analyses, Mr. Bourassa uses a forecasted risk-free rate (R_f) based, in part, upon estimates from Value Line and Blue Chip Consensus Forecasts for the 30-year long-term Treasury yield covering the period, 2013-2015. The forecasted rate used by Mr. Bourassa in his CAPM analyses is 3.9 percent. At present, the current 30-year long-term Treasury yield is 3.8 percent, which suggests that he has overstated the risk-free rate in his CAPM analysis by 10 basis points.

[31] A review of TJB Schedule D-4.7 indicates that rather than using the annual dividend (D_0) paid by each of his sample companies in 2012 for purposes of calculating the current dividend (D_0/P_0) yield, Mr. Bourassa has used the annual dividend (D_0) paid in 2011.

Q. Does Staff have any comment regarding Mr. Bourassa's downward 70 basis point financial risk adjustment?

A. Yes. In the narrative of his Direct testimony, Mr. Bourassa states that a "downward adjustment of no more than 80 basis points" is warranted to give recognition to LPSCO's diminished exposure to financial risk.[32] A review of TJB Schedule D-4.1, however, indicates that he confined his downward financial risk adjustment to only 70 basis points. As noted in TJB Schedule D-4.1, details of Mr. Bourassa's financial risk computation are presented in TJB Schedule D-4.22. Staff reviewed the work papers supporting TJB Schedule D-4.22, and in so doing determined that properly calculated, Mr. Bourassa's downward financial risk adjustment equated to 79 basis points (0.79 percent). Based upon this calculation, Mr. Bourassa has understated his downward financial risk adjustment, for rather than rounding down to 70 basis points, he rightly should have rounded up to 80 basis points, a level that he, himself, acknowledges to be appropriate.

Q. Does Staff have any comment regarding Mr. Bourassa's proposed 50 basis point small company risk premium?

A. Yes. The Commission previously ruled in Decision No. 64282[33] for Arizona Water that firm size does not warrant recognition of a risk premium stating, "We do not agree with the Company's proposal to assign a risk premium to Arizona Water based on it size relative to other publicly traded water utilities...." The Commission confirmed its previous ruling in Decision No. 64727[34] for Black Mountain Gas agreeing with Staff that "the 'firm size phenomenon' does not exist for regulated utilities, and that therefore there is no need to adjust for risk for small firm size in utility regulation." All companies have firm-specific risks; therefore, the existence of unique risks for a company does not lead to

[32] *See* Bourassa Direct, p.43, line 9.
[33] Dated December 28, 2001.
[34] Dated April 17, 2002.

the conclusion that its total risk is greater than other entities. Moreover, as previously discussed, investors cannot expect compensation for firm-specific risk since it can be eliminated through diversification.

XI. CONCLUSION

Q. Please summarize Staff's recommendations.

A. Staff recommends that the Commission adopt an 8.1 percent overall rate of return for the Company, a capital structure composed of 15.9 percent debt and 84.1 percent equity, an 8.4 percent cost of equity estimate, a 60 basis point (0.60 percent) downward financial risk adjustment and a 60 basis point (0.60 percent) upward economic assessment adjustment.

Q. Does this conclude your direct testimony?

A. Yes, it does.

Litchfield Park Service Company Cost of Capital Calculation
Capital Structure
And Weighted Average Cost of Capital
Staff Recommended and Company Proposed

[A]	[B]	[C]	[D]
Description	Weight (%)	Cost	Weighted Cost
Staff Recommended Structure			
Debt	15.9%	6.4%	1.0%
Common Equity	84.1%	8.4%	7.1%
Weighted Average Cost of Capital			8.1%
Company Proposed Structure			
Debt	15.87%	6.86%	1.09%
Common Equity	84.13%	10.00%	8.41%
Weighted Average Cost of Capital			9.50%

[D] : [B] x [C]

Supporting Schedules: JAC-2, JAC-3 and JAC-4.

Intentionally left blank

Litchfield Park Service Company Cost of Capital Calculation
Final Cost of Equity Estimates
Sample Water Utilities

[A]	[B]		[C]		[D]		[E]
DCF Method			D_1/P_0 [1]	+	g [2]	=	k
Constant Growth DCF Estimate			3.0%	+	5.0%	=	8.0%
Multi-Stage DCF Estimate						=	9.3%
Average DCF Estimate							**8.7%**
CAPM Method	Rf	+	β [5]	x	(Rp)	=	k
Historical Market Risk Premium [3]	2.2%	+	0.71	x	7.2% [6]	=	7.3%
Current Market Risk Premium [4]	3.8%	+	0.71	x	7.1% [7]	=	8.8%
Average CAPM Estimate							**8.1%**
					Average of Overall Estimates		**8.4%**
					Economic Assessment Adjustment		**0.6%**
					Sub-Total		**9.0%**
					Financial risk adjustment		**-0.6%**
					Total		**8.4%**

1 MSN Money and Value Line

2 Schedule JAC-8

3 Risk-free rate (Rf) for 5, 7, and 10 year Treasury rates from the U.S. Treasury Department at www.ustreas.gov

4 Risk-free rate (Rf) for 30 Year Treasury bond rate from the U.S. Treasury Department at www.ustreas.gov .

5 Value Line

6 Historical Market Risk Premium (Rp) calculated from 2013 Ibbotson SBBI Classic Yearbook data

7 Testimony

Litchfield Park Service Company Cost of Capital Calculation
Average Capital Structure of Sample Water Utilities

[A]	[B]	[C]	[D]
Company	Debt	Common Equity	Total
American States Water	43.3%	56.7%	100.0%
California Water	54.2%	45.8%	100.0%
Aqua America	55.2%	44.8%	100.0%
Connecticut Water	55.3%	44.7%	100.0%
Middlesex Water	43.1%	56.9%	100.0%
SJW Corp	56.2%	43.8%	100.0%
York Water	45.0%	55.0%	100.0%
Average Sample Water Utilities	**50.3%**	**49.7%**	**100.0%**
LPSCO - Actual Capital Structure	**15.9%**	**84.1%**	**100.0%**

Source:
Sample Water Companies from Value Line

Litchfield Park Service Company Cost of Capital Calculation
Growth in Earnings and Dividends
Sample Water Utilities

[A]	[B]	[C]	[D]	[E]
Company	Dividends Per Share 2002 to 2012 DPS[1]	Dividends Per Share Projected DPS[1]	Earnings Per Share 2002 to 2012 EPS[1]	Earnings Per Share Projected EPS[1]
American States Water	3.9%	7.2%	7.7%	1.2%
California Water	1.2%	7.4%	5.0%	5.8%
Aqua America	7.7%	8.3%	7.3%	8.0%
Connecticut Water	1.7%	3.5%	3.2%	2.7%
Middlesex Water	1.6%	1.6%	2.1%	5.0%
SJW Corp	4.4%	4.9%	4.2%	6.3%
York Water	4.4%	3.8%	6.1%	4.6%
Average Sample Water Utilities	**3.6%**	**5.2%**	**5.1%**	**4.8%**

1 Value Line

Litchfield Park Service Company Cost of Capital Calculation
Sustainable Growth
Sample Water Utilities

[A]	[B]	[C]	[D]	[E]	[F]
Company	Retention Growth 2002 to 2012 br	Retention Growth Projected br	Stock Financing Growth vs	Sustainable Growth 2002 to 2012 br + vs	Sustainable Growth Projected br + vs
American States Water	3.8%	5.1%	1.6%	5.4%	6.7%
California Water	2.4%	3.2%	1.5%	3.9%	4.7%
Aqua America	3.9%	4.4%	1.9%	5.8%	6.3%
Connecticut Water	2.0%	3.0%	3.9%	5.8%	6.9%
Middlesex Water	1.2%	2.8%	3.1%	4.3%	5.9%
SJW Corp	3.5%	3.8%	0.1%	3.6%	3.9%
York Water	2.2%	2.8%	4.5%	6.7%	7.3%
Average Sample Water Utilities	**2.7%**	**3.6%**	**2.4%**	**5.1%**	**6.0%**

[B]: Value Line
[C]: Value Line
[D]: Value Line, MSN Money, and Form 10-Ks filed with the Securities and Exchange Commission (http://www.sec.gov/)
[E]: [B]+[D]
[F]: [C]+[D]

Litchfield Park Service Company Cost of Capital Calculation
Selected Financial Data of Sample Water Utilities

[A]	[B]	[C]	[D]	[E]	[F]	[G]
Company	Symbol	Spot Price 8/28/2013	Book Value	Mkt To Book	*Value Line* Beta β	Raw Beta β *raw*
American States Water	AWR	**54.99**	23.56	2.3	**0.70**	0.52
California Water	CWT	**20.42**	11.62	1.8	**0.65**	0.45
Aqua America	WTR	**31.52**	9.92	3.2	**0.60**	0.37
Connecticut Water	CTWS	**30.75**	13.95	2.2	**0.75**	0.60
Middlesex Water	MSEX	**20.76**	11.98	1.7	**0.70**	0.52
SJW Corp	SJW	**27.01**	15.21	1.8	**0.85**	0.75
York Water	YORW	**19.71**	8.13	2.4	**0.70**	0.52
Average				**2.2**	**0.71**	**0.53**

[C]: Msn Money

[D]: Value Line

[E]: [C] / [D]

[F]: Value Line

[G]: (-0.35 + [F]) / 0.67

Litchfield Park Service Company Cost of Capital Calculation
Calculation of Expected Infinite Annual Growth in Dividends
Sample Water Utilities

[A]	[B]
Description	g
DPS Growth - Historical[1]	3.6%
DPS Growth - Projected[1]	5.2%
EPS Growth - Historical[1]	5.1%
EPS Growth - Projected[1]	4.8%
Sustainable Growth - Historical[2]	5.1%
Sustainable Growth - Projected[2]	6.0%
Average	**5.0%**

1 Schedule JAC-5

2 Schedule JAC-6

Litchfield Park Service Company Cost of Capital Calculation
Multi-Stage DCF Estimates
Sample Water Utilities

[A]	[B]	[C]	[D]	[E]	[F]	[G]	[H]
Company	Current Mkt. Price (P_o)[1]	Projected Dividends[2] (Stage 1 growth) (D_t)				Stage 2 growth[3] (g_n)	Equity Cost Estimate (K)[4]
	8/28/2013	d_1	d_2	d_3	d_4		
American States Water	55.0	1.52	1.60	1.68	1.76	6.5%	9.1%
California Water	20.4	0.65	0.68	0.72	0.75	6.5%	9.5%
Aqua America	31.5	0.74	0.78	0.82	0.86	6.5%	8.7%
Connecticut Water	30.8	1.02	1.07	1.12	1.18	6.5%	9.7%
Middlesex Water	20.8	0.76	0.79	0.83	0.88	6.5%	10.0%
SJW Corp	27.0	0.74	0.77	0.81	0.85	6.5%	9.1%
York Water	19.7	0.55	0.58	0.61	0.64	6.5%	9.2%

Average **9.3%**

$$P_0 = \sum_{t=1}^{n} \frac{D_t}{(1+K)^t} + \frac{D_n(1+g_n)}{K-g_n}\left[\frac{1}{(1+K)}\right]^n$$

Where : P_0 = current stock price
D_t = dividends expected during stage 1
K = cost of equity
n = years of non – constant growth
D_n = dividend expected in year n
g_n = constant rate of growth expected after year n

1 [B] see Schedule JAC-7

2 Derived from Value Line information

3 Average annual growth in GDP 1929 - 2012 in current dollars.

4 Internal Rate of Return of Projected Dividends

EXHIBIT
S-5
ADMITTED

BEFORE THE ARIZONA CORPORATION COMMISSION

BOB STUMP
Chairman
GARY PIERCE
Commissioner
BRENDA BURNS
Commissioner
SUSAN BITTER SMITH
Commissioner
BOB BURNS
Commissioner

IN THE MATTER OF THE APPLICATION OF LITCHFIELD PARK SERVICE COMPANY, AN ARIZONA CORPORATION, FOR A DETERMINATION OF THE FAIR VALUE OF ITS UTILITY PLANTS AND PROPERTY AND FOR INCREASES IN ITS WASTEWATER RATES AND CHARGES FOR UTILITY SERVICE BASED THEREON.	)	DOCKET NO. SW-01428A-13-0042
IN THE MATTER OF THE APPLICATION OF LITCHFIELD PARK SERVICE COMPANY, AN ARIZONA CORPORATION, FOR A DETERMINATION OF THE FAIR VALUE OF ITS UTILITY PLANTS AND PROPERTY AND FOR INCREASES IN ITS WATER RATES AND CHARGES FOR UTILITY SERVICE BASED THEREON.	)	DOCKET NO. W-01427A-13-0043

SURREBUTTAL

TESTIMONY

OF

JOHN A. CASSIDY

PUBLIC UTILITIES ANALYST

UTILITIES DIVISION

ARIZONA CORPORATION COMMISSION

NOVEMBER 12, 2013

TABLE OF CONTENTS

		PAGE
I.	INTRODUCTION	1
II.	STAFF RESPONSE TO COMPANY'S COST OF CAPITAL WITNESS MR. THOMAS J. BOURASSA	2
III.	STAFF RESPONSE TO COMPANY'S COST OF CAPITAL WITNESS MR. WENDELL LICON	5
IV.	STAFF RECOMMENDATIONS	15

SURREBUTTAL SCHEDULES

Calculation of Unlevered Beta JAC-1

Calculation of Relevered Beta JAC-2

Calculation of Financial Risk Adjustment JAC-3

EXECUTIVE SUMMARY
LITCHFIELD PARK SERVICE COMPANY
DOCKET NO. SW-01428A-13-0042, ET AL.

The surrebuttal testimony of Staff witness John A. Cassidy addresses the following issues:

Capital Structure – Staff recommends that the Commission adopt a capital structure for Litchfield Park Service Company ("Company") for this proceeding consisting of 15.9 percent debt and 84.1 percent equity.

Cost of Equity – Staff recommends that the Commission adopt an 8.4 percent return on equity ("ROE") for the Company. Staff's estimated ROE for the Company is based on the 8.4 percent average of its discounted cash flow method ("DCF") and capital asset pricing model ("CAPM") cost of equity methodology estimates for the sample companies of 8.8 percent for the DCF and 8.0 percent for the CAPM. Staff's recommended ROE includes an upward economic assessment adjustment of 60 basis points, and a downward financial risk adjustment of 60 basis points.

Cost of Debt – Staff recommends that the Commission adopt a 6.4 percent cost of debt for the Company.

Overall Rate of Return – Staff recommends that the Commission adopt an 8.1 percent overall rate of return.

Mr. Bourassa's Testimony – The Commission should reject the Company's proposed 9.7 percent ROE for the following reasons:

> Mr. Bourassa's primary Future Growth DCF model relies exclusively on analysts' forecasts of earnings per share growth, and the estimates derived from his Future Growth DCF model are effectively assigned a 75 percent weight to his overall DCF estimate. Mr. Bourassa's historical dividend growth estimate in his Past and Future Growth DCF model is inflated through the use of growth in average annual share price as a proxy to estimate dividend growth. Mr. Bourassa's CAPM estimates are inflated due to use of a forecasted risk-free rate. Mr. Bourassa's 9.7 percent recommended cost of equity includes an upward 50 basis point small company risk premium.

I. INTRODUCTION

Q. Please state your name, occupation, and business address.

A. My name is John A. Cassidy. I am a Public Utilities Analyst employed by the Arizona Corporation Commission ("Commission") in the Utilities Division ("Staff"). My business address is 1200 West Washington Street, Phoenix, Arizona 85007.

Q. Are you the same John A. Cassidy who filed direct testimony in this case?

A. Yes, I am.

Q. What is the purpose of your surrebuttal testimony in this rate proceeding?

A. The purpose of my surrebuttal testimony is to respond to the cost of capital rebuttal testimony of Company witnesses, Thomas J. Bourassa ("Mr. Bourassa's Rebuttal") and Wendell Licon ("Mr. Licon's Rebuttal").

Q. Please explain how Staff's surrebuttal testimony is organized.

A. Staff's surrebuttal testimony is presented in four sections. Section I is this introduction. Section II presents Staff's comments on the rebuttal testimony of the Company's cost of capital witness, Mr. Bourassa. Section III presents Staff's comments on the rebuttal testimony of the Company's cost of capital witness, Mr. Licon. Lastly, Section IV presents Staff's recommendations.

II. STAFF RESPONSE TO COMPANY'S COST OF CAPITAL WITNESS MR. THOMAS J. BOURASSA

Q. Please summarize the capital structure, cost of equity and overall rate of return proposed in Mr. Bourassa's rebuttal.

A. Mr. Bourassa's rebuttal continues to propose a capital structure consisting of 15.87 percent debt and 84.13 percent equity. However, Mr. Bourassa now adopts Staff's 6.4 percent cost of debt, and he has lowered his recommended cost of equity to 9.70 percent. As a result of these changes, Mr. Bourassa's rebuttal testimony now proposes a weighted average cost of capital for LPSCO of 9.18 percent.

Q. How does Staff respond to Mr. Bourassa's criticism of Staff's use of book values, rather than market values, in the calculation of Staff's Hamada financial risk adjustment?

A. Although, the Hamada adjustment finds its theoretical basis in market capital structures, a market based capital structure is not the issue in this proceeding. All cost of equity estimation methods require making assumptions, and the application of a Hamada financial risk adjustment based upon book values is a reasonable example of just such an assumption.

Q. Does Staff have any comment regarding Mr. Bourassa's proposed 50 basis point small company risk premium adjustment?

A. Yes. While Staff would agree with the general proposition that smaller companies are riskier than larger companies, empirical research has demonstrated that a small company risk premium adjustment to the cost of equity is unwarranted for regulated utilities.

Annie Wong, of Western Connecticut State University, conducted a study on utility stocks to determine if the so-called size effect exists in the utility industry, and she writes as follows:

> The fact that the two samples show different, though weak, results indicates that utility and industrial stocks do not share the same characteristics. First, given firm size, utility stocks are consistently less risky than industrial stocks. Second, industrial betas tend to decrease with firm size but utility betas do not. These findings may be attributed to the fact that all public utilities operate in an environment with regional monopolistic power and regulated financial structure. As a result, the business and financial risks are very similar among the utilities regardless of their size. Therefore, utility betas would not necessarily be expected to be related to firm size.
>
> The object of this study is to examine if the size effect exists in the utility industry. After controlling for equity values, there is some weak evidence that firm size is a missing factor from the CAPM for the industrial but not for the utility stocks. *This implies that although the size phenomenon has been strongly documented for industrials, the findings suggest that there is no need to adjust for the firm size in utility regulations*. [emphasis added].[1]

To underscore this point, Paschall and Hawkins write as follows:

> A size premium does not automatically apply in every case. Each privately held company should be analyzed to determine if a size premium is appropriate in its particular case. There can be unusual circumstances where a small company has risk characteristics that make it far less risky than the average company, warranting the use of a very low equity risk premium. One possible example of this is a private water utility (monopoly situation, very low risk, near-guarantee of payments).[2]

[1] Annie Wong, "Utility Stock and the Size Effect: An Empirical Analysis," *Journal of the Midwest Finance Association*, (1993), p.98.
[2] Michael A. Paschall and George B. Hawkins, "Do Smaller Companies Warrant a Higher Discount Rate for Risk?: The 'Size Effect' Debate," *CCH Business Valuation Alert*, Vol. 1, Issue No. 2, December 1999.

Q. Does Staff have additional evidence to demonstrate that Mr. Bourassa's proposed small company risk premium adjustment is without merit?

A. Yes, and from a source which he, himself, relies upon for purposes of his Risk Premium Build-Up cost of equity estimation methodology.[3] The 2012 *Duff & Phelps* Risk Premium Study includes a discussion of the size effect and the possible explanations for small companies having achieved historically higher returns than larger companies, and reads as follows:

> Traditionally, small companies are believed to have greater required rates of return than large companies because small companies are inherently riskier. It is not clear, however, whether this is due to size itself, or another factor closely related to size. The qualification that Banz noted in 1981 remains pertinent today:
>
> *"It is not known whether size [as measured by market capitalization-ed.] per se is responsible for the effect or whether size is just a proxy for one or more true unknown factors correlated with size."*
>
> Practitioners know that small firms measured in terms of fundamental size measures such as assets or net income have risk characteristics that differ from those of large firms. For example, *potential competitors* (emphasis added) can more easily enter the "real" market (market for the goods and/or services offered to customers) of the small firm and "take" the value that the small firm has built. Large companies have more resources to better *adjust to competition* (emphasis added) and avoid distress in economic slowdowns. Small firms undertake less research and development and spend less on advertising than large firms, giving them less control over product demand and *potential competition* (emphasis added). Small firms have fewer resources to *fend off competition* (emphasis added) and redirect themselves after changes in the market occur. Smaller firms may have fewer analysts following them, and less information available about them. Smaller firms may have lesser access to capital, thinner management depth, greater dependency on a few large customers, and may be less liquid than their counterparts. Each of these characteristics would tend to increase the rate of return that an investor might demand for investing in stocks of small companies rather than investing in stocks of large companies."[4]

[3] *See* Bourassa Direct, p.41, footnote 13.

Q. How has the Commission previously ruled on the issue of firm size and whether it warrants a risk premium adjustment to the cost of equity?

A. As discussed in Staff's direct testimony,[5] the Commission has previously ruled that the 'firm size phenomenon' does not exist for regulated utilities, and thus there is no need to make an upward risk adjustment to the cost of equity for small firm size in utility regulation.

III. STAFF RESPONSE TO COMPANY'S COST OF CAPITAL WITNESS MR. WENDELL LICON

Q. How does Staff respond to Mr. Licon's assertion that the ROE recommendations derived from Staff's cost of capital model are "unreasonable," and that the calculations supporting Staff's recommended ROE are "biased toward achieving a low cost of capital as the end result?"[6]

A. Staff respectfully disagrees with Mr. Licon's characterization of Staff's model. As noted in Staff's direct testimony, the cost of equity is determined by investor activity in the market, wherein it manifests itself as the investors' expected rate of return on investments of similar risk.[7] Staff's model is market based;[8] thus, the estimates derived therefrom are reflective of investor expectations of the market cost of equity. Thus, because Staff's model is market based and reflective of investor expectations, Mr. Licon's assertion that Staff's recommended ROE is "unreasonable" is without merit, as is his suggestion that Staff's underlying calculations are "biased toward achieving a low cost of capital as the end result."

---

[4] *Duff & Phelps* 2012 Risk Premium Study, p. 28.
[5] *See* Cassidy Direct, pp. 46-47.
[6] *See* Licon Rebuttal, p. 4, lines 17-22.
[7] *See* Cassidy Direct, p. 9, lines
[8] Staff's model incorporates estimates derived from two DCF models (Constant Growth DCF and Multi-Stage DCF) and two CAPM models (Historical MRP CAPM and Current MRP CAPM). Both the DCF and CAPM are widely recognized as being market based cost of equity estimation models.

Q. In his rebuttal testimony, does Mr. Licon cite examples of what he considers to be evidence that Staff's model is biased toward achieving a low cost of capital as the end result?

A. Yes. Mr. Licon is critical of Staff's CAPM model, stating that he found "inconsistent applications of the CAPM model used by Staff."[9] Specifically, Mr. Licon identified what he termed, "three simple errors," to illustrate his point. These include 1) use of an unrealistic risk-free rate, 2) an incorrect use of the Historical Market Risk Premium ("MRP"),[10] and 3) an incorrect application of the Hamada adjustment used to calculate Staff's financial risk adjustment.[11]

Q. In regard to the first "error" noted above, what is Mr. Licon's stated criticism of the risk free rate used by Staff in its CAPM model?

A. In essence, Mr. Licon asserts that Staff's use of an intermediate-term proxy for the risk-free rate (i.e. average spot yield on 5-, 7- and 10-year U.S. Treasury securities) in its historical market risk premium CAPM results in a mismatch between the investment time horizon in question (i.e. 30 year average depreciable life of LPSCO's plant assets), thus serving to downwardly bias Staff's cost of equity estimate.

Q. How does Staff respond to Mr. Licon's criticism of Staff's use of an intermediate-term proxy for the risk-free rate in Staff's Historical MRP CAPM.

A. As the relevant risk/return consideration when using the CAPM relates to the equity investors holding period, not the depreciable life of the asset(s). As noted in Staff's direct

---

[9] *See* Licon Rebuttal, p. 4, lines 22-23.
[10] Upon review of his rebuttal testimony, it appears Mr. Licon's criticism relates to the market risk premium component of Staff's current MRP CAPM, and not Staff's historical MRP CAPM.
[11] *See* Licon Rebuttal, p. 5, lines 12-15.

testimony,[12] the CAPM is used to determine the prices of equity securities in a competitive market, and describes the relationship between an equity security's investment risk and its market rate of return. Furthermore, the CAPM is assumed to be a single holding period model.[13] Accordingly, Staff incorporates an intermediate-term proxy for the risk-free rate in its historical MRP CAPM, calculated as the average spot yield on the 5-, 7- and 10-year U.S. Treasury securities, as this intermediate-term holding period more closely conforms to the investment time horizon of equity investors in the marketplace. Thus, contrary to Mr. Licon's assertion otherwise, Staff's historical MRP CAPM methodology is appropriate, and the cost of equity estimates derived therefrom reasonable.[14]

Q. In view of Mr. Licon's assertion that Staff is "inconsistent" when applying the CAPM model, please explain why Staff incorporates the long-term 30-year Treasury Bond yield as a proxy for the risk-free rate in its Current MRP CAPM.

A. Staff utilizes the spot yield on the 30-year long-term Treasury Bond as a proxy for the risk-free rate because the market risk premium ($R_m - R_f$) component of Staff's current MRP CAPM is, DCF-derived.[15] As noted in Staff's direct testimony,[16] the constant-growth DCF model assumes that an entity's dividend growth will continue indefinitely at the same rate, with the dividend growth (g) component being a measure of the expected *infinite annual growth rate* of dividends. Thus, having borrowed upon constant-growth

[12] *See* Cassidy Direct, p. 28, lines 19-21.
[13] *See* Cassidy Direct, p. 29, footnote 14.
[14] It should be noted that for income tax purposes, capital gains on equity investments (i.e. common stock) held for a period of 12 months or longer qualify for treatment as long-term capital gains and are taxed at a lower rate than short-term capital gains on investments held for a period of less than 12 months. Thus, to equity investors the intermediate-term risk-free rate time horizon adopted by Staff for use in its historical MRP CAPM qualifies as a long-term investment holding period for income tax purposes.
[15] *See* Cassidy Direct, p. 31, lines 23-24.

DCF theory/methodology to calculate the market risk premium ($R_m - R_f$) component of its current MRP CAPM, Staff utilizes the 30-year U.S. Treasury Bond as a proxy for the risk-free rate as dividend growth in the constant-growth DCF model is assumed to continue for a longer period of time (i.e. infinity).

Q. When reviewing Mr. Bourassa's direct and rebuttal testimonies, did Staff find evidence that he had been "inconsistent" in his choice of a risk-free rate in his cost of equity estimation methodology?

A. Yes, a review of Mr. Bourassa's testimonies indicates that he used a forecasted estimate of the 30-year long-term Treasury rate as a proxy for the risk-free rate in both his historical MRP CAPM and his current MRP CAPM (see TJB Schedules D-4.10 and D-4.12), but used a spot 20-year Treasury yield as a proxy for the risk-free rate in his risk premium Build-Up method (see TJB Schedules D-4.17 and D-4.18).[17]

Q. In his rebuttal testimony, is Mr. Licon's stated criticism of Staff's historical MRP CAPM confined only to Staff's use of an intermediate-term risk-free rate (i.e. average of 5-, 7- and 10-year spot Treasury yields) rather than a 30-year risk-free rate?

A. Yes. Mr. Licon's stated criticism is confined only to this issue.

---

[16] *See* Cassidy Direct, p. 16, lines 20-21, and p. 17, Equation 2.

[17] In TJB Schedule D-4.17 of his direct testimony, Mr. Bourassa incorrectly reported the closing February 14, 2013 spot 20-year Treasury yield to be 2.49%. Corrected, the closing spot 20-year Treasury yield on that date was 2.79%.

Q. What is the second "error" which Mr. Licon claims to have identified in Staff's CAPM model?

A. Mr. Licon asserts that Staff's calculation of the market risk premium ($R_m - R_f$) component in Staff's Current MRP CAPM has been understated.[18] Mr. Licon points out that Staff utilizes as an input into the model *Value Line's* forecasted 3-5 year stock price appreciation potential estimate, but takes issue with Staff for having discounted this forecasted estimate over a 4-year, rather than a 3-year period. He takes exception to Staff's 4-year "middle time estimate," stating "there is no other justification for spreading the return over 4 years." In advocating for use of a 3-year period to make the calculation, Mr. Licon makes the following statement: "In fact, *if* market participants were in *complete* agreement with this forecast, the argument could be made that the market would move to this point earlier rather than later in order to capture these returns." (emphasis added) Mr. Licon goes on to point out that when annualized over a 3-year period, Staff's current MRP CAPM would have generated a MRP of 10.22 percent, rather than the 7.13 percent MRP calculated by Staff using a 4-year period.

Q. How does Staff respond to Mr. Licon's criticism of Staff's use of a 4-year "middle time estimate" to calculate the market risk premium ($R_m - R_f$) component in Staff's Current MRP CAPM?

A As Staff's use of a 4-year period over which to discount *Value Line's* 3-5 year stock price appreciation potential estimate for purposes of calculating the market risk premium component in Staff's Current MRP CAPM is entirely reasonable. By their very nature,

forecasts and projections come with no guarantee or certainty as to when, or even if, the anticipated growth will be realized, as the underlying assumptions upon which they are grounded may, with the passage of time, prove to have been incorrect. *Value Line* updates its 3-5 year price appreciation potential estimate in each weekly edition of the *Value Line Investment Survey - Summary and Index*, and an informational qualifying statement appearing above the estimate reads as follows: "The estimated median price appreciation potential of all stocks in the *hypothesized economic environment 3 to 5 years hence*" (emphasis added). This statement clearly demonstrates two things; namely, (i) *Value Line's* projection is based on a future hypothesized economic environment 3-5 years out, and (ii) there is no specificity as to the year (i.e. 3, 4, or 5) in which *Value Line* anticipates its price appreciation potential estimate to materialize. Thus, contrary to Mr. Licon's assertions otherwise, Staff's choice of the 4-year midpoint upon which to base its MRP calculations is appropriate, and despite his advocacy for use of a 3-year period to make the calculation, an equally strong theoretical argument could be made for use of a 5-year period.

Q. Does Mr. Bourassa, for purposes of calculating the market risk premium ($R_m - R_f$) component in his current MRP CAPM, discount/annualize *Value Line's* 3-5 year price appreciation potential estimate over a 3-year period?

A. A review of Bourassa Schedule D-4.11 suggests that he did so.[19]

[18] *See* Licon Direct, p. 7, lines 3-17.
[19] See Schedule D-4.11, footnote 3.

Q. In his rebuttal testimony, is Mr. Licon's stated criticism of Staff's current MRP CAPM confined only to the issue of Staff's use of a 4-year, rather than 3-year, period over which to discount/annualize *Value Line's* 3-5 year price appreciation potential estimate for purposes of calculating the market risk premium ($R_m - R_f$) component?

A. Yes, Mr. Licon's stated criticism of Staff's current MRP CAPM is confined only to this issue.

Q. What is the third "error" which Mr. Licon claims to have identified in Staff's CAPM model?

A. Mr. Licon's final critique of Staff's CAPM model concerns Staff's use of the Hamada adjustment used to calculate Staff's downward 60 basis point financial risk adjustment. Mr. Licon asserts that Staff's Hamada adjustment to LPSCO's cost of equity is improperly based upon a comparison of LPSCO's capital structure to that of Staff's sample group of companies "(in order to adjust for a greater degree of financial leverage for the comparator firms than with LPSCO) based on 'book values of equity' rather than 'market values of equity."[20] Mr. Licon further asserts that Staff's calculations generate a "downward bias" to the estimated relevered beta value calculated for LPSCO, with the "net effect of this error" translating into a "lower calculated expected rate of return for investing in LPSCO equity."[21]

Q. How does Staff respond to Mr. Licon's criticism of Staff's Hamada financial risk adjustment methodology?

A. Once again, Staff takes exception to Mr. Licon's criticism, and in particular to the suggestion/insinuation that Staff's Hamada adjustment calculations are inherently

[20] In his rebuttal testimony, Mr. Licon states that he was so informed by Mr. Bourassa.
[21] *See* Licon Rebuttal, pp. 7-8.

predisposed to underestimate LPSCO's relevered beta, thereby resulting in Staff's downward financial risk adjustment to the Company's cost of equity to be overstated. While it is true that Staff's model incorporates the use of book values rather than market values for purposes of its Hamada adjustment calculation,[22] contrary to Mr. Licon's assertion otherwise, Staff does *not* base its Hamada risk adjustment on a comparison of LPSCO's capital structure relative to that of Staff's sample group of companies "in order to adjust for a greater degree of financial leverage for the comparator firms than with LPSCO." Instead, Staff makes its calculation based on a capital structure consisting of 40 percent debt and 60 percent equity, resulting in a calculated relevered beta for LPSCO *identical to that of Mr. Bourassa in his Direct testimony* (i.e. 0.63).[23]

Q. Please explain why Staff uses a capital structure assumed to consist of 40 percent debt and 60 percent equity for purposes of calculating a downward financial risk adjustment?

A. First, Staff does not make a financial risk adjustment to the cost of equity when the subject utility has a balanced, economical capital structure. Staff considers a capital structure within the range of 40 percent debt-60 percent equity (conversely, 60 percent debt-40 percent equity) to be balanced and economical. Accordingly, when making a downward financial risk adjustment, Staff's Hamada adjustment methodology incorporates a capital

[22] See Staff's earlier response to Mr. Bourassa's criticism of Staff's use of book values in this surrebuttal testimony.
[23] See Bourassa Direct, Schedule TJB D-4.21.

structure assumed to consist of 40 percent debt and 60 percent equity, and *not* the average capital structure of Staff's comparator sample as suggested by Mr. Licon.[24]

Q. Please explain why Staff elected to supplement its surrebuttal testimony with the presentation of Surrebuttal Schedules JAC-11, JAC-12 and JAC-13.

A. Staff presents these additional schedules for purposes of demonstrating that Staff's Hamada risk adjustment calculations generate the identical 0.63 adjusted relevered beta for LPSCO as that calculated by Mr. Bourassa in his direct testimony. Surrebuttal Schedule JAC-11 presents details of Staff's calculation of LPSCO's unlevered raw beta. As shown, although Staff's sample average capital structure is composed of 50 percent debt and 50 percent equity, the adjusted capital structure used to calculate Staff's Hamada adjustment consists of 40 percent debt and 60 percent equity. Turning to Surrebuttal Schedule JAC-12, Staff calculates LPSCO's relevered beta to be 0.63. Finally, Surrebuttal Schedule JAC-13 presents the detail of Staff's financial risk adjustment calculation based upon its 0.63 relevered beta, resulting in Staff's downward 60 basis point financial risk adjustment.

Details of Mr. Bourassa's financial risk adjustment calculations are presented in TJB Schedules D-4.19, D-4.20 and D-4.21. As shown in TJB Schedule D-4.20 of Mr. Bourassa's direct testimony, LPSCO's relevered CAPM beta is shown to be 0.63, and as presented in TJB Schedule D-4.21 of Mr. Bourassa's direct testimony, led to his making a

[24] In the interest of full disclosure, when making an upward financial risk adjustment to give recognition to a subject utility having a highly leveraged capital structure, Staff's Hamada adjustment would be based on a capital structure consisting of 60 percent debt and 40 percent equity.

downward financial risk adjustment of 70 basis points.[25] For purposes of his updated rebuttal testimony, Mr. Bourassa now calculates LPSCO's relevered beta to be 0.64, resulting in in what he purports to be a downward financial risk adjustment for LPSCO of 60 basis points (see TJB Rebuttal Schedules D-4.20 and D-4.21).

Q. In light of the above, is there any basis for Mr. Licon's assertion that Staff's Hamada adjustment methodology has underestimated LPSCO's relevered beta, resulting in an overstatement to Staff's downward financial risk adjustment for the Company?

A. No, there is not. As evidenced by the fact that both Staff and Mr. Bourassa calculated LPSCO's relevered beta to be 0.63, there is no justification for such an assertion.

Q. In his rebuttal testimony,[26] Mr. Licon briefly discusses the implications of selecting between an investment providing a ROE of 9.9 percent instead of 8.4 percent. How does Staff respond?

A. Mr. Licon conveniently fails to mention that in rebuttal testimony, Mr. Bourassa now proposes a reduced 9.7 percent ROE for LPSCO, a figure 20 basis points below the 9.9 percent ROE contemplated in his discussion. Furthermore, Mr. Licon fails to mention that if LPSCO were to have a more balanced capital structure, there would be no need for Staff to make a downward financial risk adjustment of 60 basis points, and Staff's recommended ROE for the Company would have been 9.0 percent rather than 8.4 percent

[25] In Staff's direct testimony, it was pointed out that Mr. Bourassa's 70 basis point downward financial risk adjustment had been understated by 9 basis points (*See* Cassidy Direct, p. 46, lines 3-13).
[26] *See* Licon Rebuttal, pp. 10-11.

(i.e. Staff's 8.4 percent estimated cost of equity plus an upward 60 basis point economic assessment adjustment).

IV. STAFF RECOMMENDATIONS

Q. Based on Staff's review of Mr. Bourassa and Mr. Licon's testimony, is Staff proposing a different ROE and ROR for the Company?

A. No. Staff continues to recommend the following for LPSCO's cost of capital:

1. A capital structure of 15.9 percent debt and 84.1 percent equity.
2. A 6.4 percent cost of debt.
3. An 8.4 percent return on equity (a figure which includes an upward 60 basis point (0.6 percent) economic assessment adjustment, and a downward 60 basis point (0.6 percent) financial risk adjustment.
4. An 8.1 percent overall rate of return.

Q. Does this conclude your surrebuttal testimony?

A. Yes, it does.

Litchfield Park Service Company Cost of Capital Calculation
Calculation of Unlevered Beta
Sample Water Utilities

$$\beta_{UL} = \frac{\beta_L}{1 + BD \div EC\ (1 - t)}$$

Where :

β_{UL} = unlevered beta
β_L = levered beta
BD = book debt
EC = equity capital
t = tax rate

	[A]	[B]	[C]	[D]	[E]	[F]
Line No.		(Unadjusted Beta) Value Line Levered Raw Beta β_L	Tax Rate t	Book Debt BD	Equity Cap EC	Unlevered Raw Beta $\beta_{UL} = \frac{\beta_L}{1+\frac{BD}{EC}(1-t)}$
1	American States Water	0.52	**39.9%**	0.43	0.57	0.36
2	California Water	0.45	**37.5%**	0.54	0.46	0.26
3	Aqua America	0.37	**39.0%**	0.55	0.45	0.21
4	Connecticut Water	0.60	**32.0%**	0.55	0.45	0.32
5	Middlesex Water	0.52	**33.9%**	0.43	0.57	0.35
6	SJW Corp	0.75	**41.1%**	0.56	0.44	0.43
7	York Water	0.52	**37.6%**	0.45	0.55	0.35
8						
9	Sample Water Utilities	0.53	37.3%	0.50	0.50	0.33
10						
11	Staff Adjusted Capital Structure					
12	(40% Debt / 60% Equity)	0.53	0.37	**0.40**	**0.60**	**0.37**
13						

Source: Value Line

Supporting Schedules: Schedule JAC-4 and Schedule JAC-7

Litchfield Park Service Company Cost of Capital Calculation
Calculation of Relevered Beta
Sample Water Utilities

$$\beta_{RL} = \beta_{UL}\ (1 + (1 - t)BD \div EC)$$

Where :

β_{RL} = relevered beta
β_{UL} = unlevered beta
t = tax rate
BD = book debt
EC = equity capital

[A]	[B]	[C]	[D]	[E]	[F]	[G]
	Unlevered Raw Beta β_{UL}	Book Debt BD	Equity Capital EC	Tax Rate t	Relevered Raw Beta $b_{RL}=\beta_{UL}(1+(1-t)BD/EC))$ β_{RL}	Adjusted Relevered Beta .35 + .67(Raw Beta) β_{RL}
Relevered Beta with Staff Adjusted 60% Debt / 40 % Equity Capital Structure	0.37	0.159	0.841	37.3%	0.42	0.63

Source: Schedule C3 of the Company's application
Supporting Schedules: Schedule JAC-1 and JAC-11

Litchfield Park Service Company Cost of Capital Calculation
Calculation of Financial Risk Adjustment
Sample Water Companies

	[A]	[B]		[C]		[D]		[E]
	CAPM Method	**Rf**	**+**	β	**x**	**(Rp)**	**=**	**k**
1	Historical Market Risk Premium	2.1%	+	0.71	x	7.2%	=	7.2%
2	Current Market Risk Premium	3.7%	+	0.71	x	7.2%	=	8.8%
3	**Average of CAPM Estimates**							**8.0%**
4								
5	**Relevered Beta**	**Rf**		β		**(Rp)**		**k**
6	Historical Market Risk Premium	2.1%	+	0.63	x	7.2%	=	6.6%
7	Current Market Risk Premium	3.7%	+	0.63	x	7.2%	=	8.2%
8	**Average of CAPM Estimates**							**7.4%**
9								
10	Financial Risk Adjustment (8 - 3)							-0.6%

Supporting Schedules: Schedule JAC-3, Schedule JAC-12

EXHIBIT
S-6
~~ADMITTED~~

BEFORE THE ARIZONA CORPORATION COMMISSION

BOB STUMP
Chairman
GARY PIERCE
Commissioner
BRENDA BURNS
Commissioner
BOB BURNS
Commissioner
SUSAN BITTER SMITH
Commissioner

IN THE MATTER OF THE APPLICATION OF LITCHFIELD PARK SERVICE COMPANY, AN ARIZONA CORPORATION, FOR A DETERMINATION OF THE FAIR VALUE OF ITS UTILITY PLANTS AND PROPERTY AND FOR INCREASES IN ITS WASTEWATER RATES AND CHARGES BASED THEREON FOR UTILITY SERVICE.	DOCKET NO. SW-01427A-13-0042
IN THE MATTER OF THE APPLICATION OF LITCHFIELD PARK SERVICE COMPANY, AN ARIZONA CORPORATION, FOR A DETERMINATION OF THE FAIR VALUE OF ITS UTILITY PLANTS AND PROPERTY AND FOR INCREASES IN ITS WATER RATES AND CHARGES BASED THEREON FOR UTILITY SERVICE.	DOCKET NO. W-01428A-13-0043

DIRECT

TESTIMONY OF

DARRON W. CARLSON

PUBLIC UTILITIES ANALYST MANAGER

UTILITIES DIVISION

ARIZONA CORPORATION COMMISSION

SEPTEMBER 26, 2013

TABLE OF CONTENTS

Page

I. INTRODUCTION 1

II. BACKGROUND 3

III. CONSUMER SERVICES 5

IV. COMPLIANCE 5

V. SUMMARY OF FILING, RECOMMENDATIONS, AND ADJUSTMENTS. 6

VI. RATE BASE 10

Rate Base Summary 10

Rate Base Adjustment No. 1 – Post-Test Year Plant (Wastewater Division Only) *11*
Rate Base Adjustment No. 2 – Accumulated Depreciation (Water Division Only) *12*
Rate Base Adjustment No. 3 – True-up of Plant-in-Service Accruals (Water and Wastewater Divisions) *13*
Rate Base Adjustment No. 4 – Plant additions recorded in wrong year (Water and Wastewater Divisions) *14*
Rate Base Adjustment No. 5 – Reclassification of Plant in Service (Water and Wastewater Divisions) *16*
Rate Base Adjustment No. 6 – Plant Not Used and Useful (Water and Wastewater Divisions) *17*
Rate Base Adjustment No. 7 – Removal of Duplicate Invoices (Water and Wastewater Divisions) *17*
Rate Base Adjustment No. 8 – Transportation Equipment not retired (Water Division Only) *18*
Rate Base Adjustment No. 9 – Contributions in Aid of Construction ("CIAC") (Water and Wastewater Divisions) *18*
Rate Base Adjustment No. 10 – Customer Deposits (Water and Wastewater Division) *19*
Rate Base Adjustment No. 11 – Accumulated Deferred Income Taxes ("ADIT") (Water and Wastewater Division) *20*

VII. OPERATING INCOME 21

Operating Income Summary 21

Operating Income Adjustment No. 1 – Water Testing Expense (Water and Wastewater Divisions) *21*
Operating Income Adjustment No. 2 – Corporate Allocation Accrual True-Up (Water and Wastewater Divisions) *22*
Operating Income Adjustment No. 3 – APUC Corporate Allocations (Water and Wastewater Divisions) *24*
Operating Income Adjustment No. 4 – Customer deposit interest expense (Water and Wastewater Divisions) *25*
Operating Income Adjustment No. 5 – Depreciation Expense (Water and Wastewater Divisions) *25*
Operating Income Adjustment No. 6 – Property Tax Expense (Water and Wastewater Divisions) *26*
Operating Income Adjustment No. 7 – Income Tax Expense (Water and Wastewater Divisions) *27*

VIII. OTHER ISSUES 28

Deferred Regulatory Asset (Water Division Only) *28*
Declining Usage Adjustment (Water Division Only) *30*
Income Taxes *32*
Hook-up Fees *34*
Property Tax Accounting Deferrals *35*

IX. ADJUSTOR MECHANISMS 36

Distribution System Improvement Charge ("DSIC") *37*
Purchased Power Adjustor Mechanism ("PPAM") *37*

WATER SCHEDULES

Revenue Requirement DWC-W1

Gross Revenue Conversion Factor DWC-W2

Rate Base – Original Cost DWC-W3

Summary of Original Cost Rate Base Adjustments DWC-W4

Rate Base Adjustment No. 1 – Not Used DWC-W5

Rate Base Adjustment No. 2 – Accumulated Depreciation DWC-W6

Rate Base Adjustment No. 3 – True-Up of Plant in Service Accruals DWC-W7

Rate Base Adjustment No. 4 – Plant Additions Recorded in Wrong Years DWC-W8

Rate Base Adjustment No. 5 – Reclassification of Plant in Service DWC-W9

Rate Base Adjustment No. 6 – Plant Not Used and Useful DWC-W10

Rate Base Adjustment No. 7 – Removal of Duplicate Invoices DWC-W11

Rate Base Adjustment No. 8 – Retirement of Transportation DWC-W12

Rate Base Adjustment No. 9 – Recalculation of Contributions in Aid of Construction DWC-W13

Rate Base Adjustment No. 10 – Customer Deposits DWC-W14

Rate Base Adjustment No. 11 – Accumulated Deferred Income Taxes DWC-W15

Operating Income Statement – Adjusted Test Year and Staff Recommended DWC-W16

Summary of Operating Income Statement Adjustments – Test Year DWC-W17

Operating Income Adj. No. 1 – Water Testing Expense DWC-W18

Operating Income Adj. No. 2 – Corporate Allocation Accrual True-Up DWC-W19

Operating Income Adj. No. 3 – APUC Corporate Allocations DWC-W20

Operating Income Adj. No. 4 – Interest on Customer Deposits DWC-W21

Operating Income Adj. No. 5 – Depreciation Expense DWC-W22

Operating Income Adj. No. 6 – Property Tax Expense DWC-W23

Operating Income Adj. No. 7 – Test Year Income Taxes DWC-W24

WASTEWATER SCHEDULES

Revenue Requirement DWC-WW1

Gross Revenue Conversion Factor DWC-WW2

Rate Base – Original Cost DWC-WW3

Summary of Original Cost Rate Base Adjustments DWC-WW4

Rate Base Adjustment No. 1 – Post Test-Year Plant DWC-WW5

Rate Base Adjustment No. 2 – Not Used DWC-WW6

Rate Base Adjustment No. 3 – True-Up of Plant in Service Accruals DWC-WW7

Rate Base Adjustment No. 4 – Plant Additions Recorded in Wrong Years DWC-WW8

Rate Base Adjustment No. 5 – Reclassification of Plant in Service DWC-WW9

Rate Base Adjustment No. 6 – Plant Not Used and Useful DWC-WW10

Rate Base Adjustment No. 7 – Removal of Duplicate Invoices DWC-WW11

Rate Base Adjustment No. 8 – Not Used DWC-WW12

Rate Base Adjustment No. 9 – Recalculation of Contributions in Aid of Construction DWC-WW13

Rate Base Adjustment No. 10 – Customer Deposits DWC-WW14

Rate Base Adjustment No. 11 – Accumulated Deferred Income Taxes DWC-WW15

Operating Income Statement – Adjusted Test Year and Staff Recommended DWC-WW16

Summary of Operating Income Statement Adjustments – Test Year DWC-WW17

Operating Income Adj. No. 1 – Water Testing Expense DWC-WW18

Operating Income Adj. No. 2 – Corporate Allocation Accrual True-Up DWC-WW19

Operating Income Adj. No. 3 – APUC Corporate Allocations DWC-WW20

Operating Income Adj. No. 4 – Interest on Customer Deposits DWC-WW21

Operating Income Adj. No. 5 – Depreciation Expense DWC-WW22

Operating Income Adj. No. 6 – Property Tax Expense DWC-WW23

Operating Income Adj. No. 7 – Test Year Income Taxes DWC-WW24

EXECUTIVE SUMMARY
LITCHFIELD PARK SERVICE COMPANY
DOCKET NOS. SW-01427A-13-0042 AND W-01427A-13-0043

Litchfield Park Service Company ("LPSCO or Company") is an Arizona "C" Corporation. Its principal place of business is 12725 W. Indian School Road, Suite D-101, Avondale, Arizona. The Company is engaged in the business of providing water and wastewater utility services in its certificated areas in portions of Maricopa County, Arizona. The Company served approximately 16,800 water customers and 16,160 wastewater customers during the test year ended December 31, 2012. The Company's current rates were approved in Decision No. 72026, dated December 10, 2010.

Rate Application:

Water Division

The Company-proposed rates, as filed, produce total operating revenue of $13,458,550, an increase of $2,257,160 or 20.15 percent, over adjusted test year revenue of $11,201,390 to provide a $3,387,127 operating income and a 9.50 percent rate of return on its proposed $35,647,602 fair value rate base ("FVRB") which is its original cost rate base ("OCRB").

The Utilities Division ("Staff") recommends rates that produce total operating revenue of $12,276,127, an increase of $1,074,737 or 9.59 percent, over the adjusted test year revenue of $11,201,390 to provide a $652,686 operating income and an 8.10 percent return on the $33,119,464 Staff-adjusted FVRB and OCRB.

Wastewater Division

The Company-proposed rates, as filed, produce total operating revenue of $11,020,691, an increase of $659,088 or 6.36 percent, over adjusted test year revenue of $10,361,603 to provide a $2,268,786 operating income and a 9.50 percent rate of return on its proposed $23,877,697 FVRB which is its OCRB.

Staff recommends rates that produce total operating revenue of $10,303,654 , a decrease of $57,949 or 0.56 percent, under the adjusted test year revenue of $10,361,603 to provide a $1,897,396 operating income and an 8.10 percent return on the $23,424,640 Staff-adjusted FVRB and OCRB.

Rate Case items:

Staff recommends that in the future the Company correctly record plant additions in the correct month and year.

Other items:

Deferred Regulatory Asset:

Staff recommends increasing the Company's deferred regulatory asset by $25,708.

Staff recommends that the Company correct its compliance filing report. Further, Staff also recommends amortizing the additional $25,708 in deferred regulatory assets over 10 years.

Declining Usage Adjustment

Staff recommends approval of a 0.5 percent declining usage adjustment subject to the same conditions that are included in the Arizona Water Company – Northern Group filing.

Income Tax

Staff recommends that the Company:

1. Determine the amount of excess deferred income tax related to the change in State income tax.
2. Present a plan, within 60 days of a Commission decision in this matter, on how to refund any excess monies to rate payers.

Hook-up Fees

Staff also recommends approval of the Company's water off-site facilities hookup fee tariff, subject to certain conditions (see testimony of Staff Engineer Dorothy Hains).

Property Tax Accounting Deferral

Staff recommends denial of the Company's proposed property tax accounting deferral.

Adjustor Mechanisms:

Staff recommends approval of the Company's proposed Purchased Power Adjustor Mechanism ("PPAM") subject to certain conditions.

I. INTRODUCTION

Q. Please state your name and business address.

A. My name is Darron W. Carlson. My business address is 1200 West Washington Street, Phoenix, Arizona 85007.

Q. Where are you employed and in what capacity?

A. I am employed by the Utilities Division ("Staff") of the Arizona Corporation Commission ("ACC" or "Commission") as a Public Utilities Analyst Manager.

Q. How long have you been employed with the Utilities Division?

A. I have been employed with the Utilities Division since September of 1991.

Q. Please describe your educational background and professional experience.

A. I hold a Bachelor of Arts degree in both Accounting and Business Management from Northeastern Illinois University in Chicago, Illinois.

I have participated in quite a number of seminars and workshops related to utility rate-making, cost of capital, income taxes, and similar issues. These have been sponsored by organizations such as the National Association of Regulatory Utility Commissioners ("NARUC"), Duke University, Florida State University, Michigan State University, New Mexico State University, and various other organizations.

Q. Briefly describe your responsibilities as a Public Utilities Analyst Manager.

A. In my capacity as a Public Utilities Analyst Manager, I supervise analysts who examine, verify, and analyze utilities' statistical, financial, and other information. These analysts write reports and/or testimonies analyzing proposed mergers, acquisitions, asset sales,

financings, rate cases, and other matters in which they make recommendations to the Commission. I provide support and guidance along with reviewing and editing the work products. I also perform analysis as needed on special projects. Additionally, I provide expert testimony at formal hearings. Finally, I assist Staff members during formal hearings and supervise responsive testimonies, as needed, during the hearing process.

Q. What is the scope of your testimony in this case?

A. I am presenting Staff's analysis and recommendations regarding Litchfield Park Service Company's ("LPSCO" or "Company") application for a permanent increase in its rates and charges for water and wastewater utility service within Maricopa County, Arizona. I am presenting testimony and schedules addressing rate base, operating revenues and expenses, revenue requirement, and rate design. Staff witness John Cassidy is presenting Staff's cost of capital. Mrs. Dorothy Hains is presenting Staff's engineering analysis and related recommendations.

Q. What is the basis of your testimony in this case?

A. Staff working under my supervision performed a regulatory audit of the Company's application and records. The regulatory audit consisted of examining and testing financial information, accounting records, and other supporting documentation and verifying that the accounting principles applied were in accordance with the Commission adopted NARUC Uniform System of Accounts ("USOA").

Q. How is your testimony organized?

A. My testimony is presented in nine sections. Section I is this introduction. Section II provides a background of the Company. Section III is a summary of consumer service issues. Section IV presents compliance status. Section V is a summary of the Company's

filing and Staff's rate base and operating income adjustments. Section VI presents Staff's rate base recommendations. Section VII presents Staff's operating income recommendations. Section VIII presents Staff's other issues, and Section IX presents Staff's recommendations on adjustor mechanisms.

II. BACKGROUND

Q. Please review the background of this application.

A. LPSCO is an Arizona "C" Corporation. Its principal place of business is 12725 W. Indian School Road, Suite D-101, Avondale, Arizona. The Company is engaged in the business of providing water utility services in its certificated areas in portions of Maricopa County, Arizona. The Company served approximately 16,800 water customers and 16,160 wastewater customers during the test year ended December 31, 2012. The Company's current rates were approved in Decision No. 72026, dated December 10, 2010.

LPSCO is organized under the Liberty Utilities (South) segment of Algonquin Power & Utilities Corp ("APUC"). APUC is an incorporated entity under the Canada Business Corporations Act. APUC's principal activity is the ownership of power generation facilities and water, gas and energy utilities, through investments in securities of subsidiaries including corporations, limited partnerships and trusts which carry on these businesses. The activities of the subsidiaries may be financed through equity contributions, interest bearing notes and third party debt.

APUC's power generation business unit conducts business under the name Algonquin Power Co. ("APCo"). APCo owns or has interests in renewable energy facilities and thermal energy facilities representing more than 1,100 MW of installed electrical generation capacity.

APUC's Utility Services business unit conducts business under the name of Liberty Utilities Co. in the United States of America ("Liberty Utilities"). In December 2005, Rio Rico Utilities, Inc. ("RRUI") became a wholly-owned subsidiary of Algonquin Water Resources of America, Inc. ("AWRA"). AWRA later became known as Liberty Water, Inc. ("Liberty Water"). Liberty Water was a wholly-owned subsidiary of Algonquin Power Income Fund ("APIF"). In October of 2009, APIF became APUC.

As of December 31, 2012, Liberty Utilities' businesses operated under three separately managed regions in the United States: Liberty Utilities (Central), Liberty Utilities (West), and Liberty Utilities (South) (formerly known as Liberty Water).

Liberty Utilities (South) currently owns a portfolio of utilities in the United States of America providing water or wastewater services in the states of Arizona, Texas, Missouri and Illinois.

Liberty Utilities (South) Arizona Facilities include:

Litchfield Park Service Company
Gold Canyon Sewer Company
Black Mountain Sewer Corporation
Entrada Del Oro Sewer Company
Northern Sunrise Water Company, Inc.[1]
Southern Sunrise Water Company, Inc.
Bella Vista Water Company
Rio Rico Utilities Inc.

[1] Decision No. 72251 ordered the consolidation of the operations of Northern Sunrise Water Company, Southern Sunrise Water Company and Bella Vista Water Company.

III. *CONSUMER SERVICES*

Q. Please provide a brief history of customer complaints received by the Commission regarding the Company. Additionally, please discuss customer responses to the Company's proposed rate increase.

A. A review of the Commission's Consumer Services database for the Company from January 1, 2010 to August 15, 2013, revealed the following for each Division:

Water Division

2013 - One Complaint (one quality of service), and zero opinions.

2012 - One Complaint (quality of service), and zero opinions.

2011 - Four Complaints (billing), and zero opinions.

2010 - One Complaint (billing), and zero opinions.

Wastewater Division

2013 - One Complaint (quality of service), and three opinions (all opposed to rate application).

2012 - Zero Complaints, and zero opinions.

2011 - Zero Complaints, and zero opinions.

2010 - One Complaint (quality of service), and zero opinions.

All complaints and inquiries have been resolved and closed.

IV. COMPLIANCE

Q. Please provide a summary of the compliance status of the Company.

A. A check of the ACC's Compliance database indicates that there are currently no delinquencies for the Company.

V. SUMMARY OF FILING, RECOMMENDATIONS, AND ADJUSTMENTS.

Q. Please summarize the Company's proposals in this filing, for its water and wastewater divisions.

A. The Company has proposed the following for its water and wastewater divisions.

Water Division

The Company-proposed rates, as filed, produce total operating revenue of $13,458,550, an increase of $2,257,160 or 20.15 percent, over adjusted test year revenue of $11,201,390 to provide a $3,387,127 operating income and a 9.50 percent rate of return on its proposed $35,647,602 fair value rate base ("FVRB") which is its original cost rate base ("OCRB").

Wastewater Division

The Company-proposed rates, as filed, produce total operating revenue of $11,020,691, an increase of $659,088 or 6.36 percent, over adjusted test year revenue of $10,361,603 to provide a $2,268,786 operating income and a 9.50 percent rate of return on its proposed $23,877,697 FVRB which is its OCRB.

Q. Please summarize Staff's recommendations.

A. Staff recommends the following for the Company's water and wastewater divisions.

Water Division

Staff recommends rates that produce total operating revenue of $12,276,127, an increase of $1,074,737 or 9.59 percent, over the adjusted test year revenue of $11,201,390 to provide a $652,686 operating income and an 8.10 percent return on the $33,119,464 Staff-adjusted FVRB and OCRB.

Wastewater Division

Staff recommends rates that produce total operating revenue of $10,303,654, a decrease of $57,949 or 0.56 percent, under the adjusted test year revenue of $10,361,603 to provide a $1,897,396 operating income and a 8.10 percent return on the $23,424,640 Staff-adjusted FVRB and OCRB.

Q. What test year did the Company use in this filing?

A. The Company's rate filing is based on the twelve months ended December 31, 2012 ("test year").

Q. Please summarize the rate base adjustments addressed in your testimony.

A. My testimony addresses the following issues:

Post-Test Year Plant – This adjustment applies to the wastewater division only, and decreases post-test year plant by $700,000 to remove plant that is not completed nor used and useful.

Accumulated Depreciation – This adjustment applies to the water division only, and increases accumulated depreciation by $2,454,081 to correct a cell formula error noted in the Company's application.

True-Up of Plant in Service Accruals – These adjustments apply to both the water and wastewater divisions, these adjustments are necessary to true-up plant that was accrued during the test year, decreases plant for the water division by $196,725, and increases plant for the wastewater division by $195,445.

Plant Additions Recorded in Wrong Years – These adjustments apply to both the water and wastewater divisions, these adjustments correct accumulated depreciation for plant that was recorded in the wrong years. These adjustments increase accumulated

depreciation for the water division by $99,151 and increase accumulated depreciation for the wastewater division by $410.

Reclassification of Plant in Service – These adjustments apply to both the water and wastewater divisions, these adjustments reclassify plant in the amount of $2,843,470 for the water division, and reclassify plant in the amount of $642,735 for the wastewater division, and transfer plant in the amount of $6,000 from the water division to the wastewater division. In addition these adjustments decrease accumulated depreciation for the water division by $27,948, and increase accumulated depreciation for the wastewater division by $18,194.

Plant Not Used and Useful – These adjustments apply to both the water and wastewater divisions, and remove plant that was not used and useful during the test year, which results in a decrease of plant in the amount of $12,156 for the water division, and a decrease of plant in the amount of $124,546 for the wastewater division.

Duplicate Invoices – These adjustments apply to both the water and wastewater divisions, and remove duplicate invoices, which results in a decrease of plant in the amount of $5,608 and accumulated depreciation in the amount of $130 for the water division, and a decrease of plant in the amount of $4,672 and accumulated depreciation in the amount of $214 for the wastewater division.

Retirement of Transportation Equipment – This adjustment applies to the water division only, and removes transportation equipment from the rate application that is retired, the result of which is a decrease of plant in the amount of $17,555 and associated accumulated depreciation of $17,555.

Contributions in Aid of Construction ("CIAC") – These adjustments apply to both the water and wastewater divisions, and correct cell formula errors in the Company's CIAC work sheets, which result in an increase of CIAC in the amount of $101,234 for the water division, and a decrease of CIAC in the amount of $93,570 for the wastewater division. In

addition, the amortization of CIAC for the water division was decreased by $193,524 and for the wastewater division by $293,474.

Customer Deposits – These adjustments apply to both the water and wastewater divisions, and increase customer deposits based on Staff's use of a 13-month average, the result of which is an increase to customer deposits in the amount of $7,514 for the water division, and an increase to customer deposits in the amount of $8,334 for the wastewater division.

Accumulated Deferred Income Taxes ("ADIT") – These adjustments apply to both the water and wastewater divisions and decrease ADIT for the water division by $526,652 and ADIT for the wastewater division by $395,488 to adjust to Staff's recommended plant adjustments.

Q. Please summarize the operating revenue and expense adjustments addressed in your testimony.

A. My testimony addresses the following issues:

Water Testing Expense – These adjustments apply to both the water and wastewater divisions and decrease water testing expense by $4,464 for the water division, and $35,730 for the wastewater division. For the wastewater division only, Staff increased the sludge removal expense by $3,410 which is related to the water testing of the sludge.

Corporate Allocation Accrual True-Up – These adjustments apply to both the water and wastewater divisions and decrease corporate expenses by $8,420 for the water division, and $7,872 for the wastewater division to true-up the Company's accrual.

Corporate Allocation Expenses – These adjustments apply to both the water and wastewater divisions and decrease corporate expenses by $18,669 for the water division, and $23,978 for the wastewater division to remove items not necessary to the provision of service.

Interest on Customer Deposits – These adjustments apply to both the water and wastewater divisions and increase customer deposit interest expense by $5,346 for the water division, and $5,931 for the wastewater division to include interest on customer deposits as an operating expense.

Depreciation Expense – These adjustments apply to both the water and wastewater divisions and increase depreciation expense for the water division by $22,525 and decrease depreciation expense for the wastewater division by $13,337.

Property Tax Expense – These adjustments apply to both the water and wastewater divisions and decrease property taxes for the water division by $27,957 and by $28,801 for the wastewater division to adjust property taxes to Staff's adjusted test year amount.

Income Tax Expense – These adjustments apply to both the water and wastewater divisions and increases income taxes for the water division by $25,440 and increases income taxes by $40,600 for the wastewater division to adjust income taxes to Staff's adjusted test year amount.

VI. RATE BASE

Fair Value Rate Base

Q. Did the Company prepare a schedule showing the elements of Reconstruction Cost New Rate Base?

A. No, the Company did not. The Company's filing treats the OCRB the same as the FVRB.

Rate Base Summary

Q. Please summarize Staff's adjustments to the Company's water and wastewater division rate bases.

A. Staff recommends the following for the Company's water and wastewater divisions.

Water Division

A. Staff's adjustments to the Company's rate base resulted in a net decrease of $2,528,138, from $35,647,602 to $33,119,464. This decrease was primarily due to Staff's: (1) adjustments to accumulated depreciation, (2) adjustments to true-up plant in service accruals, (3) adjustments to correct plant in service recorded in the wrong years, (4) removal of plant not used and useful, (5) removal of duplicate invoices, (6) adjustments to reclassify plant in service to the correct accounts, (7) retirement of plant in service, (8) adjustments to contributions in aid of construction, (9) adjustments to customer deposits, and (10) adjustments to accumulated deferred income taxes, as shown on schedules DWC-W3, and DWC-W4.

Wastewater Division

A. Staff's adjustments to the Company's rate base resulted in a net decrease of $453,057, from $23,877,697 to $23,424,640. This decrease was primarily due to Staff's: (1) post-test year plant (2) adjustments to accumulated depreciation, (3) adjustments to true-up plant in service accruals, (4) adjustments to correct plant in service recorded in the wrong years, (5) removal of plant not used and useful, (6) removal of duplicate invoices, (7) adjustments to reclassify plant in service to the correct accounts, (8) adjustments to contributions in aid of construction, (9) adjustments to customer deposits, and (10) adjustments to accumulated deferred income taxes, as shown on schedules DWC-WW3, and DWC-WW4.

Rate Base Adjustment No. 1 – Post-Test Year Plant (Wastewater Division Only)

Q. Did the Company include post-test year plant in its application?

A. Yes. The Company has asked that its Palm Valley Water Reclamation Facility ("PVWRF") Equalization Basin be included as post-test year plant. Part of the concrete

celling of the structure has eroded away, exposing several of the underlying structural beams. The Company in its application stated that it anticipates the project to be completed in the third or fourth quarter of 2013.

Q. How did the Company account for the post-test year plant in its application?

A. The Company estimated a cost of $1,000,000 and associated retirement cost $300,000, thus a net addition of $700,000 has been included in Plant Account No. 380 Treatment and Disposal Equipment.

Q. Has the PVWRF Equalization Basin project been completed?

A. No, not at the date of this filing.

Q. Is Staff amendable to including the post-test year plant at a later date in this docket provided the Company can demonstrate that the project is complete and used and useful?

A. Yes. However, time is running out for the Company for inclusion of its post-test year plant. Staff's surrebuttal testimony is tentatively due on November 12, 2013.

Q. What is Staff's recommendation at the date of this filing?

A. Staff recommends that Plant Account No. 380 Treatment and Disposal Equipment be reduced by $700,000 from $5,585,470 to $4,885,470, as shown on schedule DWC-WW5.

Rate Base Adjustment No. 2 – Accumulated Depreciation (Water Division Only)

Q. Did Staff make an adjustment to Accumulated Depreciation for the water division?

A. Yes.

Q. What adjustments did Staff make?

A. First, Staff noted that accumulated depreciation is overstated on the Company's application for the water division, Schedule B-2; page 4.3 the Company added account 301 Organization Cost in the amount of $21,100 which is a non-depreciable account to accumulated depreciation. Therefore, the $21,100 must be removed from accumulated depreciation.

Second, Staff noticed a cell formula error on the Company's application for the water division, Schedule B-2; page 3.5 the accumulated depreciation column contained hard coded numbers, which resulted in accumulated depreciation being understated. Staff recalculated the accumulated depreciation using the correct cell formula. The result is an increase to accumulated depreciation in the amount of $2,475,801.

Q. What is Staff's recommendation?

A. Staff recommends increasing accumulated depreciation by $2,454,801 from $16,514,086 to $18,968,887, as shown on schedule DWC-W6.

Rate Base Adjustment No. 3 – True-up of Plant-in-Service Accruals (Water and Wastewater Divisions)

Q. Did Staff make an adjustment to True-up Plant Accruals at the end of the test year?

A. Yes. The Company uses accrual accounting, and therefore records an accrual for the service when it is completed, but not yet billed. The Company then reverses the accrual in the subsequent month and records the actual expense when the invoice is sent to the Company. Based on a Staff data request the Company provided Staff with a transaction detail listing of invoices obtained after the test year.

Q. Based on transaction detail listing, were adjustments necessary?

A. Yes. As summarized below:

NARUC Account No.	(Project Manager Estimate) Original Accrual	(Transaction Detail Tab) Actual Invoices	(Actual - Accrual) Difference
304	$516,230	$337,613	($178,617)
307	$54,325	$36,217	($18,108)
Total Water	$570,555	$373,830	($196,725)
354	$1,117,556	$1,316,556	$199,000
396	$56,425	$52,870	($3,555)
371	$45,548	$45,548	$0
Total Wastewater	$1,219,529	$1,414,974	$195,445

Q. What is Staff's recommendation?

A. Staff recommends that Plant Account No. 304 Structures and Improvements be reduced by $178,617 from $28,000,916 to $27,822,299, and Plant Account No. 307 Wells and Springs be reduced by $18,108 from $54,325 to $36,217 for the water division; and for the wastewater division Plant Account Number 354 Structures and Improvements be increased by $199,000 from $24,208,314 to $24,407,314, and Plant Account Number 396 Communications Equipment be decreased by $3,555, as shown on schedules DWC-W7 and DWC-WW7.

Rate Base Adjustment No. 4 – Plant additions recorded in wrong year (Water and Wastewater Divisions)

Q. Did Staff make several adjustments to Accumulated Depreciation for Plant that was recorded in the wrong year?

A. Yes.

Q. Why did Staff make this adjustment?

A. While reviewing the Company's plant invoices, Staff noted several invoices that were dated in 2006, 2007, and 2008 that were posted to the Company's general ledger as additions in 2009, 2010, 2011, and 2012.

Q. What was the cause of the error?

A. Based on the Company's response to Staff data request 15.1, the Company stated that it "inadvertently omitted these invoices from its B-2 Schedules in the last rate case. The Company discovered a batch of invoices were not capitalized to utility plant in-service in the last rate case and therefore needed to be included in this rate case. As a consequence, the Company has not yet recovered a return on or of these investments."

Q. What is the effect of this error?

A. Since the plant was placed into service prior to being recorded in the general ledger, the effect of this error is that the accumulated depreciation balance has been understated.

Q. Based on a Staff data request, did the Company provide Staff with a spreadsheet that recalculated the correct accumulated depreciation balances for those plant items that were posted in the future?

A. Yes.

Q. What is Staff's recommendation?

A. Staff recommends increasing the accumulated depreciation balances by $99,151 for the water division and $401 for the wastewater division to correct this error, as shown on schedules DWC-W8 and DWC-WW8.

Q. Does Staff have any additional recommendations?

A. Yes. Staff recommends that in the future the Company correctly record plant additions in the correct month and year.

Rate Base Adjustment No. 5 – Reclassification of Plant in Service (Water and Wastewater Divisions)

Q. Based on Staff's engineering analysis has Staff reclassified some of the Company's plant?

A. Yes. See the attached Staff Engineering Report.

Q. Why did Staff make this adjustment?

A. The Company incorrectly included plant costs in the wrong plant accounts. Dorothy Hains, Staff's Engineer, inspected the entire system for both the water and wastewater divisions and identified plant-in-service items that needed to be reclassified.

Q. What is Staff's recommendation?

A. For the water division, Staff recommends reclassifying $2,843,470 into the proper plant accounts and the transfer of $6,000 from the water to wastewater division, along with the associated accumulated depreciation, as shown on schedule DWC-W9.

For the wastewater division, Staff recommends reclassifying $642,738 into the proper plant accounts and the transfer of $6,000 from the water division, along with the associated accumulated depreciation, as shown on schedule DWC-WW9.

Rate Base Adjustment No. 6 – Plant Not Used and Useful (Water and Wastewater Divisions)

Q. Did Staff make an adjustment to plant or plant items that were not used and useful?

A. Yes.

Q. What adjustment did Staff make?

A. Staff identified $12,156 in plant that was not used and useful for the water division, and $124,546 in plant that was not used and useful for the wastewater division, along with the associated accumulated depreciation.

Q. Why did Staff make this adjustment?

A. Dorothy Hains, Staff's Engineer, inspected the entire system for both the water and wastewater divisions and identified certain individual plant items that were not serving customers during the test year.

Q. What is Staff's recommendation?

A. Staff recommends decreasing plant in service by $12,156, for the water division; and decreasing plant in service by $124,546 for the wastewater division, along with the associated accumulated depreciation to remove all plant from rate base that was not used and useful, as shown on schedules DWC-W10 and DWC-WW10.

Rate Base Adjustment No. 7 – Removal of Duplicate Invoices (Water and Wastewater Divisions)

Q. During the course of the audit did the Company agree to remove some duplicate invoices?

A. Yes.

Q. Has Staff made adjustments to its schedules to remove the duplicate invoices and associated accumulated depreciation?

A. Yes.

Q. What is Staff's recommendation?

A. Staff recommends removal of these items, in the amount of $5,608 for the water division, and in the amount of $4,672 for the wastewater division, along with the associated accumulated depreciation, as shown on schedules DWC-W11 and DWC-WW11.

Rate Base Adjustment No. 8 – Transportation Equipment not retired (Water Division Only)

Q. Has the Company proposed to retire Transportation Equipment that was not deleted from the Company books?

A. Yes. According to the Company in 2011, the Company traded in an old truck for the purchase of a new truck, but did not record the retirement.

Q. What is Staff's recommendation?

A. Staff recommends the removal of $17,555 from Plant Account 341 Transportation Equipment, along with the associated accumulated depreciation. As shown on schedule DWC-W12.

Rate Base Adjustment No. 9 – Contributions in Aid of Construction ("CIAC") (Water and Wastewater Divisions)

Q. During the course of the Audit did Staff identify some cell formula errors in the Company's CIAC Excel worksheets?

A. Yes.

Q. Are Staff and the Company in agreement with the corrections made to the CIAC Excel worksheets?

A. Yes.

Q. What is Staff's recommendation?

A. Staff recommends increasing CIAC for the water division by $101,234 from $7,324,578 to $7,425,812, and decreasing CIAC for the wastewater division by $93,570 from $28,470,485 to $28,376,915.

Staff also recommends decreasing the CIAC amortization for the water division by $193,524 from $1,489,772 to $1,296,248, and decreasing the CIAC amortization for the wastewater division by $293,474 from $4,446,775 to $4,153,301, as shown in schedules DWC-W13 and DWC-WW13.

Rate Base Adjustment No. 10 – Customer Deposits (Water and Wastewater Division)

Q. Did Staff make an adjustment to customer deposits?

A. Yes.

Q. What adjustment did Staff make?

A. Staff is increasing Customer Deposits by $15,849, of which $7,514 will be allocated to the water division and $8,334 will be allocated to the wastewater division.

Q. Why did Staff make this adjustment?

A. Staff utilized a 13-month average to calculate an average customer deposit amount. Staff believes a 13-month average is preferable to using a year-end amount as the year-end

amount may differ significantly from the average amount, and thus provides a more realistic relationship between revenues, expenses and rate base.

Q. Has Staff also made an adjustment to recognize the interest paid on the customer deposits?

A. Yes, see operating income adjustment number 5.

Q. What is Staff's recommendation?

A. Staff recommends increasing Customer Deposits by $166,998 from $68,685 to $235,683 as shown on schedules DWC-W14 and DWC-WW14.

Rate Base Adjustment No. 11 – Accumulated Deferred Income Taxes ("ADIT") (Water and Wastewater Division)

Q. Based on the adjustments to plant has Staff made an adjustment to the ADIT calculation?

A. Yes. Staff has adjusted the ADIT calculation to account for the changes in the plant, post-test year plant and changes in the Arizona state income tax. The Arizona state income tax change will be discussed below.

Q. What is Staff's recommendation?

A. Staff recommends decreasing ADIT for the water division by $565,674 and decreasing ADIT for the wastewater division by $601,479 to reflect Staff's recommended plant adjustments, as shown on schedules DWC-W15 and DWC-WW15.

VII. OPERATING INCOME

Operating Income Summary

Q. What are the results of Staff's analysis of test year revenues, expenses, and operating income for the water and wastewater divisions?

A. The results for the Company's water and wastewater divisions are presented below:

Water Division

Staff's analysis resulted in adjusted test year operating revenues of $11,201,390 operating expenses of $9,171,401 and operating income of $2,029,989, as shown on schedules DWC-W16 and DWC-W17. Staff made seven adjustments to operating expenses.

Wastewater Division

Staff's analysis resulted in adjusted test year operating revenues of $10,361,603, operating expenses of $8,429,079 and operating income of $1,932,524 as shown on schedules DWC-WW16 and DWC-WW17. Staff made seven adjustments to operating expenses.

Operating Income Adjustment No. 1 – Water Testing Expense (Water and Wastewater Divisions)

Q. What did the Company propose for water testing expense?

A. The Company proposed water testing expenses for the water division of $66,942, and for the wastewater division of $57,735.

Q. What adjustment did Staff make?

A. Staff adjusted water testing expense downward by $4,464, from $66,942 to $62,478 for the water division, and adjusted water testing expense downward by $35,730, from $57,735 to $22,005 for the wastewater division, to reflect Staff's recommended amount.

In addition, Staff also increased sludge removal expense by $3,410 (to account for sludge testing that must be performed before the waste can be removed), from $234,893 to $238,303. Please see the attached Engineering Report.

Q. What is Staff's recommendation?

A. Staff recommends decreasing water testing expense by $4,464 for the water division, decreasing water testing expense by $35,730 for the wastewater division, and increasing sludge removal expense by $3,410 for the wastewater division, as shown on schedules DWC-W18 and DWC-WW18.

Operating Income Adjustment No. 2 – Corporate Allocation Accrual True-Up (Water and Wastewater Divisions)

Q. Did Staff make an adjustment to true-up corporate allocation accruals?

A. Yes. The Company allocated a percentage of the following corporate cost pools from its parent company APUC during the test year. The cost pools are as shown below:

Audit	$1,561,911
Tax	$1,169,300
Legal	$635,190
Professional Services	$680,395
Unitholder Communications	$700,793
Trustee / Director Fees	$378,154
Computer Supplies /Repairs	$51,761
Office Expenses	$98,210
Employee Stock Purchase Plan	$4,270
Board of Director's Insurance	$145,728
Escrow & Transfer Agent Fees	$75,000
Training	$76,343
Stock Option expense	$1,376,013
Recruiting	$54,095
Meals and Entertainment	$2,315
Rent	$84,861
Communication	$78,982
Dues and Memberships	$47,155
Licenses/Fees & Permits	$384,904
Net Other Admin Costs	$14,274
Total	$7,619,653

As stated earlier the Company uses accrual accounting, and therefore records an accrual for the estimated service when it is completed, but not yet billed. The Company then reverses the accrual in the subsequent month and records the actual expense when the invoice is sent to the Company. Based on a Staff data request the Company provided Staff with a transaction detail listing of invoices obtained after the test year.

Q. Based on transaction detail listing, were adjustments necessary?

A. Yes. As summarized below:

Description	[1] Total	[2] Actual	[3] Accrual	[4] Invoices Received	[5] Accrual
Audit	$1,561,911	$1,193,820	$368,090	$778,942	$410,852
Tax	$1,169,300	$258,075	$911,225	$443,044	($468,181)
Legal	$635,190	$544,314	$90,877	$100,292	$9,415
Unitholder Communications	$700,793	$479,663	$221,130	$212,116	($9,014)
Trustee / Director Fees	$378,154	$374,615	$3,540	$22,875	$19,335
Computer Supplies /Repairs	$51,761	$51,761	$0	$0	$0
Office Expenses	$98,210	$98,210	$0	$0	$0
Licenses/Fees & Permits	$384,904	$98,627	$286,276	$294,571	$8,295
Total	$4,980,223	$3,099,085	$1,881,139	$1,851,841	($29,297)

Q. What is Staff's recommendation?

A. Staff recommends reducing corporate expenses by $29,297, of which $8,420 will be allocated to the water division and $7,872 will be allocated to the wastewater division, as shown on schedules DWC-W19, and DWC-WW19.

Operating Income Adjustment No. 3 – APUC Corporate Allocations (Water and Wastewater Divisions)

Q. In response to a Staff data request did the Company propose eliminating meals and entertainment expenses related to the corporate cost pool allocations, and other items such as donations?

A. Yes.

Q. Does Staff agree with the Company's adjustments to the APUC Corporate Allocations?

A. Yes.

Q. What is Staff's recommendation?

A. Staff recommends reducing APUC corporate expenses by $18,669 for the water division, and by $23,978 for the wastewater division, as shown in schedules DWC-W20 and DWC-WW20.

Operating Income Adjustment No. 4 – Customer deposit interest expense (Water and Wastewater Divisions)

Q. In response to a Staff data request did the Company include customer interest as an operating expense?

A. No. The Company included customer deposit interest as a below the line expense item.

Q. What is Staff's recommendation?

A. Staff recommends including customer interest expense as an operating expense, and increasing operating expenses by $5,346 for the water division, and by $5,931 for the wastewater division, as shown on schedules DWC-W21 and DWC-WW21.

Operating Income Adjustment No. 5 – Depreciation Expense (Water and Wastewater Divisions)

Q. Did Staff make an adjustment to depreciation expense?

A. Yes.

Q. What adjustment did Staff make?

A. As a result of adjustments made to plant in service, Staff also adjusted the associated depreciation expense.

Q. What is Staff's recommendation?

A. For the Water Division, Staff recommends increasing depreciation expense by $13,318 from $2,615,868 to $2,629,186 , as shown in Schedule DWC-W22. For the Wastewater Division, Staff recommends decreasing depreciation expense by $9,384 from $1,598,765 to $1,589,381 as shown on Schedule DWC-WW22.

Operating Income Adjustment No. 6 – Property Tax Expense (Water and Wastewater Divisions)

Q. What method has the Commission typically adopted to determine property tax expense for ratemaking purposes for Class C and above water utilities?

A. The Commission's practice in recent years has been to use a modified Arizona Department of Revenue ("ADOR") methodology for water and wastewater utilities.

Q. Did Staff calculate property taxes using the modified ADOR method?

A. Yes. As shown on Schedule DWC-W23, and DWC-WW23, Staff calculated property tax expense using the modified ADOR method for both test year and Staff-recommended revenues. Since the modified ADOR method is revenue dependent, the property tax is different for test year and recommended revenues. Staff has included a factor for property taxes in the gross revenue conversion factor that automatically adjusts the revenue requirement for changes in revenue in the same way that income taxes are adjusted for changes in operating income.

Q. Has Staff also made an adjustment to the property tax assessment ratio?

A. Yes. Based on House Bill 2001, Staff has adjusted the property tax assessment ratio to 19.0 percent.

Q. What does Staff recommend for test year property tax expense?

A. For the water division, Staff recommends decreasing test year property tax expense by $30,754, from $559,128 to $528,374, as shown in schedule DWC-W23, and for the wastewater division, Staff recommends decreasing test year property tax expense by $28,801 from $576,026 to $547,225 as shown on schedule DWC-WW23.

Operating Income Adjustment No. 7 – Income Tax Expense (Water and Wastewater Divisions)

Q. Did Staff make an adjustment to income tax expense?

A. Yes, based on Staff's recommended revenue requirement.

Q. How did Staff calculate income tax expense for the Company?

A. Staff applied the statutory state and federal income tax rates to Staff's taxable income. Income tax expenses for the test year and recommended revenues are shown on schedules DWC-W2, and DWC-WW2.

Q. Did Staff change the State income tax rate from 6.968 percent to 6.5 percent?

A. Yes, as will be discussed in the other matters section under the heading income taxes.

Q. What adjustment does Staff recommend for test year income tax expense for the Company?

A. For the water division, Staff recommends increasing test year income tax expense by $30,754 , from $1,028,634 to $1,024,470 , as shown on schedule DWC-W24, and for the wastewater division, Staff recommends increasing test year income tax expense by $28,801 from $1,013,153 to $1,042,000 as shown on schedule DWC-WW24.

VIII. OTHER ISSUES

Deferred Regulatory Asset (Water Division Only)

Q. Can you provide some background on the Company's Deferred Regulatory Asset?

A. Yes. On December 28, 2006, the Company filed a request asking for an accounting order that would authorize deferral of LPSCO's costs incurred in connection with the Company's response to the potential groundwater Trichloroethylene ("TCE") contamination including but not limited to 1) litigation costs related to defending the Company against lawsuits; 2) litigation costs related to seeking restitution from polluters/contaminators; 3) increases in operation and maintenance costs from alternative (replacement) water sources; 4) capital costs of acquiring and/or constructing alternative (replacement) sources of water; 5) capital costs and/or operating expenses to treat contaminated water supplies; 6) settlement costs and/or amounts received as a result of settlements with polluters/contaminators; and 7) punitive damages received as the result of litigation against polluters/contaminators.

In Decision No. 69912, dated September 27, 2007, the Commission approved LPSCO's request for an accounting order authorizing the deferral of costs associated with efforts to address the potential contamination of its water supply.

Q. Was the issue of the Company's TCE deferral addressed in the Company's last rate case?

A. Yes. In Decision No. 72026, dated December 10, 2010, the Commission found that:

"It is appropriate to allow LPSCO to include the deferred regulatory assets in rate base herein and to amortize those assets over 10 years."[2]

[2] Please see page 25 of Commission Decision No. 72026.

Q. What was the amount authorized in Decision No. 72026?

A. The amount authorized in Decision No. 72026 was $82,561, and this amount was to be amortized over ten years.

Q. Did the Company amortize any of the $82,561 approved in the last Decision?

A. Yes. The Company has amortized $17,888. The Company has calculated a net deferred regulatory asset of $64,673 (i.e. $82,561 - $17,888).

Q. What amount is the Company claiming as a deferred asset in the current rate case?

A. The Company is claiming $90,381 as a deferred regulatory asset related to the TCE plume.

Q. In addition to the net deferred regulatory asset of $64,673 did the Company also include $25,708 in ongoing TCE plume expenses?

A. Yes. The Company is claiming $90,381 (i.e. $64,673 + $25,708) as a deferred regulatory asset. However, in a separate compliance filing, filed on December 21, 2012, the Company claimed it has spent to date approximately $99,565. This results in a difference of $8,704 (i.e. $108,269 (82,561+25,708) - $99,565). Based on informal conversations with the Company, the Company has acknowledged that the compliance report is incorrect.

Q. Is Staff opposed to recognizing an additional $25,708 in this case?

A. No.

Q. What is Staff's recommendation?

A. Staff recommends increasing the Company's deferred regulatory asset by $25,708. Staff recommends that the Company correct its compliance filing report. Further Staff also recommends amortizing the additional $25,708 in deferred regulatory assets over 10 years.

Declining Usage Adjustment (Water Division Only)

Q. Has the Company asked for a declining usage adjustment?

A. Yes. The Company has asked for an approximate 1/2 percentage decrease or a $58,000 decrease in test year revenues, based on the declining usage-driven revenue erosion of its 3/4 inch and 1 inch residential customers.

Q. Does the declining usage adjustment cover other customer classes like commercial, industrial, and large size residential customers?

A. No.

Q. What happens if these customers increase their usage?

A. The Company increases its revenue at the expense of its ratepayers.

Q. Has Staff previously recommended a Declining Usage Adjustment?

A. Yes, as part of a settlement agreement in the Arizona Water - Northern Group Case, Docket No. W-01445A-12-0348.

Q. Has the Commission expressed concerns about a declining usage adjustor?

A. Yes and the Commission expressed these concerns in the Arizona Water Northern Group case, in which Commissioner Brenda Burns on September 10, 2013, proposed the following amendment which passed.

Page 65, Line 7 - INSERT New Paragraph:

"Based on our language in AWC's Eastern Group rate case decision (Decision No. 73736), RUCO's exceptions to this adjustment, and the fact that we have never before approved a declining water usage adjustment and there is a possibility (regardless of how small a possibility) that water use will not actually decline, we will also require AWC to provide the above data every January, until further order of the Commission, beginning January 2015. The data provided shall cover the previous twelve (12) months. Staff shall analyze the data and, if necessary, provide a recommendation to the Commission to modify or eliminate the water usage adjustment by recommending that this Decision be reopened for further Commission consideration. Any other party to this case may also make a recommendation to the Commission based on that party's analysis of the data."

Page 71, Line 13 - INSERT New Finding of Fact:

"In addition, we will require AWC to provide the above data every January, until further order of the Commission, beginning January 2015. The data provided shall cover the previous twelve (12) months. Staff shall analyze the data and, if necessary, provide a recommendation to the Commission to modify or eliminate the water usage adjustment. If the Commission desires to consider such an adjustment or elimination, the Commission shall do so by reopening this Decision and provide notice and an opportunity to be heard. Any other party to this case may also make a recommendation to the Commission based on that party's analysis of the data."

Page 73, Line 15 - INSERT New ordering Paragraph:

"IT IS FURTHER ORDERED that Arizona Water Company shall provide the above water usage data every January, until further order of the Commission, beginning January 2015. The data provided shall cover the previous twelve (12) months. Staff shall analyze

the data and, if necessary, provide a recommendation to the Commission to modify or eliminate the water usage adjustment as discussed in Finding of Fact No. XX."

Q. What is Staff's recommendation?

A. Staff recommends approval of a declining usage adjustment subject to the same conditions that are included in the Arizona Water Company – Northern Group filing.

Q. How will the process work?

A. The Company shall file an annual report that details not only the 3/4 inch and 1 inch customer usage, but all customer usage. Staff will review the annual filings and, if necessary, provide a report and recommendation of the Commission.

Income Taxes

Q. Did Staff reduce the state corporate income tax rate from 6.968 percent to 6.5 percent to comport with House Bill ("HB") 2001 that was signed into law by Governor Jan Brewer on February 17, 2011?

A. Yes. Staff has reduced the State corporate income tax rate in its gross revenue conversion factor for both the Company's Water and Wastewater Divisions.

Q. Please elaborate on the provision contained in HB 2001.

A. H.B. 2001 maintains the current State corporate income tax rate of 6.968% through December 31, 2013. Thereafter, H.B. 2001 reduces the rate as follows:

- 6.5% for taxable years beginning from and after December 31, 2013 through December 31, 2014
- 6.0% for taxable years beginning from and after December 31, 2014 through December 31, 2015

- 5.5% for taxable years beginning from and after December 31, 2015 through December 31, 2016
- 4.9% for taxable years beginning from and after December 31, 2016

Q. Do the provisions of this new HB give rise to excess deferred income taxes?

A. Yes.

Q. Please explain deferred income taxes?

A. The level of income that is taxable from state and federal tax agencies is often different for accounting "book" income and for income tax reporting purposes due to expense recognition timing differences. A prime example is the level of depreciation expense recognized for accounting purposes will be less in early years than the level of depreciation expense recognized for tax purposes – due to the accelerated depreciation methods used for income tax reporting purposes. Such timing difference originates in one period and reverses or turns around in one or more subsequent periods. When effective tax rates change over time, especially with the tax rate is scheduled to decrease over a period of time, ratepayers can overfund the level of income taxes. In this case since the State taxable rate has been 6.0 percent but the actual tax rate will decrease to 4.9 percent of a period of years. Because taxes have been collected from ratepayers, and deferred on the Company's books at 6.0percent, but will eventually be paid to the state at only say 4.9 percent, a surplus exists in this account. This excess should be quantified and a plan presented for eventually crediting any over-collections back to ratepayers.

Q. Has the Commission dealt with the refunding of excess deferred income taxes before?

A. Yes. In the late 1980s when the Federal Income Tax rate was reduced from 46 percent to 34 percent by the Tax Reform Act of 1986. In Decision No. 56035, Docket No. E-1051-88-034, the Utility was ordered by the Commission to first come-up with a plan and second to refund any excess monies to rate payers.

Q. As a result of this decision did other utility companies file a plan and refund monies to ratepayers?

A. Yes.

Q. What is Staff's recommendation with regards to the HB 2001-driven reduction to the State income tax rate?

A. Staff recommends that the Company:

1. Determine the amount of excess deferred income tax related to the change in State income tax.
2. Present a plan, within 60 days of a Commission decision in this matter, on how to refund any excess State income tax recoveries to rate payers.

Hook-up Fees

Q. Does the Company currently have hook-up fees?

A. Yes.

Q. Is the Company proposing a change to its existing hook-up fees for its water division in this case?

A. Yes. The Company is proposing to add an 8-inch, 10-inch, and 12-inch and larger meters size to its hook-up fee tariff, with an increasing cost for each progressively larger meter size.

Q. Does Staff agree with the Company's proposed changes to its water hook-up fee tariff?

A. Yes. Staff recommends approval of the Company's water off-site facilities hookup fee tariff, subject to certain conditions (see testimony of Staff Engineer Dorothy Hains).

Property Tax Accounting Deferrals

Q. Are you aware of any water or wastewater companies that have Commission authorized property tax accounting deferral plans?

A. I am not aware of any such deferral being authorized for water or wastewater companies.

Q. To the best of your knowledge, does the Arizona Public Service Corporation ("APS") have such a Commission authorized accounting deferral plan?

A. Yes. APS has been cited by various water and wastewater companies seeking a similar property tax deferral, and LPSCO has also cited APS, although no Decision, Docket Number, or citation was given in Mr. Krygier's testimony.

Q. Staff already adjusts property tax recoveries to reflect its recommended revenue requirement, correct?

A. Yes, just as the Company's consultant adjusted property taxes when he filed this rate case.

Q. Has there been a problem in the past with the way Staff traditionally computed the higher property taxes that result from higher authorized revenues?

A. No, not that I am aware of. This methodology has been used by Staff for over ten years. This methodology usually provides an added benefit to water and wastewater companies because it has a forward looking component which is based on Staff's recommended revenue. Simply put, it usually increases test year property tax expenses.

Q. Do you take issue with the $740,000 property tax increase cited in Mr. Krygier's testimony?

A. Yes. This property tax increase appears to be unrealistic when looking at the level of such tax in the Company's annual reports. The Company's annual reports reflect property tax paid in 2008 for its water division was $104,798, and in 2012 the amount was $158,006, an increase of $53,208. For its wastewater division, the Company reported property tax paid in 2008 for its wastewater division of $423,415, and in 2012 the amount was $627,380, an increase of $203,965 or a total increase of $257,173.

Q. What is Staff's recommendation?

A. Staff recommends denial of the Company's proposed property tax accounting deferral request.

IX. ADJUSTOR MECHANISMS

Q. What types of adjustor mechanisms has the Company asked for in this case?

A. The Company has requested Commission approval of the following:

1. A Distribution System Improvement Charge ("DSIC")
2. A Collection System Improvement Charge ("CSIC")
3. A Purchased Power Adjustor Mechanism ("PPAM"), and

4. A Property Tax Accounting Deferral

Distribution System Improvement Charge ("DSIC")

Q. Explain the general concept of a DSIC as proposed by the Company?

A. A DSIC is a surcharge mechanism that enables the Company to implement and/or change a surcharge to recover the revenue requirement (depreciation and rate of return) on capital invested in certain items of plant between rate cases.

Purchased Power Adjustor Mechanism ("PPAM")

Q. Has the Company asked for a PPAM?

A. Yes.

Q. What is a PPAM?

A. It is an adjustor mechanism that allows a utility to track fluctuations in its cost of power. In a rate case, the cost of power is determined and that cost is included in regular base rates. Then fluctuations from that cost are tracked and recorded and the adjustor mechanism allows the utility to bill its customers for costs of power above that set in the rate case or credit its customers for costs below that set in the rate case.

Q. How has the Company's purchased power expense varied over the last five years?

A. The following information demonstrates the fluctuating nature in its purchased power expense for both the water and wastewater divisions.

Water Division – Purchased Power[3]

2012 $891,103

2011 $898,826

2010 $937,193

2009 $1,036,813

2008 $883,165

Wastewater Division – Purchased Power

2012 $605,563

2011 $616,260

2010 $629,703

2009 $649,649

2008 $677,056

Q. What is Staff's recommendation?

A. Staff recommends approval of the Company's proposed PPAM subject to certain conditions.

Q. What are those conditions?

A. These conditions are continually evolving, but for now Staff recommends the following:

1. That the Company provided an annual report on purchased power.
2. That Staff calculate an annual increase or decrease, and provide a Recommended Opinion and Order for Commission approval within 30 days of the Company's annual report.

[3] As reported on the Company's Annual Report.

Q. Does this conclude your direct testimony?

A. Yes, it does.

Litchfield Park Service Company - Water Division
Docket Nos. W-01428A-13-0043 and SW-01428A-13-0042
Test Year Ended: December 31, 2012

Direct Testimony of Darron W. Carlson

TABLE OF CONTENTS TO SCHEDULES

SCH #	TITLE
DWC-W1	REVENUE REQUIREMENT
DWC-W2	GROSS REVENUE CONVERSION FACTOR
DWC-W3	RATE BASE - ORIGINAL COSTS
DWC-W4	SUMMARY OF ORIGINAL COST RATE BASE ADJUSTMENTS
DWC-W5	ORIGINAL COST RATE BASE ADJUSTMENT # 1 - NOT USED
DWC-W6	ORIGINAL COST RATE BASE ADJUSTMENT # 2 - ACCUMULATED DEPRECIATION
DWC-W7	ORIGINAL COST RATE BASE ADJUSTMENT # 3 - TRUE-UP OF PLANT IN SERVICE ACCRUALS
DWC-W8	ORIGINAL COST RATE BASE ADJUSTMENT # 4 - PLANT ADDITIONS RECORDED IN WRONG YEARS
DWC-W9	ORIGINAL COST RATE BASE ADJUSTMENT # 5 - RECLASSIFICATION OF PLANT IN SERVICE
DWC-W10	ORIGINAL COST RATE BASE ADJUSTMENT # 6 - PLANT NOT USED AND USEFUL
DWC-W11	ORIGINAL COST RATE BASE ADJUSTMENT # 7 - REMOVAL OF DUPLICATE INVOICES
DWC-W12	ORIGINAL COST RATE BASE ADJUSTMENT # 8 - RETIREMENT OF TRANSPORTATION
DWC-W13	ORIGINAL COST RATE BASE ADJUSTMENT # 9 - RECALCULATION OF CONTRIBUTIONS IN AID OF CONSTRUCTION
DWC-W14	ORIGINAL COST RATE BASE ADJUSTMENT # 9 - CUSTOMER DEPOSITS
DWC-W15	ORIGINAL COST RATE BASE ADJUSTMENT # 10 - ACCUMULATED DEFERRED INCOME TAXES
DWC-W16	OPERATING INCOME STATEMENT - ADJUSTED TEST YEAR AND STAFF RECOMMENDED
DWC-W17	SUMMARY OF OPERTING INCOME STATEMENT ADJUSTMENTS - TEST YEAR
DWC-W18	OPERATING INCOME ADJUSTMENT # 1 - WATER TESTING EXPENSE
DWC-W19	OPERATING INCOME ADJUSTMENT # 2 - CORPORATE ALLOCATION ACCRUAL TRUE-UP
DWC-W20	OPERATING INCOME ADJUSTMENT # 3 - CORPORATE ALLOCATION EXPENSE
DWC-W21	OPERATING INCOME ADJUSTMENT # 4 - INTEREST ON CUSTOMER DEPOSITS
DWC-W22	OPERATING INCOME ADJUSTMENT # 5 - DEPRECIATION EXPENSE
DWC-W23	OPERATING INCOME ADJUSTMENT # 6 - PROPERTY TAX EXPENSE
DWC-W24	OPERATING INCOME ADJUSTMENT # 7 - TEST YEAR INCOME TAXES

Litchfield Park Service Company - Water Division
Docket Nos. W-01428A-13-0043 and SW-01428A-13-0042
Test Year Ended: December 31, 2012

Schedule DWC-W1

REVENUE REQUIREMENT

LINE NO.	DESCRIPTION	(A) COMPANY FAIR VALUE	(B) STAFF FAIR VALUE
1	Adjusted Rate Base	$ 35,647,602	$ 33,119,464
2	Adjusted Operating Income (Loss)	$ 2,024,376	$ 2,029,990
3	Current Rate of Return (L2 / L1)	5.68%	6.13%
4	Required Rate of Return	9.50%	8.10%
5	Required Operating Income (L4 * L1)	$ 3,387,127	$ 2,682,677
6	Operating Income Deficiency (L5 - L2)	$ 1,362,751	$ 652,686
7	Gross Revenue Conversion Factor	1.6563	1.6466
8	Required Revenue Increase (L7 * L6)	$ 2,257,160	$ 1,074,737
9	Adjusted Test Year Revenue	$ 11,201,390	$ 11,201,390
10	Proposed Annual Revenue (L8 + L9)	$ 13,458,550	$ 12,276,127
11	Required Increase in Revenue (%)	20.15%	9.59%

References:
Column (A): Company Schedule A-1
Column (B): Staff Schedules DWC-W3 and DWC-W16

Litchfield Park Service Company - Water Division
Docket Nos. W-01428A-13-0043 and SW-01428A-13-0042
Test Year Ended: December 31, 2012

Schedule DWC-W2

GROSS REVENUE CONVERSION FACTOR

LINE NO.	DESCRIPTION	(A)	(B)	(C)	(D)
	Calculation of Gross Revenue Conversion Factor:				
1	Revenue	100.0000%			
2	Uncollecible Factor (Line 11)	0.0000%			
3	Revenues (L1 - L2)	100.0000%			
4	Combined Federal and State Income Tax and Property Tax Rate (Line 23)	39.2701%			
5	Subtotal (L3 - L4)	60.7299%			
6	**Revenue Conversion Factor (L1 / L5)**	1.646636			
	Calculation of Uncollecttible Factor:				
7	Unity	100.0000%			
8	Combined Federal and State Tax Rate (Line 23)	38.2900%			
9	One Minus Combined Income Tax Rate (L7 - L8)	61.7100%			
10	Uncollectible Rate	0.0000%			
11	Uncollectible Factor (L9 * L10)	0.0000%			
	Calculation of Effective Tax Rate:				
12	Operating Income Before Taxes (Arizona Taxable Income)	100.0000%			
13	Arizona State Income Tax Rate	6.5000%			
14	Federal Taxable Income (L12 - L13)	93.5000%			
15	Applicable Federal Income Tax Rate (Line 55)	34.0000%			
16	Effective Federal Income Tax Rate (L14 x L15)	31.7900%			
17	Combined Federal and State Income Tax Rate (L13 +L16)		38.2900%		
	Calculation of Effective Property Tax Factor				
18	Unity	100.0000%			
19	Combined Federal and State Income Tax Rate (L17)	38.2900%			
20	One Minus Combined Income Tax Rate (L18-L19)	61.7100%			
21	Property Tax Factor	1.5883%			
22	Effective Property Tax Factor (L20*L21)		0.9801%		
23	Combined Federal and State Income Tax and Property Tax Rate (L17+L22)			39.2701%	
24	Required Operating Income	$ 2,682,677			
25	AdjustedTest Year Operating Income (Loss)	2,029,990			
26	Required Increase in Operating Income (L24 - L25)		$ 652,686		
27	Income Taxes on Recommended Revenue (Col. [E], L52)	$ 1,459,054			
28	Income Taxes on Test Year Revenue (Col. [B], L52)	1,054,074			
29	Required Increase in Revenue to Provide for Income Taxes (L27 - L28)		404,981		
30	Recommended Revenue Requirement	$ 12,276,127			
31	Uncollectible Rate (Line 10)	0.0000%			
32	Uncollectible Expense on Recommended Revenue (L30*L31)	$ -			
33	Adjusted Test Year Uncollectible Expense	$ -			
34	Required Increase in Revenue to Provide for Uncollectible Exp. (L32-L33)		-		
35	Property Tax with Recommended Revenue	$ 548,241			
36	Property Tax on Test Year Revenue	531,171			
37	Increase in Property Tax Due to Increase in Revenue (L35-L36)		17,070		
38	Total Required Increase in Revenue (L26 + L29 + L34 + L37)		$ 1,074,737		

		Test Year		Staff Recommended
	Calculation of Income Tax:			
39	Revenue	$ 11,201,390	$ 1,074,737	$ 12,276,127
40	Operating Expenses Excluding Income Taxes	$ 8,117,326		$ 8,134,396
41	Synchronized Interest (L56)	$ 331,195		$ 331,195
42	Arizona Taxable Income (L39 - L40 - L41)	$ 2,752,869		$ 3,810,536
43	Arizona State Income Tax Rate	6.5000%		6.5000%
44	Arizona Income Tax (L42 x L43)	$ 178,936		$ 247,685
45	Federal Taxable Income (L42 - L44)	$ 2,573,933		$ 3,562,851
46	Federal Tax on First Income Bracket ($1 - $50,000) @ 15%	$ 7,500		$ 7,500
47	Federal Tax on Second Income Bracket ($51,001 - $75,000) @ 25%	$ 6,250		$ 6,250
48	Federal Tax on Third Income Bracket ($75,001 - $100,000) @ 34%	$ 8,500		$ 8,500
49	Federal Tax on Fourth Income Bracket ($100,001 - $335,000) @ 39%	$ 91,650		$ 91,650
50	Federal Tax on Fifth Income Bracket ($335,001 -$10,000,000) @ 34%	$ 761,237		$ 1,097,469
51	Total Federal Income Tax	$ 875,137		$ 1,211,369
52	Combined Federal and State Income Tax (L44 + L51)	$ 1,054,074		$ 1,459,054
53	Applicable Federal Income Tax Rate [Col. [E], L51 - Col. [B], L51] / [Col. [E], L45 - Col. [B], L45]			34.0000%
	Calculation of Interest Synchronization:			
54	Rate Base	$ 33,119,464		
55	Weighted Average Cost of Debt	1.0000%		
56	Synchronized Interest (L45 X L46)	$ 331,195		

Litchfield Park Service Company - Water Division
Docket Nos. W-01428A-13-0043 and SW-01428A-13-0042
Test Year Ended: December 31, 2012

Schedule DWC-W3

RATE BASE - ORIGINAL COST

LINE NO.		(A) COMPANY AS FILED	(B) STAFF ADJUSTMENTS	(C) STAFF AS ADJUSTED
1	Plant in Service	$ 91,151,411	$ (244,200)	$ 90,907,211
2	Less: Accumulated Depreciation	16,514,086	2,508,318	19,022,404
3	Net Plant in Service	$ 74,637,325	$ (2,752,518)	$ 71,884,807
4				
5	*LESS:*			
6				
7	Contributions in Aid of Construction (CIAC)	$ 7,324,578	$ 101,234	$ 7,425,812
8	Less: Accumulated Amortization	1,489,772	(193,524)	$ 1,296,248
9	Net CIAC	5,834,806	294,758	$ 6,129,564
10				
11	Advances in Aid of Construction (AIAC)	30,374,274	-	30,374,274
12				
13	Customer Meter Deposits	1,271,802	-	1,271,802
14	Customer Deposits	140,147	7,514	147,661
15	Deferred Income Tax Credits	1,459,075	(526,652)	932,423
16				
17				
18	*ADD:*			
19				
20				
21	Deferred Regulatory Assets TCE Plume	90,381	-	90,381
22				
23	Deffered Regulatory Assets	-	-	-
24				
25				
26	**Original Cost Rate Base**	$ 35,647,602	$ (2,528,138)	$ 33,119,464

References:
Column [A]: Company as Filed
Column [B]: Schedule DWC-W4
Column (C): Column (A) + Column (B)

Litchfield Park Service Company - Water Division
Docket Nos. W-01428A-13-0043 and SW-01428A-13-0042
Test Year Ended: December 31, 2012

SUMMARY OF ORIGINAL COST RATE BASE ADJUSTMENTS

LINE NO.	ACCT. NO.		[A] COMPANY AS FILED	[B] ADJ #1 Not Used Ref: Sch JMM-W5	[C] ADJ #2 Accumulated Depreciation Ref: Sch JMM-W6	[D] ADJ #3 True-Up of Accruals Ref: Sch JMM-W7	[E] ADJ #4 Plant Addtions Recorded in Wrong Years Ref: Sch JMM-W8	[F] ADJ #5 Reclassification of Plant Ref: Sch JMM-W9	[G] ADJ #6 Plant Not Used and Useful Ref: Sch JMM-W10
PLANT IN SERVICE:									
1		DESCRIPTION							
2	301	Organization Cost	$ 21,100	$ -	$ -	$ -	$ -	$ -	$ -
3	302	Franchise Cost	-	-	-	-	-	-	-
4	303	Land and Land Rights	1,456,278	-	-	-	-	-	(12,156)
5	304	Structures and Improvements	28,000,916	-	-	(178,617)	-	(2,776,772)	-
6	305	Collecting and Impounding Res.	-	-	-	-	-	-	-
7	306	Lake River and Other Intakes	-	-	-	-	-	-	-
8	307	Wells and Springs	3,097,345	-	-	(18,108)	-	134,878	-
9	308	Infiltration Galleries and Tunnels	-	-	-	-	-	-	-
10	309	Supply Mains	-	-	-	-	-	-	-
11	310	Power Generation Equipment	207,020	-	-	-	-	18,111	-
12	311	Electric Pumping Equipment	897,792	-	-	-	-	(16,947)	-
13	320.1	Water Treatment Plant	1,696,759	-	-	-	-	1,728,635	
14	320.2	Water Treatment Equipment	-	-	-	-	-	-	
15	330.1	Storage Tanks	492,176	-	-	-	-	901,841	-
16	331	Transmission and Distribution Mains	40,259,045	-	-	-	-	-	-
17	333	Services	5,350,963	-	-	-	-	-	
18	334	Meters	4,759,560	-	-	-	-	-	
19	335	Hydrants	3,304,755	-	-	-	-	-	-
20	336	Backflow Prevention Devices	38,387	-	-	-	-	-	-
21	339	Other Plant and Miscellaneous Equipment	259,531	-	-	-	-	-	-
22	340	Office Furniture and Fixtures	651,098	-	-	-	-	-	-
23	340.1	Computer and Software	-				-	7,995	
24	341	Transportation Equipment	307,592	-	-	-	-	-	-
25	342	Stores Equipment	37,143	-	-	-	-	-	-
26	343	Tools and Work Equipment	47,434	-	-	-	-	-	
27	344	Laboratory Equipment	5,803	-	-	-	-	-	-
28	345	Power Operated Equipment	-	-	-	-	-	-	-
29	346	Communications Equipment	128,402	-	-	-	-	-	-
30	347	Miscellaneous Equipment	-	-	-	-	-	-	-
31	348	Other Tangible Plant	132,312	-	-	-	-	(9,897)	-
32		Total Plant In Service - Sub Total	91,151,411	-	-	-	-	-	-
33			-	-					
34		*Total Plant in Service*	$ 91,151,411	$ -	$ -	$ (196,725)	$ -	$ (12,156)	$ (12,156)
35		Less: Accumulated Depreciation	16,514,086	-	2,454,801	-	99,151	(27,948)	-
36			-	-	-	-		-	-
37		Net Plant in Service	$ 74,637,325	$ -	$ (2,454,801)	$ (196,725)	$ (99,151)	$ 15,792	$ (12,156)
38									
39		*LESS:*							
40		Contributions in Aid of Construction (CIAC)	$ 7,324,578	$ -	$ -	$ -	$ -	$ -	$ -
41		Less: Accumulated Amortization	1,489,772	-	-	-	-	-	-
42		Net CIAC (L25 - L26)	5,834,806	-	-	-	-	-	-
43		Advances in Aid of Construction (AIAC)	30,374,274	-	-	-	-	-	-
44		Customer Meter Deposits	1,271,802	-	-	-	-	-	-
45		Customer Deposits	140,147						
46		Deferred Income Taxes	1,459,075	-	-	-	-	-	-
47			-	-					
48									
49		*ADD:*							
50		Deferred Regulatory Assets TCE Plume	90,381	-	-	-	-	-	-
51		Deffered Regulatory Assets	-	-	-	-	-	-	-
52									
53		**Original Cost Rate Base**	$ 35,647,602	$ -	$ (2,454,801)	$ (196,725)	$ (99,151)	$ 15,792	$ (12,156)

[H] ADJ #7 Duplicate Invoices Ref: Sch JMM-W11	[I] ADJ #8 Retirement of Transportation Equip Ref: Sch JMM-W12	[J] ADJ #9 Recalculation of CIAC Ref: Sch JMM-W13	[K] ADJ #10 Customer Deposits Ref: Sch JMM-W14	[L] ADJ #11 ADIT Ref: Sch JMM-W15	[M] STAFF ADJUSTED
$ -	$ -	$ -	$ -	$ -	$ 21,100
-	-	-	-	-	-
-	-	-	-	-	1,444,122
(3,000)	-	-	-	-	25,042,527
-	-	-	-	-	-
-	-	-	-	-	-
-	-	-	-	-	3,214,115
-	-	-	-	-	-
-	-	-	-	-	-
-	-	-	-	-	225,131
-	-	-	-	-	880,845
					3,425,394
					-
-	-	-	-	-	1,394,017
-	-	-	-	-	40,259,045
					5,350,963
					4,759,560
(2,608)	-	-	-	-	3,302,147
-	-	-	-	-	38,387
-	-	-	-	-	259,531
-	-	-	-	-	651,098
					7,995
-	(17,555)	-	-	-	290,037
-	-	-	-	-	37,143
					47,434
-	-	-	-	-	5,803
-	-	-	-	-	-
-	-	-	-	-	128,402
-	-	-	-	-	-
-	-	-	-	-	122,415
-	-	-	-	-	90,907,211
					-
$ (5,608)	$ (17,555)	$ -	$ -	$ -	$ 90,907,211
(130)	(17,555)	-	-	-	19,022,404
-	-	-	-	-	-
$ (5,477)	$ -	$ -	$ -	$ -	$ 71,884,807
$ -	$ -	$ 101,234	$ -	$ -	$ 7,425,812
-	-	(193,524)	-	-	$ 1,296,248
-	-	294,758	-	-	6,129,564
-	-	-	-	-	30,374,274
-	-	-	-	-	1,271,802
			7,514		147,661
-	-	-	-	(526,652)	932,423
					-
					-
					-
-	-	-		-	90,381
-	-	-	-	-	-
$ (5,477)	$ -	$ (294,758)	$ (7,514)	$ 526,652	$ 33,119,464

RATE BASE ADJUSTMENT NO. 1 - NOT USED

Litchfield Park Service Company - Water Division
Docket Nos. W-01428A-13-0043 and SW-01428A-13-0042
Test Year Ended: December 31, 2012

Schedule DWC-W6

RATE BASE ADJUSTMENT NO. 2 - ACCUMULATED DEPRECIATION

LINE NO.	ACCT NO.	DESCRIPTION	[A] COMPANY PROPOSED	[B] STAFF ADJUSTMENTS	[C] STAFF[1] RECOMMENDED
1		Accumulated Depreciation	$ 16,514,086	$ 2,454,801	18,968,887

[1] Amounts may not reflect other adjustments.

REFERENCES:
Column [A]: Company Filing
Column [B]: Testimony DWC
Column [C]: Column [A] + Column [B]

RATE BASE ADJUSTMENT NO. 3 - TRUE-UP OF PLANT IN SERVICE ACCRUALS

LINE NO.	ACCT NO.	DESCRIPTION	[A] COMPANY PROPOSED	[B] STAFF ADJUSTMENTS	[C] STAFF[1] RECOMMENDED
1	304	Structures and Improvements	$ 28,000,916	$ (178,617)	$ 27,822,299
2	307	Wells and Springs	3,097,345	(18,108)	3,079,237
			$ 31,098,261	$ (196,725)	$ 30,901,536

[1] Amounts may not reflect other adjustments.

REFERENCES:
Column [A]: Company Filing
Column [B]: Testimony DWC
Column [C]: Column [A] + Column [B]

Litchfield Park Service Company - Water Division
Docket Nos. W-01428A-13-0043 and SW-01428A-13-0042
Test Year Ended: December 31, 2012

Schedule DWC-W8

RATE BASE ADJUSTMENT NO. 4 - PLANT ADDITIONS RECORDED IN WRONG YEARS

LINE NO.	ACCT NO.	DESCRIPTION	[A] COMPANY PROPOSED	[B] STAFF ADJUSTMENTS	[C] STAFF[1] RECOMMENDED
1		Accumulated Depreciation	$ 16,514,086	$ 99,151	$ 16,613,237

[1] Amounts may not reflect other adjustments.

REFERENCES:
Column [A]: Company Filing
Column [B]: Testimony DWC
Column [C]: Column [A] + Column [B]

Litchfield Park Service Company - Water Division
Docket Nos. W-01428A-13-0043 and SW-01428A-13-0042
Test Year Ended: December 31, 2012

Schedule DWC-W9

RATE BASE ADJUSTMENT NO. 5 - RECLASSIFICATION OF PLANT

LINE NO.	ACCT NO.	DESCRIPTION	[A] COMPANY PROPOSED	[B] STAFF ADJUSTMENTS	[C] STAFF[1] RECOMMENDED
1	304	Structure and Improvement	$ 28,000,916	$ (2,776,772)	$ 25,224,144
2	311	Pumping Equipment	897,792	(16,947)	880,845
3	348	Other Tangible Plant	132,312	(9,897)	122,415
4	307	Wells and Springs	3,097,345	134,878	3,232,223
5	310	Power Generation	207,020	18,111	225,131
6	320.1	Water Treatment Plant	1,696,759	1,728,635	3,425,394
7	330.1	Storage Tanks	492,176	901,841	1,394,017
8	340.1	Computer Software	-	7,995	7,995
9		Total	$ 34,524,320	$ (12,156)	$ 34,512,164
10					
11		Accumulated Depreciation	$ 16,514,086	$ (27,948)	16,486,138
12					
13					

				PIS Adjustment	Years (1/2 Conv,)	Depr Rate	A/D Adjustment
14	Staff's Removal of Plant and Accumulated Depreciation						
15	2009	304	Structures and Improvment	$ (1,036,948)	3.5	3.33%	$ (120,856)
16	2010	304	Structures and Improvment	(1,245,500)	2.5	3.33%	(103,688)
17	2010	348	Other Tangible Plant	(9,897)	2.5	10.00%	(2,474)
18	2011	304	Structures and Improvment	(494,324)	1.5	3.33%	(24,691)
19	2011	311	Pumping Equipment	(68,958)	1.5	12.50%	(12,930)
20	Total Removal of Plant and Accumulated Depreciation			$ (2,855,627)			$ (264,639)
21							
22							

				PIS Adjustment	Years (1/2 Conv,)	Depr Rate	A/D Adjustment
23	Staff's Reclassification of Plant and Accumulated Depreciation						
24	2009	307	Well and Springs	$ 65,920	3.5	3.33%	$ 7,683
25	2009	311	Pumping Equipment	10,851	3.5	12.50%	4,747
26	2009	320.1	Water Treatment Plant	287,816	3.5	3.33%	33,545
27	2009	340.1	Computer Software	7,995	3.5	20.00%	5,597
28	2009	330.1	Storage Tanks	664,366	3.5	2.20%	51,156
29	2010	311	Pumping Equipment	13,620	2.5	12.50%	4,256
30	2010	320.1	Water Treatment Plant	1,215,221	2.5	3.30%	100,256
31	2010	330.1	Storage Tanks	20,000	2.5	2.22%	1,110
32	2010	340	Office Furniture and Equip	6,555	2.5	6.67%	1,093
33	2011	307	Well and Springs	68,958	1.5	3.33%	3,444
34	2011	310	Power Generation	18,111	1.5	5.00%	1,358
35	2011	311	Pumping Equipment	20,984	1.5	12.50%	3,935
36	2011	320.1	Water Treatment Plant	225,598	1.5	3.33%	11,269
37	2011	330.1	Storage Tanks	217,475	1.5	2.22%	7,242
38	Total Reclassification of Plant and Accumulated Depreciation			$ 2,843,470			$ 236,691
39							
40	Net decrease to accumulated depreciation						$ (27,948)
41							

42 Note: Of the difference of $12,157 (i.e. $2,855,627 - $2,843,470) $6,000 is being reclassified to the Wastewater Division, and the remaining $6,156.34 is not used and useful.

[1] Amounts may not reflect other adjustments.

REFERENCES:
Column [A]: Company Filing
Column [B]: Testimony DWC
Column [C]: Column [A] + Column [B]

Litchfield Park Service Company - Water Division
Docket Nos. W-01428A-13-0043 and SW-01428A-13-0042
Test Year Ended: December 31, 2012

Schedule DWC-W10

RATE BASE ADJUSTMENT NO. 6 - PLANT NOT USED AND USEFUL

LINE NO.	ACCT NO.	DESCRIPTION	[A] COMPANY PROPOSED	[B] STAFF ADJUSTMENTS	[C] STAFF[1] RECOMMENDED
1	303	Land and Land Rights	$ 1,456,278	$ (12,156)	$ 1,444,122
2					

[1] Amounts may not reflect other adjustments.

REFERENCES:
Column [A]: Company Filing
Column [B]: Testimony DWC
Column [C]: Column [A] + Column [B]

Litchfield Park Service Company - Water Division
Docket Nos. W-01428A-13-0043 and SW-01428A-13-0042
Test Year Ended: December 31, 2012

Schedule DWC-W11

RATE BASE ADJUSTMENT NO. 7 - REMOVAL OF DUPLICATE INVOICES

LINE NO.	ACCT NO.	DESCRIPTION	[A] COMPANY PROPOSED	[B] STAFF ADJUSTMENTS	[C] STAFF[1] RECOMMENDED
1	304	Structures and Improvements	$ 28,000,916	$ (3,000)	$ 27,997,916
2	335	Hydrants	3,304,755	(2,608)	3,302,147
3		Total	$ 31,305,671	$ (5,608)	$ 31,300,063
4					
5		Accumulated Depreciation	$ 16,514,086	$ (130)	$ 16,513,956
6					
7			PIS	Years	Depr	A/D
8	Staff's Calculation		Adjustment	(1/2 Conv.)	Rate	Adjustment
9	335	Hydrants	$ (2,608)	2.5	2.00%	$ (130)
10						

[1] Amounts may not reflect other adjustments.

REFERENCES:
Column [A]: Company Filing
Column [B]: Testimony DWC
Column [C]: Column [A] + Column [B]

Litchfield Park Service Company - Water Division
Docket Nos. W-01428A-13-0043 and SW-01428A-13-0042
Test Year Ended: December 31, 2012

Schedule DWC-W12

RATE BASE ADJUSTMENT NO. 8 RETIREMENT OF TRANSPORTATION EQUIPMENT

LINE NO.	ACCT NO.	DESCRIPTION	[A] COMPANY PROPOSED	[B] STAFF ADJUSTMENTS	[C] STAFF[1] RECOMMENDED
1	341	Transportation Equipment	$ 307,592	$ (17,555)	$ 290,037
2					
3		Accumulated Depreciation	$ 16,514,086	$ (17,555)	$ 16,496,531

[1] Amounts may not reflect other adjustments.

REFERENCES:
Column [A]: Company Filing
Column [B]: Testimony DWC
Column [C]: Column [A] + Column [B]

RATE BASE ADJUSTMENT NO. 9 RECALCULATION OF CONTRIBUTIONS IN AID OF CONSTRUCTION

LINE NO.	ACCT NO.	DESCRIPTION	[A] COMPANY PROPOSED	[B] STAFF ADJUSTMENTS	[C] STAFF[1] RECOMMENDED
1		Contributions in Aid of Construction	$ 7,324,578	$ 101,234	$ 7,425,812
2					
3		Amortization of Contributions in Aid of Construction	$ 1,489,772	$ (193,524)	$ 1,296,248

[1] Amounts may not reflect other adjustments.

REFERENCES:
Column [A]: Company Filing
Column [B]: Testimony DWC
Column [C]: Column [A] + Column [B]

Litchfield Park Service Company - Water Division
Docket Nos. W-01428A-13-0043 and SW-01428A-13-0042
Test Year Ended: December 31, 2012

Schedule DWC-W14

RATE BASE ADJUSTMENT NO. 10 - CUSTOMER DEPOSITS

LINE NO.	ACCT NO.	DESCRIPTION	[A] COMPANY PROPOSED	[B] STAFF ADJUSTMENTS	[C] STAFF[1] RECOMMENDED
1		Customer Deposits	$ 140,147	$ 7,514	$ 147,661
2					
3		Staff Calculation:			
4		13th month average of customer deposits	$ 311,436		
5		December 31th amount	295,587		
6		Increase over December 31 test year amount	$ 15,849		
7					
8		Allocated to Water	$ 7,514		
9		Allocated to Wastewater	8,334		
10		Total	$ 15,849		

[1] Amounts may not reflect other adjustments.

REFERENCES:
Column [A]: Company Filing
Column [B]: Testimony DWC
Column [C]: Column [A] + Column [B]

Litchfield Park Service Company - Water Division
Docket Nos. W-01428A-13-0043 and SW-01428A-13-0042
Test Year Ended: December 31, 2012

Schedule DWC-W15

RATE BASE ADJUSTMENT NO. 11 - ACCUMULATED DEFERRED INCOME TAXES

LINE NO.	ACCT NO.	DESCRIPTION	[A] COMPANY PROPOSED	[B] STAFF ADJUSTMENTS	[C] STAFF[1] RECOMMENDED
1		Deferred Income Taxes	$ 1,459,075	$ (526,652)	$ 932,423

[1] Amounts may not reflect other adjustments.

REFERENCES:
Column [A]: Company Filing
Column [B]: Testimony DWC
Column [C]: Column [A] + Column [B]

Litchfield Park Service Company - Water Division
Docket Nos. W-01428A-13-0043 and SW-01428A-13-0042
Test Year Ended: December 31, 2012

Schedule DWC-W16

OPERATING INCOME STATEMENT - ADJUSTED TEST YEAR AND STAFF RECOMMENDED

LINE NO.	DESCRIPTION	[A] COMPANY ADJUSTED TEST YEAR AS FILED	[B] STAFF TEST YEAR ADJUSTMENTS	[C] STAFF TEST YEAR AS ADJUSTED	[D] STAFF PROPOSED CHANGES	[E] STAFF RECOMMENDED
1	*REVENUES:*					
2	Metered Water Sales	$ 10,965,667	$ -	$ 10,965,667	$ 1,074,737	$ 12,040,404
3	Water Sales-Unmetered	-	-	-	-	-
4	Other Operating Revenue	235,723	-	235,723	-	235,723
5	Intentionally Left Blank	-	-	-	-	-
6	**Total Operating Revenues**	$ 11,201,390	$ -	$ 11,201,390	$ 1,074,737	$ 12,276,127
7						
8	*OPERATING EXPENSES:*					
9	Salaries and Wages	$ 1,069,839	$ -	$ 1,069,839	$ -	$ 1,069,839
10	Purchased Water	2,615	-	2,615	-	2,615
11	Purchased Power	903,527	-	903,527	-	903,527
12	Fuel for Power Production	-	-	-	-	-
13	Chemicals	208,080	-	208,080	-	208,080
14	Repairs and Maintenance	91,139	-	91,139	-	91,139
15	Office Supplies and Expense	-	-	-	-	-
16	Management Services - US Liberty Water	1,260,835	(27,089)	1,233,746	-	1,233,746
17	Management Services - Corporate	781,023	-	781,023	-	781,023
18	Outside Services - Accounting	9,271	-	9,271	-	9,271
19	Outside Services - Other	103,412	-	103,412	-	103,412
20	Outside Servies - Legal	19,865	-	19,865	-	19,865
21	Water Testing	66,942	(4,464)	62,478	-	62,478
22	Rents Equipment	7,229	-	7,229	-	7,229
23	Transportation Expeneses	103,726	-	103,726	-	103,726
24	Insurance - General Liability	88,374	-	88,374	-	88,374
25	Insurance - Vehicle	20,825	-	20,825	-	20,825
26	Reg. Comm. Exp. - Other	19,721	-	19,721	-	19,721
27	Reg. Comm. Exp. - Rate Case	65,800	-	65,800	-	65,800
28	Interest on Customer Deposits	-	-	5,931	-	5,931
29	Miscellaneous Expenses	151,237	-	151,237	-	151,237
30	Bad Debt Expense	(76)	-	(76)	-	(76)
31	Depreciation and Amortization Expense	2,615,868	22,525	2,638,393	-	2,638,393
32	Property Taxes	559,128	(27,957)	531,171	17,070	548,241
33	Income Taxes	1,028,634	25,440	1,054,074	404,981	1,459,054
34	Intentionally Left Blank	-	-	-	-	-
35	**Total Operating Expenses**	$ 9,177,014	$ (11,545)	$ 9,171,400	$ 422,050	$ 9,593,450
36	**Operating Income (Loss)**	$ 2,024,376	$ 11,545	$ 2,029,990	$ 652,686	$ 2,682,677

References:
Column (A): Company Schedule C-1
Column (B): Schedule DWC-W17
Column (C): Column (A) + Column (B)
Column (D): Schedules DWC-W24 and DWC-W25
Column (E): Column (C) + Column (D)

.itchfield Park Service Company - Water Division
)ocket Nos. W-01428A-13-0043 and SW-01428A-13-0042
'est Year Ended: December 31, 2012

Schedule DWC-W17

SUMMARY OF OPERATING INCOME STATEMENT ADJUSTMENTS - TEST YEAR

INE IO.	DESCRIPTION	[A] COMPANY AS FILED	[B] Water Testing Expense ADJ #1	[C] Corporate Allocation True-Up ADJ #2	[D] Corporate Allocation Expense ADJ #3	[E] Interest on Customer Deposts ADJ #4	[F] Depreciation Expense ADJ #5	[G] Property Tax Expense ADJ #6	[H] Income Tax Expense ADJ #7	[I] STAFF ADJUSTED
			Ref: Sch JMM-W18	Ref: Sch JMM-W19	Ref: Sch JMM-W20	Ref: Sch JMM-W21	Ref: Sch JMM-W22	Ref: Sch JMM-W23	Ref: Sch JMM-W24	
1	*REVENUES:*									
2	Metered Water Sales	$ 10,965,667	$ -	$ -	$ -	$ -	$ -	$ -	$ -	$ 10,965,667
3	Water Sales-Unmetered	-	-	-	-	-	-	-	-	-
4	Other Operating Revenue	235,723	-	-	-	-	-	-	-	235,723
5	Intentionally Left Blank	-	-	-	-	-	-	-	-	-
6	**Total Operating Revenues**	$ 11,201,390	$ -	$ -	$ -	$ -	$ -	$ -	$ -	$ 11,201,390
7										
8	*OPERATING EXPENSES:*									
9	Salaries and Wages	$ 1,069,839	$ -	$ -	$ -	$ -	$ -	$ -	$ -	$ 1,069,839
10	Purchased Water	2,615	-	-	-	-	-	-	-	2,615
11	Purchased Power	903,527	-	-	-	-	-	-	-	903,527
12	Fuel for Power Production	-	-	-	-	-	-	-	-	-
13	Chemicals	208,080	-	-	-	-	-	-	-	208,080
14	Repairs and Maintenance	91,139	-	-	-	-	-	-	-	91,139
15	Office Supplies and Expense	-	-	-	-	-	-	-	-	-
16	Management Services - US Liberty Water	1,260,835	-	(8,420)	(18,669)	-	-	-	-	1,233,746
17	Management Services - Corporate	781,023	-	-	-	-	-	-	-	781,023
18	Outside Services - Accounting	9,271	-	-	-	-	-	-	-	9,271
19	Outside Services - Other	103,412	-	-	-	-	-	-	-	103,412
20	Outside Servies - Legal	19,865	-	-	-	-	-	-	-	19,865
21	Water Testing	66,942	(4,464)	-	-	-	-	-	-	62,478
22	Rents Equipment	7,229	-	-	-	-	-	-	-	7,229
23	Transportation Expeneses	103,726	-	-	-	-	-	-	-	103,726
24	Insurance - General Liability	88,374	-	-	-	-	-	-	-	88,374
25	Insurance - Vehicle	20,825	-	-	-	-	-	-	-	20,825
26	Reg. Comm. Exp. - Other	19,721	-	-	-	-	-	-	-	19,721
27	Reg. Comm. Exp. - Rate Case	65,800	-	-	-	-	-	-	-	65,800
28	Interest on Customer Deposits	-	-	-	-	5,931	-	-	-	5,931
29	Miscellaneous Expenses	151,237	-	-	-	-	-	-	-	151,237
30	Bad Debt Expense	(76)	-	-	-	-	-	-	-	(76)
31	Depreciation and Amortization Expense	2,615,868	-	-	-	-	22,525	-	-	2,638,393
32	Property Taxes	559,128	-	-	-	-	-	(27,957)	-	531,171
33	Income Taxes	1,028,634	-	-	-	-	-	-	25,440	1,054,074
34	Intentionally Left Blank	-	-	-	-	-	-	-	-	-
35	**Total Operating Expenses**	$ 9,177,014	$ (4,464)	$ (8,420)	$ (18,669)	$ 5,931	$ 22,525	$ (27,957)	$ 25,440	$ 9,171,401
36	**Operating Income (Loss)**	$ 2,024,376	$ 4,464	$ 8,420	$ 18,669	$ (5,931)	$ (22,525)	$ 27,957	$ (25,440)	$ 2,029,989

Litchfield Park Service Company - Water Division
Docket Nos. W-01428A-13-0043 and SW-01428A-13-0042
Test Year Ended: December 31, 2012

Schedule DWC-W18

OPERATING INCOME ADJUSTMENT NO. 1 - Water Testing

LINE NO.	DESCRIPTION	[A] COMPANY PROPOSED	[B] STAFF ADJUSTMENTS	[C] STAFF[1] RECOMMENDED
1	Water Testing	$ 66,942	$ (4,464)	$ 62,478

[1] Amounts may not reflect other adjustments.

REFERENCES:
Column [A]: Company Filing
Column [B]: Testimony DWC
Column [C]: Column [A] + Column [B]

Litchfield Park Service Company - Water Division
Docket Nos. W-01428A-13-0043 and SW-01428A-13-0042
Test Year Ended: December 31, 2012

Schedule DWC-W19

OPERATING INCOME ADJUSTMENT NO. 2 - CORPORATE EXPENSE TRUE-UP

LINE NO.	DESCRIPTION	[A] COMPANY PROPOSED	[B] STAFF ADJUSTMENTS	[C] STAFF[1] RECOMMENDED
1	Management Services - US Liberty Water	$ 1,260,835	$ (8,420)	$ 62,478
2				
3				
4	Staff's Calculation			
5	Accrual Adjustment	$ 29,297		
6	Allocated to Water	28.74%	$ 8,420	
7	Allocated to Wastewater	26.87%	$ 7,872	

[1] Amounts may not reflect other adjustments.

REFERENCES:
Column [A]: Company Filing
Column [B]: Testimony DWC
Column [C]: Column [A] + Column [B]

Litchfield Park Service Company - Water Division
Docket Nos. W-01428A-13-0043 and SW-01428A-13-0042
Test Year Ended: December 31, 2012

Schedule DWC-W20

OPERATING INCOME ADJUSTMENT NO. 3 - CORPORATE ALLOCATION EXPENSE

LINE NO.	DESCRIPTION	[A] COMPANY PROPOSED	[B] STAFF ADJUSTMENTS	[C] STAFF[1] RECOMMENDED
1	Management Services - US Liberty Water	$ 1,260,835	$ (18,669)	$ 1,242,166

[1] Amounts may not reflect other adjustments.

REFERENCES:
Column [A]: Company Filing
Column [B]: Testimony DWC
Column [C]: Column [A] + Column [B]

Litchfield Park Service Company - Water Division
Docket Nos. W-01428A-13-0043 and SW-01428A-13-0042
Test Year Ended: December 31, 2012

Schedule DWC-W21

OPERATING INCOME ADJUSTMENT NO. 4 - INTEREST ON CUSTOMER DEPOSITS

LINE NO.	DESCRIPTION	[A] COMPANY PROPOSED	[B] STAFF ADJUSTMENTS	[C] STAFF[1] RECOMMENDED
1	Interest on Customer Deposits	$ -	$ 5,931	$ 5,931
2				
3	Staff's Calculation			
4	Allocated to Water		$ 5,346	
5	Allocated to Wastewater		5,931	
6	Total		$ 11,277	

[1] Amounts may not reflect other adjustments.

REFERENCES:
Column [A]: Company Filing
Column [B]: Testimony DWC
Column [C]: Column [A] + Column [B]

Litchfield Park Service Company - Water Division
Docket Nos. W-01428A-13-0043 and SW-01428A-13-0042
Test Year Ended: December 31, 2012

Schedule DWC-W22

OPERATING INCOME ADJUSTMENT NO. 5 - DEPRECIATION EXPENSE ON TEST YEAR PLANT

LINE NO.	ACCT NO.	DESCRIPTION	[A] PLANT In SERVICE Per Staff	[B] NonDepreciable or Fully Depreciated PLANT	[C] DEPRECIABLE PLANT (Col A - Col B)	[D] DEPRECIATION RATE	[E] DEPRECIATION EXPENSE (Col C x Col D)
1	301	Organization Cost	$ 21,100	$ 21,100	$ -	0.00%	$ -
2	302	Franchise Cost	$ -	$ -	$ -	0.00%	$ -
3	303	Land and Land Rights	$ 1,444,122	$ 1,450,278	$ (6,156)	0.00%	$ -
4	304	Structures and Improvements	$ 25,042,527	$ -	$ 25,042,527	3.33%	$ 833,916
5	305	Collecting and Impounding Res.	$ -	$ -	$ -	2.50%	$ -
6	306	Lake River and Other Intakes	$ -	$ -	$ -	2.50%	$ -
7	307	Wells and Springs	$ 3,214,115	$ -	$ 3,214,115	3.33%	$ 107,030
8	308	Infiltration Galleries and Tunnels	$ -	$ -	$ -	6.67%	$ -
9	309	Supply Mains	$ -	$ -	$ -	2.00%	$ -
10	310	Power Generation Equipment	$ 225,131	$ -	$ 225,131	5.00%	$ 11,257
11	311	Electric Pumping Equipment	$ 880,845	$ -	$ 880,845	12.50%	$ 110,106
12	320	Water Treatment Equipment	$ 3,425,394	$ -	$ 3,425,394	3.33%	$ 114,066
13	320	Water Treatment Plant	$ -	$ -	$ -	3.33%	$ -
14	330	Distribution Reservoirs & Standpipe	$ 1,394,017	$ -	$ 1,394,017	2.22%	$ 30,947
15	331	Transmission and Distribution Mains	$ 40,259,045	$ -	$ 40,259,045	2.00%	$ 805,181
16	333	Services	$ 5,350,963	$ -	$ 5,350,963	3.33%	$ 178,187
17	334	Meters	$ 4,759,560	$ -	$ 4,759,560	8.33%	$ 396,471
18	335	Hydrants	$ 3,302,147	$ -	$ 3,302,147	2.00%	$ 66,043
19	336	Backflow Prevention Devices	$ 38,387	$ -	$ 38,387	6.67%	$ 2,560
20	339	Other Plant and Miscellaneous Equipment	$ 259,531	$ -	$ 259,531	6.67%	$ 17,311
21	340	Office Furniture and Fixtures	$ 651,098	$ -	$ 651,098	6.67%	$ 43,428
22	340.1	Computer and Software	$ 7,995	$ -	$ 7,995	20.00%	$ 1,599
23	341	Transportation Equipment	$ 290,037	$ -	$ 290,037	20.00%	$ 58,007
24	342	Stores Equipment	$ 37,143	$ -	$ 37,143	4.00%	$ 1,486
25	343	Tools and Work Equipment	$ 47,434	$ -	$ 47,434	5.00%	$ 2,372
26	344	Laboratory Equipment	$ 5,803	$ -	$ 5,803	10.00%	$ 580
27	345	Power Operated Equipment	$ -	$ -	$ -	5.00%	$ -
28	346	Communications Equipment	$ 128,402	$ -	$ 128,402	10.00%	$ 12,840
29	347	Miscellaneous Equipment	$ -	$ -	$ -	10.00%	$ -
30	348	Other Tangible Plant	$ 122,415	$ -	$ 122,415	10.00%	$ 12,241
31		Total Plant	$ 90,907,211	$ 1,471,378	$ 89,435,833		$ 2,805,629
32							
33	Less: Amortization of Contributions						
34	307	Wells and Springs	$ 499,000			3.33%	$ (16,617)
35	311	Electric Pumping Equipment	$ 40,572			12.50%	$ (5,072)
36	331	Trans. and Dist. Mains	$ 5,893,218			2.00%	$ (117,864)
37	333	Services	$ 772,209			3.33%	$ (25,715)
38	334	Meters	$ 29,899			8.33%	$ -
39	335	Hydrants	$ 98,419			2.00%	$ (1,968)
40			$ 7,333,317				$ (167,236)
41							
42		Total Depreciation Expense					$ 2,638,393
43							
44		Depreciation Expense - Company					$ 2,615,868
45							
46		Staff's Adjustment to Depreciation Expense					$ 22,525

*Fully Depreciated/Amortized

References:
Column [A]: Schedule DWC-W16
Column [B]: From Column [A]
Column [C]: Column [A] - Column [B]
Column [D]: Engineering Staff Report
Column [E]: Column [C] x Column [D]

Litchfield Park Service Company - Water Division
Docket Nos. W-01428A-13-0043 and SW-01428A-13-0042
Test Year Ended: December 31, 2012

Schedule DWC-W23

OPERATING INCOME ADJUSTMENT NO. 6 - PROPERTY TAX EXPENSE

LINE NO.	Property Tax Calculation	[A] STAFF AS ADJUSTED	[B] STAFF RECOMMENDED
1	Staff Adjusted Test Year Revenues	$ 11,201,390	$ 11,201,390
2	Weight Factor	2	2
3	Subtotal (Line 1 * Line 2)	22,402,780	$ 22,402,780
4	Staff Recommended Revenue, Per Schedule JMM-W1	11,201,390	$ 12,276,127
5	Subtotal (Line 4 + Line 5)	33,604,170	34,678,907
6	Number of Years	3	3
7	Three Year Average (Line 5 / Line 6)	11,201,390	$ 11,559,636
8	Department of Revenue Mutilplier	2	2
9	Revenue Base Value (Line 7 * Line 8)	22,402,780	$ 23,119,271
10	Plus: 10% of CWIP -	-	-
11	Less: Net Book Value of Licensed Vehicles	107,049	$ 107,049
12	Full Cash Value (Line 9 + Line 10 - Line 11)	22,295,731	$ 23,012,222
13	Assessment Ratio	19.0%	19.0%
14	Assessment Value (Line 12 * Line 13)	4,236,189	$ 4,372,322
15	Composite Property Tax Rate (Per Company Schedule)	12.5389%	12.5389%
16			$ -
17	Staff Test Year Adjusted Property Tax (Line 14 * Line 15)	$ 531,171	
18	Company Proposed Property Tax	559,128	
19			
20	Staff Test Year Adjustment (Line 16-Line 17)	$ (27,957)	
21	Property Tax - Staff Recommended Revenue (Line 14 * Line 15)		$ 548,241
22	Staff Test Year Adjusted Property Tax Expense (Line 16)		$ 531,171
23	Increase in Property Tax Expense Due to Increase in Revenue Requirement		$ 17,070
24			
25	Increase to Property Tax Expense		$ 17,070
26	Increase in Revenue Requirement		1,074,737
27	Increase to Property Tax per Dollar Increase in Revenue (Line19/Line 20)		1.588260%

REFERENCES:
Column [A]: Company Filing
Column [B]: Testimony DWC
Column [C]: Column [A] + Column [B]

Litchfield Park Service Company - Water Division
Docket Nos. W-01428A-13-0043 and SW-01428A-13-0042
Test Year Ended: December 31, 2012

Schedule DWC-W24

OPERATING INCOME ADJUSTMENT NO. 7 - TEST YEAR INCOME TAXES

LINE NO.	DESCRIPTION		
1			
2			
3			
4	*Calculation of Income Tax:*		Test Year
5	Revenue (Schedule JMM-11)	$	11,201,390
6	Operating Expenses Excluding Income Taxes	$	8,117,326
7	Synchronized Interest (L17)	$	331,195
8	Arizona Taxable Income (L1 - L2 - L3)	$	2,752,869
9	Arizona State Income Tax Rate		6.5000%
10	Arizona Income Tax (L4 x L5)	$	178,936
11	Federal Taxable Income (L4 - L6)	$	2,573,933
12	Federal Tax on First Income Bracket ($1 - $50,000) @ 15%	$	7,500
13	Federal Tax on Second Income Bracket ($51,001 - $75,000) @ 25%	$	6,250
14	Federal Tax on Third Income Bracket ($75,001 - $100,000) @ 34%	$	8,500
15	Federal Tax on Fourth Income Bracket ($100,001 - $335,000) @ 39%	$	91,650
16	Federal Tax on Fifth Income Bracket ($335,001 -$10,000,000) @ 34%	$	761,237
17	Total Federal Income Tax	$	875,137
18	Combined Federal and State Income Tax (L44 + L51)	$	1,054,074
19			
20			
21	*Calculation of Interest Synchronization:*		
22	Rate Base (Schedule JMM-W4)	$	33,119,464
23	Weighted Average Cost of Debt		1.10%
24	Synchronized Interest (L16 x L17)	$	364,314
25			
26			
27	Income Tax - Per Staff	$	1,054,074
28	Income Tax - Per Company	$	1,028,634
29	Staff Adjustment	$	25,440

REFERENCES:
Column [A]: Company Filing
Column [B]: Testimony DWC
Column [C]: Column [A] + Column [B]

Litchfield Park Service Company - Wastewater Division
Docket Nos. W-01428A-13-0043 and SW-01428A-13-0042
Test Year Ended: December 31, 2012

Direct Testimony of Darron W. Carlson

TABLE OF CONTENTS TO SCHEDULES

SCH #	TITLE
DWC-WW1	REVENUE REQUIREMENT
DWC-WW2	GROSS REVENUE CONVERSION FACTOR
DWC-WW3	RATE BASE - ORIGINAL COSTS
DWC-WW4	SUMMARY OF ORIGINAL COST RATE BASE ADJUSTMENTS
DWC-WW5	ORIGINAL COST RATE BASE ADJUSTMENT # 1 - POST TEST-YEAR PLANT
DWC-WW6	ORIGINAL COST RATE BASE ADJUSTMENT # 2 - NOT USED
DWC-WW7	ORIGINAL COST RATE BASE ADJUSTMENT # 3 - TRUE-UP OF PLANT IN SERVICE ACCRUALS
DWC-WW8	ORIGINAL COST RATE BASE ADJUSTMENT # 4 - PLANT ADDITIONS RECORDED IN WRONG YEARS
DWC-WW9	ORIGINAL COST RATE BASE ADJUSTMENT # 5 - RECLASSIFICATION OF PLANT IN SERVICE
DWC-WW10	ORIGINAL COST RATE BASE ADJUSTMENT # 6 - PLANT NOT USED AND USEFUL
DWC-WW11	ORIGINAL COST RATE BASE ADJUSTMENT # 7 - REMOVAL OF DUPLICATE INVOICES
DWC-WW12	ORIGINAL COST RATE BASE ADJUSTMENT # 8 - NOT USED
DWC-WW13	ORIGINAL COST RATE BASE ADJUSTMENT # 9 - RECALCUATION OF CONTRIBUTIONS IN AID OF CONSTRUCTION
DWC-WW14	ORIGINAL COST RATE BASE ADJUSTMENT # 10 - CUSTOMER DEPOSITS
DWC-WW15	ORIGINAL COST RATE BASE ADJUSTMENT # 11 - ACCUMULATED DEFERRED INCOME TAXES
DWC-WW16	OPERATING INCOME STATEMENT - ADJUSTED TEST YEAR AND STAFF RECOMMENDED
DWC-WW17	SUMMARY OF OPERTING INCOME STATEMENT ADJUSTMENTS - TEST YEAR
DWC-WW18	OPERATING INCOME ADJUSTMENT # 1 - WATER TESTING EXPENSE
DWC-WW19	OPERATING INCOME ADJUSTMENT # 2 - CORPORATE ALLOCATION ACCRUAL TRUE-UP
DWC-WW20	OPERATING INCOME ADJUSTMENT # 3 - CORPORATE ALLOCATION EXPENSE
DWC-WW21	OPERATING INCOME ADJUSTMENT # 4 - INTEREST ON CUSTOMER DEPOSITS
DWC-WW22	OPERATING INCOME ADJUSTMENT # 5 - DEPRECIATION EXPENSE
DWC-WW23	OPERATING INCOME ADJUSTMENT # 6 - PROPERTY TAX EXPENSE
DWC-WW24	OPERATING INCOME ADJUSTMENT # 7 - TEST YEAR INCOME TAXES

Litchfield Park Service Company - Wastewater Division
Docket Nos. W-01428A-13-0043 and SW-01428A-13-0042
Test Year Ended: December 31, 2012

Schedule DWC-WW1

REVENUE REQUIREMENT

LINE NO.	DESCRIPTION		(A) COMPANY FAIR VALUE		(B) STAFF FAIR VALUE
1	Adjusted Rate Base	$	23,877,697	$	23,424,640
2	Adjusted Operating Income (Loss)	$	1,871,616	$	1,932,525
3	Current Rate of Return (L2 / L1)		7.84%		8.25%
4	Required Rate of Return		9.50%		8.10%
5	Required Operating Income (L4 * L1)	$	2,268,786	$	1,897,396
6	Operating Income Deficiency (L5 - L2)	$	397,170	$	(35,129)
7	Gross Revenue Conversion Factor		1.6595		1.6496
8	Required Revenue Increase (L7 * L6)	$	659,088	$	(57,949)
9	Adjusted Test Year Revenue	$	10,361,603	$	10,361,603
10	Proposed Annual Revenue (L8 + L9)	$	11,020,691	$	10,303,654
11	Required Increase in Revenue (%)		6.36%		-0.56%

References:
Column (A): Company Schedule A-1
Column (B): Staff Schedules DWC-W3 and DWC-W16

Litchfield Park Service Company - Wastewater Division
Docket Nos. W-01428A-13-0043 and SW-01428A-13-0042
Test Year Ended: December 31, 2012

Schedule DWC-WW2

GROSS REVENUE CONVERSION FACTOR

LINE NO.	DESCRIPTION	(A)	(B)	(C)	(D)
	Calculation of Gross Revenue Conversion Factor:				
1	Revenue	100.0000%			
2	Uncollecible Factor (Line 11)	0.0000%			
3	Revenues (L1 - L2)	100.0000%			
4	Combined Federal and State Income Tax and Property Tax Rate (Line 23)	39.3790%			
5	Subtotal (L3 - L4)	60.6210%			
6	**Revenue Conversion Factor (L1 / L5)**	1.649594			
	Calculation of Uncollecttible Factor:				
7	Unity	100.0000%			
8	Combined Federal and State Tax Rate (Line 23)	38.2900%			
9	One Minus Combined Income Tax Rate (L7 - L8)	61.7100%			
10	Uncollectible Rate	0.0000%			
11	Uncollectible Factor (L9 * L10)	0.0000%			
	Calculation of Effective Tax Rate:				
12	Operating Income Before Taxes (Arizona Taxable Income)	100.0000%			
13	Arizona State Income Tax Rate	6.5000%			
14	Federal Taxable Income (L12 - L13)	93.5000%			
15	Applicable Federal Income Tax Rate (Line 55)	34.0000%			
16	Effective Federal Income Tax Rate (L14 x L15)	31.7900%			
17	Combined Federal and State Income Tax Rate (L13 +L16)		38.2900%		
	Calculation of Effective Property Tax Factor				
18	Unity	100.0000%			
19	Combined Federal and State Income Tax Rate (L17)	38.2900%			
20	One Minus Combined Income Tax Rate (L18-L19)	61.7100%			
21	Property Tax Factor	1.7647%			
22	Effective Property Tax Factor (L20*L21)		1.0890%		
23	Combined Federal and State Income Tax and Property Tax Rate (L17+L22)			39.3790%	
24	Required Operating Income	$ 1,897,396			
25	AdjustedTest Year Operating Income (Loss)	1,932,525			
26	Required Increase in Operating Income (L24 - L25)		$ (35,129)		
27	Income Taxes on Recommended Revenue (Col. [E], L52)	$ 1,031,956			
28	Income Taxes on Test Year Revenue (Col. [B], L52)	1,053,753			
29	Required Increase in Revenue to Provide for Income Taxes (L27 - L28)		(21,797)		
30	Recommended Revenue Requirement	$ 10,303,654			
31	Uncollectible Rate (Line 10)	0.0000%			
32	Uncollectible Expense on Recommended Revenue (L30*L31)	$ -			
33	Adjusted Test Year Uncollectible Expense	$ -			
34	Required Increase in Revenue to Provide for Uncollectible Exp. (L32-L33)		-		
35	Property Tax with Recommended Revenue	$ 546,202			
36	Property Tax on Test Year Revenue	547,225			
37	Increase in Property Tax Due to Increase in Revenue (L35-L36)		(1,023)		
38	Total Required Increase in Revenue (L26 + L29 + L34 + L37)		$ (57,949)		

		Test Year		Staff Recommended
	Calculation of Income Tax:			
39	Revenue	$ 10,361,603	$ (57,949)	$ 10,303,654
40	Operating Expenses Excluding Income Taxes	$ 7,375,325		$ 7,374,303
41	Synchronized Interest (L56)	$ 234,246		$ 234,246
42	Arizona Taxable Income (L39 - L40 - L41)	$ 2,752,031		$ 2,695,105
43	Arizona State Income Tax Rate	6.5000%		6.5000%
44	Arizona Income Tax (L42 x L43)	$ 178,882		$ 175,182
45	Federal Taxable Income (L42 - L44)	$ 2,573,149		$ 2,519,923
46	Federal Tax on First Income Bracket ($1 - $50,000) @ 15%	$ 7,500		$ 7,500
47	Federal Tax on Second Income Bracket ($51,001 - $75,000) @ 25%	$ 6,250		$ 6,250
48	Federal Tax on Third Income Bracket ($75,001 - $100,000) @ 34%	$ 8,500		$ 8,500
49	Federal Tax on Fourth Income Bracket ($100,001 - $335,000) @ 39%	$ 91,650		$ 91,650
50	Federal Tax on Fifth Income Bracket ($335,001 -$10,000,000) @ 34%	$ 760,971		$ 742,874
51	Total Federal Income Tax	$ 874,871		$ 856,774
52	Combined Federal and State Income Tax (L44 + L51)	$ 1,053,753		$ 1,031,956
53	Applicable Federal Income Tax Rate [Col. [E], L51 - Col. [B], L51] / [Col. [E], L45 - Col. [B], L45]			34.0000%
	Calculation of Interest Synchronization:			
54	Rate Base	$ 23,424,640		
55	Weighted Average Cost of Debt	1.0000%		
56	Synchronized Interest (L45 X L46)	$ 234,246		

Litchfield Park Service Company - Wastewater Division
Docket Nos. W-01428A-13-0043 and SW-01428A-13-0042
Test Year Ended: December 31, 2012

Schedule DWC-WW3

RATE BASE - ORIGINAL COST

LINE NO.		(A) COMPANY AS FILED	(B) STAFF ADJUSTMENTS	(C) STAFF AS ADJUSTED
1	Plant in Service	$ 74,024,533	$ (627,774)	$ 73,396,759
2	Less: Accumulated Depreciation	13,244,186	12,533	13,256,719
3	Net Plant in Service	$ 60,780,347	$ (640,307)	$ 60,140,040
	LESS:			
4	Contributions in Aid of Construction (CIAC)	$ 28,470,485	$ (93,570)	$ 28,376,915
5	Less: Accumulated Amortization	4,446,775	(293,474)	$ 4,153,301
6	Net CIAC	24,023,710	199,904	$ 24,223,614
7	Advances in Aid of Construction (AIAC)	11,645,290	-	11,645,290
8	Customer Meter Deposits	95,892	-	95,892
	Customer Deposits	155,440	8,334	163,774
9	Deferred Income Tax Credits	982,318	(395,488)	586,830
	ADD:			
9	Deferred Regulatory Assets TCE Plume	-	-	-
10	Deffered Regulatory Assets	-	-	-
11	**Original Cost Rate Base**	$ 23,877,697	$ (453,057)	$ 23,424,640

References:
Column [A]: Company as Filed
Column [B]: Schedule DWC-W4
Column (C): Column (A) + Column (B)

Litchfield Park Service Company - Wastewater Division
Docket Nos. W-01428A-13-0043 and SW-01428A-13-0042
Test Year Ended: December 31, 2012

SUMMARY OF ORIGINAL COST RATE BASE ADJUSTMENTS

LINE NO.	ACCT. NO.	DESCRIPTION	[A] COMPANY AS FILED	[B] ADJ #1 Post-Test Year Plant Ref: Sch JMM-WW5	[C] ADJ #2 Not used Ref: Sch JMM-WW6	[D] ADJ #3 True-Up of Accruals Ref: Sch JMM-WW7	[E] ADJ #4 Plant Addtions Recorded in Wrong Years Ref: Sch JMM-WW8	[F] ADJ #5 Reclassification of Plant Ref: Sch JMM-WW9	[G] ADJ #6 Plant Not Used and Useful Ref: Sch JMM-WW10
		PLANT IN SERVICE:							
1									
2	351	Organization	$ -	$ -	$ -	$ -	$ -	$ -	$ -
3	352	Franchises	-	-	-	-	-	-	-
4	353	Land and Land Rights	1,850,582	-	-	-	-	-	(11,217)
5	354	Structures and Improvements	24,208,314	-	-	199,000	-	(525,110)	(113,329)
6	355	Power Generation Equipment	603,332	-	-	-	-	-	-
7	360	Collection Services - Force	1,162,597	-	-	-	-	-	-
8	361	Collection Services - Gravity	31,886,680	-	-	-	-	41,564	-
9	362	Special Collecting Structures	-	-	-	-	-	-	-
10	363	Services to Customers	76,190	-	-	-	-	-	-
11	364	Flow Measuring Devices	46,210	-	-	-	-	-	-
12	365	Flow Measuring Installations	-	-	-	-	-	36,618	-
13	366	Reuse Services	4,057,660	-	-	-	-	-	
14	367	Reuse Meters and Installations	44,753	-	-	-	-	-	-
15	370	Receiving Wells	860,393	-	-	-	-	-	-
16	371	Effluent Pumping Equipment	799,481	-	-	-	-	61,670	-
17	374	Reuse Trans. And Dist. System	62,286	-	-	-	-	-	-
18	375	Resuse T&D	420,334	-	-	-	-	-	-
19	380	Treatment and Disposal Equipment	5,585,470	(700,000)	-	-	-	470,592	-
20	381	Plant Sewers	47,802	-	-	-	-	-	-
21	382	Outfall Sewer Lines	343,681	-	-	-	-	-	-
22	389	Other Plant & Misc. Equipment	871,496	-	-	-	-	(43,005)	-
23	390	Office Furniture & Equipment	275,740	-	-	-	-	-	-
24	391	Transportation Equipment	33,497	-	-	-	-	-	-
25	392	Stores Equipment	8,968	-	-	-	-	-	-
26	393	Tools, Shop & Garage Equipment	145,631	-	-	-	-	(15,681)	-
27	394	Labratory Equipment	186,348	-	-	-	-	836	-
28	395	Power Operated Equipment	28,090	-	-	-	-	(21,485)	-
29	396	Communication Equipment	418,996	-	-	(3,555)	-	-	-
30	398	Other Tangible Plant	-	-	-	-	-	-	-
31		*Total Plant in Service - Sub Total*	74,024,533	-	-	-	-	-	-
32			-	-					
33		Total Plant in Service	$ 74,024,533	$ (700,000)	$ -	$ 195,445	$ 401	$ 6,000	$ (124,546)
34		Less: Accumulated Depreciation	13,244,186	-	-	-	-	18,194	(5,661)
35			-	-	-	-		-	-
36		Net Plant in Service	$ 60,780,347	$ (700,000)	$ -	$ 195,445	$ 401	$ (12,194)	$ (118,886)
37									
38		*LESS:*							
39		Contributions in Aid of Construction (CIAC)	$ 28,470,485	$ -	$ -	$ -	$ -	$ -	$ -
40		Less: Accumulated Amortization .	4,446,775	-	-	-	-	-	-
41		Net CIAC (L25 - L26)	24,023,710	-	-	-	-	-	-
42		Advances in Aid of Construction (AIAC)	11,645,290	-	-	-	-	-	-
43		Customer Meter Deposits	95,892	-	-	-	-	-	-
44		Customer Deposits	155,440						
45		Deferred Income Taxes	982,318	-	-	-	-	-	-
46			-	-					
47									
48		*ADD:*							
49		Deferred Regulatory Assets TCE Plume	-	-	-	-	-	-	-
50		Deffered Regulatory Assets	-	-	-	-	-	-	-
51									
52		**Original Cost Rate Base**	$ 23,877,697	$ (700,000)	$ -	$ 195,445	$ 401	$ (12,194)	$ (118,886)

[H] ADJ #7 Duplicate Invoices Ref: Sch JMM-WW11	[I] ADJ #8 Not Used Ref: Sch JMM-WW12	[J] ADJ #9 Recalculation of CIAC Ref: Sch JMM-WW13	[K] ADJ #10 Customer Deposits Ref: Sch JMM-WW14	[L] ADJ #11 ADIT Ref: Sch JMM-WW15	[M] STAFF ADJUSTED
$ -	$ -	$ -	$ -	$ -	$ -
-	-	-	-	-	-
(3,409)	-	-	-	-	1,835,956
-	-	-	-	-	23,768,875
(400)	-	-	-	-	602,932
-	-	-	-	-	1,162,597
-	-	-	-	-	31,928,244
-	-	-	-	-	-
-	-	-	-	-	76,190
-	-	-	-	-	46,210
-	-	-	-	-	36,618
					4,057,660
					44,753
-	-	-	-	-	860,393
-	-	-	-	-	861,151
					62,286
					420,334
-	-	-	-	-	5,356,062
-	-	-	-	-	47,802
-	-	-	-	-	343,681
(864)	-	-	-	-	827,629
-	-	-	-	-	275,740
-	-	-	-	-	33,497
					8,968
-	-	-	-	-	129,950
-	-	-	-	-	187,184
-	-	-	-	-	6,605
-	-	-	-	-	415,441
-	-	-	-	-	-
(214)	-	-	-	-	73,396,759
$ (4,886)	$ -	$ -	$ -	$ -	$ 73,396,759
-	-	-	-	-	13,256,719
-	-	-	-	-	-
$ (4,886)	$ -	$ -	$ -	$ -	$ 60,140,040
$ -	$ -	$ (93,570)	$ -	$ -	$ 28,376,915
-	-	(293,474)	-	-	4,153,301
-	-	199,904	-	-	24,223,614
-	-	-	-	-	11,645,290
-	-	-	-	-	95,892
	-	-	8,334		163,774
-	-	-	-	(395,488)	586,830
					-
-	-	-	-	-	-
-	-	-	-	-	-
$ (4,886)	$ -	$ (199,904)	$ (8,334)	$ 395,488	$ 23,424,640

Litchfield Park Service Company - Wastewater Division
Docket Nos. W-01428A-13-0043 and SW-01428A-13-0042
Test Year Ended: December 31, 2012

Schedule DWC-WW5

RATE BASE ADJUSTMENT NO. 1 - POST TEST-YEAR PLANT

LINE NO.	ACCT NO.	DESCRIPTION	[A] COMPANY PROPOSED	[B] STAFF ADJUSTMENTS	[C] STAFF[1] RECOMMENDED
1	380	Treatment and Disposal Equipment	$ 5,585,470	$ (700,000)	$ 4,885,470

[1] Amounts may not reflect other adjustments.

REFERENCES:
Column [A]: Company Filing
Column [B]: Testimony DWC
Column [C]: Column [A] + Column [B]

RATE BASE ADJUSTMENT NO. 2 - NOT USED

Litchfield Park Service Company - Wastewater Division
Docket Nos. W-01428A-13-0043 and SW-01428A-13-0042
Test Year Ended: December 31, 2012

Schedule DWC-WW7

RATE BASE ADJUSTMENT NO. 3 - TRUE-UP OF PLANT IN SERVICE ACCRUALS

LINE NO.	ACCT NO.	DESCRIPTION	[A] COMPANY PROPOSED	[B] STAFF ADJUSTMENTS	[C] STAFF[1] RECOMMENDED
1	354	Structures and Improvements	$ 24,208,314	$ 199,000	$ 24,407,314
2	396	Communications Equipment	418,996	(3,555)	415,441
3			$ 24,627,310	$ 195,445	$ 24,822,755

[1] Amounts may not reflect other adjustments.

REFERENCES:
Column [A]: Company Filing
Column [B]: Testimony DWC
Column [C]: Column [A] + Column [B]

Litchfield Park Service Company - Wastewater Division
Docket Nos. W-01428A-13-0043 and SW-01428A-13-0042
Test Year Ended: December 31, 2012

Schedule DWC-WW8

RATE BASE ADJUSTMENT NO. 4 - PLANT ADDITIONS RECORDED IN WRONG YEARS

LINE NO.	ACCT NO.	DESCRIPTION	[A] COMPANY PROPOSED	[B] STAFF ADJUSTMENTS	[C] STAFF[1] RECOMMENDED
1		Accumulated Depreciation	$ 13,244,186	$ 401	$ 13,244,587

[1] *Amounts may not reflect other adjustments.*

REFERENCES:
Column [A]: Company Filing
Column [B]: Testimony DWC
Column [C]: Column [A] + Column [B]

Litchfield Park Service Company - Wastewater Division
Docket Nos. W-01428A-13-0043 and SW-01428A-13-0042
Test Year Ended: December 31, 2012

Schedule DWC-WW9

RATE BASE ADJUSTMENT NO. 5 - RECLASSIFICATION OF PLANT IN SERVICE

LINE NO.	ACCT NO.	DESCRIPTION	[A] COMPANY PROPOSED	[B] STAFF ADJUSTMENTS	[C] STAFF[1] RECOMMENDED
1	354	Structure and Improvement	$ 24,208,314	$ (525,110)	$ 23,683,204
2	361	Collection Services - Gravity	31,886,680	41,564	31,928,244
	365	Flow Measuring Installation	-	36,618	36,618
3	371	Effluent Pumping Equipment	799,481	61,670	861,151
4	380	Wastewater Treatment and Disposal Equipment	5,585,470	470,592	6,056,062
5	389	Other Plant & Misc Equipment	871,498	(43,005)	828,493
6	393	Tools, Shop & Garage Equipment	145,631	(15,681)	129,950
7	394	Lab Equipment	186,348	836	187,184
8	395	Power Operated Equipment	28,090	(21,485)	6,605
9		Total	$ 63,711,512	$ 6,000	$ 63,717,512
10					
11		Accumulated Depreciation	$ 16,514,086	$ 18,194	16,532,280
12					
13					
14	Staff's Removal of Plant and Accumulated Depreciation			PIS Adjustment	Years (1/2 Conv.)	Depr Rate	A/D Adjustment
15	2009	354	Structures and Improvment	$ (465,350)	3.5	3.33%	$ (54,237)
16	2011	354	Structures and Improvment	(59,760)	1.5	3.33%	(2,985)
17	2009	380	Wastewater Treatment and Disposal Equipment	(37,454)	3.5	5.00%	(6,555)
18	2009	389	Other Plant & Misc Equipment	(43,005)	3.5	6.67%	(10,039)
19	2012	393	Tools, Shop & Garage Equipment	(15,681)	0.5	5.00%	(392)
20	2012	395	Power Operated Equipment	(21,485)	0.5	10.00%	(1,074)
21	Total Removal of Plant and Accumulated Depreciation			$ (642,735)			$ (75,282)
22							
23							
24	Staff's Reclassification of Plant and Accumulated Depreciation			PIS Adjustment	Years (1/2 Conv.)	Depr Rate	A/D Adjustment
25	2009	361	Collection Sewer	$ 41,564	3.5	2.00%	$ 2,910
26	2009	365	Flow measuring installation	36,618	3.5	2.00%	2,563
27	2009	371	Effluent Pumping Equipment	5,048	3.5	12.50%	2,208
28	2011	371	Effluent Pumping Equipment	6,000	0.5	12.50%	375
29	2012	371	Effluent Pumping Equipment	50,622	0.5	12.50%	3,164
30	2009	380	Wastewater Treatment and Disposal Equipment	461,742	3.5	5.00%	80,805
31	2012	380	Wastewater Treatment and Disposal Equipment	46,304	0.5	5.00%	1,158
32	2009	394	Lab Equipment	836	3.5	10.00%	293
33	Total Reclassification of Plant and Accumulated Depreciation			$ 648,735			$ 93,475
34							
35	Net increase to accumulated depreciation						$ 18,194
36							
37	Note: The $6,000 difference represents the relcassification of plant from the Water Division.						

[1] Amounts may not reflect other adjustments.

REFERENCES:
Column [A]: Company Filing
Column [B]: Testimony DWC
Column [C]: Column [A] + Column [B]

Litchfield Park Service Company - Wastewater Division
Docket Nos. W-01428A-13-0043 and SW-01428A-13-0042
Test Year Ended: December 31, 2012

Schedule DWC-WW10

RATE BASE ADJUSTMENT NO. 6 - PLANT NOT USED AND USEFUL

LINE NO.	ACCT NO.	DESCRIPTION	[A] COMPANY PROPOSED	[B] STAFF ADJUSTMENTS	[C] STAFF[1] RECOMMENDED
1	353	Land and Land Right	$ 1,850,582	$ (11,217)	$ 1,839,365
2					
3	354	Structures and Improvements	$ 24,208,314	$ (113,329)	$ 24,094,985
4					
5		Accumulated Depreciation	$ 13,244,186	$ (5,661)	13,238,525
6					
7				PIS	Years	Depr	A/D
8	Staff's Removal of Plant and Accumulated Depreciation			Adjustment	(1/2 Conv.)	Rate	Adjustment
9	2011	354.	Structures and Improvment	$ (113,329)	1.5	3.33%	$ (5,661)

[1] Amounts may not reflect other adjustments.

REFERENCES:
Column [A]: Company Filing
Column [B]: Testimony DWC
Column [C]: Column [A] + Column [B]

RATE BASE ADJUSTMENT NO. 7 - REMOVAL OF DUPLICATE INVOICES

LINE NO.	ACCT NO.	DESCRIPTION	[A] COMPANY PROPOSED	[B] STAFF ADJUSTMENTS	[C] STAFF[1] RECOMMENDED
1	353	Land and Land Rights	$ 1,850,582	$ (3,409)	$ 1,847,173
2	355	Power Generation Equipment	603,332	(400)	602,932
3	389	Other Plant & Misc. Equipment	871,498	(864)	870,634
4		Total	$ 3,325,412	$ (4,672)	$ 3,320,740
5					
6		Accumulated Depreciation	$ 16,514,086	$ (214)	$ 16,513,872
7					
8			PIS	Years	Depr	A/D
9	Staff's Calculation		Adjustment	(1/2 Conv.)	Rate	Adjustment
10	355	Power Generation Equipment	(400)	3.5	5.00%	$ (70)
11						
12	389	Other Plant & Misc. Equipment	$ (864)	2.5	6.67%	$ (144)

[1] Amounts may not reflect other adjustments.

REFERENCES:
Column [A]: Company Filing
Column [B]: Testimony DWC
Column [C]: Column [A] + Column [B]

RATE BASE ADJUSTMENT NO. 8 - NOT USED

RATE BASE ADJUSTMENT NO. 9 RECALCULATION OF CONTRIBUTIONS IN AID OF CONSTRUCTION

LINE NO.	ACCT NO.	DESCRIPTION	[A] COMPANY PROPOSED	[B] STAFF ADJUSTMENTS	[C] STAFF[1] RECOMMENDED
1		Contributions in Aid of Construction	$ 28,470,485	$ (93,570)	$ 28,376,915
2					
3		Amortization of Contributions in Aid of Construction	$ 4,446,775	$ (293,474)	$ 4,153,301

[1] Amounts may not reflect other adjustments.

REFERENCES:
Column [A]: Company Filing
Column [B]: Testimony DWC
Column [C]: Column [A] + Column [B]

Litchfield Park Service Company - Wastewater Division
Docket Nos. W-01428A-13-0043 and SW-01428A-13-0042
Test Year Ended: December 31, 2012

Schedule DWC-WW14

RATE BASE ADJUSTMENT NO. 10 - CUSTOMER DEPOSITS

LINE NO.	ACCT NO.	DESCRIPTION	[A] COMPANY PROPOSED	[B] STAFF ADJUSTMENTS	[C] STAFF[1] RECOMMENDED
1		Customer Deposits	$ 155,440	$ 8,334	$ 163,774

Staff Calculation:

13th month average of customer deposits	$ 311,436
December 31th amount	295,587
Increase over December 31 test year amount	$ 15,849
Allocated to Water	$ 7,514
Allocated to Wastewater	8,334
Total	$ 15,849

[1] Amounts may not reflect other adjustments.

REFERENCES:
Column [A]: Company Filing
Column [B]: Testimony DWC
Column [C]: Column [A] + Column [B]

Litchfield Park Service Company - Wastewater Division
Docket Nos. W-01428A-13-0043 and SW-01428A-13-0042
Test Year Ended: December 31, 2012

Schedule DWC-WW15

RATE BASE ADJUSTMENT NO. 11 - ACCUMULATED DEFERRED INCOME TAXES

LINE NO.	ACCT NO.	DESCRIPTION	[A] COMPANY PROPOSED	[B] STAFF ADJUSTMENTS	[C] STAFF[1] RECOMMENDED
1		Deferred Income Taxes	$ 982,318	$ (395,488)	$ 586,830

[1] Amounts may not reflect other adjustments.

REFERENCES:
Column [A]: Company Filing
Column [B]: Testimony DWC
Column [C]: Column [A] + Column [B]

Litchfield Park Service Company - Wastewater Division
Docket Nos. W-01428A-13-0043 and SW-01428A-13-0042
Test Year Ended: December 31, 2012

Schedule DWC-WW16

OPERATING INCOME STATEMENT - ADJUSTED TEST YEAR AND STAFF RECOMMENDED

LINE NO.	DESCRIPTION	[A] COMPANY ADJUSTED TEST YEAR AS FILED	[B] STAFF TEST YEAR ADJUSTMENTS	[C] STAFF TEST YEAR AS ADJUSTED	[D] STAFF PROPOSED CHANGES	[E] STAFF RECOMMENDED
1	*REVENUES:*					
2	Metered Water Sales	$ 9,853,383	$ -	$ 9,853,383	$ (57,949)	$ 9,795,434
3	Water Sales-Unmetered	-	-	-	-	-
4	Other Operating Revenue	508,220	-	508,220	-	508,220
5	Intentionally Left Blank	-	-	-	-	-
6	**Total Operating Revenues**	$ 10,361,603	$ -	$ 10,361,603	$ (57,949)	$ 10,303,654
7						
8	*OPERATING EXPENSES:*					
9	Salaries and Wages	$ 1,168,151	$ -	$ 1,168,151	$ -	$ 1,168,151
10	Purchased Water	26,656	-	26,656	-	26,656
11	Purchased Power	601,635	-	601,635	-	601,635
12	Slude Removal Expense	234,893	3,410	238,303	-	238,303
13	Chemicals	357,986	-	357,986	-	357,986
14	Materials and Supplies	86,994	-	86,994	-	86,994
15	Management Services - US Liberty Water	1,469,058	(32,398)	1,436,660	-	1,436,660
16	Management Services - Corporate	698,951	-	698,951	-	698,951
17	Outside Services - Accounting	2,161	-	2,161	-	2,161
18	Outside Services - Engineering	-	-	-	-	-
19	Outside Services- Other	222,303	-	222,303	-	222,303
20	Outside Services- Legal	25,746	-	25,746	-	25,746
21	Water Testing	57,735	(35,730)	22,005	-	22,005
22	Rents - Office	40,007	-	40,007	-	40,007
23	Equipment Rental	3,076	-	3,076	-	3,076
24	Transportation Expenses	26,465	-	26,465	-	26,465
25	Insurance - General Liability	57,823	-	57,823	-	57,823
26	Insurance - Vehicle	11,506	-	11,506	-	11,506
27	Reg. Comm. Exp. - Other	14,189	-	14,189	-	14,189
28	Reg. Comm. Exp. - Rate Case	74,200	-	74,200	-	74,200
29	Interest on Customer Deposits	-		5,346		5,346
30	Miscellaneous Expense	77,293	-	77,293	-	77,293
31	Bad Debt Expense	45,215	-	45,215	-	45,215
32	Depreciation and Amortization Expense	1,598,765	(13,337)	1,585,428		1,585,428
33	Property Taxes	576,026	(28,801)	547,225	(1,023)	546,202
34	Income Tax	1,013,153	40,600	1,053,753	(21,797)	1,031,956
35	**Total Operating Expenses**	$ 8,489,987	$ (66,255)	$ 8,429,078	$ (22,820)	$ 8,406,258
36	**Operating Income (Loss)**	$ 1,871,616	$ 66,255	$ 1,932,525	$ (35,129)	$ 1,897,396

References:
Column (A): Company Schedule C-1
Column (B): Schedule DWC-W17
Column (C): Column (A) + Column (B)
Column (D): Schedules DWC-WW23 and DWC-WW24
Column (E): Column (C) + Column (D)

Schedule DWC-WW17

Litchfield Park Service Company - Wastewater Division
Docket Nos. W-01428A-13-0043 and SW-01428A-13-0042
Test Year Ended: December 31, 2012

SUMMARY OF OPERATING INCOME STATEMENT ADJUSTMENTS - TEST YEAR

LINE NO.	DESCRIPTION	[A] COMPANY AS FILED	[B] Water Testing Expense ADJ #1	[C] Corporate Allocation True-Up ADJ #2	[D] Corporate Allocation Expense ADJ #3	[E] Interest on Customer Deposts ADJ #4	[F] Depreciation Expense ADJ #5	[G] Property Tax Expense ADJ #6	[H] Income Tax Expense ADJ #7	[I] STAFF ADJUSTED
			Ref: Sch JMM-WW18	Ref: Sch JMM-WW19	Ref: Sch JMM-WW20	Ref: Sch JMM-WW21	Ref: Sch JMM-WW22	Ref: Sch JMM-WW23	Ref: Sch JMM-W24	
1	*REVENUES:*									
2	Metered Water Sales	$ 9,853,383	$ -	$ -	$ -	$ -	$ -	$ -	$ -	$ 9,853,383
3	Water Sales-Unmetered	-	-	-	-	-	-	-	-	-
4	Other Operating Revenue	508,220	-	-	-	-	-	-	-	508,220
5	Intentionally Left Blank	-	-	-	-	-	-	-	-	-
6	**Total Operating Revenues**	$ 10,361,603	$ -	$ -	$ -	$ -	$ -	$ -	$ -	$ 10,361,603
7										
8	*OPERATING EXPENSES:*									
9	Salaries and Wages	$ 1,168,151	$ -	$ -	$ -	$ -	$ -	$ -	$ -	$ 1,168,151
10	Purchased Water	26,656	-	-	-	-	-	-	-	26,656
11	Purchased Power	601,635	-	-	-	-	-	-	-	601,635
12	Slude Removal Expense	234,893	3,410	-	-	-	-	-	-	238,303
13	Chemicals	357,986	-	-	-	-	-	-	-	357,986
14	Materials and Supplies	86,994	-	-	-	-	-	-	-	86,994
15	Management Services - US Liberty Water	1,469,058	-	(8,420)	(23,978)	-	-	-	-	1,436,660
16	Management Services - Corporate	698,951	-	-	-	-	-	-	-	698,951
17	Outside Services - Accounting	2,161	-	-	-	-	-	-	-	2,161
18	Outside Services - Engineering	-	-	-	-	-	-	-	-	-
19	Outside Services- Other	222,303	-	-	-	-	-	-	-	222,303
20	Outside Services- Legal	25,746	-	-	-	-	-	-	-	25,746
21	Water Testing	57,735	(35,730)	-	-	-	-	-	-	22,005
22	Rents - Office	40,007	-	-	-	-	-	-	-	40,007
23	Equipment Rental	3,076	-	-	-	-	-	-	-	3,076
24	Transportation Expenses	26,465	-	-	-	-	-	-	-	26,465
25	Insurance - General Liability	57,823	-	-	-	-	-	-	-	57,823
26	Insurance - Vehicle	11,506	-	-	-	-	-	-	-	11,506
27	Reg. Comm. Exp. - Other	14,189	-	-	-	-	-	-	-	14,189
28	Reg. Comm. Exp. - Rate Case	74,200	-	-	-	-	-	-	-	74,200
29	Interest on Customer Deposits	-	-	-	-	5,346	-	-	-	5,346
30	Miscellaneous Expense	77,293	-	-	-	-	-	-	-	77,293
31	Bad Debt Expense	45,215	-	-	-	-	-	-	-	45,215
32	Depreciation and Amortization Expense	1,598,765	-	-	-	-	(13,337)	-	-	1,585,428
33	Property Taxes	576,026	-	-	-	-	-	(28,801)	-	547,225
34	Income Tax	1,013,153	-	-	-	-	-	-	40,600	1,053,753
35	**Total Operating Expenses**	$ 8,489,987	$ (32,320)	$ (8,420)	$ (23,978)	$ 5,346	$ (13,337)	$ (28,801)	$ 40,600	$ 8,429,079
36	**Operating Income (Loss)**	$ 1,871,616	$ 32,320	$ 8,420	$ 23,978	$ (5,346)	$ 13,337	$ 28,801	$ (40,600)	$ 1,932,524

Litchfield Park Service Company - Wastewater Division
Docket Nos. W-01428A-13-0043 and SW-01428A-13-0042
Test Year Ended: December 31, 2012

Schedule DWC-WW18

OPERATING INCOME ADJUSTMENT NO. 1 - WATER TESTING EXPENSE

LINE NO.	DESCRIPTION	[A] COMPANY PROPOSED	[B] STAFF ADJUSTMENTS	[C] STAFF[1] RECOMMENDED
1	Sludge Removal Expense	$ 234,893	$ 3,410	$ 238,303
2				
3	Water Testing Expense	$ 57,735	$ (35,730)	$ 22,005

[1] Amounts may not reflect other adjustments.

REFERENCES:
Column [A]: Company Filing
Column [B]: Testimony DWC
Column [C]: Column [A] + Column [B]

Litchfield Park Service Company - Wastewater Division
Docket Nos. W-01428A-13-0043 and SW-01428A-13-0042
Test Year Ended: December 31, 2012

Schedule DWC-WW19

OPERATING INCOME ADJUSTMENT NO. 2 - CORPORATE EXPENSE TRUE-UP

LINE NO.	DESCRIPTION	[A] COMPANY PROPOSED	[B] STAFF ADJUSTMENTS	[C] STAFF[1] RECOMMENDED
1	Management Services - US Liberty Water	$ 1,469,058	$ (8,420)	$ 62,478

Staff's Calculation			
Accrual Adjustment	$ 29,297		
Allocated to Water	28.74%	$	8,420
Allocated to Wastewater	26.87%	$	7,872

[1] Amounts may not reflect other adjustments.

REFERENCES:
Column [A]: Company Filing
Column [B]: Testimony DWC
Column [C]: Column [A] + Column [B]

Litchfield Park Service Company - Wastewater Division
Docket Nos. W-01428A-13-0043 and SW-01428A-13-0042
Test Year Ended: December 31, 2012

Schedule DWC-WW20

OPERATING INCOME ADJUSTMENT NO. 3 - CORPORATE ALLOCATION EXPENSE

LINE NO.	DESCRIPTION	[A] COMPANY PROPOSED	[B] STAFF ADJUSTMENTS	[C] STAFF RECOMMENDED
1	Management Services - US Liberty Water	$ 1,469,058	$ (23,978)	$ 62,478

[1] Amounts may not reflect other adjustments.

REFERENCES:
Column [A]: Company Filing
Column [B]: Testimony DWC
Column [C]: Column [A] + Column [B]

Litchfield Park Service Company - Wastewater Division
Docket Nos. W-01428A-13-0043 and SW-01428A-13-0042
Test Year Ended: December 31, 2012

Schedule DWC-WW21

OPERATING INCOME ADJUSTMENT NO. 4 - INTEREST ON CUSTOMER DEPOSITS

LINE NO.	DESCRIPTION	[A] COMPANY PROPOSED	[B] STAFF ADJUSTMENTS	[C] STAFF[1] RECOMMENDED
1	Interest on Customer Deposits	$ -	$ 5,346	$ 5,346

Staff's Calculation	
Allocated to Water	$ 5,346
Allocated to Wastewater	5,931
Total	$ 11,277

[1] Amounts may not reflect other adjustments.

REFERENCES:
Column [A]: Company Filing
Column [B]: Testimony DWC
Column [C]: Column [A] + Column [B]

Litchfield Park Service Company - Wastewater Division
Docket Nos. W-01428A-13-0043 and SW-01428A-13-0042
Test Year Ended: December 31, 2012

Schedule DWC-WW22

OPERATING INCOME ADJUSTMENT NO. 5 - DEPRECIATION EXPENSE ON TEST YEAR PLANT

LINE NO.	ACCT NO.	DESCRIPTION	[A] PLANT In SERVICE Per Staff	[B] NonDepreciable or Fully Depreciated PLANT	[C] DEPRECIABLE PLANT (Col A - Col B)	[D] DEPRECIATION RATE	[E] DEPRECIATION EXPENSE (Col C x Col D)
1	351	Organization	$ -	$ 100	$ (100)	0.00%	$ -
2	352	Franchises	$ -	$ -	$ -	0.00%	$ -
3	353	Land and Land Rights	$ 1,835,956	$ 1,284,595	$ 551,361	0.00%	$ -
4	354	Structures and Improvements	$ 23,768,875	$ -	$ 23,768,875	3.33%	$ 791,504
5	355	Power Generation Equipment	$ 602,932	$ -	$ 602,932	5.00%	$ 30,147
6	360	Collection Services - Force	$ 1,162,597	$ -	$ 1,162,597	2.00%	$ 23,252
7	361	Collection Services - Gravity	$ 31,928,244	$ -	$ 31,928,244	2.00%	$ 638,565
8	362	Special Collecting Structures	$ -	$ -	$ -	2.00%	$ -
9	363	Services to Customers	$ 76,190	$ -	$ 76,190	2.00%	$ 1,524
10	364	Flow Measuring Devices	$ 46,210	$ -	$ 46,210	10.00%	$ 4,621
11	365	Flow Measuring Installations	$ 36,618	$ -	$ 36,618	2.00%	$ 732
12	366	Reuse Services	$ 4,057,660	$ -	$ 4,057,660	2.00%	$ 81,153
13	367	Reuse Meters and Installations	$ 44,753	$ -	$ 44,753	8.33%	$ 3,728
14	370	Receiving Wells	$ 860,393	$ -	$ 860,393	3.33%	$ 28,651
15	371	Effluent Pumping Equipment	$ 861,151	$ -	$ 861,151	12.50%	$ 107,644
16	374	Reuse Trans. And Dist. System	$ 62,286	$ -	$ 62,286	2.50%	$ 1,557
17	375	Resuse T&D	$ 420,334	$ -	$ 420,334	2.50%	$ 10,508
18	380	Treatment and Disposal Equipment	$ 5,356,062	$ -	$ 5,356,062	5.00%	$ 267,803
19	381	Plant Sewers	$ 47,802	$ -	$ 47,802	5.00%	$ 2,390
20	382	Outfall Sewer Lines	$ 343,681	$ -	$ 343,681	3.33%	$ 11,445
21	389	Other Plant & Misc. Equipment	$ 827,629	$ -	$ 827,629	6.67%	$ 55,203
22	390	Office Furniture & Equipment	$ 275,740	$ -	$ 275,740	6.67%	$ 18,392
23	391	Transportation Equipment	$ 33,497	$ -	$ 33,497	20.00%	$ 6,699
24	392	Stores Equipment	$ 8,968	$ -	$ 8,968	4.00%	$ 359
25	393	Tools, Shop & Garage Equipment	$ 129,950	$ -	$ 129,950	5.00%	$ 6,497
26	394	Labratory Equipment	$ 187,184	$ -	$ 187,184	10.00%	$ 18,718
27	395	Power Operated Equipment	$ 6,605	$ -	$ 6,605	5.00%	$ 330
28	396	Communication Equipment	$ 415,441	$ -	$ 415,441	10.00%	$ 41,544
29	398	Other Tangible Plant	$ -	$ -	$ -	10.00%	$ -
30		Total Plant	$ 73,396,759	$ 1,284,695	$ 72,112,064		$ 2,152,967
31							
32	Plus: Post Test Year Plant						
33	380	Treatment and Disposal Equipment	$ 700,000	$ -	$ 700,000	5.00%	$ -
37							
39	Less: Amortization of Contributions						
40	361	Collection Sewers Gravity	$ 24,892,778			2.00%	$ (497,856)
41	363	Customer Services	$ 3,484,137			2.00%	$ (69,683)
45			$ 28,376,915				$ (567,538)
46							
47		Total Depreciation Expense					$ 1,585,428
48							
49		Depreciation Expense - Company					$ 1,598,765
50							
51		Staff's Adjustment to Depreciation Expense					$ (13,337)

References:
Column [A]: Schedule DWC-WW16
Column [B]: From Column [A]
Column [C]: Column [A] - Column [B]
Column [D]: Engineering Staff Report
Column [E]: Column [C] x Column [D]

Litchfield Park Service Company - Wastewater Division
Docket Nos. W-01428A-13-0043 and SW-01428A-13-0042
Test Year Ended: December 31, 2012

Schedule DWC-WW23

OPERATING INCOME ADJUSTMENT NO. 6 - PROPERTY TAX EXPENSE

LINE NO.	Property Tax Calculation	[A] STAFF AS ADJUSTED	[B] STAFF RECOMMENDED
1	Staff Adjusted Test Year Revenues	$ 10,361,603	$ 10,361,603
2	Weight Factor	2	2
3	Subtotal (Line 1 * Line 2)	20,723,206	$ 20,723,206
4	Staff Recommended Revenue, Per Schedule DWC-W1	10,361,603	$ 10,303,654
5	Subtotal (Line 4 + Line 5)	31,084,809	31,026,860
6	Number of Years	3	3
7	Three Year Average (Line 5 / Line 6)	10,361,603	$ 10,342,287
8	Department of Revenue Mutilplier	2	2
9	Revenue Base Value (Line 7 * Line 8)	20,723,206	$ 20,684,573
10	Plus: 10% of CWIP -	-	-
11	Less: Net Book Value of Licensed Vehicles	50,681	$ 50,681
12	Full Cash Value (Line 9 + Line 10 - Line 11)	20,672,525	$ 20,633,892
13	Assessment Ratio	19.0%	19.0%
14	Assessment Value (Line 12 * Line 13)	3,927,780	$ 3,920,440
15	Composite Property Tax Rate (Per Company Schedule)	13.9322%	13.9322%
16			$ -
17	Staff Test Year Adjusted Property Tax (Line 14 * Line 15)	$ 547,225	
18	Company Proposed Property Tax	576,026	
19			
20	Staff Test Year Adjustment (Line 16-Line 17)	$ (28,801)	
21	Property Tax - Staff Recommended Revenue (Line 14 * Line 15)		$ 546,202
22	Staff Test Year Adjusted Property Tax Expense (Line 16)		$ 547,225
23	Increase in Property Tax Expense Due to Increase in Revenue Requirement		$ (1,023)
24			
25	Increase to Property Tax Expense		$ (1,023)
26	Increase in Revenue Requirement		(57,949)
27	Increase to Property Tax per Dollar Increase in Revenue (Line19/Line 20)		1.764740%

Litchfield Park Service Company - Wastewater Division
Docket Nos. W-01428A-13-0043 and SW-01428A-13-0042
Test Year Ended: December 31, 2012

Schedule DWC-WW24

OPERATING INCOME ADJUSTMENT NO. 7 - TEST YEAR INCOME TAXES

LINE NO.	DESCRIPTION		
1			
2			
3			
4	*Calculation of Income Tax:*		Test Year
5	Revenue (Schedule DWC-WW1)	$	10,361,603
6	Operating Expenses Excluding Income Taxes	$	7,375,325
7	Synchronized Interest (L17)	$	234,246
8	Arizona Taxable Income (L1 - L2 - L3)	$	2,752,031
9	Arizona State Income Tax Rate		6.5000%
10	Arizona Income Tax (L4 x L5)	$	178,882
11	Federal Taxable Income (L4 - L6)	$	2,573,149
12	Federal Tax on First Income Bracket ($1 - $50,000) @ 15%	$	7,500
13	Federal Tax on Second Income Bracket ($51,001 - $75,000) @ 25%	$	6,250
14	Federal Tax on Third Income Bracket ($75,001 - $100,000) @ 34%	$	8,500
15	Federal Tax on Fourth Income Bracket ($100,001 - $335,000) @ 39%	$	91,650
16	Federal Tax on Fifth Income Bracket ($335,001 -$10,000,000) @ 34%	$	760,971
17	Total Federal Income Tax	$	874,871
18	Combined Federal and State Income Tax (L44 + L51)	$	1,053,753
19			
20			
21	*Calculation of Interest Synchronization:*		
22	Rate Base (Schedule DWC-W4)	$	23,424,640
23	Weighted Average Cost of Debt		1.10%
24	Synchronized Interest (L16 x L17)	$	257,671
25			
26			
27	Income Tax - Per Staff	$	1,053,753
28	Income Tax - Per Company	$	1,013,153
29	**Staff Adjustment**	$	40,600

ATTACHMENTS

DATA RESPONSES

REFERENCED

LITCHFIELD PARK SERVICE COMPANY DBA LIBERTY UTILITIES
DOCKET NOS. W-01427A-13-0043 AND SW-01428A-13-0042
RESPONSE TO STAFF'S FIFTEENTH SET OF DATA REQUESTS

August 7, 2013

Response provided by:	Christopher D. Krygier
Title:	Utility Rates and Regulatory Manager
Company:	Litchfield Park Service Company dba Liberty Utilities
Address:	12725 W. Indian School Road, Suite D101 Avondale, AZ 85392

Company Response Number: JMM 15-1

Q. Capital Asset Additions – While reviewing the Company's plant invoices, Staff noted several invoices that were dated in 2006 and 2007, and posted to the Company's general ledger as additions in 2011. Please answer the following questions:

a. Are these invoices double posted? If no please explain.

b. Does the Company consider the presence of the late postings to reflect the possibility of internal control weaknesses?

c. Did the Company's external auditor(s) issue a separate report on the Company's internal controls for 2011? If so please provide Staff with a copy of this report.

RESPONSE:

a. No, the Company inadvertently omitted these invoices from its B-2 Schedules in the last rate case. The Company discovered a batch of invoices were not capitalized to utility plant in-service in the last rate case and therefore needed to be included in this rate case. As a consequence, the Company has not yet recovered a return on or off these investments.

b. No, while the Company is always looking to improve processes and procedures, it does not have internal control weaknesses.

c. Yes, at a minimum, the parent company's, Algonquin Power & Utilities Corporation, three most recent annual reports all contain statements by the KPMG, APUC's external auditors that the controls in place or the financial statements as presented are materially correct. The following are excerpts from the annual reports.

2012: Attached as "JMM 15-1(c) - (APUC Annual Report 2012)", KMPG states on page 71 "In our opinion, Algonquin Power & Utilities Corp. maintained, in all material respects, effective internal control over financial reporting as of December 31, 2012, based on criteria established in *Internal Control – Integrated Framework* issued by the Committee of Sponsoring Organizations of the Treadway Commission."

Two paragraphs later KPMG further elaborates "We also have audited, in accordance We also have audited, in accordance with Canadian generally accepted auditing standards and the standards of the Public Company Accounting Oversight Board (United States), the consolidated balance sheets of Algonquin Power & Utilities Corp. as of December 31, 2012 and December 31, 2011, and the related consolidated statements of operations, comprehensive income (loss), equity and cash flows for the years ended December 31, 2012 and December 31, 2011, and our report dated March 14, 2013 expressed an unqualified (unmodified) opinion on those consolidated financial statements."

2011: Furthermore, the 2011 Annual Report attached as "JMM 15-1 (c) - (APUC Annual Report 2011)" states on page 68 "In our opinion, the consolidated financial statements present fairly, in all material respects, the consolidated financial position of Algonquin Power & Utilities Corp. as at December 31, 2011 and December 31, 2010, and its consolidated results of operations and its consolidated cash flows for the years ended December 31, 2011 and December 31, 2010 in accordance with U.S. generally accepted accounting principles."

2010: Finally, "JMM 15-1(c) - (APUC Annual Report 2010)"contains the 2010 Annual Report: "In our opinion, the consolidated financial statements present fairly, in all material respects, the consolidated financial position of Algonquin Power & Utilities Corp. as at December 31, 2010 and 2009 and the consolidated results of its operations and its consolidated cash flows for the two years then ended in accordance with Canadian generally accepted accounting principles."

EXHIBIT
S-7
ADMITTED

BEFORE THE ARIZONA CORPORATION COMMISSION

BOB STUMP
Chairman
GARY PIERCE
Commissioner
BRENDA BURNS
Commissioner
BOB BURNS
Commissioner
SUSAN BITTER SMITH
Commissioner

IN THE MATTER OF THE APPLICATION OF LITCHFIELD PARK SERVICE COMPANY, AN ARIZONA CORPORATION, FOR A DETERMINATION OF THE FAIR VALUE OF ITS UTILITY PLANTS AND PROPERTY AND FOR INCREASES IN ITS WASTEWATER RATES AND CHARGES BASED THEREON FOR UTILITY SERVICE.	)	DOCKET NO. SW-01427A-13-0042
IN THE MATTER OF THE APPLICATION OF LITCHFIELD PARK SERVICE COMPANY, AN ARIZONA CORPORATION, FOR A DETERMINATION OF THE FAIR VALUE OF ITS UTILITY PLANTS AND PROPERTY AND FOR INCREASES IN ITS WATER RATES AND CHARGES BASED THEREON FOR UTILITY SERVICE.	)	DOCKET NO. W-01428A-13-0043

SURREBUTTAL TESTIMONY OF

DARRON W. CARLSON

PUBLIC UTILITIES ANALYST MANAGER

UTILITIES DIVISION

ARIZONA CORPORATION COMMISSION

NOVEMBER 12, 2013

TABLE OF CONTENTS

Page

I. INTRODUCTION 1

II. BACKGROUND 1

III. PURPOSE FOR SURREBUTTAL TESTIMONY 2

IV. RESPONSE TO COMPANY WITNESS, MR. CHRISTOPHER KRYGIER'S REBUTTAL TESTIMONY 2

V. RESPONSE TO COMPANY WITNESS, MR. THOMAS BOURASSA'S REBUTTAL TESTIMONY 3

V. STAFF'S SURREBUTTAL TESTIMONY ADJUSTMENTS 4

VI. RATE DESIGN 5

WATER SCHEDULES

DWC-W1	REVENUE REQUIREMENT
DWC-W2	GROSS REVENUE CONVERSION FACTOR
DWC-W3	RATE BASE - ORIGINAL COSTS
DWC-W4	SUMMARY OF ORIGINAL COST RATE BASE ADJUSTMENTS
DWC-W5	ORIGINAL COST RATE BASE ADJUSTMENT # 1 - COMPANY'S REBUTTAL ADJUSTMENTS
DWC-W6	ORIGINAL COST RATE BASE ADJUSTMENT # 2 - ACCUMULATED DEPRECIATION
DWC-W7	ORIGINAL COST RATE BASE ADJUSTMENT # 3 - TRUE-UP OF PLANT IN SERVICE ACCRUALS
DWC-W8	ORIGINAL COST RATE BASE ADJUSTMENT # 4 - PLANT ADDITIONS RECORDED IN WRONG YEARS
DWC-W9	ORIGINAL COST RATE BASE ADJUSTMENT # 5 - RECLASSIFICATION OF PLANT IN SERVICE
DWC-W10	ORIGINAL COST RATE BASE ADJUSTMENT # 6 - PLANT NOT USED AND USEFUL
DWC-W11	ORIGINAL COST RATE BASE ADJUSTMENT # 7 - REMOVAL OF DUPLICATE INVOICES
DWC-W12	ORIGINAL COST RATE BASE ADJUSTMENT # 8 - RETIREMENT OF TRANSPORTATION
DWC-W13	ORIGINAL COST RATE BASE ADJUSTMENT # 9 - RECALCULATION OF CONTRIBUTIONS IN AID OF CONSTRUCTION
DWC-W14	ORIGINAL COST RATE BASE ADJUSTMENT # 10 - CUSTOMER DEPOSITS
DWC-W15	ORIGINAL COST RATE BASE ADJUSTMENT # 11 - ACCUMULATED DEFERRED INCOME TAXES
DWC-W16	OPERATING INCOME STATEMENT - ADJUSTED TEST YEAR AND STAFF RECOMMENDED
DWC-W17	SUMMARY OF OPERTING INCOME STATEMENT ADJUSTMENTS - TEST YEAR
DWC-W18	OPERATING INCOME ADJUSTMENT # 1 - WATER TESTING EXPENSE

DWC-W19	OPERATING INCOME ADJUSTMENT # 2 - CORPORATE ALLOCATION ACCRUAL TRUE-UP
DWC-W20	OPERATING INCOME ADJUSTMENT # 3 - CORPORATE ALLOCATION EXPENSE
DWC-W21	OPERATING INCOME ADJUSTMENT # 4 - INTEREST ON CUSTOMER DEPOSITS
DWC-W22	OPERATING INCOME ADJUSTMENT # 5 - DEPRECIATION EXPENSE
DWC-W23	OPERATING INCOME ADJUSTMENT # 6 - PROPERTY TAX EXPENSE
DWC-W24	OPERATING INCOME ADJUSTMENT # 7 - TEST YEAR INCOME TAXES
DWC-W25	RATE DESIGN
DWC-W26	TYPICAL BILL ANALYSIS

WASTEWATER SCHEDULES

DWC-WW1	REVENUE REQUIREMENT
DWC-WW2	GROSS REVENUE CONVERSION FACTOR
DWC-WW3	RATE BASE - ORIGINAL COSTS
DWC-WW4	SUMMARY OF ORIGINAL COST RATE BASE ADJUSTMENTS
DWC-WW5	ORIGINAL COST RATE BASE ADJUSTMENT # 1 - POST TEST-YEAR PLANT
DWC-WW6	ORIGINAL COST RATE BASE ADJUSTMENT # 2 - NOT USED
DWC-WW7	ORIGINAL COST RATE BASE ADJUSTMENT # 3 - TRUE-UP OF PLANT IN SERVICE ACCRUALS
DWC-WW8	ORIGINAL COST RATE BASE ADJUSTMENT # 4 - PLANT ADDITIONS RECORDED IN WRONG YEARS
DWC-WW9	ORIGINAL COST RATE BASE ADJUSTMENT # 5 - RECLASSIFICATION OF PLANT IN SERVICE
DWC-WW10	ORIGINAL COST RATE BASE ADJUSTMENT # 6 - PLANT NOT USED AND USEFUL
DWC-WW11	ORIGINAL COST RATE BASE ADJUSTMENT # 7 - REMOVAL OF DUPLICATE INVOICES
DWC-WW12	ORIGINAL COST RATE BASE ADJUSTMENT # 8 - NOT USED
DWC-WW13	ORIGINAL COST RATE BASE ADJUSTMENT # 9 - RECALCUATION OF CONTRIBUTIONS IN AID OF CONSTRUCTION
DWC-WW14	ORIGINAL COST RATE BASE ADJUSTMENT # 10 - CUSTOMER DEPOSITS
DWC-WW15	ORIGINAL COST RATE BASE ADJUSTMENT # 11 - ACCUMULATED DEFERRED INCOME TAXES
DWC-WW16	OPERATING INCOME STATEMENT - ADJUSTED TEST YEAR AND STAFF RECOMMENDED
DWC-WW17	SUMMARY OF OPERTING INCOME STATEMENT ADJUSTMENTS - TEST YEAR
DWC-WW18	OPERATING INCOME ADJUSTMENT # 1 - WATER TESTING EXPENSE
DWC-WW19	OPERATING INCOME ADJUSTMENT # 2 - CORPORATE ALLOCATION ACCRUAL TRUE-UP
DWC-WW20	OPERATING INCOME ADJUSTMENT # 3 - CORPORATE ALLOCATION EXPENSE
DWC-WW21	OPERATING INCOME ADJUSTMENT # 4 - INTEREST ON CUSTOMER DEPOSITS
DWC-WW22	OPERATING INCOME ADJUSTMENT # 5 - DEPRECIATION EXPENSE
DWC-WW23	OPERATING INCOME ADJUSTMENT # 6 - PROPERTY TAX EXPENSE
DWC-WW24	OPERATING INCOME ADJUSTMENT # 7 - TEST YEAR INCOME TAXES
DWC-WW25	RATE DESIGN
DWC-WW26	TYPICAL BILL ANALYSIS

EXECUTIVE SUMMARY
LITCHFIELD PARK SERVICE COMPANY
DOCKET NOS. SW-01427A-13-0042 AND W-01427A-13-0043

Litchfield Park Service Company ("Company") is an Arizona "C" corporation. Its principal place of business is 12725 W. Indian School Road, Suite D-101, Avondale, Arizona. The Company is engaged in the business of providing water and wastewater utility services in its certificated areas in portions of Maricopa County, Arizona. The Company served approximately 16,800 water customers and 16,160 wastewater customers during the test year ended December 31, 2012.

Water Division

Staff made several adjustments to plant. The fair value rate base was altered but there was little change to Staff's recommended rates in its direct testimony.

Wastewater Division

Staff made several adjustments to plant and an adjustment to water testing expense. The fair value rate base was altered but, again, there was little change to Staff's recommended rates in its direct testimony.

I. INTRODUCTION

Q. Please state your name, occupation, and business address.

A. My name is Darron W. Carlson. I am a Public Utilities Analyst Manager employed by the Arizona Corporation Commission ("Commission") in the Utilities Division ("Staff"). My business address is 1200 West Washington Street, Phoenix, Arizona 85007.

Q. Are you the same Darron Carlson who previously filed direct testimony regarding the revenue requirements and direct testimony regarding rate design in this docket?

A. Yes, I am. I filed direct testimony regarding revenue requirements on September 26, 2013, and filed direct testimony regarding rate design on October 4, 2013.

II. BACKGROUND

Q. Please describe the operations of the applicant Litchfield Park Service Company ("LPSCO" or "Company").

A. LPSCO is an Arizona "C" corporation. Its principle place of business is 12725 West Indian School Road, Suite D-101, Avondale, Arizona. LPSCO is engaged in the business of providing water and wastewater utility services in its certificated areas in portions of Maricopa County, Arizona. The Company served approximately 16,800 water customers and 16,160 wastewater customers during the test year ended December 31, 2012.

Q. When were the Company's current rates approved?

A. The Company's current rates were approved in Decision No. 72026, dated December 10, 2010.

III. PURPOSE FOR SURREBUTTAL TESTIMONY

Q. What is the purpose of your surrebuttal testimony?

A. The purpose of my surrebuttal testimony is to respond, on behalf of Staff, to the Company's rebuttal testimony. I am responding to issues regarding rate base, revenue requirement, and rate design. Staff witness, Ms. Dorothy Hains will be responding on engineering and technical issues and Staff witness, Mr. John Cassidy will be responding on cost of capital issues.

Where Staff does not address a specific issue raised by the Company in its rebuttal testimonies, it should not be construed that Staff concedes the issue. Rather, if Staff does not address any specific issue in its surrebuttal testimony that is raised in rebuttal testimony, it relies on its direct testimony.

Additionally Staff is recommending some adjustments to its rate base in accordance with a supplemental data response filed by the Company on October 4, 2013, in further response to Residential Utility Consumer Office ("RUCO") data request 6.01. Staff had already filed its direct testimony. Further Staff is updating its recommended water testing expense for the Company's Wastewater Division as per Ms. Hains surrebuttal Engineering Report.

IV. RESPONSE TO COMPANY WITNESS, MR. CHRISTOPHER KRYGIER'S REBUTTAL TESTIMONY

Q. Please respond to Mr. Krygier's rebuttal testimony.

A. There is only one issue that Mr. Krygier brings up in his rebuttal testimony that requires a Staff response. Mr. Krygier complains that Staff has unfairly singled out the Company in recommending that it be required to respond to the Commission within 60 days of a Decision in this case as to how it will plan to deal with potential deferred income taxes

arising from lower state corporate income tax rates effective in 2014, and even lower rates beyond.

Q. Has Staff unfairly singled the Company out with its recommendation?

A. No, not at all. In fact, although it has been quite some time since corporate income tax rates have changed, Staff cited a specific previous case in its direct testimony. The Company is the first utility, that Staff is aware of, that is using the new lower state corporate income tax rates in its rate filing.

Q. Is Staff recommending that the Company perform unnecessary or burdensome tasks?

A. No not at all. The Company will need to keep track of any deferred income tax issues as a normal part of its bookkeeping. Staff is just recommending that the Company provide the Commission with a plan to deal with the potential refunding of deferred income taxes arising from new lower corporate income tax rates. This was required by the Commission when the federal corporate income tax rates were lowered by the Tax Reform Act of 1986. Staff continues to support its recommendation (DT page 34, lines 14 -18).

V. RESPONSE TO COMPANY WITNESS, MR. THOMAS BOURASSA'S REBUTTAL TESTIMONY

Q. Please respond to Mr. Bourassa's rebuttal testimony.

A. Mr. Bourassa does not really take any specific issue with Staff's positions except to say that he is unclear on various Staff calculations.

Q. Has Staff provided the Company with its work papers?

A. Yes, to the best of Staff's knowledge, all of Staff's work papers have already been sent to the Company. If anything specific cannot be located, Staff is willing to advise as to where in the work papers that information can be accessed.

V. STAFF'S SURREBUTTAL TESTIMONY ADJUSTMENTS

Q. Please describe Staff's surrebuttal testimony adjustments.

A. Staff's surrebuttal testimony adjustments are reflected as follows:

<u>Water Division</u>	
Plant adjustments	
Acct. no. 331 Transmission & Distribution Mains	$(2,859)
Acct. no. 341 Transportation Equipment	$(55,340)
Acct. no. 345 Power Operated Equipment	$18,003
Accumulated Depreciation adjustments	
Related to above plant adjustments	$(46,612)
Related to direct testimony plant adj. #6	$(308)
<u>Wastewater Division</u>	
Plant adjustments	
Acct. no. 389 Other Plant & Misc. Equipment	$6,193
Acct. no. 391 Transportation Equipment	$(7,110)
Accumulated Depreciation adjustment	
Related to above plant adjustments	$(5,406)
Water Testing Expense	
Altered per Staff rebuttal Engineering Report	$(23,347)

Q. How did these adjustments change Staff's recommendations between direct and surrebuttal testimony?

A. Staff's recommendations were altered as follows:

Water Division	Direct	Surrebuttal
Fair Value Rate Base	$33,119,464	$33,125,342
Required Revenue Increase	$1,074,737	$1,064,885
Revenue Requirement	$12,276,127	$12,266,275

Wastewater Division	Direct	Surrebuttal
Fair Value Rate Base	$23,424,640	$23,428,440
Required Revenue Decrease	$(57,949)	$(45,887)
Revenue Requirement	$10,303,654	$10,315,716

VI. RATE DESIGN

Q. How have the aforementioned adjustments altered Staff's rate design?

A. The aforementioned adjustments have altered Staff's recommended rate design only slightly. The only changes recommended by Staff over its direct testimony rate design is to decrease the residential monthly minimum charge by $0.10 from $10.00 to $9.90 for the Water Division and to increase the residential monthly flat rate by $0.05 from $38.78 to $38.83 for the Wastewater Division.

Q. Where can one see and compare the current, Company-proposed, and Staff-recommended rates?

A. All of these rates can be seen and compared on the attached Surrebuttal Schedules DWC-W25 and DWC-WW25.

Q. What is the effect of Staff's recommended rates on the typical residential customer?

A. Staff's recommended rates would decrease the monthly water bill for a typical residential customer using the median of 5,000 gallons by $1.37 (8.05 percent) from $17.02 to $15.65. See Schedule DWC-W26.

Staff's recommended rates would decrease the monthly wastewater bill for a typical residential customer by $0.16 (0.41 percent) from $38.99 to $38.83. See Schedule DWC-WW26.

Q. Does this conclude your surrebuttal testimony?

A. Yes, it does.

Litchfield Park Service Company - Water Division
Docket Nos. W-01428A-13-0043 and SW-01428A-13-0042
Test Year Ended: December 31, 2012

Surrebuttal Testimony of Darron W. Carlson

TABLE OF CONTENTS TO SURREBUTTAL SCHEDULES

SCH #	TITLE
DWC-W1	REVENUE REQUIREMENT
DWC-W2	GROSS REVENUE CONVERSION FACTOR
DWC-W3	RATE BASE - ORIGINAL COSTS
DWC-W4	SUMMARY OF ORIGINAL COST RATE BASE ADJUSTMENTS
DWC-W5	ORIGINAL COST RATE BASE ADJUSTMENT # 1 - COMPANY'S REBUTTAL ADJUSTMENTS
DWC-W6	ORIGINAL COST RATE BASE ADJUSTMENT # 2 - ACCUMULATED DEPRECIATION
DWC-W7	ORIGINAL COST RATE BASE ADJUSTMENT # 3 - TRUE-UP OF PLANT IN SERVICE ACCRUALS
DWC-W8	ORIGINAL COST RATE BASE ADJUSTMENT # 4 - PLANT ADDITIONS RECORDED IN WRONG YEARS
DWC-W9	ORIGINAL COST RATE BASE ADJUSTMENT # 5 - RECLASSIFICATION OF PLANT IN SERVICE
DWC-W10	ORIGINAL COST RATE BASE ADJUSTMENT # 6 - PLANT NOT USED AND USEFUL
DWC-W11	ORIGINAL COST RATE BASE ADJUSTMENT # 7 - REMOVAL OF DUPLICATE INVOICES
DWC-W12	ORIGINAL COST RATE BASE ADJUSTMENT # 8 - RETIREMENT OF TRANSPORTATION
DWC-W13	ORIGINAL COST RATE BASE ADJUSTMENT # 9 - RECALCULATION OF CONTRIBUTIONS IN AID OF CONSTRUCTION
DWC-W14	ORIGINAL COST RATE BASE ADJUSTMENT # 10 - CUSTOMER DEPOSITS
DWC-W15	ORIGINAL COST RATE BASE ADJUSTMENT # 11 - ACCUMULATED DEFERRED INCOME TAXES
DWC-W16	OPERATING INCOME STATEMENT - ADJUSTED TEST YEAR AND STAFF RECOMMENDED
DWC-W17	SUMMARY OF OPERTING INCOME STATEMENT ADJUSTMENTS - TEST YEAR
DWC-W18	OPERATING INCOME ADJUSTMENT # 1 - WATER TESTING EXPENSE
DWC-W19	OPERATING INCOME ADJUSTMENT # 2 - CORPORATE ALLOCATION ACCRUAL TRUE-UP
DWC-W20	OPERATING INCOME ADJUSTMENT # 3 - CORPORATE ALLOCATION EXPENSE
DWC-W21	OPERATING INCOME ADJUSTMENT # 4 - INTEREST ON CUSTOMER DEPOSITS
DWC-W22	OPERATING INCOME ADJUSTMENT # 5 - DEPRECIATION EXPENSE
DWC-W23	OPERATING INCOME ADJUSTMENT # 6 - PROPERTY TAX EXPENSE
DWC-W24	OPERATING INCOME ADJUSTMENT # 7 - TEST YEAR INCOME TAXES
DWC-W25	RATE DESIGN
DWC-W26	TYPICAL BILL ANALYSIS

Litchfield Park Service Company - Water Division
Docket Nos. W-01428A-13-0043 and SW-01428A-13-0042
Test Year Ended: December 31, 2012

Surrebuttal Schedule DWC-W1

REVENUE REQUIREMENT

LINE NO.	DESCRIPTION	(A) COMPANY FAIR VALUE	(B) STAFF FAIR VALUE
1	Adjusted Rate Base	$ 35,647,602	$ 33,125,342
2	Adjusted Operating Income (Loss)	$ 2,024,376	$ 2,036,449
3	Current Rate of Return (L2 / L1)	5.68%	6.15%
4	Required Rate of Return	9.50%	8.10%
5	Required Operating Income (L4 * L1)	$ 3,387,127	$ 2,683,153
6	Operating Income Deficiency (L5 - L2)	$ 1,362,751	$ 646,704
7	Gross Revenue Conversion Factor	1.6563	1.6466
8	Required Revenue Increase (L7 * L6)	$ 2,257,160	**$ 1,064,885**
9	Adjusted Test Year Revenue	$ 11,201,390	$ 11,201,390
10	Proposed Annual Revenue (L8 + L9)	$ 13,458,550	$ 12,266,275
11	Required Increase in Revenue (%)	20.15%	9.51%

References:
Column (A): Company Schedule A-1
Column (B): Staff Schedules DWC-W3 and DWC-W16

Litchfield Park Service Company - Water Division
Docket Nos. W-01428A-13-0043 and SW-01428A-13-0042
Test Year Ended: December 31, 2012

Surrebutal Schedule DWC-W2

GROSS REVENUE CONVERSION FACTOR

LINE NO.	DESCRIPTION	(A)	(B)	(C)	(D)
	Calculation of Gross Revenue Conversion Factor:				
1	Revenue	100.0000%			
2	Uncollecible Factor (Line 11)	0.0000%			
3	Revenues (L1 - L2)	100.0000%			
4	Combined Federal and State Income Tax and Property Tax Rate (Line 23)	39.2701%			
5	Subtotal (L3 - L4)	60.7299%			
6	**Revenue Conversion Factor (L1 / L5)**	1.646636			
	Calculation of Uncollecttible Factor:				
7	Unity	100.0000%			
8	Combined Federal and State Tax Rate (Line 23)	38.2900%			
9	One Minus Combined Income Tax Rate (L7 - L8)	61.7100%			
10	Uncollectible Rate	0.0000%			
11	Uncollectible Factor (L9 * L10)	0.0000%			
	Calculation of Effective Tax Rate:				
12	Operating Income Before Taxes (Arizona Taxable Income)	100.0000%			
13	Arizona State Income Tax Rate	6.5000%			
14	Federal Taxable Income (L12 - L13)	93.5000%			
15	Applicable Federal Income Tax Rate (Line 55)	34.0000%			
16	Effective Federal Income Tax Rate (L14 x L15)	31.7900%			
17	Combined Federal and State Income Tax Rate (L13 +L16)		38.2900%		
	Calculation of Effective Property Tax Factor				
18	Unity	100.0000%			
19	Combined Federal and State Income Tax Rate (L17)	38.2900%			
20	One Minus Combined Income Tax Rate (L18-L19)	61.7100%			
21	Property Tax Factor	1.5883%			
22	Effective Property Tax Factor (L20*L21)		0.9801%		
23	Combined Federal and State Income Tax and Property Tax Rate (L17+L22)			39.2701%	
24	Required Operating Income	$ 2,683,153			
25	AdjustedTest Year Operating Income (Loss)	2,036,449			
26	Required Increase in Operating Income (L24 - L25)		$ 646,704		
27	Income Taxes on Recommended Revenue (Col. [E], L52)	$ 1,459,313			
28	Income Taxes on Test Year Revenue (Col. [B], L52)	1,058,045			
29	Required Increase in Revenue to Provide for Income Taxes (L27 - L28)		401,269		
30	Recommended Revenue Requirement	$ 12,266,275			
31	Uncollectible Rate (Line 10)	0.0000%			
32	Uncollectible Expense on Recommended Revenue (L30*L31)	$ -			
33	Adjusted Test Year Uncollectible Expense	$ -			
34	Required Increase in Revenue to Provide for Uncollectible Exp. (L32-L33)		-		
35	Property Tax with Recommended Revenue	$ 548,085			
36	Property Tax on Test Year Revenue	531,171			
37	Increase in Property Tax Due to Increase in Revenue (L35-L36)		16,913		
38	Total Required Increase in Revenue (L26 + L29 + L34 + L37)		$ 1,064,885		

		Test Year		Staff Recommended
	Calculation of Income Tax:			
39	Revenue	$ 11,201,390	$ 1,064,885	$ 12,266,275
40	Operating Expenses Excluding Income Taxes	$ 8,106,896		$ 8,123,809
41	Synchronized Interest (L56)	$ 331,253		$ 331,253
42	Arizona Taxable Income (L39 - L40 - L41)	$ 2,763,240		$ 3,811,213
43	Arizona State Income Tax Rate	6.5000%		6.5000%
44	Arizona Income Tax (L42 x L43)	$ 179,611		$ 247,729
45	Federal Taxable Income (L42 - L44)	$ 2,583,630		$ 3,563,484
46	Federal Tax on First Income Bracket ($1 - $50,000) @ 15%	$ 7,500		$ 7,500
47	Federal Tax on Second Income Bracket ($51,001 - $75,000) @ 25%	$ 6,250		$ 6,250
48	Federal Tax on Third Income Bracket ($75,001 - $100,000) @ 34%	$ 8,500		$ 8,500
49	Federal Tax on Fourth Income Bracket ($100,001 - $335,000) @ 39%	$ 91,650		$ 91,650
50	Federal Tax on Fifth Income Bracket ($335,001 -$10,000,000) @ 34%	$ 764,534		$ 1,097,684
51	Total Federal Income Tax	$ 878,434		$ 1,211,584
52	Combined Federal and State Income Tax (L44 + L51)	$ 1,058,045		$ 1,459,313
53	Applicable Federal Income Tax Rate [Col. [E], L51 - Col. [B], L51] / [Col. [E], L45 - Col. [B], L45]			34.0000%
	Calculation of Interest Synchronization:			
54	Rate Base	$ 33,125,342		
55	Weighted Average Cost of Debt	1.0000%		
56	Synchronized Interest (L45 X L46)	$ 331,253		

Litchfield Park Service Company - Water Division
Docket Nos. W-01428A-13-0043 and SW-01428A-13-0042
Test Year Ended: December 31, 2012

Surrebuttal Schedule DWC-W3

RATE BASE - ORIGINAL COST

LINE NO.		(A) COMPANY AS FILED	(B) STAFF ADJUSTMENTS	(C) STAFF AS ADJUSTED
1	Plant in Service	$ 91,151,411	$ (284,396)	$ 90,867,015
2	Less: Accumulated Depreciation	16,514,086	2,461,398	18,975,484
3	Net Plant in Service	$ 74,637,325	$ (2,745,794)	$ 71,891,531
4				
5	*LESS:*			
6				
7	Contributions in Aid of Construction (CIAC)	$ 7,324,578	$ 101,234	$ 7,425,812
8	Less: Accumulated Amortization	1,489,772	(193,524)	$ 1,296,248
9	Net CIAC	5,834,806	294,758	$ 6,129,564
10				
11	Advances in Aid of Construction (AIAC)	30,374,274	-	30,374,274
12				
13	Customer Meter Deposits	1,271,802	-	1,271,802
14	Customer Deposits	140,147	7,514	147,661
15	Deferred Income Tax Credits	1,459,075	(525,120)	933,955
16				
17				
18	*ADD:*			
19				
20				
21	Deferred Regulatory Assets TCE Plume	90,381	686	91,067
22				
23	Deffered Regulatory Assets	-	-	-
24				
25				
26	**Original Cost Rate Base**	$ 35,647,602	$ (2,522,260)	$ 33,125,342

References:
Column [A]: Company as Filed
Column [B]: Schedule DWC-W4
Column (C): Column (A) + Column (B)

Litchfield Park Service Company - Water Division
Docket Nos. W-01428A-13-0043 and SW-01428A-13-0042
Test Year Ended: December 31, 2012

SUMMARY OF ORIGINAL COST RATE BASE ADJUSTMENTS

LINE NO.	ACCT. NO.	DESCRIPTION	[A] COMPANY AS FILED	[B] ADJ #1 Not Used Ref: Sch JMM-W5	[C] ADJ #2 Accumulated Depreciation Ref: Sch JMM-W6	[D] ADJ #3 True-Up of Accruals Ref: Sch JMM-W7	[E] ADJ #4 Plant Addtions Recorded in Wrong Years Ref: Sch JMM-W8	[F] ADJ #5 Reclassification of Plant Ref: Sch JMM-W9	[G] ADJ #6 Plant Not Used and Useful Ref: Sch JMM-W10
		PLANT IN SERVICE:							
1	301	Organization Cost	$ 21,100	$ -	$ -	$ -	$ -	$ -	$ -
2	302	Franchise Cost	-	-	-	-	-	-	-
3	303	Land and Land Rights	1,456,278	-	-	-	-	-	(6,000)
4	304	Structures and Improvements	28,000,916	-	-	(178,617)	-	(2,776,772)	(6,156)
5	305	Collecting and Impounding Res.	-	-	-	-	-	-	-
6	306	Lake River and Other Intakes	-	-	-	-	-	-	-
7	307	Wells and Springs	3,097,345	-	-	(18,108)	-	134,878	-
8	308	Infiltration Galleries and Tunnels	-	-	-	-	-	-	-
9	309	Supply Mains	-	-	-	-	-	-	-
10	310	Power Generation Equipment	207,020	-	-	-	-	18,111	-
11	311	Electric Pumping Equipment	897,792	-	-	-	-	(16,947)	-
12	320.1	Water Treatment Plant	1,696,759	-	-	-	-	1,728,635	
13	320.2	Water Treatment Equipment	-	-	-	-	-	-	
14	330.1	Storage Tanks	492,176	-	-	-	-	901,841	-
15	331	Transmission and Distribution Mains	40,259,045	(2,859)	-	-	-	-	-
16	333	Services	5,350,963	-	-	-	-	-	
17	334	Meters	4,759,560	-	-	-	-	-	
18	335	Hydrants	3,304,755	-	-	-	-	-	-
19	336	Backflow Prevention Devices	38,387	-	-	-	-	-	-
20	339	Other Plant and Miscellaneous Equipment	259,531	-	-	-	-	-	-
21	340	Office Furniture and Fixtures	651,098	-	-	-	-	-	-
22	340.1	Computer and Software	-				-	7,995	
23	341	Transportation Equipment	307,592	(55,340)	-	-	-	-	-
24	342	Stores Equipment	37,143	-	-	-	-	-	-
25	343	Tools and Work Equipment	47,434	-	-	-	-	-	
26	344	Laboratory Equipment	5,803	-	-	-	-	-	-
27	345	Power Operated Equipment	-	18,003	-	-	-	-	-
28	346	Communications Equipment	128,402	-	-	-	-	-	-
29	347	Miscellaneous Equipment	-	-	-	-	-	-	-
30	348	Other Tangible Plant	132,312	-	-	-	-	(9,897)	-
31		Total Plant in Service - Sub Total	91,151,411	-	-	-	-	-	-
32			-	-					
33		Total Plant in Service	$ 91,151,411	$ (40,196)	$ -	$ (196,725)	$ -	$ (12,156)	$ (12,156)
34		Less: Accumulated Depreciation	16,514,086	(46,612)	2,454,801	-	99,151	(27,948)	(308)
35			-	-	-	-		-	-
36		Net Plant in Service	$ 74,637,325	$ 6,416	$ (2,454,801)	$ (196,725)	$ (99,151)	$ 15,792	$ (11,848)
37									
38		*LESS:*							
39		Contributions in Aid of Construction (CIAC)	$ 7,324,578	$ -	$ -	$ -	$ -	$ -	$ -
40		Less: Accumulated Amortization	1,489,772	-	-	-	-	-	-
41		Net CIAC (L25 - L26)	5,834,806	-	-	-	-	-	-
42		Advances in Aid of Construction (AIAC)	30,374,274	-	-	-	-	-	-
43		Customer Meter Deposits	1,271,802	-	-	-	-	-	-
44		Customer Deposits	140,147						
45		Deferred Income Taxes	1,459,075	-	-	-	-	-	-
46			-	-					
47									
48		*ADD:*							
49		Deferred Regulatory Assets TCE Plume	90,381	686	-	-	-	-	-
50		Deffered Regulatory Assets	-	-	-	-	-	-	-
51									
52		**Original Cost Rate Base**	$ 35,647,602	$ 7,102	$ (2,454,801)	$ (196,725)	$ (99,151)	$ 15,792	$ (11,848)
53									

[H] ADJ #7 Duplicate Invoices Ref: Sch JMM-W11	[I] ADJ #8 Retirement of Transportation Equip Ref: Sch JMM-W12	[J] ADJ #9 Recalculation of CIAC Ref: Sch JMM-W13	[K] ADJ #10 Customer Deposits Ref: Sch JMM-W14	[L] ADJ #11 ADIT Ref: Sch JMM-W15	[M] STAFF ADJUSTED
$ -	$ -	$ -	$ -	$ -	$ 21,100
-	-	-	-	-	-
-	-	-	-	-	1,450,278
(3,000)	-	-	-	-	25,036,371
-	-	-	-	-	-
-	-	-	-	-	-
-	-	-	-	-	3,214,115
-	-	-	-	-	-
-	-	-	-	-	-
-	-	-	-	-	225,131
-	-	-	-	-	880,845
-	-	-	-	-	3,425,394
					-
-	-	-	-	-	1,394,017
-	-	-	-	-	40,256,186
					5,350,963
					4,759,560
(2,608)	-	-	-	-	3,302,147
-	-	-	-	-	38,387
-	-	-	-	-	259,531
-	-	-	-	-	651,098
					7,995
-	(17,555)	-	-	-	234,697
-	-	-	-	-	37,143
					47,434
-	-	-	-	-	5,803
-	-	-	-	-	18,003
-	-	-	-	-	128,402
-	-	-	-	-	-
-	-	-	-	-	122,415
-	-	-	-	-	90,867,015
-	-	-	-	-	-
$ (5,608)	$ (17,555)	$ -	$ -	$ -	$ 90,867,015
(130)	(17,555)	-	-	-	18,975,484
-	-	-	-	-	-
$ (5,477)	$ -	$ -	$ -	$ -	$ 71,891,531
$ -	$ -	$ 101,234	$ -	$ -	$ 7,425,812
-	-	(193,524)	-	-	$ 1,296,248
-	-	294,758	-	-	6,129,564
-	-	-	-	-	30,374,274
-	-	-	-	-	1,271,802
			7,514		147,661
-	-	-	-	(525,120)	933,955
					-
					-
					-
-	-	-		-	91,067
-	-	-	-	-	-
$ (5,477)	$ -	$ (294,758)	$ (7,514)	$ 525,120	$ 33,125,342

Litchfield Park Service Company - Water Division
Docket Nos. W-01428A-13-0043 and SW-01428A-13-0042
Test Year Ended: December 31, 2012

Surrebuttal Schedule DWC-W5

RATE BASE ADJUSTMENT NO. 1 - COMPANY'S REBUTTAL ADJUSTMENTS

LINE NO.	ACCT NO.	DESCRIPTION	[A] COMPANY PROPOSED	[B] STAFF ADJUSTMENTS	[C] STAFF[1] RECOMMENDED
16	331	Transmission and Distribution Mains	$ 40,259,045	$ (2,859)	$ 40,256,186
24	341	Transportation Equipment	$ 307,592	$ (55,340)	$ 252,252
28	345	Power Operated Equipment	-0-	$ 18,003	$ 18,003
50	N/A	Deferred Regulatory Asset - TCE Plume	$ 90,381	$ 686	$ 91,067
		Totals:	$ 40,657,018	$ (39,510)	$ 40,617,508

[1] Amounts may not reflect other adjustments.

The first three adjustments above were made by the Company, after Staff Direct Testimony was filed, in response to RUCO Data Request 6.01 Supplemental. These reflect additional unrecorded retirements and reclassifications, which also include adjustments to two wastewater plant accounts (#389 and #391) which will be reflected in the wastewater schedules.

The fourth adjustment should have been recognized in Staff's Direct Testimony as Company Proposed.

REFERENCES:
Column [A]: Company Filing
Column [B]: Testimony DWC
Column [C]: Column [A] + Column [B]

Litchfield Park Service Company - Water Division
Docket Nos. W-01428A-13-0043 and SW-01428A-13-0042
Test Year Ended: December 31, 2012

Surrebuttal Schedule DWC-W6

RATE BASE ADJUSTMENT NO. 2 - ACCUMULATED DEPRECIATION

LINE NO.	ACCT NO.	DESCRIPTION	[A] COMPANY PROPOSED	[B] STAFF ADJUSTMENTS	[C] STAFF[1] RECOMMENDED
1		Accumulated Depreciation	$ 16,514,086	$ 2,454,801	18,968,887

[1] Amounts may not reflect other adjustments.

REFERENCES:
Column [A]: Company Filing
Column [B]: Testimony DWC
Column [C]: Column [A] + Column [B]

Litchfield Park Service Company - Water Division
Docket Nos. W-01428A-13-0043 and SW-01428A-13-0042
Test Year Ended: December 31, 2012

Surrebuttal Schedule DWC-W7

RATE BASE ADJUSTMENT NO. 3 - TRUE-UP OF PLANT IN SERVICE ACCRUALS

LINE NO.	ACCT NO.	DESCRIPTION	[A] COMPANY PROPOSED	[B] STAFF ADJUSTMENTS	[C] STAFF[1] RECOMMENDED
1	304	Structures and Improvements	$ 28,000,916	$ (178,617)	$ 27,822,299
2	307	Wells and Springs	3,097,345	(18,108)	3,079,237
			$ 31,098,261	$ (196,725)	$ 30,901,536

[1] Amounts may not reflect other adjustments.

REFERENCES:
Column [A]: Company Filing
Column [B]: Testimony DWC
Column [C]: Column [A] + Column [B]

Litchfield Park Service Company - Water Division
Docket Nos. W-01428A-13-0043 and SW-01428A-13-0042
Test Year Ended: December 31, 2012

Surrebuttal Schedule DWC-W8

RATE BASE ADJUSTMENT NO. 4 - PLANT ADDITIONS RECORDED IN WRONG YEARS

LINE NO.	ACCT NO.	DESCRIPTION	[A] COMPANY PROPOSED	[B] STAFF ADJUSTMENTS	[C] STAFF[1] RECOMMENDED
1		Accumulated Depreciation	$ 16,514,086	$ 99,151	$ 16,613,237

[1] Amounts may not reflect other adjustments.

REFERENCES:
Column [A]: Company Filing
Column [B]: Testimony DWC
Column [C]: Column [A] + Column [B]

Litchfield Park Service Company - Water Division
Docket Nos. W-01428A-13-0043 and SW-01428A-13-0042
Test Year Ended: December 31, 2012

Surrebuttal Schedule DWC-W9

RATE BASE ADJUSTMENT NO. 5 - RECLASSIFICATION OF PLANT

LINE NO.	ACCT NO.	DESCRIPTION	[A] COMPANY PROPOSED	[B] STAFF ADJUSTMENTS	[C] STAFF[1] RECOMMENDED
1	304	Structure and Improvement	$ 28,000,916	$ (2,776,772)	$ 25,224,144
2	311	Pumping Equipment	897,792	(16,947)	880,845
3	348	Other Tangible Plant	132,312	(9,897)	122,415
4	307	Wells and Springs	3,097,345	134,878	3,232,223
5	310	Power Generation	207,020	18,111	225,131
6	320.1	Water Treatment Plant	1,696,759	1,728,635	3,425,394
7	330.1	Storage Tanks	492,176	901,841	1,394,017
8	340.1	Computer Software	-	7,995	7,995
9		Total	$ 34,524,320	$ (12,156)	$ 34,512,164
10					
11		Accumulated Depreciation	$ 16,514,086	$ (27,948)	16,486,138

				PIS Adjustment	Years (1/2 Conv,)	Depr Rate	A/D Adjustment
14	Staff's Removal of Plant and Accumulated Depreciation						
15	2009	304	Structures and Improvment	$ (1,036,948)	3.5	3.33%	$ (120,856)
16	2010	304	Structures and Improvment	(1,245,500)	2.5	3.33%	(103,688)
17	2010	348	Other Tangible Plant	(9,897)	2.5	10.00%	(2,474)
18	2011	304	Structures and Improvment	(494,324)	1.5	3.33%	(24,691)
19	2011	311	Pumping Equipment	(68,958)	1.5	12.50%	(12,930)
20	Total Removal of Plant and Accumulated Depreciation			$ (2,855,627)			$ (264,639)
21							
22				PIS Adjustment	Years (1/2 Conv,)	Depr Rate	A/D Adjustment
23	Staff's Reclassification of Plant and Accumulated Depreciation						
24	2009	307	Well and Springs	$ 65,920	3.5	3.33%	$ 7,683
25	2009	311	Pumping Equipment	10,851	3.5	12.50%	4,747
26	2009	320.1	Water Treatment Plant	287,816	3.5	3.33%	33,545
27	2009	340.1	Computer Software	7,995	3.5	20.00%	5,597
28	2009	330.1	Storage Tanks	664,366	3.5	2.20%	51,156
29	2010	311	Pumping Equipment	13,620	2.5	12.50%	4,256
30	2010	320.1	Water Treatment Plant	1,215,221	2.5	3.30%	100,256
31	2010	330.1	Storage Tanks	20,000	2.5	2.22%	1,110
32	2010	340	Office Furniture and Equip	6,555	2.5	6.67%	1,093
33	2011	307	Well and Springs	68,958	1.5	3.33%	3,444
34	2011	310	Power Generation	18,111	1.5	5.00%	1,358
35	2011	311	Pumping Equipment	20,984	1.5	12.50%	3,935
36	2011	320.1	Water Treatment Plant	225,598	1.5	3.33%	11,269
37	2011	330.1	Storage Tanks	217,475	1.5	2.22%	7,242
38	Total Reclassification of Plant and Accumulated Depreciation			$ 2,843,470			$ 236,691
39							
40	Net decrease to accumulated depreciation						$ (27,948)

41

42 Note: Of the difference of $12,157 (I.e. $2,855,627 - $2,843,470) $6,000 is being reclassified to the Wastewater Division, and the remaining $6,156.34 is not used and useful.

[1] Amounts may not reflect other adjustments.

REFERENCES:
Column [A]: Company Filing
Column [B]: Testimony DWC
Column [C]: Column [A] + Column [B]

Litchfield Park Service Company - Water Division
Docket Nos. W-01428A-13-0043 and SW-01428A-13-0042
Test Year Ended: December 31, 2012

Surrebuttal Schedule DWC-W10

RATE BASE ADJUSTMENT NO. 6 - PLANT NOT USED AND USEFUL

LINE NO.	ACCT NO.	DESCRIPTION	[A] COMPANY PROPOSED	[B] STAFF ADJUSTMENTS	[C] STAFF[1] RECOMMENDED
1	303	Land and Land Rights	$ 14,565,278	$ (6,000)	$ 14,559,278
2	304	Structures and Improvements	$ 28,000,916	$ (6,156)	$ 27,994,760
		Totals:	$ 42,566,194	$ (12,156)	$ 42,554,038

[1] Amounts may not reflect other adjustments.

REFERENCES:
Column [A]: Company Filing
Column [B]: Testimony DWC
Column [C]: Column [A] + Column [B]

Litchfield Park Service Company - Water Division
Docket Nos. W-01428A-13-0043 and SW-01428A-13-0042
Test Year Ended: December 31, 2012

Surrebuttal Schedule DWC-W11

RATE BASE ADJUSTMENT NO. 7 - REMOVAL OF DUPLICATE INVOICES

LINE NO.	ACCT NO.	DESCRIPTION	[A] COMPANY PROPOSED	[B] STAFF ADJUSTMENTS	[C] STAFF[1] RECOMMENDED
1	304	Structures and Improvements	$ 28,000,916	$ (3,000)	$ 27,997,916
2	335	Hydrants	3,304,755	(2,608)	3,302,147
3		Total	$ 31,305,671	$ (5,608)	$ 31,300,063
4					
5		Accumulated Depreciation	$ 16,514,086	$ (130)	$ 16,513,956
6					
7			PIS	Years	Depr	A/D
8	Staff's Calculation		Adjustment	(1/2 Conv.)	Rate	Adjustment
9	335	Hydrants	$ (2,608)	2.5	2.00%	$ (130)
10						

[1] Amounts may not reflect other adjustments.

REFERENCES:
Column [A]: Company Filing
Column [B]: Testimony DWC
Column [C]: Column [A] + Column [B]

Litchfield Park Service Company - Water Division
Docket Nos. W-01428A-13-0043 and SW-01428A-13-0042
Test Year Ended: December 31, 2012

Surrebuttal Schedule DWC-W12

RATE BASE ADJUSTMENT NO. 8 RETIREMENT OF TRANSPORTATION EQUIPMENT

LINE NO.	ACCT NO.	DESCRIPTION	[A] COMPANY PROPOSED	[B] STAFF ADJUSTMENTS	[C] STAFF[1] RECOMMENDED
1	341	Transportation Equipment	$ 307,592	$ (17,555)	$ 290,037
2					
3		Accumulated Depreciation	$ 16,514,086	$ (17,555)	$ 16,496,531

[1] Amounts may not reflect other adjustments.

REFERENCES:
Column [A]: Company Filing
Column [B]: Testimony DWC
Column [C]: Column [A] + Column [B]

Litchfield Park Service Company - Water Division
Docket Nos. W-01428A-13-0043 and SW-01428A-13-0042
Test Year Ended: December 31, 2012

Surrebuttal Schedule DWC-W13

RATE BASE ADJUSTMENT NO. 9 RECALCULATION OF CONTRIBUTIONS IN AID OF CONSTRUCTION

LINE NO.	ACCT NO.	DESCRIPTION	[A] COMPANY PROPOSED	[B] STAFF ADJUSTMENTS	[C] STAFF[1] RECOMMENDED
1		Contributions in Aid of Construction	$ 7,324,578	$ 101,234	$ 7,425,812
2					
3		Amortization of Contributions in Aid of Construction	$ 1,489,772	$ (193,524)	$ 1,296,248

[1] Amounts may not reflect other adjustments.

REFERENCES:
Column [A]: Company Filing
Column [B]: Testimony DWC
Column [C]: Column [A] + Column [B]

Litchfield Park Service Company - Water Division
Docket Nos. W-01428A-13-0043 and SW-01428A-13-0042
Test Year Ended: December 31, 2012

Surrebuttal Schedule DWC-W14

RATE BASE ADJUSTMENT NO. 10 - CUSTOMER DEPOSITS

LINE NO.	ACCT NO.	DESCRIPTION	[A] COMPANY PROPOSED	[B] STAFF ADJUSTMENTS	[C] STAFF[1] RECOMMENDED
1		Customer Deposits	$ 140,147	$ 7,514	$ 147,661
2					
3		Staff Calculation:			
4		13th month average of customer deposits	$ 311,436		
5		December 31th amount	295,587		
6		Increase over December 31 test year amount	$ 15,849		
7					
8		Allocated to Water	$ 7,514		
9		Allocated to Wastewater	8,334		
10		Total	$ 15,849		

[1] Amounts may not reflect other adjustments.

REFERENCES:
Column [A]: Company Filing
Column [B]: Testimony DWC
Column [C]: Column [A] + Column [B]

Litchfield Park Service Company - Water Division
Docket Nos. W-01428A-13-0043 and SW-01428A-13-0042
Test Year Ended: December 31, 2012

Surrebuttal Schedule DWC-W15

RATE BASE ADJUSTMENT NO. 11 - ACCUMULATED DEFERRED INCOME TAXES

LINE NO.	ACCT NO.	DESCRIPTION	[A] COMPANY PROPOSED	[B] STAFF ADJUSTMENTS	[C] STAFF[1] RECOMMENDED
1		Deferred Income Taxes	$ 1,459,075	$ (525,120)	$ 933,955

[1] Amounts may not reflect other adjustments.

REFERENCES:
Column [A]: Company Filing
Column [B]: Testimony DWC
Column [C]: Column [A] + Column [B]

Litchfield Park Service Company - Water Division
Docket Nos. W-01428A-13-0043 and SW-01428A-13-0042
Test Year Ended: December 31, 2012

Surrebuttal Schedule DWC-W16

OPERATING INCOME STATEMENT - ADJUSTED TEST YEAR AND STAFF RECOMMENDED

LINE NO.	DESCRIPTION	[A] COMPANY ADJUSTED TEST YEAR AS FILED	[B] STAFF TEST YEAR ADJUSTMENTS	[C] STAFF TEST YEAR AS ADJUSTED	[D] STAFF PROPOSED CHANGES	[E] STAFF RECOMMENDED
1	*REVENUES:*					
2	Metered Water Sales	$ 10,965,667	$ -	$ 10,965,667	$ 1,064,885	$ 12,030,552
3	Water Sales-Unmetered	-	-	-	-	-
4	Other Operating Revenue	235,723	-	235,723	-	235,723
5	Intentionally Left Blank	-	-	-	-	-
6	**Total Operating Revenues**	$ 11,201,390	$ -	$ 11,201,390	$ 1,064,885	$ 12,266,275
7						
8	*OPERATING EXPENSES:*					
9	Salaries and Wages	$ 1,069,839	$ -	$ 1,069,839	$ -	$ 1,069,839
10	Purchased Water	2,615	-	2,615	-	2,615
11	Purchased Power	903,527	-	903,527	-	903,527
12	Fuel for Power Production	-	-	-	-	-
13	Chemicals	208,080	-	208,080	-	208,080
14	Repairs and Maintenance	91,139	-	91,139	-	91,139
15	Office Supplies and Expense	-	-	-	-	-
16	Management Services - US Liberty Water	1,260,835	(27,089)	1,233,746	-	1,233,746
17	Management Services - Corporate	781,023	-	781,023	-	781,023
18	Outside Services - Accounting	9,271	-	9,271	-	9,271
19	Outside Services - Other	103,412	-	103,412	-	103,412
20	Outside Servies - Legal	19,865	-	19,865	-	19,865
21	Water Testing	66,942	(4,464)	62,478	-	62,478
22	Rents Equipment	7,229	-	7,229	-	7,229
23	Transportation Expeneses	103,726	-	103,726	-	103,726
24	Insurance - General Liability	88,374	-	88,374	-	88,374
25	Insurance - Vehicle	20,825	-	20,825	-	20,825
26	Reg. Comm. Exp. - Other	19,721	-	19,721	-	19,721
27	Reg. Comm. Exp. - Rate Case	65,800	-	65,800	-	65,800
28	Interest on Customer Deposits	-	-	5,931	-	5,931
29	Miscellaneous Expenses	151,237	-	151,237	-	151,237
30	Bad Debt Expense	(76)	-	(76)	-	(76)
31	Depreciation and Amortization Expense	2,615,868	12,095	2,627,963	-	2,627,963
32	Property Taxes	559,128	(27,957)	531,171	16,913	548,085
33	Income Taxes	1,028,634	29,411	1,058,045	401,269	1,459,313
34	Intentionally Left Blank	-	-	-	-	-
35	**Total Operating Expenses**	$ 9,177,014	$ (18,004)	$ 9,164,941	$ 418,182	$ 9,583,123
36	**Operating Income (Loss)**	$ 2,024,376	$ 18,004	$ 2,036,449	$ 646,704	**$ 2,683,153**

References:
Column (A): Company Schedule C-1
Column (B): Schedule DWC-W17
Column (C): Column (A) + Column (B)
Column (D): Schedules DWC-W24 and DWC-W25
Column (E): Column (C) + Column (D)

Litchfield Park Service Company - Water Division
Docket Nos. W-01428A-13-0043 and SW-01428A-13-0042
Test Year Ended: December 31, 2012

SUMMARY OF OPERATING INCOME STATEMENT ADJUSTMENTS - TEST YEAR

LINE NO.	DESCRIPTION	[A] COMPANY AS FILED	[B] Water Testing Expense ADJ #1	[C] Corporate Allocation True-Up ADJ #2	[D] Corporate Allocation Expense ADJ #3	[E] Interest on Customer Deposts ADJ #4	[F] Depreciation Expense ADJ #5	[G] Property Tax Expense ADJ #6	[H] Income Tax Expense ADJ #7	[I] STAFF ADJUSTED
			Ref: Sch JMM-W18	Ref: Sch JMM-W19	Ref: Sch JMM-W20	Ref: Sch JMM-W21	Ref: Sch JMM-W22	Ref: Sch JMM-W23	Ref: Sch JMM-W24	
1	*REVENUES:*									
2	Metered Water Sales	$ 10,965,667	$ -	$ -	$ -	$ -	$ -	$ -	$ -	$ 10,965,667
3	Water Sales-Unmetered	-	-	-	-	-	-	-	-	-
4	Other Operating Revenue	235,723	-	-	-	-	-	-	-	235,723
5	Intentionally Left Blank	-	-	-	-	-	-	-	-	-
6	**Total Operating Revenues**	$ 11,201,390	$ -	$ -	$ -	$ -	$ -	$ -	$ -	$ 11,201,390
7										
8	*OPERATING EXPENSES:*									
9	Salaries and Wages	$ 1,069,839	$ -	$ -	$ -	$ -	$ -	$ -	$ -	$ 1,069,839
10	Purchased Water	2,615	-	-	-	-	-	-	-	2,615
11	Purchased Power	903,527	-	-	-	-	-	-	-	903,527
12	Fuel for Power Production	-	-	-	-	-	-	-	-	-
13	Chemicals	208,080	-	-	-	-	-	-	-	208,080
14	Repairs and Maintenance	91,139	-	-	-	-	-	-	-	91,139
15	Office Supplies and Expense	-	-	-	-	-	-	-	-	-
16	Management Services - US Liberty Water	1,260,835	-	(8,420)	(18,669)	-	-	-	-	1,233,746
17	Management Services - Corporate	781,023	-	-	-	-	-	-	-	781,023
18	Outside Services - Accounting	9,271	-	-	-	-	-	-	-	9,271
19	Outside Services - Other	103,412	-	-	-	-	-	-	-	103,412
20	Outside Servies - Legal	19,865	-	-	-	-	-	-	-	19,865
21	Water Testing	66,942	(4,464)	-	-	-	-	-	-	62,478
22	Rents Equipment	7,229	-	-	-	-	-	-	-	7,229
23	Transportation Expeneses	103,726	-	-	-	-	-	-	-	103,726
24	Insurance - General Liability	88,374	-	-	-	-	-	-	-	88,374
25	Insurance - Vehicle	20,825	-	-	-	-	-	-	-	20,825
26	Reg. Comm. Exp. - Other	19,721	-	-	-	-	-	-	-	19,721
27	Reg. Comm. Exp. - Rate Case	65,800	-	-	-	-	-	-	-	65,800
28	Interest on Customer Deposits	-	-	-	-	5,931	-	-	-	5,931
29	Miscellaneous Expenses	151,237	-	-	-	-	-	-	-	151,237
30	Bad Debt Expense	(76)	-	-	-	-	-	-	-	(76)
31	Depreciation and Amortization Expense	2,615,868	-	-	-	-	12,095	-	-	2,627,963
32	Property Taxes	559,128	-	-	-	-	-	(27,957)	-	531,171
33	Income Taxes	1,028,634	-	-	-	-	-	-	29,411	1,058,045
34	Intentionally Left Blank	-	-	-	-	-	-	-	-	-
35	**Total Operating Expenses**	$ 9,177,014	$ (4,464)	$ (8,420)	$ (18,669)	$ 5,931	$ 12,095	$ (27,957)	$ 29,411	$ 9,164,942
36	**Operating Income (Loss)**	$ 2,024,376	$ 4,464	$ 8,420	$ 18,669	$ (5,931)	$ (12,095)	$ 27,957	$ (29,411)	$ 2,036,448

Litchfield Park Service Company - Water Division
Docket Nos. W-01428A-13-0043 and SW-01428A-13-0042
Test Year Ended: December 31, 2012

Surrebuttal Schedule DWC-W18

OPERATING INCOME ADJUSTMENT NO. 1 - Water Testing

LINE NO.	DESCRIPTION	[A] COMPANY PROPOSED	[B] STAFF ADJUSTMENTS	[C] STAFF[1] RECOMMENDED
1	Water Testing	$ 66,942	$ (4,464)	$ 62,478

[1] Amounts may not reflect other adjustments.

REFERENCES:
Column [A]: Company Filing
Column [B]: Testimony DWC
Column [C]: Column [A] + Column [B]

Litchfield Park Service Company - Water Division
Docket Nos. W-01428A-13-0043 and SW-01428A-13-0042
Test Year Ended: December 31, 2012

Surrebuttal Schedule DWC-W19

OPERATING INCOME ADJUSTMENT NO. 2 - CORPORATE EXPENSE TRUE-UP

LINE NO.	DESCRIPTION	[A] COMPANY PROPOSED	[B] STAFF ADJUSTMENTS	[C] STAFF[1] RECOMMENDED
1	Management Services - US Liberty Water	$ 1,260,835	$ (8,420)	$ 1,252,415
2				
3				
4	Staff's Calculation			
5	Accrual Adjustment	$ 29,297		
6	Allocated to Water	28.74%	$ 8,420	
7	Allocated to Wastewater	26.87%	$ 7,872	

[1] Amounts may not reflect other adjustments.

REFERENCES:
Column [A]: Company Filing
Column [B]: Testimony DWC
Column [C]: Column [A] + Column [B]

Litchfield Park Service Company - Water Division
Docket Nos. W-01428A-13-0043 and SW-01428A-13-0042
Test Year Ended: December 31, 2012

Surrebuttal Schedule DWC-W20

OPERATING INCOME ADJUSTMENT NO. 3 - CORPORATE ALLOCATION EXPENSE

LINE NO.	DESCRIPTION	[A] COMPANY PROPOSED	[B] STAFF ADJUSTMENTS	[C] STAFF[1] RECOMMENDED
1	Management Services - US Liberty Water	$ 1,260,835	$ (18,669)	$ 1,242,166

[1] Amounts may not reflect other adjustments.

REFERENCES:
Column [A]: Company Filing
Column [B]: Testimony DWC
Column [C]: Column [A] + Column [B]

Litchfield Park Service Company - Water Division
Docket Nos. W-01428A-13-0043 and SW-01428A-13-0042
Test Year Ended: December 31, 2012

Surrebuttal Schedule DWC-W21

OPERATING INCOME ADJUSTMENT NO. 4 - INTEREST ON CUSTOMER DEPOSITS

LINE NO.	DESCRIPTION	[A] COMPANY PROPOSED	[B] STAFF ADJUSTMENTS	[C] STAFF[1] RECOMMENDED
1	Interest on Customer Deposits	$ -	$ 5,931	$ 5,931
2				
3	*Staff's Calculation*			
4	Allocated to Water		$ 5,346	
5	Allocated to Wastewater		5,931	
6	Total		$ 11,277	

[1] Amounts may not reflect other adjustments.

REFERENCES:
Column [A]: Company Filing
Column [B]: Testimony DWC
Column [C]: Column [A] + Column [B]

Litchfield Park Service Company - Water Division
Docket Nos. W-01428A-13-0043 and SW-01428A-13-0042
Test Year Ended: December 31, 2012

Surrebuttal Schedule DWC-W22

OPERATING INCOME ADJUSTMENT NO. 5 - DEPRECIATION EXPENSE ON TEST YEAR PLANT

LINE NO.	ACCT NO.	DESCRIPTION	[A] PLANT In SERVICE Per Staff	[B] NonDepreciable or Fully Depreciated PLANT	[C] DEPRECIABLE PLANT (Col A - Col B)	[D] DEPRECIATION RATE	[E] DEPRECIATION EXPENSE (Col C x Col D)
1	301	Organization Cost	$ 21,100	$ 21,100	$ -	0.00%	$ -
2	302	Franchise Cost	$ -	$ -	$ -	0.00%	$ -
3	303	Land and Land Rights	$ 1,450,278	$ 1,450,278	$ -	0.00%	$ -
4	304	Structures and Improvements	$ 25,036,371	$ -	$ 25,036,371	3.33%	$ 833,711
5	305	Collecting and Impounding Res.	$ -	$ -	$ -	2.50%	$ -
6	306	Lake River and Other Intakes	$ -	$ -	$ -	2.50%	$ -
7	307	Wells and Springs	$ 3,214,115	$ -	$ 3,214,115	3.33%	$ 107,030
8	308	Infiltration Galleries and Tunnels	$ -	$ -	$ -	6.67%	$ -
9	309	Supply Mains	$ -	$ -	$ -	2.00%	$ -
10	310	Power Generation Equipment	$ 225,131	$ -	$ 225,131	5.00%	$ 11,257
11	311	Electric Pumping Equipment	$ 880,845	$ -	$ 880,845	12.50%	$ 110,106
12	320	Water Treatment Equipment	$ 3,425,394	$ -	$ 3,425,394	3.33%	$ 114,066
13	320	Water Treatment Plant	$ -	$ -	$ -	3.33%	$ -
14	330	Distribution Reservoirs & Standpipe	$ 1,394,017	$ -	$ 1,394,017	2.22%	$ 30,947
15	331	Transmission and Distribution Mains	$ 40,256,186	$ -	$ 40,256,186	2.00%	$ 805,124
16	333	Services	$ 5,350,963	$ -	$ 5,350,963	3.33%	$ 178,187
17	334	Meters	$ 4,759,560	$ -	$ 4,759,560	8.33%	$ 396,471
18	335	Hydrants	$ 3,302,147	$ -	$ 3,302,147	2.00%	$ 66,043
19	336	Backflow Prevention Devices	$ 38,387	$ -	$ 38,387	6.67%	$ 2,560
20	339	Other Plant and Miscellaneous Equipment	$ 259,531	$ -	$ 259,531	6.67%	$ 17,311
21	340	Office Furniture and Fixtures	$ 651,098	$ -	$ 651,098	6.67%	$ 43,428
22	340.1	Computer and Software	$ 7,995	$ -	$ 7,995	20.00%	$ 1,599
23	341	Transportation Equipment	$ 234,697	$ -	$ 234,697	20.00%	$ 46,939
24	342	Stores Equipment	$ 37,143	$ -	$ 37,143	4.00%	$ 1,486
25	343	Tools and Work Equipment	$ 47,434	$ -	$ 47,434	5.00%	$ 2,372
26	344	Laboratory Equipment	$ 5,803	$ -	$ 5,803	10.00%	$ 580
27	345	Power Operated Equipment	$ 18,003	$ -	$ 18,003	5.00%	$ 900
28	346	Communications Equipment	$ 128,402	$ -	$ 128,402	10.00%	$ 12,840
29	347	Miscellaneous Equipment	$ -	$ -	$ -	10.00%	$ -
30	348	Other Tangible Plant	$ 122,415	$ -	$ 122,415	10.00%	$ 12,241
31		Total Plant	$ 90,867,015	$ 1,471,378	$ 89,395,637		$ 2,795,199
32							
33	Less: Amortization of Contributions						
34	307	Wells and Springs	$ 499,000			3.33%	$ (16,617)
35	311	Electric Pumping Equipment	$ 40,572			12.50%	$ (5,072)
36	331	Trans. and Dist. Mains	$ 5,893,218			2.00%	$ (117,864)
37	333	Services	$ 772,209			3.33%	$ (25,715)
38	334	Meters	$ 29,899			8.33%	$ -
39	335	Hydrants	$ 98,419			2.00%	$ (1,968)
40			$ 7,333,317				$ (167,236)
41							
42		Total Depreciation Expense					$ 2,627,963
43							
44		Depreciation Expense - Company					$ 2,615,868
45							
46		Staff's Adjustment to Depreciation Expense					$ 12,095

Fully Depreciated/Amortized

References:
Column [A]: Schedule DWC-W16
Column [B]: From Column [A]
Column [C]: Column [A] - Column [B]
Column [D]: Engineering Staff Report
Column [E]: Column [C] x Column [D]

Litchfield Park Service Company - Water Division
Docket Nos. W-01428A-13-0043 and SW-01428A-13-0042
Test Year Ended: December 31, 2012

Surrebuttal Schedule DWC-W23

OPERATING INCOME ADJUSTMENT NO. 6 - PROPERTY TAX EXPENSE

LINE NO.	Property Tax Calculation	[A] STAFF AS ADJUSTED	[B] STAFF RECOMMENDED
1	Staff Adjusted Test Year Revenues	$ 11,201,390	$ 11,201,390
2	Weight Factor	2	2
3	Subtotal (Line 1 * Line 2)	22,402,780	$ 22,402,780
4	Staff Recommended Revenue, Per Schedule JMM-W1	11,201,390	$ 12,266,275
5	Subtotal (Line 4 + Line 5)	33,604,170	34,669,055
6	Number of Years	3	3
7	Three Year Average (Line 5 / Line 6)	11,201,390	$ 11,556,352
8	Department of Revenue Mutilplier	2	2
9	Revenue Base Value (Line 7 * Line 8)	22,402,780	$ 23,112,703
10	Plus: 10% of CWIP -	-	-
11	Less: Net Book Value of Licensed Vehicles	107,049	$ 107,049
12	Full Cash Value (Line 9 + Line 10 - Line 11)	22,295,731	$ 23,005,655
13	Assessment Ratio	19.0%	19.0%
14	Assessment Value (Line 12 * Line 13)	4,236,189	$ 4,371,074
15	Composite Property Tax Rate (Per Company Schedule)	12.5389%	12.5389%
16			$ -
17	Staff Test Year Adjusted Property Tax (Line 14 * Line 15)	$ 531,171	
18	Company Proposed Property Tax	559,128	
19			
20	Staff Test Year Adjustment (Line 16-Line 17)	$ (27,957)	
21	Property Tax - Staff Recommended Revenue (Line 14 * Line 15)		$ 548,085
22	Staff Test Year Adjusted Property Tax Expense (Line 16)		$ 531,171
23	Increase in Property Tax Expense Due to Increase in Revenue Requirement		$ 16,913
24			
25	Increase to Property Tax Expense		$ 16,913
26	Increase in Revenue Requirement		1,064,885
27	Increase to Property Tax per Dollar Increase in Revenue (Line19/Line 20)		1.588260%

REFERENCES:
Column [A]: Company Filing
Column [B]: Testimony DWC
Column [C]: Column [A] + Column [B]

Litchfield Park Service Company - Water Division
Docket Nos. W-01428A-13-0043 and SW-01428A-13-0042
Test Year Ended: December 31, 2012

Surrebuttal Schedule DWC-W24

OPERATING INCOME ADJUSTMENT NO. 7 - TEST YEAR INCOME TAXES

LINE NO.	DESCRIPTION		
1			
2			
3			
4	*Calculation of Income Tax:*		Test Year
5	Revenue (Schedule JMM-11)	$	11,201,390
6	Operating Expenses Excluding Income Taxes	$	8,106,896
7	Synchronized Interest (L17)	$	331,253
8	Arizona Taxable Income (L1 - L2 - L3)	$	2,763,240
9	Arizona State Income Tax Rate		6.5000%
10	Arizona Income Tax (L4 x L5)	$	179,611
11	Federal Taxable Income (L4 - L6)	$	2,583,630
12	Federal Tax on First Income Bracket ($1 - $50,000) @ 15%	$	7,500
13	Federal Tax on Second Income Bracket ($51,001 - $75,000) @ 25%	$	6,250
14	Federal Tax on Third Income Bracket ($75,001 - $100,000) @ 34%	$	8,500
15	Federal Tax on Fourth Income Bracket ($100,001 - $335,000) @ 39%	$	91,650
16	Federal Tax on Fifth Income Bracket ($335,001 -$10,000,000) @ 34%	$	764,534
17	Total Federal Income Tax	$	878,434
18	Combined Federal and State Income Tax (L44 + L51)	$	1,058,045
19			
20			
21	*Calculation of Interest Synchronization:*		
22	Rate Base (Schedule JMM-W4)	$	33,125,342
23	Weighted Average Cost of Debt		1.10%
24	Synchronized Interest (L16 x L17)	$	364,379
25			
26			
27	Income Tax - Per Staff	$	1,058,045
28	Income Tax - Per Company	$	1,028,634
29	Staff Adjustment	$	29,411

REFERENCES:
Column [A]: Company Filing
Column [B]: Testimony DWC
Column [C]: Column [A] + Column [B]

Monthly Usage Charge	Present	Company Proposed Rates	Staff Recommended Rates
Meter Size (All Classes):			
5/8 x 3/4 Inch	$ 10.20	$ 14.50	$ 9.90
3/4 Inch - Residential	10.20	14.50	9.90
3/4 Inch	10.20	14.50	9.90
1 Inch - Residential	22.95	32.75	25.00
1 Inch	25.50	36.25	27.68
1 1/2 Inch	51.00	72.50	50.00
2 Inch	81.60	116.00	80.00
3 Inch	163.20	232.00	160.00
4 Inch	255.00	362.50	250.00
6 Inch	510.00	725.00	500.00
8 Inch - Bulk Water Only	501.00	575.00	500.00
8 Inch	841.50	1,160.00	800.00
10 Inch	1,173.00	1,667.50	1,150.00
12 Inch	2,193.00	3,117.50	2,150.00
Commodity Charge - Per 1,000 Gallons			
5/8" x 3/4" Meter and 3/4" (Residential)			
First 3,000 gallons	$ 1.00	N/A	N/A
3,001 to 9,000 gallons	$ 1.91	N/A	N/A
Over 9,000 gallons	$ 3.03	N/A	N/A
First 3,000 gallons	N/A	$ 1.00	N/A
3,001 to 11,000 gallons	N/A	$ 2.00	N/A
11,001 to 30,000 gallons	N/A	$ 3.05	N/A
Over 30,000 gallons	N/A	$ 3.66	N/A
First 3,000 gallons	N/A	N/A	$ 0.75
3,001 to 9,000 gallons	N/A	N/A	$ 1.75
9,001 to 20,000 gallons	N/A	N/A	$ 3.55
Over 20,000 gallons	N/A	N/A	$ 4.00
5/8" x 3/4" and 3/4" Meter (Commercial & Irrigation)			
First 9,000 gallons	$ 1.91	$ 2.00	N/A
Over 9,000 gallons	$ 3.03	$ 3.66	N/A
First 9,000 gallons	N/A	N/A	$ 1.75
Over 9,000 gallons	N/A	N/A	$ 4.00
1" Meter (Residential)			
First 5,000 gallons	$ 1.00	N/A	N/A
5,001 to 20,000 gallons	$ 1.91	N/A	N/A
Over 20,000 gallons	$ 3.03	N/A	N/A
First 5,000 gallons	N/A	$ 1.00	N/A
5,001 to 20,000 gallons	N/A	$ 2.00	N/A
20,001 to 40,000 gallons	N/A	$ 3.05	N/A
Over 40,000 gallons	N/A	$ 3.66	N/A
First 3,000 gallons	N/A	N/A	$ 0.75
3,001 to 20,000 gallons	N/A	N/A	$ 1.75
20,001 to 37,000 gallons	N/A	N/A	$ 3.55
Over 37,000 gallons	N/A	N/A	$ 4.00
1" Meter (Commercial & Irrigation)			
First 20,000 gallons	$ 1.91	$ 2.00	N/A
Over 20,000 gallons	$ 3.03	$ 3.66	N/A
First 25,000 gallons	N/A	N/A	$ 1.75
Over 25,000 gallons	N/A	N/A	$ 4.00
1 1/2" Meter (All Classes)			
First 40,000 gallons	$ 1.91	$ 2.00	N/A
Over 40,000 gallons	$ 3.03	$ 3.66	N/A
First 37,000 gallons	N/A	N/A	$ 1.75
Over 37,000 gallons	N/A	N/A	$ 4.00
2" Meter (All Classes)			
First 60,000 gallons	$ 1.91	$ 2.00	N/A
Over 60,000 gallons	$ 3.03	$ 3.66	N/A
First 52,000 gallons	N/A	N/A	$ 1.75
Over 52,000 gallons	N/A	N/A	$ 4.00
3" Meter (All Classes)			
First 120,000 gallons	$ 1.91	$ 2.00	N/A
Over 120,000 gallons	$ 3.03	$ 3.66	N/A
First 94,000 gallons	N/A	N/A	$ 1.75
Over 94,000 gallons	N/A	N/A	$ 4.00
4" Meter (All Classes)			
First 180,000 gallons	$ 1.91	$ 2.00	N/A
Over 180,000 gallons	$ 3.03	$ 3.66	N/A
First 140,000 gallons	N/A	N/A	$ 1.75
Over 140,000 gallons	N/A	N/A	$ 4.00
6" Meter (All Classes)			
First 360,000 gallons	$ 1.91	$ 2.00	N/A
Over 360,000 gallons	$ 3.03	$ 3.66	N/A
First 270,000 gallons	N/A	N/A	$ 1.75
Over 270,000 gallons	N/A	N/A	$ 4.00
8" Meter (Bulk Resale)			
All Classes	$ 1.50	$ 1.65	$ 1.65
8" Meter (All Classes)			
First 650,000 gallons	$ 1.91	$ 2.00	N/A
Over 650,000 gallons	$ 3.03	$ 3.66	N/A
First 430,000 gallons	N/A	N/A	$ 1.75
Over 430,000 gallons	N/A	N/A	$ 4.00

10" Meter (All Classes)			
First 940,000 gallons	1.91	2.00	N/A
Over 940,000 gallons	3.03	3.66	N/A
First 600,000 gallons	N/A	N/A	1.75
Over 600,000 gallons	N/A	N/A	4.00
12" Meter (All Classes)			
First 1,248,000 gallons	2.92	N/A	N/A
Over 1,248,000 gallons	3.64	N/A	N/A
First 1,000,000 gallons	N/A	N/A	1.75
Over 1,000,000 gallons	N/A	N/A	4.00
Construction Hydrants			
All Gallons	3.03	3.66	3.66

Other Service Charges			
Establishment (Regular Hours) per Rule R14-2-403D (a)	$ 20.00	$ 20.00	$ 20.00
Establishment (After Hours) per Rule R14-2-403D (a)	**40.00**	**40.00**	**NT**
Re-Establishment of Service per Rule R14-2-403D (a)	(b)	(b)	(b)
Reconnection (Regular Hours) per Rule R14-2-403D (a)	$ 50.00	$ 50.00	$ 20.00
Reconnection (After Hours) per Rule R14-2-403D (a)	**65.00**	**65.00**	**NT**
Meter Test (if correct) per Rule R14-2-408F	$ 25.00	$ 25.00	$ 25.00
Meter Reread per Rule R14-2-408C (if correct)	$ 5.00	$ 5.00	$ 5.00
Fire Hydrant Meter Relocation	NT	$ 50.00	$ 50.00
Fire Hydrant Meter Repair	NT	Cost	Cost
NSF Check per Rule R14-2-409F (a)	$ 25.00	$ 25.00	$ 25.00
Deferred Payment, Per Month	1.50%	1.50%	1.50%
Late Charge	(c)	(c)	(c)
Service Calls - Per Hour/After Hours	**40.00**	**40.00**	**NT**
After Hours Service Charge (d)	NT	NT	$ 40.00
Deposit Requirements	(e)	(e)	(e)
Deposit Interest	3.50%	3.50%	6.00%
Meter and Service lines	**See Below**	**See Below**	**See Below**
Main Extension Tariff	NT	at Cost	at Cost

(a) Charges applicable to water service.
(b) Minimum charge times number of full months off the system, per Rule R14-2-403(D).
(c) Greater of $5.00 or 1.5% of unpaid balance.
(d) An After Hours Service Charge is appropriate when it is at the customer's request or convenience. It compensates the utility for additional expenses incurred from providing after-hours services. It is appropriate to apply this charge in addition to the charge for any utility service provided after hours at the customer's request or for the customer's convenience.
(e) Per ACC Rules R14-2-403(B) *Residential - two times the average bill.* Commercial - two and one-half times the average bill.

NT = No tariff

Refundable Meter and Service Line Charges

	Present Service Line Charge	Present Meter Installation Charge	Total Present Charge	Proposed Service Line Charge	Proposed Meter Installation Charge	Total Proposed Charge	Recommended Service Line Charge	Recommended Meter Installation Charge	Total Recommended Charge
5/8 x 3/4 inch	$ 385.00	$ 135.00	$ 520.00	at Cost	at Cost	at Cost	$ 445.00	$ 155.00	$ 600.00
3/4 Inch	$ 385.00	$ 215.00	$ 600.00	at Cost	at Cost	at Cost	$ 445.00	$ 255.00	$ 700.00
1 Inch	$ 435.00	$ 255.00	$ 690.00	at Cost	at Cost	at Cost	$ 495.00	$ 315.00	$ 810.00
1 1/2 Inch	$ 470.00	$ 465.00	$ 935.00	at Cost	at Cost	at Cost	$ 550.00	$ 525.00	$ 1,075.00
2 Inch / Turbine	$ 630.00	$ 965.00	$ 1,595.00	at Cost	at Cost	at Cost	at Cost	at Cost	at Cost
2 Inch / Compound	$ 630.00	$ 1,690.00	$ 2,320.00	at Cost	at Cost	at Cost	at Cost	at Cost	at Cost
3 Inch / Turbine	$ 805.00	$ 1,470.00	$ 2,275.00	at cost	at Cost	at Cost	at Cost	at Cost	at Cost
3 Inch / Compound	$ 845.00	$ 2,265.00	$ 3,110.00	at Cost	at Cost	at Cost	at Cost	at Cost	at Cost
4 Inch / Turbine	$ 1,170.00	$ 2,350.00	$ 3,520.00	at Cost	at Cost	at Cost	at Cost	at Cost	at Cost
4 Inch / Compound	$ 1,230.00	$ 3,245.00	$ 4,475.00	at Cost	at Cost	at Cost	at Cost	at Cost	at Cost
6 Inch / Turbine	$ 1,730.00	$ 4,545.00	$ 6,275.00	at Cost	at Cost	at Cost	at Cost	at Cost	at Cost
6 Inch / Compound	$ 1,770.00	$ 6,280.00	$ 8,050.00	at Cost	at Cost	at Cost	at Cost	at Cost	at Cost
8 Inch & Larger	at Cost	at Cost	at Cost	at Cost	at Cost	at Cost	at Cost	at Cost	at Cost

Hydrant Meter Deposit*	Present Charge	Proposed Charge	Proposed Charge
5/8 x 3/4 Inch	$ 135.00	$ 135.00	$ 135.00
3/4 Inch	$ 215.00	$ 215.00	$ 215.00
1 Inch	$ 255.00	$ 255.00	$ 255.00
1 1/2 Inch	$ 465.00	$ 465.00	$ 465.00
2 Inch / Turbine	$ 965.00	$ 965.00	$ 965.00
2 Inch / Compound	$ 1,690.00	$ 1,690.00	$ 1,690.00
3 Inch / Turbine	$ 1,470.00	$ 1,470.00	$ 1,470.00
3 Inch / Compound	$ 2,265.00	$ 2,265.00	$ 2,265.00
4 Inch / Turbine	$ 2,350.00	$ 2,350.00	$ 2,350.00
4 Inch / Compound	$ 3,245.00	$ 3,245.00	$ 3,245.00
6 Inch / Turbine	$ 4,545.00	$ 4,545.00	$ 4,545.00
6 Inch / Compound	$ 6,280.00	$ 6,280.00	$ 6,280.00
8 Inch & Larger	at Cost	at Cost	at Cost

* Shall have a non-interest bearing deposit of the amount indicated, refundable in its entirety upon return of the meter in good condition and payment of the final bill.

**These line items should be removed from new tariff.

Note that a low income tariff is available. See the low income tariff for more information.

Litchfield Park Service Company - Water Division
Docket No. W-01427A-13-0043
Test Year Ended: December 31, 2012

Surrebuttal Schedule DWC-W26

Typical Bill Analysis
General Service 5/8 x 3/4-Inch Meter

Company Proposed	Gallons	Present Rates	Proposed Rates	Dollar Increase	Percent Increase
Average Usage	9,061	$ 24.84	$ 31.46	$ 6.61	26.61%
Median Usage	5,000	17.02	23.01	$ 5.99	35.19%
Staff Recommended					
Average Usage	9,061	$ 24.84	$ 22.87	$ (1.98)	-7.96%
Median Usage	5,000	17.02	15.65	$ (1.37)	-8.05%

Present & Proposed Rates (Without Taxes)
General Service 5/8 x 3/4-Inch Meter

Gallons	Present		Company Proposed		%	Staff Recommended		%
	3/4"		3/4"			3/4"		
	Minimum Charge	$ 10.20	Minimum Charge	$ 14.77		Minimum Charge	$ 9.90	
	1st Tier Rate	1.0000	1st Tier Rate	1.5400		1st Tier Rate	0.7500	
	1st Tier Breakover	3,000	1st Tier Breakover	4,000		1st Tier Breakover	3,000	
	2nd Tier Rate	1.9100	2nd Tier Rate	2.0800		2nd Tier Rate	1.7500	
	2nd Tier Breakover	9,000	2nd Tier Breakover	12,000		2nd Tier Breakover	9,000	
	3rd Tier Rate	3.0300	3rd Tier Rate	2.9500		3rd Tier Rate	3.5500	
Consumption	Rates		Rates		Increase	Rates		Increase
-	$ 10.20		$ 14.77		44.80%	$ 9.90		-2.94%
1,000	11.20		16.31		45.63%	10.65		-4.91%
2,000	12.20		17.85		46.31%	11.40		-6.56%
3,000	13.20		19.39		46.89%	12.15		-7.95%
4,000	15.11		20.93		38.52%	13.90		-8.01%
5,000	17.02		23.01		35.19%	15.65		-8.05%
6,000	18.93		25.09		32.54%	17.40		-8.08%
7,000	20.84		27.17		30.37%	19.15		-8.11%
8,000	22.75		29.25		28.57%	20.90		-8.13%
9,000	24.66		31.33		27.05%	22.65		-8.15%
10,000	27.69		33.41		20.66%	26.20		-5.38%
11,000	30.72		35.49		15.53%	29.75		-3.16%
12,000	33.75		37.57		11.32%	33.30		-1.33%
13,000	36.78		40.52		10.17%	36.85		0.19%
14,000	39.81		43.47		9.19%	40.40		1.48%
15,000	42.84		46.42		8.36%	43.95		2.59%
16,000	45.87		49.37		7.63%	47.50		3.55%
17,000	48.90		52.32		6.99%	51.05		4.40%
18,000	51.93		55.27		6.43%	54.60		5.14%
19,000	54.96		58.22		5.93%	58.15		5.80%
20,000	57.99		61.17		5.48%	61.70		6.40%
25,000	73.14		75.92		3.80%	79.45		8.63%
30,000	88.29		90.67		2.70%	97.20		10.09%
35,000	103.44		105.42		1.91%	114.95		11.13%
40,000	118.59		120.17		1.33%	132.70		11.90%
45,000	133.74		134.92		0.88%	150.45		12.49%
50,000	148.89		149.67		0.52%	168.20		12.97%
75,000	224.64		223.42		-0.54%	256.95		14.38%
100,000	300.39		297.17		-1.07%	345.70		15.08%

Litchfield Park Service Company - Wastewater Division
Docket Nos. *W-01428A-13-0043 and SW-01428A-13-0042*
Test Year Ended: December 31, 2012

Surrebuttal Testimony of Darron W. Carlson

TABLE OF CONTENTS TO SURREBUTTAL SCHEDULES

SCH #	TITLE
DWC-WW1	REVENUE REQUIREMENT
DWC-WW2	GROSS REVENUE CONVERSION FACTOR
DWC-WW3	RATE BASE - ORIGINAL COSTS
DWC-WW4	SUMMARY OF ORIGINAL COST RATE BASE ADJUSTMENTS
DWC-WW5	ORIGINAL COST RATE BASE ADJUSTMENT # 1 - POST TEST-YEAR PLANT
DWC-WW6	ORIGINAL COST RATE BASE ADJUSTMENT # 2 - NOT USED
DWC-WW7	ORIGINAL COST RATE BASE ADJUSTMENT # 3 - TRUE-UP OF PLANT IN SERVICE ACCRUALS
DWC-WW8	ORIGINAL COST RATE BASE ADJUSTMENT # 4 - PLANT ADDITIONS RECORDED IN WRONG YEARS
DWC-WW9	ORIGINAL COST RATE BASE ADJUSTMENT # 5 - RECLASSIFICATION OF PLANT IN SERVICE
DWC-WW10	ORIGINAL COST RATE BASE ADJUSTMENT # 6 - PLANT NOT USED AND USEFUL
DWC-WW11	ORIGINAL COST RATE BASE ADJUSTMENT # 7 - REMOVAL OF DUPLICATE INVOICES
DWC-WW12	ORIGINAL COST RATE BASE ADJUSTMENT # 8 - NOT USED
DWC-WW13	ORIGINAL COST RATE BASE ADJUSTMENT # 9 - RECALCUATION OF CONTRIBUTIONS IN AID OF CONSTRUCTION
DWC-WW14	ORIGINAL COST RATE BASE ADJUSTMENT # 10 - CUSTOMER DEPOSITS
DWC-WW15	ORIGINAL COST RATE BASE ADJUSTMENT # 11 - ACCUMULATED DEFERRED INCOME TAXES
DWC-WW16	OPERATING INCOME STATEMENT - ADJUSTED TEST YEAR AND STAFF RECOMMENDED
DWC-WW17	SUMMARY OF OPERTING INCOME STATEMENT ADJUSTMENTS - TEST YEAR
DWC-WW18	OPERATING INCOME ADJUSTMENT # 1 - WATER TESTING EXPENSE
DWC-WW19	OPERATING INCOME ADJUSTMENT # 2 - CORPORATE ALLOCATION ACCRUAL TRUE-UP
DWC-WW20	OPERATING INCOME ADJUSTMENT # 3 - CORPORATE ALLOCATION EXPENSE
DWC-WW21	OPERATING INCOME ADJUSTMENT # 4 - INTEREST ON CUSTOMER DEPOSITS
DWC-WW22	OPERATING INCOME ADJUSTMENT # 5 - DEPRECIATION EXPENSE
DWC-WW23	OPERATING INCOME ADJUSTMENT # 6 - PROPERTY TAX EXPENSE
DWC-WW24	OPERATING INCOME ADJUSTMENT # 7 - TEST YEAR INCOME TAXES
DWC-WW25	RATE DESIGN
DWC-WW26	TYPICAL BILL ANALYSIS

Litchfield Park Service Company - Wastewater Division
Docket Nos. W-01428A-13-0043 and SW-01428A-13-0042
Test Year Ended: December 31, 2012

Surrebuttal Schedule DWC-WW1

REVENUE REQUIREMENT

LINE NO.	DESCRIPTION		(A) COMPANY FAIR VALUE		(B) STAFF FAIR VALUE
1	Adjusted Rate Base	$	23,877,697	$	23,428,440
2	Adjusted Operating Income (Loss)	$	1,871,616	$	1,925,521
3	Current Rate of Return (L2 / L1)		7.84%		8.22%
4	Required Rate of Return		9.50%		8.10%
5	Required Operating Income (L4 * L1)	$	2,268,786	$	1,897,704
6	Operating Income Deficiency (L5 - L2)	$	397,170	$	(27,817)
7	Gross Revenue Conversion Factor		1.6595		1.6496
8	Required Revenue Increase (L7 * L6)	$	659,088	$	**(45,887)**
9	Adjusted Test Year Revenue	$	10,361,603	$	10,361,603
10	Proposed Annual Revenue (L8 + L9)	$	11,020,691	$	10,315,716
11	Required Increase in Revenue (%)		6.36%		-0.44%

References:
Column (A): Company Schedule A-1
Column (B): Staff Schedules DWC-W3 and DWC-W16

Litchfield Park Service Company - Wastewater Division
Docket Nos. W-01428A-13-0043 and SW-01428A-13-0042
Test Year Ended: December 31, 2012

Surrebuttal Schedule DWC-WW2

GROSS REVENUE CONVERSION FACTOR

LINE NO.	DESCRIPTION	(A)	(B)	(C)	(D)
	Calculation of Gross Revenue Conversion Factor:				
1	Revenue	100.0000%			
2	Uncollecible Factor (Line 11)	0.0000%			
3	Revenues (L1 - L2)	100.0000%			
4	Combined Federal and State Income Tax and Property Tax Rate (Line 23)	39.3790%			
5	Subtotal (L3 - L4)	60.6210%			
6	**Revenue Conversion Factor (L1 / L5)**	1.649594			
	Calculation of Uncollecttible Factor:				
7	Unity	100.0000%			
8	Combined Federal and State Tax Rate (Line 23)	38.2900%			
9	One Minus Combined Income Tax Rate (L7 - L8)	61.7100%			
10	Uncollectible Rate	0.0000%			
11	Uncollectible Factor (L9 * L10)	0.0000%			
	Calculation of Effective Tax Rate:				
12	Operating Income Before Taxes (Arizona Taxable Income)	100.0000%			
13	Arizona State Income Tax Rate	6.5000%			
14	Federal Taxable Income (L12 - L13)	93.5000%			
15	Applicable Federal Income Tax Rate (Line 55)	34.0000%			
16	Effective Federal Income Tax Rate (L14 x L15)	31.7900%			
17	Combined Federal and State Income Tax Rate (L13 +L16)		38.2900%		
	Calculation of Effective Property Tax Factor				
18	Unity	100.0000%			
19	Combined Federal and State Income Tax Rate (L17)	38.2900%			
20	One Minus Combined Income Tax Rate (L18-L19)	61.7100%			
21	Property Tax Factor	1.7647%			
22	Effective Property Tax Factor (L20*L21)		1.0890%		
23	Combined Federal and State Income Tax and Property Tax Rate (L17+L22)			39.3790%	
24	Required Operating Income	$ 1,897,704			
25	AdjustedTest Year Operating Income (Loss)	1,925,521			
26	Required Increase in Operating Income (L24 - L25)		$ (27,817)		
27	Income Taxes on Recommended Revenue (Col. [E], L52)	$ 1,032,123			
28	Income Taxes on Test Year Revenue (Col. [B], L52)	1,049,383			
29	Required Increase in Revenue to Provide for Income Taxes (L27 - L28)		(17,260)		
30	Recommended Revenue Requirement	$ 10,315,716			
31	Uncollectible Rate (Line 10)	0.0000%			
32	Uncollectible Expense on Recommended Revenue (L30*L31)	$ -			
33	Adjusted Test Year Uncollectible Expense	$ -			
34	Required Increase in Revenue to Provide for Uncollectible Exp. (L32-L33)		-		
35	Property Tax with Recommended Revenue	$ 546,415			
36	Property Tax on Test Year Revenue	547,225			
37	Increase in Property Tax Due to Increase in Revenue (L35-L36)		(810)		
38	Total Required Increase in Revenue (L26 + L29 + L34 + L37)		$ (45,887)		

	Calculation of Income Tax:	Test Year		Staff Recommended
39	Revenue	$ 10,361,603	$ (45,887)	$ 10,315,716
40	Operating Expenses Excluding Income Taxes	$ 7,386,699		$ 7,385,890
41	Synchronized Interest (L56)	$ 234,284		$ 234,284
42	Arizona Taxable Income (L39 - L40 - L41)	$ 2,740,619		$ 2,695,542
43	Arizona State Income Tax Rate	6.5000%		6.5000%
44	Arizona Income Tax (L42 x L43)	$ 178,140		$ 175,210
45	Federal Taxable Income (L42 - L44)	$ 2,562,479		$ 2,520,332
46	Federal Tax on First Income Bracket ($1 - $50,000) @ 15%	$ 7,500		$ 7,500
47	Federal Tax on Second Income Bracket ($51,001 - $75,000) @ 25%	$ 6,250		$ 6,250
48	Federal Tax on Third Income Bracket ($75,001 - $100,000) @ 34%	$ 8,500		$ 8,500
49	Federal Tax on Fourth Income Bracket ($100,001 - $335,000) @ 39%	$ 91,650		$ 91,650
50	Federal Tax on Fifth Income Bracket ($335,001 -$10,000,000) @ 34%	$ 757,343		$ 743,013
51	Total Federal Income Tax	$ 871,243		$ 856,913
52	Combined Federal and State Income Tax (L44 + L51)	$ 1,049,383		$ 1,032,123
53	Applicable Federal Income Tax Rate [Col. [E], L51 - Col. [B], L51] / [Col. [E], L45 - Col. [B], L45]			34.0000%
	Calculation of Interest Synchronization:			
54	Rate Base	$ 23,428,440		
55	Weighted Average Cost of Debt	1.0000%		
56	Synchronized Interest (L45 X L46)	$ 234,284		

Litchfield Park Service Company - Wastewater Division
Docket Nos. W-01428A-13-0043 and SW-01428A-13-0042
Test Year Ended: December 31, 2012

Surrebuttal Schedule DWC-WW3

RATE BASE - ORIGINAL COST

LINE NO.		(A) COMPANY AS FILED	(B) STAFF ADJUSTMENTS	(C) STAFF AS ADJUSTED
1	Plant in Service	$ 74,024,533	$ (628,691)	$ 73,395,842
2	Less: Accumulated Depreciation	13,244,186	7,127	13,251,313
3	Net Plant in Service	$ 60,780,347	$ (635,818)	$ 60,144,529
	LESS:			
4	Contributions in Aid of Construction (CIAC)	$ 28,470,485	$ (93,570)	$ 28,376,915
5	Less: Accumulated Amortization	4,446,775	(293,474)	$ 4,153,301
6	Net CIAC	24,023,710	199,904	$ 24,223,614
7	Advances in Aid of Construction (AIAC)	11,645,290	-	11,645,290
8	Customer Meter Deposits	95,892	-	95,892
	Customer Deposits	155,440	8,334	163,774
9	Deferred Income Tax Credits	982,318	(394,799)	587,519
	ADD:			
9	Deferred Regulatory Assets TCE Plume	-	-	-
10	Deffered Regulatory Assets	-	-	-
11	**Original Cost Rate Base**	$ 23,877,697	$ (449,257)	$ 23,428,440

References:
Column [A]: Company as Filed
Column [B]: Schedule DWC-W4
Column (C): Column (A) + Column (B)

Litchfield Park Service Company - Wastewater Division
Docket Nos. W-01428A-13-0043 and SW-01428A-13-0042
Test Year Ended: December 31, 2012

SUMMARY OF ORIGINAL COST RATE BASE ADJUSTMENTS

LINE NO.	ACCT. NO.	DESCRIPTION	[A] COMPANY AS FILED	[B] ADJ #1 Post-Test Year Plant Ref: Sch JMM-WW5	[C] ADJ #2 Company's Rebuttal Adjustments Ref: Sch JMM-WW6	[D] ADJ #3 True-Up of Accruals Ref: Sch JMM-WW7	[E] ADJ #4 Plant Additions Recorded In Wrong Years Ref: Sch JMM-WW8	[F] ADJ #5 Reclassification of Plant Ref: Sch JMM-WW9	[G] ADJ #6 Plant Not Used and Useful Ref: Sch JMM-WW10
		PLANT IN SERVICE:							
1			$ -	$ -	$ -	$ -	$ -	$ -	$ -
2	351	Organization	-	-	-	-	-	-	(11,217)
3	352	Franchises	1,850,582	-	-	199,000	-	(525,110)	(113,329)
4	353	Land and Land Rights	24,208,314	-	-	-	-	-	-
5	354	Structures and Improvements	603,332	-	-	-	-	-	-
6	355	Power Generation Equipment	1,162,597	-	-	-	-	41,564	-
7	360	Collection Services - Force	31,886,660	-	-	-	-	-	-
8	361	Collection Services - Gravity	-	-	-	-	-	-	-
9	362	Special Collecting Structures	76,190	-	-	-	-	-	-
10	363	Services to Customers	46,210	-	-	-	-	36,618	-
11	364	Flow Measuring Devices	-	-	-	-	-	-	-
12	365	Flow Measuring Installations	4,057,660	-	-	-	-	-	-
13	366	Reuse Services	44,753	-	-	-	-	-	-
14	367	Reuse Meters and Installations	860,393	-	-	-	-	61,670	-
15	370	Receiving Wells	799,481	-	-	-	-	-	-
16	371	Effluent Pumping Equipment	62,286	-	-	-	-	-	-
17	374	Reuse Trans. And Dist. System	420,334	-	-	-	-	470,592	-
18	375	Resuse T&D	5,585,470	(700,000)	-	-	-	-	-
19	380	Treatment and Disposal Equipment	47,802	-	-	-	-	-	-
20	381	Plant Sewers	343,681	-	-	-	-	(43,005)	-
21	382	Outfall Sewer Lines	871,498	-	6,193	-	-	-	-
22	389	Other Plant & Misc. Equipment	275,740	-	-	-	-	-	-
23	390	Office Furniture & Equipment	33,497	-	(7,110)	-	-	-	-
24	391	Transportation Equipment	8,968	-	-	-	-	(15,681)	-
25	392	Stores Equipment	145,631	-	-	-	-	836	-
26	393	Tools, Shop & Garage Equipment	186,348	-	-	-	-	(21,485)	-
27	394	Labratory Equipment	28,090	-	-	(3,555)	-	-	-
28	395	Power Operated Equipment	418,996	-	-	-	-	-	-
29	396	Communication Equipment	-	-	-	-	-	-	-
30	398	Other Tangible Plant	74,024,533	-	-	-	-	-	-
31		Total Plant In Service - Sub Total	-	-					
32			$ 74,024,533	$ (700,000)	$ (917)	$ 195,445	$ 401	$ 6,000	$ (124,546)
33		Total Plant In Service	13,244,186	-	(5,406)	-	-	18,194	(5,661)
34		Less: Accumulated Depreciation	-	-	-	-		-	-
35			$ 60,780,347	$ (700,000)	$ 4,489	$ 195,445	$ 401	$ (12,194)	$ (118,886)
36		Net Plant In Service							
37									
38		*LESS:*	$ 28,470,485	$ -	$ -	$ -	$ -	$ -	$ -
39		Contributions In Aid of Construction (CIAC)	4,446,775	-	-	-	-	-	-
40		Less: Accumulated Amortization	24,023,710	-	-	-	-	-	-
41		Net CIAC (L25 - L26)	11,645,290	-	-	-	-	-	-
42		Advances In Aid of Construction (AIAC)	95,892	-	-	-	-	-	-
43		Customer Meter Deposits	155,440				-	-	-
44		Customer Deposits	982,318	-	-	-			
45		Deferred Income Taxes	-	-					
46									
47									
48		*ADD:*	-	-	-	-	-	-	-
49		Deferred Regulatory Assets TCE Plume	-	-	-	-	-	-	-
50		Deffered Regulatory Assets							
51			$ 23,877,697	$ (700,000)	$ 4,489	$ 195,445	$ 401	$ (12,194)	$ (118,886)
52		**Original Cost Rate Base**							

[H] ADJ #7 Duplicate Invoices Ref: Sch JMM-WW11	[I] ADJ #8 Not Used Ref: Sch JMM-WW12	[J] ADJ #9 Recalculation of CIAC Ref: Sch JMM-WW13	[K] ADJ #10 Customer Deposits Ref: Sch JMM-WW14	[L] ADJ #11 ADIT Ref: Sch JMM-WW15	[M] STAFF ADJUSTED
$ -	$ -	$ -	$ -	$ -	$ -
-	-	-	-	-	1,835,956
(3,409)	-	-	-	-	23,768,875
-	-	-	-	-	602,932
(400)	-	-	-	-	1,162,597
-	-	-	-	-	31,928,244
-	-	-	-	-	-
-	-	-	-	-	76,190
-	-	-	-	-	46,210
-	-	-	-	-	36,618
-	-	-	-	-	4,057,660
					44,753
			-	-	860,393
-	-	-	-	-	861,151
-	-	-			62,286
					420,334
			-	-	5,356,062
-	-	-	-	-	47,802
-	-	-	-	-	343,681
-	-	-	-	-	833,822
(864)	-	-	-	-	275,740
-	-	-	-	-	26,387
-	-	-			8,968
			-	-	129,950
-	-	-	-	-	187,184
-	-	-	-	-	6,605
-	-	-	-	-	415,441
-	-	-	-	-	-
-	-	-	-	-	73,395,842
(214)	-	-	-		-
$ (4,886)	$ -	$ -	$ -	$ -	$ 73,395,842
-	-	-	-	-	13,251,313
-	-	-	-	-	-
$ (4,886)	$ -	$ -	$ -	$ -	$ 60,144,529
$ -	$ -	$ (93,570)	$ -	$ -	$ 28,376,915
-	-	(293,474)	-	-	4,153,301
		199,904	-	-	24,223,614
-	-	-	-	-	11,645,290
-	-	-	-	-	95,892
-	-	-	8,334		163,774
-	-	-	-	(394,799)	587,519
-					-
-	-	-	-	-	-
-	-	-	-	-	-
$ (4,886)	$ -	$ (199,904)	$ (8,334)	$ 394,799	$ 23,428,440

Litchfield Park Service Company - Wastewater Division
Docket Nos. W-01428A-13-0043 and SW-01428A-13-0042
Test Year Ended: December 31, 2012

Surrebuttal Schedule DWC-WW5

RATE BASE ADJUSTMENT NO. 1 - POST TEST-YEAR PLANT

LINE NO.	ACCT NO.	DESCRIPTION	[A] COMPANY PROPOSED	[B] STAFF ADJUSTMENTS	[C] STAFF[1] RECOMMENDED
1	380	Treatment and Disposal Equipment	$ 5,585,470	$ (700,000)	$ 4,885,470

[1] Amounts may not reflect other adjustments.

REFERENCES:
Column [A]: Company Filing
Column [B]: Testimony DWC
Column [C]: Column [A] + Column [B]

Litchfield Park Service Company - Wastewater Division
Docket Nos. W-01428A-13-0043 and SW-01428A-13-0042
Test Year Ended: December 31, 2012

Surrebuttal Schedule DWC-WW6

RATE BASE ADJUSTMENT NO. 2 - COMPANY'S REBUTTAL ADJUSTMENTS

LINE NO.	ACCT NO.	DESCRIPTION	[A] COMPANY PROPOSED	[B] STAFF ADJUSTMENTS	[C] STAFF[1] RECOMMENDED
22	389	Other Plant & Miscellaneous Equipment	$ 871,498	$ 6,193	$ 877,691
24	391	Transportation Equipment	$ 33,497	$ (7,110)	$ 26,387
		Totals:	$ 904,995	$ (917)	$ 904,078

[1] Amounts may not reflect other adjustments.

The two adjustments above were made by the Company, after Staff Direct Testimony was filed, in response to RUCO Data Request 6.01 Supplemental. These reflect additional unrecorded retirements and reclassifications, which also include adjustments to three water plant accounts (#331, #341, and #345) which are reflected in the water schedules.

REFERENCES:
Column [A]: Company Filing
Column [B]: Testimony DWC
Column [C]: Column [A] + Column [B]

Litchfield Park Service Company - Wastewater Division
Docket Nos. W-01428A-13-0043 and SW-01428A-13-0042
Test Year Ended: December 31, 2012

Surebuttal Schedule DWC-WW7

RATE BASE ADJUSTMENT NO. 3 - TRUE-UP OF PLANT IN SERVICE ACCRUALS

LINE NO.	ACCT NO.	DESCRIPTION	[A] COMPANY PROPOSED	[B] STAFF ADJUSTMENTS	[C] STAFF[1] RECOMMENDED
1	354	Structures and Improvements	$ 24,208,314	$ 199,000	$ 24,407,314
2	396	Communications Equipment	418,996	(3,555)	415,441
3			$ 24,627,310	$ 195,445	$ 24,822,755

[1] Amounts may not reflect other adjustments.

REFERENCES:
Column [A]: Company Filing
Column [B]: Testimony DWC
Column [C]: Column [A] + Column [B]

Litchfield Park Service Company - Wastewater Division
Docket Nos. W-01428A-13-0043 and SW-01428A-13-0042
Test Year Ended: December 31, 2012

Surrebuttal Schedule DWC-WW8

RATE BASE ADJUSTMENT NO. 4 - PLANT ADDITIONS RECORDED IN WRONG YEARS

LINE NO.	ACCT NO.	DESCRIPTION	[A] COMPANY PROPOSED	[B] STAFF ADJUSTMENTS	[C] STAFF[1] RECOMMENDED
1		Accumulated Depreciation	$ 13,244,186	$ 401	$ 13,244,587

[1] Amounts may not reflect other adjustments.

REFERENCES:
Column [A]: Company Filing
Column [B]: Testimony DWC
Column [C]: Column [A] + Column [B]

Litchfield Park Service Company - Wastewater Division
Docket Nos. W-01428A-13-0043 and SW-01428A-13-0042
Test Year Ended: December 31, 2012

RATE BASE ADJUSTMENT NO. 5 - RECLASSIFICATION OF PLANT IN SERVICE

LINE NO.	ACCT NO.	DESCRIPTION	[A] COMPANY PROPOSED	[B] STAFF ADJUSTMENTS	[C] STAFF[1] RECOMMENDED
1	354	Structure and Improvement	$ 24,208,314	$ (525,110)	$ 23,683,204
2	361	Collection Services - Gravity	31,886,680	41,564	31,928,244
	365	Flow Measuring Installation	-	36,618	36,618
3	371	Effluent Pumping Equipment	799,481	61,670	861,151
4	380	Wastewater Treatment and Disposal Equipment	5,585,470	470,592	6,056,062
5	389	Other Plant & Misc Equipment	871,498	(43,005)	828,493
6	393	Tools, Shop & Garage Equipment	145,631	(15,681)	129,950
7	394	Lab Equipment	186,348	836	187,184
8	395	Power Operated Equipment	28,090	(21,485)	6,605
9		Total	$ 63,711,512	$ 6,000	$ 63,717,512
10					
11		Accumulated Depreciation	$ 16,514,086	$ 18,194	16,532,280
12					
13					
14	Staff's Removal of Plant and Accumulated Depreciation			PIS Adjustment	Years (1/2 Conv.)	Depr Rate	A/D Adjustment
15	2009	354	Structures and Improvment	$ (465,350)	3.5	3.33%	$ (54,237)
16	2011	354	Structures and Improvment	(59,760)	1.5	3.33%	(2,985)
17	2009	380	Wastewater Treatment and Disposal Equipment	(37,454)	3.5	5.00%	(6,555)
18	2009	389	Other Plant & Misc Equipment	(43,005)	3.5	6.67%	(10,039)
19	2012	393	Tools, Shop & Garage Equipment	(15,681)	0.5	5.00%	(392)
20	2012	395	Power Operated Equipment	(21,485)	0.5	10.00%	(1,074)
21	Total Removal of Plant and Accumulated Depreciation			$ (642,735)			$ (75,282)
22							
23				PIS Adjustment	Years (1/2 Conv.)	Depr Rate	A/D Adjustment
24	Staff's Reclassification of Plant and Accumulated Depreciation						
25	2009	361	Collection Sewer	$ 41,564	3.5	2.00%	$ 2,910
26	2009	365	Flow measuring installation	36,618	3.5	2.00%	2,563
27	2009	371	Effluent Pumping Equipment	5,048	3.5	12.50%	2,208
28	2011	371	Effluent Pumping Equipment	6,000	0.5	12.50%	375
29	2012	371	Effluent Pumping Equipment	50,622	0.5	12.50%	3,164
30	2009	380	Wastewater Treatment and Disposal Equipment	461,742	3.5	5.00%	80,805
31	2012	380	Wastewater Treatment and Disposal Equipment	46,304	0.5	5.00%	1,158
32	2009	394	Lab Equipment	836	3.5	10.00%	293
33	Total Reclassification of Plant and Accumulated Depreciation			$ 648,735			$ 93,475
34							
35	Net increase to accumulated depreciation						$ 18,194
36							
37	Note: The $6,000 difference represents the relcassification of plant from the Water Division.						

[1] Amounts may not reflect other adjustments.

REFERENCES:
Column [A]: Company Filing
Column [B]: Testimony DWC
Column [C]: Column [A] + Column [B]

Litchfield Park Service Company - Wastewater Division
Docket Nos. W-01428A-13-0043 and SW-01428A-13-0042
Test Year Ended: December 31, 2012

Surrebuttal Schedule DWC-WW10

RATE BASE ADJUSTMENT NO. 6 - PLANT NOT USED AND USEFUL

LINE NO.	ACCT NO.	DESCRIPTION	[A] COMPANY PROPOSED	[B] STAFF ADJUSTMENTS	[C] STAFF[1] RECOMMENDED
1	353	Land and Land Right	$ 1,850,582	$ (11,217)	$ 1,839,365
2					
3	354	Structures and Improvements	$ 24,208,314	$ (113,329)	$ 24,094,985
4					
5		Accumulated Depreciation	$ 13,244,186	$ (5,661)	13,238,525
6					
7				PIS	Years	Depr	A/D
8	Staff's Removal of Plant and Accumulated Depreciation			Adjustment	(1/2 Conv,)	Rate	Adjustment
9	2011	354	Structures and Improvment	$ (113,329)	1.5	3.33%	$ (5,661)

[1] Amounts may not reflect other adjustments.

REFERENCES:
Column [A]: Company Filing
Column [B]: Testimony DWC
Column [C]: Column [A] + Column [B]

Litchfield Park Service Company - Wastewater Division
Docket Nos. W-01428A-13-0043 and SW-01428A-13-0042
Test Year Ended: December 31, 2012

Surrebuttal Schedule DWC-WW11

RATE BASE ADJUSTMENT NO. 7 - REMOVAL OF DUPLICATE INVOICES

LINE NO.	ACCT NO.	DESCRIPTION	[A] COMPANY PROPOSED	[B] STAFF ADJUSTMENTS	[C] STAFF[1] RECOMMENDED
1	353	Land and Land Rights	$ 1,850,582	$ (3,409)	$ 1,847,173
2	355	Power Generation Equipment	603,332	(400)	602,932
3	389	Other Plant & Misc. Equipment	871,498	(864)	870,634
4		Total	$ 3,325,412	$ (4,672)	$ 3,320,740
5					
6		Accumulated Depreciation	$ 16,514,086	$ (214)	$ 16,513,872
7					
8			PIS	Years	Depr	A/D
9	Staff's Calculation		Adjustment	(1/2 Conv.)	Rate	Adjustment
10	355	Power Generation Equipment	(400)	3.5	5.00%	$ (70)
11						
12	389	Other Plant & Misc. Equipment	$ (864)	2.5	6.67%	$ (144)

[1] Amounts may not reflect other adjustments.

REFERENCES:
Column [A]: Company Filing
Column [B]: Testimony DWC
Column [C]: Column [A] + Column [B]

RATE BASE ADJUSTMENT NO. 8 - NOT USED

Litchfield Park Service Company - Wastewater Division
Docket Nos. W-01428A-13-0043 and SW-01428A-13-0042
Test Year Ended: December 31, 2012

Surrebuttal Schedule DWC-WW13

RATE BASE ADJUSTMENT NO. 9 RECALCULATION OF CONTRIBUTIONS IN AID OF CONSTRUCTION

LINE NO.	ACCT NO.	DESCRIPTION	[A] COMPANY PROPOSED	[B] STAFF ADJUSTMENTS	[C] STAFF[1] RECOMMENDED
1		Contributions in Aid of Construction	$ 28,470,485	$ (93,570)	$ 28,376,915
2					
3		Amortization of Contributions in Aid of Construction	$ 4,446,775	$ (293,474)	$ 4,153,301

[1] Amounts may not reflect other adjustments.

REFERENCES:
Column [A]: *Company Filing*
Column [B]: Testimony DWC
Column [C]: Column [A] + Column [B]

Litchfield Park Service Company - Wastewater Division
Docket Nos. W-01428A-13-0043 and SW-01428A-13-0042
Test Year Ended: December 31, 2012

Surrebuttal Schedule DWC-WW14

RATE BASE ADJUSTMENT NO. 10 - CUSTOMER DEPOSITS

LINE NO.	ACCT NO.	DESCRIPTION	[A] COMPANY PROPOSED	[B] STAFF ADJUSTMENTS	[C] STAFF[1] RECOMMENDED
1		Customer Deposits	$ 155,440	$ 8,334	$ 163,774

Staff Calculation:

13th month average of customer deposits	$ 311,436
December 31th amount	295,587
Increase over December 31 test year amount	$ 15,849
Allocated to Water	$ 7,514
Allocated to Wastewater	8,334
Total	$ 15,849

[1] Amounts may not reflect other adjustments.

REFERENCES:
Column [A]: Company Filing
Column [B]: Testimony DWC
Column [C]: Column [A] + Column [B]

Litchfield Park Service Company - Wastewater Division
Docket Nos. W-01428A-13-0043 and SW-01428A-13-0042
Test Year Ended: December 31, 2012

Surrebuttal Schedule DWC-WW15

RATE BASE ADJUSTMENT NO. 11 - ACCUMULATED DEFERRED INCOME TAXES

LINE NO.	ACCT NO.	DESCRIPTION	[A] COMPANY PROPOSED	[B] STAFF ADJUSTMENTS	[C] STAFF[1] RECOMMENDED
1		Deferred Income Taxes	$ 982,318	$ (394,799)	$ 587,519

[1] Amounts may not reflect other adjustments.

REFERENCES:
Column [A]: Company Filing
Column [B]: Testimony DWC
Column [C]: Column [A] + Column [B]

Litchfield Park Service Company - Wastewater Division
Docket Nos. W-01428A-13-0043 and SW-01428A-13-0042
Test Year Ended: December 31, 2012

Surrebuttal Schedule DWC-WW16

OPERATING INCOME STATEMENT - ADJUSTED TEST YEAR AND STAFF RECOMMENDED

LINE NO.	DESCRIPTION	[A] COMPANY ADJUSTED TEST YEAR AS FILED	[B] STAFF TEST YEAR ADJUSTMENTS	[C] STAFF TEST YEAR AS ADJUSTED	[D] STAFF PROPOSED CHANGES	[E] STAFF RECOMMENDED
1	*REVENUES:*					
2	Metered Water Sales	$ 9,853,383	$ -	$ 9,853,383	$ (45,887)	$ 9,807,496
3	Water Sales-Unmetered	-	-	-	-	-
4	Other Operating Revenue	508,220	-	508,220	-	508,220
5	Intentionally Left Blank	-	-	-	-	-
6	**Total Operating Revenues**	$ 10,361,603	$ -	$ 10,361,603	$ (45,887)	$ 10,315,716
7						
8	*OPERATING EXPENSES:*					
9	Salaries and Wages	$ 1,168,151	$ -	$ 1,168,151	$ -	$ 1,168,151
10	Purchased Water	26,656	-	26,656	-	26,656
11	Purchased Power	601,635	-	601,635	-	601,635
12	Slude Removal Expense	234,893	3,410	238,303	-	238,303
13	Chemicals	357,986	-	357,986	-	357,986
14	Materials and Supplies	86,994	-	86,994	-	86,994
15	Management Services - US Liberty Water	1,469,058	(32,398)	1,436,660	-	1,436,660
16	Management Services - Corporate	698,951	-	698,951	-	698,951
17	Outside Services - Accounting	2,161	-	2,161	-	2,161
18	Outside Services - Engineering	-	-	-	-	-
19	Outside Services- Other	222,303	-	222,303	-	222,303
20	Outside Services- Legal	25,746	-	25,746	-	25,746
21	Water Testing	57,735	(23,347)	34,388	-	34,388
22	Rents - Office	40,007	-	40,007	-	40,007
23	Equipment Rental	3,076	-	3,076	-	3,076
24	Transportation Expenses	26,465	-	26,465	-	26,465
25	Insurance - General Liability	57,823	-	57,823	-	57,823
26	Insurance - Vehicle	11,506	-	11,506	-	11,506
27	Reg. Comm. Exp. - Other	14,189	-	14,189	-	14,189
28	Reg. Comm. Exp. - Rate Case	74,200	-	74,200	-	74,200
29	Interest on Customer Deposits	-		5,346		5,346
30	Miscellaneous Expense	77,293	-	77,293	-	77,293
31	Bad Debt Expense	45,215	-	45,215	-	45,215
32	Depreciation and Amortization Expense	1,598,765	(14,346)	1,584,419		1,584,419
33	Property Taxes	576,026	(28,801)	547,225	(810)	546,415
34	Income Tax	1,013,153	36,231	1,049,383	(17,260)	1,032,123
35	**Total Operating Expenses**	$ 8,489,987	$ (59,251)	$ 8,436,082	$ (18,070)	$ 8,418,013
36	**Operating Income (Loss)**	$ 1,871,616	$ 59,251	$ 1,925,521	$ (27,817)	$ 1,897,704

References:
Column (A): Company Schedule C-1
Column (B): Schedule DWC-W17
Column (C): Column (A) + Column (B)
Column (D): Schedules DWC-WW23 and DWC-WW24
Column (E): Column (C) + Column (D)

Litchfield Park Service Company - Wastewater Division
Docket Nos. W-01428A-13-0043 and SW-01428A-13-0042
Test Year Ended: December 31, 2012

SUMMARY OF OPERATING INCOME STATEMENT ADJUSTMENTS - TEST YEAR

LINE NO.	DESCRIPTION	[A] COMPANY AS FILED	[B] Water Testing Expense ADJ #1 Ref: Sch JMM-WW18	[C] Corporate Allocation True-Up ADJ #2 Ref: Sch JMM-WW19	[D] Corporate Allocation Expense ADJ #3 Ref: Sch JMM-WW20	[E] Interest on Customer Deposits ADJ #4 Ref: Sch JMM-WW21	[F] Depreciation Expense ADJ #5 Ref: Sch JMM-WW22	[G] Property Tax Expense ADJ #6 Ref: Sch JMM-WW23	[H] Income Tax Expense ADJ #7 Ref: Sch JMM-W24	[I] STAFF ADJUSTED
1	*REVENUES:*									
2	Metered Water Sales	$ 9,853,383	$ -	$ -	$ -	$ -	$ -	$ -	$ -	$ 9,853,383
3	Water Sales-Unmetered	-	-	-	-	-	-	-	-	-
4	Other Operating Revenue	508,220	-	-	-	-	-	-	-	508,220
5	Intentionally Left Blank	-	-	-	-	-	-	-	-	-
6	**Total Operating Revenues**	$ 10,361,603	$ -	$ -	$ -	$ -	$ -	$ -	$ -	$ 10,361,603
7										
8	*OPERATING EXPENSES:*									
9	Salaries and Wages	$ 1,168,151	$ -	$ -	$ -	$ -	$ -	$ -	$ -	$ 1,168,151
10	Purchased Water	26,656	-	-	-	-	-	-	-	26,656
11	Purchased Power	601,635	-	-	-	-	-	-	-	601,635
12	Slude Removal Expense	234,893	3,410	-	-	-	-	-	-	238,303
13	Chemicals	357,986	-	-	-	-	-	-	-	357,986
14	Materials and Supplies	86,994	-	-	-	-	-	-	-	86,994
15	Management Services - US Liberty Water	1,469,058	-	(8,420)	(23,978)	-	-	-	-	1,436,660
16	Management Services - Corporate	698,951	-	-	-	-	-	-	-	698,951
17	Outside Services - Accounting	2,161	-	-	-	-	-	-	-	2,161
18	Outside Services - Engineering	-	-	-	-	-	-	-	-	-
19	Outside Services- Other	222,303	-	-	-	-	-	-	-	222,303
20	Outside Services- Legal	25,746	-	-	-	-	-	-	-	25,746
21	Water Testing	57,735	(23,347)	-	-	-	-	-	-	34,388
22	Rents - Office	40,007	-	-	-	-	-	-	-	40,007
23	Equipment Rental	3,076	-	-	-	-	-	-	-	3,076
24	Transportation Expenses	26,465	-	-	-	-	-	-	-	26,465
25	Insurance - General Liability	57,823	-	-	-	-	-	-	-	57,823
26	Insurance - Vehicle	11,506	-	-	-	-	-	-	-	11,506
27	Reg. Comm. Exp. - Other	14,189	-	-	-	-	-	-	-	14,189
28	Reg. Comm. Exp. - Rate Case	74,200	-	-	-	-	-	-	-	74,200
29	Interest on Customer Deposits	-	-	-	-	5,346	-	-	-	5,346
30	Miscellaneous Expense	77,293	-	-	-	-	-	-	-	77,293
31	Bad Debt Expense	45,215	-	-	-	-	-	-	-	45,215
32	Depreciation and Amortization Expense	1,598,765	-	-	-	-	(14,346)	-	-	1,584,419
33	Property Taxes	576,026	-	-	-	-	-	(28,801)	-	547,225
34	Income Tax	1,013,153	-	-	-	-	-	-	36,231	1,049,383
35	**Total Operating Expenses**	$ 8,489,987	$ (19,937)	$ (8,420)	$ (23,978)	$ 5,346	$ (14,346)	$ (28,801)	$ 36,231	$ 8,436,083
36	**Operating Income (Loss)**	$ 1,871,616	$ 19,937	$ 8,420	$ 23,978	$ (5,346)	$ 14,346	$ 28,801	$ (36,231)	$ 1,925,520

Litchfield Park Service Company - Wastewater Division
Docket Nos. W-01428A-13-0043 and SW-01428A-13-0042
Test Year Ended: December 31, 2012

Surrebuttal Schedule DWC-WW18

OPERATING INCOME ADJUSTMENT NO. 1 - WATER TESTING EXPENSE

LINE NO.	DESCRIPTION	[A] COMPANY PROPOSED	[B] STAFF ADJUSTMENTS	[C] STAFF[1] RECOMMENDED
1	Sludge Removal Expense	$ 234,893	$ 3,410	$ 238,303
2				
3	Water Testing Expense	$ 57,735	$ (23,347)	$ 34,388

[1] Amounts may not reflect other adjustments.

REFERENCES:
Column [A]: Company Filing
Column [B]: Testimony DWC
Column [C]: Column [A] + Column [B]

Litchfield Park Service Company - Wastewater Division
Docket Nos. W-01428A-13-0043 and SW-01428A-13-0042
Test Year Ended: December 31, 2012

Surrebuttal Schedule DWC-WW19

OPERATING INCOME ADJUSTMENT NO. 2 - CORPORATE EXPENSE TRUE-UP

LINE NO.	DESCRIPTION	[A] COMPANY PROPOSED	[B] STAFF ADJUSTMENTS	[C] STAFF[1] RECOMMENDED
1	Management Services - US Liberty Water	$ 1,469,058	$ (8,420)	$ 62,478

Staff's Calculation			
Accrual Adjustment	$ 29,297		
Allocated to Water	28.74%	$	8,420
Allocated to Wastewater	26.87%	$	7,872

[1] Amounts may not reflect other adjustments.

REFERENCES:
Column [A]: Company Filing
Column [B]: Testimony DWC
Column [C]: Column [A] + Column [B]

Litchfield Park Service Company - Wastewater Division
Docket Nos. W-01428A-13-0043 and SW-01428A-13-0042
Test Year Ended: December 31, 2012

Surrebuttal Schedule DWC-WW20

OPERATING INCOME ADJUSTMENT NO. 3 - CORPORATE ALLOCATION EXPENSE

LINE NO.	DESCRIPTION	[A] COMPANY PROPOSED	[B] STAFF ADJUSTMENTS	[C] STAFF RECOMMENDED
1	Management Services - US Liberty Water	$ 1,469,058	$ (23,978)	$ 62,478

[1] Amounts may not reflect other adjustments.

REFERENCES:
Column [A]: Company Filing
Column [B]: Testimony DWC
Column [C]: Column [A] + Column [B]

Litchfield Park Service Company - Wastewater Division
Docket Nos. W-01428A-13-0043 and SW-01428A-13-0042
Test Year Ended: December 31, 2012

Surrebuttal Schedule DWC-WW21

OPERATING INCOME ADJUSTMENT NO. 4 - INTEREST ON CUSTOMER DEPOSITS

LINE NO.	DESCRIPTION	[A] COMPANY PROPOSED	[B] STAFF ADJUSTMENTS	[C] STAFF[1] RECOMMENDED
1	Interest on Customer Deposits	$ -	$ 5,346	$ 5,346

Staff's Calculation	
Allocated to Water	$ 5,346
Allocated to Wastewater	5,931
Total	$ 11,277

[1] Amounts may not reflect other adjustments.

REFERENCES:
Column [A]: Company Filing
Column [B]: Testimony DWC
Column [C]: Column [A] + Column [B]

OPERATING INCOME ADJUSTMENT NO. 5 - DEPRECIATION EXPENSE ON TEST YEAR PLANT

LINE NO.	ACCT NO.	DESCRIPTION	[A] PLANT In SERVICE Per Staff	[B] NonDepreciable or Fully Depreciated PLANT	[C] DEPRECIABLE PLANT (Col A - Col B)	[D] DEPRECIATION RATE	[E] DEPRECIATION EXPENSE (Col C x Col D)
1	351	Organization	$ -	$ 100	$ (100)	0.00%	$ -
2	352	Franchises	$ -	$ -	$ -	0.00%	$ -
3	353	Land and Land Rights	$ 1,835,956	$ 1,284,595	$ 551,361	0.00%	$ -
4	354	Structures and Improvements	$ 23,768,875	$ -	$ 23,768,875	3.33%	$ 791,504
5	355	Power Generation Equipment	$ 602,932	$ -	$ 602,932	5.00%	$ 30,147
6	360	Collection Services - Force	$ 1,162,597	$ -	$ 1,162,597	2.00%	$ 23,252
7	361	Collection Services - Gravity	$ 31,928,244	$ -	$ 31,928,244	2.00%	$ 638,565
8	362	Special Collecting Structures	$ -	$ -	$ -	2.00%	$ -
9	363	Services to Customers	$ 76,190	$ -	$ 76,190	2.00%	$ 1,524
10	364	Flow Measuring Devices	$ 46,210	$ -	$ 46,210	10.00%	$ 4,621
11	365	Flow Measuring Installations	$ 36,618	$ -	$ 36,618	2.00%	$ 732
12	366	Reuse Services	$ 4,057,660	$ -	$ 4,057,660	2.00%	$ 81,153
13	367	Reuse Meters and Installations	$ 44,753	$ -	$ 44,753	8.33%	$ 3,728
14	370	Receiving Wells	$ 860,393	$ -	$ 860,393	3.33%	$ 28,651
15	371	Effluent Pumping Equipment	$ 861,151	$ -	$ 861,151	12.50%	$ 107,644
16	374	Reuse Trans. And Dist. System	$ 62,286	$ -	$ 62,286	2.50%	$ 1,557
17	375	Resuse T&D	$ 420,334	$ -	$ 420,334	2.50%	$ 10,508
18	380	Treatment and Disposal Equipment	$ 5,356,062	$ -	$ 5,356,062	5.00%	$ 267,803
19	381	Plant Sewers	$ 47,802	$ -	$ 47,802	5.00%	$ 2,390
20	382	Outfall Sewer Lines	$ 343,681	$ -	$ 343,681	3.33%	$ 11,445
21	389	Other Plant & Misc. Equipment	$ 833,822	$ -	$ 833,822	6.67%	$ 55,616
22	390	Office Furniture & Equipment	$ 275,740	$ -	$ 275,740	6.67%	$ 18,392
23	391	Transportation Equipment	$ 26,387	$ -	$ 26,387	20.00%	$ 5,277
24	392	Stores Equipment	$ 8,968	$ -	$ 8,968	4.00%	$ 359
25	393	Tools, Shop & Garage Equipment	$ 129,950	$ -	$ 129,950	5.00%	$ 6,497
26	394	Labratory Equipment	$ 187,184	$ -	$ 187,184	10.00%	$ 18,718
27	395	Power Operated Equipment	$ 6,605	$ -	$ 6,605	5.00%	$ 330
28	396	Communication Equipment	$ 415,441	$ -	$ 415,441	10.00%	$ 41,544
29	398	Other Tangible Plant	$ -	$ -	$ -	10.00%	$ -
30		Total Plant	$ 73,395,842	$ 1,284,695	$ 72,111,147		$ 2,151,958
31							
32	Plus: Post Test Year Plant						
33	380	Treatment and Disposal Equipment	$ 700,000	$ -	$ 700,000	5.00%	$ -
37							
39	Less: Amortization of Contributions						
40	361	Collection Sewers Gravity	$ 24,892,778			2.00%	$ (497,856)
41	363	Customer Services	$ 3,484,137			2.00%	$ (69,683)
45			$ 28,376,915				$ (567,538)
46							
47		Total Depreciation Expense					$ 1,584,419
48							
49		Depreciation Expense - Company					$ 1,598,765
50							
51		Staff's Adjustment to Depreciation Expense					$ (14,346)

References:
Column [A]: Schedule DWC-WW16
Column [B]: From Column [A]
Column [C]: Column [A] - Column [B]
Column [D]: Engineering Staff Report
Column [E]: Column [C] x Column [D]

Litchfield Park Service Company - Wastewater Division
Docket Nos. W-01428A-13-0043 and SW-01428A-13-0042
Test Year Ended: December 31, 2012

Surrebuttal Schedule DWC-WW23

OPERATING INCOME ADJUSTMENT NO. 6 - PROPERTY TAX EXPENSE

LINE NO.	Property Tax Calculation	[A] STAFF AS ADJUSTED	[B] STAFF RECOMMENDED
1	Staff Adjusted Test Year Revenues	$ 10,361,603	$ 10,361,603
2	Weight Factor	2	2
3	Subtotal (Line 1 * Line 2)	20,723,206	$ 20,723,206
4	Staff Recommended Revenue, Per Schedule DWC-W1	10,361,603	$ 10,315,716
5	Subtotal (Line 4 + Line 5)	31,084,809	31,038,922
6	Number of Years	3	3
7	Three Year Average (Line 5 / Line 6)	10,361,603	$ 10,346,307
8	Department of Revenue Mutilplier	2	2
9	Revenue Base Value (Line 7 * Line 8)	20,723,206	$ 20,692,615
10	Plus: 10% of CWIP -	-	-
11	Less: Net Book Value of Licensed Vehicles	50,681	$ 50,681
12	Full Cash Value (Line 9 + Line 10 - Line 11)	20,672,525	$ 20,641,934
13	Assessment Ratio	19.0%	19.0%
14	Assessment Value (Line 12 * Line 13)	3,927,780	$ 3,921,967
15	Composite Property Tax Rate (Per Company Schedule)	13.9322%	13.9322%
16			$ -
17	Staff Test Year Adjusted Property Tax (Line 14 * Line 15)	$ 547,225	
18	Company Proposed Property Tax	576,026	
19			
20	Staff Test Year Adjustment (Line 16-Line 17)	$ (28,801)	
21	Property Tax - Staff Recommended Revenue (Line 14 * Line 15)		$ 546,415
22	Staff Test Year Adjusted Property Tax Expense (Line 16)		$ 547,225
23	Increase in Property Tax Expense Due to Increase in Revenue Requirement		$ (810)
24			
25	Increase to Property Tax Expense		$ (810)
26	Increase in Revenue Requirement		(45,887)
27	Increase to Property Tax per Dollar Increase in Revenue (Line19/Line 20)		1.764740%

Litchfield Park Service Company - Wastewater Division
Docket Nos. W-01428A-13-0043 and SW-01428A-13-0042
Test Year Ended: December 31, 2012

Surrebuttal Schedule DWC-WW24

OPERATING INCOME ADJUSTMENT NO. 7 - TEST YEAR INCOME TAXES

LINE NO.	DESCRIPTION		Test Year
1			
2			
3			
4	*Calculation of Income Tax:*		
5	Revenue (Schedule DWC-WW1)	$	10,361,603
6	Operating Expenses Excluding Income Taxes	$	7,386,699
7	Synchronized Interest (L17)	$	234,284
8	Arizona Taxable Income (L1 - L2 - L3)	$	2,740,619
9	Arizona State Income Tax Rate		6.5000%
10	Arizona Income Tax (L4 x L5)	$	178,140
11	Federal Taxable Income (L4 - L6)	$	2,562,479
12	Federal Tax on First Income Bracket ($1 - $50,000) @ 15%	$	7,500
13	Federal Tax on Second Income Bracket ($51,001 - $75,000) @ 25%	$	6,250
14	Federal Tax on Third Income Bracket ($75,001 - $100,000) @ 34%	$	8,500
15	Federal Tax on Fourth Income Bracket ($100,001 - $335,000) @ 39%	$	91,650
16	Federal Tax on Fifth Income Bracket ($335,001 -$10,000,000) @ 34%	$	757,343
17	Total Federal Income Tax	$	871,243
18	Combined Federal and State Income Tax (L44 + L51)	$	1,049,383
19			
20			
21	*Calculation of Interest Synchronization:*		
22	Rate Base (Schedule DWC-W4)	$	23,428,440
23	Weighted Average Cost of Debt		1.10%
24	Synchronized Interest (L16 x L17)	$	257,713
25			
26			
27	Income Tax - Per Staff	$	1,049,383
28	Income Tax - Per Company	$	1,013,153
29	**Staff Adjustment**	$	36,231

Monthly Charge for:	Present		Company Proposed Rates		Staff Recommended Rates	
Monthly Residential Service	$	38.99	$	41.62		38.83
Low Income Residential Service		33.14		35.38		33.01
Multi-Unit Housing - Monthly per Unit		36.19		38.63		35.99
Commercial:						
Small Commercial - Monthly Service		65.93		70.37		65.56
Measured Service:						
Regular Domestic:		36.91		39.40		36.71
Monthly Service Charge		3.22		3.44		3.21
Commodity Charge per 1,000 gallons						
Restaurant, Motels, Grocery Stores & Dry Cleaning Estab.1						
Monthly Service Charge		36.91		39.40		36.71
Commodity Charge per 1,000 gallons		4.30		4.59		4.28
Wigwam Resort:						
Monthly Rate - Per Room		36.19		39.40		35.99
Main Hotel Facilities - Per Month		1,433.30		1,529.90		1,425.41
Schools - Monthly Service Rates:						
Elementary Schools		974.64		1,040.33		969.28
Middle Schools		1,146.64		1,223.92		1,140.33
High Schools		1,146.64		1,223.92		1,140.33
Community College		1,777.29		1,897.08		1,767.51
Effluent2:						
1 Motels without restuarants charged multi-unit monthly rate.						
2 Market Rate - Maximum effluent rate shall not exceed $430 per acre foot based on a potable water rate of $1.32 per thousand gallons.						
Late Payment Penalty						
Other Service Charges:						
Establishment (Regular Hours) per Rule R14-2-603D (a)	$	20.00	$	20.00	$	20.00
Establishment (After Hours) per Rule R14-2-603D (a)	$	40.00	$	40.00	$	40.00
Re-Establishment of Service per Rule R14-2-603D (a)		(b)		(b)		(b)
Reconnection (Regular Hours) per Rule R14-2-603D (a)	$	50.00	$	50.00	$	50.00
Reconnection (After Hours) per Rule R14-2-603D (a)	$	65.00	$	65.00	$	65.00
NSF Check, per Rule R14-2-608E (a)	$	25.00	$	25.00	$	25.00
Deferred Payment, Per Month		1.50%		1.50%		1.50%
Late Charge	(c)		(c)		(c)	
Service Calls - Per Hour/After Hours(d)	$	40.00	$	40.00	$	40.00
Deposit Requirement	(e)		(e)		(e)	
Deposit Interest		3.50%		3.50%		3.50%
Service Lateral Connection Charge- All Sizes	(f)		(f)		(f)	
Main Extension Tariff, per Rule R14-2-606B	(g)		(g)		(g)	

(a) Service charges for customers taking both water and sewer service are not duplicative.
(b) Minimum charge times number of full months off the system. per Rule R14-2-603D.
(c) Per Rule R14-2-608F. Greater of $5.00 or 1.5% of unpaid balance.
(d) No charge for service calls during normal working hours.
(e) Per ACC Rules R14-2-603B Residential - two times the average bill.
Non-residential - two and one-half times the average bill.
(f) At cost. Customer/Developer shall install or cuase to be installed all Service Laterals as a non-refundable contribution-in-aid of construction..
(g) All Main Extensions shall be completed at cost and shall be treated as non-refundable contribution-in-aid of construction.

Litchfield Park Service Company - Wastewater Division
Docket No. SW-01428A-13-0042
Test Year Ended: December 31, 2012

Surrebuttal Schedule DWC-WW26

Typical Bill Analysis
General Service 5/8 x 3/4-Inch Meter

Company Proposed	Gallons	Present Rates	Proposed Rates	Dollar Increase	Percent Increase
Average Usage	-	$ 38.99	$ 41.62	$ 2.63	6.75%
Median Usage	-	38.99	41.62	$ 2.63	6.75%
Staff Recommended					
Average Usage	-	$ 38.99	$ 38.83	$ (0.16)	-0.41%
Median Usage	-	38.99	38.83	$ (0.16)	-0.41%

Present & Proposed Rates (Without Taxes)
General Service 5/8 x 3/4-Inch Meter

Gallons	Present		Company Proposed		%	Staff Recommended		%
	3/4"		3/4"			3/4"		
	Minimum Charge	$ 38.99	Minimum Charge	$ 41.62		Minimum Charge	$ 38.83	
	1st Tier Rate	-	1st Tier Rate	-		1st Tier Rate	-	
	1st Tier Breakover	-	1st Tier Breakover	-		1st Tier Breakover	-	
	2nd Tier Rate	-	2nd Tier Rate	-		2nd Tier Rate	-	
	2nd Tier Breakover	-	2nd Tier Breakover	-		2nd Tier Breakover	-	
	3rd Tier Rate	-	3rd Tier Rate	-		3rd Tier Rate	-	
Consumption	Rates		Rates		Increase	Rates		Increase
-	$ 38.99		$ 41.62		6.75%	$ 38.83		-0.41%
1,000	38.99		41.62		6.75%	38.83		-0.41%
2,000	38.99		41.62		6.75%	38.83		-0.41%
3,000	38.99		41.62		6.75%	38.83		-0.41%
4,000	38.99		41.62		6.75%	38.83		-0.41%
5,000	38.99		41.62		6.75%	38.83		-0.41%
6,000	38.99		41.62		6.75%	38.83		-0.41%
7,000	38.99		41.62		6.75%	38.83		-0.41%
8,000	38.99		41.62		6.75%	38.83		-0.41%
9,000	38.99		41.62		6.75%	38.83		-0.41%
10,000	38.99		41.62		6.75%	38.83		-0.41%
11,000	38.99		41.62		6.75%	38.83		-0.41%
12,000	38.99		41.62		6.75%	38.83		-0.41%
13,000	38.99		41.62		6.75%	38.83		-0.41%
14,000	38.99		41.62		6.75%	38.83		-0.41%
15,000	38.99		41.62		6.75%	38.83		-0.41%
16,000	38.99		41.62		6.75%	38.83		-0.41%
17,000	38.99		41.62		6.75%	38.83		-0.41%
18,000	38.99		41.62		6.75%	38.83		-0.41%
19,000	38.99		41.62		6.75%	38.83		-0.41%
20,000	38.99		41.62		6.75%	38.83		-0.41%
25,000	38.99		41.62		6.75%	38.83		-0.41%
30,000	38.99		41.62		6.75%	38.83		-0.41%
35,000	38.99		41.62		6.75%	38.83		-0.41%
40,000	38.99		41.62		6.75%	38.83		-0.41%
45,000	38.99		41.62		6.75%	38.83		-0.41%
50,000	38.99		41.62		6.75%	38.83		-0.41%
75,000	38.99		41.62		6.75%	38.83		-0.41%
100,000	38.99		41.62		6.75%	38.83		-0.41%

EXHIBIT
S-8
ADMITTED

BEFORE THE ARIZONA CORPORATION COMMISSION

BOB STUMP
Chairman
GARY PIERCE
Commissioner
BRENDA BURNS
Commissioner
BOB BURNS
Commissioner
SUSAN BITTER SMITH
Commissioner

IN THE MATTER OF THE APPLICATION OF LITCHFIELD PARK SERVICE COMPANY, AN ARIZONA CORPORATION, FOR A DETERMINATION OF THE FAIR VALUE OF ITS UTILITY PLANTS AND PROPERTY AND FOR INCREASES IN ITS WASTEWATER RATES AND CHARGES BASED THEREON FOR UTILITY SERVICE.	)	DOCKET NO. SW-01427A-13-0042
IN THE MATTER OF THE APPLICATION OF LITCHFIELD PARK SERVICE COMPANY, AN ARIZONA CORPORATION, FOR A DETERMINATION OF THE FAIR VALUE OF ITS UTILITY PLANTS AND PROPERTY AND FOR INCREASES IN ITS WATER RATES AND CHARGES BASED THEREON FOR UTILITY SERVICE.	)	DOCKET NO. W-01428A-13-0043

RATE DESIGN

DIRECT TESTIMONY OF

DARRON W. CARLSON

PUBLIC UTILITIES ANALYST MANAGER

UTILITIES DIVISION

ARIZONA CORPORATION COMMISSION

OCTOBER 4, 2013

TABLE OF CONTENTS

Page

I. INTRODUCTION 1

II. BACKGROUND 1

III. WATER RATE DESIGN 2

IV. WASTEWATER RATE DESIGN 3

WATER SCHEDULES

Rate Design DWC-W1

Typical Bill Analysis DWC-W2

WASTEWATER SCHEDULES

Rate Design DWC-WW1

Typical Bill Analysis DWC-WW2

EXECUTIVE SUMMARY
LITCHFIELD PARK SERVICE COMPANY
DOCKET NOS. SW-01427A-13-0042 AND W-01427A-13-0043

Litchfield Park Service Company ("Company") is an Arizona "C" corporation. Its principal place of business is 12725 W. Indian School Road, Suite D-101, Avondale, Arizona. The Company is engaged in the business of providing water and wastewater utility services in its certificated areas in portions of Maricopa County, Arizona. The Company served approximately 16,800 water customers and 16,160 wastewater customers during the test year ended December 31, 2012.

Water Division Rate Design

The Company-proposed rates include a monthly minimum charge based on meter size and an inverted four-tier commodity usage rate for residential customers or an inverted two-tier commodity usage rate for commercial, irrigation, and all customer classes with 1-1/2 inch meters or larger. The Company-proposed rates would increase the monthly bill for a typical 5/8 X 3/4 - inch meter residential customer, with a median usage of 5,000 gallons, by $5.99 (35.19 percent) from $17.02 to $23.01.

The Utilities Division ("Staff") recommended rates also include a monthly minimum charge based on meter size and an inverted four-tier commodity usage rate for residential customers or an inverted two-tier commodity usage rate for commercial, irrigation, and all customer classes with 1-1/2 inch meters or larger. Staff's recommended rates would decrease the monthly bill for a typical 5/8 X 3/4 - inch meter residential customer, with a median usage of 5,000 gallons, by $1.27 (7.46 percent) from $17.02 to $15.75.

Wastewater Division Rate Design

The Company-proposed rates include a flat rate based on customer class for most customer classes and includes a single-tier commodity water usage rate for certain commercial customers as indicated on Schedule DWC-WW1. The Company-proposed rates would increase the monthly bill for a typical residential customer by $2.63 (6.75 percent) from $38.99 to $41.62.

Staff recommended rates also include a flat rate based on customer class for most customer classes and includes a single-tier commodity water usage rate for certain commercial customers as indicated on Schedule DWC-WW1. Staff recommended rates would decrease the monthly bill for a typical residential customer by $0.21 (0.55 percent) from $38.99 to $38.78.

I. INTRODUCTION

Q. Please state your name, occupation, and business address.

A. My name is Darron W. Carlson. I am a Public Utilities Analyst Manager employed by the Arizona Corporation Commission ("Commission") in the Utilities Division ("Staff"). My business address is 1200 West Washington Street, Phoenix, Arizona 85007.

Q. Are you the same Darron Carlson who previously filed direct testimony regarding the revenue requirements in this docket?

A. Yes, I am. I filed that direct testimony on September 26, 2013.

II. BACKGROUND

Q. Please describe the operations of the applicant Litchfield Park Service Company ("LPSCO" or "Company").

A. LPSCO is an Arizona "C" corporation. Its principle place of business is 12725 West Indian School Road, Suite D-101, Avondale, Arizona. LPSCO is engaged in the business of providing water and wastewater utility services in its certificated areas in portions of Maricopa County, Arizona. The Company served approximately 16,800 water customers and 16,160 wastewater customers during the test year ended December 31, 2012.

Q. When were the Company's current rates approved?

A. The Company's current rates were approved in Decision No. 72026, dated December 10, 2010.

III. WATER RATE DESIGN

Q. Please describe the Company's current rate design.

A. The Company's current rate design includes a monthly minimum charge based on meter size and an inverted three-tier commodity usage rate for residential customers or an inverted two-tier commodity usage rate for commercial, irrigation, and all customer classes with 1-1/2 inch meters or larger.

Q. Please describe the Company's proposed rate design.

A. The Company-proposed rate design includes a monthly minimum charge based on meter size and an inverted four-tier commodity usage rate for residential customers or an inverted two-tier commodity usage rate for commercial, irrigation, and all customer classes with 1-1/2 inch meters or larger.

Q. Please describe Staff's proposed rate design.

A. Staff's recommended rate design also includes a monthly minimum charge based on meter size and an inverted four-tier commodity usage rate for residential customers or an inverted two-tier commodity usage rate for commercial, irrigation, and all customer classes with 1-1/2 inch meters or larger.

Q. Where can one see and compare the current, Company-proposed, and Staff-recommended rates?

A. All of these rates can be seen and compared on the attached Schedule DWC-W1.

Q. What is the effect of the Company's proposed rates on the typical residential customer?

A. The Company-proposed rates would increase the monthly bill for a typical 5/8 X 3/4 - inch meter residential customer, with a median usage of 5,000 gallons, by $5.99 (35.19 percent) from $17.02 to $23.01. See Schedule DWC-W2.

Q. What is the effect of Staff's recommended rates on the typical residential customer?

A. Staff's recommended rates would decrease the monthly bill for a typical 5/8 X 3/4 - inch meter residential customer, with a median usage of 5,000 gallons, by $1.27 (7.46 percent) from $17.02 to $15.75. See Schedule SWC-W2.

IV. WASTEWATER RATE DESIGN

Q. Please describe the Company's current rate design.

A. The Company's current rate design includes a flat rate based on customer class for most customer classes except certain commercial customers, as indicated on Schedule DWC-WW1, also are subject to a single-tier commodity water usage rate.

Q. Please describe the Company's proposed rate design.

A. The Company-proposed rate design continues to include a flat rate based on customer class for most customer classes and includes a single-tier commodity water usage rate for certain commercial customers as indicated on Schedule DWC-WW1.

Q. Please describe Staff's recommended rate design.

A. The Staff recommended rate design also includes a flat rate based on customer class for most customer classes and includes a single-tier commodity water usage rate for certain commercial customers as indicated on Schedule DWC-WW1.

Q. Where can one see and compare the current, Company-proposed, and Staff-recommended rates?

A. All of these rates can be seen and compared on the attached Schedule DWC-WW1.

Q. What is the effect of the Company's proposed rates on the typical residential customer?

A. The Company-proposed rates would increase the monthly bill for a typical residential customer by $2.63 (6.75 percent) from $38.99 to $41.62. See Schedule DWC-WW2.

Q. What is the effect of Staff's recommended rates on the typical residential customer?

A. Staff's recommended rates would decrease the monthly bill for a typical residential customer by $0.21 (0.55 percent) from $38.99 to $38.78. See Schedule DWC-WW2.

Q. Does this conclude your rate design direct testimony?

A. Yes, it does.

Monthly Usage Charge	Present	Company Proposed Rates	Staff Recommended Rates
Meter Size (All Classes):			
5/8 x 3/4 Inch	$ 10.20	$ 14.50	$ 10.00
3/4 Inch - Residential	10.20	14.50	10.00
3/4 Inch	10.20	14.50	10.00
1 Inch - Residential	22.95	32.75	25.00
1 Inch	25.50	36.25	27.68
1 1/2 Inch	51.00	72.50	50.00
2 Inch	81.60	116.00	80.00
3 Inch	163.20	232.00	160.00
4 Inch	255.00	362.50	250.00
6 Inch	510.00	725.00	500.00
8 Inch - Bulk Water Only	501.00	575.00	500.00
8 Inch	841.50	1,160.00	800.00
10 Inch	1,173.00	1,667.50	1,150.00
12 Inch	2,193.00	3,117.50	2,150.00
Commodity Charge - Per 1,000 Gallons			
5/8" x 3/4" Meter and 3/4" (Residential)			
First 3,000 gallons	$ 1.0000	N/A	N/A
3,001 to 9,000 gallons	1.9100	N/A	N/A
Over 9,000 gallons	3.0300	N/A	N/A
First 3,000 gallons	N/A	$ 1.0000	N/A
3,001 to 11,000 gallons	N/A	2.0000	N/A
11,001 to 30,000 gallons	N/A	3.0500	N/A
Over 30,000 gallons	N/A	3.6600	N/A
First 3,000 gallons	N/A	N/A	$ 0.7500
3,001 to 9,000 gallons	N/A	N/A	1.7500
9,001 to 20,000 gallons	N/A	N/A	3.5500
Over 20,000 gallons	N/A	N/A	4.0000
5/8" x 3/4" and 3/4" Meter (Commercial & Irrigations)			
First 9,000 gallons	1.9100	2.0000	N/A
Over 9,000 gallons	3.0300	3.6600	N/A
First 9,000 gallons	N/A	N/A	1.7500
Over 9,000 gallons	N/A	N/A	3.5500
1" Meter (Residential)			
First 5,000 gallons	1.0000	N/A	N/A
5,001 to 20,000 gallons	1.9100	N/A	N/A
Over 20,000 gallons	3.0300	N/A	N/A
First 5,000 gallons	N/A	1.0000	N/A
5,001 to 20,000 gallons	N/A	2.0000	N/A
20,001 to 40,000 gallons	N/A	3.0500	N/A
Over 40,000 gallons	N/A	3.6600	N/A
First 3,000 gallons	N/A	N/A	0.7500
3,001 to 20,000 gallons	N/A	N/A	1.7500
20,001 to 37,000 gallons	N/A	N/A	3.5500
Over 37,000 gallons	N/A	N/A	4.0000
1" Meter (Commercial & Irrigations)			
First 20,000 gallons	1.9100	2.0000	N/A
Over 20,000 gallons	3.0300	3.6600	N/A
First 25,000 gallons	N/A	N/A	1.7500
Over 25,000 gallons	N/A	N/A	3.5500
1 1/2" Meter (All Classes)			
First 40,000 gallons	1.9100	2.0000	N/A
Over 40,000 gallons	3.0300	3.6600	N/A
First 37,000 gallons	N/A	N/A	1.7500
Over 37,000 gallons	N/A	N/A	3.5500
2" Meter (All Classes)			
First 60,000 gallons	1.9100	2.0000	N/A
Over 60,000 gallons	3.0300	3.6600	N/A
First 52,000 gallons	N/A	N/A	1.7500
Over 52,000 gallons	N/A	N/A	3.5500
3" Meter (All Classes)			
First 120,000 gallons	1.9100	2.0000	N/A
Over 120,000 gallons	3.0300	3.6600	N/A
First 94,000 gallons	N/A	N/A	1.7500
Over 94,000 gallons	N/A	N/A	3.5500
4" Meter (All Classes)			
First 180,000 gallons	1.9100	2.0000	N/A
Over 180,000 gallons	3.0300	3.6600	N/A
First 140,000 gallons	N/A	N/A	1.7500
Over 140,000 gallons	N/A	N/A	3.5500
6" Meter (All Classes)			
First 360,000 gallons	1.9100	2.0000	N/A
Over 360,000 gallons	3.0300	3.6600	N/A
First 270,000 gallons	N/A	N/A	1.7500
Over 270,000 gallons	N/A	N/A	3.5500
8" Meter (Bulk Resale)			
All Classes	1.5000	1.6500	3.5500
8" Meter (All Classes)			
First 650,000 gallons	1.9100	2.0000	N/A
Over 650,000 gallons	3.0300	3.6600	N/A
First 430,000 gallons	N/A	N/A	1.7500
Over 430,000 gallons	N/A	N/A	3.5500

10" Meter (All Classes)			
First 940,000 gallons	1.9100	2.0000	N/A
Over 940,000 gallons	3.0300	3.6600	N/A
First 600,000 gallons	N/A	N/A	1.7500
Over 600,000 gallons	N/A	N/A	3.5500
12" Meter (All Classes)			
First 1,248,000 gallons	2.9200	N/A	N/A
Over 1,248,000 gallons	3.6400	N/A	N/A
First 1,000,000 gallons	N/A	N/A	1.7500
Over 1,000,000 gallons	N/A	N/A	3.5500
Construction Hydrants			
All Gallons	3.0300	3.6600	3.5500

Other Service Charges			
Establishment (Regular Hours) per Rule R14-2-403D (a)	$ 20.00	$ 20.00	$ 20.00
Establishment (After Hours) per Rule R14-2-403D (a)	$ 40.00	$ 40.00	$ 40.00
Re-Establishment of Service per Rule R14-2-403D (a)	(b)	(b)	(b)
Reconnection (Regular Hours) per Rule R14-2-403D (a)	$ 50.00	$ 50.00	$ 50.00
Reconnection (After Hours) per Rule R14-2-403D (a)	$ 65.00	$ 65.00	$ 65.00
Meter Test (If correct) per Rule R14-2-408F (c)	$ 25.00	$ 25.00	$ 25.00
Meter Reread per Rule R14-2-408C (If correct)	$ 5.00	$ 5.00	$ 5.00
Fire Hydrant Meter Relocation	NT	$ 50.00	$ 50.00
Fire Hydrant Meter Repair	NT	Cost	Cost
NSF Check per Rule R14-2-409F (a)	$ 20.00	$ 25.00	$ 25.00
Deferred Payment, Per Month	1.50%	1.50%	1.50%
Late Charge	(d)	(d)	(d)
Service Calls - Per Hour/After Hours(e)	$ 40.00	$ 40.00	$ 40.00
Deposit Requirements	(f)	(f)	(f)
Deposit Interest	$ 0.04	$ 0.04	0.04
Meter and Service lines	See Below	See Below	See Below
Main Extension Tariff	at Cost	at Cost	at Cost

(a) Service charges for customers taking both water and sewer service are not duplicative.
(b) Minimum charge times number of full months off the system. per Rule R14-2-403(D).
(c) $25 plus cost of test
(d) Greater of $5.00 or 1.5% of unpaid balance.
(e) No charge for service calls during normal working hours.
(f) Per ACC Rules R14-2-403(B) Residential - two times the average bill.
Commercial - two and one-half times the average bill.

Refundable Meter and Service Line Charges

	Present Service Line Charge	Present Meter Install-ation Charge	Total Present Charge	Proposed Service Line Charge	Proposed Meter Install-ation Charge	Total Proposed Charge	Recommended Service Line Charge	Recommended Meter Install-ation Charge	Total Recommended Charge
5/8 x 3/4 Inch	$ 385.00	$ 135.00	$ 520.00	$ 385.00	$ 135.00	$ 520.00	$ 385.00	$ 135.00	$ 520.00
3/4 Inch	$ 385.00	$ 215.00	$ 600.00	$ 385.00	$ 215.00	$ 600.00	$ 385.00	$ 215.00	$ 600.00
1 Inch	$ 435.00	$ 255.00	$ 690.00	$ 435.00	$ 255.00	$ 690.00	$ 435.00	$ 255.00	$ 690.00
1 1/2 Inch	$ 470.00	$ 465.00	$ 935.00	$ 470.00	$ 465.00	$ 935.00	$ 470.00	$ 465.00	$ 935.00
2 Inch / Turbine	$ 630.00	$ 965.00	$ 1,595.00	$ 630.00	$ 965.00	$ 1,595.00	$ 630.00	$ 965.00	$ 1,595.00
2 Inch / Compound	$ 630.00	$ 1,690.00	$ 2,320.00	$ 630.00	$ 1,690.00	$ 2,320.00	$ 630.00	$ 1,690.00	$ 2,320.00
3 Inch / Turbine	$ 805.00	$ 1,470.00	$ 2,275.00	$ 805.00	$ 1,470.00	$ 2,275.00	$ 805.00	$ 1,470.00	$ 2,275.00
3 Inch / Compound	$ 845.00	$ 2,265.00	$ 3,110.00	$ 845.00	$ 2,265.00	$ 3,110.00	$ 845.00	$ 2,265.00	$ 3,110.00
4 Inch / Turbine	$ 1,170.00	$ 2,350.00	$ 3,520.00	$ 1,170.00	$ 2,350.00	$ 3,520.00	$ 1,170.00	$ 2,350.00	$ 3,520.00
4 Inch / Compound	$ 1,230.00	$ 3,245.00	$ 4,475.00	$ 1,230.00	$ 3,245.00	$ 4,475.00	$ 1,230.00	$ 3,245.00	$ 4,475.00
6 Inch / Turbine	$ 1,730.00	$ 4,545.00	$ 6,275.00	$ 1,730.00	$ 4,545.00	$ 6,275.00	$ 1,730.00	$ 4,545.00	$ 6,275.00
6 Inch / Compound	$ 1,770.00	$ 6,280.00	$ 8,050.00	$ 1,770.00	$ 6,280.00	$ 8,050.00	$ 1,770.00	$ 6,280.00	$ 8,050.00
8 Inch & Larger	At Cost	At Cost	At Cost	At Cost	At Cost	At Cost	At Cost	At Cost	At Cost

Hydrant Meter Deposit*	Present Charge	Proposed Charge	Proposed Charge
5/8 x 3/4 Inch	$ 135.00	$ 135.00	$ 135.00
3/4 Inch	$ 215.00	$ 215.00	$ 215.00
1 Inch	$ 255.00	$ 255.00	$ 255.00
1 1/2 Inch	$ 465.00	$ 465.00	$ 465.00
2 Inch / Turbine	$ 965.00	$ 965.00	$ 965.00
2 Inch / Compound	$ 1,690.00	$ 1,690.00	$ 1,690.00
3 Inch / Turbine	$ 1,470.00	$ 1,470.00	$ 1,470.00
3 Inch / Compound	$ 2,265.00	$ 2,265.00	$ 2,265.00
4 Inch / Turbine	$ 2,350.00	$ 2,350.00	$ 2,350.00
4 Inch / Compound	$ 3,245.00	$ 3,245.00	$ 3,245.00
6 Inch / Turbine	$ 4,545.00	$ 4,545.00	$ 4,545.00
6 Inch / Compound	$ 6,280.00	$ 6,280.00	$ 6,280.00
8 Inch & Larger	At Cost	At Cost	At Cost

* Shall have a non-interest bearing deposit of the amount indicated, refundable in its entirety upon return of the meter in good condition and payment of the final bill.

Litchfield Park Service Company - Water Division
Docket No. W-01427A-13-0043
Test Year Ended: December 31, 2012

Schedule DWC-W2

Typical Bill Analysis
General Service 5/8 x 3/4-Inch Meter

Company Proposed	Gallons	Present Rates	Proposed Rates	Dollar Increase	Percent Increase
Average Usage	9,061	$ 24.84	$ 31.46	$ 6.61	26.61%
Median Usage	5,000	17.02	23.01	$ 5.99	35.19%
Staff Recommended					
Average Usage	9,061	$ 24.84	$ 22.97	$ (1.88)	-7.56%
Median Usage	5,000	17.02	15.75	$ (1.27)	-7.46%

Present & Proposed Rates (Without Taxes)
General Service 5/8 x 3/4-Inch Meter

Gallons	Present		Company Proposed		%	Staff Recommended		%
	3/4"		3/4"			3/4"		
	Minimum Charge	$ 10.20	Minimum Charge	$ 14.77		Minimum Charge	$ 10.00	
	1st Tier Rate	1.0000	1st Tier Rate	1.5400		1st Tier Rate	0.7500	
	1st Tier Breakover	3,000	1st Tier Breakover	4,000		1st Tier Breakover	3,000	
	2nd Tier Rate	1.9100	2nd Tier Rate	2.0800		2nd Tier Rate	1.7500	
	2nd Tier Breakover	9,000	2nd Tier Breakover	12,000		2nd Tier Breakover	9,000	
	3rd Tier Rate	3.0300	3rd Tier Rate	2.9500		3rd Tier Rate	3.5500	
Consumption	Rates		Rates		Increase	Rates		Increase
-	$ 10.20		$ 14.77		44.80%	$ 10.00		-1.96%
1,000	11.20		16.31		45.63%	10.75		-4.02%
2,000	12.20		17.85		46.31%	11.50		-5.74%
3,000	13.20		19.39		46.89%	12.25		-7.20%
4,000	15.11		20.93		38.52%	14.00		-7.35%
5,000	17.02		23.01		35.19%	15.75		-7.46%
6,000	18.93		25.09		32.54%	17.50		-7.55%
7,000	20.84		27.17		30.37%	19.25		-7.63%
8,000	22.75		29.25		28.57%	21.00		-7.69%
9,000	24.66		31.33		27.05%	22.75		-7.75%
10,000	27.69		33.41		20.66%	26.30		-5.02%
11,000	30.72		35.49		15.53%	29.85		-2.83%
12,000	33.75		37.57		11.32%	33.40		-1.04%
13,000	36.78		40.52		10.17%	36.95		0.46%
14,000	39.81		43.47		9.19%	40.50		1.73%
15,000	42.84		46.42		8.36%	44.05		2.82%
16,000	45.87		49.37		7.63%	47.60		3.77%
17,000	48.90		52.32		6.99%	51.15		4.60%
18,000	51.93		55.27		6.43%	54.70		5.33%
19,000	54.96		58.22		5.93%	58.25		5.99%
20,000	57.99		61.17		5.48%	61.80		6.57%
25,000	73.14		75.92		3.80%	79.55		8.76%
30,000	88.29		90.67		2.70%	97.30		10.21%
35,000	103.44		105.42		1.91%	115.05		11.22%
40,000	118.59		120.17		1.33%	132.80		11.98%
45,000	133.74		134.92		0.88%	150.55		12.57%
50,000	148.89		149.67		0.52%	168.30		13.04%
75,000	224.64		223.42		-0.54%	257.05		14.43%
100,000	300.39		297.17		-1.07%	345.80		15.12%

Monthly Charge for:	Present	Company Proposed Rates	Staff Recommended Rates
Monthly Residential Service	$ 38.99	$ 41.62	38.78
Low Income Residential Service	33.14	35.38	32.96
Multi-Unit Housing - Monthly per Unit	36.19	38.63	35.99
Commercial:			
Small Commercial - Monthly Service	65.93	70.37	65.56
Measured Service:			
Regular Domestic:	36.91	39.40	36.71
Monthly Service Charge	3.22	3.44	3.21
Commodity Charge per 1,000 gallons			
Restaurant, Motels, Grocery Stores & Dry Cleaning Estab.1			
Monthly Service Charge	36.91	39.40	36.71
Commodity Charge per 1,000 gallons	4.30	4.59	4.28
Wigwam Resort:			
Monthly Rate - Per Room	36.19	39.40	35.99
Main Hotel Facilities - Per Month	1,433.30	1,529.90	1,425.41
Schools - Monthly Service Rates:			
Elementary Schools	974.64	1,040.33	969.28
Middile Schools	1,146.64	1,223.92	1,140.33
High Schools	1,146.64	1,223.92	1,140.33
Community College	1,777.29	1,897.08	1,767.51
Effluent2:			
1 Motels without restuarants charged multi-unit monthly rate.			
2 Market Rate - Maximum effluent rate shall not exceed $430 per acre foot based on a potable water rate of $1.32 per thousand gallons.			
Late Payment Penalty			
Other Service Charges:			
Establishment (Regular Hours) per Rule R14-2-603D (a)	$ 20.00	$ 20.00	$ 20.00
Establishment (After Hours) per Rule R14-2-603D (a)	$ 40.00	$ 40.00	$ 40.00
Re-Establishment of Service per Rule R14-2-603D (a)	(b)	(b)	(b)
Reconnection (Regular Hours) per Rule R14-2-603D (a)	$ 50.00	$ 50.00	$ 50.00
Reconnection (After Hours) per Rule R14-2-603D (a)	$ 65.00	$ 65.00	$ 65.00
NSF Check, per Rule R14-2-608E (a)	$ 25.00	$ 25.00	$ 25.00
Deferred Payment, Per Month	1.50%	1.50%	1.50%
Late Charge	(c)	(c)	(c)
Service Calls - Per Hour/After Hours(d)	$ 40.00	$ 40.00	$ 40.00
Deposit Requirement	(e)	(e)	(e)
Deposit Interest	3.50%	3.50%	3.50%
Service Lateral Connection Charge- All Sizes	(f)	(f)	(f)
Main Extension Tariff, per Rule R14-2-606B	(g)	(g)	(g)

(a) Service charges for customers taking both water and sewer service are not duplicative.
(b) Minimum charge times number of full months off the system. per Rule R14-2-603D.
(c) Per Rule R14-2-608F. Greater of $5.00 or 1.5% of unpaid balance.
(d) No charge for service calls during normal working hours.
(e) Per ACC Rules R14-2-603B Residential - two times the average bill.
Non-residential - two and one-half times the average bill.
(f) At cost. Customer/Developer shall install or cuase to be installed all Service Laterals as a non-refundable contribution-in-aid of construction..
(g) All Main Extensions shall be completed at cost and shall be treated as non-refundable contribution-in-aid of construction.

Litchfield Park Service Company - Wastewater Division
Docket No. SW-01428A-13-0042
Test Year Ended: December 31, 2012

Schedule DWC-WW2

Typical Bill Analysis
General Service 5/8 x 3/4-Inch Meter

Company Proposed	Gallons	Present Rates	Proposed Rates	Dollar Increase	Percent Increase
Average Usage	-	$ 38.99	$ 41.62	$ 2.63	6.75%
Median Usage	-	38.99	41.62	$ 2.63	6.75%
Staff Recommended					
Average Usage	-	$ 38.99	$ 38.78	$ (0.21)	-0.55%
Median Usage	-	38.99	38.78	$ (0.21)	-0.55%

Present & Proposed Rates (Without Taxes)
General Service 5/8 x 3/4-Inch Meter

Gallons	Present		Company Proposed		%	Staff Recommended		%
	3/4"		3/4"			3/4"		
	Minimum Charge	$ 38.99	Minimum Charge	$ 41.62		Minimum Charge	$ 38.78	
	1st Tier Rate	-	1st Tier Rate	-		1st Tier Rate	-	
	1st Tier Breakover	-	1st Tier Breakover	-		1st Tier Breakover	-	
	2nd Tier Rate	-	2nd Tier Rate	-		2nd Tier Rate	-	
	2nd Tier Breakover	-	2nd Tier Breakover	-		2nd Tier Breakover	-	
	3rd Tier Rate	-	3rd Tier Rate	-		3rd Tier Rate	-	
Consumption	Rates		Rates		Increase	Rates		Increase
-	$ 38.99		$ 41.62		6.75%	$ 38.78		-0.55%
1,000	38.99		41.62		6.75%	38.78		-0.55%
2,000	38.99		41.62		6.75%	38.78		-0.55%
3,000	38.99		41.62		6.75%	38.78		-0.55%
4,000	38.99		41.62		6.75%	38.78		-0.55%
5,000	38.99		41.62		6.75%	38.78		-0.55%
6,000	38.99		41.62		6.75%	38.78		-0.55%
7,000	38.99		41.62		6.75%	38.78		-0.55%
8,000	38.99		41.62		6.75%	38.78		-0.55%
9,000	38.99		41.62		6.75%	38.78		-0.55%
10,000	38.99		41.62		6.75%	38.78		-0.55%
11,000	38.99		41.62		6.75%	38.78		-0.55%
12,000	38.99		41.62		6.75%	38.78		-0.55%
13,000	38.99		41.62		6.75%	38.78		-0.55%
14,000	38.99		41.62		6.75%	38.78		-0.55%
15,000	38.99		41.62		6.75%	38.78		-0.55%
16,000	38.99		41.62		6.75%	38.78		-0.55%
17,000	38.99		41.62		6.75%	38.78		-0.55%
18,000	38.99		41.62		6.75%	38.78		-0.55%
19,000	38.99		41.62		6.75%	38.78		-0.55%
20,000	38.99		41.62		6.75%	38.78		-0.55%
25,000	38.99		41.62		6.75%	38.78		-0.55%
30,000	38.99		41.62		6.75%	38.78		-0.55%
35,000	38.99		41.62		6.75%	38.78		-0.55%
40,000	38.99		41.62		6.75%	38.78		-0.55%
45,000	38.99		41.62		6.75%	38.78		-0.55%
50,000	38.99		41.62		6.75%	38.78		-0.55%
75,000	38.99		41.62		6.75%	38.78		-0.55%
100,000	38.99		41.62		6.75%	38.78		-0.55%

ORIGINAL

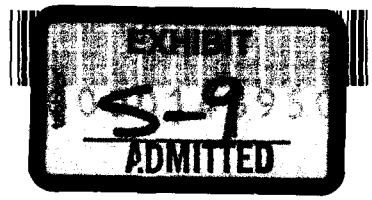

BEFORE THE ARIZONA CORPORATION

COMMISSIONERS
BOB STUMP - Chairman
GARY PIERCE
BRENDA BURNS
BOB BURNS
SUSAN BITTER SMITH

RECEIVED

2013 OCT 16 A 10: 50

AZ CORP COMMISSION
DOCKET CONTROL

IN THE MATTER OF THE APPLICATION OF LITCHFIELD PARK SERVICE COMPANY, AN ARIZONA CORPORATION, FOR A DETERMINATION OF THE FAIR VALUE OF ITS UTILITY PLANTS AND PROPERTY AND FOR INCREASES IN ITS WASTEWATER RATES AND CHARGES BASED THEREON FOR UTILITY SERVICE.	DOCKET NO. SW-01428A-13-0042
IN THE MATTER OF THE APPLICATION OF LITCHFIELD PARK SERVICE COMPANY, AN ARIZONA CORPORATION, FOR A DETERMINATION OF THE FAIR VALUE OF ITS UTILITY PLANTS AND PROPERTY AND FOR INCREASES IN ITS WATER RATES AND CHARGES BASED THEREON FOR UTILITY SERVICE.	DOCKET NO. W-01427A-13-0043

Arizona Corporation Commission
DOCKETED
OCT 16 2013
DOCKETED BY

STAFF NOTICE OF ERRATA

The Utilities Division ("Staff") of the Arizona Corporation Commission ("Commission") files this notice of errata regarding the Staff rate design testimony filed, October 4, 2013. Attached are revised Schedule 4 for the water and wastewater divisions with the correct service charges.

RESPECTFULLY SUBMITTED this 16th day of October, 2013.

Robin R. Mitchell, Staff Attorney
Matthew Laudone, Staff Attorney
Legal Division
Arizona Corporation Commission
1200 West Washington Street
Phoenix, Arizona 85007
(602) 542-3402

...

...

Original and thirteen (13) copies
of the foregoing filed this
16th day of October, 2013 with:

Docket Control
Arizona Corporation Commission
1200 West Washington Street
Phoenix, AZ 85006

Copy of the foregoing mailed and/or emailed
this 16th day of October, 2013 to:

Jay L. Shapiro
Todd C. Wiley
FENNEMORE CRAIG, P.C.
2394 E. Camelback Road, Ste. 600
Phoenix, AZ 85016
Attorneys for LPSCO

Daniel Pozefsky
Chief Counsel
Residential Utility Consumer Office
1110 W. Washington Street, Suite 220
Phoenix, AZ 85007

Olivia Burnes
356 N. Cloverfield Circle
Litchfield Park, AZ 85340

Ashley Hodge

Monthly Usage Charge	Present	Company Proposed Rates	Staff Recommended Rates
Meter Size (All Classes):			
5/8 x 3/4 Inch	$ 10.20	$ 14.50	$ 10.00
3/4 Inch - Residential	10.20	14.50	10.00
3/4 Inch	10.20	14.50	10.00
1 Inch - Residential	22.95	32.75	25.00
1 Inch	25.50	36.25	27.88
1 1/2 Inch	51.00	72.50	50.00
2 Inch	81.60	116.00	80.00
3 Inch	163.20	232.00	160.00
4 Inch	255.00	362.50	250.00
6 Inch	510.00	725.00	500.00
8 Inch - Bulk Water Only	501.00	575.00	500.00
8 Inch	841.50	1,160.00	800.00
10 Inch	1,173.00	1,667.50	1,150.00
12 Inch	2,193.00	3,117.50	2,150.00
Commodity Charge - Per 1,000 Gallons			
5/8" x 3/4" Meter and 3/4" (Residential)			
First 3,000 gallons	$ 1.0000	N/A	N/A
3,001 to 9,000 gallons	1.9100	N/A	N/A
Over 9,000 gallons	3.0300	N/A	N/A
First 3,000 gallons	N/A	$ 1.0000	N/A
3,001 to 11,000 gallons	N/A	2.0000	N/A
11,001 to 30,000 gallons	N/A	3.0500	N/A
Over 30,000 gallons	N/A	3.6600	N/A
First 3,000 gallons	N/A	N/A	$ 0.7500
3,001 to 9,000 gallons	N/A	N/A	1.7500
9,001 to 20,000 gallons	N/A	N/A	3.5500
Over 20,000 gallons	N/A	N/A	4.0000
5/8" x 3/4" and 3/4" Meter (Commercial & Irrigations)			
First 9,000 gallons	1.9100	2.0000	N/A
Over 9,000 gallons	3.0300	3.6600	N/A
First 9,000 gallons	N/A	N/A	1.7500
Over 9,000 gallons	N/A	N/A	3.5500
1" Meter (Residential)			
First 5,000 gallons	1.0000	N/A	N/A
5,001 to 20,000 gallons	1.9100	N/A	N/A
Over 20,000 gallons	3.0300	N/A	N/A
First 5,000 gallons	N/A	1.0000	N/A
5,001 to 20,000 gallons	N/A	2.0000	N/A
20,001 to 40,000 gallons	N/A	3.0500	N/A
Over 40,000 gallons	N/A	3.6600	N/A
First 3,000 gallons	N/A	N/A	0.7500
3,001 to 20,000 gallons	N/A	N/A	1.7500
20,001 to 37,000 gallons	N/A	N/A	3.5500
Over 37,000 gallons	N/A	N/A	4.0000
1" Meter (Commercial & Irrigations)			
First 20,000 gallons	1.9100	2.0000	N/A
Over 20,000 gallons	3.0300	3.6600	N/A
First 25,000 gallons	N/A	N/A	1.7500
Over 25,000 gallons	N/A	N/A	3.5500
1 1/2" Meter (All Classes)			
First 40,000 gallons	1.9100	2.0000	N/A
Over 40,000 gallons	3.0300	3.6600	N/A
First 37,000 gallons	N/A	N/A	1.7500
Over 37,000 gallons	N/A	N/A	3.5500
2" Meter (All Classes)			
First 60,000 gallons	1.9100	2.0000	N/A
Over 60,000 gallons	3.0300	3.6600	N/A
First 52,000 gallons	N/A	N/A	1.7500
Over 52,000 gallons	N/A	N/A	3.5500
3" Meter (All Classes)			
First 120,000 gallons	1.9100	2.0000	N/A
Over 120,000 gallons	3.0300	3.6600	N/A
First 94,000 gallons	N/A	N/A	1.7500
Over 94,000 gallons	N/A	N/A	3.5500
4" Meter (All Classes)			
First 180,000 gallons	1.9100	2.0000	N/A
Over 180,000 gallons	3.0300	3.6600	N/A
First 140,000 gallons	N/A	N/A	1.7500
Over 140,000 gallons	N/A	N/A	3.5500
6" Meter (All Classes)			
First 360,000 gallons	1.9100	2.0000	N/A
Over 360,000 gallons	3.0300	3.6600	N/A
First 270,000 gallons	N/A	N/A	1.7500
Over 270,000 gallons	N/A	N/A	3.5500
8" Meter (Bulk Resale)			
All Classes	1.5000	1.6500	3.5500
8" Meter (All Classes)			
First 650,000 gallons	1.9100	2.0000	N/A
Over 650,000 gallons	3.0300	3.6600	N/A
First 430,000 gallons	N/A	N/A	1.7500
Over 430,000 gallons	N/A	N/A	3.5500

10" Meter (All Classes)			
First 940,000 gallons	1.9100	2.0000	N/A
Over 940,000 gallons	3.0300	3.6600	N/A
First 600,000 gallons	N/A	N/A	1.7500
Over 600,000 gallons	N/A	N/A	3.5500
12" Meter (All Classes)			
First 1,248,000 gallons	2.9200	N/A	N/A
Over 1,248,000 gallons	3.6400	N/A	N/A
First 1,000,000 gallons	N/A	N/A	1.7500
Over 1,000,000 gallons	N/A	N/A	3.5500
Construction Hydrants			
All Gallons	3.0300	3.6600	3.5500

Other Service Charges			
Establishment (Regular Hours) per Rule R14-2-403D (a)	$ 20.00	$ 20.00	$ 20.00
Establishment (After Hours) per Rule R14-2-403D (a)	$ 40.00	$ 40.00	NT
Re-Establishment of Service per Rule R14-2-403D (a)	(b)	(b)	(b)
Reconnection (Regular Hours) per Rule R14-2-403D (a)	$ 50.00	$ 50.00	$ 20.00
Reconnection (After Hours) per Rule R14-2-403D (a)	$ 65.00	$ 65.00	NT
Meter Test (if correct) per Rule R14-2-408F (c)	$ 25.00	$ 25.00	$ 25.00
Meter Reread per Rule R14-2-408C (if correct)	$ 5.00	$ 5.00	$ 5.00
Fire Hydrant Meter Relocation	NT	$ 50.00	$ 50.00
Fire Hydrant Meter Repair	NT	Cost	Cost
NSF Check per Rule R14-2-409F (a)	$ 25.00	$ 25.00	$ 25.00
Deferred Payment, Per Month	1.50%	1.50%	1.50%
Late Charge	(d)	(d)	(d)
Service Calls - Per Hour/After Hours(e)	$ 40.00	$ 40.00	NT
After Hours Service Charge (f)	NT	NT	$ 40.00
Deposit Requirements	(g)	(g)	(g)
Deposit Interest	$ 0.04	$ 0.04	0.04
Meter and Service lines	See Below	See Below	See Below
Main Extension Tariff	NT	at Cost	at Cost

(a) Service charges for customers taking both water and sewer service are not duplicative.
(b) Minimum charge times number of full months off the system, per Rule R14-2-403(D).
(c) $25 plus cost of test
(d) Greater of $5.00 or 1.5% of unpaid balance.
(e) No charge for service calls during normal working hours.
(f) An After Hours Service Charge is appropriate when it is at the customer's request or convenience. It compensates the utility for additional expenses incurred from providing after-hours services. It is appropriate to apply this charge in addition to the charge for any utility service provided after hours at the customer's request or for the customer's convenience.
(g) Per ACC Rules R14-2-403(B) Residential - two times the average bill. Commercial - two and one-half times the average bill.

Refundable Meter and Service Line Charges

	Present Service Line Charge	Present Meter Install-ation Charge	Total Present Charge	Proposed Service Line Charge	Proposed Meter Install-ation Charge	Total Proposed Charge	Recommended Service Line Charge	Recommended Meter Install-ation Charge	Total Recommended Charge
5/8 x 3/4 Inch	$ 385.00	$ 135.00	$ 520.00	$ 385.00	$ 135.00	$ 520.00	$ 385.00	$ 135.00	$ 520.00
3/4 Inch	$ 385.00	$ 215.00	$ 600.00	$ 385.00	$ 215.00	$ 600.00	$ 385.00	$ 215.00	$ 600.00
1 Inch	$ 435.00	$ 255.00	$ 690.00	$ 435.00	$ 255.00	$ 690.00	$ 435.00	$ 255.00	$ 690.00
1 1/2 Inch	$ 470.00	$ 465.00	$ 935.00	$ 470.00	$ 465.00	$ 935.00	$ 470.00	$ 465.00	$ 935.00
2 Inch / Turbine	$ 630.00	$ 965.00	$ 1,595.00	$ 630.00	$ 965.00	$ 1,595.00	$ 630.00	$ 965.00	$ 1,595.00
2 Inch / Compound	$ 630.00	$ 1,690.00	$ 2,320.00	$ 630.00	$ 1,690.00	$ 2,320.00	$ 630.00	$ 1,690.00	$ 2,320.00
3 Inch / Turbine	$ 805.00	$ 1,470.00	$ 2,275.00	$ 805.00	$ 1,470.00	$ 2,275.00	$ 805.00	$ 1,470.00	$ 2,275.00
3 Inch / Compound	$ 845.00	$ 2,265.00	$ 3,110.00	$ 845.00	$ 2,265.00	$ 3,110.00	$ 845.00	$ 2,265.00	$ 3,110.00
4 Inch / Turbine	$ 1,170.00	$ 2,350.00	$ 3,520.00	$ 1,170.00	$ 2,350.00	$ 3,520.00	$ 1,170.00	$ 2,350.00	$ 3,520.00
4 Inch / Compound	$ 1,230.00	$ 3,245.00	$ 4,475.00	$ 1,230.00	$ 3,245.00	$ 4,475.00	$ 1,230.00	$ 3,245.00	$ 4,475.00
6 Inch / Turbine	$ 1,730.00	$ 4,545.00	$ 6,275.00	$ 1,730.00	$ 4,545.00	$ 6,275.00	$ 1,730.00	$ 4,545.00	$ 6,275.00
6 Inch / Compound	$ 1,770.00	$ 6,280.00	$ 8,050.00	$ 1,770.00	$ 6,280.00	$ 8,050.00	$ 1,770.00	$ 6,280.00	$ 8,050.00
8 Inch & Larger	At Cost	At Cost	At Cost	At Cost	At Cost	At Cost	At Cost	At Cost	At Cost

Hydrant Meter Deposit*	Present Charge	Proposed Charge	Proposed Charge
5/8 x 3/4 Inch	$ 135.00	$ 135.00	$ 135.00
3/4 Inch	$ 215.00	$ 215.00	$ 215.00
1 Inch	$ 255.00	$ 255.00	$ 255.00
1 1/2 Inch	$ 465.00	$ 465.00	$ 465.00
2 Inch / Turbine	$ 965.00	$ 965.00	$ 965.00
2 Inch / Compound	$ 1,690.00	$ 1,690.00	$ 1,690.00
3 Inch / Turbine	$ 1,470.00	$ 1,470.00	$ 1,470.00
3 Inch / Compound	$ 2,265.00	$ 2,265.00	$ 2,265.00
4 Inch / Turbine	$ 2,350.00	$ 2,350.00	$ 2,350.00
4 Inch / Compound	$ 3,245.00	$ 3,245.00	$ 3,245.00
6 Inch / Turbine	$ 4,545.00	$ 4,545.00	$ 4,545.00
6 Inch / Compound	$ 6,280.00	$ 6,280.00	$ 6,280.00
8 Inch & Larger	At Cost	At Cost	At Cost

* Shall have a non-interest bearing deposit of the amount indicated, refundable in its entirety upon return of the meter in good condition and payment of the final bill.

NT = No Tariff

Highlighted items should be removed from new tariff.

Monthly Charge for:	Present	Company Proposed Rates	Staff Recommended Rates
Monthly Residential Service	$ 38.99	$ 41.62	38.78
Low Income Residential Service	33.14	35.38	32.96
Multi-Unit Housing - Monthly per Unit	36.19	38.63	35.99
Commercial:			
Small Commercial - Monthly Service	65.93	70.37	65.56
Measured Service:			
Regular Domestic:	36.91	39.40	36.71
Monthly Service Charge	3.22	3.44	3.21
Commodity Charge per 1,000 gallons			
Restaurant, Motels, Grocery Stores & Dry Cleaning Estab.1			
Monthly Service Charge	36.91	39.40	36.71
Commodity Charge per 1,000 gallons	4.30	4.59	4.28
Wigwam Resort:			
Monthly Rate - Per Room	36.19	39.40	35.99
Main Hotel Facilities - Per Month	1,433.30	1,529.90	1,425.41
Schools - Monthly Service Rates:			
Elementary Schools	974.64	1,040.33	969.28
Middle Schools	1,146.64	1,223.92	1,140.33
High Schools	1,146.64	1,223.92	1,140.33
Community College	1,777.29	1,897.08	1,767.51
Effluent2:			
1 Motels without restuarants charged multi-unit monthly rate.			
2 Market Rate - Maximum effluent rate shall not exceed $430 per acre foot based on a potable water rate of $1.32 per thousand gallons.			
Late Payment Penalty			
Other Service Charges:			
Establishment (Regular Hours) per Rule R14-2-603D (a)	$ 20.00	$ 20.00	$ 20.00
Establishment (After Hours) per Rule R14-2-603D (a)	$ 40.00	$ 40.00	NT
Re-Establishment of Service per Rule R14-2-603D (a)	(b)	(b)	(b)
Reconnection (Regular Hours) per Rule R14-2-603D (a)	$ 50.00	$ 50.00	$ 20.00
Reconnection (After Hours) per Rule R14-2-603D (a)	$ 65.00	$ 65.00	NT
NSF Check, per Rule R14-2-608E (a)	$ 25.00	$ 25.00	$ 25.00
Deferred Payment, Per Month	1.50%	1.50%	1.50%
Late Charge	(c)	(c)	(c)
Service Calls - Per Hour/After Hours (d)	$ 40.00	$ 40.00	NT
After Hours Service Charge (e)	NT	NT	$ 40.00
Deposit Requirement	(f)	(f)	(f)
Deposit Interest	3.50%	3.50%	6.00%
Service Lateral Connection Charge- All Sizes	(g)	(g)	(g)
Main Extension Tariff, per Rule R14-2-606B	(h)	(h)	(h)

(a) Service charges for customers taking both water and sewer service are not duplicative.
(b) Minimum charge times number of full months off the system. per Rule R14-2-603D.
(c) Per Rule R14-2-608F. Greater of $5.00 or 1.5% of unpaid balance.
(d) No charge for service calls during normal working hours.
(e) An After Hours Service Charge is appropriate when it is at the customer's request or convenience. It compensates the utility for additional expenses incurred from providing after-hours services. It is appropriate to apply this charge in addition to the charge for any utility service provided after hoursat the customer's request or for the customer's convenience.
(f) Per ACC Rules R14-2-603B Residential - two times the average bill. Non-residential - two and one-half times the average bill.
(g) At cost. Customer/Developer shall install or cause to be installed all Service Laterals as a non-refundable contribution-in-aid of construction.
(h) All Main Extensions shall be completed at cost and shall be treated as non-refundable contribution-in-aid of construction.

NT = No Tariff

Highlighted items should be removed from new tariff.

ORIGINAL

EXHIBIT S-10 ADMITTED

BEFORE THE ARIZONA CORPORATION C

AZ CORP COMMISSION
DOCKET CONTROL

2013 OCT 21 PM 12 53

COMMISSIONERS
BOB STUMP - Chairman
GARY PIERCE
BRENDA BURNS
BOB BURNS
SUSAN BITTER SMITH

IN THE MATTER OF THE APPLICATION OF LITCHFIELD PARK SERVICE COMPANY, AN ARIZONA CORPORATION, FOR A DETERMINATION OF THE FAIR VALUE OF ITS UTILITY PLANTS AND PROPERTY AND FOR INCREASES IN ITS WASTEWATER RATES AND CHARGES BASED THEREON FOR UTILITY SERVICE.	DOCKET NO. SW-01428A-13-0042
IN THE MATTER OF THE APPLICATION OF LITCHFIELD PARK SERVICE COMPANY, AN ARIZONA CORPORATION, FOR A DETERMINATION OF THE FAIR VALUE OF ITS UTILITY PLANTS AND PROPERTY AND FOR INCREASES IN ITS WATER RATES AND CHARGES BASED THEREON FOR UTILITY SERVICE.	DOCKET NO. W-01427A-13-0043

STAFF NOTICE OF ERRATA

The Utilities Division ("Staff") of the Arizona Corporation Commission ("ACC") files this notice of errata regarding the Staff rate design testimony filed, October 4, 2013. Please disregard the previously filed notice of errata dated October 15, 2013. Staff's service charges, as filed in its rate design direct testimony, as well as some aspects of Staff's rate design were incorrect. Attached is a revised Schedule 4 with corrected rates and service charges.

RESPECTFULLY SUBMITTED this 21st day of October, 2013.

Arizona Corporation Commission
DOCKETED
OCT 21 2013
DOCKETED BY

Robin R. Mitchell, Staff Attorney
Matthew Laudone, Staff Attorney
Legal Division
Arizona Corporation Commission
1200 West Washington Street
Phoenix, Arizona 85007
(602) 542-3402

Original and thirteen (13) copies
of the foregoing filed this
21st day of October, 2013 with:

Docket Control
Arizona Corporation Commission
1200 West Washington Street
Phoenix, AZ 85006

Copy of the foregoing mailed and/or emailed
this 21st day of October, 2013 to:

Jay L. Shapiro
Todd C. Wiley
FENNEMORE CRAIG, P.C.
2394 E. Camelback Road, Ste. 600
Phoenix, AZ 85016
Attorneys for LPSCO

Daniel Pozefsky
Chief Counsel
Residential Utility Consumer Office
1110 W. Washington Street, Suite 220
Phoenix, AZ 85007

Olivia Burnes
356 N. Cloverfield Circle
Litchfield Park, AZ 85340

_____

Monthly Usage Charge	Present	Company Proposed Rates	Staff Recommended Rates
Meter Size (All Classes):			
5/8 x 3/4 Inch	$ 10.20	$ 14.50	$ 10.00
3/4 Inch - Residential	10.20	14.50	10.00
3/4 Inch	10.20	14.50	10.00
1 Inch - Residential	22.95	32.75	25.00
1 Inch	25.50	36.25	27.68
1 1/2 Inch	51.00	72.50	50.00
2 Inch	81.60	116.00	80.00
3 Inch	163.20	232.00	160.00
4 Inch	255.00	362.50	250.00
6 Inch	510.00	725.00	500.00
8 Inch - Bulk Water Only	501.00	575.00	500.00
8 Inch	841.50	1,160.00	800.00
10 Inch	1,173.00	1,667.50	1,150.00
12 Inch	2,193.00	3,117.50	2,150.00
Commodity Charge - Per 1,000 Gallons			
5/8" x 3/4" Meter and 3/4" (Residential)			
First 3,000 gallons	$ 1.00	N/A	N/A
3,001 to 9,000 gallons	$ 1.91	N/A	N/A
Over 9,000 gallons	$ 3.03	N/A	N/A
First 3,000 gallons	N/A	$ 1.00	N/A
3,001 to 11,000 gallons	N/A	$ 2.00	N/A
11,001 to 30,000 gallons	N/A	$ 3.05	N/A
Over 30,000 gallons	N/A	$ 3.66	N/A
First 3,000 gallons	N/A	N/A	$ 0.75
3,001 to 9,000 gallons	N/A	N/A	$ 1.75
9,001 to 20,000 gallons	N/A	N/A	$ 3.55
Over 20,000 gallons	N/A	N/A	$ 4.00
5/8" x 3/4" and 3/4" Meter (Commercial & Irrigation)			
First 9,000 gallons	$ 1.91	$ 2.00	N/A
Over 9,000 gallons	$ 3.03	$ 3.66	N/A
First 9,000 gallons	N/A	N/A	$ 1.75
Over 9,000 gallons	N/A	N/A	$ 4.00
1" Meter (Residential)			
First 5,000 gallons	$ 1.00	N/A	N/A
5,001 to 20,000 gallons	$ 1.91	N/A	N/A
Over 20,000 gallons	$ 3.03	N/A	N/A
First 5,000 gallons	N/A	$ 1.00	N/A
5,001 to 20,000 gallons	N/A	$ 2.00	N/A
20,001 to 40,000 gallons	N/A	$ 3.05	N/A
Over 40,000 gallons	N/A	$ 3.66	N/A
First 3,000 gallons	N/A	N/A	$ 0.75
3,001 to 20,000 gallons	N/A	N/A	$ 1.75
20,001 to 37,000 gallons	N/A	N/A	$ 3.55
Over 37,000 gallons	N/A	N/A	$ 4.00
1" Meter (Commercial & Irrigation)			
First 20,000 gallons	$ 1.91	$ 2.00	N/A
Over 20,000 gallons	$ 3.03	$ 3.66	N/A
First 25,000 gallons	N/A	N/A	$ 1.75
Over 25,000 gallons	N/A	N/A	$ 4.00
1 1/2" Meter (All Classes)			
First 40,000 gallons	$ 1.91	$ 2.00	N/A
Over 40,000 gallons	$ 3.03	$ 3.66	N/A
First 37,000 gallons	N/A	N/A	$ 1.75
Over 37,000 gallons	N/A	N/A	$ 4.00
2" Meter (All Classes)			
First 60,000 gallons	$ 1.91	$ 2.00	N/A
Over 60,000 gallons	$ 3.03	$ 3.66	N/A
First 52,000 gallons	N/A	N/A	$ 1.75
Over 52,000 gallons	N/A	N/A	$ 4.00
3" Meter (All Classes)			
First 120,000 gallons	$ 1.91	$ 2.00	N/A
Over 120,000 gallons	$ 3.03	$ 3.66	N/A
First 94,000 gallons	N/A	N/A	$ 1.75
Over 94,000 gallons	N/A	N/A	$ 4.00
4" Meter (All Classes)			
First 180,000 gallons	$ 1.91	$ 2.00	N/A
Over 180,000 gallons	$ 3.03	$ 3.66	N/A
First 140,000 gallons	N/A	N/A	$ 1.75
Over 140,000 gallons	N/A	N/A	$ 4.00
6" Meter (All Classes)			
First 360,000 gallons	$ 1.91	$ 2.00	N/A
Over 360,000 gallons	$ 3.03	$ 3.66	N/A
First 270,000 gallons	N/A	N/A	$ 1.75
Over 270,000 gallons	N/A	N/A	$ 4.00
8" Meter (Bulk Resale)			
All Classes	$ 1.50	$ 1.65	$ 1.65
8" Meter (All Classes)			
First 650,000 gallons	$ 1.91	$ 2.00	N/A
Over 650,000 gallons	$ 3.03	$ 3.66	N/A
First 430,000 gallons	N/A	N/A	$ 1.75
Over 430,000 gallons	N/A	N/A	$ 4.00

10" Meter (All Classes)			
First 940,000 gallons	1.91	2.00	N/A
Over 940,000 gallons	3.03	3.66	N/A
First 600,000 gallons	N/A	N/A	1.75
Over 600,000 gallons	N/A	N/A	4.00
12" Meter (All Classes)			
First 1,248,000 gallons	2.92	N/A	N/A
Over 1,248,000 gallons	3.64	N/A	N/A
First 1,000,000 gallons	N/A	N/A	1.75
Over 1,000,000 gallons	N/A	N/A	4.00
Construction Hydrants			
All Gallons	3.03	3.66	3.66

Other Service Charges			
Establishment (Regular Hours) per Rule R14-2-403D (a)	$ 20.00	$ 20.00	$ 20.00
Establishment (After Hours) per Rule R14-2-403D (a)	**40.00**	**40.00**	**NT**
Re-Establishment of Service per Rule R14-2-403D (a)	(b)	(b)	(b)
Reconnection (Regular Hours) per Rule R14-2-403D (a)	$ 50.00	$ 50.00	$ 20.00
Reconnection (After Hours) per Rule R14-2-403D (a)	**65.00**	**65.00**	**NT**
Meter Test (If correct) per Rule R14-2-408F	$ 25.00	$ 25.00	$ 25.00
Meter Reread per Rule R14-2-408C (If correct)	$ 5.00	$ 5.00	$ 5.00
Fire Hydrant Meter Relocation	NT	$ 50.00	$ 50.00
Fire Hydrant Meter Repair	NT	Cost	Cost
NSF Check per Rule R14-2-409F (a)	$ 25.00	$ 25.00	$ 25.00
Deferred Payment, Per Month	1.50%	1.50%	1.50%
Late Charge	(c)	(c)	(c)
Service Calls - Per Hour/After Hours	**40.00**	**40.00**	**NT**
After Hours Service Charge (d)	NT	NT	$ 40.00
Deposit Requirements	(e)	(e)	(e)
Deposit Interest	3.50%	3.50%	6.00%
Meter and Service lines	**See Below**	**See Below**	**See Below**
Main Extension Tariff	NT	at Cost	at Cost

(a) Charges applicable to water service.
(b) Minimum charge times number of full months off the system, per Rule R14-2-403(D).
(c) Greater of $5.00 or 1.5% of unpaid balance.
(d) An After Hours Service Charge is appropriate when it is at the customer's request or convenience. It compensates the utility for additional expenses incurred from providing after-hours services. It is appropriate to apply this charge in addition to the charge for any utility service provided after hours at the customer's request or for the customer's convenience.
(e) Per ACC Rules R14-2-403(B) Residential - two times the average bill. Commercial - two and one-half times the average bill.

NT = No tariff

Refundable Meter and Service Line Charges

	Present Service Line Charge	Present Meter Install-ation Charge	Total Present Charge	Proposed Service Line Charge	Proposed Meter Install-ation Charge	Total Proposed Charge	Recommended Service Line Charge	Recommended Meter Install-ation Charge	Total Recommended Charge
5/8 x 3/4 Inch	$ 385.00	$ 135.00	$ 520.00	$ 385.00	$ 135.00	$ 520.00	$ 385.00	$ 135.00	$ 520.00
3/4 Inch	$ 385.00	$ 215.00	$ 600.00	$ 385.00	$ 215.00	$ 600.00	$ 385.00	$ 215.00	$ 600.00
1 Inch	$ 435.00	$ 255.00	$ 690.00	$ 435.00	$ 255.00	$ 690.00	$ 435.00	$ 255.00	$ 690.00
1 1/2 Inch	$ 470.00	$ 465.00	$ 935.00	$ 470.00	$ 465.00	$ 935.00	$ 470.00	$ 465.00	$ 935.00
2 Inch / Turbine	$ 630.00	$ 965.00	$ 1,595.00	$ 630.00	$ 965.00	$ 1,595.00	$ 630.00	$ 965.00	$ 1,595.00
2 Inch / Compound	$ 630.00	$ 1,690.00	$ 2,320.00	$ 630.00	$ 1,690.00	$ 2,320.00	$ 630.00	$ 1,690.00	$ 2,320.00
3 Inch / Turbine	$ 805.00	$ 1,470.00	$ 2,275.00	$ 805.00	$ 1,470.00	$ 2,275.00	$ 805.00	$ 1,470.00	$ 2,275.00
3 Inch / Compound	$ 845.00	$ 2,265.00	$ 3,110.00	$ 845.00	$ 2,265.00	$ 3,110.00	$ 845.00	$ 2,265.00	$ 3,110.00
4 Inch / Turbine	$ 1,170.00	$ 2,350.00	$ 3,520.00	$ 1,170.00	$ 2,350.00	$ 3,520.00	$ 1,170.00	$ 2,350.00	$ 3,520.00
4 Inch / Compound	$ 1,230.00	$ 3,245.00	$ 4,475.00	$ 1,230.00	$ 3,245.00	$ 4,475.00	$ 1,230.00	$ 3,245.00	$ 4,475.00
6 Inch / Turbine	$ 1,730.00	$ 4,545.00	$ 6,275.00	$ 1,730.00	$ 4,545.00	$ 6,275.00	$ 1,730.00	$ 4,545.00	$ 6,275.00
6 Inch / Compound	$ 1,770.00	$ 6,280.00	$ 8,050.00	$ 1,770.00	$ 6,280.00	$ 8,050.00	$ 1,770.00	$ 6,280.00	$ 8,050.00
8 Inch & Larger	At Cost	At Cost	At Cost	At Cost	At Cost	At Cost	At Cost	At Cost	At Cost

Hydrant Meter Deposit*	Present Charge	Proposed Charge	Proposed Charge
5/8 x 3/4 Inch	$ 135.00	$ 135.00	$ 135.00
3/4 Inch	$ 215.00	$ 215.00	$ 215.00
1 Inch	$ 255.00	$ 255.00	$ 255.00
1 1/2 Inch	$ 465.00	$ 465.00	$ 465.00
2 Inch / Turbine	$ 965.00	$ 965.00	$ 965.00
2 Inch / Compound	$ 1,690.00	$ 1,690.00	$ 1,690.00
3 Inch / Turbine	$ 1,470.00	$ 1,470.00	$ 1,470.00
3 Inch / Compound	$ 2,265.00	$ 2,265.00	$ 2,265.00
4 Inch / Turbine	$ 2,350.00	$ 2,350.00	$ 2,350.00
4 Inch / Compound	$ 3,245.00	$ 3,245.00	$ 3,245.00
6 Inch / Turbine	$ 4,545.00	$ 4,545.00	$ 4,545.00
6 Inch / Compound	$ 6,280.00	$ 6,280.00	$ 6,280.00
8 Inch & Larger	At Cost	At Cost	At Cost

* Shall have a non-interest bearing deposit of the amount indicated, refundable in its entirety upon return of the meter in good condition and payment of the final bill.

**These line items should be removed from new tariff.

Note that a low income tariff is available. See the low income tariff for more information.

Monthly Charge for:	Present	Company Proposed Rates	Staff Recommended Rates
Monthly Residential Service	$ 38.99	$ 41.62	38.78
Low Income Residential Service	33.14	35.38	32.96
Multi-Unit Housing - Monthly per Unit	36.19	38.63	35.99
Commercial:			
Small Commercial - Monthly Service	65.93	70.37	65.56
Measured Service:			
Regular Domestic:	36.91	39.40	36.71
Monthly Service Charge	3.22	3.44	3.21
Commodity Charge per 1,000 gallons			
Restaurant, Motels, Grocery Stores & Dry Cleaning Estab.1			
Monthly Service Charge	36.91	39.40	36.71
Commodity Charge per 1,000 gallons	4.30	4.59	4.28
Wigwam Resort:			
Monthly Rate - Per Room	36.19	39.40	35.99
Main Hotel Facilities - Per Month	1,433.30	1,529.90	1,425.41
Schools - Monthly Service Rates:			
Elementary Schools	974.64	1,040.33	969.28
Middle Schools	1,146.64	1,223.92	1,140.33
High Schools	1,146.64	1,223.92	1,140.33
Community College	1,777.29	1,897.08	1,767.51
Effluent2:			
1 Motels without restuarants charged multi-unit monthly rate.			
2 Market Rate - Maximum effluent rate shall not exceed $430 per acre foot based on a potable water rate of $1.32 per thousand gallons.			
Late Payment Penalty			
Other Service Charges:			
Establishment (Regular Hours) per Rule R14-2-603D (a)	$ 20.00	$ 20.00	$ 20.00
Establishment (After Hours) per Rule R14-2-603D (a)	**40.00**	**40.00**	**NT**
Re-Establishment of Service per Rule R14-2-603D (a)	(b)	(b)	(b)
Reconnection (Regular Hours) per Rule R14-2-603D (a)	$ 50.00	$ 50.00	$ 20.00
Reconnection (After Hours) per Rule R14-2-603D (a)	**65.00**	**65.00**	**NT**
NSF Check, per Rule R14-2-608E (a)	$ 25.00	$ 25.00	$ 25.00
Deferred Payment, Per Month	1.50%	1.50%	1.50%
Late Charge	(c)	(c)	(c)
Service Calls - Per Hour/After Hours	**40.00**	**40.00**	**NT**
After Hours Service Charge (d)	NT	NT	$ 40.00
Deposit Requirement	(e)	(e)	(e)
Deposit Interest	3.50%	3.50%	6.00%
Service Lateral Connection Charge- All Sizes	(f)	(f)	(f)
Main Extension Tariff, per Rule R14-2-606B	(g)	(g)	(g)

(a) Charges applicable to wastewater service.
(b) Minimum charge times number of full months off the system. per Rule R14-2-603D.
(c) Greater of $5.00 or 1.5% of unpaid balance.
(d) An After Hours Service Charge is appropriate when it is at the customer's request or convenience. It compensates the utility for additional expenses incurred from providing after-hours services. It is appropriate to apply this charge in addition to the charge for any utility service provided after hoursat the customer's request or for the customer's convenience.
(e) Per ACC Rules R14-2-603B Residential - two times the average bill. Non-residential - two and one-half times the average bill.
(f) At cost. Customer/Developer shall install or cause to be installed all Service Laterals as a non-refundable contribution-in-aid of construction..
(g) All Main Extensions shall be completed at cost and shall be treated as non-refundable contribution-in-aid of construction.

NT = No Tariff

**These line items should be removed from new tariff.

Note that a low income tariff is available. See the low income tariff for more information.

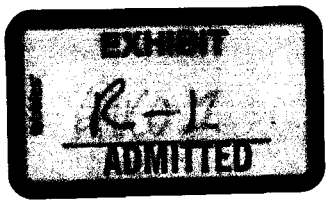

LITCHFIELD PARK SERVICE COMPANY

DOCKET NO. SW-01428A-13-0042

DOCKET NO. W-01427A-13-0043

DIRECT TESTIMONY

OF

ROBERT B. MEASE

ON BEHALF OF

THE

RESIDENTIAL UTILITY CONSUMER OFFICE

SEPTEMBER 25, 2013

TABLE OF CONTENTS

EXECUTIVE SUMMARY I

INTRODUCTION 1

BACKGROUND 2

SUMMARY SCHEDULE - REVENUE REQUIREMENTS 6

SUMMARY SCHEDULE – RATE BASE ADJUSTMENTS 7

DETAILED RATE BASE ADJUSTMENTS 7

RATE BASE ADJUSTMENT NO. 1 – UTILITY PLANT IN SERVICE 9
RATE BASE ADJUSTMENT NO. 2 – ACCUMULATED DEPRECIATION 12
RATE BASE ADJUSTMENT NO. 3 – INTENTIONALLY LEFT BLANK 16
RATE BASE ADJUSTMENT NO. 4 – CONTRIBUTIONS IN AID OF CONSTRUCTION ("CIAC") AND CIAC ACCUMULATED AMORTIZATIONS 16
RATE BASE ADJUSTMENT NO. 5 – CUSTOMER METER DEPOSITS 17
RATE BASE ADJUSTMENT NO. 6 – CUSTOMER SECURITY DEPOSITS 18
RATE BASE ADJUSTMENT NO.7 AND NO. 8 – INTENTIONALLY LEFT BLANK 19
RATE BASE ADJUSTMENT #9 – ACCUMULATED DEFERRED INCOME TAX ("ADIT") 19
RATE BASE ADJUSTMENT #10 – REGULATORY ASSET – TCE PLUME 20

SUMMARY SCHEDULE – OPERATING INCOME AND EXPENSE ADJUSTMENTS 21

DETAILED OPERATING INCOME EXPENSE ADJUSTMENTS 21

OPERATING INCOME ADJUSTMENT NO. 1 – DEPRECIATION EXPENSE 21
OPERATING INCOME ADJUSTMENT NO. 2 – PROPERTY TAX EXPENSE 22
OPERATING INCOME ADJUSTMENT NO. 3 – ANNUALIZATION OF REVENUES AND EXPENSES 23
OPERATING INCOME ADJUSTMENT NO. 4 – INTENTIONALLY LEFT BLANK 23
OPERATING INCOME ADJUSTMENT NO.5 – DECLINING USAGE FOR WATER DIVISION 23
OPERATING INCOME ADJUSTMENT NO. 6 – WATER TESTING EXPENSE 25
OPERATING INCOME ADJUSTMENT NO. 7 – INTENTIONALLY LEFT BLANK 26
OPERATING INCOME ADJUSTMENT NO. 8 – EMPLOYEE PENSION BENEFITS 26
OPERATING INCOME ADJUSTMENT NO. 9 – INTENTIONALLY LEFT BLANK 27
OPERATING INCOME ADJUSTMENT NO.10 – ADDITIONAL REDUCTIONS TO US LIBERTY UTILITIES EXPENSE TO THE WATER AND WASTEWATER DIVISIONS 27
OPERATING INCOME ADJUSTMENT NO. 11 – ALLOCATE BAD DEBT EXPENSE 28
OPERATING INCOME ADJUSTMENT NO. 12 – INTENTIONALLY LEFT BLANK 28
OPERATING INCOME ADJUSTMENT NO.13 – ALGONQUIN POWER UTILITIES CORPORATION ("APUC") COST ALLOCATIONS; 28
OPERATING INCOME ADJUSTMENT NO. 14 – ACHIEVEMENT/INCENTIVE/BONUS PAY 31
OPERATING INCOME ADJUSTMENT NO. 15 – MISCELLANEOUS EXPENSE 33
OPERATING INCOME ADJUSTMENT NO. 16 – CUSTOMER DEPOSIT INTEREST EXPENSE 33
OPERATING INCOME ADJUSTMENT NO. 17 – INCOME TAXES 34

RUCO'S WEIGHTED AVERAGE COST OF CAPITAL CALCULATION 35

OTHER ISSUES 38

PROPOSAL NUMBER 1 - DSIC AND CSIC 38
PROPOSAL NUMBER 2 - PROPERTY TAX ACCOUNTING DEFERRAL 46
PROPOSAL NUMBER 3 – PPAM 47
PROPOSAL NUMBER 4 – BALANCED RATE DESIGN 49

EXECUTIVE SUMMARY

Litchfield Park Service Company ("LPSCO" or "Company") is an Arizona public service corporation authorized to provide water and wastewater services in portions of Maricopa County, Arizona. The Company's service area is located in the southwestern portion of the Phoenix metropolitan area, and includes the Town of Litchfield Park, a portion of the City of Goodyear north of Interstate 10, two commercial sites in Avondale (including Estrella Mountain Community College), and an unincorporated area of Maricopa County. LPSCO serves approximately 16,802 water and 16,161 wastewater service connections in a portion of Maricopa County, but the Water and wastewater Certificates of Convenience and Necessity ("CC&N") are not identical per the Company's rate Application.

On February 28, 2013, LPSCO filed applications with the Arizona Corporation Commission ("ACC" or "Commission") seeking permanent rate increases for the Company's water and wastewater utility operations.

On March 4, 2013, LPSCO file a Motion to Consolidate Docket Numbers SW-01428A-13-0042 and W-0427A-13-0043. The Procedural Order dated April 12, 2013, stated that the issues presented by the two applications are similar, the rights of the parties will not be prejudiced by their consolidation, and they should therefore be consolidated as SW-01428A-13-0042 ET AL.

On March 28, 2013, the Commission's Utilities Division filed Letters of Sufficiency indicating that LPSCO's applications met the sufficiency requirements and classified LPSCO as a Class A Utility.

Company's proposed and RUCO recommendations for revenue increase, Fair Value Rate Base ("FVRB"), Rate of Return and Operating Income are as follows:

	Water Division		Wastewater Division	
	Company Proposed	RUCO Recommends	Company Proposed	RUCO Recommends
Revenue Increase	$ 2,257,160	$ 1,111,850	$ 659,088	$ 36,254
Percent Increase	20.15 %	9.87 %	6.36 %	0.35 %
FVRB	$35,647,602	$33,245,457	$ 23,877,697	$ 23,988,000
Rate of Return	9.50 %	8.83 %	9.50 %	8.83 %
Operating Income	$ 3,387,127	$ 2,935,126	$ 2,268,786	$ 2,117,817

In addition to the Company's request seeking permanent rate increases, the Company is requesting a Distribution System Improvement Charge ("DSIC") a Collection System Improvement Charge ("CSIC"), a Property Tax Accounting Deferral, a Purchase Power Adjustor Mechanism ("PPAM") and a Balanced Rate Design.

INTRODUCTION

Q. Please state your name, position, employer and address.

A. My Name is Robert B. Mease. I am the Chief of Accounting and Rates employed by the Residential Utility Consumer Office ("RUCO") located at 1110 W. Washington, Suite 220, Phoenix, Arizona 85007.

Q. Please state your educational background and qualifications in the utility regulation field.

A. Attachment A, which is attached to this testimony, describes my educational background, work experience and regulatory matters in which I have participated. In summary, I joined RUCO in October of 2011. I graduated from Morris Harvey College in Charleston, WV and attended Kanawha Valley School of Graduate Studies. I am a Certified Public Accountant and currently licensed in the state of West Virginia. My years of work experience include serving as Vice President and Controller of Energy West, Inc. a public utility and energy company located in Great Falls, Montana. While with Energy West I had responsibility for all utility filings and participated in several rate case filings on behalf of the utility. As Energy West was a publicly traded company listed on the NASDAQ Exchange I also had responsibility for all filings with the Securities and Exchange Commission.

Q. Please state the purpose of your testimony.

A. The purpose of my testimony is to present RUCO's recommendations regarding Litchfield Park Service Company's ("LPSCO" or "Company") Water and Wastewater Divisions' rate Application for a determination of the current fair value of its utility plant and property and for a permanent increase in its rates and charges. The Test Year ("TY") utilized by LPSCO in connection with the preparation of this Application is the 12-month period ending December 31, 2012.

BACKGROUND

Q. Please describe your work effort on this project.

A. I reviewed financial data provided by the Company and performed analytical procedures necessary to understand the Company's filings as it related to operating income, rate base, and the overall revenue requirement for both of the water and wastewater divisions. My recommendations are based on these analyses. Procedures performed include in-house formulation and analysis of this data, the review and analysis of the Company's responses to Commission Staff data requests, and review of prior dockets related to LPSCO's prior filings.

Q. How is RUCO's testimony organized?

A. RUCO's testimony is organized into six sections for the Water and Wastewater Divisions as follows:

Section I	SUMMARY SCHEDULE - REVENUE REQUIREMENTS
Section II	SUMMARY SCHEDULE - RATE BASE ADJUSTMENTS
Section III	DETAILED RATE BASE ADJUSTMENTS
Section IV	SUMMARY SCHEDULE – OPERATING INCOME AND EXPENSE ADJUSTMENTS
Section V	DETAILED OPERATING INCOME / EXPENSE ADJUSTMENTS
Section VI	OTHER ISSUES

Q. Does RUCO have a general concern about the Company's Internal Controls over the recording of transactions?

A. Yes. Many errors were identified in the Company's reporting and numerous adjustments had to be made. At an organizational level the basic internal control objective is defined as follows: "Internal control objectives relate to the reliability of financial reporting." Following is a summary of the inaccuracies identified in the reporting of the test year results which lead RUCO to question the Company's Internal Control process and procedures:

1) Prior to beginning work on the review of Company's test year, the Company's Utility Rates and Regulatory Manager called and informed RUCO that an error had been made in the reporting of the Accumulated Depreciation balance. The Company' Water Division's Accumulated Depreciation balance was understated by

$2,411,551. (The Company did inform all parties that this error was made)

2) During the course of RUCO's review it was determined that approximately $2,819,595 in plant additions for the Water Division and $563,717 in plant additions for the Wastewater Division had been recorded to the incorrect NARUC accounts.

3) Plant additions of $724,962 and $90,223 were made to the Water and Wastewater Divisions respectively, during year 2011, and many of the plant invoices supporting these additions were dated in year 2006. RUCO was concerned that these plant additions were duplicated. When discussing our concerns with the Company it was determined that these invoices were correctly accrued during the last rate case but were not transferred from the CWIP account, to plant accounts, until year 2011 even though the projects had been placed in service during prior years.

4) Several invoices related to plant additions had been recorded to the incorrect division and had to be reclassified.

5) Several duplicate invoices were identified.

6) A data request was sent asking the Company why there was no Construction Work In Progress identified with either division. The Company response, CWIP was incorrectly identified to the Inter-Company Receivables Account.

7) Incorrect assessment ratios were used to calculate property taxes and the incorrect Arizona Income Tax rate was used to calculate Arizona Income Taxes.

Q. Has RUCO, in preparing its testimony, segregated between the Water and Wastewater Divisions?

A. Yes. When RUCO proposes an adjustment that is synonymous to both divisions, the adjustment will be identified to both Water and Wastewater Divisions. If an adjustment relates to only one division it will be identified to that division.

Q. Has the Company adopted or reached agreement with any of RUCO's recommended adjustments??

A. Yes. Many of the items that will be discussed throughout my testimony have been discussed with the Company.

Q. Please identify the schedules and exhibits that you are sponsoring.

A. I'm sponsoring the revenue requirement schedules for LPSCO's Water and Wastewater Divisions numbered RBM-1 through RBM-12, RUCO's recommended rate base schedule adjustments. RUCO Schedules RBM-13 through RBM-32 consists of RUCO's recommended operating income adjustments and cost of capital recommendation.

I. SUMMARY SCHEDULE - REVENUE REQUIREMENTS

Q. Can you please provide a summary schedule identifying the Company's proposed and RUCO's recommended revenue requirements for both the water and wastewater divisions?

A. Yes, please see following summaries:

Summary - Water Division

	Company	RUCO	Adjustment
OCRB/FVRB	$ 35,647,602	$ 33,245,457	($ 2,402,145)
Adjusted TY Operating Income	2,024,376	2,259,901	235,525
Required Operating Income	3,387,127	2,935,126	(452,001)
Required ROR on Rate Base	9.50%	8.83%	(0.67%)
Increase in Gross Revenue	$ 2,257,160	$ 1,111,850	($ 1,145,310)
Adjusted TY Revenues	11,201,390	11,260,093	58,703
Proposed Annual Revenues	13,458,550	12,371,943	(1,086,607)
Required % Increase in Revenue	20.15%	9.87%	(10.28%)
Rate of Return on Equity	10.00%	9.20%[1]	(0.80%)

Summary - Wastewater Division

	Company	RUCO	Difference
OCRB/FVRB	$ 23,877,697	$ 23,988,000	$ 110,303
Adjusted TY Operating Income	1,871,616	2,095,839	224,223
Required Operating Income	2,268,786	2,117,817	(150,969)
Required ROR on Rate Base	9.50%	8.83%	(0.67%)
Increase in Gross Revenue	$ 659,088	$ 36,254	($ 622,834)
Adjusted TY Revenues	10,361,603	10,362,796	1,193
Proposed Annual Revenues	11,020,691	10,399,050	(621,641)
Required % Increase in Revenue	6.36%	0.35%	(6.01%)
Rate of Return on Equity	10.00%	9.20%[2]	(0.80%)

[1] The Return on Equity Recommended by RUCO was the amount authorized in Rio Rico Utilities, which is a sister company to LPSCO, in ACC Decision No. 73996 dated July 30, 2013.
[2] Ibid.

II. SUMMARY SCHEDULE – RATE BASE ADJUSTMENTS

Q. Can you please provide a summary schedule identifying RUCO's proposed rate base adjustments for both the Water and Wastewater Divisions?

A. Yes, please see the schedules as follows for a summary of RUCO's adjustments. Please see detailed discussion in Section II.

Rate Base Adjustments

Adjustment No / Description	Water Div.	Wastewater Div.
1 – Utility Plant In Service	($ 32,483)	($ 8,315)
2 – Accumulated Depreciation	(2,502,368)	(53,883)
3 – Intentionally Left Blank	-- 0 --	-- 0 --
4 – CIAC and CIAC Amortization	(305,152)	(199,905)
5 – Customer Meter Deposits	(160,986)	14,231
6 – Customer Security Deposits	(7,785)	(8,553)
7 – Intentionally Left Blank	– 0 –	-- 0 --
8 – Intentionally Left Blank	-- 0 --	-- 0 --
9 –Accumulated Deferred Income Taxes	605,941	366,728
10-Regulatory Asset (TCE Plume	688	-- 0 --
Total RUCO recommended Water and Wastewater Rate Base Adjustments	($2,402,144)	$110,304

See Schedules RBM-3 both the Water and Wastewater Divisions

III. DETAILED RATE BASE ADJUSTMENTS

Q. Did RUCO reconstruct the Company's plant in service beginning with the balance as approved in the last rate case?

A. Yes. RUCO began with the balance as approved in the last rate case filing and performed a reconstruction year by year through the end of the test year ending December 31, 2013.

Q. Does RUCO agree with the Company's utility plant in service beginning balance reflected in its reconstruction schedules in this rate proceeding for both the Water and Wastewater Divisions as filed in the LPSCO's Application?

A. While RUCO had some difficulty in accepting the Company's beginning balance we did not recommend a UPIS adjustment to either the Water or Wastewater Divisions' UPIS reconstruction schedules.

Q. What was the difficulty that RUCO encountered with the beginning balance from the last rate case?

A. RUCO and Staff both identified several plant invoices dating back to year 2006 that were identified as plant additions during year 2011. The Company's prior rate case TY ended September 30, 2008 and there were concerns that these additions were duplicated during subsequent years.

Q. How did the Company respond to the concerns raised by RUCO and Staff through data requests?

A. The Company requested a meeting with Staff at the Commission's office and both RUCO and Staff attended this meeting. The Company indicated that the invoices for these plant additions were recorded in the Construction Work In Process ("CWIP") account in the last case and were not transferred from CWIP to UPIS when placed in service. The Company assured both RUCO and Staff at the meeting that the plant invoices

identified were UPIS and serving customers before the end of the previous rate case TY.

Q Did RUCO accept the Company's explanation as provided at the meeting you mentioned above?

A. Yes. RUCO was able to determine that the invoices were in CWIP during the last rate case and there were no duplicate amounts included in utility plant in service.

WATER / WASTEWATER DIVISION'S RATE BASE ADJUSTMENTS

Rate Base Adjustment No. 1 – Utility Plant in Service – Water Division

Q. Can you please identify the $32,483 decrease RUCO is recommending to the Water Division's UPIS accounts?

A. Yes. RUCO identified several adjustments necessary to correct the UPIS accounts.

(1) During RUCO's review, many errors were noted in the Company's plant accounts and recording of invoices to the correct NARUC accounts. RUCO reclassified $2,819,595 between accounts as shown on Schedule RBM-4(a). While the net effect of these reclassifications was a reduction of $164 in the plants overall balance in UPIS, the errors did create an adjustment to the Company's A/D balance as well.

(2) This adjustment reclassifies two invoices that were originally recorded to the Water Division's account 304 – Structures & Improvements and reclassifies the costs to the Wastewater Division's Account 354 – Structures & Improvements. The adjustment removes $12,156 from the Water Division and reclassifies the same costs to the Wastewater Division. See RBM-4(a).

(3) In the Company's response to Staff Data Request 2-65 the Company identified two invoices that had been duplicated. RUCO's recommended adjustment of $2,608 removes the duplicate invoices from the Company's utility plant is service balance.

(4) Pursuant to the Company's response to RUCO DR 3.02, the Company indicated that they failed to retire a truck that had been replaced by another vehicle. "The Company agrees a retirement should be recorded." The replacement cost for the vehicle was $17,555 as reflected on the invoice included with the plant detail.

<u>Rate Base Adjustment No. 1 – Utility Plant in Service – Wastewater Division</u>

Q. Can you explain the adjustment of $8,315 to the Wastewater Division's UPIS balance?

A. Yes. RUCO identified several adjustments necessary to correct the UPIS accounts. The adjustments are very similar to those for the Water Division.

(1) During RUCO's review, many errors were noted in the Company's plant accounts and recording of invoices to the correct NARUC accounts. RUCO reclassified $564,077 between accounts as shown on Schedule RBM-4(a). As were i dentified in the Water Division the net effect of these reclassifications was zero on the plants overall balance in UPIS, however, the errors did create an adjustment to the Company's A/D balance.

(2) This adjustment reclassifies two invoices totaling $12,156 from the Water Division and reclassifies the same costs to the Wastewater Division. These adjustments are shown on the respective RUCO Water and Wastewater Schedules RBM-4(a) page 1 of 1.

(3) During RUCO's review it was noted that the Company again duplicated the recording of invoices totaling $9,254. The Company is aware of the duplication and has agreed to adjust their records accordingly.

(4) RUCO recommends the removal on plant valued at $11,217 that has been determined as non-used and useful. Per Staff DR DH 11-5.

Rate Base Adjustment No. 2 – Accumulated Depreciation

Q. Can you please summarize the A/D Depreciation Adjustments for both the Water and Wastewater Divisions?

A. Yes, please see below.

Accumulated Depreciation Adjustments

Adjustment No. / Description	Water Div.	Wastewater Div.
1 – UPIS A/D Reconstruction Schedule increases	($ 2,475,900)	($ 13,854)
2 – UPIS Reclassifications decrease A/D	25,981	(32,534)
3 – Reclassify Invoices from Water to Wastewater	607	(607)
4 – Remove Duplicate Invoices	130	823
5 – Truck Retirement	17,555	-- 0 --
6 – Used Only for Wastewater Division	– 0 –	-- 0 --
7 – Additional A/D on Late Recorded Invoices	(91,841)	(7,711)
8 – Correct Company's A/D for a Non-Depreciable Plant account	21,100	-- 0 --
Total RUCO recommended Water and Wastewater A/D Adjustments	($ 2,502,368)	($ 53,883)

Water Division Adjustments

Q. Can you please explain Adjustment No. 1 for the A/D Account for the Water Division?

A. Yes. The Company admitted early in this rate proceeding that an error had been made in the Water Division's A/D reconstruction schedule as filed in its application.

Q. What adjustment was necessary to correct the Company's A/D error for the Water Division?

A. It was necessary to increase the Water Division's A/D by $2,411,551 to correct the error. The Company and RUCO should be in agreement with this adjustment. See RBM-4(a) page 2 of 2.

Q. Please explain the A/D error that existed in the Company's Water Division reconstruction schedule.

A. The Company "hard numbered" the A/D balance for the year ended 2009, which was the same balance as the starting-point on September 30, 2008, that was authorized by the Commission in the previous rate case. In other words, the A/D balance going forward from the end of the prior test year was not adjusted for the depreciation expense recognized during the following fifteen months.

Q. Were there other adjustments to A/D that RUCO identified while reconstructing the UPIS accounts?

A. Yes. One additional adjustment was made to the A/D account in year 2010. The Company failed to include the AD balance of $64,349 for Account 349, Pumping Equipment.

Q. Are there additional A/D adjustments related to the Company's Water Division?

A. Yes. There are additional adjustments being proposed by RUCO to the A/D balance for the Water Division.

(1) There several plant reclassifications between NARUC accounts that decreased A/D by $25,981.

(2) The reclassification of plant costs between the water and wastewater divisions decreased A/D by $607.

(3) The adjustment for duplicate invoices decreased A/D by $130.

(4) The Company failed to retire a truck with a cost of $17,555 when a replacement vehicle was purchased. RUCO identified this error and once the retirement was recorded it created an adjustment by decreasing the A/D account by the same amount.

(5) The Company failed to timely record asset purchases. A/D was calculated retroactive to the purchase date creating an adjustment increasing A/D by $91,841.

(6) LPSCO inappropriately calculated amortization expense on non-depreciable Organization Cost of $21,100. RUCO recommends that the amortization of this account be reversed.

Wastewater Division A/D Adjustments

Q. Can you please explain the adjustments that RUCO is proposing for the Wastewater Division?

A. Yes. The total adjustment to this account as proposed by RUCO is $53,883 and consists of the following individual adjustments:

(1) RUCO performed a plant reconstruction beginning with the last test year approved plant in service accounts. When making the adjustments for additions, deletions, adjustments and retirements RUCO's calculated A/D balance required an increase in the A/D balance by $13,854. See Schedule RBM-4(a) page 2 of 2.

(2) As a result of reclassifications of plant additions between accounts, an adjustment to A/D was made increasing the A/D balance by $32,534.

(2) The reclassification of invoices between the water and wastewater divisions increased A/D by $607.

(3) The adjustment for duplicate invoices decreased A/D by $823.

(4) The Company failed to timely record asset purchases. A/D was calculated retroactive to the purchase date creating an adjustment increasing A/D by $7,711.

Rate Base Adjustment No. 3 – Intentionally Left Blank

Rate Base Adjustment No. 4 – Contributions in Aid of Construction ("CIAC") and CIAC Accumulated Amortizations

Water Division Adjustments

Q. Can you please explain the adjustment that RUCO is proposing for the Water Division's CIAC balance?

A. RUCO's rate base adjustment No. 4 corrects the Company's inclusion of "rate case true-up" additions and the Accumulated amortization ("A/A") of CIAC as proposed in the Company's filing.

Q. Please explain what you mean by correcting the Company's "rate case true-ups" as filed by the Company.

A. True up adjustments are generally made to correct a misstated beginning of period account balance. There are no true-ups necessary in this case. RUCO and the Company begin with the same balances of gross CIAC as approved in Decision No. 72026 for the Water and Wastewater Divisions.

Q. What adjustments are necessary to correct what the Company referred to as "rate case true-ups"?

A. For the Water Division, it is necessary to increase the gross CIAC balance by $101,234. See Schedule RBM-3 page 1 of 1.

Q. You indicated that an adjustment was necessary to reflect the correct balance in the Accumulated Amortization account as well?

A. Yes. The Company amortized a full-year of the gross CIAC balance in both divisions for year 2008. The first nine-months of 2008 was amortized and included in the Company's last rate case TY that ended on September 30, 2008. The total adjustment necessary to reflect the correct balance is $203,918.

Wastewater Division

Q. Can you please explain the adjustments that RUCO is proposing for the Wastewater Divisions CIAC and related A/A account balances?

A. Yes. RUCO is proposing adjustments to the CIAC and A/A balances for the Wastewater Division for the same reasons as proposed in the Water Division. RUCO is proposing an decrease in the CIAC balance by $93,570 related to true-up adjustments made by LPSCO. RUCO also proposes an adjustment to decrease the A/A account by $293,475 for excessive amortization recorded for year 2008.

Rate Base Adjustment No. 5 – Customer Meter Deposits

Water and Wastewater Divisions

Q. What did LPSCO include in its filing for Customer Meter Deposits?

A. In its application LPSCO included the balance as of December 31, 2012.

Q. **Is RUCO proposing an adjustment to the Company's Customer Meter Deposits for both the Water and Wastewater Divisions?**

A. Yes. RUCO recommends a thirteen-month average, using the months December 2011 through TY end December 2012, for the Customer Meter Deposit asset balance. A thirteen-month average smooth's out fluctuations over a period whenever the month end balances tend to change significantly. See Schedule RBM-3.

Q. What adjustments are necessary to reflect a more reasonable customer meter deposit balance for both divisions?

A. RUCO is proposing an increase in the Water Division's Customer Meter Deposit balance of ($160,986). For the Wastewater Division, RUCO is proposing a decrease in Customer Meter Deposit balance by $14,231. See Schedule RBM-3.

<u>Rate Base Adjustment No. 6 – Customer Security Deposits</u>

Q. **Is RUCO proposing an adjustment to the Company's Customer Security Deposits for both the Water and Wastewater Divisions?**

A. Yes. RUCO is also recommending a thirteen-month average of December 2011 through TY end December 2012 for the Customer Security Deposits for the same reasons RUCO proposed for Customer Meter Deposits. A thirteen-month average smooth's out fluctuations over a period whenever the month end balances tend to change significantly.

Q. What adjustments are necessary to reflect a more reasonable customer security deposit balance for both divisions?

A. It is necessary to increase the Water and Wastewater Divisions Customer Security Deposit balances by $7,785 and $8,553 respectively.

Rate Base Adjustment No.7 and No. 8 – Intentionally Left Blank

Rate Base Adjustment #9 – Accumulated Deferred Income Tax ("ADIT")

Water and Wastewater Divisions

Q. Can you please explain the adjustments that RUCO is proposing to the Company's Accumulated Deferred Income Tax Accounts?

A. The adjustments that RUCO is proposing relates to the total rate base adjustments that RUCO has recommended. RUCO has also adjusted the statutory State Income Tax rate from 6.9868 percent to the new rate established for years ending December 31, 2013, of 6.50 percent. (See Attachment A. Excerpts from House Bill 2001)

Q. What adjustments are necessary to account for RUCO's total rate base adjustments that impact the ADIT balances for the Water and Wastewater Divisions?

A. In the Water Division, RUCO recommends reducing the ADIT liability balance by $605,941. For the Wastewater Division, it is necessary to reduce the ADIT liability balance by $366,728. These adjustments are shown on the respective Water and Wastewater Schedules RBM-3.

Rate Base Adjustment #10 – Regulatory Asset – TCE Plume

Water Division

Q. Can you please explain RUCO's adjustment to the Water Divisions Regulatory Asset Account?

A. This adjustment is the result of RUCO amortizing the Company's regulatory asset for the TCE Plume to the TY month-end rather than the Company amortizing one additional month post-test year. The resulting adjustment increases the Company's regulatory asset by $688. This adjustment is for the Water Division only and is shown in Column [K] on RUCO Schedule RBM-3.

IV. SUMMARY SCHEDULE – OPERATING INCOME AND EXPENSE ADJUSTMENTS

Operating Income Adjustments

Adjustment No / Description	Water Div.	Wastewater Div.
1 – Depreciation Expenses	$ 28,697	$ 22,150
2 – Property Tax Expense	(24,121)	(27,493)
3 – Reverse Expense Animalization's	-- 0 --	(2,632)
4 – Intentional Left Blank	-- 0 --	-- 0 –
5 – Declining Usage Adjustment	58,744	-- 0 –
6 – Water Testing Expense	(22,062)	-- 0 –
7 – Intentionally Left Blank	-- 0 --	-- 0 –
8 – Employee Pension Benefits	(62,199)	(76,431)
9 – Intentionally Left Blank	-- 0 --	-- 0 –
10- Liberty Utilities Expense Reductions	(1,829)	(2,521)
11- Allocate Bad Debt Expense	21,216	(23,924)
12- Intentionally Left Blank	-- 0 --	-- 0 –
13- APUC Cost Allocations	(115,363)	(115,707)
14- Achievement / Incentive Pay	(138,887)	(128,034)
15- Miscellaneous Expense	(16,108)	(342)
16- Customer Interest Deposit	4,848	5,467
17- Income Tax Expense	149,026	125,244
Total RUCO Recommended Operating Income Adjustments. See Schedules RBM-14	$235,525	$224,223

V. DETAILED OPERATING INCOME EXPENSE ADJUSTMENTS

Water and Wastewater Divisions

Operating Income Adjustment No. 1 – Depreciation Expense

Q. Is RUCO proposing adjustments to LPSCO's Depreciation Expense accounts?

A. YES. RUCO's proposed Depreciation Expense adjustments are the result of the reclassifications between NARUC accounts for both divisions, the adjustments related to the plant projects transferred between the divisions and the identification of several duplicate invoices. The adjustments proposed by RUCO resulted in a depreciation expense increase of

$28,697 and $22,150 to the Water and Wastewater Divisions respectively. See Schedule RBM-14

Operating Income Adjustment No. 2 – Property Tax Expense

Q. Is RUCO recommending an adjustment in the test-year calculations for property tax expense?

A. Yes, RUCO is proposing an adjustment. In calculating property taxes the primary inputs are annual revenues, assessment ratio and effective property tax rate. As a result of the Company's using an incorrect property tax ratio of 20 percent, RUCO is proposing a decrease in TY property tax expense of $24,121 in the Water Division and a decrease of $27,493 in the Wastewater Division. See Schedule RBM-14.

Q. Can you explain how RUCO became aware of the reduction in the ratio used to calculate property taxes to be paid by the Company?

A. RUCO was provided a copy of Arizona "House Bill 2001" by the Arizona Department of Revenue. Per the House Bill the tax assessment ratio beginning from December 31, 2013, through December 31, 2014 is 19 percent. After December 31, 2014, the ratio continues to reduce until the ratio reaches 18 percent and will remain there until the assessment ratios are amended. (See Attachment B for Excerpts from House Bill 2001)

Wastewater Only

Operating Income Adjustment No. 3 – Annualization of Revenues and Expenses

Q. Why is RUCO proposing an adjustment increasing TY operating income of $2,632 to the account described as "Annualization of Revenues and Expenses"

A. The first adjustment RUCO is proposing increases TY revenues by a net amount of $1,193. The adjustment relates to the annualization of revenues based on the expected increase in customers to the low income classification. The second adjustment decreases operating expenses by $1,439 an d relates to the Company's calculating a test year postage adjustment for the distribution of monthly bills. This represents a duplicated TY adjustment as the Water Division also recorded an adjustment. The monthly bills are distributed as a combination of both water and wastewater charges, consequently, there is no need for both divisions to make the same adjustment. See RBM-14 page 1of 2.

Operating Income Adjustment No. 4 – Intentionally Left Blank

Water Division Only

Operating Income Adjustment No. 5 – Declining Usage for Water Division

Q. Can you please explain what is meant by declining use?

A. Declining usage as defined by the Company is: "The decline in usage is caused by the inverted tier rate design and resultant conservation."

Q. Did the Company adjust test year operating income to compensate for Declining Usage?

A. Yes. The Company decreased operating revenues by $58,744. RUCO is proposing that this adjustment be reversed.

Q. How did the Company compute the adjustment for the declining usage decrease in revenues?

A. The Company took the average of the three years prior to the test year, in gallons sold, and then compared the average to the test year for the two residential blocks of 3/4 inch and one inch. The result was then multiplied by the commodity rate and again multiplied by a factor of 1.5. The 1.5 multiplier was described as the midpoint of a three year period, between the expected date of rate increases in this rate filing and the expected date of rate increases in the next rate case filing.

Q. Does RUCO agree with the Company's treatment of Declining Usage?

A. No. There are several reasons why RUCO does not agree with declining usage adjustments. First, declining usage is not a known and measureable determinant. Second, in this case when looking at the three rate tiers in the residential rate structure, the first tier used in the Company analysis had an average increase for the three years, the second tier had an average that was basically constant during the three years, and the

third tier the average gallons did increase during the three years. When analyzing the three year period that the Company used in its analysis the total gallons sold for the TY should increase slightly. RUCO believes that the analysis used by the Company is flawed and should not be relied upon.

Q. What about the 1.5 multiplier the Company used?

A. Using a multiplier is not acceptable. This assumes that declining usage will continue each year until the next rate case and further assumes that the next rate case will be in three years. Again, declining usage is not a known and measurable determinant and assuming that a rate case will be filed in three years is a flawed assumption.

Operating Income Adjustment No. 6 – Water Testing Expense

Q. What adjustment is RUCO recommending to Water Testing Expense?

A. In the Company's response to RUCO DR 3.32, the Company stated, "Generally, every third year is a compliance year." The Water Division's total cost during a compliance year is expected to be $33,090 which the Company proposed as a TY adjustment. RUCO is proposing an adjustment that decreases this TY expense by $22,062. RUCO's adjustment will allow the Company to collect in rates $11,030 in each of the three years between compliance years. See RBM-14

Operating Income Adjustment No. 7 – Intentionally Left Blank

Water and Wastewater Divisions

Operating Income Adjustment No. 8 – Employee Pension Benefits

Q. Did LPSCO have a Pension Benefit program in place during the TY?

A. No.

Q. Has LPSCO made TY adjustments, for the Water and Wastewater Divisions for pension expenses that the Company is expecting to pay for year 2013?

A. Yes. LPSOC recently put into place (May 2013) what is described as cash balance pension plan. It will be submitted to the Internal Revenue Service for approval and is expected to comply with ERISA.

Q. Does RUCO agree with the Company's TY adjustments?

A. No. RUCO is proposing an adjustment reversing the Company's requested expense of $62,199 for the Water Division and $76,431 for the Wastewater Division.

Q. Why does RUCO not agree with the Company's TY adjustment for a pension expense?

A. The Company has not made pension contributions during previous years or during the test year. In addition, the Company is under no obligation to make contributions to the plan. It is at the discretion of the Company when to make deposits and deposits are not mandatory. See RBM-14

Operating Income Adjustment No. 9 – Intentionally Left Blank

Operating Income Adjustment No.10 – Additional Reductions to US Liberty Utilities Expense to the Water and Wastewater Divisions

Q. Did the Company identify an error in the allocation of Utilities Expense from US Liberty to LPSCO?

A. Yes. In the Company's response to Staff DR JMM 12-2, LPSCO identified a formula mistake when making adjustments of US Liberty Utilities costs to LPSCO's Water and Wastewater Divisions. The Company identified additional reductions of $1,829 and $2,521 respectively for the Water and Wastewater Divisions. See RBM-14.

Operating Income Adjustment No. 11 – Allocate Bad Debt Expense

Q. Can you please describe the Company's method for recording Bad Debt Expense?

A. Yes. LPSCO has charged the total Company's Bad Debt Expense to the Wastewater Division.

Q. What adjustments are necessary to allocate the bad debt expense among the two divisions?

A. RUCO is proposing the total Bad Debt Expense of $45,431 be allocated as follows: Water Division, $21,140 and Wastewater Division, $21,291. The allocation percentage agreed on between RUCO and the Company was 47 percent to the Water Division and 53 percent to the Wastewater Division.

Operating Income Adjustment No. 12 – Intentionally Left Blank

Operating Income Adjustment No.13 – Algonquin Power Utilities Corporation ("APUC") Cost Allocations;

Q. Is RUCO recommending adjustments to the APUC cost allocations to LPSCO?

A. Yes.

Q. Briefly describe the APUC cost allocation methodology?

A. APUC pools costs from twenty distinct expense areas, such as audit, tax services, unit holder communications, trustee fees, and escrow/transfer fees etc. APUC allocates these costs to its regulated and unregulated, Algonquin Power Company ("APCO"), entities. The unregulated entity, Liberty Utilities, further allocates its share of the cost pool to the regulated operating entities, which includes LPSCO. The total amount allocated to its unregulated entities, Liberty Utilities, is approximately $3,944,525 that is further allocated to Liberty Utilities South. Liberty Utilities South allocates 28.74 percent, or $262,593, of its share of the costs to LPSCO's Water Division and 26.87 percent, or $261,973, of the costs to LPSCO's Wastewater Division by customer counts.

Q. What rationale did RUCO rely on when making its adjustments to the Company's APUC cost allocations?

A. First, RUCO reviewed Commission Decision No. 72059 dated January 6, 2011. On page 22 at lines 15-16, it stated "we will allow APT's central costs related to audit, tax, legal, and license fees and permits to be allocated to RRUI[3]..."

[3] RRUI is the acronym for Rio Rico Utilities, Inc., which is a sister company to LPSCO.

Q. Did RUCO allow these costs in this case?

A. Yes. Based on the Commission's Decision No. 72059, RUCO believes that these cost allocations are appropriate.

Q. What adjustment does RUCO recommend for the APUC cost allocations?

A. RUCO recommends reducing the amounts allocated to LPSCO as shown on Schedules RBM-27 by $115,363 for the Water Division and by $115,707 for the Wastewater Division. RUCO finds these adjustments to be a fair and reasonable amount for both the ratepayers and Company's Shareholders in this case. These adjustments are shown on Schedules RBM-14 on page two and the details reflected in RUCO Schedules RBM-27.

Q. What portion of the allocated APUC expenses does RUCO believe could be attributable to LPSCO?

A. RUCO's analysis, review, and review of past Commission decisions determined that the audit, tax services, legal – general, and depreciation expenses would benefit the ratepayers of LPSCO. However, RUCO allowed more of the total costs than those cited above. In some of the line item expenses, RUCO allowed 100 percent. There were some other expensed line item amounts that RUCO allowed less than 100 percent.

There are other line item expensed amounts that RUCO did not recommend any recovery in rates.

Q Did RUCO agree with the Liberty Utility allocations for its shared service model?

A. Other than RUCO's achievement / incentive / bonus pay programs that RUCO recommends be shared equally (i.e., 50/50 ratio) in addition to the sharing of the APUC costs previously mentioned between the shareholders and ratepayers, RUCO did not take issue with the Liberty Utilities shared service model.

Operating Income Adjustment No. 14 – Achievement/Incentive/Bonus Pay

Q. Is RUCO proposing an allocation of the achievement, incentive and bonus pay costs that the Company has included in its application?

A. Yes, RUCO is recommending the allocation of 50 percent of T/Y expense for the achievement/ incentive / bonus payments to shareholders.

Q. Please explain why a 50 percent allocation is appropriate in this case?

A. Generally, achievement / incentive / bonus pay programs can provide benefits to both shareholders and ratepayers. The shareholders stand to gain from potential cost savings while the ratepayers may benefit through superior customer service. The adjustment essentially provides an equal

sharing of such costs and the potential benefits that may be derived from these program(s). In addition, there is no certainty that the same level of costs will reoccur on a going forward basis.

Q. Has the Commission in the past ordered an equal sharing between the shareholders and ratepayers of such costs?

A. Yes. In numerous Commission decisions,[4] the Commission has ordered a 50/50 sharing of incentive pay programs and provides for a fair and reasonable balancing of the interests between the ratepayers and shareholders.

Q. What adjustments is RUCO recommending in order to share these costs in a manner that balances the interests between ratepayers and shareholders?

A. RUCO recommends allocating 50 percent of the achievement / incentive / bonus pay costs. RUCO recommends 50 percent disallowance on behalf of the ratepayers of $138,887 and $128,034 of TY discretionary achievement / incentive / bonus pay expense from the Water and Wastewater Divisions respectively. See RBM-14

[4] See Decision No. 70011 at 27, Decision No. 70360 at 21, Decision No. 68487 at 18, Decision No. 70665 at 16, and Decision No. 71623 at 31.

Operating Income Adjustment No. 15 – Miscellaneous Expense

Q. Is RUCO recommending a reduction in LPSCO's T/Y Miscellaneous Expense Account?

A. Yes, RUCO is proposing a reduction of 100 percent of the Company's Public Relations Expense and Charitable Contributions Expense, and 50 percent of Meals and Entertainment Expense. RUCO's proposal reduces the Water Division's Miscellaneous Expense by $16,108 and reduces the Wastewater Division's Miscellaneous Expense by $342. See RBM-14.

Operating Income Adjustment No. 16 – Customer Deposit Interest Expense

Q. Is RUCO proposing an adjustment to the Company's Customer Interest Expense?

A. Yes. RUCO's proposal recommends that the Company be allowed recovery of interest expense incurred in the course of business on Customer Security Deposits

Q. Did the Company request customer deposit interest expense in its Application?

A. In response to Staff DR JMM 13-3, the Company stated, "Yes, however the expense was incurred below the line on the Company's C-1 Schedules within all other interest expense."

Q. Did RUCO reclassify the interest expense related to the Customer Security Deposits that the Company included below-the-line to an adjustment that would be included in rates?

A. Yes. RUCO reclassified the Company's below-the-line interest expense related to Customer Security Deposits to Miscellaneous Expense, which is an expense included in rates. The adjustment increases the Water Divisions Miscellaneous Expense by $4,848 and increased the Wastewater Divisions Miscellaneous Expense by $5,467. See RBM-14

Operating Income Adjustment No. 17 – Income Taxes

Q. Have you calculated income tax expense based on both RUCO's recommended adjusted operating income for the TY and the recommended operating income associated with RUCO's revenue increase?

A. Yes. For the Water Division, RUCO's adjusted TY income tax adjustment increases the income tax expense by $149,026. For the Wastewater Division, RUCO's adjusted TY income tax adjustment increases the income tax expense by $125,244.

Q. Did the Company use the most current statutory State income tax rate of 6.50 percent rather than the superseded rate of 6.968 percent?

A. No. The Company calculated state income tax expense using the superseded rate of 6.968 percent. The Arizona Corporate Income Tax

Rates have been changed in accordance with HB 2001. The adjusted rate has been reduced to 6.50 percent effective with the tax year ending December 31, 2014. (See Attachment B)

Q. Have you included an interest synchronization calculation in your computation of income tax expense?

A. Yes. Interest synchronization has been included in RUCO' calculation for income tax purposes. Interest synchronization is calculated by multiplying the adjusted TY rate base by the weighted average cost of debt. The income tax gross up revenue conversion factor also includes an element for the increase in property taxes due to RUCO's recommended level of increased revenues.

RUCO'S WEIGHTED AVERAGE COST OF CAPITAL CALCULATION

Q. Has RUCO performed an extensive cost of capital review in LPSCO's rate application?

A. No. RUCO will rely on the cost of capital review as was performed in the most recent Rio Rico Utilities, Inc. rate application. That case was approved by the Commission on July 30, 2013.

Q. Can you describe the capital structure of LPSCO's Water and Wastewater Divisions as filed in the rate application?

A. The Company's current capital structure is comprised of $10,420,000 (15.87 percent) of Long-Term Debt and Common Equity of $55,240,319 (85.13 percent). The cost rate of Long Term Debt is 6.86 percent and the cost of Common Equity that the Company is requesting is 10.00 percent.

Q. What did RUCO propose as a cost of equity is their testimony related to the Rio Rico Utilities application?

A. RUCO recommended that the Commission adopt a 9.00 percent cost of Common Equity. At that time 9.00 percent was 26 basis points more than the high side of the range of results obtained in RUCO's cost of equity analysis, and was 170 points lower than the 10.70 percent cost of equity proposed by Rio Rico Utilities.

Q. What was the final cost of equity approved by the Commission in its final order?

A. In Decision No. 73996 the Commission approved a 9.20 percent of Common Equity and a final overall rate of return to be 8.50 percent.

Q. Is RUCO recommending a 9.20 percent cost of common equity in this rate case?

A. Yes. RUCO is recommending 9.20 percent. The overall Weighted Average Cost of Capital assuming 9.20 percent cost of Common Equity and a 6.86 percent cost rate of the Company's Long Term Debt, is 8.83 percent.

Q. How does this compare to Rio Rico's overall rate of return?

A. The final overall rate of return as approved in the Rio Rico case filing was 8.50 percent and RUCO's proposed rate of return in this filing is 8.83 percent.

Q. Does RUCO's Weighted Average Cost of Capital of 8.83 percent take into account adjustments assuming that a DSIC or SIB mechanism is approved by the Commission?

A. No. RUCO is recommending a 9.20 cost of Common Equity under the assumption that a DSIC or SIB mechanism is not approved. The cost of Common Equity would have been evaluated differently assuming the approval of a DSIC or SIB mechanism.

Q. Did Decision No. 73996, Rio Rico Utilities, when the Commission approved the cost of Common Equity of 9.20 percent, contain a DSIC or SIB mechanism?

A. No. The 9.20 percent cost of Common Equity was approved without either of these mechanisms.

VI. OTHER ISSUES

Q. Has LPSCO requested in this current rate filing what they define as "Liberty's Policy Proposals?"

A. Yes. I will identify what the Company has proposed and then expound on each of these items.

1) Proposal Number 1 – DSIC and CSIC
2) Proposal Number 2 – Property Tax Accounting Deferral
3) Proposal Number 3 – Purchase Power Pass Through Adjustment Mechanism ("PPAM")
3) Proposal Number 4 – Balanced Rate Design

Proposal Number 1 - DSIC and CSIC

Q. Did the Company in its current rate application request a DSIC and a CSIC?

A. Yes. The Company requested a DSIC for its water division and a CSIC for its wastewater division.

Q. In the Company's request for a DSIC and CSIC what has been provided to support their request?

A. The Company provided an Engineering Study prepared by Keogh Engineering, Inc., titled "Asset Management Plan." Included in the study were cost estimates totaling $17,287,924 for water system replacements and $11,298,777 for wastewater system replacements. The Executive Summary read as follows: "An Engineering Cost Estimate has been performed analyzing the cost to replace existing water and sewer infrastructure in Old Litchfield Park, Arizona. The analysis is based on the oldest improvements being removed and replaced first and then progresses to the most recent improvements. Current contractor costs were utilized for the cost estimates."

Q. In the Engineering Study was there any mention that the infrastructure identified as being replaced, was leaking excessively and that the service being provided to existing customers was less than adequate?

A. No. Nothing was mentioned that the water or wastewater systems were providing less than adequate service nor was there any indication that the either system had excessive leakage problems.

Q. Since the Company's rate filing has the Commission approved a DSIC or a CSIC mechanism?

A. Yes. On August 5, 2011 Arizona Water Company ("AWC") Eastern Group filed an application requesting adjustments to its rates and charges in its Eastern Group water systems.

On February 20, 2013, the Commission issued Decision no. 73736 granting AWC a rate increase for its Eastern Group systems, however, kept open for further consideration of a "Phase 2" DSIC Recommended Order to be considered at the June 11 and 12, 2013 Open Meeting.

On April 8, 2013, an evidentiary hearing commenced on the merits of a DSIC and ultimately concluded on April 11, 2013. On April 29, 2013, post-hearing briefs were filed by all parties including RUCO. RUCO submitted its brief on April 29, 2013 opposing the implementation of a DSIC or SIB.

On June 28, 2013, the Commission approved the SIB mechanism in Decision No. 73938. On July 17, 2013, RUCO filed an Application for Rehearing of Decision No. 73938 and specifically identified errors and inconsistencies with this decision as well as the original Decision No. 73736.

Q. What action did the Commission take on RUCO's Application for Rehearing of Decision No. 73938?

A. In the Staff Open Meeting held on August 15, 2013, the Commission agreed to a (1) rehearing of Decision No. 73938, (2) the reopening of Decision No. 73736 for consideration of modifying the decision, and (3) consolidating these matters and directing the Hearing Division to hold proceedings on the consolidated matters and prepare a recommended opinion and order.

Q. Does RUCO believe that the Engineering Study in LPSCO's application provides sufficient information for the Commission to approve a DISC or a CSIC mechanism?

A. No. When reviewing the information necessary to be included when filing for a SIB as identified in Decision No. 73938, there were many requirements that LPSCO has not complied. While there has been a decision made by the Commission to rehear Decision No. 73938, the Commission has laid the groundwork for the information they consider to be relevant in requesting a DSIC or CSIC mechanism. Even without this decision, the Engineering Study as filed is not sufficient for the Commission to approve a DSIC or a CSIC. Most important, there is no information provided by the Company that identifies the effect on ratepayers.

Q. Can you please explain why RUCO has opposed a SIB mechanism in past rate cases?

A. Yes. In past rate cases RUCO has opposed a DSIC, CSIC and/or a SIB mechanism, for the following reasons: (1) It allows for the recovery of routine plant improvements outside of a rate case that would normally be recovered in a general rate case filing, (2) The SIB is a one-sided mechanism that works only for the benefit of the company and the company's shareholders, (3) There has been no Federal or State mandates that requires recovery of routine plant investments through a surcharge, (4) LPSCO has not provided proof that they would be unable to ensure safe and reliable water service or achieve cost recovery without the adoption of a SIB mechanism.

Q. In regard to RUCO's first reason for rejecting the Company-proposed DSIC, are the types of infrastructure improvements that would be recovered through the DSIC extraordinary in nature?

A. No. The types of infrastructure improvements for which the Company seeks cost recovery for through a DSIC mechanism are routine in nature. These are plant and infrastructure improvements that any regulated utility would normally make as existing assets reach the end of their useful lives. There is nothing extraordinary about these types of plant additions. The normal regulatory procedures allow cost recovery for these types of plant additions after a determination of prudency and that the additions meet the

used and useful standard during a general rate case proceeding when all of the various ratemaking elements are taken into consideration. RUCO has consistently opposed the use of cost recovery mechanisms that do not allow for the type of thorough analysis that takes place in a general rate case proceeding.

Q. What about the benefit of a reduction in Operations and Maintenance ("O&M") Expenses as a result of new infrastructure improvements?

A. The addition of new plant and infrastructure that replaces aging plant can have an impact on operating expenses which are recovered by a utility on a dollar-for-dollar basis in new rates. New additions can have the effect of lowering pumping power costs as well as reducing other O&M expenses. Ratepayers receive no benefit from any cost savings that are related to the plant additions that they will be paying for through the DSIC. Any potential cost savings resulting from new plant additions would not be passed on to ratepayers.

Q. In the SIB mechanism approved by the Commission in Decision No. 73938, wasn't there a 5 percent "efficiency credit' used to reduce the increase to ratepayers as a result of the SIB?

A. Yes there was an "efficiency credit" approved. However, a 5 percent credit compared to the O&M expense reductions doesn't appear to be a significant benefit to ratepayers. For example, in a recent case a

Company estimated $900,000 infrastructure improvements identified as SIB eligible. The SIB eligible projects created a future expected revenue increase to the Company of approximately $100,000. The 5 percent efficiency credit would benefit the ratepayer by reducing future rates by only $5,000. I would have to think that a Company upgrading plant infrastructure by $900,000 would expect more than $5,000 in reductions to their O&M expenses.

Q. Are there any federal or state regulations that require the Commission to approve a mechanism that is similar to the ACRM?

A. No. Unlike the circumstances surrounding plant that was required for reducing the level of arsenic in drinking water, there are no federal or state requirements that warrant the implementation of a mechanism similar to the Arsenic Cost Recovery Mechanism ("ACRM")[5] f or the recovery of aging plant between general rate cases. RUCO believes that the routine replacement of aging infrastructure, does not qualify as an extraordinary circumstance that requires a mechanism such as the ACRM which was specifically designed to address a one-time event.

[5] The ACRM was adopted by the Commission in order to allow Arizona water providers to recover the costs associated with meeting more stringent arsenic level standards imposed by the federal government.

Q. Please discuss RUCO's fourth reason for rejecting the DSIC.

A. RUCO believes that LPSCO should replace aging infrastructure as part of the Company's normal course of infrastructure improvements to ensure continued safety and reliability. LPSCO has not indicated in their application that the denial of a DSIC would change its ability to meet the Company's statutory and regulatory commitments and LPSCO does not contend that it is financially unable to make necessary and prudent infrastructure replacements without the DSIC.

Q. Mr. Mease, can you please summarize RUCO's position on the establishment of SIB mechanism is this rate case and future rate cases?

A. Yes. RUCO does not agree with the establishment of a SIB in this case or future rate cases.

Q. Does this conclude you testimony on the approval of a SIB mechanism?

A. Yes.

Proposal Number 2 - Property Tax Accounting Deferral

Q. Can you please explain what the Company is proposing when asking for a Property Tax Accounting Deferral?

A. LPSCO has proposed a regulatory asset or liability to recover or refund property tax rates expenses greater than property tax rates experienced in the test year. Mr. Kreiger states in his testimony that if the Company experiences a significant increase in property taxes as it has over the past few years that allowing a deferral will refrain the Company from coming in for a rate case driven by increases in property tax expense.

Q. Does RUCO believe this to be sufficient justification for proposing a Property Tax Accounting Deferral?

A. No. First of all property tax increases are primarily driven by increases in revenues. When revenues increase property taxes increase and when they decrease property taxes will decrease. Without the Company identifying a significant increase or decrease in revenues then a property tax deferral is not necessary. In addition, the assessment ratio is decreasing over the next several years. If revenues increase during the next several years then property tax expense should be offset by the reduction in the assessment ratio.

Proposal Number 3 – PPAM

Q. Can you please explain what the Company is proposing when asking for a PPAM?

A. The Company has identified the PPAM as another regulatory tool that furthers rate gradualism. They identify purchased power, along with labor, as one of LPSCO's top five largest expenses and state that the cost of purchased power is largely outside the Company's control. The Company further states "If power is volatile enough for the power companies to need an adjuster, that adjust the rates we pay them in the first place, that the same volatility is just being passed on to us."

Q. Do you believe that this is a valid argument by the Company for requesting a PPAM?

A. No. There are several reasons why this is invalid reasoning. First, by definition, adjustor mechanisms are appropriate for expenses that routinely fluctuate widely. When reviewing Schedules E-1 for both the water and wastewater divisions these expenses do not fluctuate widely.

The purchased power expenses for the last three years are as follows:

Year	Water Division	Wastewater Division
2010	$937,193	$629,703
2011	$898,826	$619,910
2012	$903,546	$601,635

(Note: 2012 Test Year Adjusted)

In the case of LPSCO purchase power clearly is not an expense that fluctuates substantially. In fact when reviewing the past three years purchased power costs in LPSCO, year 2012 costs are lower than the three year average cost. Second, purchased power for electricity companies, referenced in LPSCO's testimony, is very close to 50 percent of the total operating costs and the fuel component of their purchased power costs is very volatile. Third, LPSCO has done an outstanding job of controlling their purchased power costs. There could be a disincentive if they, or any other water utility, is given the opportunity to pass on to ratepayers increased costs whenever they occur.

Q. Has the Commission considered a PPAM for water systems in prior rate applications?

A. Yes. Arizona Water Company filed a rate application for all seventeen of its systems on August 22, 2008 and had requested a purchase power and fuel adjuster mechanism. In Decision No. 71856, dated August 24, 2010, the Commission denied the adjustor mechanism and the decision read as follows:

> "There is a danger of piecemeal regulation inherent in adjustment mechanisms. Because they allow increases in rates without a simultaneous review of the utility's unrelated costs, adjustment mechanisms have a built-in potential of allowing a utility to increase rates based on certain isolated costs when its other costs are

declining, or when overall revenues are increasing faster that costs due to customer growth. Adjustment mechanisms should therefore be used only in extraordinary circumstances to mitigate the effect of uncontrollable price volatility or uncertainty in the marketplace."[6]

Proposal Number 4 – Balanced Rate Design

Q. Can you please explain what is meant when the Company requests a "Balanced Rate Design?"

A. LPSCO would like the Commission to adopt a fixed charge of approximately 40 percent of the revenue requirement, with the remaining revenue being spread in a more balanced manner across the rate tiers instead of being concentrated in the highest consumption tiers. In addition, the Company is requesting that the Commission set a near term goal through a policy statement of water and sewer utilities fixed charge ratio's reaching the 50 percent threshold of revenue requirement with a reasonable balance between the volumetric tiers.

Q What is RUCO's response to the Company's request?

A. First, RUCO has been recommending the fixed monthly charge related to residential ratepayers at approximately 45 percent in the most recent cases. RUCO believes that spreading the revenues more evenly across tiers does not encourage conservation. Water conservation has been a

[6] See Decision No. 71845

goal of the Commission for many years and this could have a negative effect on those individuals who in fact are making attempts to conserve.

Q. Does RUCO have any additional comments related to "Balanced Rate Design?"

A. While RUCO's primary function is for the protection of the residential ratepayer, it seems apparent that a 50 / 50 fixed charge / commodity cost split would be very difficult to absorb by Commercial and Industrial ratepayers. RUCO will provide additional input on this subject during our Rate Design testimony.

Q. Does your silence on any of the issues, matters or findings addressed in the testimony of any of the witnesses for LPSCO constitute your acceptance of their positions on such issues, matters, or findings?

A. No, it does not. RUCO has not received complete responses to all Data Requests submitted to the Company. The Company indicated on its last response that they "Will be provided once the information has been compiled."

Q. Does this conclude your testimony on LPSCO's Water and Wastewater Divisions?

A. Yes, it does.

ATTACHMENT A

ROBERT B. MEASE, CPA
Education and Professional Qualifications

EDUCATION

Bachelors Degree Business Administration / Accounting - Morris Harvey College.

Attended West Virginia School of Graduate Studies and studied Accounting and Public Administration

Attended numerous courses and seminars for Continuing Professional Educational purposes.

WORK EXPERIENCE

Controller
Knives of Alaska, Inc., Diamond Blade, LLC., and Alaska Expedition Company.

Financial Manager / CFO
All Saints Camp & Conference Center

Energy West, Inc.
Vice President, Controller

- Led team that succeeded in obtaining a $1.5 million annual utility rate increase
- Coached accountants for proper communication techniques with Public Service Commission, supervised 9 professional accountants
- Developed financial models used to negotiate an $18 million credit line
- Responsible for monthly, quarterly and annual financial statements for internal and external purposes, SEC filings on a quarterly and annual basis, quarterly presentations to Board of Directors and shareholders during annual meetings, coordinated annual audit
- Communication with senior management team, supervised accounting staff and resolved all accounting issues, reviewed expenditures related to capital projects
- Monitored natural gas prices and worked with senior buyers to ensure optimal price obtained

Junkermier, Clark, Campanella, Stevens
Consulting Staff

- Established a consulting practice that generated approximately $160k the first year of existence
- Prepared business plan and projections for inclusion in clients financing documents
- Prepared written reports related to consulting engagements performed
- Developed models used in financing documents and made available for other personnel to use
- Performed Profit Enhancement engagements
- Participated during audit of large manufacturing client for two reporting years

Prior to 1999, held various positions: TMC Sales, Inc. as **Vice President / Controller**, with American Agri-Technology Corporation as **Vice President / CFO** and with Union Carbide Corporation as **Accounting Manager. (Union Carbide was a multi-national Fortune 500 Company that was purchased by Dow Chemical)**

PROFESSIONAL AFFILIATIONS
Member - Institute of Management Accountants
Member - American Institute of CPA's
Past Member –WV Society of CPA's and Montana Society of CPA's

RESUME OF RATE CASE AND REGULATORY PARTICIPATION WITH RUCO

Utility Company	Docket No.
Arizona Water Company (Eastern Group)	W-01445A-11-0310
Pima Utility Company	W-02199A-11-0329 et al.
Tucson Electric Power Company	E-01933A-12-0291
Arizona Water Company (Northern Group)	W-01445A-12-0348
UNS Electric	E-04204A-12-0504
Global Water	W-01212A-12-0309 et al.

ATTACHMENT B

(c) For the third tax year of assessment, the assessor shall use sixty-two per cent of the scheduled depreciated value.

(d) For the fourth tax year of assessment, the assessor shall use seventy-eight per cent of the scheduled depreciated value.

(e) For the fifth tax year of assessment, the assessor shall use ninety-four per cent of the scheduled depreciated value.

(f) For the sixth and subsequent tax years of assessment, the assessor shall use the scheduled depreciated value as prescribed in the department's guidelines.

3. FOR PERSONAL PROPERTY THAT IS INITIALLY CLASSIFIED DURING OR AFTER TAX YEAR 2012 AS CLASS ONE, PARAGRAPH 8, 9, 10 OR 13 PURSUANT TO SECTION 42-12001 AND PERSONAL PROPERTY THAT IS INITIALLY CLASSIFIED DURING OR AFTER TAX YEAR 2012 AS CLASS TWO (P) PURSUANT TO SECTION 42-12002:

(a) FOR THE FIRST TAX YEAR OF ASSESSMENT, THE ASSESSOR SHALL USE TWENTY-FIVE PER CENT OF THE SCHEDULED DEPRECIATED VALUE.

(b) FOR THE SECOND TAX YEAR OF ASSESSMENT, THE ASSESSOR SHALL USE FORTY-ONE PER CENT OF THE SCHEDULED DEPRECIATED VALUE.

(c) FOR THE THIRD TAX YEAR OF ASSESSMENT, THE ASSESSOR SHALL USE FIFTY-SEVEN PER CENT OF THE SCHEDULED DEPRECIATED VALUE.

(d) FOR THE FOURTH TAX YEAR OF ASSESSMENT, THE ASSESSOR SHALL USE SEVENTY-THREE PER CENT OF THE SCHEDULED DEPRECIATED VALUE.

(e) FOR THE FIFTH TAX YEAR OF ASSESSMENT, THE ASSESSOR SHALL USE EIGHTY-NINE PER CENT OF THE SCHEDULED DEPRECIATED VALUE.

(f) FOR THE SIXTH AND SUBSEQUENT TAX YEARS OF ASSESSMENT, THE ASSESSOR SHALL USE THE SCHEDULED DEPRECIATED VALUE AS PRESCRIBED IN THE DEPARTMENT'S GUIDELINES.

C. The additional depreciation prescribed in subsection B of this section:

1. Does not apply to any property valued by the department.

2. Shall not reduce the valuation below the minimum value prescribed by the department for property in use.

Sec. 84. Section 42-15001, Arizona Revised Statutes, is amended to read:

42-15001. Assessed valuation of class one property

The assessed valuation of class one property described in section 42-12001 is the following percentage of its full cash value or limited valuation, as applicable:

1. Twenty-five per cent through December 31, 2005.

2. Twenty-four and one-half per cent beginning from and after December 31, 2005 through December 31, 2006.

3. Twenty-four per cent beginning from and after December 31, 2006 through December 31, 2007.

4. Twenty-three per cent beginning from and after December 31, 2007 through December 31, 2008.

5. Twenty-two per cent beginning from and after December 31, 2008 through December 31, 2009.

6. Twenty-one per cent beginning from and after December 31, 2009 through December 31, 2010.

7. Twenty per cent beginning from and after December 31, 2010 THROUGH DECEMBER 31, 2012.

8. NINETEEN AND ONE-HALF PER CENT BEGINNING FROM AND AFTER DECEMBER 31, 2012 THROUGH DECEMBER 31, 2013.

9. NINETEEN PER CENT BEGINNING FROM AND AFTER DECEMBER 31, 2013 THROUGH DECEMBER 31, 2014.

10. EIGHTEEN AND ONE-HALF PER CENT BEGINNING FROM AND AFTER DECEMBER 31, 2014 THROUGH DECEMBER 31, 2015.

11. EIGHTEEN PER CENT BEGINNING FROM AND AFTER DECEMBER 31, 2015.

Sec. 85. Section 42-15002, Arizona Revised Statutes, is amended to read:

42-15002. Assessed valuation of class two property

The following percentages apply to the full cash value or limited valuation, as applicable, as a basis for determining the assessed valuation of class two property described in section 42-12002:

1. Class two (R): sixteen per cent THROUGH DECEMBER 31, 2015 AND FIFTEEN PER CENT BEGINNING FROM AND AFTER DECEMBER 31, 2015.

2. Class two (P): sixteen per cent THROUGH DECEMBER 31, 2015, AND FIFTEEN PER CENT BEGINNING FROM AND AFTER DECEMBER 31, 2015, of the value exceeding the maximum amount of valuation of personal property that is exempt from taxation pursuant to section 42-11127.

Sec. 86. Section 42-15102, Arizona Revised Statutes, is amended to read:

42-15102. Notice information entered by assessor

A. The assessor shall include in the assessment notice:

1. The full cash value found by the assessor for the property for the preceding valuation year.

2. The classification of the property pursuant to chapter 12 of this title.

3. The mailing date of the notice.

4. The last date on which the owner may file an appeal from the valuation or classification assigned to the property.

B. Except for property that is listed as class three property under section 42-12003, OWNER-OCCUPIED RESIDENTIAL PROPERTY THAT IS LISTED AS CLASS FOUR PROPERTY UNDER SECTION 42-12004, SUBSECTION A, PARAGRAPH 1 and single family rented residential property that is listed as class four property under section 42-12004, subsection A, paragraph ~~1~~ 2, the notice shall separately list the full cash value of the land and the full cash value of the improvement or improvements associated with the land.

H. A taxpayer who claims a credit under section 43-1074, 43-1077 or 43-1079 may not claim a credit under this section with respect to the same full-time employment positions.

I. The department of revenue shall adopt rules and prescribe forms and procedures as necessary for the purposes of this section. The department of revenue and the ~~department of commerce~~ ARIZONA COMMERCE AUTHORITY shall collaborate in adopting rules as necessary to avoid duplication and contradictory requirements while accomplishing the intent and purposes of this section.

J. For the purposes of this section, renewable energy operations are limited to manufacturers of, and headquarters for, systems and components that are used or useful in manufacturing renewable energy equipment for the generation, storage, testing and research and development, transmission or distribution of electricity from renewable resources, including specialized crates necessary to package the renewable energy equipment manufactured at the facility.

Sec. 104. Repeal

Section 43-1088.01, Arizona Revised Statutes, is repealed.

Sec. 105. Section 43-1111, Arizona Revised Statutes, is amended to read:

43-1111. Tax rates for corporations

There shall be levied, collected and paid for each taxable year upon the entire Arizona taxable income of every corporation, unless exempt under section 43-1126 or 43-1201 or as otherwise provided in this title or by law, taxes in an amount of ~~6.968 per cent of net income or fifty dollars, whichever is greater.~~ THE GREATER OF FIFTY DOLLARS OR:

1. FOR TAXABLE YEARS BEGINNING THROUGH DECEMBER 31, 2013, 6.968 PER CENT OF NET INCOME.

2. FOR TAXABLE YEARS BEGINNING FROM AND AFTER DECEMBER 31, 2013 THROUGH DECEMBER 31, 2014, 6.5 PER CENT OF NET INCOME.

3. FOR TAXABLE YEARS BEGINNING FROM AND AFTER DECEMBER 31, 2014 THROUGH DECEMBER 31, 2015, 6.0 PER CENT OF NET INCOME.

4. FOR TAXABLE YEARS BEGINNING FROM AND AFTER DECEMBER 31, 2015 THROUGH DECEMBER 31, 2016, 5.5 PER CENT OF NET INCOME.

5. FOR TAXABLE YEARS BEGINNING FROM AND AFTER DECEMBER 31, 2016, 4.9 PER CENT OF NET INCOME.

Sec. 106. Section 43-1139, Arizona Revised Statutes, is amended to read:

43-1139. Allocation of business income

A. Except as provided in subsection B of this section, the taxpayer shall elect to apportion all business income to this state for taxable years beginning from and after:

1. December 31, 2006 through December 31, 2007 by either:

TABLE OF CONTENTS TO RBM SCHEDULES

SCH. NO.	PAGE NO.	TITLE
RBM-1	1 of 2	REVENUE REQUIREMENT
RBM-1	2 of 2	GROSS REVENUE CONVERSION FACTOR ("GRCF")
RBM-2	1	RATE BASE SUMMARY
RBM-3	1	RATE BASE ADJUSTMENTS
RBM-4(a)	1 of 2	SUMMARY OF UTILITY PLANT IN SERVICE ("UPIS") ADJUSTMENTS
RBM-4(a)	2 of 2	SUMMARY OF UPIS ACCUMULATED DEPRECIATION ("A/D") ADJUSTMENTS
RBM-4(b)	1 - 5	RECONSTRUCTION OF UPIS & A/D SCHEDULES
RBM-4(c)	1 - 2	UPIS & A/D RECLASSIFICATIONS
RBM-4(d)	1	RECLASSIFY WATER DIVISION INVOICES TO WASTEWATER DIVISION
RBM-4(e)	1	REMOVE DUPLICATE INVOICES FROM UPIS ADDITIONS
RBM-4(f)	1	RETIREMENT OF UPIS - TRANSPORTATION EQUIPMENT
RBM-4(g)	1	USED ONLY FOR WASTEWATER DIVISION
RBM-4(h)	1	ADDITIONAL ACCUMULATED DEPRECIATION ("A/D") FOR LATE RECORDED UPIS INVOIVES
RBM-4(i)	1	TO CORRECT A/D FOR NON-DEPRECIABLE UPIS ACCOUNT
RBM-5	1	ADVANCES IN AID OF CONSTRUCTION ("AIAC")
RBM-6	1 - 6	CONTRIBUTIONS IN AID OF CONSTRUCTION ("CIAC") & ACCUMULATED AMORTIZATIONS ("AA")
RBM-7	1	CUSTOMER METER DEPOSITS
RBM-8	1	CUSTOMER SECURITY DEPOSITS
RBM-9	1	INTENTIONALLY LEFT BLANK
RBM-10	1	INTENTIONALLY LEFT BLANK
RBM-11	1 - 2	ACCUMULATED DEFERRED INCOME TAX ("ADIT")
RBM-12	1	REGULATORY ASSET - TCE PLUME
RBM-13	1	OPERATING INCOME SUMMARY
RBM-14	1 - 2	OPERATING INCOME ADJUSTMENTS
RBM-15	1	DEPRECIATION EXPENSE
RBM-16	1	PROPERTY TAX EXPENSE
RBM-17	1	USED ONLY FOR WASTEWATER DIVISION
RBM-18	1	REVENUE ACCRUAL FIX TO BE USED IN FUTURE
RBM-19	1	REVERSE COMPANY'S DECLINING USAGE ADJUSTMENT - USED ONLY FOR WATER DIVISION
RBM-20	1	WATER TESTING EXPENSE - USED ONLY FOR WATER DIVISION
RBM-21	1	INTENTIONALLY LEFT BLANK
RBM-22	1	EMPLOYEE PENSION PLAN
RBM-23	1	INTENTIONALLY LEFT BLANK
RBM-24	1	ADDITIONAL REDUCTIONS TO US LIBERTY UTILITIES
RBM-25	1	ALLOCATE BAD DEBT EXPENSE BETWEEN WATER AND WASTEWATER DIVISION
RBM-26	1	INTENTIONALLY LEFT BLANK
RBM-27	1	ALGONQUIN POWER UTILITIES CORPORATION ("APUC") COST ALLOCATIONS
RBM-28	1	ACHIEVEMENT / INCENTIVE / BONUS PAY
RBM-29	1	MISCELLANEOUS EXPENSE
RBM-30	1	CUSTOMER DEPOSIT INTEREST EXPENSE
RBM-31	1	INCOME TAXES
RBM-32	1	COST OF CAPITAL

RUCO RECOMMENDED REVENUE REQUIREMENT

Line No.	Description	[A] Company OCRB/FVRB Cost	[B] RUCO OCRB/FVRB Cost
1	Fair Value Rate Base	$ 35,647,602	$ 33,245,457
2	Adjusted Test Year Operating Income (Loss)	$ 2,024,376	$ 2,259,901
3	Current Rate Of Return (L2 / L1)	5.68%	6.80%
4	Required Operating Income (L5 X L1)	$ 3,387,127	$ 2,935,126
5	Required Rate Of Return On Fair Value Rate Base	9.50%	8.83%
6	Operating Income Deficiency (L4 - L2)	$ 1,362,751	$ 675,225
7	Gross Revenue Conversion Factor (RLM-1, Pg 2)	1.6563	1.6466
8	Increase In Gross Revenue Requirement (L7 X L6)	$ 2,257,160	$ 1,111,850
9	Adjusted Test Year Revenues	$ 11,201,390	$ 11,260,093
10	Proposed Annual Revenue (L8 + L9)	$ 13,458,550	$ 12,371,943
11	Required Percentage Increase In Revenue (L8 / L9)	20.15%	9.87%
12	Rate Of Return On Common Equity	10.00%	9.20%

References:
Column [A]: Company Schedules A-1, B-1, C-1, and D-1
Column [B]: RUCO Schedule RBM-2, RBM-13 and RBM-32

RUCO GROSS REVENUE CONVERSION FACTOR ("GRCF")

LINE NO.	DESCRIPTION	[A]	[B]	[C]
	Calculation of Gross Revenue Conversion Factor:			
1	Revenue	100.0000%		
2	Uncollecible Factor	0.0000%		
3	Revenues (L1 - L2)	100.0000%		
4	Combined Federal and State Income Tax and Property Tax Rate (Line 23)	39.2701%		
5	Subtotal (L3 - L4)	60.7299%		
6	**Revenue Conversion Factor (L1 / L5)**	1.6466		
	Calculation of Uncollecttible Factor:			
7	Unity	100.0000%		
8	Combined Federal and State Tax Rate (Line 17)	38.2900%		
9	One Minus Combined Income Tax Rate (L7 - L8)	61.7100%		
10	Uncollectible Rate	0.00000		
11	Uncollectible Factor (L9 * L10)	0.0000%		
	Calculation of Effective Tax Rate:			
12	Operating Income Before Taxes (Arizona Taxable Income)	100.0000%		
13	Arizona State Income Tax Rate	6.5000%		
14	Federal Taxable Income (L12 - L13)	93.5000%		
15	Applicable Federal Income Tax Rate (Col. [C], L53)	34.0000%		
16	Effective Federal Income Tax Rate (L14 x L15)	31.7900%		
17	Combined Federal and State Income Tax Rate (L13 + L16)		38.2900%	
	Calculation of Effective Property Tax Factor			
18	Unity	100.0000%		
19	Combined Federal and State Income Tax Rate (Col. [B], L17)	38.2900%		
20	One Minus Combined Income Tax Rate (L18-L19)	61.7100%		
21	*Property Tax Factor (Sch. RBM-9, Col. [B], L24)*	1.5883%		
22	Effective Property Tax Factor (L20 x L21)		0.9801%	
23	Combined Federal and State Income Tax and Property Tax Rate (Col. [B], L17 + L22)			39.2701%
24	Required Operating Income (Sch. RBM-1, Col. [B] Line 4)	$ 2,935,126		
25	Adjusted Test Year Operating Income (Loss) (Sch. RBM-1, Col. [B], L2)	2,259,901		
26	Required Increase in Operating Income (L24 - L25)		$ 675,225	
27	Income Taxes on Recommended Revenue (Col. [C], L52)	$ 1,596,626		
28	Income Taxes on Test Year Revenue (Col. [A], L52)	1,177,660		
29	Required Increase in Revenue to Provide for Income Taxes (L27 - L28)		418,966	
30	Recommended Revenue Requirement (Sch. RBM-1, Col. [B], Line 10)	$ 12,371,943		
31	Uncollectible Rate (L10)	0.0000%		
32	Uncollectible Expense on Recommended Revenue (L30 x L31)	$ -		
33	Adjusted Test Year Uncollectible Expense(Sch. RBM-6, Col. [C], L32)	$ -		
34	Required Increase in Revenue to Provide for Uncollectible Exp. (L32 - L33)		-	
35	Property Tax with Recommended Revenue (Sch. RBM-9, Col. [B], L19)	$ 552,666		
36	Property Tax on Test Year Revenue (Sch. RBM-9, Col. [B], L20)	535,007		
37	Increase in Property Tax Due to Increase in Revenue (L35 - 36)		17,659	
38	Total Required Increase in Revenue (Col. [B], L26 + L29 + L34 + L37)		$ 1,111,850	

	Calculation of Income Tax:	Test Year		RUCO Recommended
39	Revenue (Sch. RBM-1, Col. [B], Line 9 & Sch. RBM-1, Col. [B], L10)	$ 11,260,093	$ 1,111,850	$ 12,371,943
40	Operating Expenses Excluding Income Taxes	$ 7,822,532		$ 7,840,191
41	Synchronized Interest (Col. [C], L57)	$ 361,927		$ 361,927
42	Arizona Taxable Income (L39 - L40 - L41)	$ 3,075,634		$ 4,169,825
43	Arizona State Income Tax Rate	6.5000%		6.5000%
44	Arizona Income Tax (L42 x L43)	$ 199,916		$ 271,039
45	Federal Taxable Income (L42 - L44)	$ 2,875,718		$ 3,898,786
46	Federal Tax on First Income Bracket ($1 - $50,000) @ 15%	$ 7,500		$ 7,500
47	Federal Tax on Second Income Bracket ($51,001 - $75,000) @ 25%	$ 6,250		$ 6,250
48	Federal Tax on Third Income Bracket ($75,001 - $100,000) @ 34%	$ 8,500		$ 8,500
49	Federal Tax on Fourth Income Bracket ($100,001 - $335,000) @ 39%	$ 91,650		$ 91,650
50	Federal Tax on Fifth Income Bracket ($335,001 -$10,000,000) @ 34%	$ 863,844		$ 1,211,687
51	Total Federal Income Tax	$ 977,744		$ 1,325,587
52	Combined Federal and State Income Tax (L44 + L51)	$ 1,177,660		$ 1,596,626
53	Applicable Federal Income Tax Rate [Col. [C], L46 - Col. [A], L46] / [Col. [C], L40 - Col. [A], L40]			34.0000%
54	**Synchronized Interest Calculation:**			
55	Rate Base			$ 33,245,457
56	x Weighted Average Cost of Debt			1.0887%
57	Synchronized Interest			$ 361,927

Litchfield Park Sevice Company
Docket No. SW-01428A-13-0042
and W-01427A-13-0043
Test Year Ended December 31, 2012

Water Division
Direct Schedule RBM-2

RUCO RATE BASE SUMMARY

Line No.	Description	[A] Company As Filed OCRB/FVRB	[B] RUCO Adjustments	[C] RUCO As Adjusted OCRB/FVRB
1	Gross Utility Plant In Service	$ 91,151,411	$ (32,483)	$ 91,118,928
2	Accumulated Depreciation	(16,514,086)	(2,502,368)	(19,016,454)
3	Net Utility Plant In Service (L1 + L2)	$ 74,637,324	$ (2,534,851)	$ 72,102,474
	Less:			
4	Advances In Aid Of Construction ("AIAC")	$ (30,374,274)	$ -	$ (30,374,274)
5	Contribution In Aid Of Construction ("CIAC")	(7,324,578)	(101,234)	(7,425,812)
6	Accumulated Amortization of CIAC	1,489,772	(203,918)	1,285,854
7	NET CIAC (L5 + L6)	$ (5,834,806)	$ (305,152)	$ (6,139,957)
8	Customer Meter Deposits	$ (1,271,802)	$ (160,986)	$ (1,432,787)
9	Customer Security Deposits	(140,147)	(7,785)	(147,932)
10	Accumulated Deferred Income Taxes ("ADIT")	(1,459,075)	605,941	(853,134)
	Plus:			
11	Deferred Regulatory Assets - TCE Plume	90,381	688	91,069
12	Allowance For Working Capital	-	-	-
13	TOTAL RATE BASE (Sum L's 3, 4, 7, 8 Thru 12)	$ 35,647,602	$ (2,402,144)	$ 33,245,457

References:
Column [A]: Company Schedule B-1
Column [B]: RBM-3, Columns [B] Thru [K]
Column [C]: Column [A] + Column [B]

Litchfield Park Sevice Company
Docket No. SW-01428A-13-0042
and W-01427A-13-0043
Test Year Ended December 31, 2012

Water Division
Direct Schedule RBM-3

RATE BASE ADJUSTMENTS

Line No.	Description	[A] Actual Test Year OCRB/FVRB	[B] Adjust No. 1 Utility Plant in Service Adjustments	[C] Adjust No. 2 Accumulated Depreciation	[D] Adjust No. 3 Intentionally Left Blank	[E] Adjust No. 4 CIAC & Amortization Adjustments	[F] Adjust No. 5 Customer Meter Deposits	[G] Adjust No. 6 Customer Security Deposits	[H] Adjust No. 7 Intentionally Left Blank	[I] Adjust No. 8 Intentionally Left Blank	[J] Adjust No. 9 ADIT Adjustment	[K] Adjust No. 10 TCE Plume Reg. Asset	[L] Total RUCO Adjustments	[M] RUCO Recommended OCRB/FVRB
1	Gross Utility Plant In Service	$ 91,151,411	$ (32,483)	$ -	$ -	$ -	$ -	$ -	$ -	$ -	$ -	$ -	$ (32,483)	$ 91,118,928
2	Accumulated Depreciation	(16,514,086)	-	(2,502,368)	-	-	-	-	-	-	-	-	(2,502,368)	(19,016,454)
3	Net Utility Plant In Service (L1 + L2)	$ 74,637,324	$ (32,483)	$ (2,502,368)	$ -	$ -	$ -	$ -	$ -	$ -	$ -	$ -	$ (2,534,851)	$ 72,102,474
	Less:													
4	Advances In Aid Of Construction ("AIAC")	$ (30,374,274)	$ -	$ -	$ -	$ -	$ -	$ -	$ -	$ -	$ -	$ -	$ -	$ (30,374,274)
5	Contribution In Aid Of Construction ("CIAC")	(7,324,578)	-	-	-	(101,234)	-	-	-	-	-	-	(101,234)	(7,425,812)
6	Accumulated Amortization of CIAC	1,489,772	-	-	-	(203,918)	-	-	-	-	-	-	(203,918)	1,285,854
7	NET CIAC (L5 + L6)	$ (5,834,806)	$ -	$ -	$ -	$ (305,152)	$ -	$ -	$ -	$ -	$ -	$ -	$ (305,152)	$ (6,139,957)
8	Customer Meter Deposits	$ (1,271,802)	$ -	$ -	$ -	$ -	$ (160,986)	$ -	$ -	$ -	$ -	$ -	$ (160,986)	$ (1,432,787)
9	Customer Security Deposits	(140,147)	-	-	-	-	-	(7,785)	-	-	-	-	(7,785)	(147,932)
10	Accumulated Deferred Income Taxes ("ADIT")	(1,459,075)	-	-	-	-	-	-	-	-	605,941	-	605,941	(853,134)
	Plus:													
11	Deferred Regulatory Assets - TCE Plume	90,381	-	-	-	-	-	-	-	-	-	688	688	91,069
12	Allowance For Working Capital	-	-	-	-	-	-	-	-	-	-	-	-	-
13	TOTAL RATE BASE (Sum L's 3, 4, 7, 8 Thru 12)	$ 35,647,602	$ (32,483)	$ (2,502,368)	$ -	$ (305,152)	$ (160,986)	$ (7,785)	$ -	$ -	$ 605,941	$ 688	$ (2,402,144)	$ 33,245,457

RUCO Adjustments:

Adjustment No. 1: Correct Utility Plant in Service ("UPIS") Balance as Filed by Company - See RUCO Rate Base Adjustment No. 1 on Schedule RBM-4(a) 2012 TY Plant Summary Schedule on page 1 of 2, Column [J] at line 35;
Adjustment No. 2: Correct *UPIS Accumulated Depreciation ("A/D") Balance as Filed by Company - See* RUCO Adjustment No. 2 on Schedule RBM-4(a) 2012 A/D Summary Schedule on page 2 of 2, Column [J] at line 35;
Adjustment No. 3: Intentionally Left Blank;
Adjustment No. 4: Correct Contributions in Aid of Construction ("CIAC") & CIAC Amortization Balances as Filed by Company - See RUCO Schedule RBM-6 CIAC Reconstruction Schedules on page 1 of 6 at lines 3 & 6 with Total Net Adjustment at line 7 and on page 6 of 6, Column [G] & [H], at line 24;
Adjustment No. 5: RUCO Recommended 13-Month Average Customer Meter Deposit Balance as Calculated - See RUCO Schedule RBM-7 Customer Meter Deposits on page 1 of 1 at line 3;
Adjustment No. 6: RUCO Recommended 13-Month Average Customer Security Deposit Balance as Calculated - See RUCO Schedule RBM-8 Customer Security Deposits on page 1 of 1 at line 3;
Adjustment No. 7: Intentionally Left Blank
Adjustment No. 8: Intentionally Left Blank
Adjustment No. 9: RUCO Recommended 2012 TY End Accumulated Deferred Income Tax ("ADIT") Balance After RUCO Recommended Rate Base Adjustments - See RUCO Schedule RBM-11 ADIT on page 1 of 2 at line 11;
Adjustment No. 10: RUCO Recommended TY Month-End Regulatory Asset Balance - TCE Plume - See RUCO Schedule RBM-12 at line 3;

References:

Column [A]: Company Schedule B-1
Column [B] Thru Column [K]: RUCO Recommended Rate Base Adjustments
Column [L]: Sum of RUCO Recommended Rate Base Adjustments of Columns [B] through [K]
Column [M]: Column [A] + Column [L]

RATE BASE ADJUSTMENTS NO. 1
SUMMARY OF UTILITY PLANT IN SERVICE ("UPIS") ADJUSTMENTS
TEST YEAR ENDED DECEMBER 31, 2012

Line No.	Acct No		[A] Company Plant in Service As Filed	[B] RUCO Adjustment #1 Utility Plant in Service	[C] RUCO Adjustment #2 Plant Reclassifications Per Staff DR DH 6.1 - 6.5	[D] RUCO Adjustment #3 Reclassify Invoices From W to WW Div.	[E] RUCO Adjustment #4 Remove Duplicate Invoices	[F] RUCO Adjustment #5 Truck Retirement Per RUCO DR 3.02	[G] RUCO Adjustment #6 Used Only for WW Division	[H] RUCO Adjustment #7 Used Only for Add'l. Late Recorded Inv. A/D	[I] RUCO Adjustment #8 Used Only for W Division A/D	[J] RUCO Total UPIS Adjustments	[K] RUCO Recommended Plant in Service
1	301	Organization Cost	$ 21,100	$ -	$ -	$ -	$ -	$ -	$ -	$ -	$ -	$ -	$ 21,100
2	302	Franchise Cost	-	-	-	-	-	-	-	-	-	-	-
3	303	Land and Land Rights	1,456,278	-	-	-	-	-	-	-	-	-	1,456,278
4	304	Structures & Improvements	28,000,916	-	(2,786,032)	(12,156)	-	-	-	-	-	(2,798,188)	25,202,728
5	305	Collecting & Impounding Reservoirs	-	-	-	-	-	-	-	-	-	-	-
6	306	Lake, River, Canal Intakes	-	-	-	-	-	-	-	-	-	-	-
7	307	Wells & Springs	3,097,345	-	164,878	-	-	-	-	-	-	164,878	3,262,222
8	308	Infiltration Galleries	-	-	-	-	-	-	-	-	-	-	-
9	309	Raw Water Supply Mains	-	-	-	-	-	-	-	-	-	-	-
10	310	Power Generation Equipment	207,020	-	9,079	-	-	-	-	-	-	9,079	216,099
11	311	Pumping Equipment	897,792	-	(23,666)	-	-	-	-	-	-	(23,666)	874,125
12	320	Water Treatment Equipment	1,696,759	-	-	-	-	-	-	-	-	-	1,696,759
13	320.1	Water Treatment Plants	-	-	1,728,635	-	-	-	-	-	-	1,728,635	1,728,635
14	320.2	Solution Chemical Feeders	-	-	-	-	-	-	-	-	-	-	-
15	330	Distribution Reservoirs & Standpipes	492,176	-	-	-	-	-	-	-	-	-	492,176
16	330.1	Storage Tanks	-	-	901,841	-	-	-	-	-	-	901,841	901,841
17	330.2	Pressure Tanks	-	-	-	-	-	-	-	-	-	-	-
18	331	Transmission & Distribution Mains	40,259,045	-	-	-	-	-	-	-	-	-	40,259,045
19	333	Services	5,350,963	-	-	-	-	-	-	-	-	-	5,350,963
20	334	Meters	4,759,560	-	-	-	-	-	-	-	-	-	4,759,560
21	335	Hydrants	3,304,755	-	-	-	(2,608)	-	-	-	-	(2,608)	3,302,148
22	336	Backflow Prevention Devices	38,387	-	-	-	-	-	-	-	-	-	38,387
23	339	Other Plant & Misc Equipment	259,531	-	-	-	-	-	-	-	-	-	259,531
24	340	Office Furniture & Equipment	651,098	-	6,555	-	-	-	-	-	-	6,555	657,653
25	340.1	Computers & Software	-	-	8,443	-	-	-	-	-	-	8,443	8,443
26	341	Transportation Equipment	307,592	-	-	-	-	(17,555)	-	-	-	(17,555)	290,037
27	342	Stores Equipment	37,143	-	-	-	-	-	-	-	-	-	37,143
28	343	Tools, Shop & Garage Equipment	47,434	-	-	-	-	-	-	-	-	-	47,434
29	344	Laboratory Equipment	5,803	-	-	-	-	-	-	-	-	-	5,803
30	345	Power Operated Equipment	-	-	-	-	-	-	-	-	-	-	-
31	346	Communication Equipment	128,402	-	-	-	-	-	-	-	-	-	128,402
32	347	Miscellaneous Equipment	-	-	-	-	-	-	-	-	-	-	-
33	348	Other Tangible Plant	132,312	-	(9,897)	-	-	-	-	-	-	(9,897)	122,414
34		Plant Held for Future Use	-	-	-	-	-	-	-	-	-	-	-
35		RUCO UPIS Adjustments	$ 91,151,411	$ -	$ (164)	$ (12,156)	$ (2,608)	$ (17,555)	$ -	$ -	$ -	$ (32,483)	$ 91,118,928

RUCO Adjustments:

Adjustment No. 1: Correct Utility Plant in Service ("UPIS") Balance as Filed by Company - See RUCO Adjustment No. 1 on Schedule RBM-4(b) 2008 thru 2012 TY Plant Schedules on pages 1-5 at page 5 on line 37;
Adjustment No. 2: Plant Reclassifications - See RUCO Schedule RBM-4(c) on page 1 of 2, Column [B], at line 35;
Adjustment No. 3: Reclassify UPIS Invoices from Water to Wastewater Division - See RUCO Schedule RBM-4(d) on page 1 of 1 at line 13;
Adjustment No. 4: Remove Duplicate Invoices - See RUCO Schedule RBM-4(e) on page 1 of 1 at line 7;
Adjustment No. 5: Record Truck Retirement - See RUCO Schedule RBM-4(f) on page 1 of 1 at line 3;
Adjustment No. 6: Used Only for Wastewater Division;
Adjustment No. 7: Used Only for A/D of Late Recorded UPIS Invoices;
Adjustment No. 8: Used Only to Correct Company's A/D for Non-Depreciable Account 301 - Organization Cost.

References:

Column [A]: Company Schedule B-2 on page 3 Adjusted Test Year UPIS Balances as Filed;
Columns [B] Thru [I]: RUCO Recommended UPIS Adjustments;
Column [J]: Sum of Columns [B] Through [I] - RUCO Sum of Total Recommended UPIS Adjustments;

RATE BASE ADJUSTMENT NO. 2
SUMMARY OF ACCUMULATED DEPRECIATION ADJUSTMENTS
TEST YEAR ENDED DECEMBER 31, 2012

Line No.	Acct No		[A] Company Accum. Depre. As Filed	[B] RUCO Adjustment #1 Accumulated Depreciation	[C] RUCO Adjustment #2 Plant Reclassifications Per Staff DR DH 6.1 - 6.5	[D] RUCO Adjustment #3 Reclassify Invoices From W to WW Div.	[E] RUCO Adjustment #4 Remove Duplicate Invoices	[F] RUCO Adjustment #5 Truck Retirement Per RUCO DR 3.02	[G] RUCO Adjustment #6 Used Only for WW Division	[H] RUCO Adjustment #7 Additional A/D on Late Recorded UPIS	[I] RUCO Adjustment #8 To Correct A/D of Non-Depre. Plant	[J] RUCO Total Accum. Depre. Adjustments	[K] RUCO Total Accum. Depre. Recommended
1	301	Organization Cost	$ (21,100)	$ -	$ -	$ -	$ -	$ -	$ -	$ -	$ 21,100	$ 21,100	$ -
2	302	Franchise Cost	-	-	-	-	-	-	-	-	-	-	-
3	303	Land and Land Rights	-	-	-	-	-	-	-	-	-	-	-
4	304	Structures & Improvements	(3,036,910)	(1,006,248)	251,726	607	-	-	-	(65,110)	-	(819,025)	(3,855,935)
5	305	Collecting & Impounding Reservoirs	-	-	-	-	-	-	-	-	-	-	-
6	306	Lake, River, Canal Intakes	-	-	-	-	-	-	-	-	-	-	-
7	307	Wells & Springs	(915,114)	(107,969)	(14,624)	-	-	-	-	-	-	(122,593)	(1,037,707)
8	308	Infiltration Galleries	-	-	-	-	-	-	-	-	-	-	-
9	309	Raw Water Supply Mains	-	-	-	-	-	-	-	-	-	-	-
10	310	Power Generation Equipment	(87,092)	(12,642)	(681)	-	-	-	-	-	-	(13,323)	(100,415)
11	311	Pumping Equipment	(759,242)	306,323	43	-	-	-	-	(14,698)	-	291,667	(467,575)
12	320	Water Treatment Equipment	(199,379)	(53,569)	-	-	-	-	-	-	-	(53,569)	(252,948)
13	320.1	Water Treatment Plants	-	-	(145,981)	-	-	-	-	-	-	(145,981)	(145,981)
14	320.2	Solution Chemical Feeders	-	-	-	-	-	-	-	-	-	-	-
15	330	Distribution Reservoirs & Standpipes	(205,453)	(12,204)	-	-	-	-	-	-	-	(12,204)	(217,657)
16	330.1	Storage Tanks	-	-	(59,973)	-	-	-	-	-	-	(59,973)	(59,973)
17	330.2	Pressure Tanks	-	-	-	-	-	-	-	-	-	-	-
18	331	Transmission & Distribution Mains	(5,947,658)	(757,892)	-	-	-	-	-	(1,827)	-	(759,720)	(6,707,377)
19	333	Services	(1,409,855)	(208,613)	-	-	-	-	-	-	-	(208,613)	(1,618,468)
20	334	Meters	(2,960,806)	(433,042)	-	-	-	-	-	(7,444)	-	(440,486)	(3,401,292)
21	335	Hydrants	(335,259)	(56,539)	-	-	130	-	-	-	-	(56,409)	(391,667)
22	336	Backflow Prevention Devices	(15,227)	(3,201)	-	-	-	-	-	-	-	(3,201)	(18,428)
23	339	Other Plant & Misc Equipment	(85,429)	(21,638)	-	-	-	-	-	(568)	-	(22,207)	(107,636)
24	340	Office Furniture & Equipment	(239,369)	(46,003)	(1,093)	-	-	-	-	-	-	(47,096)	(286,464)
25	340.1	Computers & Software	-	-	(5,910)	-	-	-	-	-	-	(5,910)	(5,910)
26	341	Transportation Equipment	(200,543)	(43,604)	-	-	-	17,555	-	-	-	(26,049)	(226,592)
27	342	Stores Equipment	(5,839)	(1,586)	-	-	-	-	-	-	-	(1,586)	(7,425)
28	343	Tools, Shop & Garage Equipment	(11,341)	(1,459)	-	-	-	-	-	-	-	(1,459)	(12,800)
29	344	Laboratory Equipment	(290)	-	-	-	-	-	-	-	-	-	(290)
30	345	Power Operated Equipment	-	-	-	-	-	-	-	-	-	-	-
31	346	Communication Equipment	(58,472)	(14,964)	-	-	-	-	-	(498)	-	(15,462)	(73,934)
32	347	Miscellaneous Equipment	-	-	-	-	-	-	-	-	-	-	-
33	348	Other Tangible Plant	(19,709)	(1,049)	2,474	-	-	-	-	(1,695)	-	(271)	(19,980)
34		*Plant Held for Future Use*	-	-	-	-	-	-	-	-	-	-	-
35		RUCO Accum. Depre. Adjustments	$ (16,514,086)	$ (2,475,900)	$ 25,981	$ 607	$ 130	$ 17,555	$ -	$ (91,841)	$ 21,100	$ (2,502,368)	$ (19,016,454)

RUCO Adjustments:

Adjustment No. 1: Accumulated Depreciation ("A/D") Per RUCO - See RUCO Schedule RBM-4(b) 2012 Plant Reconstruction Schedule on pages 1-5 at page 5 on line 39;
Adjustment No. 2: Plant Reclassifications A/D Per RUCO - See RUCO Schedule RBM-4(c) on page 2 of 2, Column [B], on line 35;
Adjustment No. 3: Reclassify A/D of UPIS Invoices from Water to Wastewater Division - See RUCO Schedule RBM-4(d) on page 1 of 1 at line 14;
Adjustment No. 4: Remove Duplicate Invoices A/D - See RUCO Schedule RBM-4(e) on page 1 of at line 8;
Adjustment No. 5: Correct A/D for Truck Retirement - See RUCO Schedule RBM-4(f) on page 1 of 1 at line 6;
Adjustment No. 6: Used Only for Wastewater Division;
Adjustment No. 7: Used Only for A/D of Late Recorded UPIS Invoices - See RUCO Schedule RBM-4(h) on page 1 of 1, Column [B], at line 35;
Adjustment No. 8: To Correct Company's A/D for Non-Depreciable Account 301 - Organization Cost.

References:

Columns [A]: Company Schedule B-2 on page 4 Adjusted Test Year as Filed
Columns [B] Through [I]: RUCO Recommended UPIS Adjustments
Columns [J]: Sum of Columns [B] Through [I] - RUCO Sum of Total Recommended UPIS Adjustments

UTILITY PLANT IN SERVICE ("UPIS") & UPIS ACCUMULATED DEPRECIATION ADJUSTMENT NO. 1
PLANT RECONSTRUCTION SCHEDULE
TEST YEAR ENDED DECEMBER 31, 2012

				Per Decision 72026			2008 (3 Months - October 1 through December 31, 2008)								
Line No.	NARUC Account No.	Description	Allowed Deprec. Rate	Plant at 9/30/2008	Accum. Deprec. At 9/30/2008	Net Plant at 9/30/2008	Plant Additions (Per Books)	Plant Adjustments	Adjusted Plant Additions	Plant Retirements	Salvage A/D Only	Depreciation (Calculated)	Plant Balance	Accum. Deprec.	Net Plant
1	301	Organization Cost	0.00%	$ 21,100	$ -	$ 21,100	$ -	$ -	$ -	$ -	$ -	$ -	$ 21,100	$ -	$ 21,100
2	302	Franchise Cost	0.00%	-	-	-	-	-	-	-	-	-	-	-	-
3	303	Land and Land Rights	0.00%	1,284,595	-	1,284,595	(367,902)	-	(367,902)	-	-	-	916,693	-	916,693
4	304	Structures & Improvements	3.33%	24,649,251	(404,869)	24,244,382	(1,026,408)	(20,938)	(1,047,346)	-	-	200,845	23,601,905	(605,714)	22,996,191
5	305	Collecting & Impounding Reservoirs	2.50%	-	-	-	-	-	-	-	-	-	-	-	-
6	306	Lake, River, Canal Intakes	2.50%	-	-	-	-	-	-	-	-	-	-	-	-
7	307	Wells & Springs	3.33%	2,393,491	(631,793)	1,761,697	163	-	163	-	-	19,926	2,393,653	(651,720)	1,741,933
8	308	Infiltration Galleries	6.67%	-	-	-	-	-	-	-	-	-	-	-	-
9	309	Raw Water Supply Mains	2.00%	-	-	-	-	-	-	-	-	-	-	-	-
10	310	Power Generation Equipment	5.00%	202,269	(56,403)	145,866	-	-	-	-	-	2,528	202,269	(58,932)	143,337
11	311	Pumping Equipment	12.50%	917,055	(598,038)	319,017	11,723	-	11,723	(420,594)	-	22,269	508,184	(199,713)	308,471
12	320	Water Treatment Equipment	3.33%	1,337,824	(41,009)	1,296,816	(46,530)	-	(46,530)	-	-	10,944	1,291,294	(51,953)	1,239,342
13	320.1	Water Treatment Plants	3.33%	-	-	-	-	-	-	-	-	-	-	-	-
14	320.2	Solution Chemical Feeders	20.00%	-	-	-	-	-	-	-	-	-	-	-	-
15	330	Distribution Reservoirs & Standpipes	2.22%	439,244	(174,417)	264,827	600	-	600	-	-	2,439	439,844	(176,856)	262,987
16	330.1	Storage Tanks	2.22%	-	-	-	-	-	-	-	-	-	-	-	-
17	330.2	Pressure Tanks	5.00%	-	-	-	-	-	-	-	-	-	-	-	-
18	331	Transmission & Distribution Mains	2.00%	28,918,695	(3,844,739)	25,073,956	724,203	(10,868)	713,335	-	-	146,377	29,632,030	(3,991,116)	25,640,914
19	333	Services	3.33%	4,245,838	(900,699)	3,345,139	164,164	(15,625)	148,539	-	-	35,965	4,394,377	(936,664)	3,457,713
20	334	Meters	8.33%	4,133,092	(1,931,628)	2,201,463	5,723	-	5,723	-	-	86,131	4,138,815	(2,017,760)	2,121,055
21	335	Hydrants	2.00%	2,055,781	(163,913)	1,891,868	91,012	-	91,012	-	-	10,506	2,146,793	(174,420)	1,972,373
22	336	Backflow Prevention Devices	6.67%	38,387	(7,546)	30,842	-	-	-	-	-	640	38,387	(8,186)	30,202
23	339	Other Plant & Misc Equipment	6.67%	259,531	(33,497)	226,034	-	-	-	-	-	4,328	259,531	(37,825)	221,706
24	340	Office Furniture & Equipment	6.67%	551,757	(124,987)	426,770	-	-	-	-	-	9,201	551,757	(134,187)	417,570
25	340.1	Computers & Software	20.00%	-	-	-	-	-	-	-	-	-	-	-	-
26	341	Transportation Equipment	20.00%	174,415	(83,060)	91,356	-	-	-	-	-	8,721	174,415	(91,781)	82,635
27	342	Stores Equipment	4.00%	31,711	(1,586)	30,126	-	-	-	-	-	317	31,711	(1,903)	29,809
28	343	Tools, Shop & Garage Equipment	5.00%	23,350	(7,113)	16,237	-	-	-	-	-	292	23,350	(7,405)	15,945
29	344	Laboratory Equipment	10.00%	-	-	-	-	-	-	-	-	-	-	-	-
30	345	Power Operated Equipment	5.00%	-	-	-	-	-	-	-	-	-	-	-	-
31	346	Communication Equipment	10.00%	119,710	(21,730)	97,980	-	-	-	-	-	2,993	119,710	(24,723)	94,987
32	347	Miscellaneous Equipment	10.00%	-	-	-	-	-	-	-	-	-	-	-	-
33	348	Other Tangible Plant	10.00%	-	-	-	2,475	-	2,475	-	-	31	2,475	(31)	2,444
34		Plant Held for Future Use	0.00%	-	-	-	-	-	-	-	-	-	-	-	-
35		RUCO Total UPIS & Accum. Depre.		$ 71,797,096	$ (9,027,027)	$ 62,770,069	$ (440,777)	$ (47,431)	$ (488,208)	$ (420,594)	$ -	$ 564,454	$ 70,888,294	$ (9,170,887)	$ 61,717,407

UTILITY PLANT IN SERVICE ("UPIS") & UPIS ACCUMULATED DEPRECIATION ADJUSTMENT NO. 1
PLANT RECONSTRUCTION SCHEDULE
TEST YEAR ENDED DECEMBER 31, 2012

				2009								
Line No.	NARUC Account No.	Description	Allowed Deprec. Rate	Plant Additions (Per Books)	Plant Adjustments	Adjusted Plant Additions	Plant Retirements	Salvage A/D Only	Depreciation (Calculated)	Plant Balance	Accum. Deprec.	Net Plant
1	301	Organization Cost	0.00%	$ -	$ -	$ -	$ -	$ -	$ -	$ 21,100	$ -	$ 21,100
2	302	Franchise Cost	0.00%	-	-	-	-	-	-	-	-	-
3	303	Land and Land Rights	0.00%	92,495	-	92,495	-	-	-	1,009,188	-	1,009,188
4	304	Structures & Improvements	3.33%	1,190,719	(21,984)	1,168,735	-	-	805,403	24,770,640	(1,411,117)	23,359,523
5	305	Collecting & Impounding Reservoirs	2.50%	-	-	-	-	-	-	-	-	-
6	306	Lake, River, Canal Intakes	2.50%	-	-	-	-	-	-	-	-	-
7	307	Wells & Springs	3.33%	501,310	(773)	500,537	-	-	88,043	2,894,190	(739,762)	2,154,428
8	308	Infiltration Galleries	6.67%	-	-	-	-	-	-	-	-	-
9	309	Raw Water Supply Mains	2.00%	-	-	-	-	-	-	-	-	-
10	310	Power Generation Equipment	5.00%	-	-	-	-	-	10,113	202,269	(69,045)	133,224
11	311	Pumping Equipment	12.50%	21,214	-	21,214	(35,008)	-	62,661	494,390	(227,366)	267,024
12	320	Water Treatment Equipment	3.33%	2,479	(24,987)	(22,508)	-	-	42,625	1,268,786	(94,578)	1,174,208
13	320.1	Water Treatment Plants	3.33%	-	-	-	-	-	-	-	-	-
14	320.2	Solution Chemical Feeders	20.00%	-	-	-	-	-	-	-	-	-
15	330	Distribution Reservoirs & Standpipes	2.22%	-	-	-	-	-	9,765	439,844	(186,621)	253,223
16	330.1	Storage Tanks	2.22%	-	-	-	-	-	-	-	-	-
17	330.2	Pressure Tanks	5.00%	-	-	-	-	-	-	-	-	-
18	331	Transmission & Distribution Mains	2.00%	1,906,160	(18,664)	1,887,496	-	-	611,516	31,519,527	(4,602,631)	26,916,895
19	333	Services	3.33%	1,580,515	-	1,580,515	-	-	172,648	5,974,892	(1,109,312)	4,865,580
20	334	Meters	8.33%	51,571	-	51,571	-	-	346,911	4,190,386	(2,364,671)	1,825,715
21	335	Hydrants	2.00%	309,661	-	309,661	-	-	46,032	2,456,454	(220,452)	2,236,002
22	336	Backflow Prevention Devices	6.67%	-	-	-	-	-	2,560	38,387	(10,746)	27,641
23	339	Other Plant & Misc Equipment	6.67%	-	-	-	-	-	17,311	259,531	(55,135)	204,395
24	340	Office Furniture & Equipment	6.67%	-	-	-	-	-	36,802	551,757	(170,990)	380,767
25	340.1	Computers & Software	20.00%	-	-	-	-	-	-	-	-	-
26	341	Transportation Equipment	20.00%	-	-	-	-	-	34,883	174,415	(126,664)	47,752
27	342	Stores Equipment	4.00%	-	-	-	-	-	1,268	31,711	(3,171)	28,540
28	343	Tools, Shop & Garage Equipment	5.00%	-	-	-	-	-	1,168	23,350	(8,573)	14,778
29	344	Laboratory Equipment	10.00%	-	-	-	-	-	-	-	-	-
30	345	Power Operated Equipment	5.00%	-	-	-	-	-	-	-	-	-
31	346	Communication Equipment	10.00%	-	-	-	-	-	11,971	119,710	(36,694)	83,016
32	347	Miscellaneous Equipment	10.00%	-	-	-	-	-	-	-	-	-
33	348	Other Tangible Plant	10.00%	15,420	-	15,420	-	-	1,019	17,895	(1,049)	16,845
34		Plant Held for Future Use	0.00%	-	-	-	-	-	-	-	-	-
35		RUCO Total UPIS & Accum. Depre.		$ 5,671,544	$ (66,408)	$ 5,605,136	$ (35,008)	$ -	$ 2,302,699	$ 76,458,422	$ (11,438,578)	$ 65,019,844

UTILITY PLANT IN SERVICE ("UPIS") & UPIS ACCUMULATED DEPRECIATION ADJUSTMENT NO. 1
PLANT RECONSTRUCTION SCHEDULE
TEST YEAR ENDED DECEMBER 31, 2012

				2010								
Line No.	NARUC Account No.	Description	Allowed Deprec. Rate	Plant Additions (Per Books)	Plant Adjustments	Adjusted Plant Additions	Plant Retirements	Salvage A/D Only	Depreciation (Calculated)	Plant Balance	Accum. Deprec.	Net Plant
1	301	Organization Cost	0.00%	$ -	$ -	$ -	$ -	$ -	$ -	$ 21,100	$ -	$ 21,100
2	302	Franchise Cost	0.00%	-	-	-	-	-	-	-	-	-
3	303	Land and Land Rights	0.00%	430,531	(53)	430,478	-	-	-	1,439,666	-	1,439,666
4	304	Structures & Improvements	3.33%	1,284,065	(776)	1,283,289	-	-	846,229	26,053,929	(2,257,346)	23,796,583
5	305	Collecting & Impounding Reservoirs	2.50%	-	-	-	-	-	-	-	-	-
6	306	Lake, River, Canal Intakes	2.50%	-	-	-	-	-	-	-	-	-
7	307	Wells & Springs	3.33%	56,518	-	56,518	-	-	97,318	2,950,708	(837,080)	2,113,628
8	308	Infiltration Galleries	6.67%	-	-	-	-	-	-	-	-	-
9	309	Raw Water Supply Mains	2.00%	-	-	-	-	-	-	-	-	-
10	310	Power Generation Equipment	5.00%	-	-	-	-	-	10,113	202,269	(79,159)	123,111
11	311	Pumping Equipment	12.50%	61,729	-	61,729	(20,920)	-	64,349	535,199	(270,795)	264,403
12	320	Water Treatment Equipment	3.33%	353,630	(34)	353,596	-	-	48,138	1,622,382	(142,716)	1,479,666
13	320.1	Water Treatment Plants	3.33%	-	-	-	-	-	-	-	-	-
14	320.2	Solution Chemical Feeders	20.00%	-	-	-	-	-	-	-	-	-
15	330	Distribution Reservoirs & Standpipes	2.22%	-	-	-	-	-	9,765	439,844	(196,385)	243,458
16	330.1	Storage Tanks	2.22%	-	-	-	-	-	-	-	-	-
17	330.2	Pressure Tanks	5.00%	-	-	-	-	-	-	-	-	-
18	331	Transmission & Distribution Mains	2.00%	1,611,724	(3,139)	1,608,585	-	-	646,476	33,128,111	(5,249,108)	27,879,004
19	333	Services	3.33%	307,502	(207)	307,294	-	-	204,080	6,282,186	(1,313,392)	4,968,794
20	334	Meters	8.33%	167,302	-	167,302	-	-	356,027	4,357,688	(2,720,698)	1,636,990
21	335	Hydrants	2.00%	221,507	-	221,507	-	-	51,344	2,677,961	(271,796)	2,406,164
22	336	Backflow Prevention Devices	6.67%	-	-	-	-	-	2,560	38,387	(13,307)	25,081
23	339	Other Plant & Misc Equipment	6.67%	-	-	-	-	-	17,311	259,531	(72,446)	187,085
24	340	Office Furniture & Equipment	6.67%	-	-	-	-	-	36,802	551,757	(207,792)	343,965
25	340.1	Computers & Software	20.00%	-	-	-	-	-	-	-	-	-
26	341	Transportation Equipment	20.00%	4,845	-	4,845	-	-	35,368	179,260	(162,031)	17,229
27	342	Stores Equipment	4.00%	3,688	-	3,688	-	-	1,342	35,399	(4,513)	30,886
28	343	Tools, Shop & Garage Equipment	5.00%	939	-	939	-	-	1,191	24,289	(9,764)	14,526
29	344	Laboratory Equipment	10.00%	-	-	-	-	-	-	-	-	-
30	345	Power Operated Equipment	5.00%	-	-	-	-	-	-	-	-	-
31	346	Communication Equipment	10.00%	-	-	-	-	-	11,971	119,710	(48,665)	71,045
32	347	Miscellaneous Equipment	10.00%	-	-	-	-	-	-	-	-	-
33	348	Other Tangible Plant	10.00%	20,924	-	20,924	-	-	2,836	38,819	(3,885)	34,934
34		Plant Held for Future Use	0.00%	-	-	-	-	-	-	-	-	-
35		RUCO Total UPIS & Accum. Depre.		$ 4,524,902	$ (4,209)	$ 4,520,693	$ (20,920)	$ -	$ 2,443,221	$ 80,958,195	$ (13,860,879)	$ 67,097,316

UTILITY PLANT IN SERVICE ("UPIS") & UPIS ACCUMULATED DEPRECIATION ADJUSTMENT NO. 1
PLANT RECONSTRUCTION SCHEDULE
TEST YEAR ENDED DECEMBER 31, 2012

				2011								
Line No.	NARUC Account No.	Description	Allowed Deprec. Rate	Plant Additions (Per Books)	Plant Adjustments	Adjusted Plant Additions	Plant Retirements	Salvage A/D Only	Depreciation (Calculated)	Plant Balance	Accum. Deprec.	Net Plant
1	301	Organization Cost	0.00%	$ -	$ -	$ -	$ -	$ -	$ -	$ 21,100	$ -	$ 21,100
2	302	Franchise Cost	0.00%	-	-	-	-	-	-	-	-	-
3	303	Land and Land Rights	0.00%	8,476	(188)	8,288	-	-	-	1,447,954	-	1,447,954
4	304	Structures & Improvements	3.33%	549,237	(2,601)	546,636	-	-	876,697	26,600,565	(3,134,043)	23,466,522
5	305	Collecting & Impounding Reservoirs	2.50%	-	-	-	-	-	-	-	-	-
6	306	Lake, River, Canal Intakes	2.50%	-	-	-	-	-	-	-	-	-
7	307	Wells & Springs	3.33%	19,010	(686)	18,324	-	-	98,564	2,969,032	(935,644)	2,033,389
8	308	Infiltration Galleries	6.67%	-	-	-	-	-	-	-	-	-
9	309	Raw Water Supply Mains	2.00%	-	-	-	-	-	-	-	-	-
10	310	Power Generation Equipment	5.00%	4,596	-	4,596	-	-	10,228	206,865	(89,387)	117,478
11	311	Pumping Equipment	12.50%	220,561	(3,315)	217,245	(1,327)	-	80,395	751,117	(349,863)	401,254
12	320	Water Treatment Equipment	3.33%	28,534	(223)	28,310	-	-	54,497	1,650,693	(197,213)	1,453,480
13	320.1	Water Treatment Plants	3.33%	-	-	-	-	-	-	-	-	-
14	320.2	Solution Chemical Feeders	20.00%	-	-	-	-	-	-	-	-	-
15	330	Distribution Reservoirs & Standpipes	2.22%	53,676	(1,344)	52,332	-	-	10,345	492,176	(206,731)	285,445
16	330.1	Storage Tanks	2.22%	-	-	-	-	-	-	-	-	-
17	330.2	Pressure Tanks	5.00%	-	-	-	-	-	-	-	-	-
18	331	Transmission & Distribution Mains	2.00%	5,388,147	(8,802)	5,379,345	-	-	716,356	38,507,456	(5,965,463)	32,541,993
19	333	Services	3.33%	382,109	(944)	381,165	-	-	215,543	6,663,351	(1,528,936)	5,134,416
20	334	Meters	8.33%	267,613	(4,811)	262,802	-	-	373,941	4,620,489	(3,094,639)	1,525,850
21	335	Hydrants	2.00%	512,885	(573)	512,312	-	-	58,682	3,190,273	(330,478)	2,859,794
22	336	Backflow Prevention Devices	6.67%	-	-	-	-	-	2,560	38,387	(15,867)	22,520
23	339	Other Plant & Misc Equipment	6.67%	-	-	-	-	-	17,311	259,531	(89,757)	169,774
24	340	Office Furniture & Equipment	6.67%	9,928	-	9,928	-	-	37,133	561,685	(244,925)	316,760
25	340.1	Computers & Software	20.00%	-	-	-	-	-	-	-	-	-
26	341	Transportation Equipment	20.00%	26,185	(636)	25,550	-	-	38,407	204,810	(200,438)	4,371
27	342	Stores Equipment	4.00%	1,116	-	1,116	-	-	1,438	36,515	(5,952)	30,564
28	343	Tools, Shop & Garage Equipment	5.00%	578	-	578	-	-	1,229	24,867	(10,993)	13,874
29	344	Laboratory Equipment	10.00%	-	-	-	-	-	-	-	-	-
30	345	Power Operated Equipment	5.00%	-	-	-	-	-	-	-	-	-
31	346	Communication Equipment	10.00%	3,986	(49)	3,937	-	-	12,168	123,647	(60,833)	62,814
32	347	Miscellaneous Equipment	10.00%	-	-	-	-	-	-	-	-	-
33	348	Other Tangible Plant	10.00%	44,349	-	44,349	-	-	6,099	83,168	(9,985)	73,184
34		Plant Held for Future Use	0.00%	-	-	-	-	-	-	-	-	-
35		RUCO Total UPIS & Accum. Depre.		$ 7,520,985	$ (24,172)	$ 7,496,813	$ (1,327)	$ -	$ 2,611,594	$ 88,453,681	$ (16,471,146)	$ 71,982,535

UTILITY PLANT IN SERVICE ("UPIS") & UPIS ACCUMULATED DEPRECIATION ADJUSTMENT NO. 1
PLANT RECONSTRUCTION SCHEDULE
TEST YEAR ENDED DECEMBER 31, 2012

				2012								
Line No.	NARUC Account No.	Description	Allowed Deprec. Rate	Plant Additions (Per Books)	Plant Adjustments	Adjusted Plant Additions	Plant Retirements	Salvage A/D Only	Depreciation (Calculated)	Plant Balance	Accum. Deprec.	Net Plant
1	301	Organization Cost	0.00%	$ -	$ -	$ -	$ -	$ -	$ -	$ 21,100	$ -	$ 21,100
2	302	Franchise Cost	0.00%	-	-	-	-	-	-	-	-	-
3	303	Land and Land Rights	0.00%	8,324	-	8,324	-	-	-	1,456,278	-	1,456,278
4	304	Structures & Improvements	3.33%	1,405,618	(5,268)	1,400,351	-	-	909,115	28,000,916	(4,043,158)	23,957,758
5	305	Collecting & Impounding Reservoirs	2.50%	-	-	-	-	-	-	-	-	-
6	306	Lake, River, Canal Intakes	2.50%	-	-	-	-	-	-	-	-	-
7	307	Wells & Springs	3.33%	142,604	(726)	141,878	(13,565)	-	101,005	3,097,345	(1,023,083)	2,074,261
8	308	Infiltration Galleries	6.67%	-	-	-	-	-	-	-	-	-
9	309	Raw Water Supply Mains	2.00%	-	-	-	-	-	-	-	-	-
10	310	Power Generation Equipment	5.00%	155	-	155	-	-	10,347	207,020	(99,734)	107,286
11	311	Pumping Equipment	12.50%	147,387	(712)	146,675	-	-	103,057	897,792	(452,920)	444,872
12	320	Water Treatment Equipment	3.33%	46,116	(50)	46,066	-	-	55,735	1,696,759	(252,948)	1,443,811
13	320.1	Water Treatment Plants	3.33%	-	-	-	-	-	-	-	-	-
14	320.2	Solution Chemical Feeders	20.00%	-	-	-	-	-	-	-	-	-
15	330	Distribution Reservoirs & Standpipes	2.22%	-	-	-	-	-	10,926	492,176	(217,657)	274,519
16	330.1	Storage Tanks	2.22%	-	-	-	-	-	-	-	-	-
17	330.2	Pressure Tanks	5.00%	-	-	-	-	-	-	-	-	-
18	331	Transmission & Distribution Mains	2.00%	1,808,114	(8,947)	1,799,167	(47,578)	-	787,665	40,259,045	(6,705,550)	33,553,495
19	333	Services	3.33%	(1,200,817)	(1,065)	(1,201,882)	(110,506)	-	200,038	5,350,963	(1,618,468)	3,732,496
20	334	Meters	8.33%	233,873	(3,333)	230,540	(91,470)	-	390,679	4,759,560	(3,393,848)	1,365,712
21	335	Hydrants	2.00%	120,585	(2,471)	118,114	(3,631)	-	64,950	3,304,755	(391,798)	2,912,958
22	336	Backflow Prevention Devices	6.67%	-	-	-	-	-	2,560	38,387	(18,428)	19,960
23	339	Other Plant & Misc Equipment	6.67%	-	-	-	-	-	17,311	259,531	(107,068)	152,463
24	340	Office Furniture & Equipment	6.67%	89,413	-	89,413	-	-	40,446	651,098	(285,371)	365,727
25	340.1	Computers & Software	20.00%	-	-	-	-	-	-	-	-	-
26	341	Transportation Equipment	20.00%	111,782	(1,468)	110,314	(7,532)	-	51,240	307,592	(244,147)	63,445
27	342	Stores Equipment	4.00%	628	-	628	-	-	1,473	37,143	(7,425)	29,718
28	343	Tools, Shop & Garage Equipment	5.00%	22,870	(303)	22,567	-	-	1,808	47,434	(12,800)	34,634
29	344	Laboratory Equipment	10.00%	5,803	-	5,803	-	-	290	5,803	(290)	5,513
30	345	Power Operated Equipment	5.00%	-	-	-	-	-	-	-	-	-
31	346	Communication Equipment	10.00%	4,827	(72)	4,755	-	-	12,602	128,402	(73,436)	54,967
32	347	Miscellaneous Equipment	10.00%	-	-	-	-	-	-	-	-	-
33	348	Other Tangible Plant	10.00%	49,143	-	49,143	-	-	10,774	132,312	(20,759)	111,553
34		Plant Held for Future Use	0.00%	-	-	-	-	-	-	-	-	-
35		RUCO Total UPIS & A/D		$ 2,996,426	$ (24,414)	$ 2,972,012	$ (274,282)	$ -	$ 2,772,023	$ 91,151,411	$ (18,968,887)	$ 72,182,524
36		UPIS Per Company As Filed								91,151,411		
37		RUCO's UPIS Adjustment								$ -		
38		A/D Per Company Plant Reconstruction Schedule									(16,492,986)	
39		RUCO's (Increase)/Decrease A/D Adjustment									$ (2,475,900)	

UTILITY PLANT IN SERVICE ("UPIS") ADJUSTMENT NO. 2
SUMMARY OF RECLASSIFICATIONS OF UTILITY PLANT IN SERVICE ("UPIS")

Line No.	Acct. No.	Description	[A] Company UPIS As Filed	[B] RUCO UPIS Reclassification Adjustments	[C] RUCO Recommended UPIS Balances
1	301	Organization Cost	$ 21,100	$ -	$ 21,100
2	302	Franchise Cost	-	-	-
3	303	Land and Land Rights	1,456,278	-	1,456,278
4	304	Structures & Improvements	28,000,916	(2,786,032)	25,214,884
5	305	Collecting & Impounding Reservoirs	-	-	-
6	306	Lake, River, Canal Intakes	-	-	-
7	307	Wells & Springs	3,097,345	164,878	3,262,222
8	308	Infiltration Galleries	-	-	-
9	309	Raw Water Supply Mains	-	-	-
10	310	Power Generation Equipment	207,020	9,079	216,099
11	311	Pumping Equipment	897,792	(23,666)	874,125
12	320	Water Treatment Equipment	1,696,759	-	1,696,759
13	320.1	Water Treatment Plants	-	1,728,635	1,728,635
14	320.2	Solution Chemical Feeders	-	-	-
15	330	Distribution Reservoirs & Standpipes	492,176	-	492,176
16	330.1	Storage Tanks	-	901,841	901,841
17	330.2	Pressure Tanks	-	-	-
18	331	Transmission & Distribution Mains	40,259,045	-	40,259,045
19	333	Services	5,350,963	-	5,350,963
20	334	Meters	4,759,560	-	4,759,560
21	335	Hydrants	3,304,755	-	3,304,755
22	336	Backflow Prevention Devices	38,387	-	38,387
23	339	Other Plant & Misc Equipment	259,531	-	259,531
24	340	Office Furniture & Equipment	651,098	6,555	657,653
25	340.1	Computers & Software	-	8,443	8,443
26	341	Transportation Equipment	307,592	-	307,592
27	342	Stores Equipment	37,143	-	37,143
28	343	Tools, Shop & Garage Equipment	47,434	-	47,434
29	344	Laboratory Equipment	5,803	-	5,803
30	345	Power Operated Equipment	-	-	-
31	346	Communication Equipment	128,402	-	128,402
32	347	Miscellaneous Equipment	-	-	-
33	348	Other Tangible Plant	132,312	(9,897)	122,414
34		Plant Held for Future Use	-	-	-
35		Totals	$ 91,151,411	$ (164)	$ 91,151,246

References:
Per Company Responses to Staff DR 6.1 thru 6.5

UPIS ACCUMULATED DEPRECIATION ADJUSTMENT NO. 2
SUMMARY OF RECLASSIFICATIONS OF ACCUMULATED DEPRECIATION ("A/D")

Line No.	Acct. No.	Description	[A] Company Accum. Depre. As Filed	[B] RUCO Accum. Depre. Reclassification Adjustments	[C] RUCO Recommended Accum. Depre. Balances
1	301	Organization Cost	$ (21,100)	$ -	$ (21,100)
2	302	Franchise Cost	-	-	-
3	303	Land and Land Rights	-	-	-
4	304	Structures & Improvements	(3,036,910)	251,726	(2,785,184)
5	305	Collecting & Impounding Reservoirs	-	-	-
6	306	Lake, River, Canal Intakes	-	-	-
7	307	Wells & Springs	(915,114)	(14,624)	(929,738)
8	308	Infiltration Galleries	-	-	-
9	309	Raw Water Supply Mains	-	-	-
10	310	Power Generation Equipment	(87,092)	(681)	(87,773)
11	311	Pumping Equipment	(759,242)	43	(759,200)
12	320	Water Treatment Equipment	(199,379)	-	(199,379)
13	320.1	Water Treatment Plants	-	(145,981)	(145,981)
14	320.2	Solution Chemical Feeders	-	-	-
15	330	Distribution Reservoirs & Standpipes	(205,453)	-	(205,453)
16	330.1	Storage Tanks	-	(59,973)	(59,973)
17	330.2	Pressure Tanks	-	-	-
18	331	Transmission & Distribution Mains	(5,947,658)	-	(5,947,658)
19	333	Services	(1,409,855)	-	(1,409,855)
20	334	Meters	(2,960,806)	-	(2,960,806)
21	335	Hydrants	(335,259)	-	(335,259)
22	336	Backflow Prevention Devices	(15,227)	-	(15,227)
23	339	Other Plant & Misc Equipment	(85,429)	-	(85,429)
24	340	Office Furniture & Equipment	(239,369)	(1,093)	(240,462)
25	340.1	Computers & Software	-	(5,910)	(5,910)
26	341	Transportation Equipment	(200,543)	-	(200,543)
27	342	Stores Equipment	(5,839)	-	(5,839)
28	343	Tools, Shop & Garage Equipment	(11,341)	-	(11,341)
29	344	Laboratory Equipment	(290)	-	(290)
30	345	Power Operated Equipment	-	-	-
31	346	Communication Equipment	(58,472)	-	(58,472)
32	347	Miscellaneous Equipment	-	-	-
33	348	Other Tangible Plant	(19,709)	2,474	(17,235)
34		Plant Held for Future Use	-	-	-
35		Totals	$ (16,514,086)	$ 25,981	$ (16,488,105)

References:

Per Company Responses to Staff DR 6.1 thru 6.5

UTILITY PLANT IN SERVICE ("UPIS") & UPIS ACCUMULATED DEPRECIATION ADJUSTMENTS NO. 3
RECLASSIFY PLANT INVOICES FROM WATER TO WASTEWATER DIVISION

Line No.		Description	Amount
		Maricopa County Environmental Service Department ("MCESD") Permit Fees:	
1	1	Company Recorded Two MCESD Permit Fees to Water Division Account 304 - Structures & Improvements	$ 6,000
2		RUCO Recommended Removal of Two MCESD Permit Fees from Water Acct. 304	(6,000)
3		RUCO's Adjustment to Remove and Reclassify Two MCESD Permit Fess to Wastewater Division	$ (6,000)
		Adjust Accumulated Depreciation:	
4		2011 Accumulated Depreciation As Filed By Company: Account 304 - Structures & Improvements	$ 300
5		RUCO Recommended Accumulated Depreciation For Removal and Reclassification of Two MCESD Permit Fees	-
6		RUCO's Adjustment to Remove and Reclassify Two MCESD Permit Fees	$ 300
		Errol L. Montgomery & Associates	
7	2	Company Recorded an Invoice to Water Division Account 304 - Structures & Improvements	$ 6,156
8		RUCO Recommended Removal of Errol L. Montgomery & Associates from Water Acct. 304	(6,156)
9		RUCO's Adjustment to Remove and Reclassify Eroll L. Montgomery & Associates Invoice to Wastewater Division	$ (6,156)
		Adjust Accumulated Depreciation:	
10		2011 Accumulated Depreciation As Filed By Company: Account 304 - Structures & Improvements	$ 308
11		RUCO Recommended Accumulated Depreciation For Removal and Reclassification of Errol L. Montgomery & Associates Invoice	-
12		RUCO's Adjustment to Remove and Reclassify Eroll L. Montgomery & Associates to Wastewater Division	$ 308
13		Total UPIS Invoices Transferred from Water to Wastewater Division (See Reference Section Below)	$ (12,156)
14		Total Accumulated Depreciation Associated with Transferred Invoices from Water to Wastewater Division (See Reference Section Below)	$ 607

References:

1 LPSCO Response to Staff DR DH - 4.6
2 LPSCO Response to Staff DR DH - 4.7

Litchfield Park Sevice Company
Docket No. SW-01428A-13-0042 .
and W-01427A-13-0043
Test Year Ended December 31, 2012

Water Division
Direct Schedule RBM-4(e)

UTILITY PLANT IN SERVICE ("UPIS") & UPIS ACCUMULATED DEPRECIATION ADJUSTMENTS NO. 4
REMOVE DUPLICATE INVOICES OF PLANT ADDITIONS

Line No.		Description	Amount
		Adjust Plant Additions:	
1	1	2010 Plant Addition As Filed By Company: Account 335 - Hydrants	$ 221,507
2		RUCO Recommended Plant Addition After Removal of Duplicate Invoice	218,899
3		RUCO's Adjustment to Remove Duplicate Invoice	$ (2,608)
		Adjust Accumulated Depreciation:	
4		2010 Accumulated Depreciation As Filed By Company: Account 335 - Hydrants	$ 130
5		RUCO Recommended Accumulated Depreciation For Removal of Duplicate Invoice	-
6		RUCO's Adjustment to Remove Duplicate Invoice	$ 130
7		Total UPIS Duplicate Invoices to be Removed	$ (2,608)
8		Total Accumulated Depreciation Associated with Duplicate Invoices to be Removed	$ 130

References:

1 Per Company Response to Staff's Water DR 2.65

UTILITY PLANT IN SERVICE ("UPIS") & UPIS ACCUMULATED DEPRECIATION ADJUSTMENTS NO. 5
RETIREMENT OF TRUCK TRADED-IN ON PURCHASE OF NEW TRUCK

Line No.		Description	Amount
		Plant (Pickup Truck) Retirement:	
1	1	Company Traded-In a Truck during 2011 Plant (Truck) Addition As Filed By Company: Account 341 - Transportation Equipment	$ -
2		RUCO Recommended Plant Retirement Related to Trade-In on Purchase of New Truck	(17,555)
3		RUCO's Recommended Increase/(Decrease) Adjustment	$ (17,555)
		Adjust Accumulated Depreciation for Retirement Reflected Above:	
4		Company Proposed Retirement for Truck Traded-In As Filed	$ -
5		RUCO Recommended Accumulated Depreciation Adjustment for Cost of Traded-In Truck	17,555
6		RUCO's Recommended (Increase)/Decrease Adjustment	$ 17,555

References:

1 Per Company Response to RUCO DR 3.02

UTILITY PLANT IN SERVICE ("UPIS") & UPIS ACCUMULATED DEPRECIATION ADJUSTMENTS NO. 6
USED ONLY FOR WASTEWATER DIVISION

Line No.	Description	Amount

References:

UPIS ACCUMULATED DEPRECIATION ADJUSTMENTS NO. 7
ADDITIONAL ACCUMULATED DEPRECIATION ("A/D") FOR LATE RECORDED PLANT ADDITIONS

Line No.	Acct. No.	Description	[A] Company Accum. Depre. As Filed	[B] RUCO Additional Accum. Depre. for Late Recorded UPIS	[C] RUCO Recommended Accum. Depre. Balances
1	301	Organization Cost	$ (21,100)	$ -	$ (21,100)
2	302	Franchise Cost	-	-	-
3	303	Land and Land Rights	-	-	-
4	304	Structures & Improvements	(3,036,910)	(65,110)	(3,102,020)
5	305	Collecting & Impounding Reservoirs	-	-	-
6	306	Lake, River, Canal Intakes	-	-	-
7	307	Wells & Springs	(915,114)	-	(915,114)
8	308	Infiltration Galleries	-	-	-
9	309	Raw Water Supply Mains	-	-	-
10	310	Power Generation Equipment	(87,092)	-	(87,092)
11	311	Pumping Equipment	(759,242)	(14,698)	(773,941)
12	320	Water Treatment Equipment	(199,379)	-	(199,379)
13	320	Water Treatment Plants	-	-	-
14	320	Solution Chemical Feeders	-	-	-
15	330	Distribution Reservoirs & Standpipes	(205,453)	-	(205,453)
16	330	Storage Tanks	-	-	-
17	330	Pressure Tanks	-	-	-
18	331	Transmission & Distribution Mains	(5,947,658)	(1,827)	(5,949,485)
19	333	Services	(1,409,855)	-	(1,409,855)
20	334	Meters	(2,960,806)	(7,444)	(2,968,250)
21	335	Hydrants	(335,259)	-	(335,259)
22	336	Backflow Prevention Devices	(15,227)	-	(15,227)
23	339	Other Plant & Misc Equipment	(85,429)	(568)	(85,997)
24	340	Office Furniture & Equipment	(239,369)	-	(239,369)
25	340	Computers & Software	-	-	-
26	341	Transportation Equipment	(200,543)	-	(200,543)
27	342	Stores Equipment	(5,839)	-	(5,839)
28	343	Tools, Shop & Garage Equipment	(11,341)	-	(11,341)
29	344	Laboratory Equipment	(290)	-	(290)
30	345	Power Operated Equipment	-	-	-
31	346	Communication Equipment	(58,472)	(498)	(58,970)
32	347	Miscellaneous Equipment	-	-	-
33	348	Other Tangible Plant	(19,709)	(1,695)	(21,405)
34		Plant Held for Future Use	-	-	-
35		Totals	$ (16,514,086)	$ (91,841)	$ (16,605,927)

References:
Per Company Responses to Staff DR 16.1

UPIS ACCUMULATED DEPRECIATION ADJUSTMENTS NO. 8

TO CORRECT ACCUMULATED DEPRECIATION FOR A NON-DEPRECIABLE ACCOUNT

Line No.	Description	Amount
	To Correct Company's A/D for a Non-Depreciable Account 301 - Organization Cost Reflected on Company Schedule B-2, page 4:	
1	Accumulated Depreciation for Account 301 - Organization Cost As Filed by Company	$ 21,100
2	Accumulated Depreciation for Account 301 - Organization Cost Per RUCO	-
3	RUCO's Recommended (Increase)/Decrease Adjustment	$ 21,100

References:

See Company Schedule B-2, page 4

RATE BASE ADJUSTMENT NO. 3
INTENTIONALLY LEFT BLANK

Line No.	Description	Amount
	Water Division:	
1		$ -
2		-
3		$ -
	Wastewater Division:	
4		$ -
5		-
6		$ -

References:

RATE BASE ADJUSTMENT NO. 4
CONTRIBUTIONS IN AID OF CONSTRUCTION ("CIAC") & AMORTIZATIONS RECONSTRUCTION SCHEDULE

Line No.	Description		Amount
	Gross CIAC:		
1	Company Gross CIAC as Filed	$	(7,324,578)
2	RUCO Recommended Gross CIAC		(7,425,812)
3	RUCO Recommended (Increase)/Decrease Adjustment	$	(101,234)
	Accumulated Amoritization of CIAC:		
4	Company Accumulated Amortization of CIAC as Filed		1,489,772
5	RUCO Recommended Accumulated Amortization of CIAC		1,285,854
6	RUCO Recommended Increase/(Decrease) Adjustment	$	(203,918)
7	RUCO Net Increase/Decrease Adjustment	$	(305,152)

References:

Company Response to Staff DR JMM 2-23
Company Schedule B-2, pages 5.1 - 5.3
See RBM Testimony

RATE BASE ADJUSTMENT NO. 4 (Continued)
CONTRIBUTIONS IN AID OF CONSTRUCTION ("CIAC") & AMORTIZATIONS RECONSTRUCTION SCHEDULE

				[A]	[B]	[C]	[D]	[E]	[F]	[G]	[H]	[I]
				Per Decision 72026			2008 (3 Months - October 1 through December 31, 2008)					
Line No.	NARUC Account No.	Description	Allowed Amort. Rate	Gross CIAC Balance at 9/30/2008	CIAC Amortization Balance 9/30/2008	CIAC Net Balance 9/30/2008	CIAC Activity	CIAC Adjustments	Adjusted CIAC Activity	RUCO Amortization (Calculated)	Gross CIAC Balance at 12/31/2008	Accum. Amortization 12/31/2008
1	303	Land & Land Rights Contributed	0.00%	$ -	$ -	$ -	$ -	$ -	$ -	$ -	$ -	$ -
2		Current Period Amortization								-		
3		Accumulated Amortization Balance			-							-
4	307	Wells Contributed	3.33%	-	-	-	-	-	-	-	-	-
5		Current Period Amortization								-		
6		Accumulated Amortization Balance			-							-
7	311	Pumping Equipment Contributed	12.50%	(15,219)	-	3,605	-	-	-	-	(15,219)	-
8		Current Period Amortization								476		
9		Accumulated Amortization Balance			18,824							19,300
10	331	Transmission/Distribution Mains Contributed	2.00%	(2,846,725)	-	(2,104,325)	-	-	-	-	(2,846,725)	-
11		Current Period Amortization								14,234		
12		Accumulated Amortization Balance			742,400							756,634
13	333	Services Contributed	3.33%	(151,402)	-	(114,679)	-	-	-	-	(151,402)	-
14		Current Period Amortization								1,260		
15		Accumulated Amortization Balance			36,723							37,983
16	334	Meters Contributed	8.33%	(29,899)	-	(191)	-	-	-	-	(29,899)	-
17		Current Period Amortization								(191)		
18		Accumulated Amortization Balance			29,708							29,899
19	335	Hydrants	2.00%	(52,935)	-	(19,884)	-	-	-	-	(52,935)	-
20		Current Period Amortization								265		
21		Accumulated Amortization Balance			33,051							33,316
22		RUCO Gross CIAC & Amortizations		$ (3,096,180)	$ 860,706	$ (2,235,474)	$ -	$ -	$ -	$ 16,044	$ (3,096,180)	$ 877,131
23		Company As Filed		$ 3,096,180	$ (860,706)	$ 2,235,474	$ -	$ -	$ -	$ (63,226)	$ 3,096,180	$ (923,932)
24		RUCO Gross CIAC & Total Accum. Amortization Increase/(Decrease) Adjustments		$ -	$ -	$ -	$ -	$ -	$ -	$ (47,182)	$ -	$ (46,801)

References:
Company Response to Staff DR JMM 2-23
Company Schedule B-2, pages 5.1 - 5.3
See RBM Testimony

RATE BASE ADJUSTMENT NO. 4 (Continued)
CONTRIBUTIONS IN AID OF CONSTRUCTION ("CIAC") & AMORTIZATIONS RECONSTRUCTION SCHEDULE

Line No.	NARUC Account No.	Description	Allowed Amort. Rate	[A] Beginning Gross CIAC 1/1/2009	[B] Beginning Amortization Balance 1/1/2009	[C] CIAC Activity	[D] CIAC Adjustments	[E] Adjusted CIAC Activity	[F] RUCO Amortization (Calculated)	[G] Gross CIAC Balance at 12/31/2009	[H] Accum. Amortization 12/31/2009
				2009							
1	303	Land & Land Rights Contributed	0.00%	$ -	$ -	$ (92,495)	$ -	$ (92,495)	$ -	$ (92,495)	$ -
2		Current Period Amortization							-		
3		Accumulated Amortization Balance			-						-
4	307	Wells Contributed	3.33%	-	-	(499,000)	-	(499,000)	-	$ (499,000)	-
5		Current Period Amortization							8,308		
6		Accumulated Amortization Balance			-						8,308
7	311	Pumping Equipment Contributed	12.50%	(15,219)	-	-	-	-	-	(15,219)	-
8		Current Period Amortization							1,902		
9		Accumulated Amortization Balance			19,300						21,202
10	331	Transmission/Distribution Mains Contributed	2.00%	(2,846,725)	-	-	-	-	-	(2,846,725)	-
11		Current Period Amortization							56,935		
12		Accumulated Amortization Balance			756,634						813,568
13	333	Services Contributed	3.33%	(151,402)	-	(448,505)	-	(448,505)	-	(599,907)	-
14		Current Period Amortization							12,509		
15		Accumulated Amortization Balance			37,983						50,492
16	334	Meters Contributed	8.33%	(29,899)	-	-	-	-	-	(29,899)	-
17		Current Period Amortization							-		
18		Accumulated Amortization Balance			29,899						29,899
19	335	Hydrants	2.00%	(52,935)	-	-	-	-	-	(52,935)	-
20		Current Period Amortization							1,059		
21		Accumulated Amortization Balance			33,316						34,375
22		RUCO Gross CIAC & Amortizations		$ (3,096,180)	$ 877,131	$ (1,040,000)	$ -	$ (1,040,000)	$ 80,713	$ (4,136,180)	$ 957,844
23		Company As Filed		$ 3,096,180	$ (923,932)	$ 1,040,000	$ -	$ 1,040,000	$ (103,592)	$ 4,136,180	$ (1,027,524)
24		RUCO Gross CIAC & Total Accum. Amortization Increase/(Decrease) Adjustments		$ -	$ 1,801,063	$ -	$ -	$ -	$ (22,879)	$ -	$ (69,680)

References:
Company Response to Staff DR JMM 2-23
Company Schedule B-2, pages 5.1 - 5.3
See RBM Testimony

RATE BASE ADJUSTMENT NO. 4 (Continued)
CONTRIBUTIONS IN AID OF CONSTRUCTION ("CIAC") & AMORTIZATIONS RECONSTRUCTION SCHEDULE

Line No.	NARUC Account No.	Description	Allowed Amort. Rate	[A] Beginning Gross CIAC 1/1/2010	[B] Beginning Amortization Balance 1/1/2010	[C] CIAC Activity	[D] CIAC Adjustments	[E] Adjusted CIAC Activity	[F] RUCO Amortization (Calculated)	[G] Gross CIAC Balance at 12/31/2010	[H] Accum. Amortization 12/31/2010
				2010							
1	303	Land & Land Rights Contributed	0.00%	$ (92,495)	$ -	$ -	$ -	$ -	$ -	$ (92,495)	$ -
2		Current Period Amortization							-		
3		Accumulated Amortization Balance			-						-
4	307	Wells Contributed	3.33%	(499,000)	-	-	-	-	-	$ (499,000)	-
5		Current Period Amortization							16,617		
6		Accumulated Amortization Balance			8,308						24,925
7	311	Pumping Equipment Contributed	12.50%	(15,219)	-	-	-	-	-	(15,219)	-
8		Current Period Amortization							1,902		
9		Accumulated Amortization Balance			21,202						23,104
10	331	Transmission/Distribution Mains Contributed	2.00%	(2,846,725)	-	-	-	-	-	(2,846,725)	-
11		Current Period Amortization							56,935		
12		Accumulated Amortization Balance			813,568						870,503
13	333	Services Contributed	3.33%	(599,907)	-	-	-	-	-	(599,907)	-
14		Current Period Amortization							19,977		
15		Accumulated Amortization Balance			50,492						70,469
16	334	Meters Contributed	8.33%	(29,899)	-	-	-	-	-	(29,899)	-
17		Current Period Amortization							-		
18		Accumulated Amortization Balance			29,899						29,899
19	335	Hydrants	2.00%	(52,935)	-	-	-	-	-	(52,935)	-
20		Current Period Amortization							1,059		
21		Accumulated Amortization Balance			34,375						35,433
22		RUCO Gross CIAC & Amortizations		$ (4,136,180)	$ 957,844	$ -	$ -	$ -	$ 96,489	$ (4,136,180)	$ 1,054,334
23		Company As Filed		$ 4,136,180	$ (1,027,524)	$ -	$ -	$ -	$ (142,247)	$ 4,136,180	$ (1,169,772)
24		RUCO Gross CIAC & Total Accum. Amortization Increase/(Decrease) Adjustments		$ -	$ 1,985,369	$ -	$ -	$ -	$ (45,758)	$ -	$ (115,438)

References:
Company Response to Staff DR JMM 2-23
Company Schedule B-2, pages 5.1 - 5.3
See RBM Testimony

RATE BASE ADJUSTMENT NO. 4 (Continued)
CONTRIBUTIONS IN AID OF CONSTRUCTION ("CIAC") & AMORTIZATIONS RECONSTRUCTION SCHEDULE

				2011							
Line No.	NARUC Account No.	Description	Allowed Amort. Rate	Beginning Gross CIAC 1/1/2011	Beginning Amortization Balance 1/1/2011	CIAC Activity	CIAC Adjustments	Adjusted CIAC Activity	RUCO Amortization (Calculated)	Gross CIAC Balance at 12/31/2011	Accum. Amortization 12/31/2011
1	303	Land & Land Rights Contributed	0.00%	$ (92,495)	$ -	$ -	$ -	$ -	$ -	$ (92,495)	$ -
2		Current Period Amortization							-		
3		Accumulated Amortization Balance			-						-
4	307	Wells Contributed	3.33%	(499,000)	-	-	-	-	-	$ (499,000)	-
5		Current Period Amortization							16,617		
6		Accumulated Amortization Balance			24,925						41,542
7	311	Pumping Equipment Contributed	12.50%	(15,219)	-	(25,353)	-	(25,353)	-	(40,572)	-
8		Current Period Amortization							3,487		
9		Accumulated Amortization Balance			23,104						26,591
10	331	Transmission/Distribution Mains Contributed	2.00%	(2,846,725)	-	-	-	-	-	(2,846,725)	-
11		Current Period Amortization							56,935		
12		Accumulated Amortization Balance			870,503						927,437
13	333	Services Contributed	3.33%	(599,907)	-	-	-	-	-	(599,907)	-
14		Current Period Amortization							19,977		
15		Accumulated Amortization Balance			70,469						90,446
16	334	Meters Contributed	8.33%	(29,899)	-	-	-	-	-	(29,899)	-
17		Current Period Amortization							-		
18		Accumulated Amortization Balance			29,899						29,899
19	335	Hydrants	2.00%	(52,935)	-	-	-	-	-	(52,935)	-
20		Current Period Amortization							1,059		
21		Accumulated Amortization Balance			35,433						36,492
22		RUCO Gross CIAC & Amortizations		$ (4,136,180)	$ 1,054,334	$ (25,353)	$ -	$ (25,353)	$ 98,074	$ (4,161,533)	$ 1,152,407
23		Company As Filed		$ 4,136,180	$ (1,169,772)	$ (75,881)	$ -	$ (75,881)	$ (142,820)	$ 4,060,299	$ (1,312,591)
24		RUCO Gross CIAC (Increase)/Decrease & Total Accum. Amortization Increase/(Decrease) Adjustments		$ -	$ 2,224,105	$ (101,234)	$ -	$ (101,234)	$ (44,746)	$ (101,234)	$ (160,184)

References:
Company Response to Staff DR JMM 2-23
Company Schedule B-2, pages 5.1 - 5.3
See RBM Testimony

RATE BASE ADJUSTMENT NO. 4 (Continued)
CONTRIBUTIONS IN AID OF CONSTRUCTION ("CIAC") & AMORTIZATIONS RECONSTRUCTION SCHEDULE

Line No.	NARUC Account No.	Description	Allowed Amort. Rate	[A] Beginning Gross CIAC 1/1/2012	[B] Beginning Amortization Balance 1/1/2012	[C] CIAC Activity	[D] CIAC Adjustments	[E] Adjusted CIAC Activity	[F] RUCO Amortization (Calculated)	[G] Gross CIAC Balance at 12/31/2012	[H] Accum. Amortization 12/31/2012
				2012							
1	303	Land & Land Rights Contributed	0.00%	$ (92,495)	$ -	$ -	$ -	$ -	$ -	$ (92,495)	$ -
2		Current Period Amortization							-		
3		Accumulated Amortization Balance			-						-
4	307	*Wells Contributed*	3.33%	(499,000)	-	-	-	-	-	$ (499,000)	-
5		Current Period Amortization							16,617		
6		Accumulated Amortization Balance			41,542						58,158
7	311	Pumping Equipment Contributed	12.50%	(40,572)	-	-	-	-	-	(40,572)	-
8		Current Period Amortization							5,071		
9		*Accumulated Amortization Balance*			26,591						31,663
10	331	Transmission/Distribution Mains Contributed	2.00%	(2,846,725)	-	(3,046,493)	-	(3,046,493)	-	(5,893,218)	-
11		Current Period Amortization							87,399		
12		Accumulated Amortization Balance			927,437						1,014,837
13	333	Services Contributed	3.33%	(599,907)	-	(172,302)	-	(172,302)	-	(772,209)	-
14		Current Period Amortization							22,846		
15		Accumulated Amortization Balance			90,446						113,292
16	334	Meters Contributed	8.33%	(29,899)	-	-	-	-	-	(29,899)	-
17		Current Period Amortization							-		
18		Accumulated Amortization Balance			29,899						29,899
19	335	Hydrants	2.00%	(52,935)	-	(45,484)	-	(45,484)	-	(98,419)	-
20		Current Period Amortization							1,514		
21		Accumulated Amortization Balance			36,492						38,006
22		RUCO Gross CIAC & Amortizations		$ (4,161,533)	$ 1,152,407	$ (3,264,279)	$ -	$ (3,264,279)	$ 133,447	$ (7,425,812)	$ 1,285,854
23		Company As Filed		$ 4,060,299	$ (1,312,591)	$ 3,264,279	$ -	$ 3,264,279	$ (177,180)	$ 7,324,578	$ (1,489,772)
24		RUCO Gross CIAC & Total Accum. Amortization Increase/(Decrease) Adjustments		$ 101,234	$ 2,464,999	$ -	$ -	$ -	$ (43,734)	$ (101,234)	$ (203,918)

References:
Company Response to Staff DR JMM 2-23
Company Schedule B-2, pages 5.1 - 5.3
See TJC Testimony

RATE BASE ADJUSTMENT NO. 5
CUSTOMER METER DEPOSITS

Line No.		Description	Amount
		Water Division:	
1	1 & 2	Customer Meter Deposits As Filed by Company	$ (1,271,802)
2		RUCO Recommended 13-Month Average - Meter Deposits	(1,432,787)
3		RUCO's Recommended (Increase)/Decrease Adjustment	$ (160,986)
		Wastewater Division:	
4	1 & 2	Customer Meter Deposits As Filed by Company	$ (95,892)
5		RUCO Recommended 13-Month Average - Meter Deposits	(81,661)
6		RUCO's Recommended (Increase)/Decrease Adjustment	$ 14,231

References:

1 & 2 Per Company Response to RUCO DRs' 3.06 through 3.10
1 & 2 Per Company Response to Staff's DR 2.68

RATE BASE ADJUSTMENT NO. 6
CUSTOMER SECURITY DEPOSITS

Line No.		Description	Amount
		Water Division:	
1	**1 & 2**	Customer Security Deposits As Filed by Company	$ (140,147)
2		RUCO Recommended 13-Month Average - Customer Security Deposits	(147,932)
3		RUCO's Recommended (Increase)/Decrease Adjustment	$ (7,785)
		Wastewater Division:	
4	**1 & 2**	Customer Security Deposits As Filed by Company	$ (155,440)
5		RUCO Recommended 13-Month Average - Customer Security Deposits	(163,504)
6		RUCO's Recommended (Increase)/Decrease Adjustment	$ (8,063)

References:

1 & 2 Per Company Response to RUCO DRs' 3.06 through 3.10
1 & 2 Per Company Response to Staff's DR 2.68

RATE BASE ADJUSTMENT NO. 7
INTENTIONALLY LEFT BLANK

Line No.	Description	Amount
	Water Division:	
1		$ -
2		-
3		$ -
	Wastewater Division:	
4		$ -
5		-
6		$ -

References:

RATE BASE ADJUSTMENT NO. 8
INTENTIONALLY LEFT BLANK

Line No.	Description	Amount
	Water Division:	
1		$ -
2		-
3		$ -
	Wastewater Division:	
4		$ -
5		-
6		$ -

References:

RATE BASE ADJUSTMENT NO. 9
ACCUMULATED DEFERRED INCOME TAX ("ADIT")

Deferred Income Tax as of December 31, 2012

Line No.			Water & Sewer Adjusted Book Value	Water & Sewer Tax Value	Probability of Realization of Future Tax Benefit	Deductible TD (Taxable TD) Expected to be Realized	Effective Tax Rate	Future Tax Asset Current	Future Tax Asset Non Current	Future Tax Liability Current	Future Tax Liability Non Current
1		Plant-in-Service	$ 161,842,911 [1]								
2		Accum. Deprec.	(32,314,523) [1]								
3		CIAC	(59,777,267) [3]								
4	Federal	Fixed Assets	$ 69,751,120	$ 47,269,626 [2]	100.0%	$ (22,481,494)	31.79%		-		(7,146,867)
5	State	Fixed Assets	$ 69,751,120	$ 73,927,914 [2]	100.0%	$ 4,176,794	6.50%		271,492		-
6	Fed & State	AIAC		14,120,318 [4]	100.0%	$ 14,120,318 [4]	38.29%		$ 5,406,670		
								$ -	$ 5,678,161	$ -	$ (7,146,867)
7		Net Asset (Liability)						$ (1,468,706)			
8		Allocation Factor - Water-Division (based on rate base before ADIT)						0.5809			
9		Net Asset (Liability) Water Division						$ (853,134)			
10		Adjusted Test Year DIT Asset (Liability) as Filed						$ (1,459,075)			
11		Adjustment to DIT						$ 605,941			

Footnotes - See Next Page

RATE BASE ADJUSTMENT NO. 9 (Continued)
ACCUMULATED DEFERRED INCOME TAX ("ADIT")

Line No.		FEDERAL		STATE	
	[1] **Per adjusted book balances**				
	2 Computation of Net Tax Value December 31, 2012				
	Based on 2012 Tax Depreciation report (December 31, 2012)				
1	Unadjusted Cost at December 31, 2012 per federal and state tax depr. report	$ 85,943,311		$ 84,887,919	
2	Reconciling Items not on tax report:				
3	Land on Tax and not on included in adjusted plant balance	(1,055,392)		-	
4	FA Accrual on not on tax report	6,391,333		6,391,333	
5	Proposed Plant retirements	(1,712,539)		(1,712,539)	
6	Post Test Year plant	1,000,000		1,000,000	
7	Post Test Year Plant Retirement	(300,000)		(300,000)	
8	Net Unadjusted Cost tax Basis at December 31, 2012		$ 90,266,713		$ 90,266,713
	Reductions				
9	Basis Reduction 2012 and Prior Years per federal and state tax depr. report	$ (25,331,094)		$ -	
10	Accumulated Depreciation 2012 and prior per federal and state tax depr. report	(19,678,532)		(18,351,338)	
11	Proposed Plant Retirements	1,712,539		1,712,539	
12	Post Test Year retirement	300,000		300,000	
13	Net Reductions through December 31, 2012		(42,997,087)		(16,338,799)
14	Net tax value of plant-in-service at December 31, 2012		$ 47,269,626		$ 73,927,914

Line No.				
	[3] **CIAC (including impact of change to probability of realization)**			
15	Gross CIAC per adjusted book balances		$ 35,802,727	
	CIAC reductions/addtions			
16	A.A per adjusted book balances	$ (5,439,154)		
17		-		
			(5,439,154)	
18	Net CIAC before unrealized AIAC			$ 30,363,572
	Unrealized AIAC Component			
19	Adjusted Net AIAC (see footnote 4 below)		$ 42,019,564	
20	Unrealized AIAC Component % (1-Realized AIAC Component)		70.0%	
21				$ 29,413,695
22	Total realizable CIAC			$ 59,777,267

Line No.			
	[4] **AIAC (including impact of change in probability of realization)**		
23	AIAC per adjusted book balances	$ 42,019,564	
24	AIAC reductions/additions		
25	Net AIAC before unrealized portion		$ 42,019,564
26	Less: Unrealized AIAC (from Note 3, above)		$ (29,413,695)
27	Net realizable AIAC		$ 12,605,869
28	*Meter and Service Line Installation Charges per adjusted book balances*		1,514,449
29	Total Realizable AIAC		$ 14,120,318

RATE BASE ADJUSTMENT NO. 10
REGULATORY ASSET - TCE PLUME

Line No.	Description		Amount
	Water Division:		
1	TCE Plume Balance Per Company		$ 90,381
2	TCE Plume Balance Per RUCO (See Amortization Note 1 Below for RUCO's Calculations)	1	91,069
3	RUCO Adjustment		$ 688

Amortization Note 1: RUCO's Amortization Calaculations

Regulatory Asset - TCE Plume Authorized in Decision No. 72026 (Amortized Over 10-Years)		$ 82,561
Amortization for December 2010 (No Approval by Commission for Further Additional Amortization)		(688)
Amortization for Year 2011 (No Approval by Commission for Further Additional Amortization)		(8,256)
Amortization for Year 2012 (No Approval by Commission for Further Additional Amortization)		(8,256)
Balance at Test-Year End (Amortized as Authorized in Decision No. 72026)		$ 65,361
Company Proposed Cost Additions Incurred (See Response to Staff DR 13-2) Since Decision No. 72026		25,708
Regulatory Asset - TCE Plume Balance at Test-Year End and Allowing the Add'l. Costs Going-Forward	1	$ 91,069

References:
Company Responses to Staff DR 13.1 and 13.2

OPERATING INCOME SUMMARY

Line No.	Description	[A] Company Adjusted Test Year As Filed	[B] RUCO Recommended Adjustments	[C] RUCO Recommended Adjusted Test Year Amounts	[D] RUCO Recommended Changes	[E] RUCO Recommended Amounts
	Revenues:					
1	Metered Water Revenues	$ 10,965,667	$ 58,703	$ 11,024,370	$ 1,111,850	$ 12,136,220
2	Unmetered Water Revenues	-	-	-	-	-
3	Other Water Revenues	235,723	-	235,723	-	235,723
4	**Total Revenues**	$ 11,201,390	$ 58,703	$ 11,260,093	$ 1,111,850	$ 12,371,943
	Operating Expenses:					
5	Salaries and Wages	$ 1,069,839	$ (62,199)	$ 1,007,640	$ -	$ 1,007,640
6	Purchased Water	2,615	-	2,615	-	2,615
7	Purchased Power	903,527	(41)	903,486	-	903,486
8	Fuel For Power Production	-	-	-	-	-
9	Chemicals	208,080	-	208,080	-	208,080
10	Materials and Supplies	91,139	-	91,139	-	91,139
11	Management Services - US Liberty Water	1,260,835	(123,549)	1,137,286	-	1,137,286
12	Management Services - Corporate	781,023	(132,530)	648,493	-	648,493
13	Management Services - Other	-	-	-	-	-
14	Outside Services - Accounting	9,271	-	9,271	-	9,271
15	Outside Services - Engineering	-	-	-	-	-
16	Outside Services- Other	103,412	-	103,412	-	103,412
17	Outside Services- Legal	19,865	-	19,865	-	19,865
18	Water Testing	66,942	(22,062)	44,880	-	44,880
19	Rents - Building	-	-	-	-	-
20	Rents - Equipment	7,229	-	7,229	-	7,229
21	Transportation Expenses	103,726	-	103,726	-	103,726
22	Insurance - General Liability	88,374	-	88,374	-	88,374
23	Insurance - Vehicle	20,825	-	20,825	-	20,825
24	Reg. Comm. Exp. - Other	19,721	-	19,721	-	19,721
25	Reg. Comm. Exp. - Rate Case	65,800	-	65,800	-	65,800
26	Miscellaneous Expense	151,237	(11,260)	139,977	-	139,977
27	Bad Debt Expense	(76)	21,216	21,140	-	21,140
28	Depreciation and Amortization Expense	2,615,868	28,697	2,644,565	-	2,644,565
29	Taxes Other Than Income	-	-	-	-	-
30	Property Taxes	559,128	(24,121)	535,007	17,659	552,666
31	Income Tax	1,028,634	149,026	1,177,660	418,966	1,596,626
32	**Total Operating Expenses**	$ 9,177,014	$ (176,822)	$ 9,000,192	$ 436,625	$ 9,436,817
33	**Operating Income (Loss)**	$ 2,024,376	$ 235,525	$ 2,259,901	$ 675,225	$ 2,935,126

References:

Column [A]: Company Schedule C-1;
Column [B]: RUCO Recommended Total Adjustments Per Schedule RBM-14 on pages 1-2 at page 2 in Column [S] at line 33;
Column [C]: Column [A] + [B] - RUCO Recommended Adjusted Test Year Amounts Per Schedule RBM-14 on page 2 of 2 in Column [T];
Column [D]: RUCO Recommended Increase/(Decrease) to Revenue Requirement;
Column [E]: Column [C] + [D] - RUCO Recommended Increase/(Decrease) Amounts for Revenue Requirement.

RUCO OPERATING INCOME ADJUSTMENTS

Line No.	Description	[A] Company Adjusted Test Year As Filed	[B] Adj. No. 1 Depreciation Expense	[C] Adj. No. 2 Property Taxes	[D] Adj. No. 3 Used for Wastewater Only	[E] Adj. No. 4 Revenue Accrual Fix	[F] Adj. No. 5 Reverse Declining Usage	[G] Adj. No. 6 Water Testing	[H] Adj. No. 7 Intentionally Left Blank	[I] Adj. No. 8 Employee Pension Benefits	[J] Adj. No. 9 Intentionally Left Blank
	Revenues:										
1	Metered Water Revenues	$ 10,965,667	$ -	$ -	$ -	$ -	$ 58,703	$ -	$ -	$ -	$ -
2	Unmetered Water Revenues	-	-	-	-	-	-	-	-	-	-
3	Other Water Revenues	235,723	-	-	-	-	-	-	-	-	-
4	**Total Revenues**	$ 11,201,390	$ -	$ -	$ -	$ -	$ 58,703	$ -	$ -	$ -	$ -
	Operating Expenses										
5	Salaries and Wages	$ 1,069,839	$ -	$ -	$ -	$ -	$ -	$ -	$ -	$ (62,199)	$ -
6	Purchased Water	2,615	-	-	-	-	-	-	-	-	-
7	Purchased Power	903,527	-	-	-	-	(41)	-	-	-	-
8	Fuel For Power Production	-	-	-	-	-	-	-	-	-	-
9	Chemicals	208,080	-	-	-	-	-	-	-	-	-
10	Materials and Supplies	91,139	-	-	-	-	-	-	-	-	-
11	Management Services - US Liberty Water	1,260,835	-	-	-	-	-	-	-	-	-
12	Management Services - Corporate	781,023	-	-	-	-	-	-	-	-	-
13	Management Services - Other	-	-	-	-	-	-	-	-	-	-
14	Outside Services - Accounting	9,271	-	-	-	-	-	-	-	-	-
15	Outside Services - Engineering	-	-	-	-	-	-	-	-	-	-
16	Outside Services- Other	103,412	-	-	-	-	-	-	-	-	-
17	Outside Services- Legal	19,865	-	-	-	-	-	-	-	-	-
18	Water Testing	66,942	-	-	-	-	-	(22,062)	-	-	-
19	Rents - Building	-	-	-	-	-	-	-	-	-	-
20	Rents - Equipment	7,229	-	-	-	-	-	-	-	-	-
21	Transportation Expenses	103,726	-	-	-	-	-	-	-	-	-
22	Insurance - General Liability	88,374	-	-	-	-	-	-	-	-	-
23	Insurance - Vehicle	20,825	-	-	-	-	-	-	-	-	-
24	Reg. Comm. Exp. - Other	19,721	-	-	-	-	-	-	-	-	-
25	Reg. Comm. Exp. - Rate Case	65,800	-	-	-	-	-	-	-	-	-
26	Miscellaneous Expense	151,237	-	-	-	-	-	-	-	-	-
27	Bad Debt Expense	(76)	-	-	-	-	-	-	-	-	-
28	Depreciation and Amortization Expense	2,615,868	28,697	-	-	-	-	-	-	-	-
29	Taxes Other Than Income	-	-	-	-	-	-	-	-	-	-
30	Property Taxes	559,128	-	(24,121)	-	-	-	-	-	-	-
31	Income Tax	1,028,634	-	-	-	-	-	-	-	-	-
32	**Total Operating Expenses**	$ 9,177,014	$ 28,697	$ (24,121)	$ -	$ -	$ (41)	$ (22,062)	$ -	$ (62,199)	$ -
33	**Operating Income**	$ 2,024,376	$ (28,697)	$ 24,121	$ -	$ -	$ 58,744	$ 22,062	$ -	$ 62,199	$ -

Adjustments:

Adjustment No. 1: Depreciation Expense - See RUCO Schedule RBM-15 in Column [C] at line 43;
Adjustment No. 2: Property Taxes - See RUCO Schedule RBM-16 in Column [A] at line 18;
Adjustment No. 3: Used for Wastewater Division Only;
Adjustment No. 4: Revenue Accrual Fix - See RUCO Schedule RBM-18;
Adjustment No. 5: Reverse Company's Declining Usage Adjustment Components - See RUCO Schedule RBM-19;
Adjustment No. 6: Water Testing Expense - See RUCO Schedule RBM-20 at line 3;
Adjustment No. 7: Intentionally Left Blank;
Adjustment No. 8: Employee Pension Benefit Plan - See RUCO Schedule RBM-22 at line 3;
Adjustment No. 9: Intentionally Left Blank

References:

Column [A]: Company Schedule C-1 Adjusted Test Year as Filed;
Column [B] through [J]: RUCO Recommended Adjusted Test Year Adjustments;

RUCO OPERATING INCOME ADJUSTMENTS

Line No.	Description	[K] Adj. No. 10 US Liberty Utilities Add'l. Reductions	[L] Adj. No. 11 Allocate Bad Debt Expense	[M] Adj. No. 12 Intentionally Left Blank	[N] Adj. No. 13 Corporate Cost Allocations	[O] Adj. No. 14 Achievement Incentive/Bonus Pay Allocations	[P] Adj. No. 15 Miscellaneous Expense	[Q] Adj. No. 16 Customer Deposit Interest Expense	[R] Adj. No. 17 Income Taxes	[S] Total RUCO Adjustments Recommended	[T] RUCO Adjusted Test Year Recommended
	Revenues:										
1	Metered Water Revenues	$ -	$ -	$ -	$ -	$ -	$ -	$ -	$ -	$ 58,703	$ 11,024,370
2	Unmetered Water Revenues	-	-	-	-	-	-	-	-	-	-
3	Other Water Revenues	-	-	-	-	-	-	-	-	-	235,723
4	**Total Revenues**	$ -	$ -	$ -	$ -	$ -	$ -	$ -	$ -	$ 58,703	$ 11,260,093
	Operating Expenses										
5	Salaries and Wages	$ -	$ -	$ -	$ -	$ -	$ -	$ -	$ -	$ (62,199)	$ 1,007,640
6	Purchased Water	-	-	-	-	-	-	-	-	-	2,615
7	Purchased Power	-	-	-	-	-	-	-	-	(41)	903,486
8	Fuel For Power Production	-	-	-	-	-	-	-	-	-	-
9	Chemicals	-	-	-	-	-		-	-	-	208,080
10	Materials and Supplies	-	-		-	-			-	-	91,139
11	Management Services - US Liberty Water	(1,829)	-	-	-	(121,720)	-	-	-	(123,549)	1,137,286
12	Management Services - Corporate	-	-	-	(115,363)	(17,167)	-	-	-	(132,530)	648,493
13	Management Services - Other	-	-	-	-	-	-	-	-	-	-
14	Outside Services - Accounting	-	-	-	-	-	-	-	-	-	9,271
15	Outside Services - Engineering	-	-	-	-	-	-	-	-	-	-
16	Outside Services- Other	-	-	-	-	-	-	-	-	-	103,412
17	Outside Services- Legal	-	-	-	-	-	-	-	-	-	19,865
18	Water Testing	-	-	-	-	-	-	-	-	(22,062)	44,880
19	Rents - Building	-	-	-	-	-	-	-	-	-	-
20	Rents - Equipment	-	-	-	-	-	-	-	-	-	7,229
21	Transportation Expenses	-	-	-	-	-	-	-	-	-	103,726
22	Insurance - General Liability	-	-	-	-	-	-	-	-	-	88,374
23	Insurance - Vehicle	-	-	-	-	-	-	-	-	-	20,825
24	Reg. Comm. Exp. - Other	-	-	-	-	-	-	-	-	-	19,721
25	Reg. Comm. Exp. - Rate Case	-	-	-	-	-	-	-	-	-	65,800
26	Miscellaneous Expense	-	-	-	-	-	(16,108)	4,848	-	(11,260)	139,977
27	Bad Debt Expense	-	21,216	-	-	-	-	-	-	21,216	21,140
28	Depreciation and Amortization Expense	-	-	-	-	-	-	-	-	28,697	2,644,565
29	Taxes Other Than Income	-	-	-	-	-	-	-	-	-	-
30	Property Taxes	-	-	-	-	-	-	-	-	(24,121)	535,007
31	Income Tax	-	-	-	-	-	-	-	149,026	149,026	1,177,660
32	**Total Operating Expenses**	$ (1,829)	$ 21,216	$ -	$ (115,363)	$ (138,887)	$ (16,108)	$ 4,848	$ 149,026	$ (176,822)	$ 9,000,192
33	**Operating Income**	$ 1,829	$ (21,216)	$ -	$ 115,363	$ 138,887	$ 16,108	$ (4,848)	$ (149,026)	$ 235,525	$ 2,259,901

Adjustments:

Adjustment No. 10: Additional Adjustments to US Liberty Utilities - See RUCO Schedule RBM-24 at line 3;
Adjustment No. 11: Allocate Bad Debt Expense - See RUCO Schedule RBM-25 at line 5;
Adjustment No. 12: Intentionally Left Blank;
Adjustment No. 13: APUC Corporate Cost Allocations - See RUCO Schedule RBM-27 in Col. [K] at line 25;
Adjustment No. 14: Achievement/Incentive/Bonus Pay Adjustments - See RUCO Schedule RBM-28 at lines 6 + 9;
Adjustment No. 15: Miscellaneous Expense Adjustments - See RUCO Schedule RBM-29;
Adjustment No. 16: Customer Security Deposit Interest Expense - See RUCO Schedule RBM-30 at line 3;
Adjustment No. 17: Income Taxes - See RUCO Schedule RBM-31 in Column [A] at line 3.

References:

Column [K] thru [R]: RUCO Recommended Adjusted Test Year Adjustments;
Column [S]: RUCO Total Adjusted Test Year Adjustments on Schedule JLK-14 page 1 of 2 in Columns [B] thru Schedule JLK-14 page 2 of 2 in Columns [K] thru [R];
Column [T]: Column [A] on Schedule JLK-14 at page 1 of 2 + Column [S] on Schedule JLK-14 page 2 of 2 - RUCO Recommended Adjusted Test Year Balances.

OPERATING INCOME ADJUSTMENT NO. 1
DEPRECIATION EXPENSE

Line No.	NARUC Account	Description	[A] RUCO UPIS Recommended	[B] Authorized Depreciation Rate	[C] RUCO Depreciation Expense Going Forward
1	301	Organization Cost	$ 21,100	0.00%	$ -
2	302	Franchise Cost	-	0.00%	-
3	303	Land and Land Rights	1,456,278	0.00%	-
4	304	Structures & Improvements	25,202,728	3.33%	839,251
5	305	Collecting & Impounding Reservoirs	-	2.50%	-
6	306	Lake, River, Canal Intakes	-	2.50%	-
7	307	Wells & Springs	3,262,222	3.33%	108,632
8	308	Infiltration Galleries	-	6.67%	-
9	309	Raw Water Supply Mains	-	2.00%	-
10	310	Power Generation Equipment	216,099	5.00%	10,805
11	311	Pumping Equipment	874,125	12.50%	109,266
12	320	Water Treatment Equipment	1,696,759	3.33%	56,502
13	320.1	Water Treatment Plants	1,728,635	3.33%	57,564
14	320.2	Solution Chemical Feeders	-	20.00%	-
15	330	Distribution Reservoirs & Standpipes	492,176	2.22%	10,926
16	330.1	Storage Tanks	901,841	2.22%	20,021
17	330.2	Pressure Tanks	-	5.00%	-
18	331	Transmission & Distribution Mains	40,259,045	2.00%	805,181
19	333	Services	5,350,963	3.33%	178,187
20	334	Meters	4,759,560	8.33%	396,471
21	335	Hydrants	3,302,148	2.00%	66,043
22	336	Backflow Prevention Devices	38,387	6.67%	2,560
23	339	Other Plant & Misc Equipment	259,531	6.67%	17,311
24	340	Office Furniture & Equipment	657,653	6.67%	43,865
25	340.1	Computers & Software	8,443	20.00%	1,689
26	341	Transportation Equipment	290,037	20.00%	58,007
27	342	Stores Equipment	37,143	4.00%	1,486
28	343	Tools, Shop & Garage Equipment	47,434	5.00%	2,372
29	344	Laboratory Equipment	5,803	10.00%	580
30	345	Power Operated Equipment	-	5.00%	-
31	346	Communication Equipment	128,402	10.00%	12,840
32	347	Miscellaneous Equipment	-	10.00%	-
33	348	Other Tangible Plant	122,414	10.00%	12,241
			$ 91,118,928		$ 2,811,800

Less: Amortization of Contributions ("CIAC")

	Account No.	Description	Gross CIAC	CIAC Account Specific Amortization Rate	
34	303	Land and Land Rights	$ (92,495)	0.00%	$ -
35	307	Wells	(499,000)	3.33%	(16,617)
36	311	Pumping Equipment	(40,572)	12.50%	(5,071)
37	331	Transmission & Distribution Mains	(5,893,218)	2.00%	(117,864)
38	333	Services	(772,209)	3.33%	(25,715)
39	334	Meters	(29,899)	8.33%	- *
40	335	Hydrants	(98,419)	2.00%	(1,968)
41		Total Gross CIAC Balance (See RUCO RBM-2)	$ (7,425,812)		$ (167,235)
42		RUCO Total Depreciation Expense			2,644,565
43		Company Adjusted Depreciation Expense As Filed			2,615,868
44		RUCO Increase/(Decrease) Expense Adjustment			$ 28,697

* Fully Depreciated Per Company Schedule C-2, page 2

OPERATING INCOME ADJUSTMENT NO. 2
PROPERTY TAXES

Line No.	Property Tax Calculation	[A] RUCO AS ADJUSTED	[B] RUCO RECOMMENDED
1	RUCO Adjusted Test Year Gross Revenues Per RUCO Schedule RBM-13	$ 11,260,093	$ 11,260,093
2	Multiplied by 2	2	2
3	Subtotal (Line 1 * Line 2)	$ 22,520,186	$ 22,520,186
4a	RUCO Adjusted Test Year Gross Revenues Per RUCO Schedule RBM-13	11,260,093	
4b	RUCO Recommended Revenue Per RUCO Schedule RBM-13		12,371,943
5	Subtotal (Line 3 + Line 4a)	$ 33,780,279	$ 34,892,129
6	Number of Years	3	3
7	Three Year Average (Line 5 / Line 6)	$ 11,260,093	$ 11,630,710
8	Department of Revenue Mutilplier	2	2
9	Revenue Base Value (Line 7 * Line 8)	$ 22,520,186	$ 23,261,419
10	Plus: 10% of CWIP Per Company Schedule E-1 As Filed	-	-
11	Less: Net Book Value of Licensed Vehicles	63,445	63,445
12	Full Cash Value (Line 9 + Line 10 - Line 11)	$ 22,456,741	$ 23,197,974
13	Assessment Ratio	19.0%	19.0%
14	Assessed Value (Line 12 * Line 13)	$ 4,266,781	$ 4,407,615
15	Composite Property Tax Rate (Per RUCO Effective Property Tax Calculation)	12.5389%	12.5389%
16	RUCO Adjusted Test Year Property Tax Expense (Line 14 * Line 15)	$ 535,007	
17	Company Adjusted Test Year Property Tax Expense (Per Company Schedule C-1)	559,128	
18	RUCO Test Year Adjustment (Line 16-Line 17)	$ (24,121)	
19	Property Tax - RUCO Recommended Revenue (Line 14 * Line 15)		$ 552,666
20	RUCO Test Year Adjusted Property Tax Expense (Line 16)		535,007
21	Increase/(Decrease) to Property Tax Expense		$ 17,659
22	Increase/(Decrease) to Property Tax Expense		$ 17,659
23	Increase in Revenue Requirement		1,111,850
24	Increase /(Decrease) to Property Tax per Dollar Increase in Revenue (Line 22 / Line 23)		1.5883%

References:
RUCO Schedule RBM-13
RUCO Schedule RBM-4(a) page 1 of 2

OPERATING INCOME ADJUSTMENT NO. 3
USED ONLY FOR WASTEWATER DIVISION

Line No.	Description	Amount

References:

OPERATING INCOME ADJUSTMENT NO. 4
REVENUE ACCRUAL FIX

Line No.	Description	Amount

References:

OPERATING INCOME ADJUSTMENT NO. 5
REVERSE COMPANY'S DECLINING USE ADJUSTMENT & REMOVE DECLINING USAGE COMPONENT FROM PURCHASED POWER ANNUALIZATION

Line No.	Description	Amount
1	Company Revenue Adjustment for Declining Usage	$ (58,703)
2	RUCO Recommended Reversal Adjustment for Declining Usage	-
3	RUCO Recommended Increase/(Decrease) Adjustment	$ 58,703
4	Company Test Year Booked Purchased Power Expense	$ 891,103
5	Test Year Gallons Sold (in thousands)	3,298,378
6	Cost Per 1,000 gallons (Line 4 / Line 5)	0.27
7	RUCO Additional Gallons from Purchased Power Expense Annualization	45,832
8	Increase in Purchased Power per Company	$ 12,423
9	RUCO Purchase Power Annualization, Less Declining Usage	12,382
10	Adjustment to Revenue and/or Expense (L10 - L8)	$ (41)
11	RUCO's Total Recommended Adjustment	$ 58,744

References:
Company Schedule C-2, page 7
Company Response to Staff DR JMM 2-2 (See RBM Direct Testimony for RUCO Rationale)
See RBM Testimony

OPERATING INCOME ADJUSTMENT NO. 6
WATER TESTING EXPENSE

Line No.	Description	Amount
1	Water Testing Proforma Adjustment Per Company as Filed	$ 33,093
2	Water Testing Proforma Adjustment Per RUCO	11,031
3	RUCO Recommended Adjustment	$ (22,062)

References:
Company Response to RUCO DR 3.32

OPERATING INCOME ADJUSTMENT NO. 7
INTENTIONALLY LEFT BLANK

Line No.	Description	Amount

References:

OPERATING INCOME ADJUSTMENT NO. 8
EMPLOYEE PENSION BENEFIT PLAN

Line No.	Description	Amount
1	Employee Pension Benefit Plan Proforma Adjustment Per Company as Filed	$ 62,199
2	Employee Pension Benefit Plan Proforma Adjustment Per RUCO Recommendation	-
3	RUCO Recommended Adjustment	$ (62,199)

References:
Company Response to RUCO DR 3.01
See Testimony of RBM

OPERATING INCOME ADJUSTMENT NO. 9
INTENTIONALLY LEFT BLANK

Line No.	Description	Amount

References:

OPERATING INCOME ADJUSTMENT NO. 10
ADDITIONAL REDUCTIONS TO US LIBERTY UTILITIES MANAGEMENT SERVICES

Line No.	Description		Amount
	Water Division:		
1	Company's Proforma Adjustment for Management Services - US Liberty Water as Filed	$	(16,840)
2	RUCO Recommended Adjustment for Management Services - US Liberty Water		(18,669)
3	RUCO Recommended Adjustment		(1,829)
	Wastewater Division:		
4	Company's Proforma Adjustment for Management Services - US Liberty Water as Filed	$	(21,457)
5	RUCO Recommended Adjustment for Management Services - US Liberty Water		(23,978)
6	RUCO Recommended Adjustment		(2,521)

References:
Company Response to Staff DR JMM 12-2

OPERATING INCOME ADJUSTMENT NO. 11
ALLOCATE BAD DEBT EXPENSE

Line No.	Description		Amount
	Water & Wastewater Divisions Combined Adjusted Test Year Bad Debt Expense as Filed:		
1	Water Division Adjusted Test Year Bad Debt Expense as Filed	$	(76)
2	Wastewater Division Adjusted Test Year Bad Debt Expense as Filed		45,215
3	Total Water & Wastewater Divisions Combined Adjusted Test Year Bad Debt Expense as Filed by Company	$	45,140
	Water Division:		
4	Allocation Factor Recommended by RUCO to Allocate Bad Debt Expense to Water Division		47%
5	RUCO Recommended Bad Debt Expense Adjustment Allocated to Water Division	$	21,216
	Wastewater Division:		
6	Allocation Factor Recommended by RUCO to Allocate Bad Debt Expense to Wastewater Division		53%
7	RUCO Recommended Bad Debt Adjustment Allocated to Wastewater Division	$	(23,924)

References:
Company Response to Staff DR JMM 12-2

OPERATING INCOME ADJUSTMENT NO. 12
INTENTIONALLY LEFT BLANK

Line No.	Description	Amount

References:

Litchfield Park Sevice Company
Docket No. SW-01428A-13-0042
and W-01427A-13-0043
Test Year Ended December 31, 2012

OPERATING INCOME ADJUSTMENT NO. 13
APUC COST ALLOCATIONS

Line No.	Description	[A] Company Requested Total APUC Cost Pool	[B] Allocation Factor From APUC To Liberty Utilities	[C] APUC Allocation To Liberty Utilities	[D] Allocation Factor From Liberty Utilites To Liberty Utilities South	[E] Liberty Utilities Allocation To Liberty Utilities South	[F] Allocation Factor From Liberty Utilities South To LPSCO Water	[G] Allocation Factor From Liberty Utilities South To LPSCO Wastewater	[H] Libery Utilities South Allocation To LPSCO Water	[I] Libery Utilities South Allocation To LPSCO Wastewater	[J] RUCO Recommended Allocations Factors Per Decision 72058	[K] RUCO Recommended Allocations LPSCO Water	[L] RUCO Recommended Allocations LPSCO Sewer
1	Audit	$ 1,561,911	51.8%	$ 808,566	22.26%	$ 179,960	28.74%	26.87%	$ 51,712	$ 48,352	100%	$ 51,712	$ 48,352
2	Tax	1,169,300	51.8%	605,321	22.26%	134,724	28.74%	26.87%	38,713	36,198	100%	38,713	36,198
3	Legal	635,190	51.8%	328,824	22.26%	73,185	28.74%	26.87%	21,030	19,664	100%	21,030	19,664
4	Professional Services	680,395	51.8%	352,225	22.26%	78,394	28.74%	26.87%	22,527	21,063	0%	-	-
5	Unitholder Communications	700,793	51.8%	362,785	22.26%	80.744	28.74%	26.87%	23,202	21,694	0%	-	-
6	Trustee / Director Fees	378,154	51.8%	195,762	22.26%	43,570	28.74%	26.87%	12,520	11,706	0%	-	-
7	Computer Supplies /Repairs	51,761	51.8%	26,796	22.26%	5,964	28.74%	26.87%	1,714	1,602	100%	1,714	1,602
8	Office Expenses	98,210	51.8%	50,841	22.26%	11 316	28.74%	26.87%	3,252	3,040	100%	3,252	3,040
9	Employee Stock Purchase Plan	4,270	51.8%	2,210	22.26%	492	28.74%	26.87%	141	132	0%	-	-
10	Board of Director's Insurance	145,728	51.8%	75,440	22.26%	16,790	28.74%	26.87%	4,825	4,511	50%	2,412	2,256
11	Escrow & Transfer Agent Fees	75,000	51.8%	38,826	22.26%	8,641	28.74%	26.87%	2,483	2,322	0%	-	-
12	Training	76,343	51.8%	39,521	22.26%	8,796	28.74%	26.87%	2,528	2,363	100%	2,528	2,363
13	Stock Option expense	1,376,013	51.8%	712,331	22.26%	158,542	28.74%	26.87%	45,557	42,597	0%	-	-
14	Recruiting	54,095	51.8%	28,004	22.26%	6,233	28.74%	26.87%	1,791	1,675	100%	1,791	1,675
15	Meals and Entertainment	2,315	51.8%	1,198	22.26%	267	28.74%	26.87%	77	72	50%	38	36
16	Rent	84,861	51.8%	43,931	22.26%	9,778	28.74%	26.87%	2,810	2,627	100%	2,810	2,627
17	Communication	78,982	51.8%	40,887	22.26%	9,100	28.74%	26.87%	2,615	2,445	100%	2,615	2,445
18	Dues and Memberships	47,155	51.8%	24,411	22.26%	5,433	28.74%	26.87%	1,561	1,460	0%	-	-
19	Licenses/Fees & Permits	384,904	51.8%	199,256	22.26%	44,348	28.74%	26.87%	12,743	11,915	100%	12,743	11,915
20	Net Other Admin Costs	14,274	51.8%	7,389	22.26%	1,645	28.74%	26.87%	473	442	100%	473	442
21	Variance Due to Company's Monthly Allocation Factoring								10,321	26,092	52%	1 5,400	13,651
												-	-
												-	-
												-	-
22	Total APUC Allocations Per RUCO	$ 7,619,653		$ 3,944,525		$ 877,921			$ 262,593	$ 261,973		$ 147,230	$ 146,266
23	Company Water Division's APUC Cost Allocation Requested											262,593	
24	Company Wastewater Division's APUC Cost Allocation Requested												261,973
25	RUCO Recommended Water and Wastewater Division's APUC Cost Allocation Adjustment											$ (115,363)	$ (115,707)

Note 1:

	Water & Wastewater
Variances by Company Per Responses to RUCO DR 1.08 and Staff 5.2	$ 36,413
RUCO Allowance Factor for the Variances Identifieed by Company	52%

References:

Column [A] - Company response to Staff DR JMM - 10.1(a) confirmed the accruals in that Column were trued-up to Actual Expenses for this rate case.

OPERATING INCOME ADJUSTMENT NO. 14
ACHIEVEMENT / INCENTIVE / BONUS PAY PROGRAMS

Line No.		Description	Water Division Amount	Wastewater Division Amount
		Algonquin Power Utilities Corporation ("APUC") Allocation:		
1	1	Per Company APUC Achievement / Incentive / Bonus Pay Program Allocations Included in Test Year	$ 45,557	$ 42,597
2	2	RUCO Recommended APUC Achievement / Incentive / Bonus Pay Program Allocations Included in Test Year	0%	0%
3	2	RUCO's Recommended Adjustment to Company's Test Year End APUC Achievement / Incentive / Bonus Pay to Include in TY	$ -	$ -
		Liberty Utilities - Local Incentive Pay		
4	1	Per Company Liberty Utilities - Local Achievement / Incentive / Bonus Pay Program Included in Test Year	$ 243,440	$ 227,622
5		RUCO Recommended Achievement / Incentive / Bonus Pay Program Allocations Included in Test Year	50%	50%
6		*RUCO's Recommended Adjustment to Company's Test Year End APUC Achievement / Incentive / Bonus Pay to Include in TY*	$ (121,720)	$ (113,811)
		Liberty Utilities - Allocated Incentive Pay		
7	1	Per Company Liberty Utilities - Local Achievement / Incentive / Bonus Pay Program Included in Test Year	$ 34,334	28,446
8		RUCO Recommended Achievement / Incentive / Bonus Pay Program Allocations Included in Test Year	50%	50%
9		RUCO's Recommended Adjustment to Company's Test Year End APUC Achievement / Incentive / Bonus Pay to Include in TY	$ (17,167)	$ (14,223)
10		RUCO's Recommended Total Adjustments	$ (138,887)	$ (128,034)

References:

1 Per Company Supplemental Response to RUCO 1.15(e)
2 *RUCO disallowed 100% of the APUC Achievement / Incentive / Pay Program - Stock Option Expense (See RUCO Schedule RBM-27 at line 13)*

OPERATING INCOME ADJUSTMENT NO. 15
MISCELLANEOUS EXPENSE

Line No.	Description	Account No.	[A] Company As Filed	[B] RUCO Allowance Factor	[C] RUCO Recommended Adjustment
1	Company Adjusted Miscellaneous Expense as Filed		$ 151,237		
	RUCO Adjustments:				
2	Public Relations	8600-2-0200-69-5390	$ 830	100%	$ (830)
3	Meals and Entertainment	8600-2-0200-69-5300	4,675	50%	(2,338)
4	Charitable Donations	8600-2-0200-69-5450	12,940	100%	(12,940)
5	Total				$ (16,108)
6	RUCO Adjustment to Miscellaneous Expense				$ (16,108)

References:
Column [A]: Company Adjusted Test Year Schedule C-1 Balance on page 1 at line 28 and Company Response to Staff DR JMM 2-45;
Column [B]: RUCO Allowance Factor;
Column [C]: RUCO Recommended Adjustment.

RATE BASE ADJUSTMENT NO. 16
CUSTOMER SECURITY DEPOSIT INTEREST EXPENSE

Line No.		Description	Amount
		Water Division:	
1	1	Customer Security Deposit Interest Expense As Filed by Company Below-the-Line for Both Divisons Per Response to Staff DR 13-4	$ 10,314
2		RUCO Recommended Allocation for Water Division Net of Interest Earned (See Note 1 Below for Allocation Percentages)	4,848
3		RUCO's Recommended Adjustment (Net of Interest Earned on Unexpended CIAC Bank Account Per Response to Staff DR 1.13)	$ 4,848
		Wastewater Division:	
4	1	Customer Security Deposit Interest Expense As Filed by Company Below-the-Line for Both Divisons Per Response to Staff DR 13-4	$ 10,314
5		RUCO Recommended Allocation for Water Division Net of Interest Earned (See Note 1 Below for Allocation Percentages)	5,467
6		RUCO's Recommended Adjustment (Net of Interest Earned on Unexpended CIAC Bank Account Per Response to Staff DR 1.13)	$ 5,467

Note 1: Allocation Percentage Factors
Water = 47%
Wastewater = 53%

References:
1 Per Company Response and Excel workbook Attachment to Staff's DR 13-4

OPERATING INCOME ADJUSTMENT NO. 17
INCOME TAXES

Line No.	Description	[A] RUCO Adjusted Test Year Recommended	[B] RUCO Test Year Recommended
1	RUCO Computed Adjusted Test Year Income Tax	$ 1,177,660	$ 1,596,626
2	Company Income Tax As Filed	1,028,634	1,885,306
3	RUCO Adjustment to Income Tax Expense	$ 149,026	$ (288,680)

References:
See RUCO Schedule RBM-1 at page 2 of 2;
Company Schedule C-1 Adjusted Test Year as Filed

COST OF CAPITAL

Line No.		[A] DOLLAR AMOUNT	[B] CAPITAL RATIO	[C] COST RATE	[D] WEIGHTED COST RATE
1	Long-Term Debt	$ 10,420,000	15.87%	6.86%	1.09%
2	Common Equity	55,240,319	84.13%	9.20% *	7.74%
3	Total Capitalization	$ 65,660,319	100.00%		
4	WEIGHTED AVERAGE COST OF CAPITAL ("WACC")				8.83%

* The Return on Equity Recommended by RUCO was authorized in Decision No. 73996 dated July 30, 2013.

References:
Columns [A] Thru [D]: RBM & RBM Testimony

TABLE OF CONTENTS TO RBM SCHEDULES

SCH. NO.	PAGE NO.	TITLE
RBM-1	1 of 2	REVENUE REQUIREMENT
RBM-1	2 of 2	GROSS REVENUE CONVERSION FACTOR ("GRCF")
RBM-2	1	RATE BASE SUMMARY
RBM-3	1	RATE BASE ADJUSTMENTS
RBM-4(a)	1 of 2	SUMMARY OF UTILITY PLANT IN SERVICE ("UPIS") ADJUSTMENTS
RBM-4(a)	2 of 2	SUMMARY OF UPIS ACCUMULATED DEPRECIATION ("A/D") ADJUSTMENTS
RBM-4(b)	1 - 5	RECONSTRUCTION OF UPIS & A/D SCHEDULES
RBM-4(c)	1 - 2	UPIS & A/D RECLASSIFICATIONS
RBM-4(d)	1	RECLASSIFY WATER DIVISION INVOICES TO WASTEWATER DIVISION
RBM-4(e)	1	REMOVE DUPLICATE INVOICES FROM UPIS ADDITIONS
RBM-4(f)	1	RETIREMENT OF UPIS - TRANSPORTATION EQUIPMENT
RBM-4(g)	1	USED ONLY FOR WASTEWATER DIVISION
RBM-4(h)	1	ADDITIONAL ACCUMULATED DEPRECIATION ("A/D") FOR LATE RECORDED UPIS INVOIVES
RBM-4(i)	1	TO CORRECT A/D FOR NON-DEPRECIABLE UPIS ACCOUNT
RBM-5	1	ADVANCES IN AID OF CONSTRUCTION ("AIAC")
RBM-6	1 - 6	CONTRIBUTIONS IN AID OF CONSTRUCTION ("CIAC") & ACCUMULATED AMORTIZATIONS ("AA")
RBM-7	1	CUSTOMER METER DEPOSITS
RBM-8	1	CUSTOMER SECURITY DEPOSITS
RBM-9	1	INTENTIONALLY LEFT BLANK
RBM-10	1	INTENTIONALLY LEFT BLANK
RBM-11	1 - 2	ACCUMULATED DEFERRED INCOME TAX ("ADIT")
RBM-12	1	REGULATORY ASSET - TCE PLUME
RBM-13	1	OPERATING INCOME SUMMARY
RBM-14	1 - 2	OPERATING INCOME ADJUSTMENTS
RBM-15	1	DEPRECIATION EXPENSE
RBM-16	1	PROPERTY TAX EXPENSE
RBM-17	1	USED ONLY FOR WASTEWATER DIVISION
RBM-18	1	REVENUE ACCRUAL FIX TO BE USED IN FUTURE
RBM-19	1	REVERSE COMPANY'S DECLINING USAGE ADJUSTMENT - USED ONLY FOR WATER DIVISION
RBM-20	1	WATER TESTING EXPENSE - USED ONLY FOR WATER DIVISION
RBM-21	1	INTENTIONALLY LEFT BLANK
RBM-22	1	EMPLOYEE PENSION PLAN
RBM-23	1	INTENTIONALLY LEFT BLANK
RBM-24	1	ADDITIONAL REDUCTIONS TO US LIBERTY UTILITIES
RBM-25	1	ALLOCATE BAD DEBT EXPENSE BETWEEN WATER AND WASTEWATER DIVISION
RBM-26	1	INTENTIONALLY LEFT BLANK
RBM-27	1	ALGONQUIN POWER UTILITIES CORPORATION ("APUC") COST ALLOCATIONS
RBM-28	1	ACHIEVEMENT / INCENTIVE / BONUS PAY
RBM-29	1	MISCELLANEOUS EXPENSE
RBM-30	1	CUSTOMER DEPOSIT INTEREST EXPENSE
RBM-31	1	INCOME TAXES
RBM-32	1	COST OF CAPITAL

RUCO RECOMMENDED REVENUE REQUIREMENT

Line No.	Description	[A] Company OCRB/FVRB Cost	[B] RUCO OCRB/FVRB Cost
1	Fair Value Rate Base	$ 23,877,697	$ 23,988,000
2	Adjusted Test Year Operating Income (Loss)	$ 1,871,616	$ 2,095,839
3	Current Rate Of Return (L2 / L1)	7.84%	8.74%
4	Required Operating Income (L5 X L1)	$ 2,268,786	$ 2,117,817
5	Required Rate Of Return On Fair Value Rate Base	9.50%	8.83%
6	Operating Income Deficiency (L4 - L2)	$ 397,170	$ 21,978
7	Gross Revenue Conversion Factor (RLM-1, Pg 2)	1.6595	1.6496
8	Increase In Gross Revenue Requirement (L7 X L6)	$ 659,088	$ 36,254
9	Adjusted Test Year Revenue	$ 10,361,603	$ 10,362,796
10	Proposed Annual Revenue (L8 + L9)	$ 11,020,691	$ 10,399,050
11	Required Percentage Increase In Revenue (L8 / L9)	6.36%	0.35%
12	Rate Of Return On Common Equity	10.00%	9.20%

References:
Column [A]: Company Schedules A-1, B-1, C-1, and D-1
Column [B]: RUCO Schedule RBM-2, RBM-13 and RBM-32

RUCO GROSS REVENUE CONVERSION FACTOR ("GRCF")

LINE NO.	DESCRIPTION	[A]	[B]	[C]
	Calculation of Gross Revenue Conversion Factor:			
1	Revenue	100.0000%		
2	Uncollecible Factor	0.0000%		
3	Revenues (L1 - L2)	100.0000%		
4	Combined Federal and State Income Tax and Property Tax Rate (Line 23)	39.3790%		
5	Subtotal (L3 - L4)	60.6210%		
6	**Revenue Conversion Factor (L1 / L5)**	1.649594		
	Calculation of Uncollecttible Factor:			
7	Unity	100.0000%		
8	Combined Federal and State Tax Rate (Line 17)	38.2900%		
9	One Minus Combined Income Tax Rate (L7 - L8)	61.7100%		
10	Uncollectible Rate	0.00000		
11	Uncollectible Factor (L9 * L10)	0.0000%		
	Calculation of Effective Tax Rate:			
12	Operating Income Before Taxes (Arizona Taxable Income)	100.0000%		
13	Arizona State Income Tax Rate	6.5000%		
14	Federal Taxable Income (L12 - L13)	93.5000%		
15	Applicable Federal Income Tax Rate (Col. [C], L53)	34.0000%		
16	Effective Federal Income Tax Rate (L14 x L15)	31.7900%		
17	Combined Federal and State Income Tax Rate (L13 + L16)		38.2900%	
	Calculation of Effective Property Tax Factor			
18	Unity	100.0000%		
19	Combined Federal and State Income Tax Rate (Col. [B], L17)	38.2900%		
20	One Minus Combined Income Tax Rate (L18-L19)	61.7100%		
21	Property Tax Factor (Sch. RBM-9, Col. [B], L24)	1.7647%		
22	*Effective Property Tax Factor (L20 x L21)*		1.0890%	
23	Combined Federal and State Income Tax and Property Tax Rate (Col. [B], L17 + L22)			39.3790%
24	Required Operating Income (Sch. RBM-1, Col. [B] Line 4)	$ 2,117,817		
25	Adjusted Test Year Operating Income (Loss) (Sch. RBM-1, Col. [B], L2)	2,095,839		
26	Required Increase in Operating Income (L24 - L25)		$ 21,978	
27	Income Taxes on Recommended Revenue (Col. [C], L52)	$ 1,152,033		
28	Income Taxes on Test Year Revenue (Col. [A], L52)	1,138,396		
29	*Required Increase in Revenue to Provide for Income Taxes (L27 - L28)*		13,637	
30	Recommended Revenue Requirement (Sch. RBM-1, Col. [B], Line 10)	$ 10,399,050		
31	Uncollectible Rate (L10)	0.0000%		
32	Uncolllectible Expense on Recommended Revenue (L30 x L31)	$ -		
33	Adjusted Test Year Uncollectible Expense(Sch. RBM-6, Col. [C], L32)	$ -		
34	Required Increase in Revenue to Provide for Uncollectible Exp. (L32 - L33)		-	
35	Property Tax with Recommended Revenue (Sch. RBM-9, Col. [B], L19)	$ 549,173		
36	Property Tax on Test Year Revenue (Sch. RBM-9, Col. [B], L20)	548,533		
37	Increase in Property Tax Due to Increase in Revenue (L35 - 36)		640	
38	Total Required Increase in Revenue (Col. [B], L26 + L29 + L34 + L37)		$ 36,254	

	Calculation of Income Tax:	Test Year		RUCO Recommended
39	Revenue (Sch. RBM-1, Col. [B], Line 9 & Sch. RBM-1, Col. [B], L10)	$ 10,362,796	$ 36,254	$ 10,399,050
40	Operating Expenses Excluding Income Taxes	$ 7,128,561		$ 7,129,200
41	Synchronized Interest (Col. [C], L57)	$ 261,146		$ 261,146
42	Arizona Taxable Income (L39 - L40 - L41)	$ 2,973,090		$ 3,008,704
43	Arizona State Income Tax Rate	6.5000%		6.5000%
44	Arizona Income Tax (L42 x L43)	$ 193,251		$ 195,566
45	Federal Taxable Income (L42 - L44)	$ 2,779,839		$ 2,813,139
46	Federal Tax on First Income Bracket ($1 - $50,000) @ 15%	$ 7,500		$ 7,500
47	Federal Tax on Second Income Bracket ($51,001 - $75,000) @ 25%	$ 6,250		$ 6,250
48	Federal Tax on Third Income Bracket ($75,001 - $100,000) @ 34%	$ 8,500		$ 8,500
49	Federal Tax on Fourth Income Bracket ($100,001 - $335,000) @ 39%	$ 91,650		$ 91,650
50	Federal Tax on Fifth Income Bracket ($335,001 -$10,000,000) @ 34%	$ 831,245		$ 842,567
51	Total Federal Income Tax	$ 945,145		$ 956,467
52	Combined Federal and State Income Tax (L44 + L51)	$ 1,138,396		$ 1,152,033
53	Applicable Federal Income Tax Rate [Col. [C], L46 - Col. [A], L46] / [Col. [C], L40 - Col. [A], L40]			34.0000%

54	**Synchronized Interest Calculation:**	
55	Rate Base	$ 23,988,000
56	x Weighted Average Cost of Debt	1.09%
57	Synchronized Interest	$ 261,146

RUCO RATE BASE SUMMARY

Line No.	Description	[A] Company As Filed OCRB/FVRB	[B] RUCO Total Adjustments	[C] RUCO Recommended OCRB/FVRB
1	Gross Utility Plant In Service	$ 74,024,532	$ (8,315)	$ 74,016,217
2	Accumulated Depreciation	(13,244,186)	(53,883)	(13,298,069)
3	Net Utility Plant in Service (L1 + L2)	$ 60,780,346	$ (62,198)	$ 60,718,148
	Less:			
4	Advances In Aid of Construction ("AIAC")	(11,645,290)	-	(11,645,290)
5	Contributions In Aid of Construction ("CIAC")	(28,470,485)	93,570	(28,376,915)
6	Accumulated Amortization of CIAC	4,446,775	(293,475)	4,153,300
7	Net CIAC (L5 + L6)	$ (24,023,709)	$ (199,905)	$ (24,223,615)
8	Customer Meter Deposits	(95,892)	14,231	(81,661)
9	Customer Security Deposits	(155,440)	(8,553)	(163,993)
10	Accumulated Deferred IncomeTaxes ("ADIT")	(982,318)	366,728	(615,589)
	Plus:			
11	Unamortized Finance Charges	-	-	-
12	Allowance For Working Capital	-	-	-
13	Total Rate Base (Sum L's 3, 4, 7, 8 Thru 12)	$ 23,877,697	$ 110,304	$ 23,988,000

References:
Column [A]: Company Schedule B-1
Column [B]: RBM-3, Columns [B] Thru [K]
Column [C]: Column [A] + Column [B]

Litchfield Park Sevice Company
Docket Nos. SW-01428A-13-0042
and W-01427A-13-0043
Test Year Ended December 31, 2012

Wastewater Division
Direct Schedule RBM-3
Page 1 of 1

RUCO RATE BASE ADJUSTMENTS

LINE NO.	Description	[A] Company As Filed OCRB/FVRB	[B] Adjust No. 1 Utility Plant in Service Adjustments	[C] Adjust No. 2 Accumulated Depreciation	[D] Adjust No. 3 Intentionally Left Blank	[E] Adjust No. 4 CIAC & Amortization Adjustments	[F] Adjust No. 5 Customer Meter Deposits	[G] Adjust No. 6 Customer Security Deposits	[H] Adjust No. 7 Intentionally Left Blank	[I] Adjust No. 8 Intentionally Left Blank	[J] Adjust No. 9 ADIT Adjustment	[K] Adjust No. 10 Used For Water Div. Only	[L] Total RUCO Adjustments	[M] RUCO Recommended OCRB/FVRB
1	Gross Utility Plant In Service	$ 74,024,532	$ (8,315)	$ -	$ -	$ -	$ -	$ -	$ -	$ -	$ -	$ -	$ (8,315)	$ 74,016,217
2	Accumulated Depreciation	(13,244,186)	-	(53,883)	-	-	-	-	-	-	-	-	(53,883)	(13,298,069)
3	Net Utility Plant in Service (L1 + L2)	$ 60,780,346	$ (8,315)	$ (53,883)	$ -	$ -	$ -	$ -	$ -	$ -	$ -	$ -	$ (62,198)	$ 60,718,148
	Less:													
4	Advances In Aid of Construction ("AIAC")	$ (11,645,290)	$ -	$ -	$ -	$ -	$ -	$ -	$ -	$ -	$ -	$ -	$ -	$ (11,645,290)
5	Contributions In Aid of Construction ("CIAC")	(28,470,485)	-	-	-	93,570	-	-	-	-	-	-	93,570	(28,376,915)
6	Accumulated Amortization of CIAC	4,446,775	-	-	-	(293,475)	-	-	-	-	-	-	(293,475)	4,153,300
7	Net CIAC (L5 + L6)	$ (24,023,709)	$ -	$ -	$ -	$ (199,905)	$ -	$ -	$ -	$ -	$ -	$ -	$ (199,905)	$ (24,223,615)
8	Customer Meter Deposits	$ (95,892)	$ -	$ -	$ -	$ -	$ 14,231	$ -	$ -	$ -	$ -	$ -	$ 14,231	$ (81,661)
9	Customer Security Deposits	(155,440)	-	-	-	-	-	(8,553)	-	-	-	-	(8,553)	(163,993)
10	Accumulated Deferred IncomeTaxes ("ADIT")	(982,318)	-	-	-	-	-	-	-	-	366,728	-	366,728	(615,589)
	Plus:													
11	Unamortized Finance Charges	-	-	-	-	-	-	-	-	-	-	-	-	-
12	Allowance For Working Capital	-	-	-	-	-	-	-	-	-	-	-	-	-
13	Total Rate Base (Sum L's 3, 4, 7, 8 Thru 12)	$ 23,877,697	$ (8,315)	$ (53,883)	$ -	$ (199,905)	$ 14,231	$ (8,553)	$ -	$ -	$ 366,728	$ -	$ 110,304	$ 23,988,000

RUCO Adjustments:

Adjustment No. 1: Correct Utility Plant in Service ("UPIS") Balance as Filed by Company - See RUCO Adjustment No. 1 on Schedule RBM-4(a) 2012 TY Plant Summary Schedule on page 1 of 2, Column [J] at line 30;
Adjustment No. 2: Correct UPIS Accumulated Depreciation ("A/D") Balance as Filed by Company - See RUCO Adjustment No. 2 on Schedule RBM-4(a) 2012 A/D Summary Schedule on page 2 of 2, Column [J] at line 30;
Adjustment No. 3: Intentionally Left Blank;
Adjustment No. 4: Correct Contributions In Aid of Construction ("CIAC") & CIAC Amortization Balances as Filed by Company - See RUCO Schedule RBM-6 CIAC Reconstruction Schedules on page 1 of 6 at lines 3 & 6 with Total Net Adjustment at line 7 and on page 6 of 6, Column [G] & [H], at line 9;
Adjustment No. 5: RUCO Recommended 13-Month Average Customer Meter Deposit Balance as Calculated - See RUCO Schedule RBM-7 Customer Meter Deposits on page 1 of 1 at line 6;
Adjustment No. 6: RUCO Recommended 13-Month Average Customer Security Deposit Balance as Calculated - See RUCO Schedule RBM-8 Customer Security Deposits on page 1 of 1 at line 6;
Adjustment No. 7: Intentionally Left Blank
Adjustment No. 8: Intentionally Left Blank
Adjustment No. 9: RUCO Recommended 2012 TY End Accumulated Deferred Income Tax ("ADIT") Balance After RUCO Recommended Rate Base Adjustments - See RUCO Schedule RBM-11 ADIT on page 1 of 2 at line 11;
Adjustment No. 10: Used Only for Water Division

References:

Column [A]: Company Schedule B-1
Column [B] Thru Column [K]: RUCO Recommended Rate Base Adjustments
Column [L]: Sum of RUCO Recommended Rate Base Adjustments of Columns [B] through [K]
Column [M]: Column [A] + Column [L]

RATE BASE ADJUSTMENT NO. 1
SUMMARY OF UTILITY PLANT IN SERVICE ("UPIS") ADJUSTMENTS
TEST YEAR ENDED DECEMBER 31, 2012

Line No.	Acct No	Description	[A] Company Plant in Service As Filed	[B] RUCO Adjustment #1 Plant Reconstruction	[C] RUCO Adjustment #2 Plant Reclassifications Per Staff DR DH 11.2	[D] RUCO Adjustment #3 Reclassify Invoices From W to WW Div.	[E] RUCO Adjustment #4 Remove Duplicate Invoices	[F] RUCO Adjustment #5 Used Only for Water Division	[G] RUCO Adjustment #6 Remove Non-Used & Useful UPIS	[H] RUCO Adjustment #7 Used Only for Add'l. Late Recorded Inv. A/D	[I] RUCO Adjustment #8 Used Only for W Division A/D	[J] RUCO Total UPIS Adjustments	[K] Total Plant in Service Recommended
1	351	Organization	$ -	$ -	$ -	$ -	$ -	$ -	$ -	$ -	$ -	$ -	$ -
2	352	Franchise	-	-	-	-	-	-	-	-	-	-	-
3	353	Land	1,850,582	-	-	-	(3,409)	-	(11,217)	-	-	(14,626)	1,835,956
4	354	Structures & Improvements	24,208,314	-	(483,546)	12,156	(4,581)	-	-	-	-	(475,971)	23,732,343
5	355	Power Generation	603,332	-	-	-	(400)	-	-	-	-	(400)	602,932
6	360	Collection Sewer Forced	1,162,597	-	-	-	-	-	-	-	-	-	1,162,597
7	361	Collection Sewers Gravity	31,886,680	-	-	-	-	-	-	-	-	-	31,886,680
8	362	Special Collecting Structures	-	-	-	-	-	-	-	-	-	-	-
9	363	Customer Services	76,190	-	-	-	-	-	-	-	-	-	76,190
10	364	Flow Measuring Devices	46,210	-	36,618	-	-	-	-	-	-	36,618	82,828
11	366	Reuse Services	4,057,660	-	-	-	-	-	-	-	-	-	4,057,660
12	367	Reuse Meters And Installation	44,753	-	-	-	-	-	-	-	-	-	44,753
13	370	Receiving Wells	860,393	-	-	-	-	-	-	-	-	-	860,393
14	371	Pumping Equipment	799,481	-	55,670	-	-	-	-	-	-	55,670	855,150
15	374	Reuse Distribution Reservoirs	62,286	-	-	-	-	-	-	-	-	-	62,286
16	375	Reuse Trans. and Dist. System	420,334	-	-	-	-	-	-	-	-	-	420,334
17	380	Treatment & Disposal Equipment	5,585,470	-	470,592	-	-	-	-	-	-	470,592	6,056,062
18	381	Plant Sewers	47,802	-	-	-	-	-	-	-	-	-	47,802
19	382	Outfall Sewer Lines	343,681	-	-	-	-	-	-	-	-	-	343,681
20	389	Other Sewer Plant & Equipment	871,498	-	(43,005)	-	(864)	-	-	-	-	(43,869)	827,630
21	390	Office Furniture & Equipment	275,740	-	-	-	-	-	-	-	-	-	275,740
22	390.1	Computers and Software	-	-	-	-	-	-	-	-	-	-	-
23	391	Transportation Equipment	33,497	-	-	-	-	-	-	-	-	-	33,497
24	392	Stores Equipment	8,968	-	-	-	-	-	-	-	-	-	8,968
25	393	Tools, Shop And Garage Equip	145,631	-	(15,681)	-	-	-	-	-	-	(15,681)	129,950
26	394	Laboratory Equip	186,348	-	836	-	-	-	-	-	-	836	187,184
26	395	Power Operated Equipment	28,090	-	(21,485)	-	-	-	-	-	-	(21,485)	6,605
26	396	Communication Equip	418,996	-	-	-	-	-	-	-	-	-	418,996
28	398	Other Tangible Plant	-	-	-	-	-	-	-	-	-	-	-
29		Plant Held for Future Use	-	-	-	-	-	-	-	-	-	-	-
30		RUCO UPIS Adjustments	$ 74,024,532	$ -	$ 0	$ 12,156	$ (9,254)	$ -	$ (11,217)	$ -	$ -	$ (8,315)	$ 74,016,217

RUCO Adjustments:

Adjustment No. 1: Correct Utility Plant in Service ("UPIS") Balance as Filed by Company - See RUCO Adjustment No. 1 on Schedule RBM-4(b) 2008 thru 2012 TY Plant Schedules on pages 1-6 at page 6 on line 32;
Adjustment No. 2: Plant Reclassifications - See RUCO Schedule RBM-4(c) on page 1 of 2, Column [B], at line 35;
Adjustment No. 3: Reclassify UPIS Invoices from Water to Wastewater Division - See RUCO Schedule RBM-4(d) on page 1 of 1 at line 13;
Adjustment No. 4: Remove Duplicate Invoices - See RUCO Schedule RBM-4(e) on page 1 of 1 at lines 3, 9, 15, and 21;
Adjustment No. 5: Used Only for Water Division;
Adjustment No. 6: Remove Non-Used & Useful Plant - See RUCO Schedule RBM-4(g) on page 1 of 1 at line 5;
Adjustment No. 7: Used Only for A/D of Late Recorded UPIS Invoices;
Adjustment No. 8: Used Only for Water Division.

References:

Column [A]: Company Schedule B-2 on page 3 Adjusted Test Year UPIS Balances as Filed;
Columns [B] Thru [I]: RUCO Recommended UPIS Adjustments;
Column [J]: Sum of Columns [B] Through [I] - RUCO Sum of Total Recommended UPIS Adjustments;
Column [K]: Column [A] + [J]

RATE BASE ADJUSTMENT NO. 2
SUMMARY OF ACCUMULATED DEPRECIATION ADJUSTMENTS
TEST YEAR ENDED DECEMBER 31, 2012

Line No.	Acct No	Description	[A] Company Accum. Depre. As Filed	[B] RUCO Adjustment #1 Plant Reconstruction	[C] RUCO Adjustment #2 Plant Reclassifications Per Staff DR DH 11.2	[D] RUCO Adjustment #3 Reclassify Invoices From W to WW Div.	[E] RUCO Adjustment #4 Remove Duplicate Invoices	[F] RUCO Adjustment #5 Used Only for Water Division	[G] RUCO Adjustment #6 Remove Non-Used & Useful UPIS	[H] RUCO Adjustment #7 Additional A/D on Late Recorded UPIS	[I] RUCO Adjustment #8 Used Only for W Division A/D	[J] RUCO Total Plant in Service Adjustments	[K] RUCO Accum. Depre. Recommended
1	351	Organization	$ -	$ -	$ -	$ -	$ -	$ -	$ -	$ -	$ -	$ -	$ -
2	352	Franchise	-	-	-	-	-	-	-	-	-	-	-
3	353	Land	-	-	-	-	-	-	-	-	-	-	-
4	354	Structures & Improvements	(3,773,984)	-	50,387	(607)	629	-	-	(6,478)	-	43,931	(3,730,053)
5	355	Power Generation	(222,393)	-	-	-	50	-	-	-	-	50	(222,343)
6	360	Collection Sewer Forced	109,004	-	-	-	-	-	-	-	-	-	109,004
7	361	Collection Sewers Gravity	(5,222,855)	-	-	-	-	-	-	(407)	-	(407)	(5,223,263)
8	362	Special Collecting Structures	-	-	-	-	-	-	-	-	-	-	-
9	363	Customer Services	(2,092)	-	-	-	-	-	-	-	-	-	(2,092)
10	364	Flow Measuring Devices	(38,453)	-	(12,816)	-	-	-	-	-	-	(12,816)	(51,269)
11	366	Reuse Services	(825,859)	-	-	-	-	-	-	(23)	-	(23)	(825,882)
12	367	Reuse Meters And Installation	(21,945)	-	-	-	-	-	-	-	-	-	(21,945)
13	370	Receiving Wells	(297,089)	-	-	-	-	-	-	-	-	-	(297,089)
14	371	Pumping Equipment	(276,747)	-	(5,372)	-	-	-	-	-	-	(5,372)	(282,119)
15	374	Reuse Distribution Reservoirs	(8,088)	-	-	-	-	-	-	-	-	-	(8,088)
16	375	Reuse Trans. and Dist. System	(48,106)	-	-	-	-	-	-	(803)	-	(803)	(48,908)
17	380	Treatment & Disposal Equipment	(1,551,533)	(17,500)	(75,408)	-	-	-	-	-	-	(92,908)	(1,644,441)
18	381	Plant Sewers	(16,686)	-	-	-	-	-	-	-	-	-	(16,686)
19	382	Outfall Sewer Lines	(118,892)	-	-	-	-	-	-	-	-	-	(118,892)
20	389	Other Sewer Plant & Equipment	(234,145)	-	10,039	-	144	-	-	-	-	10,183	(223,962)
21	390	Office Furniture & Equipment	(122,510)	-	-	-	-	-	-	-	-	-	(122,510)
22	390.1	Computers and Software	-	-	-	-	-	-	-	-	-	-	-
23	391	Transportation Equipment	(33,497)	3,646	-	-	-	-	-	-	-	3,646	(29,852)
24	392	Stores Equipment	(3,681)	-	-	-	-	-	-	-	-	-	(3,681)
25	393	Tools, Shop And Garage Equip.	(25,027)	-	392	-	-	-	-	-	-	392	(24,635)
26	394	Laboratory Equip	(135,667)	-	(293)	-	-	-	-	-	-	(293)	(135,959)
26	395	Power Operated Equipment	(702)	-	537	-	-	-	-	-	-	537	(165)
26	396	Communication Equip	(373,237)	-	-	-	-	-	-	-	-	-	(373,237)
28	398	Other Tangible Plant	-	-	-	-	-	-	-	-	-	-	-
29		Plant Held for Future Use	-	-	-	-	-	-	-	-	-	-	-
30		Totals	$ (13,244,186)	$ (13,854)	$ (32,534)	$ (607)	$ 823	$ -	$ -	$ (7,711)	$ -	$ (53,883)	$ (13,298,069)

RUCO Adjustments:

Adjustment No. 1: Accumulated Depreciation ("A/D") Per RUCO - See RUCO Schedule RBM-4(b) 2012 Plant Reconstruction Schedule on pages 1-6 at page 6 on line 34;
Adjustment No. 2: Plant Reclassifications A/D Per RUCO - See RUCO Schedule RBM-4(c) on page 2 of 2, Column [B], on line 35;
Adjustment No. 3: Reclassify A/D of UPIS Invoices from Water to Wastewater Division - See RUCO Schedule RBM-4(d) on page 1 of 1 at line 14;
Adjustment No. 4: Remove Duplicate Invoices A/D - See RUCO Schedule RBM-4(e) on page 1 of 1 at lines 6, 12, 18, and 24;
Adjustment No. 5: Used Only for Water Division;
Adjustment No. 6: To Remove A/D Associated with Non-Used & Useful Plant - See RUCO Schedule RBM-4(g) on page 1 of 1 at line 7;
Adjustment No. 7: Used Only for A/D of Late Recorded UPIS Invoices - See RUCO Schedule RBM-4(h) on page 1 of 1, Column [B], at line 35;
Adjustment No. 8: Used Only for Water Division.

References:

Columns [A]: Company Schedule B-2 on page 4 Adjusted Test Year as Filed
Columns [B] Through [I]: RUCO Recommended UPIS Adjustments
Columns [J]: Sum of Columns [B] Through [I] - RUCO Sum of Total Recommended UPIS Adjustments
Column [K]: Column [A] + [J]

UTILITY PLANT IN SERVICE ("UPIS") & UPIS ACCUMULATED DEPRECIATION ADJUSTMENT NO. 1
PLANT RECONSTRUCTION SCHEDULE
#REF!

				Per Decision 72026			2008 (3 Months - October 1 through December 31, 2008)								
Line No.	NARUC Account No.	Description	Allowed Deprec. Rate	Plant at 9/30/2008	Accum. Deprec. At 9/30/2008	Net Plant at 9/30/2008	Plant Additions (Per Books)	Plant Adjustments	Adjusted Plant Additions	Plant Retirements	Salvage A/D Only	Depreciation (Calculated)	Plant Balance	Accum. Deprec.	Net Plant
1	351	Organization	0.00%	$ -	$ -	$ -	$ -	$ -	$ -	$ -	$ -	$ -	$ -	$ -	$ -
2	352	Franchise	0.00%	-	-	-	-	-	-	-	-	-	-	-	-
3	353	Land	0.00%	1,783,426	-	1,783,426	-	-	-	-	-	-	1,783,426	-	1,783,426
4	354	Structures & Improvements	3.33%	18,720,541	(1,470,581)	17,249,960	(233,680)	(20,663)	(254,342)	-	-	154,790	18,466,199	(1,625,370)	16,840,828
5	355	Power Generation	5.00%	548,674	(107,121)	441,552	-	-	-	-	-	6,858	548,674	(113,980)	434,694
6	360	Collection Sewer Forced	2.00%	1,161,105	207,785	1,368,889	-	-	-	-	-	5,806	1,161,105	201,979	1,363,084
7	361	Collection Sewers Gravity	2.00%	23,094,661	(2,850,025)	20,244,636	681,674	(7,514)	674,161	-	-	117,159	23,768,822	(2,967,184)	20,801,638
8	362	Special Collecting Structures	2.00%	-	-	-	-	-	-	-	-	-	-	-	-
9	363	Customer Services	2.00%	-	-	-	-	-	-	-	-	-	-	-	-
10	364	Flow Measuring Devices	10.00%	47,019	(19,320)	27,699	-	-	-	-	-	1,175	47,019	(20,495)	26,524
11	366	Reuse Services	2.00%	3,789,468	(482,984)	3,306,484	160,400	(59)	160,341	-	-	19,348	3,949,808	(502,332)	3,447,476
12	367	Reuse Meters And Installation	8.33%	52,331	(7,610)	44,721	1,535	-	1,535	-	-	1,106	53,866	(8,716)	45,150
13	370	Receiving Wells	3.33%	860,393	(175,322)	685,072	-	-	-	-	-	7,163	860,393	(182,484)	677,909
14	371	Pumping Equipment	12.50%	1,759,801	(959,964)	799,837	7,696	-	7,696	-	-	55,114	1,767,496	(1,015,078)	752,418
15	374	Reuse Distribution Reservoirs	2.50%	62,825	(1,959)	60,866	-	-	-	-	-	393	62,825	(2,352)	60,474
16	375	Reuse Trans. and Dist. System	2.50%	414,315	(3,884)	410,431	-	-	-	-	-	2,589	414,315	(6,474)	407,842
17	380	Treatment & Disposal Equipment	5.00%	5,431,228	(1,365,496)	4,065,731	(36,423)	-	(36,423)	-	-	67,663	5,394,805	(1,433,159)	3,961,646
18	381	Plant Sewers	5.00%	47,788	(6,531)	41,257	-	-	-	-	-	597	47,788	(7,128)	40,660
19	382	Outfall Sewer Lines	3.33%	343,681	(70,253)	273,428	-	-	-	-	-	2,861	343,681	(73,114)	270,567
20	389	Other Sewer Plant & Equipment	6.67%	605,548	(41,241)	564,307	(11,446)	-	(11,446)	-	-	10,002	594,101	(51,243)	542,859
21	390	Office Furniture & Equipment	6.67%	198,772	(58,516)	140,256	12,496	-	12,496	-	-	3,419	211,268	(61,935)	149,334
22	390.1	Computers and Software	20.00%	-	-	-	-	-	-	-	-	-	-	-	-
23	391	Transportation Equipment	20.00%	26,078	(10,505)	15,573	3,368	-	3,368	-	-	1,388	29,446	(11,893)	17,553
24	392	Stores Equipment	4.00%	8,968	(2,156)	6,811	-	-	-	-	-	90	8,968	(2,246)	6,721
25	393	Tools, Shop And Garage Equip	5.00%	56,167	(8,241)	47,927	4,879	-	4,879	-	-	733	61,046	(8,973)	52,073
26	394	Laboratory Equip	10.00%	173,948	(60,590)	113,358	-	-	-	-	-	4,349	173,948	(64,939)	109,010
27	395	Power Operated Equipment	5.00%	-	-	-	-	-	-	-	-	-	-	-	-
28	396	Communication Equip	10.00%	418,996	(195,163)	223,833	-	-	-	-	-	10,475	418,996	(205,638)	213,358
29	398	Other Tangible Plant	10.00%	-	-	-	-	-	-	-	-	-	-	-	-
30		Plant Held for Future Use	0.00%	-	-	-	-	-	-	-	-	-	-	-	-
31		RUCO Total UPIS & A/D		$ 59,605,733	$ (7,689,676)	$ 51,916,057	$ 590,500	$ (28,236)	$ 562,264	$ -	$ -	$ 473,077	$ 60,167,997	$ (8,162,753)	$ 52,005,243

UTILITY PLANT IN SERVICE ("UPIS") & UPIS ACCUMULATED DEPRECIATION ADJUSTMENT NO. 1
PLANT RECONSTRUCTION SCHEDULE
#REF!

				2009								
Line No.	NARUC Account No.	Description	Allowed Deprec. Rate	Plant Additions (Per Books)	Plant Adjustments	Adjusted Plant Additions	Plant Retirements	Salvage A/D Only	Depreciation (Calculated)	Plant Balance	Accum. Deprec.	Net Plant
1	351	Organization	0.00%	$ -	$ -	$ -	$ -	$ -	$ -	$ -	$ -	$ -
2	352	Franchise	0.00%	-	-	-	-	-	-	-	-	-
3	353	Land	0.00%	68,263	-	68,263	-	-	-	1,851,690	-	1,851,690
4	354	Structures & Improvements	3.33%	643,865	(6,430)	637,435	-	-	625,538	19,103,634	(2,250,908)	16,852,725
5	355	Power Generation	5.00%	7,457	-	7,457	-	-	27,620	556,131	(141,600)	414,531
6	360	Collection Sewer Forced	2.00%	1,200	-	1,200	-	-	23,234	1,162,305	178,745	1,341,050
7	361	Collection Sewers Gravity	2.00%	3,132,384	(18,762)	3,113,622	-	-	506,513	26,882,443	(3,473,696)	23,408,747
8	362	Special Collecting Structures	2.00%	-	-	-	-	-	-	-	-	-
9	363	Customer Services	2.00%	-	-	-	-	-	-	-	-	-
10	364	Flow Measuring Devices	10.00%	-	-	-	-	-	4,702	47,019	(25,197)	21,822
11	366	Reuse Services	2.00%	107,733	-	107,733	-	-	80,073	4,057,541	(582,405)	3,475,136
12	367	Reuse Meters And Installation	8.33%	-	-	-	-	-	4,487	53,866	(13,203)	40,663
13	370	Receiving Wells	3.33%	-	-	-	-	-	28,651	860,393	(211,136)	649,258
14	371	Pumping Equipment	12.50%	59,896	-	59,896	-	-	224,681	1,827,393	(1,239,759)	587,634
15	374	Reuse Distribution Reservoirs	2.50%	-	-	-	-	-	1,571	62,825	(3,922)	58,903
16	375	Reuse Trans. and Dist. System	2.50%	-	-	-	-	-	10,358	414,315	(16,832)	397,484
17	380	Treatment & Disposal Equipment	5.00%	38,942	-	38,942	-	-	270,714	5,433,746	(1,703,873)	3,729,874
18	381	Plant Sewers	5.00%	-	-	-	-	-	2,389	47,788	(9,518)	38,270
19	382	Outfall Sewer Lines	3.33%	-	-	-	-	-	11,445	343,681	(84,558)	259,123
20	389	Other Sewer Plant & Equipment	6.67%	78,761	-	78,761	-	-	42,253	672,862	(93,496)	579,367
21	390	Office Furniture & Equipment	6.67%	-	-	-	-	-	14,092	211,268	(76,026)	135,242
22	390.1	Computers and Software	20.00%	-	-	-	-	-	-	-	-	-
23	391	Transportation Equipment	20.00%	-	-	-	-	-	5,889	29,446	(17,782)	11,664
24	392	Stores Equipment	4.00%	-	-	-	-	-	359	8,968	(2,605)	6,363
25	393	Tools, Shop And Garage Equip	5.00%	-	-	-	-	-	3,052	61,046	(12,026)	49,021
26	394	Laboratory Equip	10.00%	-	-	-	-	-	17,395	173,948	(82,333)	91,615
27	395	Power Operated Equipment	5.00%	-	-	-	-	-	-	-	-	-
28	396	Communication Equip	10.00%	-	-	-	-	-	41,900	418,996	(247,538)	171,458
29	398	Other Tangible Plant	10.00%	-	-	-	-	-	-	-	-	-
30		Plant Held for Future Use	0.00%	-	-	-	-	-	-	-	-	-
31		RUCO Total UPIS & A/D		$ 4,138,501	$ (25,192)	$ 4,113,310	$ -	$ -	$ 1,946,915	$ 64,281,306	$ (10,109,668)	$ 54,171,639

UTILITY PLANT IN SERVICE ("UPIS") & UPIS ACCUMULATED DEPRECIATION ADJUSTMENT NO. 1
PLANT RECONSTRUCTION SCHEDULE
#REF!

				2010								
Line No.	NARUC Account No.	Description	Allowed Deprec. Rate	Plant Additions (Per Books)	Plant Adjustments	Adjusted Plant Additions	Plant Retirements	Salvage A/D Only	Depreciation (Calculated)	Plant Balance	Accum. Deprec.	Net Plant
1	351	Organization	0.00%	$ -	$ -	$ -	$ -	$ -	$ -	$ -	$ -	$ -
2	352	Franchise	0.00%	-	-	-	-	-	-	-	-	-
3	353	Land	0.00%	1,613	-	1,613	-	-	-	1,853,302	-	1,853,302
4	354	Structures & Improvements	3.33%	-	-	-	-	-	636,151	19,103,634	(2,887,059)	16,216,574
5	355	Power Generation	5.00%	800	-	800	-	-	27,827	556,931	(169,427)	387,505
6	360	Collection Sewer Forced	2.00%	-	-	-	-	-	23,246	1,162,305	155,499	1,317,804
7	361	Collection Sewers Gravity	2.00%	1,324,126	(7,422)	1,316,704	-	-	550,816	28,199,148	(4,024,512)	24,174,636
8	362	Special Collecting Structures	2.00%	-	-	-	-	-	-	-	-	-
9	363	Customer Services	2.00%	15,630	-	15,630	-	-	156	15,630	(156)	15,474
10	364	Flow Measuring Devices	10.00%	-	-	-	-	-	4,702	47,019	(29,899)	17,120
11	366	Reuse Services	2.00%	-	-	-	-	-	81,151	4,057,541	(663,556)	3,393,985
12	367	Reuse Meters And Installation	8.33%	-	-	-	-	-	4,487	53,866	(17,690)	36,176
13	370	Receiving Wells	3.33%	-	-	-	-	-	28,651	860,393	(239,787)	620,607
14	371	Pumping Equipment	12.50%	36,683	-	36,683	(935,300)	-	172,261	928,776	(476,719)	452,057
15	374	Reuse Distribution Reservoirs	2.50%	-	-	-	-	-	1,571	62,825	(5,493)	57,332
16	375	Reuse Trans. and Dist. System	2.50%	-	-	-	-	-	10,358	414,315	(27,189)	387,126
17	380	Treatment & Disposal Equipment	5.00%	35,345	-	35,345	-	-	272,571	5,469,092	(1,976,444)	3,492,648
18	381	Plant Sewers	5.00%	-	-	-	-	-	2,389	47,788	(11,907)	35,881
19	382	Outfall Sewer Lines	3.33%	-	-	-	-	-	11,445	343,681	(96,003)	247,678
20	389	Other Sewer Plant & Equipment	6.67%	33,548	-	33,548	-	-	45,999	706,410	(139,495)	566,915
21	390	Office Furniture & Equipment	6.67%	10,777	-	10,777	-	-	14,451	222,046	(90,477)	131,568
22	390.1	Computers and Software	20.00%	-	-	-	-	-	-	-	-	-
23	391	Transportation Equipment	20.00%	-	-	-	-	-	5,889	29,446	(23,672)	5,775
24	392	Stores Equipment	4.00%	-	-	-	-	-	359	8,968	(2,964)	6,004
25	393	Tools, Shop And Garage Equip	5.00%	2,936	-	2,936	-	-	3,126	63,982	(15,151)	48,831
26	394	Laboratory Equip	10.00%	-	-	-	-	-	17,395	173,948	(99,728)	74,220
27	395	Power Operated Equipment	5.00%	-	-	-	-	-	-	-	-	-
28	396	Communication Equip	10.00%	-	-	-	-	-	41,900	418,996	(289,438)	129,559
29	398	Other Tangible Plant	10.00%	-	-	-	-	-	-	-	-	-
30		Plant Held for Future Use	0.00%	-	-	-	-	-	-	-	-	-
31		RUCO Total UPIS & A/D		$ 1,461,458	$ (7,422)	$ 1,454,036	$ (935,300)	$ -	$ 1,956,899	$ 64,800,042	$ (11,131,266)	$ 53,668,776

UTILITY PLANT IN SERVICE ("UPIS") & UPIS ACCUMULATED DEPRECIATION ADJUSTMENT NO. 1
PLANT RECONSTRUCTION SCHEDULE
#REF!

				2011								
Line No.	NARUC Account No.	Description	Allowed Deprec. Rate	Plant Additions (Per Books)	Plant Adjustments	Adjusted Plant Additions	Plant Retirements	Salvage A/D Only	Depreciation (Calculated)	Plant Balance	Accum. Deprec.	Net Plant
1	351	Organization	0.00%	$ -	$ -	$ -	$ -	$ -	$ -	$ -	$ -	$ -
2	352	Franchise	0.00%	-	-	-	-	-	-	-	-	-
3	353	Land	0.00%	-	-	-	-	-	-	1,853,302	-	1,853,302
4	354	Structures & Improvements	3.33%	455,088	(13,362)	441,725	-	-	643,506	19,545,359	(3,530,565)	16,014,794
5	355	Power Generation	5.00%	48,087	-	48,087	-	-	29,049	605,018	(198,475)	406,543
6	360	Collection Sewer Forced	2.00%	-	-	-	-	-	23,246	1,162,305	132,253	1,294,557
7	361	Collection Sewers Gravity	2.00%	3,563,023	(2,268)	3,560,755	-	-	599,591	31,759,903	(4,624,103)	27,135,800
8	362	Special Collecting Structures	2.00%	-	-	-	-	-	-	-	-	-
9	363	Customer Services	2.00%	35,240	-	35,240	-	-	665	50,870	(821)	50,049
10	364	Flow Measuring Devices	10.00%	-	-	-	-	-	4,702	47,019	(34,601)	12,418
11	366	Reuse Services	2.00%	-	-	-	-	-	81,151	4,057,541	(744,707)	3,312,834
12	367	Reuse Meters And Installation	8.33%	-	-	-	-	-	4,487	53,866	(22,177)	31,689
13	370	Receiving Wells	3.33%	-	-	-	-	-	28,651	860,393	(268,438)	591,955
14	371	Pumping Equipment	12.50%	44,147	(782)	43,364	(4,702)	-	118,513	967,439	(590,531)	376,908
15	374	Reuse Distribution Reservoirs	2.50%	-	-	-	-	-	1,571	62,825	(7,063)	55,762
16	375	Reuse Trans. and Dist. System	2.50%	5,005	-	5,005	-	-	10,420	419,320	(37,610)	381,710
17	380	Treatment & Disposal Equipment	5.00%	69,624	(1,025)	68,600	-	-	275,170	5,537,692	(2,251,613)	3,286,078
18	381	Plant Sewers	5.00%	-	-	-	-	-	2,389	47,788	(14,296)	33,492
19	382	Outfall Sewer Lines	3.33%	-	-	-	-	-	11,445	343,681	(107,448)	236,233
20	389	Other Sewer Plant & Equipment	6.67%	36,091	-	36,091	-	-	48,321	742,502	(187,816)	554,686
21	390	Office Furniture & Equipment	6.67%	9,304	-	9,304	-	-	15,121	231,350	(105,598)	125,752
22	390.1	Computers and Software	20.00%	-	-	-	-	-	-	-	-	-
23	391	Transportation Equipment	20.00%	-	-	-	-	-	5,775	29,446	(29,446)	-
24	392	Stores Equipment	4.00%	-	-	-	-	-	359	8,968	(3,322)	5,645
25	393	Tools, Shop And Garage Equip	5.00%	29,211	(485)	28,726	-	-	3,917	92,709	(19,069)	73,640
26	394	Laboratory Equip	10.00%	5,476	(187)	5,289	-	-	17,659	179,237	(117,388)	61,850
27	395	Power Operated Equipment	5.00%	-	-	-	-	-	-	-	-	-
28	396	Communication Equip	10.00%	-	-	-	-	-	41,900	418,996	(331,337)	87,659
29	398	Other Tangible Plant	10.00%	-	-	-	-	-	-	-	-	-
30		Plant Held for Future Use	0.00%	-	-	-	-	-	-	-	-	-
31		RUCO Total UPIS & A/D		$ 4,300,296	$ (18,109)	$ 4,282,187	$ (4,702)	$ -	$ 1,967,607	$ 69,077,528	$ (13,094,171)	$ 55,983,357

UTILITY PLANT IN SERVICE ("UPIS") & UPIS ACCUMULATED DEPRECIATION ADJUSTMENT NO. 1
PLANT RECONSTRUCTION SCHEDULE
#REF!

				2012								
Line No.	NARUC Account No.	Description	Allowed Deprec. Rate	Plant Additions (Per Books)	Plant Adjustments	Adjusted Plant Additions	Plant Retirements	Salvage A/D Only	Depreciation (Calculated)	Plant Balance	Accum. Deprec.	Net Plant
1	351	Organization	0.00%	$ -	$ -	$ -	$ -	$ -	$ -	$ -	$ -	$ -
2	352	Franchise	0.00%	-	-	-	-	-	-	-	-	-
3	353	Land	0.00%	(2,541)	(179)	(2,720)	-	-	-	1,850,582	-	1,850,582
4	354	Structures & Improvements	3.33%	5,164,696	(16,661)	5,148,034	(485,079)	-	728,499	24,208,314	(3,773,984)	20,434,330
5	355	Power Generation	5.00%	4,604	-	4,604	(6,291)	-	30,209	603,332	(222,393)	380,938
6	360	Collection Sewer Forced	2.00%	292	-	292	-	-	23,249	1,162,597	109,004	1,271,601
7	361	Collection Sewers Gravity	2.00%	165,891	(1,400)	164,491	(37,713)	-	636,466	31,886,680	(5,222,855)	26,663,825
8	362	Special Collecting Structures	2.00%	-	-	-	-	-	-	-	-	-
9	363	Customer Services	2.00%	25,356	(37)	25,320	-	-	1,271	76,190	(2,092)	74,098
10	364	Flow Measuring Devices	10.00%	-	-	-	(809)	-	4,661	46,210	(38,453)	7,757
11	366	Reuse Services	2.00%	118	-	118	-	-	81,152	4,057,660	(825,859)	3,231,801
12	367	Reuse Meters And Installation	8.33%	(4,774)	-	(4,774)	(4,339)	-	4,107	44,753	(21,945)	22,808
13	370	Receiving Wells	3.33%	-	-	-	-	-	28,651	860,393	(297,089)	563,304
14	371	Pumping Equipment	12.50%	257,054	(796)	256,258	(424,216)	-	110,432	799,481	(276,747)	522,733
15	374	Reuse Distribution Reservoirs	2.50%	-	-	-	(539)	-	1,564	62,286	(8,088)	54,198
16	375	Reuse Trans. and Dist. System	2.50%	1,013	-	1,013	-	-	10,496	420,334	(48,106)	372,228
17	380	Treatment & Disposal Equipment	5.00%	8,503	(66)	8,437	(660,659)	-	260,579	4,885,470	(1,851,533)	3,033,936
18	381	Plant Sewers	5.00%	14	-	14	-	-	2,390	47,802	(16,686)	31,116
19	382	Outfall Sewer Lines	3.33%	-	-	-	-	-	11,445	343,681	(118,892)	224,789
20	389	Other Sewer Plant & Equipment	6.67%	136,494	-	136,494	(7,497)	-	53,827	871,498	(234,145)	637,353
21	390	Office Furniture & Equipment	6.67%	44,390	-	44,390	-	-	16,911	275,740	(122,510)	153,230
22	390.1	Computers and Software	20.00%	-	-	-	-	-	-	-	-	-
23	391	Transportation Equipment	20.00%	4,051	-	4,051	-	-	405	33,497	(29,852)	3,646
24	392	Stores Equipment	4.00%	-	-	-	-	-	359	8,968	(3,681)	5,287
25	393	Tools, Shop And Garage Equip	5.00%	53,206	(284)	52,922	-	-	5,958	145,631	(25,027)	120,604
26	394	Laboratory Equip	10.00%	7,144	(34)	7,111	-	-	18,279	186,348	(135,667)	50,681
27	395	Power Operated Equipment	5.00%	28,090	-	28,090	-	-	702	28,090	(702)	27,388
28	396	Communication Equip	10.00%	-	-	-	-	-	41,900	418,996	(373,237)	45,759
29	398	Other Tangible Plant	10.00%	-	-	-	-	-	-	-	-	-
30		Plant Held for Future Use	0.00%	-	-	-	-	-	-	-	-	-
31		RUCO Total UPIS & A/D		$ 5,893,603	$ (19,456)	$ 5,874,147	$ (1,627,142)	$ -	$ 2,073,512	$ 73,324,532	$ (13,540,541)	$ 59,783,991
31		Company As Filed Excluding PTY Plant		$ 5,893,603	$ (19,456)	$ 5,874,147	$ 1,627,142	$ -	$ 2,077,158	$ 73,324,532	$ 13,544,186	$ 59,780,346
32		RUCO Adjustments Excluding PTY Plant		$ -	$ -	$ -	$ -	$ -	$ (3,646) [1]	$ -	$ 3,646	$ 3,646

Notes:

LPSCO 2012 Depre. Exp. - Acct. 391 - Transportation Equipment (Company Fully Depreciated 2012 Plant Addition of $4,051).....	$ 4,051
RUCO 2012 Depre. Exp. - Acct. 391 - Transportation Equipment (HY Convention for 2012 $4,051 Plant Addition).....	405
Difference Between LPSCO and RUCO A/D Calculations.....	$ (3,646) [1]

UTILITY PLANT IN SERVICE ("UPIS") & UPIS ACCUMULATED DEPRECIATION ADJUSTMENT NO. 1
PLANT RECONSTRUCTION SCHEDULE
#REF!

				2012 - Post-Test Year Plant Additions								
Line No.	NARUC Account No.	Description	Allowed Deprec. Rate	Plant Additions Estimated	Plant Adjustments	Adjusted Plant Additions	Plant Retirements Estimated	Salvage A/D Only	Depreciation (Calculated)	Plant Balance	Accum. Deprec.	Net Plant
1	351	Organization	0.00%	$ -	$ -	$ -	$ -	$ -	$ -	$ -	$ -	$ -
2	352	Franchise	0.00%	-	-	-	-	-	-	-	-	-
3	353	Land	0.00%	-	-	-	-	-	-	1,850,582	-	1,850,582
4	354	Structures & Improvements	3.33%	-	-	-	-	-	-	24,208,314	(3,773,984)	20,434,330
5	355	Power Generation	5.00%	-	-	-	-	-	-	603,332	(222,393)	380,938
6	360	Collection Sewer Forced	2.00%	-	-	-	-	-	-	1,162,597	109,004	1,271,601
7	361	Collection Sewers Gravity	2.00%	-	-	-	-	-	-	31,886,680	(5,222,855)	26,663,825
8	362	Special Collecting Structures	2.00%	-	-	-	-	-	-	-	-	-
9	363	Customer Services	2.00%	-	-	-	-	-	-	76,190	(2,092)	74,098
10	364	Flow Measuring Devices	10.00%	-	-	-	-	-	-	46,210	(38,453)	7,757
11	366	Reuse Services	2.00%	-	-	-	-	-	-	4,057,660	(825,859)	3,231,801
12	367	Reuse Meters And Installation	8.33%	-	-	-	-	-	-	44,753	(21,945)	22,808
13	370	Receiving Wells	3.33%	-	-	-	-	-	-	860,393	(297,089)	563,304
14	371	Pumping Equipment	12.50%	-	-	-	-	-	-	799,481	(276,747)	522,733
15	374	Reuse Distribution Reservoirs	2.50%	-	-	-	-	-	-	62,286	(8,088)	54,198
16	375	Reuse Trans. and Dist. System	2.50%	-	-	-	-	-	-	420,334	(48,106)	372,228
17	380	Treatment & Disposal Equipment	5.00%	1,000,000	-	1,000,000	(300,000)	-	17,500	5,585,470	(1,569,033)	4,016,436
18	381	Plant Sewers	5.00%	-	-	-	-	-	-	47,802	(16,686)	31,116
19	382	Outfall Sewer Lines	3.33%	-	-	-	-	-	-	343,681	(118,892)	224,789
20	389	Other Sewer Plant & Equipment	6.67%	-	-	-	-	-	-	871,498	(234,145)	637,353
21	390	Office Furniture & Equipment	6.67%	-	-	-	-	-	-	275,740	(122,510)	153,230
22	390.1	Computers and Software	20.00%	-	-	-	-	-	-	-	-	-
23	391	Transportation Equipment	20.00%	-	-	-	-	-	-	33,497	(29,852)	3,646
24	392	Stores Equipment	4.00%	-	-	-	-	-	-	8,968	(3,681)	5,287
25	393	Tools, Shop And Garage Equip	5.00%	-	-	-	-	-	-	145,631	(25,027)	120,604
26	394	Laboratory Equip	10.00%	-	-	-	-	-	-	186,348	(135,667)	50,681
27	395	Power Operated Equipment	5.00%	-	-	-	-	-	-	28,090	(702)	27,388
28	396	Communication Equip	10.00%	-	-	-	-	-	-	418,996	(373,237)	45,759
29	398	Other Tangible Plant	10.00%	-	-	-	-	-	-	-	-	-
30		Plant Held for Future Use	0.00%	-	-	-	-	-	-	-	-	-
31		*RUCO Total UPIS & A/D*		$ 1,000,000	$ -	$ 1,000,000	$ (300,000)	$ -	$ 17,500	$ 74,024,532	$ (13,258,041)	$ 60,766,491
31		UPIS Per Company As Filed - Including Post-Test Year Plant								74,024,532		
32		RUCO's UPIS Adjustment								$ -		
33		A/D Per Company As Filed									(13,244,186)	
34		RUCO's (Increase)/Decrease A/D Adjustment									$ (13,854)	

UTILITY PLANT IN SERVICE ("UPIS") ADJUSTMENT NO. 2
SUMMARY OF RECLASSIFICATIONS OF UTILITY PLANT IN SERVICE ("UPIS")

Line No.	Acct. No.	Description	[A] Company UPIS As Filed	[B] RUCO UPIS Reclassification Adjustments	[C] RUCO Recommended UPIS Balances
1	351	Organization	$ -	$ -	$ -
2	352	Franchise	-	-	-
3	353	Land	1,850,582	-	1,850,582
4	354	Structures & Improvements	24,208,314	(483,546)	23,724,768
5	355	Power Generation	603,332	-	603,332
6	360	Collection Sewer Forced	1,162,597	-	1,162,597
7	361	Collection Sewers Gravity	31,886,680	-	31,886,680
8	362	Special Collecting Structures	-	-	-
9	363	Customer Services	76,190	-	76,190
10	364	Flow Measuring Devices	46,210	36,618	82,828
11	366	Reuse Services	4,057,660	-	4,057,660
12	367	Reuse Meters And Installation	44,753	-	44,753
13	370	Receiving Wells	860,393	-	860,393
14	371	Pumping Equipment	799,481	55,670	855,150
15	374	Reuse Distribution Reservoirs	62,286	-	62,286
16	375	Reuse Trans. and Dist. System	420,334	-	420,334
17	380	Treatment & Disposal Equipment	5,585,470	470,592	6,056,062
18	381	Plant Sewers	47,802	-	47,802
19	382	Outfall Sewer Lines	343,681	-	343,681
20	389	Other Sewer Plant & Equipment	871,498	(43,005)	828,494
21	390	Office Furniture & Equipment	275,740	-	275,740
22	390.1	Computers and Software	-	-	-
23	391	Transportation Equipment	33,497	-	33,497
24	392	Stores Equipment	8,968	-	8,968
25	393	Tools, Shop And Garage Equip	145,631	(15,681)	129,950
26	394	Laboratory Equip	186,348	836	187,184
27	395	Power Operated Equipment	28,090	(21,485)	6,605
28	396	Communication Equip	418,996	-	418,996
29	398	Other Tangible Plant	-	-	-
34		Plant Held for Future Use	-	-	-
35		Totals	$ 74,024,532	$ 0	$ 74,024,532

References:

Per Company Responses to Staff DR 11.2

UPIS ACCUMULATED DEPRECIATION ADJUSTMENT NO. 2
SUMMARY OF RECLASSIFICATIONS OF ACCUMULATED DEPRECIATION ("A/D")

Line No.	Acct. No.	Description	[A] Company Accum. Depre. As Filed	[B] RUCO Accum. Depre. Reclassification Adjustments	[C] RUCO Recommended Accum. Depre. Balances
1	301	Organization Cost	$ -	$ -	$ -
2	302	Franchise Cost	-	-	-
3	303	Land and Land Rights	-	-	-
4	304	Structures & Improvements	(3,773,984)	50,387	(3,723,597)
5	305	Collecting & Impounding Reservoirs	(222,393)	-	(222,393)
6	306	Lake, River, Canal Intakes	109,004	-	109,004
7	307	Wells & Springs	(5,222,855)	-	(5,222,855)
8	308	Infiltration Galleries	-	-	-
9	309	Raw Water Supply Mains	(2,092)	-	(2,092)
10	310	Power Generation Equipment	(38,453)	(12,816)	(51,269)
11	311	Pumping Equipment	(825,859)	-	(825,859)
12	320	Water Treatment Equipment	(21,945)	-	(21,945)
13	320.1	Water Treatment Plants	(297,089)	-	(297,089)
14	320.2	Solution Chemical Feeders	(276,747)	(5,372)	(282,119)
15	330	Distribution Reservoirs & Standpipes	(8,088)	-	(8,088)
16	330.1	Storage Tanks	(48,106)	-	(48,106)
17	330.2	Pressure Tanks	(1,551,533)	(75,408)	(1,626,941)
18	331	Transmission & Distribution Mains	(16,686)	-	(16,686)
19	333	Services	(118,892)	-	(118,892)
20	334	Meters	(234,145)	10,039	(224,106)
21	335	Hydrants	(122,510)	-	(122,510)
22	336	Backflow Prevention Devices	-	-	-
23	339	Other Plant & Misc Equipment	(33,497)	-	(33,497)
24	340	Office Furniture & Equipment	(3,681)	-	(3,681)
25	340.1	Computers & Software	(25,027)	392	(24,635)
26	341	Transportation Equipment	(135,667)	(293)	(135,959)
27	342	Stores Equipment	(702)	537	(165)
28	343	Tools, Shop & Garage Equipment	(373,237)	-	(373,237)
29	344	Laboratory Equipment	-	-	-
34		Plant Held for Future Use	-	-	-
35		Totals	$ (13,244,186)	$ (32,534)	$ (13,276,720)

References:

Per Company Responses to Staff DR DH 11-2

UTILITY PLANT IN SERVICE ("UPIS") & UPIS ACCUMULATED DEPRECIATION ADJUSTMENTS NO. 3
RECLASSIFY PLANT INVOICES FROM WATER TO WASTEWATER DIVISION

Line No.		Description	Amount
		Maricopa County Environmental Service Department ("MCESD") Permit Fees:	
1	1	Company Recorded Two MCESD Permit Fees to Water Division Account 304 - Structures & Improvements	$ 6,000
2		RUCO Recommended Removal of Two MCESD Permit Fees from Water Acct. 304	(6,000)
3		RUCO's Adjustment to Remove and Reclassify Two MCESD Permit Fees to Wastewater Division Acct. 354	$ 6,000
		Adjust Accumulated Depreciation:	
4		2011 Accumulated Depreciation As Filed By Company: Account 304 - Structures & Improvements	$ 300
5		RUCO Recommended Accumulated Depreciation For Removal and Reclassification of Two MCESD Permit Fees	(300)
6		RUCO's Adjustment to Remove and Reclassify Two MCESD Permit Fees to Acct. 354	$ (300)
		Errol L. Montgomery & Associates	
7	2	Company Recorded Invoice to W Division Account 304 - Structures & Improvements	$ 6,156
8		RUCO Recommended Removal of Errol L. Montgomery & Associates from Water Acct. 304	(6,156)
9		RUCO's Adjustment to Remove and Reclassify Eroll L. Montgomery & Associates Invoice to Wastewater Division Acct. 354	$ 6,156
		Adjust Accumulated Depreciation:	
10		2011 Accumulated Depreciation As Filed By Company: Account 304 - Structures & Improvements	$ 308
11		RUCO Recommended Accumulated Depreciation to Remove and Reclassify Errol L. Montgomery & Associates Invoice	(308)
12		RUCO's Adjustment to Remove and Reclassify Eroll L. Montgomery & Associates to Wastewater Division - Acct. 354	$ (308)
13		Total UPIS Invoices Transferred from Water to Wastewater Division (See Reference Section Below)	$ 12,156
14		Total Accumulated Depreciation Associated with Transferred Invoices from Water to Wastewater Division (See Reference Section Below)	$ (607)

References:

1 LPSCO Response to Staff DR DH - 4.6
2 LPSCO Response to Staff DR DH - 4.7

UTILITY PLANT IN SERVICE ("UPIS") & UPIS ACCUMULATED DEPRECIATION ADJUSTMENTS NO. 4
REMOVE DUPLICATE INVOICES OF PLANT ADDITIONS

Line No.		Description	Amount
		Adjust Plant Additions:	
1		2008 Plant Addition As Filed By Company: Account 354 - Structures & Improvements	$ (233,680)
2		RUCO Recommended Plant Addition After Removal of Duplicate Invoice	(238,261)
3		RUCO's Plant Adjustment to Remove Duplicate Invoice	$ (4,581)
		Adjust Accumulated Depreciation:	
4		2008 Accumulated Depreciation As Filed By Company: Account 354 - Structures & Improvements	$ 629
5		RUCO Recommended Accumulated Depreciation For Removal of Duplicate Invoice	-
6		RUCO's Adjustment to Remove Duplicate Invoice	$ 629
		Adjust Plant Additions:	
7	1	2009 Plant Addition As Filed By Company: Account 353 - Land	$ 68,263
8		RUCO Recommended Plant Addition After Removal of Duplicate Invoice	64,855
9		RUCO's Plant Adjustment to Remove Duplicate Invoice	$ (3,409)
		Adjust Accumulated Depreciation:	
10		2009 Accumulated Depreciation As Filed By Company: Account 353 - Land	$ -
11		RUCO Recommended Accumulated Depreciation For Removal of Duplicate Invoice	-
12		RUCO's Adjustment to Remove Duplicate Invoice	$ -
		Adjust Plant Additions:	
13	2	2010 Plant Addition As Filed By Company: Account 355 - Power Generation Equipment	$ 800
14		RUCO Recommended Plant Addition After Removal of Duplicate Invoice	400
15		RUCO's Plant Adjustment to Remove Duplicate Invoice	$ (400)
		Adjust Accumulated Depreciation:	
16		2010 Accumulated Depreciation As Filed By Company: Account 355 - Power Generation Equipment	$ 50
17		RUCO Recommended Accumulated Depreciation For Removal of Duplicate Invoice	-
18		RUCO's Adjustment to Remove Duplicate Invoice	$ 50
		Adjust Plant Additions:	
19	3	2010 Plant Addition As Filed By Company: Account 389 - Other Sewer Plant & Equipment	$ 864
20		RUCO Recommended Plant Addition After Removal of Duplicate Invoice	-
21		RUCO's Plant Adjustment to Remove Duplicate Invoice	$ (864)
		Adjust Accumulated Depreciation:	
22		2010 Accumulated Depreciation As Filed By Company: Account 389 - Other Sewer Plant & Equipment	$ 144
23		RUCO Recommended Accumulated Depreciation For Removal of Duplicate Invoice	-
24		RUCO's Adjustment to Remove Duplicate Invoice	$ 144

References:

1 Per Company Response to Staff's Wastewater DR 1.12
2 Per Company Response to Staff's Wastewater DR 2.65
3 Per Company Response to DR 3.16

UTILITY PLANT IN SERVICE ("UPIS") & UPIS ACCUMULATED DEPRECIATION ADJUSTMENTS NO. 5
USED ONLY FOR WATER DIVISION

Line No.	Asset Index No.	Description	Amount

References:

UTILITY PLANT IN SERVICE ("UPIS") & UPIS ACCUMULATED DEPRECIATION ADJUSTMENTS NO. 6
REMOVE NON-USED & USEFUL PLANT INVOICES

Line No.	Asset Index No.	Description	Amount
		Account 353 - Land: Remove 2009 Plant Additions as Non-Used & Useful Per LPSCO Response to Staff DR DH 11-5:	
1	4708	Hydro Engineering Solutions, LLC	(3,995)
2	4709	Hydro Engineering Solutions, LLC	(1,194)
3	4751	Hydro Engineering Solutions, LLC	(2,620)
4	4749	Hydro Engineering Solutions, LLC	(3,409)
5		RUCO's Recommended Adjustment	(11,217)
		Accumulated Depreciation Adjustment Related to the Above Invoices:	
6		Per RUCO - There is no accumulated depreciation adjustment because the Invoices were charged to non-depreciable Account 353 - Land	-
7		RUCO's Recommended Adjustment	-

References:
Per Company Response to Staff's DR DH 11-5

UPIS ACCUMULATED DEPRECIATION ADJUSTMENTS NO. 7
ADDITIONAL ACCUMULATED DEPRECIATION ("A/D") FOR LATE RECORDED PLANT ADDITIONS

Line No.	Acct. No.	Description	[A] Company Accum. Depre. As Filed	[B] RUCO Additional Accum. Depre. for Late Recorded UPIS	[C] RUCO Recommended Accum. Depre. Balances
1	351	Organization Cost	$ -	$ -	$ -
2	352	Franchise Cost	-	-	-
3	353	Land and Land Rights	-	-	-
4	354	Structures & Improvements	(3,773,984)	(6,478)	(3,780,463)
5	355	Collecting & Impounding Reservoirs	(222,393)	-	(222,393)
6	360	Lake, River, Canal Intakes	109,004	-	109,004
7	361	Wells & Springs	(5,222,855)	(407)	(5,223,263)
8	362	Infiltration Galleries	-	-	-
9	363	Raw Water Supply Mains	(2,092)	-	(2,092)
10	364	Power Generation Equipment	(38,453)	-	(38,453)
11	366	Pumping Equipment	(825,859)	(23)	(825,882)
12	367	Water Treatment Equipment	(21,945)	-	(21,945)
13	370	Water Treatment Plants	(297,089)	-	(297,089)
14	371	Solution Chemical Feeders	(276,747)	-	(276,747)
15	374	Distribution Reservoirs & Standpipes	(8,088)	-	(8,088)
16	375	Storage Tanks	(48,106)	(803)	(48,908)
17	380	Pressure Tanks	(1,551,533)	-	(1,551,533)
18	381	Transmission & Distribution Mains	(16,686)	-	(16,686)
19	382	Services	(118,892)	-	(118,892)
20	389	Meters	(234,145)	-	(234,145)
21	390	Hydrants	(122,510)	-	(122,510)
22	390.1	Backflow Prevention Devices	-	-	-
23	391	Other Plant & Misc Equipment	(33,497)	-	(33,497)
24	392	Office Furniture & Equipment	(3,681)	-	(3,681)
25	393	Computers & Software	(25,027)	-	(25,027)
26	394	Transportation Equipment	(135,667)	-	(135,667)
27	395	Stores Equipment	(702)	-	(702)
28	396	Tools, Shop & Garage Equipment	(373,237)	-	(373,237)
29	398	Laboratory Equipment	-	-	-
34		Plant Held for Future Use	-	-	-
35		Totals	$ (13,244,186)	$ (7,711)	$ (13,251,897)

References:
Per Company Responses to Staff DR 16.1

UPIS ACCUMULATED DEPRECIATION ADJUSTMENTS NO. 8
USED ONLY FOR WATER DIVISION

Line No.	Description	Amount
1		$ -
2		-
3		$ -

References:

RATE BASE ADJUSTMENT NO. 3
INTENTIONALLY LEFT BLANK

Line No.	Description	Amount
	Water Division:	
1		$ -
2		-
3		$ -
	Wastewater Division:	
4		$ -
5		-
6		$ -

References:

RATE BASE ADJUSTMENT NO. 4
CONTRIBUTIONS IN AID OF CONSTRUCTION ("CIAC") & AMORTIZATIONS RECONSTRUCTION SCHEDULE

Line No.	Description	Amount
	Gross CIAC:	
1	Company Gross CIAC as Filed	$ (28,470,485)
2	RUCO Recommended Gross CIAC	(28,376,915)
3	RUCO Recommended Increase/(Decrease) Adjustment	$ 93,570
	Accumulated Amoritization of CIAC:	
4	Company Accumulated Amortization of CIAC as Filed	4,446,775
5	RUCO Recommended Accumulated Amortization of CIAC	4,153,300
6	RUCO Recommended Increase/(Decrease) Adjustment	$ (293,475)
7	RUCO Net Increase/Decrease Adjustment	$ (199,905)

References:
Company Response to Staff DR JMM 2-23
Company Schedule B-2, pages 5.1 - 5.3
See TJC Testimony

RATE BASE ADJUSTMENT NO. 4
CONTRIBUTIONS IN AID OF CONSTRUCTION ("CIAC") & AMORTIZATIONS RECONSTRUCTION SCHEDULE

				[A]	[B]	[C]	[D]	[E]	[F]	[G]	[H]	[I]
				Per Decision 72026			2008 (3 Months - October 1 through December 31, 2008)					
Line No.	NARUC Account No.	Description	Allowed Amort. Rate	Gross CIAC Balance at 9/30/2008	CIAC Amortization Balance 9/30/2008	CIAC Net Balance 9/30/2008	CIAC Activity	CIAC Adjustments	Adjusted CIAC Activity	RUCO Amortization (Calculated)	Gross CIAC Balance at 12/31/2008	Accum. Amortization 12/31/2008
1	361	Collection Sewers Gravity Contributed	2.00%	$ (17,134,023)	$ -	$ (15,557,435)	$ (706,018)	$ -	$ (706,018)	$ -	$ (17,840,041)	$ -
2		Current Period Amortization								87,435		
3		Accumulated Amortization Balance			1,576,589							1,664,024
4	363	Customer Services Contributed	2.00%	(1,509,762)	-	(1,014,234)	(140,400)	-	(140,400)	-	(1,650,162)	-
5		Current Period Amortization								7,900		
6		Accumulated Amortization Balance			495,529							503,428
7		RUCO Gross CIAC & Amortizations		$ (18,643,786)	$ 2,072,117	$ (16,571,669)	$ (846,418)	$ -	$ (846,418)	$ 95,335	$ (19,490,203)	$ 2,167,452
8		Company As Filed		$ 18,643,786	$ (2,072,117)	$ 16,571,669	$ 846,418	$ -	$ 846,418	$ (381,340)	$ 19,583,549	$ (2,453,457)
9		RUCO Gross CIAC & Total Accum. Amortization Increase/(Decrease) Adjustments		$ -	$ -	$ -	$ -	$ -	$ -	$ (286,005)	$ 93,346	$ (286,005)

References:
Company Response to Staff DR JMM 2-23
Company Schedule B-2, pages 5.1 - 5.3
See TJC Testimony

RATE BASE ADJUSTMENT NO. 4
CONTRIBUTIONS IN AID OF CONSTRUCTION ("CIAC") & AMORTIZATIONS RECONSTRUCTION SCHEDULE

				[A]	[B]	[C]	[D]	[E]	[F]	[G]	[H]
				2009							
Line No.	NARUC Account No.	Description	Allowed Amort. Rate	Beginning Gross CIAC 1/1/2009	Beginning Amortization Balance 1/1/2009	CIAC Activity	CIAC Adjustments	Adjusted CIAC Activity	RUCO Amortization (Calculated)	Gross CIAC Balance at 12/31/2009	Accum. Amortization 12/31/2009
1	361	Collection Sewers Gravity Contributed	2.00%	$ (17,840,041)	$ -	$ (2,870,602)	$ -	$ (2,870,602)	$ -	$ (20,710,643)	$ -
2		Current Period Amortization							385,507		
3		Accumulated Amortization Balance			1,664,024						2,049,531
4	363	Customer Services Contributed	2.00%	(1,650,162)	-	(698,724)	-	(698,724)		(2,348,887)	
5		Current Period Amortization							39,990		
6		Accumulated Amortization Balance			503,428						543,419
7		RUCO Gross CIAC & Amortizations		$ (19,490,203)	$ 2,167,452	$ (3,569,326)	$ -	$ (3,569,326)	$ 425,497	$ (23,059,530)	$ 2,592,949
8		Company As Filed		$ 19,583,549	$ (2,453,457)	$ 3,569,326	$ -	$ 3,569,326	$ (427,364)	$ 23,152,876	$ (2,880,822)
9		RUCO Gross CIAC & Total Accum. Amortization Increase/(Decrease) Adjustments		$ (93,346)	$ 4,620,909	$ -	$ -	$ -	$ (1,867)	$ 93,346	$ (287,872)

References:
Company Response to Staff DR JMM 2-23
Company Schedule B-2, pages 5.1 - 5.3
See TJC Testimony

RATE BASE ADJUSTMENT NO. 4
CONTRIBUTIONS IN AID OF CONSTRUCTION ("CIAC") & AMORTIZATIONS RECONSTRUCTION SCHEDULE

				[A]	[B]	[C]	[D]	[E]	[F]	[G]	[H]
				2010							
Line No.	NARUC Account No.	Description	Allowed Amort. Rate	Beginning Gross CIAC 1/1/2010	Beginning Amortization Balance 1/1/2010	CIAC Activity	CIAC Adjustments	Adjusted CIAC Activity	RUCO Amortization (Calculated)	Gross CIAC Balance at 12/31/2010	Accum. Amortization 12/31/2010
1	361	Collection Sewers Gravity Contributed	2.00%	$ (20,710,643)	$ -	$ (1,079,042)	$ -	$ (1,079,042)	$ -	$ (21,789,685)	$ -
2		Current Period Amortization							425,003		
3		Accumulated Amortization Balance			2,049,531						2,474,534
4	363	Customer Services Contributed	2.00%	(2,348,887)	-	(15,630)	-	(15,630)		(2,364,517)	
5		Current Period Amortization							47,134		
6		Accumulated Amortization Balance			543,419						590,553
7		RUCO Gross CIAC & Amortizations		$ (23,059,530)	$ 2,592,949	$ (1,094,672)	$ -	$ (1,094,672)	$ 472,137	$ (24,154,202)	$ 3,065,087
8		Company As Filed		$ 23,152,876	$ (2,880,822)	$ 1,094,672	$ -	$ 1,094,672	$ (474,004)	$ 24,247,548	$ (3,354,826)
9		RUCO Gross CIAC & Total Accum. Amortization Increase/(Decrease) Adjustments		$ (93,346)	$ 5,473,771	$ -	$ -	$ -	$ (1,867)	$ 93,346	$ (289,739)

References:
Company Response to Staff DR JMM 2-23
Company Schedule B-2, pages 5.1 - 5.3
See TJC Testimony

RATE BASE ADJUSTMENT NO. 4
CONTRIBUTIONS IN AID OF CONSTRUCTION ("CIAC") & AMORTIZATIONS RECONSTRUCTION SCHEDULE

Line No.	NARUC Account No.	Description	Allowed Amort. Rate	[A] Beginning Gross CIAC 1/1/2011	[B] Beginning Amortization Balance 1/1/2011	[C] CIAC Activity	[D] CIAC Adjustments	[E] Adjusted CIAC Activity	[F] RUCO Amortization (Calculated)	[G] Gross CIAC Balance at 12/31/2011	[H] Accum. Amortization 12/31/2011
				2011							
1	361	Collection Sewers Gravity Contributed	2.00%	$ (21,789,685)	$ -	$ (4,063,446)	$ 107,523	$ (3,955,923)	$ -	$ (25,745,608)	$ -
2		Current Period Amortization							475,353		
3		Accumulated Amortization Balance			2,474,534						2,949,887
4	363	Customer Services Contributed	2.00%	(2,364,517)	-	(34,990)	-	(34,990)		(2,399,507)	
5		Current Period Amortization							47,640		
6		Accumulated Amortization Balance			590,553						638,193
7		RUCO Gross CIAC & Amortizations		$ (24,154,202)	$ 3,065,087	$ (4,098,436)	$ 107,523	$ (3,990,913)	$ 522,993	$ (28,145,114)	$ 3,588,080
8		Company As Filed		$ 24,247,548	$ (3,354,826)	$ 4,098,436	$ (107,523)	$ 3,990,913	$ (524,860)	$ 28,238,460	$ (3,879,686)
9		RUCO Gross CIAC & Total Accum. Amortization Increase/(Decrease) Adjustments		$ (93,346)	$ 6,419,913	$ -	$ -	$ -	$ (1,867)	$ 93,346	$ (291,606)

References:
Company Response to Staff DR JMM 2-23
Company Schedule B-2, pages 5.1 - 5.3
See RBM Testimony

RATE BASE ADJUSTMENT NO. 4
CONTRIBUTIONS IN AID OF CONSTRUCTION ("CIAC") & AMORTIZATIONS RECONSTRUCTION SCHEDULE

Line No.	NARUC Account No.	Description	Allowed Amort. Rate	[A] Beginning Gross CIAC 1/1/2012	[B] Beginning Amortization Balance 1/1/2012	[C] CIAC Activity	[D] CIAC Adjustments	[E] Adjusted CIAC Activity	[F] RUCO Amortization (Calculated)	[G] Gross CIAC Balance at 12/31/2012	[H] Accum. Amortization 12/31/2012
				2012							
1	361	Collection Sewers Gravity Contributed	2.00%	$ (25,745,608)	$ -	$ -	$ -	$ -	$ -	$ (25,745,608)	$ -
2		Current Period Amortization							514,912		
3		Accumulated Amortization Balance			2,949,887						3,464,799
4	363	Customer Services Contributed	2.00%	(2,399,507)	-	(231,801)	-	(231,801)		(2,631,307)	
5		Current Period Amortization							50,308		
6		Accumulated Amortization Balance			638,193						688,501
7		RUCO Gross CIAC & Amortizations		$ (28,145,114)	$ 3,588,080	$ (231,801)	$ -	$ (231,801)	$ 565,220	$ (28,376,915)	$ 4,153,300
8		Company As Filed		$ 28,238,460	$ (3,879,686)	$ 232,025	$ -	$ 232,025	$ (567,089)	$ 28,470,485	$ (4,446,775)
9		RUCO Gross CIAC & Total Accum. Amortization Increase/(Decrease) Adjustments		$ (93,346)	$ (291,606)	$ 224	$ -	$ 224	$ (1,869)	$ 93,570	$ (293,475)

References:
Company Response to Staff DR JMM 2-23
Company Schedule B-2, pages 5.1 - 5.3
See RBM Testimony

RATE BASE ADJUSTMENT NO. 5
CUSTOMER METER DEPOSITS

Line No.		Description	Amount
		Water Division:	
1	1	Customer Meter Deposits As Filed by Company	$ (1,271,802)
2		RUCO Recommended 13-Month Average - Meter Deposits	(1,432,787)
3		RUCO's Recommended (Increase)/Decrease Adjustment	$ (160,986)
		Wastewater Division:	
4	1	Customer Meter Deposits As Filed by Company	$ (95,892)
5		RUCO Recommended 13-Month Average - Meter Deposits	(81,661)
6		RUCO's Recommended (Increase)/Decrease Adjustment	$ 14,231

References:
1 Per Company Response to Staff's DR 2.68

RATE BASE ADJUSTMENT NO. 6
CUSTOMER SECURITY DEPOSITS

Line No.		Description	Amount
		Water Division:	
1	1 & 2	Customer Security Deposits As Filed by Company	$ (140,147)
2		RUCO Recommended 13-Month Average - Customer Security Deposits	(145,428)
3		RUCO's Recommended (Increase)/Decrease Adjustment	$ (5,281)
		Wastewater Division:	
4	1 & 2	Customer Security Deposits As Filed by Company	$ 155,440
5		RUCO Recommended 13-Month Average - Customer Security Deposits	163,993
6		RUCO's Recommended (Increase)/Decrease Adjustment	$ (8,553)

References:
1 Per Company Response to Staff's DR 2.68
2 Per Company Response to DR 3.07

RATE BASE ADJUSTMENT NO. 7
INTENTIONALLY LEFT BLANK

Line No.	Description	Amount
	Water Division:	
1		$ -
2		-
3		$ -
	Wastewater Division:	
4		$ -
5		-
6		$ -

References:

RATE BASE ADJUSTMENT NO. 8
INTENTIONALLY LEFT BLANK

Line No.	Description	Amount
	Water Division:	
1		$ -
2		-
3		$ -
	Wastewater Division:	
4		$ -
5		-
6		$ -

References:

RATE BASE ADJUSTMENT NO. 9
ACCUMULATED DEFERRED INCOME TAX ("ADIT")

Line No.		Deferred Income Tax as of December 31, 2012	Water & Sewer Adjusted Book Value	Water & Sewer Tax Value	Probability of Realization of Future Tax Benefit	Deductible TD (Taxable TD) Expected to be Realized	Effective Tax Rate	Future Tax Asset Current	Future Tax Asset Non Current	Future Tax Liability Current	Future Tax Liability Non Current
1		Plant-in-Service	$ 161,843,075 [1]								
2		Accum. Deprec.	(32,314,575) [1]								
3		CIAC	(59,777,267) [3]								
4	Federal	Fixed Assets	$ 69,751,233	$ 47,269,626 [2]	100.0%	$ (22,481,607)	31.79%		-		(7,146,903)
5	State	Fixed Assets	$ 69,751,233	$ 73,927,914 [2]	100.0%	$ 4,176,681	6.50%		271,484		-
6	Fed & State	AIAC		14,120,318 [4]	100.0%	$ 14,120,318 [4]	38.29%		$ 5,406,670		
								$ -	$ 5,678,154	$ -	$ (7,146,903)
7		Net Asset (Liability)						$ (1,468,749)			
8		Allocation Factor - Wastewater-Division (based on rate base before ADIT)						0.4191			
9		Net Asset (Liability) Wastewater Division						$ (615,589)			
10		Adjusted Test Year DIT Asset (Liability) as Filed						$ (982,318)			
11		Adjustment to DIT						$ 366,728			

Footnotes - See Next Page

RATE BASE ADJUSTMENT NO. 9 (Continued)
ACCUMULATED DEFERRED INCOME TAX ("ADIT")

Line No.		FEDERAL			STATE		
	[1] **Per adjusted book balances**						
	2 Computation of Net Tax Value December 31, 2012						
	Based on 2012 Tax Depreciation report (December 31, 2012)						
1	Unadjusted Cost at December 31, 2012 per federal and state tax depr. report	$ 85,943,311			$ 84,887,919		
2	Reconciling Items not on tax report:						
3	Land on Tax and not on included in adjusted plant balance	(1,055,392)			-		
4	FA Accrual on not on tax report	6,391,333			6,391,333		
5	Proposed Plant retirements	(1,712,539)			(1,712,539)		
6	Post Test Year plant	1,000,000			1,000,000		
7	Post Test Year Plant Retirement	(300,000)			(300,000)		
8	Net Unadjusted Cost tax Basis at December 31, 2012			$ 90,266,713			$ 90,266,713
	Reductions						
9	Basis Reduction 2012 and Prior Years per federal and state tax depr. report	$ (25,331,094)			$ -		
10	Accumulated Depreciation 2012 and prior per federal and state tax depr. report	(19,678,532)			(18,351,338)		
11	*Proposed Plant Retirements*	1,712,539			1,712,539		
12	Post Test Year retirement	300,000			300,000		
13	Net Reductions through December 31, 2012			(42,997,087)			(16,338,799)
14	Net tax value of plant-in-service at December 31, 2012			$ 47,269,626			$ 73,927,914
	[3] **CIAC (including impact of change to probability of realization)**						
15	Gross CIAC per adjusted book balances		$ 35,802,727				
	CIAC reductions/addtions						
16	A.A per adjusted book balances	$ (5,439,154)					
17		-					
			(5,439,154)				
18	Net CIAC before unrealized AIAC			$ 30,363,572			
	Unrealized AIAC Component						
19	Adjusted Net AIAC (see footnote 4 below)		$ 42,019,564				
20	Unrealized AIAC Component % (1-Realized AIAC Component)		70.0%				
21				$ 29,413,695			
22	Total realizable CIAC			$ 59,777,267			
	[4] **AIAC (including impact of change in probability of realization)**						
23	AIAC per adjusted book balances		$ 42,019,564				
24	AIAC reductions/additions						
25	Net AIAC before unrealized portion			$ 42,019,564			
26	Less: Unrealized AIAC (from Note 3, above)			$ (29,413,695)			
27	Net realizable AIAC			$ 12,605,869			
28	Meter and Service Line Installation Charges per adjusted book balances			1,514,449			
29	Total Realizable AIAC			$ 14,120,318			

RATE BASE ADJUSTMENT NO. 10
USED FOR WATER DIVISION ONLY

Line No.	Description	Amount
	Water Division:	
1		$ -
2		-
3		$ -
	Wastewater Division:	
4		$ -
5		-
6		$ -

References:

RUCO OPERATING INCOME SUMMARY

Line No.		[A] Company Adjusted Test Year As Filed	[B] RUCO Test Year Adjustments	[C] RUCO Test Year As Adjusted	[D] RUCO Recommended Changes	[E] RUCO Recommended Amounts
	Revenues:					
1	Metered Water Revenues	$ 9,853,383	$ 1,193	$ 9,854,576	$ 36,254	$ 9,890,830
2	Unmetered Water Revenues	-	-	-	-	-
3	Other Water Revenues	508,220	-	508,220	-	508,220
4	**Total Revenues**	$ 10,361,603	$ 1,193	$ 10,362,796	$ 36,254	$ 10,399,050
	Operating Expenses:					
5	Salaries and Wages	$ 1,168,151	$ (76,431)	$ 1,091,720	$ -	$ 1,091,720
6	Purchased Water	26,656	54	26,710	-	26,710
7	Purchased Power	601,635	-	601,635	-	601,635
8	Sludge Removal Expense	234,893	13	234,907	-	234,907
9	Fuel for Power Production	-	-	-	-	-
10	Chemicals	357,986	-	357,986	-	357,986
11	Materials and Supplies	86,994	-	86,994	-	86,994
12	Management Services - US Liberty Water	1,469,058	(116,332)	1,352,726	-	1,352,726
13	Management Services - Corporate	698,951	(129,930)	569,021	-	569,021
14	Management Services - Other	-	-	-	-	-
15	Outside Services - Accounting	2,161	-	2,161	-	2,161
16	Outside Services - Engineering	-	-	-	-	-
17	Outside Services- Other	222,303	-	222,303	-	222,303
18	Outside Services- Legal	25,746	-	25,746	-	25,746
19	Water Testing	57,735	-	57,735	-	57,735
20	Rents - Office	40,007	-	40,007	-	40,007
21	Equipment Rental	3,076	-	3,076	-	3,076
22	Transportation Expenses	26,465	-	26,465	-	26,465
23	Insurance - General Liability	57,823	-	57,823	-	57,823
24	Insurance - Vehicle	11,506	-	11,506	-	11,506
25	Reg. Comm. Exp. - Other	14,189	-	14,189	-	14,189
26	Reg. Comm. Exp. - Rate Case	74,200	-	74,200	-	74,200
27	Miscellaneous Expense	77,293	3,619	80,913	-	80,913
28	Bad Debt Expense	45,215	(23,924)	21,291	-	21,291
29	Depreciation and Amortization Expense	1,598,765	22,150	1,620,915	-	1,620,915
30	Taxes Other Than Income	-	-	-	-	-
31	Property Taxes	576,026	(27,493)	548,533	640	549,173
32	Income Tax	1,013,153	125,244	1,138,396	13,637	1,152,033
33	**Total Operating Expenses**	$ 8,489,987	$ (223,030)	$ 8,266,957	$ 14,277	$ 8,281,233
34	**Operating Income (Loss)**	$ 1,871,616	$ 224,223	$ 2,095,839	$ 21,978	$ 2,117,817

References:

Column [A]: Company Schedule C-1;
Column [B]: RUCO Recommended Total Adjustments Per Schedule RBM-14 on pages 1-2 at page 2 in Column [S] at line 33;
Column [C]: Column [A] + [B] - RUCO Recommended Adjusted Test Year Amounts Per Schedule RBM-14 on page 2 of 2 in Column [T];
Column [D]: RUCO Recommended Increase/(Decrease) to Revenue Requirement;
Column [E]: Column [C] + [D] - RUCO Recommended Increase/(Decrease) Amounts for Revenue Requirement.

RUCO OPERATING INCOME ADJUSTMENTS

Line No.	Description	[A] Company Adjusted Test Year As Filed	[B] Adj. No. 1 Depreciation Expense	[C] Adj. No. 2 Property Taxes	[D] Adj. No. 3 *Revenue & Expense Annualizations*	[E] Adj. No. 4 Revenue Accrual Fix	[F] Adj. No. 5 Used for Water Div. Only	[G] Adj. No. 6 Used for Water Div. Only	[H] Adj. No. 7 Intentionally Left Blank	[I] Adj. No. 8 Employee Pension Benefits	[J] Adj. No. 9 Intentionally Left Blank
	Revenues:										
1	Metered Water Revenues	$ 9,853,383	$ -	$ -	$ 1,193	$ -	$ -	$ -	$ -	$ -	$ -
2	Unmetered Water Revenues	-	-	-	-	-	-	-	-	-	-
3	Other Water Revenues	508,220	-	-	-	-	-	-	-	-	-
4	**Total Revenues**	$ 10,361,603	$ -	$ -	$ 1,193	$ -	$ -	$ -	$ -	$ -	$ -
	Operating Expenses:										
5	Salaries and Wages	$ 1,168,151	$ -	$ -	$ -	$ -	$ -	$ -	$ -	$ (76,431)	$ -
6	Purchased Water	26,656	-	-	54	-	-	-	-	-	-
7	Purchased Power	601,635	-	-	-	-	-	-	-	-	-
8	Sludge Removal Expense	234,893	-	-	13	-	-	-	-	-	-
9	Fuel for Power Production	-	-	-	-	-	-	-	-	-	-
10	Chemicals	357,986	-	-	-	-	-	-	-	-	-
11	Materials and Supplies	86,994	-	-	-	-	-	-	-	-	-
12	*Management Services - US Liberty Water*	1,469,058	-	-	-	-	-	-	-	-	-
13	Management Services - Corporate	698,951	-	-	-	-	-	-	-	-	-
14	Management Services - Other	-	-	-	-	-	-	-	-	-	-
15	Outside Services - Accounting	2,161	-	-	-	-	-	-	-	-	-
16	Outside Services - Engineering	-	-	-	-	-	-	-	-	-	-
17	Outside Services- Other	222,303	-	-	-	-	-	-	-	-	-
18	Outside Services- Legal	25,746	-	-	-	-	-	-	-	-	-
19	Water Testing	57,735	-	-	-	-	-	-	-	-	-
20	Rents - Office	40,007	-	-	-	-	-	-	-	-	-
21	Equipment Rental	3,076	-	-	-	-	-	-	-	-	-
22	Transportation Expenses	26,465	-	-	-	-	-	-	-	-	-
23	Insurance - General Liability	57,823	-	-	-	-	-	-	-	-	-
24	Insurance - Vehicle	11,506	-	-	-	-	-	-	-	-	-
25	Reg. Comm. Exp. - Other	14,189	-	-	-	-	-	-	-	-	-
26	Reg. Comm. Exp. - Rate Case	74,200	-	-	-	-	-	-	-	-	-
27	Miscellaneous Expense	77,293	-	-	(1,506)	-	-	-	-	-	-
28	Bad Debt Expense	45,215	-	-	-	-	-	-	-	-	-
29	Depreciation and Amortization Expense	1,598,765	22,150	-	-	-	-	-	-	-	-
30	Taxes Other Than Income	-	-	-	-	-	-	-	-	-	-
31	Property Taxes	576,026	-	(27,493)	-	-	-	-	-	-	-
32	Income Tax	1,013,153	-	-	-	-	-	-	-	-	-
33	**Total Operating Expenses**	$ 8,489,987	$ 22,150	$ (27,493)	$ (1,439)	$ -	$ -	$ -	$ -	$ (76,431)	$ -
34	**Operating Income**	$ 1,871,616	$ (22,150)	$ 27,493	$ 2,632	$ -	$ -	$ -	$ -	$ 76,431	$ -

Adjustments:

Adjustment No. 1: Depreciation Expense - See RUCO Schedule RBM-15 in Column [C] at line 36;
Adjustment No. 2: Property Taxes - See RUCO Schedule RBM-16 in Column [A] at line 18;
Adjustment No. 3: Revenue & Expense Annualizations - See RUCO Schedule RBM-17 on page 2 of 2 at line 22;
Adjustment No. 4: Revenue Accrual Fix - See RUCO Schedule RBM-18;
Adjustment No. 5: Used for Water Division Only;
Adjustment No. 6: Used for Water Division Only;
Adjustment No. 7: Intentionally Left Blank;
Adjustment No. 8: Employee Pension Benefit Plan - See RUCO Schedule RBM-22 at line 3;
Adjustment No. 9: Intentionally Left Blank

References:

Column [A]: Company Schedule C-1 Adjusted Test Year as *Filed;*
Column [B] through [J]: RUCO Recommended Adjusted Test Year Adjustments;

RUCO OPERATING INCOME ADJUSTMENTS

Line No.	Description	[K] Adj. No. 10 US Liberty Utilities Add'l. Reductions	[L] Adj. No. 11 Allocate Bad Debt Expense	[M] Adj. No. 12 Intentionally Left Blank	[N] Adj. No. 13 Corporate Cost Allocations	[O] Adj. No. 14 Achievement Incentive/Bonus Pay Allocations	[P] Adj. No. 15 Miscellaneous Expense	[Q] Adj. No. 16 Customer Deposit Interest Expense	[R] Adj. No. 17 Income Taxes	[S] Total RUCO Adjustments Recommended	[T] RUCO Adjusted Test Year Recommended
	Revenues:										
1	Metered Water Revenues	$ -	$ -	$ -	$ -	$ -	$ -	$ -	$ -	$ 1,193	$ 9,854,576
2	Unmetered Water Revenues	-	-	-	-	-	-	-	-	-	-
3	Other Water Revenues	-	-	-	-	-	-	-	-	-	508,220
4	**Total Revenues**	$ -	$ -	$ -	$ -	$ -	$ -	$ -	$ -	$ 1,193	$ 10,362,796
	Operating Expenses:										
5	Salaries and Wages	$ -	$ -	$ -	$ -	$ -	$ -	$ -	$ -	$ (76,431)	$ 1,091,720
6	Purchased Water	-	-	-	-	-	-	-	-	54	26,710
7	Purchased Power	-	-	-	-	-	-	-	-	-	601,635
8	Sludge Removal Expense	-	-	-	-	-	-	-	-	13	234,907
9	Fuel for Power Production	-	-	-	-	-	-	-	-	-	-
10	Chemicals	-	-	-	-	-	-	-	-	-	357,986
11	Materials and Supplies	-	-	-	-	-	-	-	-	-	86,994
12	Management Services - US Liberty Water	(2,521)	-	-	-	(113,811)	-	-	-	(116,332)	1,352,726
13	Management Services - Corporate	-	-	-	(115,707)	(14,223)	-	-	-	(129,930)	569,021
14	Management Services - Other	-	-	-	-	-	-	-	-	-	-
15	Outside Services - Accounting	-	-	-	-	-	-	-	-	-	2,161
16	Outside Services - Engineering	-	-	-	-	-	-	-	-	-	-
17	Outside Services- Other	-	-	-	-	-	-	-	-	-	222,303
18	Outside Services- Legal	-	-	-	-	-	-	-	-	-	25,746
19	Water Testing	-	-	-	-	-	-	-	-	-	57,735
20	Rents - Office	-	-	-	-	-	-	-	-	-	40,007
21	Equipment Rental	-	-	-	-	-	-	-	-	-	3,076
22	Transportation Expenses	-	-	-	-	-	-	-	-	-	26,465
23	Insurance - General Liability	-	-	-	-	-	-	-	-	-	57,823
24	Insurance - Vehicle	-	-	-	-	-	-	-	-	-	11,506
25	Reg. Comm. Exp. - Other	-	-	-	-	-	-	-	-	-	14,189
26	Reg. Comm. Exp. - Rate Case	-	-	-	-	-	-	-	-	-	74,200
27	Miscellaneous Expense	-	-	-	-	-	(342)	5,467	-	3,619	80,913
28	Bad Debt Expense	-	(23,924)	-	-	-	-	-	-	(23,924)	21,291
29	Depreciation and Amortization Expense	-	-	-	-	-	-	-	-	22,150	1,620,915
30	Taxes Other Than Income	-	-	-	-	-	-	-	-	-	-
31	Property Taxes	-	-	-	-	-	-	-	-	(27,493)	548,533
32	Income Tax	-	-	-	-	-	-	-	125,244	125,244	1,138,396
33	**Total Operating Expenses**	$ (2,521)	$ (23,924)	$ -	$ (115,707)	$ (128,034)	$ (342)	$ 5,467	$ 125,244	$ (223,030)	$ 8,266,957
34	**Operating Income**	$ 2,521	$ 23,924	$ -	$ 115,707	$ 128,034	$ 342	$ (5,467)	$ (125,244)	$ 224,223	$ 2,095,839

Adjustments:

Adjustment No. 10: Additional Adjustments to US Liberty Utilities - See RUCO Schedule TJC-24 at line 6;
Adjustment No. 11: Allocate Bad Debt Expense - See RUCO Schedule TJC-25 at line 7;
Adjustment No. 12: Intentionally Left Blank;
Adjustment No. 13: APUC Corporate Cost Allocations - See RUCO Schedule TJC-27 in Column [L] at line 32;
Adjustment No. 14: Achievement/Incentive/Bonus Pay Adjustments - See RUCO Schedule TJC-28 at line 10;
Adjustment No. 15: Miscellaneous Expense Adjustments - See RUCO Schedule TJC-29;
Adjustment No. 16: Customer Security Deposit Interest Expense - See RUCO Schedule TJC-30 at line 6;
Adjustment No. 17: Income Taxes - See RUCO Schedule TJC-31 at line 3.

References:

Column [K] thru [R]: RUCO Recommended Adjusted Test Year Adjustments;
Column [S]: RUCO Total Adjusted Test Year Adjustments on Schedule TJC-14 page 1 of 2 in Columns [B] thru Schedule TJC-14 page 2 of 2 in Columns [K] thru [R];
Column [T]: Column [A] on Schedule TJC-14 at page 1 of 2 + Column [S] on Schedule TJC-14 page 2 of 2 - RUCO Recommended Adjusted Test Year Balances.

OPERATING INCOME ADJUSTMENT NO. 1
DEPRECIATION EXPENSE

Line No.	NARUC Account	Description	[A] RUCO UPIS Recommended	[B] Authorized Depreciation Rate	[C] RUCO Depreciation Expense Going Forward
1	351	Organization	$ -	0.00%	$ -
2	352	Franchise	-	0.00%	-
3	353	Land	1,835,956	0.00%	-
4	354	Structures & Improvements	23,732,343	3.33%	790,287
5	355	Power Generation	602,932	5.00%	30,147
6	360	Collection Sewer Forced	1,162,597	2.00%	23,252
7	361	Collection Sewers Gravity	31,886,680	2.00%	637,734
8	362	Special Collecting Structures	-	2.00%	-
9	363	Customer Services	76,190	2.00%	1,524
10	364	Flow Measuring Devices	82,828	10.00%	8,283
11	366	Reuse Services	4,057,660	2.00%	81,153
12	367	Reuse Meters And Installation	44,753	8.33%	3,728
13	370	Receiving Wells	860,393	3.33%	28,651
14	371	Pumping Equipment	855,150	12.50%	106,894
15	374	Reuse Distribution Reservoirs	62,286	2.50%	1,557
16	375	Reuse Trans. and Dist. System	420,334	2.50%	10,508
17	380	Treatment & Disposal Equipment	6,056,062	5.00%	302,803
18	381	Plant Sewers	47,802	5.00%	2,390
19	382	Outfall Sewer Lines	343,681	3.33%	11,445
20	389	Other Sewer Plant & Equipment	827,630	6.67%	55,203
21	390	Office Furniture & Equipment	275,740	6.67%	18,392
22	390.1	Computers and Software	-	20.00%	-
23	391	Transportation Equipment	33,497	20.00%	6,699 *
24	392	Stores Equipment	8,968	4.00%	359
25	393	Tools, Shop And Garage Equip	129,950	5.00%	6,497
26	394	Laboratory Equip	187,184	10.00%	18,718
27	395	Power Operated Equipment	6,605	5.00%	330
28	396	Communication Equip	418,996	10.00%	41,900
29	398	Other Tangible Plant	-	10.00%	-
30		Totals	$ 74,016,217		$ 2,188,454

Less: Amortization of Contributions ("CIAC")

	Account No.	Description	Gross CIAC	CIAC Account Specific Amortization Rate	
31	361	Collection Sewers Gravity	$ (25,745,608)	2.00%	$ (514,912)
32	363	Customer Services	(2,631,307)	2.00%	(52,626)
33		Total Gross CIAC Balance (See RUCO RBM-2)	$ (28,376,915)		$ (567,538)
34		RUCO Total Depreciation Expense			1,620,915
35		Company Adjusted Depreciation Expense As Filed			1,598,765
36		RUCO Increase/(Decrease) Expense Adjustment			$ 22,150

* *Fully Depreciated Per Company Schedule C-2, page 2*

References:
Company B-2 and C-1 Schedules, and RUCO Schedule RBM-2.

OPERATING INCOME ADJUSTMENT NO. 2
PROPERTY TAXES

LINE NO.	Property Tax Calculation	[A] RUCO AS ADJUSTED	[B] RUCO RECOMMENDED
1	RUCO Adjusted Test Year Gross Revenues Per RUCO Schedule JLK-13	$ 10,362,796	$ 10,362,796
2	Multiplied by 2	2	2
3	Subtotal (Line 1 * Line 2)	$ 20,725,592	$ 20,725,592
4a	RUCO Adjusted Test Year Gross Revenues Per RUCO Schedule JLK-13	10,362,796	
4b	RUCO Recommended Revenue Per RUCO Schedule JLK-13		10,399,050
5	Subtotal (Line 3 + Line 4a)	$ 31,088,389	$ 31,124,643
6	Number of Years	3	3
7	Three Year Average (Line 5 / Line 6)	$ 10,362,796	$ 10,374,881
8	Department of Revenue Mutilplier	2	2
9	Revenue Base Value (Line 7 * Line 8)	$ 20,725,592	$ 20,749,762
10	Plus: 10% of CWIP Per Company Schedule E-1 As Filed	-	-
11	Less: Net Book Value of Licensed Vehicles	3,646	3,646
12	Full Cash Value (Line 9 + Line 10 - Line 11)	$ 20,721,947	$ 20,746,116
13	Assessment Ratio	19.0%	19.0%
14	Assessed Value (Line 12 * Line 13)	$ 3,937,170	$ 3,941,762
15	Composite Property Tax Rate (Per RUCO Effective Property Tax Calculation)	13.9322%	13.9322%
16	RUCO Adjusted Test Year Property Tax Expense (Line 14 * Line 15)	$ 548,533	
17	Company Adjusted Test Year Property Tax Expense (Per Company Schedule C-1)	576,026	
18	RUCO Test Year Adjustment (Line 16-Line 17)	$ (27,493)	
19	Property Tax - RUCO Recommended Revenue (Line 14 * Line 15)		$ 549,173
20	RUCO Test Year Adjusted Property Tax Expense (Line 16)		548,533
21	Increase/(Decrease) to Property Tax Expense		$ 640
22	Increase/(Decrease) to Property Tax Expense		$ 640
23	Increase in Revenue Requirement		36,254
24	Increase /(Decrease) to Property Tax per Dollar Increase in Revenue (Line 22 / Line 23)		1.7647%

References:
RUCO Schedule RBM-13
RUCO Schedule RBM-4(a) page 1 of 2

OPERATING INCOME ADJUSTMENT NO. 3
REVENUE & EXPENSE ANNUALIZATIONS

Line No.	Meter Size	Class	[A] Company Annualization Present Revenues	[B] RUCO Annualization Adjustments	[C] RUCO Annualization Present Revenues	[D] Additional Bills	[E] Additional Gallons to be Pumped (In 1,000's)
1	N/A	Residential	$ 127,341	$ -	$ 127,341	3,266	9,798
2	N/A	Residential (Low Income)	-	1,193	1,193	36	108
3		Subtotal	$ 127,341	$ 1,193	$ 128,534	3,302	9,906
4							
5	145, 172, 560	HOA	$ -	-	$ -	-	-
6							
7	3, 4, 5, 7, 8, 13, 15, 16,	Multi-Unit	-	-	-	-	-
8	17, 22, 43, 78, 84, 123, 282	Multi-Family	-	-	-	-	-
9		Subtotal	$ -	$ -	$ -	$ -	$ -
10							
11	Small	Commercial	$ 66	$ -	$ 66	1	2
12	Measured Service	Commercial	(1,644)	-	(1,644)	(8)	(24)
13	Measured Svc. Other	Commercial	3,014	-	3,014	8	36
14		Subtotal	$ 1,436	$ -	$ 1,436	1	14
15							
16	Room and Main	Wigwam	$ -	$ -	$ -	-	-
17							
18	Elem, Mid & College	Schools	$ -	$ -	$ -	-	-
19							
20	100	Effluent	$ 93	$ -	$ 93	2	-
21	125	Effluent	(3,380)		(3,380)	(3)	-
22	200	Effluent	$ -	$ -	$ -	7	-
23		Subtotal	$ (3,287)	$ -	$ (3,287)	6	-
24							
25	Total Revenue Annualization		$ 125,490	$ 1,193	$ 126,683	$ 3,309	
26							
27	RUCO Total Revenue Annualization						$ 126,683
28							
29	Company Revenue Annualization						125,490
30							
31							
32	RUCO Increase/(Decrease) Adjustment to Revenue and/or Expense						$ 1,193
33							
34							
35							
36	Total Increase/(Decrease) Gallons to be Produced						9,920

References:
RUCO RBM Workpapers
Company H-5 Schedules

OPERATING INCOME ADJUSTMENT NO. 3 (Continued)
REVENUE & EXPENSE ANNUALIZATIONS

Line No.	Description		Amount
	Annualize Revenues:		
1	Per RUCO Annualized Revenues	$	126,683
2	Per Company Annualized Revenues		125,490
3	RUCO Adjustment to Revenue and/or Expense (L1 - L2)	$	1,193
	Annualize Purchased Power Expense:		
4	Test Year Purchased Power	$	606,563
5	Test Year Gallons Treated (in 1,000s)		1,223,828
6	Cost Per 1,000 gallons (L24 / L25)	$	0.50
7	Additional Gallons Treated from Annualization (See L36 on RUCO Schedule JLK-17 on page 1 of 2)		9,920
8	Per RUCO Increase in Annualized Purchased Power Costs (L6 X L7)	$	4,916
9	Per Company Increase in Annualized Purchased Power Costs as Filed		4,863
10	RUCO Adjustment to Revenue and/or Expense (L8 - L9)	$	54
	Annualize Sludge Removal Expense:		
11	Test Year Sludge Removal Expense	$	230,913
12	Gallons Treated (in 1,000's)		1,223,828
13	Cost per 1,000 gallons (L11 / L12)	$	0.19
14	Number of bills during Test Year		191,338
15	Average flow per bill per month (in 1,000's) - (L12 / L14)		6.4
16	Increase (decrease) in number of bills (See Column [D] at line 25 on RUCO Schedule JLK-17 at page 1 of 2)		3,309
17	Increase (decrease) in flows (in 1,000's) - (L15 X L16)		21,165
18	Per RUCO Increase (decrease) in Sludge Removal (L13 X L17)	$	3,993
19	Per Company Increase (decrease) in Sludge Removal (Company Schedule C-1)		3,980
20	RUCO Adjustment to Revenue and/or Expense (L18 - L19)	$	13
	Annualize Postage Expense:		
21	RUCO's Reversal of Company's Double-Count for Wastewater Division's Annualized Postage Expense	$	(1,506)
22	RUCO Total Net Annualized Revenue & Expense Adjustments	$	2,632

References:
See RUCO Schedule RBM-17 on page 1 of 2
Company C-2 & H Schedules

OPERATING INCOME ADJUSTMENT NO. 4
REVENUE ACCRUAL FIX

Line No.	Description	Amount

References:

OPERATING INCOME ADJUSTMENT NO. 5
USED ONLY FOR WATER DIVISION

Line No.	Description	Amount

References:

OPERATING INCOME ADJUSTMENT NO. 6
USED ONLY FOR WATER DIVISION

Line No.	Description	Amount

References:

OPERATING INCOME ADJUSTMENT NO. 7
INTENTIONALLY LEFT BLANK

Line No.	Description	Amount

References:

OPERATING INCOME ADJUSTMENT NO. 8
EMPLOYEE PENSION BENEFIT PLAN

Line No.	Description	Amount
1	Employee Pension Benefit Plan Proforma Adjustment Per Company as Filed	$ 76,431
2	Employee Pension Benefit Plan Proforma Adjustment Per RUCO Recommendation	-
3	RUCO Recommended Adjustment	$ (76,431)

References:
Company Response to RUCO DR 3.01
See Testimony of RBM

OPERATING INCOME ADJUSTMENT NO. 9
INTENTIONALLY LEFT BLANK

Line No.	Description	Amount

References:

OPERATING INCOME ADJUSTMENT NO. 10
ADDITIONAL REDUCTIONS TO US LIBERTY UTILITIES MANAGEMENT SERVICES

Line No.	Description		Amount
	Water Division:		
1	Company's Proforma Adjustment for Management Services - US Liberty Water as Filed	$	(16,840)
2	RUCO Recommended Adjustment for Management Services - US Liberty Water		(18,669)
3	RUCO Recommended Adjustment		(1,829)
	Wastewater Division:		
4	Company's Proforma Adjustment for Management Services - US Liberty Water as Filed	$	(21,457)
5	RUCO Recommended Adjustment for Management Services - US Liberty Water		(23,978)
6	RUCO Recommended Adjustment		(2,521)

References:
Company Response to Staff DR JMM 12-2

OPERATING INCOME ADJUSTMENT NO. 11
ALLOCATE BAD DEBT EXPENSE

Line No.	Description		Amount
	Water & Wastewater Divisions Combined Adjusted Test Year Bad Debt Expense as Filed:		
1	Water Division Adjusted Test Year Bad Debt Expense as Filed	$	(76)
2	Wastewater Division Adjusted Test Year Bad Debt Expense as Filed		45,215
3	Total Water & Wastewater Divisions Combined Adjusted Test Year Bad Debt Expense as Filed by Company	$	45,140
	Water Division:		
4	Allocation Factor Recommended by RUCO to Allocate Bad Debt Expense to Water Division		47%
5	RUCO Recommended Bad Debt Expense Adjustment Allocated to Water Division	$	21,216
	Wastewater Division:		
6	Allocation Factor Recommended by RUCO to Allocate Bad Debt Expense to Wastewater Division		53%
7	RUCO Recommended Bad Debt Adjustment Allocated to Wastewater Division	$	(23,924)

References:
Company Response to Staff DR JMM 12-2

OPERATING INCOME ADJUSTMENT NO. 12
INTENTIONALLY LEFT BLANK

Line No.	Description	Amount

References:

Litchfield Park Sevice Company
Docket Nos. SW-01428A-13-0042
and W-01427A-13-0043
Test Year Ended December 31, 2012

OPERATING INCOME ADJUSTMENT NO. 13
APUC COST ALLOCATIONS

Line No.	Description	[A] Company Requested Total APUC Cost Pool	[B] Allocation Factor From APUC To Liberty Utilities	[C] APUC Allocation To Liberty Utilities	[D] Allocation Factor From Liberty Utilites To Liberty Utilites South	[E] Liberty Utilities Allocation To Liberty Utilities South	[F] Allocation Factor From Liberty Utilities South To LPSCO Water	[G] Allocation Factor From Liberty Utilities South To LPSCO Wastewater	[H] Libery Utilities South Allocation To LPSCO Water	[I] Libery Utilities South Allocation To LPSCO Wastewater	[J] RUCO Recommended Allocations Factors Per Decision 72059	[K] RUCO Recommended Allocations LPSCO Water	[L] RUCO Recommended Allocations LPSCO Sewer
1	Audit	$ 1,561,911	51.8%	$ 808,566	22.26%	$ 179,960	28.74%	26.87%	$ 51,712	$ 48,352	100%	$ 51,712	$ 48,352
2	Tax	1,169,300	51.8%	605,321	22.26%	134,724	28.74%	26.87%	38,713	36,198	100%	38,713	36,198
3	Legal	635,190	51.8%	328,824	22.26%	73,185	28.74%	26.87%	21,030	19,664	100%	21,030	19,664
4	Professional Services	680,395	51.8%	352,225	22.26%	78,394	28.74%	26.87%	22,527	21,063	0%	-	-
5	Unitholder Communications	700,793	51.8%	362,785	22.26%	80,744	28.74%	26.87%	23,202	21,694	0%	-	-
6	Trustee / Director Fees	378,154	51.8%	195,762	22.26%	43,570	28.74%	26.87%	12,520	11,706	0%	-	-
7	Computer Supplies /Repairs	51,761	51.8%	26,796	22.26%	5,964	28.74%	26.87%	1,714	1,602	100%	1,714	1,602
8	Office Expenses	98,210	51.8%	50,841	22.26%	11,316	28.74%	26.87%	3,252	3,040	100%	3,252	3,040
9	Employee Stock Purchase Plan	4,270	51.8%	2,210	22.26%	492	28.74%	26.87%	141	132	0%	-	-
10	Board of Director's Insurance	145,728	51.8%	75,440	22.26%	16,790	28.74%	26.87%	4,825	4,511	50%	2,412	2,256
11	Escrow & Transfer Agent Fees	75,000	51.8%	38,826	22.26%	8,641	28.74%	26.87%	2,483	2,322	0%	-	-
12	Training	76,343	51.8%	39,521	22.26%	8,796	28.74%	26.87%	2,528	2,363	100%	2,528	2,363
13	Stock Option expense	1,376,013	51.8%	712,331	22.26%	158,542	28.74%	26.87%	45,557	42,597	0%	-	-
14	Recruiting	54,095	51.8%	28,004	22.26%	6,233	28.74%	26.87%	1,791	1,675	100%	1,791	1,675
15	Meals and Entertainment	2,315	51.8%	1,198	22.26%	267	28.74%	26.87%	77	72	50%	38	36
16	Rent	84,861	51.8%	43,931	22.26%	9,778	28.74%	26.87%	2,810	2,627	100%	2,810	2,627
17	Communication	78,982	51.8%	40,887	22.26%	9,100	28.74%	26.87%	2,615	2,445	100%	2,615	2,445
18	Dues and Memberships	47,155	51.8%	24,411	22.26%	5,433	28.74%	26.87%	1,561	1,460	0%	-	-
19	Licenses/Fees & Permits	384,904	51.8%	199,256	22.26%	44,348	28.74%	26.87%	12,743	11,915	100%	12,743	11,915
20	Net Other Admin Costs	14,274	51.8%	7,389	22.26%	1,645	28.74%	26.87%	473	442	100%	473	442
21	Variance Due to Company's Monthly Allocation Factoring								10,321	26,092	52%	1 5,400	13,651
22												-	-
23												-	-
24												-	-
25													
26	Total APUC Allocations Per RUCO	$ 7,619,653		$ 3,944,525		$ 877,921			$ 262,583	$ 261,973		$ 147,230	$ 146,266
27													
28	Company Water Division's APUC Cost Allocation Requested											262,593	
29													
30	Company Wastewater Division's APUC Cost Allocation Requested												261,973
31													
32	RUCO Recommended Water and Wastewater Division's APUC Cost Allocation Adjustment											$ (115,363)	$ (115,707)

Note 1:

	Water & Wastewater
Variances by Company Per Responses to RUCO DR 1.08 and Staff 5.2	$ 36,413
RUCO Allowance Factor for the Variances Identifieed by Company	52%

References:
Column [A] - Company response to Staff DR JMM - 10.1(a) confirmed the accruals in that Column were trued-up to Actual Expenses for this rate case.

OPERATING INCOME ADJUSTMENT NO. 14
ACHIEVEMENT / INCENTIVE / BONUS PAY PROGRAMS

Line No.		Description	Water Division Amount	Wastewater Division Amount
		Algonquin Power Utilities Corporation ("APUC") Allocation:		
1	1	Per Company APUC Achievement / Incentive / Bonus Pay Program Allocations Included in Test Year	$ 45,557	$ 42,597
2	2	RUCO Recommended APUC Achievement / Incentive / Bonus Pay Program Allocations Included in Test Year	0%	0%
3	2	*RUCO's Recommended Adjustment to Company's Test Year End APUC Achievement / Incentive / Bonus Pay to Include in TY*	$ -	$ -
		Liberty Utilities - Local Incentive Pay		
4	1	Per Company Liberty Utilities - Local Achievement / Incentive / Bonus Pay Program Included in Test Year	$ 243,440	$ 227,622
5		RUCO Recommended Achievement / Incentive / Bonus Pay Program Allocations Included in Test Year	50%	50%
6		RUCO's Recommended Adjustment to Company's Test Year End APUC Achievement / Incentive / Bonus Pay to Include in TY	$ (121,720)	$ (113,811)
		Liberty Utilities - Allocated Incentive Pay		
7	1	Per Company Liberty Utilities - Local Achievement / Incentive / Bonus Pay Program Included in Test Year	$ 34,334	28,446
8		RUCO Recommended Achievement / Incentive / Bonus Pay Program Allocations Included in Test Year	50%	50%
9		RUCO's Recommended Adjustment to Company's Test Year End APUC Achievement / Incentive / Bonus Pay to Include in TY	$ (17,167)	$ (14,223)
10		RUCO's Recommended Total Adjustments	$ (138,887)	$ (128,034)

References:
1 Per Company Supplemental Response to RUCO 1.15(e)
2 RUCO disallowed 100% of the APUC Achievement / Incentive / Pay Program - Stock Option Expense (See RUCO Schedule RBM-27 at line 13)

OPERATING INCOME ADJUSTMENT NO. 11
MISCELLANEOUS EXPENSE

Line No.	Description	Account No.	[A] Company As Filed	[B] RUCO Allowance Factor	[C] RUCO Recommended Adjustment
	Company Adjusted Miscellaneous Expense as Filed		$ 77,293		
	RUCO Adjustments:				
	Public Relations	8600-2-0200-69-5390	$ 231	100%	$ (231)
	Meals and Entertainment	8600-2-0200-69-5300	221	50%	(111)
	Total				$ (342)
	RUCO Recommended Adjustment				$ (342)

References:
Column [A]: Company Adjusted Test Year Schedule C-1 Balance on page 1 at line 29;
Column [B]: RUCO Allowance Factor;
Column [C]: Company Response to Staff DR JMM 2-63.

RATE BASE ADJUSTMENT NO. 16
CUSTOMER SECURITY DEPOSIT INTEREST EXPENSE

Line No.		Description	Amount
		Water Division:	
1	1	Customer Security Deposit Interest Expense As Filed by Company Below-the-Line for Both Divisons Per Response to Staff DR 13-4	$ 10,314
2		RUCO Recommended Allocation for Water Division Net of Interest Earned (See Note 1 Below for Allocation Percentages)	4,848
3		RUCO's Recommended Adjustment (Net of Interest Earned on Unexpended CIAC Bank Account Per Response to Staff DR 1.13)	$ 4,848
		Wastewater Division:	
4	1	Customer Security Deposit Interest Expense As Filed by Company Below-the-Line for Both Divisons Per Response to Staff DR 13-4	$ 10,314
5		RUCO Recommended Allocation for Water Division Net of Interest Earned (See Note 1 Below for Allocation Percentages)	5,467
6		RUCO's Recommended Adjustment (Net of Interest Earned on Unexpended CIAC Bank Account Per Response to Staff DR 1.13)	$ 5,467

Note 1: Allocation Percentage Factors
Water = 47%
Wastewater = 53%

References:
1 *Per Company Response and Excel workbook Attachment to Staff's DR 13-4*

OPERATING INCOME ADJUSTMENT NO. 17
INCOME TAXES

Line No.	Description	RUCO Adjusted Test Year Recommended	RUCO Test Year Recommended
1	RUCO Computed Adjusted Test Year Income Tax	$ 1,138,396	$ 1,152,033
2	Company Income Tax As Filed	1,013,153	1,262,828
3	RUCO Adjustment to Income Tax Expense	$ 125,244	$ (110,795)

References:
See RUCO Schedule RBM-1 at page 2 of 2;
Company Schedule C-1 Adjusted Test Year as Filed

COST OF CAPITAL

LINE NO.		[A] DOLLAR AMOUNT	[B] CAPITAL RATIO	[C] COST RATE	[D] WEIGHTED COST RATE
1	Long-Term Debt	$ 10,420,000	15.87%	6.86%	1.09%
2	Common Equity	55,240,319	84.13%	9.20% [1]	7.74%
3	Total Capitalization	$ 65,660,319	100.00%		
4	WEIGHTED AVERAGE COST OF CAPITAL ("WACC")				8.83%

[1] The Return on Equity Recommended by RUCO was authorized in Decision No. 73996 dated July 30, 2013.

References:
Columns [A] Thru [D]: RBM and RBM Testimony

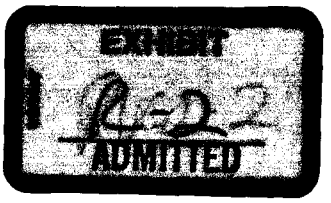

LITCHFIELD PARK SERVICE COMPANY

DOCKET NO. SW-01428A-13-0042

DOCKET NO. W-01427A-13-0043

SURREBUTTAL TESTIMONY

OF

ROBERT B. MEASE

ON BEHALF OF

THE

RESIDENTIAL UTILITY CONSUMER OFFICE

NOVEMBER 12, 2013

TABLE OF CONTENTS

EXECUTIVE SUMMARY - SURREBUTTAL I

INTRODUCTION 1

GENERAL STATEMENT 2

I. SURREBUTTAL RATE BASE ADJUSTMENTS 5

RATE BASE ADJUSTMENT NO. 1 – UTILITY PLANT IN SERVICE ("UPIS") 6
RATE BASE ADJUSTMENT NO. 2 – ACCUMULATED DEPRECIATION ("A/D") 7
RATE BASE ADJUSTMENT NO. 3 – INTENTIONALLY LEFT BLANK FOR FUTURE USE 8
RATE BASE ADJUSTMENT NO. 4 – CONTRIBUTIONS IN AID OF CONSTRUCTION ("CIAC") AND CIAC AMORTIZATIONS 8
RATE BASE ADJUSTMENT NO. 5 – THIRTEEN-MONTH AVERAGE OF CUSTOMER METER DEPOSITS 9
RATE BASE ADJUSTMENT NO. 6 – CUSTOMER SECURITY DEPOSITS 11
RATE BASE ADJUSTMENT NO. 7 – INTENTIONALLY LEFT BLANK FOR FUTURE USE 11
RATE BASE ADJUSTMENT NO. 8 – INTENTIONALLY LEFT BLANK FOR FUTURE USE 11
RATE BASE ADJUSTMENT NO. 9 – ACCUMULATED DEFERRED INCOME TAX ("ADIT") 11
RATE BASE ADJUSTMENT NO. 10 – TCE PLUME REGULATORY ASSET 12

II. SURREBUTTAL OPERATING INCOME ADJUSTMENTS 13

OPERATING INCOME ADJUSTMENT NO. 1 – DEPRECIATION EXPENSE 15
OPERATING INCOME ADJUSTMENT NO. 2 – PROPERTY TAX EXPENSE 15
OPERATING INCOME ADJUSTMENT NO. 3 – REVENUE AND EXPENSE ANNUALIZATIONS 16
OPERATING INCOME ADJUSTMENT NO. 4 – TCE PLUME REGULATORY ASSET AMORTIZATION EXPENSE 17
OPERATING INCOME ADJUSTMENT NO. 5 – REVERSE COMPANY'S DECLINING USAGE ADJUSTMENT 17
OPERATING INCOME ADJUSTMENT NO. 6 – WATER TESTING EXPENSE 18
OPERATING INCOME ADJUSTMENT NO. 7 – US LIBERTY WATER CORPORATE EXPENSE TRUE-UPS 18
OPERATING INCOME ADJUSTMENT NO. 8 – EMPLOYEE BENEFIT PENSION PLAN 19
OPERATING INCOME ADJUSTMENT NO. 9 – INTENTIONALLY LEFT BLANK 20
OPERATING INCOME ADJUSTMENT NO. 10 – US LIBERTY WATER ADDITIONAL REDUCTIONS 20
OPERATING INCOME ADJUSTMENT NO. 11 – ALLOCATE BAD DEBT EXPENSE THAT WAS ENTIRELY BOOKED TO THE WASTEWATER DIVISION 20
OPERATING INCOME ADJUSTMENT NO. 12 – INTENTIONALLY LEFT BLANK 21
OPERATING INCOME ADJUSTMENT NO. 13 – CORPORATE COST ALLOCATIONS 21
OPERATING INCOME ADJUSTMENT NO. 14 – ACHIEVEMENT / INCENTIVE / BONUS PAY 23
OPERATING INCOME ADJUSTMENT NO. 15 – MISCELLANEOUS EXPENSE 26
OPERATING INCOME ADJUSTMENT NO. 16 – CUSTOMER DEPOSIT INTEREST EXPENSE 27
OPERATING INCOME ADJUSTMENT NO. 17 – INCOME TAX EXPENSE 27

III. COST OF CAPITAL 28

IV. OTHER ISSUES - LIBERTY'S POLICY PROPOSALS 30

PROPOSAL NUMBER 1 - DSIC AND CSIC / SIB 30
POLICY PROPOSAL – PURCHASED POWER ADJUSTER MECHANISM – ("PPAM") 33
POLICY PROPOSAL - PROPERTY TAX DEFERRAL ORDER 34

V. RUCO'S RATE DESIGN 35

WATER DIVISION RATE DESIGN 35

WASTEWATER DIVISION RATE DESIGN 37

OTHER RATE DESIGN ISSUES 38

EXECUTIVE SUMMARY - SURREBUTTAL

The Residential Utility Consumer Office ("RUCO") has reviewed Litchfield Park Service Company's ("LPSCO" or "Company") rebuttal testimony and has made several adjustments based on additional information provided by the Company. RUCO will address the Company's rebuttal issues for both LPSCO's Water and Wastewater Divisions' rate base, operating income, revenue requirement, cost of capital, and rate design testimonies.

Following are LPSCO's and RUCO's proposed rate base and adjusted operating income positions as filed in its direct and rebuttal testimonies for both the Water and Wastewater Divisions.

Rate Base

Water Division

Company Direct	Company Rebuttal	RUCO Direct	RUCO Surrebuttal
$35,647,602	$33,227,792	$33,245,457	$33,093,677

Wastewater Division

Company Direct	Company Rebuttal	RUCO Direct	RUCO Surrebuttal
$23,877,697	$24,264,817	$23,988,000	$24,275,426

Adjusted Operating Income

Water Division

Company Direct	Company Rebuttal	RUCO Direct	RUCO Surrebuttal
$2,024,376	$2,035,629	$2,259,901	$2,246,156

Wastewater Division

Company Direct	Company Rebuttal	RUCO Direct	RUCO Surrebuttal
$1,871,616	$1,908,943	$2,095,839	$2,086,729

The following tables present the required gross revenue increase as filed by the Company and RUCO in their direct and rebuttal testimonies for both the Water and Wastewater Divisions:

Required Dollar Increase in Gross Revenues
Water Division

Company Direct	Company Rebuttal	RUCO Direct	RUCO Surrebuttal
$2,257,160	$1,668,790	$1,111,850	$1,072,637

Wastewater Division

Company Direct	Company Rebuttal	RUCO Direct	RUCO Surrebuttal
$659,088	$524,028	$36,254	$63,910

Required Percentage Increase in Gross Revenues
Water Division

Company Direct	Company Rebuttal	RUCO Direct	RUCO Surrebuttal
20.15%	14.90%	9.87%	9.53%

Wastewater Division

Company Direct	Company Rebuttal	RUCO Direct	RUCO Surrebuttal
6.36%	5.06%	0.35%	0.62%

The Company is requesting a rate of return of 9.18 percent in its rebuttal testimony on its fair value rate base ("FVRB") of $33,227,792 for its Water Division and $24,264,817 for its Wastewater Division. RUCO in proposing a rate of return of 8.76 percent on the FVRB of $33,093,677 for the Company's Water Division and $24,275,426 for the Wastewater Division.

Based on RUCO's analysis of the Company's rebuttal filing for its Water Division, RUCO is recommending an inverted four-tiered commodity charge for a ⅝ x ¾-inch metered customer with monthly minimums based on meter size. An average ⅝ x ¾-inch metered residential water customer that consumes 4,277 gallons per month will experience an

increase of $0.34 from $15.64 to $15.98. For a ⅝ x ¾-inch metered wastewater customer, RUCO recommends a flat monthly minimum charge of $39.21, an increase of $0.22 from its current monthly charge of $38.99.

INTRODUCTION

Q. Please state your name for the record.

A. My name is Robert B. Mease.

Q. Have you previously filed testimony regarding this docket?

A. Yes, I have. I filed direct testimony in this docket on September 27, 2013.

Q. What is the purpose of your surrebuttal testimony?

A. My surrebuttal testimony will address the Company's rebuttal proposals and comments pertaining to the adjustments RUCO recommended in its direct testimony.

Q. What areas will you address in your surrebuttal testimony?

A. My surrebuttal testimony will address RUCO's recommended rate base, operating income, revenue requirement, cost of capital, and rate design for both the Company's Water and Wastewater Divisions.

Q. How is your surrebuttal testimony organized?

A. My surrebuttal testimony is divided as follows: I) SURREBUTTAL RATE BASE ADJUSTMENTS; II) SURREBUTTAL OPERATING INCOME ADJUSTMENTS; III) COST OF CAPITAL; IV) OTHER ISSUES – LIBRTY'S POLICY PROPOSALS; V) RUCO's RATE DESIGN.

Q. Please identify the schedules that you are sponsoring in RUCO's surrebuttal testimony.

A. I am sponsoring RUCO's recommended overall revenue requirement, rate base, operating income, cost of capital, and rate design schedules for LPSCO's Water and Wastewater Divisions labeled as RBM-1 through RBM-32 and rate design schedules labeled RBM RD-1 through RBM RD-4 for both LPSCO's Water and Wastewater Divisions.

Q. Prior to beginning its discussion on rate base adjustments does RUCO continue to have concerns over the Company's Internal Controls?

A. Yes. RUCO will once again provide a general comment about the Company's Internal Controls as related to financial reporting and related testimony.

GENERAL STATEMENT

Q. In direct testimony did RUCO have a general concern about the Company's Internal Controls over the recording of transactions?

A. Yes. RUCO identified a number of inaccuracies in the reporting of test year results which led RUCO to question the Company's Internal Controls over financial reporting. If the Company had properly recorded those transactions when filing its original application the increase in gross

revenue requirements would have been $1,925,288 and not $2,257,160 as was originally requested for the Water Division alone.

Q. Did the Company address this deficiency in their rebuttal testimony?

A. No.

Q. Has RUCO identified additional errors in the Company's schedules and rebuttal testimony that leads RUCO to believe that the Company continues to have reporting deficiencies?

A. Yes. Following is a summary of errors noted in the Company's rebuttal testimony and/or supporting schedules.

1) The Company's Weighted Average Cost of Capital ("WACC") as presented in their rebuttal testimony is comprised of two elements cost of debt and cost of equity. The cost of equity component as identified on Schedule D-1 of the Company's schedules shows a 9.93 percent cost of equity and a final WACC of 9.37 percent. However, in the Company's WACC rebuttal testimony the capital structure shows a 9.70 percent as cost of equity and a WACC of 9.18 percent.[1] RUCO discussed this with the Company and it was determined that the written testimony was correct and the supporting Schedule D-1 was incorrect.

2) Beginning on page 42 of Mr. Bourassa's rebuttal testimony Line 25 is the following sentence, "Similarly, a 1-1/2 inch customer using XX gallons of water will pay $X.XX less under the RUCO

[1] Rebuttal Testimony of Mr. Thomas J. Bourassa, Cost of Capital, Page 3

rates than he/she currently pays." Obviously, numbers were to be inserted but were omitted when the rebuttal testimony was filed.

3) Deferred Income Taxes -- Accumulated Deferred Income Taxes

(a) On page 12 of Mr. Bourassa's rebuttal testimony the Company proposes to reduce accumulated deferred income taxes ("ADIT") by $631,432 for the Water Division. On Company Rebuttal Schedule B-2 the pro-forma adjustment for ADIT for the Water Division is a reduction of $590,078.

(b) On page 21 of Mr. Bourassa's rebuttal testimony the Company proposes to reduce ADIT by $631,432 for the Wastewater division. (The reduction is identical as the Water Division). On Company Rebuttal Schedule B-2 the pro-forma adjustment for the Wastewater Division is a reduction of $347,221.

4) On page 27 of Mr. Bourassa's testimony, Line 9 reads as follows: "Rebuttal adjustment 1 increases depreciation expense." Line 11 reads "This reduction is primarily due to impacts of the Company's proposed rebuttal adjustments to PIS and CIAC as discussed above.

Q. Does RUCO usually comment on Company's internal controls over reporting?

A. No. RUCO, in general, does not make such comments. However, in the situation of LPSCO, there were numerous errors made in the original schedules as filed as well as the rebuttal testimony and schedules. When errors of this magnitude and quantity are made in Company filings significant time is taken to identify the error as well as discussions with Company personnel in order to resolve the differences.

Q. Does RUCO have a recommendation regarding what they have identified as a reporting weakness?

A. Yes. Since the Company has hired Mr. Christopher Krygier as Utility Rates and Regulatory Manager, we would recommend that the Company consider preparing the required financial schedules and testimony in house. RUCO believes that there was a lack of review performed by the Company prior to filing both schedules and third party testimony and by preparing such information in house would help in preventing these types of deficiencies in future rate case filings.

I. SURREBUTTAL RATE BASE ADJUSTMENTS

Q. Can you please identify the rate base adjustments that RUCO is purposing?

A. Yes, please see the schedules as follows for a summary of RUCO's adjustments.

Rate Base Adjustments

Adjustment No / Description	Water Div.	Wastewater Div.
1 – Utility Plant In Service	($ 284,396)	$ 571,272
2 – Accumulated Depreciation	(2,413,512)	(319,489)
3 – Intentionally Left Blank	-- 0 --	-- 0 --
4 – CIAC and CIAC Amortization	(305,152)	(199,905)
5 – Customer Meter Deposits	(160,986)	14,231
6 – Customer Security Deposits	(7,785)	(8,553)
7 – Intentionally Left Blank	– 0 –	-- 0 --
8 – Intentionally Left Blank	-- 0 --	-- 0 --
9 –Accumulated Deferred Income Taxes	617,218	340,173
10-Regulatory Asset (TCE Plume)	688	-- 0 --
Total RUCO recommended Water and Wastewater Rate Base Adjustments	($2,553,925)	$397,729

See Schedules RBM-3 FOR both the Water and Wastewater Divisions.

Rate Base Adjustment No. 1 – Utility Plant in Service ("UPIS")

Q. Please identify RUCO's rate base adjustment No. 1 to UPIS.

Water Division

A. RUCO's adjustments are related to plant reclassifications of ($12,156), adjustments to remove duplicate invoices ($5,608); truck retirement ($17,555); plant true up accruals ($196,725); retirements not included in original filing and reclassifications ($40,196); and not used and useful plant ($12,156).

NOTE: The Company and RUCO are in agreement with all UPIS adjustments for the Water Division.

Wastewater Division

RUCO's adjustments to the UPIS for the Wastewater Division are related to final cost of post-test year plant $500,000; plant reclassifications $12,156; plant not used and useful ($124,546); remove duplicate invoices ($4,673); plant true up accruals $195,445; and retirements not included in original filing and reclassifications ($7,110).

NOTE: The Company and RUCO are in agreement with all UPIS adjustments for the Wastewater Division.

Rate Base Adjustment No. 2 – Accumulated Depreciation ("A/D")

Q. Can you please identify the adjustments RUCO is proposing to Accumulated Depreciation?

Water Division

A. RUCO's first adjustment for the Water Division relates to an error the Company made in its original filing of ($2,475,900). The Company failed to include depreciation expense for the period of October 1, 2008 through December 31, 2009. Consequently, the A/D balance was understated by this amount.

The remaining adjustments include A/D related to the plant reclassifications $26,572; non used and useful plant $308; removal of duplicate invoices $380; truck retirement $17,555; A/D on the Company's later recording of invoices ($91,841); adjustment to reverse non-depreciable plant $21,100; true up accruals $3,275; A/D related to reconciling adjustments $32,888; and retirements not included in original filing $52,152.

NOTE: RUCO and the Company are in agreement with all adjustments for the Water Division.

Q. Can you please explain how an error of $2,475,900 as mentioned above could be made?

A. First I would like to say that the Company did inform RUCO that the error was made prior to RUCO's beginning its analytical review. It appears to

RUCO to be a copy and paste error more than anything else. Maybe the Company can provide a better explanation as to how the error was made in its original filing.

Wastewater Division

RUCO's adjustments to A/D for the Wastewater Division consists of the removal of retirements from post-test year plant ($300,000), primarily related to post-test year plant; transportation equipment adjustment $3,646; plant reclassifications ($32,185); non used and useful plant $5,661; remove duplicate invoices $214; late recording of invoices ($7,711); true up accruals ($3,136); reconciling adjustments $3,508; and retirements not included in original filing $10,515.

NOTE: The Company and RUCO are in agreement with all adjustments except the transportation equipment of $3,646.

Rate Base Adjustment No. 3 – Intentionally Left Blank for Future Use

Rate Base Adjustment No. 4 – Contributions in Aid of Construction ("CIAC") and CIAC Amortizations

Q. Are RUCO and the Company in agreement with RUCO rate base adjustment No. 4 for CIAC and CIAC Amortizations for the Water and Wastewater Divisions?

A. Yes. The Company recognized it had erred when including CIAC true-ups in its CIAC balances as filed in its direct Application. The true-ups

authorized in the prior Decision No. 72026 were included in the Company's beginning balance carried forward from its prior rate case. LPSCO also recognized the fact that its CIAC amortizations included an additional nine-months of amortizations that were in error. The net adjustment for the CIAC and CIAC amortization was an increase in the beginning balance of ($305,152) for the Water Division and ($199,905) for the Wastewater Division.

Rate Base Adjustment No. 5 – Thirteen-Month Average of Customer Meter Deposits

Q. Are RUCO and the Company in agreement with RUCO rate base adjustment No. 5 that uses a thirteen-month average for Customer Meter Deposits in the Water and Wastewater Divisions?

A. No. In LPSCO's rebuttal testimony, it stated "The Company does not agree with this adjustment because it will result in a rate base mismatch between meter deposits and PIS. The PIS balance in rate base is a test year-end balance. The meter deposits balance must be stated on the basis as PIS balance otherwise a mismatch will occur."

Q. How does RUCO respond to the Company's argument?

A. Simply, RUCO has historically made the same argument against a number of companies' insistence of including post-test year plant. It creates a mismatch between what is included in test year end UPIS and

all the remaining rate base items. However, RUCO does allow for post-test year plant in certain circumstances and has allowed post-test year plant in this case.

Q. Why does RUCO believe that a thirteen month average is more representative of the Company's true balance?

A. When reviewing the Company's month end balance in customer deposits you see that the balance will change significantly from month to month. For example, the balance in October of 2012 for long term water deposits was $1,212,720 while the balance in December of 2012 was $914,859. Using the average will provide a more accurate representation of the actual balance rather than a specific point in time.

Q. What adjustment is RUCO recommending to account for its thirteen-month average of non-investor supplied capital related to meter deposits?

A. RUCO recommends a reduction in rate base for customer meter deposits of $160,986 for the Water Division and an increase in customer meter deposits of $14,231 for the Wastewater Division.

Rate Base Adjustment No. 6 – Customer Security Deposits

Q. Are RUCO and the Company in agreement with RUCO rate base adjustment No. 6 that uses the same thirteen-month average of Customer Security Deposits for the Water and Wastewater Divisions?

A. The Company accepted RUCO's thirteen-month average customer security deposit recommendation, but the calculations differ slightly. For the Water Division, RUCO recommends a rate base reduction of $7,785 while the Company recommends a reduction of $7,514. For the Wastewater Division, RUCO recommends a reduction to rate base of $8,553 while the Company's recommends a reduction of $8,334. RUCO was unable to determine the difference in the Company's calculations.

Rate Base Adjustment No. 7 – Intentionally Left Blank for Future Use

Rate Base Adjustment No. 8 – Intentionally Left Blank for Future Use

Rate Base Adjustment No. 9 – Accumulated Deferred Income Tax ("ADIT")

Q. Are RUCO and the Company in agreement with RUCO rate base adjustment No. 9 for the ADIT balances of the Water and Wastewater Divisions?

A. Yes. Both RUCO and the Company propose reductions to the ADIT balance as filed here and in LPSCO's rebuttal filings. The ADIT balances recommended by RUCO differ from the Company's but are due to the respective adjustments to UPIS, A/D, AIAC, CIAC balances and income tax calculations. The ADIT balances as recommended by RUCO are dependent on each party's recommendations regarding those rate base items. The Company corrected its errant and former State of Arizona statutory income tax rate, which was superseded by House Bill 2001.

Rate Base Adjustment No. 10 – TCE Plume Regulatory Asset

Q. Are RUCO and the Company in agreement with RUCO rate base adjustment No. 10 for the regulatory asset balances of the Water Division?

A. Yes. However, there is a very minor difference in RUCO and the Company's calculations. This could be a rounding issue since more than one number is used to derive the amount. This adjustment applies only to the Water Division, which increases the regulatory asset by $688 whereas the Company calculated $686.

II. SURREBUTTAL OPERATING INCOME ADJUSTMENTS

Operating Income Adjustments

Adjustment No / Description	Water Div.	Wastewater Div.
1 – Depreciation Expenses	$(11,713)	$ (27,613)
2 – Property Tax Expense	24,904	27,493
3 – Reverse Expense Animalization's	-- 0 --	2,686
4 – Regulatory Asset	(851)	-- 0 –
5 – Declining Usage Adjustment	58,744	-- 0 –
6 – Water Testing Expense	22,062	23,668
7 – Corporate Expense	8,420	7,420
8 – Employee Pension Benefits	62,199	76,431
9 – Intentionally Left Blank	-- 0 --	-- 0 –
10- Liberty Utilities Expense Reductions	1,829	2,521
11- Allocate Bad Debt Expense	(21,216)	23,924
12- Intentionally Left Blank	-- 0 --	-- 0 –
13- APUC Cost Allocations	83,768	84,319
14- Achievement / Incentive Pay	138,887	128,034
15- Miscellaneous Expense	16,108	342
16- Customer Interest Deposit	(4,848)	(5,467)
17- Income Tax Expense	(156,513)	(128,645)
Total RUCO Recommended Operating Income Adjustments. See Schedules RBM-14	$221,780	$215,113

Q. What are RUCO's surrebuttal operating income adjustments and briefly summarize each one?

A. For the Water Division, RUCO recommended twelve direct testimony operating income adjustments and in surrebuttal testimony, RUCO is now recommending fourteen operating income adjustments. For the Wastewater Division, RUCO recommended eleven direct testimony operating income adjustments and in surrebuttal testimony, RUCO is now recommending thirteen operating income adjustments. Most of RUCO's adjustments were recommended in RUCO's direct testimony and were fully discussed there.

Q. What two new operating income adjustments for the Water Division does RUCO recommend in surrebuttal testimony?

A. RUCO adopted a Staff recommended adjustment for US Liberty Water – Management Services for $8,420 that the Company accepted, which reflects a US Liberty Water corporate expense true-up during the test year. The second operating income expense adjustment that RUCO adopted was proposed by the Company, which was not recommended in RUCO's direct filing, was an $851 additional amortization expense related to the regulatory asset of the TCE plume

Q. What two new operating income adjustments for the Wastewater Division does RUCO recommend in surrebuttal testimony?

A. RUCO adopted a Staff recommended adjustment for US Liberty Water – Management Services for $7,420 that the Company accepted, which reflects a US Liberty Water corporate expense true-up during the test year. The second operating expense adjustment that RUCO adopted as proposed by the Company, increased the sludge removal expense by $3,410 and decreased the water testing expense by $27,078 for a net operating income adjustment of $23,668.

Operating Income Adjustment No. 1 – Depreciation Expense

Q. Are RUCO and the Company in agreement with RUCO operating income adjustment No. 1 for depreciation expense on a going forward basis for the Water and Wastewater Divisions?

A. Yes. Since RUCO is in agreement with the Company's UPIS and CIAC balances for both the Water and Wastewater Divisions, both parties agree on the depreciation expense going forward. The depreciation expense adjustments are $11,713 and $27,613 for the Water and Wastewater Divisions, respectively.

Operating Income Adjustment No. 2 – Property Tax Expense

Q. Please discuss RUCO's recommended property tax expense compared to the Company's and briefly explain the differences?

A. The property tax expense is primarily driven by the gross revenues recommended by RUCO and proposed by the Company. In that regard, there will always be a difference in this expense from the Company's proposed cost of capital ("COC") versus RUCO's recommended COC alone. Since the Company has adopted and applied the correct assessment ratio as prescribed in House Bill ("HB") 2001 in its rebuttal testimony, RUCO and the Company are relatively close in the level of the expense for both the Water and Wastewater Divisions.

Q. What property tax expense adjustments does RUCO recommend for the Water and Wastewater Divisions in its surrebuttal filing?

A. RUCO recommends property tax expense decrease of $24,904 and $27,493 for the Water and Wastewater Divisions, respectively. Whereas, the Company proposed adjustments are $27,701 and $28,753, respectively.

<u>Operating Income Adjustment No. 3 – Revenue and Expense Annualizations</u>

Q. Did the Company adopt RUCO's revenue and expense annualizations adjustment?

A. Yes. RUCO would like to note that this adjustment applies only to the Wastewater Division and is fully explained in RUCO's direct testimony. This adjustment increases revenues by $1,193 for 3 additional annualized customers, increases the sludge removal expense by $13, and decreases postage expense by $1,506 for a double-count of postage expense because the Company mails both the Water and Wastewater monthly-bills in one envelope or monthly-billing. There is no need to increase postage expense for both divisions when both bills are sent simultaneously in one monthly billing. The net operating income adjustment is $2,686, which increases the Company's test year operating income.

Operating Income Adjustment No. 4 – TCE Plume Regulatory Asset Amortization Expense

Q. Are RUCO and the Company in agreement with RUCO operating income adjustment No. 4 for the additional amortization expense proposed by the Company?

A. Yes. RUCO adopted the Company's $851 additional amortization expense associated with the TCE plume regulatory asset. This adjustment applies only to the Water Division.

Operating Income Adjustment No. 5 – Reverse Company's Declining Usage Adjustment

Q. Does RUCO continue to take exception to the Company's declining usage adjustment?

A. Yes. RUCO does not agree with the Company's test year adjustment for declining usage for several reasons. First, the adjustment is not known and measureable. Second, when applying the Company's methodology in calculating the adjustment this current year would produce an increase in gallons sold over the test year. Finally, RUCO doesn't agree with the 1.5 multiplier used by the Company in its calculation. The 1.5 multiplier was described as the midpoint of a three year period, between the expected date of rate increases in this rate filing and the expected date of rate increases in the next rate case filing. The use of a multiplier is a flawed

assumption since the Company has not applied for new rates every three years.

Q. What adjustments does RUCO continue to make related to declining usage?

A. The adjustment proposed by RUCO increases the Company's teat year operating income by $58,744, and applies only to the Water Division.

Operating Income Adjustment No. 6 – Water Testing Expense

Q. Did the Company adopt RUCO's water testing expense adjustments for the Water and Wastewater Divisions?

A. Yes. The Company adopted RUCO's Water Division's water testing expense of $22,062. However, RUCO did not recommend a Wastewater Division water testing expense adjustment but adopted Staff's proposed adjustments to increase the sludge removal expense for $3,410 and a decrease in water testing expense of $27,078. RUCO's proposed adjustments for the Wastewater Division increase operating income by $23,688.

Operating Income Adjustment No. 7 – US Liberty Water Corporate Expense True-ups

Q. Did RUCO adopt Staff's US Liberty Water Corporate expense true-ups for the Water and Wastewater Divisions?

A. Yes. RUCO adopted the Staff's US Liberty Water corporate expense true-ups of $8,420 and $7,420, respectively, for the Water and Wastewater Divisions. The Company was also in agreement with the adjustments recommended by Staff.

Operating Income Adjustment No. 8 – Employee Benefit Pension Plan

Q. Did RUCO take exception to the Company's test year adjustment for pension expense?

A. Yes. Included LPSCO's recently approved pension plan was the clause that the Company is under no obligation to make payments to the plan. This clause coupled with the lack of historical payments to the plan created doubt that an adjustment should be made to test year results.

Q. Has additional information been provided to RUCO that would support the pension contributions?

A. While RUCO has not reversed their test year adjustment, RUCO has agreed to allow the pension expense if the Company can provide evidence at the hearing (or with its final briefs) showing that the expense has been incurred and/or paid.

Operating Income Adjustment No. 9 – Intentionally Left Blank

Operating Income Adjustment No. 10 – US Liberty Water Additional Reductions

Q. Did the Company reflect the additional US Liberty Water Corporate expense reductions in its operating income adjustments that were proposed by LPSCO representative Mr. Krygier in response to a Staff DR labeled JMM 12-2 as RUCO recommended in its operating income adjustments?

A. Yes, the Company did reflect Mr. Krygier's proposed adjustments in response to the JMM 12-2 DR. The adjustments reduce LPSCO's expenses by $1,829 and $2,521 for the Water and Wastewater Divisions respectively.

Operating Income Adjustment No. 11 – Allocate Bad Debt Expense that was Entirely Booked to the Wastewater Division

Q. Are RUCO and the Company in agreement that an operating income adjustment was needed to allocate the bad debt expense across both the Water and Wastewater Divisions rather than have the entire expense reside on the Wastewater Division's books?

A. Yes. RUCO and the Company both agree that the corrected bad debt expense for the Water Division is $21,140. However, RUCO believes that the bad debt expense for the Wastewater Division is $21,291 while the

Company had agreed to an expense of $21,921. There appears to be a transposition error in the Wastewater Division.

Operating Income Adjustment No. 12 – Intentionally Left Blank

Operating Income Adjustment No. 13 – Corporate Cost Allocations

Q. Did RUCO make any new adjustments to its direct filing for Algonquin Power Utilities Corporation ("APUC") corporate cost allocations here in surrebuttal testimony?

A. Yes.

Q. Please explain the adjustments that RUCO recommends in its surrebuttal testimony for the APUC cost allocations.

A. RUCO made five updates to Schedule RBM-27 that increased the percentages allowed for the APUC cost allocations. The adjustments increased the itemized expenses for professional services from 0 to 50 percent, unit holder communications from 0 to 50 percent, trustee/director fees from 0 to 50 percent, employee stock purchase plan from 0 to 50 percent, and escrow and transfer agent fees from 0 to 50 percent. All of those percentage adjustments are reflected in column [J] on Schedule RBM-27.

Q. What impact do those adjustments make to RUCO's recommended APUC cost allocations allowance?

A. For the Water Division, the surrebuttal adjustments increase RUCO's recommended allowable APUC cost allocations by $31,595 from $147,230 to $178,825. For the Wastewater Division, the surrebuttal adjustments increase RUCO's recommended allowable APUC cost allocations by $31,388 from $146,266 to $177,654.

Q. Please explain RUCO's rationale for increasing the allowable APUC cost allocations shown above.

A. The adjustments recognize that there is more than one beneficiary of the parent Company, APUC, being a member of the Toronto Stock Exchange and thus a publicly traded Company. The owners/shareholders also benefit from APUC being a publicly traded Company on the Toronto Stock Exchange by having a market to openly buy and sell their shares of stock in APUC. The owners/shareholders also benefit from the growth in the value of each share of stock and regular quarterly dividends. The ratepayers in turn have a source in which the operating Company, LPSCO, can access the equity capital market as needed.

The actual awards provided in the stock option expense compensation plan may vary at management's discretion. For instance, the Company provided a response to RUCO DR 3.24 that clearly shows the volatility of

such pay programs. For instance, the response to DR 3.24 identified that the stock option expense levels have varied from $0 in 2009 to the TY 2012 amount of $1,376,013. In essence, if the Company's test year were 2009, there would be a zero amount allocated to LPSCO, but since the test year was 2012, LPSCO is being allocated $88,154 in this proceeding simply because of the test year utilized in this case. These are the type of volatile expenses RUCO believes should be shared on a 50/50 basis between shareholders and ratepayers. Stock option expense is normally reserved for the senior executives in Canada not the rank and file employees of Liberty Utilities or the meter readers that read the LPSCO ratepayers' water meter. To embed 100 percent of such a volatile expense into rates is one-sided when all, including shareholders, benefit from the expense. Ratemaking is not a one-way street. It requires a balancing of the issues and expenses to obtain a more fair, just, and reasonable outcome, which resembles a two-way or sided street.

<u>Operating Income Adjustment No. 14 – Achievement / Incentive / Bonus Pay</u>

Q. Please explain RUCO operating income adjustment No. 14 for achievement / incentive / bonus pay programs?

A. This adjustment provides for the allocation of 50 percent of the test year expense for the achievement / incentive / bonus pay compensation to shareholders. Test year expense for these types of compensation

expenses proposed by LPSCO is reduced by $138,887 for the Water Division and decreased by $128,034 for the Wastewater Division. RUCO is not recommending any related payroll tax expense in this adjustment, which certainly could be warranted also.

Q. Please explain why a 50 percent allocation to shareholders is appropriate for an achievement / incentive / bonus pay compensation programs.

A. In general, incentive compensation programs can provide benefits to both shareholders and ratepayers. The removal of 50 percent of the incentive compensation expense essentially provides for an equal sharing of such cost, and therefore provides an appropriate balance between the benefits attained by both shareholders and ratepayers. Both shareholders and ratepayers stand to benefit from the achievement of performance goals as they have been awarded to a number of Algonquin and Liberty Utilities' employees. However, there is no guarantee that the same award levels that have been included in the Company's proposed expenses in this test year case will be repeated in future years. The ratepayers are already providing cost recovery to the Company for all salaries, wages, including merit pay increases, through the current rates as charged, and through the new rates that the Commission will ultimately decide in this rate

proceeding because no intervening party in this case has made an adjustment to do otherwise.[2]

Staff Consultant, Mr. Ralph Smith, testified in a previous Uni-Source Gas rate case:

Q. Does UNSG recognize that its proposed treatment of incentive compensation expense in the current case represents a conscious deviation from principles and policies established in prior Commission Orders?

A. Yes. The response to data request UDR 1.66 stated: In Commission Decision No. 71623 (April 14, 2010), 50% of the incentive compensation expense was excluded from revenue requirements. UNS Gas is requesting full recovery of the normal and recurring level of incentive compensations expense.

Q. What reasoning does UNSG give for its request to recover 100% of its incentive compensation expense despite prior Commission Orders?

A. In her Direct Testimony at pages 4-5, Company witness Sabers stated that the Company's incentive compensation program is "a core piece of compensation based on the benchmarked cost needed to attract and retain qualified personnel." See Attachment RCS-3.

Q. What criteria has the Commission found important in deciding issues concerning utility incentive compensation in recent cases?

A. The criteria the Commission has found important in deciding this issue in recent cases are described in various orders, which have addressed the treatment of utility incentive compensation expense for ratemaking purposes. In Decision No. 68487 (February 23, 2006), the Commission adopted Staff's recommendation for an equal sharing of costs associated with the Southwest Gas Corporation's ("SWG') Management Incentive Plan ("MIP") expense. For example, in reaching its conclusion regarding SWG's MIP, the Commission stated in part on page 18 of Order 68487 that:

[2] RUCO has currently recommended disallowance for the pension plan proposed by the Company in this case because LPSCO has not actually spent anything towards that proposed expense.

> We believe that Staffs recommendation for an equal sharing of the costs associated with MIP compensation provides an appropriate balance between the benefits attained by both shareholders and ratepayers. Although achievement of the performance goals in the MIP, and the benefits attendant thereto, cannot be precisely quantified there is little doubt that both shareholders and ratepayers derive some benefit from incentive goals. Therefore, the costs of the program should be borne by both groups and we find Staffs equal sharing recommendations to be a reasonable resolution. (Emphasis Added)

Q. Do UNSG's shareholders and customers both benefit from the achievement of incentive compensation program?

A. Yes. Shareholders benefit from the achievement of financial goals. Additionally, shareholders benefit from the achievement of expense reduction and expense containment goals between rate cases. Shareholders and ratepayers can both benefit from the achievement of customer service goals.

Operating Income Adjustment No. 15 – Miscellaneous Expense

Q. Did the Company adopt RUCO's operating income adjustment No. 15 for miscellaneous expense?

A. Yes. The adjustment reduces the adjusted TY expense by $16,108 for the Water Division and decreases the same expense by $342 for the wastewater Division.

Operating Income Adjustment No. 16 – Customer Deposit Interest Expense

Q. Did the Company adopt RUCO's adjustment to include the customer deposit expense recorded above the line and thus in its recommended rates?

A. The Company did accept RUCO's suggestion to include the expense above the line and thus in rates. However, the Company's expense level for this expense is shown in the DR response provided to Staff DR JMM 13-4. The expense level recorded above the line by the Company as a miscellaneous expense in rebuttal testimony includes thirteen-months rather than a TY period of twelve-months. The Company's expense level is overstated by approximately $963 for the Company's TY. RUCO's recommended level for the expense ties to the twelve-month TY period of $10,315 rather than the Company's thirteen-months' worth of expenses of $11,277, which reflects the overstatement of $963 referenced above. RUCO maintains its adjustments that reflect a twelve-month period of $4,848 and $5,467 for the Water and Wastewater Divisions, respectively.

Operating Income Adjustment No. 17 – Income Tax Expense

Q. Have you calculated income tax expense based on RUCO's recommended adjusted operating income?

A. Yes. This adjustment is shown on Schedules RBM-1 on page 2 of 2 and RBM-31.

Q. Have you included an interest synchronization calculation in your computation of income tax expense?

A. Yes. The interest synchronization calculation, which computes an interest expense deduction for income taxes, can be viewed in the schedules noted above. The interest synchronization calculation is the adjusted rate base multiplied by the weighted cost of debt. The income tax gross up revenue conversion factor includes an element for the increase in property taxes due to RUCO's recommended level of increased revenues as discussed in the property tax expense adjustment No. 2.

III. COST OF CAPITAL

Q. Did RUCO perform a detailed cost of capital review in this case?

A. No. RUCO accepted the capital structure as filed by the Company, accepted the Company's cost of long term debt but did not accept the Company's cost of equity as filed.

Q. What did RUCO recommend for cost of equity?

A. RUCO recommended the same cost of equity, 9.20 percent, as agreed on in the recent Rio Rico Utility's Decision No. 73996. In the Rio Rico case the Company had requested a cost of equity of 9.50 percent, RUCO had recommended a cost of equity of 8.25 percent and Staff had recommended at cost of equity of 8.20 percent.

Q. What was RUCO's reasoning for recommending the 9.20 percent?

A. Decision No. 73996 was issued on July 30, 2013, which was less than two months prior to the testimony being filed in this case. RUCO believed that the final settlement cost of equity of 9.20 percent was fair and presented the Company with a sufficient Weighted Average Cost of Capital to earn their required rate of return. In addition, RUCO believes that LPSCO has a very similar capital structure to that of Rio Rico and shares a common parent. In other words, comparatively, Rio Rico and LPSCO are similar from a financial standpoint and it is appropriate for the Commission to award a 9.20 percent cost of equity. RUCO's approach in this case to cost of capital given the recent Rio Rico case did not involve the usual DCF and CAPM analysis. Rather RUCO approached it from a comparative analysis which is also an approach often used and accepted when ascertaining cost of capital.

Q. What did the Staff recommend as cost of equity?

A. The Staff recommended cost of equity of 8.40 percent.

Q. Based on Staff's recommendation do you believe that RUCO's recommended cost of equity is fair and reasonable in determining rates in this case?

A. Yes. RUCO believes that the 9.20 percent on cost of equity is very fair in this case.

IV. OTHER ISSUES - Liberty's Policy Proposals

Proposal Number - DSIC and CSIC / SIB

Q. Did RUCO accept and/or agree with the Company's request for a DSIC and a CSIC mechanism?

A. No. RUCO did not agree with the Company's request for a DSIC or CSIC.

Q. Has RUCO been provided with any new information that would affect their previous testimony regarding a DSIC or CSIC?

A. No. The Company did include the following statement, "However, after the approval of a SIB for Arizona Water Company in Decision No. 73938 (June 27, 2013) in which Liberty Utilities has participated, we modified our request and are now seeking approval of a water and wastewater SIB."[3]

Q. Has a CSIC, or SIB for a wastewater system, ever been approved by the Commission?

A. No. A CSIC or SIB for a wastewater system has never been approved.

Q. Was the SIB for the water and wastewater systems approved by the Staff in their testimony?

A. No. According to Staff testimony the SIB for the water and wastewater divisions were not approved. However, it went on to say that "LPSCO is finalizing the documentation to support its request for a SIB mechanism

[3] Rebuttal Testimony of Mr. Christopher D. Krygier, Page 21

which Staff expects will be docketed soon. Staff will review the documentation and file its recommendation with its rate design testimony."

Q. Did the Company file additional schedules in support of its request?

A. Yes. LPSCO docketed additional detailed schedules in support of their request on September 26, 2013, the day Direct Testimony was filed by RUCO and Staff.

Q. Was there any mention of a SIB mechanism in Staff's rate design testimony filed on October 4, 2013?

A. No, there was no mention of an approval by Staff related to the Company's SIB request. RUCO is assuming that as of filing surrebuttal testimony that Staff has not approved the SIB mechanism for either the water or wastewater divisions.

Q. **Did the Company agree with RUCO's assessment as filed in its direct testimony that the Engineering Study provided as support for a SIB was incomplete?**

A. No. The Company states in its rebuttal testimony that the information was sufficient and that the SIB as approved by the Commission in Decision No. 73938, did not set forth any requirements for "financial information."[4]

[4] Rebuttal Testimony of Mr. Christopher D. Krygier, Page 22

Q. Does RUCO agree with the Company's assessment that "financial information" was not required?

A. No. The documentation that the Staff requested in order to perform a satisfactory review of a SIB was the same information that RUCO indicated was missing from the Company's original filing. The information that was ultimately filed by the Company in support of a SIB was the same detailed schedules as included in Decision No. 73938 that the Commission stated could be used as a template for future filings by Companies requesting a SIB. In addition, at a minimum, an analysis should be performed, and filed with the filing of a SIB request, identifying the effect on ratepayers assuming a SIB is approved.

Q. Can you comment on Mr. Krygier's statement "this is why the proposed SIB includes a 100 basis point reduction in the ROE, the most significant customer benefit in the country?"[5]

A. RUCO finds this statement very confusing at best. There is no mention in any of the testimony filed by Company witnesses that indicate a 100 basis point reduction was made to ROE in this filing. Neither Mr. Kreiger, Mr. Sorensen nor Mr. Bourassa (Company Cost of Capital Witness) makes such a statement.

[5] Rebuttal Testimony of Mr. Christopher D. Krygier, Page 22

Q. Does RUCO have any other comments related to the SIB mechanism?

A. No. Between RUCO's Direct and surrebuttal testimonies all reasons have been identified for RUCO's disapproval of a DSIC and or SIB mechanism.

Policy Proposal – Purchased Power Adjuster Mechanism – ("PPAM")

Q. Did the Company request a PPAM in their original rate application?

A. Yes.

Q. **Does RUCO believe that a PPAM is justified in this case?**

A. No. RUCO continues to believe that a PPAM is not justifiable in this case.

Q. **Can you please explain RUCO's position on the Company's filing for a PPAM?**

A. Yes. I will briefly reiterate my direct testimony. First, by definition adjustor mechanisms are appropriate for certain narrowly defined expenses that routinely fluctuate widely. In LPSCO's case these expenses do not vary widely between years. When reviewing the actual purchase power costs for the past three years there has been less than a 4 percent change, in total, between the years 2010 through 2012. Second, contrary the Company's stating in its rebuttal testimony that the following argument is ridiculous, allowing adjustor mechanisms to collect increases in costs, could be a disincentive for companies to closely monitor and control costs.

While RUCO has not insinuated that LPSCO would be less than watchful over all costs, the possibility still exists. In reality, in RUCO's direct testimony, RUCO stated that LPSCO has done an outstanding job of controlling their purchased power costs. Finally, the Commission has disallowed a purchased power and fuel adjustor mechanism as recently as Decision No. 71856, by stating "adjustor mechanisms have a built-in potential of allowing a utility to increase rates based on certain isolated costs when its other costs are declining." This decision went on to say that "adjustor mechanisms should therefore be used only in extraordinary circumstances." Based on the facts as presented RUCO does not believe that LPSCO's purchase power costs fluctuation presents an extraordinary circumstance.

Policy Proposal - Property Tax Deferral Order

Q. Did the Company propose a Property Tax Accounting Deferral in its original rate filing?

A. Yes. In discussions with the Company, this request has been withdrawn.

Q. Does this conclude your testimony on revenue requirements.

A. Yes. I will now continue with RUCO's recommendations for rate design.

V. RUCO's RATE DESIGN

WATER DIVISION RATE DESIGN

Q. Did RUCO prepare a summary of the Company's present rates, proposed rates, and RUCO's recommended rates for both LPSCO's water and wastewater divisions?

A. Yes, see Schedules RBM W RD-1 and RBM WW RD-1 for the water and wastewater divisions respectively.

Q. Please summarize RUCO's recommended water rate design.

A. RUCO recommends a monthly minimum basic charge of $11.00 and an inverted four-tier rate design that consists of four-tiers for the ⅝ x ¾ and ¾-inch residential meter sizes. RUCO's recommended commodity rates are $0.85 per thousand gallons for 0 to 3,000 gallons, $1.90 per thousand gallons for 3,001 to 9,000 gallons, $3.08 per thousand gallons for 9,001 to 20,000 gallons, and $3.3830 per thousand gallons for any consumption over 20,000 gallons.

For the 1-inch residential and multi-family meter sizes, RUCO also recommends a monthly minimum basic charge of $27.75 and the same inverted four-tier rate design structure but with different break-over points that consists of four-tiers. RUCO's recommended commodity rates are $0.85 per thousand gallons for 0 to 5,000 gallons, $1.90 per thousand gallons for 5,001 to 11,000 gallons, $3.08 per thousand gallons for 11,001

to 35,000 gallons, and $3.383 per thousand gallons for any consumption over 35,000 gallons.

RUCO recommends a two-tier inverted block rate structure for all customers with meters larger than 1-inch meters. The recommended break-over point for the two-tier customers increases with meter size, as shown in Schedule RBM W RD-1. Under the recommended rate design, the monthly bill at any usage level is higher for a larger meter than for a smaller meter.

RUCO identified a billing crossover issue where a smaller meter size pays more than a larger meter size at the same consumption level in the Company's rate design for the ¾-inch commercial and 1-inch residential customer rate design. The Company's rate design testimony and schedules that support the testimony break-over points are inconsistent with one another. For instance, LPSCO's testimony supports the same break-over points for the residential ⅝ x ¾-inch and 1-inch metered customers while the supporting schedules do not reflect the same break points.

Q. Did RUCO prepare a typical bill analysis for a ⅝ x ¾ inch customer?

A. Yes. Please see Schedule RBM W RD-2.

Q. What is the rate impact on a ⅝ x ¾ inch meter residential customer using an average consumption of 4,277 gallons?

A. Under RUCO's recommended rates, a residential ⅝ x ¾ inch metered customer consuming the average usage of 4,277 gallons per month will pay $15.98, which is $0.34 more than the current $15.64 or a 2.16 percent increase. By comparison, a residential ⅝ x ¾ inch metered customer consuming the average usage of 4,277 gallons per month under the Company's proposed rates would be billed $19.37, which is $3.73 more than the current $15.64 or an increase of 23.86 percent.

WASTEWATER DIVISION RATE DESIGN

Q. Did RUCO prepare a summary of the Company's present rates, proposed rates, and RUCO's recommended rates for LPSCO's wastewater division?

A. Yes, please see Schedule RBM WW RD-2.

Q. What is the rate impact on a ⅝ x ¾ inch meter residential customer?

A. Under RUCO's recommended rates, a residential wastewater ⅝ x ¾ inch metered customer will pay $39.21, which is $0.22 more than the current $38.99 or an approximate .56 percent increase. By comparison, a residential ⅝ x ¾ inch meter customer under the Company's rebuttal proposed rates would be billed $41.08, which is $2.09 more than the current $38.99 or an increase of 5.36 percent.

OTHER RATE DESIGN ISSUES

Q. Are there any other issues that RUCO would want to clarify regarding rate design?

A. Yes. RUCO's wastewater rate design model is currently capable of designing rates up to a ten-inch meter. The Company has requested rates from a ⅝ x ¾ inch meter through a twelve-inch meter. To accommodate LPSCO's twelve-inch meter rate design request, RUCO advises the interested parties to multiply RUCO's recommended ⅝ x ¾ inch meter rate by the meter multiplier of 215 to obtain that specific customer classification customer rate for a twelve-inch meter in all such instances.

Q. Did RUCO examine Mr. Bourassa's claim that RUCO Wastewater Division's direct testimony rate design "revenues generated by the RUCO proposed rates are about $20,000 short of RUCO proposed revenue requirement"?

A. Yes. After RUCO's examination of Mr. Bourassa's claim, RUCO determined that Mr. Bourassa's assertion that RUCO's approximate $20,000 revenue shortfall was essentially caused by his own annualized billing determinate errors. He failed to recognize the additional revenues generated by the additional annualized bill counts for the residential low-income customers that consisted of 36 additional bills and the effluent 200-customer classification's additional bills that consisted of 7-additional

bills. Of course, he recognized the declining bill counts for the effluent 125-customer classification as RUCO did also. If the Company had recognized those additional annualized bills for the two customer classifications, RUCO's so-called shortfall would have been less than $1,000 rather than $20,000. RUCO was unable to determine the cause of the remaining $1,000 or less, but believes it was due to the effluent customers' revenue annualization for gallonage. RUCO believes that the Company's revenues generated by its rate design are approximately $19,000 over the Company's proposed revenue requirements when the annualization as discussed above are properly corrected.

Q. Does this conclude your testimony on rate design.

A. Yes.

TABLE OF CONTENTS TO RBM SCHEDULES

SCH. NO.	PAGE NO.	TITLE
RBM-1	1 of 2	REVENUE REQUIREMENT
RBM-1	2 of 2	GROSS REVENUE CONVERSION FACTOR ("GRCF")
RBM-2	1	RATE BASE SUMMARY
RBM-3	1	RATE BASE ADJUSTMENTS
RBM-4(a)	1 of 2	SUMMARY OF UTILITY PLANT IN SERVICE ("UPIS") ADJUSTMENTS
RBM-4(a)	2 of 2	SUMMARY OF UPIS ACCUMULATED DEPRECIATION ("A/D") ADJUSTMENTS
RBM-4(b)	1 - 5	RECONSTRUCTION OF UPIS & A/D SCHEDULES
RBM-4(c)	1 - 2	UPIS & A/D RECLASSIFICATIONS - NOT USED IN SURREBUTTAL FILING ADOPTED COMPANY'S
RBM-4(d)	1	RECLASSIFY WATER DIVISION INVOICES TO WASTEWATER DIVISION - NOT USED ADOPTED LPSCO
RBM-4(e)	1	REMOVE DUPLICATE INVOICES FROM UPIS ADDITIONS - NOT USED ADOPTED COMPANY'S
RBM-4(f)	1	RETIREMENT OF UPIS - TRANSPORTATION EQUIPMENT
RBM-4(g)	1	INTENTIONALLY LEFT BLANK
RBM-4(h)	1	ADDITIONAL ACCUMULATED DEPRECIATION ("A/D") FOR LATE RECORDED UPIS INVOIVES
RBM-4(i)	1	TO CORRECT A/D FOR NON-DEPRECIABLE UPIS ACCOUNT - USED ONLY FOR WATER DIVISION
RBM-5	1	ADVANCES IN AID OF CONSTRUCTION ("AIAC") - NOT USED
RBM-6	1 - 6	CONTRIBUTIONS IN AID OF CONSTRUCTION ("CIAC") & ACCUMULATED AMORTIZATIONS ("AA")
RBM-7	1	CUSTOMER METER DEPOSITS
RBM-8	1	CUSTOMER SECURITY DEPOSITS
RBM-9	1	INTENTIONALLY LEFT BLANK
RBM-10	1	INTENTIONALLY LEFT BLANK
RBM-11	1 - 2	ACCUMULATED DEFERRED INCOME TAX ("ADIT")
RBM-12	1	REGULATORY ASSET - TCE PLUME USED ONLY FOR WATER DIVISION
RBM-13	1	OPERATING INCOME SUMMARY
RBM-14	1 - 2	OPERATING INCOME ADJUSTMENTS
RBM-15	1	DEPRECIATION EXPENSE
RBM-16	1	PROPERTY TAX EXPENSE
RBM-17	1	USED ONLY FOR WASTEWATER DIVISION
RBM-18	1	REVENUE ACCRUAL FIX TO BE USED IN FUTURE
RBM-19	1	REVERSE COMPANY'S DECLINING USAGE ADJUSTMENT - USED ONLY FOR WATER DIVISION
RBM-20	1	WATER TESTING EXPENSE
RBM-21	1	INTENTIONALLY LEFT BLANK
RBM-22	1	EMPLOYEE PENSION PLAN
RBM-23	1	INTENTIONALLY LEFT BLANK
RBM-24	1	ADDITIONAL REDUCTIONS TO US LIBERTY UTILITIES CORPORATE EXPENSE
RBM-25	1	ALLOCATE BAD DEBT EXPENSE BETWEEN WATER AND WASTEWATER DIVISIONS
RBM-26	1	INTENTIONALLY LEFT BLANK
RBM-27	1	ALGONQUIN POWER UTILITIES CORPORATION ("APUC") COST ALLOCATIONS EXPENSE
RBM-28	1	ACHIEVEMENT / INCENTIVE / BONUS PAY EXPENSE
RBM-29	1	MISCELLANEOUS EXPENSE
RBM-30	1	CUSTOMER DEPOSIT INTEREST EXPENSE
RBM-31	1	ADJUSTED TEST YEAR ("TY") INCOME TAX EXPENSE
RBM-32	1	COST OF CAPITAL

RUCO RECOMMENDED REVENUE REQUIREMENT

Line No.	Description	[A] Company OCRB/FVRB Cost	[B] RUCO OCRB/FVRB Cost
1	Fair Value Rate Base	$ 35,647,602	$ 33,093,677
2	Adjusted Test Year Operating Income (Loss)	$ 2,024,376	$ 2,246,156
3	Current Rate Of Return (L2 / L1)	5.68%	6.79%
4	Required Operating Income (L5 X L1)	$ 3,387,127	$ 2,897,567
5	Required Rate Of Return On Fair Value Rate Base	9.50%	8.76%
6	Operating Income Deficiency (L4 - L2)	$ 1,362,751	$ 651,411
7	Gross Revenue Conversion Factor (RLM-1, Pg 2)	1.6563	1.6466
8	Increase In Gross Revenue Requirement (L7 X L6)	$ 2,257,160	$ 1,072,637
9	Adjusted Test Year Revenues	$ 11,201,390	$ 11,260,093
10	Proposed Annual Revenue (L8 + L9)	$ 13,458,550	$ 12,332,730
11	Required Percentage Increase In Revenue (L8 / L9)	20.15%	9.53%
12	Rate Of Return On Common Equity	10.00%	9.20%

References:
Column [A]: Company Schedules A-1, B-1, C-1, and D-1
Column [B]: RUCO Schedule RBM-2, RBM-13 and RBM-32

RUCO GROSS REVENUE CONVERSION FACTOR ("GRCF")

LINE NO.	DESCRIPTION	[A]	[B]	[C]
	Calculation of Gross Revenue Conversion Factor:			
1	Revenue	100.0000%		
2	Uncollecible Factor	0.0000%		
3	Revenues (L1 - L2)	100.0000%		
4	Combined Federal and State Income Tax and Property Tax Rate (Line 23)	39.2701%		
5	Subtotal (L3 - L4)	60.7299%		
6	**Revenue Conversion Factor (L1 / L5)**	1.6466		
	Calculation of Uncollecttible Factor:			
7	Unity	100.0000%		
8	Combined Federal and State Tax Rate (Line 17)	38.2900%		
9	One Minus Combined Income Tax Rate (L7 - L8)	61.7100%		
10	Uncollectible Rate	0.00000		
11	Uncollectible Factor (L9 * L10)	0.0000%		
	Calculation of Effective Tax Rate:			
12	Operating Income Before Taxes (Arizona Taxable Income)	100.0000%		
13	Arizona State Income Tax Rate	6.5000%		
14	Federal Taxable Income (L12 - L13)	93.5000%		
15	Applicable Federal Income Tax Rate (Col. [C], L53)	34.0000%		
16	Effective Federal Income Tax Rate (L14 x L15)	31.7900%		
17	Combined Federal and State Income Tax Rate (L13 + L16)		38.2900%	
	Calculation of Effective Property Tax Factor			
18	Unity	100.0000%		
19	Combined Federal and State Income Tax Rate (Col. [B], L17)	38.2900%		
20	One Minus Combined Income Tax Rate (L18-L19)	61.7100%		
21	Property Tax Factor (Sch. RBM-9, Col. [B], L24)	1.5883%		
22	Effective Property Tax Factor (L20 x L21)		0.9801%	
23	Combined Federal and State Income Tax and Property Tax Rate (Col. [B], L17 + L22)			39.2701%
24	Required Operating Income (Sch. RBM-1, Col. [B] Line 4)	$ 2,897,567		
25	Adjusted Test Year Operating Income (Loss) (Sch. RBM-1, Col. [B], L2)	2,246,156		
26	Required Increase in Operating Income (L24 - L25)		$ 651,411	
27	Income Taxes on Recommended Revenue (Col. [C], L52)	$ 1,589,336		
28	Income Taxes on Test Year Revenue (Col. [A], L52)	1,185,147		
29	Required Increase in Revenue to Provide for Income Taxes (L27 - L28)		404,190	
30	Recommended Revenue Requirement (Sch. RBM-1, Col. [B], Line 10)	$ 12,332,730		
31	Uncollectible Rate (L10)	0.0000%		
32	Uncollectible Expense on Recommended Revenue (L30 x L31)	$ -		
33	Adjusted Test Year Uncollectible Expense(Sch. RBM-6, Col. [C], L32)	$ -		
34	Required Increase in Revenue to Provide for Uncollectible Exp. (L32 - L33)		-	
35	Property Tax with Recommended Revenue (Sch. RBM-9, Col. [B], L19)	$ 551,260		
36	Property Tax on Test Year Revenue (Sch. RBM-9, Col. [B], L20)	534,224		
37	Increase in Property Tax Due to Increase in Revenue (L35 - 36)		17,036	
38	Total Required Increase in Revenue (Col. [B], L26 + L29 + L34 + L37)		$ 1,072,637	

	Calculation of Income Tax:	Test Year		RUCO Recommended
39	Revenue (Sch. RBM-1, Col. [B], Line 9 & Sch. RBM-1, Col. [B], L10)	$ 11,260,093	$ 1,072,637	$ 12,332,730
40	Operating Expenses Excluding Income Taxes	$ 7,828,790		$ 7,845,827
41	Synchronized Interest (Col. [C], L57)	$ 336,116		$ 336,116
42	Arizona Taxable Income (L39 - L40 - L41)	$ 3,095,186		$ 4,150,787
43	Arizona State Income Tax Rate	6.5000%		6.5000%
44	Arizona Income Tax (L42 x L43)	$ 201,187		$ 269,801
45	Federal Taxable Income (L42 - L44)	$ 2,893,999		$ 3,880,986
46	Federal Tax on First Income Bracket ($1 - $50,000) @ 15%	$ 7,500		$ 7,500
47	Federal Tax on Second Income Bracket ($51,001 - $75,000) @ 25%	$ 6,250		$ 6,250
48	Federal Tax on Third Income Bracket ($75,001 - $100,000) @ 34%	$ 8,500		$ 8,500
49	Federal Tax on Fourth Income Bracket ($100,001 - $335,000) @ 39%	$ 91,650		$ 91,650
50	Federal Tax on Fifth Income Bracket ($335,001 -$10,000,000) @ 34%	$ 870,060		$ 1,205,635
51	Total Federal Income Tax	$ 983,960		$ 1,319,535
52	Combined Federal and State Income Tax (L44 + L51)	$ 1,185,147		$ 1,589,336
53	Applicable Federal Income Tax Rate [Col. [C], L46 - Col. [A], L46] / [Col. [C], L40 - Col. [A], L40]			34.0000%
54	**Synchronized Interest Calculation:**			
55	Rate Base			$ 33,093,677
56	x Weighted Average Cost of Debt			1.0157%
57	Synchronized Interest			$ 336,116

RUCO RATE BASE SUMMARY

Line No.	Description	[A] Company As Filed OCRB/FVRB	[B] RUCO Adjustments	[C] RUCO As Adjusted OCRB/FVRB
1	Gross Utility Plant In Service	$ 91,151,411	$ (284,396)	$ 90,867,014
2	Accumulated Depreciation	(16,514,086)	(2,413,512)	(18,927,598)
3	Net Utility Plant In Service (L1 + L2)	$ 74,637,324	$ (2,697,908)	$ 71,939,417
	Less:			
4	Advances In Aid Of Construction ("AIAC")	$ (30,374,274)	$ -	$ (30,374,274)
5	Contribution In Aid Of Construction ("CIAC")	(7,324,578)	(101,234)	(7,425,812)
6	Accumulated Amortization of CIAC	1,489,772	(203,918)	1,285,854
7	NET CIAC (L5 + L6)	$ (5,834,806)	$ (305,152)	$ (6,139,957)
8	Customer Meter Deposits	$ (1,271,802)	$ (160,986)	$ (1,432,787)
9	Customer Security Deposits	(140,147)	(7,785)	(147,932)
10	Accumulated Deferred Income Taxes ("ADIT")	(1,459,075)	617,218	(841,857)
	Plus:			
11	Deferred Regulatory Assets - TCE Plume	90,381	688	91,069
12	Allowance For Working Capital	-	-	-
13	TOTAL RATE BASE (Sum L's 3, 4, 7, 8 Thru 12)	$ 35,647,602	$ (2,553,925)	$ 33,093,677

References:
Column [A]: Company Schedule B-1
Column [B]: RBM-3, Columns [B] Thru [K]
Column [C]: Column [A] + Column [B]

Litchfield Park Service Company
Docket No's. SW-01428A-13-0042 and
W-01427A-13-0043
Test Year Ended December 31, 2012

Water Division
Surrebuttal Schedule RBM-3
Page 1 of 1

RATE BASE ADJUSTMENTS

Line No.	Description	[A] Actual Test Year OCRB/FVRB	[B] Adjust No. 1 Utility Plant in Service Adjustments	[C] Adjust No. 2 Accumulated Depreciation	[D] Adjust No. 3 Intentionally Left Blank	[E] Adjust No. 4 CIAC & Amortization Adjustments	[F] Adjust No. 5 Customer Meter Deposits	[G] Adjust No. 6 Customer Security Deposits	[H] Adjust No. 7 Intentionally Left Blank	[I] Adjust No. 8 Intentionally Left Blank	[J] Adjust No. 9 ADIT Adjustment	[K] Adjust No. 10 TCE Plume Reg. Asset	[L] Total RUCO Adjustments	[M] RUCO Recommended OCRB/FVRB
1	Gross Utility Plant In Service	$ 91,151,411	$ (284,396)	$ -	$ -	$ -	$ -	$ -	$ -	$ -	$ -	$ -	$ (284,396)	$ 90,867,014
2	Accumulated Depreciation	(16,514,086)	-	(2,413,512)	-	-	-	-	-	-	-	-	(2,413,512)	(18,927,598)
3	Net Utility Plant In Service (L1 + L2)	$ 74,637,324	$ (284,396)	$ (2,413,512)	$ -	$ -	$ -	$ -	$ -	$ -	$ -	$ -	$ (2,697,908)	$ 71,939,417
	Less:													
4	Advances In Aid Of Construction ("AIAC")	$ (30,374,274)	$ -	$ -	$ -	$ -	$ -	$ -	$ -	$ -	$ -	$ -	$ -	$ (30,374,274)
5	Contribution In Aid Of Construction ("CIAC")	(7,324,578)	-	-	-	(101,234)	-	-	-	-	-	-	(101,234)	(7,425,812)
6	Accumulated Amortization of CIAC	1,489,772	-	-	-	(203,918)	-	-	-	-	-	-	(203,918)	1,285,854
7	NET CIAC (L5 + L6)	$ (5,834,806)	$ -	$ -	$ -	$ (305,152)	$ -	$ -	$ -	$ -	$ -	$ -	$ (305,152)	$ (6,139,957)
8	Customer Meter Deposits	$ (1,271,802)	$ -	$ -	$ -	$ -	$ (160,986)	$ -	$ -	$ -	$ -	$ -	$ (160,986)	$ (1,432,787)
9	Customer Security Deposits	(140,147)	-	-	-	-	-	(7,785)	-	-	-	-	(7,785)	(147,932)
10	Accumulated Deferred Income Taxes ("ADIT")	(1,459,075)	-	-	-	-	-	-	-	-	617,218	-	617,218	(841,857)
	Plus:													
11	Deferred Regulatory Assets - TCE Plume	90,381	-	-	-	-	-	-	-	-	-	688	688	91,069
12	Allowance For Working Capital	-	-	-	-	-	-	-	-	-	-	-	-	-
13	TOTAL RATE BASE (Sum L's 3, 4, 7, 8 Thru 12)	$ 35,647,602	$ (284,396)	$ (2,413,512)	$ -	$ (305,152)	$ (160,986)	$ (7,785)	$ -	$ -	$ 617,218	$ 688	$ (2,553,925)	$ 33,093,677

RUCO Adjustments:

Adjustment No. 1: Correct Utility Plant in Service ("UPIS") Balance as Filed by Company - See RUCO Rate Base Adjustment No. 1 on Schedule RBM-4(a) 2012 TY Plant Summary Schedule on page 1 of 2, Column [J] at line 35;
Adjustment No. 2: Correct UPIS Accumulated Depreciation ("A/D") Balance as Filed by Company - See RUCO Adjustment No. 2 on Schedule RBM-4(a) 2012 A/D Summary Schedule on page 2 of 2, Column [J] at line 35;
Adjustment No. 3: Intentionally Left Blank;
Adjustment No. 4: Correct Contributions in Aid of Construction ("CIAC") & CIAC Amortization Balances as Filed by Company - See RUCO Schedule RBM-6 CIAC Reconstruction Schedules on page 1 of 6 at lines 3 & 6 with Total Net Adjustment at line 7 and on page 6 of 6, Column [G] & [H], at line 24;
Adjustment No. 5: RUCO Recommended 13-Month Average Customer Meter Deposit Balance as Calculated - See RUCO Schedule RBM-7 Customer Meter Deposits on page 1 of 1 at line 3;
Adjustment No. 6: RUCO Recommended 13-Month Average Customer Security Deposit Balance as Calculated - See RUCO Schedule RBM-8 Customer Security Deposits on page 1 of 1 at line 3;
Adjustment No. 7: Intentionally Left Blank
Adjustment No. 8: Intentionally Left Blank
Adjustment No. 9: RUCO Recommended 2012 TY End Accumulated Deferred Income Tax ("ADIT") Balance After RUCO Recommended Rate Base Adjustments - See RUCO Schedule RBM-11 ADIT on page 1 of 2 at line 11;
Adjustment No. 10: RUCO Recommended TY Month-End Regulatory Asset Balance - TCE Plume - See RUCO Schedule RBM-12 at line 3;

References:

Column [A]: Company Schedule B-1
Column [B] Thru Column [K]: RUCO Recommended Rate Base Adjustments
Column [L]: Sum of RUCO Recommended Rate Base Adjustments of Columns [B] through [K]
Column [M]: Column [A] + Column [L]

RATE BASE ADJUSTMENTS NO. 1
SUMMARY OF UTILITY PLANT IN SERVICE ("UPIS") ADJUSTMENTS
TEST YEAR ENDED DECEMBER 31, 2012

Line No.	Acct No		[A] Company Plant in Service As Filed	[B] RUCO Adjustment #1 Utility Plant in Service	[C] RUCO Adjustment #2 Plant Reclassifications Per Staff DR DH 6.1 - 6.5	[D] RUCO Adjustment #3 UPIS Not Used & Useful	[E] RUCO Adjustment #4 Remove Duplicate Invoices	[F] RUCO Adjustment #5 Truck Retirement Per RUCO DR 3.02	[G] RUCO Adjustment #6 Intentionally Left Blank	[H] RUCO Adjustment #7 Used Only for Add'l. Late Recorded Inv. A/D	[I] RUCO Adjustment #8 Used Only for W Division A/D	[J] RUCO Adjustment #9 True-Up of Accruals	[K] RUCO Adjustment #10 Reconciling Adjustments	[L] RUCO Adjustment #11 Post-Direct Retires/Reclass	[M] Total UPIS Adjustments	[N] RUCO Recommended Plant in Service
1	301	Organization Cost	$ 21,100	$ -	$ -	$ -	$ -	$ -	$ -	$ -	$ -	$ -	$ -	$ -	$ -	$ 21,100
2	302	Franchise Cost	-	-	-	-	-	-	-	-	-	-	-	-	-	-
3	303	Land and Land Rights	1,456,278	-	-	(6,000)	-	-	-	-	-	-	-	-	(6,000)	1,450,278
4	304	Structures & Improvements	28,000,916	-	(2,776,772)	(6,156)	(3,000)	-	-	-	-	(178,617)	-	-	(2,964,545)	25,036,371
5	305	Collecting & Impounding Reservoirs	-	-	-	-	-	-	-	-	-	-	-	-	-	-
6	306	Lake, River, Canal Intakes	-	-	-	-	-	-	-	-	-	-	-	-	-	-
7	307	Wells & Springs	3,097,345	-	134,878	-	-	-	-	-	-	(18,108)	(0)	-	116,770	3,214,114
8	308	Infiltration Galleries	-	-	-	-	-	-	-	-	-	-	-	-	-	-
9	309	Raw Water Supply Mains	-	-	-	-	-	-	-	-	-	-	-	-	-	-
10	310	Power Generation Equipment	207,020	-	18,111	-	-	-	-	-	-	-	-	-	18,111	225,130
11	311	Pumping Equipment	897,792	-	(23,502)	-	-	-	-	-	-	-	-	-	(23,502)	874,290
12	320	Water Treatment Equipment	1,696,759	-	-	-	-	-	-	-	-	-	-	-	-	1,696,759
13	320.1	Water Treatment Plants	-	-	1,728,635	-	-	-	-	-	-	-	-	-	1,728,635	1,728,635
14	320.2	Solution Chemical Feeders	-	-	-	-	-	-	-	-	-	-	-	-	-	-
15	330	Distribution Reservoirs & Standpipes	492,176	-	-	-	-	-	-	-	-	-	-	-	-	492,176
16	330.1	Storage Tanks	-	-	901,841	-	-	-	-	-	-	-	-	-	901,841	901,841
17	330.2	Pressure Tanks	-	-	-	-	-	-	-	-	-	-	-	-	-	-
18	331	Transmission & Distribution Mains	40,259,045	-	-	-	-	-	-	-	-	-	0	(2,859)	(2,859)	40,256,187
19	333	Services	5,350,963	-	-	-	-	-	-	-	-	-	-	-	-	5,350,963
20	334	Meters	4,759,560	-	-	-	-	-	-	-	-	-	-	-	-	4,759,560
21	335	Hydrants	3,304,755	-	-	-	(2,608)	-	-	-	-	-	0	-	(2,607)	3,302,148
22	336	Backflow Prevention Devices	38,387	-	-	-	-	-	-	-	-	-	-	-	-	38,387
23	339	Other Plant & Misc Equipment	259,531	-	-	-	-	-	-	-	-	-	-	-	-	259,531
24	340	Office Furniture & Equipment	651,098	-	6,555	-	-	-	-	-	-	-	-	-	6,555	657,653
25	340.1	Computers & Software	-	-	7,995	-	-	-	-	-	-	-	-	-	7,995	7,995
26	341	Transportation Equipment	307,592	-	-	-	-	(17,555)	-	-	-	-	1	(55,341)	(72,895)	234,697
27	342	Stores Equipment	37,143	-	-	-	-	-	-	-	-	-	-	-	-	37,143
28	343	Tools, Shop & Garage Equipment	47,434	-	-	-	-	-	-	-	-	-	-	-	-	47,434
29	344	Laboratory Equipment	5,803	-	-	-	-	-	-	-	-	-	-	-	-	5,803
30	345	Power Operated Equipment	-	-	-	-	-	-	-	-	-	-	(0)	18,003	18,003	18,003
31	346	Communication Equipment	128,402	-	-	-	-	-	-	-	-	-	-	-	-	128,402
32	347	Miscellaneous Equipment	-	-	-	-	-	-	-	-	-	-	-	-	-	-
33	348	Other Tangible Plant	132,312	-	(9,897)	-	-	-	-	-	-	-	-	-	(9,897)	122,414
34		Rounding	-	-	-	-	-	-	-	-	-	-	(1)	-	(1)	(1)
35		RUCO UPIS Adjustments	$ 91,151,411	$ -	$ (12,156)	$ (12,156)	$ (5,608)	$ (17,555)	$ -	$ -	$ -	$ (196,725)	$ -	$ (40,198)	$ (284,396)	$ 90,867,014

RUCO Adjustments:

Adjustment No. 1: Correct Utility Plant in Service ("UPIS") Balance as Filed by Company - See RUCO Adjustment No. 1 on Schedule RBM-4(b) 2008 thru 2012 TY Plant Schedules on pages 1-5 at page 5 on line 37;
Adjustment No. 2: Plant Reclassifications - RUCO Adopted the Company's UPIS as Filed in Rebuttal Testimony;
Adjustment No. 3: Reclassify UPIS Invoices from Water to Wastewater Division - RUCO Adopted the Company's Adjustment as Filed in Rebuttal Testimony;
Adjustment No. 4: Remove Duplicate Invoices - RUCO Adopted the Company's Adjustment as Filed in Rebuttal Testimony;
Adjustment No. 5: Record Truck Retirement - See RUCO Schedule RBM-4(f) on page 1 of 1 at line 3;
Adjustment No. 6: Intentionally Left Blank;
Adjustment No. 7: Used Only for A/D of Late Recorded UPIS Invoices;
Adjustment No. 8: Used Only to Correct Company's A/D for Non-Depreciable Account 301 - Organization Cost;
Adjustment No. 9: RUCO Adopted True-up of Accruals Recommended by Staff (See Company Rebuttal Testimony);
Adjustment No. 10: Company's Reconciling Adjustment to Reconstruction of UPIS Schedules (See Company Rebuttal Testimony); and
Adjustment No. 11: Post-Direct Filing of Retirements & Reclassifications (See Company Rebuttal Testimony).

References:

Column [A]: Company Schedule B-2 on page 3 Adjusted Test Year UPIS Balances as Filed;
Columns [B] Thru [L]: RUCO Recommended UPIS Adjustments;
Column [M]: Sum of Columns [B] Through [L] - RUCO Sum of Total Recommended UPIS Adjustments;

RATE BASE ADJUSTMENT NO. 2
SUMMARY OF ACCUMULATED DEPRECIATION ADJUSTMENTS
TEST YEAR ENDED DECEMBER 31, 2012

Line No.	Acct No		[A] Company Accum. Depre. As Filed	[B] RUCO Adjustment #1 Accumulated Depreciation	[C] RUCO Adjustment #2 Plant Reclassifications Per Staff DR DH 6.1 - 6.5	[D] RUCO Adjustment #3 Remove A/D Booked for Non-Used & Useful UPIS	[E] RUCO Adjustment #4 Remove Duplicate Invoices	[F] RUCO Adjustment #5 Truck Retirement Per RUCO DR 3.02	[G] RUCO Adjustment #6 Intentionally Left Blank	[H] RUCO Adjustment #7 Additional A/D on Late Recorded UPIS	[I] RUCO Adjustment #8 To Correct A/D of Non-Depre. Plant	[J] RUCO Adjustment #9 True-Up of Accruals	[K] RUCO Adjustment #10 Reconciling Adjustments	[L] RUCO Adjustment #11 Post-Direct Retires/Reclass	[M] RUCO Total Accum. Depre. Adjustments	[N] RUCO Total Accum. Depre. Recommended
1	301	Organization Cost	$ (21,100)	$ -	$ -	$ -	$ -	$ -	$ -	$ -	$ 21,100	$ -	$ -	$ -	$ 21,100	$ -
2	302	Franchise Cost	-	-	-	-	-	-	-	-	-	-	-	-	-	-
3	303	Land and Land Rights	-	-	-	-	-	-	-	-	-	-	-	-	-	-
4	304	Structures & Improvements	(3,036,910)	(1,006,248)	249,236	308	250	-	-	(65,110)	-	2,974	-	-	(818,591)	(3,855,501)
5	305	Collecting & Impounding Reservoirs	-	-	-	-	-	-	-	-	-	-	-	-	-	-
6	306	Lake, River, Canal Intakes	-	-	-	-	-	-	-	-	-	-	-	-	-	-
7	307	Wells & Springs	(915,114)	(107,969)	(11,127)	-	-	-	-	-	-	301	0	-	(118,795)	(1,033,909)
8	308	Infiltration Galleries	-	-	-	-	-	-	-	-	-	-	-	-	-	-
9	309	Raw Water Supply Mains	-	-	-	-	-	-	-	-	-	-	-	-	-	-
10	310	Power Generation Equipment	(87,092)	(12,642)	(1,358)	-	-	-	-	-	-	-	-	-	(14,000)	(101,092)
11	311	Pumping Equipment	(759,242)	306,323	(9)	-	-	-	-	(14,698)	-	-	-	-	291,615	(467,627)
12	320	Water Treatment Equipment	(199,379)	(53,569)	-	-	-	-	-	-	-	-	-	-	(53,569)	(252,948)
13	320.1	Water Treatment Plants	-	-	(145,981)	-	-	-	-	-	-	-	-	-	(145,981)	(145,981)
14	320.2	Solution Chemical Feeders	-	-	-	-	-	-	-	-	-	-	-	-	-	-
15	330	Distribution Reservoirs & Standpipes	(205,453)	(12,204)	-	-	-	-	-	-	-	-	-	-	(12,204)	(217,657)
16	330.1	Storage Tanks	-	-	(59,973)	-	-	-	-	-	-	-	-	-	(59,973)	(59,973)
17	330.2	Pressure Tanks	-	-	-	-	-	-	-	-	-	-	-	-	-	-
18	331	Transmission & Distribution Mains	(5,947,658)	(757,892)	-	-	-	-	-	(1,827)	-	-	(0)	525	(759,195)	(6,706,853)
19	333	Services	(1,409,855)	(208,613)	-	-	-	-	-	-	-	-	-	-	(208,613)	(1,618,468)
20	334	Meters	(2,960,808)	(433,042)	-	-	-	-	-	(7,444)	-	-	-	-	(440,486)	(3,401,292)
21	335	Hydrants	(335,259)	(56,539)	-	-	130	-	-	-	-	-	(0)	-	(56,409)	(391,667)
22	336	Backflow Prevention Devices	(15,227)	(3,201)	-	-	-	-	-	-	-	-	-	-	(3,201)	(18,428)
23	339	Other Plant & Misc Equipment	(85,429)	(21,838)	-	-	-	-	-	(568)	-	-	-	-	(22,207)	(107,636)
24	340	Office Furniture & Equipment	(239,369)	(46,003)	(1,093)	-	-	-	-	-	-	-	-	-	(47,096)	(286,464)
25	340.1	Computers & Software	-	-	(5,597)	-	-	-	-	-	-	-	-	-	(5,597)	(5,597)
26	341	Transportation Equipment	(200,543)	(43,604)	-	-	-	17,555	-	-	-	-	32,888	55,341	62,179	(138,363)
27	342	Stores Equipment	(5,839)	(1,586)	-	-	-	-	-	-	-	-	-	-	(1,586)	(7,425)
28	343	Tools, Shop & Garage Equipment	(11,341)	(1,459)	-	-	-	-	-	-	-	-	-	-	(1,459)	(12,800)
29	344	Laboratory Equipment	(290)	-	-	-	-	-	-	-	-	-	-	-	-	(290)
30	345	Power Operated Equipment	-	-	-	-	-	-	-	-	-	-	0	(3,713)	(3,713)	(3,713)
31	346	Communication Equipment	(58,472)	(14,964)	-	-	-	-	-	(498)	-	-	-	-	(15,462)	(73,934)
32	347	Miscellaneous Equipment	-	-	-	-	-	-	-	-	-	-	-	-	-	-
33	348	Other Tangible Plant	(19,709)	(1,049)	2,474	-	-	-	-	(1,695)	-	-	-	-	(271)	(19,980)
34		Rounding	-	-	-	-	-	-	-	-	-	-	-	-	-	-
35		RUCO Accum. Depre. Adjustments	$ (16,514,086)	$ (2,475,900)	$ 26,572	$ 308	$ 380	$ 17,555	$ -	$ (91,841)	$ 21,100	$ 3,275	$ 32,888	$ 52,152	$ (2,413,512)	$ (18,927,598)

RUCO Adjustments:

Adjustment No. 1: Accumulated Depreciation ("A/D") Per RUCO - RUCO Adopted the Company's A/D as Filed in Rebuttal Testimony:
Adjustment No. 2: Plant Reclassifications A/D Per RUCO - RUCO Adopted the Company's A/D as Filed in Rebuttal Testimony:
Adjustment No. 3: Reclassify A/D of UPIS Invoices from Water to Wastewater Division - See RUCO Schedule RBM-4(d) on page 1 of 1 at line 14;
Adjustment No. 4: Remove Duplicate Invoices A/D - RUCO Adopted the Company's A/D as Filed in Rebuttal Testimony:
Adjustment No. 5: Correct A/D for Truck Retirement - See RUCO Schedule RBM-4(f) on page 1 of 1 at line 6;
Adjustment No. 6: Used Only for Wastewater Division;
Adjustment No. 7: Used Only for A/D of Late Recorded UPIS Invoices - See RUCO Schedule RBM-4(h) on page 1 of 1, Column [B], at line 35;
Adjustment No. 8: To Correct Company's A/D for Non-Depreciable Account 301 - Organization Cost;
Adjustment No. 9: RUCO Adopted True-up of Accruals Recommended by Staff (See Company Rebuttal Testimony);
Adjustment No. 10: Company's Reconciling Adjustment to Reconstruction of A/D Schedules (See Company Rebuttal Testimony); and
Adjustment No. 11: Post-Direct Filing of Retirements & Reclassifications (See Company Rebuttal Testimony).

References:

Columns [A]: Company Schedule B-2 on page 4 Adjusted Test Year as Filed
Columns [B] Through [L]: RUCO Recommended A/D Adjustments
Columns [M]: Sum of Columns [B] Through [L] - RUCO Sum of Total Recommended UPIS Adjustments

UTILITY PLANT IN SERVICE ("UPIS") & UPIS ACCUMULATED DEPRECIATION ADJUSTMENT NO. 1
PLANT RECONSTRUCTION SCHEDULE
TEST YEAR ENDED DECEMBER 31, 2012

				Per Decision 72026			2008 (3 Months - October 1 through December 31, 2008)								
Line No.	NARUC Account No.	Description	Allowed Deprec. Rate	Plant at 9/30/2008	Accum. Deprec. At 9/30/2008	Net Plant at 9/30/2008	Plant Additions (Per Books)	Plant Adjustments	Adjusted Plant Additions	Plant Retirements	Salvage A/D Only	Depreciation (Calculated)	Plant Balance	Accum. Deprec.	Net Plant
1	301	Organization Cost	0.00%	$ 21,100	$ -	$ 21,100	$ -	$ -	$ -	$ -	$ -	$ -	$ 21,100	$ -	$ 21,100
2	302	Franchise Cost	0.00%	-	-	-	-	-	-	-	-	-	-	-	-
3	303	Land and Land Rights	0.00%	1,284,595	-	1,284,595	(367,902)	-	(367,902)	-	-	-	916,693	-	916,693
4	304	Structures & Improvements	3.33%	24,649,251	(404,869)	24,244,382	(1,026,408)	(20,938)	(1,047,346)	-	-	200,845	23,601,905	(605,714)	22,996,191
5	305	Collecting & Impounding Reservoirs	2.50%	-	-	-	-	-	-	-	-	-	-	-	-
6	306	Lake, River, Canal Intakes	2.50%	-	-	-	-	-	-	-	-	-	-	-	-
7	307	Wells & Springs	3.33%	2,393,491	(631,793)	1,761,697	163	-	163	-	-	19,926	2,393,653	(651,720)	1,741,933
8	308	Infiltration Galleries	6.67%	-	-	-	-	-	-	-	-	-	-	-	-
9	309	Raw Water Supply Mains	2.00%	-	-	-	-	-	-	-	-	-	-	-	-
10	310	Power Generation Equipment	5.00%	202,269	(56,403)	145,866	-	-	-	-	-	2,528	202,269	(58,932)	143,337
11	311	Pumping Equipment	12.50%	917,055	(598,038)	319,017	11,723	-	11,723	(420,594)	-	22,269	508,184	(199,713)	308,471
12	320	Water Treatment Equipment	3.33%	1,337,824	(41,009)	1,296,816	(46,530)	-	(46,530)	-	-	10,944	1,291,294	(51,953)	1,239,342
13	320.1	Water Treatment Plants	3.33%	-	-	-	-	-	-	-	-	-	-	-	-
14	320.2	Solution Chemical Feeders	20.00%	-	-	-	-	-	-	-	-	-	-	-	-
15	330	Distribution Reservoirs & Standpipes	2.22%	439,244	(174,417)	264,827	600	-	600	-	-	2,439	439,844	(176,856)	262,987
16	330.1	Storage Tanks	2.22%	-	-	-	-	-	-	-	-	-	-	-	-
17	330.2	Pressure Tanks	5.00%	-	-	-	-	-	-	-	-	-	-	-	-
18	331	Transmission & Distribution Mains	2.00%	28,918,695	(3,844,739)	25,073,956	724,203	(10,868)	713,335	-	-	146,377	29,632,030	(3,991,116)	25,640,914
19	333	Services	3.33%	4,245,838	(900,699)	3,345,139	164,164	(15,625)	148,539	-	-	35,965	4,394,377	(936,664)	3,457,713
20	334	Meters	8.33%	4,133,092	(1,931,628)	2,201,463	5,723	-	5,723	-	-	86,131	4,138,815	(2,017,760)	2,121,055
21	335	Hydrants	2.00%	2,055,781	(163,913)	1,891,868	91,012	-	91,012	-	-	10,506	2,146,793	(174,420)	1,972,373
22	336	Backflow Prevention Devices	6.67%	38,387	(7,546)	30,842	-	-	-	-	-	640	38,387	(8,186)	30,202
23	339	Other Plant & Misc Equipment	6.67%	259,531	(33,497)	226,034	-	-	-	-	-	4,328	259,531	(37,825)	221,706
24	340	Office Furniture & Equipment	6.67%	551,757	(124,987)	426,770	-	-	-	-	-	9,201	551,757	(134,187)	417,570
25	340.1	Computers & Software	20.00%	-	-	-	-	-	-	-	-	-	-	-	-
26	341	Transportation Equipment	20.00%	174,415	(83,060)	91,356	-	-	-	-	-	8,721	174,415	(91,781)	82,635
27	342	Stores Equipment	4.00%	31,711	(1,586)	30,126	-	-	-	-	-	317	31,711	(1,903)	29,809
28	343	Tools, Shop & Garage Equipment	5.00%	23,350	(7,113)	16,237	-	-	-	-	-	292	23,350	(7,405)	15,945
29	344	Laboratory Equipment	10.00%	-	-	-	-	-	-	-	-	-	-	-	-
30	345	Power Operated Equipment	5.00%	-	-	-	-	-	-	-	-	-	-	-	-
31	346	Communication Equipment	10.00%	119,710	(21,730)	97,980	-	-	-	-	-	2,993	119,710	(24,723)	94,987
32	347	Miscellaneous Equipment	10.00%	-	-	-	-	-	-	-	-	-	-	-	-
33	348	Other Tangible Plant	10.00%	-	-	-	2,475	-	2,475	-	-	31	2,475	(31)	2,444
34		Plant Held for Future Use	0.00%	-	-	-	-	-	-	-	-	-	-	-	-
35		RUCO Total UPIS & Accum. Depre.		$ 71,797,096	$ (9,027,027)	$ 62,770,069	$ (440,777)	$ (47,431)	$ (488,208)	$ (420,594)	$ -	$ 564,454	$ 70,888,294	$ (9,170,887)	$ 61,717,407

UTILITY PLANT IN SERVICE ("UPIS") & UPIS ACCUMULATED DEPRECIATION ADJUSTMENT NO. 1
PLANT RECONSTRUCTION SCHEDULE
TEST YEAR ENDED DECEMBER 31, 2012

				2009								
Line No.	NARUC Account No.	Description	Allowed Deprec. Rate	Plant Additions (Per Books)	Plant Adjustments	Adjusted Plant Additions	Plant Retirements	Salvage A/D Only	Depreciation (Calculated)	Plant Balance	Accum. Deprec.	Net Plant
1	301	Organization Cost	0.00%	$ -	$ -	$ -	$ -	$ -	$ -	$ 21,100	$ -	$ 21,100
2	302	Franchise Cost	0.00%	-	-	-	-	-	-	-	-	-
3	303	Land and Land Rights	0.00%	92,495	-	92,495	-	-	-	1,009,188	-	1,009,188
4	304	Structures & Improvements	3.33%	1,190,719	(21,984)	1,168,735	-	-	805,403	24,770,640	(1,411,117)	23,359,523
5	305	Collecting & Impounding Reservoirs	2.50%	-	-	-	-	-	-	-	-	-
6	306	Lake, River, Canal Intakes	2.50%	-	-	-	-	-	-	-	-	-
7	307	Wells & Springs	3.33%	501,310	(773)	500,537	-	-	88,043	2,894,190	(739,762)	2,154,428
8	308	Infiltration Galleries	6.67%	-	-	-	-	-	-	-	-	-
9	309	Raw Water Supply Mains	2.00%	-	-	-	-	-	-	-	-	-
10	310	Power Generation Equipment	5.00%	-	-	-	-	-	10,113	202,269	(69,045)	133,224
11	311	Pumping Equipment	12.50%	21,214	-	21,214	(35,008)	-	62,661	494,390	(227,366)	267,024
12	320	Water Treatment Equipment	3.33%	2,479	(24,987)	(22,508)	-	-	42,625	1,268,786	(94,578)	1,174,208
13	320.1	Water Treatment Plants	3.33%	-	-	-	-	-	-	-	-	-
14	320.2	Solution Chemical Feeders	20.00%	-	-	-	-	-	-	-	-	-
15	330	Distribution Reservoirs & Standpipes	2.22%	-	-	-	-	-	9,765	439,844	(186,621)	253,223
16	330.1	Storage Tanks	2.22%	-	-	-	-	-	-	-	-	-
17	330.2	Pressure Tanks	5.00%	-	-	-	-	-	-	-	-	-
18	331	Transmission & Distribution Mains	2.00%	1,906,160	(18,664)	1,887,496	-	-	611,516	31,519,527	(4,602,631)	26,916,895
19	333	Services	3.33%	1,580,515	-	1,580,515	-	-	172,648	5,974,892	(1,109,312)	4,865,580
20	334	Meters	8.33%	51,571	-	51,571	-	-	346,911	4,190,386	(2,364,671)	1,825,715
21	335	Hydrants	2.00%	309,661	-	309,661	-	-	46,032	2,456,454	(220,452)	2,236,002
22	336	Backflow Prevention Devices	6.67%	-	-	-	-	-	2,560	38,387	(10,746)	27,641
23	339	Other Plant & Misc Equipment	6.67%	-	-	-	-	-	17,311	259,531	(55,135)	204,395
24	340	Office Furniture & Equipment	6.67%	-	-	-	-	-	36,802	551,757	(170,990)	380,767
25	340.1	Computers & Software	20.00%	-	-	-	-	-	-	-	-	-
26	341	Transportation Equipment	20.00%	-	-	-	-	-	34,883	174,415	(126,664)	47,752
27	342	Stores Equipment	4.00%	-	-	-	-	-	1,268	31,711	(3,171)	28,540
28	343	Tools, Shop & Garage Equipment	5.00%	-	-	-	-	-	1,168	23,350	(8,573)	14,778
29	344	Laboratory Equipment	10.00%	-	-	-	-	-	-	-	-	-
30	345	Power Operated Equipment	5.00%	-	-	-	-	-	-	-	-	-
31	346	Communication Equipment	10.00%	-	-	-	-	-	11,971	119,710	(36,694)	83,016
32	347	Miscellaneous Equipment	10.00%	-	-	-	-	-	-	-	-	-
33	348	Other Tangible Plant	10.00%	15,420	-	15,420	-	-	1,019	17,895	(1,049)	16,845
34		Plant Held for Future Use	0.00%	-	-	-	-	-	-	-	-	-
35		RUCO Total UPIS & Accum. Depre.		$ 5,671,544	$ (66,408)	$ 5,605,136	$ (35,008)	$ -	$ 2,302,699	$ 76,458,422	$ (11,438,578)	$ 65,019,844

UTILITY PLANT IN SERVICE ("UPIS") & UPIS ACCUMULATED DEPRECIATION ADJUSTMENT NO. 1
PLANT RECONSTRUCTION SCHEDULE
TEST YEAR ENDED DECEMBER 31, 2012

				2010								
Line No.	NARUC Account No.	Description	Allowed Deprec. Rate	Plant Additions (Per Books)	Plant Adjustments	Adjusted Plant Additions	Plant Retirements	Salvage A/D Only	Depreciation (Calculated)	Plant Balance	Accum. Deprec.	Net Plant
1	301	Organization Cost	0.00%	$ -	$ -	$ -	$ -	$ -	$ -	$ 21,100	$ -	$ 21,100
2	302	Franchise Cost	0.00%	-	-	-	-	-	-	-	-	-
3	303	Land and Land Rights	0.00%	430,531	(53)	430,478	-	-	-	1,439,666	-	1,439,666
4	304	Structures & Improvements	3.33%	1,284,065	(776)	1,283,289	-	-	846,229	26,053,929	(2,257,346)	23,796,583
5	305	Collecting & Impounding Reservoirs	2.50%	-	-	-	-	-	-	-	-	-
6	306	Lake, River, Canal Intakes	2.50%	-	-	-	-	-	-	-	-	-
7	307	Wells & Springs	3.33%	56,518	-	56,518	-	-	97,318	2,950,708	(837,080)	2,113,628
8	308	Infiltration Galleries	6.67%	-	-	-	-	-	-	-	-	-
9	309	Raw Water Supply Mains	2.00%	-	-	-	-	-	-	-	-	-
10	310	Power Generation Equipment	5.00%	-	-	-	-	-	10,113	202,269	(79,159)	123,111
11	311	Pumping Equipment	12.50%	61,729	-	61,729	(20,920)	-	64,349	535,199	(270,795)	264,403
12	320	Water Treatment Equipment	3.33%	353,630	(34)	353,596	-	-	48,138	1,622,382	(142,716)	1,479,666
13	320.1	Water Treatment Plants	3.33%	-	-	-	-	-	-	-	-	-
14	320.2	Solution Chemical Feeders	20.00%	-	-	-	-	-	-	-	-	-
15	330	Distribution Reservoirs & Standpipes	2.22%	-	-	-	-	-	9,765	439,844	(196,385)	243,458
16	330.1	Storage Tanks	2.22%	-	-	-	-	-	-	-	-	-
17	330.2	Pressure Tanks	5.00%	-	-	-	-	-	-	-	-	-
18	331	Transmission & Distribution Mains	2.00%	1,611,724	(3,139)	1,608,585	-	-	646,476	33,128,111	(5,249,108)	27,879,004
19	333	Services	3.33%	307,502	(207)	307,294	-	-	204,080	6,282,186	(1,313,392)	4,968,794
20	334	Meters	8.33%	167,302	-	167,302	-	-	356,027	4,357,688	(2,720,698)	1,636,990
21	335	Hydrants	2.00%	221,507	-	221,507	-	-	51,344	2,677,961	(271,796)	2,406,164
22	336	Backflow Prevention Devices	6.67%	-	-	-	-	-	2,560	38,387	(13,307)	25,081
23	339	Other Plant & Misc Equipment	6.67%	-	-	-	-	-	17,311	259,531	(72,446)	187,085
24	340	Office Furniture & Equipment	6.67%	-	-	-	-	-	36,802	551,757	(207,792)	343,965
25	340.1	Computers & Software	20.00%	-	-	-	-	-	-	-	-	-
26	341	Transportation Equipment	20.00%	4,845	-	4,845	-	-	35,368	179,260	(162,031)	17,229
27	342	Stores Equipment	4.00%	3,688	-	3,688	-	-	1,342	35,399	(4,513)	30,886
28	343	Tools, Shop & Garage Equipment	5.00%	939	-	939	-	-	1,191	24,289	(9,764)	14,526
29	344	Laboratory Equipment	10.00%	-	-	-	-	-	-	-	-	-
30	345	Power Operated Equipment	5.00%	-	-	-	-	-	-	-	-	-
31	346	Communication Equipment	10.00%	-	-	-	-	-	11,971	119,710	(48,665)	71,045
32	347	Miscellaneous Equipment	10.00%	-	-	-	-	-	-	-	-	-
33	348	Other Tangible Plant	10.00%	20,924	-	20,924	-	-	2,836	38,819	(3,885)	34,934
34		Plant Held for Future Use	0.00%	-	-	-	-	-	-	-	-	-
35		RUCO Total UPIS & Accum. Depre.		$ 4,524,902	$ (4,209)	$ 4,520,693	$ (20,920)	$ -	$ 2,443,221	$ 80,958,195	$ (13,860,879)	$ 67,097,316

UTILITY PLANT IN SERVICE ("UPIS") & UPIS ACCUMULATED DEPRECIATION ADJUSTMENT NO. 1
PLANT RECONSTRUCTION SCHEDULE
TEST YEAR ENDED DECEMBER 31, 2012

				2011								
Line No.	NARUC Account No.	Description	Allowed Deprec. Rate	Plant Additions (Per Books)	Plant Adjustments	Adjusted Plant Additions	Plant Retirements	Salvage A/D Only	Depreciation (Calculated)	Plant Balance	Accum. Deprec.	Net Plant
1	301	Organization Cost	0.00%	$ -	$ -	$ -	$ -	$ -	$ -	$ 21,100	$ -	$ 21,100
2	302	Franchise Cost	0.00%	-	-	-	-	-	-	-	-	-
3	303	Land and Land Rights	0.00%	8,476	(188)	8,288	-	-	-	1,447,954	-	1,447,954
4	304	Structures & Improvements	3.33%	549,237	(2,601)	546,636	-	-	876,697	26,600,565	(3,134,043)	23,466,522
5	305	Collecting & Impounding Reservoirs	2.50%	-	-	-	-	-	-	-	-	-
6	306	Lake, River, Canal Intakes	2.50%	-	-	-	-	-	-	-	-	-
7	307	Wells & Springs	3.33%	19,010	(686)	18,324	-	-	98,564	2,969,032	(935,644)	2,033,389
8	308	Infiltration Galleries	6.67%	-	-	-	-	-	-	-	-	-
9	309	Raw Water Supply Mains	2.00%	-	-	-	-	-	-	-	-	-
10	310	Power Generation Equipment	5.00%	4,596	-	4,596	-	-	10,228	206,865	(89,387)	117,478
11	311	Pumping Equipment	12.50%	220,561	(3,315)	217,245	(1,327)	-	80,395	751,117	(349,863)	401,254
12	320	Water Treatment Equipment	3.33%	28,534	(223)	28,310	-	-	54,497	1,650,693	(197,213)	1,453,480
13	320.1	Water Treatment Plants	3.33%	-	-	-	-	-	-	-	-	-
14	320.2	Solution Chemical Feeders	20.00%	-	-	-	-	-	-	-	-	-
15	330	Distribution Reservoirs & Standpipes	2.22%	53,676	(1,344)	52,332	-	-	10,345	492,176	(206,731)	285,445
16	330.1	Storage Tanks	2.22%	-	-	-	-	-	-	-	-	-
17	330.2	Pressure Tanks	5.00%	-	-	-	-	-	-	-	-	-
18	331	Transmission & Distribution Mains	2.00%	5,388,147	(8,802)	5,379,345	-	-	716,356	38,507,456	(5,965,463)	32,541,993
19	333	Services	3.33%	382,109	(944)	381,165	-	-	215,543	6,663,351	(1,528,936)	5,134,416
20	334	Meters	8.33%	267,613	(4,811)	262,802	-	-	373,941	4,620,489	(3,094,639)	1,525,850
21	335	Hydrants	2.00%	512,885	(573)	512,312	-	-	58,682	3,190,273	(330,478)	2,859,794
22	336	Backflow Prevention Devices	6.67%	-	-	-	-	-	2,560	38,387	(15,867)	22,520
23	339	Other Plant & Misc Equipment	6.67%	-	-	-	-	-	17,311	259,531	(89,757)	169,774
24	340	Office Furniture & Equipment	6.67%	9,928	-	9,928	-	-	37,133	561,685	(244,925)	316,760
25	340.1	Computers & Software	20.00%	-	-	-	-	-	-	-	-	-
26	341	Transportation Equipment	20.00%	26,185	(636)	25,550	-	-	38,407	204,810	(200,438)	4,371
27	342	Stores Equipment	4.00%	1,116	-	1,116	-	-	1,438	36,515	(5,952)	30,564
28	343	Tools, Shop & Garage Equipment	5.00%	578	-	578	-	-	1,229	24,867	(10,993)	13,874
29	344	Laboratory Equipment	10.00%	-	-	-	-	-	-	-	-	-
30	345	Power Operated Equipment	5.00%	-	-	-	-	-	-	-	-	-
31	346	Communication Equipment	10.00%	3,986	(49)	3,937	-	-	12,168	123,647	(60,833)	62,814
32	347	Miscellaneous Equipment	10.00%	-	-	-	-	-	-	-	-	-
33	348	Other Tangible Plant	10.00%	44,349	-	44,349	-	-	6,099	83,168	(9,985)	73,184
34		Plant Held for Future Use	0.00%	-	-	-	-	-	-	-	-	-
35		RUCO Total UPIS & Accum. Depre.		$ 7,520,985	$ (24,172)	$ 7,496,813	$ (1,327)	$ -	$ 2,611,594	$ 88,453,681	$ (16,471,146)	$ 71,982,535

UTILITY PLANT IN SERVICE ("UPIS") & UPIS ACCUMULATED DEPRECIATION ADJUSTMENT NO. 1
PLANT RECONSTRUCTION SCHEDULE
TEST YEAR ENDED DECEMBER 31, 2012

				2012								
Line No.	NARUC Account No.	Description	Allowed Deprec. Rate	Plant Additions (Per Books)	Plant Adjustments	Adjusted Plant Additions	Plant Retirements	Salvage A/D Only	Depreciation (Calculated)	Plant Balance	Accum. Deprec.	Net Plant
1	301	Organization Cost	0.00%	$ -	$ -	$ -	$ -	$ -	$ -	$ 21,100	$ -	$ 21,100
2	302	Franchise Cost	0.00%	-	-	-	-	-	-	-	-	-
3	303	Land and Land Rights	0.00%	8,324	-	8,324	-	-	-	1,456,278	-	1,456,278
4	304	Structures & Improvements	3.33%	1,405,618	(5,268)	1,400,351	-	-	909,115	28,000,916	(4,043,158)	23,957,758
5	305	Collecting & Impounding Reservoirs	2.50%	-	-	-	-	-	-	-	-	-
6	306	Lake, River, Canal Intakes	2.50%	-	-	-	-	-	-	-	-	-
7	307	Wells & Springs	3.33%	142,604	(726)	141,878	(13,565)	-	101,005	3,097,345	(1,023,083)	2,074,261
8	308	Infiltration Galleries	6.67%	-	-	-	-	-	-	-	-	-
9	309	Raw Water Supply Mains	2.00%	-	-	-	-	-	-	-	-	-
10	310	Power Generation Equipment	5.00%	155	-	155	-	-	10,347	207,020	(99,734)	107,286
11	311	Pumping Equipment	12.50%	147,387	(712)	146,675	-	-	103,057	897,792	(452,920)	444,872
12	320	Water Treatment Equipment	3.33%	46,116	(50)	46,066	-	-	55,735	1,696,759	(252,948)	1,443,811
13	320.1	Water Treatment Plants	3.33%	-	-	-	-	-	-	-	-	-
14	320.2	Solution Chemical Feeders	20.00%	-	-	-	-	-	-	-	-	-
15	330	Distribution Reservoirs & Standpipes	2.22%	-	-	-	-	-	10,926	492,176	(217,657)	274,519
16	330.1	Storage Tanks	2.22%	-	-	-	-	-	-	-	-	-
17	330.2	Pressure Tanks	5.00%	-	-	-	-	-	-	-	-	-
18	331	Transmission & Distribution Mains	2.00%	1,808,114	(8,947)	1,799,167	(47,578)	-	787,665	40,259,045	(6,705,550)	33,553,495
19	333	Services	3.33%	(1,200,817)	(1,065)	(1,201,882)	(110,506)	-	200,038	5,350,963	(1,618,468)	3,732,496
20	334	Meters	8.33%	233,873	(3,333)	230,540	(91,470)	-	390,679	4,759,560	(3,393,848)	1,365,712
21	335	Hydrants	2.00%	120,585	(2,471)	118,114	(3,631)	-	64,950	3,304,755	(391,798)	2,912,958
22	336	Backflow Prevention Devices	6.67%	-	-	-	-	-	2,560	38,387	(18,428)	19,960
23	339	Other Plant & Misc Equipment	6.67%	-	-	-	-	-	17,311	259,531	(107,068)	152,463
24	340	Office Furniture & Equipment	6.67%	89,413	-	89,413	-	-	40,446	651,098	(285,371)	365,727
25	340.1	Computers & Software	20.00%	-	-	-	-	-	-	-	-	-
26	341	Transportation Equipment	20.00%	111,782	(1,468)	110,314	(7,532)	-	51,240	307,592	(244,147)	63,445
27	342	Stores Equipment	4.00%	628	-	628	-	-	1,473	37,143	(7,425)	29,718
28	343	Tools, Shop & Garage Equipment	5.00%	22,870	(303)	22,567	-	-	1,808	47,434	(12,800)	34,634
29	344	Laboratory Equipment	10.00%	5,803	-	5,803	-	-	290	5,803	(290)	5,513
30	345	Power Operated Equipment	5.00%	-	-	-	-	-	-	-	-	-
31	346	Communication Equipment	10.00%	4,827	(72)	4,755	-	-	12,602	128,402	(73,436)	54,967
32	347	Miscellaneous Equipment	10.00%	-	-	-	-	-	-	-	-	-
33	348	Other Tangible Plant	10.00%	49,143	-	49,143	-	-	10,774	132,312	(20,759)	111,553
34		Plant Held for Future Use	0.00%	-	-	-	-	-	-	-	-	-
35		RUCO Total UPIS & A/D		$ 2,996,426	$ (24,414)	$ 2,972,012	$ (274,282)	$ -	$ 2,772,023	$ 91,151,411	$ (18,968,887)	$ 72,182,524
36		UPIS Per Company As Filed								91,151,411		
37		RUCO's UPIS Adjustment								$ -		
38		A/D Per Company Plant Reconstruction Schedule									(16,492,986)	
39		RUCO's (Increase)/Decrease A/D Adjustment									$ (2,475,900)	

UTILITY PLANT IN SERVICE ("UPIS") ADJUSTMENT NO. 2
NOT USED IN RUCO SURREBUTTAL FILING - ADOPTED COMPANY'S PROPOSED REBUTTAL RECLASSIFICATIONS

Line No.	Acct. No.	Description	[A] Company UPIS As Filed	[B] RUCO UPIS Reclassification Adjustments	[C] RUCO Recommended UPIS Balances

References:
Per Company Responses to Staff DR 6.1 thru 6.5

UPIS ACCUMULATED DEPRECIATION ADJUSTMENT NO. 2
NOT USED IN RUCO SURREBUTTAL FILING - ADOPTED COMPANY'S PROPOSED REBUTTAL RECLASSIFICATIONS

Line No.	Acct. No.	Description	[A] Company Accum. Depre. As Filed	[B] RUCO Accum. Depre. Reclassification Adjustments	[C] RUCO Recommended Accum. Depre. Balances

References:
Per Company Responses to Staff DR 6.1 thru 6.5

UTILITY PLANT IN SERVICE ("UPIS") & UPIS ACCUMULATED DEPRECIATION ADJUSTMENTS NO. 3
NOT USED IN RUCO SURREBUTTAL FILING - ADOPTED COMPANY'S PROPOSED REBUTTAL RECLASSIFICATIONS

Line No.	Description	Amount

References:

1 LPSCO Response to Staff DR DH - 4.6
2 LPSCO Response to Staff DR DH - 4.7

UTILITY PLANT IN SERVICE ("UPIS") & UPIS ACCUMULATED DEPRECIATION ADJUSTMENTS NO. 4
REMOVE DUPLICATE INVOICES OF PLANT ADDITIONS
NOT USED IN RUCO SURREBUTTAL FILING - ADOPTED COMPANY'S PROPOSED REBUTTAL RECLASSIFICATIONS

Line No.	Description	Amount

References:

1 Per Company Response to Staff's Water DR 2.65

UTILITY PLANT IN SERVICE ("UPIS") & UPIS ACCUMULATED DEPRECIATION ADJUSTMENTS NO. 5
RETIREMENT OF TRUCK TRADED-IN ON PURCHASE OF NEW TRUCK

Line No.		Description	Amount
		Plant (Pickup Truck) Retirement:	
1	1	Company Traded-In a Truck during 2011 Plant (Truck) Addition As Filed By Company: Account 341 - Transportation Equipment	$ -
2		RUCO Recommended Plant Retirement Related to Trade-In on Purchase of New Truck	(17,555)
3		RUCO's Recommended Increase/(Decrease) Adjustment	$ (17,555)
		Adjust Accumulated Depreciation for Retirement Reflected Above:	
4		Company Proposed Retirement for Truck Traded-In As Filed	$ -
5		RUCO Recommended Accumulated Depreciation Adjustment for Cost of Traded-In Truck	17,555
6		RUCO's Recommended (Increase)/Decrease Adjustment	$ 17,555

References:

1 Per Company Response to RUCO DR 3.02

UTILITY PLANT IN SERVICE ("UPIS") & UPIS ACCUMULATED DEPRECIATION ADJUSTMENTS NO. 6
USED ONLY FOR WASTEWATER DIVISION

Line No.	Description	Amount

References:

UPIS ACCUMULATED DEPRECIATION ADJUSTMENTS NO. 7
ADDITIONAL ACCUMULATED DEPRECIATION ("A/D") FOR LATE RECORDED PLANT ADDITIONS

Line No.	Acct. No.	Description	[A] Company Accum. Depre. As Filed	[B] RUCO Additional Accum. Depre. for Late Recorded UPIS	[C] RUCO Recommended Accum. Depre. Balances
1	301	Organization Cost	$ (21,100)	$ -	$ (21,100)
2	302	Franchise Cost	-	-	-
3	303	Land and Land Rights	-	-	-
4	304	Structures & Improvements	(3,036,910)	(65,110)	(3,102,020)
5	305	Collecting & Impounding Reservoirs	-	-	-
6	306	Lake, River, Canal Intakes	-	-	-
7	307	Wells & Springs	(915,114)	-	(915,114)
8	308	Infiltration Galleries	-	-	-
9	309	Raw Water Supply Mains	-	-	-
10	310	Power Generation Equipment	(87,092)	-	(87,092)
11	311	Pumping Equipment	(759,242)	(14,698)	(773,941)
12	320	Water Treatment Equipment	(199,379)	-	(199,379)
13	320	Water Treatment Plants	-	-	-
14	320	Solution Chemical Feeders	-	-	-
15	330	Distribution Reservoirs & Standpipes	(205,453)	-	(205,453)
16	330	Storage Tanks	-	-	-
17	330	Pressure Tanks	-	-	-
18	331	Transmission & Distribution Mains	(5,947,658)	(1,827)	(5,949,485)
19	333	Services	(1,409,855)	-	(1,409,855)
20	334	Meters	(2,960,806)	(7,444)	(2,968,250)
21	335	Hydrants	(335,259)	-	(335,259)
22	336	Backflow Prevention Devices	(15,227)	-	(15,227)
23	339	Other Plant & Misc Equipment	(85,429)	(568)	(85,997)
24	340	Office Furniture & Equipment	(239,369)	-	(239,369)
25	340	Computers & Software	-	-	-
26	341	Transportation Equipment	(200,543)	-	(200,543)
27	342	Stores Equipment	(5,839)	-	(5,839)
28	343	Tools, Shop & Garage Equipment	(11,341)	-	(11,341)
29	344	Laboratory Equipment	(290)	-	(290)
30	345	Power Operated Equipment	-	-	-
31	346	Communication Equipment	(58,472)	(498)	(58,970)
32	347	Miscellaneous Equipment	-	-	-
33	348	Other Tangible Plant	(19,709)	(1,695)	(21,405)
34		Plant Held for Future Use	-	-	-
35		Totals	$ (16,514,086)	$ (91,841)	$ (16,605,927)

References:
Per Company Responses to Staff DR 16.1

UPIS ACCUMULATED DEPRECIATION ADJUSTMENTS NO. 8

TO CORRECT ACCUMULATED DEPRECIATION FOR A NON-DEPRECIABLE ACCOUNT

Line No.	Description	Amount
	To Correct Company's A/D for a Non-Depreciable Account 301 - Organization Cost Reflected on Company Schedule B-2, page 4:	
1	Accumulated Depreciation for Account 301 - Organization Cost As Filed by Company	$ 21,100
2	Accumulated Depreciation for Account 301 - Organization Cost Per RUCO	-
3	RUCO's Recommended (Increase)/Decrease Adjustment	$ 21,100

References:

See Company Schedule B-2, page 4

RATE BASE ADJUSTMENT NO. 3
INTENTIONALLY LEFT BLANK

Line No.	Description	Amount
	Water Division:	
1		$ -
2		-
3		$ -
	Wastewater Division:	
4		$ -
5		-
6		$ -

References:

RATE BASE ADJUSTMENT NO. 4
CONTRIBUTIONS IN AID OF CONSTRUCTION ("CIAC") & AMORTIZATIONS RECONSTRUCTION SCHEDULE

Line No.	Description	Amount
	Gross CIAC:	
1	Company Gross CIAC as Filed	$ (7,324,578)
2	RUCO Recommended Gross CIAC	(7,425,812)
3	RUCO Recommended (Increase)/Decrease Adjustment	$ (101,234)
	Accumulated Amoritization of CIAC:	
4	Company Accumulated Amortization of CIAC as Filed	1,489,772
5	RUCO Recommended Accumulated Amortization of CIAC	1,285,854
6	RUCO Recommended Increase/(Decrease) Adjustment	$ (203,918)
7	RUCO Net Increase/Decrease Adjustment	$ (305,152)

References:
Company Response to Staff DR JMM 2-23
Company Schedule B-2, pages 5.1 - 5.3
See RBM Testimony

RATE BASE ADJUSTMENT NO. 4 (Continued)
CONTRIBUTIONS IN AID OF CONSTRUCTION ("CIAC") & AMORTIZATIONS RECONSTRUCTION SCHEDULE

				[A]	[B]	[C]	[D]	[E]	[F]	[G]	[H]	[I]
				Per Decision 72026			2008 (3 Months - October 1 through December 31, 2008)					
Line No.	NARUC Account No.	Description	Allowed Amort. Rate	Gross CIAC Balance at 9/30/2008	CIAC Amortization Balance 9/30/2008	CIAC Net Balance 9/30/2008	CIAC Activity	CIAC Adjustments	Adjusted CIAC Activity	RUCO Amortization (Calculated)	Gross CIAC Balance at 12/31/2008	Accum. Amortization 12/31/2008
1	303	Land & Land Rights Contributed	0.00%	$ -	$ -	$ -	$ -	$ -	$ -	$ -	$ -	$ -
2		Current Period Amortization								-		
3		Accumulated Amortization Balance			-							-
4	307	Wells Contributed	3.33%	-	-	-	-	-	-	-	-	-
5		Current Period Amortization								-		
6		Accumulated Amortization Balance			-							-
7	311	Pumping Equipment Contributed	12.50%	(15,219)	-	3,605	-	-	-	-	(15,219)	-
8		Current Period Amortization								476		
9		Accumulated Amortization Balance			18,824							19,300
10	331	Transmission/Distribution Mains Contributed	2.00%	(2,846,725)	-	(2,104,325)	-	-	-	-	(2,846,725)	-
11		Current Period Amortization								14,234		
12		Accumulated Amortization Balance			742,400							756,634
13	333	Services Contributed	3.33%	(151,402)	-	(114,679)	-	-	-	-	(151,402)	-
14		Current Period Amortization								1,260		
15		Accumulated Amortization Balance			36,723							37,983
16	334	Meters Contributed	8.33%	(29,899)	-	(191)	-	-	-	-	(29,899)	-
17		Current Period Amortization								(191)		
18		Accumulated Amortization Balance			29,708							29,899
19	335	Hydrants	2.00%	(52,935)	-	(19,884)	-	-	-	-	(52,935)	-
20		Current Period Amortization								265		
21		Accumulated Amortization Balance			33,051							33,316
22		RUCO Gross CIAC & Amortizations		$ (3,096,180)	$ 860,706	$ (2,235,474)	$ -	$ -	$ -	$ 16,044	$ (3,096,180)	$ 877,131
23		Company As Filed		$ 3,096,180	$ (860,706)	$ 2,235,474	$ -	$ -	$ -	$ (63,226)	$ 3,096,180	$ (923,932)
24		RUCO Gross CIAC & Total Accum. Amortization Increase/(Decrease) Adjustments		$ -	$ -	$ -	$ -	$ -	$ -	$ (47,182)	$ -	$ (46,801)

References:
Company Response to Staff DR JMM 2-23
Company Schedule B-2, pages 5.1 - 5.3
See RBM Testimony

RATE BASE ADJUSTMENT NO. 4 (Continued)
CONTRIBUTIONS IN AID OF CONSTRUCTION ("CIAC") & AMORTIZATIONS RECONSTRUCTION SCHEDULE

Line No.	NARUC Account No.	Description	Allowed Amort. Rate	[A] Beginning Gross CIAC 1/1/2009	[B] Beginning Amortization Balance 1/1/2009	[C] CIAC Activity	[D] CIAC Adjustments	[E] Adjusted CIAC Activity	[F] RUCO Amortization (Calculated)	[G] Gross CIAC Balance at 12/31/2009	[H] Accum. Amortization 12/31/2009
						2009					
1	303	Land & Land Rights Contributed	0.00%	$ -	$ -	$ (92,495)	$ -	$ (92,495)	$ -	$ (92,495)	$ -
2		Current Period Amortization							-		
3		Accumulated Amortization Balance			-						-
4	307	Wells Contributed	3.33%	-	-	(499,000)	-	(499,000)	-	$ (499,000)	-
5		Current Period Amortization							8,308		
6		Accumulated Amortization Balance			-						8,308
7	311	Pumping Equipment Contributed	12.50%	(15,219)	-	-	-	-	-	(15,219)	-
8		Current Period Amortization							1,902		
9		Accumulated Amortization Balance			19,300						21,202
10	331	Transmission/Distribution Mains Contributed	2.00%	(2,846,725)	-	-	-	-	-	(2,846,725)	-
11		Current Period Amortization							56,935		
12		Accumulated Amortization Balance			756,634						813,568
13	333	Services Contributed	3.33%	(151,402)	-	(448,505)	-	(448,505)	-	(599,907)	-
14		Current Period Amortization							12,509		
15		Accumulated Amortization Balance			37,983						50,492
16	334	Meters Contributed	8.33%	(29,899)	-	-	-	-	-	(29,899)	-
17		Current Period Amortization							-		
18		Accumulated Amortization Balance			29,899						29,899
19	335	Hydrants	2.00%	(52,935)	-	-	-	-	-	(52,935)	-
20		Current Period Amortization							1,059		
21		Accumulated Amortization Balance			33,316						34,375
22		RUCO Gross CIAC & Amortizations		$ (3,096,180)	$ 877,131	$ (1,040,000)	$ -	$ (1,040,000)	$ 80,713	$ (4,136,180)	$ 957,844
23		Company As Filed		$ 3,096,180	$ (923,932)	$ 1,040,000	$ -	$ 1,040,000	$ (103,592)	$ 4,136,180	$ (1,027,524)
24		RUCO Gross CIAC & Total Accum. Amortization Increase/(Decrease) Adjustments		$ -	$ 1,801,063	$ -	$ -	$ -	$ (22,879)	$ -	$ (69,680)

References:
Company Response to Staff DR JMM 2-23
Company Schedule B-2, pages 5.1 - 5.3
See RBM Testimony

RATE BASE ADJUSTMENT NO. 4 (Continued)
CONTRIBUTIONS IN AID OF CONSTRUCTION ("CIAC") & AMORTIZATIONS RECONSTRUCTION SCHEDULE

Line No.	NARUC Account No.	Description	Allowed Amort. Rate	[A] Beginning Gross CIAC 1/1/2010	[B] Beginning Amortization Balance 1/1/2010	[C] CIAC Activity	[D] CIAC Adjustments	[E] Adjusted CIAC Activity	[F] RUCO Amortization (Calculated)	[G] Gross CIAC Balance at 12/31/2010	[H] Accum. Amortization 12/31/2010
				2010							
1	303	Land & Land Rights Contributed	0.00%	$ (92,495)	$ -	$ -	$ -	$ -	$ -	$ (92,495)	$ -
2		Current Period Amortization							-		
3		Accumulated Amortization Balance			-						-
4	307	Wells Contributed	3.33%	(499,000)	-	-	-	-	-	$ (499,000)	-
5		Current Period Amortization							16,617		
6		Accumulated Amortization Balance			8,308						24,925
7	311	Pumping Equipment Contributed	12.50%	(15,219)	-	-	-	-	-	(15,219)	-
8		Current Period Amortization							1,902		
9		Accumulated Amortization Balance			21,202						23,104
10	331	Transmission/Distribution Mains Contributed	2.00%	(2,846,725)	-	-	-	-	-	(2,846,725)	-
11		Current Period Amortization							56,935		
12		Accumulated Amortization Balance			813,568						870,503
13	333	Services Contributed	3.33%	(599,907)	-	-	-	-	-	(599,907)	-
14		Current Period Amortization							19,977		
15		Accumulated Amortization Balance			50,492						70,469
16	334	Meters Contributed	8.33%	(29,899)	-	-	-	-	-	(29,899)	-
17		Current Period Amortization							-		
18		Accumulated Amortization Balance			29,899						29,899
19	335	Hydrants	2.00%	(52,935)	-	-	-	-	-	(52,935)	-
20		Current Period Amortization							1,059		
21		Accumulated Amortization Balance			34,375						35,433
22		RUCO Gross CIAC & Amortizations		$ (4,136,180)	$ 957,844	$ -	$ -	$ -	$ 96,489	$ (4,136,180)	$ 1,054,334
23		Company As Filed		$ 4,136,180	$ (1,027,524)	$ -	$ -	$ -	$ (142,247)	$ 4,136,180	$ (1,169,772)
24		RUCO Gross CIAC & Total Accum. Amortization Increase/(Decrease) Adjustments		$ -	$ 1,985,369	$ -	$ -	$ -	$ (45,758)	$ -	$ (115,438)

References:
Company Response to Staff DR JMM 2-23
Company Schedule B-2, pages 5.1 - 5.3
See RBM Testimony

RATE BASE ADJUSTMENT NO. 4 (Continued)
CONTRIBUTIONS IN AID OF CONSTRUCTION ("CIAC") & AMORTIZATIONS RECONSTRUCTION SCHEDULE

				2011							
Line No.	NARUC Account No.	Description	Allowed Amort. Rate	Beginning Gross CIAC 1/1/2011	Beginning Amortization Balance 1/1/2011	CIAC Activity	CIAC Adjustments	Adjusted CIAC Activity	RUCO Amortization (Calculated)	Gross CIAC Balance at 12/31/2011	Accum. Amortization 12/31/2011
1	303	Land & Land Rights Contributed	0.00%	$ (92,495)	$ -	$ -	$ -	$ -	$ -	$ (92,495)	$ -
2		Current Period Amortization							-		
3		Accumulated Amortization Balance			-						-
4	307	Wells Contributed	3.33%	(499,000)	-	-	-	-	-	$ (499,000)	-
5		Current Period Amortization							16,617		
6		Accumulated Amortization Balance			24,925						41,542
7	311	Pumping Equipment Contributed	12.50%	(15,219)	-	(25,353)	-	(25,353)	-	(40,572)	-
8		Current Period Amortization							3,487		
9		Accumulated Amortization Balance			23,104						26,591
10	331	Transmission/Distribution Mains Contributed	2.00%	(2,846,725)	-	-	-	-	-	(2,846,725)	-
11		Current Period Amortization							56,935		
12		Accumulated Amortization Balance			870,503						927,437
13	333	Services Contributed	3.33%	(599,907)	-	-	-	-	-	(599,907)	-
14		Current Period Amortization							19,977		
15		Accumulated Amortization Balance			70,469						90,446
16	334	Meters Contributed	8.33%	(29,899)	-	-	-	-	-	(29,899)	-
17		Current Period Amortization							-		
18		Accumulated Amortization Balance			29,899						29,899
19	335	Hydrants	2.00%	(52,935)	-	-	-	-	-	(52,935)	-
20		Current Period Amortization							1,059		
21		Accumulated Amortization Balance			35,433						36,492
22		RUCO Gross CIAC & Amortizations		$ (4,136,180)	$ 1,054,334	$ (25,353)	$ -	$ (25,353)	$ 98,074	$ (4,161,533)	$ 1,152,407
23		Company As Filed		$ 4,136,180	$ (1,169,772)	$ (75,881)	$ -	$ (75,881)	$ (142,820)	$ 4,060,299	$ (1,312,591)
24		RUCO Gross CIAC (Increase)/Decrease & Total Accum. Amortization Increase/(Decrease) Adjustments		$ -	$ 2,224,105	$ (101,234)	$ -	$ (101,234)	$ (44,746)	$ (101,234)	$ (160,184)

References:
Company Response to Staff DR JMM 2-23
Company Schedule B-2, pages 5.1 - 5.3
See RBM Testimony

RATE BASE ADJUSTMENT NO. 4 (Continued)
CONTRIBUTIONS IN AID OF CONSTRUCTION ("CIAC") & AMORTIZATIONS RECONSTRUCTION SCHEDULE

Line No.	NARUC Account No.	Description	Allowed Amort. Rate	[A] Beginning Gross CIAC 1/1/2012	[B] Beginning Amortization Balance 1/1/2012	[C] CIAC Activity	[D] CIAC Adjustments	[E] Adjusted CIAC Activity	[F] RUCO Amortization (Calculated)	[G] Gross CIAC Balance at 12/31/2012	[H] Accum. Amortization 12/31/2012
				2012							
1	303	Land & Land Rights Contributed	0.00%	$ (92,495)	$ -	$ -	$ -	$ -	$ -	$ (92,495)	$ -
2		Current Period Amortization							-		
3		Accumulated Amortization Balance			-						-
4	307	Wells Contributed	3.33%	(499,000)	-	-	-	-	-	$ (499,000)	-
5		Current Period Amortization							16,617		
6		Accumulated Amortization Balance			41,542						58,158
7	311	Pumping Equipment Contributed	12.50%	(40,572)	-	-	-	-	-	(40,572)	-
8		Current Period Amortization							5,071		
9		Accumulated Amortization Balance			26,591						31,663
10	331	Transmission/Distribution Mains Contributed	2.00%	(2,846,725)	-	(3,046,493)	-	(3,046,493)	-	(5,893,218)	-
11		Current Period Amortization							87,399		
12		Accumulated Amortization Balance			927,437						1,014,837
13	333	Services Contributed	3.33%	(599,907)	-	(172,302)	-	(172,302)	-	(772,209)	-
14		Current Period Amortization							22,846		
15		Accumulated Amortization Balance			90,446						113,292
16	334	Meters Contributed	8.33%	(29,899)	-	-	-	-	-	(29,899)	-
17		Current Period Amortization							-		
18		Accumulated Amortization Balance			29,899						29,899
19	335	Hydrants	2.00%	(52,935)	-	(45,484)	-	(45,484)	-	(98,419)	-
20		Current Period Amortization							1,514		
21		Accumulated Amortization Balance			36,492						38,006
22		RUCO Gross CIAC & Amortizations		$ (4,161,533)	$ 1,152,407	$ (3,264,279)	$ -	$ (3,264,279)	$ 133,447	$ (7,425,812)	$ 1,285,854
23		Company As Filed		$ 4,060,299	$ (1,312,591)	$ 3,264,279	$ -	$ 3,264,279	$ (177,180)	$ 7,324,578	$ (1,489,772)
24		RUCO Gross CIAC & Total Accum. Amortization Increase/(Decrease) Adjustments		$ 101,234	$ 2,464,999	$ -	$ -	$ -	$ (43,734)	$ (101,234)	$ (203,918)

References:
Company Response to Staff DR JMM 2-23
Company Schedule B-2, pages 5.1 - 5.3
See TJC Testimony

Litchfield Park Service Company
Docket No's. SW-01428A-13-0042 and
W-01427A-13-0043
Test Year Ended December 31, 2012

Water Division
Surrebuttal Schedule RBM-7

RATE BASE ADJUSTMENT NO. 5
CUSTOMER METER DEPOSITS

Line No.		Description	Amount
		Water Division:	
1	**1 & 2**	Customer Meter Deposits As Filed by Company	$ (1,271,802)
2		RUCO Recommended 13-Month Average - Meter Deposits	(1,432,787)
3		RUCO's Recommended (Increase)/Decrease Adjustment	$ (160,986)
		Wastewater Division:	
4	**1 & 2**	Customer Meter Deposits As Filed by Company	$ (95,892)
5		RUCO Recommended 13-Month Average - Meter Deposits	(81,661)
6		RUCO's Recommended (Increase)/Decrease Adjustment	$ 14,231

References:

1 & 2 Per Company Response to RUCO DRs' 3.06 through 3.10
1 & 2 Per Company Response to Staff's DR 2.68

RATE BASE ADJUSTMENT NO. 6
CUSTOMER SECURITY DEPOSITS

Line No.		Description	Amount
		Water Division:	
1	**1 & 2**	Customer Security Deposits As Filed by Company	$ (140,147)
2		RUCO Recommended 13-Month Average - Customer Security Deposits	(147,932)
3		RUCO's Recommended (Increase)/Decrease Adjustment	$ (7,785)
		Wastewater Division:	
4	**1 & 2**	Customer Security Deposits As Filed by Company	$ (155,440)
5		RUCO Recommended 13-Month Average - Customer Security Deposits	(163,504)
6		RUCO's Recommended (Increase)/Decrease Adjustment	$ (8,063)

References:

1 & 2 Per Company Response to RUCO DRs' 3.06 through 3.10
1 & 2 Per Company Response to Staff's DR 2.68

RATE BASE ADJUSTMENT NO. 7
INTENTIONALLY LEFT BLANK

Line No.	Description	Amount
	Water Division:	
1		$ -
2		-
3		$ -
	Wastewater Division:	
4		$ -
5		-
6		$ -

References:

RATE BASE ADJUSTMENT NO. 8
INTENTIONALLY LEFT BLANK

Line No.	Description	Amount
	Water Division:	
1		$ -
2		-
3		$ -
	Wastewater Division:	
4		$ -
5		-
6		$ -

References:

RATE BASE ADJUSTMENT NO. 9
ACCUMULATED DEFERRED INCOME TAX ("ADIT")

Line No.		Deferred Income Tax as of December 31, 2012	Water & Sewer Adjusted Book Value	Water & Sewer Tax Value	Probability of Realization of Future Tax Benefit	Deductible TD (Taxable TD) Expected to be Realized	Effective Tax Rate	Future Tax Asset Current	Future Tax Asset Non Current	Future Tax Liability Current	Future Tax Liability Non Current
1		Plant-in-Service	$ 162,176,584 [1]								
2		Accum. Deprec.	(32,491,273) [1]								
3		CIAC	(59,777,267) [3]								
4	Federal	Fixed Assets	$ 69,908,045	$ 47,469,626 [2]	100.0%	$ (22,438,419)	31.79%		-		(7,133,173)
5	State	Fixed Assets	$ 69,908,045	$ 74,127,914 [2]	100.0%	$ 4,219,869	6.50%		274,292		-
6	Fed & State	AIAC		14,120,318 [4]	100.0%	$ 14,120,318 [4]	38.29%		$ 5,406,670		
								$ -	$ 5,680,961	$ -	$ (7,133,173)
7		Net Asset (Liability)						$ (1,452,212)			
8		Allocation Factor - Water-Division (based on rate base before ADIT)						0.5797			
9		Net Asset (Liability) Water Division						$ (841,857)			
10		Adjusted Test Year DIT Asset (Liability) as Filed						$ (1,459,075)			
11		Adjustment to DIT						$ 617,218			

Footnotes - See Next Page

RATE BASE ADJUSTMENT NO. 9 (Continued)
ACCUMULATED DEFERRED INCOME TAX ("ADIT")

Line No.		FEDERAL		STATE	
	[1] **Per adjusted book balances**				
	2 Computation of Net Tax Value December 31, 2012				
	Based on 2012 Tax Depreciation report (December 31, 2012)				
1	Unadjusted Cost at December 31, 2012 per federal and state tax depr. report	$ 85,943,311		$ 84,887,919	
2	Reconciling Items not on tax report:				
3	Land on Tax and not on included in adjusted plant balance	(1,055,392)		-	
4	FA Accrual on not on tax report	6,391,333		6,391,333	
5	Proposed Plant retirements	(1,712,539)		(1,712,539)	
6	Post Test Year plant	1,200,000		1,200,000	
7	Post Test Year Plant Retirement	-		-	
8	*Net Unadjusted Cost tax Basis at December 31, 2012*		$ 90,766,713		$ 90,766,713
	Reductions				
9	Basis Reduction 2012 and Prior Years per federal and state tax depr. report	$ (25,331,094)		$ -	
10	Accumulated Depreciation 2012 and prior per federal and state tax depr. report	(19,678,532)		(18,351,338)	
11	Proposed Plant Retirements	1,712,539		1,712,539	
12	Post Test Year retirement	-		-	
13	Net Reductions through December 31, 2012		(43,297,087)		(16,638,799)
14	Net tax value of plant-in-service at December 31. 2012		$ 47,469,626		$ 74,127,914

Line No.				
	[3] **CIAC (including impact of change to probability of realization)**			
15	Gross CIAC per adjusted book balances		$ 35,802,727	
	CIAC reductions/addtions			
16	A.A per adjusted book balances	$ (5,439,154)		
17		-		
			(5,439,154)	
18	Net CIAC before unrealized AIAC			$ 30,363,572
	Unrealized AIAC Component			
19	Adjusted Net AIAC (see footnote 4 below)		$ 42,019,564	
20	Unrealized AIAC Component % (1-Realized AIAC Component)		70.0%	
21				$ 29,413,695
22	Total realizable CIAC			$ 59,777,267

Line No.		
	[4] **AIAC (including impact of change in probability of realization)**	
23	AIAC per adjusted book balances	$ 42,019,564
24	AIAC reductions/additions	
25	Net AIAC before unrealized portion	$ 42,019,564
26	Less: Unrealized AIAC (from Note 3, above)	$ (29,413,695)
27	Net realizable AIAC	$ 12,605,869
28	Meter and Service Line Installation Charges per adjusted book balances	1,514,449
29	Total Realizable AIAC	$ 14,120,318

RATE BASE ADJUSTMENT NO. 10
REGULATORY ASSET - TCE PLUME

Line No.	Description		Amount
	Water Division:		
1	TCE Plume Balance Per Company		$ 90,381
2	TCE Plume Balance Per RUCO (See Amortization Note 1 Below for RUCO's Calculations)	1	91,069
3	RUCO Adjustment		$ 688

Amortization Note 1: RUCO's Amortization Calaculations

Regulatory Asset - TCE Plume Authorized in Decision No. 72026 (Amortized Over 10-Years)		$ 82,561
Amortization for December 2010 (No Approval by Commission for Further Additional Amortization)		(688)
Amortization for Year 2011 (No Approval by Commission for Further Additional Amortization)		(8,256)
Amortization for Year 2012 (No Approval by Commission for Further Additional Amortization)		(8,256)
Balance at Test-Year End (Amortized as Authorized in Decision No. 72026)		$ 65,361
Company Proposed Cost Additions Incurred (See Response to Staff DR 13-2) Since Decision No. 72026		25,708
Regulatory Asset - TCE Plume Balance at Test-Year End and Allowing the Add'l. Costs Going-Forward	1	$ 91,069

References:
Company Responses to Staff DR 13.1 and 13.2

Litchfield Park Service Company
Docket No's. SW-01428A-13-0042 and
W-01427A-13-0043
Test Year Ended December 31, 2012

Water Division
Surrebuttal Schedule RBM-13

OPERATING INCOME SUMMARY

Line No.	Description	[A] Company Adjusted Test Year As Filed	[B] RUCO Recommended Adjustments	[C] RUCO Recommended Adjusted Test Year Amounts	[D] RUCO Recommended Changes	[E] RUCO Recommended Amounts
	Revenues:					
1	Metered Water Revenues	$ 10,965,667	$ 58,703	$ 11,024,370	$ 1,072,637	$ 12,097,008
2	Unmetered Water Revenues	-	-	-	-	-
3	Other Water Revenues	235,723	-	235,723	-	235,723
4	**Total Revenues**	$ 11,201,390	$ 58,703	$ 11,260,093	$ 1,072,637	$ 12,332,730
	Operating Expenses:					
5	Salaries and Wages	$ 1,069,839	$ (62,199)	$ 1,007,640	$ -	$ 1,007,640
6	Purchased Water	2,615	-	2,615	-	2,615
7	Purchased Power	903,527	(41)	903,486	-	903,486
8	Fuel For Power Production	-	-	-	-	-
9	Chemicals	208,080	-	208,080	-	208,080
10	Materials and Supplies	91,139	-	91,139	-	91,139
11	Management Services - US Liberty Water	1,260,835	(131,969)	1,128,866	-	1,128,866
12	Management Services - Corporate	781,023	(100,935)	680,088	-	680,088
13	Management Services - Other	-	-	-	-	-
14	Outside Services - Accounting	9,271	-	9,271	-	9,271
15	Outside Services - Engineering	-	-	-	-	-
16	Outside Services- Other	103,412	-	103,412	-	103,412
17	Outside Services- Legal	19,865	-	19,865	-	19,865
18	Water Testing	66,942	(22,062)	44,880	-	44,880
19	Rents - Building	-	-	-	-	-
20	Rents - Equipment	7,229	-	7,229	-	7,229
21	Transportation Expenses	103,726	-	103,726	-	103,726
22	Insurance - General Liability	88,374	-	88,374	-	88,374
23	Insurance - Vehicle	20,825	-	20,825	-	20,825
24	Reg. Comm. Exp. - Other	19,721	851	20,572	-	20,572
25	Reg. Comm. Exp. - Rate Case	65,800	-	65,800	-	65,800
26	Miscellaneous Expense	151,237	(11,260)	139,977	-	139,977
27	Bad Debt Expense	(76)	21,216	21,140	-	21,140
28	Depreciation and Amortization Expense	2,615,868	11,713	2,627,581	-	2,627,581
29	Taxes Other Than Income	-	-	-	-	-
30	Property Taxes	559,128	(24,904)	534,224	17,036	551,260
31	Income Tax	1,028,634	156,513	1,185,147	404,190	1,589,336
32	**Total Operating Expenses**	$ 9,177,014	$ (163,077)	$ 9,013,937	$ 421,226	$ 9,435,163
33	**Operating Income (Loss)**	$ 2,024,376	$ 221,780	$ 2,246,156	$ 651,411	$ 2,897,567

References:

Column [A]: Company Schedule C-1;
Column [B]: RUCO Recommended Total Adjustments Per Schedule RBM-14 on pages 1-2 at page 2 in Column [S] at line 33;
Column [C]: Column [A] + [B] - RUCO Recommended Adjusted Test Year Amounts Per Schedule RBM-14 on page 2 of 2 in Column [T];
Column [D]: RUCO Recommended Increase/(Decrease) to Revenue Requirement;
Column [E]: Column [C] + [D] - RUCO Recommended Increase/(Decrease) Amounts for Revenue Requirement.

Litchfield Park Service Company
Docket No's. SW-01428A-13-0042 and
W-01427A-13-0043
Test Year Ended December 31, 2012

RUCO OPERATING INCOME ADJUSTMENTS

Line No.	Description	[A] Company Adjusted Test Year As Filed	[B] Adj. No. 1 Depreciation Expense	[C] Adj. No. 2 Property Taxes	[D] Adj. No. 3 Used for Wastewater Only	[E] Adj. No. 4 Regulatory Asset Amort. Exp.	[F] Adj. No. 5 Reverse Declining Usage	[G] Adj. No. 6 Water Testing	[H] Adj. No. 7 Corporate Expense True-Up	[I] Adj. No. 8 Employee Pension Benefits	[J] Adj. No. 9 Intentionally Left Blank
	Revenues:										
1	Metered Water Revenues	$ 10,965,667	$ -	$ -	$ -	$ -	$ 58,703	$ -	$ -	$ -	$ -
2	Unmetered Water Revenues	-	-	-	-	-	-	-	-	-	-
3	Other Water Revenues	235,723	-	-	-	-	-	-	-	-	-
4	**Total Revenues**	$ 11,201,390	$ -	$ -	$ -	$ -	$ 58,703	$ -	$ -	$ -	$ -
	Operating Expenses										
5	Salaries and Wages	$ 1,069,839	$ -	$ -	$ -	$ -	$ -	$ -	$ -	$ (62,199)	$ -
6	Purchased Water	2,615	-	-	-	-	-	-	-	-	-
7	Purchased Power	903,527	-	-	-	-	(41)	-	-	-	-
8	Fuel For Power Production	-	-	-	-	-	-	-	-	-	-
9	Chemicals	208,080	-	-	-	-	-	-	-	-	-
10	Materials and Supplies	91,139	-	-	-	-	-	-	-	-	-
11	Management Services - US Liberty Water	1,260,835	-	-	-	-	-	-	(8,420)	-	-
12	Management Services - Corporate	781,023	-	-	-	-	-	-	-	-	-
13	Management Services - Other	-	-	-	-	-	-	-	-	-	-
14	Outside Services - Accounting	9,271	-	-	-	-	-	-	-	-	-
15	Outside Services - Engineering	-	-	-	-	-	-	-	-	-	-
16	Outside Services- Other	103,412	-	-	-	-	-	-	-	-	-
17	Outside Services- Legal	19,865	-	-	-	-	-	-	-	-	-
18	Water Testing	66,942	-	-	-	-	-	(22,062)	-	-	-
19	Rents - Building	-	-	-	-	-	-	-	-	-	-
20	Rents - Equipment	7,229	-	-	-	-	-	-	-	-	-
21	Transportation Expenses	103,726	-	-	-	-	-	-	-	-	-
22	Insurance - General Liability	88,374	-	-	-	-	-	-	-	-	-
23	Insurance - Vehicle	20,825	-	-	-	-	-	-	-	-	-
24	Reg. Comm. Exp. - Other	19,721	-	-	-	851	-	-	-	-	-
25	Reg. Comm. Exp. - Rate Case	65,800	-	-	-	-	-	-	-	-	-
26	Miscellaneous Expense	151,237	-	-	-	-	-	-	-	-	-
27	Bad Debt Expense	(76)	-	-	-	-	-	-	-	-	-
28	Depreciation and Amortization Expense	2,615,868	11,713	-	-	-	-	-	-	-	-
29	Taxes Other Than Income	-	-	-	-	-	-	-	-	-	-
30	Property Taxes	559,128	-	(24,904)	-	-	-	-	-	-	-
31	Income Tax	1,028,634	-	-	-	-	-	-	-	-	-
32	**Total Operating Expenses**	$ 9,177,014	$ 11,713	$ (24,904)	$ -	$ 851	$ (41)	$ (22,062)	$ (8,420)	$ (62,199)	$ -
33	**Operating Income**	$ 2,024,376	$ (11,713)	$ 24,904	$ -	$ (851)	$ 58,744	$ 22,062	$ 8,420	$ 62,199	$ -

Adjustments:

Adjustment No. 1: Depreciation Expense - See RUCO Schedule RBM-15 in Column [C] at line 43;
Adjustment No. 2: Property Taxes - See RUCO Schedule RBM-16 in Column [A] at line 18;
Adjustment No. 3: Used for Wastewater Division Only;
Adjustment No. 4: Revenue Accrual Fix - See RUCO Schedule RBM-18;
Adjustment No. 5: Reverse Company's Declining Usage Adjustment Components - See RUCO Schedule RBM-19;
Adjustment No. 6: Water Testing Expense - See RUCO Schedule RBM-20 at line 3;
Adjustment No. 7: Adopted Company's Calculations of Staff's Recommedation;
Adjustment No. 8: Employee Pension Benefit Plan - See RUCO Schedule RBM-22 at line 3;
Adjustment No. 9: Intentionally Left Blank

References:

Column [A]: Company Schedule C-1 Adjusted Test Year as Filed;
Column [B] through [J]: RUCO Recommended Adjusted Test Year Adjustments;

Litchfield Park Service Company
Docket No's. SW-01428A-13-0042 and
W-01427A-13-0043
Test Year Ended December 31, 2012

Water Division
Surrebuttal Schedule RBM-14
Page 2 of 2

RUCO OPERATING INCOME ADJUSTMENTS

Line No.	Description	[K] Adj. No. 10 US Liberty Utilities Add'l. Reductions	[L] Adj. No. 11 Allocate Bad Debt Expense	[M] Adj. No. 12 Intentionally Left Blank	[N] Adj. No. 13 Corporate Cost Allocations	[O] Adj. No. 14 Achievement Incentive/Bonus Pay Allocations	[P] Adj. No. 15 Miscellaneous Expense	[Q] Adj. No. 16 Customer Deposit Interest Expense	[R] Adj. No. 17 Income Taxes	[S] Total RUCO Adjustments Recommended	[T] RUCO Adjusted Test Year Recommended
	Revenues:										
1	Metered Water Revenues	$ -	$ -	$ -	$ -	$ -	$ -	$ -	$ -	$ 58,703	$ 11,024,370
2	Unmetered Water Revenues	-	-	-	-	-	-	-	-	-	-
3	Other Water Revenues	-	-	-	-	-	-	-	-	-	235,723
4	**Total Revenues**	$ -	$ -	$ -	$ -	$ -	$ -	$ -	$ -	$ 58,703	$ 11,260,093
	Operating Expenses										
5	Salaries and Wages	$ -	$ -	$ -	$ -	$ -	$ -	$ -	$ -	$ (62,199)	$ 1,007,640
6	Purchased Water	-	-	-	-	-	-	-	-	-	2,615
7	Purchased Power	-	-	-	-	-	-	-	-	(41)	903,486
8	Fuel For Power Production	-	-	-	-	-	-	-	-	-	-
9	Chemicals	-	-	-	-	-	-	-	-	-	208,080
10	Materials and Supplies	-	-	-	-	-	-	-	-	-	91,139
11	Management Services - US Liberty Water	(1,829)	-	-	-	(121,720)	-	-	-	(131,969)	1,128,866
12	Management Services - Corporate	-	-	-	(83,768)	(17,167)	-	-	-	(100,935)	680,088
13	Management Services - Other	-	-	-	-	-	-	-	-	-	-
14	Outside Services - Accounting	-	-	-	-	-	-	-	-	-	9,271
15	Outside Services - Engineering	-	-	-	-	-	-	-	-	-	-
16	Outside Services- Other	-	-	-	-	-	-	-	-	-	103,412
17	Outside Services- Legal	-	-	-	-	-	-	-	-	-	19,865
18	Water Testing	-	-	-	-	-	-	-	-	(22,062)	44,880
19	Rents - Building	-	-	-	-	-	-	-	-	-	-
20	Rents - Equipment	-	-	-	-	-	-	-	-	-	7,229
21	Transportation Expenses	-	-	-	-	-	-	-	-	-	103,726
22	Insurance - General Liability	-	-	-	-	-	-	-	-	-	88,374
23	Insurance - Vehicle	-	-	-	-	-	-	-	-	-	20,825
24	Reg. Comm. Exp. - Other	-	-	-	-	-	-	-	-	851	20,572
25	Reg. Comm. Exp. - Rate Case	-	-	-	-	-	-	-	-	-	65,800
26	Miscellaneous Expense	-	-	-	-	-	(16,108)	4,848	-	(11,260)	139,977
27	Bad Debt Expense	-	21,216	-	-	-	-	-	-	21,216	21,140
28	Depreciation and Amortization Expense	-	-	-	-	-	-	-	-	11,713	2,627,581
29	Taxes Other Than Income	-	-	-	-	-	-	-	-	-	-
30	Property Taxes	-	-	-	-	-	-	-	-	(24,904)	534,224
31	Income Tax	-	-	-	-	-	-	-	156,513	156,513	1,185,147
32	**Total Operating Expenses**	$ (1,829)	$ 21,216	$ -	$ (83,768)	$ (138,887)	$ (16,108)	$ 4,848	$ 156,513	$ (163,077)	$ 9,013,937
33	**Operating Income**	$ 1,829	$ (21,216)	$ -	$ 83,768	$ 138,887	$ 16,108	$ (4,848)	$ (156,513)	$ 221,780	$ 2,246,156

Adjustments:

Adjustment No. 10: Additional Adjustments to US Liberty Utilities - See RUCO Schedule RBM-24 at line 3;
Adjustment No. 11: Allocate Bad Debt Expense - See RUCO Schedule RBM-25 at line 5;
Adjustment No. 12: Intentionally Left Blank;
Adjustment No. 13: APUC Corporate Cost Allocations - See RUCO Schedule RBM-27 in Col. [K] at line 25;
Adjustment No. 14: Achievement/Incentive/Bonus Pay Adjustments - See RUCO Schedule RBM-28 at lines 6 + 9;
Adjustment No. 15: Miscellaneous Expense Adjustments - See RUCO Schedule RBM-29;
Adjustment No. 16: Customer Security Deposit Interest Expense - See RUCO Schedule RBM-30 at line 3;
Adjustment No. 17: Income Taxes - See RUCO Schedule RBM-31 in Column [A] at line 3.

References:

Column [K] thru [R]: RUCO Recommended Adjusted Test Year Adjustments;
Column [S]: RUCO Total Adjusted Test Year Adjustments on Schedule JLK-14 page 1 of 2 in Columns [B] thru Schedule JLK-14 page 2 of 2 in Columns [K] thru [R];
Column [T]: Column [A] on Schedule JLK-14 at page 1 of 2 + Column [S] on Schedule JLK-14 page 2 of 2 - RUCO Recommended Adjusted Test Year Balances.

OPERATING INCOME ADJUSTMENT NO. 1
DEPRECIATION EXPENSE

Line No.	NARUC Account	Description	[A] RUCO UPIS Recommended	[B] Authorized Depreciation Rate	[C] RUCO Depreciation Expense Going Forward
1	301	Organization Cost	$ 21,100	0.00%	$ -
2	302	Franchise Cost	-	0.00%	-
3	303	Land and Land Rights	1,450,278	0.00%	-
4	304	Structures & Improvements	25,036,371	3.33%	833,711
5	305	Collecting & Impounding Reservoirs	-	2.50%	-
6	306	Lake, River, Canal Intakes	-	2.50%	-
7	307	Wells & Springs	3,214,114	3.33%	107,030
8	308	Infiltration Galleries	-	6.67%	-
9	309	Raw Water Supply Mains	-	2.00%	-
10	310	Power Generation Equipment	225,130	5.00%	11,257
11	311	Pumping Equipment	874,290	12.50%	109,286
12	320	Water Treatment Equipment	1,696,759	3.33%	56,502
13	320.1	Water Treatment Plants	1,728,635	3.33%	57,564
14	320.2	Solution Chemical Feeders	-	20.00%	-
15	330	Distribution Reservoirs & Standpipes	492,176	2.22%	10,926
16	330.1	Storage Tanks	901,841	2.22%	20,021
17	330.2	Pressure Tanks	-	5.00%	-
18	331	Transmission & Distribution Mains	40,256,187	2.00%	805,124
19	333	Services	5,350,963	3.33%	178,187
20	334	Meters	4,759,560	8.33%	396,471
21	335	Hydrants	3,302,148	2.00%	66,043
22	336	Backflow Prevention Devices	38,387	6.67%	2,560
23	339	Other Plant & Misc Equipment	259,531	6.67%	17,311
24	340	Office Furniture & Equipment	657,653	6.67%	43,865
25	340.1	Computers & Software	7,995	20.00%	1,599
26	341	Transportation Equipment	234,697	20.00%	46,939
27	342	Stores Equipment	37,143	4.00%	1,486
28	343	Tools, Shop & Garage Equipment	47,434	5.00%	2,372
29	344	Laboratory Equipment	5,803	10.00%	580
30	345	Power Operated Equipment	18,003	5.00%	900
31	346	Communication Equipment	128,402	10.00%	12,840
32	347	Miscellaneous Equipment	-	10.00%	-
33	348	Other Tangible Plant	122,414	10.00%	12,241
			$ 90,867,015		$ 2,794,816

Less: Amortization of Contributions ("CIAC")

	Account No.	Description	Gross CIAC	CIAC Account Specific Amortization Rate	
34	303	Land and Land Rights	$ (92,495)	0.00%	$ -
35	307	Wells	(499,000)	3.33%	(16,617)
36	311	Pumping Equipment	(40,572)	12.50%	(5,071)
37	331	Transmission & Distribution Mains	(5,893,218)	2.00%	(117,864)
38	333	Services	(772,209)	3.33%	(25,715)
39	334	Meters	(29,899)	8.33%	- *
40	335	Hydrants	(98,419)	2.00%	(1,968)
41		Total Gross CIAC Balance (See RUCO RBM-2)	$ (7,425,812)		$ (167,235)
42		RUCO Total Depreciation Expense			2,627,581
43		Company Adjusted Depreciation Expense As Filed			2,615,868
44		RUCO Increase/(Decrease) Expense Adjustment			$ 11,713

* Fully Depreciated Per Company Schedule C-2, page 2

OPERATING INCOME ADJUSTMENT NO. 2
PROPERTY TAXES

Line No.	Property Tax Calculation	[A] RUCO AS ADJUSTED	[B] RUCO RECOMMENDED
1	RUCO Adjusted Test Year Gross Revenues Per RUCO Schedule RBM-13	$ 11,260,093	$ 11,260,093
2	Multiplied by 2	2	2
3	Subtotal (Line 1 * Line 2)	$ 22,520,186	$ 22,520,186
4a	RUCO Adjusted Test Year Gross Revenues Per RUCO Schedule RBM-13	11,260,093	
4b	RUCO Recommended Revenue Per RUCO Schedule RBM-13		12,332,730
5	Subtotal (Line 3 + Line 4a)	$ 33,780,279	$ 34,852,916
6	Number of Years	3	3
7	Three Year Average (Line 5 / Line 6)	$ 11,260,093	$ 11,617,639
8	Department of Revenue Mutilplier	2	2
9	Revenue Base Value (Line 7 * Line 8)	$ 22,520,186	$ 23,235,278
10	Plus: 10% of CWIP Per Company Schedule E-1 As Filed	-	-
11	Less: Net Book Value of Licensed Vehicles	96,334	96,334
12	Full Cash Value (Line 9 + Line 10 - Line 11)	$ 22,423,853	$ 23,138,944
13	Assessment Ratio	19.0%	19.0%
14	Assessed Value (Line 12 * Line 13)	$ 4,260,532	$ 4,396,399
15	Composite Property Tax Rate (Per RUCO Effective Property Tax Calculation)	12.5389%	12.5389%
16	RUCO Adjusted Test Year Property Tax Expense (Line 14 * Line 15)	$ 534,224	
17	Company Adjusted Test Year Property Tax Expense (Per Company Schedule C-1)	559,128	
18	RUCO Test Year Adjustment (Line 16-Line 17)	$ (24,904)	
19	Property Tax - RUCO Recommended Revenue (Line 14 * Line 15)		$ 551,260
20	RUCO Test Year Adjusted Property Tax Expense (Line 16)		534,224
21	Increase/(Decrease) to Property Tax Expense		$ 17,036
22	Increase/(Decrease) to Property Tax Expense		$ 17,036
23	Increase in Revenue Requirement		1,072,637
24	Increase /(Decrease) to Property Tax per Dollar Increase in Revenue (Line 22 / Line 23)		1.5883%

References:
RUCO Schedule RBM-13
RUCO Schedule RBM-4(a) page 1 of 2

OPERATING INCOME ADJUSTMENT NO. 3
USED ONLY FOR WASTEWATER DIVISION

Line No.	Description	Amount

References:

OPERATING INCOME ADJUSTMENT NO. 4
REVENUE ACCRUAL FIX

Line No.	Description	Amount

References:

OPERATING INCOME ADJUSTMENT NO. 5
REVERSE COMPANY'S DECLINING USE ADJUSTMENT & REMOVE DECLINING USAGE COMPONENT FROM PURCHASED POWER ANNUALIZATION

Line No.	Description		Amount
1	Company Revenue Adjustment for Declining Usage	$	(58,703)
2	RUCO Recommended Reversal Adjustment for Declining Usage		-
3	RUCO Recommended Increase/(Decrease) Adjustment	$	58,703
4	Company Test Year Booked Purchased Power Expense	$	891,103
5	Test Year Gallons Sold (in thousands)		3,298,378
6	Cost Per 1,000 gallons (Line 4 / Line 5)		0.27
7	RUCO Additional Gallons from Purchased Power Expense Annualization		45,832
8	Increase in Purchased Power per Company	$	12,423
9	RUCO Purchase Power Annualization, Less Declining Usage		12,382
10	Adjustment to Revenue and/or Expense (L10 - L8)	$	(41)
11	RUCO's Total Recommended Adjustment	$	58,744

References:
Company Schedule C-2, page 7
Company Response to Staff DR JMM 2-2 (See RBM Direct Testimony for RUCO Rationale)
See RBM Testimony

OPERATING INCOME ADJUSTMENT NO. 6
WATER TESTING EXPENSE

Line No.	Description	Amount
1	Water Testing Proforma Adjustment Per Company as Filed	$ 33,093
2	Water Testing Proforma Adjustment Per RUCO	11,031
3	RUCO Recommended Adjustment	$ (22,062)

References:
Company Response to RUCO DR 3.32

OPERATING INCOME ADJUSTMENT NO. 7
INTENTIONALLY LEFT BLANK

Line No.	Description	Amount

References:

OPERATING INCOME ADJUSTMENT NO. 8
EMPLOYEE PENSION BENEFIT PLAN

Line No.	Description	Amount
1	Employee Pension Benefit Plan Proforma Adjustment Per Company as Filed	$ 62,199
2	Employee Pension Benefit Plan Proforma Adjustment Per RUCO Recommendation	-
3	RUCO Recommended Adjustment	$ (62,199)

References:
Company Response to RUCO DR 3.01
See Testimony of RBM

OPERATING INCOME ADJUSTMENT NO. 9
INTENTIONALLY LEFT BLANK

Line No.	Description	Amount

References:

OPERATING INCOME ADJUSTMENT NO. 10
ADDITIONAL REDUCTIONS TO US LIBERTY UTILITIES MANAGEMENT SERVICES

Line No.	Description		Amount
	Water Division:		
1	Company's Proforma Adjustment for Management Services - US Liberty Water as Filed	$	(16,840)
2	RUCO Recommended Adjustment for Management Services - US Liberty Water		(18,669)
3	RUCO Recommended Adjustment		(1,829)
	Wastewater Division:		
4	Company's Proforma Adjustment for Management Services - US Liberty Water as Filed	$	(21,457)
5	RUCO Recommended Adjustment for Management Services - US Liberty Water		(23,978)
6	RUCO Recommended Adjustment		(2,521)

References:
Company Response to Staff DR JMM 12-2

OPERATING INCOME ADJUSTMENT NO. 11
ALLOCATE BAD DEBT EXPENSE

Line No.	Description		Amount
	Water & Wastewater Divisions Combined Adjusted Test Year Bad Debt Expense as Filed:		
1	Water Division Adjusted Test Year Bad Debt Expense as Filed	$	(76)
2	Wastewater Division Adjusted Test Year Bad Debt Expense as Filed		45,215
3	Total Water & Wastewater Divisions Combined Adjusted Test Year Bad Debt Expense as Filed by Company	$	45,140
	Water Division:		
4	Allocation Factor Recommended by RUCO to Allocate Bad Debt Expense to Water Division		47%
5	RUCO Recommended Bad Debt Expense Adjustment Allocated to Water Division	$	21,216
	Wastewater Division:		
6	Allocation Factor Recommended by RUCO to Allocate Bad Debt Expense to Wastewater Division		53%
7	RUCO Recommended Bad Debt Adjustment Allocated to Wastewater Division	$	(23,924)

References:
Company Response to Staff DR JMM 12-2

OPERATING INCOME ADJUSTMENT NO. 12
INTENTIONALLY LEFT BLANK

Line No.	Description	Amount

References:

OPERATING INCOME ADJUSTMENT NO. 13
APUC COST ALLOCATIONS

Line No.	Description	[A] Company Requested Total APUC Cost Pool	[B] Allocation Factor From APUC To Liberty Utilities	[C] APUC Allocation To Liberty Utilities	[D] Allocation Factor From Liberty Utilites To Liberty Utilities South	[E] Liberty Utilities Allocation To Liberty Utilities South	[F] Allocation Factor From Liberty Utilities South To LPSCO Water	[G] Allocation Factor From Liberty Utilities South To LPSCO Wastewater	[H] Libery Utilities South Allocation To LPSCO Water	[I] Libery Utilities South Allocation To LPSCO Wastewater	[J] RUCO Recommended Allocations Factors Per Decision 72059	[K] RUCO Recommended Allocations LPSCO Water	[L] RUCO Recommended Allocations LPSCO Sewer
1	Audit	$ 1,561,911	51.8%	$ 808,566	22.26%	$ 179,960	28.74%	26.87%	$ 51,712	$ 48,352	100%	$ 51,712	$ 48,352
2	Tax	1,169,300	51.8%	605,321	22.26%	134,724	28.74%	26.87%	38,713	36,198	100%	38,713	36,198
3	Legal	635,190	51.8%	328,824	22.26%	73,185	28.74%	26.87%	21,030	19,664	100%	21,030	19,664
4	Professional Services	680,395	51.8%	352,225	22.26%	78,394	28.74%	26.87%	22,527	21,063	50%	11,263	10,531
5	Unitholder Communications	700,793	51.8%	362,785	22.26%	80,744	28.74%	26.87%	23,202	21,694	50%	11,601	10,847
6	Trustee / Director Fees	378,154	51.8%	195,762	22.26%	43,570	28.74%	26.87%	12,520	11,706	50%	6,260	5,853
7	Computer Supplies /Repairs	51,761	51.8%	26,796	22.26%	5,964	28.74%	26.87%	1,714	1,602	100%	1,714	1,602
8	Office Expenses	98,210	51.8%	50,841	22.26%	11,316	28.74%	26.87%	3,252	3,040	100%	3,252	3,040
9	Employee Stock Purchase Plan	4,270	51.8%	2,210	22.26%	492	28.74%	26.87%	141	132	50%	71	66
10	Board of Director's Insurance	145,728	51.8%	75,440	22.26%	16,790	28.74%	26.87%	4,825	4,511	50%	2,412	2,256
11	Escrow & Transfer Agent Fees	75,000	51.8%	38,826	22.26%	8,641	28.74%	26.87%	2,483	2,322	50%	1,242	1,161
12	Training	76,343	51.8%	39,521	22.26%	8,796	28.74%	26.87%	2,528	2,363	100%	2,528	2,363
13	Stock Option expense	1,376,013	51.8%	712,331	22.26%	158,542	28.74%	26.87%	45,557	42,597	0%	-	-
14	Recruiting	54,095	51.8%	28,004	22.26%	6,233	28.74%	26.87%	1,791	1,675	100%	1,791	1,675
15	Meals and Entertainment	2,315	51.8%	1,198	22.26%	267	28.74%	26.87%	77	72	50%	38	36
16	Rent	84,861	51.8%	43,931	22.26%	9,778	28.74%	26.87%	2,810	2,627	100%	2,810	2,627
17	Communication	78,982	51.8%	40,887	22.26%	9,100	28.74%	26.87%	2,615	2,445	100%	2,615	2,445
18	Dues and Memberships	47,155	51.8%	24,411	22.26%	5,433	28.74%	26.87%	1,561	1,460	0%	-	-
19	Licenses/Fees & Permits	384,904	51.8%	199,256	22.26%	44,348	28.74%	26.87%	12,743	11,915	100%	12,743	11,915
20	Net Other Admin Costs	14,274	51.8%	7,389	22.26%	1,645	28.74%	26.87%	473	442	100%	473	442
21	Variance Due to Company's Monthly Allocation Factoring								10,321	26,092	64%	1 6,559	16,580
												-	-
												-	-
												-	-
22	Total APUC Allocations Per RUCO	$ 7,619,653		$ 3,944,525		$ 877,921			$ 262,593	$ 261,973		$ 178,825	$ 177,654
23	Company Water Division's APUC Cost Allocation Requested											262,593	
24	Company Wastewater Division's APUC Cost Allocation Requested												261,973
25	RUCO Recommended Water and Wastewater Division's APUC Cost Allocation Adjustment											$ (83,768)	$ (84,319)

Note 1:

	Water & Wastewater
Variances by Company Per Responses to RUCO DR 1.08 and Staff 5.2	$ 36,413
RUCO Allowance Factor for the Variances Identifieed by Company	64%

References:

Column [A] - Company response to Staff DR JMM - 10.1(a) confirmed the accruals in that Column were trued-up to Actual Expenses for this rate case.

Litchfield Park Service Company
Docket No's. SW-01428A-13-0042 and
W-01427A-13-0043
Test Year Ended December 31, 2012

Water Division
Surrebuttal Schedule RBM-28
Page 1 of 1

OPERATING INCOME ADJUSTMENT NO. 14
ACHIEVEMENT / INCENTIVE / BONUS PAY PROGRAMS

Line No.		Description	Water Division Amount	Wastewater Division Amount
		Algonquin Power Utilities Corporation ("APUC") Allocation:		
1	1	Per Company APUC Achievement / Incentive / Bonus Pay Program Allocations Included in Test Year	$ 45,557	$ 42,597
2	2	RUCO Recommended APUC Achievement / Incentive / Bonus Pay Program Allocations Included in Test Year	0%	0%
3	2	RUCO's Recommended Adjustment to Company's Test Year End APUC Achievement / Incentive / Bonus Pay to Include in TY	$ -	$ -
		Liberty Utilities - Local Incentive Pay		
4	1	Per Company Liberty Utilities - Local Achievement / Incentive / Bonus Pay Program Included in Test Year	$ 243,440	$ 227,622
5		RUCO Recommended Achievement / Incentive / Bonus Pay Program Allocations Included in Test Year	50%	50%
6		RUCO's Recommended Adjustment to Company's Test Year End APUC Achievement / Incentive / Bonus Pay to Include in TY	$ (121,720)	$ (113,811)
		Liberty Utilities - Allocated Incentive Pay		
7	1	Per Company Liberty Utilities - Local Achievement / Incentive / Bonus Pay Program Included in Test Year	$ 34,334	28,446
8		RUCO Recommended Achievement / Incentive / Bonus Pay Program Allocations Included in Test Year	50%	50%
9		RUCO's Recommended Adjustment to Company's Test Year End APUC Achievement / Incentive / Bonus Pay to Include in TY	$ (17,167)	$ (14,223)
10		RUCO's Recommended Total Adjustments	$ (138,887)	$ (128,034)

References:

1 Per Company Supplemental Response to RUCO 1.15(e)
2 RUCO disallowed 100% of the APUC Achievement / Incentive / Pay Program - Stock Option Expense (See RUCO Schedule RBM-27 at line 13)

OPERATING INCOME ADJUSTMENT NO. 15
MISCELLANEOUS EXPENSE

Line No.	Description	Account No.	[A] Company As Filed	[B] RUCO Allowance Factor	[C] RUCO Recommended Adjustment
1	Company Adjusted Miscellaneous Expense as Filed		$ 151,237		
	RUCO Adjustments:				
2	Public Relations	8600-2-0200-69-5390	$ 830	100%	$ (830)
3	Meals and Entertainment	8600-2-0200-69-5300	4,675	50%	(2,338)
4	Charitable Donations	8600-2-0200-69-5450	12,940	100%	(12,940)
5	Total				$ (16,108)
6	RUCO Adjustment to Miscellaneous Expense				$ (16,108)

References:
Column [A]: Company Adjusted Test Year Schedule C-1 Balance on page 1 at line 28 and Company Response to Staff DR JMM 2-45;
Column [B]: RUCO Allowance Factor;
Column [C]: RUCO Recommended Adjustment.

RATE BASE ADJUSTMENT NO. 16
CUSTOMER SECURITY DEPOSIT INTEREST EXPENSE

Line No.		Description	Amount
		Water Division:	
1	1	Customer Security Deposit Interest Expense As Filed by Company Below-the-Line for Both Divisons Per Response to Staff DR 13-4	$ 10,314
2		RUCO Recommended Allocation for Water Division Net of Interest Earned (See Note 1 Below for Allocation Percentages)	4,848
3		RUCO's Recommended Adjustment (Net of Interest Earned on Unexpended CIAC Bank Account Per Response to Staff DR 1.13)	$ 4,848
		Wastewater Division:	
4	1	Customer Security Deposit Interest Expense As Filed by Company Below-the-Line for Both Divisons Per Response to Staff DR 13-4	$ 10,314
5		RUCO Recommended Allocation for Water Division Net of Interest Earned (See Note 1 Below for Allocation Percentages)	5,467
6		RUCO's Recommended Adjustment (Net of Interest Earned on Unexpended CIAC Bank Account Per Response to Staff DR 1.13)	$ 5,467

Note 1: Allocation Percentage Factors
Water = 47%
Wastewater = 53%

References:
1 Per Company Response and Excel workbook Attachment to Staff's DR 13-4

OPERATING INCOME ADJUSTMENT NO. 17
INCOME TAXES

Line No.	Description	[A] RUCO Adjusted Test Year Recommended	[B] RUCO Test Year Recommended
1	RUCO Computed Adjusted Test Year Income Tax	$ 1,185,147	$ 1,589,336
2	Company Income Tax As Filed	1,028,634	1,885,306
3	RUCO Adjustment to Income Tax Expense	$ 156,513	$ (295,970)

References:
See RUCO Schedule RBM-1 at page 2 of 2;
Company Schedule C-1 Adjusted Test Year as Filed

COST OF CAPITAL

Line No.		[A] DOLLAR AMOUNT	[B] CAPITAL RATIO	[C] COST RATE	[D] WEIGHTED COST RATE
1	Long-Term Debt	$ 10,420,000	15.87%	6.40%	1.02%
2	Common Equity	55,240,319	84.13%	9.20% *	7.74%
3	Total Capitalization	$ 65,660,319	100.00%		
4	WEIGHTED AVERAGE COST OF CAPITAL ("WACC")				8.76%

* The Return on Equity Recommended by RUCO was authorized in Decision No. 73996 dated July 30, 2013.

References:
Columns [A] Thru [D]: RBM & RBM Testimony

TABLE OF CONTENTS TO RBM SCHEDULES

SCH. NO.	PAGE NO.	TITLE
RBM-1	1 of 2	REVENUE REQUIREMENT
RBM-1	2 of 2	GROSS REVENUE CONVERSION FACTOR ("GRCF")
RBM-2	1	RATE BASE SUMMARY
RBM-3	1	RATE BASE ADJUSTMENTS
RBM-4(a)	1 of 2	SUMMARY OF UTILITY PLANT IN SERVICE ("UPIS") ADJUSTMENTS
RBM-4(a)	2 of 2	SUMMARY OF UPIS ACCUMULATED DEPRECIATION ("A/D") ADJUSTMENTS
RBM-4(b)	1 - 5	RECONSTRUCTION OF UPIS & A/D SCHEDULES
RBM-4(c)	1 - 2	UPIS & A/D RECLASSIFICATIONS
RBM-4(d)	1	RECLASSIFY WATER DIVISION INVOICES TO WASTEWATER DIVISION
RBM-4(e)	1	REMOVE DUPLICATE INVOICES FROM UPIS ADDITIONS
RBM-4(f)	1	RETIREMENT OF UPIS - TRANSPORTATION EQUIPMENT
RBM-4(g)	1	USED ONLY FOR WASTEWATER DIVISION
RBM-4(h)	1	ADDITIONAL ACCUMULATED DEPRECIATION ("A/D") FOR LATE RECORDED UPIS INVOIVES
RBM-4(i)	1	TO CORRECT A/D FOR NON-DEPRECIABLE UPIS ACCOUNT
RBM-5	1	ADVANCES IN AID OF CONSTRUCTION ("AIAC")
RBM-6	1 - 6	CONTRIBUTIONS IN AID OF CONSTRUCTION ("CIAC") & ACCUMULATED AMORTIZATIONS ("AA")
RBM-7	1	CUSTOMER METER DEPOSITS
RBM-8	1	CUSTOMER SECURITY DEPOSITS
RBM-9	1	INTENTIONALLY LEFT BLANK
RBM-10	1	INTENTIONALLY LEFT BLANK
RBM-11	1 - 2	ACCUMULATED DEFERRED INCOME TAX ("ADIT")
RBM-12	1	REGULATORY ASSET - TCE PLUME
RBM-13	1	OPERATING INCOME SUMMARY
RBM-14	1 - 2	OPERATING INCOME ADJUSTMENTS
RBM-15	1	DEPRECIATION EXPENSE
RBM-16	1	PROPERTY TAX EXPENSE
RBM-17	1	USED ONLY FOR WASTEWATER DIVISION
RBM-18	1	REVENUE ACCRUAL FIX TO BE USED IN FUTURE
RBM-19	1	REVERSE COMPANY'S DECLINING USAGE ADJUSTMENT - USED ONLY FOR WATER DIVISION
RBM-20	1	WATER TESTING EXPENSE - USED ONLY FOR WATER DIVISION
RBM-21	1	INTENTIONALLY LEFT BLANK
RBM-22	1	EMPLOYEE PENSION PLAN
RBM-23	1	INTENTIONALLY LEFT BLANK
RBM-24	1	ADDITIONAL REDUCTIONS TO US LIBERTY UTILITIES
RBM-25	1	ALLOCATE BAD DEBT EXPENSE BETWEEN WATER AND WASTEWATER DIVISION
RBM-26	1	INTENTIONALLY LEFT BLANK
RBM-27	1	ALGONQUIN POWER UTILITIES CORPORATION ("APUC") COST ALLOCATIONS
RBM-28	1	ACHIEVEMENT / INCENTIVE / BONUS PAY
RBM-29	1	MISCELLANEOUS EXPENSE
RBM-30	1	CUSTOMER DEPOSIT INTEREST EXPENSE
RBM-31	1	INCOME TAXES
RBM-32	1	COST OF CAPITAL

RUCO RECOMMENDED REVENUE REQUIREMENT

Line No.	Description	[A] Company OCRB/FVRB Cost	[B] RUCO OCRB/FVRB Cost
1	Fair Value Rate Base	$ 23,877,697	$ 24,275,426
2	Adjusted Test Year Operating Income (Loss)	$ 1,871,616	$ 2,086,729
3	Current Rate Of Return (L2 / L1)	7.84%	8.60%
4	Required Operating Income (L5 X L1)	$ 2,268,786	$ 2,125,472
5	Required Rate Of Return On Fair Value Rate Base	9.50%	8.76%
6	Operating Income Deficiency (L4 - L2)	$ 397,170	$ 38,743
7	Gross Revenue Conversion Factor (RLM-1, Pg 2)	1.6595	1.6496
8	Increase In Gross Revenue Requirement (L7 X L6)	$ 659,088	$ 63,910
9	Adjusted Test Year Revenue	$ 10,361,603	$ 10,362,797
10	Proposed Annual Revenue (L8 + L9)	$ 11,020,691	$ 10,426,706
11	Required Percentage Increase In Revenue (L8 / L9)	6.36%	0.62%
12	Rate Of Return On Common Equity	10.00%	9.20%

References:
Column [A]: Company Schedules A-1, B-1, C-1, and D-1
Column [B]: RUCO Schedule RBM-2, RBM-13 and RBM-32

RUCO GROSS REVENUE CONVERSION FACTOR ("GRCF")

LINE NO.	DESCRIPTION	[A]	[B]	[C]
	Calculation of Gross Revenue Conversion Factor:			
1	Revenue	100.0000%		
2	Uncollecible Factor	0.0000%		
3	Revenues (L1 - L2)	100.0000%		
4	Combined Federal and State Income Tax and Property Tax Rate (Line 23)	39.3790%		
5	Subtotal (L3 - L4)	60.6210%		
6	**Revenue Conversion Factor (L1 / L5)**	1.649594		
	Calculation of Uncollecttible Factor:			
7	Unity	100.0000%		
8	Combined Federal and State Tax Rate (Line 17)	38.2900%		
9	One Minus Combined Income Tax Rate (L7 - L8)	61.7100%		
10	Uncollectible Rate	0.00000		
11	Uncollectible Factor (L9 * L10)	0.0000%		
	Calculation of Effective Tax Rate:			
12	Operating Income Before Taxes (Arizona Taxable Income)	100.0000%		
13	Arizona State Income Tax Rate	6.5000%		
14	Federal Taxable Income (L12 - L13)	93.5000%		
15	Applicable Federal Income Tax Rate (Col. [C], L53)	34.0000%		
16	Effective Federal Income Tax Rate (L14 x L15)	31.7900%		
17	Combined Federal and State Income Tax Rate (L13 + L16)		38.2900%	
	Calculation of Effective Property Tax Factor			
18	Unity	100.0000%		
19	Combined Federal and State Income Tax Rate (Col. [B], L17)	38.2900%		
20	One Minus Combined Income Tax Rate (L18-L19)	61.7100%		
21	Property Tax Factor (Sch. RBM-9, Col. [B], L24)	1.7647%		
22	Effective Property Tax Factor (L20 x L21)		1.0890%	
23	Combined Federal and State Income Tax and Property Tax Rate (Col. [B], L17 + L22)			39.3790%
24	Required Operating Income (Sch. RBM-1, Col. [B] Line 4)	$ 2,125,472		
25	*Adjusted Test Year Operating Income (Loss) (Sch. RBM-1, Col. [B], L2)*	2,086,729		
26	Required Increase in Operating Income (L24 - L25)		$ 38,743	
27	Income Taxes on Recommended Revenue (Col. [C], L52)	$ 1,165,837		
28	Income Taxes on Test Year Revenue (Col. [A], L52)	1,141,797		
29	Required Increase in Revenue to Provide for Income Taxes (L27 - L28)		24,039	
30	Recommended Revenue Requirement (Sch. RBM-1, Col. [B], Line 10)	$ 10,426,706		
31	Uncollectible Rate (L10)	0.0000%		
32	Uncolllectible Expense on Recommended Revenue (L30 x L31)	$ -		
33	Adjusted Test Year Uncollectible Expense(Sch. RBM-6, Col. [C], L32)	$ -		
34	Required Increase in Revenue to Provide for Uncollectible Exp. (L32 - L33)		-	
35	Property Tax with Recommended Revenue (Sch. RBM-9, Col. [B], L19)	$ 549,661		
36	Property Tax on Test Year Revenue (Sch. RBM-9, Col. [B], L20)	548,533		
37	Increase in Property Tax Due to Increase in Revenue (L35 - 36)		1,128	
38	Total Required Increase in Revenue (Col. [B], L26 + L29 + L34 + L37)		$ 63,910	

	Calculation of Income Tax:	Test Year		*RUCO* Recommended
39	Revenue (Sch. RBM-1, Col. [B], Line 9 & Sch. RBM-1, Col. [B], L10)	$ 10,362,797	$ 63,910	$ 10,426,706
40	Operating Expenses Excluding Income Taxes	$ 7,134,270		$ 7,135,398
41	Synchronized Interest (Col. [C], L57)	$ 246,554		$ 246,554
42	Arizona Taxable Income (L39 - L40 - L41)	$ 2,981,973		$ 3,044,755
43	Arizona State Income Tax Rate	6.5000%		6.5000%
44	Arizona Income Tax (L42 x L43)	$ 193,828		$ 197,909
45	Federal Taxable Income (L42 - L44)	$ 2,788,145		$ 2,846,846
46	Federal Tax on First Income Bracket ($1 - $50,000) @ 15%	$ 7,500		$ 7,500
47	Federal Tax on Second Income Bracket ($51,001 - $75,000) @ 25%	$ 6,250		$ 6,250
48	Federal Tax on Third Income Bracket ($75,001 - $100,000) @ 34%	$ 8,500		$ 8,500
49	Federal Tax on Fourth Income Bracket ($100,001 - $335,000) @ 39%	$ 91,650		$ 91,650
50	Federal Tax on Fifth Income Bracket ($335,001 -$10,000,000) @ 34%	$ 834,069		$ 854,028
51	Total Federal Income Tax	$ 947,969		$ 967,928
52	Combined Federal and State Income Tax (L44 + L51)	$ 1,141,797		$ 1,165,837
53	Applicable Federal Income Tax Rate [Col. [C], L46 - Col. [A], L46] / [Col. [C], L40 - Col. [A], L40]			34.0000%
54	**Synchronized Interest Calculation:**			
55	Rate Base			$ 24,275,426
56	x Weighted Average Cost of Debt			1.02%
57	Synchronized Interest			$ 246,554

RUCO RATE BASE SUMMARY

Line No.	Description	[A] Company As Filed OCRB/FVRB	[B] RUCO Total Adjustments	[C] RUCO Recommended OCRB/FVRB
1	Gross Utility Plant In Service	$ 74,024,532	$ 571,272	$ 74,595,804
2	Accumulated Depreciation	(13,244,186)	(319,489)	(13,563,675)
3	Net Utility Plant in Service (L1 + L2)	$ 60,780,346	$ 251,784	$ 61,032,130
	Less:			
4	Advances In Aid of Construction ("AIAC")	(11,645,290)	-	(11,645,290)
5	Contributions In Aid of Construction ("CIAC")	(28,470,485)	93,570	(28,376,915)
6	Accumulated Amortization of CIAC	4,446,775	(293,475)	4,153,300
7	Net CIAC (L5 + L6)	$ (24,023,709)	$ (199,905)	$ (24,223,615)
8	Customer Meter Deposits	(95,892)	14,231	(81,661)
9	Customer Security Deposits	(155,440)	(8,553)	(163,993)
10	Accumulated Deferred IncomeTaxes ("ADIT")	(982,318)	340,173	(642,145)
	Plus:			
11	Unamortized Finance Charges	-	-	-
12	Allowance For Working Capital	-	-	-
13	Total Rate Base (Sum L's 3, 4, 7, 8 Thru 12)	$ 23,877,697	$ 397,729	$ 24,275,426

References:
Column [A]: Company Schedule B-1
Column [B]: RBM-3, Columns [B] Thru [K]
Column [C]: Column [A] + Column [B]

Litchfield Park Service Company
Docket No's. SW-01428A-13-0042 and
W-01427A-13-0043
Test Year Ended December 31, 2012

Wastewater Division
Surrebuttal Schedule RBM-3
Page 1 of 1

RATE BASE ADJUSTMENTS

LINE NO.	Description	[A] Company As Filed OCRB/FVRB	[B] Adjust No. 1 Utility Plant in Service Adjustments	[C] Adjust No. 2 Accumulated Depreciation	[D] Adjust No. 3 Intentionally Left Blank	[E] Adjust No. 4 CIAC & Amortization Adjustments	[F] Adjust No. 5 Customer Meter Deposits	[G] Adjust No. 6 Customer Security Deposits	[H] Adjust No. 7 Intentionally Left Blank	[I] Adjust No. 8 Intentionally Left Blank	[J] Adjust No. 9 ADIT Adjustment	[K] Adjust No. 10 Used For Water Div. Only	[L] Total RUCO Adjustments	[M] RUCO Recommended OCRB/FVRB
1	Gross Utility Plant In Service	$ 74,024,532	$ 571,272	$ -	$ -	$ -	$ -	$ -	$ -	$ -	$ -	$ -	$ 571,272	$ 74,595,804
2	Accumulated Depreciation	(13,244,186)	-	(319,489)	-	-	-	-	-	-	-	-	(319,489)	(13,563,675)
3	Net Utility Plant in Service (L1 + L2)	$ 60,780,346	$ 571,272	$ (319,489)	$ -	$ -	$ -	$ -	$ -	$ -	$ -	$ -	$ 251,784	$ 61,032,130
	Less:													
4	Advances In Aid of Construction ("AIAC")	$ (11,645,290)	$ -	$ -	$ -	$ -	$ -	$ -	$ -	$ -	$ -	$ -	$ -	$ (11,645,290)
5	Contributions In Aid of Construction ("CIAC")	(28,470,485)	-	-	-	93,570	-	-	-	-	-	-	93,570	(28,376,915)
6	Accumulated Amortization of CIAC	4,446,775	-	-	-	(293,475)	-	-	-	-	-	-	(293,475)	4,153,300
7	Net CIAC (L5 + L6)	$ (24,023,709)	$ -	$ -	$ -	$ (199,905)	$ -	$ -	$ -	$ -	$ -	$ -	$ (199,905)	$ (24,223,615)
8	Customer Meter Deposits	$ (95,892)	$ -	$ -	$ -	$ -	$ 14,231	$ -	$ -	$ -	$ -	$ -	$ 14,231	$ (81,661)
9	Customer Security Deposits	(155,440)	-	-	-	-	-	(8,553)	-	-	-	-	(8,553)	(163,993)
10	Accumulated Deferred IncomeTaxes ("ADIT")	(982,318)	-	-	-	-	-	-	-	-	340,173	-	340,173	(642,145)
	Plus:													
11	Unamortized Finance Charges	-	-	-	-	-	-	-	-	-	-	-	-	-
12	Allowance For Working Capital	-	-	-	-	-	-	-	-	-	-	-	-	-
13	Total Rate Base (Sum L's 3, 4, 7, 8 Thru 12)	$ 23,877,697	$ 571,272	$ (319,489)	$ -	$ (199,905)	$ 14,231	$ (8,553)	$ -	$ -	$ 340,173	$ -	$ 397,729	$ 24,275,426

RUCO Adjustments:

Adjustment No. 1: Correct Utility Plant in Service ("UPIS") Balance as Filed by Company - See RUCO Adjustment No. 1 on Schedule RBM-4(a) 2012 TY Plant Summary Schedule on page 1 of 2, Column [J] at line 30;
Adjustment No. 2: Correct UPIS Accumulated Depreciation ("A/D") Balance as Filed by Company - See RUCO Adjustment No. 2 on Schedule RBM-4(a) 2012 A/D Summary Schedule on page 2 of 2, Column [J] at line 30;
Adjustment No. 3: Intentionally Left Blank;
Adjustment No. 4: Correct Contributions In Aid of Construction ("CIAC") & CIAC Amortization Balances as Filed by Company - See RUCO Schedule RBM-6 CIAC Reconstruction Schedules on page 1 of 6 at lines 3 & 6 with Total Net Adjustment at line 7 and on page 6 of 6, Column [G] & [H], at line 9;
Adjustment No. 5: RUCO Recommended 13-Month Average Customer Meter Deposit Balance as Calculated - See RUCO Schedule RBM-7 Customer Meter Deposits on page 1 of 1 at line 6;
Adjustment No. 6: RUCO Recommended 13-Month Average Customer Security Deposit Balance as Calculated - See RUCO Schedule RBM-8 Customer Security Deposits on page 1 of 1 at line 6;
Adjustment No. 7: Intentionally Left Blank
Adjustment No. 8: Intentionally Left Blank
Adjustment No. 9: RUCO Recommended 2012 TY End Accumulated Deferred Income Tax ("ADIT") Balance After RUCO Recommended Rate Base Adjustments - See RUCO Schedule RBM-11 ADIT on page 1 of 2 at line 11;
Adjustment No. 10: Used Only for Water Division

References:

Column [A]: Company Schedule B-1
Column [B] Thru Column [K]: RUCO Recommended Rate Base Adjustments
Column [L]: Sum of RUCO Recommended Rate Base Adjustments of Columns [B] through [K]
Column [M]: Column [A] + Column [L]

RATE BASE ADJUSTMENT NO. 1
SUMMARY OF UTILITY PLANT IN SERVICE ("UPIS") ADJUSTMENTS
TEST YEAR ENDED DECEMBER 31, 2012

Line No.	Acct No	Description	[A] Company Plant in Service As Filed	[B] RUCO Adjustment #1 Plant Reconstruction	[C] RUCO Adjustment #2 Plant Reclassifications Per Staff DR DH 11.2	[D] RUCO Adjustment #3 UPIS Not Used & Useful	[E] RUCO Adjustment #4 Remove Duplicate Invoices	[F] RUCO Adjustment #5 Used Only for Water Division	[G] RUCO Adjustment #6 Intentionally Left Blank	[H] RUCO Adjustment #7 Used Only for Add'l. Late Recorded Inv. A/D	[I] RUCO Adjustment #8 Used Only for W Division A/D	[J] RUCO Adjustment #9 True-Up of Accruals	[K] RUCO Adjustment #10 Reconciling Adjustments	[L] RUCO Adjustment #11 Post-Direct Retires/Reclass	[M] RUCO Total UPIS Adjustments	[N] Total Plant in Service Recommended
1	351	Organization	$ -	$ -	$ -	$ -	$ -	$ -	$ -	$ -	$ -	$ -	$ -	$ -	$ -	$ -
2	352	Franchise	-	-	-	-	-	-	-	-	-	-	-	-	-	-
3	353	Land	1,850,582	-	-	(11,217)	(3,409)	-	-	-	-	-	-	-	(14,626)	1,835,957
4	354	Structures & Improvements	24,208,314	1,200,000	(525,110)	(113,329)	-	-	-	-	-	199,000	-	-	760,561	24,968,875
5	355	Power Generation	603,332	-	-	-	(400)	-	-	-	-	-	-	-	(400)	602,932
6	360	Collection Sewer Forced	1,162,597	-	-	-	-	-	-	-	-	-	-	-	-	1,162,597
7	361	Collection Sewers Gravity	31,886,680	-	41,564	-	-	-	-	-	-	-	-	-	41,564	31,928,245
8	362	Special Collecting Structures	-	-	-	-	-	-	-	-	-	-	-	-	-	-
9	363	Customer Services	76,190	-	-	-	-	-	-	-	-	-	-	-	-	76,190
10	364	Flow Measuring Devices	46,210	-	36,618	-	-	-	-	-	-	-	-	-	36,618	82,828
11	366	Reuse Services	4,057,660	-	-	-	-	-	-	-	-	-	-	-	-	4,057,660
12	367	Reuse Meters And Installation	44,753	-	-	-	-	-	-	-	-	-	-	-	-	44,753
13	370	Receiving Wells	860,393	-	-	-	-	-	-	-	-	-	-	-	-	860,393
14	371	Pumping Equipment	799,481	-	61,670	-	-	-	-	-	-	-	-	-	61,670	861,150
15	374	Reuse Distribution Reservoirs	62,286	-	-	-	-	-	-	-	-	-	-	-	-	62,286
16	375	Reuse Trans. and Dist. System	420,334	-	-	-	-	-	-	-	-	-	-	-	-	420,334
17	380	Treatment & Disposal Equipment	5,585,470	(700,000)	476,749	-	-	-	-	-	-	-	-	-	(223,251)	5,362,219
18	381	Plant Sewers	47,802	-	-	-	-	-	-	-	-	-	-	-	-	47,802
19	382	Outfall Sewer Lines	343,681	-	-	-	-	-	-	-	-	-	-	-	-	343,681
20	389	Other Sewer Plant & Equipment	871,498	-	(43,005)	-	(864)	-	-	-	-	-	-	6,193	(37,675)	833,823
21	390	Office Furniture & Equipment	275,740	-	-	-	-	-	-	-	-	-	-	-	-	275,740
22	390.1	Computers and Software	-	-	-	-	-	-	-	-	-	-	-	-	-	-
23	391	Transportation Equipment	33,497	-	-	-	-	-	-	-	-	-	-	(13,303)	(13,303)	20,194
24	392	Stores Equipment	8,968	-	-	-	-	-	-	-	-	-	-	-	-	8,968
25	393	Tools, Shop And Garage Equip	145,631	-	(15,681)	-	-	-	-	-	-	-	-	-	(15,681)	129,950
26	394	Laboratory Equip	186,348	-	836	-	-	-	-	-	-	-	-	-	836	187,184
26	395	Power Operated Equipment	28,090	-	(21,485)	-	-	-	-	-	-	-	-	-	(21,485)	6,605
26	396	Communication Equip	418,996	-	-	-	-	-	-	-	-	(3,555)	-	-	(3,555)	415,441
28	398	Other Tangible Plant	-	-	-	-	-	-	-	-	-	-	-	-	-	-
29		Rounding	-	-	-	-	(1)	-	-	-	-	-	-	-	(1)	(1)
30		RUCO UPIS Adjustments	$ 74,024,532	$ 500,000	$ 12,156	$ (124,546)	$ (4,673)	$ -	$ -	$ -	$ -	$ 195,445	$ -	$ (7,110)	$ 571,272	$ 74,595,805

RUCO Adjustments:

Adjustment No. 1: Correct Utility Plant in Service ("UPIS") Balance as Filed by Company - See RUCO Adjustment No. 1 on Schedule RBM-4(b) 2008 thru 2012 TY Plant Schedules on pages 1-6 at page 6 on line 32;
Adjustment No. 2: Plant Reclassifications - RUCO Adopted the Company's UPIS Reclassifications as Filed in Rebuttal Testimony;
Adjustment No. 3: Reclassify UPIS Invoices from Water to Wastewater Division - RUCO Adopted the Company's UPIS Adjustments as Filed in Rebuttal Testimony;
Adjustment No. 4: Remove Duplicate Invoices - See RUCO Schedule RBM-4(e) on page 1 of 1 at lines 3, 9, 15, and 21;
Adjustment No. 5: Used Only for Water Division;
Adjustment No. 6: Intentionally Left Blank;
Adjustment No. 7: Used Only for A/D of Late Recorded UPIS Invoices;
Adjustment No. 8: Used Only for Water Division.
Adjustment No. 9: RUCO Adopted True-up of Accruals Recommended by Staff (See Company Rebuttal Testimony);
Adjustment No. 10: Company's Reconciling Adjustment to Reconstruction of UPIS Schedules (See Company Rebuttal Testimony); and
Adjustment No. 11: Post-Direct Filing of Retirements & Reclassifications (See Company Rebuttal Testimony).

References:

Column [A]: Company Schedule B-2 on page 3 Adjusted Test Year UPIS Balances as Filed;
Columns [B] Thru [I]: RUCO Recommended UPIS Adjustments;
Column [J]: Sum of Columns [B] Through [I] - RUCO Sum of Total Recommended UPIS Adjustments;
Column [K]: Column [A] + [J]

RATE BASE ADJUSTMENT NO. 2
SUMMARY OF ACCUMULATED DEPRECIATION ADJUSTMENTS
TEST YEAR ENDED DECEMBER 31, 2012

Line No.	Acct No	Description	[A] Company Accum. Depre. As Filed	[B] RUCO Adjustment #1 Plant Reconstruction	[C] RUCO Adjustment #2 Plant Reclassifications Per Staff DR DH 11.2	[D] RUCO Adjustment #3 Remove A/D Booked for Non-Used & Useful UPIS	[E] RUCO Adjustment #4 Remove Duplicate Invoices	[F] RUCO Adjustment #5 Used Only for Water Division	[G] RUCO Adjustment #6 Intentionally Left Blank	[H] RUCO Adjustment #7 Additional A/D on Late Recorded UPIS	[I] RUCO Adjustment #8 Used Only for W Division A/D	[J] RUCO Adjustment #9 True-Up of Accruals	[K] RUCO Adjustment #10 Reconciling Adjustments	[L] RUCO Adjustment #11 Post-Direct Retires/Reclass	[M] RUCO Total Plant In Service Adjustments	[N] RUCO Accum. Depre. Recommended
1	351	Organization	$ -	$ -	$ -	$ -	$ -	$ -	$ -	$ -	$ -	$ -	$ -	$ -	$ -	$ -
2	352	Franchise	-	-	-	-	-	-	-	-	-	-	-	-	-	-
3	353	Land	-	-	-	-	-	-	-	-	-	-	-	-	-	-
4	354	Structures & Improvements	(3,773,984)	-	55,232	5,661	-	-	-	(6,478)	-	(3,313)	-	-	51,101	(3,722,884)
5	355	Power Generation	(222,393)	-	-	-	70	-	-	-	-	-	(0)	-	70	(222,323)
6	360	Collection Sewer Forced	109,004	-	-	-	-	-	-	-	-	-	-	-	-	109,004
7	361	Collection Sewers Gravity	(5,222,855)	-	(2,910)	-	-	-	-	(407)	-	-	-	-	(3,317)	(5,226,172)
8	362	Special Collecting Structures	-	-	-	-	-	-	-	-	-	-	-	-	-	-
9	363	Customer Services	(2,092)	-	-	-	-	-	-	-	-	-	-	-	-	(2,092)
10	364	Flow Measuring Devices	(38,453)	-	(12,816)	-	-	-	-	-	-	-	-	-	(12,816)	(51,269)
11	366	Reuse Services	(825,859)	-	-	-	-	-	-	(23)	-	-	-	-	(23)	(825,882)
12	367	Reuse Meters And Installation	(21,945)	-	-	-	-	-	-	-	-	-	-	-	-	(21,945)
13	370	Receiving Wells	(297,089)	-	-	-	-	-	-	-	-	-	-	-	-	(297,089)
14	371	*Pumping Equipment*	(276,747)	-	(6,497)	-	-	-	-	-	-	-	-	-	(6,497)	(283,244)
15	374	Reuse Distribution Reservoirs	(8,088)	-	-	-	-	-	-	-	-	-	-	-	-	(8,088)
16	375	Reuse Trans. and Dist. System	(48,106)	-	-	-	-	-	-	(803)	-	-	-	-	(803)	(48,908)
17	380	Treatment & Disposal Equipment	(1,551,533)	(300,000)	(75,870)	-	-	-	-	-	-	-	-	-	(375,870)	(1,927,403)
18	381	Plant Sewers	(16,686)	-	-	-	-	-	-	-	-	-	-	-	-	(16,686)
19	382	Outfall Sewer Lines	(118,892)	-	-	-	-	-	-	-	-	-	-	-	-	(118,892)
20	389	Other Sewer Plant & Equipment	(234,145)	-	10,039	-	144	-	-	-	-	-	-	(1,704)	8,480	(225,666)
21	390	Office Furniture & Equipment	(122,510)	-	-	-	-	-	-	-	-	-	-	-	-	(122,510)
22	390.1	Computers and Software	-	-	-	-	-	-	-	-	-	-	-	-	-	-
23	391	Transportation Equipment	(33,497)	3,646	-	-	-	-	-	-	-	-	3,508	12,219	19,373	(14,124)
24	392	Stores Equipment	(3,681)	-	-	-	-	-	-	-	-	-	-	-	-	(3,681)
25	393	Tools, Shop And Garage Equip	(25,027)	-	392	-	-	-	-	-	-	-	-	-	392	(24,635)
26	394	Laboratory Equip	(135,667)	-	(293)	-	-	-	-	-	-	-	-	-	(293)	(135,959)
26	395	Power Operated Equipment	(702)	-	537	-	-	-	-	-	-	-	-	-	537	(165)
28	396	*Communication Equip*	(373,237)	-	-	-	-	-	-	-	-	178	-	-	178	(373,059)
28	398	Other Tangible Plant	-	-	-	-	-	-	-	-	-	-	-	-	-	-
29		Plant Held for Future Use	-	-	-	-	-	-	-	-	-	-	-	-	-	-
30		Totals	$ (13,244,186)	$ (296,354)	$ (32,185)	$ 5,661	$ 214	$ -	$ -	$ (7,711)	$ -	$ (3,136)	$ 3,508	$ 10,515	$ (319,489)	$ (13,563,675)

RUCO Adjustments:

Adjustment No. 1: Accumulated Depreciation ("A/D") Per RUCO - See RUCO Schedule RBM-4(b) 2012 Plant Reconstruction Schedule on pages 1-6 at page 6 on line 34;
Adjustment No. 2: Plant Reclassifications A/D Per RUCO - RUCO Adopted the Company's A/D Reclassifications as Filed in Rebuttal Testimony;
Adjustment No. 3: Reclassify A/D of UPIS Invoices from Water to Wastewater Division - RUCO Adopted the Company's A/D as Filed in Rebuttal Testimony;
Adjustment No. 4: Remove Duplicate Invoices A/D - RUCO Adopted the Company's A/D as Filed in Rebuttal Testimony;
Adjustment No. 5: Used Only for Water Division;
Adjustment No. 6: Intentionally Left Blank;
Adjustment No. 7: Used Only for A/D of Late Recorded UPIS Invoices - See RUCO Schedule RBM-4(h) on page 1 of 1, Column [B], at line 35;
Adjustment No. 8: Used Only for Water Division.
Adjustment No. 9: RUCO Adopted True-up of Accruals Recommended by Staff (See Company Rebuttal Testimony);
Adjustment No. 10: Company's Reconciling Adjustment to Reconstruction of A/D Schedules (See Company Rebuttal Testimony); and
Adjustment No. 11: Post-Direct Filing of Retirements & Reclassifications (See Company Rebuttal Testimony).

References:

Columns [A]: Company Schedule B-2 on page 4 Adjusted Test Year as Filed
Columns [B] Through [L]: RUCO Recommended A/D Adjustments
Columns [M]: Sum of Columns [B] Through [L] - RUCO Sum of Total Recommended UPIS Adjustments
Column [N]: Column [A] + [M]

UTILITY PLANT IN SERVICE ("UPIS") & UPIS ACCUMULATED DEPRECIATION ADJUSTMENT NO. 1
PLANT RECONSTRUCTION SCHEDULE
TEST YEAR ENDED DECEMBER 31, 2012

				Per Decision 72026			2008 (3 Months - October 1 through December 31, 2008)								
Line No.	NARUC Account No.	Description	Allowed Deprec. Rate	Plant at 9/30/2008	Accum. Deprec. At 9/30/2008	Net Plant at 9/30/2008	Plant Additions (Per Books)	Plant Adjustments	Adjusted Plant Additions	Plant Retirements	Salvage A/D Only	Depreciation (Calculated)	Plant Balance	Accum. Deprec.	Net Plant
1	351	Organization	0.00%	$ -	$ -	$ -	$ -	$ -	$ -	$ -	$ -	$ -	$ -	$ -	$ -
2	352	Franchise	0.00%	-	-	-	-	-	-	-	-	-	-	-	-
3	353	Land	0.00%	1,783,426	-	1,783,426	-	-	-	-	-	-	1,783,426	-	1,783,426
4	354	Structures & Improvements	3.33%	18,720,541	(1,470,581)	17,249,960	(233,680)	(20,663)	(254,342)	-	-	154,790	18,466,199	(1,625,370)	16,840,828
5	355	Power Generation	5.00%	548,674	(107,121)	441,552	-	-	-	-	-	6,858	548,674	(113,980)	434,694
6	360	Collection Sewer Forced	2.00%	1,161,105	207,785	1,368,889	-	-	-	-	-	5,806	1,161,105	201,979	1,363,084
7	361	Collection Sewers Gravity	2.00%	23,094,661	(2,850,025)	20,244,636	681,674	(7,514)	674,161	-	-	117,159	23,768,822	(2,967,184)	20,801,638
8	362	Special Collecting Structures	2.00%	-	-	-	-	-	-	-	-	-	-	-	-
9	363	Customer Services	2.00%	-	-	-	-	-	-	-	-	-	-	-	-
10	364	Flow Measuring Devices	10.00%	47,019	(19,320)	27,699	-	-	-	-	-	1,175	47,019	(20,495)	26,524
11	366	Reuse Services	2.00%	3,789,468	(482,984)	3,306,484	160,400	(59)	160,341	-	-	19,348	3,949,808	(502,332)	3,447,476
12	367	Reuse Meters And Installation	8.33%	52,331	(7,610)	44,721	1,535	-	1,535	-	-	1,106	53,866	(8,716)	45,150
13	370	Receiving Wells	3.33%	860,393	(175,322)	685,072	-	-	-	-	-	7,163	860,393	(182,484)	677,909
14	371	Pumping Equipment	12.50%	1,759,801	(959,964)	799,837	7,696	-	7,696	-	-	55,114	1,767,496	(1,015,078)	752,418
15	374	Reuse Distribution Reservoirs	2.50%	62,825	(1,959)	60,866	-	-	-	-	-	393	62,825	(2,352)	60,474
16	375	Reuse Trans. and Dist. System	2.50%	414,315	(3,884)	410,431	-	-	-	-	-	2,589	414,315	(6,474)	407,842
17	380	Treatment & Disposal Equipment	5.00%	5,431,228	(1,365,496)	4,065,731	(36,423)	-	(36,423)	-	-	67,663	5,394,805	(1,433,159)	3,961,646
18	381	Plant Sewers	5.00%	47,788	(6,531)	41,257	-	-	-	-	-	597	47,788	(7,128)	40,660
19	382	Outfall Sewer Lines	3.33%	343,681	(70,253)	273,428	-	-	-	-	-	2,861	343,681	(73,114)	270,567
20	389	Other Sewer Plant & Equipment	6.67%	605,548	(41,241)	564,307	(11,446)	-	(11,446)	-	-	10,002	594,101	(51,243)	542,859
21	390	Office Furniture & Equipment	6.67%	198,772	(58,516)	140,256	12,496	-	12,496	-	-	3,419	211,268	(61,935)	149,334
22	390.1	Computers and Software	20.00%	-	-	-	-	-	-	-	-	-	-	-	-
23	391	Transportation Equipment	20.00%	26,078	(10,505)	15,573	3,368	-	3,368	-	-	1,388	29,446	(11,893)	17,553
24	392	Stores Equipment	4.00%	8,968	(2,156)	6,811	-	-	-	-	-	90	8,968	(2,246)	6,721
25	393	Tools, Shop And Garage Equip	5.00%	56,167	(8,241)	47,927	4,879	-	4,879	-	-	733	61,046	(8,973)	52,073
26	394	Laboratory Equip	10.00%	173,948	(60,590)	113,358	-	-	-	-	-	4,349	173,948	(64,939)	109,010
27	395	Power Operated Equipment	5.00%	-	-	-	-	-	-	-	-	-	-	-	-
28	396	Communication Equip	10.00%	418,996	(195,163)	223,833	-	-	-	-	-	10,475	418,996	(205,638)	213,358
29	398	Other Tangible Plant	10.00%	-	-	-	-	-	-	-	-	-	-	-	-
30		Plant Held for Future Use	0.00%	-	-	-	-	-	-	-	-	-	-	-	-
31		RUCO Total UPIS & A/D		$ 59,605,733	$ (7,689,676)	$ 51,916,057	$ 590,500	$ (28,236)	$ 562,264	$ -	$ -	$ 473,077	$ 60,167,997	$ (8,162,753)	$ 52,005,243

UTILITY PLANT IN SERVICE ("UPIS") & UPIS ACCUMULATED DEPRECIATION ADJUSTMENT NO. 1
PLANT RECONSTRUCTION SCHEDULE
TEST YEAR ENDED DECEMBER 31, 2012

				2009								
Line No.	NARUC Account No.	Description	Allowed Deprec. Rate	Plant Additions (Per Books)	Plant Adjustments	Adjusted Plant Additions	Plant Retirements	Salvage A/D Only	Depreciation (Calculated)	Plant Balance	Accum. Deprec.	Net Plant
1	351	Organization	0.00%	$ -	$ -	$ -	$ -	$ -	$ -	$ -	$ -	$ -
2	352	Franchise	0.00%	-	-	-	-	-	-	-	-	-
3	353	Land	0.00%	68,263	-	68,263	-	-	-	1,851,690	-	1,851,690
4	354	Structures & Improvements	3.33%	643,865	(6,430)	637,435	-	-	625,538	19,103,634	(2,250,908)	16,852,725
5	355	Power Generation	5.00%	7,457	-	7,457	-	-	27,620	556,131	(141,600)	414,531
6	360	Collection Sewer Forced	2.00%	1,200	-	1,200	-	-	23,234	1,162,305	178,745	1,341,050
7	361	Collection Sewers Gravity	2.00%	3,132,384	(18,762)	3,113,622	-	-	506,513	26,882,443	(3,473,696)	23,408,747
8	362	Special Collecting Structures	2.00%	-	-	-	-	-	-	-	-	-
9	363	Customer Services	2.00%	-	-	-	-	-	-	-	-	-
10	364	Flow Measuring Devices	10.00%	-	-	-	-	-	4,702	47,019	(25,197)	21,822
11	366	Reuse Services	2.00%	107,733	-	107,733	-	-	80,073	4,057,541	(582,405)	3,475,136
12	367	Reuse Meters And Installation	8.33%	-	-	-	-	-	4,487	53,866	(13,203)	40,663
13	370	Receiving Wells	3.33%	-	-	-	-	-	28,651	860,393	(211,136)	649,258
14	371	Pumping Equipment	12.50%	59,896	-	59,896	-	-	224,681	1,827,393	(1,239,759)	587,634
15	374	Reuse Distribution Reservoirs	2.50%	-	-	-	-	-	1,571	62,825	(3,922)	58,903
16	375	Reuse Trans. and Dist. System	2.50%	-	-	-	-	-	10,358	414,315	(16,832)	397,484
17	380	Treatment & Disposal Equipment	5.00%	38,942	-	38,942	-	-	270,714	5,433,746	(1,703,873)	3,729,874
18	381	Plant Sewers	5.00%	-	-	-	-	-	2,389	47,788	(9,518)	38,270
19	382	Outfall Sewer Lines	3.33%	-	-	-	-	-	11,445	343,681	(84,558)	259,123
20	389	Other Sewer Plant & Equipment	6.67%	78,761	-	78,761	-	-	42,253	672,862	(93,496)	579,367
21	390	Office Furniture & Equipment	6.67%	-	-	-	-	-	14,092	211,268	(76,026)	135,242
22	390.1	Computers and Software	20.00%	-	-	-	-	-	-	-	-	-
23	391	Transportation Equipment	20.00%	-	-	-	-	-	5,889	29,446	(17,782)	11,664
24	392	Stores Equipment	4.00%	-	-	-	-	-	359	8,968	(2,605)	6,363
25	393	Tools, Shop And Garage Equip	5.00%	-	-	-	-	-	3,052	61,046	(12,026)	49,021
26	394	Laboratory Equip	10.00%	-	-	-	-	-	17,395	173,948	(82,333)	91,615
27	395	Power Operated Equipment	5.00%	-	-	-	-	-	-	-	-	-
28	396	Communication Equip	10.00%	-	-	-	-	-	41,900	418,996	(247,538)	171,458
29	398	Other Tangible Plant	10.00%	-	-	-	-	-	-	-	-	-
30		Rounding	0.00%	-	-	-	-	-	-	-	-	-
31		RUCO Total UPIS & A/D		$ 4,138,501	$ (25,192)	$ 4,113,310	$ -	$ -	$ 1,946,915	$ 64,281,306	$ (10,109,668)	$ 54,171,639

UTILITY PLANT IN SERVICE ("UPIS") & UPIS ACCUMULATED DEPRECIATION ADJUSTMENT NO. 1
PLANT RECONSTRUCTION SCHEDULE
TEST YEAR ENDED DECEMBER 31, 2012

				2010								
Line No.	NARUC Account No.	Description	Allowed Deprec. Rate	Plant Additions (Per Books)	Plant Adjustments	Adjusted Plant Additions	Plant Retirements	Salvage A/D Only	Depreciation (Calculated)	Plant Balance	Accum. Deprec.	Net Plant
1	351	Organization	0.00%	$ -	$ -	$ -	$ -	$ -	$ -	$ -	$ -	$ -
2	352	Franchise	0.00%	-	-	-	-	-	-	-	-	-
3	353	Land	0.00%	1,613	-	1,613	-	-	-	1,853,302	-	1,853,302
4	354	Structures & Improvements	3.33%	-	-	-	-	-	636,151	19,103,634	(2,887,059)	16,216,574
5	355	Power Generation	5.00%	800	-	800	-	-	27,827	556,931	(169,427)	387,505
6	360	Collection Sewer Forced	2.00%	-	-	-	-	-	23,246	1,162,305	155,499	1,317,804
7	361	Collection Sewers Gravity	2.00%	1,324,126	(7,422)	1,316,704	-	-	550,816	28,199,148	(4,024,512)	24,174,636
8	362	Special Collecting Structures	2.00%	-	-	-	-	-	-	-	-	-
9	363	Customer Services	2.00%	15,630	-	15,630	-	-	156	15,630	(156)	15,474
10	364	Flow Measuring Devices	10.00%	-	-	-	-	-	4,702	47,019	(29,899)	17,120
11	366	Reuse Services	2.00%	-	-	-	-	-	81,151	4,057,541	(663,556)	3,393,985
12	367	Reuse Meters And Installation	8.33%	-	-	-	-	-	4,487	53,866	(17,690)	36,176
13	370	Receiving Wells	3.33%	-	-	-	-	-	28,651	860,393	(239,787)	620,607
14	371	Pumping Equipment	12.50%	36,683	-	36,683	(935,300)	-	172,261	928,776	(476,719)	452,057
15	374	Reuse Distribution Reservoirs	2.50%	-	-	-	-	-	1,571	62,825	(5,493)	57,332
16	375	Reuse Trans. and Dist. System	2.50%	-	-	-	-	-	10,358	414,315	(27,189)	387,126
17	380	Treatment & Disposal Equipment	5.00%	35,345	-	35,345	-	-	272,571	5,469,092	(1,976,444)	3,492,648
18	381	Plant Sewers	5.00%	-	-	-	-	-	2,389	47,788	(11,907)	35,881
19	382	Outfall Sewer Lines	3.33%	-	-	-	-	-	11,445	343,681	(96,003)	247,678
20	389	Other Sewer Plant & Equipment	6.67%	33,548	-	33,548	-	-	45,999	706,410	(139,495)	566,915
21	390	Office Furniture & Equipment	6.67%	10,777	-	10,777	-	-	14,451	222,046	(90,477)	131,568
22	390.1	Computers and Software	20.00%	-	-	-	-	-	-	-	-	-
23	391	Transportation Equipment	20.00%	-	-	-	-	-	5,889	29,446	(23,672)	5,775
24	392	Stores Equipment	4.00%	-	-	-	-	-	359	8,968	(2,964)	6,004
25	393	Tools, Shop And Garage Equip	5.00%	2,936	-	2,936	-	-	3,126	63,982	(15,151)	48,831
26	394	Laboratory Equip	10.00%	-	-	-	-	-	17,395	173,948	(99,728)	74,220
27	395	Power Operated Equipment	5.00%	-	-	-	-	-	-	-	-	-
28	396	Communication Equip	10.00%	-	-	-	-	-	41,900	418,996	(289,438)	129,559
29	398	Other Tangible Plant	10.00%	-	-	-	-	-	-	-	-	-
30		Plant Held for Future Use	0.00%	-	-	-	-	-	-	-	-	-
31		RUCO Total UPIS & A/D		$ 1,461,458	$ (7,422)	$ 1,454,036	$ (935,300)	$ -	$ 1,956,899	$ 64,800,042	$ (11,131,266)	$ 53,668,776

UTILITY PLANT IN SERVICE ("UPIS") & UPIS ACCUMULATED DEPRECIATION ADJUSTMENT NO. 1
PLANT RECONSTRUCTION SCHEDULE
TEST YEAR ENDED DECEMBER 31, 2012

				2011								
Line No.	NARUC Account No.	Description	Allowed Deprec. Rate	Plant Additions (Per Books)	Plant Adjustments	Adjusted Plant Additions	Plant Retirements	Salvage A/D Only	Depreciation (Calculated)	Plant Balance	Accum. Deprec.	Net Plant
1	351	Organization	0.00%	$ -	$ -	$ -	$ -	$ -	$ -	$ -	$ -	$ -
2	352	Franchise	0.00%	-	-	-	-	-	-	-	-	-
3	353	Land	0.00%	-	-	-	-	-	-	1,853,302	-	1,853,302
4	354	Structures & Improvements	3.33%	455,088	(13,362)	441,725	-	-	643,506	19,545,359	(3,530,565)	16,014,794
5	355	Power Generation	5.00%	48,087	-	48,087	-	-	29,049	605,018	(198,475)	406,543
6	360	Collection Sewer Forced	2.00%	-	-	-	-	-	23,246	1,162,305	132,253	1,294,557
7	361	Collection Sewers Gravity	2.00%	3,563,023	(2,268)	3,560,755	-	-	599,591	31,759,903	(4,624,103)	27,135,800
8	362	Special Collecting Structures	2.00%	-	-	-	-	-	-	-	-	-
9	363	Customer Services	2.00%	35,240	-	35,240	-	-	665	50,870	(821)	50,049
10	364	Flow Measuring Devices	10.00%	-	-	-	-	-	4,702	47,019	(34,601)	12,418
11	366	Reuse Services	2.00%	-	-	-	-	-	81,151	4,057,541	(744,707)	3,312,834
12	367	Reuse Meters And Installation	8.33%	-	-	-	-	-	4,487	53,866	(22,177)	31,689
13	370	Receiving Wells	3.33%	-	-	-	-	-	28,651	860,393	(268,438)	591,955
14	371	Pumping Equipment	12.50%	44,147	(782)	43,364	(4,702)	-	118,513	967,439	(590,531)	376,908
15	374	Reuse Distribution Reservoirs	2.50%	-	-	-	-	-	1,571	62,825	(7,063)	55,762
16	375	Reuse Trans. and Dist. System	2.50%	5,005	-	5,005	-	-	10,420	419,320	(37,610)	381,710
17	380	Treatment & Disposal Equipment	5.00%	69,624	(1,025)	68,600	-	-	275,170	5,537,692	(2,251,613)	3,286,078
18	381	Plant Sewers	5.00%	-	-	-	-	-	2,389	47,788	(14,296)	33,492
19	382	Outfall Sewer Lines	3.33%	-	-	-	-	-	11,445	343,681	(107,448)	236,233
20	389	Other Sewer Plant & Equipment	6.67%	36,091	-	36,091	-	-	48,321	742,502	(187,816)	554,686
21	390	Office Furniture & Equipment	6.67%	9,304	-	9,304	-	-	15,121	231,350	(105,598)	125,752
22	390.1	Computers and Software	20.00%	-	-	-	-	-	-	-	-	-
23	391	Transportation Equipment	20.00%	-	-	-	-	-	5,775	29,446	(29,446)	-
24	392	Stores Equipment	4.00%	-	-	-	-	-	359	8,968	(3,322)	5,645
25	393	Tools, Shop And Garage Equip	5.00%	29,211	(485)	28,726	-	-	3,917	92,709	(19,069)	73,640
26	394	Laboratory Equip	10.00%	5,476	(187)	5,289	-	-	17,659	179,237	(117,388)	61,850
27	395	Power Operated Equipment	5.00%	-	-	-	-	-	-	-	-	-
28	396	Communication Equip	10.00%	-	-	-	-	-	41,900	418,996	(331,337)	87,659
29	398	Other Tangible Plant	10.00%	-	-	-	-	-	-	-	-	-
30		Plant Held for Future Use	0.00%	-	-	-	-	-	-	-	-	-
31		RUCO Total UPIS & A/D		$ 4,300,296	$ (18,109)	$ 4,282,187	$ (4,702)	$ -	$ 1,967,607	$ 69,077,528	$ (13,094,171)	$ 55,983,357

UTILITY PLANT IN SERVICE ("UPIS") & UPIS ACCUMULATED DEPRECIATION ADJUSTMENT NO. 1
PLANT RECONSTRUCTION SCHEDULE
TEST YEAR ENDED DECEMBER 31, 2012

Line No.	NARUC Account No.	Description	Allowed Deprec. Rate	2012 Plant Additions (Per Books)	Plant Adjustments	Adjusted Plant Additions	Plant Retirements	Salvage A/D Only	Depreciation (Calculated)	Plant Balance	Accum. Deprec.	Net Plant
1	351	Organization	0.00%	$ -	$ -	$ -	$ -	$ -	$ -	$ -	$ -	$ -
2	352	Franchise	0.00%	-	-	-	-	-	-	-	-	-
3	353	Land	0.00%	(2,541)	(179)	(2,720)	-	-	-	1,850,582	-	1,850,582
4	354	Structures & Improvements	3.33%	5,164,696	(16,661)	5,148,034	(485,079)	-	728,499	24,208,314	(3,773,984)	20,434,330
5	355	Power Generation	5.00%	4,604	-	4,604	(6,291)	-	30,209	603,332	(222,393)	380,938
6	360	Collection Sewer Forced	2.00%	292	-	292	-	-	23,249	1,162,597	109,004	1,271,601
7	361	Collection Sewers Gravity	2.00%	165,891	(1,400)	164,491	(37,713)	-	636,466	31,886,680	(5,222,855)	26,663,825
8	362	Special Collecting Structures	2.00%	-	-	-	-	-	-	-	-	-
9	363	Customer Services	2.00%	25,356	(37)	25,320	-	-	1,271	76,190	(2,092)	74,098
10	364	Flow Measuring Devices	10.00%	-	-	-	(809)	-	4,661	46,210	(38,453)	7,757
11	366	Reuse Services	2.00%	118	-	118	-	-	81,152	4,057,660	(825,859)	3,231,801
12	367	Reuse Meters And Installation	8.33%	(4,774)	-	(4,774)	(4,339)	-	4,107	44,753	(21,945)	22,808
13	370	Receiving Wells	3.33%	-	-	-	-	-	28,651	860,393	(297,089)	563,304
14	371	Pumping Equipment	12.50%	257,054	(796)	256,258	(424,216)	-	110,432	799,481	(276,747)	522,733
15	374	Reuse Distribution Reservoirs	2.50%	-	-	-	(539)	-	1,564	62,286	(8,088)	54,198
16	375	Reuse Trans. and Dist. System	2.50%	1,013	-	1,013	-	-	10,496	420,334	(48,106)	372,228
17	380	Treatment & Disposal Equipment	5.00%	8,503	(66)	8,437	(660,659)	-	260,579	4,885,470	(1,851,533)	3,033,936
18	381	Plant Sewers	5.00%	14	-	14	-	-	2,390	47,802	(16,686)	31,116
19	382	*Outfall Sewer Lines*	3.33%	-	-	-	-	-	11,445	343,681	(118,892)	224,789
20	389	Other Sewer Plant & Equipment	6.67%	136,494	-	136,494	(7,497)	-	53,827	871,498	(234,145)	637,353
21	390	Office Furniture & Equipment	6.67%	44,390	-	44,390	-	-	16,911	275,740	(122,510)	153,230
22	390.1	Computers and Software	20.00%	-	-	-	-	-	-	-	-	-
23	391	Transportation Equipment	20.00%	4,051	-	4,051	-	-	405	33,497	(29,852)	3,646
24	392	Stores Equipment	4.00%	-	-	-	-	-	359	8,968	(3,681)	5,287
25	393	Tools, Shop And Garage Equip	5.00%	53,206	(284)	52,922	-	-	5,958	145,631	(25,027)	120,604
26	394	Laboratory Equip	10.00%	7,144	(34)	7,111	-	-	18,279	186,348	(135,667)	50,681
27	395	Power Operated Equipment	5.00%	28,090	-	28,090	-	-	702	28,090	(702)	27,388
28	396	Communication Equip	10.00%	-	-	-	-	-	41,900	418,996	(373,237)	45,759
29	398	Other Tangible Plant	10.00%	-	-	-	-	-	-	-	-	-
30		Plant Held for Future Use	0.00%	-	-	-	-	-	-	-	-	-
31		RUCO Total UPIS & A/D		$ 5,893,603	$ (19,456)	$ 5,874,147	$ (1,627,142)	$ -	$ 2,073,512	$ 73,324,532	$ (13,540,541)	$ 59,783,991
31		Company As Filed Excluding PTY Plant		$ 5,893,603	$ (19,456)	$ 5,874,147	$ 1,627,142	$ -	$ 2,077,158	$ 73,324,532	$ 13,544,186	$ 59,780,346
32		RUCO Adjustments Excluding PTY Plant		$ -	$ -	$ -	$ -	$ -	$ (3,646) [1]	$ -	$ 3,646	$ 3,646

Notes:

LPSCO 2012 Depre. Exp. - Acct. 391 - Transportation Equipment (Company Fully Depreciated 2012 Plant Addition of $4,051)..... $ 4,051
RUCO 2012 Depre. Exp. - Acct. 391 - Transportation Equipment (HY Convention for 2012 $4,051 Plant Addition)..... 405

Difference Between LPSCO and RUCO A/D Calculations..... $ (3,646) [1]

UTILITY PLANT IN SERVICE ("UPIS") & UPIS ACCUMULATED DEPRECIATION ADJUSTMENT NO. 1
PLANT RECONSTRUCTION SCHEDULE
TEST YEAR ENDED DECEMBER 31, 2012

				2012 - Post-Test Year Plant Additions								
Line No.	NARUC Account No.	Description	Allowed Deprec. Rate	Plant Additions Estimated	Plant Adjustments	Adjusted Plant Additions	Plant Retirements Estimated	Salvage A/D Only	Depreciation (Calculated)	Plant Balance	Accum. Deprec.	Net Plant
1	351	Organization	0.00%	$ -	$ -	$ -	$ -	$ -	$ -	$ -	$ -	$ -
2	352	Franchise	0.00%	-	-	-	-	-	-	-	-	-
3	353	Land	0.00%	-	-	-	-	-	-	1,850,582	-	1,850,582
4	354	Structures & Improvements	3.33%	1,200,000	-	1,200,000	-	-	19,980	25,408,314	(3,793,964)	21,614,350
5	355	Power Generation	5.00%	-	-	-	-	-	-	603,332	(222,393)	380,938
6	360	Collection Sewer Forced	2.00%	-	-	-	-	-	-	1,162,597	109,004	1,271,601
7	361	Collection Sewers Gravity	2.00%	-	-	-	-	-	-	31,886,680	(5,222,855)	26,663,825
8	362	Special Collecting Structures	2.00%	-	-	-	-	-	-	-	-	-
9	363	Customer Services	2.00%	-	-	-	-	-	-	76,190	(2,092)	74,098
10	364	Flow Measuring Devices	10.00%	-	-	-	-	-	-	46,210	(38,453)	7,757
11	366	Reuse Services	2.00%	-	-	-	-	-	-	4,057,660	(825,859)	3,231,801
12	367	Reuse Meters And Installation	8.33%	-	-	-	-	-	-	44,753	(21,945)	22,808
13	370	Receiving Wells	3.33%	-	-	-	-	-	-	860,393	(297,089)	563,304
14	371	Pumping Equipment	12.50%	-	-	-	-	-	-	799,481	(276,747)	522,733
15	374	Reuse Distribution Reservoirs	2.50%	-	-	-	-	-	-	62,286	(8,088)	54,198
16	375	Reuse Trans. and Dist. System	2.50%	-	-	-	-	-	-	420,334	(48,106)	372,228
17	380	Treatment & Disposal Equipment	5.00%	-	-	-	-	-	-	4,885,470	(1,851,533)	3,033,936
18	381	Plant Sewers	5.00%	-	-	-	-	-	-	47,802	(16,686)	31,116
19	382	Outfall Sewer Lines	3.33%	-	-	-	-	-	-	343,681	(118,892)	224,789
20	389	Other Sewer Plant & Equipment	6.67%	-	-	-	-	-	-	871,498	(234,145)	637,353
21	390	Office Furniture & Equipment	6.67%	-	-	-	-	-	-	275,740	(122,510)	153,230
22	390.1	Computers and Software	20.00%	-	-	-	-	-	-	-	-	-
23	391	Transportation Equipment	20.00%	-	-	-	-	-	-	33,497	(29,852)	3,646
24	392	Stores Equipment	4.00%	-	-	-	-	-	-	8,968	(3,681)	5,287
25	393	Tools, Shop And Garage Equip	5.00%	-	-	-	-	-	-	145,631	(25,027)	120,604
26	394	Laboratory Equip	10.00%	-	-	-	-	-	-	186,348	(135,667)	50,681
27	395	Power Operated Equipment	5.00%	-	-	-	-	-	-	28,090	(702)	27,388
28	396	Communication Equip	10.00%	-	-	-	-	-	-	418,996	(373,237)	45,759
29	398	Other Tangible Plant	10.00%	-	-	-	-	-	-	-	-	-
30		Plant Held for Future Use	0.00%	-	-	-	-	-	-	-	-	-
31		RUCO Total UPIS & A/D		$ 1,200,000	$ -	$ 1,200,000	$ -	$ -	$ 19,980	$ 74,524,532	$ (13,560,521)	$ 60,964,011
31		UPIS Per Company As Filed - Including Post-Test Year Plant								74,024,532		
32		RUCO's UPIS Adjustment								$ 500,000		
33		A/D Per Company As Filed									(13,244,186)	
34		RUCO's (Increase)/Decrease A/D Adjustment									$ (316,334)	

UTILITY PLANT IN SERVICE ("UPIS") ADJUSTMENT NO. 2
NOT USED IN RUCO SURREBUTTAL FILING - ADOPTED COMPANY'S PROPOSED REBUTTAL RECLASSIFICATIONS

Line No.	Acct. No.	Description	[A] Company UPIS As Filed	[B] RUCO UPIS Reclassification Adjustments	[C] RUCO Recommended UPIS Balances

References:
Per Company Responses to Staff DR 11.2

UPIS ACCUMULATED DEPRECIATION ADJUSTMENT NO. 2
NOT USED IN RUCO SURREBUTTAL FILING - ADOPTED COMPANY'S PROPOSED REBUTTAL RECLASSIFICATIONS

Line No.	Acct. No.	Description	[A] Company Accum. Depre. As Filed	[B] RUCO Accum. Depre. Reclassification Adjustments	[C] RUCO Recommended Accum. Depre. Balances

References:

Per Company Responses to Staff DR DH 11-2

UTILITY PLANT IN SERVICE ("UPIS") & UPIS ACCUMULATED DEPRECIATION ADJUSTMENTS NO. 3
NOT USED IN RUCO SURREBUTTAL FILING - ADOPTED COMPANY'S PROPOSED REBUTTAL RECLASSIFICATIONS

Line No.	Description	Amount

References:

1 LPSCO Response to Staff DR DH - 4.6
2 LPSCO Response to Staff DR DH - 4.7

Litchfield Park Service Company
Docket No's. SW-01428A-13-0042 and
W-01427A-13-0043
Test Year Ended December 31, 2012

Wastewater Division
Surrebuttal Schedule RBM-4(e)

UTILITY PLANT IN SERVICE ("UPIS") & UPIS ACCUMULATED DEPRECIATION ADJUSTMENTS NO. 4
REMOVE DUPLICATE INVOICES OF PLANT ADDITIONS
NOT USED IN RUCO SURREBUTTAL FILING - ADOPTED COMPANY'S PROPOSED REBUTTAL RECLASSIFICATIONS

Line No.	Description	Amount

References:

1 Per Company Response to Staff's Wastewater DR 1.12
2 Per Company Response to Staff's Wastewater DR 2.65
3 Per Company Response to DR 3.16

UTILITY PLANT IN SERVICE ("UPIS") & UPIS ACCUMULATED DEPRECIATION ADJUSTMENTS NO. 5
USED ONLY FOR WATER DIVISION

Line No.	Asset Index No.	Description	Amount

References:

UTILITY PLANT IN SERVICE ("UPIS") & UPIS ACCUMULATED DEPRECIATION ADJUSTMENTS NO. 6
REMOVE NON-USED & USEFUL PLANT INVOICES
NOT USED IN RUCO SURREBUTTAL FILING - ADOPTED COMPANY'S NOT USED & USEFUL ADJUSTMENTS

Line No.	Asset Index No.	Description	Amount

References:
Per Company Response to Staff's DR DH 11-5

UPIS ACCUMULATED DEPRECIATION ADJUSTMENTS NO. 7
ADDITIONAL ACCUMULATED DEPRECIATION ("A/D") FOR LATE RECORDED PLANT ADDITIONS

Line No.	Acct. No.	Description	[A] Company Accum. Depre. As Filed	[B] RUCO Additional Accum. Depre. for Late Recorded UPIS	[C] RUCO Recommended Accum. Depre. Balances
1	351	Organization Cost	$ -	$ -	$ -
2	352	Franchise Cost	-	-	-
3	353	Land and Land Rights	-	-	-
4	354	Structures & Improvements	(3,773,984)	(6,478)	(3,780,463)
5	355	Collecting & Impounding Reservoirs	(222,393)	-	(222,393)
6	360	Lake, River, Canal Intakes	109,004	-	109,004
7	361	Wells & Springs	(5,222,855)	(407)	(5,223,263)
8	362	Infiltration Galleries	-	-	-
9	363	Raw Water Supply Mains	(2,092)	-	(2,092)
10	364	Power Generation Equipment	(38,453)	-	(38,453)
11	366	Pumping Equipment	(825,859)	(23)	(825,882)
12	367	Water Treatment Equipment	(21,945)	-	(21,945)
13	370	Water Treatment Plants	(297,089)	-	(297,089)
14	371	Solution Chemical Feeders	(276,747)	-	(276,747)
15	374	Distribution Reservoirs & Standpipes	(8,088)	-	(8,088)
16	375	Storage Tanks	(48,106)	(803)	(48,908)
17	380	Pressure Tanks	(1,551,533)	-	(1,551,533)
18	381	Transmission & Distribution Mains	(16,686)	-	(16,686)
19	382	Services	(118,892)	-	(118,892)
20	389	Meters	(234,145)	-	(234,145)
21	390	Hydrants	(122,510)	-	(122,510)
22	390.1	Backflow Prevention Devices	-	-	-
23	391	Other Plant & Misc Equipment	(33,497)	-	(33,497)
24	392	Office Furniture & Equipment	(3,681)	-	(3,681)
25	393	Computers & Software	(25,027)	-	(25,027)
26	394	Transportation Equipment	(135,667)	-	(135,667)
27	395	Stores Equipment	(702)	-	(702)
28	396	Tools, Shop & Garage Equipment	(373,237)	-	(373,237)
29	398	Laboratory Equipment	-	-	-
34		Plant Held for Future Use	-	-	-
35		Totals	$ (13,244,186)	$ (7,711)	$ (13,251,897)

References:
Per Company Responses to Staff DR 16.1

UPIS ACCUMULATED DEPRECIATION ADJUSTMENTS NO. 8
USED ONLY FOR WATER DIVISION

Line No.	Description	Amount
1		$ -
2		-
3		$ -

References:

RATE BASE ADJUSTMENT NO. 3
INTENTIONALLY LEFT BLANK

Line No.	Description	Amount
	Water Division:	
1		$ -
2		-
3		$ -
	Wastewater Division:	
4		$ -
5		-
6		$ -

References:

RATE BASE ADJUSTMENT NO. 4
CONTRIBUTIONS IN AID OF CONSTRUCTION ("CIAC") & AMORTIZATIONS RECONSTRUCTION SCHEDULE

Line No.	Description	Amount
	Gross CIAC:	
1	Company Gross CIAC as Filed	$ (28,470,485)
2	RUCO Recommended Gross CIAC	(28,376,915)
3	RUCO Recommended Increase/(Decrease) Adjustment	$ 93,570
	Accumulated Amoritization of CIAC:	
4	Company Accumulated Amortization of CIAC as Filed	4,446,775
5	RUCO Recommended Accumulated Amortization of CIAC	4,153,300
6	RUCO Recommended Increase/(Decrease) Adjustment	$ (293,475)
7	RUCO Net Increase/Decrease Adjustment	$ (199,905)

References:
Company Response to Staff DR JMM 2-23
Company Schedule B-2, pages 5.1 - 5.3
See TJC Testimony

RATE BASE ADJUSTMENT NO. 4
CONTRIBUTIONS IN AID OF CONSTRUCTION ("CIAC") & AMORTIZATIONS RECONSTRUCTION SCHEDULE

				[A]	[B]	[C]	[D]	[E]	[F]	[G]	[H]	[I]
				Per Decision 72026			2008 (3 Months - October 1 through December 31, 2008)					
Line No.	NARUC Account No.	Description	Allowed Amort. Rate	Gross CIAC Balance at 9/30/2008	CIAC Amortization Balance 9/30/2008	CIAC Net Balance 9/30/2008	CIAC Activity	CIAC Adjustments	Adjusted CIAC Activity	RUCO Amortization (Calculated)	Gross CIAC Balance at 12/31/2008	Accum. Amortization 12/31/2008
1	361	Collection Sewers Gravity Contributed	2.00%	$ (17,134,023)	$ -	$ (15,557,435)	$ (706,018)	$ -	$ (706,018)	$ -	$ (17,840,041)	$ -
2		Current Period Amortization								87,435		
3		Accumulated Amortization Balance			1,576,589							1,664,024
4	363	Customer Services Contributed	2.00%	(1,509,762)	-	(1,014,234)	(140,400)	-	(140,400)	-	(1,650,162)	-
5		Current Period Amortization								7,900		
6		Accumulated Amortization Balance			495,529							503,428
7		RUCO Gross CIAC & Amortizations		$ (18,643,786)	$ 2,072,117	$ (16,571,669)	$ (846,418)	$ -	$ (846,418)	$ 95,335	$ (19,490,203)	$ 2,167,452
8		Company As Filed		$ 18,643,786	$ (2,072,117)	$ 16,571,669	$ 846,418	$ -	$ 846,418	$ (381,340)	$ 19,583,549	$ (2,453,457)
9		RUCO Gross CIAC & Total Accum. Amortization Increase/(Decrease) Adjustments		$ -	$ -	$ -	$ -	$ -	$ -	$ (286,005)	$ 93,346	$ (286,005)

References:
Company Response to Staff DR JMM 2-23
Company Schedule B-2, pages 5.1 - 5.3
See TJC Testimony

RATE BASE ADJUSTMENT NO. 4
CONTRIBUTIONS IN AID OF CONSTRUCTION ("CIAC") & AMORTIZATIONS RECONSTRUCTION SCHEDULE

Line No.	NARUC Account No.	Description	Allowed Amort. Rate	[A] Beginning Gross CIAC 1/1/2009	[B] Beginning Amortization Balance 1/1/2009	[C] CIAC Activity	[D] CIAC Adjustments	[E] Adjusted CIAC Activity	[F] RUCO Amortization (Calculated)	[G] Gross CIAC Balance at 12/31/2009	[H] Accum. Amortization 12/31/2009
				2009							
1	361	Collection Sewers Gravity Contributed	2.00%	$ (17,840,041)	$ -	$ (2,870,602)	$ -	$ (2,870,602)	$ -	$ (20,710,643)	$ -
2		Current Period Amortization							385,507		
3		Accumulated Amortization Balance			1,664,024						2,049,531
4	363	Customer Services Contributed	2.00%	(1,650,162)	-	(698,724)	-	(698,724)		(2,348,887)	
5		Current Period Amortization							39,990		
6		Accumulated Amortization Balance			503,428						543,419
7		RUCO Gross CIAC & Amortizations		$ (19,490,203)	$ 2,167,452	$ (3,569,326)	$ -	$ (3,569,326)	$ 425,497	$ (23,059,530)	$ 2,592,949
8		Company As Filed		$ 19,583,549	$ (2,453,457)	$ 3,569,326	$ -	$ 3,569,326	$ (427,364)	$ 23,152,876	$ (2,880,822)
9		RUCO Gross CIAC & Total Accum. Amortization Increase/(Decrease) Adjustments		$ (93,346)	$ 4,620,909	$ -	$ -	$ -	$ (1,867)	$ 93,346	$ (287,872)

References:
Company Response to Staff DR JMM 2-23
Company Schedule B-2, pages 5.1 - 5.3
See TJC Testimony

RATE BASE ADJUSTMENT NO. 4
CONTRIBUTIONS IN AID OF CONSTRUCTION ("CIAC") & AMORTIZATIONS RECONSTRUCTION SCHEDULE

Line No.	NARUC Account No.	Description	Allowed Amort. Rate	[A] Beginning Gross CIAC 1/1/2010	[B] Beginning Amortization Balance 1/1/2010	[C] CIAC Activity	[D] CIAC Adjustments	[E] Adjusted CIAC Activity	[F] RUCO Amortization (Calculated)	[G] Gross CIAC Balance at 12/31/2010	[H] Accum. Amortization 12/31/2010
				2010							
1	361	Collection Sewers Gravity Contributed	2.00%	$ (20,710,643)	$ -	$ (1,079,042)	$ -	$ (1,079,042)	$ -	$ (21,789,685)	$ -
2		Current Period Amortization							425,003		
3		Accumulated Amortization Balance			2,049,531						2,474,534
4	363	Customer Services Contributed	2.00%	(2,348,887)	-	(15,630)	-	(15,630)		(2,364,517)	
5		Current Period Amortization							47,134		
6		Accumulated Amortization Balance			543,419						590,553
7		RUCO Gross CIAC & Amortizations		$ (23,059,530)	$ 2,592,949	$ (1,094,672)	$ -	$ (1,094,672)	$ 472,137	$ (24,154,202)	$ 3,065,087
8		Company As Filed		$ 23,152,876	$ (2,880,822)	$ 1,094,672	$ -	$ 1,094,672	$ (474,004)	$ 24,247,548	$ (3,354,826)
9		RUCO Gross CIAC & Total Accum. Amortization Increase/(Decrease) Adjustments		$ (93,346)	$ 5,473,771	$ -	$ -	$ -	$ (1,867)	$ 93,346	$ (289,739)

References:
Company Response to Staff DR JMM 2-23
Company Schedule B-2, pages 5.1 - 5.3
See TJC Testimony

RATE BASE ADJUSTMENT NO. 4
CONTRIBUTIONS IN AID OF CONSTRUCTION ("CIAC") & AMORTIZATIONS RECONSTRUCTION SCHEDULE

Line No.	NARUC Account No.	Description	Allowed Amort. Rate	[A] Beginning Gross CIAC 1/1/2011	[B] Beginning Amortization Balance 1/1/2011	[C] CIAC Activity	[D] CIAC Adjustments	[E] Adjusted CIAC Activity	[F] RUCO Amortization (Calculated)	[G] Gross CIAC Balance at 12/31/2011	[H] Accum. Amortization 12/31/2011
				2011							
1	361	Collection Sewers Gravity Contributed	2.00%	$ (21,789,685)	$ -	$ (4,063,446)	$ 107,523	$ (3,955,923)	$ -	$ (25,745,608)	$ -
2		Current Period Amortization							475,353		
3		Accumulated Amortization Balance			2,474,534						2,949,887
4	363	Customer Services Contributed	2.00%	(2,364,517)	-	(34,990)	-	(34,990)		(2,399,507)	
5		Current Period Amortization							47,640		
6		Accumulated Amortization Balance			590,553						638,193
7		RUCO Gross CIAC & Amortizations		$ (24,154,202)	$ 3,065,087	$ (4,098,436)	$ 107,523	$ (3,990,913)	$ 522,993	$ (28,145,114)	$ 3,588,080
8		Company As Filed		$ 24,247,548	$ (3,354,826)	$ 4,098,436	$ (107,523)	$ 3,990,913	$ (524,860)	$ 28,238,460	$ (3,879,686)
9		RUCO Gross CIAC & Total Accum. Amortization Increase/(Decrease) Adjustments		$ (93,346)	$ 6,419,913	$ -	$ -	$ -	$ (1,867)	$ 93,346	$ (291,606)

References:
Company Response to Staff DR JMM 2-23
Company Schedule B-2, pages 5.1 - 5.3
See RBM Testimony

RATE BASE ADJUSTMENT NO. 4
CONTRIBUTIONS IN AID OF CONSTRUCTION ("CIAC") & AMORTIZATIONS RECONSTRUCTION SCHEDULE

				[A]	[B]	[C]	[D]	[E]	[F]	[G]	[H]
				2012							
Line No.	NARUC Account No.	Description	Allowed Amort. Rate	Beginning Gross CIAC 1/1/2012	Beginning Amortization Balance 1/1/2012	CIAC Activity	CIAC Adjustments	Adjusted CIAC Activity	RUCO Amortization (Calculated)	Gross CIAC Balance at 12/31/2012	Accum. Amortization 12/31/2012
1	361	Collection Sewers Gravity Contributed	2.00%	$ (25,745,608)	$ -	$ -	$ -	$ -	$ -	$ (25,745,608)	$ -
2		Current Period Amortization							514,912		
3		Accumulated Amortization Balance			2,949,887						3,464,799
4	363	Customer Services Contributed	2.00%	(2,399,507)	-	(231,801)	-	(231,801)		(2,631,307)	
5		Current Period Amortization							50,308		
6		Accumulated Amortization Balance			638,193						688,501
7		RUCO Gross CIAC & Amortizations		$ (28,145,114)	$ 3,588,080	$ (231,801)	$ -	$ (231,801)	$ 565,220	$ (28,376,915)	$ 4,153,300
8		Company As Filed		$ 28,238,460	$ (3,879,686)	$ 232,025	$ -	$ 232,025	$ (567,089)	$ 28,470,485	$ (4,446,775)
9		RUCO Gross CIAC & Total Accum. Amortization Increase/(Decrease) Adjustments		$ (93,346)	$ (291,606)	$ 224	$ -	$ 224	$ (1,869)	$ 93,570	$ (293,475)

References:
Company Response to Staff DR JMM 2-23
Company Schedule B-2, pages 5.1 - 5.3
See RBM Testimony

RATE BASE ADJUSTMENT NO. 5
CUSTOMER METER DEPOSITS

Line No.		Description	Amount
		Water Division:	
1	1	Customer Meter Deposits As Filed by Company	$ (1,271,802)
2		RUCO Recommended 13-Month Average - Meter Deposits	(1,432,787)
3		RUCO's Recommended (Increase)/Decrease Adjustment	$ (160,986)
		Wastewater Division:	
4	1	Customer Meter Deposits As Filed by Company	$ (95,892)
5		RUCO Recommended 13-Month Average - Meter Deposits	(81,661)
6		RUCO's Recommended (Increase)/Decrease Adjustment	$ 14,231

References:
1 Per Company Response to Staff's DR 2.68

RATE BASE ADJUSTMENT NO. 6
CUSTOMER SECURITY DEPOSITS

Line No.		Description	Amount
		Water Division:	
1	**1 & 2**	Customer Security Deposits As Filed by Company	$ (140,147)
2		RUCO Recommended 13-Month Average - Customer Security Deposits	(145,428)
3		RUCO's Recommended (Increase)/Decrease Adjustment	$ (5,281)
		Wastewater Division:	
4	**1 & 2**	Customer Security Deposits As Filed by Company	$ 155,440
5		RUCO Recommended 13-Month Average - Customer Security Deposits	163,993
6		RUCO's Recommended (Increase)/Decrease Adjustment	$ (8,553)

References:
1 Per Company Response to Staff's DR 2.68
2 Per Company Response to DR 3.07

RATE BASE ADJUSTMENT NO. 7
INTENTIONALLY LEFT BLANK

Line No.	Description	Amount
	Water Division:	
1		$ -
2		-
3		$ -
	Wastewater Division:	
4		$ -
5		-
6		$ -

References:

RATE BASE ADJUSTMENT NO. 8
INTENTIONALLY LEFT BLANK

Line No.	Description	Amount
	Water Division:	
1		$ -
2		-
3		$ -
	Wastewater Division:	
4		$ -
5		-
6		$ -

References:

RATE BASE ADJUSTMENT NO. 9
ACCUMULATED DEFERRED INCOME TAX ("ADIT")

Line No.		Deferred Income Tax as of December 31, 2012	Water & Sewer Adjusted Book Value	Water & Sewer Tax Value	Probability of Realization of Future Tax Benefit	Deductible TD (Taxable TD) Expected to be Realized	Effective Tax Rate	Future Tax Asset Current	Future Tax Asset Non Current	Future Tax Liability Current	Future Tax Liability Non Current
1		Plant-in-Service	$ 162,155,959 [1]								
2		Accum. Deprec.	(32,491,273) [1]								
3		CIAC	(59,777,267) [3]								
4	Federal	Fixed Assets	$ 69,887,419	$ 47,269,626 [2]	100.0%	$ (22,617,793)	31.79%		-		(7,190,196)
5	State	Fixed Assets	$ 69,887,419	$ 73,927,914 [2]	100.0%	$ 4,040,495	6.50%		262,632		-
6	Fed & State	AIAC		14,120,318 [4]	100.0%	$ 14,120,318 [4]	38.29%		$ 5,406,670		
								$ -	$ 5,669,302	$ -	$ (7,190,196)
7		Net Asset (Liability)						$ (1,520,895)			
8		Allocation Factor - Wastewater-Division (based on rate base before ADIT)						0.4222			
9		Net Asset (Liability) Wastewater Division						$ (642,145)			
10		Adjusted Test Year DIT Asset (Liability) as Filed						$ (982,318)			
11		Adjustment to DIT						$ 340,173			

Footnotes - See Next Page

RATE BASE ADJUSTMENT NO. 9 (Continued)
ACCUMULATED DEFERRED INCOME TAX ("ADIT")

Line No.		FEDERAL		STATE	
	[1] **Per adjusted book balances**				
	2 Computation of Net Tax Value December 31, 2012				
	Based on 2012 Tax Depreciation report (December 31, 2012)				
1	Unadjusted Cost at December 31, 2012 per federal and state tax depr. report	$ 85,943,311		$ 84,887,919	
2	Reconciling Items not on tax report:				
3	Land on Tax and not on included in adjusted plant balance	(1,055,392)		-	
4	FA Accrual on not on tax report	6,391,333		6,391,333	
5	Proposed Plant retirements	(1,712,539)		(1,712,539)	
6	Post Test Year plant	1,000,000		1,000,000	
7	Post Test Year Plant Retirement	(300,000)		(300,000)	
8	Net Unadjusted Cost tax Basis at December 31, 2012		$ 90,266,713		$ 90,266,713
	Reductions				
9	Basis Reduction 2012 and Prior Years per federal and state tax depr. report	$ (25,331,094)		$ -	
10	Accumulated Depreciation 2012 and prior per federal and state tax depr. report	(19,678,532)		(18,351,338)	
11	Proposed Plant Retirements	1,712,539		1,712,539	
12	Post Test Year retirement	300,000		300,000	
13	Net Reductions through December 31, 2012		(42,997,087)		(16,338,799)
14	Net tax value of plant-in-service at December 31. 2012		$ 47,269,626		$ 73,927,914

Line No.				
	[3] **CIAC (including impact of change to probability of realization)**			
15	Gross CIAC per adjusted book balances		$ 35,802,727	
	CIAC reductions/addtions			
16	A.A per adjusted book balances	$ (5,439,154)		
17		-		
			(5,439,154)	
18	Net CIAC before unrealized AIAC			$ 30,363,572
	Unrealized AIAC Component			
19	Adjusted Net AIAC (see footnote 4 below)		$ 42,019,564	
20	Unrealized AIAC Component % (1-Realized AIAC Component)		70.0%	
21				$ 29,413,695
22	Total realizable CIAC			$ 59,777,267

Line No.			
	[4] **AIAC (including impact of change in probability of realization)**		
23	AIAC per adjusted book balances	$ 42,019,564	
24	AIAC reductions/additions		
25	Net AIAC before unrealized portion		$ 42,019,564
26	Less: Unrealized AIAC (from Note 3, above)		$ (29,413,695)
27	Net realizable AIAC		$ 12,605,869
28	Meter and Service Line Installation Charges per adjusted book balances		1,514,449
29	Total Realizable AIAC		$ 14,120,318

RATE BASE ADJUSTMENT NO. 10
USED FOR WATER DIVISION ONLY

Line No.	Description	Amount
	Water Division:	
1		$ -
2		-
3		$ -
	Wastewater Division:	
4		$ -
5		-
6		$ -

References:

RUCO OPERATING INCOME SUMMARY

Line No.		[A] Company Adjusted Test Year As Filed	[B] RUCO Test Year Adjustments	[C] RUCO Test Year As Adjusted	[D] RUCO Recommended Changes	[E] RUCO Recommended Amounts
	Revenues:					
1	Metered Water Revenues	$ 9,853,383	$ 1,194	$ 9,854,577	$ 63,910	$ 9,918,486
2	Unmetered Water Revenues	-	-	-	-	-
3	Other Water Revenues	508,220	-	508,220	-	508,220
4	**Total Revenues**	$ 10,361,603	$ 1,194	$ 10,362,797	$ 63,910	$ 10,426,706
	Operating Expenses:					
5	Salaries and Wages	$ 1,168,151	$ (76,431)	$ 1,091,720	$ -	$ 1,091,720
6	Purchased Water	26,656	-	26,656	-	26,656
7	Purchased Power	601,635	-	601,635	-	601,635
8	Sludge Removal Expense	234,893	3,423	238,317	-	238,317
9	Fuel for Power Production	-	-	-	-	-
10	Chemicals	357,986	-	357,986	-	357,986
11	Materials and Supplies	86,994	-	86,994	-	86,994
12	Management Services - US Liberty Water	1,469,058	(123,752)	1,345,306	-	1,345,306
13	Management Services - Corporate	698,951	(98,542)	600,409	-	600,409
14	Management Services - Other	-	-	-	-	-
15	Outside Services - Accounting	2,161	-	2,161	-	2,161
16	Outside Services - Engineering	-	-	-	-	-
17	Outside Services- Other	222,303	-	222,303	-	222,303
18	Outside Services- Legal	25,746	-	25,746	-	25,746
19	Water Testing	57,735	(27,078)	30,657	-	30,657
20	Rents - Office	40,007	-	40,007	-	40,007
21	Equipment Rental	3,076	-	3,076	-	3,076
22	Transportation Expenses	26,465	-	26,465	-	26,465
23	Insurance - General Liability	57,823	-	57,823	-	57,823
24	Insurance - Vehicle	11,506	-	11,506	-	11,506
25	Reg. Comm. Exp. - Other	14,189	-	14,189	-	14,189
26	Reg. Comm. Exp. - Rate Case	74,200	-	74,200	-	74,200
27	Miscellaneous Expense	77,293	3,619	80,913	-	80,913
28	Bad Debt Expense	45,215	(23,924)	21,291	-	21,291
29	Depreciation and Amortization Expense	1,598,765	27,613	1,626,378	-	1,626,378
30	Taxes Other Than Income	-	-	-	-	-
31	Property Taxes	576,026	(27,493)	548,533	1,128	549,661
32	Income Tax	1,013,153	128,645	1,141,797	24,039	1,165,837
33	**Total Operating Expenses**	$ 8,489,987	$ (213,919)	$ 8,276,068	$ 25,167	$ 8,301,235
34	**Operating Income (Loss)**	$ 1,871,616	$ 215,113	$ 2,086,729	$ 38,743	$ 2,125,472

References:

Column [A]: Company Schedule C-1;
Column [B]: RUCO Recommended Total Adjustments Per Schedule RBM-14 on pages 1-2 at page 2 in Column [S] at line 33;
Column [C]: Column [A] + [B] - RUCO Recommended Adjusted Test Year Amounts Per Schedule RBM-14 on page 2 of 2 in Column [T];
Column [D]: RUCO Recommended Increase/(Decrease) to Revenue Requirement;
Column [E]: Column [C] + [D] - RUCO Recommended Increase/(Decrease) Amounts for Revenue Requirement.

RUCO OPERATING INCOME ADJUSTMENTS

Line No.	Description	[A] Company Adjusted Test Year As Filed	[B] Adj. No. 1 Depreciation Expense	[C] Adj. No. 2 Property Taxes	[D] Adj. No. 3 Revenue & Expense Annualizations	[E] Adj. No. 4 Used Only for Water Division	[F] Adj. No. 5 Used for Water Div. Only	[G] Adj. No. 6 Water Testing	[H] Adj. No. 7 Corporate Expense True-Up	[I] Adj. No. 8 Employee Pension Benefits	[J] Adj. No. 9 Intentionally Left Blank
	Revenues:										
1	Metered Water Revenues	$ 9,853,383	$ -	$ -	$ 1,194	$ -	$ -	$ -	$ -	$ -	$ -
2	Unmetered Water Revenues	-	-	-	-	-	-	-	-	-	-
3	Other Water Revenues	508,220	-	-	-	-	-	-	-	-	-
4	**Total Revenues**	$ 10,361,603	$ -	$ -	$ 1,194	$ -	$ -	$ -	$ -	$ -	$ -
	Operating Expenses:										
5	Salaries and Wages	$ 1,168,151	$ -	$ -	$ -	$ -	$ -	$ -	$ -	$ (76,431)	$ -
6	Purchased Water	26,656	-	-	-	-	-	-	-	-	-
7	Purchased Power	601,635	-	-	-	-	-	-	-	-	-
8	Sludge Removal Expense	234,893	-	-	13	-	-	3,410	-	-	-
9	Fuel for Power Production	-	-	-	-	-	-	-	-	-	-
10	Chemicals	357,986	-	-	-	-	-	-	-	-	-
11	Materials and Supplies	86,994	-	-	-	-	-	-	-	-	-
12	Management Services - US Liberty Water	1,469,058	-	-	-	-	-	-	(7,420)	-	-
13	Management Services - Corporate	698,951	-	-	-	-	-	-	-	-	-
14	Management Services - Other	-	-	-	-	-	-	-	-	-	-
15	Outside Services - Accounting	2,161	-	-	-	-	-	-	-	-	-
16	Outside Services - Engineering	-	-	-	-	-	-	-	-	-	-
17	Outside Services- Other	222,303	-	-	-	-	-	-	-	-	-
18	Outside Services- Legal	25,746	-	-	-	-	-	-	-	-	-
19	Water Testing	57,735	-	-	-	-	-	(27,078)	-	-	-
20	Rents - Office	40,007	-	-	-	-	-	-	-	-	-
21	Equipment Rental	3,076	-	-	-	-	-	-	-	-	-
22	Transportation Expenses	26,465	-	-	-	-	-	-	-	-	-
23	Insurance - General Liability	57,823	-	-	-	-	-	-	-	-	-
24	Insurance - Vehicle	11,506	-	-	-	-	-	-	-	-	-
25	Reg. Comm. Exp. - Other	14,189	-	-	-	-	-	-	-	-	-
26	Reg. Comm. Exp. - Rate Case	74,200	-	-	-	-	-	-	-	-	-
27	Miscellaneous Expense	77,293	-	-	(1,506)	-	-	-	-	-	-
28	Bad Debt Expense	45,215	-	-	-	-	-	-	-	-	-
29	Depreciation and Amortization Expense	1,598,765	27,613	-	-	-	-	-	-	-	-
30	Taxes Other Than Income	-	-	-	-	-	-	-	-	-	-
31	Property Taxes	576,026	-	(27,493)	-	-	-	-	-	-	-
32	Income Tax	1,013,153	-	-	-	-	-	-	-	-	-
33	**Total Operating Expenses**	$ 8,489,987	$ 27,613	$ (27,493)	$ (1,492)	$ -	$ -	$ (23,668)	$ (7,420)	$ (76,431)	$ -
34	**Operating Income**	$ 1,871,616	$ (27,613)	$ 27,493	$ 2,686	$ -	$ -	$ 23,668	$ 7,420	$ 76,431	$ -

Adjustments:

Adjustment No. 1: Depreciation Expense - See RUCO Schedule RBM-15 in Column [C] at line 36;
Adjustment No. 2: Property Taxes - See RUCO Schedule RBM-16 in Column [A] at line 18;
Adjustment No. 3: Revenue & Expense Annualizations - See RUCO Schedule RBM-17 on page 2 of 2 at line 22;
Adjustment No. 4: Revenue Accrual Fix - See RUCO Schedule RBM-18;
Adjustment No. 5: Used for Water Division Only;
Adjustment No. 6: *Water Testing - Adopted Company's Calculations of Staff's Recommendation*
Adjustment No. 7: Adopted Company's Calculations of Staff's Recommedation;
Adjustment No. 8: Employee Pension Benefit Plan - See RUCO Schedule RBM-22 at line 3;
Adjustment No. 9: Intentionally Left Blank

References:

Column [A]: Company Schedule C-1 Adjusted Test Year as Filed;
Column [B] through [J]: *RUCO Recommended Adjusted Test Year Adjustments;*

RUCO OPERATING INCOME ADJUSTMENTS

Line No.	Description	[K] Adj. No. 10 US Liberty Utilities Add'l. Reductions	[L] Adj. No. 11 Allocate Bad Debt Expense	[M] Adj. No. 12 Intentionally Left Blank	[N] Adj. No. 13 Corporate Cost Allocations	[O] Adj. No. 14 Achievement Incentive/Bonus Pay Allocations	[P] Adj. No. 15 Miscellaneous Expense	[Q] Adj. No. 16 Customer Deposit Interest Expense	[R] Adj. No. 17 Income Taxes	[S] Total RUCO Adjustments Recommended	[T] RUCO Adjusted Test Year Recommended
	Revenues:										
1	Metered Water Revenues	$ -	$ -	$ -	$ -	$ -	$ -	$ -	$ -	$ 1,194	$ 9,854,577
2	Unmetered Water Revenues	-	-	-	-	-	-	-	-	-	-
3	Other Water Revenues	-	-	-	-	-	-	-	-	-	508,220
4	**Total Revenues**	$ -	$ -	$ -	$ -	$ -	$ -	$ -	$ -	$ 1,194	$ 10,362,797
	Operating Expenses:										
5	Salaries and Wages	$ -	$ -	$ -	$ -	$ -	$ -	$ -	$ -	$ (76,431)	$ 1,091,720
6	Purchased Water	-	-	-	-	-	-	-	-	-	26,656
7	Purchased Power	-	-	-	-	-	-	-	-	-	601,635
8	Sludge Removal Expense	-	-	-	-	-	-	-	-	3,423	238,317
9	Fuel for Power Production	-	-	-	-	-	-	-	-	-	-
10	Chemicals	-	-	-	-	-	-	-	-	-	357,986
11	Materials and Supplies	-	-	-	-	-	-	-	-	-	86,994
12	Management Services - US Liberty Water	(2,521)	-	-	-	(113,811)	-	-	-	(123,752)	1,345,306
13	Management Services - Corporate	-	-	-	(84,319)	(14,223)	-	-	-	(98,542)	600,409
14	Management Services - Other	-	-	-	-	-	-	-	-	-	-
15	Outside Services - Accounting	-	-	-	-	-	-	-	-	-	2,161
16	Outside Services - Engineering	-	-	-	-	-	-	-	-	-	-
17	Outside Services- Other	-	-	-	-	-	-	-	-	-	222,303
18	Outside Services- Legal	-	-	-	-	-	-	-	-	-	25,746
19	Water Testing	-	-	-	-	-	-	-	-	(27,078)	30,657
20	Rents - Office	-	-	-	-	-	-	-	-	-	40,007
21	Equipment Rental	-	-	-	-	-	-	-	-	-	3,076
22	Transportation Expenses	-	-	-	-	-	-	-	-	-	26,465
23	Insurance - General Liability	-	-	-	-	-	-	-	-	-	57,823
24	Insurance - Vehicle	-	-	-	-	-	-	-	-	-	11,506
25	Reg. Comm. Exp. - Other	-	-	-	-	-	-	-	-	-	14,189
26	Reg. Comm. Exp. - Rate Case	-	-	-	-	-	-	-	-	-	74,200
27	Miscellaneous Expense	-	-	-	-	-	(342)	5,467	-	3,619	80,913
28	Bad Debt Expense	-	(23,924)	-	-	-	-	-	-	(23,924)	21,291
29	Depreciation and Amortization Expense	-	-	-	-	-	-	-	-	27,613	1,626,378
30	Taxes Other Than Income	-	-	-	-	-	-	-	-	-	-
31	Property Taxes	-	-	-	-	-	-	-	-	(27,493)	548,533
32	Income Tax	-	-	-	-	-	-	-	128,645	128,645	1,141,797
33	**Total Operating Expenses**	$ (2,521)	$ (23,924)	$ -	$ (84,319)	$ (128,034)	$ (342)	$ 5,467	$ 128,645	$ (213,919)	$ 8,276,068
34	**Operating Income**	$ 2,521	$ 23,924	$ -	$ 84,319	$ 128,034	$ 342	$ (5,467)	$ (128,645)	$ 215,113	$ 2,086,729

Adjustments:

Adjustment No. 10: Additional Adjustments to US Liberty Utilities - See RUCO Schedule TJC-24 at line 6;
Adjustment No. 11: Allocate Bad Debt Expense - See RUCO Schedule TJC-25 at line 7;
Adjustment No. 12: Intentionally Left Blank;
Adjustment No. 13: APUC Corporate Cost Allocations - See RUCO Schedule TJC-27 in Column [L] at line 32;
Adjustment No. 14: Achievement/Incentive/Bonus Pay Adjustments - See RUCO Schedule TJC-28 at line 10;
Adjustment No. 15: Miscellaneous Expense Adjustments - See RUCO Schedule TJC-29;
Adjustment No. 16: Customer Security Deposit Interest Expense - See RUCO Schedule TJC-30 at line 6;
Adjustment No. 17: Income Taxes - See RUCO Schedule TJC-31 at line 3.

References:

Column [K] thru [R]: RUCO Recommended Adjusted Test Year Adjustments;
Column [S]: RUCO Total Adjusted Test Year Adjustments on Schedule TJC-14 page 1 of 2 in Columns [B] thru Schedule TJC-14 page 2 of 2 in Columns [K] thru [R];
Column [T]: Column [A] on Schedule TJC-14 at page 1 of 2 + Column [S] on Schedule TJC-14 page 2 of 2 - RUCO Recommended Adjusted Test Year Balances.

OPERATING INCOME ADJUSTMENT NO. 1
DEPRECIATION EXPENSE

Line No.	NARUC Account	Description	[A] RUCO UPIS Recommended	[B] Authorized Depreciation Rate	[C] RUCO Depreciation Expense Going Forward
1	351	Organization	$ -	0.00%	$ -
2	352	Franchise	-	0.00%	-
3	353	Land	1,835,957	0.00%	-
4	354	Structures & Improvements	24,968,875	3.33%	831,464
5	355	Power Generation	602,932	5.00%	30,147
6	360	Collection Sewer Forced	1,162,597	2.00%	23,252
7	361	Collection Sewers Gravity	31,928,245	2.00%	638,565
8	362	Special Collecting Structures	-	2.00%	-
9	363	Customer Services	76,190	2.00%	1,524
10	364	Flow Measuring Devices	82,828	10.00%	8,283
11	366	Reuse Services	4,057,660	2.00%	81,153
12	367	Reuse Meters And Installation	44,753	8.33%	3,728
13	370	Receiving Wells	860,393	3.33%	28,651
14	371	Pumping Equipment	861,150	12.50%	107,644
15	374	Reuse Distribution Reservoirs	62,286	2.50%	1,557
16	375	Reuse Trans. and Dist. System	420,334	2.50%	10,508
17	380	Treatment & Disposal Equipment	5,362,219	5.00%	268,111
18	381	Plant Sewers	47,802	5.00%	2,390
19	382	Outfall Sewer Lines	343,681	3.33%	11,445
20	389	Other Sewer Plant & Equipment	833,823	6.67%	55,616
21	390	Office Furniture & Equipment	275,740	6.67%	18,392
22	390.1	Computers and Software	-	20.00%	-
23	391	Transportation Equipment	20,194	20.00%	4,039 *
24	392	Stores Equipment	8,968	4.00%	359
25	393	Tools, Shop And Garage Equip	129,950	5.00%	6,497
26	394	Laboratory Equip	187,184	10.00%	18,718
27	395	Power Operated Equipment	6,605	5.00%	330
28	396	Communication Equip	415,441	10.00%	41,544
29	398	Other Tangible Plant	-	10.00%	-
30		Totals	$ 74,595,805		$ 2,193,916

Less: Amortization of Contributions ("CIAC")

	Account No.	Description	Gross CIAC	CIAC Account Specific Amortization Rate	
31	361	Collection Sewers Gravity	$ (25,745,608)	2.00%	$ (514,912)
32	363	Customer Services	(2,631,307)	2.00%	(52,626)
33		Total Gross CIAC Balance (See RUCO RBM-2)	$ (28,376,915)		$ (567,538)
34		RUCO Total Depreciation Expense			1,626,378
35		Company Adjusted Depreciation Expense As Filed			1,598,765
36		RUCO Increase/(Decrease) Expense Adjustment			$ 27,613

* Fully Depreciated Per Company Schedule C-2, page 2

References:
Company B-2 and C-1 Schedules, and RUCO Schedule RBM-2.

OPERATING INCOME ADJUSTMENT NO. 2
PROPERTY TAXES

LINE NO.	Property Tax Calculation	[A] RUCO AS ADJUSTED	[B] RUCO RECOMMENDED
1	RUCO Adjusted Test Year Gross Revenues Per RUCO Schedule JLK-13	$ 10,362,797	$ 10,362,797
2	Multiplied by 2	2	2
3	Subtotal (Line 1 * Line 2)	$ 20,725,593	$ 20,725,593
4a	RUCO Adjusted Test Year Gross Revenues Per RUCO Schedule JLK-13	10,362,797	
4b	RUCO Recommended Revenue Per RUCO Schedule JLK-13		10,426,706
5	Subtotal (Line 3 + Line 4a)	$ 31,088,390	$ 31,152,300
6	Number of Years	3	3
7	Three Year Average (Line 5 / Line 6)	$ 10,362,797	$ 10,384,100
8	Department of Revenue Mutilplier	2	2
9	Revenue Base Value (Line 7 * Line 8)	$ 20,725,593	$ 20,768,200
10	Plus: 10% of CWIP Per Company Schedule E-1 As Filed	-	-
11	Less: Net Book Value of Licensed Vehicles	3,646	3,646
12	Full Cash Value (Line 9 + Line 10 - Line 11)	$ 20,721,948	$ 20,764,554
13	Assessment Ratio	19.0%	19.0%
14	Assessed Value (Line 12 * Line 13)	$ 3,937,170	$ 3,945,265
15	Composite Property Tax Rate (Per RUCO Effective Property Tax Calculation)	13.9322%	13.9322%
16	RUCO Adjusted Test Year Property Tax Expense (Line 14 * Line 15)	$ 548,533	
17	Company Adjusted Test Year Property Tax Expense (Per Company Schedule C-1)	576,026	
18	RUCO Test Year Adjustment (Line 16-Line 17)	$ (27,493)	
19	Property Tax - RUCO Recommended Revenue (Line 14 * Line 15)		$ 549,661
20	RUCO Test Year Adjusted Property Tax Expense (Line 16)		548,533
21	Increase/(Decrease) to Property Tax Expense		$ 1,128
22	Increase/(Decrease) to Property Tax Expense		$ 1,128
23	Increase in Revenue Requirement		63,910
24	Increase /(Decrease) to Property Tax per Dollar Increase in Revenue (Line 22 / Line 23)		1.7647%

References:
RUCO Schedule RBM-13
RUCO Schedule RBM-4(a) page 1 of 2

OPERATING INCOME ADJUSTMENT NO. 3
REVENUE & EXPENSE ANNUALIZATIONS

Line No.	Meter Size	Class	[A] Company Annualization Present Revenues	[B] RUCO Annualization Adjustments	[C] RUCO Annualization Present Revenues	[D] Additional Bills	[E] Additional Gallons to be Pumped (In 1,000's)
1	N/A	Residential	$ 127,341	$ -	$ 127,341	3,266	9,798
2	N/A	Residential (Low Income)	-	1,193	1,193	36	108
3		Subtotal	$ 127,341	$ 1,193	$ 128,534	3,302	9,906
4							
5	145, 172, 560	HOA	$ -	-	$ -	-	-
6							
7	3, 4, 5, 7, 8, 13, 15, 16,	Multi-Unit	-	-	-	-	-
8	17, 22, 43, 78, 84, 123, 282	Multi-Family	-	-	-	-	-
9		Subtotal	$ -	$ -	$ -	$ -	$ -
10							
11	Small	Commercial	$ 66	$ -	$ 66	1	2
12	Measured Service	Commercial	(1,644)	-	(1,644)	(8)	(24)
13	Measured Svc. Other	Commercial	3,014	-	3,014	8	36
14		Subtotal	$ 1,436	$ -	$ 1,436	1	14
15							
16	Room and Main	Wigwam	$ -	$ -	$ -	-	-
17							
18	Elem, Mid & College	Schools	$ -	$ -	$ -	-	-
19							
20	100	Effluent	$ 93	$ -	$ 93	2	-
21	125	Effluent	(3,380)		(3,380)	(3)	-
22	200	Effluent	$ -	$ -	$ -	7	-
23		Subtotal	$ (3,287)	$ -	$ (3,287)	6	-
24							
25	Total Revenue Annualization		$ 125,490	$ 1,193	$ 126,683	$ 3,309	
26							
27	RUCO Total Revenue Annualization						$ 126,683
28							
29	Company Revenue Annualization						125,490
30							
31							
32	RUCO Increase/(Decrease) Adjustment to Revenue and/or Expense						$ 1,193
33							
34							
35							
36	Total Increase/(Decrease) Gallons to be Produced						9,920

References:
RUCO RBM Workpapers
Company H-5 Schedules

OPERATING INCOME ADJUSTMENT NO. 3 (Continued)
REVENUE & EXPENSE ANNUALIZATIONS

Line No.	Description		Amount
	Annualize Revenues:		
1	Per RUCO Annualized Revenues	$	126,683
2	Per Company Annualized Revenues		125,490
3	RUCO Adjustment to Revenue and/or Expense (L1 - L2)	$	1,193
	Annualize Sludge Removal Expense:		
11	Test Year Sludge Removal Expense	$	230,913
12	Gallons Treated (in 1,000's)		1,223,828
13	Cost per 1,000 gallons (L11 / L12)	$	0.19
14	Number of bills during Test Year		191,338
15	Average flow per bill per month (in 1,000's) - (L12 / L14)		6.4
16	Increase (decrease) in number of bills (See Column [D] at line 25 on RUCO Schedule JLK-17 at page 1 of 2)		3,309
17	Increase (decrease) in flows (in 1,000's) - (L15 X L16)		21,165
18	Per RUCO Increase (decrease) in Sludge Removal (L13 X L17)	$	3,993
19	Per Company Increase (decrease) in Sludge Removal (Company Schedule C-1)		3,980
20	RUCO Adjustment to Revenue and/or Expense (L18 - L19)	$	13
	Annualize Postage Expense:		
21	RUCO's Reversal of Company's Double-Count for Wastewater Division's Annualized Postage Expense	$	(1,506)
22	RUCO Total Net Annualized Revenue & Expense Adjustments	$	2,686

References:
See RUCO Schedule RBM-17 on page 1 of 2
Company C-2 & H Schedules

OPERATING INCOME ADJUSTMENT NO. 4
REVENUE ACCRUAL FIX

Line No.	Description	Amount

References:

OPERATING INCOME ADJUSTMENT NO. 5
USED ONLY FOR WATER DIVISION

Line No.	Description	Amount

References:

OPERATING INCOME ADJUSTMENT NO. 6
USED ONLY FOR WATER DIVISION

Line No.	Description	Amount

References:

OPERATING INCOME ADJUSTMENT NO. 7
INTENTIONALLY LEFT BLANK

Line No.	Description	Amount

References:

OPERATING INCOME ADJUSTMENT NO. 8
EMPLOYEE PENSION BENEFIT PLAN

Line No.	Description	Amount
1	Employee Pension Benefit Plan Proforma Adjustment Per Company as Filed	$ 76,431
2	Employee Pension Benefit Plan Proforma Adjustment Per RUCO Recommendation	-
3	RUCO Recommended Adjustment	$ (76,431)

References:
Company Response to RUCO DR 3.01
See Testimony of RBM

OPERATING INCOME ADJUSTMENT NO. 9
INTENTIONALLY LEFT BLANK

Line No.	Description	Amount

References:

OPERATING INCOME ADJUSTMENT NO. 10
ADDITIONAL REDUCTIONS TO US LIBERTY UTILITIES MANAGEMENT SERVICES

Line No.	Description	Amount
	Water Division:	
1	Company's Proforma Adjustment for Management Services - US Liberty Water as Filed	$ (16,840)
2	RUCO Recommended Adjustment for Management Services - US Liberty Water	(18,669)
3	RUCO Recommended Adjustment	(1,829)
	Wastewater Division:	
4	Company's Proforma Adjustment for Management Services - US Liberty Water as Filed	$ (21,457)
5	RUCO Recommended Adjustment for Management Services - US Liberty Water	(23,978)
6	RUCO Recommended Adjustment	(2,521)

References:
Company Response to Staff DR JMM 12-2

OPERATING INCOME ADJUSTMENT NO. 11
ALLOCATE BAD DEBT EXPENSE

Line No.	Description		Amount
	Water & Wastewater Divisions Combined Adjusted Test Year Bad Debt Expense as Filed:		
1	Water Division Adjusted Test Year Bad Debt Expense as Filed	$	(76)
2	Wastewater Division Adjusted Test Year Bad Debt Expense as Filed		45,215
3	Total Water & Wastewater Divisions Combined Adjusted Test Year Bad Debt Expense as Filed by Company	$	45,140
	Water Division:		
4	Allocation Factor Recommended by RUCO to Allocate Bad Debt Expense to Water Division		47%
5	RUCO Recommended Bad Debt Expense Adjustment Allocated to Water Division	$	21,216
	Wastewater Division:		
6	Allocation Factor Recommended by RUCO to Allocate Bad Debt Expense to Wastewater Division		53%
7	RUCO Recommended Bad Debt Adjustment Allocated to Wastewater Division	$	(23,924)

References:
Company Response to Staff DR JMM 12-2

OPERATING INCOME ADJUSTMENT NO. 12
INTENTIONALLY LEFT BLANK

Line No.	Description	Amount

References:

OPERATING INCOME ADJUSTMENT NO. 13
APUC COST ALLOCATIONS

Line No.	Description	[A] Company Requested Total APUC Cost Pool	[B] Allocation Factor From APUC To Liberty Utilities	[C] APUC Allocation To Liberty Utilities	[D] Allocation Factor From Liberty Utilites To Liberty Utilities South	[E] Liberty Utilities Allocation To Liberty Utilities South	[F] Allocation Factor From Liberty Utilities South To LPSCO Water	[G] Allocation Factor From Liberty Utilities South To LPSCO Wastewater	[H] Libery Utilities South Allocation To LPSCO Water	[I] Libery Utilities South Allocation To LPSCO Wastewater	[J] RUCO Recommended Allocations Factors Per Decision 72059	[K] RUCO Recommended Allocations LPSCO Water	[L] RUCO Recommended Allocations LPSCO Sewer
1	Audit	$ 1,561,911	51.8%	$ 808,566	22.26%	$ 179,960	28.74%	26.87%	$ 51,712	$ 48,352	100%	$ 51,712	$ 48,352
2	Tax	1,169,300	51.8%	605,321	22.26%	134,724	28.74%	26.87%	38,713	36,198	100%	38,713	36,198
3	Legal	635,190	51.8%	328,824	22.26%	73,185	28.74%	26.87%	21,030	19,664	100%	21,030	19,664
4	Professional Services	680,395	51.8%	352,225	22.26%	78,394	28.74%	26.87%	22,527	21,063	50%	11,263	10,531
5	Unitholder Communications	700,793	51.8%	362,785	22.26%	80,744	28.74%	26.87%	23,202	21,694	50%	11,601	10,847
6	Trustee / Director Fees	378,154	51.8%	195,762	22.26%	43,570	28.74%	26.87%	12,520	11,706	50%	6,260	5,853
7	Computer Supplies /Repairs	51,761	51.8%	26,796	22.26%	5,964	28.74%	26.87%	1,714	1,602	100%	1,714	1,602
8	Office Expenses	98,210	51.8%	50,841	22.26%	11,316	28.74%	26.87%	3,252	3,040	100%	3,252	3,040
9	Employee Stock Purchase Plan	4,270	51.8%	2,210	22.26%	492	28.74%	26.87%	141	132	50%	71	66
10	Board of Director's Insurance	145,728	51.8%	75,440	22.26%	16,790	28.74%	26.87%	4,825	4,511	50%	2,412	2,256
11	Escrow & Transfer Agent Fees	75,000	51.8%	38,826	22.26%	8,641	28.74%	26.87%	2,483	2,322	50%	1,242	1,161
12	Training	76,343	51.8%	39,521	22.26%	8,796	28.74%	26.87%	2,528	2,363	100%	2,528	2,363
13	Stock Option expense	1,376,013	51.8%	712,331	22.26%	158,542	28.74%	26.87%	45,557	42,597	0%	-	-
14	Recruiting	54,095	51.8%	28,004	22.26%	6,233	28.74%	26.87%	1,791	1,675	100%	1,791	1,675
15	Meals and Entertainment	2,315	51.8%	1,198	22.26%	267	28.74%	26.87%	77	72	50%	38	36
16	Rent	84,861	51.8%	43,931	22.26%	9,778	28.74%	26.87%	2,810	2,627	100%	2,810	2,627
17	Communication	78,982	51.8%	40,887	22.26%	9,100	28.74%	26.87%	2,615	2,445	100%	2,615	2,445
18	Dues and Memberships	47,155	51.8%	24,411	22.26%	5,433	28.74%	26.87%	1,561	1,460	0%	-	-
19	Licenses/Fees & Permits	384,904	51.8%	199,256	22.26%	44,348	28.74%	26.87%	12,743	11,915	100%	12,743	11,915
20	Net Other Admin Costs	14,274	51.8%	7,389	22.26%	1,645	28.74%	26.87%	473	442	100%	473	442
21	Variance Due to Company's Monthly Allocation Factoring								10,321	26,092	64%	1 6,559	16,580
22												-	-
23												-	-
24												-	-
25													
26	Total APUC Allocations Per RUCO	$ 7,619,653		$ 3,944,525		$ 877,921			$ 262,593	$ 261,973		$ 178,825	$ 177,654
27													
28	Company Water Division's APUC Cost Allocation Requested											262,593	
29													261,973
30	Company Wastewater Division's APUC Cost Allocation Requested												
31													
32	RUCO Recommended Water and Wastewater Division's APUC Cost Allocation Adjustment											$ (83,768)	$ (84,319)

Note 1:

	Water & Wastewater
Variances by Company Per Rasponses to RUCO DR 1.08 and Staff 5.2	$ 36,413
RUCO Allowance Factor for the Variances Identified by Company	64%

References:
Column [A] - Company response to Staff DR JMM - 10.1(a) confirmed the accruals in that Column were trued-up to Actual Expenses for this rate case.

Litchfield Park Service Company
Docket No's. SW-01428A-13-0042 and
W-01427A-13-0043
Test Year Ended December 31, 2012

Wastewater Division
Surrebuttal Schedule RBM-28
Page 1 of 1

OPERATING INCOME ADJUSTMENT NO. 14
ACHIEVEMENT / INCENTIVE / BONUS PAY PROGRAMS

Line No.		Description	Water Division Amount	Wastewater Division Amount
		Algonquin Power Utilities Corporation ("APUC") Allocation:		
1	1	Per Company APUC Achievement / Incentive / Bonus Pay Program Allocations Included in Test Year	$ 45,557	$ 42,597
2	2	RUCO Recommended APUC Achievement / Incentive / Bonus Pay Program Allocations Included in Test Year	0%	0%
3	2	RUCO's Recommended Adjustment to Company's Test Year End APUC Achievement / Incentive / Bonus Pay to Include in TY	$ -	$ -
		Liberty Utilities - Local Incentive Pay		
4	1	Per Company Liberty Utilities - Local Achievement / Incentive / Bonus Pay Program Included in Test Year	$ 243,440	$ 227,622
5		RUCO Recommended Achievement / Incentive / Bonus Pay Program Allocations Included in Test Year	50%	50%
6		RUCO's Recommended Adjustment to Company's Test Year End APUC Achievement / Incentive / Bonus Pay to Include in TY	$ (121,720)	$ (113,811)
		Liberty Utilities - Allocated Incentive Pay		
7	1	Per Company Liberty Utilities - Local Achievement / Incentive / Bonus Pay Program Included in Test Year	$ 34,334	28,446
8		RUCO Recommended Achievement / Incentive / Bonus Pay Program Allocations Included in Test Year	50%	50%
9		RUCO's Recommended Adjustment to Company's Test Year End APUC Achievement / Incentive / Bonus Pay to Include in TY	$ (17,167)	$ (14,223)
10		RUCO's Recommended Total Adjustments	$ (138,887)	$ (128,034)

References:
1 Per Company Supplemental Response to RUCO 1.15(e)
2 RUCO disallowed 100% of the APUC Achievement / Incentive / Pay Program - Stock Option Expense (See RUCO Schedule RBM-27 at line 13)

OPERATING INCOME ADJUSTMENT NO. 15
MISCELLANEOUS EXPENSE

Line No.	Description	Account No.	[A] Company As Filed	[B] RUCO Allowance Factor	[C] RUCO Recommended Adjustment
1	Company Adjusted Miscellaneous Expense as Filed		$ 77,293		
	RUCO Adjustments:				
2	Public Relations	8600-2-0200-69-5390	$ 231	100%	$ (231)
3	Meals and Entertainment	8600-2-0200-69-5300	221	50%	(111)
4	Total				$ (342)
5	RUCO Recommended Adjustment				$ (342)

References:
Column [A]: Company Adjusted Test Year Schedule C-1 Balance on page 1 at line 29;
Column [B]: RUCO Allowance Factor;
Column [C]: Company Response to Staff DR JMM 2-63.

RATE BASE ADJUSTMENT NO. 16
CUSTOMER SECURITY DEPOSIT INTEREST EXPENSE

Line No.		Description	Amount
		Water Division:	
1	1	Customer Security Deposit Interest Expense As Filed by Company Below-the-Line for Both Divisons Per Response to Staff DR 13-4	$ 10,314
2		RUCO Recommended Allocation for Water Division Net of Interest Earned (See Note 1 Below for Allocation Percentages)	4,848
3		RUCO's Recommended Adjustment (Net of Interest Earned on Unexpended CIAC Bank Account Per Response to Staff DR 1.13)	$ 4,848
		Wastewater Division:	
4	1	Customer Security Deposit Interest Expense As Filed by Company Below-the-Line for Both Divisons Per Response to Staff DR 13-4	$ 10,314
5		RUCO Recommended Allocation for Water Division Net of Interest Earned (See Note 1 Below for Allocation Percentages)	5,467
6		RUCO's Recommended Adjustment (Net of Interest Earned on Unexpended CIAC Bank Account Per Response to Staff DR 1.13)	$ 5,467

Note 1: Allocation Percentage Factors
Water = 47%
Wastewater = 53%

References:
1 Per Company Response and Excel workbook Attachment to Staff's DR 13-4

OPERATING INCOME ADJUSTMENT NO. 17
INCOME TAXES

Line No.	Description	RUCO Adjusted Test Year Recommended	RUCO Test Year Recommended
1	RUCO Computed Adjusted Test Year Income Tax	$ 1,141,797	$ 1,165,837
2	Company Income Tax As Filed	1,013,153	1,262,828
3	RUCO Adjustment to Income Tax Expense	$ 128,645	$ (96,991)

References:
See RUCO Schedule RBM-1 at page 2 of 2;
Company Schedule C-1 Adjusted Test Year as Filed

COST OF CAPITAL

LINE NO.		[A] DOLLAR AMOUNT	[B] CAPITAL RATIO	[C] COST RATE	[D] WEIGHTED COST RATE
1	Long-Term Debt	$ 10,420,000	15.87%	6.40%	1.02%
2	Common Equity	55,240,319	84.13%	9.20% [1]	7.74%
3	Total Capitalization	$ 65,660,319	100.00%		
4	WEIGHTED AVERAGE COST OF CAPITAL ("WACC")				8.76%

[1] The Return on Equity Recommended by RUCO was authorized in Decision No. 73996 dated July 30, 2013.

References:
Columns [A] Thru [D]: RBM and RBM Testimony

TABLE OF CONTENTS

SCHEDULES
LITCHFIELD PARK SERVICE COMPANY
WATER DIVISION

Rate Design.....RBM W RD-1

Typical Bill Analysis.....RBM W RD-2

WASTEWATER DIVISION

Rate Design.....RBM WW RD-1

Typical Bill Analysis.....RBM WW RD-2

Monthly Usage Charge	Present	Company Proposed Rates	RUCO Recommended Rates
Meter Size (All Classes):			
5/8 x 3/4 Inch	$ 10.20	$ 14.50	$ 11.00
3/4 Inch - Residential	10.20	14.50	11.00
3/4 Inch	10.20	14.50	11.00
1 Inch - Residential	22.95	32.75	27.75
1 Inch	25.50	36.25	30.72
1 1/2 Inch	51.00	72.50	55.00
2 Inch	81.60	116.00	88.00
3 Inch	163.20	232.00	176.00
4 Inch	255.00	362.50	275.00
6 Inch	510.00	725.00	550.00
8 Inch - Bulk Water Only	501.00	575.00	510.00
8 Inch	841.50	1,160.00	880.00
10 Inch	1,173.00	1,667.50	1,265.00
12 Inch	2,193.00	3,117.50	2,365.00
The low income monthly meter charge is 85% of the Residential 3/4 inch and 1 inch meter charge.			
Commodity Charge - Per 1,000 Gallons			
5/8" x 3/4" Meter and 3/4" (Residential)			
First 3,000 gallons	$ 1.0000	N/A	N/A
3,001 to 9,000 gallons	1.9100	N/A	N/A
Over 9,000 gallons	3.0300	N/A	N/A
First 3,000 gallons	N/A	$ 1.0000	N/A
3,001 to 11,000 gallons	N/A	2.0000	N/A
11,001 to 30,000 gallons	N/A	3.0500	N/A
Over 30,000 gallons	N/A	3.6600	N/A
First 3,000 gallons	N/A	N/A	$ 0.8500
3,001 to 9,000 gallons	N/A	N/A	1.9000
9,001 to 20,000 gallons	N/A	N/A	3.0800
Over 20,000 gallons	N/A	N/A	3.3830
5/8" x 3/4" and 3/4" Meter (Commercial & Irrigations)			
First 9,000 gallons	1.9100	2.0000	N/A
Over 9,000 gallons	3.0300	3.6600	N/A
First 9,000 gallons	N/A	N/A	1.9000
Over 9,000 gallons	N/A	N/A	3.3830
1" Meter (Residential & Multi-family)			
First 5,000 gallons	1.0000	N/A	N/A
5,001 to 20,000 gallons	1.9100	N/A	N/A
Over 20,000 gallons	3.0300	N/A	N/A
First 5,000 gallons	N/A	1.0000	N/A
5,001 to 20,000 gallons	N/A	2.0000	N/A
20,001 to 40,000 gallons	N/A	3.0500	N/A
Over 40,000 gallons	N/A	3.6600	N/A
First 5,000 gallons	N/A	N/A	0.8500
5,001 to 11,000 gallons	N/A	N/A	1.9000
11,001 to 35,000 gallons	N/A	N/A	3.0800
Over 35,000 gallons	N/A	N/A	3.3830
1" Meter (Commercial & Irrigations)			
First 20,000 gallons	1.9100	2.0000	N/A
Over 20,000 gallons	3.0300	3.6600	N/A
First 17,000 gallons	N/A	N/A	1.9000
Over 17,000 gallons	N/A	N/A	3.3830
1 1/2" Meter (All Classes)			
First 40,000 gallons	1.9100	2.0000	N/A
Over 40,000 gallons	3.0300	3.6600	N/A

First 33,000 gallons	N/A	N/A	1.9000
Over 33,000 gallons	N/A	N/A	3.3830
2" Meter (All Classes)			
First 60,000 gallons	1.9100	2.0000	N/A
Over 60,000 gallons	3.0300	3.6600	N/A
First 53,000 gallons	N/A	N/A	1.9000
Over 53,000 gallons	N/A	N/A	3.3830
3" Meter (All Classes)			
First 120,000 gallons	1.9100	2.0000	N/A
Over 120,000 gallons	3.0300	3.6600	N/A
First 110,000 gallons	N/A	N/A	1.9000
Over 110,000 gallons	N/A	N/A	3.3830
4" Meter (All Classes)			
First 180,000 gallons	1.9100	2.0000	N/A
Over 180,000 gallons	3.0300	3.6600	N/A
First 175,000 gallons	N/A	N/A	1.9000
Over 175,000 gallons	N/A	N/A	3.3830
6" Meter (All Classes)			
First 360,000 gallons	1.9100	2.0000	N/A
Over 360,000 gallons	3.0300	3.6600	N/A
First 355,000 gallons	N/A	N/A	1.9000
Over 355,000 gallons	N/A	N/A	3.3830
8" Meter (Bulk Resale)			
All Classes	1.5000	1.6500	1.6500
8" Meter (All Classes)			
First 650,000 gallons	1.9100	2.0000	N/A
Over 650,000 gallons	3.0300	3.6600	N/A
First 573,000 gallons	N/A	N/A	1.9000
Over 573,000 gallons	N/A	N/A	3.3830
10" Meter (All Classes)			
First 940,000 gallons	1.9100	2.0000	N/A
Over 940,000 gallons	3.0300	3.6600	N/A
First 800,000 gallons	N/A	N/A	1.9000
Over 800,000 gallons	N/A	N/A	3.3830
12" Meter (All Classes)			
First 1,248,000 gallons	2.9200	N/A	N/A
Over 1,248,000 gallons	3.6400	N/A	N/A
First 1,500,000 gallons	N/A	N/A	1.9000
Over 1,500,000 gallons	N/A	N/A	3.3830
Construction Hydrants			
All Gallons	3.0300	3.6600	3.3830

Litchfield Park Service Company - Water Division
Docket No. SW-01428A-13-0042 ET AL.
Test Year Ended: December 31, 2013

Surrebuttal Schedule RBM W RD-2

Typical Bill Analysis
Residential 5/8 x 3/4-Inch Meters

Company Proposed	Gallons	Present Rates	Proposed Rates	Dollar Increase	Percent Increase
Average Usage	4,277	$ 15.64	$ 19.37	$ 3.73	23.86%
Median Usage	4,000	22.75	26.63	$ 3.88	17.05%
RUCO Recommended					
Average Usage	4,277	$ 15.64	$ 15.98	$ 0.34	2.16%
Median Usage	4,000	22.75	23.05	$ 0.30	1.32%

Present & Proposed Rates (Without Taxes)
Residential 5/8 x 3/4-Inch Meters

Gallons Consumption	Present Rates	Company Proposed Rates	% Increase	RUCO Recommended Rates	% Increase
-	$ 10.20	$ 13.88	36.08%	$ 11.00	7.84%
1,000	11.20	$ 14.88	32.86%	$ 11.85	5.80%
2,000	12.20	$ 15.88	30.16%	$ 12.70	4.10%
3,000	13.20	$ 16.88	27.88%	$ 13.55	2.65%
4,000	15.11	$ 18.83	24.62%	$ 15.45	2.25%
5,000	17.02	$ 20.78	22.09%	$ 17.35	1.94%
6,000	18.93	$ 22.73	20.07%	$ 19.25	1.69%
7,000	20.84	$ 24.68	18.43%	$ 21.15	1.49%
8,000	22.75	$ 26.63	17.05%	$ 23.05	1.32%
9,000	24.66	$ 28.58	15.90%	$ 24.95	1.18%
10,000	27.69	$ 30.53	10.26%	$ 28.03	1.23%
11,000	30.72	$ 32.48	5.73%	$ 31.11	1.27%
12,000	33.75	$ 35.42	4.95%	$ 34.19	1.30%
13,000	36.78	$ 38.36	4.30%	$ 37.27	1.33%
14,000	39.81	$ 41.30	3.74%	$ 40.35	1.36%
15,000	42.84	$ 44.24	3.27%	$ 43.43	1.38%
16,000	45.87	$ 47.18	2.86%	$ 46.51	1.40%
17,000	48.90	$ 50.12	2.49%	$ 49.59	1.41%
18,000	51.93	$ 53.06	2.18%	$ 52.67	1.42%
19,000	54.96	$ 56.00	1.89%	$ 55.75	1.44%
20,000	57.99	$ 58.94	1.64%	$ 58.83	1.45%
25,000	73.14	$ 75.74	3.55%	$ 75.75	3.56%
30,000	88.29	$ 92.54	4.81%	$ 92.66	4.95%
35,000	103.44	$ 109.34	5.70%	$ 109.58	5.93%
40,000	118.59	$ 126.14	6.37%	$ 126.49	6.66%
45,000	133.74	$ 142.94	6.88%	$ 143.41	7.23%
50,000	148.89	$ 159.74	7.29%	$ 160.32	7.68%
75,000	224.64	$ 243.74	8.50%	$ 244.90	9.02%
100,000	300.39	$ 327.74	9.10%	$ 329.47	9.68%

Monthly Charge for:	Present	Company Rebuttal Proposed Rates	RUCO Surrebuttal Recommended Rates
Monthly Residential Service	$ 38.99	$ 41.08	$ 39.21
Low Income Residential Service	33.14	34.92	33.33
Multi-Unit Housing - Monthly per Unit	36.19	38.13	36.36
Commercial:			
Small Commercial - Monthly Service	65.93	69.46	66.50
Measured Service:			
Regular Domestic:	36.91	38.88	37.25
Monthly Service Charge	3.22	3.39	3.25
Commodity Charge per 1,000 gallons			
Restaurant, Motels, Grocery Stores & Dry Cleaning Estab.1			
Monthly Service Charge	36.91	38.88	37.25
Commodity Charge per 1,000 gallons	4.30	4.52	4.40
Wigwam Resort:			
Monthly Rate - Per Room	36.19	38.13	36.35
Main Hotel Facilities - Per Month	1,433.30	1,509.88	1,450.00
Schools - Monthly Service Rates:			
Elementary Schools	974.64	1,026.78	981.00
Middile Schools	1,146.64	1,207.99	1,155.00
High Schools	1,146.64	1,207.99	1,155.00
Community College	1,777.29	1,872.38	1,790.00
Effluent2:			

1 Motels without restuarants charged multi-unit monthly rate.
2 Market Rate - Maximum effluent rate shall not exceed $430 per acre foot based on a potable water rate of $1.32 per thousand gallons.
Late Payment Penalty

Litchfield Park Service Company - Wastewater Division
Docket No. SW-01428A-13-0042 ET AL.
Test Year Ended: December 31, 2013

Schedule RBM WW RD-2

Typical Bill Analysis
Residential

Company Proposed	Gallons	Present Rates	Proposed Rates	Dollar Increase	Percent Increase
Average Usage	-	$ 38.99	$ 41.62	$ 2.63	6.75%
Median Usage	-	38.99	41.62	$ 2.63	6.75%
RUCO Recommended					
Average Usage	-	$ 38.99	$ 39.21	$ 0.22	0.56%
Median Usage	-	38.99	39.21	$ 0.22	0.56%

BEFORE THE ARIZONA CORPORATION COMMISSION

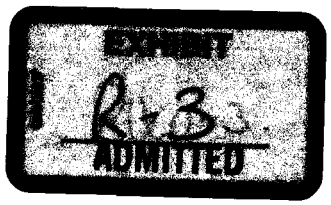

BOB STUMP
CHAIRMAN
GARY PIERCE
COMMISSIONER
BRENDA BURNS
COMMISSIONER
BOB BURNS
COMMISSIONER
SUSAN BITTER SMITH
COMMISSIONER

IN THE MATTER OF THE APPLICATION OF LITCHFIELD PARK SERVICE COMPANY, AN ARIZONA CORPORATION, FOR A DETERMINATION OF THE FAIR VALUE OF ITS UTILITY PLANTS AND PROPERTY AND FOR INCREASES IN ITS WASTEWATER RATES AND CHARGES BASED THEREON FOR UTILITY SERVICE.	Docket No. SW-01428A-13-0042
IN THE MATTER OF THE APPLICATION OF LITCHFIELD PARK SERVICE COMPANY, AN ARIZONA CORPORATION, FOR A DETERMINATION OF THE FAIR VALUE OF ITS UTILITY PLANTS AND PROPERTY AND FOR INCREASES IN ITS WATER RATES AND CHARGES BASED THEREON FOR UTILITY SERVICE.	Docket No. W-01427A-13-0043

NOTICE OF FILING.

The RESIDENTIAL UTILITY CONSUMER OFFICE ("RUCO") hereby provides notice of filing the Direct Testimony of Robert B. Mease on Rate Design, in the above-referenced matter.

RESPECTFULLY SUBMITTED this 4th day of October, 2013.

Daniel W. Pozefsky
Chief Counsel

AN ORIGINAL AND THIRTEEN COPIES
of the foregoing filed this 4th day
of October, 2013 with:

Docket Control
Arizona Corporation Commission
1200 West Washington
Phoenix, Arizona 85007

COPIES of the foregoing hand delivered/
mailed this 4th day of October, 2013 to:

Teena Jibilian
Administrative Law Judge
Arizona Corporation Commission
1200 West Washington
Phoenix, Arizona 85007

Janice Alward, Chief Counsel
Legal Division
Arizona Corporation Commission
1200 West Washington
Phoenix, Arizona 85007

Steve Olea, Director
Utilities Division
Arizona Corporation Commission
1200 West Washington
Phoenix, Arizona 85007

Jay L. Shapiro
Fennemore Craig, PC
2394 E. Camelback Rd., Suite 600
Phoenix, Arizona 85016
Attorneys for LPSCO

Olivia Burnes
356 N. Cloverfield Circle
Litchfield Park, AZ 85340

By Cheryl Fraulob
Cheryl Fraulob

LITCHFIELD PARK SERVICE COMPANY

DOCKET NO. SW-01428A-13-0042

DOCKET NO. W-01427A-13-0043

DIRECT TESTIMONY

OF

ROBERT B. MEASE

ON

RATE DESIGN

ON BEHALF OF

THE

RESIDENTIAL UTILITY CONSUMER OFFICE

OCTOBER 4, 2013

TABLE OF CONTENTS

EXECUTIVE SUMMARY i

INTRODUCTION 1

WATER DIVISION RATE DESIGN 1

WASTEWATER DIVISION RATE DESIGN 3

LOW INCOME TARIFF 4

OTHER RATE DESIGN ISSUES 4

SCHEDULES
LITCHFIELD PARK SERVICE COMPANY
WATER DIVISION

Rate Design ..... RBM W RD-1

Typical Bill Analysis ..... RBM W RD-2

WASTEWATER DIVISION

Rate Design ..... RBM WW RD-1

Typical Bill Analysis ..... RBM WW RD-2

EXECUTIVE SUMMARY

Litchfield Park Service Company ("LPSCO" or "Company") is a for profit Class A public service corporation serving potable water to approximately 16,802 customers and wastewater service to approximately 16,161 customers in portions of Maricopa County, Arizona. The testimony of Mr. Robert B. Mease represents the Residential Utility Consumer Office's ("RUCO") recommended water and wastewater rate designs.

Water Division

The present rate design is based on monthly minimum charges that increase by meter size and a three-tiered commodity rate charge per one-thousand gallons consumed. There are currently seven residential customer classifications, eight commercial customer classifications, six irrigation customer classifications, four multi-family customer classifications, and seven other classifications that include fire, hydrant, sweeper, City of Goodyear, and Valley Utilities Inc. customer classifications.

All residential customers on the ⅝ x ¾, ¾, and 1-inch meter sizes have a three-tier rate design, while all other rate classes have a two-tier rate design. The Company proposes to increase the break-over points for all meter sizes. In addition, the Company proposes to add an additional fourth-tier rate design for the ⅝ x ¾, ¾, and 1-inch residential meter sizes.

The Company-proposed rates would increase the monthly bill for a typical ⅝ x ¾-inch meter residential customer with an average usage of 4,277 gallons by $4.41 or 28.23 percent from $15.64 to $20.05. Under RUCO's recommended rate design, the monthly bill for a typical residential customer would increase by $0.80 or 5.09 percent from $15.64 to $16.44 (See Schedule RBM W RD-2).

Wastewater Division

The present rate design is based largely on flat monthly minimum rates. All customers are charged a flat monthly rate based on customer classifications listed above with the exception of two commercial customers and the three effluent sale customers. The two commercial classification customers are billed a flat monthly rate with a commodity charge per one-thousand gallons of water billed to those customers. The three effluent sale customers have no flat monthly minimum charge and are only billed per one-thousand gallons of metered effluent water sales delivered.

The Company-proposed rates would increase the monthly bill for a typical ⅝ x ¾-inch meter residential customer by $2.63 or approximately 6.75 percent from $38.99 to $41.62. Under RUCO's recommended rate design, the monthly bill for a typical ⅝ x ¾-inch metered residential customer would increase by $0.07 or roughly .18 percent from $38.99 to $39.06 (See Schedule RBM WW RD-2).

I. INTRODUCTION

Q. Please state your name, position, employer and address.

A. My name is Robert B. Mease. I am the Chief of Accounting & Rates and am employed by the Residential Utility Consumer Office ("RUCO") located at 1110 W. Washington, Suite 220, Phoenix, Arizona 85007.

Q. Are you the same Robert B. Mease who previously filed testimony pertaining to rate base, operating income, and revenue requirement on behalf of RUCO in this docket for Litchfield Park Service Company's ("LPSCO" or "Company") permanent rate Application?

A. Yes.

II. WATER DIVISION RATE DESIGN

Q. Did RUCO prepare a summary of the Company's present rates, proposed rates, and RUCO's recommended rates for both LPSCO's water and wastewater divisions?

A. Yes, see Schedules RBM W RD-1 and RBM WW RD-1 for the water and wastewater divisions respectively.

Q. Please summarize RUCO's recommended water rate design.

A. RUCO recommends an inverted four-tier rate design that consists of four-tiers for the ⅝ x ¾ and ¾-inch residential meter sizes with commodity rates of $0.84 per thousand gallons for 0 to 3,000 gallons, $1.50 per

thousand gallons for 3,001 to 9,000 gallons, $2.71 per thousand gallons for 9,001 to 15,000 gallons, and $3.81 per thousand gallons for any consumption over 15,000 gallons.

For the 1-inch residential meter size, RUCO also recommends the same inverted four-tier rate design structure but with different break-over points that consists of four-tiers with commodity rates of $0.84 per thousand gallons for 0 to 5,000 gallons, $1.50 per thousand gallons for 5,001 to 15,000 gallons, $2.71 per thousand gallons for 15,001 to 35,000 gallons, and $3.79 per thousand gallons for any consumption over 35,000 gallons.

RUCO recommends a two-tier inverted block rate structure for all customers with meters larger than 1-inch meters. The recommended break-over point for the two-tier customers increases with meter size, as shown in Schedule RBM W RD-1. Under the recommended rate design, the monthly bill at any usage level is higher for a larger meter than for a smaller meter.

Q. Did RUCO prepare a typical bill analysis for a ⅝ x ¾ inch customer?

A. Yes. Please see Schedule RBM W RD-2.

Q. What is the rate impact on a ⅝ x ¾ inch meter residential customer using an average consumption of 4,277 gallons?

A. Under RUCO's recommended rates, a residential ⅝ x ¾ inch meter customer consuming the average usage of 4,277 gallons per month will pay $16.44, which is $0.80 more than the current $15.64 or a 5.09 percent increase. By comparison, a residential ⅝ x ¾ inch meter customer consuming the average usage of 4,277 gallons per month under the Company's proposed rates would be billed $20.05, which is $4.41 more than the current $15.64 or an increase of 28.23 percent.

III. WASTEWATER DIVISION RATE DESIGN

Q. Did RUCO prepare a summary of the Company's present rates, proposed rates, and RUCO's recommended rates for LPSCO's wastewater division?

A. Yes, please see Schedule RBM WW RD-2.

Q. What is the rate impact on a ⅝ x ¾ inch meter residential customer?

A. Under RUCO's recommended rates, a residential ⅝ x ¾ inch meter customer will pay $39.06, which is $0.07 more than the current $38.99 or an approximate .18 percent increase. By comparison, a residential ⅝ x ¾ inch meter customer under the Company's proposed rates would be billed $41.62, which is $2.63 more than the current $38.99 or an increase of 6.75 percent.

IV. LOW INCOME TARIFF

Q. Does the Company presently have a Low Income Tariff for both the water and wastewater divisions?

A. Yes.

Q. Is the Company proposing changes to the present Low Income Tariff?

A. No.

Q. What does RUCO recommend for LPSCO's Low Income Tariff?

A. RUCO recommends that the Low Income Tariff approved in the last case remain in effect, which is 85 percent of the same meter size for customers that do not qualify for the low income program.

V. OTHER RATE DESIGN ISSUES

Q. Are there any other issues that RUCO would want to clarify regarding rate design?

A. Yes. RUCO's wastewater rate design model is currently capable of designing rates up to a ten-inch meter. The Company has requested rates from a ⅝ x ¾ inch meter through a twelve-inch meter. To accommodate LPSCO's twelve-inch meter rate design request, RUCO advises the interested parties to multiply RUCO's recommended ⅝ x ¾ inch meter rate by the meter multiplier of 215 to obtain that specific

customer classification customer rate for a twelve-inch meter in all such instances.

Q. Does this conclude your Direct Testimony for the water and wastewater divisions' rate design?

A. Yes, it does.

Monthly Usage Charge	Present	Company Proposed Rates	RUCO Recommended Rates
Meter Size (All Classes):			
5/8 x 3/4 Inch	$ 10.20	$ 14.50	$ 12.00
3/4 Inch - Residential	10.20	14.50	12.00
3/4 Inch	10.20	14.50	12.00
1 Inch - Residential	22.95	32.75	30.00
1 Inch	25.50	36.25	33.21
1 1/2 Inch	51.00	72.50	60.00
2 Inch	81.60	116.00	96.00
3 Inch	163.20	232.00	192.00
4 Inch	255.00	362.50	300.00
6 Inch	510.00	725.00	600.00
8 Inch - Bulk Water Only	501.00	575.00	475.86
8 Inch	841.50	1,160.00	960.00
10 Inch	1,173.00	1,667.50	1,380.00
12 Inch	2,193.00	3,117.50	2,580.00
The low income monthly meter charge is 85% of the Residential 3/4 inch and 1 inch meter charge.			
Commodity Charge - Per 1,000 Gallons			
5/8" x 3/4" Meter and 3/4" (Residential)			
First 3,000 gallons	$ 1.0000	N/A	N/A
3,001 to 9,000 gallons	1.9100	N/A	N/A
Over 9,000 gallons	3.0300	N/A	N/A
First 3,000 gallons	N/A	$ 1.0000	N/A
3,001 to 11,000 gallons	N/A	2.0000	N/A
11,001 to 30,000 gallons	N/A	3.0500	N/A
Over 30,000 gallons	N/A	3.6600	N/A
First 3,000 gallons	N/A	N/A	$ 0.8400
3,001 to 9,000 gallons	N/A	N/A	1.5000
9,001 to 15,000 gallons	N/A	N/A	2.7100
Over 15,000 gallons	N/A	N/A	3.8100
5/8" x 3/4" and 3/4" Meter (Commercial & Irrigations)			
First 9,000 gallons	1.9100	2.0000	N/A
Over 9,000 gallons	3.0300	3.6600	N/A
First 9,000 gallons	N/A	N/A	1.5000
Over 9,000 gallons	N/A	N/A	3.8100
1" Meter (Residential)			
First 5,000 gallons	1.0000	N/A	N/A
5,001 to 20,000 gallons	1.9100	N/A	N/A
Over 20,000 gallons	3.0300	N/A	N/A
First 5,000 gallons	N/A	1.0000	N/A
5,001 to 20,000 gallons	N/A	2.0000	N/A
20,001 to 40,000 gallons	N/A	3.0500	N/A
Over 40,000 gallons	N/A	3.6600	N/A
First 5,000 gallons	N/A	N/A	0.8400
5,001 to 15,000 gallons	N/A	N/A	1.5000
15,001 to 35,000 gallons	N/A	N/A	2.7100
Over 35,000 gallons	N/A	N/A	3.8100
1" Meter (Commercial & Irrigations)			
First 20,000 gallons	1.9100	2.0000	N/A
Over 20,000 gallons	3.0300	3.6600	N/A
First 22,500 gallons	N/A	N/A	1.5000
Over 22,500 gallons	N/A	N/A	3.8100
1 1/2" Meter (All Classes)			
First 40,000 gallons	1.9100	2.0000	N/A
Over 40,000 gallons	3.0300	3.6600	N/A

First 40,000 gallons	N/A	N/A	1.5000
Over 40,000 gallons	N/A	N/A	3.8100
2" Meter (All Classes)			
First 60,000 gallons	1.9100	2.0000	N/A
Over 60,000 gallons	3.0300	3.6600	N/A
First 60,000 gallons	N/A	N/A	1.5000
Over 60,000 gallons	N/A	N/A	3.8100
3" Meter (All Classes)			
First 120,000 gallons	1.9100	2.0000	N/A
Over 120,000 gallons	3.0300	3.6600	N/A
First 100,000 gallons	N/A	N/A	1.5000
Over 100,000 gallons	N/A	N/A	3.8100
4" Meter (All Classes)			
First 180,000 gallons	1.9100	2.0000	N/A
Over 180,000 gallons	3.0300	3.6600	N/A
First 160,000 gallons	N/A	N/A	1.5000
Over 160,000 gallons	N/A	N/A	3.8100
6" Meter (All Classes)			
First 360,000 gallons	1.9100	2.0000	N/A
Over 360,000 gallons	3.0300	3.6600	N/A
First 340,000 gallons	N/A	N/A	1.5000
Over 340,000 gallons	N/A	N/A	3.8100
8" Meter (Bulk Resale)			
All Classes	1.5000	1.6500	3.8100
8" Meter (All Classes)			
First 650,000 gallons	1.9100	2.0000	N/A
Over 650,000 gallons	3.0300	3.6600	N/A
First 550,000 gallons	N/A	N/A	1.5000
Over 550,000 gallons	N/A	N/A	3.8100
10" Meter (All Classes)			
First 940,000 gallons	1.9100	2.0000	N/A
Over 940,000 gallons	3.0300	3.6600	N/A
First 800,000 gallons	N/A	N/A	1.5000
Over 800,000 gallons	N/A	N/A	3.8100
12" Meter (All Classes)			
First 1,248,000 gallons	2.9200	N/A	N/A
Over 1,248,000 gallons	3.6400	N/A	N/A
First 1,500,000 gallons	N/A	N/A	1.5000
Over 1,500,000 gallons	N/A	N/A	3.8100
Construction Hydrants			
All Gallons	3.0300	3.6600	3.8100

Litchfield Park Service Company - Water Division
Docket No. SW-01428A-13-0042 ET AL.
Test Year Ended: December 31, 2013

Schedule RBM W RD-2

Typical Bill Analysis
Residential 5/8 x 3/4-Inch Meters

Company Proposed	Gallons	Present Rates	Proposed Rates	Dollar Increase	Percent Increase
Average Usage	4,277	$ 15.64	$ 20.05	$ 4.41	28.23%
Median Usage	4,000	22.75	27.50	$ 4.75	20.88%
RUCO Recommended					
Average Usage	4,277	$ 15.64	$ 16.44	$ 0.80	5.09%
Median Usage	4,000	22.75	22.02	$ (0.73)	-3.21%

Present & Proposed Rates (Without Taxes)
Residential 5/8 x 3/4-Inch Meters

Gallons Consumption	Present Rates	Company Proposed Rates	% Increase	RUCO Recommended Rates	% Increase
-	$ 10.20	$ 14.50	42.16%	$ 12.00	17.65%
1,000	11.20	$ 15.50	38.39%	$ 12.84	14.64%
2,000	12.20	$ 16.50	35.25%	$ 13.68	12.13%
3,000	13.20	$ 17.50	32.58%	$ 14.52	10.00%
4,000	15.11	$ 19.50	29.05%	$ 16.02	6.02%
5,000	17.02	$ 21.50	26.32%	$ 17.52	2.94%
6,000	18.93	$ 23.50	24.14%	$ 19.02	0.48%
7,000	20.84	$ 25.50	22.36%	$ 20.52	-1.54%
8,000	22.75	$ 27.50	20.88%	$ 22.02	-3.21%
9,000	24.66	$ 29.50	19.63%	$ 23.52	-4.62%
10,000	27.69	$ 31.50	13.76%	$ 26.23	-5.27%
11,000	30.72	$ 33.50	9.05%	$ 28.94	-5.79%
12,000	33.75	$ 36.55	8.30%	$ 31.65	-6.22%
13,000	36.78	$ 39.60	7.67%	$ 34.36	-6.58%
14,000	39.81	$ 42.65	7.13%	$ 37.07	-6.88%
15,000	42.84	$ 45.70	6.68%	$ 39.78	-7.14%
16,000	45.87	$ 48.75	6.28%	$ 43.59	-4.97%
17,000	48.90	$ 51.80	5.93%	$ 47.40	-3.07%
18,000	51.93	$ 54.85	5.62%	$ 51.21	-1.39%
19,000	54.96	$ 57.90	5.35%	$ 55.02	0.11%
20,000	57.99	$ 60.95	5.10%	$ 58.83	1.45%
25,000	73.14	$ 76.20	4.18%	$ 77.88	6.48%
30,000	88.29	$ 91.45	3.58%	$ 96.93	9.79%
35,000	103.44	$ 109.75	6.10%	$ 115.98	12.12%
40,000	118.59	$ 128.05	7.98%	$ 135.03	13.86%
45,000	133.74	$ 146.35	9.43%	$ 154.08	15.21%
50,000	148.89	$ 164.65	10.58%	$ 173.13	16.28%
75,000	224.64	$ 256.15	14.03%	$ 268.38	19.47%
100,000	300.39	$ 347.65	15.73%	$ 363.63	21.05%

Monthly Charge for:	Present	Company Proposed Rates	RUCO Recommended Rates
Monthly Residential Service	$ 38.99	$ 41.62	$ 39.06
Low Income Residential Service	33.14	35.38	33.20
Multi-Unit Housing - Monthly per Unit	36.19	38.63	36.29
Commercial:			
Small Commercial - Monthly Service	65.93	70.37	66.12
Measured Service:			
Regular Domestic:	36.91	39.40	37.00
Monthly Service Charge	3.22	3.44	3.22
Commodity Charge per 1,000 gallons			
Restaurant, Motels, Grocery Stores & Dry Cleaning Estab.1			
Monthly Service Charge	36.91	39.40	37.00
Commodity Charge per 1,000 gallons	4.30	4.59	4.31
Wigwam Resort:			
Monthly Rate - Per Room	36.19	39.40	36.30
Main Hotel Facilities - Per Month	1,433.30	1,529.90	1,438.00
Schools - Monthly Service Rates:			
Elementary Schools	974.64	1,040.33	977.37
Middile Schools	1,146.64	1,223.92	1,150.00
High Schools	1,146.64	1,223.92	1,150.00
Community College	1,777.29	1,897.08	1,782.50
Effluent2:			

1 Motels without restuarants charged multi-unit monthly rate.
2 Market Rate - Maximum effluent rate shall not exceed $430 per acre foot based on a potable water rate of $1.32 per thousand gallons.
Late Payment Penalty

Litchfield Park Service Company - Wastewater Division
Docket No. SW-01428A-13-0042 ET AL.
Test Year Ended: December 31, 2013

Schedule RBM WW RD-2

Typical Bill Analysis
Residential

Company Proposed	Gallons	Present Rates	Proposed Rates	Dollar Increase	Percent Increase
Average Usage	-	$ 38.99	$ 41.62	$ 2.63	6.75%
Median Usage	-	38.99	41.62	$ 2.63	6.75%
RUCO Recommended					
Average Usage	-	$ 38.99	$ 39.06	$ 0.07	0.18%
Median Usage	-	38.99	39.06	$ 0.07	0.18%

12/10 last week

EXHIBIT
R-4
ADMITTED

TABLE OF CONTENTS

I. GENERAL DESCRIPTION 2
II. DEFINITIONS 2
III. SIB RELATED FILINGS 4
IV. SURCHARGE CALCULATIONS 6
V. ADDING PROJECTS TO SIB TABLE I UNDER EMERGENCY CIRCUMSTANCES 8
VI. RATE DESIGN 9
VII. SURCHARGE IMPLEMENTATION 10

ATTACHMENTS

SIB PLANT TABLE I

SIB PLANT TABLE II

CALCULATION OF OVERALL SIB REVENUE REQUIREMENTS AND EFFICIENCY CREDIT ..... ATTACHMENT A

CALCULATION OF SIB TRUE-UP REVENUE REQUIREMENTS ADJUSTMENT ..... ATTACHMENT B

TYPICAL BILLS ANALYSIS ..... ATTACHMENT C

SUMMARY OF REVENUE AND RATE BASE IMPACTS INCLUDING EARNINGS TEST ..... ATTACHMENT D

I. GENERAL DESCRIPTION

This document is the Plan of Administration ("POA") for the System Improvement Benefits ("SIB") Mechanism approved for Liberty Utilities (Litchfield Park Water & Sewer) Corp.'s ("LPSCO" or "Company") water and wastewater divisions by the Arizona Corporation Commission ("ACC" or "Commission") in Decision No. _____ on _____. The SIB provides for recovery of the capital costs (return on investment, income taxes and depreciation expense) associated with distribution/collection system improvement projects listed in SIB Plant Table I that have been verified to be completed[1] and placed in service per SIB Plant Table II and where costs have not been included in rate base for recovery in Decision No._____. Any expenditures offset by contributions in aid of construction or advances in aid of construction are not eligible for inclusion in the SIB.

Since the SIB covers the water and wastewater infrastructure, all SIB tables, details and associated calculations will have separate water and wastewater components.

II. THE SYSTEM IMPROVEMENT BENEFITS MECHANISM

In Docket Nos. SW-01428A-13-0042 and W-01427A-13-0043, the Company sought approval of a SIB for both its water and wastewater divisions. The Company sought approval of a SIB mechanism to provide for recovery of the capital costs (return on investment, income taxes and depreciation expense) associated with distribution/collection system improvement projects that have been verified to be completed and placed in service where costs have not been included in rate base for recovery in Decision No. _____.

As determined in Decision No. _____, implementation of a SIB for the Company's water and wastewater divisions, respectively, will serve the public interest by allowing Liberty to make significant plant investments in its water and wastewater systems to maintain and/or improve service to existing customers in a way that will lessen the impact of necessary rate increases by allowing smaller, more incremental rate increases to cover the costs of these necessary plant investments. As determined in Decision No. _____, the costs of these water and wastewater projects, the benefits of rate gradualism for both water and wastewater customers, and the other factors set forth in the record justifies implementation of a SIB and Collection System Improvement Benefit ("CSIB") Mechanism for Liberty's water and wastewater divisions.

III. DEFINITIONS

- NARUC – National Association of Regulatory Utility Commissioners

[1] Acceptable form of verifications may include the Arizona Department of Environmental Quality Approval of Construction, Professional Engineer's Certificate of Completion, etc.

- SIB – System Improvement Benefit mechanism to be implemented between rate proceedings to support investment in plant recorded in SIB Eligible NARUC accounts.

- SIB Eligible Plant – Investments in plant recorded in SIB Eligible NARUC accounts.

- SIB Eligible NARUC water accounts:

  - NARUC Account No. 331 –Valves

  - NARUC Account No. 333 – Services

  - NARUC Account No. 334 - Meters and Meter Installations;

  - NARUC Account No. 335 – Hydrants

- SIB Eligible NARUC wastewater accounts:

  - NARUC Account No. 361 – Collection Mains

  - NARUC Account No. 363 - Services

- SIB Plant Table I – The schedule of planned SIB eligible projects approved in the Company's most recent rate case decision.

- SIB Plant Table II – The schedule of completed and verified SIB eligible projects, from SIB Plant Table I and associated retirements.

- SIB Revenue Requirement – The revenue requirement equal to the return on investment, income taxes and depreciation expense necessary to support the SIB Plant Table II amounts.

- SIB Revenue Requirement Efficiency Credit – An amount equal to 5 percent of the SIB Revenue Requirement.

- SIB Authorized Revenue – Amount equal to the SIB Revenue Requirement less the SIB Revenue Requirement Efficiency Credit plus any SIB True up Adjustment.

- Gross SIB Surcharge – Amount to be shown on customers' bills based on meter sizes without consideration to the SIB Surcharge Efficiency Credit.

- SIB Surcharge Efficiency Credit – An amount equal to 5 percent of the Gross SIB Surcharge to be shown on customers' bills.

- SIB Surcharge – The amount equal to the Gross SIB Surcharge less the SIB Surcharge Efficiency Credit to be charged based on meter size, calculated to recover the SIB Authorized Revenue, to be shown on the customers' bills.

- SIB True-up Adjustment – An amount to adjust for over or under collection of the SIB Authorized Revenues as compared with the total Net SIB Surcharges collected for the preceding 12 month period. Each true–up shall also analyze the cumulative over or under collections to include a comparison of all past SIB Authorized Revenues, total Net SIB Surcharges, and prior true-ups to be used in calculation of the SIB true-up surcharge or credit.

IV. SIB RELATED FILINGS

A. Progress Reports – Once a SIB is approved in a decision, the Company must file with Docket Control semi-annual status reports delineating the status of all SIB Eligible Plant, on a project by project basis as listed in SIB Plant Table I, starting 6 months after the decision and every 6 months thereafter.

B. Reconciliation and True Up – Once a SIB Surcharge is implemented, the Company must file annually to true up its SIB Surcharge collections over the preceding twelve months with the SIB Authorized Revenue for that period and establish a surcharge or credit to true up over or under collections, regardless of whether it seeks a new surcharge. The filing dates for these annual true-ups shall be as established in the Commission's Decision approving the SIB Surcharge.

C. SIB Surcharge Requests – To obtain its SIB Surcharge, the Company must file the following:

1. SIB Plant Table II (with supporting information and documentation), showing the SIB eligible projects completed for which the Company seeks cost recovery. Such projects must

   a) be projects listed in the Company's initial SIB Plant Table I, approved in Decision No._____, or have been added to said SIB Plant Table I pursuant to Section V of this POA;

   b) have been completed by the Company;

   c) have been verified; and

d) be actually serving customers.

2. A summary of Commission approved SIB-eligible projects contemplated for the next twelve (12)-month SIB surcharge period from SIB Plant Table I.

3. SIB Schedule A, showing a calculation of the SIB Revenue Requirement and SIB Revenue Requirement Efficiency Credit, SIB Authorized Revenue, Gross SIB Surcharge, SIB Surcharge Efficiency Credit, and the SIB Surcharge. Schedule A shall be supported by revenue requirements schedules supporting the revenue requirements in Decision No. _____ and the pro-forma revenue requirements including the effects of SIB Eligible Plant.

4. Schedule B showing the overall SIB True-up Adjustment calculation for the prior twelve-month SIB Surcharge period, as well as the individual SIB True-up Adjustment for each meter size.

5. SIB Schedule C showing the effect of the SIB Surcharge on a typical residential customer bill for both median and average usage.

6. SIB Schedule D which shall include an analysis of the impact of the SIB Eligible Plant on the fair value rate base, revenue, and the fair value rate of return. The Company shall also file the following:

a) the most current balance sheet at the time of the filing;

b) the most current income statement;

c) an earnings test schedule;

d) a rate review schedule (including the incremental and pro forma effects of the proposed increase);

e) an adjusted rate base schedule; and

f) a Construction Work in Progress ledger (for each project showing accumulation of charges by month and paid vendor invoices).

D. The Company will maintain and provide Excel schedules with formulae intact supporting the revenue requirements approved in the rate decision that approved the SIB and provide those same Excel schedules to incorporate the effects of SIB

Eligible Plant for the current SIB Surcharge Request and any previously approved Surcharge and True-up requests.

E. The Company may make its initial SIB Surcharge Request through Docket Control no earlier than twelve months after the entry of Decision No._____.

F. The Company may make no more than one SIB Surcharge Request every twelve months with no more than five SIB Surcharge Requests between rate case decisions. A True-up must be filed with each Surcharge Request, except the first.

G. Unless otherwise authorized by the Commission, the Company shall be required to file its next general rate case no later than June 30, 2019, with a test year ending no later than December 31, 2018.

H. Any SIB Surcharges that are in effect shall be reset to zero upon the date new rates become effective in the Company's next general rate case.

I. The Company may request to add Plant to SIB Table I only under emergency circumstances. An y additions or modifications to SIB Plant Table I must be approved by the Commission.

V. SURCHARGE CALCULATIONS

A. Calculations of Amounts to Be Collected By the SIB Surcharge.

1. The amount to be collected by the SIB Authorized Revenue shall be equal to the SIB Revenue Requirement minus the SIB Revenue Requirement Efficiency Credit plus any SIB True up Adjustment.

For purposes of calculating the SIB Revenue Requirement:

a. The required rate of return is equal to the overall rate of return authorized in Decision No. _____.

b. The gross revenue conversion factor/tax multiplier is equal to the gross revenue conversion factor/tax multiplier approved in Decision No. _____.

c. The applicable depreciation rate(s) is equal to the depreciation rate(s) approved in Decision No. _____.

2. The project cost to be used in calculating the SIB Revenue Requirement shall be the lesser of the actual project cost listed in SIB Plant Table II or 110 percent of the estimated cost listed in SIB Plant Table I as approved in Decision No. _____. Unit costs shall be used if actual units constructed are less than estimated in SIB Plant Table II.

3. The amount to be collected by each SIB Surcharge Request shall be capped annually at five percent of the revenue requirement authorized in Decision No. _____.

B. Reconciliation And True-Ups

1. The revenue collected by the total SIB Surcharges over the preceding twelve months shall be trued-up and reconciled with the SIB Authorized Revenue for that period.

2. A new SIB Surcharge shall be combined with an existing SIB Surcharge such that a single SIB surcharge and SIB Efficiency Credit are shown on a customer's bill.

3. For each twelve (12) month period that a SIB surcharge is in effect, the Company shall reconcile the amounts collected by the SIB Surcharge with the SIB Authorized Revenue for that twelve (12)-month period consistent with Schedule B, attached hereto as Exhibit B.

4. Any under- or over-collected SIB Authorized Revenues shall be recovered or refunded, without interest, over a twelve-month period by means of a SIB True-up Surcharge or Credit.

5. Starting with the second annual SIB Surcharge, where there are over-collected or under-collected balances, such over-collected or under-collected balances shall be carried over to the next year, and considered in the calculation of the new SIB True-up Surcharge or Credit. If, after the five-year period, there remains an over-collected or under-collected balance, such balance shall be reset to zero, and addressed in the next rate case.

C. Earnings Test

1. Once a SIB Surcharge is in effect, the Company shall be required to perform an annual earnings test calculation for each SIB Surcharge Request to determine whether the actual rate of return reflected by the operating income for the affected system or division for the relevant 12-

month period exceeded the most recently authorized fair value rate of return for the affected system or division.

2. The earnings test shall be:

a) based on the most recent available operating income,

b) adjusted for any operating revenue and expense adjustments adopted in the most recent general rate case; and

c) based on the rate base adopted in the most recent general rate case, updated to recognize changes in plant, accumulated depreciation, retirements, contributions in aid of construction, advances in aid of construction, and accumulated deferred income taxes through the most recent available financial statement (quarterly or longer).

VI. ADDING PROJECTS TO SIB TABLE I UNDER EMERGENCY CIRCUMSTANCES

A. The Company can seek Commission approval to add projects in SIB Plant Table I only in the event of emergency circumstances. No such changes may be made without Commission approval.

B. Any addition to SIB Plant Table I must be plant investment that maintains or improves existing customer service, system reliability, integrity and safety. Eligible plant additions are limited to plant replacement projects. The costs of extending facilities or capacity to serve new customers are not recoverable through the SIB mechanism.

C. To be eligible for SIB treatment, a project must be SIB Eligible Plant.

D. SIB Eligible Plant must satisfy at least one of the following conditions:

1. Water loss for the system exceeds ten (10) percent, as calculated by the following formula: ((Volume of Water Produced and/ or Purchased) – (Volume of Water Sold + Volume of Water Put to Beneficial Use)) divided by (Volume of Water Produced and/or Purchased). If the Volume of Water Put to Beneficial Use is not metered, it shall be established in a reliable, verifiable manner.

2. Plant assets that have remained in service beyond their useful service lives (based on the Company's system's authorized utility plant depreciation

rates) and are in need of replacement due to being worn out or in a deteriorating condition through no fault of the Company.

3. Any other engineering, operational or financial justification supporting the need for a plant asset replacement, other than the Company's negligence or improper maintenance, including, but not limited to:

   a. A documented increasing level of repairs to, or failures of, a plant asset justifying its replacement prior to reaching the end of its useful service life (e.g. black poly pipe);

   b. Assets that are required to be moved, replaced or abandoned by a governmental agency or political subdivision if the Company can show that it has made a good faith effort to seek reimbursement for all or part of the costs incurred.

VII. RATE DESIGN

A. The SIB Surcharge rate design shall be calculated as follows:

   1) The SIB Water Surcharge shall be a fixed monthly surcharge containing a Gross SIB Surcharge and the SIB Surcharge Efficiency Credit as its two components.

   2) The SIB Surcharge shall be calculated by dividing the SIB Authorized Revenue by the number of equivalent active 5/8-inch meters at the end of the most recent twelve (12) month period, and shall increase with meter size based on the following meter capacity multipliers:

5/8-inch x ¾-inch	1.0 times
¾-inch	1.5 times
1-inch	2.5 times
1½-inch	5 times
2-inch	8 times
3-inch	16 times
4-inch	25 times
6-inch	50 times
8-inch	80 times
10-inch & above	115 times

B. The SIB Surcharge shall apply to all of the Company's metered customers, including private fire service customers.

C. The SIB Wastewater Surcharge rate design shall be calculated in a similar manner to the wastewater rate design approved in Decision No. _____.

D. The SIB Water and Wastewater Surcharges shall be two separate surcharges on the bill referencing a total of four lines as follows: SIB Water Surcharge, SIB Water Efficiency Credit, SIB Wastewater Surcharge, SIB Wastewater Efficiency Credit. The Company may modify such billing references if the Company's billing system cannot programmatically include the full description on customer bills.

VIII. SURCHARGE IMPLEMENTATION

A. SIB surcharges shall not become effective until approved by the Commission.

B. At least 30 days prior to the SIB surcharge becoming effective, the Company shall provide public notice in the form of a billing insert or customer letter in a form acceptable to Staff. Such notice shall include the following information:

1. The individual Gross SIB Surcharge, by meter size;

2. The individual SIB Surcharge Efficiency Credit, by meter size;

3. SIB Surcharge, by meter size; and

4. Directions where the customer may obtain a summary of the projects included in the current SIB Surcharge Request, including a description of each project and its cost.