RECEIVED
AZ CORP COMMISSION
DOCKET CONTROL
2013 MAY 22 PM 2 33

Transcript Exhibit(s)

Docket #(s): W-01445A-12-0348

Arizona Corporation Commission
DOCKETED
MAY 22 2013
DOCKETED BY ne

Exhibit #:A11-Section 1

Part 5 of 14. FOR PART 1 PLEASE SEE BARCODE 0000151150, FOR PART 2 SEE BARCODE 0000151151, FOR PART 3 SEE BARCODE 0000151152, FOR PART 4 SEE BARCODE 0000151153, FOR PART 6 SEE BARCODE 0000151155, FOR PART 7 SEE BARCODE 000151156 FOR PART 8 PLEASE SEE BARCODE 0000151157, FOR PART 9 SEE 0000151158, FOR PART 10 SEE BARCODE 0000151159, FOR PART 11 SEE BARCODE 0000151160, FOR PART 12 SEE BARCODE 0000151161, FOR PART 13 SEE BARCODE 0000151162 FOR PART 14 SEE BARCODE 000151163

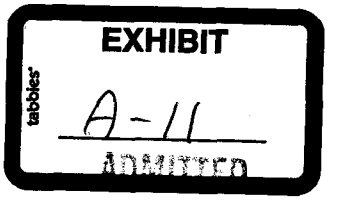

ARIZONA WATER COMPANY

Docket No. W-01445A-12-

2012 RATE HEARING

(For Test Year Ending 12/31/11

PREPARED

DIRECT TESTIMONY & EXHIBITS

OF

Fredrick K. Schneider

TABLE OF CONTENTS

I. INTRODUCTION AND QUALIFICATIONS 5

II. PURPOSE AND EXTENT OF DIRECT TESTIMONY 8

III. POST-TEST YEAR PLANT ADDITIONS 10

A. NAVAJO DIVISION 10

i. LAKESIDE (09-003)

ii. OVERGAARD (09-004)

iii. PINETOP LAKES (09-018)

B. VERDE VALLEY DIVISION 18

i. PINEWOOD (03-002)

ii. RIMROCK (13-046)

iii. SEDONA (03-003)

iv. VALLEY VISTA (13-114)

C. PHOENIX OFFICE 27

IV. DESCRIPTION OF COMPANY-FUNDED CONSTRUCTION BUDGETING PROCEDURES 28

V. DESCRIPTION OF COMPANY-FUNDED UTILITY PLANT ADDITIONS FOR THE NORTHERN GROUP 30

A. NAVAJO DIVISION 31

i. FOREST TOWNE (09-002)

ii. LAKESIDE (09-003)

iii. OVERGAARD (09-004)

iv. PINETOP LAKES (09-018)

B. VERDE VALLEY DIVISION 33

i. PINEWOOD (03-002)

ii. RIMROCK (13-046)

iii. SEDONA (03-003)

iv. VALLEY VISTA (13-114)

VI. PROPOSED ARSENIC REMOVAL FACILITIES 36

VII. TRANSMISSION AND DISTRIBUTION SYSTEM MAINTENANCE 39

VIII. FACILITIES CONSTRUCTED USING OFF–SITE FACILITIES FEES 41

IX. REDUCING WATER LOSS – CURRENT PROGRAM 44

X. REDUCING WATER LOSS – DISTRIBUTION SYSTEM IMPROVEMENTS 50

APPENDICES AND EXHIBITS

POST-TEST YEAR PLANT ADDITIONS – PROJECT DETAIL FKS-1

SOUTHWEST CENTER WELL NO. 8 ARSENIC TRENDS FKS-2

SOUTHWEST CENTER WELL NO. 8 ARSENIC REMOVAL FACILITY CONSTRUCTION DRAWINGS FKS-3

SOUTHWEST CENTER WELL NO. 8 ARSENIC REMOVAL FACILITY CONSTRUCTION SCHEDULE FKS-4

SOUTHWEST CENTER WELL NO. 8 ARSENIC REMOVAL FACILITY COST ESTIMATE FKS-5

ZANE GREY WELL NO. 3 ARSENIC TRENDS FKS-6

ZANE GREY WELL NO. 3 ARSENIC REMOVAL FACILITY SITE PLAN FKS-7

ZANE GREY WELL NO. 3 ARSENIC REMOVAL FACILITY DESIGN AND CONSTRUCTION SCHEDULE FKS-8

ZANE GREY WELL NO. 3 ARSENIC REMOVAL FACILITY COST ESTIMATE FKS-9

MOGOLLON WELL NO. 5 ARSENIC TRENDS FKS-10

MOGOLLON WELL NO. 5 ARSENIC REMOVAL FACILITY SITE PLAN FKS-11

MOGOLLON WELL NO. 5 ARSENIC REMOVAL FACILITY
DESIGN AND CONSTRUCTION SCHEDULE FKS-12
MOGOLLON WELL NO. 5 ARSENIC REMOVAL FACILITY
COST ESTIMATE FKS-13
OFF-SITE FACILITIES FEE – NEEDS ASSESSMENT FKS-14
OFF-SITE FACILITIES FEE – CONCEPTUAL SITE PLAN FKS-15
OFF-SITE FACILITIES FEE – COST ESTIMATE FKS-16
OFF-SITE FACILITIES FEE – CONSTRUCTION SCHEDULE FKS-17
EXCERPTS FROM THE ADWR THIRD MANAGEMENT PLAN FKS-18
WATER LOSS REDUCTION PROGRAM FOR
WATER SYSTEMS IN THE NORTHERN GROUP FKS-19
A REPORT ON ARIZONA WATER COMPANY'S PLAN TO REDUCE
WATER LOSSES FKS-20
OVERGAARD INFRASTRUCTURE REPLACEMENT COST ESTIMATE FKS-21
PINETOP LAKES INFRASTRUCTURE REPLACEMENT COST ESTIMATE FKS-22
PINEWOOD INFRASTRUCTURE REPLACEMENT COST ESTIMATE FKS-23
RIMROCK INFRASTRUCTURE REPLACEMENT COST ESTIMATE FKS-24
SEDONA INFRASTRUCTURE REPLACEMENT COST ESTIMATE FKS-25
BURIED NO LONGER: CONFRONTING AMERICA'S WATER
INFRASTRUCTURE CHALLENGE,
AMERICAN WATER WORKS ASSOCIATION, 2012 ..... FKS-26

ARIZONA WATER COMPANY

Direct Testimony of

Fredrick K. Schneider

I. **Introduction and Qualifications**

Q. PLEASE STATE YOUR NAME, EMPLOYER AND OCCUPATION.

A. My name is Fredrick K. Schneider. I am employed by Arizona Water Company (the "Company") as Vice President of Engineering. My business address is 3805 N. Black Canyon Highway, Phoenix, Arizona 85015.

Q. PLEASE DESCRIBE YOUR EDUCATIONAL BACKGROUND.

A. I graduated in 1990 with a Bachelor of Science degree in Hydrology from the College of Engineering and Mines at the University of Arizona, in Tucson, Arizona. Additionally, I have taken graduate level classes at the University of Phoenix.

Q. PLEASE DESCRIBE YOUR WORK EXPERIENCE.

A. In 1987, I began working for the United States Department of Agriculture performing chemical and granular gradation laboratory soils analysis. In 1988, I accepted a position with the City of Tucson as an Engineering Intern in its Engineering department performing civil engineering site reviews, and later transferred to the Water department working on groundwater modeling, environmental remediation and groundwater contamination investigation until I graduated from the University of Arizona in 1990.

Upon obtaining my degree, I joined Boyle Engineering Corporation in Phoenix, Arizona as an Assistant Engineer and was later promoted to the position of Associate Engineer. Boyle Engineering provides consulting engineering services to the public and private sectors in the areas of water and wastewater. During this time, I was involved in a variety of consulting

assignments, including all phases of system planning and design, reconnaissance level investigations, feasibility studies and construction phase services, including water and wastewater master planning, groundwater supply development, surface water supply development, storage reservoir design and construction, treatment facilities, pipeline systems and wastewater collection, treatment and disposal.

In 1995, I accepted a position with Wood, Patel and Associates in Phoenix, Arizona. During that time, my duties consisted of engineering design and project management for various water and wastewater pipeline feasibility analyses, evaluation of alternatives, cost estimating, detailed hydraulic analysis and master planning new developments ranging in size from several hundred to several thousand acres.

In 1998, I joined Citizens Water Resources ("Citizens") as a Senior Development Engineer. I was later promoted to the position of Development Services Supervisor, where I negotiated development agreements, reviewed water and wastewater master plans and facility infrastructure plans, and was responsible for the inspection and approval of constructed facilities for projects within the metropolitan Phoenix area. I became an employee of Arizona American Water Company ("Arizona-American") when its parent company, American Water Company, purchased the water and wastewater assets of Citizens on January 15, 2001. Subsequently, I was promoted to the position of Development Services Manager, and was responsible on a statewide basis for the same duties described above. In 2003, I moved from engineering to operations when I was promoted to the position of Manager of Arizona-American. I was responsible for all of the operations of Arizona-American's water and wastewater treatment facilities, distribution and collection facilities and customer service. In May 2004, I was promoted to the position of Director of Engineering

for American Water Company's Western Region, where my responsibilities included overseeing all capital planning and engineering activities for American Water Company's operations in Arizona, California, Hawaii, New Mexico and Texas.

In October 2005, I accepted a position as an Associate with Brown and Caldwell, managing the Phoenix Infrastructure department including the design, project management and construction administration of water and wastewater infrastructure projects within the metropolitan Phoenix area.

In August 2007, I joined Arizona Water Company as Vice President of Engineering where my responsibilities include capital planning, design and construction management of all of the Company's engineering projects.

Q. ARE YOU A MEMBER OF ANY PROFESSIONAL ORGANIZATIONS?

A. Yes. I am a member of the American Water Works Association ("AWWA") and the Arizona Water Association. I was also a member of the Infrastructure Replacement Group of the Blue Ribbon Panel on Sustainability, a panel formed to address water sustainability that was jointly chaired by the Arizona Corporation Commission (the "Commission"), the Arizona Department of Water Resources ("ADWR") and the Arizona Department of Environmental Quality ("ADEQ").

Q. ARE YOU A REGISTERED PROFESSIONAL ENGINEER?

A. Yes. I have been a registered professional engineer in the State of Arizona since 1995.

Q. DO YOU HAVE ANY OTHER CERTIFICATIONS?

A. Yes. I am an ADEQ Grade 2 certified operator in Water and Wastewater Treatment and a Grade 3 certified operator in Water Distribution and Wastewater Collection.

Q. HAVE YOU TESTIFIED PREVIOUSLY BEFORE THE COMMISSION?

A. Yes. I have testified in rate proceedings and Certificate of Convenience and Necessity ("CCN") hearings before the Commission. In addition, I have testified in California before the California Public Utilities Commission and prepared pre-filed testimony in Hawaii and New Mexico. I testified in the Company's last three general rate applications: the total Company (Docket No. W-01445A-08-0440), the Company's Western Group (Docket No. W-01445A-10-0517) and the Company's Eastern Group (Docket No. W-01445A-11-0310).

II. Purpose and Extent of Direct Testimony

Q. WHAT IS THE PURPOSE AND EXTENT OF YOUR DIRECT TESTIMONY?

A. For ratemaking purposes, the Company's water systems are divided into three groups: the Western, Eastern and Northern Groups. My direct testimony concerns the Northern Group, which is comprised of the Navajo and the Verde Valley Divisions. The Navajo Division includes the Forest Towne, Lakeside, Overgaard and Pinetop Lakes public water systems, as shown below, which were consolidated for rate and accounting purposes in Decision No. 71845.

Navajo Division ADEQ Public Water Systems	
Water System	**PWSID No.**
Forest Towne	09-002
Lakeside	09-003
Overgaard	09-004
Pinetop Lakes	09-018

The Verde Valley Division includes the Pinewood, Rimrock, Sedona and Valley Vista public water systems, as shown below. In Decision No. 71845 the Pinewood and Rimrock water systems were fully consolidated for rate and accounting purposes into the Verde Valley Division, which was partially consolidated with the Sedona and Valley Vista water systems.

Verde Valley Division ADEQ Public Water Systems	
Water System	**PWSID No.**
Pinewood	03-002
Rimrock	13-046
Sedona	03-003
Valley Vista	13-114

My direct testimony discusses:

1. Critical and necessary post-Test Year plant additions which are now or soon will be in service in the Navajo and Verde Valley Divisions and the reasons why such additions should be included in this rate case.
2. The Company's planning and budgeting process for the construction of plant additions and improvements;
3. The Company-funded utility plant additions since the last rate proceeding.
4. Proposed arsenic removal facilities in the Navajo and Verde Valley Divisions;
5. Company-wide transmission and distribution system maintenance costs; and
6. The Company's proposed East Sedona Storage and Water Supply projects and related water infrastructure in the Sedona water system associated with the Off-Site Facilities Fee.

Finally, my direct testimony discusses lost and unaccounted for water (which I characterize as system water loss throughout this direct testimony) and the replacement of service lines and water mains required to reduce water loss in the Pinewood, Rimrock, Overgaard, Pinetop Lakes and Sedona water systems to comply with Commission directives in Decision No. 71845 for the company to prepare and file a Water Loss Report.

Q. DID THE COMPANY FILE THAT WATER LOSS REPORT WITH DOCKET CONTROL?

A. Yes. A copy of that report is attached hereto as Exhibit FKS-20. Results of this report and the Company's most recent analysis is discussed further in Section X of this testimony.

III. Post-Test Year Plant Additions

Q. IS THE COMPANY PROPOSING TO INCLUDE ANY POST-TEST YEAR PLANT ADDITIONS?

A. Yes. The Company is proposing that Post-Test Year Plant Additions for the Navajo and Verde Valley Divisions be included in Test Year rate base.

Q. PLEASE DESCRIBE THOSE ADDITIONS.

A. Those utility plant additions include projects which are identified and described below and listed by water system and Division. Exhibit FKS-1 contains detailed project information and descriptions of those utility plant additions as well as supporting data.

A. Navajo Division

i. Lakeside (PWSID No. 09-003)

Replace Problematic and Failing Automatic Controls at Moonridge Well Site, Moonridge Tank Site and Office (WA 1-4920) – Phone lines currently transmit control signals from the Moonridge Tank site to the office and from the Moonridge Tank site to the Moonridge Well. Recurring or frequent phone line failures impair the reliability of automatic controls for the Moonridge Well. Deterioration and damage to phone lines lead to short circuits frequently and cause the automatic controls at these sites to fail. These problems occur most frequently when it rains. During periods of high demand, failures of the automatic controls in the Lakeside system cause low pressure and water storage shortages. Ancillary equipment at these sites also needs to be replaced because

the equipment is obsolete, replacement and repair parts are not available and the equipment has begun to fail. As an example, the Moonridge Tank site control system includes a transducer and pulse duration recorder and electromechanical devices which were manufactured several decades ago by Acco-Bristol.

The project consists of the installation of three wireless telemetry control units to replace obsolete hard-wired phone line controls. An ACE 3600 wireless radio is being installed at the Moonridge Tank site, office and Moonridge Well site. Tank level information is transmitted wirelessly to the office transceiver, which is then displayed on a chart recorder. The Moonridge Well transceiver also receives tank level information and its associated programmable logic controller ("PLC") starts and stops the well based on preconfigured set points. These automatic controls are needed to provide safe, reliable, and adequate water service. Cost estimates, proposal/contract, and schedules are included in Exhibit FKS-1. This project will be completed and placed in service on or before December 31, 2012. The total estimated cost to complete this project is $70,000.

Replace Approximately 450 LF of Failing 3-inch Plastic with 6-inch Ductile Iron Pipe on Hidden Pines Drive (WA 1-4921) – The existing 3-inch plastic water main was installed in 1962. Several repairs have been made on this main in recent years (as shown in Exhibit FKS-1). This water main is the sole feed (single source) to approximately 200 customers in the Hidden Pines development. Frequent breaks and leaks cause water service interruptions to the customers in the Hidden Pines Development. Failures of plastic water main typically involve longitudinal splits, requiring large excavations of water service. Based on the frequency of leaks, breaks, and disruptions in service to customers and the Company's assessment of the condition of this water main, the Company included this water main replacement project in its construction budget for 2012.

This section of water main along Hidden Pines Drive is part of an ongoing water main replacement program in the Hidden Pines area of Lakeside.

This project replaces approximately 450 linear feet of failing 3-inch plastic water main with 6-inch ductile iron water main along Hidden Pines Drive from Highway 260 to Norbert Lane. The Company replaced this water main to reduce water loss and maintain safe, reliable and adequate water service. Cost estimates, proposal/contract, construction drawings, leak maps, a survey information, pictures and the completion notice are included in Exhibit FKS-1. This project was completed on May 25, 2012 and is now in service. The total cost to complete this project was $39,981.

Replace 21 Wireless Telemetry and Voice Communication Units to Comply with Federal Communications Commission ("FCC") Narrowband Regulations (WA 1-4926) – The Company's existing telemetry control and wireless communication systems operate within the 150-174 MHz (VHF) and 421-512 MHz (UHF) frequencies at 25 kHz bandwidths and are subject to federally mandated narrowband regulations. These telemetry control systems are used to control well, tank and booster pump station operation necessary to provide water service to the Company's customers.

Under the Code of Federal Regulations ("CFR") Title 47, Section 90.209(b)(5), the FCC mandated that all Industrial/Business licensees operating within VHF or UHF frequencies comply with the 12.5 kHz bandwidth (narrowband) regulations by January 1, 2013. Accordingly, the Company is modifying or replacing 21 wireless telemetry and communication units (7 telemetry and 14 voice communication devices) in its Lakeside system to comply with the narrowband regulations. This project modifies or replaces exiting wireless telemetry units at the Lakeside Office, Pine Lakes Tank, Lower Woodland Well No. 6, Sandy 40 Nate Well No. 7, Rim Tank, Larson Road Well

No. 4 and Timber Lake Pines Tank. This project also modifies or replaces wireless voice communication units, the base station at the Lakeside office, 11 mobile unit radios, and two handheld radios. A copy of CFR Title 47 Section 90.209 and a power point presentation explaining the FCC Narrowband mandate are included in Exhibit FKS-1 along with cost estimates, proposal/contract, vicinity maps, and a schedule. This project will be completed and placed in service by December 31, 2012. The total estimated cost to complete this project is $59,982.

Install 900 LF of 6-inch Ductile Iron Pipe on Rim Road and Green Valley Road to Increase Pressure in Areas with Low Pressure (WA 1-4927) – Fire hydrant testing or water main flushing causes low pressures in this area. Existing customers along Green Valley Road receive water service from gravity flow water storage tanks in the Lakeside system. This water main installation project will increase and help stabilize system pressures in this area, especially when fire hydrants are in use or when water mains are flushed.

The project includes the installation of approximately 900 linear feet of 6-inch ductile iron water main on Rim Road and Green Valley Road. This project increases water pressure to these customers by extending service to a higher pressure zone (Hydro Zone). Pressures will be more stable and will increase from less than 40 psi (and even less during fire hydrant testing) to approximately 70 psi with an associated increase in flow capacity. The increase in system pressure will help to provide safe, reliable, and adequate water service and improve water service to these customers. Cost estimates, proposal/contract, construction drawings, and approval of construction are included in Exhibit FKS-1. This project was completed on July 5, 2012, and is now in service. Final accounting is not complete. The total estimated cost to complete this project is $60,000.

ii. Overgaard (PWSID No. 09-007)

Purchase Additional Property at Mogollon No. 5 Well Site for Arsenic Removal Facility (WA 1-4923) – Arsenic levels have been increasing toward the MCL of 10ppb as shown in the graph included in Exhibit FKS-10. Based on the water quality testing results, the water from the well requires treatment to ensure compliance with safe drinking water regulations. The existing site is approximately 50 ft x 50 ft and too small to accommodate an arsenic removal facility. Additional property is needed at the Mogollon Well No. 5 site to construct an arsenic removal facility (as shown in the proposed site plan included in Exhibit FKS-1). Additional property is available adjacent to the existing site on Mogollon Drive.

Purchasing this property for the construction of an arsenic removal facility is necessary for the Company's provision of safe, reliable, and adequate water service. Until the arsenic treatment facility is constructed, the site will be fenced and used to store Company materials and supplies since additional storage space in the Overgaard water system is needed. Cost estimates, site plan, schedule, and photographs are included in Exhibit FKS-1. This property will be acquired by December 31, 2012. The total estimated cost to complete this acquisition is $50,000.

Retrofit 75 Meter Boxes for Freeze Protection (WA 1-4924) – As of May 31, 2012, water loss is at 12.58 percent in the Overgaard water system. Approximately 68 percent of all recorded leaks from 2007-2011 were caused by broken freeze plates on meters (as shown in Exhibit FKS-1). Many existing meters were installed before the Company adopted its current depth specifications and are susceptible to freeze damage. Past meter insulation efforts have included fiberglass, foam filled plastic bags and foam insulation.

This project will retrofit approximately 75 meter boxes for freeze protection. The Company will retrofit existing meter boxes to increase depth per Company specifications and make other modifications to reduce the risk and incidence of broken freeze plates. Insulating and lowering meter boxes will help to reduce water loss as mandated by the Commission. Cost estimates, schedule, photographs, and leak map are included in Exhibit FKS-1. This project will be completed and placed in service by November 15, 2012. The total estimated cost to complete this project is $50,000.

Replace Failing Controls at Zane Grey Well Site (WA 1-4925): The automatic controls and wiring at this site are obsolete, failing and need to be replaced. As-built electrical drawings and control descriptions are not available for some of the on-site controls, making maintenance and modifications difficult. The Zane Grey site currently uses time of day and demand-based electrical service. Existing time of day controls do not provide full capacity of the well during peak system demands.

Zane Grey Well No. 3 pumps into on-site storage tanks based on a series of time clocks, and as a result only runs during certain hours of the day. The on-site booster station pumps water from the storage tanks into the distribution system based on another series of time clocks, and its operation is limited to certain hours of the day. Some of these time clocks are failing and replacement parts are not available. The Company will modify portions of the existing electrical controls for the Zane Grey Well No. 3 pump and booster pump station and will replace other portions with PLCs to operate the well and booster pump station based on system demands and tank levels. The modifications and new controls will take advantage of lower off-peak power rates while still allowing for increased production during times of high demand. Cost estimates, schedule, and photographs are included in Exhibit FKS-1. This project will be completed

and placed in service by October 31, 2012. The total estimated cost to complete this project is $40,000.

Replace 15 Wireless Telemetry and Voice Communication Units to Comply with the FCC Narrowband Regulations (WA 1-4926) – As discussed with the Lakeside water system, the Company's existing wireless voice communication equipment and telemetry control systems in Overgaard do not comply with the FCC's new narrowband regulations and must be modified or replaced. These wireless telemetry control systems control well, tank and booster pump station operation and are necessary to provide water service to the Company's customers.

Accordingly, the Company is modifying or replacing 15 wireless telemetry and voice communication units (6 telemetry units and 9 voice communication devices) within the Overgaard system. This project modifies or replaces existing wireless telemetry control units at the Overgaard Office, Timber Lake Pines Tank, Pine Meadows Well No. 2, Holliday Forest Well No. 4, Mogollon Well No. 5 and Zane Grey Well No. 3. This project also modifies or replaces communications equipment at the Overgaard office, six mobile unit radios and two handheld radios. Cost estimates, proposal/contract, schedule and pictures are included in Exhibit FKS-1. This project will be completed and placed in service by December 31, 2012. The total estimated cost to complete this project is $69,647.

iii. Pinetop Lakes (PWSID No. 09-018)

Reconstruct Sanitary Seal at Pinetop Lakes Well No. 1 and 2 (WA 1-4922) – Pinetop Lakes Well Nos. 1 and 2 supply groundwater to the Pinetop Lakes water system . Well No. 1 was constructed in 1982. Based on customer growth, increasing demands and the need for a more reliable source of supply, Well No. 2 was constructed in 1985. At the time these two wells were constructed, a 20-

foot deep concrete sanitary seal was not a requirement of ADWR. Both wells are located near a golf course lake and residential septic systems and could be vulnerable to contamination. A nearby golf course irrigation well is also located close by (as shown in Exhibit FKS-1). Liquid sodium hypochlorite chlorination is injected at the Company's well discharge head for disinfection purposes.

The Company is concerned about these nearby sources of potential contamination. Current ADWR and ADEQ regulations require concrete encasement of the surface casing to protect drinking water sources. Accordingly, Company engineers recommended that a concrete sanitary seal be installed for both wells. In addition to the installation of a concrete sanitary seal, Company engineers recommend continuous chlorine monitoring in accordance with ADEQ requirements to ensure the safety of drinking water achieved by adequate chlorine contact time. Adequate chlorine contact time will be achieved by maintaining a minimum of 5 feet of water in the existing water storage tank, the installation of an on-line chlorine analyzer and PLC to verify continuous chlorine residual.

This project installs concrete sanitary seals for each of the two wells and purchases and installs an on-line chlorine analyzer and PLC to verify continuous chlorine residual. Assuring the safety of drinking water from these wells is critical since both of these well are needed to satisfy the water system's peak summer demands. Contamination of one or both of these wells could impact the safety of the drinking water and cause water shortages for the Pinetop Lakes water system. Cost estimates, construction drawings, vicinity maps, well records, photographs and a schedule are included in Exhibit FKS-1. This project will be completed and placed in service by December 15, 2012. The total estimated cost to complete this project is $50,000.

Replace Two Wireless Telemetry Units to Comply with the FCC Narrowband Regulations (WA 1-4926) – As discussed with the Lakeside water system, the Company's existing wireless telemetry control systems in its Pinetop Lakes system do not comply with the new FCC narrowband regulations and must be replaced. These wireless telemetry units control well, tank and booster pump station operation and are necessary to provide water service to the Company's customers.

Accordingly, the Company is modifying or replacing two wireless telemetry control systems within the Pinetop Lakes system. This project modifies or replaces existing wireless telemetry units at the Pinetop Lakes Million Gallon Tank and Pinetop Lakes Country Club Tank and Booster Pump Station. Cost estimates, proposal/contract and a schedule are included in Exhibit FKS-1. This project will be completed and placed in service by December 31, 2012. The total estimated cost to complete this project is $18,262.

B. Verde Valley Division

i. Pinewood (PWSID No. 03-002)

Replace 43 Failing Services on Kay, Acoma, San Felipe Hopi, Zuni, and Navajo Place (WA 1-4929) – Water loss in the Pinewood water system exceeds 25 percent and has approached 30 percent at times over the past few years. After collecting and inputting leak records into the Company's database for the Pinewood water system (compiled in Exhibit FKS-1), Company engineers developed a service line replacement program, which is detailed in Exhibit FKS-19. This project is the first phase of the service line replacement program for the Pinewood water system. The soil in the Pinewood water system consists of solid rock and cinders as discussed in Section 5.2 of Exhibit FKS-19.

This project replaces 43 failing services on Kay Place, Acoma Place, San Felipe, Hopi, Zuni and Navajo Place due to frequent failure of these plastic

service lines (see attached construction drawings contained in Exhibit FKS-1). Water loss exceeds the Commission mandated 10-percent due to failures of plastic service lines. Cost estimates, proposal/contract, leak maps, construction drawings, photographs and completion notice are included in Exhibit FKS-1. This project was completed on May 31, 2012. The total cost to complete this project was $205,800.

Replace Five Wireless Telemetry and Voice Communication Units to Comply with FCC Narrowband Regulations (WA 1-4932) – As discussed above, the Company's existing wireless voice communication equipment and telemetry control units in its Pinewood system do not comply with the FCC's narrowband regulations and must be replaced. These wireless telemetry units or phone lines control well, tank and booster pump station operation necessary to provide water service to the Company's customers.

Accordingly, the Company is modifying or replacing one wireless telemetry control system and four voice communication units within the Pinewood system. This project modifies or replaces the wireless telemetry unit at the Pinewood Unit 9 Tank site. This project also modifies or replaces two mobile unit radios and two handheld radios. Cost estimates, proposal/contract, and a schedule are included in Exhibit FKS-1. This project will be completed and placed in service by December 31, 2012. The total estimated cost to complete this project is $16,861.

ii. Rimrock (PWSID No. 13-046)

Construct Arsenic Removal Facility at Montezuma Haven Well Nos. 2 and 3 (WA 1-4874) – Montezuma Haven Well No. 3 was originally equipped with an ion exchange arsenic removal facility. The lease on the existing arsenic removal facility expired April 10, 2012. Operating and maintenance expenses on this ion exchange arsenic removal facility were considerably higher than the Company's adsorptive arsenic removal facilities. Therefore, Company engineers determined

the most cost effective way to continue providing safe and reliable water that complies with the safe drinking water requirements is to construct a new adsorptive arsenic removal facility at this well. The new adsorptive arsenic removal facility uses the best available technology at the lowest contracted price in a design-build format and uses adsorptive media in steel vessels to remove arsenic from the drinking water supply.

The arsenic removal facility was bid to a pre-qualified group of contractors, vendors, and engineers based on their prior performance and experience. The Company's engineers chose iron based adsorptive media in this arsenic removal facility, based on an evaluation of water quality, site sizing constraints, construction sequencing, and projected operating costs. Cost estimates, proposal/contract, vicinity maps, photographs, construction drawings, a schedule and completion notice are included in Exhibit FKS-1. This project was completed and placed in service on April 2, 2012. The total cost to complete this project was $703,043.

Replace 1,230 LF of Failing 2-inch Galvanized Steel with 700 LF of 6-inch Ductile Iron Pipe and 23 Services on Cliffside Trail A-Q (WA 1-4930) – Water loss in the Rimrock water system exceeds 15 percent. Company engineers completed an evaluation of the recorded leaks in the Rimrock water system, which showed aging and failing galvanized steel water mains were a significant source of leaks and failures (as documented in Exhibit FKS-1 and FKS-19). The Company developed a main replacement program for its Rimrock water system to replace galvanized steel water mains identified through its analysis of leak and repair history. The galvanized water main that was replaced had deteriorated to the point that repairs were difficult to make by normal methods. Repairs with full circle clamps were difficult to make and did not seal reliably, as the pipe had little wall strength and was severely corroded. More than 21 recorded leaks and

repairs on this main were reported since 2002; five in the first 10 months of 2011 (as shown in Exhibit FKS-1).

This project replaces 1,230 linear feet of 2-inch galvanized steel with 700 linear feet of 6-inch ductile iron water main and replaces 23 services along Cliffside Trail to serve the Montezuma Fairway Villas. Meter boxes for apartments were relocated closer to the roadway and customer service lines were tied over per details on construction drawings. Cost estimates, proposal/contract, leak maps, survey information, construction drawings, schedule, pictures of repairs and completion notice are included in Exhibit FKS-1. This project was completed and placed in service on May 23, 2012. Final accounting for this project will be submitted when complete. The total estimated cost to complete this project is $110,190.

Replace 800 LF of Failing 4-inch Galvanized Steel with 6-inch Ductile Iron Pipe and Replace 6 Services on Antigua Way (WA 1-4931) – This section of water main has had a sharp increase in the number of leaks in the past 18 months. More than 19 leaks and repairs on this water main have been recorded since 2002; 11 of those have been since the beginning of 2011 (as shown in Exhibit FKS-1).

This project replaces approximately 800 linear feet of 4-inch galvanized steel water main with 6-inch ductile iron water main, two double services and two single services on Antigua Way (as shown in the construction drawings included in Exhibit FKS-1). Cost estimates, a proposal/contract, leak maps, survey information, photographs, construction drawings, a schedule and completion notice are included in Exhibit FKS-1. This project was completed and placed in service on May 10, 2012. The total cost to complete this project was $64,971.

Replace Eight Wireless Telemetry and Voice Communication Units to Comply FCC Narrowband Regulations (WA 1-4932) – As discussed with the

Lakeside water system, the Company's existing wireless voice communication equipment and telemetry units in its Rimrock system do not comply with FCC's new narrowband regulations and must be replaced. These wireless telemetry control systems control well, tank, booster pump station and arsenic removal facilities necessary to provide water service to the Company's customers.

Accordingly, the Company is modifying or replacing five wireless telemetry control systems and three voice communication units within the Rimrock system. The project replaces or modifies wireless telemetry units at the Montezuma Hills Tank, Wickiup Mesa Tank, Rimrock Well No. 1, Rimrock Well No. 2, and Montezuma Haven Well No. 3. The project also modifies or replaces three mobile unit radios. Cost estimates, a proposal/contract, and a schedule are included in Exhibit FKS-1. This project will be completed and placed in service by December 31, 2012. The total estimated cost to complete this project is $26,031.

iii. Sedona (PWSID No. 03-003)

Construct Arsenic Removal Facility for Harmony Hills Well Nos. 5 and 12 (WA 1-4814) – The Company constructed an arsenic removal facility because arsenic levels were increasing in the Company's Harmony Hills Well Nos. 5 and 12. Construction of this arsenic removal facility was needed to ensure compliance with the federally-mandated safe drinking water standards for arsenic and to provide an adequate supply during peak system demands. When Well Nos. 5 and 12 were originally drilled and placed in service in 1962 and 2004, the arsenic levels were approximately 8 parts per billion ("ppb"), which was below the new arsenic MCL of 10 ppb. The wells have been in service since that date but water sampling results over the past five years show arsenic levels increasing above 10 ppb. A well and tank analysis was performed on the Sedona water system and calculations show that the water system lacks sufficient water

supplies to meet demands without these two wells, making construction of a new arsenic removal facility necessary.

The new arsenic removal facility was designed with the best available technology at the lowest contracted price in a design-bid-build format. Through the evaluation, the Company's engineers determined that the new arsenic removal facility will utilize iron based adsorptive media based on an evaluation of water quality, site sizing constraints, construction timelines, and projected operating costs.

The arsenic removal facility consists of two steel pressure vessels equipped with iron based adsorptive media, backwash tanks, two backwash booster pumps, bypass line, and related appurtenances, as shown on the construction drawings included in Exhibit FKS-1. The arsenic removal facility was bid to a pre-qualified group of contractors, vendors, and engineers based on their prior performance and experience. Harmony Hills Well No. 12 pumps to the backwash tanks during start up and shut down to prevent water hammer in the distribution system and to ensure that no water is wasted from the well during start up or shut down. Cost estimates, a proposal/contract, vicinity maps, design reports, calculations, construction drawings, photographs and completion notice are included in Exhibit FKS-1. This project was completed and placed in service on June 25, 2012. The total cost to complete this project was $1,183,437.

Construct Arsenic Removal Facility at Broken Arrow Well No. 10 (WA 1-4875) – Broken Arrow Well No. 10 had an existing ion exchange arsenic removal facility. The lease on the existing arsenic removal facility at Broken Arrow Well No. 10 expired on October 31, 2011, at which time the facility was removed from service. Operating and maintenance expenses on this ion exchange arsenic removal facility were considerably higher than the Company's other adsorptive arsenic removal facilities. Therefore, Company engineers determined that the

most cost effective way to continue providing water that complies with the safe drinking water regulations was to construct a new adsorptive arsenic removal facility at this well. The new arsenic removal facility uses the best available technology at the lowest contracted price in a design-build format. The Company would not be able to keep up with peak water demands for its Sedona water system without this arsenic removal facility.

The arsenic removal facility was bid to a pre-qualified group of contractors, vendors, and engineers based on their prior performance experience. The Company engineers chose iron-based adsorptive media in this arsenic removal facility based on an evaluation of water quality, site sizing constraints, construction, and projected operating costs. Cost estimates, a proposal/contract, vicinity maps, photographs, construction drawings, and completion notice are included in Exhibit FKS-1. This project was completed and placed in service on May 15, 2012. The total cost to complete this project was $588,322.

Re-alignments for City of Sedona's Harmony Windsong Drainage Channel Project – Phase 3 (WA 1-4928) – The City of Sedona started construction of a new drainage channel causing conflicts with the Company's existing facilities, located in City of Sedona rights-of-way on Lyric and Windsong Drives. Pursuant to the Franchise Agreement with the City, the Company is required to relocate its facilities. These relocations are needed to provide water service to existing customers in the Sedona water system. Work includes the construction of two vertical realignments and transmission lines for well discharge. Cost estimates, a proposal/contract, construction drawings and schedule are included in Exhibit FKS-1. This project will be completed and placed in service by December 31, 2012. The total estimated cost to complete this project is $75,000.

Replace 23 Wireless Telemetry and Voice Communication Units to Comply with FCC Narrowband Regulations (WA 1-4932) – As discussed with the

Lakeside water system, the Company's existing wireless voice communication equipment and telemetry control systems in its Sedona system do not comply with the FCC's narrowband regulations and must be replaced or modified. These wireless telemetry systems control well, tank, booster pump station and arsenic removal facilities necessary to provide water service to the Company's customers.

Accordingly, the Company is modifying or replacing 23 wireless telemetry control systems and voice communication devices within the Sedona system. This project modifies or replaces existing wireless telemetry units at the Sedona Office, Harmony High Park Tank, Rainbow Well No. 6, Williams Well No. 7, Southwest Center Well No. 8 and Harmony Hills Well No. 12. This project also modifies voice communication equipment at the Schnebly Hill base station and replaces 14 mobile unit radios and two handheld radios. Cost estimates, proposal/contract and a schedule are included in Exhibit FKS-1. This project will be completed and placed in service by December 31, 2012. The total estimated cost to complete this project is $60,009.

iv. Valley Vista (PWSID No. 13-114)

Construct Arsenic Removal Facility at Sedona Golf Resort Well (WA 1-4873) – The Sedona Golf Resort Well was originally equipped with an ion exchange arsenic removal facility. The lease on the existing arsenic removal facility at Sedona Golf Resort Well expired on February 18, 2012. Operating and maintenance expenses on this ion exchange arsenic removal facility were considerably higher than the Company's adsorptive arsenic removal facilities. Therefore, Company engineers determined that the most cost effective way to continue providing safe and reliable water which complies with the safe drinking water requirements is to construct a new adsorptive arsenic removal facility at

this well. The arsenic removal facility uses the best available technology at the lowest contracted price in a design-build format.

The arsenic removal facility was bid to a pre-qualified group of contractors, vendors, and engineers based on their prior performance and experience. The Company's engineers chose iron based adsorptive media in this arsenic removal facility based on an evaluation of water quality, site sizing constraints, construction, and projected operating costs. Cost estimates, a proposal/contract, vicinity maps, photographs, construction drawings, a schedule and completion notice are included in Exhibit FKS-1. This project was completed and placed in service on May 10, 2012. The total cost to complete this project was $445,986.

Replace Four Wireless Telemetry Units to Comply with FCC Narrowband Regulations (WA 1-4932) – As discussed with the Lakeside water system, the Company's existing wireless telemetry control systems in its Valley Vista system do not comply with the FCC's narrowband regulations and must be replaced. The wireless telemetry units control well, tank, booster pump station and arsenic removal facilities necessary to provide water service to the Company's customers.

Accordingly, the Company is modifying or replacing four wireless telemetry control systems within its Valley Vista system. This project modifies or replaces wireless telemetry units at the Sedona Golf Resort Tank, Rancho Rojo Well, Sedona Golf Resort Well and Valley Vista Well No. 13. Cost estimates, a proposal/contract and a schedule are included in Exhibit FKS-1. This project will be completed and placed in service by December 31, 2012. The total estimated cost to complete this project is $61,385.

C. **Phoenix Office**

Data Processing Encoder (WA 1-4933) – Because the previous National Cash Register ("NCR") payment processing equipment was obsolete and NCR no longer supported the device or had replacement or repair parts available, the Company replaced this equipment. Cost estimates and details of equipment purchased are included in Exhibit FKS-1. This project was completed and placed in service on July 12, 2012. The total estimated cost to complete this project is $190,000.

Purchase Additional Leak Detection Equipment (WA 1-4934) – As discussed in detail within Section 3.2 of Exhibit FKS-19 to this testimony, in 2003 the Company implemented an aggressive leak detection program and purchased state of the art leak detection equipment. With the continued success of this program, the Company budgeted and purchased additional leak detection equipment each year since 2003. In February of 2012, the Company purchased two additional Digital Data Loggers manufactured by Flow Matrix, Incorporated. The Company has successfully used this equipment to survey large portions of its water system. Now, each of the Company's Divisions has at least one Data Logger assigned for their use. In addition to the Digital Data Loggers, the Company also purchased two additional sets of Leak Noise Amplification Systems, which water system operators use to locate leaks. These devices are placed on valves, fire hydrants or service lines, and are used to listen for distinct leak noises that travel along the pipe. A summary of this equipment is included in Exhibit FKS-1. A description of this equipment and its use is described in detail in Section 3.2 of Exhibit FKS-19. This equipment was purchased February 29, 2012. The total cost to purchase this equipment was $47,841.

IV. Description of Company-Funded Construction Budgeting Procedures

Q. HOW DOES THE COMPANY DETERMINE WHICH PROJECTS TO FUND IN A GIVEN BUDGET YEAR?

A. Each year, the Company prepares the next year's detailed construction budget for each of its eleven consolidated water systems. The budgeting process starts with each Division Manager preparing a proposed construction budget for utility plant additions in the water systems they manage. Within the proposed construction budget, each Division Manager identifies water facilities needed to improve or maintain service to existing customers. For example, Division Managers propose construction projects, such as storage tanks, booster pump station replacements or upgrades, new wells, or replacement of water mains or transmission lines. These recommendations are made based on the need to maintain safe, reliable and adequate water service.

The proposed construction projects are then reviewed and analyzed by the Company's engineering staff, who further research and evaluate the need for each project. The Company's engineering staff develops preliminary schematics and cost estimates and collects supporting data. Engineering staff also reviews current and projected water system demands and evaluates production, pumping and storage capacities available to meet such demands. Additional factors reviewed and analyzed include compliance with applicable codes, ordinances and safe drinking water standards, trends in source water quality and changes in regulations that may affect continued compliance with drinking water standards.

Several days are set aside each year for Division Managers, engineering staff, operations staff and senior management to meet at each Division office to collectively review and discuss each proposed construction project. A field visit is subsequently conducted to review and discuss large-scale construction projects. The proposed projects are then prioritized and a final construction

budget is prepared and presented to the Company's Board of Directors for review and approval.

Q. WHO DETERMINES HOW MUCH WILL BE ALLOCATED AND APPROVED FOR COMPANY-FUNDED PROJECTS?

A. The Company's Board of Directors establishes the annual construction budget. Under normal circumstances, the construction budget would increase each year to reflect increasing costs of construction due to increases in the costs of materials and labor, general inflation and additional regulatory requirements. Since the end of 2007, however, the Company's construction budget has been significantly reduced due to the Company's financial condition. For example, the Company's 2008 capital budget was reduced from $18.9 million to $8.1 million. Additional reductions for the next three budget years were required, further reducing the Company's 2009, 2010 and 2011 construction budgets to $5.0 million, $6.6 million and $8.8 million respectively. The Company's construction budget for 2012 increased slightly to $10.975 million.

Q. HOW DO YOU PROCEED ONCE THE COMPANY'S CONSTRUCTION BUDGET IS APPROVED BY ITS BOARD OF DIRECTORS?

A. Once the Board of Directors approves the Company's construction budget, the Company's Engineering department prepares detailed construction plans for the utility plant additions and obtains the required regulatory permits and approvals. Once the required approvals are received, the Engineering department releases the project to construction. The Company's Engineering department solicits competitive bids for major water infrastructure such as booster pump stations, storage tanks and new wells. The Division Managers solicit competitive bids from a list of qualified independent contractors for most pipeline projects. Absent other considerations, these projects are typically awarded to the qualified contractors submitting the lowest bids.

Q. DOES THE COMPANY FUND INFRASTRUCTURE NEEDED TO SERVE NEW DEVELOPMENTS?

A. No. Developers' infrastructure requirements are funded by the developers through advances or contributions as their projects proceed.

Q. ARE DEVELOPER ADVANCED FUNDS FOR WATER FACILITIES INCLUDED IN THE COMPANY'S ANNUAL CAPITAL BUDGET?

A. No.

Q. HOW ARE DEVELOPERS' WATER FACILITY REQUIREMENTS DETERMINED AND BUDGETED?

A. The Company works with developers to determine the water facilities needed to serve their developments. Such facilities include waterlines, fire hydrants, water services and meters. However, for larger developments, water storage tanks, booster pump stations, wells and water treatment plants may also be required. These types of facilities are included in main extension agreements between the Company and developers. Developers fund this infrastructure and the project timing is entirely dependent on the developer's construction schedule. Because the Company does not fund these infrastructure requirements, it does not include developer advances or contributions in its annual capital budget.

V. <u>Description of Company-Funded Utility Plant Additions For The Northern Group</u>

Q. PLEASE SUMMARIZE THE COMPANY-FUNDED UTILITY PLANT ADDED TO THE NORTHERN GROUP SINCE DECEMBER 31, 2007, THE TEST YEAR UTILIZED IN THE LAST RATE CASE FOR THE NORTHERN GROUP.

A. From the January 1, 2008, through December 31, 2011, the Company annually funded construction projects for each Northern Group system to maintain or replace infrastructure, address water loss, resolve operational problems and comply with safety requirements, as well as safe drinking water standards. The

cost of the utility plant additions for the two Northern Group Divisions represents infrastructure needed to maintain safe, reliable and adequate water service. A summary of the cost of these utility plant additions is as follows:

Northern Group Company-Funded Utility Plant Added From January 1, 2008 to December 31, 2012	
Division	**Plant Added**
Navajo	$ 1,587,568
Verde Valley	$ 6,188,463

A summary of the capital investments, listed by water system, is shown below:

A. Navajo Division

i. Forest Towne (PWSID No. 09-002)

The Forest Towne water system is a non-community water system serving five connections. No significant improvements were required in this water system since the last rate case application.

ii. Lakeside (PWSID No. 09-003)

In Lakeside, capital expenditures have primarily focused on replacing failed motors and pumping equipment and replacing leaking and failing waterlines. A list of significant projects completed for this water system is included in the following table:

Plant Addition Summary for PWSID No. 09-003	
WA No.	**Project Description**
4020	Replace 1,480 LF of Old and Failing 3-inch Plastic with 6-inch DIP on Kempa Drive Between River Lane and Open Pine Drive
4275	Replace 1,000 LF of Old and Failing 2-inch GS with 8-inch DIP and Related Fittings on Highway 260 near Wagon Wheel
4507	Replace obsolete Electrical Control Panel and Cabinet with New Panel and Cabinet at the Moonridge Well Site
4508	Tie-Over Water Services on Lots 48 Through 72 to Existing 8-inch DIP Water Main on Yavapai and Hidden Pines
4509	Replace 1,830 LF of Old and Failing 6-inch CA with 6-inch DIP on Pima Road Between O'Malley and Julia in the Woodland Park Subdivision
4624	Tie-Over Services on Kempa Drive
4665	Replace Failed Pump and Motor at Larson Road Well No. 4
4671	Replace Failed Pump and Motor at Nate Well No. 7
4710	Remove and Replace Failed Asphalt in Office Parking Lot and Re-Stripe
4818	Tie-Over Existing Long Services on Pima Lane
4840	Replace Pump Bowl Assembly at Larson Road Well No. 4 Due to Wear From Sand

iii. Overgaard (PWSID No. 09-004)

In Overgaard, capital expenditures have primarily focused on replacing failed motors and pumping equipment and replacing leaking and failing water lines. A list of significant projects completed for this water system is included in the following table:

Plant Addition Summary for PWSID No. 09-004	
WA No.	**Project Description**
4279	Replace 1,100 LF of Old and Failing 2-inch GS and 4-inch CA Water Main with 6-inch DIP on Wildcat Trail
4511	Replace Failed Pump and Motor at Pine Meadows Well and Replace Obsolete Electrical Panel and Cabinets
4712	Replace Failed Pump and Motor at Mogollon Well No. 5
4819	Replace Failed Pump and Motor at Overgaard Townsite Well No. 1

iv. Pinetop Lakes (PWSID No. 09-018)

In Pinetop Lakes, capital expenditures have primarily focused on replacing failed motors and pumping equipment. A list of significant projects completed for this water system is included in the following table:

Plant Addition Summary for PWSID No. 09-018	
WA No.	**Project Description**
4644	Replace Failed Pump and Motor at Pinetop Lakes Well No. 2
4709	Install Operator Interface Terminal at Apache Trail Booster Pump Station
4747	Replace Failed Motor at Pinetop Lakes Well No. 2

B. Verde Valley Division

I. Pinewood (PWSID No. 03-002)

In Pinewood, capital expenditures have primarily focused on electrical safety improvements and water main relocations that were necessary as a result of the County's storm drain improvements. In 2012, the Company increased its replacement of old and failing plastic service lines to comply with the Commission's directive in Decision No. 71845 to reduce water loss, as described in Exhibit FKS-19 of this testimony. A list of significant projects completed for this water system is included in the following table:

Plant Addition Summary for PWSID No. 03-002	
WA No.	**Project Description**
4308	Replace the Old and Obsolete Electrical Control Panels at Pinewood Well No. 10
4407	Replace Existing Water Main and Install Vertical Realignments In Pinewood Blvd to Accommodate a Coconino County Storm Drain Project

ii. Rimrock (PWSID No. 13-046)

In Rimrock, capital expenditures have focused on replacing failed motors and pumping equipment, replacing old and failing water mains and the purchase or replacement of leased arsenic removal facilities. A list of significant projects completed for this water system is included in the following table:

Plant Addition Summary for PWSID No. 13-046	
WA No.	**Project Description**
4403	Replace Approximately 100 LF of 4-inch CA Water Main with 6-inch DIP on Montezuma Avenue due to Flood Damage
4679	Replace Failed Pump and Motor at Montezuma Haven Well No. 3
4708	Replace Failed and Leaking Well Head, Sand Separator and Discharge Line at Rimrock Well No. 2
4721	Replace Failed Pump and Motor at Rimrock Well No. 2
4817	Replace 300 LF of Old and Failed 4-inch GS with 6-inch DIP on Paiute Trail
4872	Design and Construct an Arsenic Removal Facility at Rimrock Well No. 2
4847	Purchase three Arsenic Removal Facilities at the end of their lease at Rimrock Well Nos. 1, 3 and 4

iii. Sedona (PWSID No. 03-003)

In Sedona, capital expenditures have primarily focused on replacing failed motors and pumping equipment, replacing and relocating water mains related to City and State improvement projects, purchasing or replacing leased arsenic removal facilities and replacing leaking and failing water lines. A list of significant projects completed for this water system is included in the following table:

Plant Addition Summary for PWSID No. 03-003	
WA No.	**Project Description**
4267a	Relocate and Replace Water Mains in ADOT Highway 179 due to Roadway and Safety Improvements
4269	Replace Failed Pump and Motor at Williams Well No. 7
4498	Replace Failed Pump and Motor at the Harmony Hills Well No. 12
4501	Construct Fence at the Carruth Site for Material Storage
4502	Replace 1,290 LF of Old and Failing 2-inch GS, 4-inch GS, and 4-inch CA with 12-inch DIP on Jordan Road
4588	Replace 360 LF of 4-inch CA with 6-inch DIP on Vista Bonita to Accommodate the City of Sedona Sewer Improvement Project
4604	Replace failed motor at the Southwest Center Well No. 8
4623	Design and Construct an Arsenic Removal Facility at the Rainbow Well No. 6 - Relocated Facility from Valley Vista Well No. 1
4635	Replace Failed Pump and Motor at the Rainbow Well No. 6
4641	Replace Approximately 620 LF of 6-inch CA Water Main and 100 LF of 8-inch Water Main with Approximately 634 LF of 8-inch DIP
4653	Replace Failed Motor at the Harmony Hills Well No. 12
4672	Replace and Install Vertical Realignments to Accommodate the City of Sedona Drainage Channel Improvement Project
4775	Replace Old and Obsolete Controls and Programming to the Harmony High Park Tank, Harmony Hills Well No. 5, Rainbow Well No. 6, Williams Well No. 7, Southwest Center Well No. 8 and Harmony Hills Well No. 12
4776	Install flush tank, recycle pump and related controls at Harmony Hills Well No. 12 to comply with the City of Sedona and ADEQ permitted discharge requirements
4811	Replace Failed Pump and Motor at the Harmony Hills Well No. 5

iv. Valley Vista (PWSID No. 13-114)

In Valley Vista, capital expenditures have primarily focused on replacing failed motors and pumping equipment, and purchasing or replacing leased arsenic removal facilities. A list of significant projects completed for this water system is included in the following table:

Plant Addition Summary for PWSID No. 13-114	
WA No.	**Project Description**
4497	Install a New Arsenic Removal Facility at Valley Vista Well No. 13 to Comply with Commission Order No. 71845
4674	Replace Failed Pump and Motor at the Sedona Golf Resort Well
4847	Purchase Two Arsenic Removal Facilities at the End of their Lease at Wild Horse Mesa and Ranch Rojo Well Sites

VI. Proposed Arsenic Removal Facilities

Q. DOES THE COMPANY INTEND TO CONSTRUCT ADDITIONAL ARSENIC REMOVAL FACILITIES IN THE NORTHERN GROUP?

A. Yes. The Company plans to construct three additional Arsenic Removal Facilities in the Northern Group. The first Arsenic Removal Facility is planned for the Company's Southwest Center Well No. 8, located in the Sedona water system in the Verde Valley Division. The other two Arsenic Removal Facilities are planned for the Company's Zane Grey Well No. 3 and Mogollon Well No. 5, located in the Overgaard water system in the Navajo Division. Additionally, the Company continues to monitor the arsenic levels in its other Verde Valley and Navajo Division wells to determine if arsenic levels are increasing, requiring new Arsenic Removal Facilities in the future.

Q. WHAT ARE YOUR PLANS FOR THE ARSENIC REMOVAL FACILITY AT THE SOUTHWEST CENTER WELL NO. 8?

A. The Company completed the design of this Arsenic Removal Facility, received a building permit and other related approvals from the City of Sedona, and received the ADEQ Approval to Construct. The Company continues to monitor the arsenic levels in the well and, based on historical results, plans to start construction in March 2013. A copy of the arsenic results for the Southwest Center Well No. 8 and a copy of the construction drawings are attached as Exhibits FKS-2 and 3, respectively.

Q. WHEN WILL THE CONSTRUCTION BE COMPLETED ON THE ARSENIC REMOVAL FACILITY AT SOUTHWEST CENTER WELL NO. 8?

A. Construction of the Arsenic Removal Facility will to begin in March 2013 and be completed by December 31, 2013. A copy of the construction schedule is attached as Exhibit FKS-4.

Q. WHAT IS THE COST TO DESIGN AND CONSTRUCT THE SOUTHWEST CENTER WELL NO. 8 ARSENIC REMOVAL FACILITY?

A. The estimated cost to design and construct the Arsenic Removal Facility is $1,192,137. A copy of the estimated cost of construction is attached as Exhibit FKS-5.

Q. WHAT ARE YOUR PLANS FOR THE ARSENIC REMOVAL FACILITY AT ZANE GREY WELL NO. 3?

The Company continues to monitor the arsenic levels in the well. The most recent results show arsenic levels are increasing and are approaching 10 ppb. A copy of the arsenic results for the Zane Grey Well No. 3 is attached as Exhibit FKS-6. The Company completed a site plan and process equipment layout for the Arsenic Removal Facility, which is attached as Exhibit FKS-7.

Q. PLEASE DESCRIBE THE NEXT STEPS FOR THE ARSENIC REMOVAL FACILITY AT ZANE GREY WELL NO. 3.

A. Company engineers will prepare the detailed construction drawings and related specifications in the first quarter of 2013 followed by permitting and other related approvals. Once all permits and required approvals are received, Company engineers will put the project out to bid and prepare for construction.

Q. WHEN WILL CONSTRUCTION BE COMPLETED FOR THE ARSENIC REMOVAL FACILITY AT ZANE GREY WELL NO. 3?

A. Due to weather conditions in the Overgaard area, construction of the Arsenic Removal Facility will begin in April 2014, with completion on or about October 31, 2014. A copy of the design and construction schedule is attached as Exhibit FKS-8.

Q. WHAT IS THE COST TO DESIGN AND CONSTRUCT THE ARSENIC REMOVAL FACILITY AT ZANE GREY WELL NO. 3?

A. The estimated cost to design and construct the Arsenic Removal Facility is $498,728. A copy of the estimated cost of construction is attached as Exhibit FKS-9.

Q. WHAT ARE YOUR PLANS FOR THE ARSENIC REMOVAL FACILITY AT MOGOLLON WELL NO. 5?

A. The Company continues to monitor the arsenic levels in the well. The most recent results show arsenic levels are increasing and have exceeded 9 ppb. A copy of the arsenic results for the Mogollon Well No. 5 is attached as Exhibit FKS-10. The Company completed a site plan and process layout for the Arsenic Removal Facility, which is attached as Exhibit FKS-11. Company engineers then determined that additional land is required to construct the Arsenic Removal Facility, as shown on Exhibit FKS-11. The Company expects to purchase this additional land by December 31, 2012.

Q. WHAT IS THE NEXT STEP RELATED TO THE ARSENIC REMOVAL FACILITY AT MOGOLLON WELL NO. 5.

A. Once additional land has been purchased, Company engineers will complete the detailed construction drawings and related specifications, put the project out to bid, and construct the facility.

Q. WHEN WILL CONSTRUCTION OF THE PLANT BE COMPLETED?

A. Construction of the Arsenic Removal Facility will begin in February 2014 and be completed by December 31, 2014. A copy of the design and construction schedule is attached as Exhibit FKS-12.

Q. WHAT IS THE COST TO DESIGN AND CONSTRUCT THE MOGOLLON ARSENIC REMOVAL FACILITY?

A. The estimated cost to design and construct the Arsenic Removal Facility is $844,740. A copy of the estimated cost of construction is attached as Exhibit FKS-13.

Q. HOW IS THE COMPANY PROPOSING TO RECOVER THE COSTS ASSOCIATED WITH THE SOUTHWEST CENTER WELL NO. 8, ZANE GREY WELL NO. 3 AND MOGOLLON WELL NO. 5 ARSENIC REMOVAL FACILITIES?

A. In Decision No. 71845, the Commission authorized continuation of the ACRM in the Company's Verde Valley Division. The Company is proposing to continue the ACRM in the Verde Valley Division and to establish an ACRM in the Navajo Division. The Company proposes to file for an ACRM to recover the cost of constructing these arsenic removal facilities. The ACRM is addressed in greater detail in Mr. Harris' testimony.

Q. DO ANY OTHER WATER SOURCES IN THE NORTHERN GROUP REQUIRE TREATMENT FOR ARSENIC?

A. Not at this time. The Company monitors all of its sources of supply to ensure compliance with the Safe Drinking Water Act, including the federally-mandated arsenic MCL. The arsenic levels in some Northern Group water system wells are increasing, and it is likely that additional arsenic removal facilities may be required in the future for some of these water sources.

VII. Transmission and Distribution System Maintenance

Q. ARE EFFORTS TO REDUCE WATER LOSS LIMITED TO CAPITAL EXPENDITURES ASSOCIATED WITH REPLACING AGING INFRASTRUCTURE?

A. No. A significant amount of the Company's effort to reduce water loss is focused on maintenance of its transmission and distribution ("T&D") systems. The Company incurs a significant amount of expense to maintain its T&D systems by detecting, locating and repairing water main and service line leaks and breaks.

In 2011, the Company incurred $1,569,457 in T&D maintenance expenses related to mains and services. In comparison, the Company's capital budget was $8.8 million. In other words, the Company incurred T&D maintenance costs equivalent to almost 20 percent of its capital budget. Between January 2008 and December 2011, the Company repaired over 1,159 leaks, or nearly two leaks for every workday, as shown in the table below.

Water Main and Service Line Leaks	
Year	Leaks repaired
2008	191
2009	248
2010	321
2011	399

Q. HAS THE COMPANY BEEN ABLE TO MAINTAIN A NORMAL LEVEL OF MAINTENANCE RELATED TO MAINS AND SERVICES?

A. No. As explained by Mr. Harris in Section II of his pre-filed testimony, the Company implemented cost-cutting measures in response to the economic downturn beginning in 2008. These measures including a focused reduction in the level of costs devoted to the maintenance of the Company's T&D systems to minimal levels sufficient to maintain adequate and reliable service. As discussed in Mr. Reiker's pre-filed direct testimony, maintenance expense related to mains and services was nearly $550,000 lower in the test year than in 2007.

Q. CAN THE COMPANY CONTINUE TO REDUCE WATER LOSS AND MAINTAIN ITS T&D SYSTEMS EFFECTIVELY WITHOUT INCREASING T&D EXPENSES?

A. No. Continued reduction and deferral of T&D maintenance expenditures will cause long-term maintenance problems and increased water loss. The Company should increase spending to normalized levels, as discussed by Mr.

Reiker in his pre-filed direct testimony, to adequately maintain and prolong the useful lives of such infrastructure and continue to reduce water loss.

Q. WILL THE COMPANY BE ABLE TO COMPLY WITH THE COMMISSION'S DIRECTIVE AND SIGNIFICANTLY REDUCE WATER LOSS IF T&D EXPENSES REMAIN AT ABNORMALLY LOW LEVELS?

A. No. That would not be possible. The Company must increase its maintenance efforts, and thus, its T&D maintenance expenses, to effectively reduce water loss. The adjustment to normalize maintenance expense proposed by Mr. Reiker accomplishes this.

Q. WILL THE COMPANY BE BETTER ABLE TO COMPLY WITH THE COMMISSION'S WATER LOSS REDUCTION DIRECTIVE IF THESE ADJUSTMENTS ARE APPROVED?

A. Yes.

VIII. Facilities Constructed Using Off-Site Facilities Fees

Q. WHAT IS THE AMOUNT OF THE COMPANY'S PROPOSED OFF-SITE FACILITIES FEE?

A. As discussed in Mr. Harris' pre-filed direct testimony, the proposed Off-Site Facilities Fee tariff is $1,100 for each new service connection with a 5/8 x 3/4-inch meter and increases for larger meter sizes. The proposed Off-Site Facilities Fee tariff is attached to Mr. Harris' pre-filed direct testimony as Exhibit JDH-9.

Q. WHAT FACILITIES DOES THE COMPANY PROPOSE TO FUND WITH THIS OFF-SITE FACILITIES FEE?

A. The Company intends to use Off-Site Facilities Fees to help fund major regional water storage and supply facilities needed to meet the requirements of the Company's growing Sedona customer base. These facilities include the East Sedona Water Storage Tank and Well ("East Sedona Storage and Water Supply") and associated T&D mains, as well as the treatment facilities and

booster pump stations needed to treat, store, pump and provide safe, reliable and adequate water service from this new facility.

Q. PLEASE DESCRIBE THE EAST SEDONA STORAGE AND WATER SUPPLY FACILITIES.

A. The East Sedona Storage and Water Supply facilities consist of one 1.5 million gallon water storage reservoir, one booster pump station and one production well needed to provide water service to the eastern portion of the Sedona water system within the Verde Valley Division. The Company's analysis of the need for additional storage, booster and water supply in the eastern portion of Sedona is shown in Exhibit FKS-14. A copy of the Company's conceptual site plans for the storage tank, booster pump station and production well are included as Exhibit FKS-15.

Q. DOES CONSTRUCTION OF THE EAST SEDONA STORAGE AND WATER SUPPLY FACILITIES REQUIRE SIGNIFICANT AMOUNTS OF CAPITAL?

A. Yes. At an estimated cost of $5.2 million, this project represents one of the Company's largest capital projects in the Verde Valley Division. Mr. Harris, in his pre-filed direct testimony, describes the Company's proposed Off-Site Facilities Fee tariff, which will provide developer-contributed funds to pay for a portion of the East Sedona Storage and Water Supply and other related facilities. The preliminary estimated cost to design and construct the East Sedona Storage and Water Supply and associated facilities is detailed in Exhibit FKS-16.

Q. WHAT WILL THE RATE IMPACT BE FOR EXISTING VERDE VALLEY DIVISION CUSTOMERS BY USING OFF-SITE FACILITIES FEES TO FUND CONSTRUCTION OF THE EAST SEDONA STORAGE AND WATER SUPPLY AND ASSOCIATED FACILITIES?

A. The Off-Site Facilities Fees will reduce potential rate impacts to customers to the extent that such fees help to fund those facilities. The Off-Site Facilities Fee is

not intended to cover all of the construction costs. As described in Mr. Harris' pre-filed direct testimony, the East Sedona Storage and Water Supply facilities will be partially funded by developers or new customers from Off-Site Facilities Fees and the balance will be funded by the Company. Mr. Harris describes the Company's proposed accounting treatment of the Off-Site Facilities Fee in his pre-filed direct testimony.

Q. WHAT STEPS WILL THE COMPANY TAKE TO PLAN FOR THE EAST SEDONA STORAGE AND WATER SUPPLY AND ASSOCIATED FACILITIES IN ADVANCE OF CONSTRUCTION?

A. There are several engineering tasks that must be completed in advance of construction. They include:

1. Acquiring land for the storage tank, booster pump station and production well.
2. Securing rights-of-way, permits, approvals and easements.
3. Submittal of design and construction drawings to ADEQ for the required approvals.
4. Obtaining a City of Sedona Conditional Use Permit(s).
5. Submittal of design and construction drawings to ADWR for the well drilling permit.
6. Coordinating with the local power company to bring power to the booster pump station and well sites.

The Company will prepare necessary documents to bid the construction of the facilities after completing the above-listed engineering tasks.

Q. WHAT ARE YOUR PLANS FOR THE EAST SEDONA STORAGE AND WATER SUPPLY AND ASSOCIATED FACILITIES?

A. In June 2012, the Company began negotiations with a property owner to acquire the Real Property needed for the water storage tank. Those negotiations are

continuing. The Company identified a parcel of land for the production well and anticipates beginning negotiations to acquire the Real Property in August. In addition, the Company completed a conceptual site plan for both the Water Storage Tank and the Production Well. A copy of these site plans are attached as Exhibit FKS-15.

Q. WHEN DOES THE COMPANY EXPECT TO START CONSTRUCTION OF THE EAST SEDONA STORAGE AND WATER SUPPLY AND ASSOCIATED FACILITIES?

A. Design of the water storage tank will start in February 2013, upon receipt of a City of Sedona Conditional Use Permit. Design of the production well will begin in April 2014, upon receipt of a City of Sedona Conditional Use Permit however, construction will begin in mid-2014. Exhibit FKS-17 shows the construction schedule for these two projects. Collection of Off-Site Facilities Fees is dependent upon customer growth in the Sedona water system. However, as described by Mr. Harris in his pre-filed direct testimony, the Off-Site Facilities Fee is not intended to fully fund the East Sedona Storage and Water Supply projects. This is consistent with Staff's recommendation regarding the Company's proposed Off-Site Facilities Fee in the Company's currently-pending Eastern Group rate case (Docket No. W-01445A-11-0310).

IX. Reducing Water Loss – Current Program

Q. HOW DOES THE COMPANY MEASURE AND REPORT WATER LOSS?

A. The Company calculates and reports water loss in accordance with ADWR requirements. Specifically, the Company reports water loss in accordance with ADWR's Third Management Plan. Each Management Plan defines water loss and establishes the methods for calculating its percentage. For the Company's water systems not regulated under ADWR's Management Plan, such as those in the Company's Northern Group, the same methodologies are employed.

For the Third Management Plan, ADWR requires water providers to exclude certain non-revenue water used for specific beneficial purposes from the water loss calculation. Those allowed non-revenue system uses are summarized in section 5.7.6.2 of the Third Management Plan titled, "Distribution System Requirements" and are listed in detail in Appendix 5-M of the Third Management Plan. The Company uses the Third Management Plan water loss calculation methods in accordance with Appendix 5-M. Pertinent excerpts from the ADWR Third Management Plan for the Phoenix Active Management Area are attached as Exhibit FKS-18.

Q. PLEASE DESCRIBE THE COMPANY'S EFFORTS TO REDUCE WATER LOSS IN THE SYSTEMS THAT ARE THE SUBJECT OF THIS GENERAL RATE CASE.

A. Reducing water loss within the Company's water systems is an ongoing and concerted effort by the Company. Water loss for each system is tracked monthly and analyzed by each Division Manager. Division Managers direct employees to monitor, detect, locate and repair leaks using the Company's leak detection equipment, and track and record those efforts each month. The Company's executive management reviews monthly reports prepared by Division Managers, which describe their activities detecting, locating and repairing leaks. These efforts are closely monitored and carefully scrutinized to ensure that water loss is kept to a cost-effective minimum.

Q. WHAT DO YOU MEAN BY "COST-EFFECTIVE MINIMUM"?

A. By "cost-effective minimum", I am referring to the level of system water loss that normally occurs as part of water system operations without: (1) having to divert financial resources from projects that are more urgent and necessary to ensure the provision of safe, reliable and adequate service; and (2) requiring a level of

investment that would be unduly burdensome on the Company's very limited capital budget or on customers' rates.

Q. YOU ALSO MENTIONED THAT THE COMPANY USES LEAK DETECTION EQUIPMENT. IS THIS EQUIPMENT USED IN THE NORTHERN GROUP WATER SYSTEMS?

A. Yes. For a complete description of the Company's leak detection equipment, see Section 3.2 of Exhibit FKS-19. Reducing water loss is fully integrated into the Company's daily operations. The Company purchased leak detection equipment so that its employees can perform the required leak surveys, as more fully described below.

In 2003, the Company purchased its first digital leak correlator and a digital data logger for use in locating leaks. Training was provided to a number of the Company's employees. Based on the initial success in using this equipment, the Company purchased a second set of leak correlators and digital data loggers. This equipment is used throughout the Company, and the Company's system operators are now more proficient and experienced with the use of these types of equipment. The Company purchased additional digital leak correlators so that each Division has at least one set of digital leak correlators. The Company authorized the purchase of two units in systems where additional digital leak correlators were needed to adequately maintain the system. Currently, the Company owns eight digital leak correlators and four digital data loggers, which are used throughout the Company's water systems. The Company purchased two additional digital data loggers in 2012. As a result, each Division has a set of digital data loggers for its use. For a complete description of the Company's leak detection equipment, see Section 3.2 of Exhibit FKS-19.

The Company is successful in reducing water loss, in large part, through its ongoing water loss monitoring and increased use of leak detection equipment.

The Company continually monitors, evaluates and reviews its success with this equipment and intends to purchase additional digital leak correlators and digital data loggers in future years, as needed.

Q. IS THE COMPANY DOING MORE TO MONITOR AND REDUCE WATER LOSS?

A. Yes. The Company prepared a comprehensive analysis outlining the historical, current and anticipated future efforts and requirements to effectively reduce water loss in those Northern Group water systems where water loss exceeds 10 percent. This initial report, titled "Water Loss Reduction Program for Water Systems in the Northern Group", dated July 27, 2012, is attached to this testimony as Exhibit FKS-19. For the Lakeside, Forest Towne and Valley Vista water systems, where water loss is less than ten percent, the Company reduces water loss through efforts in the following four categories: (1) water main and service line repair and replacement program; (2) leak detection; (3) meter selection review; and (4) meter maintenance program.

Q. CAN YOU SUMMARIZE THESE CATEGORIES IN MORE DETAIL?

A. Yes. I summarize these categories as below:

Water Main and Service Line Repair and Replacement Program

The Company reduces water loss caused by water main or service line breaks and leaks by locating, repairing and replacing them. The Company schedules repairs of smaller water main and service line leaks as soon as practical, but the Company repairs water main breaks on an emergency basis. The Company detects and locates water main and service line leaks through the use of digital leak detection or correlation equipment and by conducting leak surveys. Meter readers report observed service, meter and water main leaks in their normal course of reading meters and enter such information into data entry devices used to generate service repair orders. Meter readers serve an essential

role in system monitoring, as they operate in every part of each water system each month and report signs of leaks and breaks through routine visual inspection.

Leak Detection

As discussed above, the Company relies primarily upon two complementary types of leak detection equipment in its water systems: digital data loggers and digital leak correlators. The Company uses this equipment to locate water leaks more efficiently than other, more labor intensive methods. The Company uses digital data loggers to survey a larger area of the distribution system to locate leaks that would not otherwise be located by visual inspection/observation techniques and uses digital leak correlators to pinpoint the location of leaks on a real-time basis. The Company also uses other types of devices to "listen for leaks" throughout the Company's water systems. The Company's system operators are professionally trained in the operation of all types of digital leak detection equipment. The use of these devices has proven to be an effective way to locate leaks and help reduce water loss.

Meter Selection Review

The Company's Engineering department, using information provided by the Company's meter shop located in Coolidge, reviews new meter applications prior to establishing water service. Typically, 5/8 x 3/4-inch water meters are installed for new residential subdivisions. Both residential and non-residential meter applications that require 1-inch or larger water meters result in wide ranges of flows and some applications may include fire flows. The Company's Engineering department chooses the most appropriate meter for each application that meets the service needs and can accurately measure the quantity of water provided throughout the expected range of customer flows.

Meter Maintenance Program

The Company's meter maintenance program establishes the criteria for meter removal, repairs and replacement. The Company's meter shop established comprehensive meter change-out criteria based on total gallons, water quality and length of time in service for each water system. The water quality characteristics of individual water systems can have a significant impact on the service life of a metering device and, as a result, maintenance criteria typically vary between systems.

The Company's meter shop technicians perform periodic random tests of meters to provide an ongoing assessment of the suitability of meter change-out criteria for each system. In this way, the Company ensures that meter accuracy is maintained within industry standards confirmed through random meter testing. The Company's water systems are on schedule with their meter maintenance program and ongoing meter testing program.

Q. ARE THESE CATEGORIES OF WATER LOSS REDUCTION METHODS TYPICALLY USED BY WATER COMPANIES?

A. Yes. Water main and service line maintenance programs and the use of leak detection equipment are standard water industry practices. However, in addition to galvanized steel water mains, the Company's Northern Group contains a significant amount of PB/PE service lines, which are prone to failure. The Company presented evidence that B/PE service lines and galvanized steel water mains were reaching the end of their useful lives in the Company's Eastern Group rate case (*see* Docket No. W-01445A-11-0310). The Company's efforts to reduce water loss are discussed in more detail in attached Exhibit FKS-19.

Q. IS THE COMPANY'S METER REPAIR PROGRAM EFFICIENT AND COMPREHENSIVE?

A. Yes. I am not aware of any private or public water utility in Arizona that manages its meter program as efficiently and comprehensively as the Company. The Company's meter shop technicians routinely instruct other water utility personnel on such advanced practices at utility conferences. The Company is a leader within the water industry in this regard. The Company's meter shop facility is equipped to test meters ranging in size from 5/8 x 3/4-inch to 12-inch and with a flow testing range of 0.25 GPM to 1,000 GPM. In fact, other water utilities periodically ask our meter shop technicians to test their meters to verify meter accuracy. The Company's meter shop technicians also test meters for the Commission, when requested to do so. In addition, the Company's President, Mr. Garfield, serves on AWWA's Water Meter Standards Committee, which establishes water meter accuracy, repair, and other meter standards for the water industry.

X. <u>Reducing Water Loss – Distribution System Improvements</u>

Q. DID THE COMMISSION ESTABLISH A LIMITATION ON WATER LOSS IN DECISION NO. 71845?

A. Yes. In Decision No. 71845, page 92, lines 26-28 and page 93, lines 1-8, the Commission ordered:

> "That Arizona Water Company shall reduce the non-account water for each of its systems to less than 10 percent by July 1, 2011. For those systems that have not achieved a water loss rate of less than 10 percent by July 1, 2011, AWC should evaluate the systems and prepare a report demonstrating how the Company plans to reduce water losses to less than 10 percent. If the Company contends that reducing water losses to less than 10 percent is not cost effective, it should submit a detailed cost analysis and explanation demonstrating why the water loss reduction to less than 10 percent is not cost effective. Absent extraordinary circumstances, and with compelling supporting documentation, no system should be permitted to maintain non-account water above 15 percent. The water loss report should be filed with Docket Control, as a compliance item in this docket, by no later than December 31, 2011."

Q. DID THE COMPANY DOCUMENT AND QUANTIFY ITS EFFORTS TO REDUCE WATER LOSS FOR ITS NORTHERN GROUP WATER SYSTEMS?

A. Yes. The Company prepared a detailed report, "Water Loss Reduction Program for Water Systems in the Northern Group", attached to this testimony as Exhibit FKS-19, which evaluates water loss in the Company's Pinewood, Rimrock, Overgaard, Pinetop Lakes, and Sedona water systems. Exhibit FKS-19 details the Company's historical and ongoing efforts to reduce water loss in these systems.

Q. PLEASE DISCUSS THE WATER LOSS ANALYSIS.

A. In addition to providing an overview of the existing water system, the Company also identified measures to reduce water loss. The Company conducted a distribution system analysis, including age, size, material type, leak history, soil conditions and other pertinent information, to evaluate all of its water main and service line infrastructure. The Company provided detailed recommendations of utility plant improvements needed to reduce water loss in this report. These recommendations include specific projects and detailed design and construction cost estimates. As discussed below, the Company replaced several water mains and service lines in the Pinewood and Rimrock water systems to help comply with the Commission's directive to reduce water loss to less than 10 percent.

Q. HAVE YOU REVIEWED WATER LOSS FOR THE COMPANY'S NORTHERN GROUP WATER SYSTEMS?

A. Yes. Currently, five Northern Group water systems have water loss percentages greater than 10 percent.

Q. WHICH NORTHERN GROUP WATER SYSTEMS HAVE WATER LOSS GREATER THAN 10 PERCENT?

A. The Pinewood, Rimrock, Overgaard, Pinetop Lakes and Sedona water systems have water loss greater than 10 percent, as shown in the following table:

Northern Group Water Systems With Water Loss Greater Than 10 Percent				
System	PWSID No.	CALENDAR YEAR 2010 Reported Water Loss	CALENDAR YEAR 2011 Reported Water Loss	12-Month Rolling Average Ending May 2012
Pinewood	03-002	31.70	25.97	25.39
Rimrock	13-046	15.65	19.49	18.48
Overgaard	09-004	12.56	13.57	12.58
Pinetop Lakes	09-018	14.39	17.49	16.52
Sedona	03-003	9.10	9.11	10.67

Q. WHAT DID THE COMPANY'S REVIEW AND ANALYSIS OF WATER LOSS SHOW FOR THESE FIVE NORTHERN GROUP WATER SYSTEMS?

A. Below, I summarize the detailed review and analysis of water loss in the Northern Group.

Pinewood:

The Company determined that water system operators spent more than 10,000 man-hours between January 2007 and December 2011 monitoring, detecting locating and repairing water main and service line leaks and breaks throughout the Pinewood water system. This is equivalent to approximately one full-time Company employee working 40 hours per week for the last five years.

Some of the Pinewood water system's water mains have been in service since the late 1950s. The number of customers increased in the 1970s and, with that growth, came the installation of 115,000 linear feet of cement asbestos water mains, as well as the installation of plastic service lines. Plastic service lines have become brittle and, as a result, are prone to split lengthwise. Repairing plastic service lines is not effective, so they are normally replaced when leaks are discovered. The Company estimates that approximately 150 failing plastic service lines have been replaced since 2000. However, over 700 plastic service lines need to be replaced in the very near future. Without these replacements, water loss will likely increase.

The following two sets of charts and tables show the quantity of water main in service in the Pinewood water system by size and decade installed, respectively.

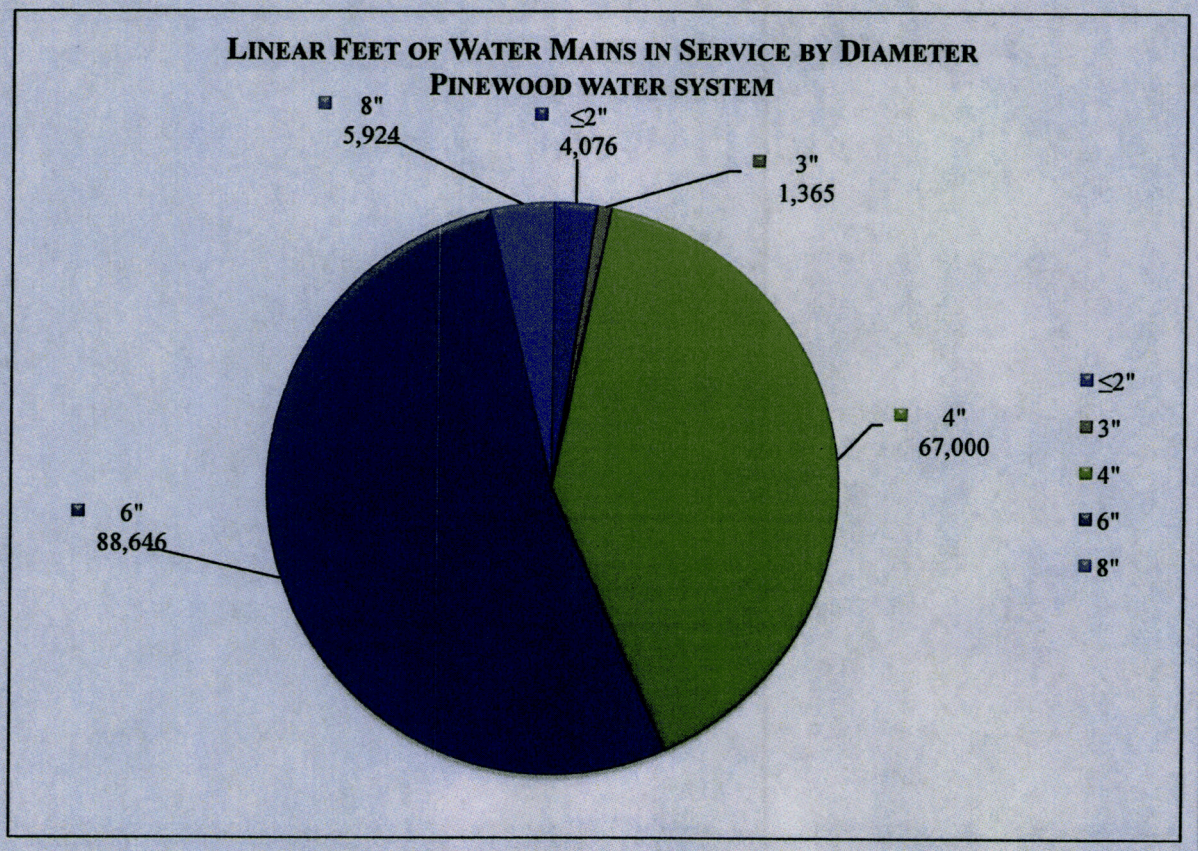

MILES AND LINEAR FEET OF WATER MAINS IN SERVICE BY DIAMETER PINEWOOD WATER SYSTEM		
WATER MAIN SIZE	MILES OF WATER MAINS	LF OF WATER MAINS
≤2"	0.77	4,076
3"	0.26	1,365
4"	12.69	67,000
6"	16.79	88,646
8"	1.12	5,924
TOTAL	**31.63**	**167,011**

The table above shows that more than 72,000 linear feet of water mains in service today are less than six inches in diameter.

The chart and table below list the length of water main that remains in service, by decade installed. As shown, twenty-one percent (over 35,000 LF) of water mains currently in service are more than 40 years old. As described in Section 5.2.1 of Exhibit FKS-19, most of these water mains are at or near the end of their useful service lives.

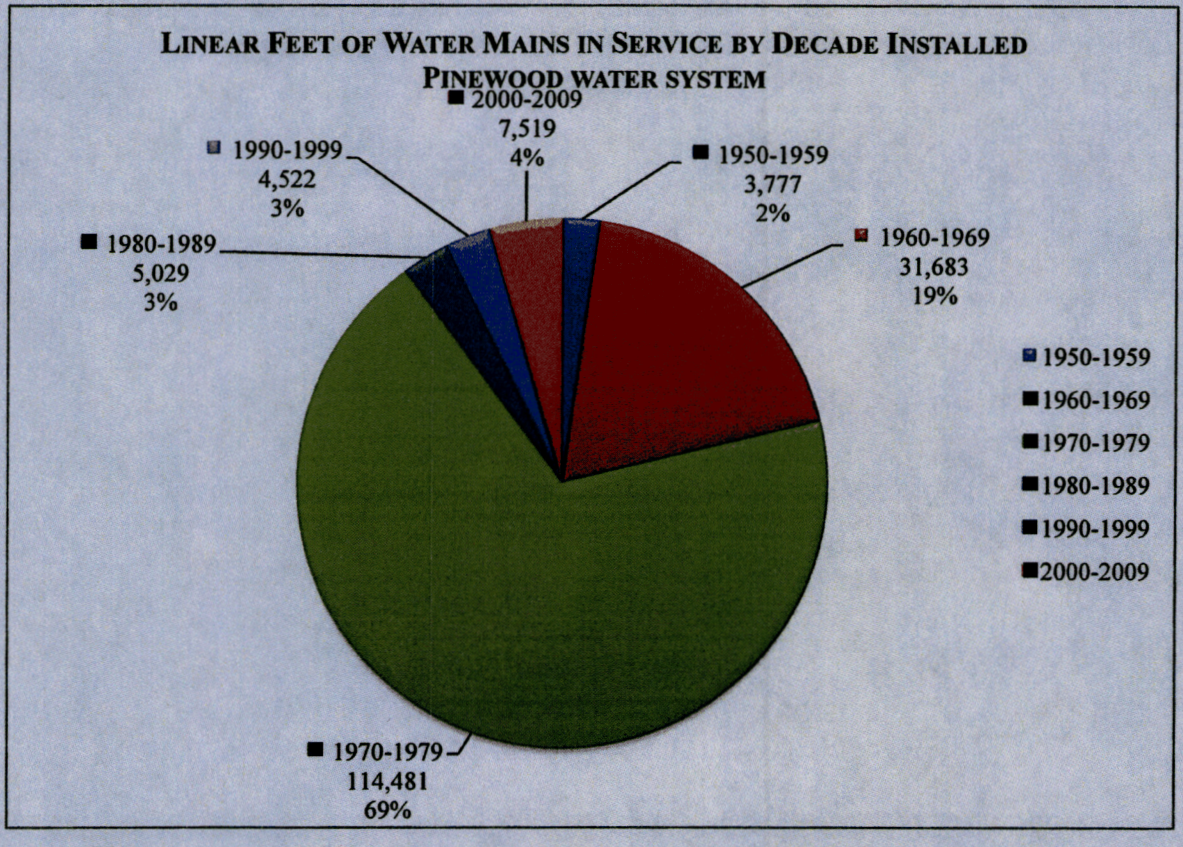

BREAKDOWN AND LINEAR FEET OF WATER MAINS IN SERVICE BY DECADE INSTALLED PINEWOOD WATER SYSTEM		
DECADE WATER MAINS INSTALLED	PERCENTAGE OF WATER MAINS	LF OF MAINS
1950-1959	2.26%	3,777
1960-1969	18.97%	31,683
1970-1979	68.55%	114,481
1980-1989	3.01%	5,029
1990-1999	2.71%	4,522
2000-2009	4.50%	7,519
TOTAL	**100%**	**167,011**

The following graph shows the length of water main, by decade installed, since 1950. Note the significant length of water mains added in the 1970s.

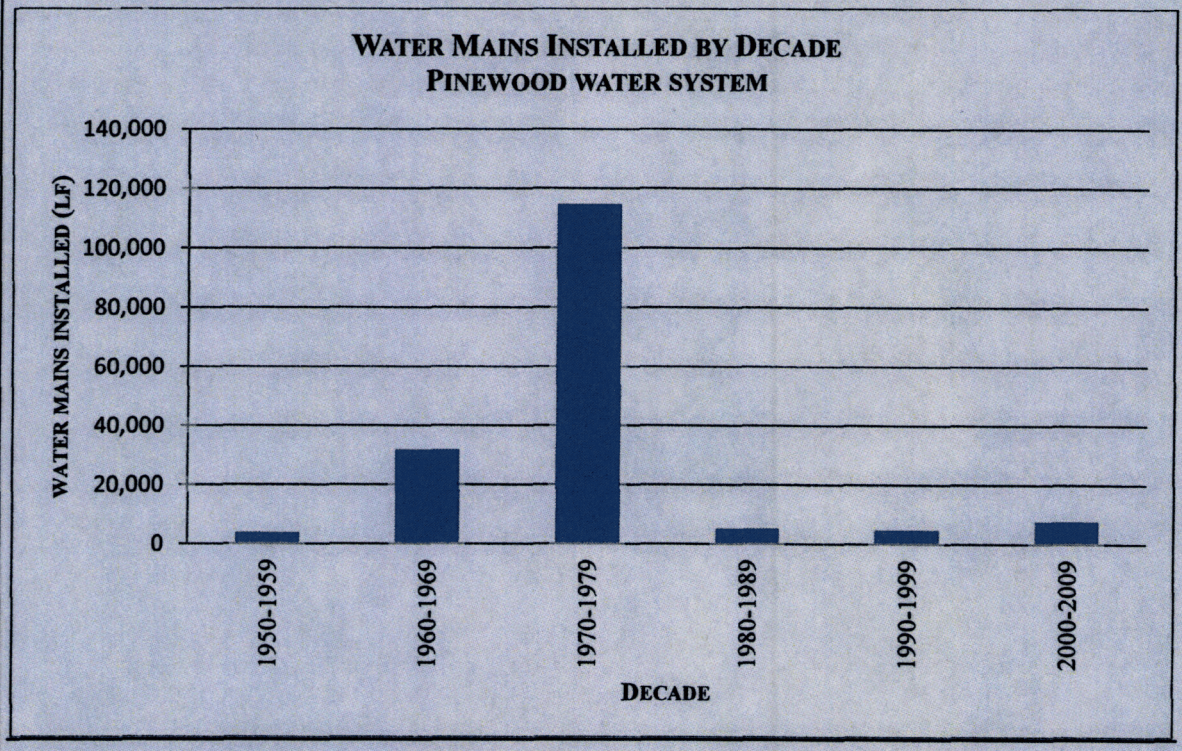

Rimrock:

In Rimrock, the Company determined that water system operators spent nearly 4,500 man-hours between January 2007 and December 2011, monitoring, detecting and repairing water main and service line leaks and breaks throughout the Rimrock water system. This is equivalent to approximately one full-time Company employee working 20 hours per week for the last five years.

Most of the Rimrock water system's galvanized steel water mains have been in service since the early 1960s and are at the end of their useful service lives. These old water mains, some smaller than 2-inches in diameter, do not comply with today's minimum standards. Corrosion protection was not available when these types of water mains were installed and, as a result, they are susceptible to corrosion and have begun to develop leaks. The following three

sets of charts and tables show the length of main in service in the Rimrock water system by size, material type, and decade installed, respectively.

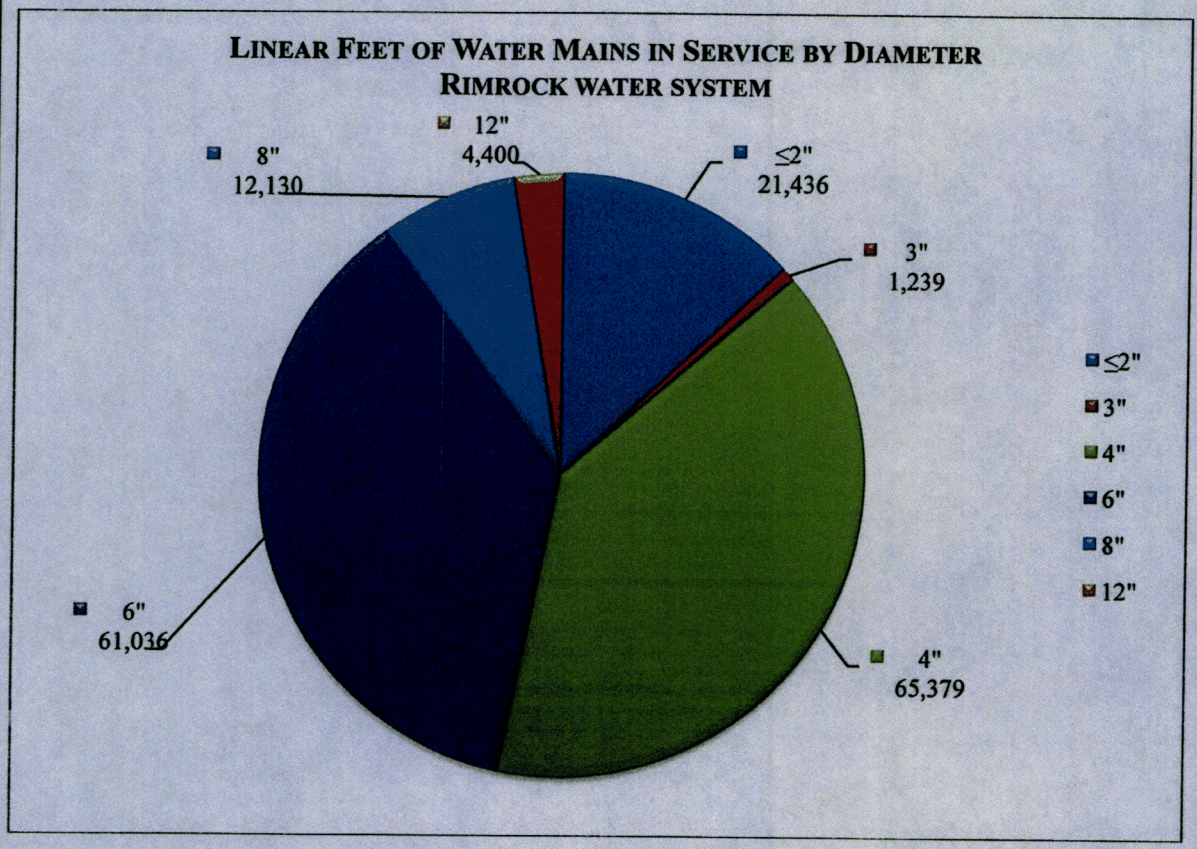

MILES AND LINEAR FEET OF WATER MAINS IN SERVICE BY DIAMETER RIMROCK WATER SYSTEM		
WATER MAIN SIZE	MILES OF WATER MAINS	LF OF WATER MAINS
≤2"	4.06	21,436
3"	0.24	1,239
4"	12.38	65,379
6"	11.56	61,036
8"	2.30	12,130
12"	0.83	4,400
TOTAL	**31.37**	**165,620**

As shown in the table above, 88,000 linear feet of water mains currently in service are less than six inches in diameter.

The chart and table below show the length of water mains currently in service, by material type. As shown, more than 75 percent of the water mains in Rimrock are constructed of cement asbestos or galvanized steel.

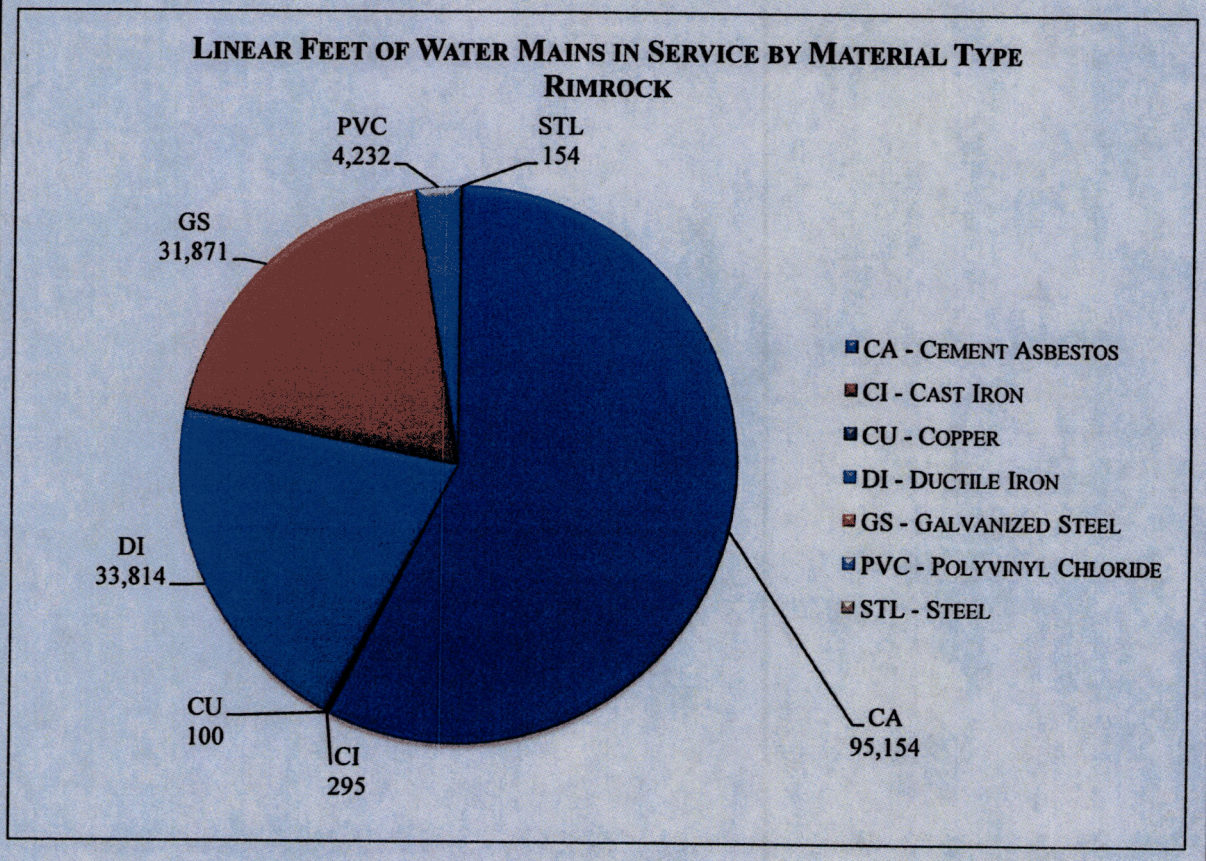

The chart and table below show the length of water mains that remain in service, by decade installed. 95,154 linear feet of cement asbestos water mains that are currently in service were installed from 1960 to 1986. As described in Section 6.2.1 of Exhibit FKS-19, many of the cement asbestos and galvanized steel water mains are at, or are near, the end of their useful service lives.

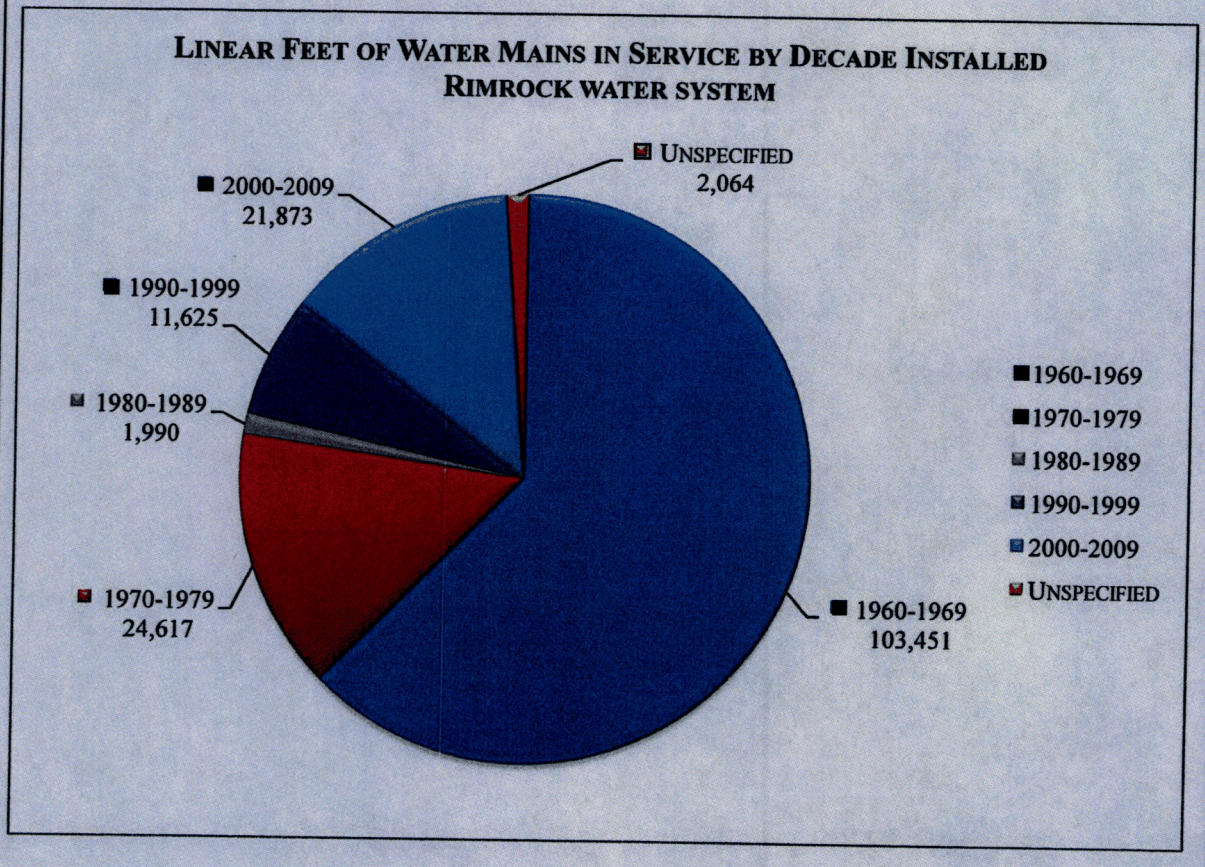

BREAKDOWN AND LINEAR FEET OF WATER MAINS IN SERVICE BY DECADE INSTALLED RIMROCK WATER SYSTEM		
DECADE WATER MAINS INSTALLED	PERCENTAGE OF WATER MAINS	LF OF MAINS
1960-1969	62.46%	103,451
1970-1979	14.86%	24,617
1980-1989	1.20%	1,990
1990-1999	7.02%	11,625
2000-2009	13.21%	21,873
UNSPECIFIED	1.25%	2,064
TOTAL	**100%**	**165,620**

The following graph shows the length of water main, by decade installed, since 1960. Note the significant length of water main added in the 1960s.

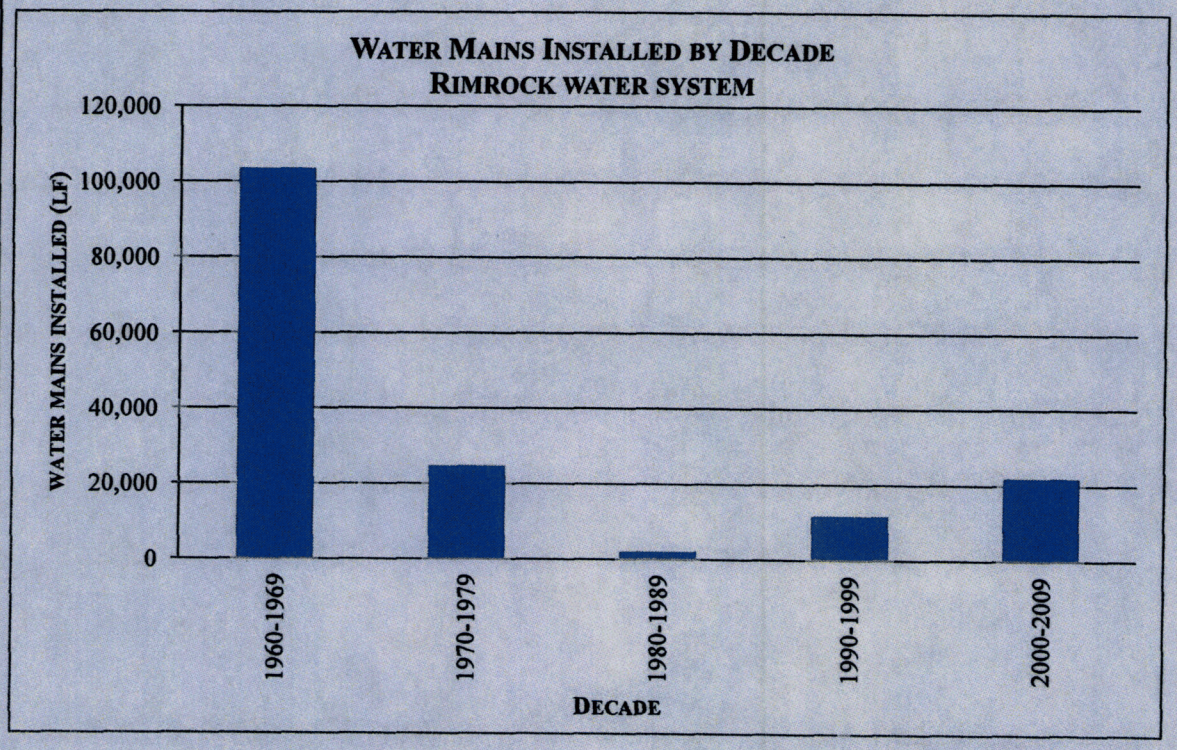

Overgaard:

In Overgaard, the Company determined that water system operators spent over 13,000 man-hours between January 2007 and December 2011, monitoring, detecting, locating and repairing water main and service line leaks and breaks throughout the Overgaard water system. This is equivalent to approximately one full-time Company employee working 40 hours per week and another employee working 10 hours per week for the last five years.

Some of the Overgaard water system's water mains have been in service since the 1940s. This water system experienced constant growth from 1970 to 2010. A large quantity of cement asbestos water mains and plastic water service lines were installed during this time period. Plastic service lines have become brittle and, as a result, are prone to split lengthwise. Repairing plastic service lines is not effective, so they are normally replaced when leaks are discovered. The Company estimates that approximately 60 failing plastic service lines have

been replaced since 2007. However, more than 590 plastic service lines remain in service and need to be replaced in the very near future. Without these replacements, water loss will likely increase. The Company observed approximately 175 meter leaks since 2007, most of which were damaged by freezing. The Company proposes to help prevent meter leaks by retrofitting meter box installations.

The following three sets of charts and tables show the length of main in service in the Overgaard water system by size, material type and decade installed, respectively.

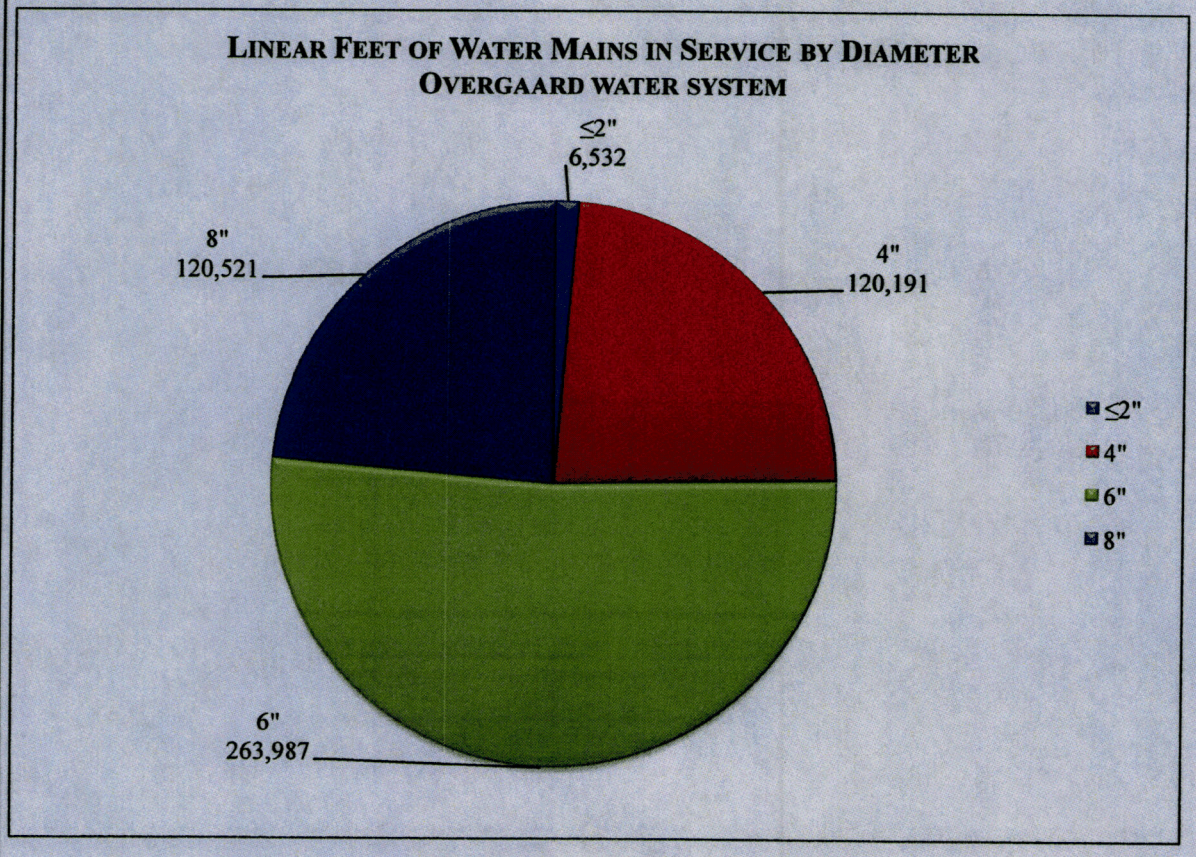

MILES AND LINEAR FEET OF WATER MAINS IN SERVICE BY DIAMETER OVERGAARD WATER SYSTEM		
WATER MAIN SIZE	MILES OF WATER MAINS	LF OF WATER MAINS
≤2"	1.24	6,532
4"	22.76	120,191
6"	50.00	263,987
8"	22.82	120,521
TOTAL	**96.82**	**511,231**

As shown in the table above, over 125,000 linear feet of water mains currently in service are less than six inches in diameter.

The following chart shows the length of water mains currently in service, by material type. A majority of the water mains are constructed of cement asbestos.

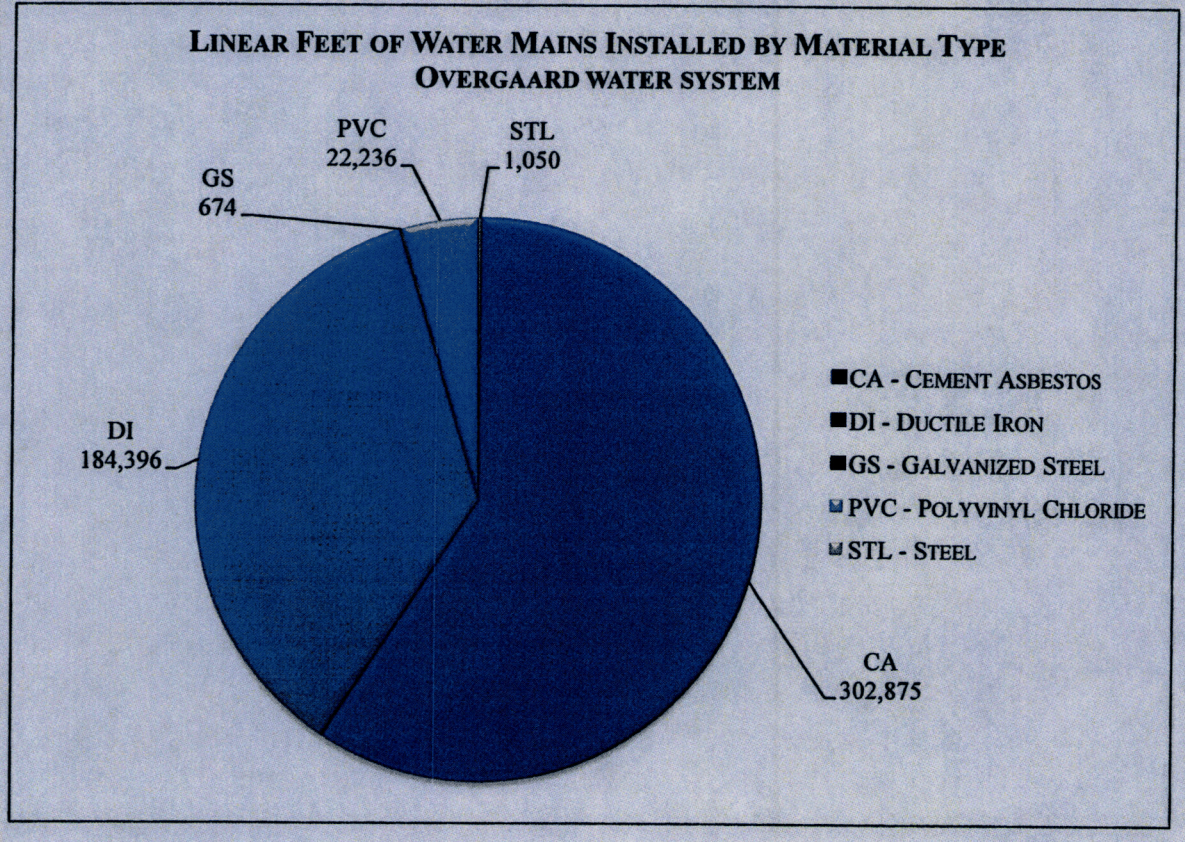

The chart and table below show the length of water mains that remain in service, by decade installed. Cement asbestos water mains were generally installed from the 1940s to 1986. As described in Section 7.2 of Exhibit FKS-19, many of the galvanized steel water mains and plastic service lines are at or near the end of their useful service lives.

LINEAR FEET OF WATER MAINS IN SERVICE BY DECADE INSTALLED
OVERGAARD WATER SYSTEM

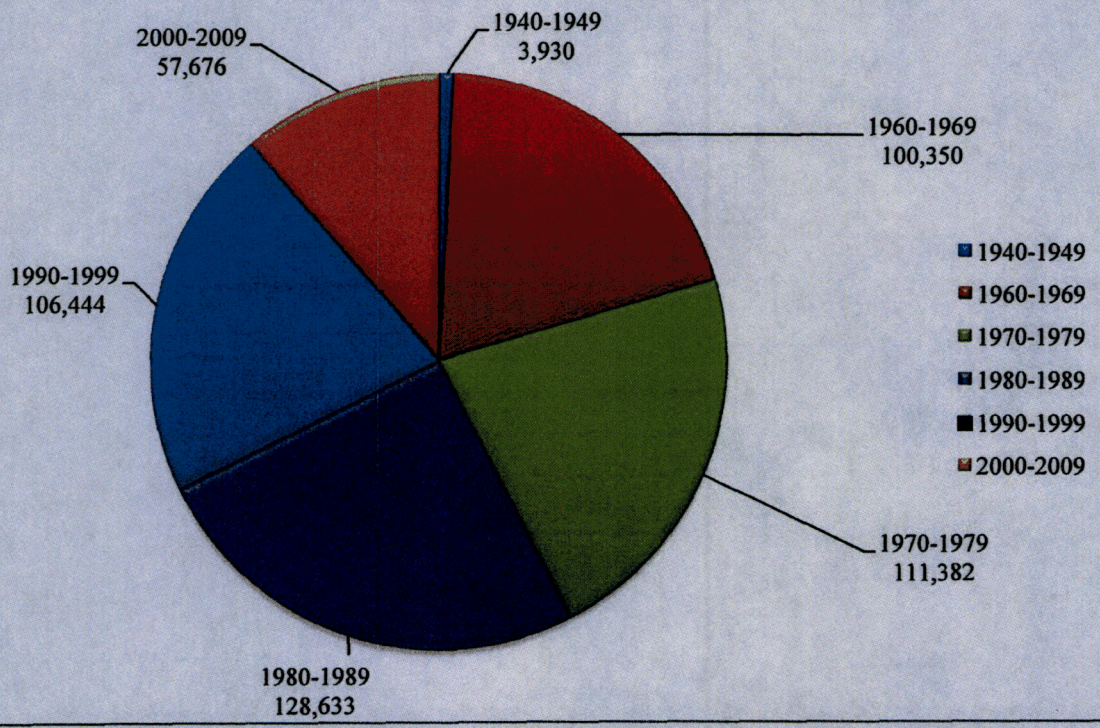

BREAKDOWN AND LINEAR FEET OF WATER MAINS IN SERVICE BY DECADE INSTALLED
OVERGAARD WATER SYSTEM

DECADE WATER MAINS INSTALLED	PERCENTAGE OF WATER MAINS	LF OF MAINS
1940-1949	0.77%	3,930
1960-1969	19.63%	100,350
1970-1979	21.79%	111,382
1980-1989	25.16%	128,633
1990-1999	20.82%	106,444
2000-2009	11.28%	57,676
UNSPECIFIED	0.55%	2,816
TOTAL	**100%**	**511,231**

The following graph shows the length of water mains by decade installed, since 1940. Note the significant length of water mains added from the 1960s through the 1990s.

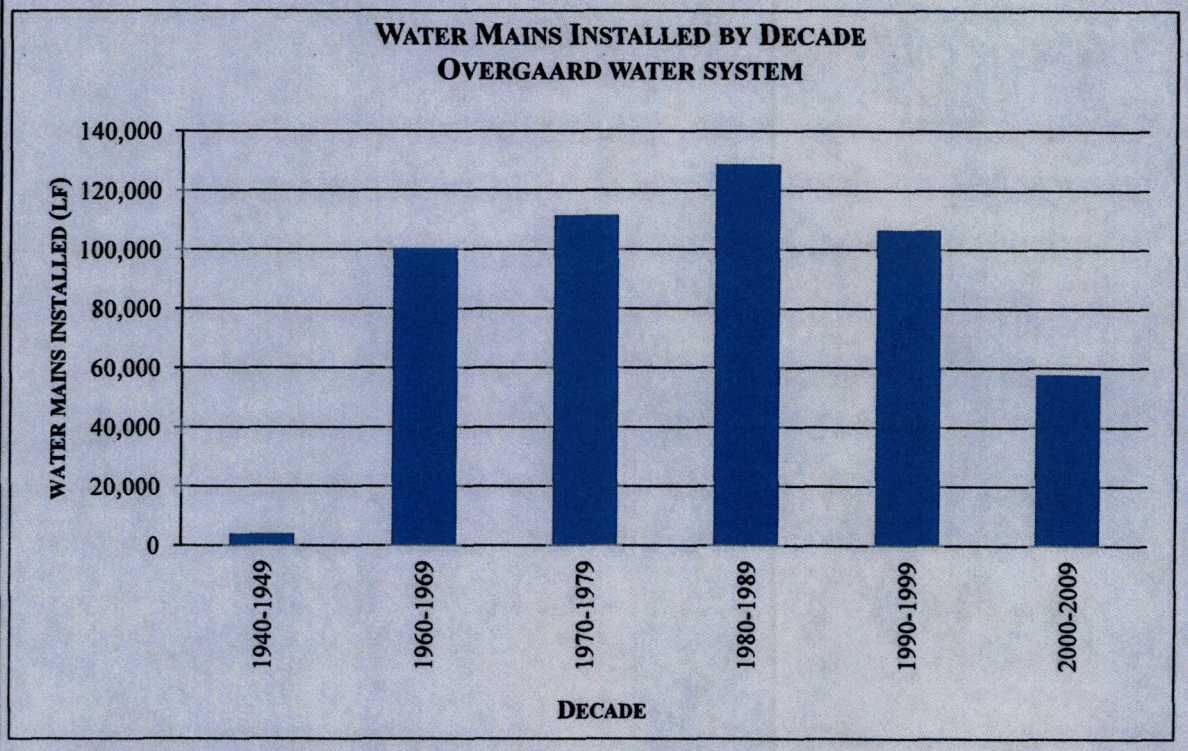

Pinetop Lakes:

In Pinetop Lakes, the Company determined that water system operators spent nearly 20,000 man-hours (including the Lakeside water system) between January 2007 and December 2011, monitoring, detecting, locating and repairing water main and service leaks and breaks throughout the Lakeside and Pinetop Lakes water systems. This is equivalent to approximately two full-time Company employees working 40 hours per week for the last five years.

A review of the Pinetop Lakes water system showed that most of the water system's water mains have been in service since the early 1970s. The Pinetop Lakes water system grew significantly over the past 30 years. Cement asbestos water mains and plastic service lines were installed in the period from

1970-1986. Plastic service lines have become brittle and, as a result, are prone to split lengthwise. Repairing plastic service lines is not effective, so they are normally replaced when leaks are discovered. However, over 120 of the failing plastic service lines are still in service and need to be replaced in the very near future. Without these replacements, water loss will likely increase.

The following three sets of charts and tables show the length of main in service in the Pinetop Lakes water system, by size, material type and decade installed, respectively.

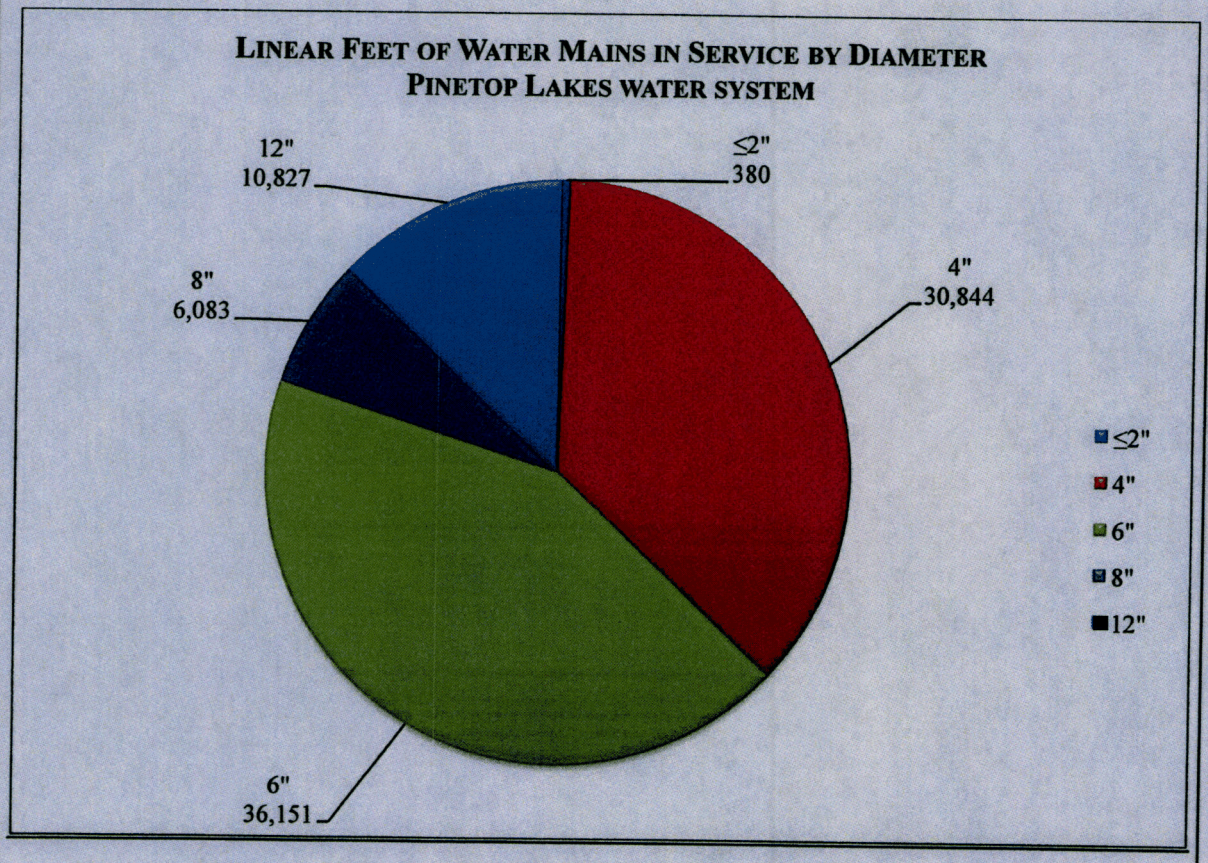

Miles and Linear Feet of Water Mains in Service by Diameter Pinetop Lakes water system		
Water Main Size	Miles of Water Mains	LF of Water Mains
≤2"	0.07	380
4"	5.84	30,844
6"	6.85	36,151
8"	1.15	6,083
12"	2.05	10,827
Total	**15.96**	**84,285**

The table above shows that more than 31,000 linear feet of water mains in service today are less than six inches in diameter.

The following chart shows the length of water mains currently in service by material type. As shown, a majority of the water mains are constructed of cement asbestos.

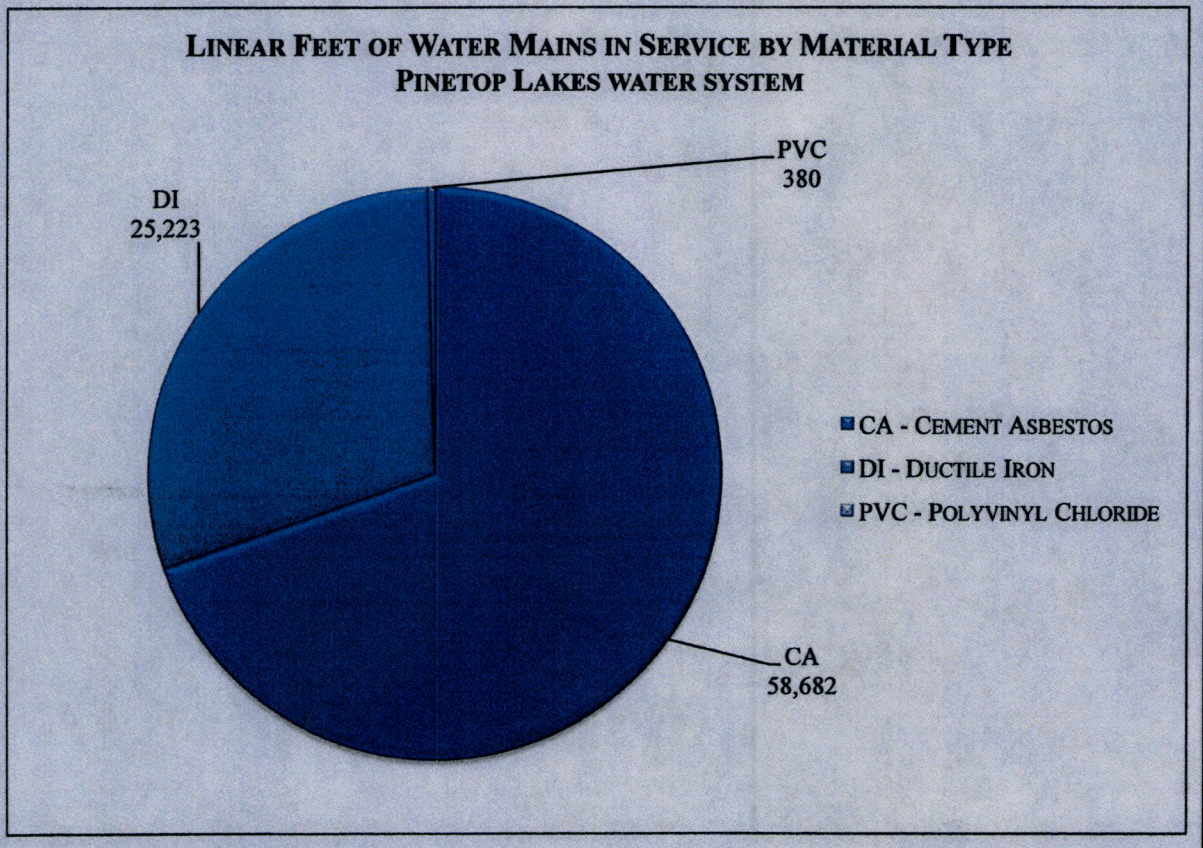

The chart and table below show the length of water main that remains in service, by decade installed. As described in Section 8.2 of Exhibit FKS-19, these water mains have generally not reached the end of their useful lives.

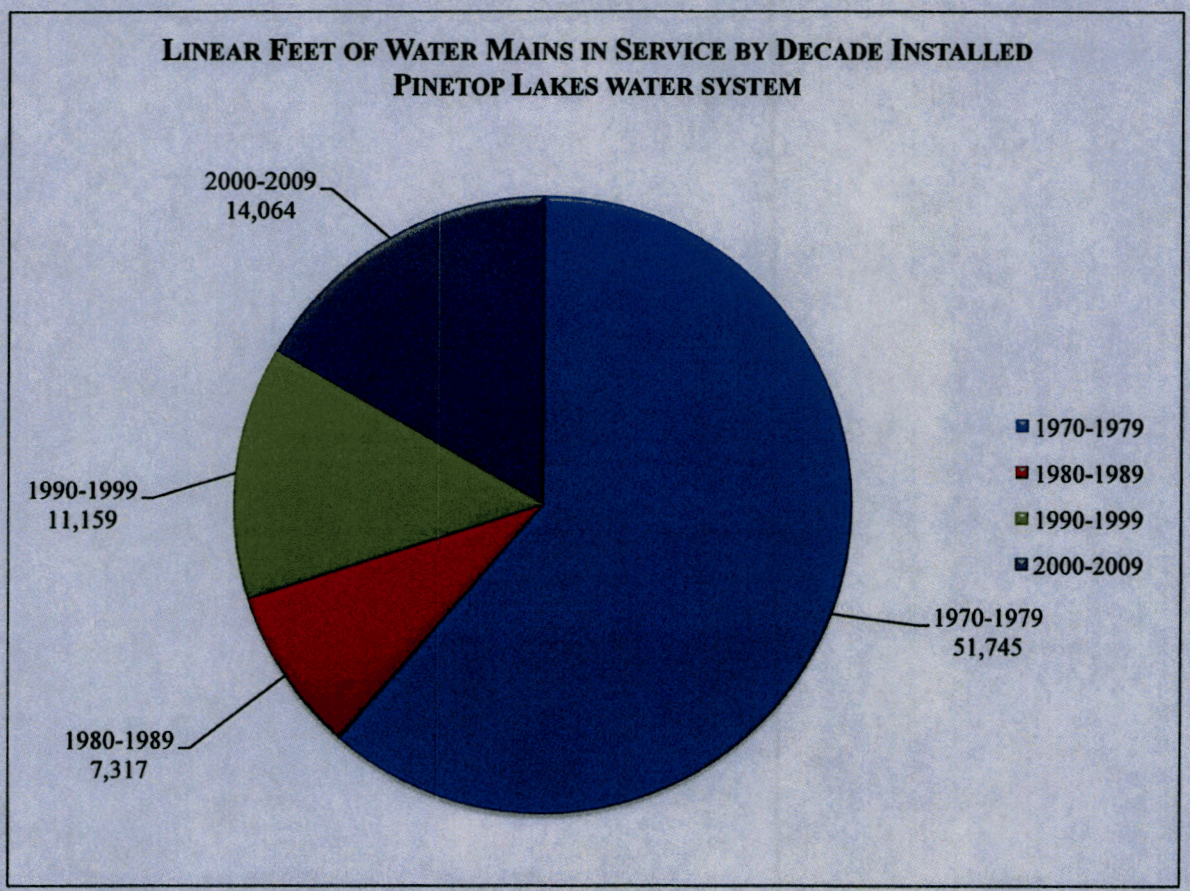

BREAKDOWN AND LINEAR FEET OF WATER MAINS IN SERVICE BY DECADE INSTALLED PINETOP LAKES WATER SYSTEM		
DECADE WATER MAINS INSTALLED	PERCENTAGE OF WATER MAINS	LF OF MAINS
1970-1979	61.39%	51,745
1980-1989	8.68%	7,317
1990-1999	13.24%	11,159
2000-2009	16.69%	14,064
TOTAL	**100%**	**84,285**

The following graph shows the length of water main, by decade installed, since 1970. Note the significant length of water mains added in the 1970s.

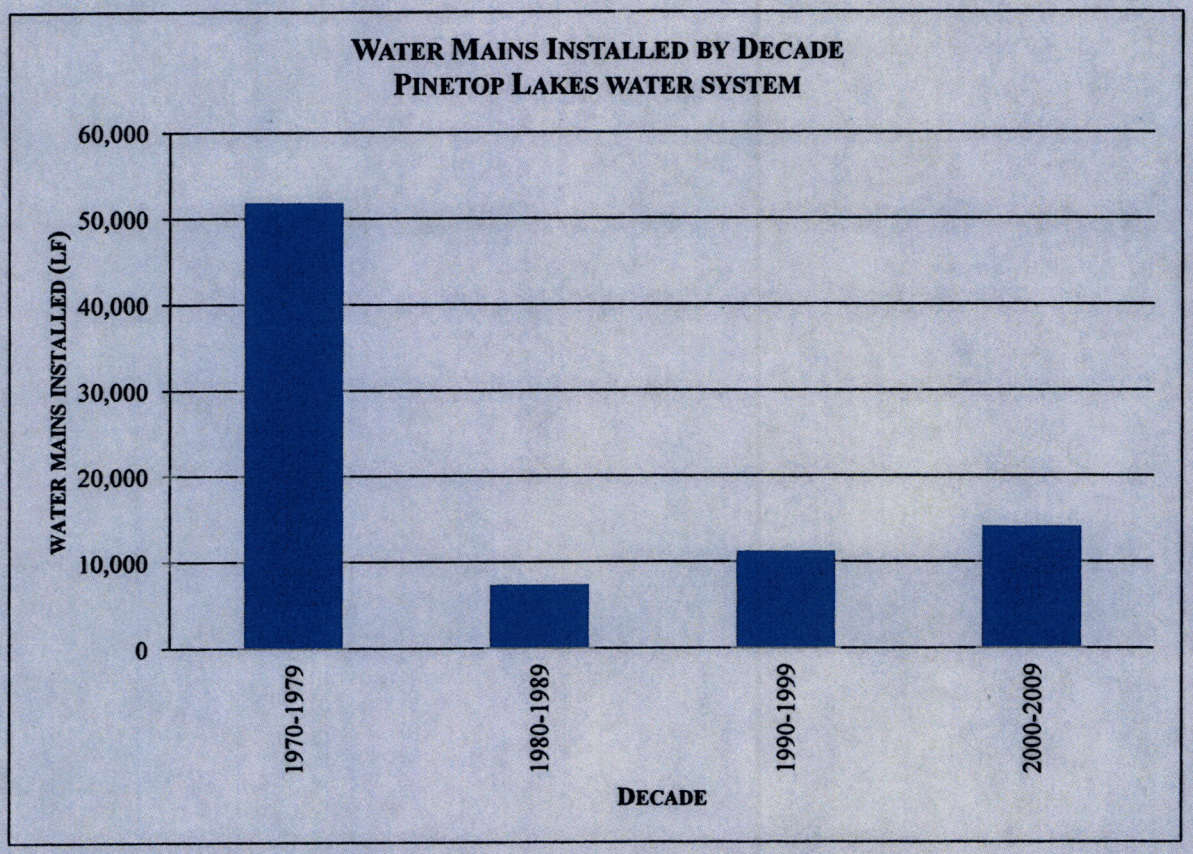

Sedona:

In Sedona, the Company determined that water system operators spent nearly 33,000 man-hours between January 2007 and December 2011, monitoring, detecting, locating and repairing water main and service leaks and breaks throughout the Sedona Water System. This is equivalent to over three full-time Company employees working 40 hours per week for the last five years.

A review of the Sedona water system showed a significant quantity of water mains are at or near the end of their useful service lives, some of which date back to the 1930s and 1940s. Many of these old water mains, some smaller than 2-inches in diameter, do not comply with today's minimum standards. Corrosion protection was not available when these water mains were installed

and, as a result, they are susceptible to corrosion and have developed leaks. Leaks are difficult to detect, locate and repair in Sedona because of the soil conditions.

The Sedona water system grew over the last 30 years. A large quantity of cement asbestos water mains and plastic service lines were installed during the period from 1970-1986. Plastic service lines have become brittle and, as a result, are prone to split lengthwise. Repairing plastic service lines is not effective, so they are normally replaced when leaks are discovered. Approximately 500 plastic service lines have been replaced since 2007, however, over 1,000 of the failing plastic service lines need to be replaced in the very near future. Without these replacements, water loss will likely increase.

The following three sets of charts and tables show the length of main in service in the Sedona water system by size, material type and decade installed, respectively.

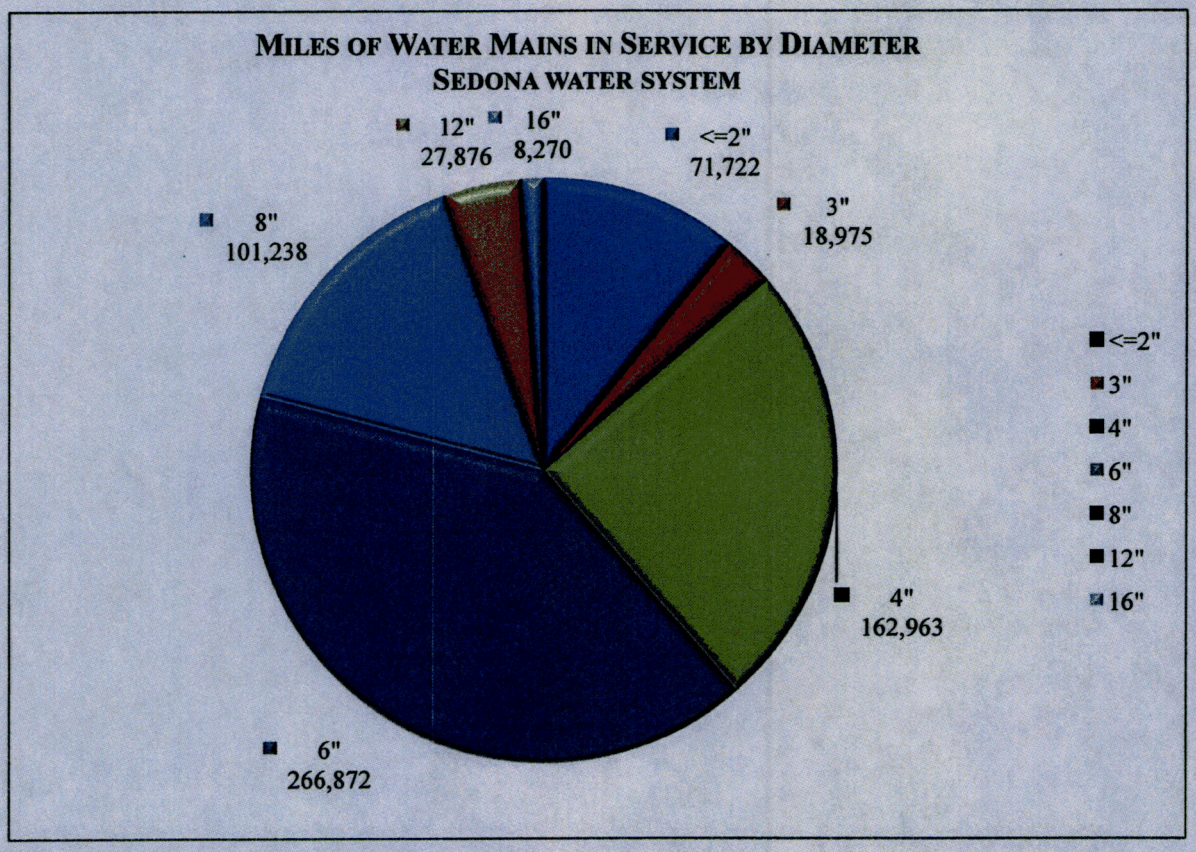

MILES AND LINEAR FEET OF WATER MAINS IN SERVICE BY DIAMETER SEDONA WATER SYSTEM		
WATER MAIN SIZE	MILES OF WATER MAINS	LF OF WATER MAINS
≤2"	13.58	71,722
3"	3.59	18,975
4"	30.87	162,963
6"	50.54	266,872
8"	19.17	101,238
12"	5.28	27,876
16"	1.57	8,270
TOTAL	**124.60**	**657,916**

The table above shows that over 250,000 linear feet of water mains in service today are less than six inches in diameter.

The following chart shows the length of water mains currently in service by material type. As shown, a majority of the water mains are cement asbestos; however, over 84,000 LF of water mains were constructed of galvanized steel or unlined steel materials.

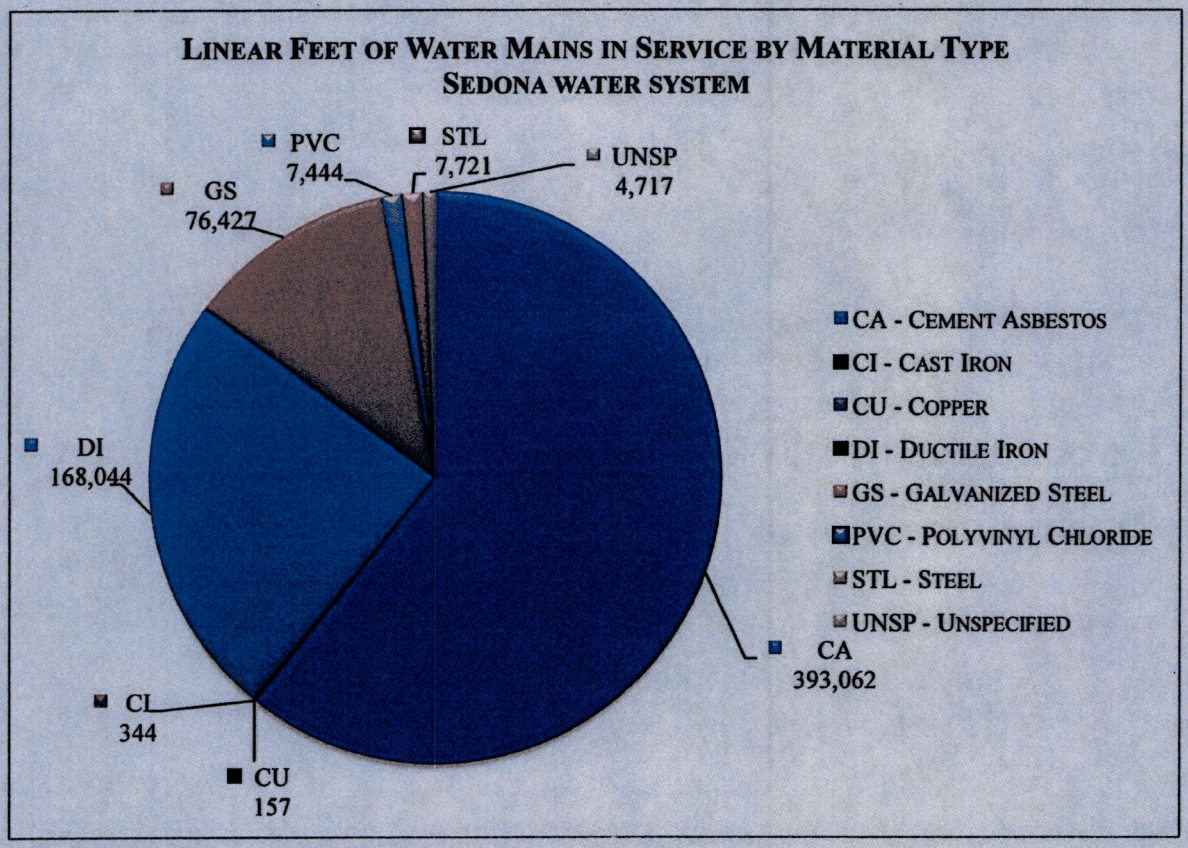

The chart and table below show the length of water mains that remain in service, by decade installed. 12 percent (over 73,000 LF) of water mains currently in service are over 50 years old. As described in Section 9.2 of Exhibit FKS-19, a significant number of water mains are at or near the end of their useful service lives.

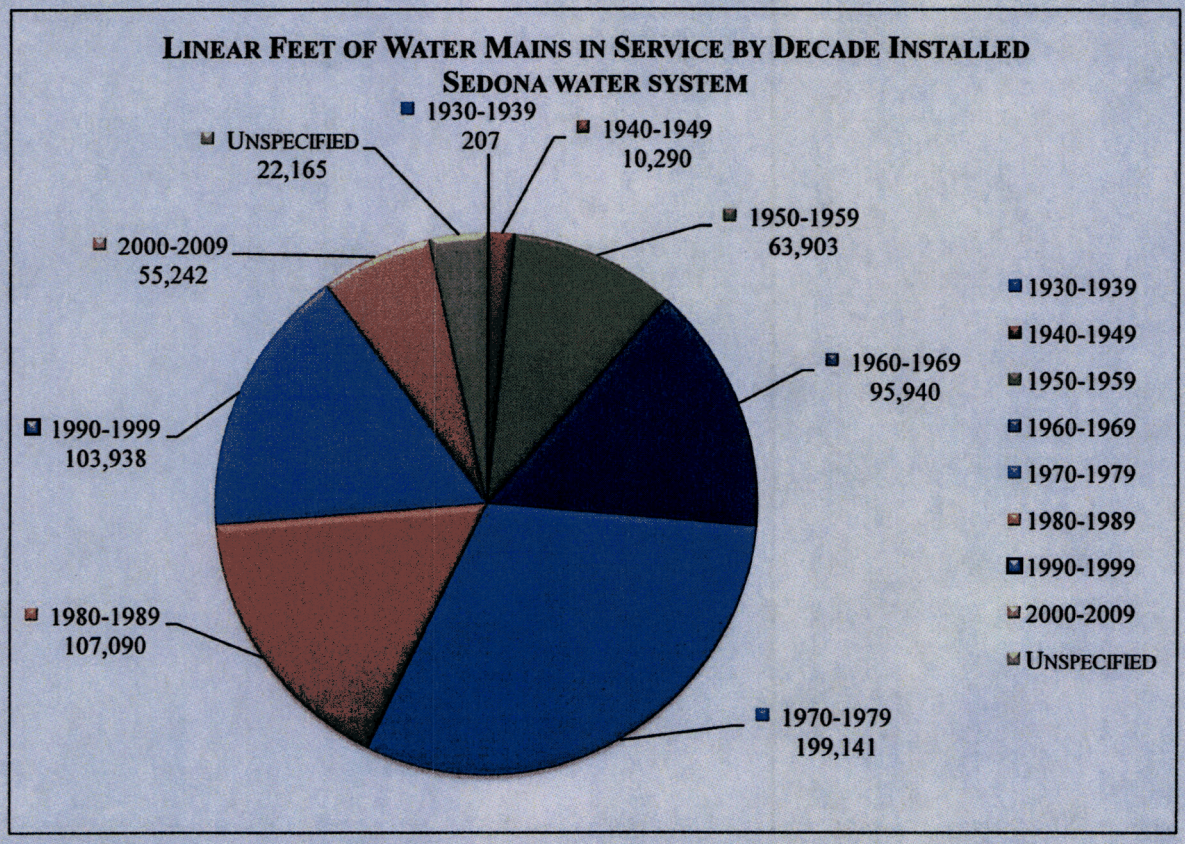

BREAKDOWN AND LINEAR FEET OF WATER MAINS IN SERVICE BY DECADE INSTALLED SEDONA WATER SYSTEM		
DECADE WATER MAINS INSTALLED	PERCENTAGE OF WATER MAINS	LF OF MAINS
1930-1939	0.03%	207
1940-1949	1.56%	10,290
1950-1959	9.71%	63,903
1960-1969	14.58%	95,940
1970-1979	30.27%	199,141
1980-1989	16.28%	107,090
1990-1999	15.80%	103,938
2000-2009	8.40%	55,242
UNSPECIFIED	3.37%	22,165
TOTAL	**100%**	**657,916**

The following graph shows the length of water mains, by decade installed, since 1930. Note the significant length of water mains added in the 1970s.

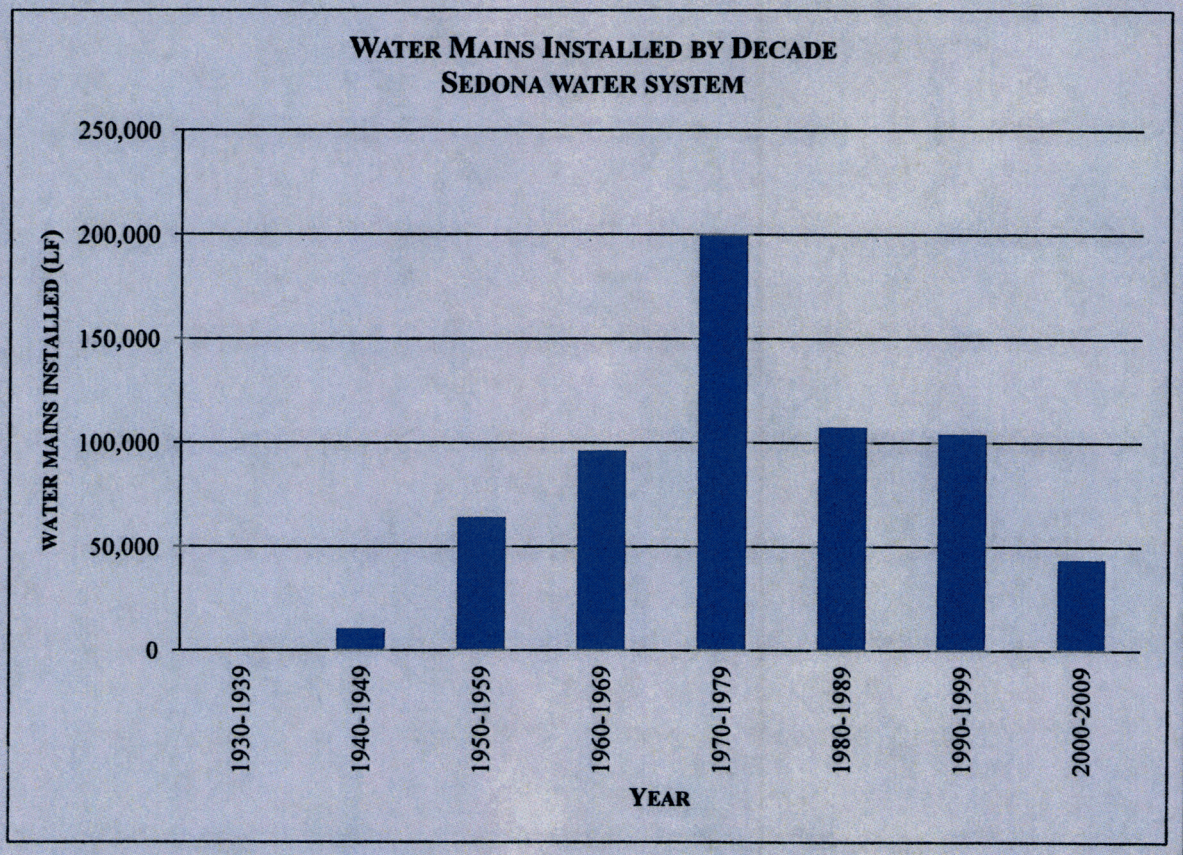

Q. THE FOREGOING DETAILED INFORMATION, CHARTS AND GRAPH SHOW A NEED TO REPLACE A SIGNIFICANT AMOUNT OF WATER MAINS AND SERVICE LINES WITHIN THE FIVE NORTHERN GROUP WATER SYSTEMS. HOW DOES THE WATER INDUSTRY CALCULATE THE COST OF REPLACING INFRASTRUCTURE?

A. The cost of replacing infrastructure is calculated in several ways. For example, the Handy Whitman Index of Public Utility Construction Costs is an engineering cost index that tracks the cost of constructing various types of public utility plant in different parts of the country. This index compares the cost of constructing public utility plant from one time period to another. For example, water mains that were installed in 1921 have a cost index of 27, while the index for water mains installed in 2011 is 590.

Q. WHAT DOES THIS CHANGE IN ENGINEERING COST INDEX MEAN IN TERMS OF DOLLARS TO INSTALL T&D MAINS IN 2011 VERSUS INSTALLING T&D MAINS IN 1921?

A. The index is used to estimate construction costs by using today's cost index and comparing it to the cost index for the time period of the original installation. In the example above, the 2011 cost index (590), divided by the 1921 cost index (27), shows that the cost of constructing cast iron or ductile iron water mains in 2011, is almost 22 times the cost of installing the same pipe under the same conditions that existed in 1921.

Q. DOES THIS ENGINEERING COST INDEX ACCOUNT FOR THE FULL REPLACEMENT COST?

A. No. This engineering cost index does not account for cost increases caused by changes in construction conditions.

Q. PLEASE EXPLAIN FURTHER WHAT YOU MEAN BY CHANGES IN CONSTRUCTION CONDITIONS.

A. In many of the Company's water systems with older water mains, the T&D mains were installed before streets were paved, curbing and gutters installed, telephone lines installed and other more recent underground utilities installed. Therefore, the cost of replacing T&D mains in these areas now would also need to include the cost of repairing streets and sidewalks, providing traffic control and working around other underground and above-ground installations to protect them against damage.

Q. HAS THE COMPANY PREPARED A TIMETABLE TO REPLACE THIS INFRASTRUCTURE?

A. Not yet, other than an initial three-year plan proposed as part of the Company's proposed Distribution System Improvement Charge ("DSIC") discussed below. I

discuss infrastructure replacements for each of the Northern Group systems, below.

Pinewood:

The Nessie Curve analysis is a predictive method of graphing annual replacement needs based on the date of water main installations and their expected useful lives. For the Pinewood water system, the graph below shows the predicted water main replacements needed versus historical replacement rates, based on the average replacement rate between 2000 and 2010. The graph clearly depicts the current scenario, where the existing replacement rate is not sufficient to keep pace with actual water system replacement needs. The Company determined that approximately 4,100 LF of water mains need to be replaced in the Pinewood water system. Another 11,400 LF of water main will need to be replaced over the next 10 years. Replacement of 15,500 LF of water mains represents 9 percent of the Pinewood water system. The estimated cost to replace 15,500 LF of water main is $1.7 million, as detailed in Exhibit FKS-19.

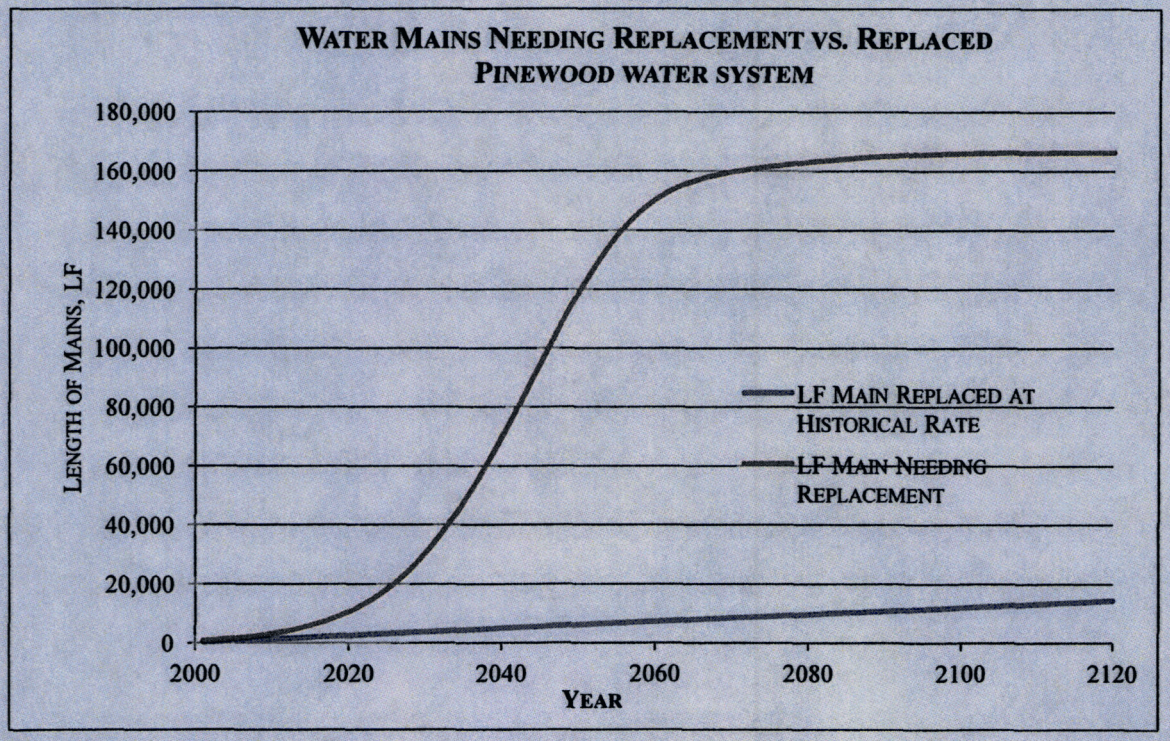

Because of the magnitude of service line leaks and breaks in the Pinewood water system, the same Nessie Curve analysis was performed for service lines constructed of plastic. The Company estimated the timing and magnitude of the investment needed to fund these replacements. The analysis shows the total cost to replace these plastic services lines to be $10.8 million, as detailed in Exhibit FKS-19.

At the current replacement rate, the Company will fall behind on water main replacements for its Pinewood water system. Replacement costs will continue to increase further limiting the quantity of aging and failing water mains and service lines that the Company may be able to replace. Without a DSIC or some other funding mechanism, or significantly higher returns on equity, the required replacement rate cannot be achieved.

Rimrock:

For the Rimrock water system, the graph below shows the water main replacements needed versus historical replacement rates based on the average replacement rate between 2000 and 2010. Based on the current replacement rate, the Company will continue to fall behind on water main and service line replacements. The Company needs to replace approximately 43,200 LF of problematic mains based on a complete review of the documented water main and service line repair history and the Nessie Curve Analysis. The estimated cost to replace approximately 43,200 LF of water mains and 900 service lines is $7.4 million over the next 10 years.

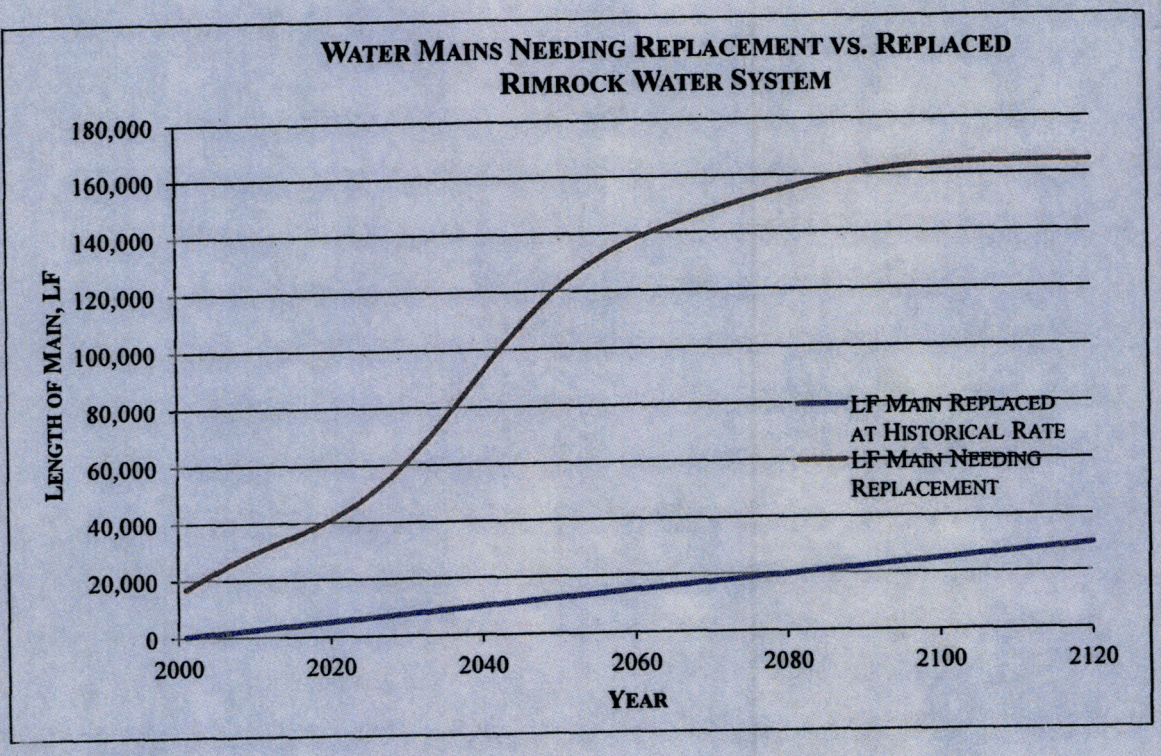

At the historical rate of water main replacement, the Company will not be able to keep up with the needed water main replacements over the next 10 years. The above graph shows that a significant increase in the rate of water main replacements is necessary. Each year, replacement costs and the quantity of aging and failing water mains and services are escalating making it increasingly difficult to replace such aging mains and services. Without a DSIC or some other funding mechanism or higher returns on equity, the required replacement rate cannot be achieved.

Overgaard:

For the Overgaard water system, the graph below shows the water main replacements needed versus historical replacement rates, based on the average replacement rate between 2000 and 2010. The analysis shows that approximately 23,700 LF of water main or approximately five percent of water mains in the Overgaard water system need to be replaced. The graph clearly shows that the current water main replacement rate is not sufficient to keep pace with the needed water system replacements.

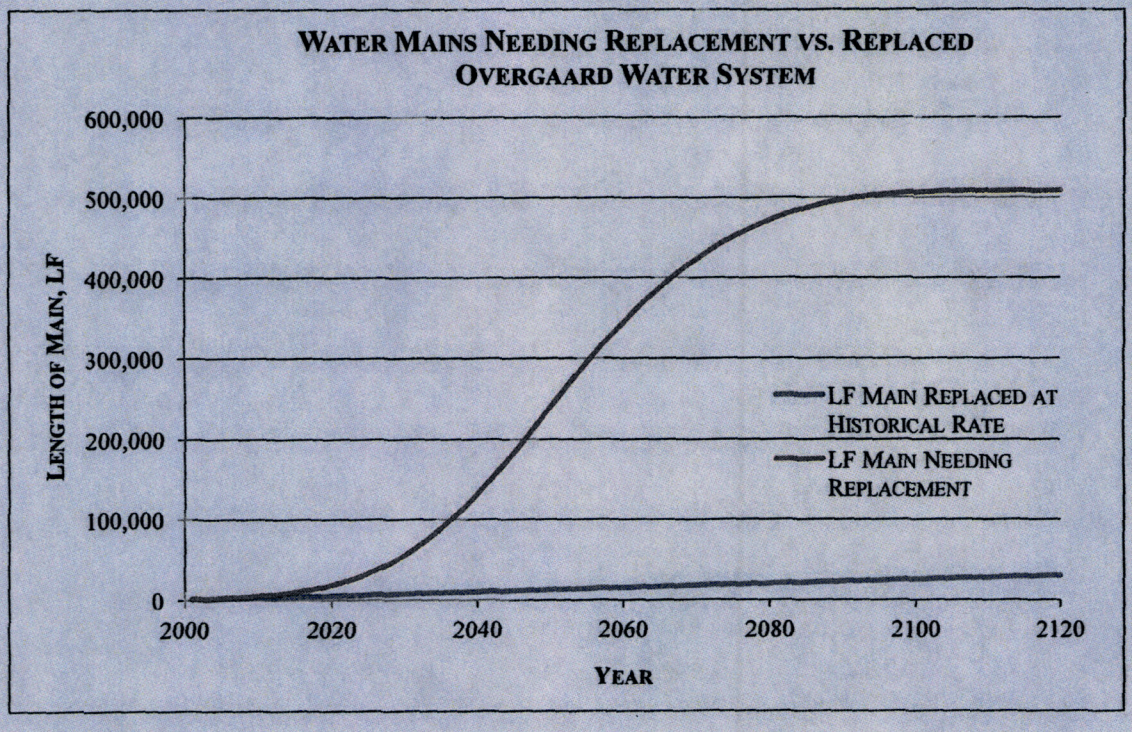

Because of the magnitude of service line leaks and breaks in the Overgaard water system, a Nessie Curve analysis was performed for service lines constructed of plastic. The analysis shows that approximately 590 of these service lines need to be replaced. Over the next 10 years, an additional 1,810 service lines constructed of plastic will need to be replaced. The total cost to replace 2,400 plastic service lines is $6.0 million, as detailed in Exhibit FKS-19.

Replacement costs will continue to increase, further limiting the quantity of aging and failing water mains and service lines that the Company is able to replace. Each year, replacement costs and the quantity of aging and failing water mains and service lines are escalating, making it increasingly more difficult to replace such aging mains and service lines. Without a DSIC or some other form of funding mechanism or higher returns on equity, the required replacement rate cannot be achieved.

Pinetop Lakes:

For the Pinetop Lakes water system, the graph below shows the water main replacements needed versus historical replacement rates, based on the average replacement rate between 2000 and 2010. At the current replacement rate, the Company is behind on service line replacements. The Company is planning to replace approximately 6,200 LF of problematic mains and 630 PB and PE service lines, based on a complete review of the documented water main and service line repair history and the Nessie Curve Analysis. The estimated cost to replace approximately 6,200 LF of water mains and 630 service lines is $3.9 million over the next 10 years.

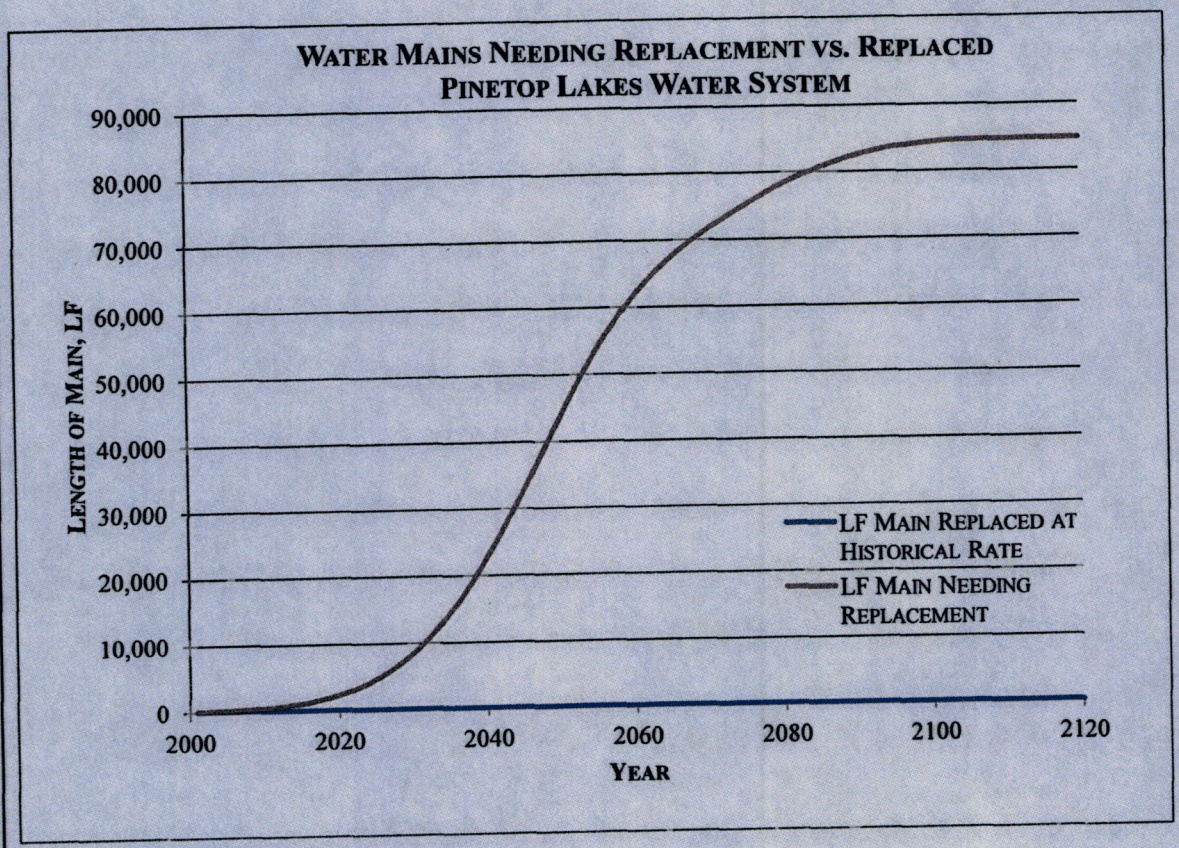
WATER MAINS NEEDING REPLACEMENT VS. REPLACED
PINETOP LAKES WATER SYSTEM
LENGTH OF MAIN, LF
90,000
80,000
70,000
60,000
50,000
40,000
30,000
20,000
10,000
0
2000
2020
2040
2060
2080
2100
2120
YEAR
LF MAIN REPLACED AT HISTORICAL RATE
LF MAIN NEEDING REPLACEMENT

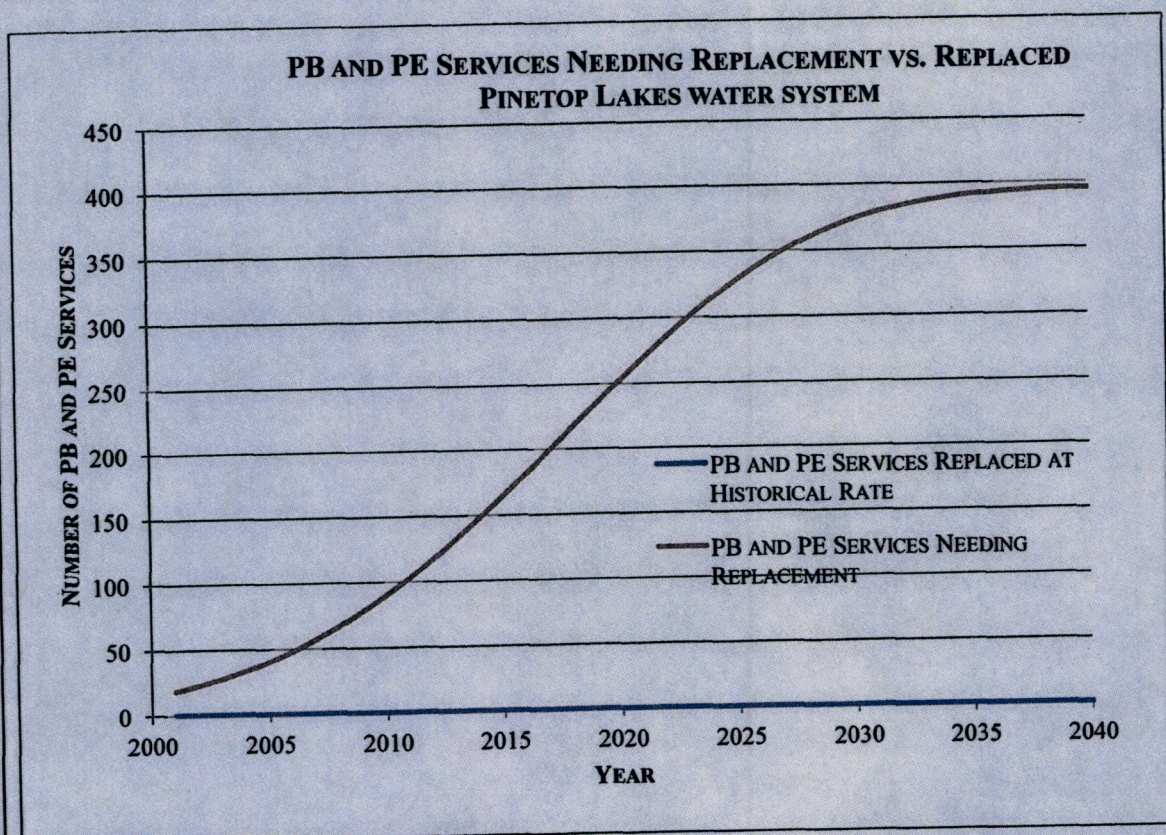
PB AND PE SERVICES NEEDING REPLACEMENT VS. REPLACED
PINETOP LAKES WATER SYSTEM
NUMBER OF PB AND PE SERVICES
450
400
350
300
250
200
150
100
50
0
2000
2005
2010
2015
2020
2025
2030
2035
2040
YEAR
PB AND PE SERVICES REPLACED AT HISTORICAL RATE
PB AND PE SERVICES NEEDING REPLACEMENT

At the historical rate of water main replacement, the Company will not be able to keep up with the needed water main replacements over the next 10 years. The above graph shows that a significant increase in the rate of water main replacements will be necessary, as shown in the Water Loss Reduction Program for Water Systems in the Northern Group attached as Exhibit FKS-17. Each year, replacement costs and the quantity of aging and failing water mains and services are escalating making it increasingly difficult to replace such aging mains and services. Without a DSIC or some other funding mechanism or higher returns on equity, the required replacement rate cannot be achieved.

Sedona:

For the Sedona water system, the graph below shows the predicted water main replacements needed versus historical replacement rates, based on the average replacement rate between 2000 and 2010. Based on the current replacement rate, the Company determined that it would take over 275 years to replace the existing infrastructure. The graph clearly depicts the current scenario, where the existing replacement rate is not sufficient to keep pace with actual water system replacement needs. The analysis shows approximately 74,400 LF of water mains need to be replaced in the Sedona water system. Another 27,500 LF of water main will need to be replaced over the next 10 years. Replacement of 101,900 LF of water mains represents 16 percent of the Sedona water system. The estimated cost to replace 101,900 LF of water main and 3,250 galvanized steel and plastic service lines is $39 million, as detailed in Exhibit FKS-19.

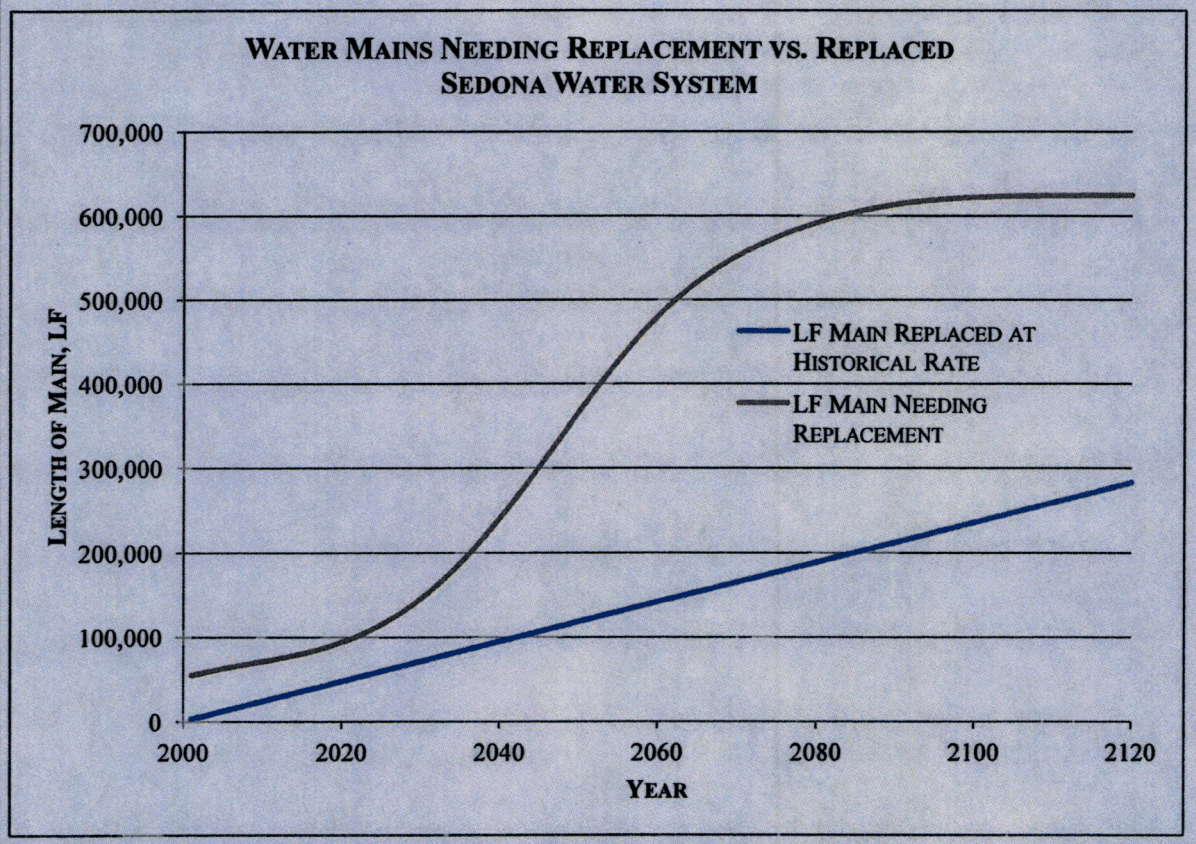

Because of the magnitude of service line leaks and breaks in the Sedona water system, a Nessie Curve analysis was performed for service lines constructed of galvanized steel and plastic. The Company's analysis shows approximately 1,090 of these service lines need to be replaced. Over the next 10 years, an additional 2,160 service lines constructed of these materials will need to be replaced.

At the historical replacement rate of 2,350 LF annually, the Company will fall behind on water main and service line replacements for its Sedona water system. Replacement costs will continue to increase further limiting the quantity of aging and failing water mains and service lines that the Company may be able to replace. With aging pipe already near failure or failing, replacing this aging infrastructure now or in the near future is critical to ensure reliable and adequate

water service. Without a DSIC or some other funding mechanism, or higher returns on equity, the required replacement rate cannot be achieved.

Q. DID THE COMPANY PREPARE A COST ESTIMATE TO REPLACE THIS INFRASTRUCTURE?

A. Yes. The Company prepared a cost estimate to replace the aging infrastructure in its Pinewood, Rimrock, Overgaard, Pinetop Lakes, and Sedona water systems. The estimated cost to replace this infrastructure is listed in the following table:

Area	Cost Estimate
Pinewood	$19,338,389
Rimrock	$7,408,120
Overgaard	$14,427,961
Pinetop Lakes	$3,987,245
Sedona	$39,048,694

Details of these cost estimates are included in Appendix 11.5 of Exhibit FKS-19 which are also included as Exhibits FKS-21 through FKS-25 in this testimony. These cost estimates are based on water mains and service lines needing replacement between 2012 and 2021. Replacement unit costs are based on recent bids from other Company projects within the Northern Group.

Q. TO REDUCE WATER LOSS IN THE PINEWOOD, RIMROCK, OVERGAARD, PINETOP LAKES AND SEDONA WATER SYSTEMS, AS THE COMMISSION DIRECTED IN DECISION NO. 71845, WHAT SPECIFIC UTILITY PLANT REPLACEMENTS HAS THE COMPANY COMPLETED ?

A. The Company completed the following projects to reduce water loss.

Pinewood (PWSID No. 03-002):

Project One

This project replaced 43 service lines on Hopi Place, Zuni Place, Navajo Place, Kay Place, Acoma Place and San Felipe Place that were installed in 1971.

The existing service lines had 13 recorded leaks in the last ten years. The cost to complete this project was approximately $205,000. This project was completed and placed in service on May 31, 2012.

Rimrock (PWSID No. 13-046):

Project Two

This project replaced 300 LF of 4-inch galvanized steel with a 6-inch DIP pipe with polywrap and five service lines along Paiute Trail that were installed in 1961. The existing water main had 12 leaks since 2005. The cost to complete this project was approximately $30,000. This project was completed and placed in service on September 20, 2011.

Project Three

This project replaced 1,230 LF of 2-inch galvanized steel with a 6-inch DIP pipe with polywrap and 23 service connections along Cliffside Trail that were installed in 1961. The existing water main had 23 leaks since 2005. The cost to complete this project was approximately $110,000. This project was completed and placed in service on March 2, 2012.

Project Four

This project replaced 820 LF of 4-inch galvanized steel with 820 LF of 6-inch DIP pipe with polywrap and three service connections along Antigua Way that were installed in 1963. The existing water main had 20 leaks since 2005. The cost to complete this project was approximately $60,000. This project was completed and placed in service on April 24, 2012.

Q. THESE URGENTLY-NEEDED WATERLINE REPLACEMENTS REPRESENT A SIGNIFICANT CAPITAL INVESTMENT BY THE COMPANY TO ADDRESS SYSTEM WATER LOSS. HOW DID THE COMPANY DECIDE TO MAKE THESE INVESTMENTS?

A. Aside from the high water losses resulting from aging and failing waterlines, the most compelling reason came from the Commission itself. The Commission ordered the Company to reduce water loss in *all* systems to less than 10 percent by July 1, 2011. For the Northern Group, the Company determined that locating and repairing leaks and breaks alone could not comply with this water loss reduction mandate. The Company's aggressive water loss reduction efforts have yet to reduce water loss in all systems to less than 10 percent as the Commission required.

Q. WILL THESE WATERLINE AND SERVICE LINE REPLACEMENTS HELP TO REDUCE WATER LOSS?

A. Yes. These waterline replacements are needed to help reduce water loss and move towards compliance with the Commission's order to reduce water loss. However, additional replacement of aging infrastructure is needed in the Northern Group to comply with water loss requirements. The solution to this problem requires an ongoing commitment to the planned replacement of aging and failing waterlines. In some cases, larger diameter waterlines are needed to address the Commission's directive to the Company to reduce water loss. Replacing a growing number of service lines is also required, as failing service lines are another significant source of water loss. Due to this critical need, the Company has developed a plan that is detailed in Sections 5.0, 6.0, 7.0 8.0 and 9.0 of Exhibit FKS-19.

Q. HOW IS THE COMPANY PROPOSING TO INCREASE INFRASTRUCTURE REPLACEMENT TO REDUCE WATER LOSS AND KEEP IT BELOW 10 PERCENT?

A. As stated previously, the Company prepared a detailed plan to begin replacing water mains and service lines. This detailed plan includes replacing approximately 190,500 LF of aging water mains and 9,580 aging service lines in

the five Northern Group water systems, as discussed in the "Water Loss Reduction Program for Water Systems in the Northern Group", attached as Exhibit FKS-19.

Q. WHAT IS THE ESTIMATED COST OF THESE REPLACEMENTS?

A. For the Northern Group, it is estimated that these initial replacements will cost at least $1.6 million dollars annually. This is in addition to the proposed $2.5 million dollars of annual replacements identified within the Company's Western Group Rate Application (Docket No. W-01445A-10-0517) and $3.1 million dollars of annual replacements identified in the Company's Eastern Group Rate Application (Docket No. W-01445A-11-0310). The initial replacements only represent about 25 percent of the annual replacements needed for the Northern Group. However, the initial 3-year replacement schedule is the first step towards replacing aging and failing water mains and service lines.

Q. CAN THE COMPANY CURRENTLY FUND THE REPLACEMENTS OF AGING INFRASTRUCTURE NEEDED TO REDUCE AND MANAGE WATER LOSS TO LESS THAN 10 PERCENT?

A. No. Not without adequate rate relief, including an effective cost-recovery mechanism such as a DSIC. As discussed in Mr. Harris' pre-filed direct testimony, the Company cannot construct these necessary water system replacements and incur the costs of doing so without a mechanism designed to recover these costs on a timely basis.

Q. IS THE COMPANY PROPOSING SUCH A MECHANISM IN THIS PROCEEDING?

A. Yes. In other jurisdictions, utility commissions have authorized a DSIC to facilitate infrastructure replacement. Accordingly, the Company is proposing a DSIC in this proceeding. The benefits of a DSIC include more efficient and timely investment of capital, significant progress in replacing aging infrastructure,

enhanced service quality and reductions in water loss. As greater demands are placed on existing water supplies in the future, reducing water loss through the replacement of aging infrastructure will become even more important. Details of the Company's proposed DSIC program are presented in the pre-filed direct testimony of Mr. Harris, with additional support for DSICs provided by Ms. Ahern.

Q. DSIC PROCEDURES ORIGINATED IN THE EASTERN PORTION OF THE UNITED STATES. IS THE PROBLEM OF AGING INFRASTRUCTURE UNIQUE TO THAT AREA?

A. No. The Company's water systems throughout Arizona have varying quantities of infrastructure that are obsolete, beyond their useful service lives and are already failing or nearing failure and need to be replaced. As presented and discussed in Sections 5.0, 6.0, 7.0, 8.0 and 9.0 of Exhibit FKS-19, water mains installed and placed in service during the early 1930s through the 1940s and later have reached the end of their useful service lives.

Q. HAVE YOU PREPARED AN ANALYSIS OF AGING INFRASTRUCTURE IN THE NORTHERN GROUP?

A. Yes. The analysis shows approximately 190,500 LF of water main or approximately 12.1 percent of the Northern Group water systems are in need of replacement including over 9,580 service lines over the next 10 years. This analysis is based on a complete review of the documented water main and service line breaks and repair history, summarized in Appendix 11.1 of Exhibit FKS-19. The specific replacement projects are presented in detail in Appendix 11.4 of Exhibit FKS-19. As explained on page 89 of my testimony, the Company estimates that replacing these failing water mains and service lines will cost $1.6 million annually. An explanation of this detailed cost estimate is provided in Exhibit FKS-19. Each year, as the quantity of aging water mains and service lines that exceed their useful service lives increases, so will the associated costs,

making it more difficult for the Company to keep up with necessary replacements.

Q. THE NORTHERN GROUP WATER SYSTEMS CONSIST OF WATER MAINS DATING BACK TO THE EARLY 1930s, 1940s AND 1950s. WHY ARE THESE FACILITIES A PROBLEM?

A. There are numerous studies which document the failure of infrastructure installed during this time period.[1] Materials used to manufacture and join distribution system piping have evolved over time.

Over 120,000 LF of water mains currently in service in the Northern Group are constructed of CI, GS, or ST pipe, without any additional form of corrosion protection. As with any ferrous type of material, water mains deteriorate through pitting, corrosion, graphitization, and tuberculation build-up. One form of corrosion protection, cement lining, applied to the interior of water mains reduces internal rates of corrosion. However, cement lining of pipes did not begin until the 1940s. Consequently, ferrous type water mains that were installed before 1940 suffer from both the internal and external effects of corrosion, further increasing the potential for leaks. The oldest ferrous water mains in the Northern Group water systems have begun to fail from corrosion. Corrosion weakens the structural integrity of the pipe, increasing the likelihood of failure. CA water mains were predominantly used from the 1930s to the mid 1980s and were originally expected to have a longer useful life and better flow characteristics than CI, GS, or ST pipe. CA water mains were commonly used in the Company's water systems since the 1930s. CA does not corrode in the same manner as ferrous (i.e. CI, GS, ST) water mains and, as a result, was initially considered a superior product by the water utility industry because of its low friction factors and

[1] DeBerry, David W. Kidwell, James R., Malish, David A. (1982). *Corrosion in Potable Water Systems.* United States Environmental Protection Agency. Thomson, James and Wang, Lili (2009). *State of Technology Review Report on Condition Assessment of Ferrous Water Transmission and Distribution Systems.* United States Environmental Protection Agency.

non-metallic construction. However, chemical changes can occur in the cement substrate of the CA pipe due to the interaction of water and the internal surface of the pipe, and from the interaction of the surrounding soil and the external surface of the pipe. These chemical changes cause a loss of strength in the composite material. Deterioration of the pipe and changes in material or pipe integrity are not immediately visible, as there is no color change or reduction in wall thickness. CA pipe deteriorates through the decomposition of hydrated silicates in the cement substrate, due to the leaching of calcium hydroxide. As the calcium hydroxide leaches out of the CA pipe, hydrated silicates decompose and release more calcium hydroxide. This degenerative process continues until most of the hydrated silicates are decomposed, resulting in material that is weak and unstable, leading to leaks, breaks and, ultimately, failure of the pipe. The Company discontinued the use of CA for new water mains in 1986, when it updated its specifications to require the use of DI pipe in the Northern Group water systems.Concerns over the failure and useful life of CA water mains have prompted many studies. For example, a study that analyzed pipe breaks in urban water systems identified the positive relationship between the rate of pipe breakage and age. This study confirmed the effects of age on pipe breaks and validates the Company's observation that water leaks are increasing as its water systems age. Other studies show that the pipe breakage rate is also influenced by pipe diameter, with a higher breakage rate for smaller diameters. The higher breakage rate can be attributed to thinner pipe wall and lower bending resistance of smaller diameter pipe.

One of the most common modes of failure of smaller diameter pipe observed by the Company is circumferential cracking caused by bending forces applied to the pipe. The failure crack propagates around the circumference of the pipe, and is visually similar to a twig snapping. Bell splitting is another

common type of failure for smaller diameter pipe caused by thermal expansion and contraction. Longitudinal cracking and bell shearing are common types of failures seen in larger pipes (more than 16 inches in diameter), since they have a high moment of inertia that does not lead to circumferential failures. Bell shearing failures are caused by bending forces or from compressive forces pushing the spigot of one length of pipe into the bell of the next pipe.

Deteriorating water distribution system infrastructure results in: (1) increased leakage and breaks; (2) taste, odor and rusty water complaints; (3) reduced flow capacity; and (4) reduced chlorine levels due to corrosion products and biofilms. Consequently, there is an increased potential for water quality degradation and, ultimately, health risks associated with aging infrastructure. As a result, this aging piping needs to be replaced. The analysis included as Exhibit FKS-19 discusses, in detail, the numerous problems associated with these aging facilities.

Q. DO THE NORTHERN GROUP OPERATORS ROUTINELY DISCOVER AND REPAIR WATER LEAKS?

A. Yes. The Company found and repaired over 1,159 leaks between January 2008 and December 2011 in the five water systems discussed in the "Water Loss Reduction Program for Water Systems in the Northern Group", as shown in Appendix 11.1 of Exhibit FKS-19. This equates to more than one leak repair every work day. Approximately 10 percent of the recorded leaks were service line leaks. All leaks were repaired promptly after they were detected and located. According to a study completed by the Aging Water Infrastructure Research division of the Environmental Protection Agency, there are 240,000 water main breaks per year in the United States, or a water main break 650 times per day[2]. That equates to one main break every two minutes.

[2] *Water Distribution Systems* (2009). United States Environmental Protection Agency Aging Water Infrastructure Research Program, http://www.epa.gov/awi/distributionsys.html (Oct. 28, 2010).

Q. DID AWWA COMPLETE ANY SIGNIFICANT STUDIES SINCE THEIR PREVIOUS STUDIED WHICH LABELED OUR CURRENT INFRASTRUCTURE CRISIS "DAWN OF THE REPLACEMENT ERA"?

A. Yes. Early this year, AWWA released their latest study titled "Buried No Longer: Confronting America's Water Infrastructure Challenge". This study used many of the same techniques the Company used to determine the anticipated lifespan of various water main material types, such as the predictive Nessie Model.

Q. WHAT ARE SOME OF THE SIGNIFICANT CONCLUSIONS REACHED AS PART OF THIS STUDY?

A. Through their study, the AWWA attempted to predict the lifespan of various water main material types by region. Specifically, Figure 5 of their study listed Average Estimated Service Lives by Pipe Material Type. The data in this figure closely matches the predicted lifespan of water main material the Company has used in its water system.

Q. WHY IS THIS SIGNIFICANT?

A. Because it confirms the projections Company engineers developed as part of their extensive analysis.

Q. WHAT ELSE DID THE REPORT CONCLUDE?

A. The study concluded that investment needs for buried drinking water infrastructure will total more than $1 trillion nationwide over the next 25 years.

Q. DID THE STUDY MAKE ANY CONCLUSIONS ABOUT POSTPONING THE NEEDED INVESTMENTS?

A. Yes. The study concluded, just as the Company's report concluded, that "overlooking or postponing infrastructure renewal in the near term will only add to the scale and challenge we face in the years to come". A copy of the AWWA study, titled "Buried No Longer: Confronting America's Water Infrastructure Challenge", is included herewith as Exhibit FKS-26.

Q. DOES THIS CONCLUDE YOUR DIRECT TESTIMONY IN THIS MATTER?

A. Yes.

FKS-1

FKS-1

POST TEST YEAR PLANT ADDITIONS – PROJECT DETAIL

INDEX

PLANT DESCRIPTION	WA NO.
A. NAVAJO DIVISION	
i. LAKESIDE (PWSID No. 09-003)	
REPLACE PROBLEMATIC AND FAILING AUTOMATIC CONTROLS AT MOONRIDGE WELL SITE, MOONRIDGE TANK SITE AND OFFICE	WA 1-4920
REPLACE APPROXIMATELY 450 LF OF FAILING 3-INCH PLASTIC WITH 6-INCH DUCTILE IRON PIPE ON HIDDEN PINES DRIVE	WA 1-4921
REPLACE 21 TELEMETRY AND VOICE RADIOS TO COMPLY WITH FEDERAL COMMUNICATIONS COMMISSION (FCC) MANDATE ON NARROW BAND REGULATIONS	WA 1-4926
INSTALL 900 LF OF 6-INCH DUCTILE IRON PIPE ON RIM AND GREEN VALLEY ROAD TO ADDRESS LOW PRESSURE	WA 1-4927
ii. OVERGAARD (PWSID No. 09-007)	
PURCHASE ADDITIONAL PROPERTY AT MOGOLLON NO. 5 WELL SITE FOR ARSENIC REMOVAL FACILITY	WA 1-4923
RETROFIT 75 METER BOXES FOR FREEZE PROTECTION	WA 1-4924
REPLACE FAILING CONTROLS AT ZANE GREY WELL SITE	WA 1-4925
REPLACE RADIOS AT 15 SITES TO COMPLY WITH FEDERAL COMMUNICATIONS COMMISSION (FCC) MANDATE ON NARROW BAND REGULATIONS	WA 1-4926
iii. PINETOP LAKES (PWSID No. 09-018)	
RECONSTRUCT SANITARY SEAL AT PINETOP LAKES WELL NOS. 1 AND 2	WA 1-4922
REPLACE RADIOS AT 2 SITES TO COMPLY WITH FEDERAL COMMUNICATIONS COMMISSION (FCC) MANDATE ON NARROW BAND REGULATIONS	WA 1-4926

B. VERDE VALLEY DIVISION

i. PINEWOOD (PWSID No. 03-002)

REPLACE 43 FAILING SERVICES ON KAY, ACOMA, SAN FELIPE, HOPE, ZUNI AND NAVAJO ..... WA 1-4929

REPLACE RADIOS AT 5 SITES TO COMPLY WITH FEDERAL COMMUNICATIONS COMMISSION (FCC) MANDATE ON NARROW BAND REGULATIONS ..... WA 1-4932

ii. RIMROCK (PWSID No. 13-046)

CONSTRUCT ARSENIC REMOVAL FACILITY AT MONTEZUMA HAVEN WELL NOS. 2 AND 3 ..... WA 1-4874

REPLACE 1,230 LF OF FAILING 2-INCH GALVANIZED STEEL WITH 700 LF OF 6-INCH DUCTILE IRON PIPE AND 23 SERVICES ON CLIFFSIDE TRAIL A-Q ..... WA 1-4930

REPLACE 800 LF OF FAILING 4-INCH GALVANIZED STEEL WITH 6-INCH DUCTILE IRON PIPE AND REPLACE 6 SERVICES ON ANTIGUA WAY ..... WA 1-4931

REPLACE RADIOS AT 8 SITES TO COMPLY WITH FEDERAL COMMUNICATIONS COMMISSION (FCC) MANDATE ON NARROW BAND REGULATIONS ..... WA 1-4932

iii. SEDONA (PWSID No. 03-003)

CONSTRUCT ARSENIC REMOVAL FACILITY FOR HARMONY HILLS WELL NOS. 5 AND 12 ..... WA 1-4814

CONSTRUCT ARSENIC REMOVAL FACILITY FOR BROKEN ARROW WELL NO. 10 ..... WA 1-4875

RE-ALIGNMENTS FOR CITY OF SEDONA'S HARMONY WINDSONG DRAINAGE CHANNEL PROJECT – PHASE 3 ..... WA 1-4928

REPLACE RADIOS AT 23 SITES TO COMPLY WITH FEDERAL COMMUNICATIONS COMMISSION (FCC) MANDATE ON NARROW BAND REGULATIONS ..... WA 1-4932

iv. VALLEY VISTA (PWSID No. 13-114)

CONSTRUCT ARSENIC REMOVAL FACILITY FOR SEDONA GOLF RESORT WELL ..... WA 1-4873

REPLACE RADIOS AT 4 SITES TO COMPLY WITH FEDERAL COMMUNICATIONS COMMISSION (FCC) MANDATE ON NARROW BAND REGULATIONS ..... WA 1-4932

C. **PHOENIX OFFICE**

DATA PROCESSING ENCODER.....WA 1-4933

PURCHASE ADDITIONAL LEAK DETECTION EQUIPMENT.....WA 1-4934

WA 1-4920

PRELIMINARY [X]

ACTUAL [ ]

ARIZONA WATER COMPANY
COST ESTIMATE WORKSHEET

PREPARED BY: Andy Haas

SYSTEM: Navajo

DATE PREPARED: 11/10/2011

SHEET 1 OF 1

PROJECT LOCATION:

DRAWING NO.

PROJECT DESCRIPTION:

Replace failing radio controls at Moonridge well site, Moonridge tank site, and office. Replace failing phone line communications with radio controls.

	DESCRIPTION	PLANT PROP ACCT	QUANTITY	UNIT COST	TOTAL
CONTRACT WORK	Purchase ACE3600 radios and program radios for Moonridge sites	397.2	1	$ 18,399.00	$ 18,399
	Install radio controls and appurtenances at Moonridge sites	397.2	1	22,258.00	22,258
	Purchase ACE3600 radios and program radios to replace phone lines	397.2	1	16,802.00	16,802
	SERVICE CONNECTIONS: DOUBLE-LONG	345			
	SERVICE CONNECTIONS: DOUBLE-SHORT	345			
	TAXABLE SERVICE CONNECTIONS COMPLETE: SINGLE-LONG	345			
	TAXABLE SERVICE CONNECTIONS COMPLETE: SINGLE-SHORT	345			
					$ 57,459
MATERIALS					
	SERVICE CONNECTIONS: DOUBLE-LONG	345			
	SERVICE CONNECTIONS: DOUBLE-SHORT	345			
	TAXABLE SERVICE CONNECTIONS: SINGLE-LONG	345			
	TAXABLE SERVICE CONNECTIONS: SINGLE-SHORT	345			
	TAXABLE METERS	346	-		
	METERS	346	-		
TOTAL MATERIALS					$ -
LABOR	Engineering Design	397.2	24	$ 50.00	$ 1,200
	TESTING FEE				
	PERMIT FEE				
	SURVEY FEE				
	FIELD INSPECTION	397.2	40	50.00	2,000
	INSTALL SERVICE CONNECTIONS: DOUBLE-LONG	345			
	INSTALL SERVICE CONNECTIONS: DOUBLE-SHORT	345			
	INSTALL TAXABLE SERVICE CONNECTIONS: SINGLE-LONG	345			
	INSTALL TAXABLE SERVICE CONNECTIONS: SINGLE-SHORT	345			
TOTAL LABOR					$ 3,200
SUBTOTAL - CONTRACT WORK, MATERIALS, AND LABOR					$ 60,659
OVERHEAD					9,099
TOTAL	REFUNDABLE PORTION [ ] NON-REFUNDABLE PORTION [ ]			COST ESTIMATE	$ 69,758

WA 1-4920 - Replace Problematic and Failing Automatic Controls at Moonridge Well Site, Moonridge Tank Site and Office

ID	Task Name	Duration	Start	Finish	Predecessors
1	**Lakeside Radio Controls**	**225 days**	**Mon 2/20/12**	**Fri 12/28/12**	
2	Update Quotes	30 days	Mon 2/20/12	Fri 3/30/12	
3	Execute Contract Documents	30 days	Mon 4/2/12	Fri 5/11/12	2
4	Procure Materials	60 days	Mon 5/14/12	Fri 8/3/12	3
5	Program Radios	60 days	Mon 5/14/12	Fri 8/3/12	3
6	Install Radio Controls, Conduit, and Appurtenances	40 days	Mon 8/6/12	Fri 9/28/12	4
7	Start-Up	30 days	Mon 10/1/12	Fri 11/9/12	6,5
8	Field Troubleshooting	20 days	Mon 11/12/12	Fri 12/7/12	7
9	Project Close Out	15 days	Mon 12/10/12	Fri 12/28/12	8
10	In Service	0 days	Fri 12/28/12	Fri 12/28/12	9

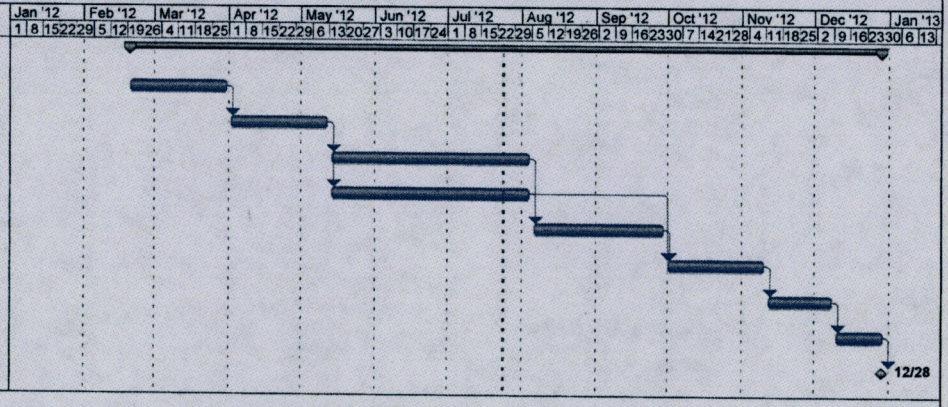

Project: Lakeside Radio Controls Sche
Date: Tue 7/24/12

Task | Progress | Summary | External Tasks | Deadline
Split | Milestone | Project Summary | External Milestone

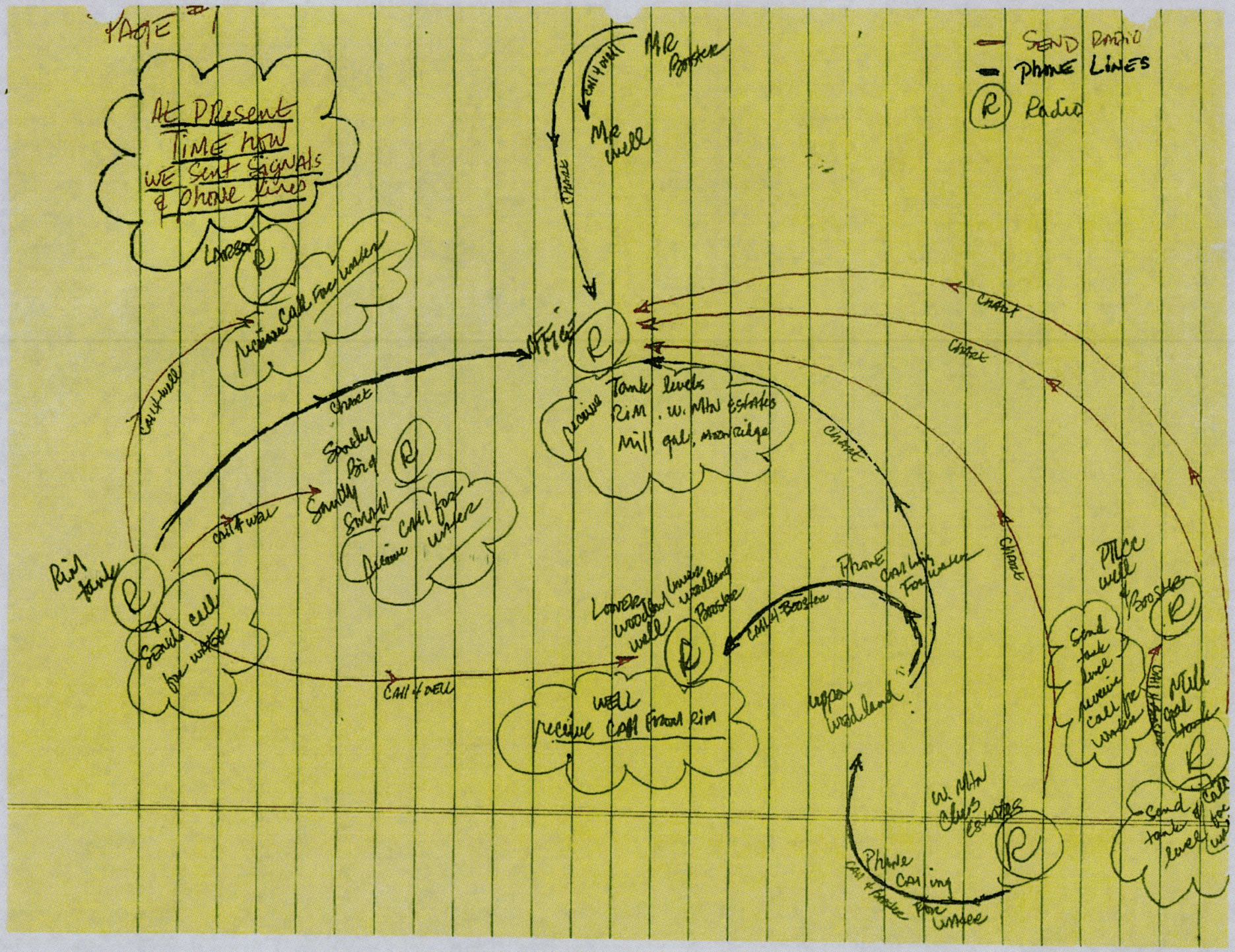
PAGE 1
At Present Time how we Sent Signals & Phone lines
SEND Radio
Phone Lines
Radio
MR Booster
MR well
Call MR well
Check
Lower Booster
Receive Call for water
Call Lower well
Office
Receive Tank levels Rim . W. Mtn Estates Mill gal, mountain ridge
Check
Check
Check
Check
Check
Smoky Ridge
Smoky Ridge receive Call for water
Call 4 well
Rim Tank
Send Call for water
Call 4 well
Phone Call for water
Lower Woodland Upper Woodland Booster
Call 4 Booster
Upper Woodland
Well receive Call from Rim
Call 4 well
Place well & Booster
Send tank level receive call for water
Mill gal tank
Send tank level
W. Mtn Club Estates
Phone Calling for water
Call 4 Booster

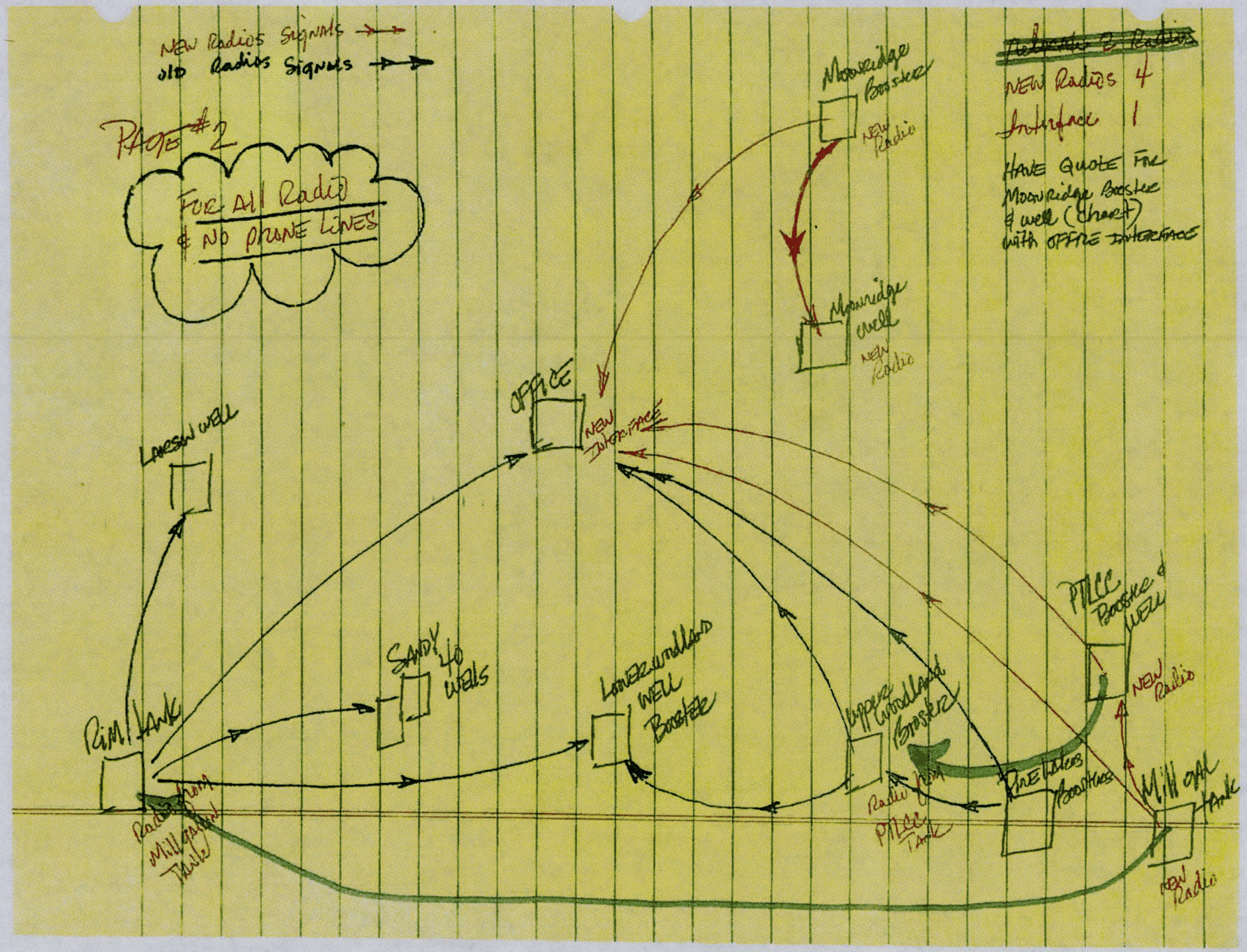
NEW Radios Signals
old Radios Signals
PAGE #2
FOR All Radio
& NO PHONE LINES
Moonridge Booster
NEW Radio
Moonridge Well
NEW Radio
NEW Radios 4
Interface 1
HAVE QUOTE FOR
Moonridge Booster
& well (Chart)
WITH OFFICE INTERFACE
OFFICE
NEW INTERFACE
LAKESIDE WELL
SANDY 40 WELLS
LOWER WOODLAND WELL Booster
Upper Woodland Booster
PINE VALLEY Booster
PVCC Booster & WELL
NEW Radio
RIM Tank
Radio from Mill Canyon Tank
Radio from PVCC Tank
MILL CANYON Tank
NEW Radio

Keller Electrical
MOTORS | CONTROLS | SERVICES

Revised 7-20-11
Also attached is Global Data Proposal for radios to go with RTUs here.

7/19/2011

Arizona Water Company
Lakeside
Attn: Eric

RE: Moonridge Scada Upgrades Revision 1

Dear Eric,
Per our discussions, Keller Electrical Industries (KEI) proposes the following scope and budget for completing this work.
Scope of Work

A. Moonridge Tank Site -
   a. Furnish and install Pressure Transmitter (Process piping by Others) for tank level.
   b. Install new conduit and cable from Level Transmitter to RTU
   c. Furnish and install conduits and cable for 120 volt power to RTU
   d. Furnish and install conduits and cable for level transmitter, to be loop powered from RTU.
   e. Complete wiring and terminations for instrumentation, control, and power units
   f. Install Antenna with RTU, both items provided by others and installed by Keller.
   g. Programming by others.

B. Moonridge Well Site -
   a. Furnish and install conduits and cable for 120 volt power to RTU
   b. Furnish and install conduit and cable for signal to Well Pump Starter for Start/Stop.
   c. Complete wiring and terminations for instrumentation, control, and power units
   d. Install Antenna with RTU, both items provided by others and installed by Keller.
   e. Programming by others

C. Main Office
   a. No work by Keller required

Moonridge Tank Estimate:	$ 12,935.00
Moonridge Well Estimate:	$ 8,262.00
Estimated Taxes:	$ 1,061.00
Deduct for installation of conduit and equipment by Arizona Water (Keller will assist with layout and install wire and terminate)	$ 5,180.00

KEI appreciates the opportunity to furnish this proposal. We have made every effort to assure that the proposed equipment and services will satisfy your requirements. Should you have any questions, comments, concerns or require further clarification, please feel free to contact me at your convenience.
Thank you,

Cody R. Eslick
Director of Field Service
Keller Electrical

GLOBAL
DATA SPECIALISTS

1815 W. First Ave., Suite 110, Mesa, AZ 85202
Phone: 480-461-3401 FAX: 480-461-3411

QUOTE: **MDM04009A** **July 19, 2011**
by Duane Moody
480-461-3401, Ext. 223, duane@gbl-data.com
Expires 17-Oct-11

Quoted To: **Eric**
Lakeside, AZ 85929
Phone: 928-242-6315
FAX: 928-368-8375

Arizona Water
3805 N. Black Canyon Hwy.
Phoenix, AZ 85015
Phone: 602-240-6860
FAX: 602-240-6878

End User: **Moon Ridge System**

Description

Global Data Specialists is pleased to provide you with the following quotation for the ACE3600 equipment and associated Engineering Services as per your request.

One ACE3600 RTU will be located at the Moon Ridge Tank and transmit level information to an ACE3600 FIU located at the office and another ACE3600 RTU located at the Moon Ridge Well.

The tank level information will be received at the FIU configured with an analog output module that is interfaced to a strip chart recorder (the strip chart recorder is not included in the quotation). The FIU is also configured with a shared radio interface to also utilize the radio and antenna system at the office with the existing Intrac protocol FIU.

The Moon Ridge Well RTU will also receive the tank level information and based upon preconfigured setpoints control the well (on/off operation).

Please note that a radio path survey may be required if communications between the Tank and the Office, and/or the Tank and Well are an issue.

An antenna and 50ft of coax are included in the quotation for the Tank and Well site. If the coax length is not correct for the site, please advise the actual coax requirement and the quote will be adjusted.

NOTE: The quotation does not include installation of the RTU's, antennas, coax cable, or wiring of the RTU's to AC power, the sensors, or other equipment.

If you have any questions or need additional information please let me know.

Best Regards,

Duane Moody
Sales Manager

ENGINEERING SERVICES

Global Data

Configuration, FIU and RTU Applications

The System Engineer will configure the FIU and RTU applications according to the system requirements.

Integration, On-site at Customer Location

Test communications between FIU and Tank RTU, as well as Tank RTU to Well RTU
Test and Debug as needed
Obtain signoff and acceptance

Engineering Services Sub-Total $ 3,810.00

MATERIALS

Global Data

FIU: $ 6,107.00

QTY	Part No	Description	Unit Price	Extended
0001	F7500	ACE3600 SYSTEM TOOL SUITE	$ 500.00	$ 500.00
0001	GD5677-ACE	ACE3600 RTU/FIU Application Program	$ 2,600.00	$ 2,600.00
0001	F7509	ACE3600 BASIC MODEL NO RADIO	$ 1,150.00	$ 1,150.00

Basic model. The model default includes PS 12V DC, CPU3640 and basic frame (no I/O slots).

0001	F599ASP96680	Shared Radio Interface Match up with Radio Office	$ 622.00	$ 622.00
0001	V103	ADD: 3 I/O SLOTS FRAME	$ 70.00	$ 70.00
0001	V276	ADD: 40X40 CM PAINTED METAL HOUSING Metal Box with Door 15x15	$ 220.00	$ 220.00
0001	V118	ADD: 4 AO MODULE	$ 495.00	$ 495.00

Module with 4 Analog Output. Each AO channel can be used as 0-20 mA or 0-10 V output.

0001	V261	ADD: AC PS 85-264 V WITH BATTERY CHARGER	$ 310.00	$ 310.00
0001	V114	ADD: 6.5 AH BACKUP BATTERY	$ 140.00	$ 140.00

Tank RTU: $ 4,257.00 Tank - Moon Eye

QTY	Part No	Description	Unit Price	Extended
0001	F7563	ACE3600 WITH CDM750 136-174 MHZ	$ 1,850.00	$ 1,850.00

The model default includes CDM750 136-174 MHz radio, radio installation kit, PS 12V DC, CPU3640 ,basic frame (no I/O slots) and plug-in radio port for CPU. Must be ordered with Metal chassis or housing option. CDM750 is only shipped to North America at this time

0001	V103	ADD: 3 I/O SLOTS FRAME	$ 70.00	$ 70.00
0001	V228	ADD: 50X50 CM PAINTED METAL HOUSING	$ 300.00	$ 300.00
0001	V245	ADD: 16DI 4DO EE 4AI +/-20MA	$ 430.00	$ 430.00
0001	V261	ADD: AC PS 85-264 V WITH BATTERY CHARGER	$ 310.00	$ 310.00
0001	V328	ADD: 10 AH BACKUP BATTERY	$ 207.00	$ 207.00

0001	FPN1653	ASSEMBLY,POWER SUPPLY,24V PS PLUG IN KIT	$ 75.00	$ 75.00
0001	GD3572-Mixed	Mixed I/O Interface Kit	$ 385.00	$ 385.00
0001	GD5027	50 Foot Line Kit	$ 415.00	$ 415.00

(Includes: coax cable, connectors, 2ft pigtail, polyphaser, and grounding kit)

0001	FG1683	Antenna, Fiberglass Omnidirectional 3 dB Gain VHF	$ 185.00	$ 185.00
0001	FM2	Mounting Bracket, Heavy Duty for Omni Fiberglass Base Antenna	$ 30.00	$ 30.00

Well RTU: $ 4,225.00

QTY	Part No	Description	Unit Price	Extended
0001	F7563	ACE3600 WITH CDM750 136-174 MHZ	$ 1,850.00	$ 1,850.00

The model default includes CDM750 136-174 MHz radio, radio installation kit, PS 12V DC, CPU3640 ,basic frame (no I/O slots) and plug-in radio port for CPU. Must be ordered with Metal chassis or housing option. CDM750 is only shipped to North America at this time

0001	V103	ADD: 3 I/O SLOTS FRAME	$ 70.00	$ 70.00
0001	V228	ADD: 50X50 CM PAINTED METAL HOUSING	$ 300.00	$ 300.00
0001	V245	ADD: 16DI 4DO EE 4AI +/-20MA	$ 430.00	$ 430.00
0001	V261	ADD: AC PS 85-264 V WITH BATTERY CHARGER	$ 310.00	$ 310.00
0001	V328	ADD: 10 AH BACKUP BATTERY	$ 207.00	$ 207.00
0001	FPN1653	ASSEMBLY,POWER SUPPLY,24V PS PLUG IN KIT	$ 75.00	$ 75.00
0001	GD3572-Mixed	Mixed I/O Interface Kit	$ 385.00	$ 385.00
0001	GD5027	50 Foot Line Kit	$ 415.00	$ 415.00

(Includes: coax cable, connectors, 2ft pigtail, polyphaser, and grounding kit)

0001	Y1503	Antenna, Gold Anodized Directional Yagi 3 Element 7.1 dB Gain VHF	$ 183.00	$ 183.00

Materials Sub-Total $ 14,589.00

TOTALS

Engineering Services	$ 3,810.00
Materials	$ 14,589.00
TOTAL	**$ 18,399.00**

TERMS

NOTE 1: All Engineering Services Will Be Quoted A Minimum Of Four (4) Hours Engineering Labor
NOTE 2: Shipping charges are not included in the quotation.

Payment:..... 100% Upon Receipt of Invoice, Net 30 Days.
Delivery:..... TBD Upon Order Placement
Validity: ..... Quotation is valid for 90 days. The above quotation is based upon the information provided at the time of quotation. Global Data Specialists is not responsible for any information that is missing or incorrect. Any new information that is received after the quotation has been submitted may result in a revised quotation being issued to cover the costs of additional equipment or services as identified.
Shipment:..... FOB Global Data Specialists, Mesa, AZ.
Warranty: ..... The Motorola equipment is warranted for 1 year upon shipment for parts and labor. Non-Motorola equipment warranties are vendor specific and will apply. No additional warranties are expressed or implied. Warranty labor does not include the cost associated with any out of the office related travel or hourly time expenses and will be billed separately.
Cancellation:.... 10% Penalty prior to 30 days of shipment. 25% Penalty less than 30 days prior to shipment.
Note: ..... Please reference quotation number on all correspondence.

Keller Electrical
MOTORS | CONTROLS | SERVICES

9/28/2011

Arizona Water Company
Lakeside
Attn: Eric

RE: Upper Woodlands & Rim Tank Scada Upgrades

Dear Eric,
Per our discussions, Keller Electrical Industries (KEI) proposes the following scope and budget for completing this work.

Scope of Work

A. Upper Woodlands Site -
   a. Install new conduit and cable from Level Transmitter to RTU.
   b. Furnish and install conduits and cable for power to RTU and level transmitter.
   c. Furnish and install conduits and cable for Start/Stop commands and fault to two booster pumps.
   d. Complete wiring and terminations for instrumentation, control, and power units.
   e. Install Owner supplied RTU and antenna.

B. Rim Tank
   a. Furnish and install Pressure/Level Transmitter (Process piping by Others) for tank level.
   b. Install new conduit and cable from Level Transmitter to RTU.
   c. Furnish and install conduits and cable for power to RTU and level transmitter.
   d. Complete wiring and terminations for instrumentation, control, and power units.
   e. Install Owner supplied RTU and antenna.

Estimated Total:	$ 16,278.00
Estimated Taxes:	$ 1,164.00

KEI appreciates the opportunity to furnish this proposal. We have made every effort to assure that the proposed equipment and services will satisfy your requirements. Should you have any questions, comments, concerns or require further clarification, please feel free to contact me at your convenience.
Thank you,

Cody R. Eslick
Project Manager
Keller Electrical

GLOBAL
DATA SPECIALISTS

1815 W. First Ave., Suite 110, Mesa, AZ 85202
Phone: 480-461-3401 FAX: 480-461-3411

REVISED

QUOTE: **MDM04061A** **September 12, 2011**
by Duane Moody
480-461-3401, Ext. 223, duane@gbl-data.com
Expires 11-Dec-11

Quoted To: **Eric**
Lakeside, AZ 85929
Phone: 928-242-6315
FAX: 928-368-8375

Arizona Water
3805 N. Black Canyon Hwy.
Phoenix, AZ 85015
Phone: 602-240-6860
FAX: 602-240-6878

End User: **Pinetop System**

Description

Global Data Specialists is pleased to provide you with the following quotation for the ACE3600 equipment and associated Engineering Services as per your request.

One ACE3600 RTU will be located at the Million Gallon Tank. The MOSCAD-L that is currently installed there will be moved to the Rim Tank to replace an older Intrac unit that is currently installed. Also a new ACE3600 will be installed at the Pinetop Lakes Tank and Booster site. The MOSCAD-L that is currently installed there will be moved and installed at the Upper Woodland Booster and Well location which is a new site. The Million Gallon Tank site and the Pinetop Lakes Tank and Booster site will communicate directly with the new ACE3600 FIU installed at the office. The Pinetop Lakes Well site will communicate with the Million Gallon Tank.

The MOSCAD-L at the Rim Tank will be programmed to communicate with the Office, Larson Road Well 4, Sandy Forty Nate Well, and Lower Woodland Well 6.

The MOSCAD-L at the new Upper Woodland Tank and Booster site will be programmed to communicate to the Office, Pine Lakes Tank, and Lower Woodland Well 6.

The tank level information will be received at the FIU configured with an analog output module that is interfaced to a strip chart recorder (the strip chart recorder is not included in the quotation). The FIU is also configured with a shared radio interface to also utilize the radio and antenna system at the office with the existing Intrac protocol FIU.

The Pinetop Lakes Well RTU will also receive the tank level information and based upon preconfigured setpoints control the well (on/off operation).

Please note that a radio path survey may be required if communications between the Tank and the Office, and/or the Tank and Well are an issue.

An antenna and 50ft of coax are included in the quotation for the Tank and Well site. If the coax length is not correct for the site, please advise the actual coax requirement and the quote will be adjusted.

NOTE: The quotation does not include installation of the RTU's, antennas, coax cable, or wiring of the RTU's to AC power, the sensors, or other equipment.

If you have any questions or need additional information please let me know.

Best Regards,

Duane Moody
Sales Manager

ENGINEERING SERVICES

Configuration, FIU and RTU Applications

The System Engineer will configure the FIU and RTU applications according to the system requirements.

Integration, On-site at Customer Location

Test communications between FIU and Tank RTU, as well as Tank RTU to Well RTU
Test and Debug as needed
Obtain signoff and acceptance

Engineering Services Sub-Total $ 8,675.00

MATERIALS

Million Gallon Tank RTU: $ 3,170.00

QTY	Part No	Description	Unit Price	Extended
0001	F7563	ACE3600 WITH CDM750 136-174 MHZ	$ 1,850.00	$ 1,850.00

The model default includes CDM750 136-174 MHz radio, radio installation kit, PS 12V DC, CPU3640 ,basic frame (no I/O slots) and plug-in radio port for CPU. Must be ordered with Metal chassis or housing option. CDM750 is only shipped to North America at this time

0001	V103	ADD: 3 I/O SLOTS FRAME	$ 70.00	$ 70.00
0001	V056	ADD: 48 X 48 CM METAL CHASSIS	$ 100.00	$ 100.00
0001	V245	ADD: 16DI 4DO EE 4AI +/-20MA	$ 430.00	$ 430.00
0001	V346	ADD: AC POWER SUPPLY 85-264 V	$ 260.00	$ 260.00
0001	FPN1653	ASSEMBLY,POWER SUPPLY,24V PS PLUG IN KIT	$ 75.00	$ 75.00
0001	GD3572-Mixed	Mixed I/O Interface Kit	$ 385.00	$ 385.00

Pinetop Lakes Well RTU: $ 3,427.00

QTY	Part No	Description	Unit Price	Extended
0001	F7563	ACE3600 WITH CDM750 136-174 MHZ	$ 1,850.00	$ 1,850.00

The model default includes CDM750 136-174 MHz radio, radio installation kit, PS 12V DC, CPU3640 ,basic frame (no I/O slots) and plug-in radio port for CPU. Must be ordered with Metal chassis or housing option. CDM750 is only shipped to North America at this time

0001	V103	ADD: 3 I/O SLOTS FRAME	$ 70.00	$ 70.00
0001	V056	ADD: 48 X 48 CM METAL CHASSIS	$ 100.00	$ 100.00
0001	V245	ADD: 16DI 4DO EE 4AI +/-20MA	$ 430.00	$ 430.00
0001	V261	ADD: AC PS 85-264 V WITH BATTERY CHARGER	$ 310.00	$ 310.00
0001	V328	ADD: 10 AH BACKUP BATTERY	$ 207.00	$ 207.00
0001	FPN1653	ASSEMBLY,POWER SUPPLY,24V PS PLUG IN KIT	$ 75.00	$ 75.00
0001	GD3572-Mixed	Mixed I/O Interface Kit	$ 385.00	$ 385.00

Narrow Band Radios (For Rim Tank and Upper Woodlands Booster Sites MOSCAD-L RTU's): $ 900.00

QTY	Part No	Description	Unit Price	Extended
0002	GD5188	Lo Power Narrow Band Radio Kit. Includes Radio, adapter board, power and comm cables.	$ 450.00	$ 900.00

Coax Cable Kit and Antenna (Upper Woodlands Booster Site): $ 630.00

QTY	Part No	Description	Unit Price	Extended
0001	GD5027	50 Foot Line Kit	$ 415.00	$ 415.00
		(Includes: coax cable, connectors, 2ft pigtail, polyphaser, and grounding kit)		
0001	FG1683	Antenna, Fiberglass Omnidirectional 3 dB Gain VHF	$ 185.00	$ 185.00
0001	FM2	Mounting Bracket, Heavy Duty for Omni Fiberglass Base Antenna	$ 30.00	$ 30.00

Materials Sub-Total $ 8,127.00

TOTALS

Engineering Services	$ 8,675.00
Materials	$ 8,127.00
TOTAL	**$ 16,802.00**

TERMS

1. Validity of quotation: This quotation is valid for 30 days, and is based on the information provided to us at the time of quotation. We are not responsible for incorrect or missing information. New information provided to us after the quotation is generated may result in a revised quotation containing additional products or services required.
2. Delivery date: Delivery dates are not guaranteed. Orders are generally delivered in the most expeditious manner possible. A planned delivery schedule will be provided upon order placement. Change orders placed subsequent to the original PO may delay delivery.
3. Order placement: We reserve the right to reject orders that do not contain all quoted products and services except those items indicated in the optional products and services section. For radio programming, please provide radio frequencies at the time of order placement.
4. Invoicing: Orders are invoiced only when they are ready for delivery. The only exception to this policy is when the customer requests early billing.
5. Payment: 100% payment is due within 30 days of the invoice date. Invoices not paid within 30 days are subject to interest at the rate of 1.5% monthly, and your placement on COD basis for future orders. Early pay discount is not available.
6. Payment method: We accept payment by bank transfer (ACH), Check, and Cards (Visa and MasterCard only). Card payments must be processed on the same date that the invoice is generated. Payments made after the invoice date can be made only via ACH or Check.
7. New Customers: Credit application and references required for all new customers. Alternatively, you may pay by one of the payment methods above on the date of order delivery.
8. Shipment FOB: Global Data Specialists, 1815 W 1st Ave, Suite 110, Mesa, AZ. For Dataradio drop-shipped orders shipment FOB is CalAmp, Waseca, MN.
9. Shipping charges: If the quotation includes shipping, handling or delivery fees, it is only an estimate. Actual shipping charges will be determined only at the time of order shipment.
10. Taxes: Applicable sales taxes will be added to all orders unless a valid tax exemption certificate is presented at the time of order placement.
11. Warranty is specific to the policies of each respective OEM (Original Equipment Manufacturer). No additional warranties are expressed or implied. Please contact us for all warranty and non-warranty repairs with the exception of Dataradio. For Dataradio warranty and non-warranty repairs, call 800-992-7774 x6707. Warranty service includes standard depot repair only, and does not include shipping charges or service calls to remove, repair or reinstall equipment. Emergency repair and swap service costs extra and is subject to parts availability. Warranty labor includes direct in-house labor costs only. If warranty service requires our personnel to travel out of our office, additional time and materials charges will be invoiced separately.
12. Order cancellation: The following order cancellation charges shall apply:
    ..... Prior to 30 days of planned delivery date: 25% of the quoted amount shall be invoiced.
    ..... Less than 30 days of planned delivery date: 50% of the quoted amount shall be invoiced.
    ..... After order is ready for delivery: 100% of the quoted amount shall be invoiced.
13. Contractors: At our discretion, we will file a pre-lien when required. Please provide full project name and number, project location, and General Contractor and owner information at the time of order placement.
14. Delinquent pick up: You will be notified when the order is ready for pick up. Orders not picked up within 7 days of notification date are subject to storage fees of $25 per unit per day.

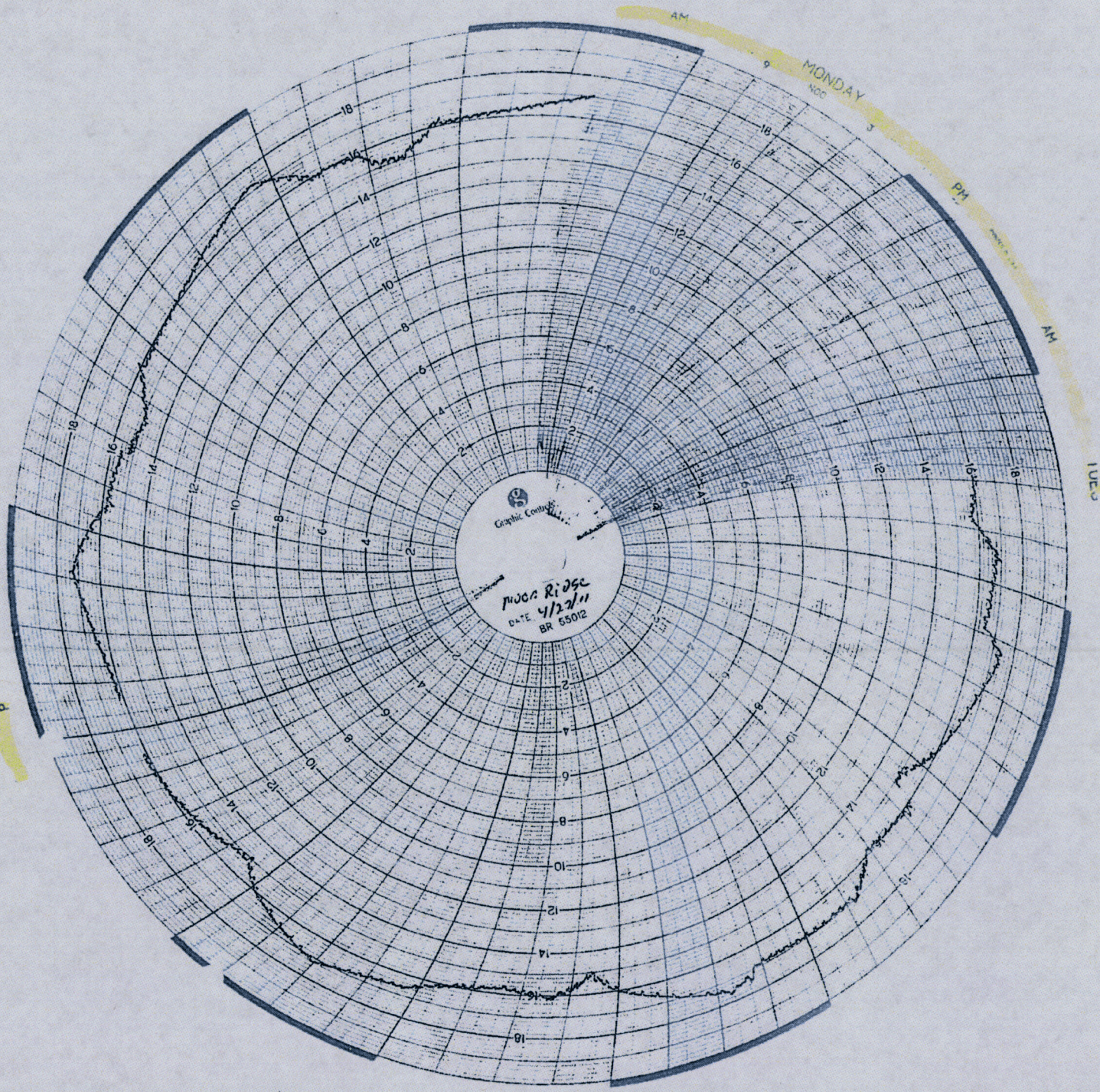
AM
MONDAY
PM
AM
TUES
Graphic Controls
MUDGE RIDGE
DATE 4/22/11
BR 55012

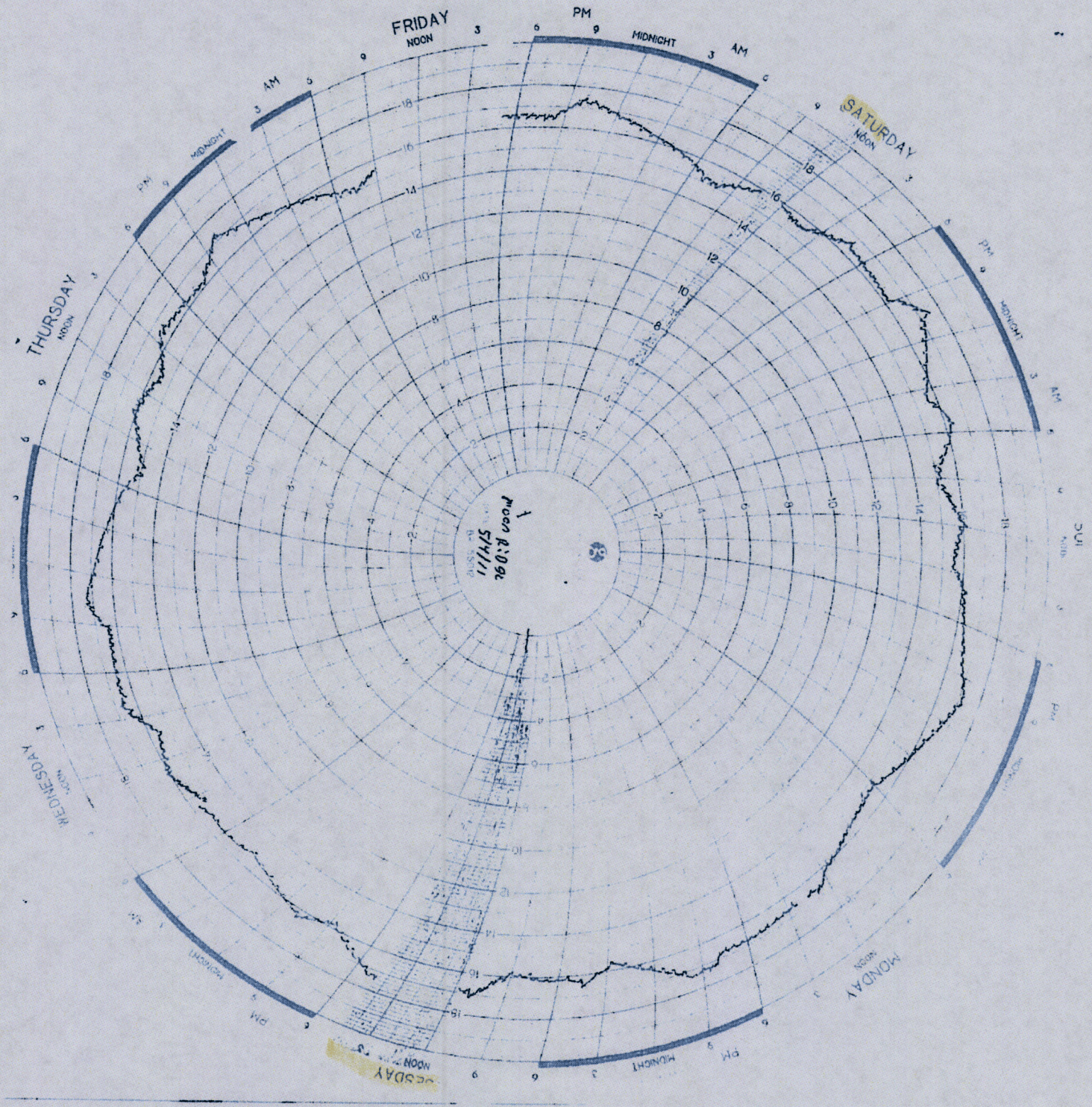
FRIDAY
NOON
PM
MIDNIGHT
AM
SATURDAY
THURSDAY
WEDNESDAY
MONDAY
TUESDAY
moon 8:09 pm
5/4/11

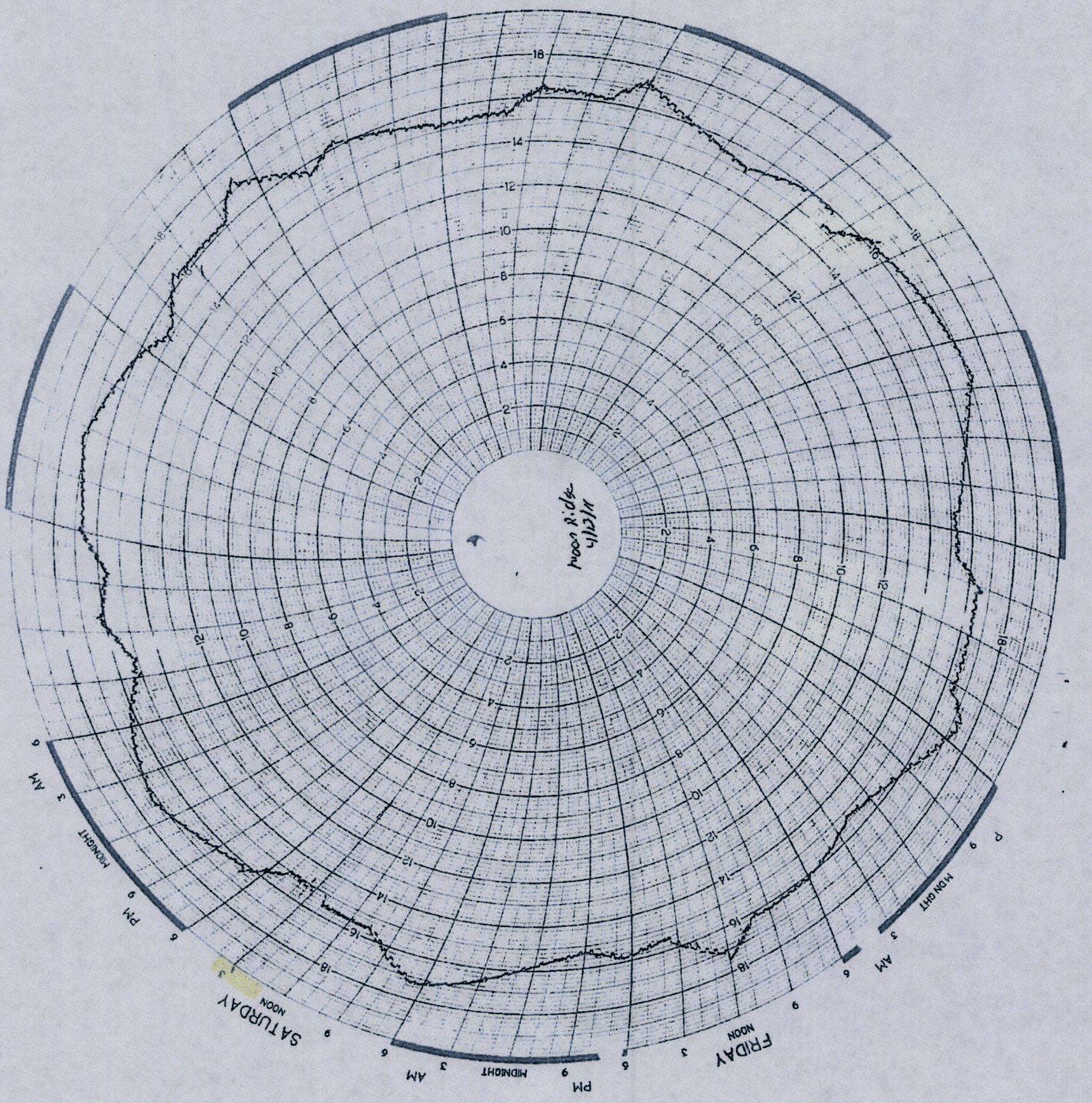
Noon Ride
4/13/11
FRIDAY
NOON
3
6
9
MIDNIGHT
3
AM
6
9
NOON
SATURDAY
3
6
9
PM
MIDNIGHT
3
AM
6
9
NOON
3
6
9
PM
MIDNIGHT
3
AM
6
9

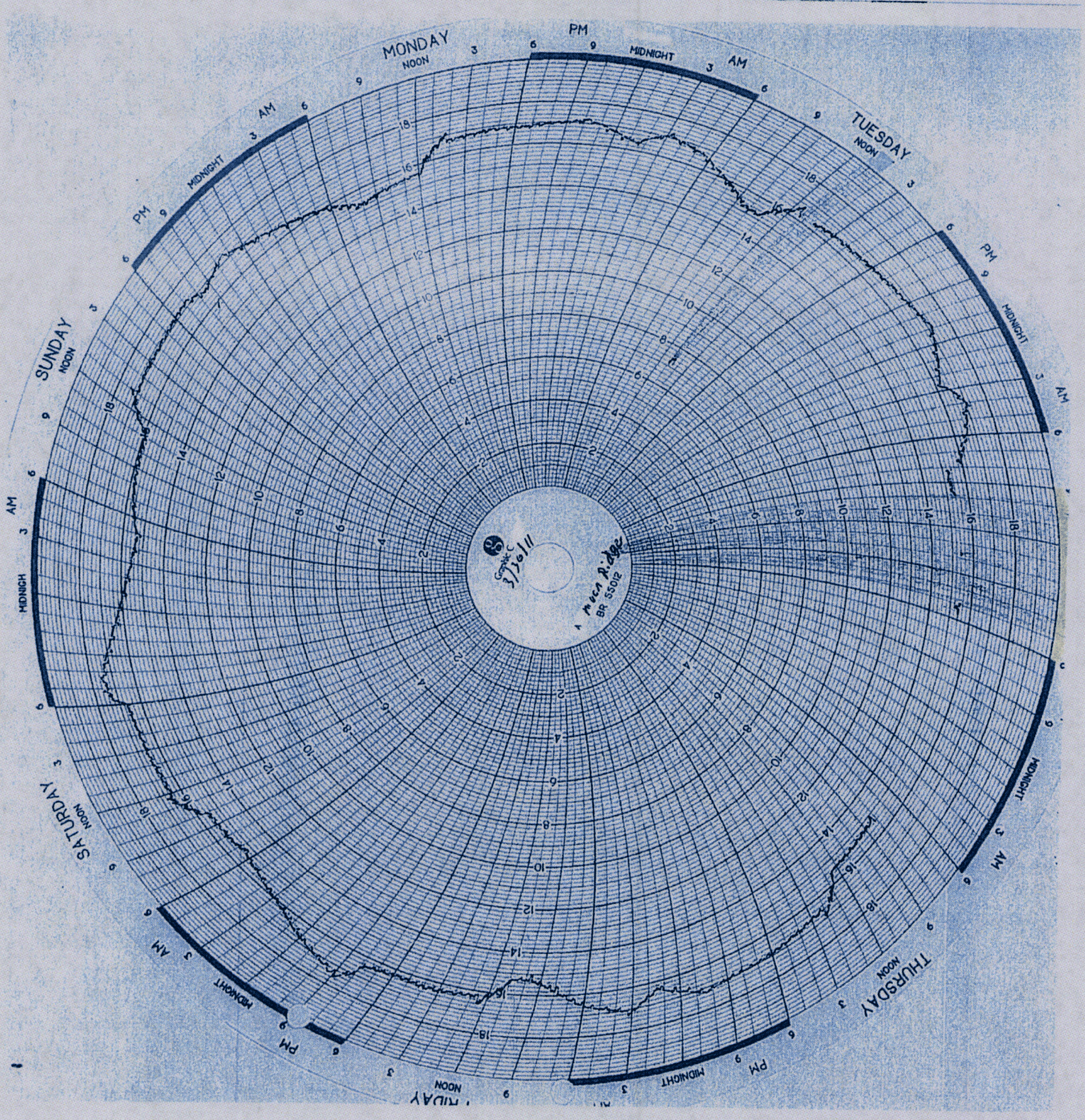
MONDAY
TUESDAY
SUNDAY
SATURDAY
THURSDAY
NOON
MIDNIGHT
AM
PM
3
6
9
12
18
Mesa Ridge
BR 5502

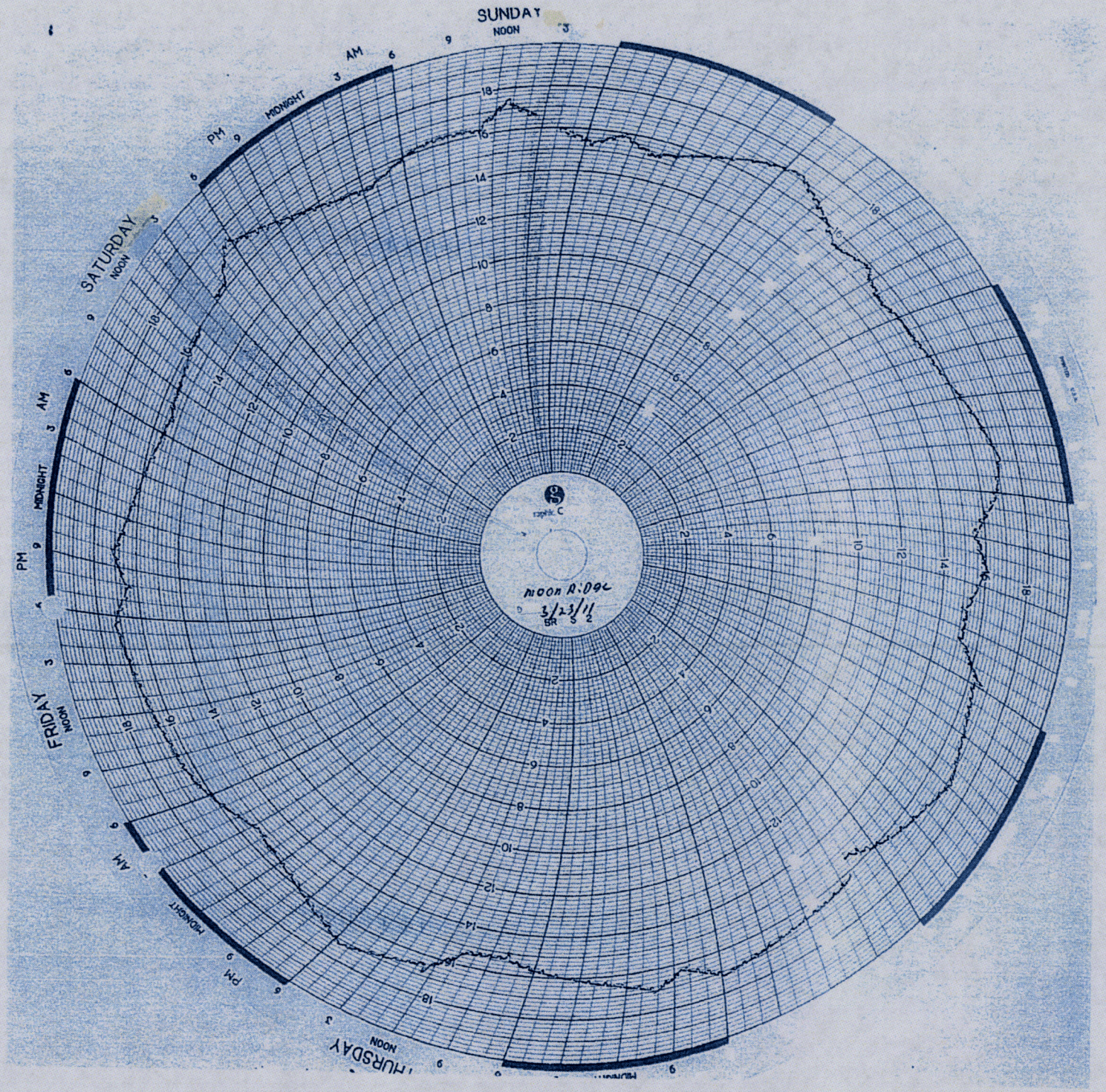
SUNDAY
NOON
AM
MIDNIGHT
PM
SATURDAY
FRIDAY
THURSDAY
Moon Ridge
3/23/11

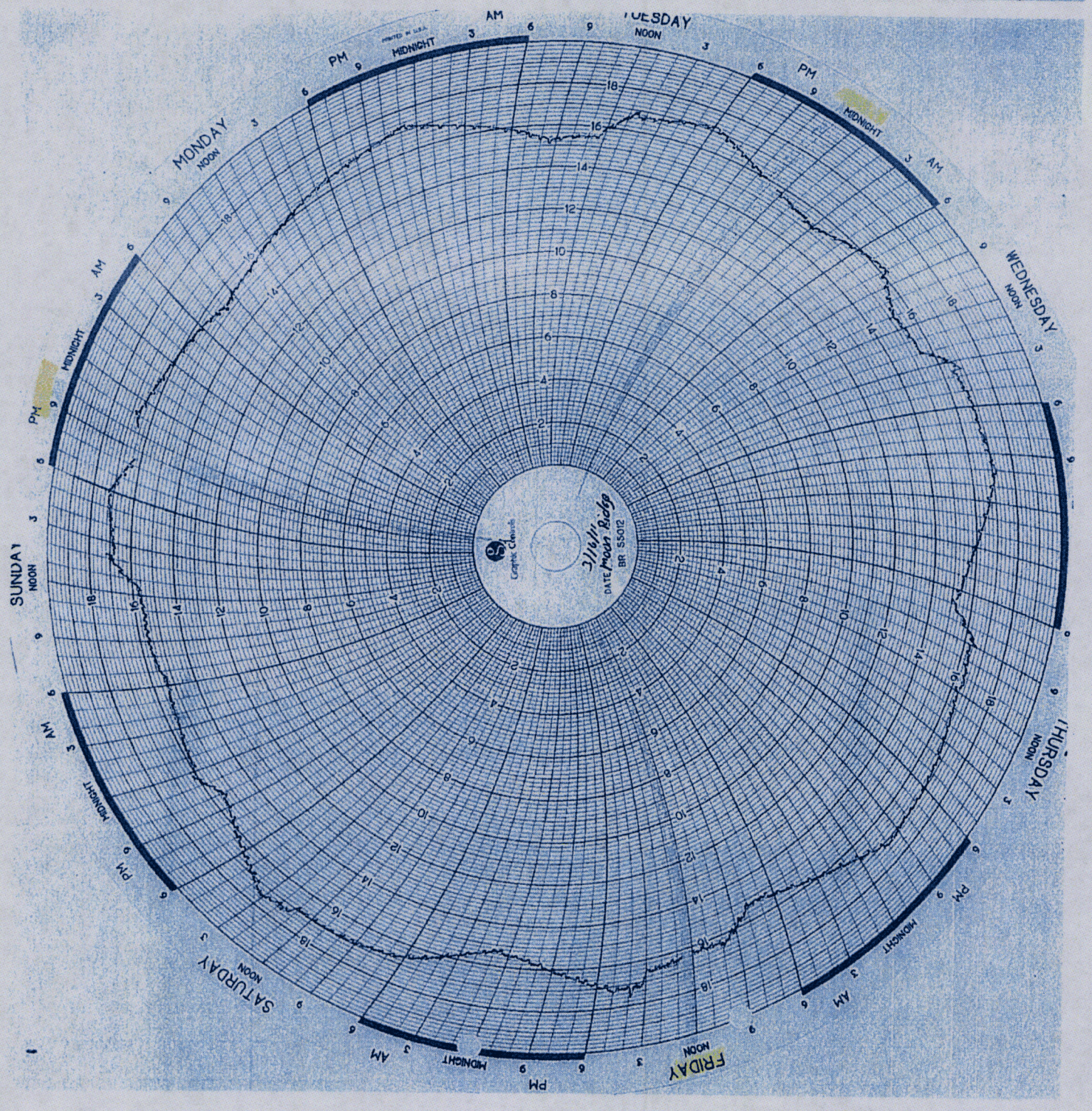
SUNDAY
MONDAY
TUESDAY
WEDNESDAY
THURSDAY
FRIDAY
SATURDAY
NOON
MIDNIGHT
AM
PM
Graphic Controls
DATE
Moon Ridge
BR 55012
PRINTED IN U.S.A.

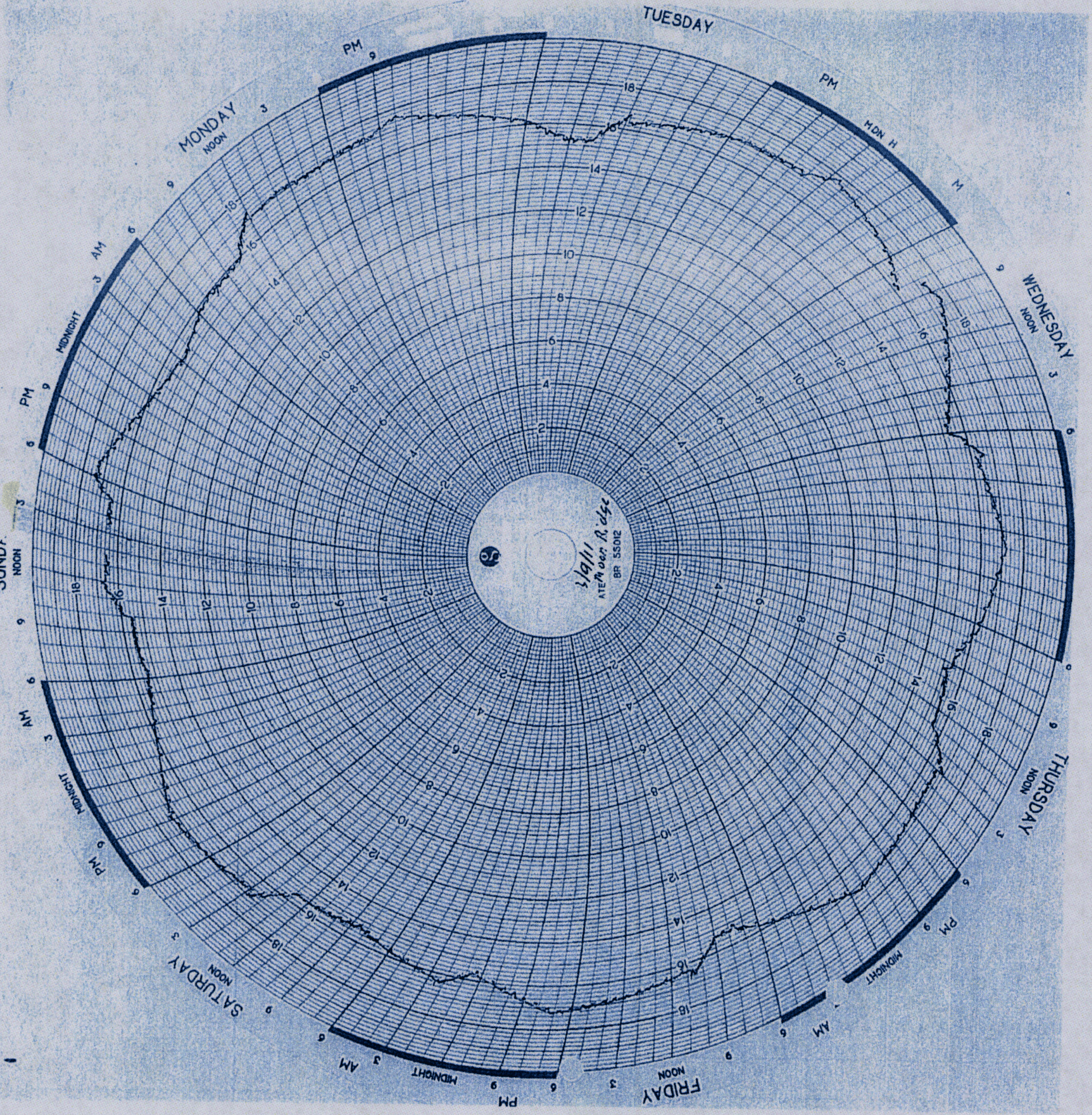
TUESDAY
WEDNESDAY
THURSDAY
FRIDAY
SATURDAY
SUNDAY
MONDAY
NOON
MIDNIGHT
AM
PM
BR 55012

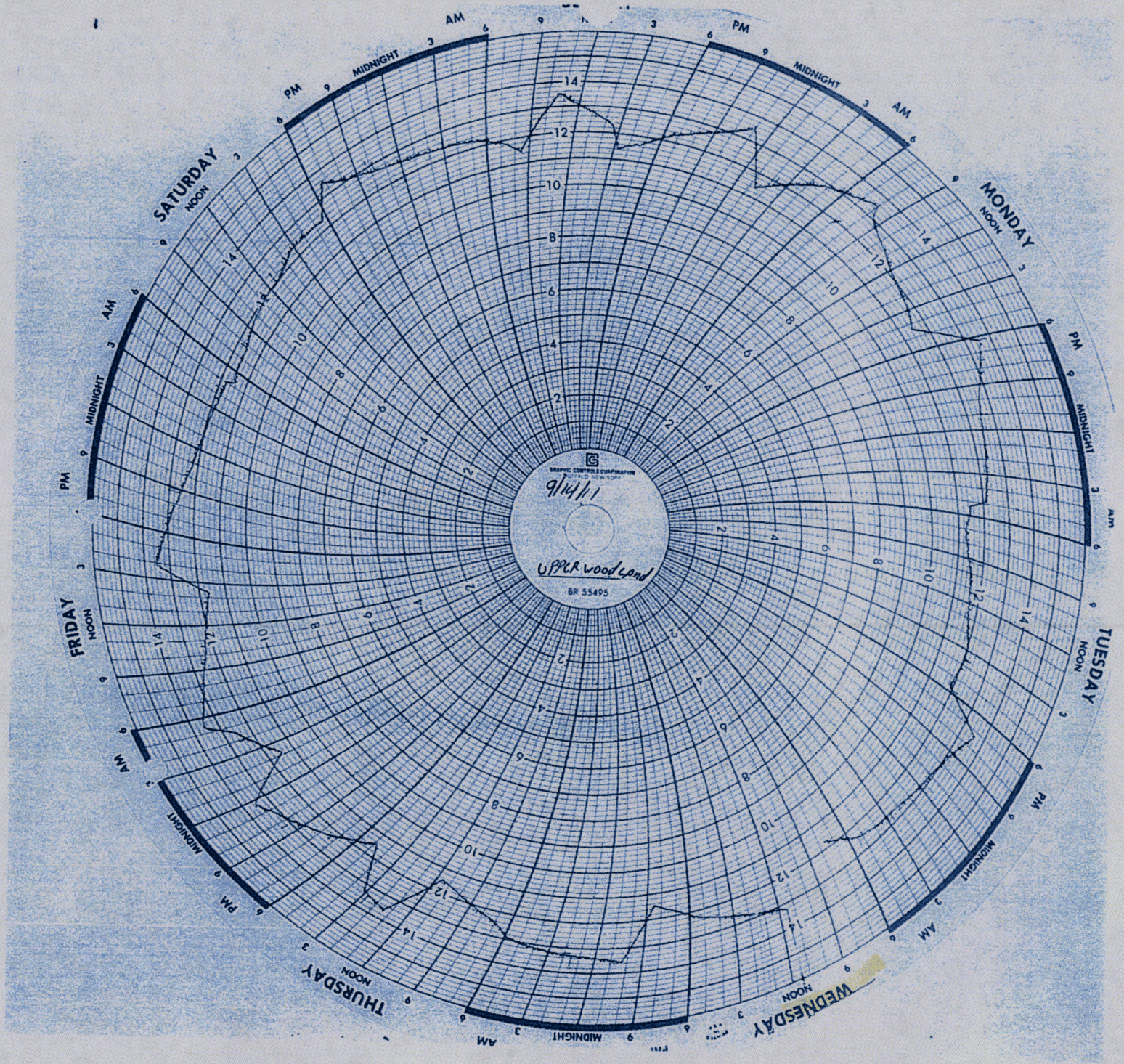
SATURDAY
MONDAY
TUESDAY
WEDNESDAY
THURSDAY
FRIDAY
NOON
MIDNIGHT
AM
PM
Upper Woodland
BR 55495

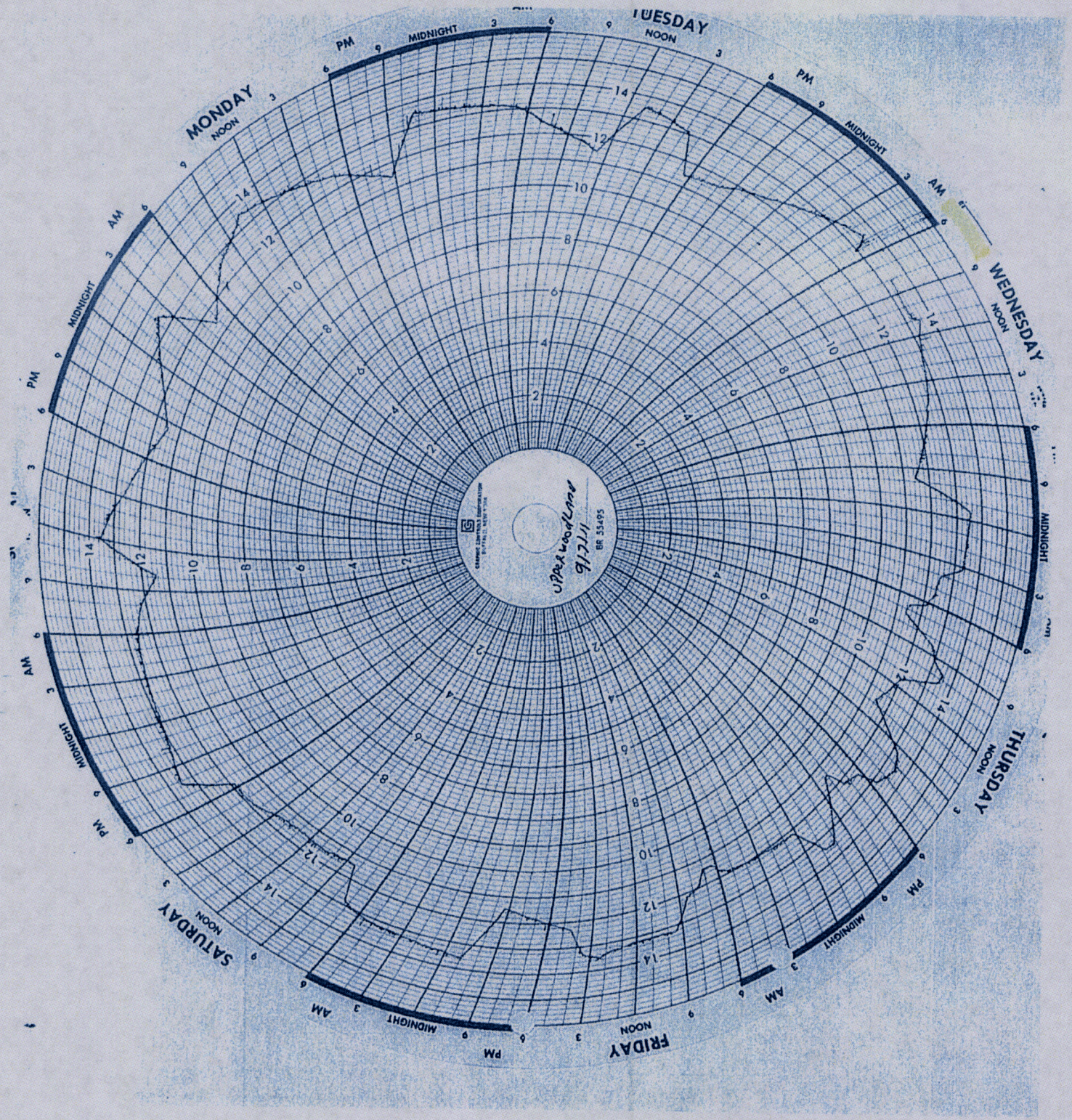
MONDAY
TUESDAY
WEDNESDAY
THURSDAY
FRIDAY
SATURDAY
NOON
MIDNIGHT
AM
PM
3
6
9
12
14
10
8
6
4
2
Upper Woodlands
BR 55495

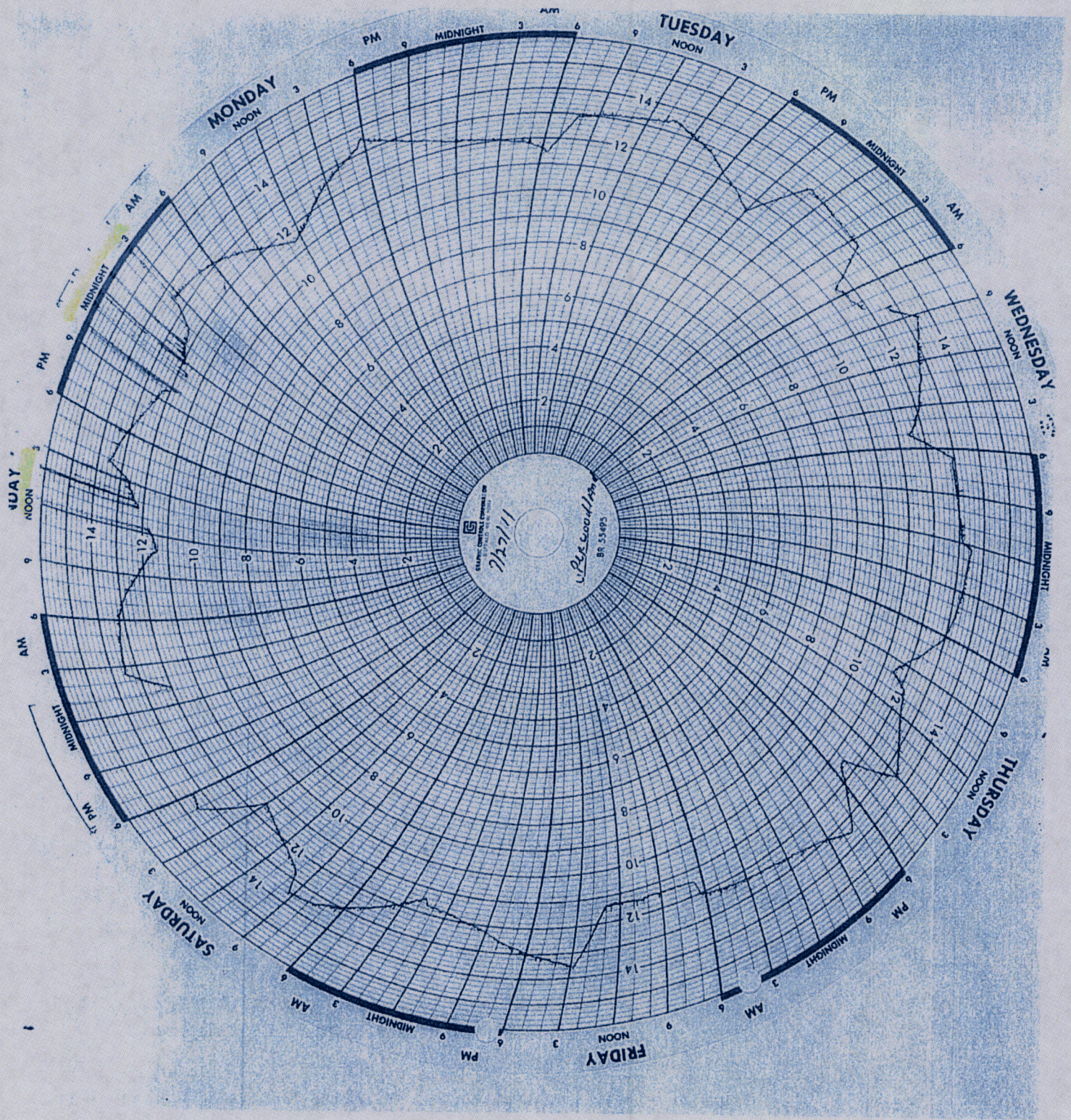
MONDAY
TUESDAY
WEDNESDAY
THURSDAY
FRIDAY
SATURDAY
SUNDAY
NOON
MIDNIGHT
AM
PM
2
4
6
8
10
12
14

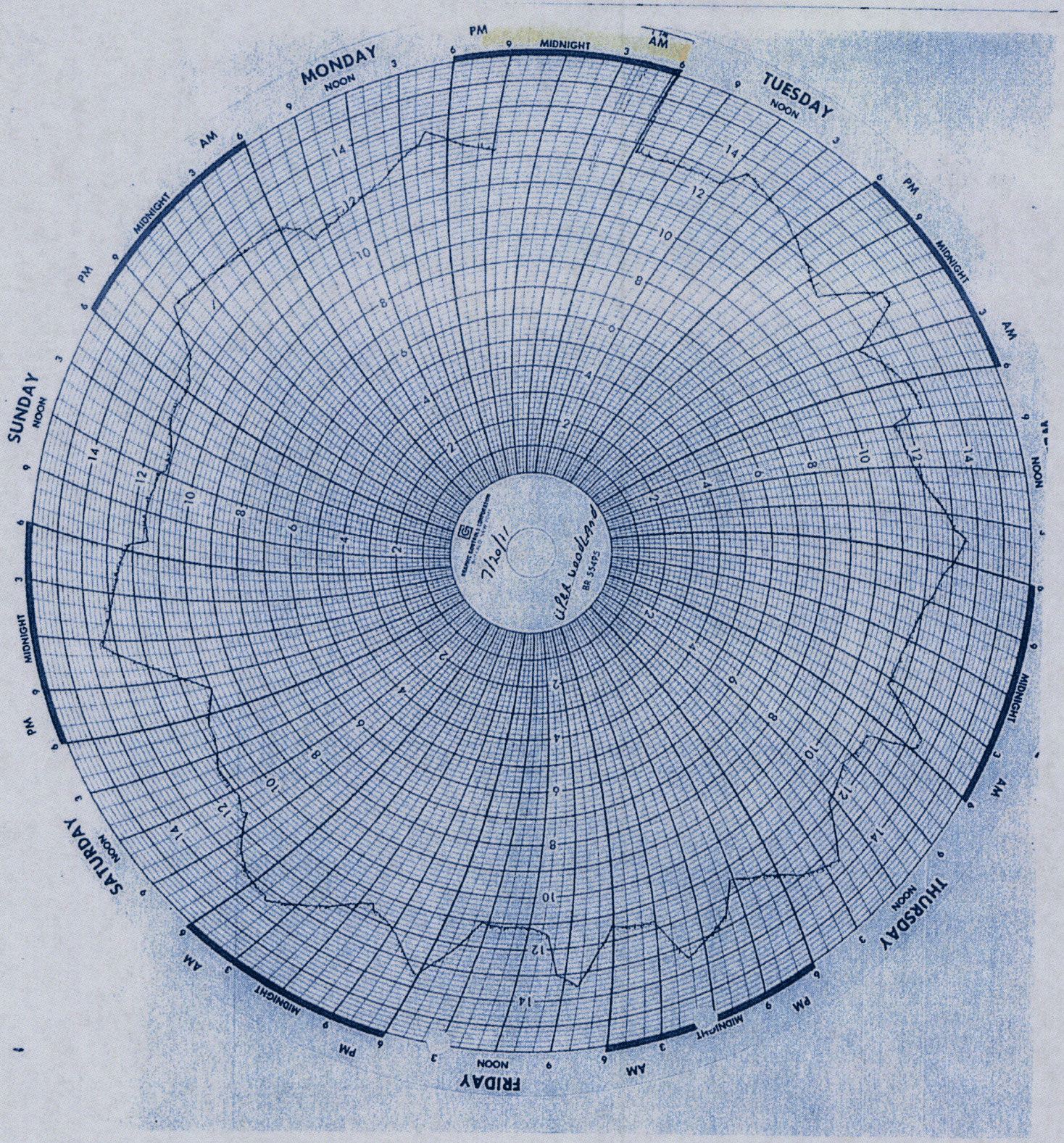
MONDAY
TUESDAY
SUNDAY
SATURDAY
THURSDAY
FRIDAY
NOON
MIDNIGHT
AM
PM
BR 55495

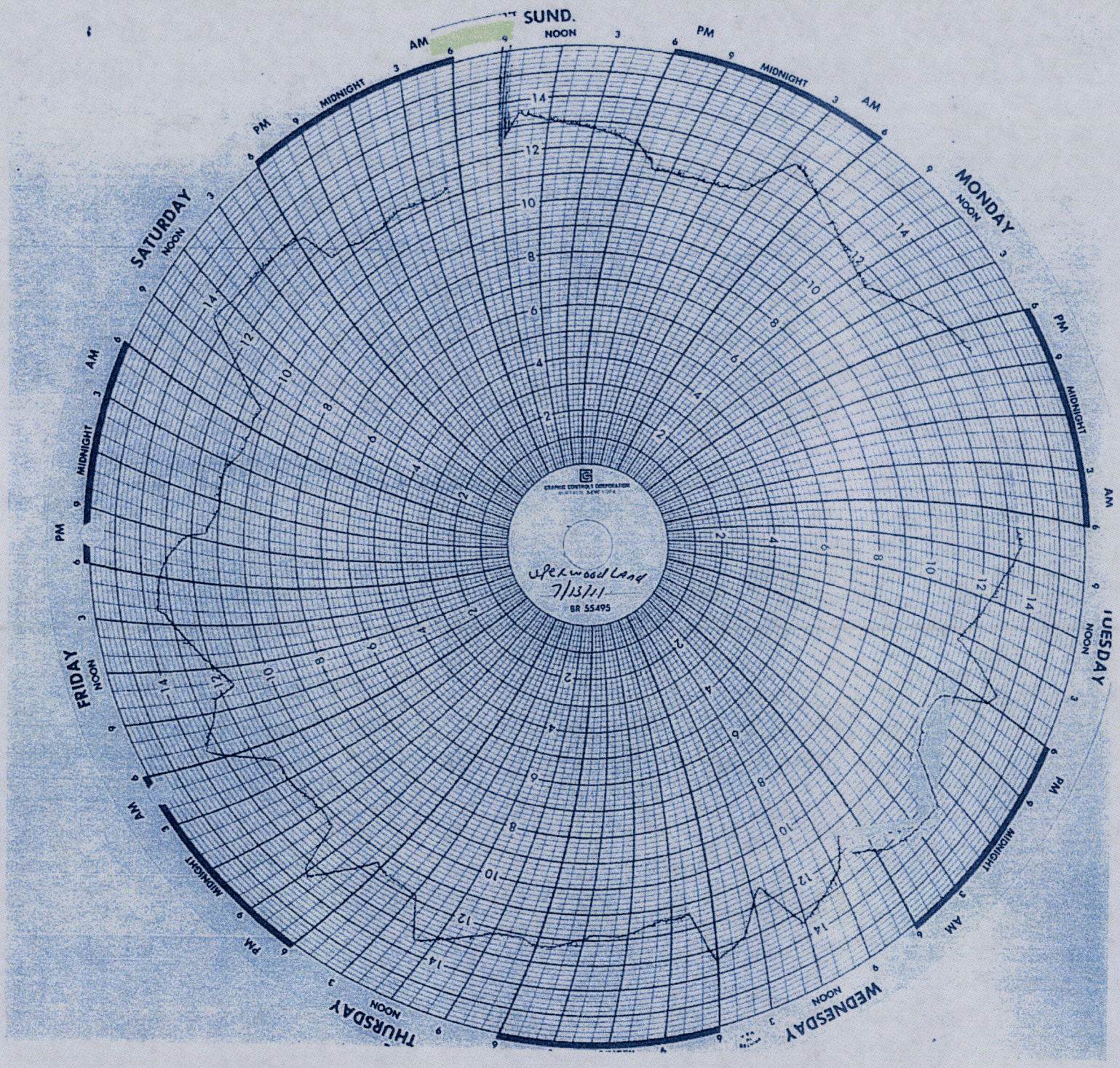
SUND.
MONDAY
TUESDAY
WEDNESDAY
THURSDAY
FRIDAY
SATURDAY
AM
PM
NOON
MIDNIGHT
Uplewood Land
7/13/11
BR 55495

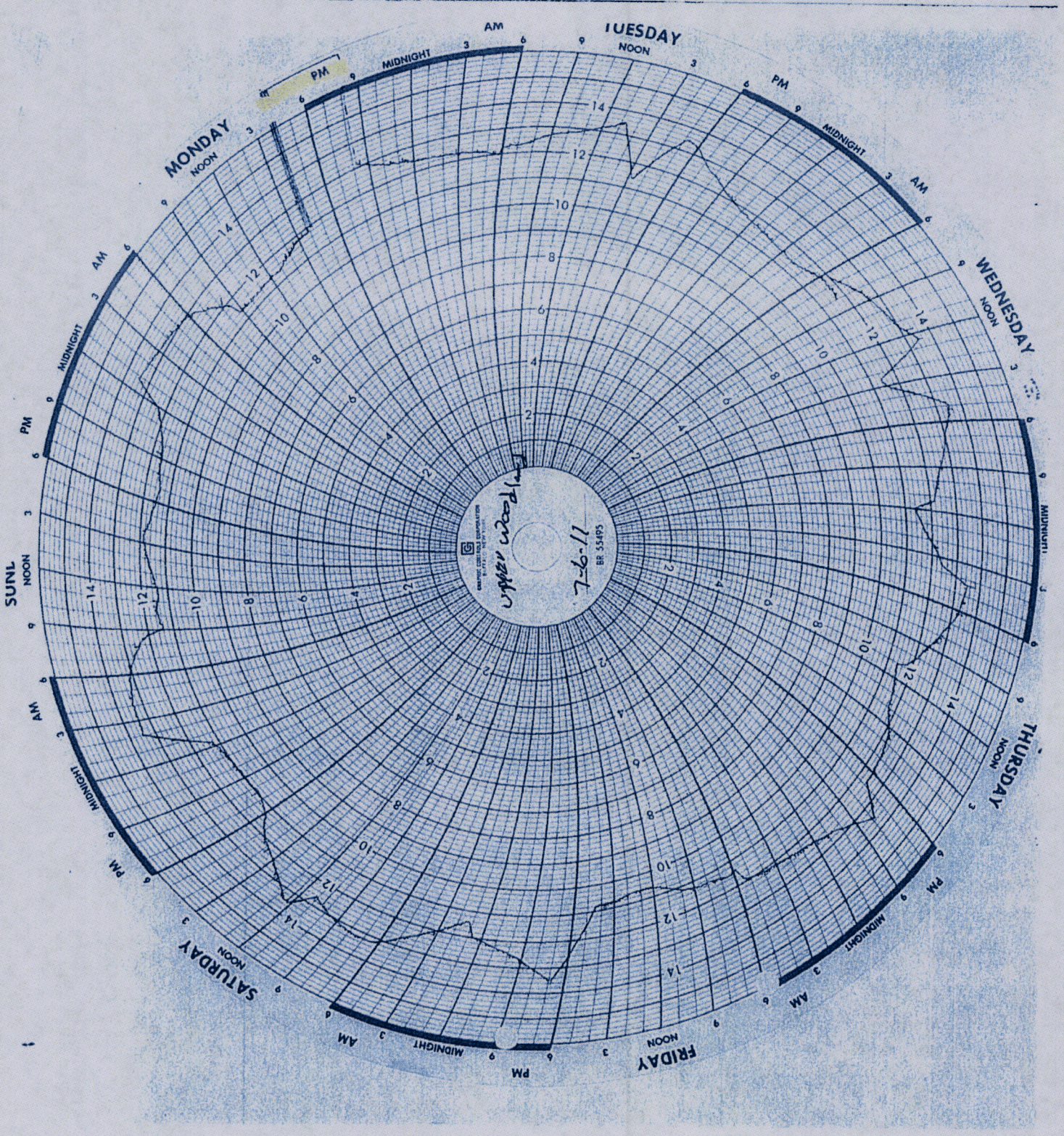
TUESDAY
WEDNESDAY
THURSDAY
FRIDAY
SATURDAY
SUNL
MONDAY
NOON
MIDNIGHT
AM
PM
7-6-11
BR 55495

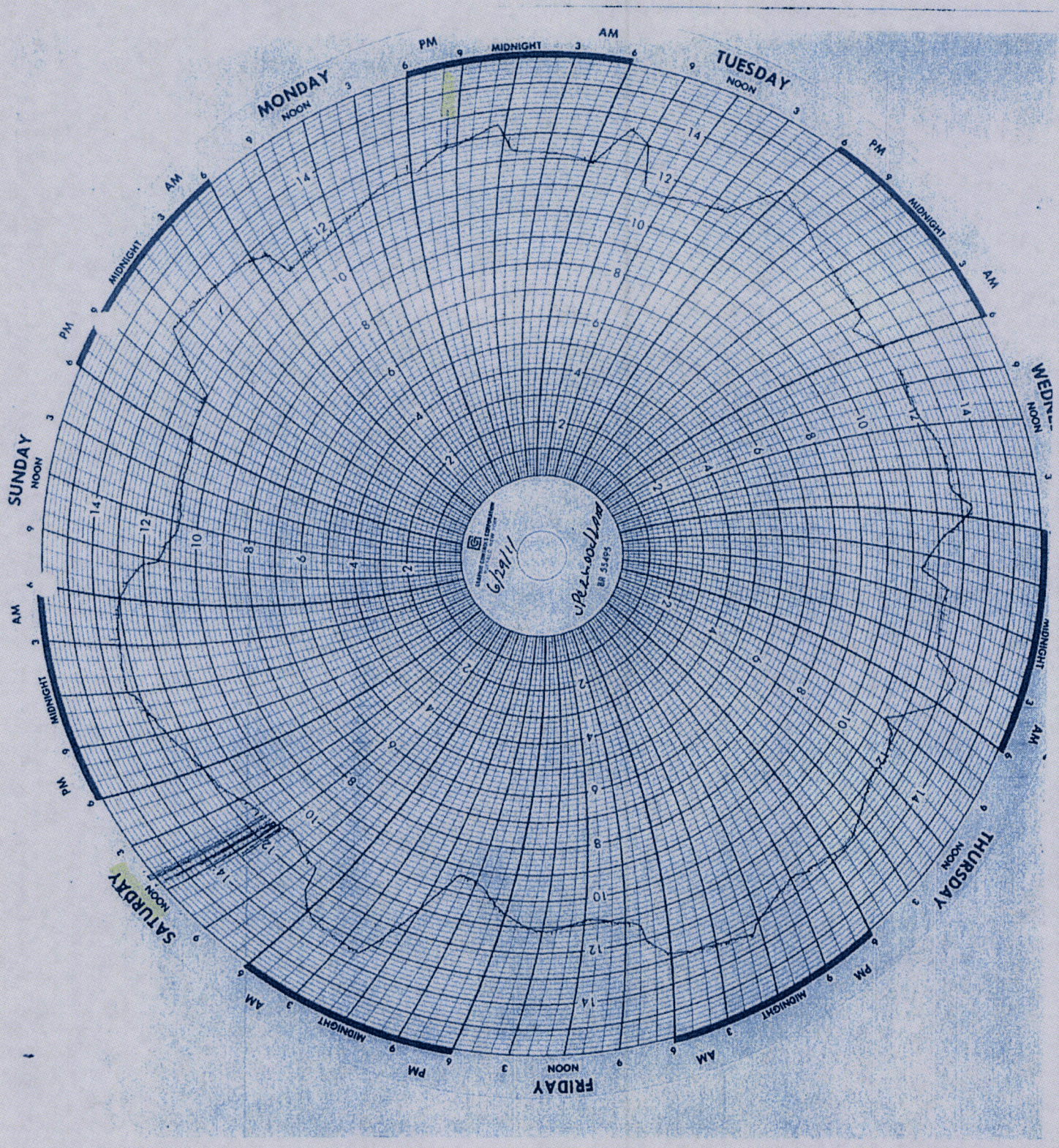
MONDAY
TUESDAY
WEDNESDAY
THURSDAY
FRIDAY
SATURDAY
SUNDAY
NOON
MIDNIGHT
AM
PM
6/29/11

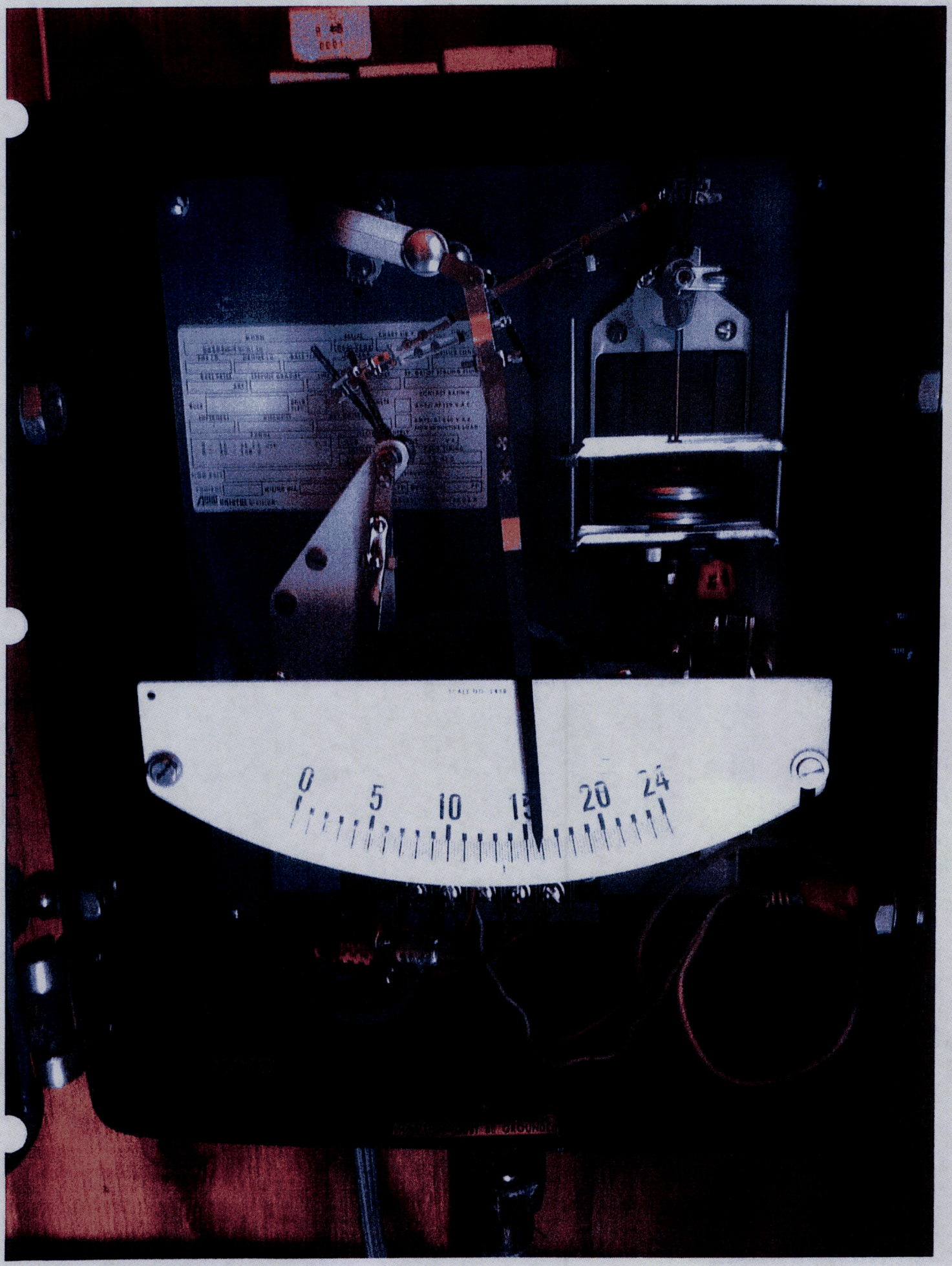
0
5
10
15
20
24

Accu Bristol

MDL OG655M-H-R13C

S# 80A-5686

Chart scale 5458

Range 0-12-24 Power
0-50-100 %

120 V

Impulse 15 Sec

Calibrating
3-12 Sec

Pulse Pulses Width See-5-0
Phase AC to DC Voltage

CLASSIC
copy paper
STAPLES

WA 1-4921

ARIZONA WATER COMPANY
WORK AUTHORIZATION

W.A. NUMBER: 1-4921
P.E. NUMBER:
BUDGET ITEM NO.: 1-4921
SHEET NO.: 1 of 2

SYSTEM: LAKESIDE
DIVISION: NAVAJO
TAX CODE: 3292

WORK TO START BY: UPON AUTHORIZATION
WORK TO BE FINISHED BY: WITHIN 60 DAYS

DESCRIPTION OF WORK:

Install approximately 532 LF of 6-inch DIP and make tie-ins along Hidden Pines Drive to replace the existing 3-inch plastic main line. Construct in accordance with attached drawings and/or Arizona Water Company specifications.

FACTORS JUSTIFYING WORK:

APPROVED 2012 BUDGET ITEM ($40,000)
This section of water main along Hidden Pines Drive is part of an ongoing water main replacement program in the Hidden Pines area of Lakeside. Repairs have been made on this main in recent years (see attached leak records). This main is critical since it is the sole feed to approximately 200 parcels in the Hidden Pines area. Based on the frequency of the historical leaks, breaks and repairs, this water main is nearing the end of its useful life.

COST ESTIMATE	
COST OF WORK:	
MATERIAL	0
LABOR	2,650
CONTRACT PORTION	33,369
OVERHEAD	3,962
TOTAL AUTHORIZED EXPENDITURES CHARGEABLE TO THIS W.A.	$ 39,981
FUNDS RECEIVED:	
CONTRIBUTIONS RECEIVED	0
REFUNDABLE ADVANCES RECEIVED	0
TOTAL CONTRIBUTIONS/ADVANCES	0
NET CASH REQUIRED	$ 39,981

COMMENTS:

AUTHORIZATION	DATE
PREPARED BY: Andrew J. Haas A.J.H. Andy Haas	3-28-12
REVIEWED FOR ENGINEERING VERIFICATION: Charles Bridge CB	03-28-2012
REVIEWED BY: Mike Loggins ML	3-28-12
APPROVED BY ENGINEERING: Fredrick Schneider	3-30-12
APPROVED BY FINANCE: Joseph Harris	3/30/12
AUTHORIZED BY PRESIDENT: William Garfield	3-30-12

CONSTRUCTION RELEASE:

RELEASED TO CONSTRUCTION
Authorized by FRED SCHNEIDER
Date 3/30/12

APH

ARIZONA WATER COMPANY

WORK AUTHORIZATION - DETAIL SHEET

W.A. NUMBER: 1-4921
P.E. NUMBER:
BUDGET ITEM NO.: 1-4921
SHEET NO.: 2 of 2

RETIREMENT PROPERTY UNITS	[illegible]	[illegible]	[illegible]	[illegible]

[illegible]

Install approximately 532 LF of 6-inch DIP and make tie-ins along Hidden Pines Drive to replace the existing 3-inch plastic main line.

	DESCRIPTION	PLANT PROP ACCT	QUANTITY	UNIT COST	TOTAL
CONTRACT WORK	Install 6" DIP w/ polywrap, tie-ins, and related fittings	343	532	$ 38.00	$ 20,216
	Install 6" Mega-Lug joint restraints	343	9	42.00	378
	Tie-Over 1" single service connection to new 6" DIP	345	1	450.00	450
	Misc. 3" and 4" pipe, couplings, and fittings for tie-ins	343	1	3,070.00	3,070
	Blacktop replacement	343	56	44.00	2,464
	Concrete replacement at driveway	343	57	39.00	2,223
	Vertical Realignment	343	2	1,425.00	2,850
	Contracting Tax	343	1	828.99	829
	100% Performance and Payment Bonds	343	1	889.00	889
	SERVICE CONNECTIONS COMPLETE: DOUBLE-LONG	345			
	SERVICE CONNECTIONS COMPLETE: DOUBLE-SHORT	345			
	SERVICE CONNECTIONS COMPLETE: SINGLE-LONG	345			
	SERVICE CONNECTIONS COMPLETE: SINGLE-SHORT	345			
TOTAL CONTRACT WORK					$ 33,369
MATERIALS					
	SERVICE CONNECTIONS: DOUBLE-LONG	345			
	SERVICE CONNECTIONS: DOUBLE-SHORT	345			
	SERVICE CONNECTIONS: SINGLE-LONG	345			
	SERVICE CONNECTIONS: SINGLE-SHORT	345			
	METERS	346			
TOTAL MATERIALS					$ -
LABOR	Project Management	343	8	$ 50.00	$ 400
	TESTING FEE	343	1	$ 250.00	250
	PERMIT FEE				
	SURVEY FEE				
	FIELD INSPECTION	343	40	50.00	2,000
	INSTALL SERVICE CONNECTIONS: DOUBLE-LONG	345			
	INSTALL SERVICE CONNECTIONS: DOUBLE-SHORT	345			
	INSTALL SERVICE CONNECTIONS: SINGLE-LONG	345			
	INSTALL SERVICE CONNECTIONS: SINGLE-SHORT	345			
TOTAL LABOR					$ 2,650
SUBTOTAL - CONTRACT WORK, MATERIALS, AND LABOR					$ 36,019
OVERHEAD					3,962
TOTAL	REFUNDABLE PORTION ☐	NON-REFUNDABLE PORTION ☐		COST ESTIMATE	$ 39,981

AFH

MASTER AGREEMENT
FOR ONGOING CONSULTING AND ENGINEERING SERVICES
BETWEEN ARIZONA WATER COMPANY
AND ALTA LAND SURVEY

THIS AGREEMENT is made and entered into on this 17th day of June, 2011, by and between Arizona Water Company, an Arizona corporation, hereinafter referred to as "Client," and ALTA LAND SURVEY, an Arizona corporation hereinafter referred to as "Consultant."

RECITALS:

WHEREAS, Client desires that from time to time Consultant furnish Client certain consulting services;

WHEREAS, Consultant has available and offers to provide personnel and facilities necessary to perform the services desired under this Agreement;

NOW, THEREFORE, Client and Consultant agree as follows:

I. DESCRIPTION OF PROJECT

Services to be provided shall be as described in written task orders made pursuant to and referencing this Agreement; the form of such task order is attached hereto as Exhibit A.

II. SCOPE OF CONSULTANT SERVICES

Consultant agrees to perform those basic services described in separate written task order(s) signed by Client and Consultant (the "Services"). This Agreement provides the terms, obligations and conditions which shall control all work under such task orders(s). The printed terms and conditions, if any, contained on the reverse side(s) of an accepted task order shall not apply to services provided under this Agreement. Unless modified in writing by both parties, duties of Consultant shall not exceed those service specifically described in each task order. Any work authorized by Client prior to the issuance of a written task order must be authorized in writing and any services then performed by Consultant will be presumed to have been completed under the terms of this Agreement.

III. RESPONSIBILITIES OF CLIENT

In addition to payment for the Services performed under this Agreement, Client shall:

1. Assist and cooperate with Consultant in any manner necessary and within its ability to facilitate Consultant's performance under this Agreement.

2. Designate in writing a person to act as Client's representative with respect to this Agreement. Such person shall have complete authority to transmit instructions, receive information, interpret and define Client's policies, make decisions and execute documents on Client's behalf.

3. Furnish Consultant with all technical data in Client's possession including, but not limited to, maps, surveys, drawings, soils or geotechnical reports, and any other information required by or useful to, Consultant in performance of the Services under this Agreement. Consultant shall be entitled to rely upon the information supplied by Client.

4. Notify Consultant of any known or potential health or safety hazards existing at or near the project site.

5. Provide access to and/or obtain permission for Consultant to enter upon all projects whether or not owned by Client, as required to perform and complete the Services.

IV. AMERICANS WITH DISABILITIES ACT

Any other provision of this Agreement to the contrary notwithstanding, unless otherwise specified in the Scope of Services, Client's contractors shall have sole responsibility as between Client and Consultant for compliance with the Americans With Disabilities Act ("ADA") 42 U.S.C. 12101 et. Seq. and the related regulations. Consultant shall provide client with applicable ADA criteria which maybe required.

V. AUTHORIZATION AND COMPLETION

In signing this Agreement, Client grants Consultant speeific authorization to proceed with work as described in Scope of Work and under the terms of this Agreement.

VI. COMPENSATION

For the Services described in each task order, Client agrees to pay, and Consultant agrees to accept the total compensation in accordance with compensation terms included in the task order. Where Consultant has provided Client with a breakdown of the total compensation into subtasks, such breakdowns are estimates only. Consultant may re-allocate compensation between tasks, provided total compensation is not exceeded without the written approval of Client. Time charges shall be in accordance with the Hourly Rate Schedule contained in Exhibit B. The rate schedule may be revised annually by mutual written Agreement. Annual revisions to the Hourly Rate Schedule shall be submitted prior to the date that they take effect. Compensation shall be billed monthly in summary form. Payment to Consultant is due upon presentation of invoice to Client.

As long as Consultant has not defaulted under this Agreement, Client shall pay Consultant within 30 days of the date of Consultant's invoices for services performed and reimbursable expenses incurred under this Agreement. Client may contest any portion of any such invoice, amounts questioned or contested shall be identified and notice given to Consultant within 15 days of the date of the invoice. Any portion of any invoice not contested shall be deemed to be accepted and approved for payment and shall be paid to Consultant within 30 days of the date of the invoice. The Consultant agrees to cooperate with Client in a mutual effort to resolve promptly any contested portions of the Consultant's invoices.

In the event any uncontested portions of any invoice are not paid within 30 days of the date of Consultant's invoice, interest on the unpaid balance shall accrue beginning with the 31st day at the maximum interest rate permitted by law, and Consultant shall have the right to suspend work per Article XV, Suspension of Work.

VII. RESPONSIBILITY OF CONSULTANT

A. Standard of Care Professional Services

Subject to the limitations inherent in the agreed scope of work as to the degree of care, amount of time and expenses to be incurred, and subject to any other limitations contained in this Agreement, Consultant shall perform its Services in accordance with generally accepted standards and practices customarily utilized by competent engineering firms in effect at the time Consultant's Services are rendered. Consultant does not expressly or impliedly warrant or guarantee its Services.

B. Reliance upon Information Provided by Others

If Consultant's performance of services hereunder requires Consultant to rely on information provided by other parties (excepting Consultant's subcontractors), Consultant shall not independently verify the validity, completeness, or accuracy of such information unless otherwise expressly engaged to do so in writing by Client.

C. Consultant's Opinion of Costs

Client acknowledges that construction cost estimates, financial analyses and feasibility projections are subject to many influences including, but not limited to, price of labor and materials, unknown or latent conditions of existing equipment or structures, and time or quality of performance by third parties. Client acknowledges that such influences may not be precisely forecasted and are beyond the control of Consultant and that actual costs incurred may vary substantially from the estimates prepared by Consultant. Consultant does not warrant or guarantee the accuracy of construction or development cost estimates.

D. Construction Phase Services

1. Consultant's Activities at Construction Site. The presence of Consultant's personnel at a construction site, whether as on-site representative, resident engineer, construction manager, or otherwise, does not make Consultant responsible for those duties that belong to Client and/or construction contractors or others, and does not relieve construction contractors or others of their obligations, duties, and responsibilities, including, but not limited to, construction methods, means, techniques, sequences, and procedures necessary for completing all portions of the construction work in accordance with the contract documents, any health or safety programs and precautions required by such construction work, and any compliance with applicable laws and regulations. Any inspection or observation of the contractor's work is solely for the purpose of determining that the work is generally proceeding in conformance with the intent of the project specifications and contract documents. Except for its own Contractors, Consultant makes no warranty or guarantee with respect to the performance of a contractor. Consultant has no authority to exercise control over any construction contractor in connection with their work or health or safety programs and

precautions. Except to protect Consultant's own personnel and except as may be expressly required elsewhere in the scope of services, Consultant has no duty to inspect, observe, correct, or report on health or safety deficiencies of the construction contractor.

2. Shop Drawing and Submittal Review. If required by Consultant's Scope of Services, Consultant shall review shop drawings or other contractor submittals for general conformance with the intent of the contract documents. Except for its own Contractors, Consultant shall not be required to verify dimensions, to engineer contractor's shop drawings or submittals, nor to coordinate shop drawings or other submittals with other shop drawings or submittals provided by contractor.

3. Record Drawings. Record drawings, if required, will be prepared, in part, on the basis of information compiled and furnished by others, and may not always represent the exact location, type of various components, or exact manner in which the Project was finally constructed. Except for its own Contractors, Consultant is not responsible for any errors or omissions in the information from others that are incorporated into the record drawings.

VIII. ASSIGNMENT OF TASKS TO AFFILIATES

If the authorized scope of work requires professional services to be performed in a jurisdiction in which Consultant renders professional services solely through a locally registered engineering affiliate for purposed of compliance with professional licensing requirements in that jurisdiction, Consultant may, in its discretion, upon notice to Client, assign its contractual rights and obligations with respect to such services to such locally registered engineering affiliate.

IX. ASBESTOS / HAZARDOUS MATERIALS

Consultant and Consultant's subcontractors shall have no responsibility for the discovery, handling, removal, or disposal of or exposure of persons to asbestos or hazardous or toxic materials that are present in any form at the Project site. Professional services related to or in any way connected with the investigation, detection, abatement, replacement, use, specification, or removal of products, materials, or processes containing asbestos or hazardous or toxic materials are beyond the scope of this Agreement. Client shall be solely responsible for notifying all appropriate governmental agencies, including the potentially effected public, of the existence of any hazardous or toxic materials located on or at the project site any any time.

In the event Consultant encounters asbestos or hazardous materials at the jobsite, Consultant may, at its option and without liability for damages, suspend the performance of services on the Project until such time as Client and Consultant mutually agree on an amendment to this Agreement to address the issue, or Client retains another specialist consultant or contractor to identify, classify, abate and/or remove the asbestos and/or hazardous materials.

X. CONSULTANT'S WORK PRODUCT

A. Scope

Consultant's work product which is prepared solely for the purposes of this Agreement, including, but not limited to, drawings, test results, recommendations and technical specifications, whether in hard copy or electronic form, shall become the property of Client when Consultant has been fully compensated as set forth herein. Consultant may keep copies of all work product(s) for its records.

Consultant and Client recognize that Consultant's work product submitted in performance of this Agreement is intended only for the project described in this Agreement. Client's alteration of Consultant's work product or its use by Client for any other purpose shall be at Client's sole risk, and Client shall hold harmless and indemnify Consultant against all losses, damages, costs and expense, including attorneys' fees, arising out of or related to any such alteration or unauthorized use.

B. Electronic Copies

If requested, solely as an aid and accommodation to Client, Consultant may provide copies of its work product documents in computer-readable media ("electronic copies," "CADD"). These documents will duplicate the documents provided as work product, but will not bear the signature and professional seals of the registered professionals responsible for the work. Client is cautioned that the accuracy of electronic copies and CADD documents may be compromised by electronic media degradation, errors in format translation, file corruption, printing errors and incompatibilities, operator inexperience and file modification. Consultant will maintain the original copy, which shall serve as the official, archived record of the electronic and CADD documents. Client agrees to hold harmless, indemnify and defend Consultant from any claims arising out of or relating to any change or alteration of electronic copies and CADD documents authorized by the Client, Client's personnel, or Client's Contractor's.

XI. INDEMNIFICATION

A. Indemnification of Client

Consultant agrees to indemnify and hold Client harmless from and against any liability to the extent arising out of the negligent errors or negligent omissions of Consultant, its agents, employees, or representatives, in the performance of Consultant's duties under this Agreement.

B. Consequential Damages.

Regardless of any other term of this Agreement, in no event shall either party be responsible or liable to the other for any incidental, consequential, or other indirect damages.

XII. CONSULTANT'S INSURANCE

Consultant shall procure and maintain the following minimum insurance:

1. Commercial general liability insurance, including personal injury liability, blanket contractual liability and broad-form property damage liability coverage. The combined single limit for bodily injury and property damage shall be not less than $1,000,000.

2. Automobile bodily injury and property damage liability insurance covering owned, non-owned, rented, and hired cars. The combined single limit for bodily injury and property damage shall be not less than $1,000,000.

3. Statutory workers' compensation and employer's liability insurance as required by state law.

4. Professional liability insurance. The policy limit shall be not less than $1,000,000.

Client shall be named as additional insured on polices 1 and 2 above. Upon execution of this Agreement, Consultant will provide a certificate of insurance to Client. Consultant will keep the certificate current at all times while this Agreement is in effect. The Consultant will provide a 30-day written notice in the event the above policies are cancelled.

XIII. CONFIDENTIALITY

Consultant agrees it will maintain the confidentiality of all material it receives from Client which Client has clearly identified as "Confidential" and will not disclose, distribute, or publish to any third party such confidential information without the prior permission of Client. Notwithstanding the foregoing, Consultant shall have no confidentiality obligation with respect to information that:

1) becomes generally available to the public other than as a result of disclosure by Consultant or its agents or employees;

2) was available to Consultant prior to its disclosure by Client;

3) becomes available to Consultant from a third party who is not, to the knowledge of Consultant, bound to retain such information in confidence.

In the event Consultant is compelled by subpoena, court order, or administrative order to disclose any confidential information, Consultant shall promptly notify Client and shall cooperate with Client prior to disclosure so that Client may take necessary actions to protect such confidential information from disclosure.

XIV. SUBCONTRACTS

Consultant shall be entitled, to the extent determined appropriate by Consultant, to subcontract any portion of the services to be performed under this Agreement.

XV. SUSPENSION OF WORK

Work under this Agreement may be suspended as follows:

1. By Client. By written notice to Consultant, Client may suspend all or a portion of the Work under this Agreement if unforeseen circumstances beyond Client's control make normal progress of the Work impracticable. Consultant shall be compensated for its reasonable expenses resulting from such suspension including mobilization and demobilization. If suspension is greater than 90 days, then Consultant shall have the right to terminate this Agreement in accordance with Article IVI, Termination of Work.

2. By Consultant. By written notice to Client, Consultant may suspend the Work if Consultant reasonably determines that working conditions at the Site (outside Consultant's control) are unsafe, or in violation of applicable laws, or in the event Client has not made timely payment in accordance with Article VI, Compensation, or for other circumstances not caused by Consultant that are interfering with the normal progress of the Work. Consultant's suspension of Work hereunder shall be without prejudice to any other remedy of Consultant at law or equity.

XVI. TERMINATION OF WORK

A. This Agreement may be terminated by Client as follows: (1) for its convenience on 15 days' notice to Consultant, or (2) for cause, if Consultant materially breaches this Agreement through no fault of Client and Consultant neither cures such material breach nor makes reasonable progress toward cure within 15 days after Client has given written notice of the alleged breach to Consultant.

B. This Agreement may be terminated by Consultant as follows: (1) for cause, if Client materially breaches this Agreement through no fault of Consultant and Client neither cures such material breach nor makes reasonable progress toward cure within 15 days after Consultant has given written notice of the alleged breach to Client, or (2) upon five days' notice if work under this Agreement has been suspended by either Client or Consultant for more than 90 days in the aggregate.

C. Payment upon Termination

In the event of termination, Consultant shall perform such additional work as is reasonably necessary for the orderly closing of the Work. Consultant shall be compensated for all work performed prior to the effective date of termination, plus work required for the orderly closing of the Work, including: (1) authorized work performed up to the termination date plus termination expenses, including all labor and expenses, at Consultant's standard billing rates, directly attributable to termination; (2) all efforts necessary to document the work completed or in progress; and (3) any termination reports requested by Client.

XVII. ASSIGNMENT

This Agreement is binding on the heirs, successors, and assigns of the parties hereto. Except as otherwise set forth under Article VIII, Assignment of Tasks to Affiliates, this Agreement may not be assigned by Client or Consultant without prior, written consent of the other.

XVIII. NO BENEFIT FOR THIRD PARTIES

The services to be performed by Consultant are intended solely for the benefit of Client, and no benefit is conferred on, nor contractual relationship established with any person or entity not a party to this Agreement. No such person or entity shall be entitled to rely on Consultant's services, opinions, recommendations, plans, or specifications without the express written consent of Consultant. No right to assert a claim against the Consultant, its officers, employees, agents, or consultants shall accrue to the construction Contractor or to any subcontractor, supplier, manufacturer, lender, insurer, surety, or any other third party as a result of this Agreement or the performance or nonperformance of the Consultant's services hereunder.

XIX. FORCE MAJEURE

Consultant shall not be responsible for delays caused by circumstances beyond their reasonable control, including, but not limited to (1) strikes, lockouts, work slowdowns or stoppages, or accidents, (2) acts of God, (3) failure of Client to furnish timely information or to approve or disapprove Consultant's instruments of service promptly, and (4) faulty performance or nonperformance by Client, Client's independent consultants or contractors, or governmental agencies. Consultant shall not be liable for damages arising out of any such delay, nor shall the Consultant or Client be deemed to be in breach of this Agreement as a result thereof.

XX. INTEGRATION

This Agreement represents the entire understanding of Client and Consultant as to those matters contained herein. No prior oral or written understanding shall be of any force or effect with respect to those matters covered herein. This Agreement may not be modified or altered except in writing signed by both parties. Any purchase order issued by Client, whether or not signed by Consultant, and any terms and conditions contained in such purchase order which are inconsistent with this Agreement shall be of no force and effect.

XXI. SEVERABILITY

If any part of this Agreement is found unenforceable under applicable laws, such part shall be inoperative, null, and void insofar as it conflicts with said laws, but the remainder of this Agreement shall be in full force and effect.

XXI. CHOICE OF LAW/JURISDICTION

This Agreement shall be administered and interpreted under the laws of the State of Arizona Jurisdiction of litigation arising from the Agreement shall be in the State of Arizona.

XXIII. ATTORNEYS' FEES

In the event either party commences legal proceedings against the other, then the prevailing party shall, in addition to any other recovery, be entitled to recover its reasonable attorneys' fees and all other costs of such proceeding.

XXIV. NOTICES

All notices required under this Agreement shall be delivered by personal delivery or first class mail and shall be addressed to the following persons:

Mr. Donald J. Loose
President
ALTA Land Survey, Inc.
209 N. Huachuca Boulevard
Huachuca City, Arizona 85616

Mr. Fred Schneider
Vice President - Engineering
Arizona Water Company
P.O. Box 29006
Phoenix, Arizona 85038

Notice shall be effective upon delivery to the above addresses. Project related instructions may be delivered by electronic mail. Either party may notify the other that a new person has been designated by it to receive notices, or that the address for the delivery of such notices has been changed, provided that, until such time as the other party receives such notice in the manner provided for herein, any notice addressed to the previously-designated person and/or delivered to the previously-designated address shall be effective.

XXV AUTHORIZATION

The persons executing this Agreement on behalf of the parties hereto represent and warrant that the parties have all legal authority and authorization necessary to enter into this Agreement, and that such persons have been duly authorized to execute this Agreement on their behalf.

IN WITNESS WHEREOF, the parties hereto have executed this Agreement as of the date first above written.

ALTA LAND SURVEY, INC.

Signature Donald J. Loose

Printed Name Donald J. Loose

Title President

Federal Tax ID number: 32-0329099

ARIZONA WATER COMPANY

Signature Fred Schneider

Printed Name Mr. Fred Schneider

Title Vice-President - Engineering

AGREEMENT FOR GENERAL ENGINEERING SERVICES BETWEEN ARIZONA WATER COMPANY AND ALTA LAND SURVEY, INC.

TASK ORDER AUTHORIZATION

ALTA Land Survey, Inc. Project Number _____

AWC Project Number Hidden Pines Drive Survey

Arizona Water Company
P.O. Box 29006
Phoenix, Arizona 85038-9006

Effective Date of Authorization 12/14/11 .

Upon execution of this Task Order, and effective as of the date shown above, the parties agree that ALTA Land Survey, Inc. shall perform the following services:

SCOPE OF SERVICES

Per the attached survey proposal dated November 28, 2011.

COMPENSATION

Per the attached survey proposal dated November 28, 2011.

GENERAL TERMS AND CONDITIONS

ALTA Land Survey's services shall be governed by the Master Agreement dated June 17, 2011 together with this Task Order and any Exhibits attached hereto.

The services performed within this Task Order shall commence on or about December 12, 2011, and shall be complete on or before December 30, 2011.

ALTA Land Survey's Representative in charge of the services is Donald Loose, who may be contacted at 520-456-9400 and dloose@alta-land.com. Client's Representative in charge of the services is Andy Haas, who may be contacted at 602-240-6860 and ahaas@azwater.com.

ARIZONA WATER COMPANY	ALTA LAND SURVEY, INC.
By _____	By Donald J. Loose
Title SR. ENGINEER	Title PRESIDENT
Date 12/14/11	Date DEC. 12, 2011

ALTA LAND SURVEY, INC.
Surveying ~ Drafting~Construction Staking
209 N. Huachuca Blvd., Huachuca City, AZ 85616 Ph. (520) 456-9400

November 28, 2011

Andrew Haas, EIT
Arizona Water Company
3805 N. Black Canyon Hwy.
Phoenix, AZ 85015

RE: Hidden Pines Drive

Dear Andrew:

ALTA Land Survey, Inc. has reviewed the Scope of Services for Hidden Pines Drive. We are pleased to submit a proposal to perform surveying survey services to locate the existing 3" and 4" asbestos water mains within the right-of-way of Hidden Pines Drive. The following is our Scope of Services:

- Locate the existing 3" and 4" asbestos water mains within the right-of-way of Hidden Pines Drive as shown on the subdivision map of Hidden Pines Estates. Also locate all above ground structures, tanks, wells, cabinets, pavement, curb, gutter, sidewalks, fences, posts, signs, manholes, guy lines, meter boxes, utility lines, buildings, walls, fences, culverts, ditches, hardscape, etc.
- Locate any bluestake markings.
- Tie the location of all mains and structures to property corners, lot lines, and/or other prominent monuments for its entire length from the point of origin to its terminus as depicted in Exhibit "B" as shown on the RFP e-mail from Arizona Water Co.
- Draft Results of Survey drawing showing results of above described surveying. Deliver one copy of survey on bond paper and one compact disc of survey drawings on AutoCAD.

The cost to perform the above work to be $1850.

We appreciate the opportunity to provide you with this proposal and thank you for considering us as your surveyor. We look forward to hearing from you.

Sincerely,

Donald J. Loose
President

EXHIBIT A

Scope of Services

Hidden Pines Drive
Project Survey
Lakeside, Arizona

HIDDEN PINES DRIVE

The purpose of the survey is to locate, via bluestake markings, the existing 3-inch plastic and 4-inch cement-asbestos water mains located within the right-of-way of Hidden Pines Drive in Hidden Pines Estates Subdivision (Book 7 of Plats, Page 9 records of Navajo County) from Highway 260 to the north line of Lot 2 of said subdivision as depicted on Exhibit B, and how the main relates to all the physical features described below:

The survey will locate and show all above-ground structures/improvements (including, but not limited to: pavement, curb, gutter, sidewalks, fences, posts, signs, poles, trees, shrubs, landscape, hardscape, manholes, guy lines, meter boxes, utility lines, buildings, walls, fences, culverts, ditches, etc.) and locate all utility bluestake markings (for underground utilities) within the right-of-way of Hidden Pines Drive as depicted on Exhibit B.

In addition, the survey will:

- Tie the location of the 3-inch and 4-inch water mains to ROW, property corners, lot lines and/or other prominent permanent monuments for its entire length from the point of origin to its terminus as depicted on Exhibit B.

ADDITIONAL INFORMATION

Project Location: Lakeside, Arizona: Hidden Pines Estates according to Book 7 of Plats, Page 9, records of Navajo County, Arizona, lying within in the Northwest quarter of Section 23, Township 9 North, Range 22 East, G.&S.R.B.&M., Navajo County, Arizona.

Deliverables:

1 complete printed set of the survey in its entirety on bond paper
1 compact disc with the electronic files of the survey in its entirety in AutoCAD format

EXHIBIT B

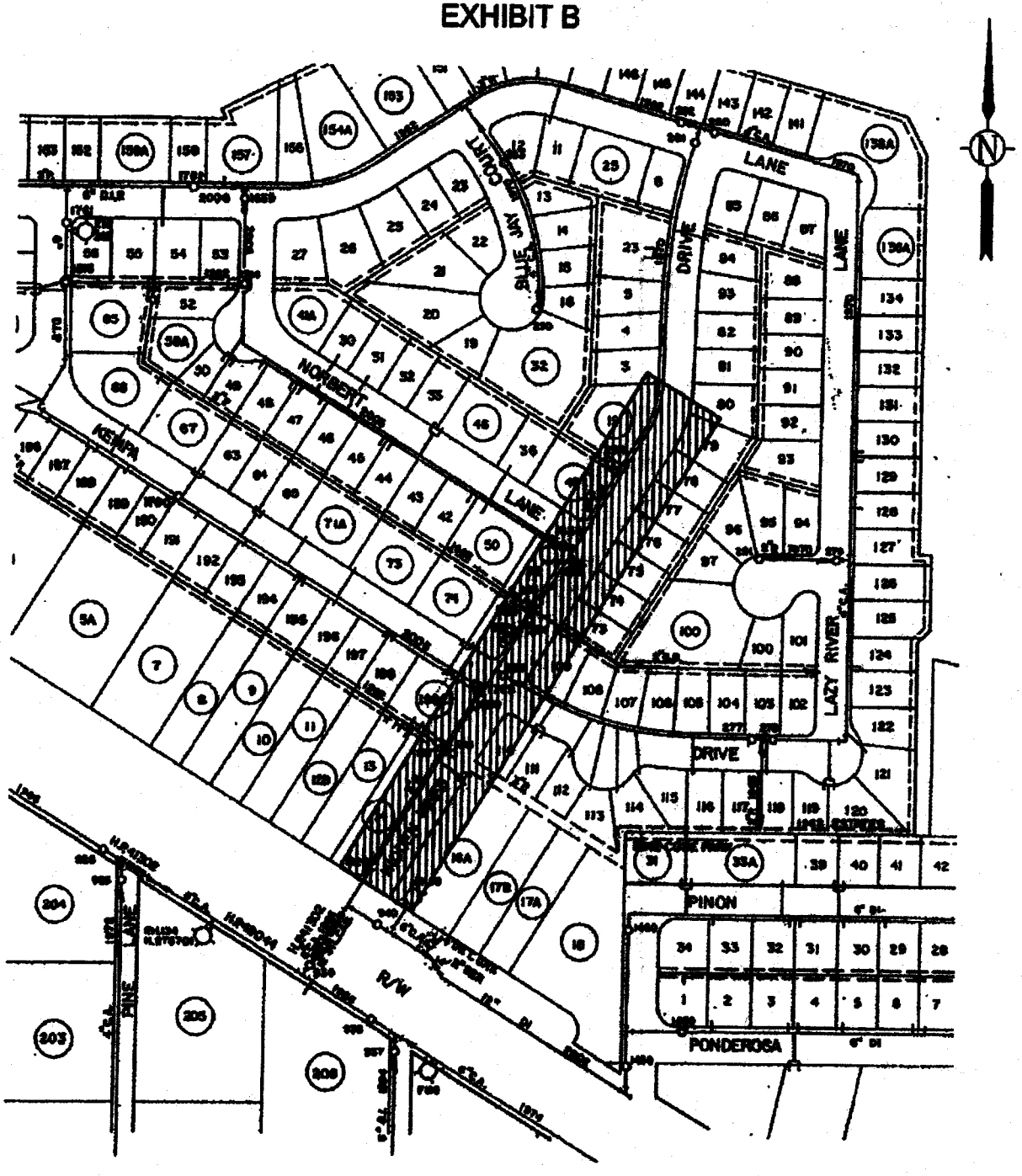

Area of Survey

Hidden Pines Estates 7-9, NCR

ARIZONA WATER COMPANY

DESCRIPTION:	EXHIBIT B MAP TO EXHIBIT A
LOCATION:	Northwest quarter Section 23, T.9N.,R.22E., G.&S.R.B.&M.
DATE: 11.21.2011	SCALE: 1"= 200'
DRAWN BY: CB	

ATTACHMENT B

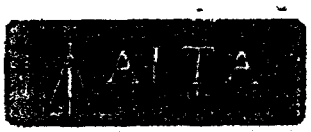

ALTA LAND SURVEY, INC.

Surveying ~ Drafting~Construction Staking

209 N. Huachuca Blvd., Huachuca City, AZ 85616 Ph. (520) 456-9400

Hourly Rates

August 15, 2011

2 Man Survey Crew	$150.HR.
Cad Drafting Calculations Research	$85/HR.
Licensed Surveyor Review	$85/HR.
Administrative	$40/HR.

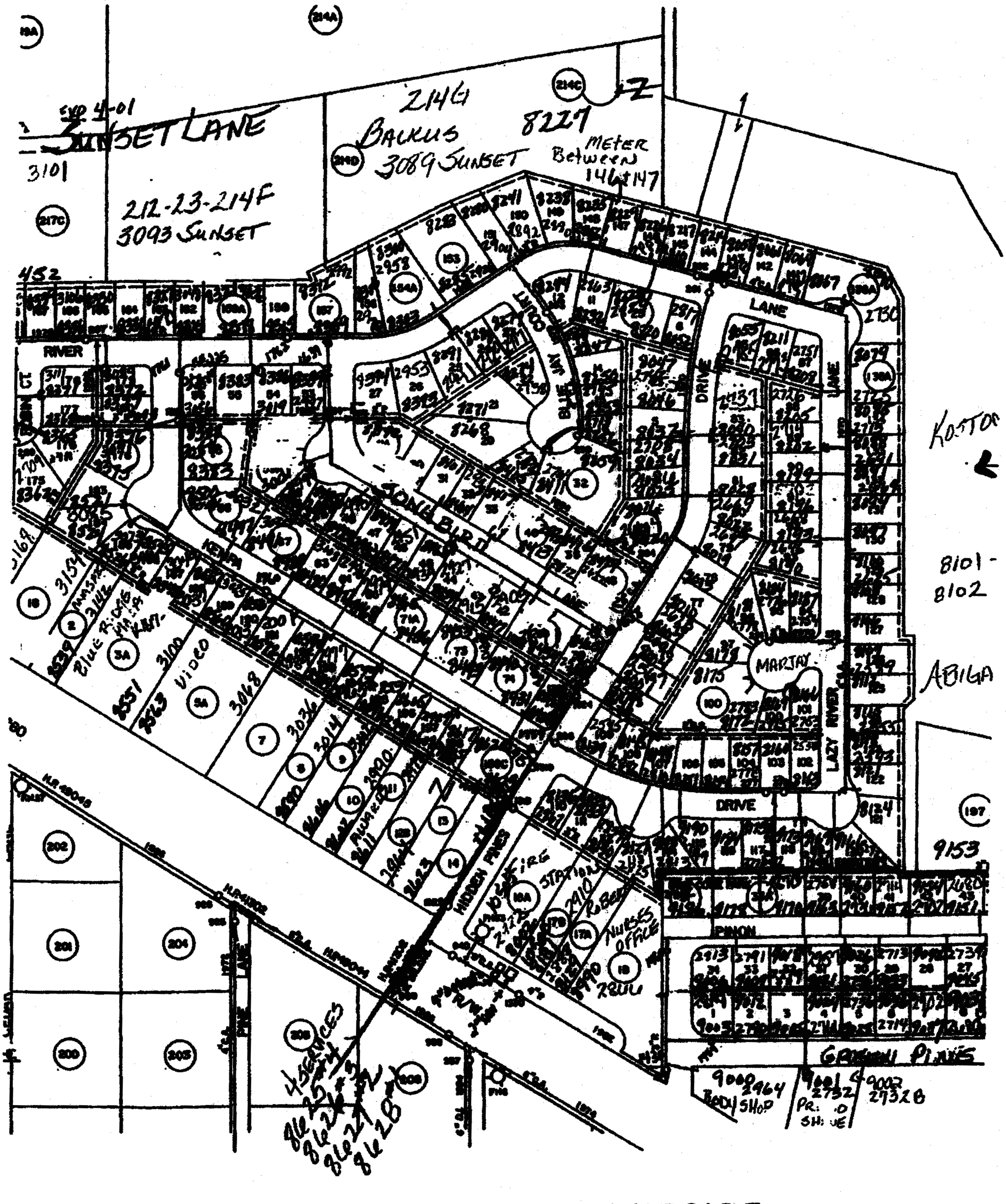
SUNSET LANE
3101
214G
BACKUS
8227
3089 SUNSET
METER Between 146 & 147
212-23-214F
3093 SUNSET
RIVER
LANE
DRIVE
MARJAY
LAZY RIVER
HIDDEN PINES
FIRE STATION
NURSES OFFICE
PINON
GREEN PINES
BODY SHOP
4 SERVICES
8101-
8102
9153
ABIGA

LAKESIDE

LEAK REPORT

ACCT OR DISTRICT: 07

ADDRESS OR LOCATION OF LEAK: Hidden Pines Rd.

DEPTH, SIZE AND TYPE OF LINE: 7' 3" Black

TYPE OF REPAIR MADE: CUT OUT 4' + DRESSERed in PVC.
NO GAS OR ELE. PHONE Lines on BOTH Sides of main
main is 3½" OFF CURB

DRAWING OF LEAK AREA WITH LOCATION OF MAIN AND ADJACENT UTILITIES:

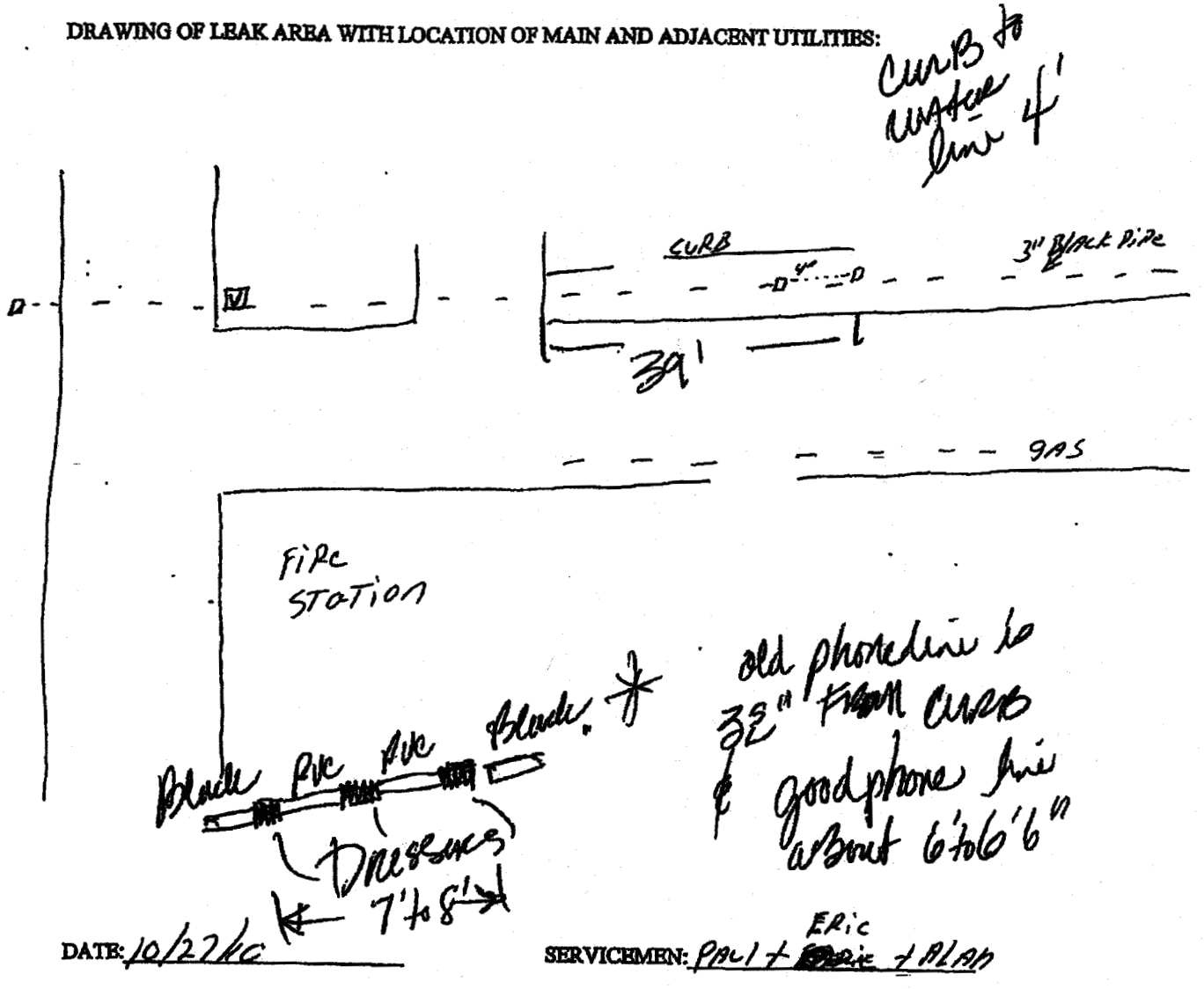

DATE: 10/22/KC

SERVICEMEN: PAUL + ERIC + ALAN

Document
XXXmailbox | 2/1/08 | 2:58 PM

LEAK REPORT

ACCT OR DISTRICT: 07

ADDRESS OR LOCATION OF LEAK: Hidden pines Rd

DEPTH, SIZE AND TYPE OF LINE: 7' 3" Black

TYPE OF REPAIR MADE: cut out 3' Dresserted in PVC phone line on Both sides of main main is about 3½' off curb Green parking lot

DRAWING OF LEAK AREA WITH LOCATION OF MAIN AND ADJACENT UTILITIES:

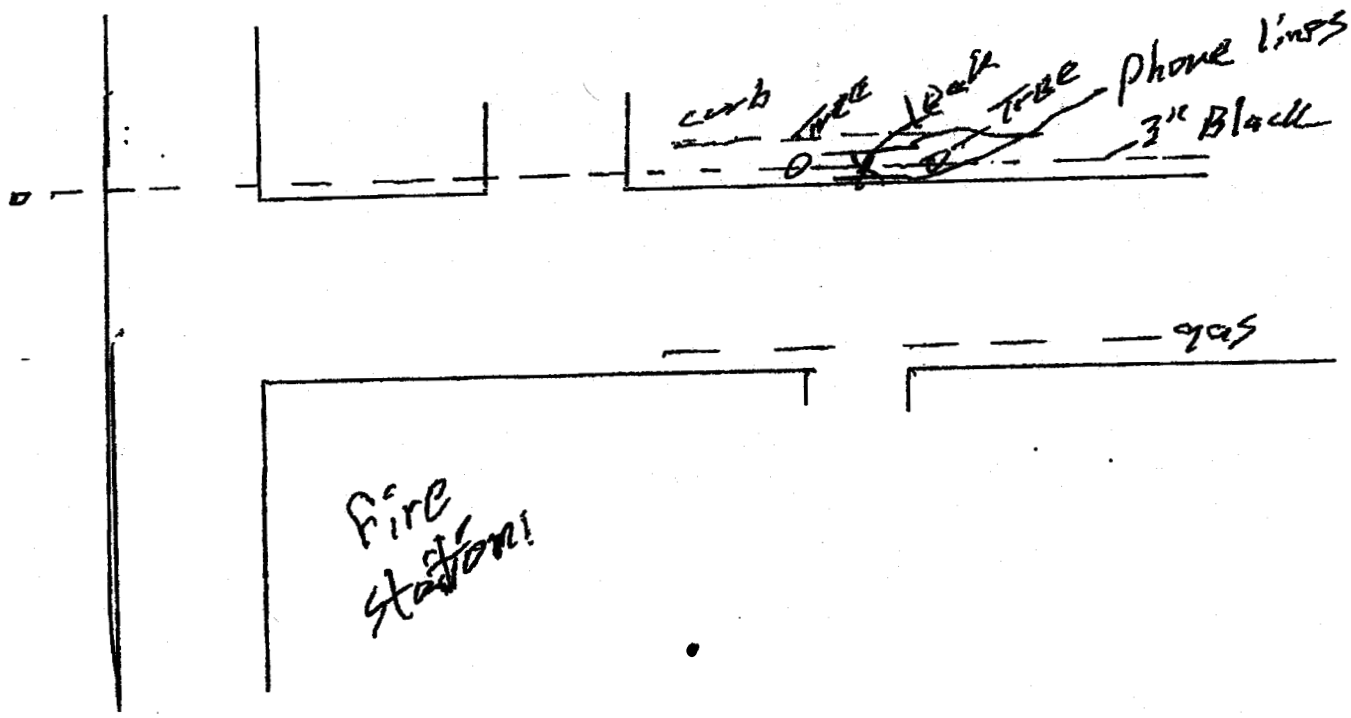

DATE: 12-27-09

SERVICEMEN: Kiowa, Brain - Alan

Document1
XXXxxxxxx | 7/10/08 | 8:33 PM

LEAK REPORT

DATE: 11/13/07

ACCT. OR DISTRICT: 7

ADDRESS OR LOCATION OF LEAK: N.W. Corner Kompa & Hidden Pines

DEPTH, SIZE AND TYPE OF LINE: 37" 3" Black Plastic

TYPE OF REPAIR MADE: Cut out split - about 30". used Two Dresser - replaced pipe with PVC new section

DRAWING OF LEAK AREA WITH LOCATION OF MAIN AND ADJACENT UTILITIES:

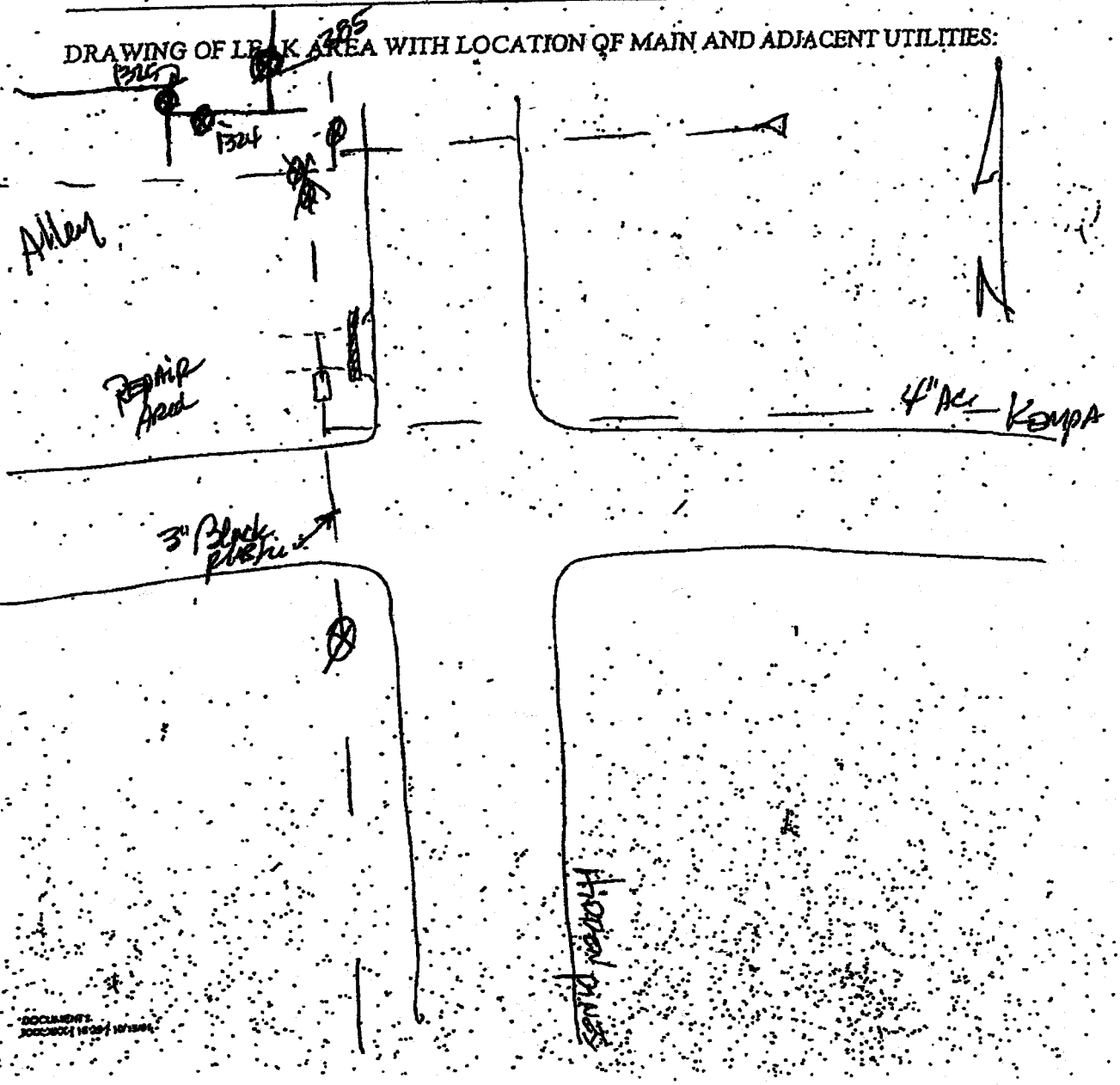

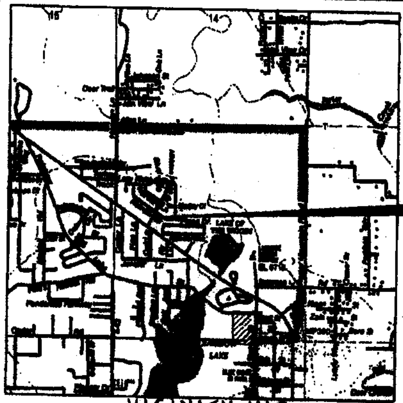

VICINITY MAP

N.T.S.

HIDDEN PINES DRIVE WATER MAIN REPLACEMENT, LOCATED WITHIN THE NW 1/4 OF SEC. 23, T9N., R.22E., G. & S.R.B. & M.

QUANTITIES LIST		
	ITEM DESCRIPTION	QTY. TOTAL
1	6" DIP w/POLYWRAP	632 LF
2	6" M.J. x FLG. GATE VALVE	1 EA.
3	6" M.J. GATE VALVE	2 EA.
4	6" 45° M.J. ELL	2 EA.
5	6" M.J. x FLG. TEE	1 EA.
6	6" M.J. TEE	2 EA.
7	6" x 4" M.J. REDUCER	1 EA.
8	6" x 3" M.J. REDUCER	1 EA.
9	6" TRANSITION COUPLING	1 EA.
10	REPLACE 1" LONG SINGLE SERVICE	1 EA.

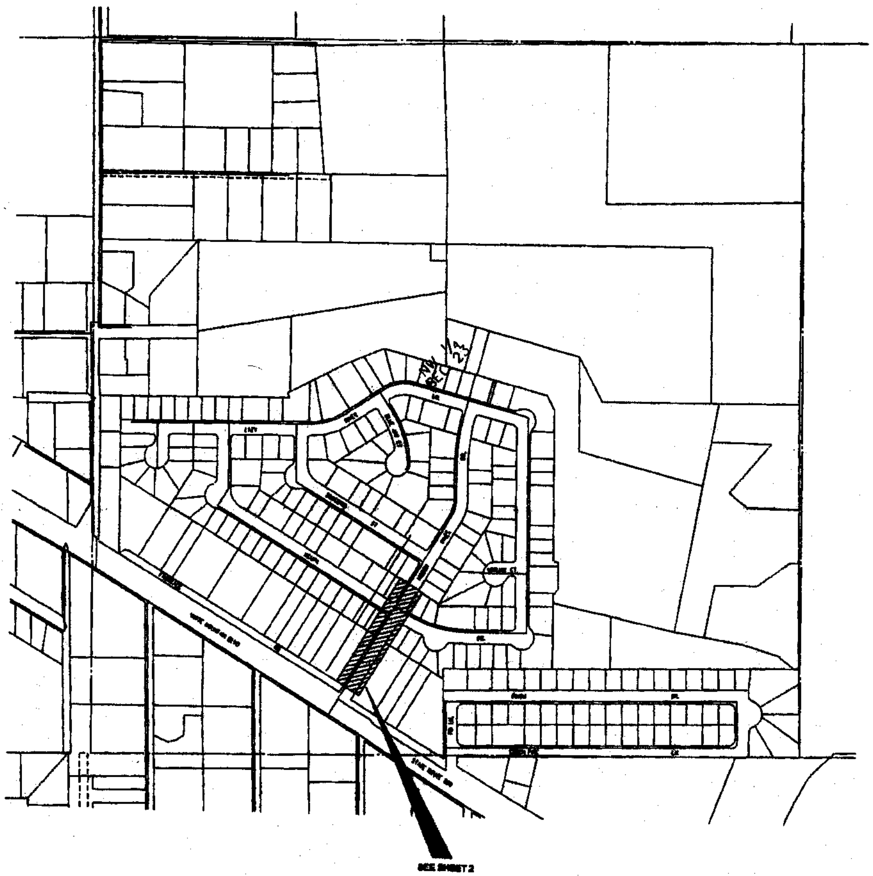

BENCHMARK
PID - EN0420
NAVD 88
ALTITUDE 6873 FT

SHEET INDEX
SHEET 1 - VICINITY MAP
SHEET 2 - PLAN/PROFILE
SHEET 3 - AWC NOTES
SHEET 4 - AWC SPECS.

GENERAL NOTES

1. All work and materials shall conform to current County Health Department Standards and Revisions, Arizona Water Company Standard Specifications and Details, and Arizona Department of Health Services Engineering Bulletin No 10.
2. Permits required will be secured from the appropriate agency, I.E. county permit in county right-of-way
3. Prior to construction, the appropriate agency(ies) will be notified as required by the permit(s)
4. All backfill, compaction, and testing shall be per current County, City, State, ADOT, and Arizona Water Company standards and specifications.
5. All water lines 8" and less are to have a minimum cover of 36 inches & all water lines 12" and greater are to have 48" of minimum cover over the top of pipe to finished grade, unless otherwise specified on the construction drawings
6. All frames, covers, valve boxes, etc. shall be adjusted to finished grade prior to placing of asphaltic concrete surface course by the contractor. (where applicable)
7. All water lines shall be pressure and leakage tested in accordance with AWWA C-600 or MAC 610-14.
8. All water lines are to be disinfected per ADEQ Engineering Bulletin No 8 and AWWA C651-92.
9. Air release valves are required at water system high points per Arizona Water Company standard details.
10. Water/sewer separation shall be per current Arizona Water Company standards and ADEQ AAC R18-4-502-C.
11. It shall be the contractors responsibility to uncover all existing water lines being connected to, and to verify the location, depth and size of pipe before any construction begins.
12. Any construction performed without the knowledge of the inspector or his representative is liable for removal and replacement at the contractor's expense.
13. In accordance with AAC R18-4-119, all materials added after January 1, 1993 which may come in contact with drinking water, shall conform to National Sanitation Foundation Standards 60 and 61.
14. All water services shall be set a minimum of 2 Feet on the customers property and NOT within right-of-way.
15. Unless otherwise specified on the construction drawings, all water mains are to be installed 5 Feet from the property line inside the right-of-way or easement
16. Water valves shall be spaced not more than 500 Feet in commercial districts and not more than 800 Feet in other districts. Variations may be required for transmission mains or special applications. Sufficient valving is required where water lines cross streams, railroads and major highways.
17. Maximum Joint Deflection For 6" Mechanical Joint Ductile Iron Pipe Is 7°-7' Or 27" For 18 Foot Length Pipe, For A Maximum Curve Of 145 Feet
18. Maximum Joint Deflection For 6", 8", & 12" Push-On Joint Ductile Iron Pipe Is 5° Or 19" For 18 Foot Length Pipe, For A Maximum Curve Of 205 Feet
19. Maximum Joint Deflection For 8" & 12" Mechanical Joint Ductile Iron Pipe Is 5°-21' Or 20" For 18 Foot Length Pipe, For A Maximum Curve Of 195 Feet.

ADEQ APPROVAL

PER NO. ____________

DATE ____________

ARIZONA WATER COMPANY
3805 N. BLACK CANYON HWY. POST OFFICE BOX 29006
PHOENIX, ARIZONA 85038-9006
(602) 240-6860

PROJECT DESC: REPLACE APPROXIMATELY 632 LF OF 3" PLASTIC WITH 6" DIP WITH RELATED FITTINGS ALONG HIDDEN PINES DRIVE.

PROJECT SHEET DESC: VICINITY MAP

1-4621	NAVAJO
NW 1/4 SEC.23-T.9N., R.22E	
0209	
2/27/2012	AS SHOWN
MC	AH

NV-0006

SHEET 1 OF 4

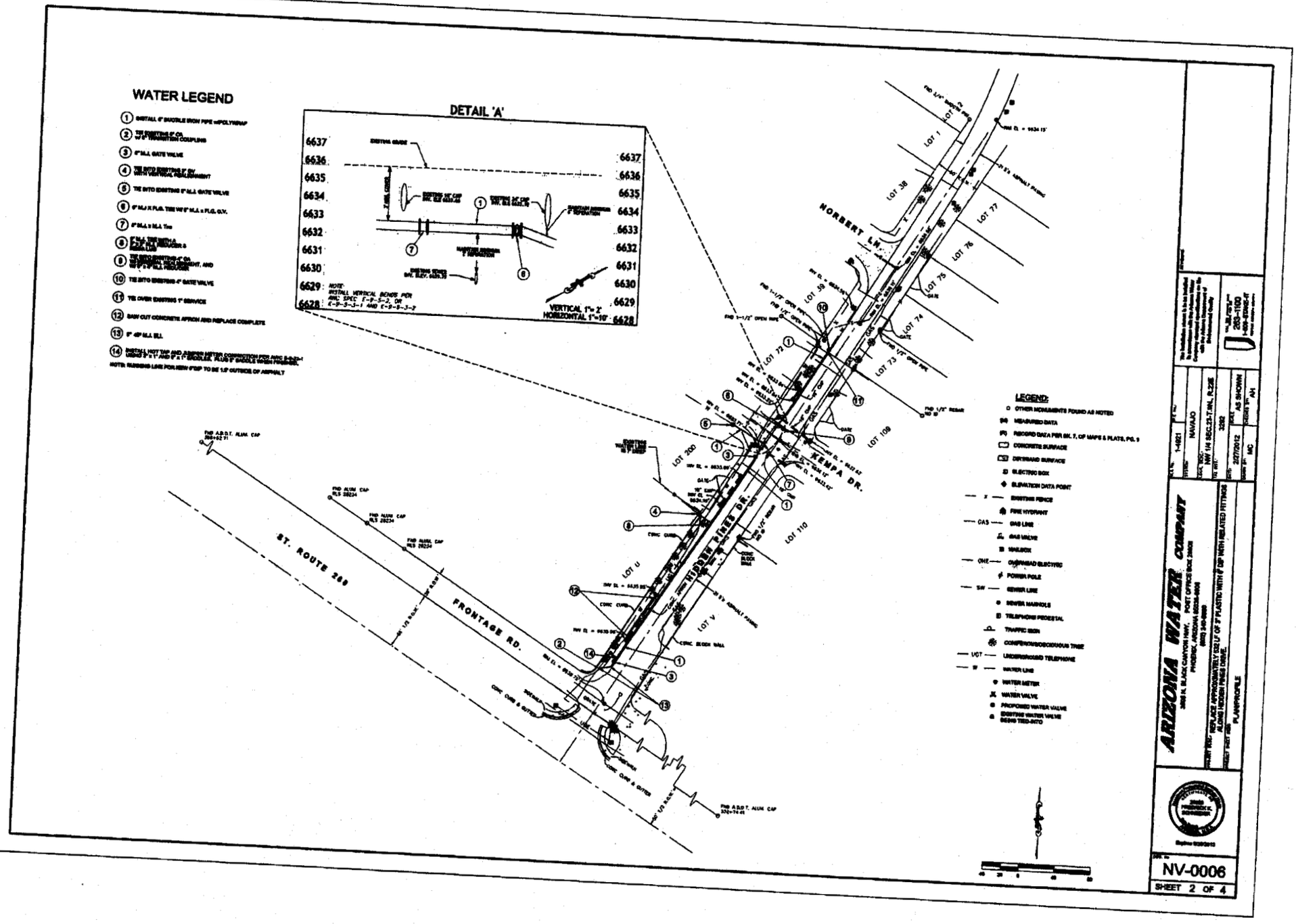
WATER LEGEND
DETAIL 'A'
VERTICAL 1"= 2'
HORIZONTAL 1"=10'
NORBERT LN.
KEMPA DR.
HOOPER PINES DR.
ST. ROUTE 289
FRONTAGE RD.
LEGEND:
ARIZONA WATER COMPANY
NV-0006
SHEET 2 OF 4

[illegible] WATER DISTRIBUTION SYSTEMS

DEFINITIONS

A. Company. The words "Company" or "Arizona Water Company" mean Arizona Water Company, and where applicable, any division of Arizona Water Company, whose principal place of business is located at 3805 North Black Canyon Highway, Phoenix, Arizona 85015-2291(Post Office Box 29006, Phoenix, Arizona 85038-9006).

B. Company's Authorized Representative. The words "Company's Authorized Representative" mean any officer of the Company, and any of the Company's Engineers, any Division Manager or Superintendent of the Company and/or such other person(s) designated in writing as the "Company's Authorized Representative" by the President or any Vice President of the Company.

C. Contractor. The word "Contractor" means either an individual or other entity employed to do the work or execute on the Construction Drawings and as specified herein.

D. Construction Drawings. The words "Construction Drawings" mean plans prepared by or on behalf of Arizona Water Company.

E. Contract. The word "Contract" means the written document titled "Proposal/Contract" when such document has been signed by an officer or other authorized representative of both the Contractor and the Company.

① GENERAL

All work is to be completed in a safe, workmanlike manner and in accordance with these Construction Specifications any deviation therefrom must be approved in writing by the Company.

Installations must conform with the requirements of all governmental/regulating agencies and the most up-to-date requirements in such regulations must be adhered to the same as if such requirements, without attempting to be inclusive, are:

a. Special conspicuous and passing for street crossing.
b. Warning tape required because of the trench depth.
c. Closing a trench in those areas where no open trench is allowed overnight.
d. Barricading and traffic controller required.

② LOCATION MARKER

Permanent markers are required in the opinion of the Company shall be installed by the Company in the Contractor and shall be set flush with the ground upon intervals and at basic United circumstances. Where intersections the pipeline location line feet 50% onto the right-of-way encountered from property pins. Grade stakes unless provided only when the Construction Drawings show a pipeline depth other than covered in these Specifications it is the responsibility of the Contractor to preserve all survey work.

③ TRENCH EXCAVATION

The trench bottom is to be determined by the Construction Drawings.

FOR 3-INCH OR SMALLER PIPE: The depth of the trench prior to pipe laying shall be such that the finished pipeline shall have between 36"(3-0) inches (42") and sixty inches (60") of cover unless otherwise operated on the Construction Drawings.

FOR 12-INCH AND LARGER PIPE: The depth of the trench prior to pipe laying shall be such that the finished pipeline shall have between forty-eight inches (48") and sixty inches (60") of cover unless otherwise operated on the Construction Drawings.

The width of the trench at and below the level of the top of the pipe shall be a minimum of twelve inches (12") plus the outside diameter of the pipe barrel and a maximum of twenty-four inches (24") plus the outside diameter of the pipe barrel.

The bottom of the trench shall be carefully graded to provide a uniform bearing for each length of pipe for the full length of the pipe. If the native material on the trench bottom can be reasonably dug by hand, bottoming shall dug for the joints so that the joints in no way support the pipe. When native materials such as rock are encountered during trenching that will not provide a uniform support for the pipe, the trench shall be over-excavated an additional six inches (6") and suitable bedding material shall be placed in the trench.

Bedding material shall be placed by hand in four inch (4") lifts and compacted to insure uniform compaction and to distribute any voids under the pipe. When the space between the pipe and trench bottom exists, this must be backfilled and compacted in four-inch (4") lifts to the undisturbed soil of the pipe.

Whenever the trench is over-excavated for whatever reason, the trench bottom shall be brought up to the correct depth at the Contractor's expense using either method (a) or (b) as follows:

a. A.B.C. material shall be used and compacted to a uniform density of not less than 95% of the maximum density as determined by AASHTO T-99 method A and T-191.

b. Native material 90% of which will pass through a one and one-half inch (1-1/2") screen and at least 25% of which will pass through a number-8 screen shall be used and compacted to a uniform density of not less than 95% of the maximum density as determined by AASHTO T-99 method A and T-191.

④ MATERIALS TO BE PROVIDED BY CONTRACTOR

Unless otherwise specified on the Construction Drawings or in the Contract, the Contractor will supply all the necessary materials which whenever a permanent and integral part of the water distribution system, including concrete blocking, anchors, bedding, backfilling material and miscellaneous items during the construction of the work. Materials furnished by the Contractor to construct the water distribution system must be NSF Standard 61 approved. Standard water mains and fittings shall have NSF 61% and. Construction materials used in the water system shall be lead free, as defined in ASC 1529-6-304 and 1530-1-304. The Contractor supersedes the following materials:

a. FIRE HYDRANTS: Mueller Super Centurion 250 Fire Hydrant, meets AWWA/ANSI C502 Standard, Model No. A-423, 5-1/4" main valve opening, three way, 6" Mechanical Joint Shoe, 1-1/2" pentagon operating nut, color - yellow, drain open, open direction - left, 4 or 6"-0" bury assembly as applicable. For pumper and hose nozzle information see below.

(1) One - 4" Pumper Nozzle, NST and Two - 2-1/2" Hose Nozzles, NST (These hosenozzles only Ajo, Casa Grande, Coolidge and San Manuel.)

(2) One - 4-1/2" Pumper Nozzle, NST and Two - 2-1/2" Hose Nozzles, NST (These hosenozzles only Apache Junction, Arizona City, Eloy, Florence, Kearsarge, Pinewood, Riverside, Sedona, Sierra Vista, White Tank and Wickenburg.)

(3) One - 4-1/2" Pumper Nozzle, NST and Two - 2-1/2" Hose Nozzles, NST (Sierra only.)

(4) One - 5" Pumper Nozzle 5A 5-240 15 threads per inch, 5.50 pitch diameter and Two - 2-1/2" Hose Nozzles, NST (Globe only.)

(5) One - 5-1/2" Pumper Nozzle 5A 5-414 15 threads per inch, 4.11 pitch diameter and Two - 2-1/2" Hose Nozzle, NST (Superior only.)

b. FITTINGS: Manufactured by Tyler or Union, Grooves, Elbows, Tees, Cap, Reducer, Adapter, Plug, Blind Flange and Tapped Flange Outside iron, Class 350, 350, Cast Iron Cement Lined

(1) Factor Adaptors for MJ, made by Inland Corporation Available in size 4" to 12" Part No. 4"- AFA-DC, 6" - AFA-DC, 8" - AFA-DC, 10" - AFA-DC, 12" - AFA-DC, 16" - AFA-DC

c. DETECTOR CHECK VALVE: Mueller/ Horsey DIC 4, iron body, bolted 3/4" x 3/4" Tyco 101 Tube Nut Part No. 4" - 282000, 6" - 282002, 8" - 282003, 10" - 282486.

d. GATE VALVES: Mueller Resilient Wedge Gate Valves meets AWWA C509 specification, 250 psig, Non-rising stem, Part No. A-2360 sizes 4" through 12" - Part No. A-2361 sizes 14" through 20" iron body, epoxy coated inside and outside to meet the NSF 61 only. The bonnet and stuffing box shall have 304 stainless steel bolts/nuts.

e. TRACER WIRE and BURIED TAPE:

(1) TRACER WIRE: Shall be direct bury AWG #10 solid copper wire. Color: Blue

(2) BURIED TAPE: Reef Industries, Standard Terra Tape in 3" width: Color Blue and imprinted "Arizona Water Company"

f. AIR RELEASE VALVE: Crispin Model #950 with 1" NPT inlet and 3/8" NPT outlet, cast iron body and top. Equipped with a 3/4x4" nipple with stainless steel valve seating bonnet and Buna-N rubber.

g. PRESSURE RELIEF VALVE: Watts 25A Model No. 2" steel, 2" outlet, Bronze Body, 200% to 300% pressure range

h. MEGALUG Mechanical Joint restraint made of ductile iron conforming to ASTM 536-80, 250 pressure by EBAA Iron Inc., series 1100 or steel.

i. METER BOXES

(1) Concrete Box with a steel regular lid, Number 1 Tucson specification

(2) Concrete Box with a steel regular lid, Number 2, 3, and 4 Phoenix specification.

j. PIPE, COPPER Type K soft copper in 60 or 100-foot coils, per ASTM B88

k. PIPE, DUCTILE IRON Ductile Iron Pipe, Cement Lined, Polyurethane, conforms to current ANSI/AWWA Specification A21.51/C151, Pressure Class 350 (plus 0" through 12"), Pressure Class 250 (plus 14" through 20"), or Pressure Class 200 for 24" through 30" pipe, Standard

(1) Pacific States Cast Iron Pipe Company
(2) Griffin Pipe
(3) United States Pipe and Foundry Company
(4) American Ductile Iron Pipe
(5) Clow Pipe Mueller, Inc.)

l. PIPE, PLASTIC: Plastic pipe class 0-1600 PVC for use: AWWA/ANSI C900, Class 150, class 3" through 12" DIPS'd approved Furnished in laying lengths of 20' The barrel specifications. In the exterior dimensions of standpipe DPS'd or cast iron size equivalent and the specifications of commercially DIPS'd.

m. POLYETHYLENE ENCASEMENT (Polywrap) For aluminum and related fittings material, EXCEPT for the Coolidge Division. Minimum 8 MIL and installed per AWWA C105/A21.5-82 and ANSI. A-605-84 Manufactured by the Pacific States Cast Iron Pipe Company. The wrapping tape shall be additional 10 mil overlaps. Do not tape shall be used

n. COUPLING Mueller Straight Drive pipe Groove, locked to meet AWWA/ANSI C800, H10403, conductive compression

Mueller, H10420, straight coupling, conductive compression by male iron pipe, locked to meet AWWA/ANSI C800 specification Size 2"

Mueller, H10422, straight coupling, conductive compression by female iron pipe, locked to meet AWWA/ANSI C800 specification Size 2"

Mueller, H10424, straight coupling, conductive compression by female iron pipe, locked to meet AWWA/ANSI C800 specification Size 2"

Mueller, H10426, straight coupling, conductive compression by male iron pipe, locked to meet AWWA/ANSI C800 specification Size 2"

Mueller, H10427, straight coupling, conductive compression by female iron pipe, locked to meet AWWA/ANSI C800 specification Size 2"

Mueller, H10428, straight coupling, conductive compression by male iron pipe, locked to meet AWWA/ANSI C800 specification Size 2"

Mueller, H10429, straight coupling, conductive compression by female iron pipe, locked to meet AWWA/ANSI C800 specification Size 2"

Mueller, H10430, straight coupling, conductive compression by male iron pipe, locked to meet AWWA/ANSI C800 specification Size 2"

Mueller, H10431, straight coupling, conductive compression by female iron pipe, locked to meet AWWA/ANSI C800 specification Size 2"

Mueller, H10432, straight coupling, conductive compression by male iron pipe, locked to meet AWWA/ANSI C800 specification Size 2"

Mueller, H10433, straight coupling, conductive compression by female iron pipe, locked to meet AWWA/ANSI C800 specification Size 2"

Mueller, H10434, straight coupling, conductive compression by male iron pipe, locked to meet AWWA/ANSI C800 specification Size 2"

Mueller, H10435, straight coupling, conductive compression by female iron pipe, locked to meet AWWA/ANSI C800 specification Size 2"

Mueller, H10436, straight coupling, conductive compression by male iron pipe, locked to meet AWWA/ANSI C800 specification Size 2"

Mueller, H10437, straight coupling, conductive compression by female iron pipe, locked to meet AWWA/ANSI C800 specification Size 2"

Mueller, H10438, straight coupling, conductive compression by male iron pipe, locked to meet AWWA/ANSI C800 specification Size 2"

Mueller, H10439, straight coupling, conductive compression by female iron pipe, locked to meet AWWA/ANSI C800 specification Size 2"

Mueller, H10440, straight coupling, conductive compression by male iron pipe, locked to meet AWWA/ANSI C800 specification Size 2"

Mueller, H10441, straight coupling, conductive compression by female iron pipe, locked to meet AWWA/ANSI C800 specification Size 2"

Mueller, H10442, straight coupling, conductive compression by male iron pipe, locked to meet AWWA/ANSI C800 specification Size 2"

Mueller, H10443, straight coupling, conductive compression by female iron pipe, locked to meet AWWA/ANSI C800 specification Size 2"

Mueller, H10444, straight coupling, conductive compression by male iron pipe, locked to meet AWWA/ANSI C800 specification Size 2"

Mueller, H10445, straight coupling, conductive compression by female iron pipe, locked to meet AWWA/ANSI C800 specification Size 2"

Mueller, H10446, straight coupling, conductive compression by male iron pipe, locked to meet AWWA/ANSI C800 specification Size 2"

Mueller, H10447, straight coupling, conductive compression by female iron pipe, locked to meet AWWA/ANSI C800 specification Size 2"

Mueller, H10448, straight coupling, conductive compression by male iron pipe, locked to meet AWWA/ANSI C800 specification Size 2"

Mueller, H10449, straight coupling, conductive compression by female iron pipe, locked to meet AWWA/ANSI C800 specification Size 2"

Mueller, H10450, straight coupling, conductive compression by male iron pipe, locked to meet AWWA/ANSI C800 specification Size 2"

Mueller, H10451, straight coupling, conductive compression by female iron pipe, locked to meet AWWA/ANSI C800 specification Size 2"

Mueller, H10452, straight coupling, conductive compression by male iron pipe, locked to meet AWWA/ANSI C800 specification Size 2"

Mueller, H10453, straight coupling, conductive compression by female iron pipe, locked to meet AWWA/ANSI C800 specification Size 2"

Mueller, H10454, straight coupling, conductive compression by male iron pipe, locked to meet AWWA/ANSI C800 specification Size 2"

Mueller, H10455, straight coupling, conductive compression by female iron pipe, locked to meet AWWA/ANSI C800 specification Size 2"

Mueller, H10456, straight coupling, conductive compression by male iron pipe, locked to meet AWWA/ANSI C800 specification Size 2"

Mueller, H10457, straight coupling, conductive compression by female iron pipe, locked to meet AWWA/ANSI C800 specification Size 2"

Mueller, H10458, straight coupling, conductive compression by male iron pipe, locked to meet AWWA/ANSI C800 specification Size 2"

Mueller, H10459, straight coupling, conductive compression by female iron pipe, locked to meet AWWA/ANSI C800 specification Size 2"

Mueller, H10460, straight coupling, conductive compression by male iron pipe, locked to meet AWWA/ANSI C800 specification Size 2"

Mueller, H10461, straight coupling, conductive compression by female iron pipe, locked to meet AWWA/ANSI C800 specification Size 2"

Mueller, H10462, straight coupling, conductive compression by male iron pipe, locked to meet AWWA/ANSI C800 specification Size 2"

Mueller, H10463, straight coupling, conductive compression by female iron pipe, locked to meet AWWA/ANSI C800 specification Size 2"

Mueller, H10464, straight coupling, conductive compression by male iron pipe, locked to meet AWWA/ANSI C800 specification Size 2"

Mueller, H10465, straight coupling, conductive compression by female iron pipe, locked to meet AWWA/ANSI C800 specification Size 2"

Mueller, H10466, straight coupling, conductive compression by male iron pipe, locked to meet AWWA/ANSI C800 specification Size 2"

Mueller, H10467, straight coupling, conductive compression by female iron pipe, locked to meet AWWA/ANSI C800 specification Size 2"

Mueller, H10468, straight coupling, conductive compression by male iron pipe, locked to meet AWWA/ANSI C800 specification Size 2"

Mueller, H10469, straight coupling, conductive compression by female iron pipe, locked to meet AWWA/ANSI C800 specification Size 2"

Mueller, H10470, straight coupling, conductive compression by male iron pipe, locked to meet AWWA/ANSI C800 specification Size 2"

Mueller, H10471, straight coupling, conductive compression by female iron pipe, locked to meet AWWA/ANSI C800 specification Size 2"

Mueller, H10472, straight coupling, conductive compression by male iron pipe, locked to meet AWWA/ANSI C800 specification Size 2"

Mueller, H10473, straight coupling, conductive compression by female iron pipe, locked to meet AWWA/ANSI C800 specification Size 2"

Mueller, H10474, straight coupling, conductive compression by male iron pipe, locked to meet AWWA/ANSI C800 specification Size 2"

Mueller, H10475, straight coupling, conductive compression by female iron pipe, locked to meet AWWA/ANSI C800 specification Size 2"

Mueller, H10476, straight coupling, conductive compression by male iron pipe, locked to meet AWWA/ANSI C800 specification Size 2"

Mueller, H10477, straight coupling, conductive compression by female iron pipe, locked to meet AWWA/ANSI C800 specification Size 2"

Mueller, H10478, straight coupling, conductive compression by male iron pipe, locked to meet AWWA/ANSI C800 specification Size 2"

Mueller, H10479, straight coupling, conductive compression by female iron pipe, locked to meet AWWA/ANSI C800 specification Size 2"

Mueller, H10480, straight coupling, conductive compression by male iron pipe, locked to meet AWWA/ANSI C800 specification Size 2"

Mueller, H10481, straight coupling, conductive compression by female iron pipe, locked to meet AWWA/ANSI C800 specification Size 2"

Mueller, H10482, straight coupling, conductive compression by male iron pipe, locked to meet AWWA/ANSI C800 specification Size 2"

Mueller, H10483, straight coupling, conductive compression by female iron pipe, locked to meet AWWA/ANSI C800 specification Size 2"

Mueller, H10484, straight coupling, conductive compression by male iron pipe, locked to meet AWWA/ANSI C800 specification Size 2"

Mueller, H10485, straight coupling, conductive compression by female iron pipe, locked to meet AWWA/ANSI C800 specification Size 2"

Mueller, H10486, straight coupling, conductive compression by male iron pipe, locked to meet AWWA/ANSI C800 specification Size 2"

Mueller, H10487, straight coupling, conductive compression by female iron pipe, locked to meet AWWA/ANSI C800 specification Size 2"

Mueller, H10488, straight coupling, conductive compression by male iron pipe, locked to meet AWWA/ANSI C800 specification Size 2"

Mueller, H10489, straight coupling, conductive compression by female iron pipe, locked to meet AWWA/ANSI C800 specification Size 2"

Mueller, H10490, straight coupling, conductive compression by male iron pipe, locked to meet AWWA/ANSI C800 specification Size 2"

Mueller, H10491, straight coupling, conductive compression by female iron pipe, locked to meet AWWA/ANSI C800 specification Size 2"

Mueller, H10492, straight coupling, conductive compression by male iron pipe, locked to meet AWWA/ANSI C800 specification Size 2"

Mueller, H10493, straight coupling, conductive compression by female iron pipe, locked to meet AWWA/ANSI C800 specification Size 2"

Mueller, H10494, straight coupling, conductive compression by male iron pipe, locked to meet AWWA/ANSI C800 specification Size 2"

Mueller, H10495, straight coupling, conductive compression by female iron pipe, locked to meet AWWA/ANSI C800 specification Size 2"

Mueller, H10496, straight coupling, conductive compression by male iron pipe, locked to meet AWWA/ANSI C800 specification Size 2"

Mueller, H10497, straight coupling, conductive compression by female iron pipe, locked to meet AWWA/ANSI C800 specification Size 2"

Mueller, H10498, straight coupling, conductive compression by male iron pipe, locked to meet AWWA/ANSI C800 specification Size 2"

Mueller, H10499, straight coupling, conductive compression by female iron pipe, locked to meet AWWA/ANSI C800 specification Size 2"

Mueller, H10500, straight coupling, conductive compression by male iron pipe, locked to meet AWWA/ANSI C800 specification Size 2"

Mueller, H10501, straight coupling, conductive compression by female iron pipe, locked to meet AWWA/ANSI C800 specification Size 2"

Mueller, H10502, straight coupling, conductive compression by male iron pipe, locked to meet AWWA/ANSI C800 specification Size 2"

Mueller, H10503, straight coupling, conductive compression by female iron pipe, locked to meet AWWA/ANSI C800 specification Size 2"

Mueller, H10504, straight coupling, conductive compression by male iron pipe, locked to meet AWWA/ANSI C800 specification Size 2"

Mueller, H10505, straight coupling, conductive compression by female iron pipe, locked to meet AWWA/ANSI C800 specification Size 2"

Mueller, H10506, straight coupling, conductive compression by male iron pipe, locked to meet AWWA/ANSI C800 specification Size 2"

Mueller, H10507, straight coupling, conductive compression by female iron pipe, locked to meet AWWA/ANSI C800 specification Size 2"

Mueller, H10508, straight coupling, conductive compression by male iron pipe, locked to meet AWWA/ANSI C800 specification Size 2"

Mueller, H10509, straight coupling, conductive compression by female iron pipe, locked to meet AWWA/ANSI C800 specification Size 2"

Mueller, H10510, straight coupling, conductive compression by male iron pipe, locked to meet AWWA/ANSI C800 specification Size 2"

Mueller, H10511, straight coupling, conductive compression by female iron pipe, locked to meet AWWA/ANSI C800 specification Size 2"

Mueller, H10512, straight coupling, conductive compression by male iron pipe, locked to meet AWWA/ANSI C800 specification Size 2"

Mueller, H10513, straight coupling, conductive compression by female iron pipe, locked to meet AWWA/ANSI C800 specification Size 2"

Mueller, H10514, straight coupling, conductive compression by male iron pipe, locked to meet AWWA/ANSI C800 specification Size 2"

Mueller, H10515, straight coupling, conductive compression by female iron pipe, locked to meet AWWA/ANSI C800 specification Size 2"

Mueller, H10516, straight coupling, conductive compression by male iron pipe, locked to meet AWWA/ANSI C800 specification Size 2"

Mueller, H10517, straight coupling, conductive compression by female iron pipe, locked to meet AWWA/ANSI C800 specification Size 2"

Mueller, H10518, straight coupling, conductive compression by male iron pipe, locked to meet AWWA/ANSI C800 specification Size 2"

Mueller, H10519, straight coupling, conductive compression by female iron pipe, locked to meet AWWA/ANSI C800 specification Size 2"

Mueller, H10520, straight coupling, conductive compression by male iron pipe, locked to meet AWWA/ANSI C800 specification Size 2"

Mueller, H10521, straight coupling, conductive compression by female iron pipe, locked to meet AWWA/ANSI C800 specification Size 2"

Mueller, H10522, straight coupling, conductive compression by male iron pipe, locked to meet AWWA/ANSI C800 specification Size 2"

Mueller, H10523, straight coupling, conductive compression by female iron pipe, locked to meet AWWA/ANSI C800 specification Size 2"

Mueller, H10524, straight coupling, conductive compression by male iron pipe, locked to meet AWWA/ANSI C800 specification Size 2"

Mueller, H10525, straight coupling, conductive compression by female iron pipe, locked to meet AWWA/ANSI C800 specification Size 2"

Mueller, H10526, straight coupling, conductive compression by male iron pipe, locked to meet AWWA/ANSI C800 specification Size 2"

Mueller, H10527, straight coupling, conductive compression by female iron pipe, locked to meet AWWA/ANSI C800 specification Size 2"

Mueller, H10528, straight coupling, conductive compression by male iron pipe, locked to meet AWWA/ANSI C800 specification Size 2"

Mueller, H10529, straight coupling, conductive compression by female iron pipe, locked to meet AWWA/ANSI C800 specification Size 2"

Mueller, H10530, straight coupling, conductive compression by male iron pipe, locked to meet AWWA/ANSI C800 specification Size 2"

Mueller, H10531, straight coupling, conductive compression by female iron pipe, locked to meet AWWA/ANSI C800 specification Size 2"

Mueller, H10532, straight coupling, conductive compression by male iron pipe, locked to meet AWWA/ANSI C800 specification Size 2"

Mueller, H10533, straight coupling, conductive compression by female iron pipe, locked to meet AWWA/ANSI C800 specification Size 2"

Mueller, H10534, straight coupling, conductive compression by male iron pipe, locked to meet AWWA/ANSI C800 specification Size 2"

Mueller, H10535, straight coupling, conductive compression by female iron pipe, locked to meet AWWA/ANSI C800 specification Size 2"

Mueller, H10536, straight coupling, conductive compression by male iron pipe, locked to meet AWWA/ANSI C800 specification Size 2"

Mueller, H10537, straight coupling, conductive compression by female iron pipe, locked to meet AWWA/ANSI C800 specification Size 2"

Mueller, H10538, straight coupling, conductive compression by male iron pipe, locked to meet AWWA/ANSI C800 specification Size 2"

Mueller, H10539, straight coupling, conductive compression by female iron pipe, locked to meet AWWA/ANSI C800 specification Size 2"

Mueller, H10540, straight coupling, conductive compression by male iron pipe, locked to meet AWWA/ANSI C800 specification Size 2"

Mueller, H10541, straight coupling, conductive compression by female iron pipe, locked to meet AWWA/ANSI C800 specification Size 2"

Mueller, H10542, straight coupling, conductive compression by male iron pipe, locked to meet AWWA/ANSI C800 specification Size 2"

Mueller, H10543, straight coupling, conductive compression by female iron pipe, locked to meet AWWA/ANSI C800 specification Size 2"

Mueller, H10544, straight coupling, conductive compression by male iron pipe, locked to meet AWWA/ANSI C800 specification Size 2"

Mueller, H10545, straight coupling, conductive compression by female iron pipe, locked to meet AWWA/ANSI C800 specification Size 2"

Mueller, H10546, straight coupling, conductive compression by male iron pipe, locked to meet AWWA/ANSI C800 specification Size 2"

Mueller, H10547, straight coupling, conductive compression by female iron pipe, locked to meet AWWA/ANSI C800 specification Size 2"

Mueller, H10548, straight coupling, conductive compression by male iron pipe, locked to meet AWWA/ANSI C800 specification Size 2"

Mueller, H10549, straight coupling, conductive compression by female iron pipe, locked to meet AWWA/ANSI C800 specification Size 2"

Mueller, H10550, straight coupling, conductive compression by male iron pipe, locked to meet AWWA/ANSI C800 specification Size 2"

Mueller, H10551, straight coupling, conductive compression by female iron pipe, locked to meet AWWA/ANSI C800 specification Size 2"

Mueller, H10552, straight coupling, conductive compression by male iron pipe, locked to meet AWWA/ANSI C800 specification Size 2"

Mueller, H10553, straight coupling, conductive compression by female iron pipe, locked to meet AWWA/ANSI C800 specification Size 2"

Mueller, H10554, straight coupling, conductive compression by male iron pipe, locked to meet AWWA/ANSI C800 specification Size 2"

Mueller, H10555, straight coupling, conductive compression by female iron pipe, locked to meet AWWA/ANSI C800 specification Size 2"

Mueller, H10556, straight coupling, conductive compression by male iron pipe, locked to meet AWWA/ANSI C800 specification Size 2"

Mueller, H10557, straight coupling, conductive compression by female iron pipe, locked to meet AWWA/ANSI C800 specification Size 2"

Mueller, H10558, straight coupling, conductive compression by male iron pipe, locked to meet AWWA/ANSI C800 specification Size 2"

Mueller, H10559, straight coupling, conductive compression by female iron pipe, locked to meet AWWA/ANSI C800 specification Size 2"

Mueller, H10560, straight coupling, conductive compression by male iron pipe, locked to meet AWWA/ANSI C800 specification Size 2"

Mueller, H10561, straight coupling, conductive compression by female iron pipe, locked to meet AWWA/ANSI C800 specification Size 2"

Mueller, H10562, straight coupling, conductive compression by male iron pipe, locked to meet AWWA/ANSI C800 specification Size 2"

Mueller, H10563, straight coupling, conductive compression by female iron pipe, locked to meet AWWA/ANSI C800 specification Size 2"

Mueller, H10564, straight coupling, conductive compression by male iron pipe, locked to meet AWWA/ANSI C800 specification Size 2"

Mueller, H10565, straight coupling, conductive compression by female iron pipe, locked to meet AWWA/ANSI C800 specification Size 2"

Mueller, H10566, straight coupling, conductive compression by male iron pipe, locked to meet AWWA/ANSI C800 specification Size 2"

Mueller, H10567, straight coupling, conductive compression by female iron pipe, locked to meet AWWA/ANSI C800 specification Size 2"

Mueller, H10568, straight coupling, conductive compression by male iron pipe, locked to meet AWWA/ANSI C800 specification Size 2"

Mueller, H10569, straight coupling, conductive compression by female iron pipe, locked to meet AWWA/ANSI C800 specification Size 2"

Mueller, H10570, straight coupling, conductive compression by male iron pipe, locked to meet AWWA/ANSI C800 specification Size 2"

Mueller, H10571, straight coupling, conductive compression by female iron pipe, locked to meet AWWA/ANSI C800 specification Size 2"

Mueller, H10572, straight coupling, conductive compression by male iron pipe, locked to meet AWWA/ANSI C800 specification Size 2"

Mueller, H10573, straight coupling, conductive compression by female iron pipe, locked to meet AWWA/ANSI C800 specification Size 2"

Mueller, H10574, straight coupling, conductive compression by male iron pipe, locked to meet AWWA/ANSI C800 specification Size 2"

Mueller, H10575, straight coupling, conductive compression by female iron pipe, locked to meet AWWA/ANSI C800 specification Size 2"

Mueller, H10576, straight coupling, conductive compression by male iron pipe, locked to meet AWWA/ANSI C800 specification Size 2"

Mueller, H10577, straight coupling, conductive compression by female iron pipe, locked to meet AWWA/ANSI C800 specification Size 2"

Mueller, H10578, straight coupling, conductive compression by male iron pipe, locked to meet AWWA/ANSI C800 specification Size 2"

Mueller, H10579, straight coupling, conductive compression by female iron pipe, locked to meet AWWA/ANSI C800 specification Size 2"

Mueller, H10580, straight coupling, conductive compression by male iron pipe, locked to meet AWWA/ANSI C800 specification Size 2"

Mueller, H10581, straight coupling, conductive compression by female iron pipe, locked to meet AWWA/ANSI C800 specification Size 2"

Mueller, H10582, straight coupling, conductive compression by male iron pipe, locked to meet AWWA/ANSI C800 specification Size 2"

Mueller, H10583, straight coupling, conductive compression by female iron pipe, locked to meet AWWA/ANSI C800 specification Size 2"

Mueller, H10584, straight coupling, conductive compression by male iron pipe, locked to meet AWWA/ANSI C800 specification Size 2"

Mueller, H10585, straight coupling, conductive compression by female iron pipe, locked to meet AWWA/ANSI C800 specification Size 2"

Mueller, H10586, straight coupling, conductive compression by male iron pipe, locked to meet AWWA/ANSI C800 specification Size 2"

Mueller, H10587, straight coupling, conductive compression by female iron pipe, locked to meet AWWA/ANSI C800 specification Size 2"

Mueller, H10588, straight coupling, conductive compression by male iron pipe, locked to meet AWWA/ANSI C800 specification Size 2"

Mueller, H10589, straight coupling, conductive compression by female iron pipe, locked to meet AWWA/ANSI C800 specification Size 2"

Mueller, H10590, straight coupling, conductive compression by male iron pipe, locked to meet AWWA/ANSI C800 specification Size 2"

Mueller, H10591, straight coupling, conductive compression by female iron pipe, locked to meet AWWA/ANSI C800 specification Size 2"

Mueller, H10592, straight coupling, conductive compression by male iron pipe, locked to meet AWWA/ANSI C800 specification Size 2"

Mueller, H10593, straight coupling, conductive compression by female iron pipe, locked to meet AWWA/ANSI C800 specification Size 2"

Mueller, H10594, straight coupling, conductive compression by male iron pipe, locked to meet AWWA/ANSI C800 specification Size 2"

Mueller, H10595, straight coupling, conductive compression by female iron pipe, locked to meet AWWA/ANSI C800 specification Size 2"

Mueller, H10596, straight coupling, conductive compression by male iron pipe, locked to meet AWWA/ANSI C800 specification Size 2"

Mueller, H10597, straight coupling, conductive compression by female iron pipe, locked to meet AWWA/ANSI C800 specification Size 2"

Mueller, H10598, straight coupling, conductive compression by male iron pipe, locked to meet AWWA/ANSI C800 specification Size 2"

Mueller, H10599, straight coupling, conductive compression by female iron pipe, locked to meet AWWA/ANSI C800 specification Size 2"

Mueller, H10600, straight coupling, conductive compression by male iron pipe, locked to meet AWWA/ANSI C800 specification Size 2"

Mueller, H10601, straight coupling, conductive compression by female iron pipe, locked to meet AWWA/ANSI C800 specification Size 2"

Mueller, H10602, straight coupling, conductive compression by male iron pipe, locked to meet AWWA/ANSI C800 specification Size 2"

Mueller, H10603, straight coupling, conductive compression by female iron pipe, locked to meet AWWA/ANSI C800 specification Size 2"

Mueller, H10604, straight coupling, conductive compression by male iron pipe, locked to meet AWWA/ANSI C800 specification Size 2"

Mueller, H10605, straight coupling, conductive compression by female iron pipe, locked to meet AWWA/ANSI C800 specification Size 2"

Mueller, H10606, straight coupling, conductive compression by male iron pipe, locked to meet AWWA/ANSI C800 specification Size 2"

Mueller, H10607, straight coupling, conductive compression by female iron pipe, locked to meet AWWA/ANSI C800 specification Size 2"

Mueller, H10608, straight coupling, conductive compression by male iron pipe, locked to meet AWWA/ANSI C800 specification Size 2"

Mueller, H10609, straight coupling, conductive compression by female iron pipe, locked to meet AWWA/ANSI C800 specification Size 2"

Mueller, H10610, straight coupling, conductive compression by male iron pipe, locked to meet AWWA/ANSI C800 specification Size 2"

Mueller, H10611, straight coupling, conductive compression by female iron pipe, locked to meet AWWA/ANSI C800 specification Size 2"

Mueller, H10612, straight coupling, conductive compression by male iron pipe, locked to meet AWWA/ANSI C800 specification Size 2"

Mueller, H10613, straight coupling, conductive compression by female iron pipe, locked to meet AWWA/ANSI C800 specification Size 2"

Mueller, H10614, straight coupling, conductive compression by male iron pipe, locked to meet AWWA/ANSI C800 specification Size 2"

Mueller, H10615, straight coupling, conductive compression by female iron pipe, locked to meet AWWA/ANSI C800 specification Size 2"

Mueller, H10616, straight coupling, conductive compression by male iron pipe, locked to meet AWWA/ANSI C800 specification Size 2"

Mueller, H10617, straight coupling, conductive compression by female iron pipe, locked to meet AWWA/ANSI C800 specification Size 2"

Mueller, H10618, straight coupling, conductive compression by male iron pipe, locked to meet AWWA/ANSI C800 specification Size 2"

Mueller, H10619, straight coupling, conductive compression by female iron pipe, locked to meet AWWA/ANSI C800 specification Size 2"

Mueller, H10620, straight coupling, conductive compression by male iron pipe, locked to meet AWWA/ANSI C800 specification Size 2"

Mueller, H10621, straight coupling, conductive compression by female iron pipe, locked to meet AWWA/ANSI C800 specification Size 2"

Mueller, H10622, straight coupling, conductive compression by male iron pipe, locked to meet AWWA/ANSI C800 specification Size 2"

Mueller, H10623, straight coupling, conductive compression by female iron pipe, locked to meet AWWA/ANSI C800 specification Size 2"

Mueller, H10624, straight coupling, conductive compression by male iron pipe, locked to meet AWWA/ANSI C800 specification Size 2"

Mueller, H10625, straight coupling, conductive compression by female iron pipe, locked to meet AWWA/ANSI C800 specification Size 2"

Mueller, H10626, straight coupling, conductive compression by male iron pipe, locked to meet AWWA/ANSI C800 specification Size 2"

Mueller, H10627, straight coupling, conductive compression by female iron pipe, locked to meet AWWA/ANSI C800 specification Size 2"

Mueller, H10628, straight coupling, conductive compression by male iron pipe, locked to meet AWWA/ANSI C800 specification Size 2"

Mueller, H10629, straight coupling, conductive compression by female iron pipe, locked to meet AWWA/ANSI C800 specification Size 2"

Mueller, H10630, straight coupling, conductive compression by male iron pipe, locked to meet AWWA/ANSI C800 specification Size 2"

Mueller, H10631, straight coupling, conductive compression by female iron pipe, locked to meet AWWA/ANSI C800 specification Size 2"

Mueller, H10632, straight coupling, conductive compression by male iron pipe, locked to meet AWWA/ANSI C800 specification Size 2"

Mueller, H10633, straight coupling, conductive compression by female iron pipe, locked to meet AWWA/ANSI C800 specification Size 2"

Mueller, H10634, straight coupling, conductive compression by male iron pipe, locked to meet AWWA/ANSI C800 specification Size 2"

Mueller, H10635, straight coupling, conductive compression by female iron pipe, locked to meet AWWA/ANSI C800 specification Size 2"

Mueller, H10636, straight coupling, conductive compression by male iron pipe, locked to meet AWWA/ANSI C800 specification Size 2"

Mueller, H10637, straight coupling, conductive compression by female iron pipe, locked to meet AWWA/ANSI C800 specification Size 2"

Mueller, H10638, straight coupling, conductive compression by male iron pipe, locked to meet AWWA/ANSI C800 specification Size 2"

Mueller, H10639, straight coupling, conductive compression by female iron pipe, locked to meet AWWA/ANSI C800 specification Size 2"

Mueller, H10640, straight coupling, conductive compression by male iron pipe, locked to meet AWWA/ANSI C800 specification Size 2"

Mueller, H10641, straight coupling, conductive compression by female iron pipe, locked to meet AWWA/ANSI C800 specification Size 2"

Mueller, H10642, straight coupling, conductive compression by male iron pipe, locked to meet AWWA/ANSI C800 specification Size 2"

Mueller, H10643, straight coupling, conductive compression by female iron pipe, locked to meet AWWA/ANSI C800 specification Size 2"

Mueller, H10644, straight coupling, conductive compression by male iron pipe, locked to meet AWWA/ANSI C800 specification Size 2"

Mueller, H10645, straight coupling, conductive compression by female iron pipe, locked to meet AWWA/ANSI C800 specification Size 2"

Mueller, H10646, straight coupling, conductive compression by male iron pipe, locked to meet AWWA/ANSI C800 specification Size 2"

Mueller, H10647, straight coupling, conductive compression by female iron pipe, locked to meet AWWA/ANSI C800 specification Size 2"

Mueller, H10648, straight coupling, conductive compression by male iron pipe, locked to meet AWWA/ANSI C800 specification Size 2"

Mueller, H10649, straight coupling, conductive compression by female iron pipe, locked to meet AWWA/ANSI C800 specification Size 2"

Mueller, H10650, straight coupling, conductive compression by male iron pipe, locked to meet AWWA/ANSI C800 specification Size 2"

Mueller, H10651, straight coupling, conductive compression by female iron pipe, locked to meet AWWA/

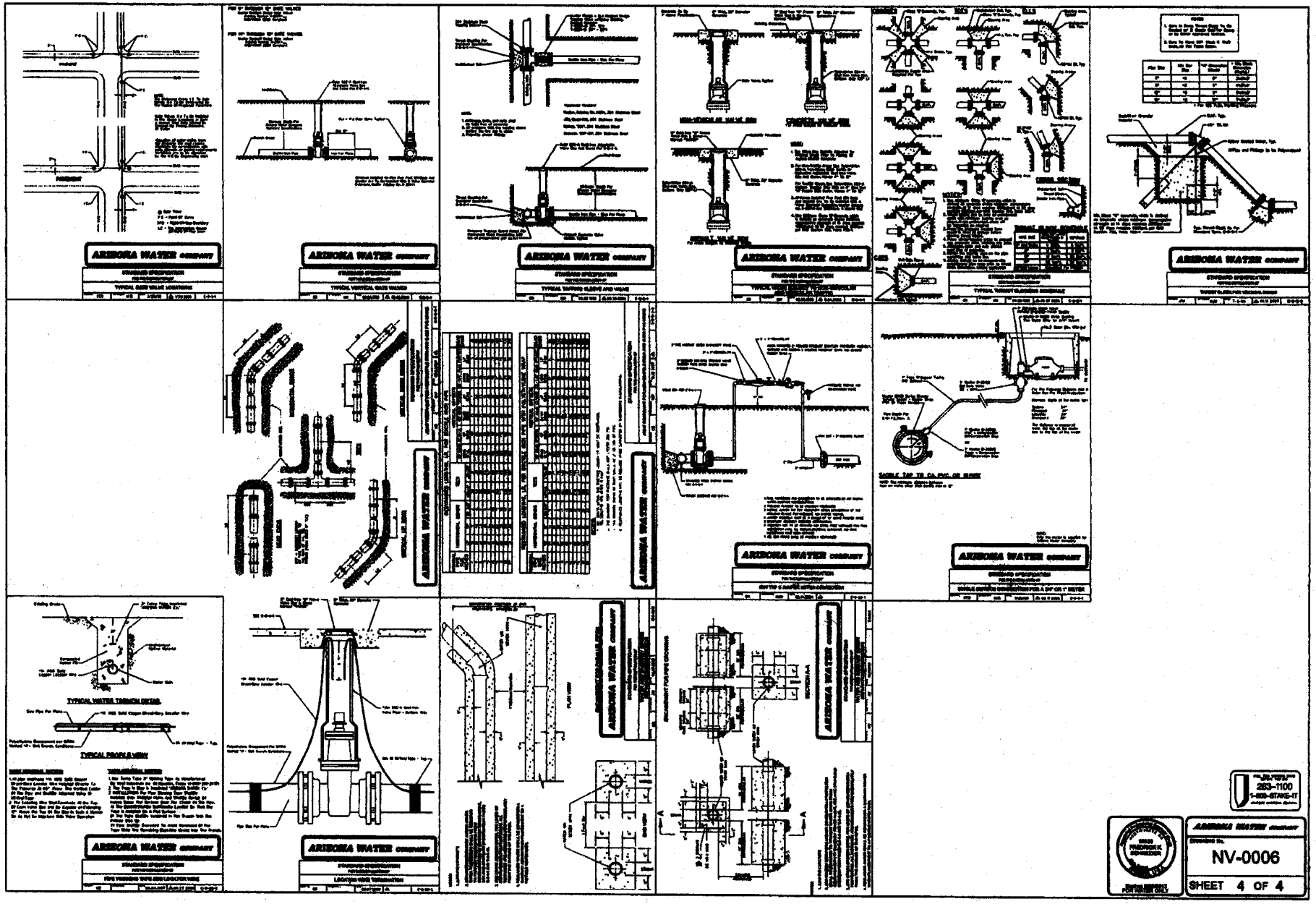

NV-0006

SHEET 4 OF 4

ARIZONA DEPARTMENT OF ENVIRONMENTAL QUALITY
CERTIFICATE OF APPROVAL TO CONSTRUCT WATER FACILITIES

ADEQ File No: 20120052	**LTF No:** 55675
System Name: Az Water Co-Lakeside	**System Number:** 09-003
Project Owner: Arizona Water Company	
Address: P O Box 29006, Phoenix, AZ 85038	
Project Location: Lakeside	**County :** Navajo
Description: REPLACE APPROXIMATELY 532 L.F. OF 3-IN PLASTIC WATER LINE WITH 6-IN D.I.P. AND RELATED APPURTENANCES, ALONG HIDDEN PINES DRIVE, LAKESIDE, NAVAJO CO.	

Approval to construct the above-described facilities as represented in the approved documents on file with the Arizona Department of Environmental Quality is hereby given subject to provisions 1 through 5 continued on page 2 through 2

1. This project must be constructed in accordance with all applicable laws, including Title 49, Chapter 2, Article 9 of the Arizona Revised Statutes and Title 18, Chapter 5, Article 5 of the Arizona Administrative Code.
2. Upon completion of construction, the engineer shall fill out the Engineer's Certificate of Completion and forward it to the Central Regional Office located in Phoenix. If all requirements have been completed, that unit will issue a Certificate of Approval of Construction. R18-5-507(B), Ariz. Admin.Code. At the project owner's request, the Department may conduct the final inspection required pursuant to R18-5-507(B); such a request must be made in writing in accordance with the time requirements of R18-5-507(C), Ariz. Admin. Code.
3. This certificate will be void if construction has not started within one year after the Certificate of Approval to Construct is issued, there is a halt in construction of more than one year, or construction is not completed within three years of the approval date. Upon receipt of a written request for an extension of time, the Department may grant an extension of time; an extension of time must be in writing. R18-5-505(E), Ariz. Admin. Code.
4. Operation of a newly constructed facility shall not begin until a Certificate of Approval of Construction has been issued by the Department. R18-5-507(A), Ariz. Admin. Code.

Reviewed by: AD4

By: _____ 3/27/2012
Janak K. Desai, P.E. Unit Manager — Date
Engineering Review Section
Water Quality Division

cc: File No : 20120052
Regional Office: Central
Owner: Arizona Water Company
County Health Department: Navajo
Engineer: Arizona Water Company
Planning and Zoning/Az Corp. Commission
Engineering Review Database - Etr021

RECEIVED
MAR 27 2012
ARIZONA WATER COMPANY
PHOENIX - ENGINEERING

5. The Arizona Department of Environmental Quality's review of this application was subject to the requirements of the licensing time frames ("LTF") statute under Arizona Revised Statutes ("A.R.S.") § 41-1072 through § 41-1079 and the LTF rules under Arizona Administrative Code ("A.A.C.") R18-1-501 through R18-1-525. This Notice is being issued within the overall time frame for your application.

ADEQ hereby approves your application for Approval to Construct Water Facilities under A.R.S. § 49-351. Your copy is enclosed.

This decision is an appealable agency action under A.R.S. § 41-1092. You have a right to request a hearing and file an appeal under A.R.S. § 41-1092.03(B). You must file a written Request for Hearing or Notice of Appeal within **30 days** of your receipt of this Notice. A Request for Hearing or Notice of Appeal is filed when it is received by ADEQ's Hearing Administrator as follows:

Office of Administrative Counsel
Arizona Department of Environmental Quality
1110 W. Washington Street
Phoenix, AZ 85007

The Request for Hearing or Notice of Appeal shall identify the party, the party's address, the agency and the action being appealed and shall contain a concise statement of the reasons for the appeal. Upon proper filing of a Request for Hearing or Notice of Appeal, ADEQ will serve a Notice of Hearing on all parties to the appeal. If you file a timely Request for Hearing or Notice of Appeal you have a right to request an informal settlement conference with ADEQ under A.R.S. § 41-1092.06. This request must be made in writing no later than **20 days** before a scheduled hearing and must be filed with the Hearing Administrator at the above address.

Please contact Adrian Dumitrescu at 602-771-4201 or ad4@azdeq.gov if you have questions regarding this Notice or the Certificate of Approval to Construct.

ARIZONA WATER COMPANY

INPUT DIVISION INFORMATION
DIVISION ADDRESS
DIVISION PHONE NUMBERS

PROPOSAL/CONTRACT

CONTRACTOR: Pacific Ponderosa Company	DIVISION: Lakeside
ADDRESS: P. O. Box 1145	W.A. Nbr: 1-4921
CITY ST ZIP: Lakeside, AZ 85929	BID DUE DATE: March 23, 2012

CONTRACTOR SUBMITS this PROPOSAL/CONTRACT to ARIZONA WATER COMPANY, an Arizona corporation (the "Company"), to perform the work and complete the project described on Page 2 (the "Project"), as an independent prime contractor.

1. Contractor certifies that it has a complete copy of, and has read, understands and accepts, the Company's General Conditions of Contract, and the Company's Construction Specifications and Standard Specification Drawings, (the "Specifications"), all of which are attached hereto. Contractor has examined the specific plans and related construction drawings for the Project (the "Drawings"), copies of which are also attached hereto. The General Conditions of Contract, Specifications and Drawings are incorporated into this Proposal/Contract. Contractor affirms that all work and materials to be furnished or purchased for the Project will be in strict conformance with the General Conditions of Contract, Specifications and Drawings.

2. Contractor represents and warrants that it has satisfied and complied with the provisions of Section 6, Contractor Understands Work and Working Conditions, of the General Conditions of Contract prior to submitting this Proposal/Contract.

3. Contractor represents that this Proposal/Contract is fair and honest in all respects, is submitted in good faith and is not submitted in collusion with any other company, entity or person.

4. Contractor acknowledges that one hundred percent (100%) Performance and Payment Bonds are required and must be provided to the Company prior to the commencement of work.

5. Prior to the commencement of work, Contractor will submit to the Company a list of all materials to be used in the Project. The materials list will include the manufacturer, part number, price and quantity included in this Proposal/Contract.

6. Contractor will furnish all labor, tools, equipment and materials required to complete the Project according to the General Conditions of Contract, Specifications and Drawings. No materials purchased by Contractor to be incorporated into the Project are subject to tax at the time of purchase and Contractor will not charge the Company for any such tax. Contractor will pay the applicable transaction privilege tax (the "Contracting Tax") on the Project after Contractor receives payment of the final Project invoice from the Company. The cost of materials incorporated into the Project which are exempt by Arizona Revised State Statutes ("A.R.S.") from the Contracting Tax, for example, pipes or valves having a diameter of four (4) inches or larger, including equipment, fittings and any other related part that is used in operating the pipes or valves (A.R.S. §42-5061 B.8.), will not be included in the total cost of the labor and materials upon which the Contracting Tax is computed. Contractor retains full liability and obligation to pay the Contracting Tax and will defend and indemnify the Company against any demand or obligation to pay the Contracting Tax.

7. Contractor will maintain detailed accounting records of all materials purchased and incorporated into the Project. Such records will include all supporting original vendor invoices for all materials purchased. Following completion of the Project, Contractor will submit an itemized accounting to the Company which will include all supporting original vendor invoices and satisfactory evidence of payment thereof. The Company will not pay Contractor for materials not actually incorporated into the Project, and the disposition of such materials will remain Contractor's responsibility.

8. The Estimated Total Cost of the Project, shown on Page 2, is based on estimated labor and material quantities to be furnished. It includes an estimate of the Contracting Tax and the cost of the required Performance and Payment Bonds. Contractor will not cancel, modify or withdraw this Proposal/Contract during a ninety-day (90) period commencing on the Bid Due Date. The Company may accept this Proposal/Contract by signing and writing, or otherwise delivering, a copy hereof to Contractor during such ninety-day (90) period. If the Company does not accept this Proposal/Contract during such ninety-day (90) period, Contractor may cancel this Proposal/Contract by giving written notice of cancellation to the Company.

9. Prior to the commencement of work, Contractor will provide the Company with a detailed construction schedule, in either Gantt or CPM form, identifying all tasks to be performed from the date of the written Commencement Notice through completion of the Project, including testing, training of Company Personnel and final Project invoicing. Contractor will provide the Company with a copy of such construction schedule documenting the progress of work on the Project at least monthly.

10. Contractor will not commence work on the Project until the Company gives Contractor a written Commencement Notice. Contractor will complete the Project within 60 calendar days after the Commencement Notice is issued.

11. Following the Company's written notice of satisfactory completion of the Project, and upon receipt of the final Project invoice from Contractor, the Company shall pay Contractor the actual total cost of the Project, which will be calculated as shown on Page 2, except that actual labor and material quantities installed/constructed will be substituted for the estimated labor and materials quantities and the Contracting Tax will be recalculated based on such actual labor and materials quantities.

12. The amount of applicable liquidated damages for Contractor's failure to deliver or perform within the time limit shown in Paragraph 10 may be deducted from the Company's payment of the final Project invoice. This provision shall not limit the Company's ability to terminate this Proposal/Contract for Contractor's unsatisfactory performance or failure to perform as provided in the General Conditions of Contract, Specifications or Drawings, or in this Proposal/Contract.

SPECIAL CONDITIONS:

(1.) Contractor will supply, install, and remove the jumper meter connection (AWC, E-9-23-1) (2.) Do not include (double side) thrust block vertical bends for realignment in "TOTAL COST." Line item price only. (3.) Coordination and planning required to minimize service interuptions. (4.) All backfill cost to be included in pipeline linear foot price. (5.) " "Related fittings" includes all valves, bends, tees, reducers, elbows, couplings, etc.

CONTRACTOR	PROPOSAL/CONTRACT ACCEPTED: ARIZONA WATER COMPANY
By: William Bulicek	By: Fredrick K. Schneider
Print Name: William Bulicek	Print Name: Fredrick K. Schneider, PE
Title: PRESIDENT	Title: Vice President - Engineering
Date: 3-21-12	Date: 4-3-2012

ARIZONA WATER COMPANY

INPUT DIVISION INFORMATION
DIVISION ADDRESS
DIVISION PHONE NUMBERS

PROPOSAL/CONTRACT

CONTRACTOR: Pacific Powderash Co.	SYSTEM: Lakeside
AZ CONTRACTOR LICENSE NO: 156413 CLASSIFICATION: K-80	W.A. No(s): 1-4921
ADDRESS: P.O. Box 1145	BID DUE DATE: March 23, 2012
CITY ST ZIP Lakeside, Az. 85929	BID BOND REQUIRED ☑ Yes ☐ No

DESCRIPTION OF PROJECT: **Install approximately 532 L.F. of 6" D.I.P. and make tie-ins along Hidden Pines Drive to replace the existing 3" plactic main line.**

1-2. MATERIALS EXEMPT FROM CONTRACTING TAX (see Paragraph 6)	QUANTITY	UNIT PRICE LABOR	UNIT PRICE MATERIALS	TOTAL COST LABOR	TOTAL COST MATERIALS
Install 6" DIP w/restrainer, tie-ins, and related fittings*	532 LF	18.00	20.00	9576.00	10640.00
Install 6" Mega-Lug joint restraints	9 ea.	20.00	22.00	180.00	198.00
Double side thrust block vertical realignment (AWC, E-9-5-2) line item price	1 ea.	1000.00	425.00	XXXXXXXXX	XXXXXXXXX
3. Total Labor to Install Exempt Materials (add the amounts in column 1)				3 9756.00	
4. Total Exempt Materials (add the amounts in column 2)					4 10838.00

5-6. NON-EXEMPT MATERIALS	QUANTITY	UNIT PRICE LABOR	UNIT PRICE MATERIALS	TOTAL COST LABOR	TOTAL COST MATERIALS
Tie-over a 1" single service connection to the new 6" DIP main	1 ea.	250.00	200.00	250.00	200.00
Misc. 3" & 4" pipe, couplings, and fittings for tie-ins	Lot	2500.00	570.00	2500.00	570.00
Blacktop replacement (priced per linear foot but complete)	56 LF	14.00	30.00	784.00	1680.00
Concrete replacement at driveway (priced per linear foot but complete)	57 LF	14.00	25.00	798.00	1425.00
7. Total Labor to Install Non-Exempt Materials (add the amounts in column 5)				7 4332.00	
8. Total Non-Exempt Materials (add the amounts in column 6)					8 3875.00
9. Subtotal A (add lines 3, 7 and 8)					9 17963.00
10. Contracting Tax Base (multiply the amount on line 9 by 0.65)				10 11675.95	
11. Applicable Contracting Tax Rate				11 7.1 %	
12. Contracting Tax (multiply the amount on line 10 by line 11)					12 828.99
13. Subtotal B (add lines 4, 9 and 12)					13 29629.99
14. 100% Performance and Payment Bonds Cost					14 889.00
15. Estimated Total Cost (add lines 13 and 14)					15 30518.99

NOTE: The Estimated Total Cost includes all labor and materials for backfill, pavement replacement, chip seal, and traffic control necessary for the Project.

ARIZONA WATER COMPANY

COMMENCEMENT NOTICE

CONTRACTOR:

Mr. William Bulicek
Pacific Ponderosa Company
P. O. Box 1145
Lakeside, AZ 85929

DATE: April 3, 2012
DIVISION: NAVAJO
SYSTEM: NAVAJO
W.A.: 1-4921

THIS IS YOUR NOTICE TO PROCEED WITH THE FOLLOWING PROJECT(S):

DESCRIPTION OF WORK:

Install approximately 532 LF of 6-inch DIP and make tie-ins along Hidden Pines Drive to replace the existing 3-inch plastic main line.

PERFORMANCE AND PAYMENT BONDS REQUIRED: [X] Yes [ ] No

TOTAL DAYS ALLOWED: 60

COMPLETION DATE: June 4, 2012

Prior to the start of construction, please call Lee Hetrick, Division Manager at 928-368-6992 to schedule a pre-construction meeting.

ARIZONA WATER COMPANY	PACIFIC PONDEROSA COMPANY
Company	Contractor (type name)
By [signature]	By
Title Vice President - Engineering	Title

AFH

RLI Insurance Company
P.O. Box 3967 Peoria IL 61612-3967
Phone: (309)692-1000 Fax: (309)693-1610

BID BOND

Bond No. LSM0388115

KNOW ALL MEN BY THESE PRESENTS,
That We, Pacific Ponderosa Co.
of 3542 Hilltop Dr
Lakeside, AZ 85929
as Principal, and RLI Insurance Company, of Peoria, Illinois, as Surety, an Illinois corporation duly licensed to do business in the State of Arizona, are held and firmly bound unto Arizona Water Co., as Obligee, in the penal sum of 10% of Total Amount Bid Not to Exceed $ 3,357.09, for the payment of which the Principal and the Surety bind themselves, their heirs, executors, administrators, successors and assigns, jointly and severally, firmly by these presents.

THE CONDITION OF THIS OBLIGATION IS SUCH, That whereas the Principal has submitted, or is about to submit, a proposal or a bid to the Obligee on a contract for install 532 LF of 6" DIP and tie-ins along Hidden Pines to replace 3" plastic line

NOW, THEREFORE, if the aforesaid principal shall be awarded the contract, the said principal will within the period specified therefore, or if no period be specified, within ten (10) days after the notice of such award enter into a contract and give bond for the faithful performance of the contract, then this obligation shall be null and void, otherwise the principal and the surety will pay unto the obligee the difference in money between the amount of the bid of said principal and the amount for which the obligee may legally contract with another party to perform the work if the latter amount be in excess of the former, in no event shall the liability hereunder exceed the penal sum hereof.

PROVIDED AND SUBJECT TO THE CONDITION PRECEDENT, that any suits at law or proceedings in equity brought or to be brought against the Surety to recover any claim hereunder must be instituted and service had upon the Surety within ninety (90) days after the acceptance of said bid of the Principal by the Obligee.

SIGNED, SEALED AND DATED this 23rd day of March, 2012.

Pacific Ponderosa Co
Principal

By: [signature]

RLI Insurance Company

By [signature]
Annette Schroeder — Attorney In Fact

RLI Insurance Company
P.O. Box 1967 Peoria IL 61612-1967
Phone: (309)692-1000 Fax: (309)692-1610

POWER OF ATTORNEY

RLI Insurance Company

Bond No. LSM0388115

Know All Men by These Presents:

That the RLI Insurance Company, a corporation organized and existing under the laws of the State of Illinois, and authorized and licensed to do business in all states and the District of Columbia does hereby make, constitute and appoint: Annette Schroeder in the City of Pinetop, State of Arizona, as Attorney In Fact, with full power and authority hereby conferred upon him/her to sign, execute, acknowledge and deliver for and on its behalf as Surety, in general, any and all bonds, undertakings, and recognizances in an amount not to exceed Five Hundred Thousand and 00/100 Dollars ($ 500,000.00) for any single obligation, and specifically for the following described bond.

Principal: Pacific Pipeline Co.
Obligee: Arizona Water Co.
Type Bond: Public Bid Bond
Bond Amount: 10% of Total Amount Bid Not to Exceed $ 3,357.89

The RLI Insurance Company further certifies that the following is a true and exact copy of a Resolution adopted by the Board of Directors of RLI Insurance Company, and now in force to-wit:

> **"All bonds, policies, undertakings, Powers of Attorney or other obligations of the corporation shall be executed in the corporate name of the Company by the President, Secretary, any Assistant Secretary, Treasurer, or any Vice President, or by such other officers as the Board of Directors may authorize. The President, any Vice President, Secretary, any Assistant Secretary, or the Treasurer may appoint Attorneys in Fact or Agents who shall have authority to issue bonds, policies or undertakings in the name of the Company. The corporate seal is not necessary for the validity of any bonds, policies, undertakings, Powers of Attorney or other obligations of the corporation. The signature of any such officer and the corporate seal may be printed by facsimile."**

IN WITNESS WHEREOF, the RLI Insurance Company has caused these presents to be executed by its Vice President with its corporate seal affixed this 23rd day of March, 2012.

ATTEST:

RLI Insurance Company

Roy C. Die, Vice President

On this 23rd day of March, 2012 before me, a Notary Public, personally appeared Roy C. Die and _____, who being by me duly sworn, acknowledged that they signed the above Power of Attorney as Vice President and _____, respectively, of the said RLI Insurance Company, and acknowledged said instrument to be the voluntary act and deed of said corporation.

Jacqueline M. Bockler, Notary Public

"OFFICIAL SEAL"
JACQUELINE M. BOCKLER
COMMISSION EXPIRES 05/01/14

A0011011

ACORD

CERTIFICATE OF LIABILITY INSURANCE

DATE (MM/DD/YYYY): [illegible]2011

[illegible]

PRODUCER

[illegible] and Associates - Pinetop
PO BOX [illegible]
Pinetop, AZ [illegible]
Phone: [illegible] Fax: [illegible]

INSURED

[illegible] Ponderosa Co., Inc.
[illegible] Hilltop Drive

LAKESIDE AZ [illegible]-

CONTACT NAME: [illegible]
PHONE: [illegible] FAX: [illegible]
E-MAIL ADDRESS: [illegible]

INSURERS AFFORDING COVERAGE

INSURER A: [illegible]
INSURER B: [illegible] Casualty
INSURER C: Travelers [illegible]
INSURER D:
INSURER E:
INSURER F:

COVERAGES

[illegible] TO NLL THE TERMS, [illegible]

INSR LTR	TYPE OF INSURANCE	POLICY NUMBER	POLICY EFF	POLICY EXP	LIMITS	
A	GENERAL LIABILITY; X COMMERCIAL GENERAL LIABILITY; CLAIMS-MADE X OCCUR; GEN'L AGGREGATE LIMIT APPLIES PER: X POLICY	CBP [illegible]	12/[illegible]2011	[illegible]	[illegible]	$ 1,000,000
					[illegible]	$ 100,000
					MED EXP (Any one person)	$ 5,000
					PERSONAL & ADV INJURY	$ 1,000,000
					GENERAL AGGREGATE	$ 2,000,000
					PRODUCTS - COMP/OP AGG	$ 2,000,000
B	AUTOMOBILE LIABILITY; X [illegible]	BA-[illegible]-11-[illegible]	[illegible]2011	[illegible]	COMBINED SINGLE LIMIT	$ 1,000,000
					BODILY INJURY (Per person)	$ 5,000
					BODILY INJURY (Per accident)	$
					PROPERTY DAMAGE	$ 1,000,000
	UMBRELLA LIAB; EXCESS LIAB; OCCUR; CLAIMS-MADE				EACH OCCURRENCE	$
					AGGREGATE	$
	WORKERS COMPENSATION AND EMPLOYERS' LIABILITY Y/N; N/A				E.L. EACH ACCIDENT	$
					E.L. DISEASE - EA EMPLOYEE	$
					E.L. DISEASE - POLICY LIMIT	$
	X Inland Marine	CBP [illegible]	12/[illegible]2010	12/[illegible]2011	Scheduled Equip	400,000

DESCRIPTION OF OPERATIONS / LOCATIONS / VEHICLES [illegible]

Subject to the terms, conditions and exclusions of this policy.

RECEIVED

JUN 15 2011

LAKESIDE OFFICE
ARIZONA WATER COMPANY

CERTIFICATE HOLDER

Arizona Water Company
P O Box [illegible]
Lakeside, AZ [illegible]

CANCELLATION

SHOULD ANY OF THE ABOVE DESCRIBED POLICIES BE CANCELLED BEFORE THE EXPIRATION DATE THEREOF, NOTICE WILL BE DELIVERED IN ACCORDANCE WITH THE POLICY PROVISIONS.

AUTHORIZED REPRESENTATIVE

[signature]

© 1988-2010 ACORD CORPORATION. All rights reserved.

The ACORD name and logo are registered marks of ACORD

CERTIFICATE OF LIABILITY INSURANCE

04/02/2012

THIS CERTIFICATE IS ISSUED AS A MATTER OF INFORMATION ONLY AND CONFERS NO RIGHTS UPON THE CERTIFICATE HOLDER. THIS CERTIFICATE DOES NOT AFFIRMATIVELY OR NEGATIVELY AMEND, EXTEND OR ALTER THE COVERAGE AFFORDED BY THE POLICIES BELOW. THIS CERTIFICATE OF INSURANCE DOES NOT CONSTITUTE A CONTRACT BETWEEN THE ISSUING INSURER(S), AUTHORIZED REPRESENTATIVE OR PRODUCER, AND THE CERTIFICATE HOLDER.

IMPORTANT: If the certificate holder is an ADDITIONAL INSURED, the policy(ies) must be endorsed. If SUBROGATION IS WAIVED, subject to the terms and conditions of the policy, certain policies may require an endorsement. A statement on this certificate does not confer rights to the certificate holder in lieu of such endorsement(s).

PRODUCER	CONTACT SCF Arizona
SCF Arizona and its subsidiaries 3020 N. 3rd Street Phoenix AZ 85012-2006	PHONE (A/C, No, Ext): 602.631.2600 or 800.264.2264 FAX (A/C, No): 602.631.2699 E-MAIL ADDRESS: [illegible]
	INSURER(S) AFFORDING COVERAGE / NAIC #
INSURED PACIFIC PONDEROSA CO INC PO Box 1146 Lakeside AZ 85929	INSURER A: SCF ARIZONA 36714 INSURER B: INSURER C: INSURER D: INSURER E: INSURER F:

COVERAGES CERTIFICATE NUMBER: 35 REVISION NUMBER:

THIS IS TO CERTIFY THAT THE POLICIES OF INSURANCE LISTED BELOW HAVE BEEN ISSUED TO THE INSURED NAMED ABOVE FOR THE POLICY PERIOD INDICATED. NOTWITHSTANDING ANY REQUIREMENT, TERM OR CONDITION OF ANY CONTRACT OR OTHER DOCUMENT WITH RESPECT TO WHICH THIS CERTIFICATE MAY BE ISSUED OR MAY PERTAIN, THE INSURANCE AFFORDED BY THE POLICIES DESCRIBED HEREIN IS SUBJECT TO ALL THE TERMS, EXCLUSIONS AND CONDITIONS OF SUCH POLICIES. LIMITS SHOWN MAY HAVE BEEN REDUCED BY PAID CLAIMS.

INSR LTR	TYPE OF INSURANCE	ADDL INSD	SUBR WVD	POLICY NUMBER	POLICY EFF (MM/DD/YYYY)	POLICY EXP (MM/DD/YYYY)	LIMITS
	GENERAL LIABILITY COMMERCIAL GENERAL LIABILITY CLAIMS-MADE OCCUR GEN'L AGGREGATE LIMIT APPLIES PER: POLICY PRO-JECT LOC						EACH OCCURRENCE $ DAMAGE TO RENTED PREMISES (Ea occurrence) $ MED EXP (Any one person) $ PERSONAL & ADV INJURY $ GENERAL AGGREGATE $ PRODUCTS - COMP/OP AGG $ $
	AUTOMOBILE LIABILITY ANY AUTO ALL OWNED AUTOS SCHEDULED AUTOS HIRED AUTOS NON-OWNED AUTOS						COMBINED SINGLE LIMIT (Ea accident) $ BODILY INJURY (Per person) $ BODILY INJURY (Per accident) $ PROPERTY DAMAGE (Per accident) $ $
	UMBRELLA LIAB OCCUR EXCESS LIAB CLAIMS-MADE DED RETENTION $						EACH OCCURRENCE $ AGGREGATE $ $
A	WORKERS COMPENSATION AND EMPLOYERS' LIABILITY ANY PROPRIETOR/PARTNER/EXECUTIVE OFFICER/MEMBER EXCLUDED? (Mandatory in NH) If yes, describe under DESCRIPTION OF OPERATIONS below	Y/N	WAIVED	148386	04/01/2012	04/01/2013	WC STATU-TORY LIMITS OTH-ER E.L. EACH ACCIDENT $ 100,000 E.L. DISEASE - EA EMPLOYEE $ 100,000 E.L. DISEASE - POLICY LIMIT $ 500,000

RECEIVED
APR 9 2012
LAKESIDE OFFICE
ARIZONA WATER COMPANY

DESCRIPTION OF OPERATIONS / LOCATIONS / VEHICLES (Attach ACORD 101, Additional Remarks Schedule, if more space is required)

Location: Various At Locations

Proof of Coverage: Water Main Construction Various At Locations

EXCAV-WCC-INC BOARDW/FILL-BACK FILL, SERVIC TANK CONSTRCTN - INSTALLATION, WATER MAIN OR CONDU CONST-INCL TUN

CERTIFICATE HOLDER	CANCELLATION
Arizona Water Company PO Box 29006 Phoenix AZ 85038-9006	SHOULD ANY OF THE ABOVE DESCRIBED POLICIES BE CANCELLED BEFORE THE EXPIRATION DATE THEREOF, NOTICE WILL BE DELIVERED IN ACCORDANCE WITH THE POLICY PROVISIONS. AUTHORIZED REPRESENTATIVE

© 1988-2010 ACORD CORPORATION. All rights reserved.

ARIZONA WATER COMPANY

SPECIFICATIONS

GENERAL CONDITIONS OF CONTRACT: E-4-1

CONSTRUCTION SPECIFICATIONS: E-8-1

STANDARD SPECIFICATION DRAWINGS: E-9-1

2007 EDITION WITH 2010 REVISIONS

ARIZONA WATER COMPANY

GENERAL CONDITIONS OF CONTRACT: E-4-1

ARIZONA WATER COMPANY

E-4-1

GENERAL CONDITIONS OF CONTRACT

DEFINITIONS

A. Company. The words "Company" or "Arizona Water Company" mean Arizona Water Company, and where applicable, any division of Arizona Water Company, whose principal place of business is located at 3805 North Black Canyon Highway, Phoenix, Arizona 85015-5351 (Post Office Box 29006, Phoenix, Arizona 85038-9006).

B. Company's Authorized Representative. The words "Company's Authorized Representative" mean any officer of the Company, and any of the Company's Engineers, any Division Manager or Superintendent of the Company and/or such other person(s) designated in writing as the "Company's Authorized Representative" by the President or any Vice President of the Company.

C. Contractor. The word "Contractor" means either an individual or other entity employed to do the work as shown on the Construction Drawings and as specified herein.

D. Construction Drawings. The words "Construction Drawings" mean plans prepared by or on behalf of Arizona Water Company.

E. Invitation to Bid. The term "Invitation to Bid" means the current copy of Arizona Water Company's Form E-3-11-4 Request for Proposal/Contract or Form E-3-12-2 Invitation to Bid.

F. Contract. The word "Contract" means the written document titled "Contract" or "Proposal/Contract" when such document has been signed by an officer or other authorized representative of both the Contractor and the Company.

G. Inspector. The word "Inspector" means the Company's Authorized Representative or a person designated in writing by the Company's Authorized Representative.

GENERAL CONDITIONS OF CONTRACT

1. GENERAL

These General Conditions of Contract govern all works of installation and construction unless deviations are provided for on the Construction Drawings or in the Contract.

2. BONDS

The Contractor shall, upon request by the Company, furnish a performance bond and a material payment bond in the amount of 100% of the Contract price, in a form and from a surety acceptable to the Company.

3. LABOR AND/OR MATERIAL RELEASES

The Contractor shall supply labor and/or material releases satisfactory to the Company when requested to do so. Forms will be provided by the Company.

4. LICENSE

The Contractor shall have, as may be required by law, a valid license applicable to the work to be performed.

5. INSURANCE

The Contractor shall maintain in full force and effect insurance at no less than the following minimum amounts:

WORKER'S COMPENSATION	In accordance with requirements of the laws of the State of Arizona.
COMPREHENSIVE GENERAL LIABILITY (Including contractual liability covering death, bodily injury and property damage)	Combined single limit of not less than $1,000,000 for each occurrence.
AUTOMOTIVE LIABILITY (Including owned, non-owned and hired vehicles)	Combined single limit of not less than $1,000,000 for each occurrence.
SUBCONTRACTOR'S PUBLIC LIABILITY AND PROPERTY DAMAGE INSURANCE AND VEHICLE LIABILITY INSURANCE	Contractor shall either require each of its subcontractors to procure and to maintain Subcontractor's Public Liability and Property Damage Insurance and Vehicle Liability Insurance of the type and in the amounts specified in this Section 5 or insure the activities of its subcontractors in Contractor's own policy, in like amounts.

Such insurance shall name the Company, its officers, agents, and employees as additional insured and be primary for all purposes.

The Company will at all times have the right to require that all of such insurance be placed with insurance companies that are satisfactory to it. The Contractor shall file with the Company a certificate evidencing that each policy of insurance for the above coverages in the minimum amounts specified has been purchased and is in good standing.

Such certificate shall provide that notice be given to the Company at least thirty (30) days prior to cancellation or material change in the form of such policies or any of them. Such certificates shall be kept on file by the Company and the Company must have current certificates on file, or a certificate must accompany any bid proposal, before that proposal will be accepted by the Company.

6. CONTRACTOR UNDERSTANDS WORK AND WORKING CONDITIONS

By executing a Contract with the Company, the Contractor warrants that it has, by careful examination, satisfied itself as to the nature and location of the work, including soil conditions, the character, quality and quantity of the materials to be encountered, the character of the equipment and facilities needed preliminary to and during prosecution of the work, the general and local conditions, and all other matters which can in any way be expected to affect its work under the Contract. Verbal agreements or conversations with any officer, agent or employee of the Company, either before or after the execution of the Contract, are not binding upon the Company and shall not affect or modify any of the terms or obligations herein contained.

7. SPECIFICATIONS AND DRAWINGS

The Contractor shall keep on the job a complete copy of all drawings and specifications furnished by the Company which are applicable to the Contract with the Company. Anything mentioned in the specifications and not shown on the drawings or shown on the drawings and not mentioned in the specifications shall be of like effect as if shown or mentioned in both. In case of a discrepancy between the figures, drawings or specifications and physical conditions of the job, the matter shall be immediately submitted to the Company's Authorized Representative for decision as to adjustments, if any, because of the discrepancy; without a decision from the Company's Authorized Representative no discrepancy shall be adjusted by the Contractor, save only at its own risk and expense. Any deviation from the specifications must be approved in writing by the Company's Authorized Representative.

8. PROPERTY PROTECTION

Trees, fences, poles, underground structures and all other property shall be protected unless their removal is authorized on the Construction Drawings. Any property damaged shall be restored by the Contractor, at its expense, to the owner's satisfaction.

9. SPECIAL PERMITS, LICENSES AND INSURANCE

The Company shall obtain all permits for railroad, county, state, city and irrigation district rights-of-way as well as Forest Service, State Land Department and Bureau of Land Management permits. (Pipeline Contractors)

Whenever blasting is required, the Contractor shall obtain all permits, licenses and insurance required at its expense. (All Contractors)

The Contractor will be required to obtain, and shall certify in writing to the Company that it has obtained, all additional permits required to perform the work including, but not limited to, a National Pollution Discharge Elimination System Permit and/or an Aquifer Protection Permit as those permits relate to disposal of drilling, development and test waters and/or any other discharge or similar activity. (Well Drilling Contractors)

10. SURVEYS

The Company shall be responsible, or arrange, for all surveys required for the work covered in the Contract, unless otherwise specified.

11. BENCH MARKS, PROPERTY STAKES AND SURVEY STAKES

Bench marks, property stakes and survey stakes shall be preserved by the Contractor; in case they are destroyed or removed by Contractor or its employees, the Company will replace them at the Contractor's expense, and the Contractor and its sureties shall be liable therefore.

12. TOOLS, EQUIPMENT AND MATERIALS

The Contractor shall furnish all of the necessary tools, equipment, and pipeline materials required for the work. All material furnished by the Contractor shall be of the quality specified by the Company in its Construction Specifications (E-8-1).

13. SUPERINTENDENCE BY CONTRACTOR

The Contractor shall assure adequate superintendence of the work by a competent foreman or superintendent (with full authority to act on behalf of Contractor) satisfactory to the Company, who will be on the job at all times when work is in progress.

14. ORDER AND DISCIPLINE

The Contractor shall at all times enforce strict discipline and good order among its employees.

15. INDEPENDENT CONTRACTOR

The Contractor is an independent contractor and any provisions in the Contract, the specifications, or these General Conditions of Contract and Arizona Water Company's Construction Specifications which may appear to give the Company the right to direct the Contractor as to the details of the doing of any work to be performed by the Contractor, or to exercise a measure of control over said work, shall be deemed to mean and shall

mean, that the Contractor shall follow the desires of the Company in the results of the work only and not in the means whereby said work is to be accomplished, and the Contractor shall use its own discretion and shall have complete and authoritative control over the work and as to the details of the doing of the work.

16. PUBLIC SAFETY AND CONVENIENCE

Contractor shall at all times conduct its work so as to ensure the least possible obstruction to traffic and other inconvenience to the general public and the residents and businesses in the vicinity of the work, and to ensure the protection of persons and property.

To protect persons from injury and to avoid property damage, Contractor shall provide and maintain adequate barricades as required during the progress of the work and until it is safe to use the property for its intended purpose. The rules and regulations of the local governmental agencies and specific permit requirements respecting safety provisions shall be observed at all times.

In the case of blasting, the Contractor shall exercise extreme caution to protect the general public and personal and public property from harm or damage.

17. PROPERTY PROTECTION

Trees, fences, poles, and all other property shall be protected unless their removal is authorized by the Company. Any property damaged shall be restored by Contractor, at his expense, to Company's satisfaction.

18. RESPONSIBILITY OF CONTRACTOR

The work shall be under Contractor's responsible care and charge. Contractor shall bear all loss and damage whatsoever and from whatsoever cause, except that caused solely by the act of Company, which may occur on or to the work during the fulfillment of the Contract. If any loss or damage occurs, Contractor shall immediately make good any such loss or damage, and in the event of Contractor refusing or neglecting to do so, Company may, or by the employment of some other person, make good any such loss or damage, and the cost and expense of so doing shall be charged to Contractor.

The mention of any specific responsibility or liability imposed upon Contractor shall not be construed as a limitation or restriction of any general liability or duty imposed upon Contractor by the Contract. The reference to any specific duty or liability being made herein is merely for the purpose of explanation.

Contractor alone shall at all times be responsible for the safety of Contractor, Contractor's employees, and its subcontractors' employees, and for Contractor and its subcontractors' plant and equipment and the method of performing the work.

19. ERRORS AND OMISSIONS

If Contractor, in the course of the work, becomes aware of any errors or omissions in the Contract Documents or in the instructions, or if Contractor becomes aware of any discrepancy between the Contract Documents and the physical conditions of the site of

the work, Contractor shall immediately inform Company in writing. Any work done by Contractor after such discovery, until authorized by Company, will be done at Contractor's risk.

20. LAWS, REGULATIONS

Contractor shall give all notices required by law and comply with all laws, ordinances, rules and regulations, including, but not limited to, all applicable federal, state, local and other legally required health and safety standards, orders, rules, regulations or other laws, pertaining to the conduct of the work. Contractor shall be liable for, and shall defend and indemnify Company against and hold it harmless from, all violations of any law, ordinance, rule, regulation, standard, or order in connection with work furnished by or on behalf of Contractor. If Contractor observes that the Contract Documents are at variance with any law, ordinance, rule, regulation, standard, or order it shall promptly notify Company in writing and any necessary changes shall be adjusted as provided in the Contract for changes in the work. Contractor shall not perform any work contrary to such laws ordinances, rules, regulations, standards, or orders.

21. PERMITS, FEES AND INSPECTIONS

Permits and licenses necessary for the prosecution of the work, including, but not limited to, any National Pollution Discharge Elimination Systems (NPDES) Permits required by U.S. Environmental Protection Agency or the Arizona Department of Environmental Quality shall be secured, paid for, and complied with by Contractor.

Contractor shall be responsible for its actions and shall abide by all conditions and/or restrictions set forth in the NPDES Permit and any other permit or license required for this project.

Company shall at all times have access to the work whenever it is in preparation or in progress and Contractor shall provide proper facilities for such access and for all inspections. If the Contract Documents, the General Superintendent's instructions, laws, ordinances or any public authority require any work to be inspected or approved, Contractor shall give timely notice of its readiness for inspection.

Inspection of the work shall not relieve Contractor of any of its obligations even if defective work or unsuitable materials may have been previously overlooked by Company and accepted or estimated for payment. If any work is found not in accordance with the Contract Documents, Contractor, at its sole cost and expense, shall promptly make good such defective work.

22. CONSTRUCTION MARKING (PIPELINE ONLY)

Each job shall be marked and/or barricaded by the Contractor in such a manner that the construction is clearly visible at all times.

23. EXTRA WORK AND/OR MATERIALS

Except as otherwise herein provided, no charge for any extra work and/or material will be allowed unless the same has been ordered in writing by the Company's Authorized Representative, and the price stated in such order.

24. CHANGES

The Company shall have the right to make any changes in the work that it may determine to be necessary. If such changes affect the cost of the work, an equitable adjustment shall be negotiated. Changes shall in no way affect or void the obligations of both parties under the original Contract.

25. INSPECTION

All work and material shall be open at all times to inspection and acceptance or rejection by the Company's Inspector. Any work covered up by the Contractor prior to inspection and acceptance by the Company shall be subject to being uncovered at the expense of the Contractor for inspection by the Company. The Contractor shall give the Company reasonable notice of starting new work and shall provide, without extra charge, reasonable and necessary facilities for inspection, even to the extent of taking out portions of finished work. In case any such finished work removed is found satisfactory, however, the actual direct cost of such removal and replacement, plus 15% of such cost, will be paid by the Company; in addition, if completion of the work has been delayed thereby, the Contractor shall be granted a suitable extension of time on account of the additional work involved.

26. DEFECTIVE WORK OR MATERIAL

The Contractor shall remove, at its own expense, any work or material found defective by the Company's Inspector and shall rebuild and replace the same without extra charge; in default thereof, the same may be done by the Company at the Contractor's expense.

27. ASSIGNMENT

Neither party to the Contract may assign the Contract or sublet it in whole or in part without the written consent of the other, nor shall the Contractor assign any monies due or which may become due hereunder without the previous written consent of the Company, nor shall such consent release the Contractor from any of its obligations and liabilities under the Contract.

28. RIGHTS OF VARIOUS INTERESTS

Whenever work that is being done for the Company other than by the Contractor is contiguous to work being done by the Contractor, the respective rights of the various interests involved shall be established by the Company to secure the completion of the various portions of the work in general harmony.

29. SUSPENSION OF WORK

The Company's Authorized Representative may at any time and for any reason suspend all or any portion of the work under the Contract. This right to suspend work shall not be construed as denying the Contractor compensation for actual, reasonable and necessary expenses due to suspension to which it may be entitled.

The Company's Authorized Representative may order the Contractor to suspend any work because of certain conditions, such as inclement weather, or because the

Contractor is in violation of these General Conditions of Contract or the Construction Specifications. It is understood that compensation for expenses will not be allowed for such suspension when ordered by the Company's Authorized Representative on account of such conditions.

30. PROCEDURE OF WORK (PIPELINE ONLY)

All work under the Contract shall be planned and performed so as to cause a minimum of interference with normal vehicular and pedestrian traffic. At no time shall the Contractor completely obstruct the traffic to any business establishment during normal work hours of that business. It shall be the Contractor's responsibility to maintain facilities for ingress and egress to any business establishment. When crossing any street, not more than one-half of the street may be blocked at one time. All federal, state, county and city laws, rules and regulations relating to this subject are to be obeyed.

The Contractor shall complete any portion or portions of the work in such order of time as the Company may require. The Company shall have the right to take possession of and use any completed or partially completed portions of the work. If such prior possession or use increases the cost of or delays the work, the Contractor will be entitled to extra compensation or extension of time or both, as the Company may determine.

31. DISPUTES

All questions or controversies which arise between the Contractor and the Company, under, or in reference to, the Contract, shall be decided by the Company's Authorized Representative and a representative of the Contractor, and their decision shall be final and conclusive upon both parties.

32. CONNECTION TO EXISTING SYSTEM (PIPELINE ONLY)

Unless approved in writing by the Company's Authorized Representative, no tie-in or hot tap on the existing system shall be made unless the Company's Inspector is present. When the tie-in requires the operation of an existing valve or other control equipment, the conditions of Paragraph(s) 30 and 33 shall be complied with. The Contractor shall notify the Company twenty-four (24) hours prior to tie-in as to the exact time the Contractor plans to make tie-in so that the Company's Inspector will have sufficient time to locate valves and make necessary preliminary arrangements for shut down.

33. PLANNED INTERRUPTION OF WATER SERVICE (PIPELINE ONLY)

No valve or other control on an existing Company water system shall be operated for any purpose by the Contractor without approval of the Company's Inspector. All of the Company's water customers whose service is interrupted by a planned interruption, other than in cases of emergency, shall be notified by the Contractor at least twenty-four (24) hours before the planned interruption and advised of the probable time when the service will be restored.

34. EXISTING UTILITY FACILITIES (PIPELINE ONLY)

The Contractor shall notify all known utilities in the area of the work to be performed under the Contract and shall make arrangements to have their facilities marked in

accordance with A.R.S. 40-360.022 ("Blue Stake Law"). The Contractor shall be responsible for locating and preserving all marked facilities. Any damages to these marked facilities shall be repaired at the expense of the Contractor.

The Company will pay the cost to relocate its or other structures when such structures are found occupying the physical space of the proposed installation. It is understood that the Contractor will be reimbursed for such work only when written authorization from the Company has been obtained in advance of such work.

35. CLEANING UP

The Contractor shall remove from the Company's property and from all public and private property, at its own expense, all temporary structures, rubbish and waste materials resulting from its operations. In the event Contractor fails to do so, the Company may remove same at the expense of the Contractor.

36. WORKING HOURS (PIPELINE ONLY)

Unless stated to the contrary in the Invitation to Bid and/or so stated on the Construction Drawings, or agreed to by the Company during a Pre-Construction Conference, the Contractor shall not be permitted to perform work on Saturdays, Sundays, or Company holidays, or commence work such as tie-ins that cannot be completed during normal working hours.

37. INDEMNITY

A. The Contractor shall indemnify the Company against, and save and hold it harmless from, any and all liability, claims, demands, loss, actions, causes of action, expense, penalties, fines, assessments, damages and costs of every kind and nature for injury to or death of any and all persons, including, without limitation, employees or representatives of the Company or of the Contractor or of any subcontractor, or any other person or persons, and for damage, destruction or loss, consequential or otherwise, to or of any and all property, real or personal, including, without limitation, property of the Company or of the Contractor or of any subcontractor, or of any other person or persons, and the violation of any law, ordinance, rule, regulation, standard, or order resulting from or in any manner arising out of or in connection with the performance of the work under the Contract, howsoever same may be caused, including, without limitation, the Company's active or passive negligence. The Contractor shall also, upon request by the Company, and at no expense to the Company, defend the Company in any and all suits, concerning such injury to or death of any and all persons, and concerning such damage, destruction or loss, consequential or otherwise, to or of any and all property, real or personal, including, without limitation, suits by employees or representatives of the Company or of the Contractor or of any subcontractor, or any other person or persons, or concerning any court or administrative proceeding concerning the violation of any law, ordinance, rule, regulation, standard, or order. Excluded from this paragraph are only those injuries to or deaths of persons and damage, destruction or loss, to or of property arising from the sole negligence or willful misconduct of the Company.

B. Contractor shall indemnify the Company against, and save and hold it harmless from, any and all liability, claims, demands, damages, costs, expenses and attorney's fees, suffered or incurred on account of any breach of any obligation, covenant or other

provision of this contract, including without limitation, breach of the indemnity provisions of subsection A of this Section 37.

C. Contractor further agrees to defend, indemnify and hold harmless the Company, its directors, officers, employees, and agents, from and against any and all costs, damages, claims, expenses, violations, notices of violations, penalties, liens, assessments, and liabilities of every kind and nature, foreseeable or unforeseeable, directly or indirectly, arising from any release, removal, generation, use, storage or disposal on, under, around, or from the well site of any material, substance, or waste, hazardous or non-hazardous, including, without limitation, drilling fluids, mud, cuttings and development and test water howsoever same may be caused, including, without limitation, the Company's active or passive negligence.

38. LIENS

If at any time there shall be evidence of any lien or claim for which the Company might become liable and which is chargeable to the Contractor, the Company shall have the right to retain out of any payment then due or thereafter to become due, an amount sufficient to completely indemnify the Company against such lien or claim. If the Company determines that such lien or claim is valid, the Company may pay and discharge the same, and deduct the amount so paid from any monies which may be or become due and payable to the Contractor.

39. PAYMENT

Upon completion of the installation or construction, the Company will, within thirty (30) days after receipt of proper invoice and labor and material releases, pay the amount due the Contractor. If the Company believes that additional work, such as clean up, is required, it may deduct the total cost of such additional work from the amount to be paid to Contractor.

40. COMPANY'S RIGHT TO TERMINATE CONTRACT; DAMAGES DUE TO DELAY

If the Company finds the Contractor to be in material violation of any section of these General Conditions of Contract, Construction Specifications or Standard Specification Drawings or if the Contractor refuses or fails to prosecute the work, or any separable part thereof, with such diligence as will insure its completion within the time specified or any extension thereof, or fails to complete said work within such time, or when any other cause exists to justify such action, the Company may, without prejudice to any other right or remedy, by written notice to the Contractor, terminate its right to proceed with the work or such part of the work as to which there has been such violation, delay or other cause.

In the event the Contractor's right to proceed is terminated, the Company may take over the work and take possession of, and utilize in completing the work, such materials as may be on the site of the work and necessary therefore and prosecute said work to completion by whatever method it may deem expedient. The Contractor and its sureties shall be liable to the Company for any excess cost caused thereby.

In the event the Contractor's right to proceed with the work is terminated, the Contractor shall not be entitled to receive any further payment until the work is completed or the job is canceled. If the unpaid balance of the Contract price exceeds the expense of finishing

the work, including compensation for additional managerial and administrative services, such excess shall be paid to the Contractor. If such expenses exceed such unpaid balance, the Contractor shall pay the difference to the Company.

41. GUARANTEE

The Contractor shall guarantee all labor and workmanship and any materials it installs for a period of one year following the date of completion and acceptance by the Company. If any portion of the work or any of the materials become defective within the guarantee period, the Company will notify the Contractor of such defect. The Contractor must repair any defect within fifteen (15) days of such notification. If repairs are not completed within this time period, the Company may repair the defect, or cause such defect to be repaired, and the cost of such repairs shall be paid by the Contractor. The Company reserves the right to determine which defects are the result of poor labor and workmanship and which are caused by defective materials.

42. LIQUIDATED DAMAGES FOR NON PERFORMANCE; REQUEST FOR EXTENSION(S) OF TIME

Time is of the essence in the Contract. The time period required for completion of the work will be specified in the Contract. The Contractor agrees that the Company will suffer substantial damages in the event the Contractor fails to complete the work within the agreed upon time period. The Contractor and the Company agree that since it would be impracticable or extremely difficult to precisely fix such damages, a reasonable approximation of such actual damages suffered by the Company shall be a sum equal to 0.5% of the Contract price for each working day beyond the time period for completion of the work specified in the Contract.

Request by the Contractor for extensions of the time period shall be in writing and shall not become effective until approved in writing by the Company's Authorized Representative.

43. PAYMENT FOR REQUIRED TESTING

Whenever testing is required by any governmental agency or by the Company to assure conformance of the Contractor's work with the appropriate standard, it will be paid for as follows:

a. For testing required under permits obtained by the Company or testing specifically requested by the Company, the cost of the first test will be paid for by the Company. In the event of failure of the first test, the cost of all further testing associated with the failure will be paid by the Contractor.

b. For testing required under permits obtained by the Contractor, all costs will be paid by the Contractor. Testing of the pipeline for pressure and leakage will be included in the Contract price.

44. CONTRACT DEADLINES AND BONDS REQUIREMENTS

The time limits to be allowed for the completion of any work covered in the Contract shall be established as follows: In the proposal submitted to the Company, in response to the Invitation to Bid, the Contractor shall state the number of calendar days required for completion of the work. The time required will become a part of the Contract. When the Company is ready to proceed with the work, a Commencement Notice will be issued by the Company to the Contractor by mail. The Commencement Notice will allow the time required in the Contract plus ten (10) calendar days and will indicate the final day of the time allowed. The work cannot begin until the Company has received a performance bond and materials payment bond for the Contract price unless the bonds have been waived under the special conditions section of the Contract. The additional ten (10) days is the allowance for time to deliver the Commencement Notice to the Contractor and for the Contractor to return the performance bond and materials payment bond to the Company. Time extensions will be granted if warranted, and only at the time of the delay, thus extending the final day of the time allowed.

If the Company elects not to require a performance bond and a material payment bond for the work, the cost of the bonds will be deducted from the proposed total cost and the Contract will reflect this reduced cost and the bonds requirements will be waived under special conditions of the Contract.

ARIZONA WATER COMPANY

CONSTRUCTION SPECIFICATIONS: E-8-1

ERRATA 2010

ARIZONA WATER COMPANY

E-8-1

CONSTRUCTION SPECIFICATIONS FOR THE INSTALLATION OF WATER DISTRIBUTION SYSTEMS DUCTILE IRON

DEFINITIONS

A. Company. The words "Company" or "Arizona Water Company" mean Arizona Water Company, and where applicable, any division of Arizona Water Company, whose principal place of business is located at 3805 North Black Canyon Highway, Phoenix, Arizona 85015-5351 (Post Office Box 29006, Phoenix, Arizona 85038-9006).

B. Company's Authorized Representative. The words "Company's Authorized Representative" mean any officer of the Company, and any of the Company's Engineers, any Division Manager or Superintendent of the Company and/or such other person(s) designated in writing as the "Company's Authorized Representative" by the President or any Vice President of the Company.

C. Contractor. The word "Contractor" means either an individual or other entity employed to do the work as shown on the Construction Drawings and as specified herein.

D. Construction Drawings. The words "Construction Drawings" mean plans prepared by or on behalf of Arizona Water Company.

E. Contract. The word "Contract" means the written document titled "Proposal/Contract" when such document has been signed by an officer or other authorized representative of both the Contractor and the Company.

CONSTRUCTION SPECIFICATIONS
FOR THE INSTALLATION OF WATER DISTRIBUTION SYSTEMS
DUCTILE IRON

1. GENERAL

All work is to be completed in a safe, workmanlike manner and in accordance with these Construction Specifications; any deviation therefrom must be approved in writing by the Company.

Installations must conform with the requirements of all governmental regulating agencies and the cost of conforming to such regulations must be included in the unit bid prices. Examples of such regulations, without attempting to be inclusive, are:

a. Special compaction and paving for street crossing.
b. Shoring when required because of the trench depth.
c. Closing a trench in those areas where no open trench is allowed overnight.
d. Barricading and traffic control as required.

2. LOCATION MARKING

Alignment stakes as required in the opinion of the Company shall be furnished by the Company to the Contractor and shall be set by the Company at agreed upon intervals and offsets. Under normal circumstances these will reference the pipeline location five feet (5') into the right-of-way measured from property pins. Grade stakes will be provided only when the Construction Drawings show a pipeline depth other than covered in these Specifications. It is the responsibility of the Contractor to preserve all survey work.

3. TRENCH EXCAVATION

The trench location is to be determined by the Construction Drawings.

FOR 8-INCH OR SMALLER PIPE: The depth of the trench prior to pipe laying shall be such that the finished pipeline shall have between thirty-six inches (36") and forty-two inches (42") of cover unless otherwise specified on the Construction Drawings.

FOR 12-INCH AND LARGER PIPE: The depth of the trench prior to pipe laying shall be such that the finished pipeline shall have between forty-eight inches (48") and sixty inches (60") of cover unless otherwise specified on the Construction Drawings.

The width of the trench at and below the level at the top of the pipe shall be a minimum of twelve inches (12") plus the outside diameter of the pipe barrel and a maximum of twenty-four inches (24") plus the outside diameter of the pipe barrel.

The bottom of the trench shall be accurately graded to provide a uniform bearing for each length of pipe for the full length of the pipe. If the native material on the trench bottom can be reasonably dug by hand, bell holes shall be dug for the joints so that the joints in no way support the pipe. When native materials such as rock are encountered during trenching that will not provide a uniform support for the pipe, the trench will be over-excavated an additional six inches (6") and suitable bedding material will be placed in the trench.

Bedding material will be placed by hand in four-inch (4") lifts and compacted to ensure uniform compaction and to eliminate any voids under the pipe. When the space between the pipe and trench bottom varies, this must be backfilled and compacted in four-inch (4") lifts to the mid-section of the pipe.

Whenever the trench is over-excavated for whatever reason, the trench bottom will be brought up to the correct depth at the Contractor's expense using either method (a) or (b) as follows:

a. A.B.C. material shall be used and compacted to a uniform density of not less than 80% of the maximum density as determined by AASHTO T-99 method A and T-191.

b. Native material 100% of which will pass through a one and one-half inch (1½") screen and at least 20% of which will pass through a number-8 screen shall be used and compacted to a uniform density of not less than 85% of the maximum density as determined by AASHTO T-99 method A and T-191.

4. MATERIALS TO BE PROVIDED BY CONTRACTOR

Unless otherwise specified on the Construction Drawings or in the Contract, the Contractor will supply all of the necessary materials which will become a permanent and integral part of the water distribution system, including concrete blocking, anchors, backfill material, paving material and supplies used during the prosecution of the work. All materials provided by the Contractor to construct the water distribution system must be NSF Standard 61 approved. All potable water pipes and fittings shall have NSF-PW seal. Construction materials used in the water system shall be lead free as defined at AAC R28-4-504 and R18-1-101. The Contractor will provide the following m aterials:

a. FIRE HYDRANTS: Mueller Super Centurion 250 Fire Hydrant, meets ANSI/AWWA C502 Standard, Model No. A-423, 5¼" main valve opening, three way, 6" Mechanical Joint Shoe, 1½" pentagon operating nut, color - yellow, drain open, open direction - left, 4' or 4'6" bury depending on application. For pumper and hose nozzle inform ation see below.

(1) 1 - 4" Pumper Nozzle, NST and 2 – 2½" Hose Nozzles, NST. (These locations only: Ajo, Casa Grande, Coolidge and San M anuel.)

(2) 1 – 4½" Pumper Nozzle, NST and 2 – 2½ " Hose Nozzles, NST. (These locations only: Apache Junction, Arizona City, Lakeside, Oracle, Overgaard, Pinewood, Rimrock, Sedona, Sierra Vista, White Tank and Winkelman.)

(3) 1 – 4½" Pumper Nozzle, NST and 2 – 2½" Hose Nozzles, NPT (Bisbee only.)

(4) 1 - 3" Pumper Nozzle GA 6-350 (6 threads per inch, 3.50 pitch diameter) and 2 – 2½" Hose Nozzles, NPT (Miami only.)

(5) 1 – 3½" Pumper Nozzle GA 6-411 (6 threads per inch, 4.11 pitch diameter) and 2 – 2½" Hose Nozzle, NST (Superior only.)

b. FITTINGS: Manufactured by Tyler or Union. Crosses, Elbows, Tees, Cap, Reducer, Adapter, Plug, Blind Flange and Tapped Flange; Ductile Iron, Class 350, SSB, Cast Iron Cement Lined.

(1) Foster Adaptors for MJ, made by Infact Corporation: Available in size 4" to 16". Part No. 4" = 4FA-BC, 6" = 6FA-BC, 8" = 8FA-BC, 10" = 10FA-BC, 12" = 12FA-BC, 16" = 16FA-BC.

c. DETECTOR CHECK VALVE: Mueller/ Hersey EDC III, iron body, including 5/8" x ¾" Trim Kit. Trim Kit Part No.: 4" = 282080, 6" = 282082, 8" = 282085, 10" = 282496.

d. GATE VALVES: Mueller Resilient Wedge Gate Valves, meets AWWA C509 specification, 250 psig, Non-rising stem, Part No. A-2360 sizes 4" through 12"; Part No. A-2361 sizes 14" through 36", low zinc stems, epoxy coated inside and outside to meet the NSF 61 rating. The bonnet and stuffing box shall have 304 stainless steel bolts/nuts.

e. TRACER WIRE and WARNING TAPE:

1. TRACER WIRE: Shall be direct bury AWG #14 solid copper wire, Color: Blue.

2. WARNING TAPE: Reef Industries, Standard Terra Tape in 3" widths. Color: Blue and imprinted 'Arizona Water Company'.

f. AIR RELEASE VALVE: Crispin Model AR10 with 1" NPT inlet and ½" NPT outlet, cast iron body and top flange; with a 5/64" orifice with stainless steel valve sealing faces and BUNA-N rubber.

g. PRESSURE RELIEF VALVE: Watts 174A, Model M, 2" inlet, 2" outlet, Bronze Body, 30lb. to 150lb. pressure range.

h. MEGA LUG: Mechanical Joint restraint made of ductile iron conforming to ASTM 536-80, 250 psi made by EBAA Iron, Inc., series 1100 or equal.

i. METER BOXES:

(1) Concrete Box with a steel regular lid, Number 1: Tucson specification.

(2) Concrete Box with a steel regular lid, Number 2, 3, and 4: Phoenix specification.

j. PIPE, COPPER: Type K soft copper in 60 or 100-foot coils, per ASTM B88.

k. PIPE, DUCTILE IRON: Ductile Iron Pipe, Cement Lined, Push-on, conform to current ANSI/AWWA Specification A21.51/C151, Pressure Class 350 (sizes 4" through 12"), Pressure Class 250 (sizes 14" through 20"), or Pressure Class 200 for 24" through 36" pipe. Vendors:

(1) Pacific States Cast Iron Pipe Company
(2) Griffin Pipe
(3) United States Pipe and Foundry Company
(4) American Ductile Iron Pipe
(5) Clow Pipe (McWane, Inc.)

l. PIPE, PLASTIC: Plastic pipe, C-900 PVC per ANSI/AWWA C900, Class 150, sizes 6" through 12". NSF61 approved. Furnished in laying lengths of 20'. The barrel shall conform to the outside dimensions of steel pipe (IPS) or cast iron (CI) pipe equivalent and the wall thickness of dimension-ratio (DR) 18.

m. POLYETHYLENE ENCASEMENT (Polywrap): For all pipeline and related fittings installed, EXCEPT for the Coolidge Division. Minimum 8 Mil. and installed per AWWA C105/A21.5-93 and ASTM A-674-89. Manufactured by the Pacific States Cast Iron Pipe Company. The wrapping tape shall be minimum 10 mil. vinyl tape. No duct tape shall be used.

n. COUPLING: Mueller, straight three part union, tested to meet ANSI/AWWA C800, H15403, conductive com pression.

Mueller, H15428, straight coupling, conductive compression by male iron pipe, tested to meet ANSI/AWWA C800 specification. Size: 2".

Mueller, H15451, straight coupling, conductive compression by female iron pipe, tested to meet ANSI/AWWA C800 specification. Size: 2".

Viking Johnson brand, sold by Mueller: MaxiFit Straight (2"-24"), MaxiFitXtra Straight (4"-8") or MaxiStep Transition, tested to meet AWWA/ANSI C.219-91 specifications – certified to ISO 9001:1994 / Smith – Blair Quantum.

o. STOP, ANGLE METER, BALL: Mueller, valve, B24258, conductive compression by meter swivel nut, tested to meet ANSI/AWWA C800, size 5/8 " x ¾" x ¾" for a ¾" service or size 1" for a 1" service.

Mueller, valve, B24265, female pipe thread by meter swivel nut, tested to meet ANSI/AWWA C800, size 5/8" x ¾" x ¾" for a ¾" service or size 1" for a 1" service.

p. STOP, CORP: Mueller, ball valve, B25008, taper thread by conductive compression, tested to meet ANSI/AWWA C800 specification, sizes: ¾", 1" and 2".

Mueller, ball valve, B25028, iron pipe thread by conductive compression, tested to meet ANSI/AWWA C800 specification. Sizes ¾", 1", and 2".

Mueller, 300 Ball Curb Valve, B-25122, taper thread by conductive compression, tested to meet ANSI/AWWA C800 specifications, size: 2". (2" service)

q. STOP, CURB: Oriseal valve, H10291, iron pipe thread by iron pipe thread, quarter turn check, brass, tested to 300 psi working pressure, tested to meet ANSI/AWWA C800 specification, size: 2".

Mueller, B20283, Mueller 300 ball curb valve, female iron pipe by female iron pipe, quarter turn check, tested to meet ANSI/AWWA C800 specification. Size: 2". (Blow-off E-9-8-1).

r. TAPPING SADDLE: Smith Blair, Cast Bronze ASTM-B584 85-5-5-5, double strap, iron pipe threads, Models 321 and 323. Washers are silicon bronze, ASTM-B36. Gaskets are grade 60 Buna N, or Mueller bronze double strap service saddle, BR 2 B series, cast bronze, ASTM-B585, 85-5-5-5, or H16084, 200 psig, meets ANSI/AWWA C800.

s. TAPPING SLEEVE: Mueller H304 Stainless Steel Tapping Sleeve, JCM 432 18-8 Type 304 Stainless Steel Tapping Sleeve, Romac "SST" Type 304 Stainless Steel Tapping Sleeve or CASCADE-style CST-EX stainless steel pressure-rated tapping sleeve.

t. TAPPING VALVE: Mueller Resilient Wedge tapping valve, Catalog Number T-2360-16, Class 125, sizes 4" through 12"; T-2361-16, Class 125, sizes 14" to 36" all with Type 304 stainless steel fasteners; bypass valves are required on 18" – 36" valves flange by mechanical joint per ANSI/AWWA C111, iron wedge, non-rising stem. Epoxy coated interior/exterior per ANSI/AWWA C550 for NSF 61 compliance. 250 PSI range for valves 4" to 12". 150 PSI range for valves 14" to 36".

u. U-BRANCH: Mueller, H15364, 1" male iron pipe by ¾" male iron pipe, tested to meet ANSI/AWWA C800 specification. Size: 1" x ¾" x 13½", straight line.

v. VALVE BOXES: Valve Box with Cover, adjustable, Tyler 562-A or equal, made of cast iron.

w. VAULTS: Utility Vault Company, Chandler, AZ.

(1) 4484-WA concrete vault with a 3660 aluminum double torsion door with a recessed padlock hasp, two - 18" x 24" center knockouts.

(2) 575-WA concrete vault with a 4874 aluminum double torsion door with a recessed padlock hasp, two - 18" x 24" center knock outs and adjustable frame.

(3) 612-5X-WA concrete vault with a 4874 aluminum double torsion door with a recessed padlock hasp, two - 18" x 24" center knockouts.

x. VALVE, METER: Mueller, B24265-1, Mueller 300 ball angle meter valve, female iron pipe by meter nut, quarter turn check, lock wing, tested to meet ANSI/AWWA C800 specification. Size: 1".

Mueller, B25170, Mueller 300 ball straight valve, conductive compression by female iron pipe, quarter turn check, lock wing, tested to meet ANSI/AWWA C800 specification. Size: 1".

y. YOKES, METER: Relocator type copper meter yoke with horizontal inlet and outlet and meter thread ends, B24118, with lock wing Mueller 300 angle ball valve, full port, sizes: 1" x 12", 5/8" x ¾" x 7", 5/8 x ¾" x 9".

Mueller, 2" copper meter yoke with horizontal inlet and outlet and female iron pipe threads, B2423-99000, with lock wing Mueller 300 ball angle meter valves on inlet and outlet risers. Raised 1" by-pass with lock wing Mueller 300 ball valve.

The Contractor also will be required to provide the following materials, the cost of which will be included in its unit bid price:

All material and concrete for thrust blocks, other anchors, reinforcing steel; all gravel, crushed stone, A.B.C., earth, sand, or screened material which may be required; all material for bracing and shoring trenches and for construction of forms; all barricades and traffic control equipment; all material for paving replacement and any water used for compaction of backfill.

5. INSTALLATION OF MATERIALS

All materials are to be installed in accordance with manufacturer's recommendations unless otherwise directed by these S pecifications.

All pipe, fittings and valves shall be laid true to the lines, grades and locations established by the Specifications and the Construction Drawings.

The ends and inside of the pipe shall be thoroughly cleaned and inspected for damage. No damaged materials shall be installed in the water distribution system .

Whenever the work ceases for any reason, all open pipeline ends shall be tightly plugged by the Contractor. Plugs shall be watertight and approved by the company.

Concrete thrust blocks of the sizes required by the plans and specifications are to be provided at all valves, changes in direction or size, or at any other point where an unbalanced thrust due to water pressure would exist. Thrust blocks are to be formed to prevent any concrete from spilling over or into a joint.

Trench curves as shown on the Construction Drawings may be made without fittings when using push on joint pipe up to twelve inches (12") in diameter, if the deflection of the pipe does not exceed five degrees (5°) or nineteen inches (19") per eighteen-foot (18') length of pipe. The minimum radius of such curves will be two hundred five feet (205').

Prior to construction, the appropriate agency(ies) will be notified as required by the permit(s).

It shall be the Contractor's responsibility to uncover all existing water lines being connected to, and to verify the location, depth and size of pipe befor e any construction begins.

Any construction performed without the knowledge of the duly authorized representative is liable for removal and replacem ent at the Contractor's expense.

All fire hydrants, frames, covers and valve boxes, etc. shall be adjusted to finished grade prior to the placing of the asphalt concrete surface course by the Contractor (where applicable).

Air release valves shall be installed at water system high points per Standard Detail E-9-8-2.

All water services shall be set a minimum of two feet (2') on the customer's property, preferably within the P.U.E. and not within right-of-way.

Unless otherwise specified on the construction drawings, all water mains shall be installed five feet (5') from the property line inside the right-of-way or easement.

Water valves shall be spaced not more than five hundred feet (500') in commercial districts and not more than eight hundred feet (800') in other districts. Variations may be required for transmission mains or special applications.

Installation of water line casing shall be per Standard Speci fication E-9-24-1.

Tracer Wire and Warning Tape are to be installed on all mains, tees, crosses, ells and fire hydrant laterals. They will not be installed on service lines. The tracer wire will be installed on the water main 45 degrees from the vertical centerline of the pipe and shall be taped to the fittings directly and on the main every 10 feet using a minimum 10 mil vinyl tape. The tracer wire shall be placed between the valve riser and box with a minimum of 12" of wire inside. The warning tape shall be installed a minimum of two feet below the surface, being measured from final grade, directly over the center of the pipe. Any splices in the tracer wire shall be joined using waterproof connectors. Any splices in the warning tape shall be joined using minimum 10 mil vinyl tape. The tracer wire shall be tested for continuity after backfill and compaction, but before paving. Any detected damages to the wire shall be repaired before paving will be allowed.

6. BACKFILL OF WATER MAIN TRENCHES

Backfill of any excavation shall conform to the requirements of any of the governmental agencies having jurisdiction over the location. If no governmental agency having such jurisdiction specifies backfill or compaction requirements, and no special requirements are shown on the Construction Drawings, the procedure set forth in this section will apply for water line trenches.

The bedding material above the pipe and backfill material shall be compacted to a minimum of 70% compaction within a utility easement and 80% compaction within a right-of-way as determined by AASHTO T-99 method A and T-191. If water settling is used for compaction, it is the responsibility of the Contractor to prevent the pipe from floating.

The bedding material shall be either native material, 100% of which will pass through a one and one-half inch (1½") screen and at least 20% of which will pass through a number-8 screen, or imported material which conforms to M.A.G. specifications for A.B.C. or type-B

select materials. Bedding material shall be used below and around the pipe and a minimum of twelve inches (12") above the pipe. Shade and bedding material to be mechanically compacted prior to remainder of trench back-fill.

The remainder of the trench shall be backfilled with native or imported material which shall be of sound earthen material free from broken concrete, wood, broken pavement, or other unsuitable substances. Except as otherwise specified, backfill may be material containing no pieces larger than six inches (6") in greatest dimension.

Where settlement occurs, additional backfill material shall be placed and compacted and the trench shall be brought to final grade.

7. HYDROSTATIC TESTING OF COMPLETED PIPELINES

Hydrostatic testing of water pipelines will be completed before the new system is connected into the existing water system so that all testing can be done against all new materials.

The completed section of water pipeline to be tested shall be slowly filled with water with care being taken to expel all air from the pipe. If necessary, the pipe will be tapped at high points to vent air.

The Contractor shall provide all equipment and labor necessary to accomplish this testing and the price shall be included in the unit prices. The Contractor shall notify the Company in advance of the testing so that the Company can schedule a duly authorized representative to be at the site during testing. The Contractor, at its own expense, shall make any necessary repairs to the system being tested in order to cause the section being tested to meet the test limits set below. The Contractor may request authorization of the Company to connect the new pipelines to the existing system prior to completion of pressure testing when, in the Company's sole opinion and judgment, conditions warrant such connection.

The Contractor shall assume all responsibility to complete pressure testing to Company's specifications after such connection, including, but not limited to, isolation of the new pipelines from the existing system, if necessary.

Connections prior to completion of pressure testing shall not be made unless prior Company authorization has been obtained, and any extra expenses resulting from such connections shall be the sole responsibility of the Contractor.

Leakage tests will be for a period of two hours at 200± 5 psi at the point of lowest elevation; leakage may not exceed 0.1 gallons per hour per one thousand feet (1,000') of pipe per inch of diameter. If dry utilities are not installed, a second pressure test is required.

8. STERILIZATION AND FLUSHING OF COMPLETED WATER PIPELINES

Sterilization and flushing will conform to recommendations of Arizona State Department of Health Services Engineering Bulletin Number 8, latest edition, or any future Arizona Department of Environmental Quality bulletins. Contractor to follow all conditions of any discharge permit.

9. NO OTHER UTILITIES ALLOWED IN OR NEAR WATER PIPELINE TRENCHES

No other utility installations will be permitted in the water pipeline trench or within five feet (5') of the Company's water pipeline when running parallel to the water pipelines.

10. PROTECTION OF WATER MAINS NEAR SEWERS

In order to protect water mains from contamination by sewers, the installation of the water mains must conform to the following requirements:

a. Horizontal - When water lines and sewers are laid parallel with each other, the horizontal distance between them shall not be less than six feet (6'). Each line shall be laid on undisturbed or bedded material in a separate trench. Where conditions prevent the minimum horizontal separation set forth above, extra protection will be required. Extra protection shall consist of constructing the sewer main with mechanical joint ductile iron pipe or with slip-joint ductile iron pipe if joint restraint is provided, or encasing both the water main and sewer main in concrete. See Detail E-9-30-1 and E-9-30-2

The Construction Drawings shall indicate the installation requirements. The drawings showing these exceptions shall have been approved by the appropriate state and/or county health department. Refer to the diagram below for clarification.

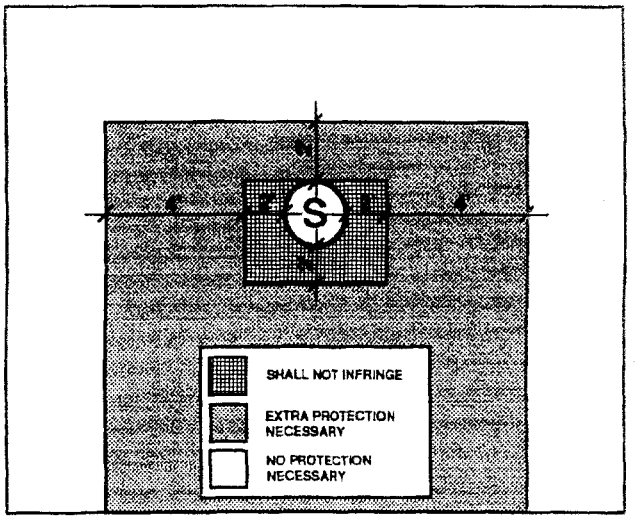

Under no circumstances will the horizontal separation between sewer mains and water mains be less than two feet (2'). All distances are to be measured from the outside of the sewer main to the outside of the water main.

b. Vertical - When a water main is parallel with or crosses a sewer main within two feet (2') above the sewer or greater than two feet (2') below the sewer, extra protection will be required. Extra protection shall consist of constructing the sewer main with mechanical joint ductile iron pipe or with slip-joint ductile iron pipe if joint restraint is provided, or encasing both the water main and sewer main in concrete. See Detail E-9-30-1 and E-9-30-2.

The Construction Drawings shall indicate the installation requirements. The drawings showing these exceptions shall have been approved by the appropriate state and/or county health department.

Under no circumstances will the vertical separation of a sewer main installed above a water main be less than two feet (2'). All distances are to be measured from the outside of the sewer main to the outside of the water main. Refer to the diagram above for clarification.

c. When unusual conditions such as, but not limited to, highway or bridge crossings prevent the water and sewer main separations required from being met, the appropriate state and/or county health department will review and may approve requests for authorization to use alternate construction techniques, materials and joints on a case-by-case basis.

d. No water pipe shall pass through or come into contact with any part of a sewer manhole. The minimum horizontal separation between water mains and manholes shall be six feet (6'), measured from the center of the manhole.

e. The minimum separation between force mains or pressure sewers and water mains shall be two feet (2') vertically and six feet (6') horizontally under all conditions. Where a sewer force main crosses above, or less than six feet (6') below, a water line, the sewer main shall be encased in at least six inches (6") of concrete for ten feet (10') on either side of the water main. Refer to the diagram below for clarification.

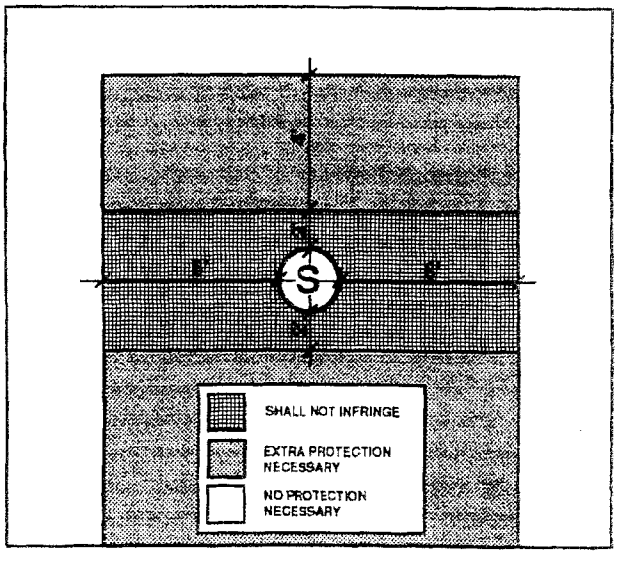

f. Sewer mains (gravity, pressure, force) shall be kept a minimum of fifty feet (50') from drinking water wells, unless the following conditions are met:

1. Water main pipe, pressure tested in place to 50 psi without excessive leakage, may be used for gravity sewers at distances greater than twenty feet (20') from drinking water wells.

2. Water main pipe, pressure tested in place to 150 psi without excessive leakage, may be used for pressure sewers and force mains at distances greater than twenty feet (20') from drinking water wells.

g. No septic tank/disposal field system shall be constructed within one hundred feet (100') of a drinking water well.

h. All distances are measured perpendicularly from the outside of the sewer main to the outside of the water main. These separation requirements do not apply to building, plumbing or individual house service connections.

i. Use Mechanical Joint ductile iron pipe with Megalug thrust restraints a minimum of ten (10') feet on each side of a sewer or storm drain crossing.

11. COMPACTION

When crossing existing water mains a minimum of 95% compaction is required to the bottom of existing mains.

Arizona Water Company requires that no slurry be permitted to contact existing cement/asbestos or ductile iron pipes, unless authorized by the company. Slurry may be poured in the bottom of the sewer trench stopping three inches (3") below the existing water main. The backfill used around the main should be AB in sufficient depth to prevent slurry from contacting existing main.

12. WATER MAIN MATERIAL SPECIFICATIONS

Ductile iron pipe (Push-on type) minimum class 350, cement lined and conform to AWWA C151.

All main line valves shall conform to AWWA C500 with a minimum working pressure of 200 psi.

All cast iron fittings to be cement lined in accordance with AWWA C104 and shall conform to AWWA C110 with a minimum working pressure of 250 psi. Except for the Coolidge System – See Note 4L.

Maximum joint deflection for 6" mechanical joint ductile iron pipe is seven degrees, seven minutes (7°, 7') or twenty-seven inches (27") per eighteen-foot (18') length pipe, for a maximum curve of one hundred forty-five feet (145').
Maximum joint deflection for 8" and 12" mechanical joint ductile iron pipe is five degrees, twenty-one minutes (5° 21') or twenty inches (20") per eighteen-foot (18') length pipe, for a maximum curve of one hundred ninety-five feet (195').

Maximum joint deflection for 6", 8" and 12" push-on joint ductile iron pipe is five degrees (5°) or nineteen inches (19") per eighteen-foot (18') length pipe for a maximum curve of two hundred five feet (205').

ARIZONA WATER COMPANY

3805 N. BLACK CANYON HIGHWAY, PHOENIX, ARIZONA 85015-5351 • P.O. BOX 29006, PHOENIX, ARIZONA 85038-9006
PHONE: (602) 240-6860 • FAX: (602) 240-6878 • WWW.AZWATER.COM

November 24, 2010

Mr. Tony Geiger
US Pipe – Waterworks Marketing Consultants
34522 N. Scottsdale Road
Scottsdale, Arizona 85226

Re: US Pipe Sentinel Fire Hydrants and Resilient Wedge Gate Valves

Dear Mr. Geiger:

Thank you for your interest in working with Arizona Water Company (the "Company") to add US Pipe Sentinel Fire Hydrants and Resilient Wedge Gate Valves to the Company's material and equipment specifications. Based on the US Pipe product information you provided and your field presentations to our operations and engineering staff, the Company is pleased to inform you that the following items are approved for use in the Company's water systems in Arizona.

Sentinel Fire Hydrant:

- Model Sentinel 250
  - 5¼" MVO
  - 4½" pumper
  - 2½" hose
  - Meets AWWA C-502 standard and approval by ULFM

Resilient Wedge Gate Valves:

- Model US Pipe A-USP0
  - Meets AWWA C-509 Full Body Cast Iron includes 304 SS Nuts, Bolts & Low Zinc Bronze Stem
  - Size range 2" thru 12"
- Model US Pipe A-USP1
  - Meets AWWA C-515 Reduced Wall Ductile Iron includes 304 SS Nuts, Bolts & Low Zinc Bronze Stem
  - Size range 14" thru 48"

We look forward to developing a long-term relationship with you and the US Pipe products. If I can be of any assistance, please call me.

Very truly yours,

Fredrick K. Schneider
Vice President – Engineering

afh

VIA EMAIL: TGEIGER4@COX.NET

ARIZONA WATER COMPANY

3805 N. BLACK CANYON HIGHWAY, PHOENIX, ARIZONA 85015-5351 • P.O. BOX 29006, PHOENIX, ARIZONA 85038-9006
PHONE: (602) 240-6860 • FAX: (602) 240-6878 • WWW.AZWATER.COM

October 19, 2010

Mr. Jim Ryan
Clow Valve Company
8121 N. 10th Avenue
Phoenix, Arizona 85021

Re: Clow Medallion Fire Hydrants and Resilient Wedge Gate Valves

Dear Mr. Ryan:

Thank you for your interest in working with Arizona Water Company (the "Company") to add Clow Medallion Fire Hydrants and Resilient Wedge Gate Valves to the Company's material and equipment specifications. Based on the Clow product information you provided and your field presentations to our operations and engineering staff, the Company is pleased to inform you that the following items are approved for use in the Company's water systems in Arizona.

Medallion Fire Hydrant:

- Model F-2545
  - 5¼" MVO
  - 4½" pumper
  - 2½" hose
  - Meets AWWA C-502 standard and approval by ULFM

Resilient Wedge Gate Valves:

- Model 2639 & 2640
  - Meets AWWA C-509 Full Body Cast Iron includes 304 SS Nuts, Bolts & Low Zinc Bronze Stem
  - Size range 2½" thru 12"
- Model 2638
  - Meets AWWA C-515 Reduced Wall Ductile Iron includes 304 SS Nuts, Bolts & Low Zinc Bronze Stem
  - Size range 14" thru 48"

E-MAIL: mail@azwater.com

We look forward to developing a long-term relationship with you and the Clow products. If I can be of any assistance, please call me.

Very truly yours,

Fredrick K. Schneider
Vice President – Engineering

lar

VIA EMAIL: JIM.RYAN@CLOWVALVE.COM

February 21, 2012

Contractor

Re: Fitting Specifications

Dear Contractor:

Effective March 1, 2012, Arizona Water Company (the "Company") has changed its fitting specifications for Ductile Iron Fittings and Ductile Iron Flanged Fittings ("Fittings"). All Fittings purchased by the Company, on the Company's behalf or installed with the intent of being conveyed to the Company, must comply with the requirements noted below.

Previous Fitting Specifications:

Fittings

Manufactured by Tyler or Union, Crosses, Elbows, Tees, Cap Reducer, Adapter, Plug, Blind Flange and Tapped Flange: Ductile Iron, Class 350, SSB, and Cast Iron Cement Lined.

New Fitting Specification:

Ductile Iron Fittings (Push-On and Mechanical Joint)

Ductile Iron Push-On and Mechanical Joint ("MJ") fittings for water lines shall be made of ductile iron per ASTM A536 and be cast in the United States of America. Fittings shall have USA cast on the fitting to designate they are made in the United States. All fittings will be manufactured and tested in accordance with ANSI/AWWA C153/A21.53 for compact design and ANSI/AWWA C110/A21.10 for full body design. In accordance with ANSI/AWWA C104/A21.4 fittings 2" – 3" will be single thickness cement mortar lined and 4" – 64" will be cement mortar lined. Fittings will be Asphaltic seal coated on the exterior in accordance with ANSI/AWWA C104/A21.4. MJ fittings with flanged end(s) will match ANSI/AWWA C115/A21.15 and ANSI B16.1 class 125 flanges. All fittings shall be NSF-61 listed for use with potable water.

Ductile Iron Flanged Fittings

Ductile Iron flanged fittings for water lines shall be made of ductile iron per ASTM A536 and be cast in the United States of America. Fittings shall have USA cast on the fitting to designate they are made in the United States. All fittings will be manufactured and tested in accordance with ANSI/AWWA C110/A21.10 design. Flange ends will match ANSI/AWWA C115/A21.15 and ANSI B16.1 class 125 flanges. In accordance with ANSI/AWWA C104/A21.4 fittings 2" – 3" will be single thickness lined and 4" – 64" will be cement mortar lined. Fittings will be Asphaltic seal coated on the exterior in accordance with ANSI/AWWA C104/A21.4. All fittings shall be NSF-61 listed for use with potable water.

If you have any questions or require further information, please contact me at 602-240-6860.

Very truly yours,

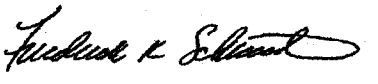

Fredrick K. Schneider, PE
Vice President - Engineering
engineering@azwater.com

afh
Enclosure

ARIZONA WATER COMPANY

STANDARD SPECIFICATION DRAWINGS: E-9-1

ERRATA 2010

ARIZONA WATER COMPANY

STANDARD SPECIFICATION DRAWINGS - DUCTILE IRON

INDEX (E-9)

E-9-1	TYPICAL GATE VALVE LOCATIONS
E-9-2	INSTALLATION OF TYPICAL VERTICAL AND HORIZONTAL GATE VALVES
E-9-3	INSTALLATION OF TYPICAL TAPPING SLEEVE AND VALVE
E-9-4	INSTALLATION OF TYPICAL VALVE SUBJECT TO NON-VEHICULAR AND VEHICULAR TRAFFIC
E-9-5	INSTALLATION OF TYPICAL THRUST BLOCKING SCHEDULE THRUST BLOCK FOR VERTICAL BENDS, AND MEGALUG THRUST RESTRAINTS
E-9-6	INSTALLATION OF TYPICAL PERPENDICULAR FIRE HYDRANT
E-9-7	INSTALLATION OF TYPICAL PARALLEL FIRE HYDRANT
E-9-8	INSTALLATION OF TYPICAL 2" BLOWOFF DEVICE, AND AIR RELEASE VALVE
E-9-9	INSTALLATION OF TYPICAL SINGLE SERVICE CONNECTION FOR A 3/4" OR 1" METER
E-9-10	INSTALLATION OF TYPICAL DOUBLE SERVICE CONNECTION FOR A 3/4" AND 1" METER
E-9-11	INSTALLATION OF TYPICAL 2" SERVICE CONNECTION
E-9-12	INSTALLATION OF 3" COMPOUND METER, 4" COMPOUND METER, 6" COMPOUND METER, 6" COMPOUND SERVICE, CONCRETE VAULT, AND NON-POTABLE PROPELLER METER
E-9-13	INSTALLATION OF TYPICAL 4" THRU 8" DETECTOR CHECK VALVES AND 3" THRU 10" REDUCED PRESSURE PRINCIPLE DETECTOR WITH BYPASS METER ASSEMBLY (RPDA) FOR FIRE LINE SERVICES
E-9-14	INSTALLATION OF TYPICAL PRESSURE RELIEF VALVE ASSEMBLY
E-9-15	INSTALLATION OF TYPICAL PRESSURE REDUCING STATION
E-9-16	PAINT COLOR SELECTION
E-9-17	STEEL WATER STORAGE TANK
E-9-18	HYDROPNEUMATIC TANK
E-9-19	INSTALLATION OF WELL SHELTER

E-9-20	INSTALLATION OF TYPICAL WELL WITH LINE SHAFT TURBINE PUMP
E-9-21	INSTALLATION OF TYPICAL WELL WITH SUBMERSIBLE TURBINE PUMP
E-9-22	INSTALLATION OF COLUMN PIPE, OIL TUBE AND LINE SHAFT
E-9-23	HOT TAP AND JUMPER METER CONNECTION
E-9-24	INSTALLATION OF TYPICAL WATER LINE ENCASEMENT
E-9-25	INSTALLATION OF CALCIUM HYPOCHLORITE TABLET CHLORINATOR
E-9-26	INSTALLATION OF CHAIN LINK FENCE
E-9-27	INSTALLATION OF SIDE HUNG WATER LINE SUSPENSION
E-9-28	PIPE WARNING TAPE, LOCATOR WIRE, AND LOCATOR WIRE TERMINATION
E-9-29	INSTALLATION OF A TYPICAL SAMPLING STATION
E-9-30-1	WATER AND SANITARY SEWER SEPARATION/PROTECTION PERPENDICULAR
E-9-30-2	WATER AND SANITARY SEWER SEPARATION/PROTECTION – PARALLEL

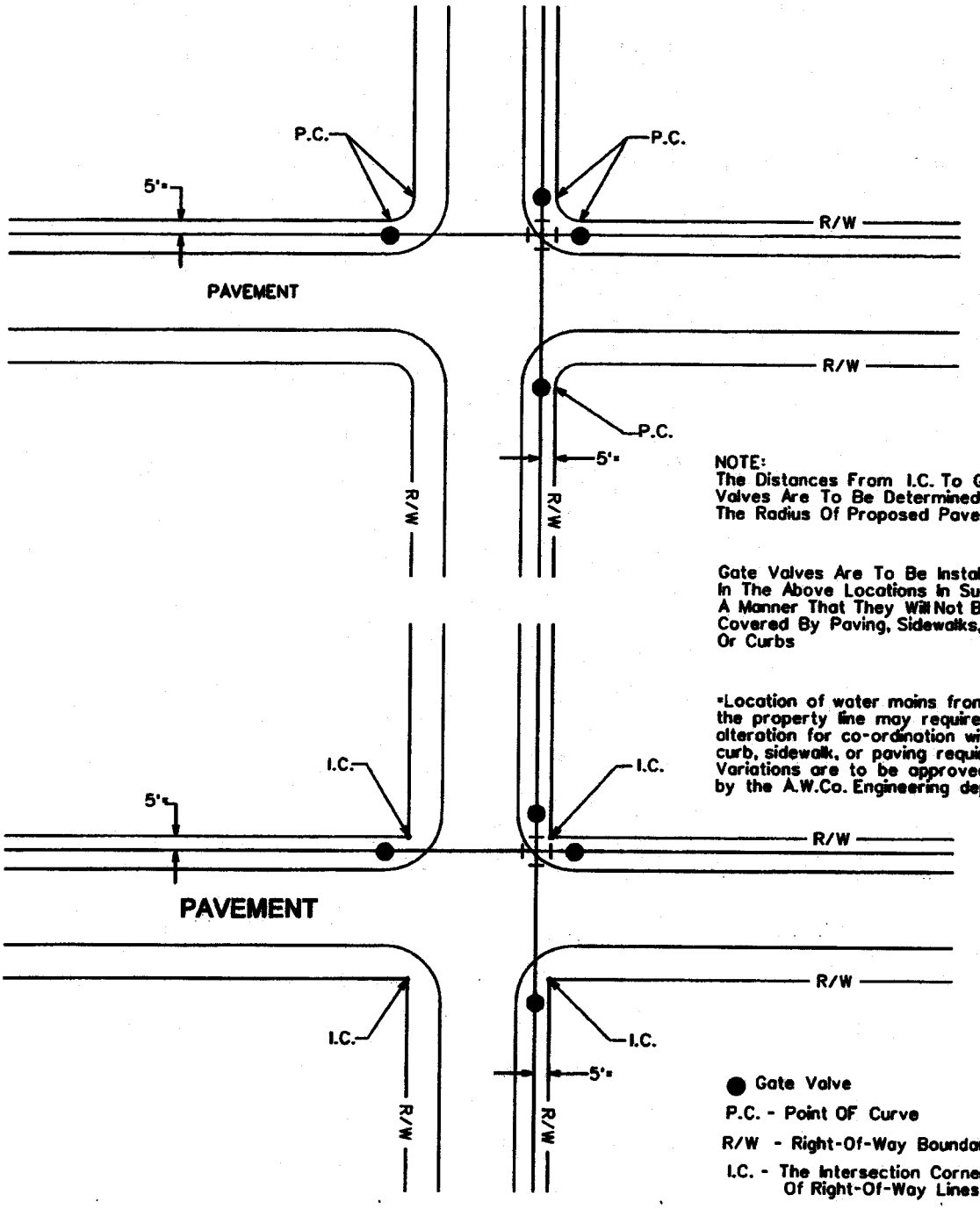

NOTE:
The Distances From I.C. To Gate Valves Are To Be Determined By The Radius Of Proposed Pavement.

Gate Valves Are To Be Installed In The Above Locations In Such A Manner That They Will Not Be Covered By Paving, Sidewalks, Or Curbs

*Location of water mains from the property line may require alteration for co-ordination with curb, sidewalk, or paving requirements. Variations are to be approved by the A.W.Co. Engineering dept.

● Gate Valve

P.C. - Point OF Curve

R/W - Right-Of-Way Boundary

I.C. - The Intersection Corner Of Right-Of-Way Lines

ARIZONA WATER COMPANY

STANDARD SPECIFICATION
FOR THE INSTALLATION OF

TYPICAL GATE VALVE LOCATIONS

DRAWN BY:	APPROVED BY:	DATE:	△	
CCO	M.W.	3/20/86	△ 1/31/2001	E-9-1-1

FOR 6" THROUGH 12" GATE VALVES

Mueller Resilient Wedge Gate Valves
Catalog Number A-2360-__
ANSI/AWWA C509 Compliant

FOR 14" THROUGH 16" GATE VALVES

Mueller Resilient Wedge Gate Valves
Catalog Number A-2361-__
ANSI/AWWA C509 Compliant

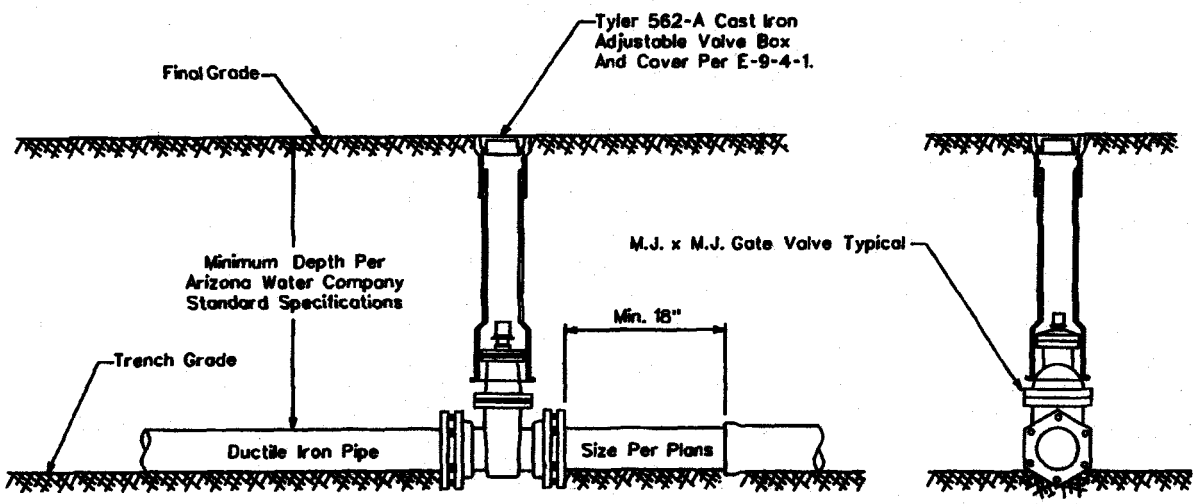

All Valves Installed On Pipe Five Feet (5') Deep And Greater Are To Be Installed With A Valve Operator Extension, Mueller Catalog No. A-26441.

ARIZONA WATER COMPANY

STANDARD SPECIFICATION
FOR THE INSTALLATION OF

TYPICAL VERTICAL GATE VALVES

DRAWN BY:	APPROVED BY:	DATE:	△ 08.23.2006	E-9-2-1
CB	MW	03.20.1986		

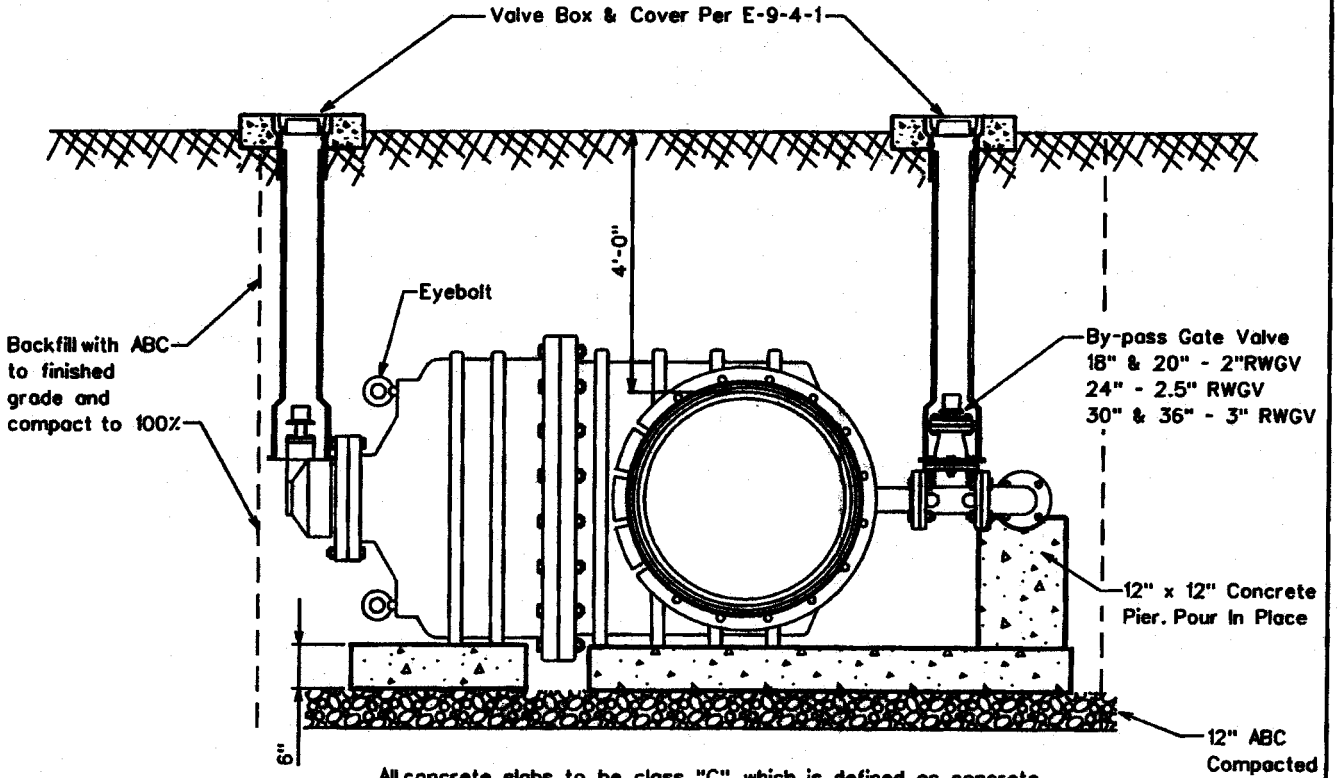

All concrete slabs to be class "C", which is defined as concrete whose minimum compressive strength at 14 days reaches 1600psi and at 28 days reaches 2000psi. per MAG Section 725, Table 725-1. Slabs to be formed and poured prior to valve installation.

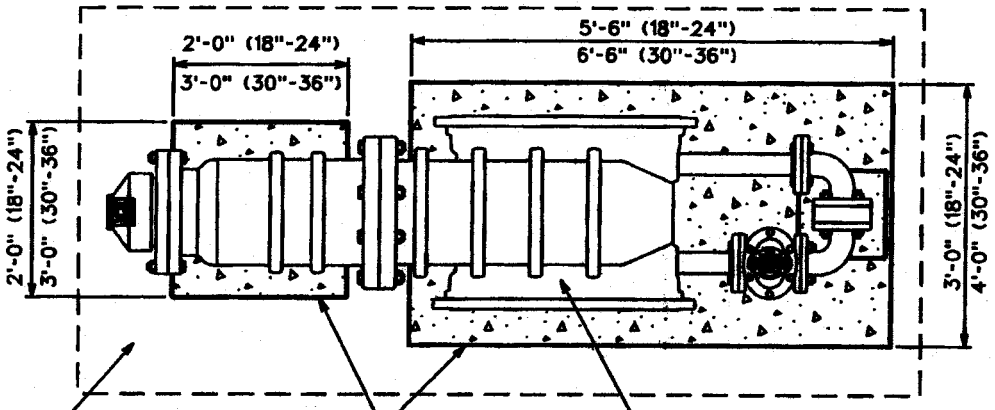

All valves installed on pipe five feet and greater are to be installed with a valve operator extension Mueller catalog No.A-26441 The distance is measured from the top of the operating nut to final grade.

ARIZONA WATER COMPANY

STANDARD SPECIFICATION

FOR THE INSTALLATION OF

INSTALLATION OF BEVEL GEARED HORIZONTAL GATE VALVES WITH BY-PASS FOR 18" AND LARGER VALVES

DRAWN BY:	APPROVED BY:	DATE:	△	
CB		12.07.2004		E-9-2-2

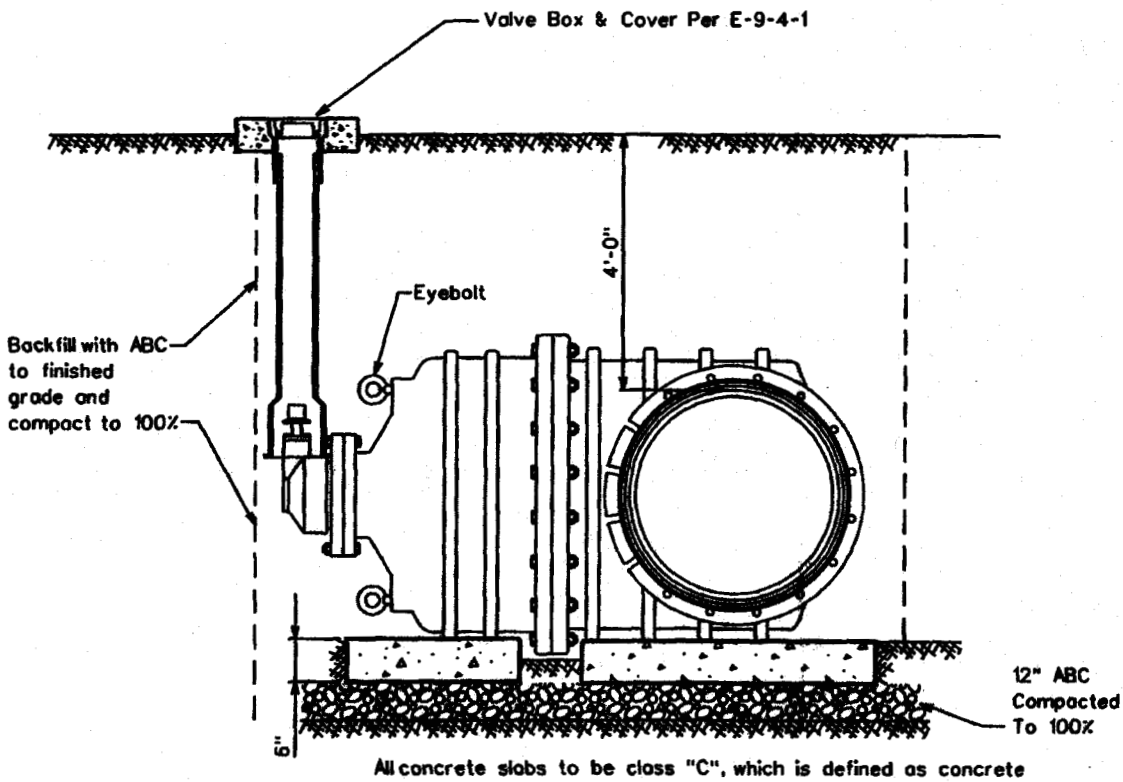

All concrete slabs to be class "C", which is defined as concrete whose minimum compressive strength at 14 days reaches 1600psi and at 28 days reaches 2000psi. per MAG Section 725, Table 725-1. Slabs to be formed and poured prior to valve installation.

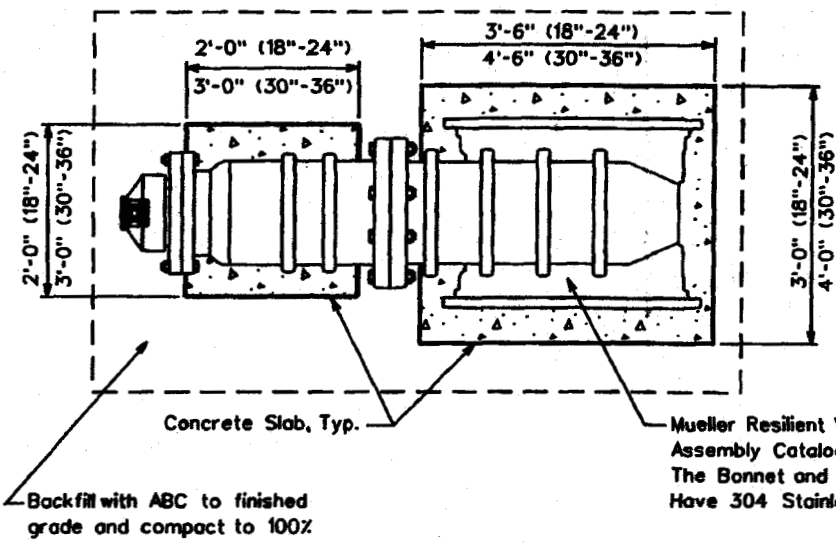

All valves installed on pipe five feet and greater are to be installed with a valve operator extension Mueller catalog No.A-26441 The distance is measured from the top of the operating nut to final grade.

ARIZONA WATER COMPANY

STANDARD SPECIFICATION

FOR THE INSTALLATION OF

INSTALLATION OF BEVEL GEARED HORIZONTAL GATE VALVES WITHOUT A BY-PASS FOR 18" AND LARGER VALVES

DRAWN BY:	APPROVED BY:	DATE:	△ 5.13.2005	E-9-2-3
CB		12.07.2004		

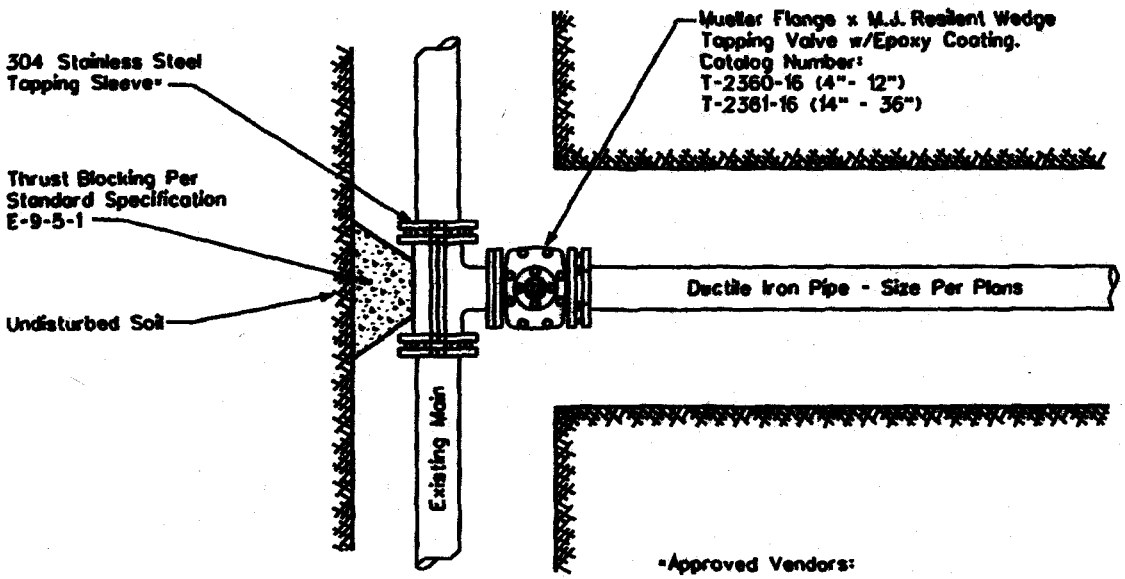

*Approved Vendors:

Mueller, Catalog No. H304, 304 Stainless Steel

JCM, Model 432, 304 Stainless Steel

Romac, 'SST', 304 Stainless Steel

Cascade, 'CST-EX', 304 Stainless Steel

NOTE:

1. All flanges, bolts, and nuts shall be kept free of concrete.
2. Air pressure test the tapping sleeve before the live tap is made.
3. Polywrap all new fittings

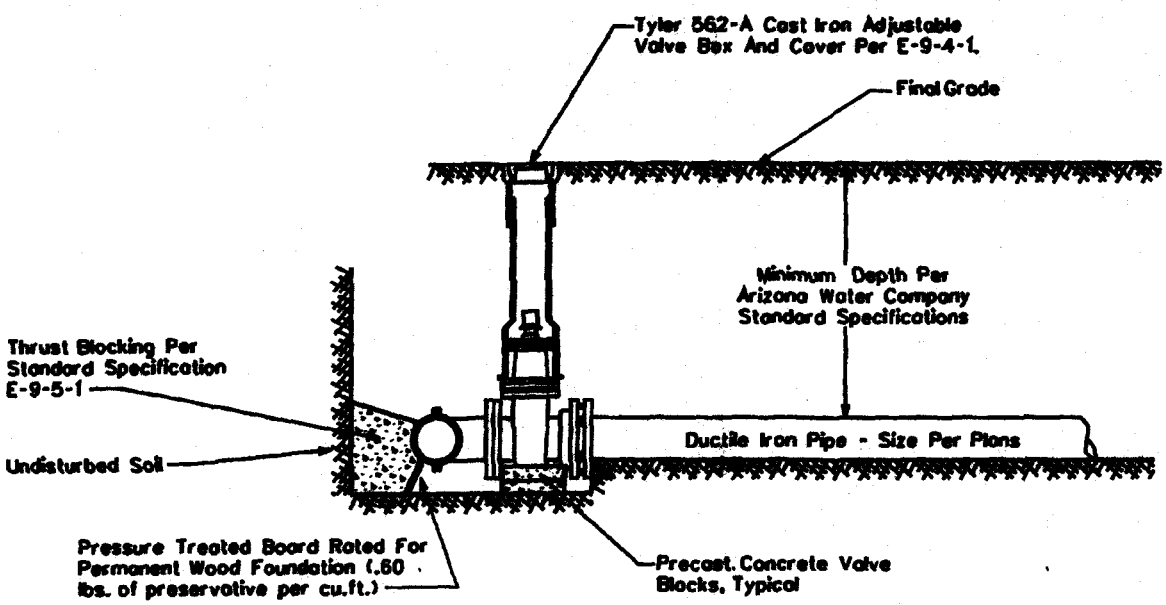

ARIZONA WATER COMPANY

STANDARD SPECIFICATION

FOR THE INSTALLATION OF

TYPICAL TAPPING SLEEVE AND VALVE

DRAWN BY:	APPROVED BY:	DATE		
CB	MW	03.20.1986	△08.23.2006	E-9-3-1

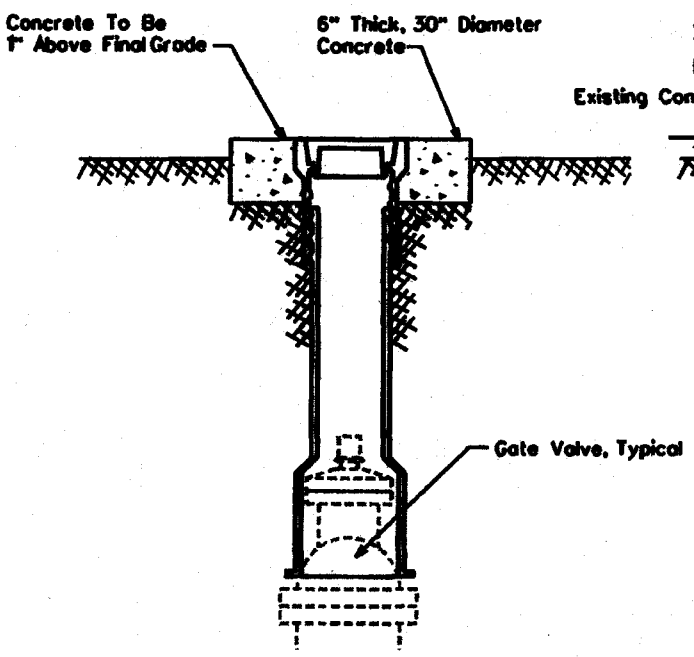

NON-VEHICULAR VALVE BOX

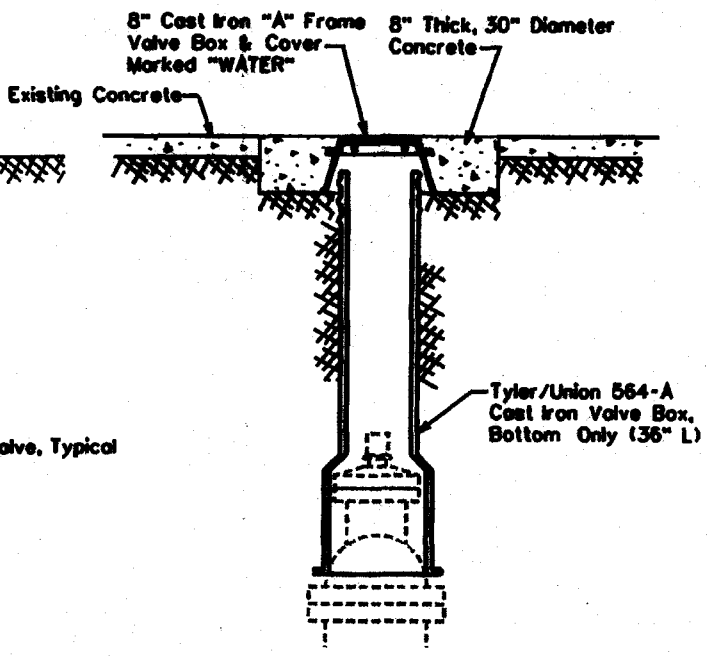

CONCRETE VALVE BOX

For Areas Subject To Vehicular Traffic

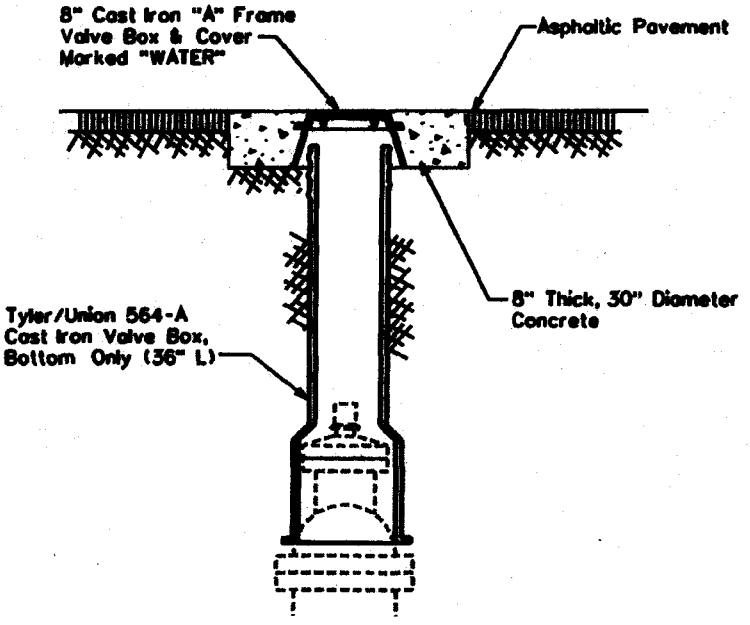

ASPHALT VALVE BOX

For Areas Subject To Vehicular Traffic

NOTE:

1. The Valve Box Shall Be Adjusted To Finished Grade Prior To Placing Of Asphalt And/Or Concrete.
2. For Non-Traffic Areas Use Tyler/Union 562-A, Two-Piece, 6855 Series Or Equivalent Adjustable Cast Iron Valve Box And Cover. Valves 4" To 12"

   For Traffic Areas, Use Tyler/Union 564-A Bottom Section Only With An 8" Cast Iron "A" Frame With Cover. Valves 4" To 12"
3. All Valves Installed Five Feet (5') Deep And Greater Are To Be Installed With A Valve Operator Extension, Mueller Catalog No. A-26441 And Shall Have A Debris Cap
4. Use Minimum Class 'C' Concrete which is defined as concrete whose minimum compressive strength at 14 days reaches 1600psi and at 28 days reaches 2000psi. per MAG Section 725, Table 725-1.

ARIZONA WATER COMPANY

STANDARD SPECIFICATION

FOR THE INSTALLATION OF

TYPICAL VALVE SUBJECT TO NON-VEHICULAR AND VEHICULAR TRAFFIC

DRAWN BY:	APPROVED BY:	DATE:	△ 8.24.2006	E-9-4-1
CB	MW	03.20.1986		

CROSSES

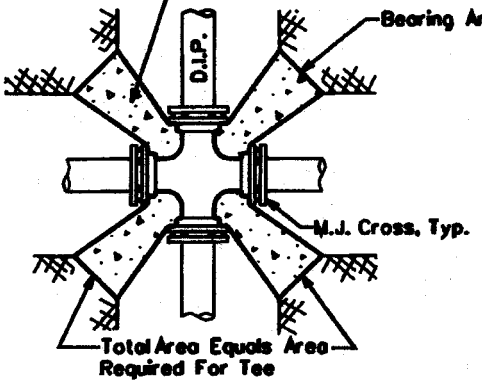

TEES

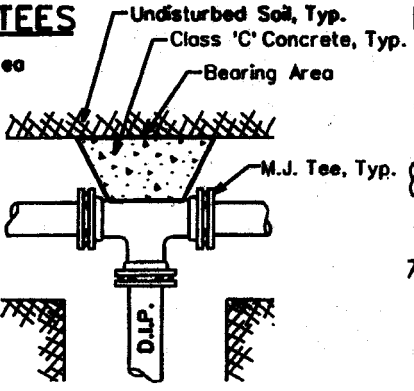

ELLS

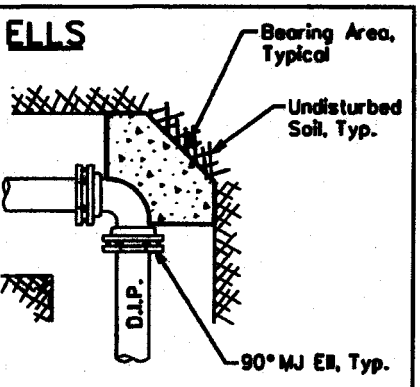

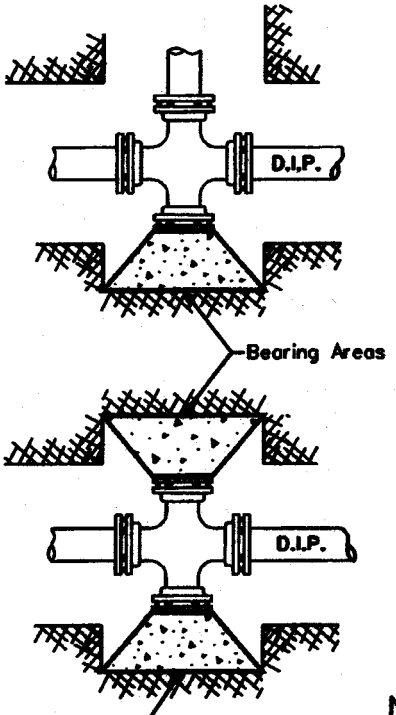

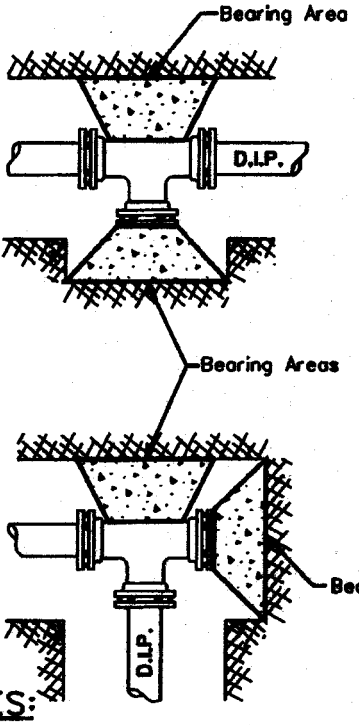

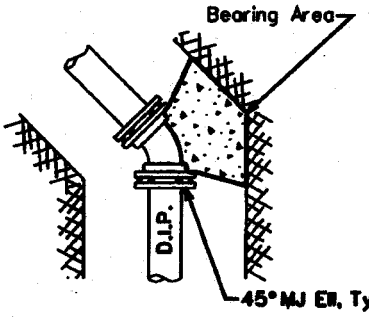

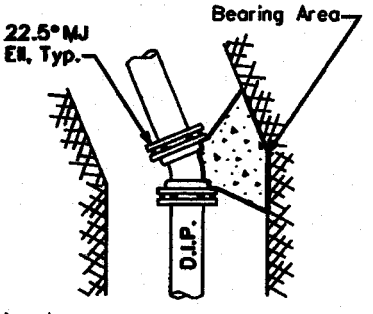

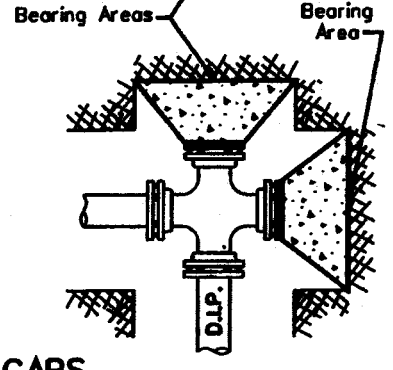

CROSS SECTION

TYPICAL

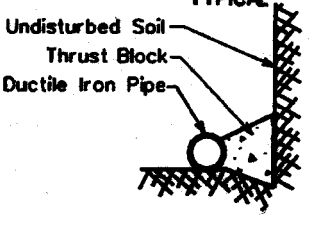

NOTES:

1. Use minimum Class 'C' concrete, which is defined as concrete whose minimum compressive strength at 14 days reaches 1600psi and at 28 days reaches 2000psi. per MAG Section 725, Table 725-1.
2. Thrust blocks are to bear on undisturbed earth with minimum bearing area as shown. If not undisturbed, areas will be increased as required.
3. Place the pressure treated form board in front of all plugs before pouring thrust blocks.
4. Form all non-bearing areas to prevent any concrete from entering any joint.
5. All flanges, bolts and nuts shall be kept free of concrete.
6. Center the bearing area on the pipe centerline and force line.
7. All pipe fittings to be wrapped with polyethylene pipe wrap prior to thrust block installation. (where applicable)

THRUST BLOCK SCHEDULE

PIPE SIZE	TEE, 45°, AND 22.5° ELLS, & PLUGS	90° ELLS
6" And Under	4 Sq.Ft.	6 Sq.Ft.
8"	6 Sq.Ft.	9 Sq.Ft.
12"	13 Sq.Ft.	20 Sq.Ft.
16"	23 Sq.Ft.	32 Sq.Ft.
18" And Larger	Calculated Per Project	

CAPS

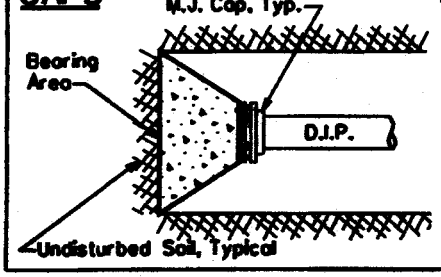

STANDARD SPECIFICATION

FOR THE INSTALLATION OF

TYPICAL THRUST BLOCKING SCHEDULE

DRAWN BY:	APPROVED BY:	DATE:	△ 05.27.2005	E-9-5-1
CB	MW	03.20.1986		

NOTES

1. Bars In Conc. Thrust Block To Be Coated w/ 2 Coats Coal Tar Epoxy or by Other Approved Method.
2. Bars To Have 90° Hook @ Their Ends, As Per Table Below.

Pipe Size	Min. Bar Size	"A" Dimension (Hook)	* Min. Block Dimension (WxHxL)
6"	#6	6"	3'x3'x3'
8"	#6	9"	4'x3'x4'
12"	#8	9"	5'x4'x5'
16"	#9	12"	7'x6'x7'

* For 125 P.S.I. Working Pressure

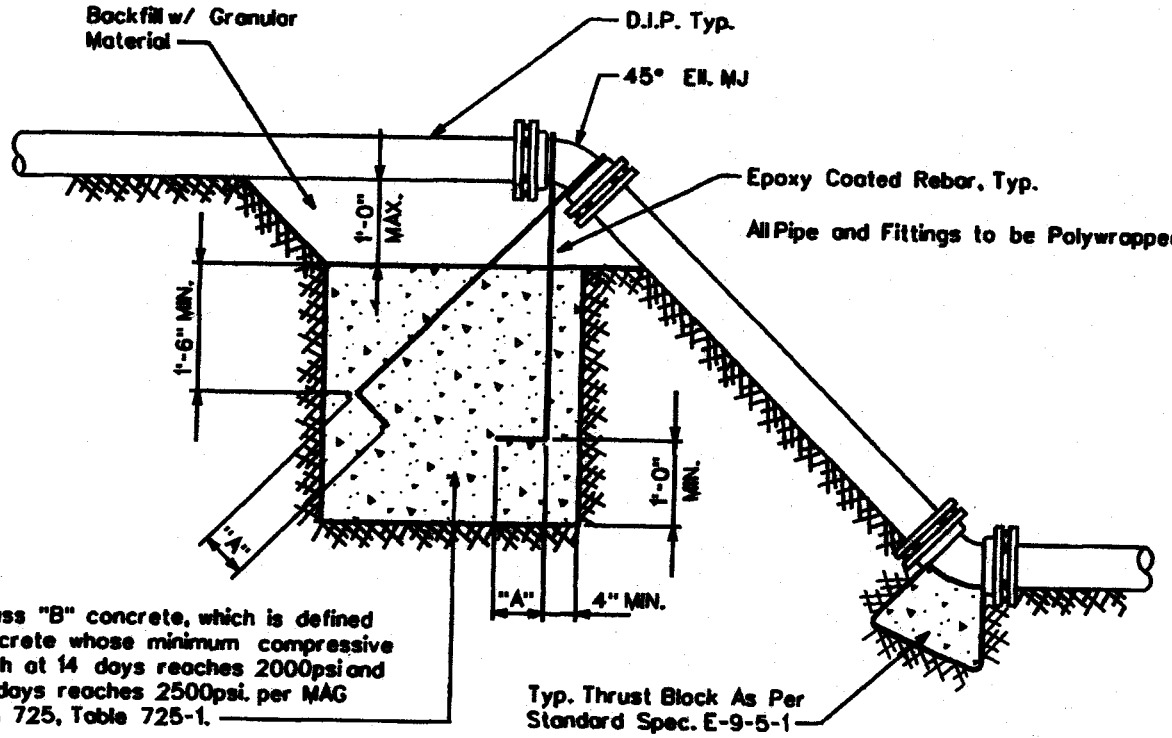

ARIZONA WATER COMPANY

STANDARD SPECIFICATION
FOR THE INSTALLATION OF

THRUST BLOCK FOR VERTICAL BENDS

DRAWN BY:	APPROVED BY:	DATE:	△ 01.16.2007	E-9-5-2
JPK	MJW	7-5-96		

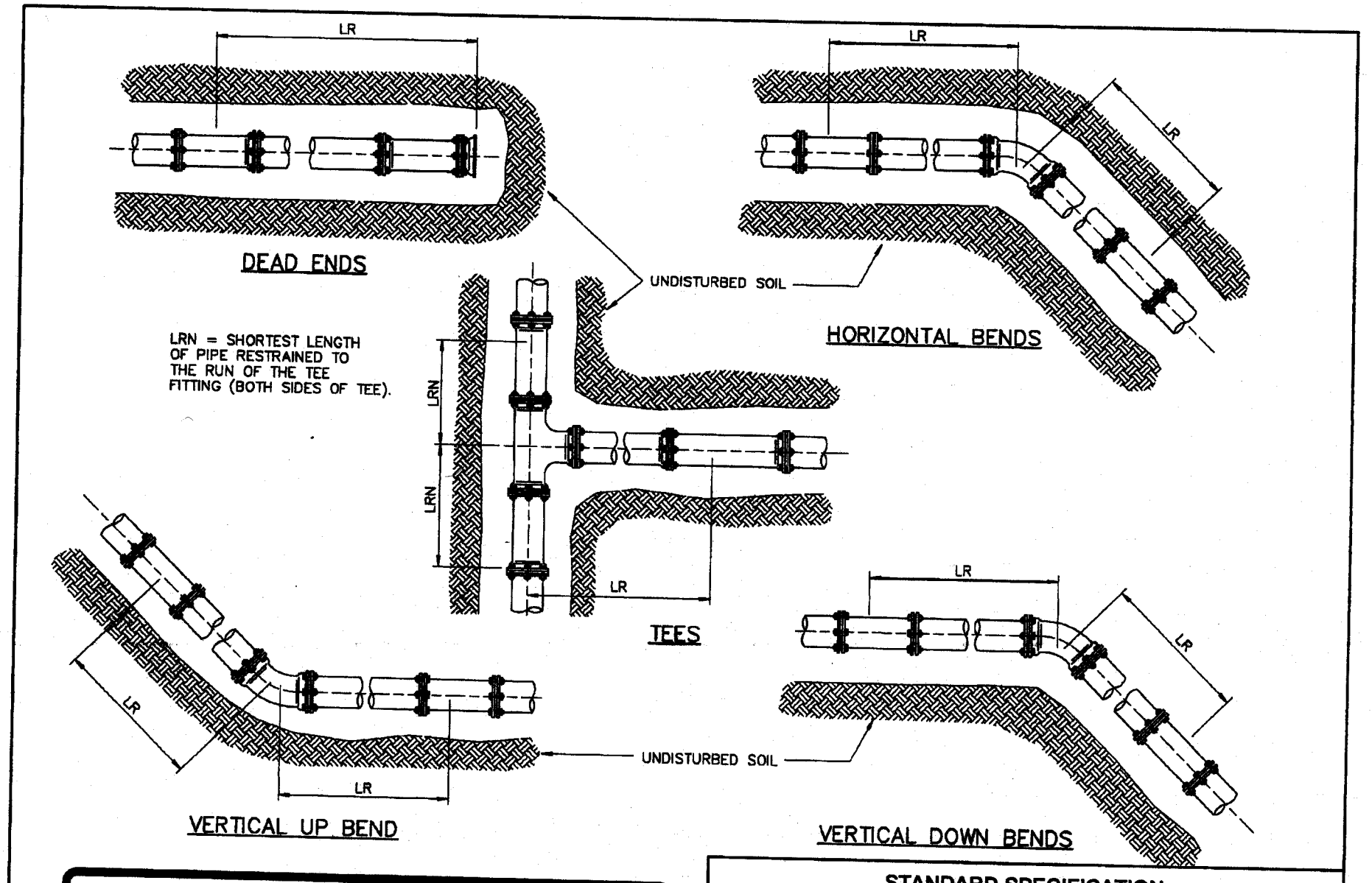

ARIZONA WATER COMPANY

STANDARD SPECIFICATION
FOR THE INSTALLATION OF

JOINT RESTRAINT FOR NEW DUCTILE IRON AND C-900 PVC MAINS

DRAWN BY:	APPROVED BY:	DATE:	△	
CB	MW	01.16.2007		E-9-5-3-1

RESTRAINED LENGTHS, LR, FOR DUCTILE IRON PIPE

NOMINAL PIPE SIZE INCHES	HORIZONTAL BENDS			TEES		VERTICAL OFFSETS						DEAD ENDS
						90° BEND FITTINGS		45° BEND FITTINGS		22-1/2° BEND FITTINGS		
	90°	45°	22-1/2°	LRN=0'	LRN=10'	DOWN BEND	UP BEND	DOWN BEND	UP BEND	DOWN BEND	UP BEND	
4	18	7	4	30	8	31	18	13	7	6	3	31
6	25	10	5	43	20	44	25	18	10	9	5	44
8	32	13	6	56	34	58	32	24	13	11	6	58
10	38	16	8	68	45	69	38	29	16	14	8	69
12	45	19	9	80	57	81	45	34	19	16	9	81
14	51	21	10	91	68	92	51	38	21	18	10	92
16	57	24	11	103	79	104	57	43	24	21	11	104
18	62	26	12	113	90	115	62	48	26	23	12	115
20	68	28	14	125	100	126	68	52	28	25	14	126
24	79	33	16	145	121	147	79	61	33	29	16	147

RESTRAINED LENGTHS, LR, FOR DUCTILE IRON PIPE WITH POLYETHYLENE WRAP

NOMINAL PIPE SIZE INCHES	HORIZONTAL BENDS			TEES		VERTICAL OFFSETS						DEAD ENDS
						90° BEND FITTINGS		45° BEND FITTINGS		22-1/2° BEND FITTINGS		
	90°	45°	22-1/2°	LRN=0'	LRN=10'	DOWN BEND	UP BEND	DOWN BEND	UP BEND	DOWN BEND	UP BEND	
4	26	11	5	69	18	72	26	30	11	14	5	72
6	36	15	7	99	47	102	36	42	15	20	7	102
8	47	19	9	130	78	133	47	55	19	26	9	133
10	56	23	11	157	103	159	56	66	23	32	11	159
12	65	27	13	185	131	187	65	77	27	37	13	187
14	74	31	15	211	156	214	74	89	31	42	15	214
16	82	34	16	238	183	241	82	100	34	48	16	241
18	90	37	18	263	207	266	90	110	38	53	18	266
20	98	41	20	289	233	292	98	121	41	58	20	292
24	113	47	22	337	280	340	113	141	47	68	22	340

NOTES:

1. ALL JOINTS WITHIN THE SPECIFIED LENGTH LR MUST BE RESTRAINED. ALL LENGTHS ARE GIVEN IN FEET.
2. THE MAXIMUM TEST PRESSURE SHALL NOT EXCEED 200 PSI
3. THE MINIMUM DEPTH OF BURY SHALL BE 3' TO TOP OF PIPE.
4. RESTRAINED LENGTHS MAY BE REDUCED WHEN SUPPORTED BY ENGINEERING CALCULATIONS.

ARIZONA WATER COMPANY

STANDARD SPECIFICATION
FOR THE INSTALLATION OF
JOINT RESTRAINT FOR NEW DUCTILE IRON AND C-900 PVC MAINS

DRAWN BY:	APPROVED BY:	DATE:	△	E-9-5-3-2
CB	MW	01.16.2007		

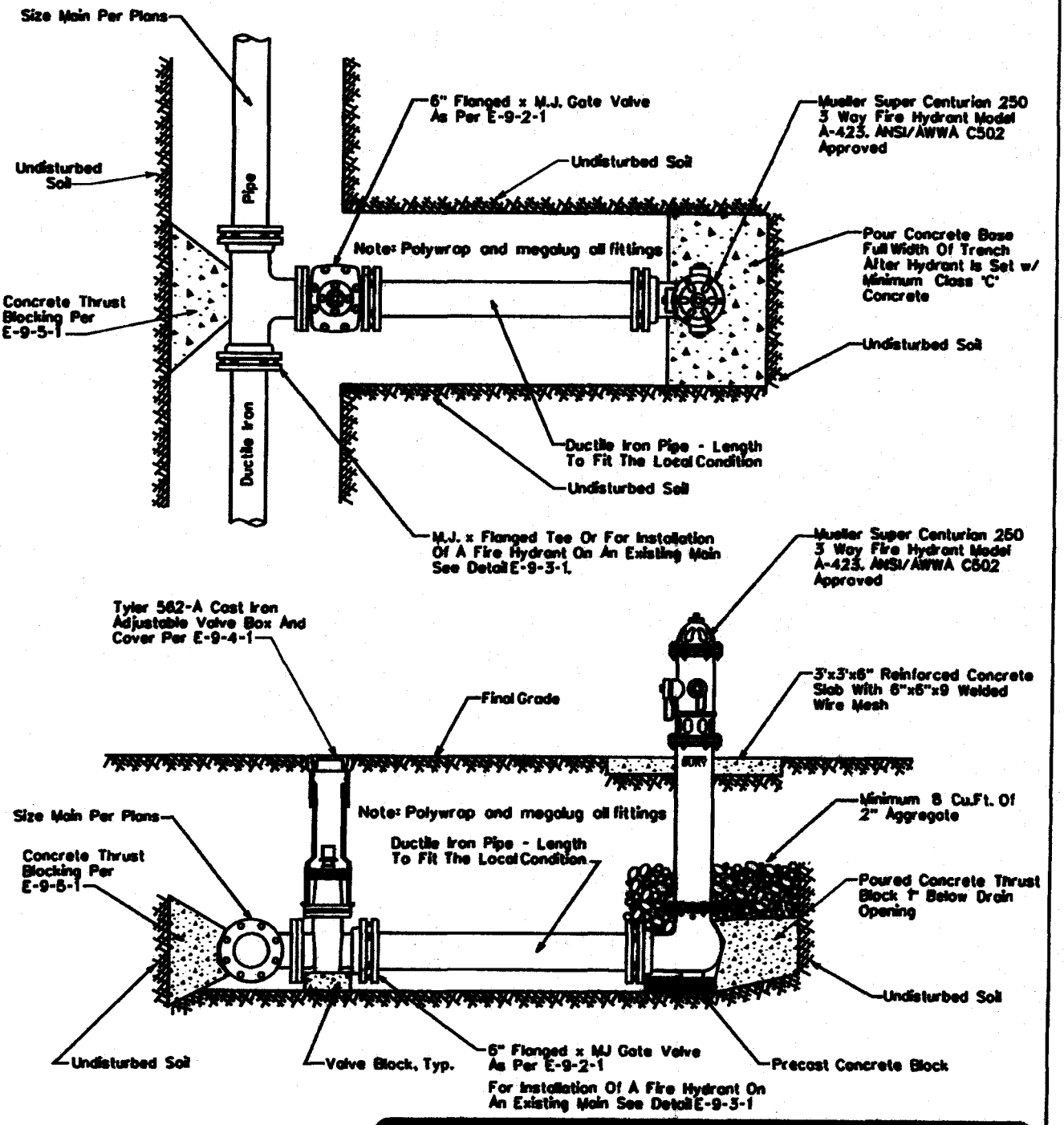

NOTE: All Flanges, Bolts, Nuts and Drain Holes Shall Be Kept Free Of Concrete

ARIZONA WATER COMPANY

STANDARD SPECIFICATION
FOR THE INSTALLATION OF

TYPICAL PERPENDICULAR FIRE HYDRANT

DRAWN BY:	APPROVED BY:	DATE:	△ 08.24.2006	E-9-6-1
CB	MW	1-28-91		

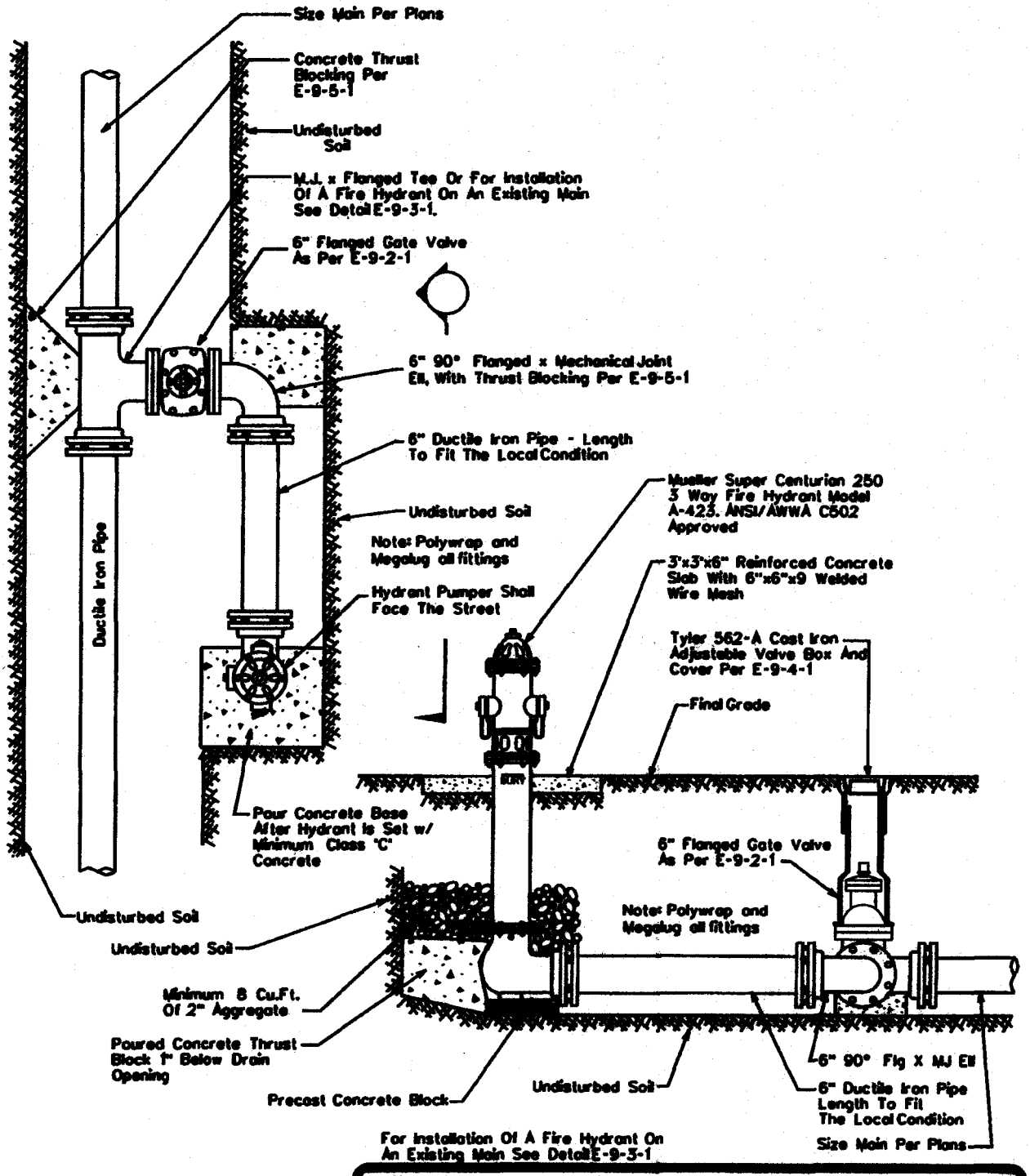

NOTE: All Flanges, Bolts, Nuts And Drain Holes Shall Be Kept Free Of Concrete.

ARIZONA WATER COMPANY

STANDARD SPECIFICATION

FOR THE INSTALLATION OF

TYPICAL PARALLEL FIRE HYDRANT

DRAWN BY:	APPROVED BY:	DATE:	△ 08.24.2006	E-9-7-1
JW	MW	03.20.1986		

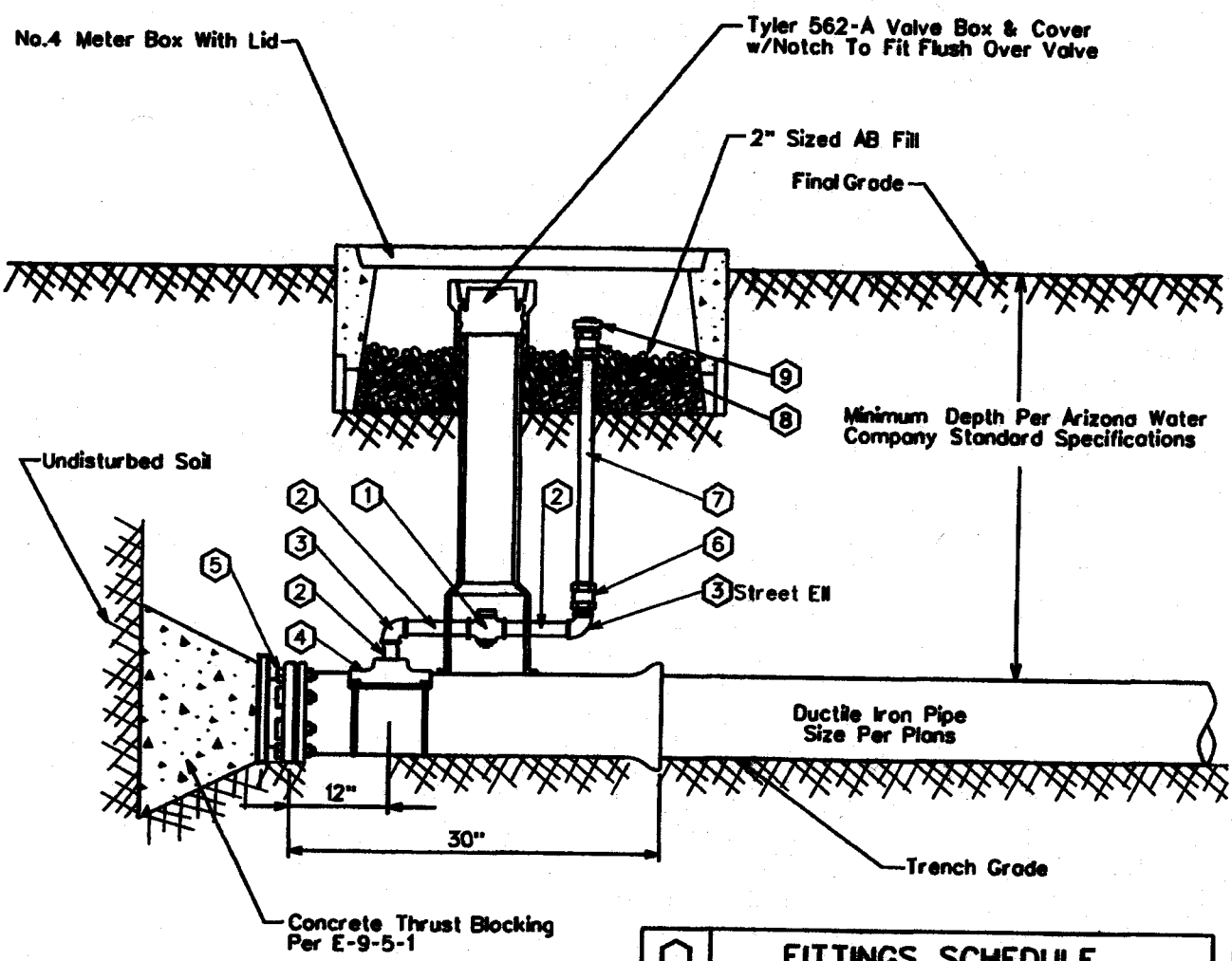

⬡	FITTINGS SCHEDULE
1.	2" Mueller 300 Ball Curb Valve B-20283 FIP x FIP W/ 2" Mueller Brass Square Wrench Nut Adapter B-20299
2.	2" Brass Nipple - Length To Fit Field Conditions
3.	2" Brass 90° Elbow, IPST
4.	Mueller Double Strap Bronze Service Saddle - BR2B
5.	M.J. Plug - Megalug Restraints May Be Required
6.	2" Straight Coupling CC x FIP H-15451
7.	2" Copper Pipe
8.	2" Straight Coupling CC x MIP H-15428
9.	2" Square Head Plug, MIP

ARIZONA WATER COMPANY

STANDARD SPECIFICATION
FOR THE INSTALLATION OF

2" BLOWOFF ASSEMBLY

DRAWN BY:	APPROVED BY:	DATE:		
CB	MW	03.20.1986	△ 03.21.2006	E-9-8-1

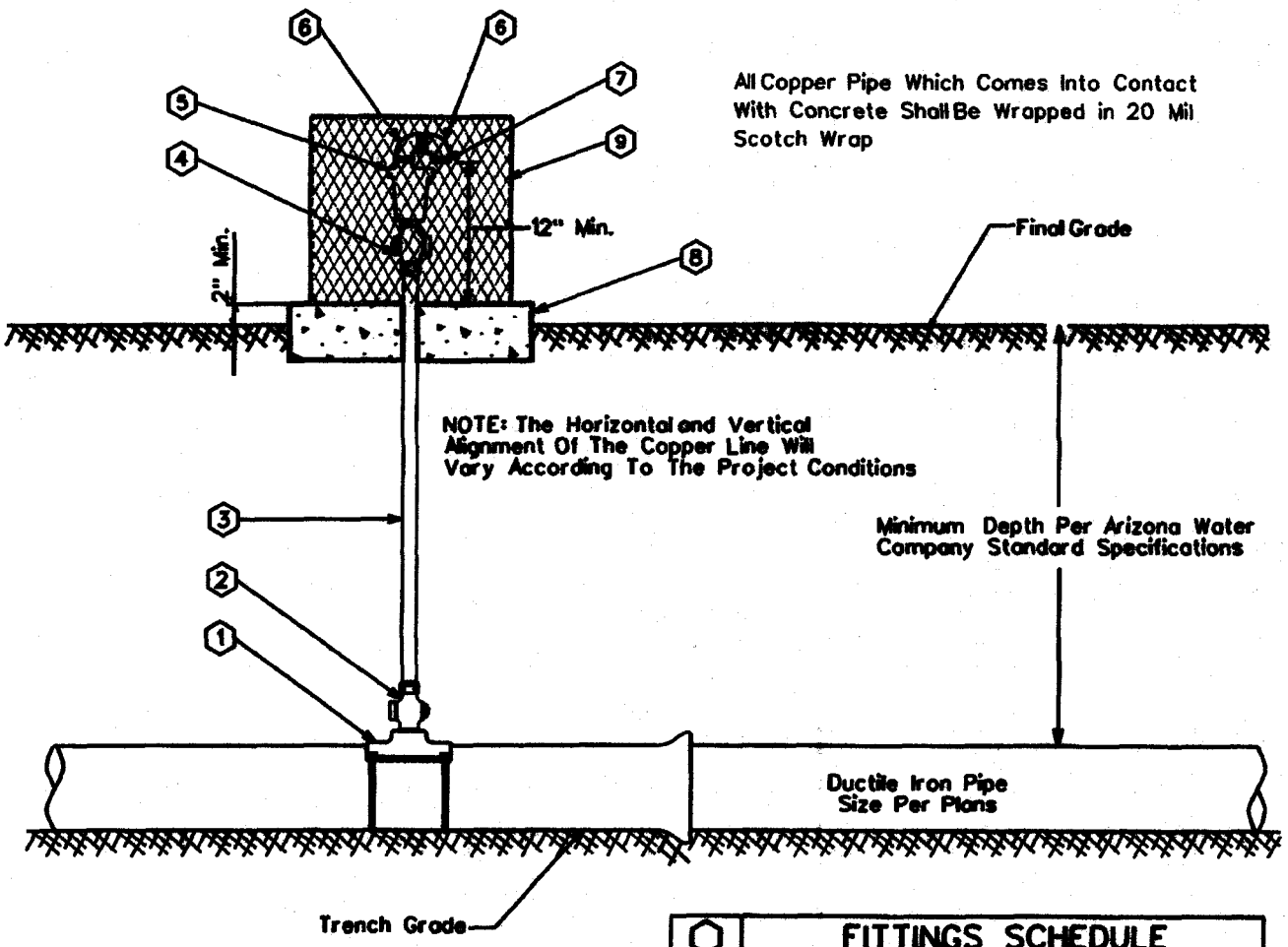

⬡	FITTINGS SCHEDULE
1.	Mueller BR2B Bronze Service Saddle - Double Strap
2.	1" Mueller B-25008 Taper x Comp. Ball Corp Stop
3.	1" Type 'K' Copper w/NO Splices - Field Fit
4.	1" Mueller B-25028 IP x Comp. Ball Corp Stop
5.	Crispin 1" Air Release Valve, Model AR10
6.	½" Brass Street Elbow
7.	No.16 Wire Mesh Screen (Non-Corrodible)
8.	4" Thick Concrete Pad - Class 'C' Concrete
9.	Guardshack, Model GS-1, Available From BPDI, Inc. Available In Leaf Green Or Desert Tan

GENERAL NOTES:

1. The valve shall be installed at high points and on long runs to vent the accumulation of air with the line under pressure- see the construction plans for specific locations.
2. The valve shall have a 1/64" orifice with valve sealing faces of stainless steel and BUNA-N rubber.
3. The valve shall be Crispin model AR10 for 6" and larger water mains.
4. Crispin model AR10 valve construction consists of a 1" IPST inlet & ½" IPST outlet, cast iron body and top flange with stainless steel float and trim.
5. The air release assembly shall be located out of the path of traffic but within right-of-way or easement.

ARIZONA WATER COMPANY

STANDARD SPECIFICATION
FOR THE INSTALLATION OF

TYPICAL AIR RELEASE VALVE

DRAWN BY:	APPROVED BY:	DATE:		
CB	MW	03.20.1997	△08.24.2006	E-9-8-2

All Copper Pipe Which Comes Into Contact With Concrete Shall Be Wrapped In 20 Mil Scotch Wrap

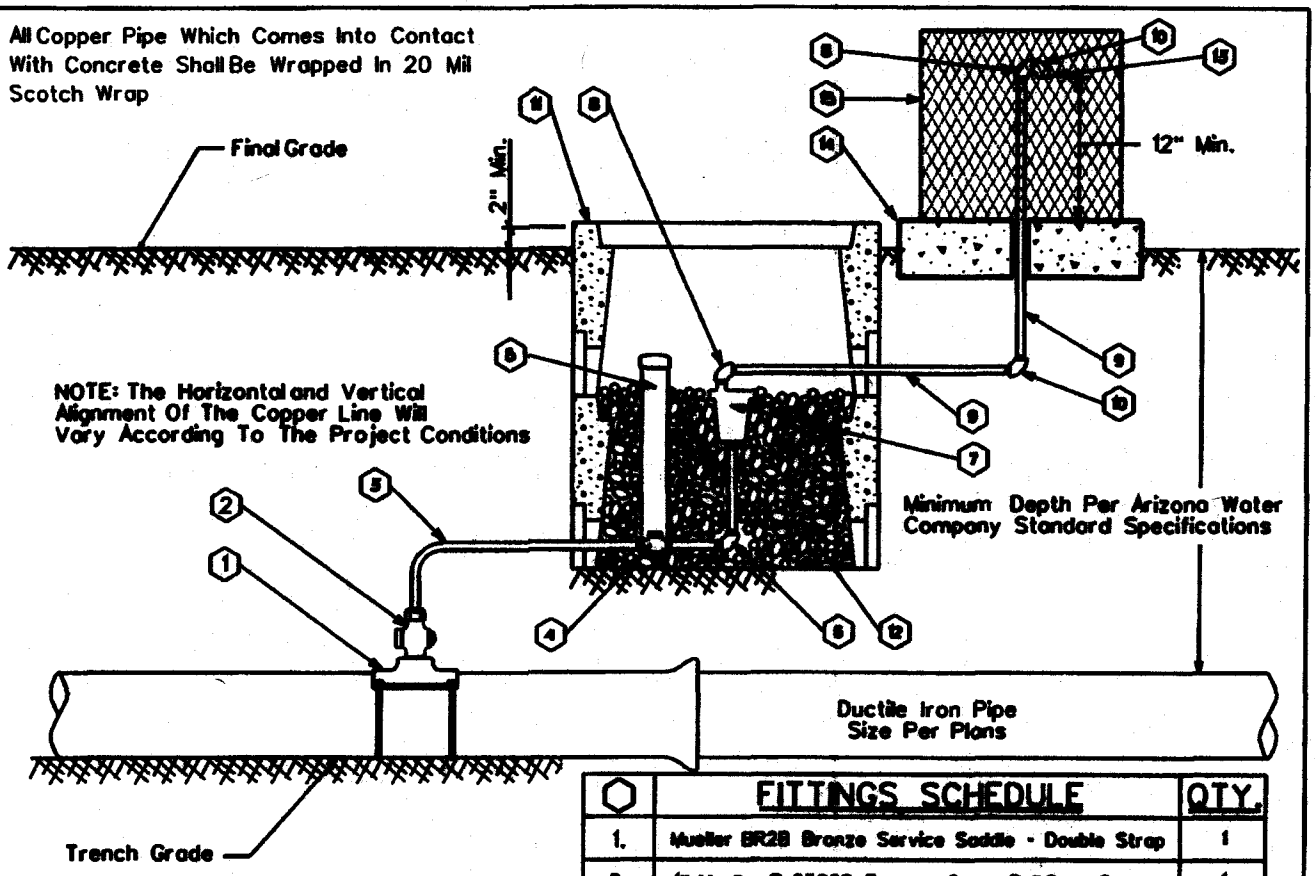

⬡	FITTINGS SCHEDULE	QTY.
1.	Mueller BR2B Bronze Service Saddle - Double Strap	1
2.	1" Mueller B-25008 Taper x Comp. Ball Corp Stop	1
3.	1" Type 'K' Copper w/NO Splices - Field Fit	As Req'd
4.	1" Mueller B-25028 IP x Comp. Ball Corp Stop	1
5.	3" PVC Pipe w/ Cap (Loose Fit)	1
6.	1" x 4" Brass Nipple w/90° Elbow	1
7.	Crispin 1" Air Release Valve, Model AR10	1
8.	½" Brass Street Elbow	2
9.	½" Galvanized Pipe - Length as req'd	2
10.	½" Galvanized 90° Ell	2
11.	Number 1 Meter Box	2
12.	2" Sized AB (Fill Meter Box To The Top Of The Air Release Valve)	As Req'd
13.	No.16 Wire Mesh Screen (Non-Corrodible)	1
14.	4" Thick Concrete Pad - Class 'C' Concrete	1
15.	Guardshock, Model GS-1, Available From BPDI, Inc. Available In Leaf Green Or Desert Tan	1

GENERAL NOTES:

1. The valve shall be installed at high points and on long runs to vent the accumulation of air with the line under pressure- see the construction plans for specific locations.
2. The valve shall have a 1/4 " orifice with valve seating faces of stainless steel and BUNA-N rubber.
3. The valve shall be Crispin model AR10 for 6" and larger water mains.
4. Crispin model AR10 valve construction consists of a 1" IPST inlet & ½" IPST outlet, cast iron body and top flange with stainless steel float and trim.
5. The air release assembly shall be located out of the path of traffic but within the right-of-way or easement.

ARIZONA WATER COMPANY

STANDARD SPECIFICATION
FOR THE INSTALLATION OF

AIR RELEASE VALVE FOR THE NORTHERN REGION

DRAWN BY:	APPROVED BY:	DATE:		
CB	MW	03.20.1997	△08.24.2006	E-9-8-3

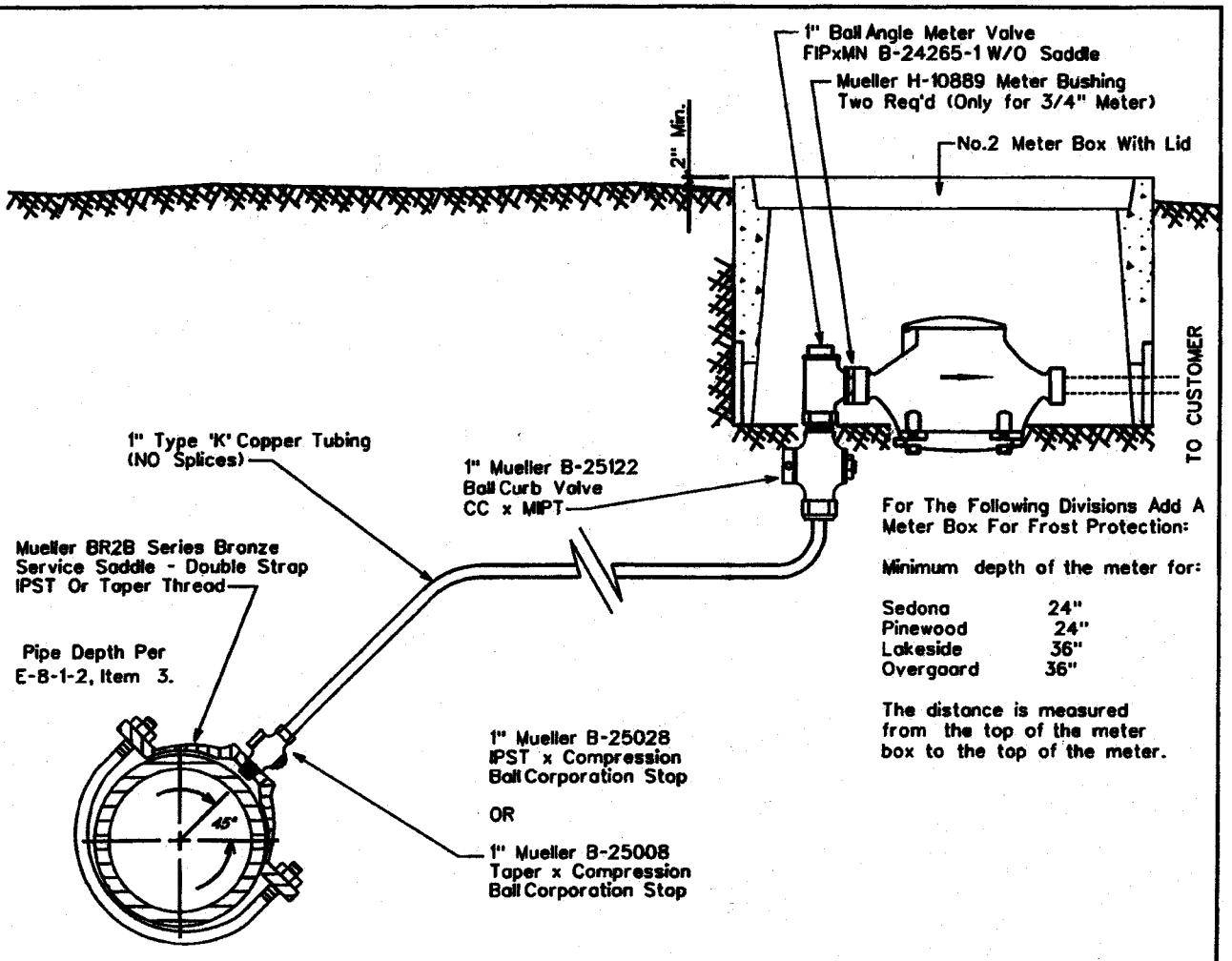

For The Following Divisions Add A Meter Box For Frost Protection:

Minimum depth of the meter for:

Sedona	24"
Pinewood	24"
Lakeside	36"
Overgaard	36"

The distance is measured from the top of the meter box to the top of the meter.

SADDLE TAP TO CA, PVC, OR DI PIPE

NOTE: The minimum distance between taps on mains other than ductile iron is 12"

NOTE:
Only the meter is supplied by Arizona Water Company

ARIZONA WATER COMPANY

STANDARD SPECIFICATION
FOR THE INSTALLATION OF

SINGLE SERVICE CONNECTION FOR A 3/4" OR 1" METER

DRAWN BY:	APPROVED BY:	DATE:	△ 03.17.2006	E-9-9-1
CCO	M.W.	3/20/86		

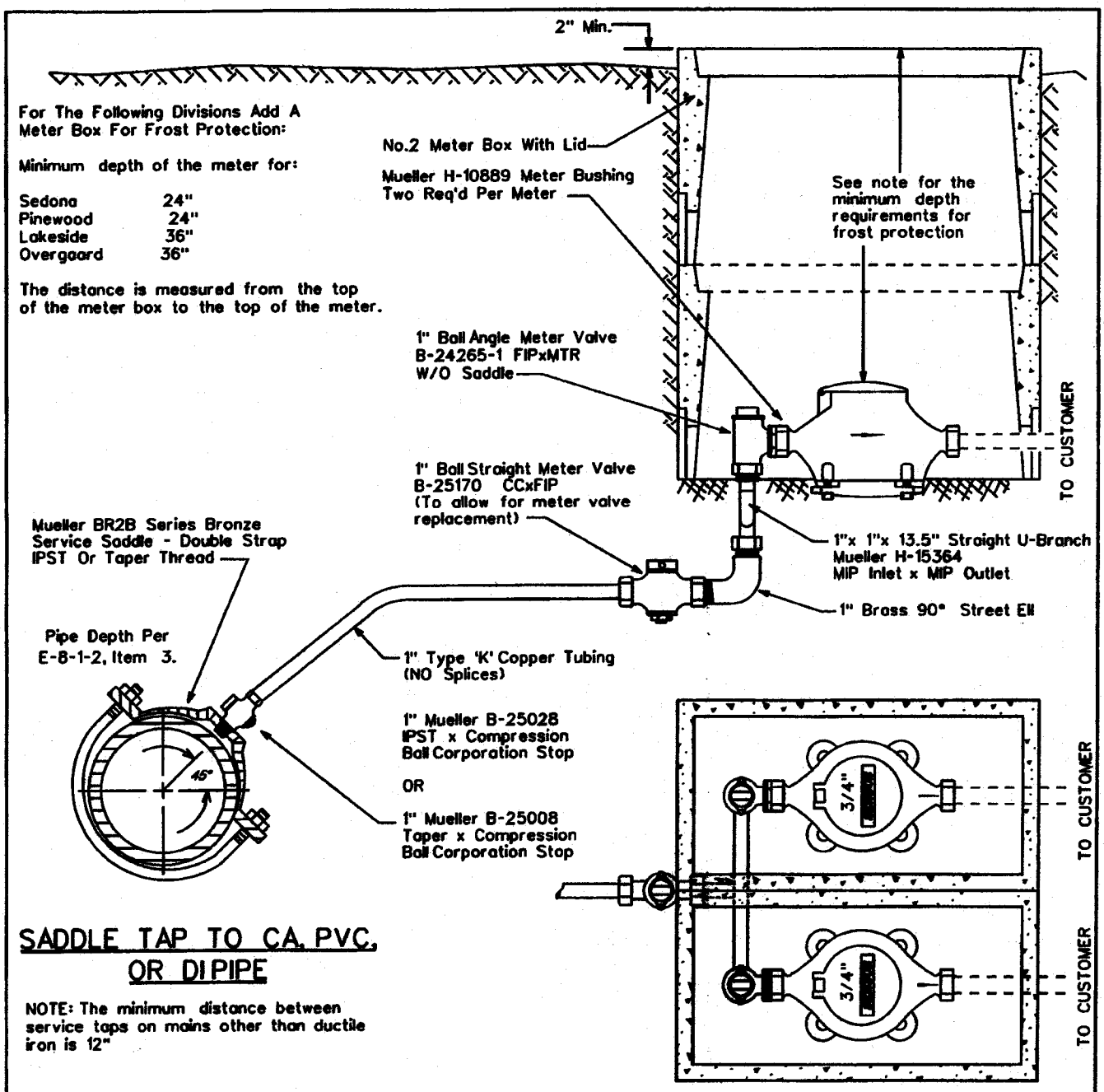

For The Following Divisions Add A Meter Box For Frost Protection:

Minimum depth of the meter for:

Sedona	24"
Pinewood	24"
Lakeside	36"
Overgaard	36"

The distance is measured from the top of the meter box to the top of the meter.

SADDLE TAP TO CA, PVC, OR DI PIPE

NOTE: The minimum distance between service taps on mains other than ductile iron is 12"

NOTE:
Only the meter is supplied by Arizona Water Company

ARIZONA WATER COMPANY

STANDARD SPECIFICATION
FOR THE INSTALLATION OF

DOUBLE SERVICE CONNECTION FOR 3/4" METERS

DRAWN BY:	APPROVED BY:	DATE:	△ 08.25.2006	E-9-10-1
CCO	M.W.	3-20-86		

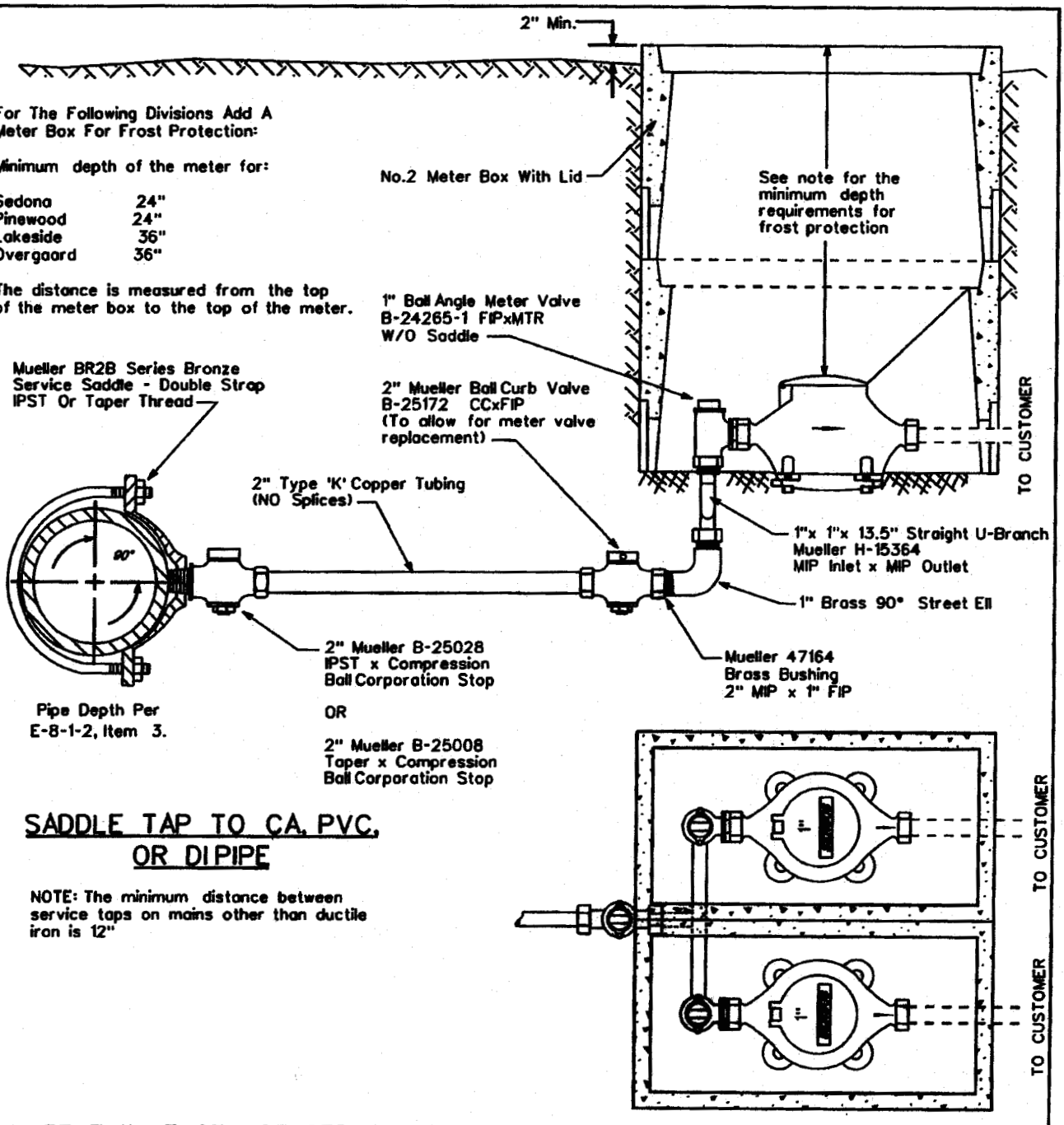

SADDLE TAP TO CA, PVC, OR DI PIPE

NOTE: The minimum distance between service taps on mains other than ductile iron is 12"

NOTE: THE LENGTH OF SERVICE IS LIMITED TO COMMERICIALLY AVAILABLE ROLLS, TYPICALLY 60 FEET

NOTE:
Only the meter is supplied by Arizona Water Company

ARIZONA WATER COMPANY

STANDARD SPECIFICATION
FOR THE INSTALLATION OF

DOUBLE SERVICE CONNECTION FOR 1" METERS

DRAWN BY:	APPROVED BY:	DATE:	△ 08.29.2006	E-9-10-2
CB	M.W.	03.17.2006		

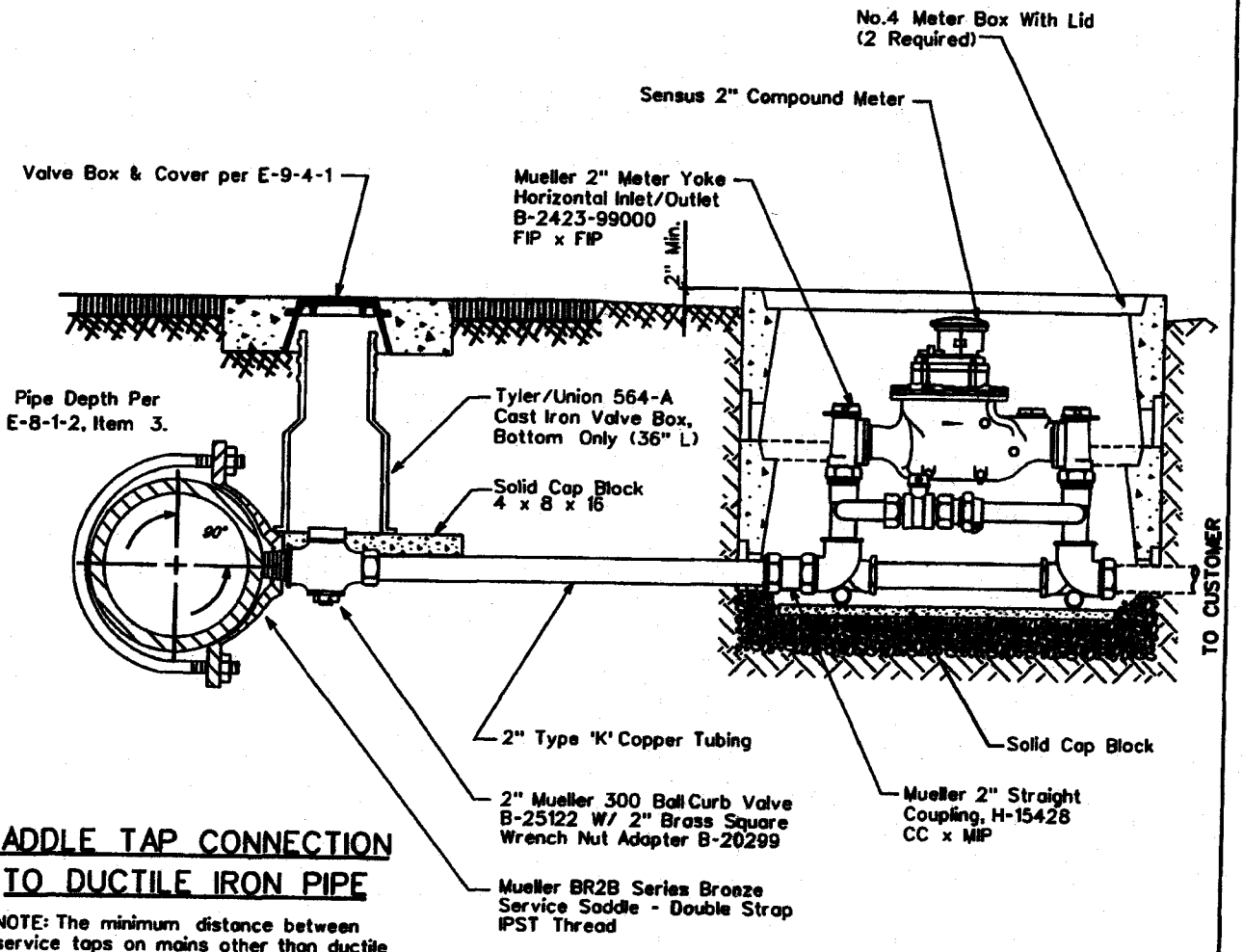

SADDLE TAP CONNECTION TO DUCTILE IRON PIPE

NOTE: The minimum distance between service taps on mains other than ductile iron is 12"

NOTE: THE LENGTH OF SERVICE IS LIMITED TO COMMERICIALLY AVAILABLE ROLLS, TYPICALLY 60 FEET

NOTE:

Only the meter is supplied by Arizona Water Company

ARIZONA WATER COMPANY

STANDARD SPECIFICATION
FOR THE INSTALLATION OF

TYPICAL 2" SERVICE CONNECTIONS

DRAWN BY:	APPROVED BY:	DATE:	△ 08.29.2006	E-9-11-1
JW	M.W.	3/20/86		

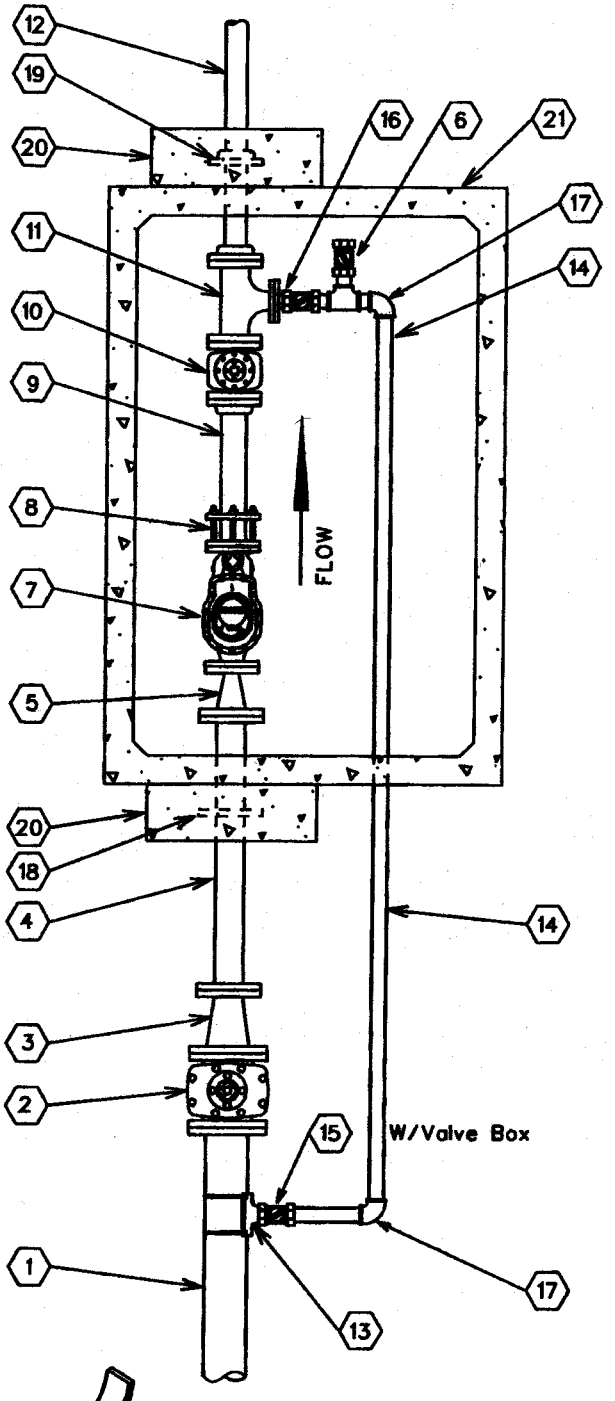

No.	FITTINGS SCHEDULE
1.	6" D.I.P.
2.	6" G.V.B.&C. mj x flng
3.	6"x4" Reducer flng x mj
4.	4"x3'-0" D.I.P. Spool flng x pe
5.	4" x 3" Reducer flng
6.	2" Test Port
7.	3" Compound Meter
8.	3" F.C.A.
9.	3"x2'-0" D.I. Spool flng x pe
10.	3" Gate Valve flng
11.	3"x2" Flg Tee w/ 2" Companion Flange
12.	3"x4'-0" D.I. Spool flng x pe
13.	6"x2" Tapping Saddle
14.	2" Copper Pipe
15.	2" Mueller B25122 Ball Valve w/B20299 Nut
16.	2" Locking Ball Valve (normally closed)
17.	2" Mueller H-15526 90° Ell CC x CC
18.	4" Megalug
19.	3" Slip-On Welding Flange
20.	24"x24"x8" Conc. Thrust Block P.I.P.
21.	575-LA Conc. Vault

NOTE:

1. Use Rowley pipe supports or equivalent as needed (See detail below).
2. Pipe support locations to be determined by field personnel.
3. All copper pipe that comes in contact with concrete to be wrapped w/10-20 Mil. Scotchwrap corrosion protection tape.
4. All mechanical joint fittings are to be megalugged.
5. Use deflection fittings (45° Ells.) to achieve necessary depths & cover as shown on the standard specification for the installation of a concrete vault (E-9-12-5).

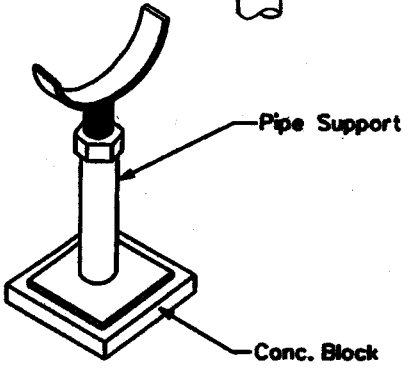

ARIZONA WATER COMPANY

STANDARD SPECIFICATION
FOR THE INSTALLATION OF

3" COMPOUND METER

DRAWN BY:	APPROVED BY:	DATE		
CCO	MW	10/5/1993	△08.29.2006	E-9-12-1

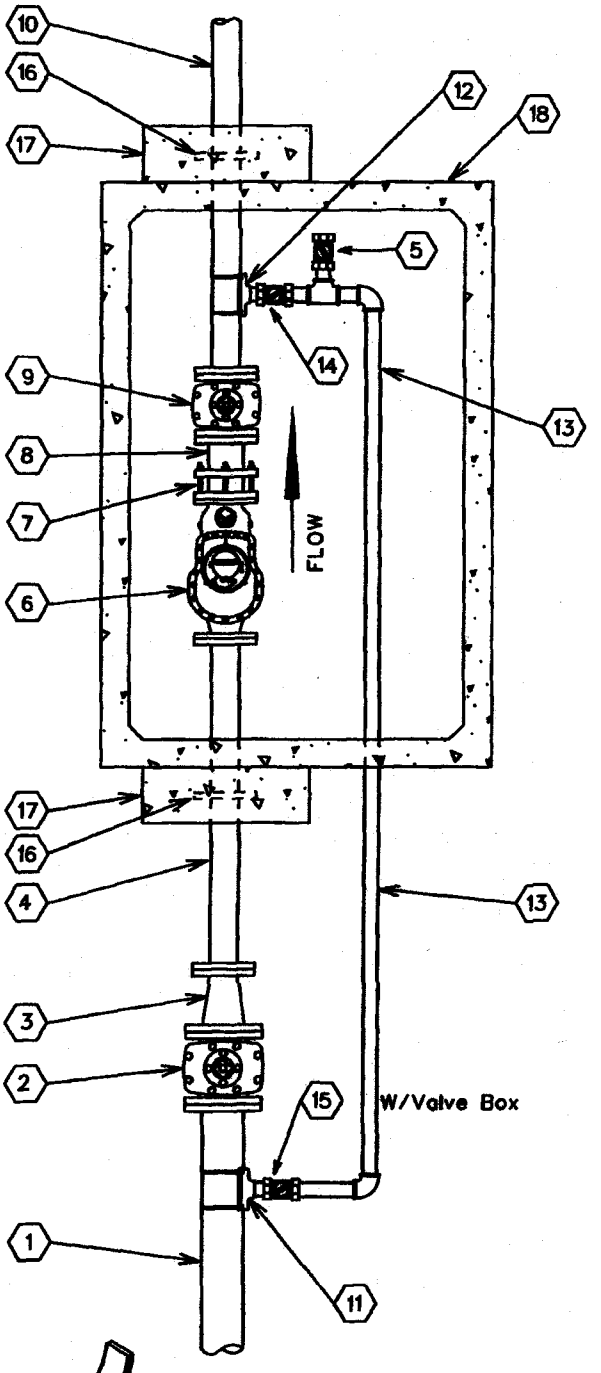

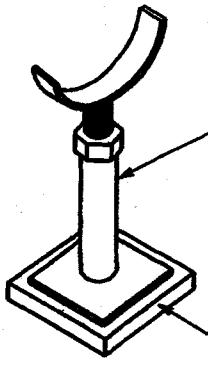

No.	FITTINGS SCHEDULE
1.	6" D.I.P.
2.	6" G.V.B.&C. mj x flng
3.	6"x4" Reducer flng x mj
4.	4"x3'-0" D.I.P. Spool flng x pe
5.	2" Test Port
6.	4" Compound Meter
7.	4" F.C.A.
8.	4"x1'-0" D.I.P. Spool flng x pe
9.	4" Gate Valve flng
10.	4"x4'-0" D.I.P. Spool flng x pe
11.	6"x2" Tapping Saddle
12.	4"x2" Tapping Saddle
13.	2" Copper Pipe
14.	2" Ball Valve / Locking (Normally Closed)
15.	2" Mueller B25122 Ball Valve w/B20299 Nut
16.	4" Megalug
17.	24"x24"x8" Conc. Thrust Block P.I.P.
18.	575-LA Conc. Vault

NOTE:

1. Use Rowley pipe supports or equivalent as needed (See detail below).
2. Pipe support locations to be determined by field personnel.
3. All copper pipe that comes in contact with concrete to be wrapped w/10-20 Mil. Scotchwrap corrosion protection tape.
4. All mechanical joint fittings are to be megalugged.
5. Use deflection fittings (45° Ells.) to achieve necessary depths & cover as shown on the standard specification for the installation of a concrete vault (E-9-12-5).

ARIZONA WATER COMPANY

STANDARD SPECIFICATION
FOR THE INSTALLATION OF

4" COMPOUND METER

DRAWN BY:	APPROVED BY:	DATE:	△08.29.2006	E-9-12-2
CCO	MW	10/5/1993		

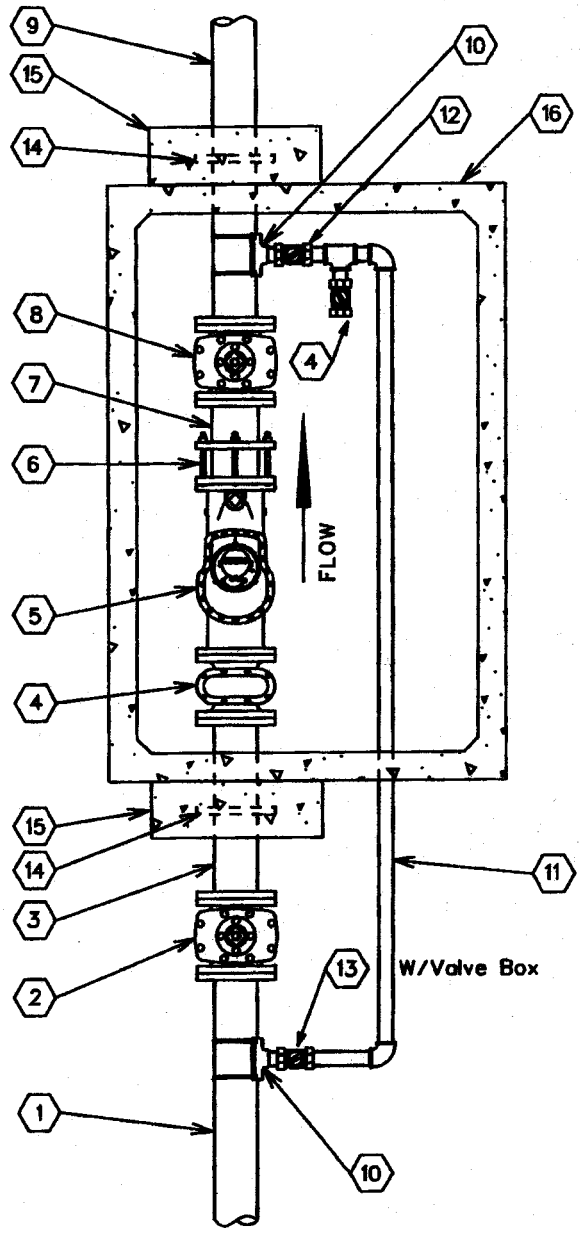

No.	FITTINGS SCHEDULE
1.	6" D.I.P.
2.	6" G.V.B.&C. mj
3.	6"x 3'-0" D.I.P. Spool flng x pe
4.	2" Test Port
5.	6" Compound Meter
6.	6" F.C.A.
7.	6"x 1'-0" D.I.P. Spool flng x pe
8.	6" Gate Valve flng
9.	6"x 4'-0" D.I.P. Spool flng x pe
10.	6"x2" Tapping Saddle
11.	2" Copper Pipe
12.	2" Ball Valve / Locking (Normally Closed)
13.	2" Mueller B25122 Ball Valve w/B20299 Nut
14.	6" Megalug
15.	24"x24"x8" Conc. Thrust Block P.I.P.
16.	575-LA Conc. Vault

NOTE:

1. Use Rowley pipe supports or equivalent as needed (See detail below).
2. Pipe support locations to be determined by field personnel.
3. All copper pipe that comes in contact with concrete to be wrapped w/10-20 Mil. Scotchwrap corrosion protection tape.
4. All mechanical joint fittings are to be megalugged.
5. Use deflection fittings (45° Ells.) to achieve necessary depths & cover as shown on the standard specification for the installation of a concrete vault (E-9-12-5).

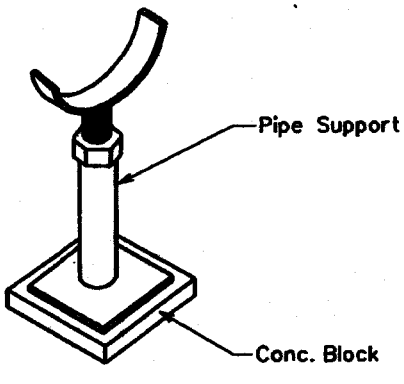

ARIZONA WATER COMPANY

STANDARD SPECIFICATION
FOR THE INSTALLATION OF

6" COMPOUND METER

DRAWN BY:	APPROVED BY:	DATE:		
CCO	MW	10/5/1993	△08.29.2006	E-9-12-3

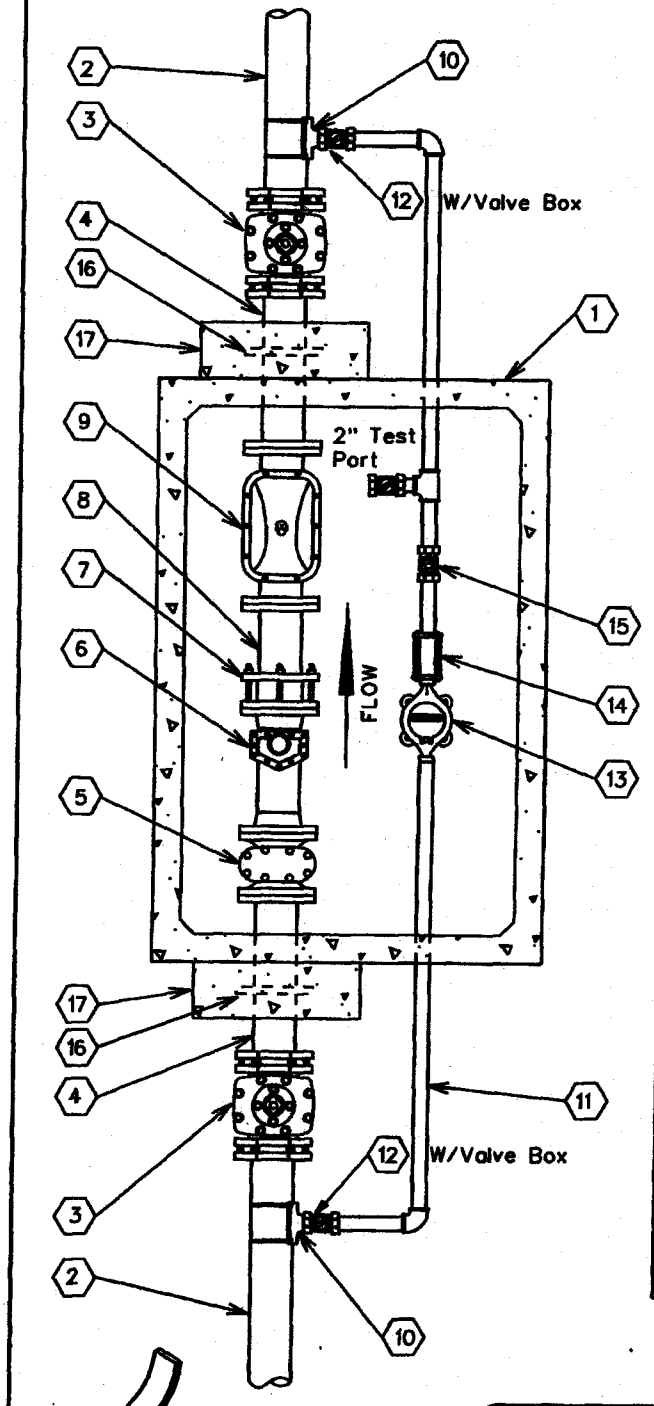

No.	FITTINGS SCHEDULE
1.	575-LA Conc. Vault
2.	6" D.I.P.
3.	6" G.V.B.&C. m.j.
4.	6" x 3'-0" D.I.P. SPoolPiece flng x pe
5.	6" Strainer
6.	6" Turbo Meter
7.	6" F.C.A.
8.	6" x 2'-0" D.I.P. SpoolPiece flng x pe (TRIM SPOOL PIECE TO 3x THE PIPE DIA.)
9.	6" Detector Check
10.	6"x"N" Tapping Saddle
11.	"N" Copper Pipe
12.	"N" Ball Valve (Locking)
13.	"N" Meter
14.	"N" Coup. Adapt.
15.	"N" Flapper Check Valve
16.	6" Megalug
17.	24"x24"x8" Conc. Thrust Block P.I.P.

"N - Size To Be determined By A.W.Co.

NOTE:

1. Use Rowley pipe supports or equivalent as needed (See detail below).
2. Pipe support locations to be determined by field personnel.
3. All copper pipe that comes in contact with concrete to be wrapped w/10-20 Mil. Scotchwrap corrosion protection tape.
4. All mechanical joint fittings are to be megalugged.
5. Use deflection fittings (45° Ells.) to achieve necessary depths & cover as shown on the standard specification for the installation of a concrete vault (E-9-12-5).
6. To change from a 6" service to a 4" service, change all listed 6" materials to 4" materials.

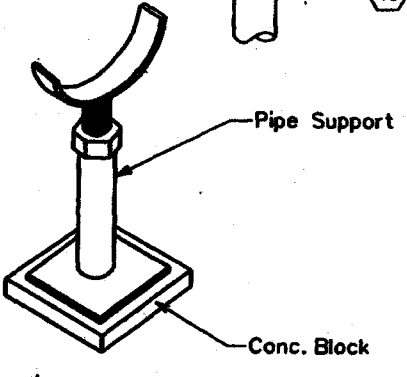

ARIZONA WATER COMPANY

STANDARD SPECIFICATION
FOR THE INSTALLATION OF

6" COMPOUND SERVICE

DRAWN BY:	APPROVED BY:	DATE:		
CCO	MW	10/05/1993	△08.29.2006	E-9-12-4

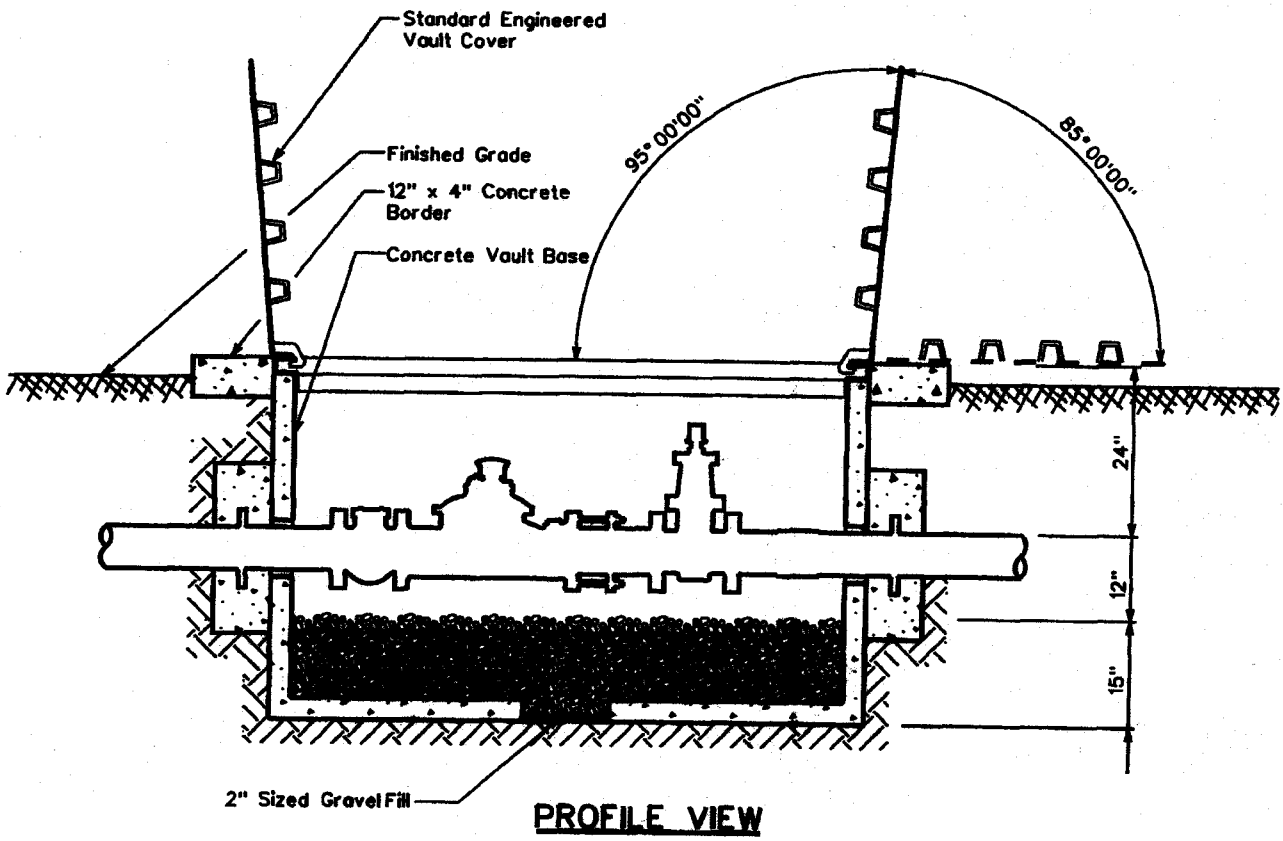

PROFILE VIEW

CONCRETE VAULT & COVER SPECIFICATIONS

Vault - Base No. 575-BL
Cover - Standard Engineered Vault Cover
- .4874 Aluminum Diamond Plate Cover For Non-Traffic Loading Areas
  Or
- .4874 Galvanized Steel Diamond Plate Cover W/ H-20 Traffic Loading
- Double Torsion Spring Assisted Doors W/ Recessed Hasp & Safety Latches

NOTES

1. Total Depth Of Concrete Vault To Be A Maximum Of 3'-0" From Top Of Vault Cover To Top Of Gravel Fill.
2. Service Connections Larger Than 6" In Diameter Will Conform To The Same Vault & Cover Specifications. Size Of Vault & Cover To Be Determined By A.W.Co. Engineers.

ARIZONA WATER COMPANY

STANDARD SPECIFICATION
FOR THE INSTALLATION OF
CONCRETE VAULT

DRAWN BY:	APPROVED BY:	DATE:	△ 05.17.2001	E-9-12-5
CCO	MW	10/5/1993		

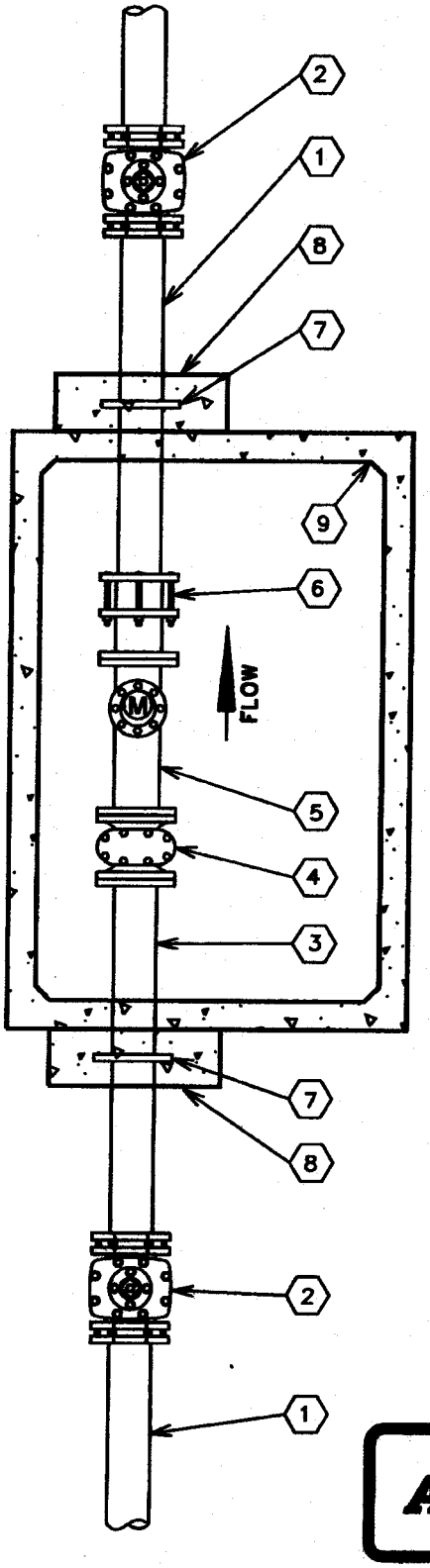

No.	FITTINGS SCHEDULE
1.	Ductile Iron Pipe
2.	Gate Valve M.J.
3.	D.I.P. Spool Piece Flg x Pe (10xDia.)
4.	Meter Strainer
5.	Propeller Meter
6.	Flanged Coupling Adapter
7.	Megalug Gland (Thrust Anchor)
8.	Concrete Thrust Block P.I.P.
9.	Concrete Vault

NOTE:

1. Use Rowley pipe supports or equivalent as needed (See E-9-12-4).
2. Pipe support locations to be determined by field personnel.
3. All Sched. 40 Stl. pipe outside of vault to be wrapped w/10-20 Mil. Scotchwrap corrosion protection tape.
4. All mechanical joint fittings to are to be megalugged.
5. Use deflection fittings (45° Ells.) to achieve necessary depths & cover as shown on the standard specification for the installation of a concrete vault (E-9-12-5).

ARIZONA WATER COMPANY

STANDARD SPECIFICATION

FOR THE INSTALLATION OF

NON-POTABLE PROPELLER METER

DRAWN BY:	APPROVED BY:	DATE:	△	
JPK	MW	7-20-95		E-9-12-6

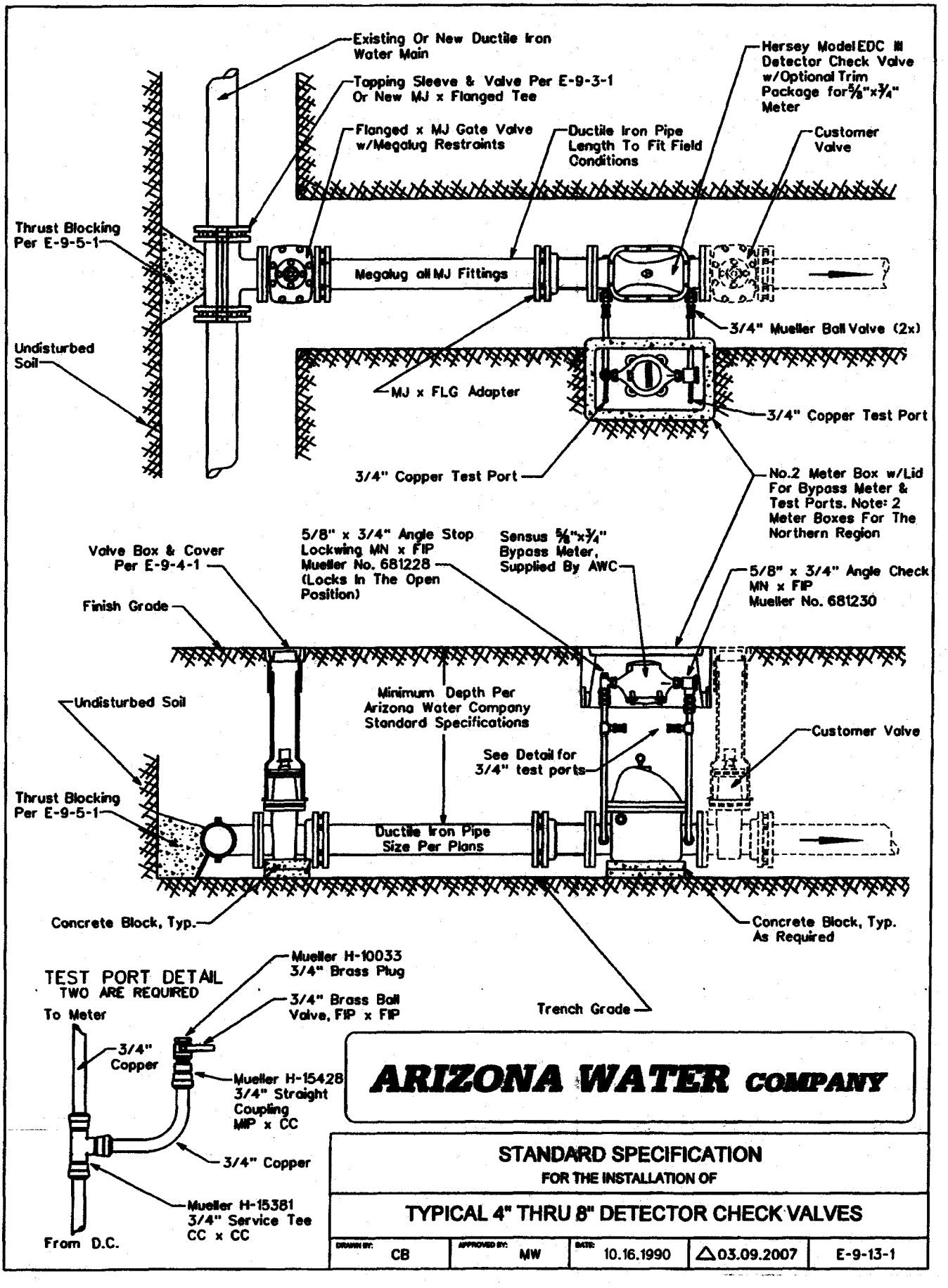

ARIZONA WATER COMPANY

STANDARD SPECIFICATION
FOR THE INSTALLATION OF

TYPICAL 4" THRU 8" DETECTOR CHECK VALVES

DRAWN BY:	APPROVED BY:	DATE:	△03.09.2007	E-9-13-1
CB	MW	10.16.1990		

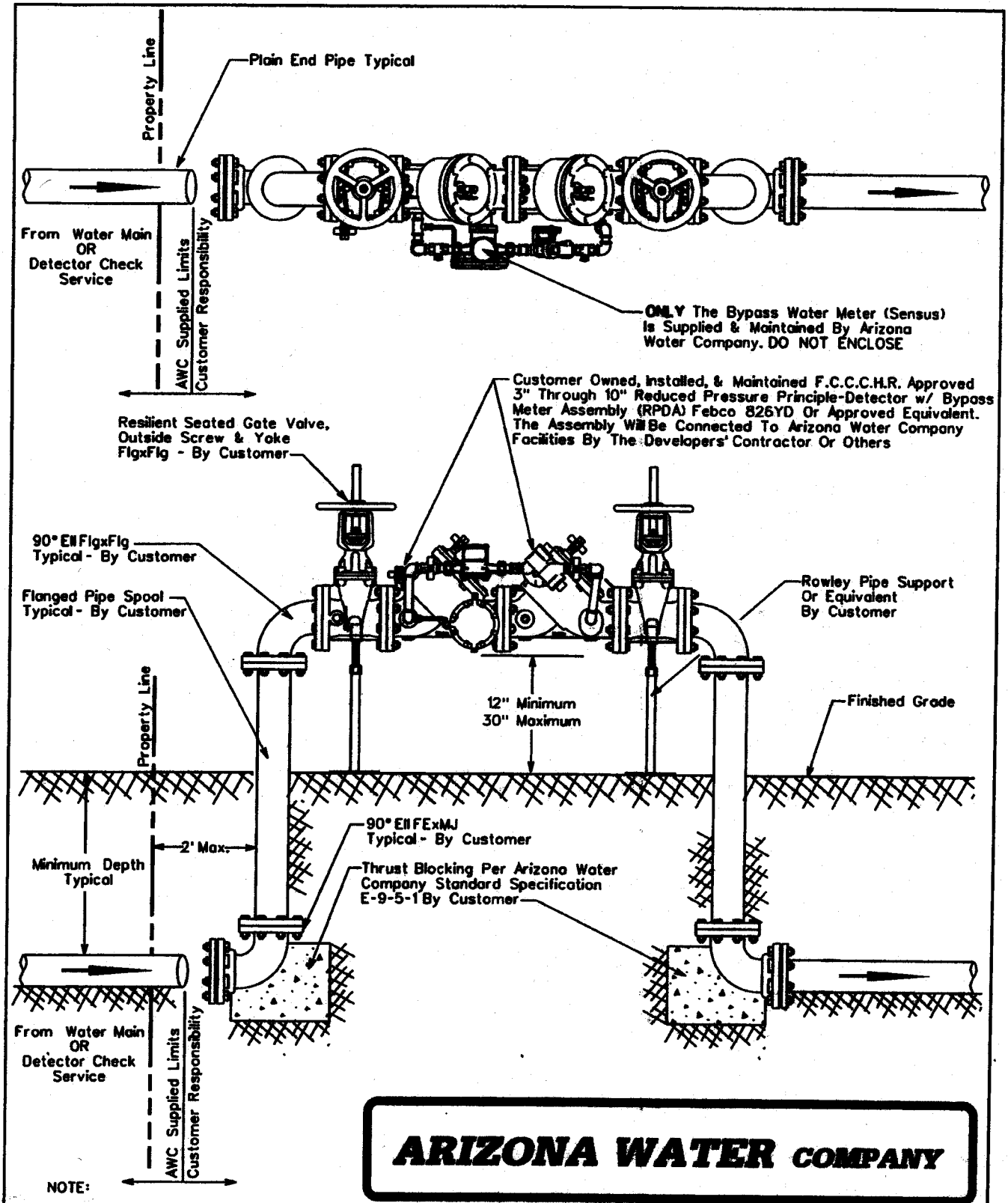

NOTE:

Minimum Depth Of Cover Over 6" & 8" Mains is 36 Inches, 12" & Greater is 48 Inches Unless Otherwise Specified

ARIZONA WATER COMPANY

STANDARD SPECIFICATION

FOR THE INSTALLATION OF

3" THRU 10" REDUCED PRESSURE PRINCIPLE-DETECTOR WITH BYPASS METER ASSEMBLY (RPDA) FOR FIRELINE SERVICES

DRAWN BY:	APPROVED BY:	DATE:		
CB	MW	10-13-98	△1-19-2000	E-9-13-2

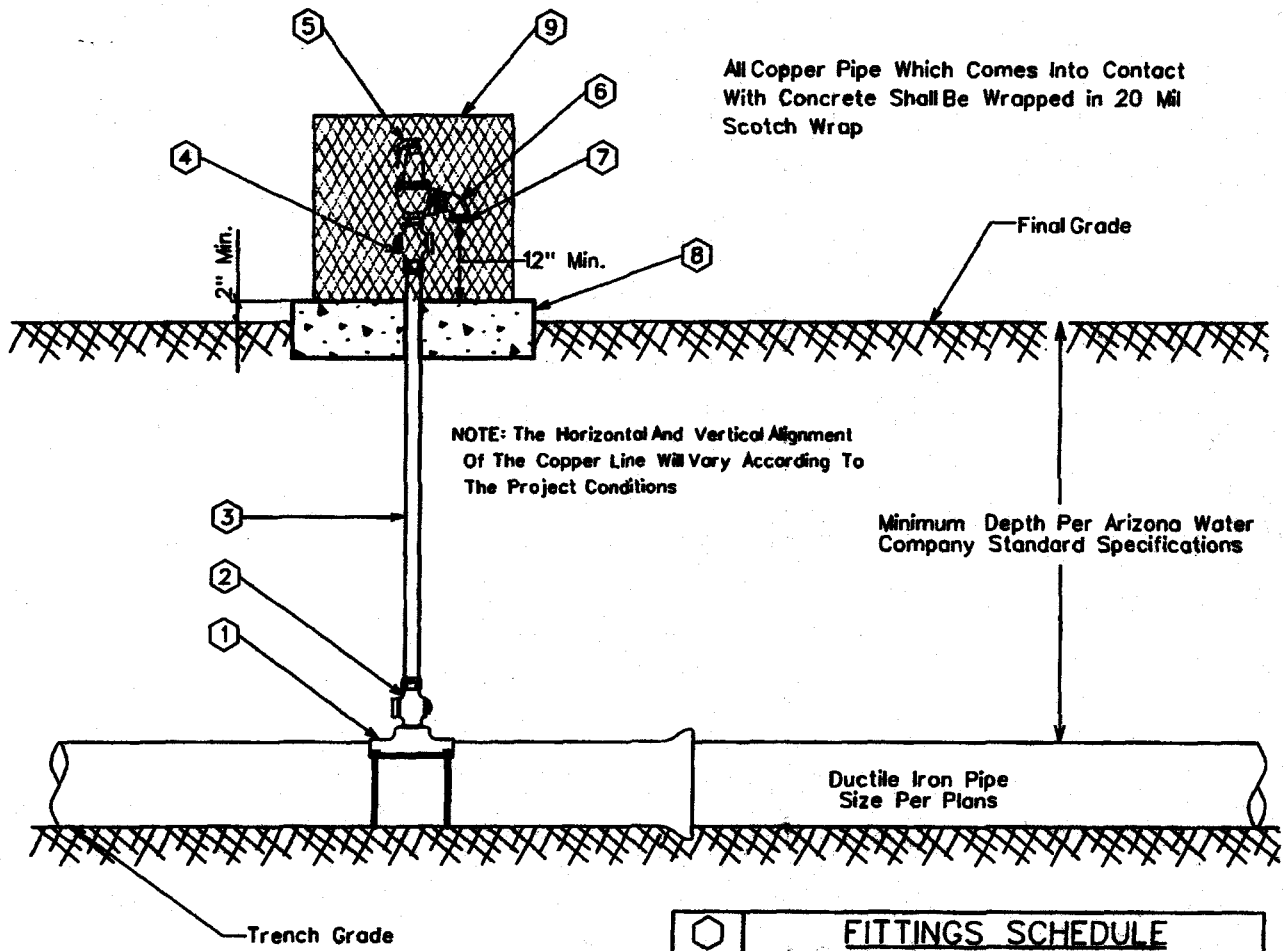

⬡	FITTINGS SCHEDULE
1.	Mueller BR2B Bronze Service Saddle - Double Strap
2.	2" Mueller B-25008 Taper x Comp. Ball Corp Stop
3.	2" Type 'K' Copper w/NO Splices - Field Fit
4.	2" Mueller B-25028 IP x Comp. Ball Corp Stop
5.	2" Pressure Relief Valve Watts 174A With A 2" Inlet / 2" Outlet 30-150 psi W/ Bronze Body
6.	2" Brass Street Elbow
7.	No.16 Wire Mesh Screen (Non-Corrodible)
8.	4" Thick Concrete Pad - Class 'C' Concrete
9.	Vandal enclosure to be centered on the concrete pad

NOTE:

1. Pressure relief valves are typically located just down stream of a pressure reducing station or where system conditions might be subject to greater than allowable pressures.
2. The relief valve assembly and vandal enclosure shall be located out of the roadway, but within the right-of-way or easement.

ARIZONA WATER COMPANY

STANDARD SPECIFICATION
FOR THE INSTALLATION OF

TYPICAL PRESSURE RELIEF VALVE ASSEMBLY

DRAWN BY:	APPROVED BY:	DATE:		
CCO	MW	3/20/1986	△ 08.29.2006	E-9-14-1

All Copper Pipe Which Comes Into Contact With Concrete Shall Be Wrapped in 20 Mil Scotch Wrap

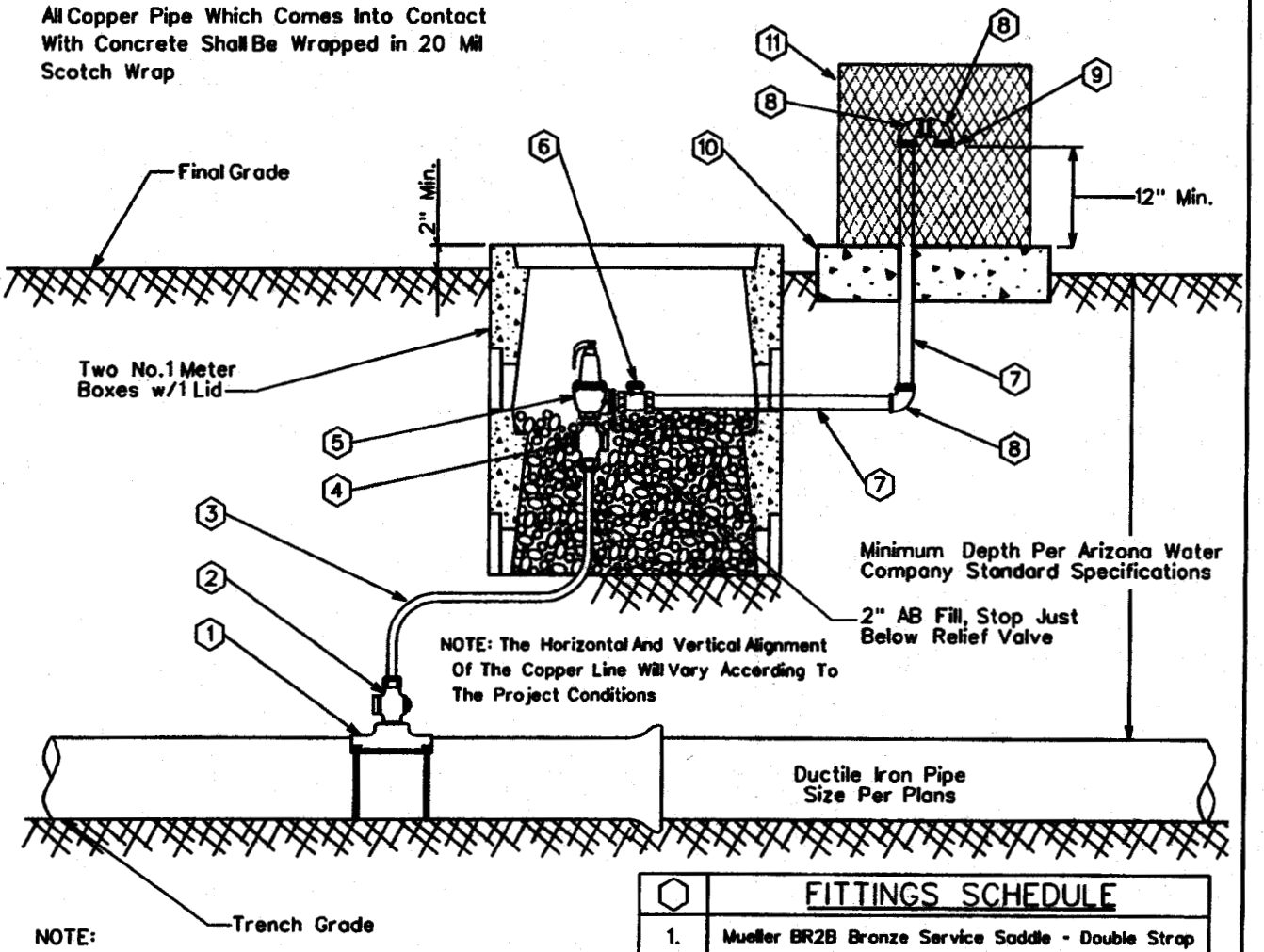

NOTE:

1. Pressure relief valves are typically located just down stream of a pressure reducing station or where system conditions might be subject to greater than allowable pressures.
2. The relief valve assembly and vandal enclosure shall be located out of the roadway, but within the right-of-way or easement.

⬡	FITTINGS SCHEDULE
1.	Mueller BR2B Bronze Service Saddle - Double Strap
2.	2" Mueller B-25008 Taper x Comp. Ball Corp Stop
3.	2" Type 'M' Rigid Copper w/NO Splices - Field Fit
4.	2" Mueller B-25028 IP x Comp. Ball Corp Stop
5.	2" Pressure Relief Valve Watts 174A With A 2" Inlet / 2" Outlet 30-150 psi W/ Bronze Body
6.	2" Bronze Check Valve Watts Series CV
7.	2" Schedule 40 Cut Pipe - Field Fit
8.	2" Brass Street Elbow
9.	No.16 Wire Mesh Screen (Non-Corrodible)
10.	4" Thick Concrete Pad - Class 'C' Concrete
11.	Guardshack, Model GS-1, Available From BPDI, Inc. Available In Leaf Green Or Desert Tan

ARIZONA WATER COMPANY

STANDARD SPECIFICATION

FOR THE INSTALLATION OF

PRESSURE RELIEF VALVE - NORTHERN REGION

DRAWN BY:	APPROVED BY:	DATE:		
CCO	MW	3/20/1986	△08.29.2006	E-9-14-2

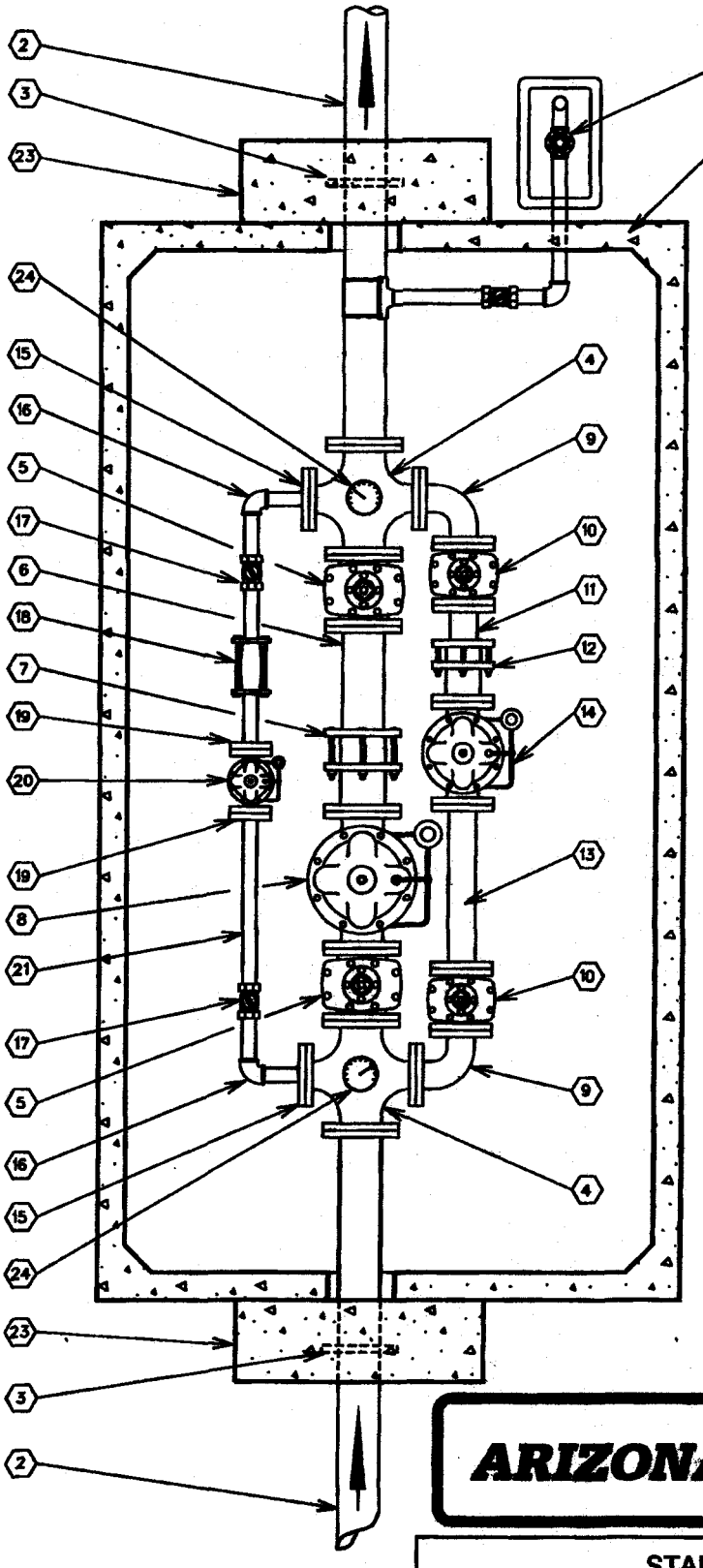

No.	FITTINGS SCHEDULE
1.	612 LA Conc. Vault (See Note 3)
2.	6"x6'-0" D.I.P. Spool Flg.xP.E.
3.	6" Megalug (Thrust Anchor)
4.	6"x4" Cross Flg.
5.	6" Gate Valve Flg.
6.	6"x2'-0" D.I.P. Spool Flg.xP.E.
7.	6" Flg. Coup. Adapt. (Rockwell 913)
8.	6" High Flow Pressure Reducing Valve Flg.
9.	4" 90° Ell. Flg.
10.	4" Gate Valve Flg.
11.	4"x1'-0" D.I.P. Spool Flg.xP.E.
12.	4" FLg. Coup. Adapt. (Rockwell 913)
13.	4"x2'-0" D.I.P. Spool Flg.
14.	4" Medium Flow Pressure Reducing Valve Flg.
15.	2"x9" O.D. Reducing Flg. (I.P.T.)
16.	2" 90° Ell. F.I.P.
17.	2" Ball Valve F.I.P.
18.	2" Comp. Coup. (Rockwell 411)
19.	2" Companion Flg. (I.P.T.)
20.	2" Low Flow Pressure Reducing Valve Flg.
21.	2" Sched. 40 Stl. Pipe
22.	2" Pressure Relief Valve (See E-9-14-1)
23.	12"x36"x36" Conc. Thrust Block P.I.P.
24.	Pressure Gauge w/shut off valve

NOTE:

1. Use Rowley pipe supports or equivalent as needed. (See E-9-12-4)
2. Pipe support locations to be determined by field personnel.
3. Vault-612 LA top section w/12" Dia. sump hole. Cover-concrete slab top w/(4) 4'-0" x2'-6" aluminum spring loaded hinged style covers for non-traffic loading areas. For areas w/low density traffic, cover is to be designed for H-20 traffic loading.
4. All Sched. 40 Stl. pipe outside of vault to be wrapped w/10-20 Mil. Scotchwrap corrosion protection tape.
5. Use deflection fittings (45° Ells.) to achieve necessary depths & cover as shown on the standard specification for the installation of a concrete vault (E-9-12-5).

ARIZONA WATER COMPANY

STANDARD SPECIFICATION

FOR THE INSTALLATION OF

PRESSURE REDUCING STATION

DRAWN BY:	APPROVED BY:	DATE:	△ 9-27-95	E-9-15-1
JPK	MW	11-16-88		

1. Specific Items To Be Painted Deer-O Pure White Enamel:

A. All Booster Pumps.
B. All Electrical Motors And Gas Engines.
C. Well Pump Discharge Heads.
D. Electrical Panel.

2. Specific Items To Be Painted Frost Cap White Or Deer-O Pure White Enamel:

A. Well Shelter.

3. Specific Items To Be Painted OSHA Orange:

A. Electrical Conduit.

4. All Other Items To Be Painted With Either:
(At Manager's Discretion)

A. Cholla Green
B. Forest Green
C. Sonora Beige
D. Red Rock
E. Rock Brown
F. Deer-O Pure White
G. Elkhorn Cactus

ARIZONA WATER COMPANY

STANDARD SPECIFICATION
FOR THE INSTALLATION OF

PAINT COLOR SELECTION

DRAWN BY:	APPROVED BY:	DATE:	△	
CCO		3/20/1986	△ 2/13/2001	E-9-16-1

1. Tank shall conform to AWWA Specification D100-84 with exceptions noted below.

*2. ¼" minimum shell plate.

3. Minimum of 12" diameter roof vent, screened with No. 16 non-corrodible wire mesh, to be located on a 24" diameter round hinged manhole opening at the center of the tank to provide access to the roof plate.

4. Overflow pipe shall be the same diameter as the inlet pipe and shall terminate 12 to 24 inches above splash pad or a minimum of 2 overflow pipe diameters above weir box high water level.

5. Storage tank shall be placed upon adequately compacted base material.

6. 6" minimum floor mounted tank drain outlet to be located close to the outer shell.

7. Tank and related fittings shall be enclosed with a 6 foot chain link fence with lockable gates and exit-personnel-ure on top of fence.

8. Liquid level shall be indicated by a target and target board on the outside surface of the tank.

9. 24 inch diameter manholes shall be provided on the roof and on the shell near the bottom of the tank. The roof manhole cover shall overlap the manhole by at least 2 inches to provide a rain tight closure. Roof manhole shall be hinged and equipped with a lock. Shell manhole cover to be hinged and bolted in place. *Tanks larger than a 80 foot diameter require 2 shell manholes.

10. Inside and outside ladders shall be located at the roof manhole. Outside ladder shall be caged with locking trap door. Bottom 8 feet of cage shall be enclosed to within ½" of shell with 10 gauge sheet steel.

11. Finished tank shall be disinfected in accordance with Arizona Department of Health Services Engineering Bulletin No. 8 before being placed into service.

12. The following information will be included with application for approval to construct:

1. Tank location_____
2. Tank height_____
3. Tank diameter_____
4. Tank capacity_____
5. Method of water level control_____

13. The storage tank will not be constructed within the 100 year flood plain and the tank site will be graded to slope away from the tank.

14. The welded steel storage tank will be coated as per AWWA Specification D102, and N.S.F. Standard 61.

*Exceptions to AWWA Specification D100-84

FOUNDATION NOTES

1. FINISH CONCRETE SURFACE MUST SLOPE UPWARDS FROM THE STEEL BAND APPROX. 1" IN 10'-0".
2. TOP OF STEEL BAND MUST BE MAINTAINED LEVEL TO WITHIN ⅛".
3. INSTALL 8-2" DIA.x12"-0" P.V.C. WEEP LINES, EQUALLY SPACED (EVERY 45°), PERFORATE 8'-0" OF LINE WITH ½" DIA. HOLES @ 8" O.C. PLUG INTERIOR END OF LINE w/2" CAP.

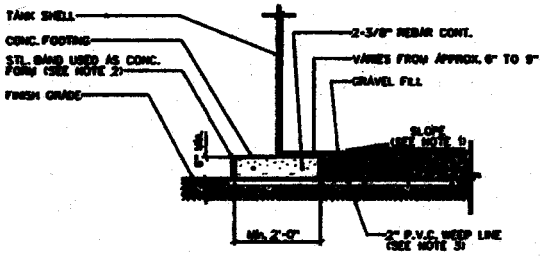

FOUNDATION DETAIL

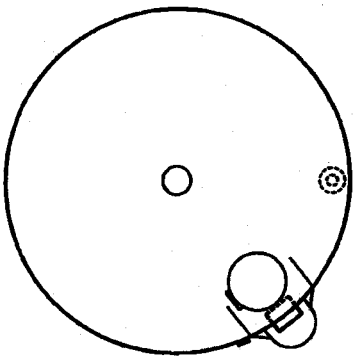

PLAN VIEW

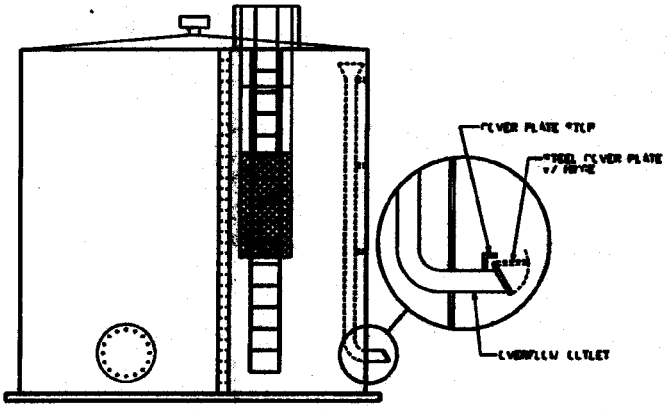

PROFILE VIEW

ARIZONA WATER COMPANY

STANDARD SPECIFICATION

FOR THE INSTALLATION OF

STEEL WATER STORAGE TANK

DRAWN BY:	APPROVED BY:	DATE:	△	
JPK	MJW	10-17-88	2-12-96	E-9-17-1

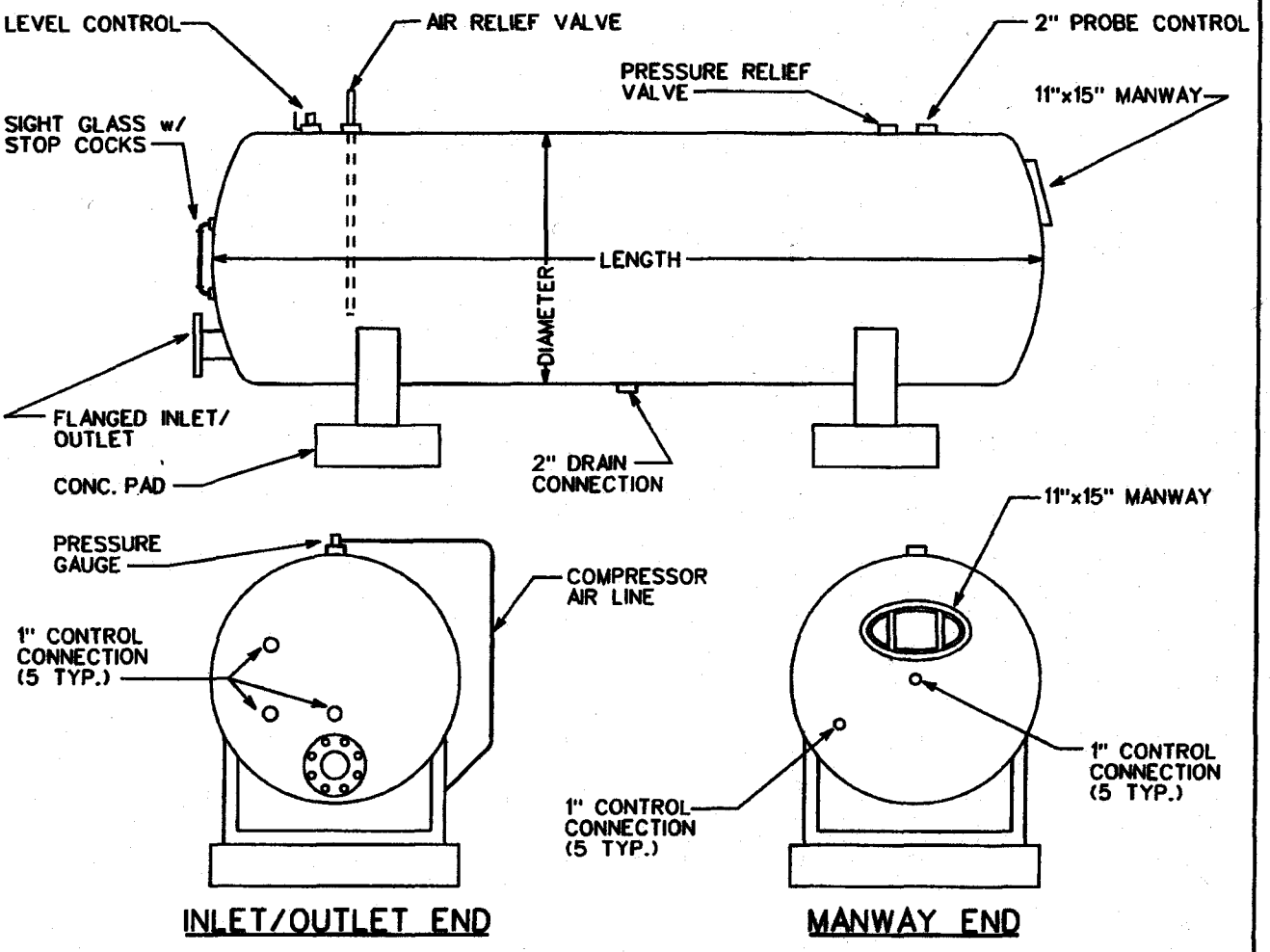

1. ALL HYDROPNEUMATIC TANKS SHALL BE DESIGNED & CONSTRUCTED IN ACCORDANCE WITH THE CURRENT REQUIREMENTS OF THE ASME CODE FOR UNFIRED PRESSURE VESSELS, SECTION VIII, DIVISION 1.
2. FINISHED TANK SHALL BE DISINFECTED IN ACCORDANCE WITH ADEQ BULLETIN No. 8 BEFORE BEING PLACED INTO SERVICE.
3. THE WELDED STEEL HYDROPNEUMATIC TANK WILL BE COATED AS PER AWWA SPECIFICATION D102 & NSF STANDARD 61.
4. THE FOLLOWING INFORMATION WILL BE INCLUDED WITH THE APPLICATION FOR APPROVAL TO CONSTRUCT.
   1. Tank Location _____
   2. Tank Length _____
   3. Tank Diameter _____
   4. Tank Capacity _____
   5. Maximum Working Pressure _____

ARIZONA WATER COMPANY

STANDARD SPECIFICATION
FOR THE INSTALLATION OF
HYDROPNEUMATIC TANK

DRAWN BY:	APPROVED BY:	DATE:	△ 01.16.2007	E-9-18-1
JPK	MW	3-20-1986		

NOT
CONVERTED
TO
CAD

ARIZONA WATER COMPANY

STANDARD SPECIFICATION
FOR THE INSTALLATION OF

WELL SHELTER

DRAWN BY:	APPROVED BY:	DATE:	△04.03.2001	E-9-19-1
CB		03.20.1986		

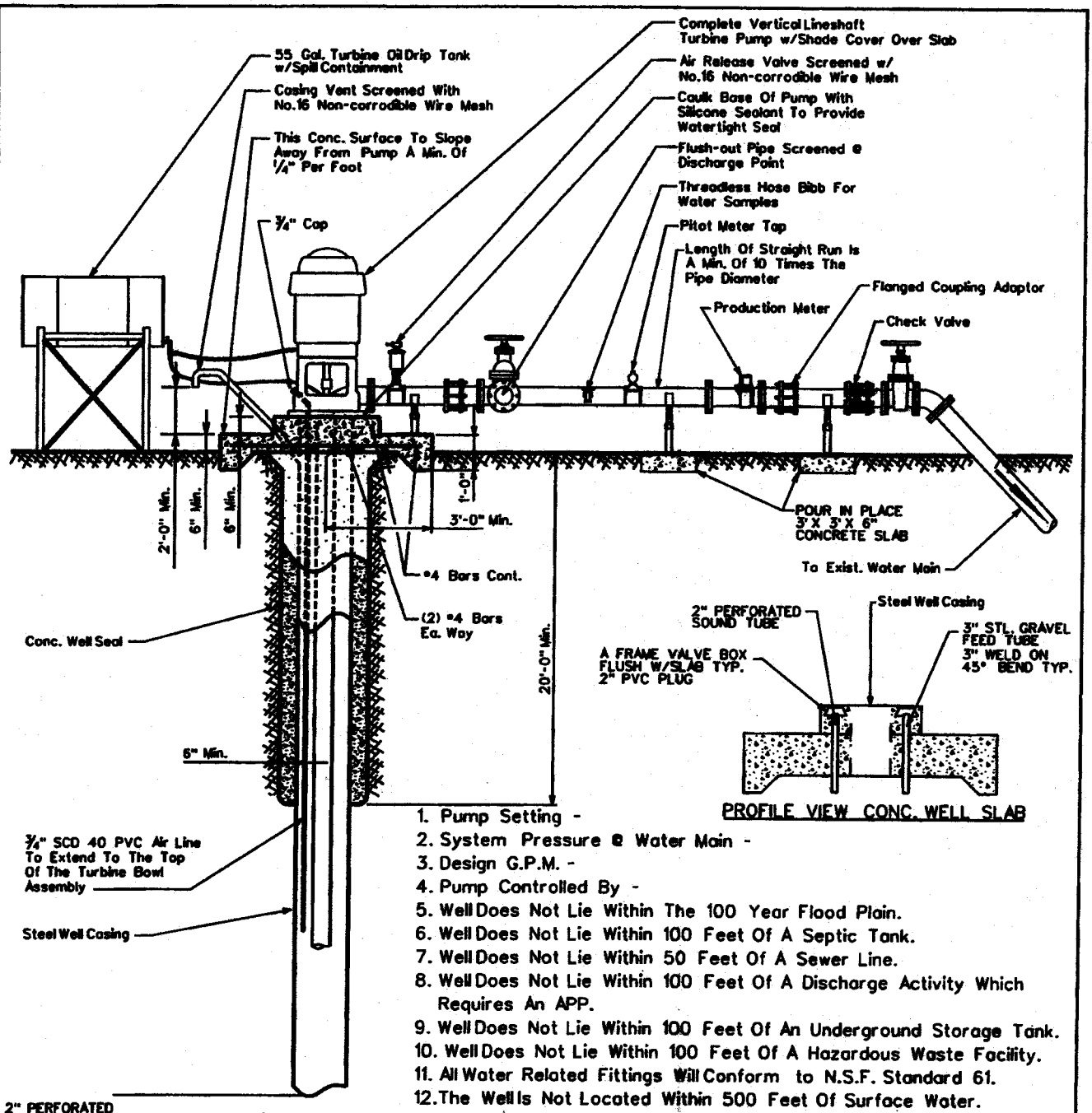

PROFILE VIEW CONC. WELL SLAB

1. Pump Setting -
2. System Pressure @ Water Main -
3. Design G.P.M. -
4. Pump Controlled By -
5. Well Does Not Lie Within The 100 Year Flood Plain.
6. Well Does Not Lie Within 100 Feet Of A Septic Tank.
7. Well Does Not Lie Within 50 Feet Of A Sewer Line.
8. Well Does Not Lie Within 100 Feet Of A Discharge Activity Which Requires An APP.
9. Well Does Not Lie Within 100 Feet Of An Underground Storage Tank.
10. Well Does Not Lie Within 100 Feet Of A Hazardous Waste Facility.
11. All Water Related Fittings Will Conform to N.S.F. Standard 61.
12. The Well Is Not Located Within 500 Feet Of Surface Water.
13. The Site Will Be Graded To Provide Adequate Drainage Away From The Well.
14. 6.88 lbs. of Davis #8084 Grey Dye, Per Yard, For 2500 PSI Concrete

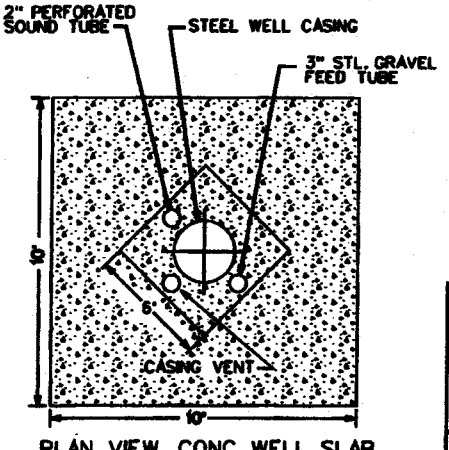

PLAN VIEW CONC. WELL SLAB

ARIZONA WATER COMPANY

STANDARD SPECIFICATION

FOR THE INSTALLATION OF

TYPICAL WELL W/ LINESHAFT TURBINE PUMP

DRAWN BY:	APPROVED BY:	DATE:		
JW	M.W.	3-20-86	△ 9/15/04	E-9-20-1

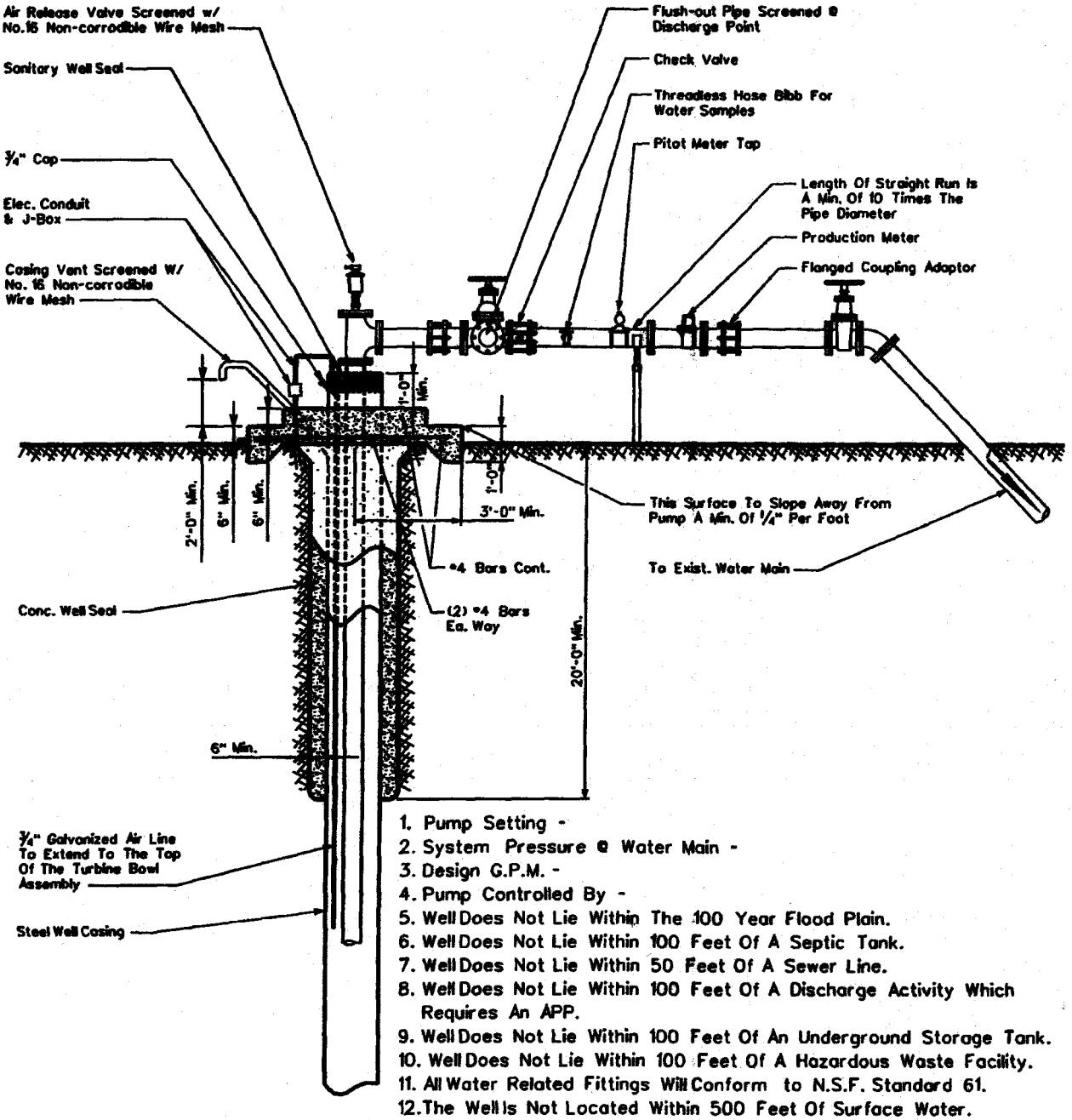

1. Pump Setting -
2. System Pressure @ Water Main -
3. Design G.P.M. -
4. Pump Controlled By -
5. Well Does Not Lie Within The 100 Year Flood Plain.
6. Well Does Not Lie Within 100 Feet Of A Septic Tank.
7. Well Does Not Lie Within 50 Feet Of A Sewer Line.
8. Well Does Not Lie Within 100 Feet Of A Discharge Activity Which Requires An APP.
9. Well Does Not Lie Within 100 Feet Of An Underground Storage Tank.
10. Well Does Not Lie Within 100 Feet Of A Hazardous Waste Facility.
11. All Water Related Fittings Will Conform to N.S.F. Standard 61.
12. The Well Is Not Located Within 500 Feet Of Surface Water.
13. The Site Will Be Graded To Provide Adequate Drainage Away From The Well.

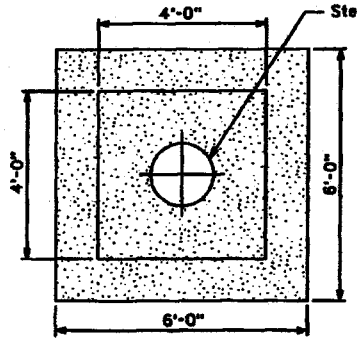

PLAN VIEW CONC. WELL SLAB

ARIZONA WATER COMPANY

STANDARD SPECIFICATION

FOR THE INSTALLATION OF

TYPICAL WELL W/ SUBMERSIBLE TURBINE PUMP

DRAWN BY:	APPROVED BY:	DATE:	△	
jpk	M.W.	3-20-86	2-16-01	E-9-21-1

All New Purchases To Conform To The Following:

Column Pipe

4" I.D. - 8	Threads	Per	Inch	Tapered	3/4"	Per	Foot	Right Hand
6" I.D. - 8	"	"	"	"	"	"	"	"
8" I.D. - 8	"	"	"	"	"	"	"	"
10" I.D.- 8	"	"	"	"	"	"	"	"
12" I.D.- 8	"	"	"	"	"	"	"	"
14" I.D.- 8	"	"	"	"	"	"	"	"

Oil Tube - Peerless Type

1 1/2" O.D. - 14	Threads	Per	Inch	Right	Hand
2" O.D. - 12	"	"	"	"	"
2 1/2" O.D. - 10	"	"	"	"	"
3" O.D. - 10	"	"	"	"	"
3 1/2" O.D. - 10	"	"	"	"	"
4" O.D. - 10	"	"	"	"	"

Line Shaft

3/4" O.D. - 10	Threads	Per	Inch	Left	Hand
1" O.D. - 14	"	"	"	"	"
1-3/16" O.D. - 10	"	"	"	"	"
1-1/2" O.D. - 10	"	"	"	"	"
1-11/16" O.D. - 10	"	"	"	"	"
1-15/16" O.D. - 10	"	"	"	"	"
2-3/16" O.D. - 10	"	"	"	"	"
2-7/16" O.D. - 8	"	"	"	"	"

ARIZONA WATER COMPANY

STANDARD SPECIFICATION
FOR THE INSTALLATION OF

COLUMN PIPE, OIL TUBE AND LINE SHAFT

DRAWN BY:	APPROVED BY:	DATE:	△	
CCO		3/20/1996	△ 2/13/2001	E-9-22-1

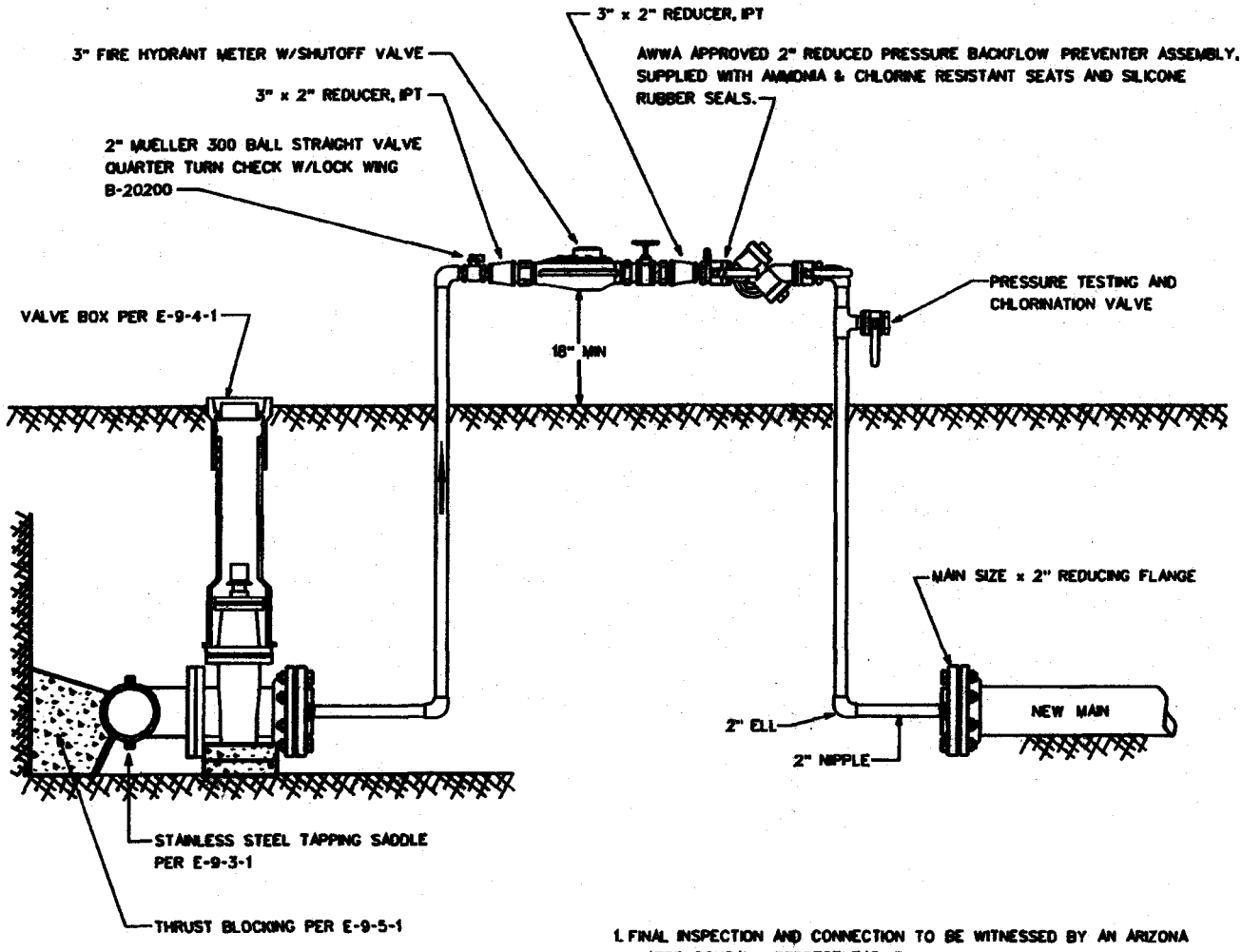

1. FINAL INSPECTION AND CONNECTION TO BE WITNESSED BY AN ARIZONA WATER COMPANY REPRESENTATIVE.
2. REDUCING FLANGES TO BE PROPERLY RESTRAINED.
3. INSTALL JUMPER TAP FOR TEMPORARY METER DOWNSTREAM OF THE REDUCING FLANGE FOR PRESSURE AND BACTEE TESTING.
4. JUMPER ASSEMBLY MUST BE A MINIMUM OF 18" ABOVE FINISHED GRADE.
5. BACKFLOW ASSEMBLY REQUIRES CERTIFICATION.
6. ASSEMBLY NOT TO BE REMOVED AND SPOOL PIECE INSTALLED FOR FINAL CONNECTION UNTIL ALL TESTING, BACTERIAL CLEARANCE AND FINAL INSPECTIONS, HAVE BEEN OBTAINED.
7. ALL NEW PIPING SHALL BE PROPERLY RESTRAINED.

ARIZONA WATER COMPANY

STANDARD SPECIFICATION
FOR THE INSTALLATION OF

HOT TAP & JUMPER METER CONNECTION

DRAWN BY:	APPROVED BY:	DATE:	△	
CB	MJW	05.14.2004		E-9-23-1

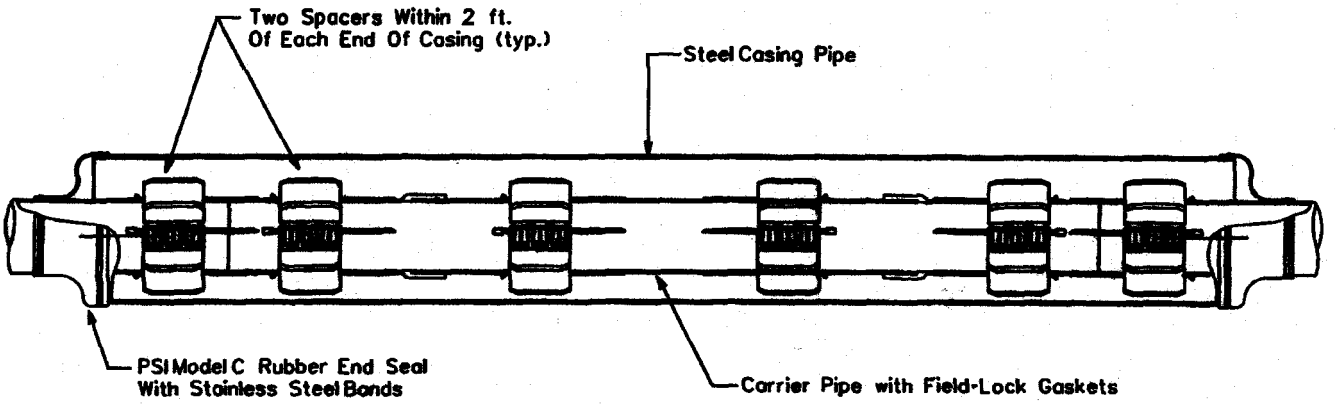

CROSS SECTION

The casing spacers shall be the PSI Ranger II Casing Spacers as manufactured by Pipeline Seal and Insulator, Inc., Houston, Texas.

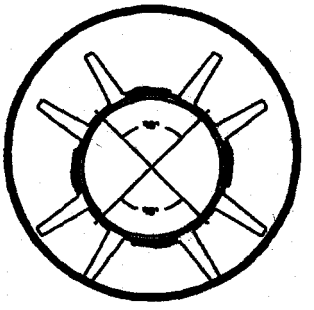

SECTION CUT

End Seals

After insertion of the carrier pipe into the casing, the ends of the casing shall be closed by installing 1/8" thick synthetic rubber end seals equal to the PSI Model "C" end seal as manufactured by Pipeline Seal and Insulator, Inc., Houston, Texas.

NOTE: The Carrier Pipe Shall Be Polywrapped Prior To The Skid Installation & Insertion Into The Carrier Casing For Divisions Requiring Polywrapped Pipe.

OD Push On Joint Bell	OD M.J. BELL
6" - 8.66"	6" - 11.12"
8" - 10.82"	8" - 13.37"
12" - 15.05"	12" - 17.94"
16" - 19.74"	16" - 22.56"
20" - 23.98"	20" - 27.08"
24" - 28.16"	24" - 31.58"
30" - 35.40"	30" - 39.12"
36" - 41.84"	36" - 46.00"
48" - 55.94"	48" - 60.00"

*Thickness Of Skid To Extend A Minimum of 1/2" Above The O.D. Of The Pipe Bell or Gland.

PIPE SIZE	CASING SIZE	CASING SIZE ID	CASING SCHEDULE	WALL THICKNESS	SKID SIZE
6"	16"	15.25"	STD.	.375	*x4x12
8"	18"	18.25"	STD.	.375	*x4x12
12"	22"	21.25"	STD.	.375	*x4x12
16"	28"	27.25"	STD.	.375	*x4x12
20"	32"	31.25"	STD.	.375	*x4x12
24"	36"	35.25"	STD.	.375	*x4x12
30"	48"	47.25"	STD.	.375	*x4x12
36"	54"	53.25"	STD.	.375	*x4x12
48"	66"	65.25"	STD.	.375	*x4x12

ARIZONA WATER COMPANY

STANDARD SPECIFICATION

FOR THE INSTALLATION OF

TYPICAL WATER LINE ENCASEMENT

DRAWN BY:	APPROVED BY:	DATE:	△	
CB		3/20/1996	△ 09.27.2006	E-9-24-1

CALCIUM HYPOCHLORITE TABLET CHLORINATOR FEEDER SPECIFICATIONS

SCOPE - This specification describes a ARCH Chemicals Calcium Hypochlorite Tablet Chlorination System as manufactured by ARCH Chemicals, 501 Merritt Seven, P.O. Box 5204, Norwalk, CT, 06856-5204.

DESCRIPTION - The chlorination system shall be completely assembled, ready to install. The chlorination system shall be a ARCH Chemicals Calcium Hypochlorite Tablet Feeder, or its equivalent, and shall be supplied with all its components factory mounted.

COMPONENTS - The Chlorination system shall have the following components:

A. 1-½" ARCH Chemical solid calcium hypochlorite tablet feeder
B. Polyethylene system enclosure
C. Integrated, level controlled solution tank
D. Adjustable flow control valve
E. Manual on/off valve (at inlet)
F. Chemical metering pump
G. On/off pump control switch
H. Waterproof electrical junction box
I. Corrosion resistant schedule 40 piping
J. Reverse flow check valves
K. Total solution output control valve

ELECTRICAL FIXTURES - The following electrical fixtures shall be provided:

A. Safety switch, 2 pole, fused for 30 Amps, for 120 Volts, 60 cycle, single phase power.

CHLORINATOR DESIGN - The chlorination facility shall be designed and constructed in accordance with Arizona State Department of Health Engineering Bulletin Number 8 - "Disinfection of Water Systems". Latest Revision.

CHLORINATION EQUIPMENT - The chlorination equipment shall be a ARCH Chemicals Calcium Hypochlorite tablet chlorinator, approved by NSF Standard 61.

CHLORINATOR OPERATION - The chlorination facility shall be operated in accordance with Arizona State Department of Health Engineering Bulletin Number 8, "Disinfection of Water Systems", Table 1. latest revision.

CHLORINATOR SYSTEM DESCRIPTION - ARCH Chemicals tablet chlorinator systems incorporate a pelerated chlorinator which is designed to utilize ARCH Chemicals 1-½" solid calcium hypochlorite tablets (Approved NSF Standard 60). Meets AWWA Standard B-300, EPA Registration # 1258-1179. The chlorinator is mounted on a polyethylene system enclosure. The inlet water is sprayed on the calcium hypochlorite tablet and collected in a solution tank. This chlorinated solution is then pumped out of the tank through a chemical metering pump. This metering pump is then adjusted to obtain the desired CL residual.

ARCH Chemicals Calcium Hypochlorite Tablet Chlorinator

NTS

HYPOCHLORINATOR COMPONENTS:

1. Chemical Metering Pump
2. Pump Suction Connection
3. Pump Discharge Connection
4. Inlet Water Assembly
5. Inlet Water Solenoid Valve
6. Inlet Shut-Off Valve
7. Inlet Pressure Regulator
8. Inlet Water Pressure Gauge
9. Spray Nozzle Water Pressure Gauge
10. Inlet Strainer
11. Inlet Tubing Connection
12. Dry Chemical Hopper
13. Suction Line
14. Electrical Control Box With Power On/Off
15. Electric Mixer
16. Solution Discharge Connection
17. Tank Drain Valve
18. Observation Port
19. Mixed Chemical Holding Tank
20. Pressure Relief Valve
21. Pump Speed Control
22. High Level Shut-Off Float Switch
23. Water Spray Nozzles

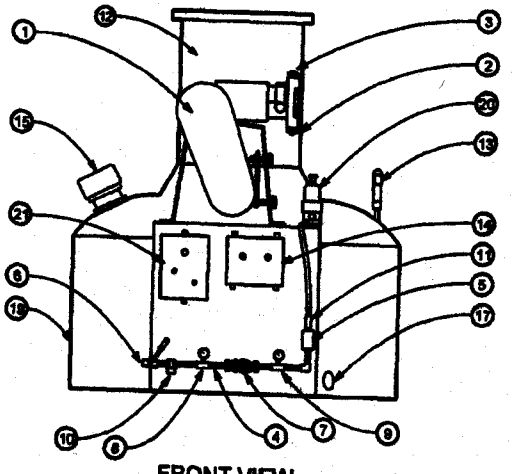

FRONT VIEW

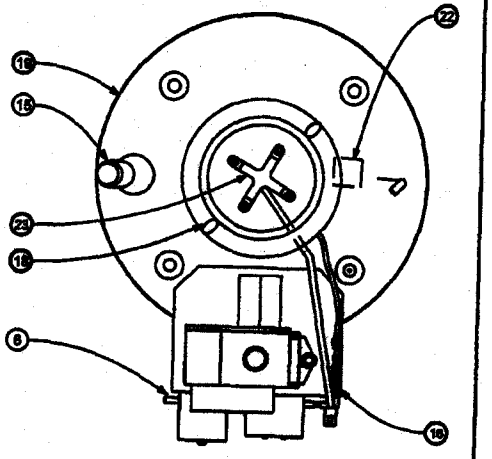

TOP VIEW

HOPPER REMOVED FOR CLARITY

Chlorinator Fluid Schematic

NTS

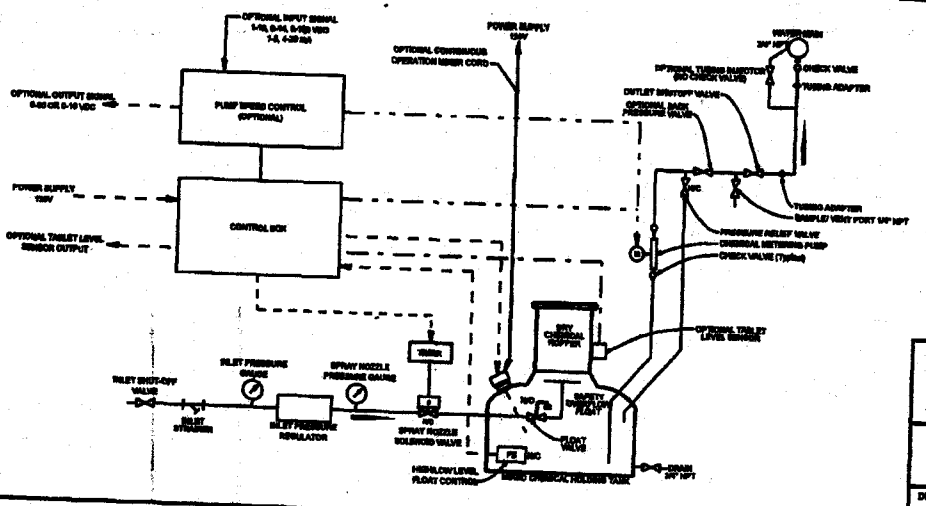

ARIZONA WATER COMPANY

STANDARD SPECIFICATION

FOR THE INSTALLATION OF

CALCIUM HYPOCHLORITE TABLET CHLORINATOR

DRAWN BY:	APPROVED BY:	DATE:	△	
CB	MW	02-09-2000		E-9-25-1

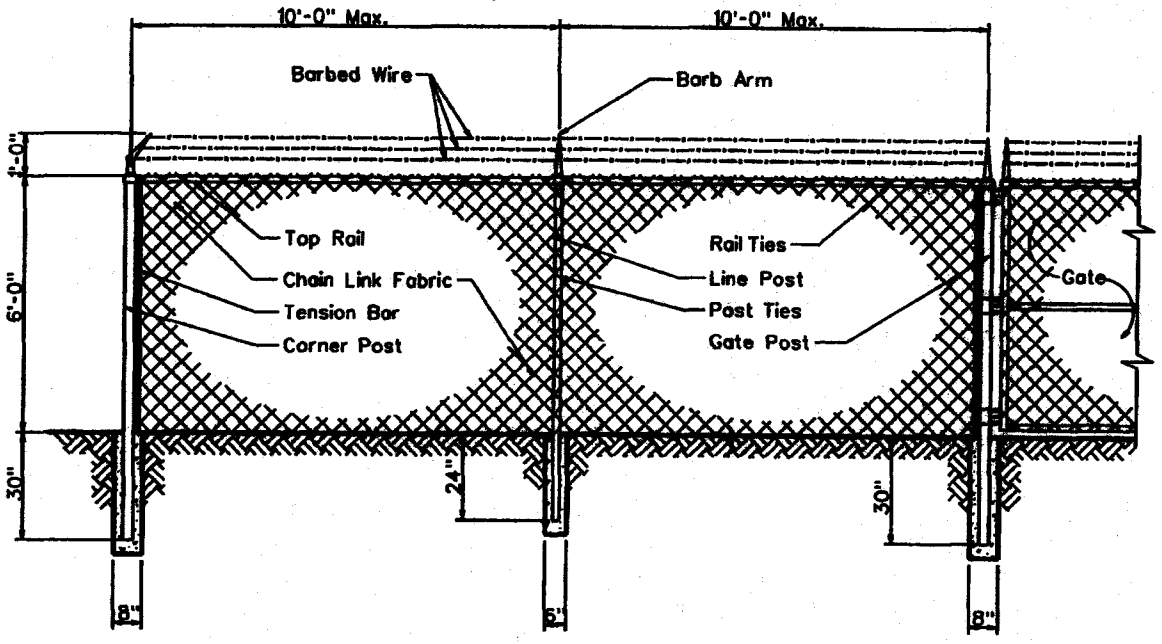

Line Post:	1-7/8" O.D.	1.74 lbs. P/L.F.	ASTM A-256
End Post:	2-7/8" O.D.	4.64 lbs. P/L.F.	ASTM A-256
Corner Post:	2-7/8" O.D.	4.64 lbs. P/L.F.	ASTM A-256
Gate Post:	2-7/8" O.D.	4.64 lbs. P/L.F.	ASTM A-256
Top Rail:	1-5/8" O.D.	4.64 lbs. P/L.F.	ASTM A-256
Chain Link Fabric:	9 Ga. 2" Mesh Galv. Before Weave		
Selvage:	Barb/Knuckle		
Fittings:	Pressed Steel		
Barb Wire:	2-1/2 Ga./2 Point		
Barb Arm:	1 Piece/45° Arm		
Tension Wire:	9 Ga./Galv.		
Line Post Set:	6"x24" In Concrete		
Terminal Post Set:	8"x30" In Concrete		

ARIZONA WATER COMPANY

STANDARD SPECIFICATION
FOR THE INSTALLATION OF

CHAIN LINK FENCE

DRAWN BY:	APPROVED BY:	DATE:	△	
CCO	MW	7/7/1992	△ 2/9/2001	E-9-26-1

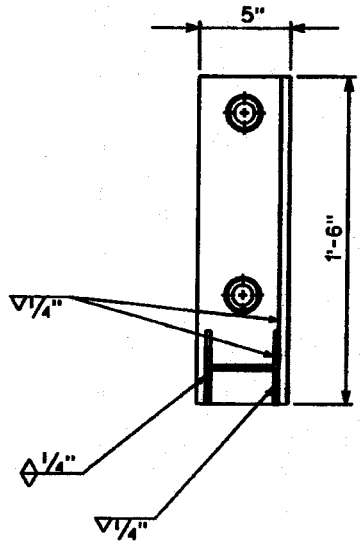

SECTION X-X

NOTES

1. Minimum 2 Supports Per Joint Of Pipe.
2. All Bolts Shall Have A Lock Washer Under The Nut.
3. All Nuts Shall Be Stainless Steel Series 304.

PIPE SIZE	A	B
8"	8"	15"
10"	9"	17"
12"	10"	19"

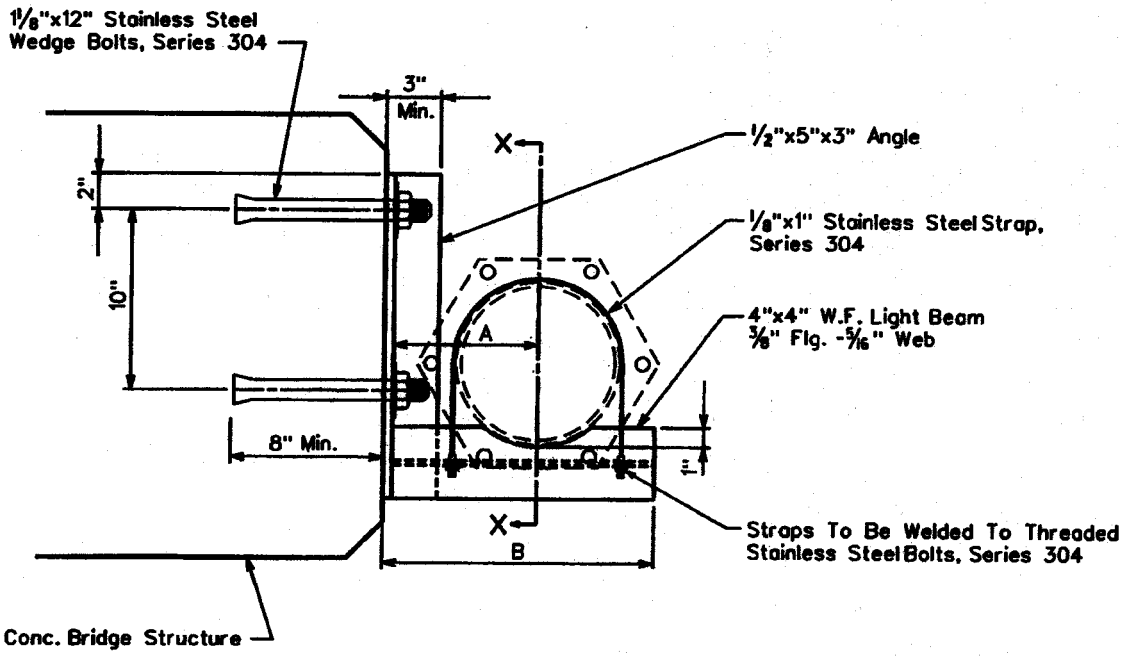

SUSPENSION DETAIL

ARIZONA WATER COMPANY

STANDARD SPECIFICATION
FOR THE INSTALLATION OF

SIDE HUNG WATER LINE SUSPENSION

DRAWN BY:	APPROVED BY:	DATE:	△	
JPK	MJW	7-12-96		E-9-27-1

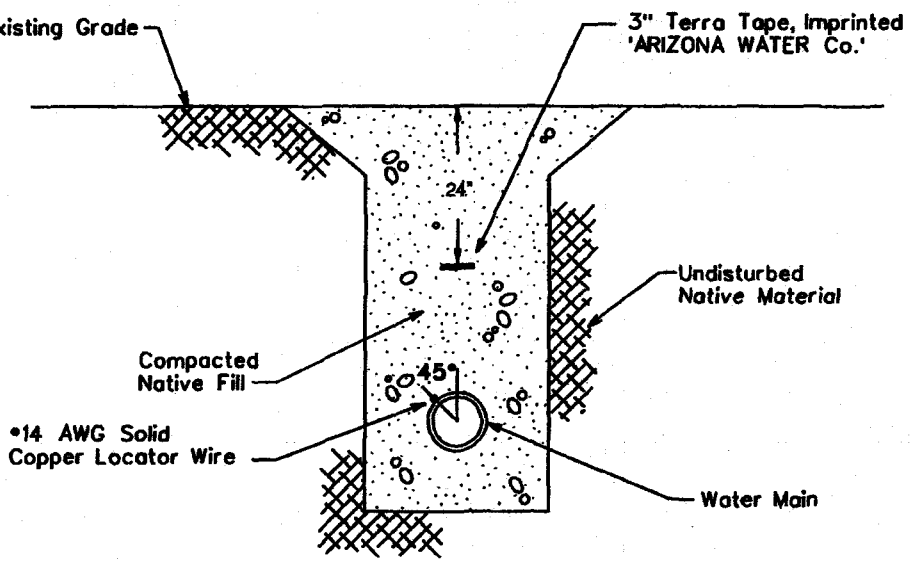

TYPICAL WATER TRENCH DETAIL

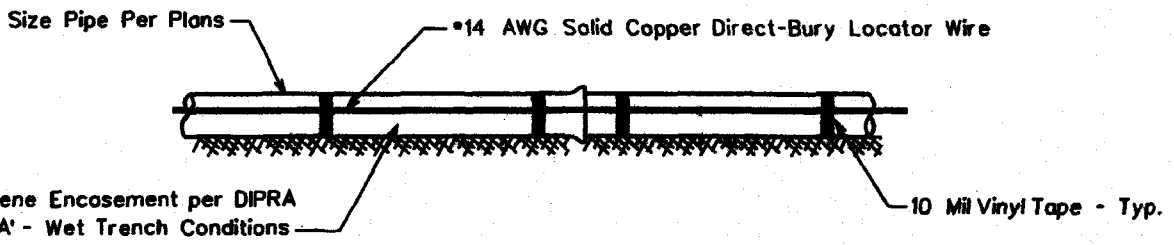

TYPICAL PROFILE VIEW

WIRE GENERAL NOTES:

1. All pipe shall have •14 AWG Solid Copper Direct-Bury Locator Wire Installed Directly To The Polywrap At 45° From The Vertical Center Of The Pipe and Shall Be Attached Using 10 Mil Vinyl Tape.
2. The Locating Wire Shall Terminate At the Top Of Each Valve Box and Be Capable of Extending 12" Above the Top Of The Box In Such A Manner So As Not To Interfere With Valve Operation.

TAPE GENERAL NOTES:

1. Use Terra Tape 3" Marking Tape As Manufactured By Reef Industries Inc. Of Houston, Texas (1-800-231-2417)
2. The Tape Is Blue & Imprinted 'ARIZONA WATER Co.'
3. INSTALLATION: The Pipe Warning Tape Shall Be Installed Over All Water Mains And Shall Be Buried 24 Inches Below The Surface Over The Center Of The Pipe.
   A) The Backfill Shall Be Sufficiently Leveled So That The Tape Is Installed On A Flat Surface.
   B) The Tape Shall Be Centered In The Trench With The Printed Side Up.
   C) Care Shall Be Exercised To Avoid Movement Of The Tape While The Remaining Backfill Is Moved Into The Trench.

ARIZONA WATER COMPANY

STANDARD SPECIFICATION
FOR THE INSTALLATION OF

PIPE WARNING TAPE AND LOCATOR WIRE

DRAWN BY:	APPROVED BY:	DATE:		
CB		03.24.1997	△09.27.2006	E-9-28-1

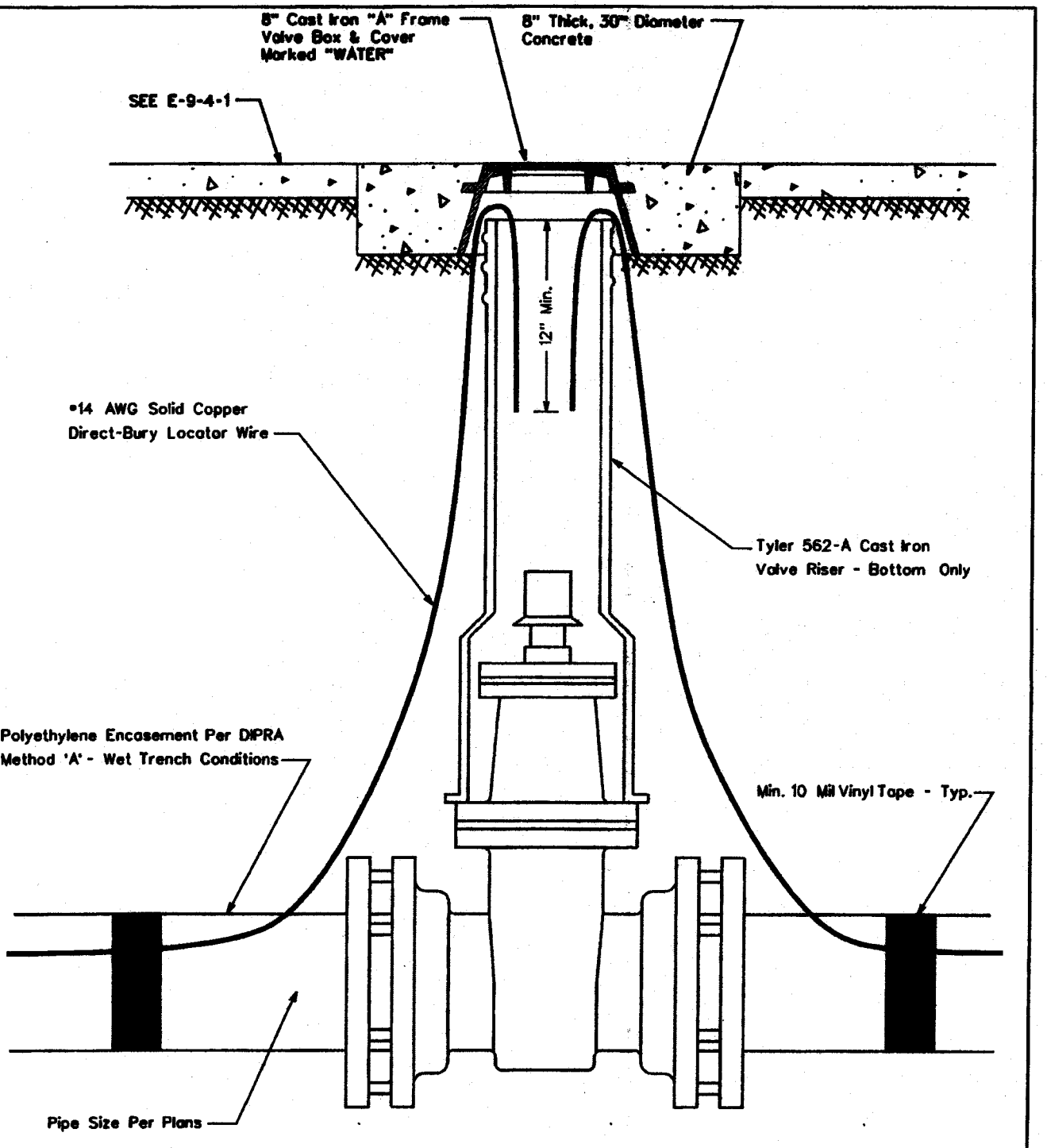

ARIZONA WATER COMPANY

STANDARD SPECIFICATION
FOR THE INSTALLATION OF

LOCATOR WIRE TERMINATION

DRAWN BY:	APPROVED BY:	DATE:	△	
CB		09.27.2006		E-9-28-2

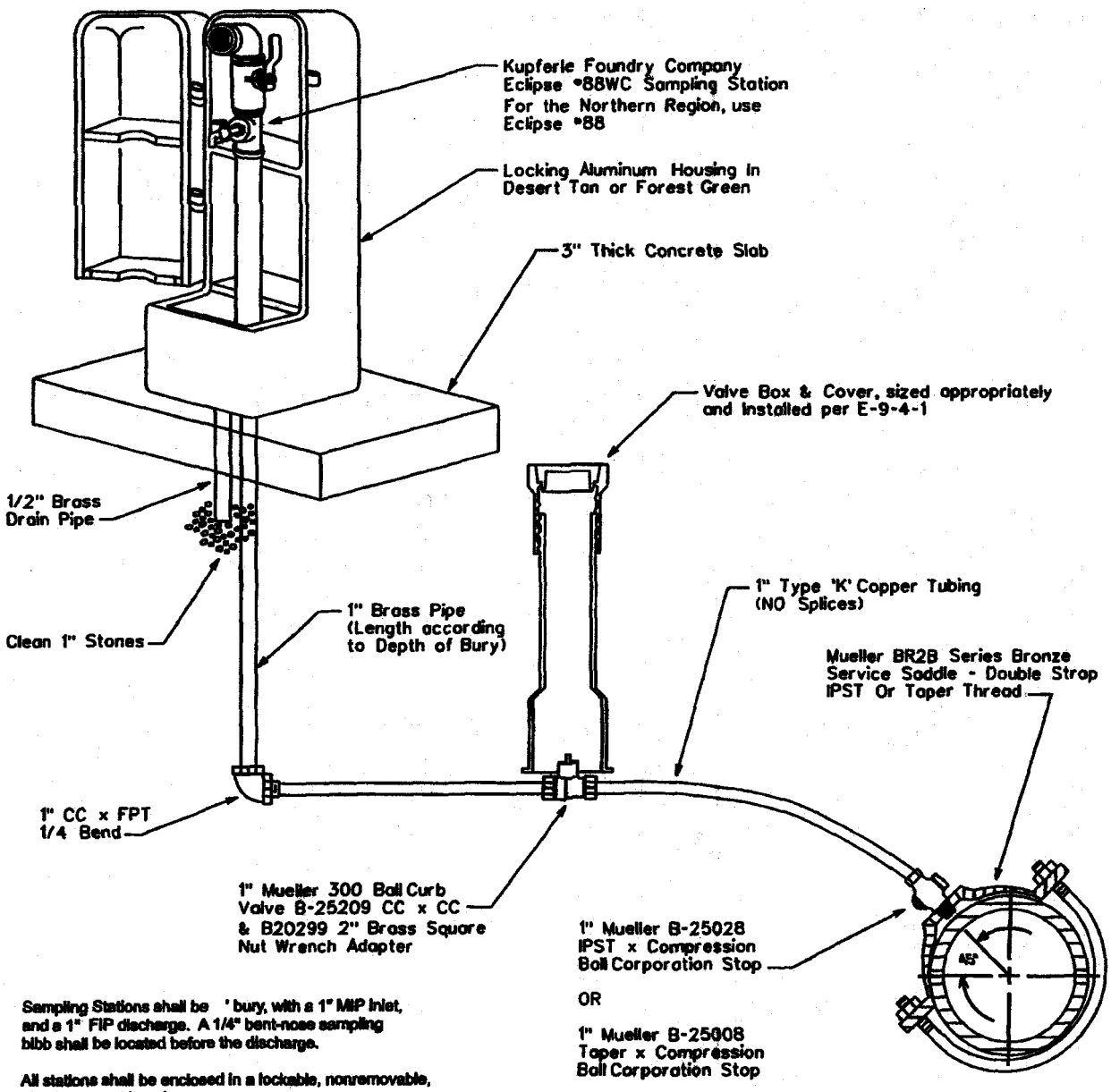

Sampling Stations shall be ' bury, with a 1" MIP inlet, and a 1" FIP discharge. A 1/4" bent-nose sampling bibb shall be located before the discharge.

All stations shall be enclosed in a lockable, nonremovable, aluminum-cast housing.

When opened, the station shall require no key for operation, and the water will flow in an all brass waterway.

All working parts will be of brass and serviceable from above ground with no digging. (OPTIONAL: if desired, a 1/2" brass drain tube will be provided within the locking cover).

A 1" ball valve will control the water flow, and be located before (or after) the sampling bibb, as manufactured by Kupferle Foundry, St. Louis, MO 63102.

SADDLE TAP TO CA, PVC, OR DI PIPE

NOTE: The minimum distance between taps on mains other than ductile iron is 12"

Pipe Depth Per
E-8-1-2, Item 3.

ARIZONA WATER COMPANY

STANDARD SPECIFICATION FOR THE INSTALLATION OF SAMPLING STATION				
DRAWN BY: CB	APPROVED BY: MW	DATE: 01.24.2007	△	E-9-29-1

ENCASEMENT FOR PIPE CROSSING

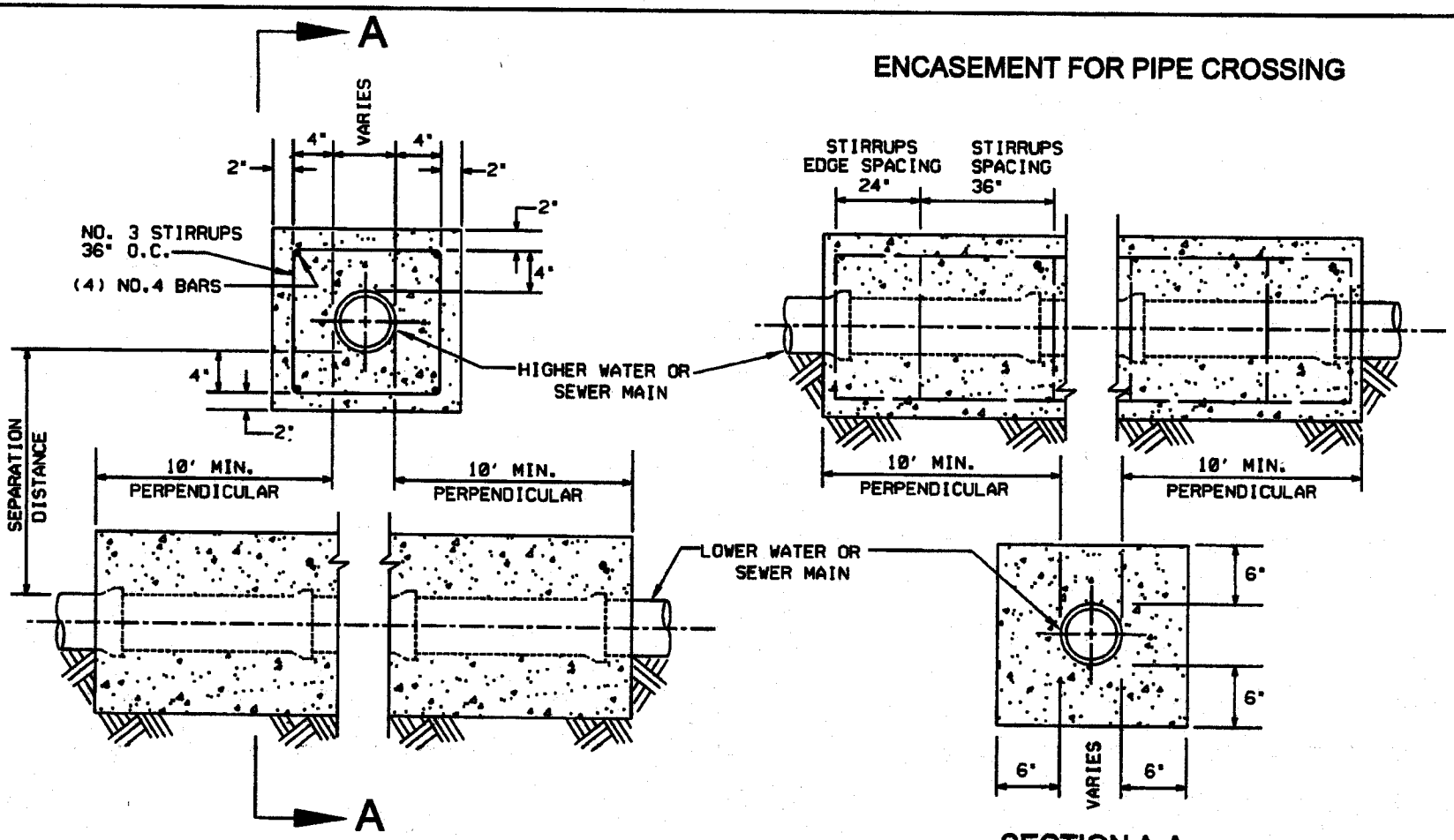

SECTION A-A

NOTES:

1. 2,000 PSI CONCRETE
2. SEPARATION DISTANCES AND/OR OTHER EXTRA PROTECTION SHALL BE REQUIRED TO PROTECT WATER MAINS FROM CONTAMINATION BY SANITARY SEWER MAINS. SEE AWC STANDARD SPECIFICATION PAGES E-8-1-9 AND E-8-1-10.
3. SEE CROSS SECTION DETAIL FOR LIMITS OF SEPARATION/EXTRA PROTECTION. ALL DISTANCES ARE MEASURED PERPENDICULARLY FROM THE OUTSIDE OF THE PIPES.
4. RECLAIMED WATER SHALL BE CONSIDERED A SANITARY SEWER WHEN PLACED NEXT TO A POTABLE WATER MAIN.

ARIZONA WATER COMPANY

STANDARD SPECIFICATION
FOR THE INSTALLATION OF
WATER AND SANITARY SEWER
SEPARATION/PROTECTION

DRAWN BY:	APPROVED BY:	DATE:	△	
CB	JW	04.07.2008		E-9-30-1

NOTES:

1. 2,000 PSI CONCRETE

2. SEPARATION DISTANCES AND/OR OTHER EXTRA PROTECTION SHALL BE REQUIRED TO PROTECT WATER MAINS FROM CONTAMINATION BY SANITARY SEWER MAINS. SEE AWC STANDARD SPECIFICATION PAGES E-8-1-9 AND E-8-1-10.

3. SEE CROSS SECTION DETAIL FOR LIMITS OF SEPARATION/EXTRA PROTECTION. ALL DISTANCES ARE MEASURED PERPENDICULARLY FROM THE OUTSIDE OF THE PIPES.

4. RECLAIMED WATER SHALL BE CONSIDERED A SANITARY SEWER WHEN PLACED NEXT TO A POTABLE WATER MAIN.

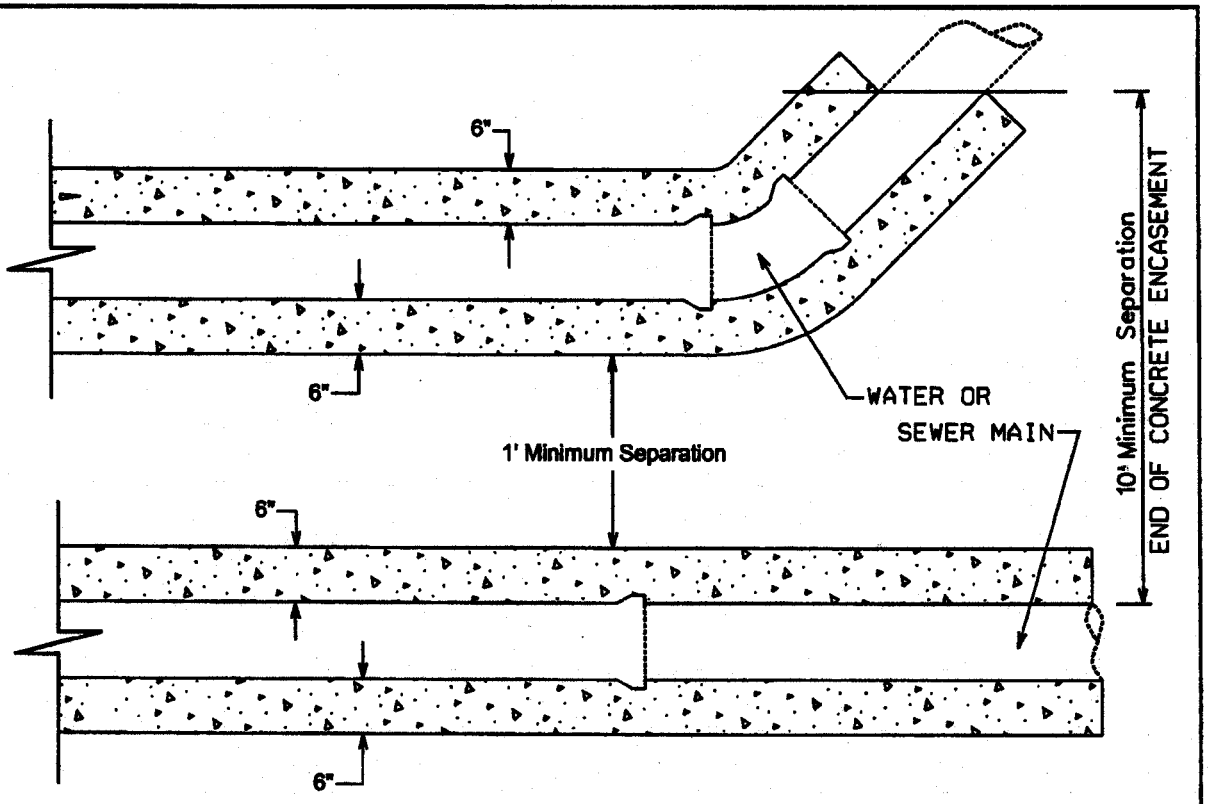

PLAN VIEW

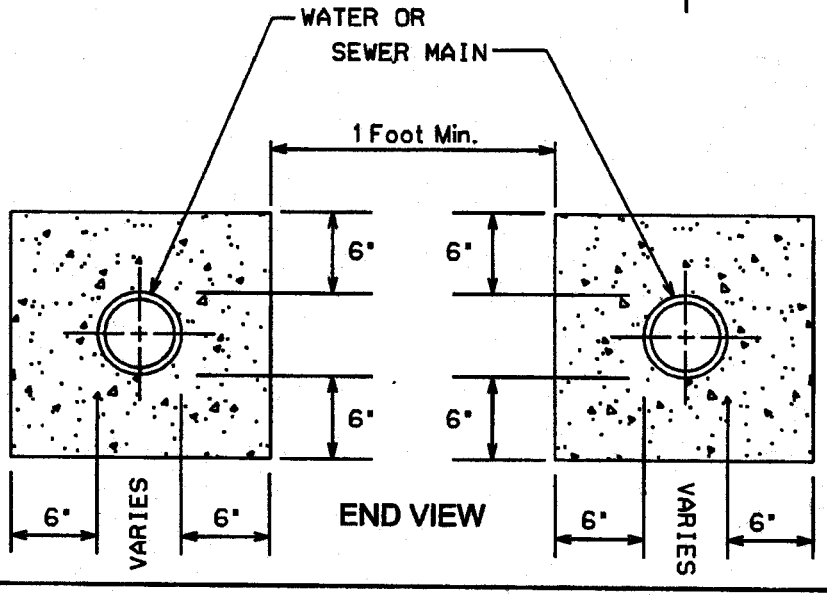

END VIEW

ENCASEMENT FOR PARALLEL PIPES

ARIZONA WATER COMPANY

STANDARD SPECIFICATION
FOR THE INSTALLATION OF
WATER AND SANITARY SEWER
SEPARATION/PROTECTION

DRAWN BY:	APPROVED BY:	DATE:	△	E-9-30-2
CB	JW	04.07.2008		

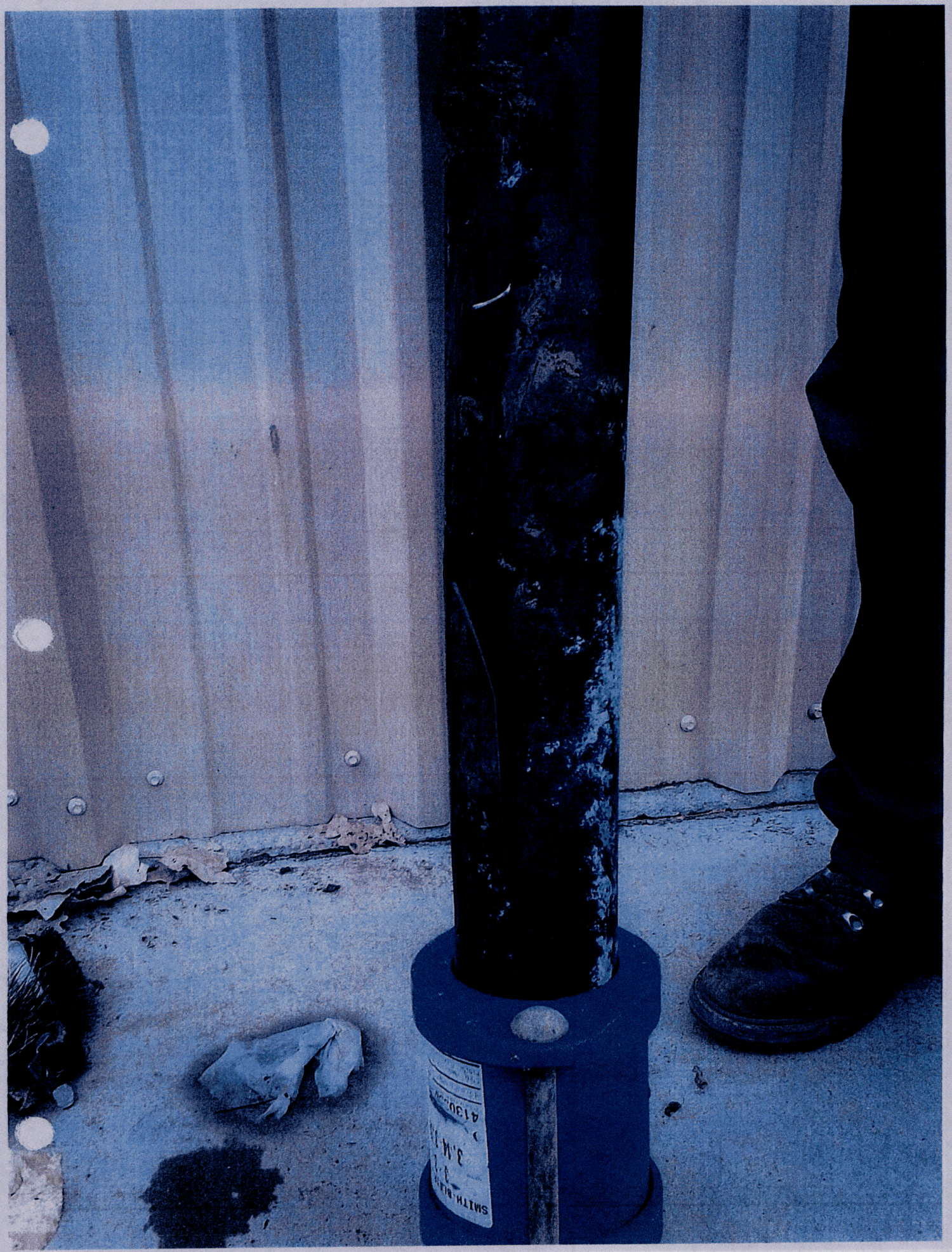
SMITH-BLAIR

ENGINEER'S CERTIFICATE OF COMPLETION AND FINAL INSPECTION "ECC"

ARIZONA DEPARTMENT OF ENVIRONMENTAL QUALITY (ADEQ) – WATER QUALITY DIVISION 5/01

ADEQ FILE NO.: 20120052 → X **DRINKING WATER DESIGN** *(New separate form now used for WASTEWATER DESIGN)* If separate Drinking Water & Wastewater Approvals to Construct were issued, separate ECCs required	**COUNTY:** Navajo
	OWNER: ARIZONA WATER COMPANY

Project Name: Hidden Pines Drive *(as shown on Approval to Construct)*

W.A. No.1-4921 SYSTEM No.09-003

Project Description: Replace approximately 532 LF of 3-inch plastic water line with 6-inch DIP and related appurtenances, along Hidden Pines Drive, Lakeside, Navajo County.

(as shown on Approval to Construct, unless completed project differed, in which case describe in detail)

I, Fredrick K. Schneider, a Professional Engineer registered in the State of Arizona, have inspected the construction of the above described project, and certify that *(check all applicable boxes, complete applicable blanks):*

ITEMS 1) THRU 4) MUST BE COMPLETED

- ☒ **1) The work on this project was completed on 5/25/2012 (date).**
- ☒ **2) On 5/25/2012 a final construction inspection was conducted by ☐ MYSELF [←check one→] ☒ under MY DIRECT SUPERVISION by Lee Hetrick (print name).**
- ☒ **3) The materials utilized and the installation and construction of those materials and equipment are in conformance with the approved plans and specifications.**
- ☒ **4) All provisions listed in the ADEQ Approval to Construct for this project, a copy of which I have attached to this certificate, have been fully satisfied or exceptions are listed on the reverse side of this certificate.**
- ☒ **5) All construction and preoperational tests (infiltration, exfiltration, pressure, deflection, chlorination, bacti, etc.) *[circle types performed]* were properly conducted, met ADEQ requirements, and are represented in attachments to this Certificate. The total number of pages of test results attached is 1.**

EITHER 6A) or 6B) MUST BE CHECKED

- ☐ **6A) Any deviation from the approved plans and the ADEQ Certificate of Approval to Construct have been noted on the attached "As-Built" plans (as stipulated in the Approval to Construct provisions) prepared and sealed pursuant to A.R.S.§ 32-125 on 5-31-12 (date). Of the total _____ sheets of "As-Built" plans attached, deviations from the approved plans are shown on sheets numbered _____. All deviations from the approved plans comply with the ADEQ minimum design and construction standards contained in statute, rule, bulletin or referenced codes, and with the key elements of the approved plans.**
- ☒ **6B) The completed project did not deviate from the plans which received the Approval to Construct.**

EITHER 7A) or 7B) MUST BE CHECKED

- ☒ **7A) This project did not require the preparation of an Operation and Maintenance Manual.**

  (the only projects which do NOT require an O&M manual are gravity-only sewage collection systems, single-family residence septic systems, and drinking water distribution projects that include no source, storage, or pressurization facilities).
- ☐ **7B) A FINAL Operation and Maintenance Manual has been prepared for this project and a copy is attached. This manual meets all ADEQ minimum design and construction standards contained in statute, rule, bulletin, referenced codes, the key elements of the approved plans, and, if applicable, with Attachment B of the September 10, 1994 Engineering Advisory for Individual Alternate Systems.**

EITHER 8A) or 8B) MUST BE CHECKED

- ☒ **8A) Review of this project for Approval of Construction issuance does not require a fee because this project involves only drinking water, not wastewater.**
- ☐ **8B) In accordance with A.A.C. R18-9-103 Schedule B, a check in the amount of $_____ is attached as initial fee for review of the submitted and other information for issuance of an Approval of Construction.**

ADDITIONAL INFORMATION

- ☐ **9) Other, see additional information on reverse side.**

↓ ENGINEER'S SEAL per AAC R4-30-304.B ↓

Engineer Address PO Box 29006, Phoenix, AZ 85038-9006

Phone 602-240-6860

AZ DEPARTMENT OF ENVIRONMENTAL QUALITY ACCEPTANCE

EMPLOYEE SIGNATURE (PRINTED NAME) DATE

ADEQ Arizona Department of Environmental Quality

ENGINEERING REVIEW SECTION
DATA REQUIRED WITH ECC

Please complete the test data and submit this form with the Engineers Certificate of Completion. An Approval of Construction cannot be issued without the data identified below in accordance with Arizona Administrative Code (A.A.C.) R18-5-508(C). Please attach all supplemental information and calculations to this form.

WA 1-4921

DATA

1.

PRESSURE TEST DATA

Indicate Segment Tested	All			
Pressure and Leakage Test Results (Pass/Fail)	Pass			
Date Tested	5-21-12			
Time Started	7:50 AM			
Time Finished	9:50 AM			
Pipe Diameter	6"			
Footage Tested	432			
Allowable Leakage	.52 gal			
Leakage Observed	None			
Pressure at Test Point	200 psi			
Employee Observing the Test (Please Print Legibly)	Kim Boucher			
Signature of Employee Observing the Test	KB			

2.

DISINFECTION SAMPLING

Initial Sampling (Minimum 50 ppm available chlorine)	Date	5-17-12			
	Time	8:10 AM			
	ppm Cl_2	80			
After 24 Hours Detention Time (Minimum 10 ppm free chlorine)	Date	5-21-12			
	Time	10:05 AM			
	ppm Cl_2	30			
After Sufficient Flushing (Water is clear and system Cl_2 residual is measured)	Date	5-21-12			
	Time	1:00 PM			
	ppm Cl_2	.9			
Bacteriological Sampling(s):	Date	5-21-12	5-21-12		
	Time	2:00 PM	2:10 PM		
	Attached (Y/N)	Yes	Yes		
		Yes/No	Yes/No	Yes/No	Yes/No

3.

Certification

I, Lee Hetrick, certify that I have inspected the work performed and have found it to be satisfactory and in accordance with Arizona Administrative Code, Arizona Engineering Bulletins, and the approved specifications.

Authorized Persons Signature

May 25, 2012
Date

Professional Seal
As per A.A.C. R4-30-301(B)(2)

Registered Professional Engineer (Civil)
CERTIFICATE NO.
20588
FREDRICK K. SCHNEIDER
Date Signed 6-3-12
ARIZONA, U.S.A.

exp 9-30-13

http://www.azdeq.gov/environ/water/dw/download/data.pdf
1110 WEST WASHINGTON, PHOENIX, AZ 85007
HTTP://WWW.AZDEQ.GOV/ENGINEERINGREVIEW/

LEGEND Technical Services, Inc.
www.legend-group.com

17631 N. 25th Avenue • Phoenix, AZ 85023
P (602) 324-6100 • F (602) 324-6101

Regina Lynds
Arizona Water Company
3805 N. Black Canyon Hwy
Phoenix, AZ85015

Project: Specials
Project Number: 5/21/12

Reported:
05/25/12 09:08

Analyte

DRAFT: 09018 (PLCC Big Well) (2051636-01) Drinking Water (Grab) Sampled: 05/21/12 11:10 Received: 05/22/12 09:20

Analyte	Result	PQL	Units	Dilution	Batch	Prepared	Analyzed	Method	Notes
Legend Technical Services of Arizona, Inc.									
DRAFT: Microbiology									
E. coli	Absent		P/A	1	B2E0669	05/22/12 12:55	05/22/12 12:55	SM 9223B	
Total Coliforms	Absent		P/A	1	B2E0669	05/22/12 12:55	05/22/12 12:55	SM 9223B	

DRAFT: 09018 (PLCC Small Well) (2051636-02) Drinking Water (Grab) Sampled: 05/21/12 11:20 Received: 05/22/12 09:20

Analyte	Result	PQL	Units	Dilution	Batch	Prepared	Analyzed	Method	Notes
Legend Technical Services of Arizona, Inc.									
DRAFT: Microbiology									
E. coli	Absent		P/A	1	B2E0669	05/22/12 12:55	05/22/12 12:55	SM 9223B	
Total Coliforms	Absent		P/A	1	B2E0669	05/22/12 12:55	05/22/12 12:55	SM 9223B	

DRAFT: 09-003, 1-2 (Hidden Pine North End) (2051638-01) Drinking Water (Grab) Sampled: 05/21/12 14:00 Received: 05/22/12 09:20

Analyte	Result	PQL	Units	Dilution	Batch	Prepared	Analyzed	Method	Notes
Legend Technical Services of Arizona, Inc.									
DRAFT: Microbiology									
E. coli	Absent		P/A	1	B2E0669	05/22/12 12:55	05/22/12 12:55	SM 9223B	
Total Coliforms	Absent		P/A	1	B2E0669	05/22/12 12:55	05/22/12 12:55	SM 9223B	

DRAFT: 09-003, 2-2 (Hidden Pine South End) (2051638-02) Drinking Water (Grab) Sampled: 05/21/12 14:10 Received: 05/22/12 09:20

Analyte	Result	PQL	Units	Dilution	Batch	Prepared	Analyzed	Method	Notes
Legend Technical Services of Arizona, Inc.									
DRAFT: Microbiology									
E. coli	Absent		P/A	1	B2E0669	05/22/12 12:55	05/22/12 12:55	SM 9223B	
Total Coliforms	Absent		P/A	1	B2E0669	05/22/12 12:55	05/22/12 12:55	SM 9223B	

ARIZONA DEPARTMENT OF ENVIRONMENTAL QUALITY
CERTIFICATE OF APPROVAL TO CONSTRUCT
WATER FACILITIES

ADEQ File No: 20120052	**LTF No:** 55675
System Name: Az Water Co-Lakeside	**System Number:** 09-003
Project Owner: Arizona Water Company	
Address: P O Box 29006, Phoenix, AZ 85038	
Project Location: Lakeside	**County:** Navajo
Description: REPLACE APPROXIMATELY 532 L.F. OF 3-IN PLASTIC WATER LINE WITH 6-IN D.I.P. AND RELATED APPURTENANCES, ALONG HIDDEN PINES DRIVE, LAKESIDE, NAVAJO CO.	

Approval to construct the above-described facilities as represented in the approved documents on file with the Arizona Department of Environmental Quality is hereby given subject to provisions 1 through 5 continued on page 2 through 2

1. This project must be constructed in accordance with all applicable laws, including Title 49, Chapter 2, Article 9 of the Arizona Revised Statutes and Title 18, Chapter 5, Article 5 of the Arizona Administrative Code.
2. Upon completion of construction, the engineer shall fill out the Engineer's Certificate of Completion and forward it to the Central Regional Office located in Phoenix. If all requirements have been completed, that unit will issue a Certificate of Approval of Construction. R18-5-507(B), Ariz. Admin.Code. At the project owner's request, the Department may conduct the final inspection required pursuant to R18-5-507(B); such a request must be made in writing in accordance with the time requirements of R18-5-507(C), Ariz. Admin. Code.
3. This certificate will be void if construction has not started within one year after the Certificate of Approval to Construct is issued, there is a halt in construction of more than one year, or construction is not completed within three years of the approval date. Upon receipt of a written request for an extension of time, the Department may grant an extension of time; an extension of time must be in writing. R18-5-505(E), Ariz. Admin. Code.
4. Operation of a newly constructed facility shall not begin until a Certificate of Approval of Construction has been issued by the Department. R18-5-507(A), Ariz. Admin. Code.

Reviewed by: AD4

By: _____ 3/22/2012
Janak K. Desai, P.E. Unit Manager — Date
Engineering Review Section
Water Quality Division

cc: File No: 20120052
Regional Office: Central
Owner: Arizona Water Company
County Health Department: Navajo
Engineer: Arizona Water Company
Planning and Zoning/Az Corp. Commission
Engineering Review Database - Sr021

RECEIVED
MAR 27 2012
ARIZONA WATER COMPANY
PHOENIX - ENGINEERING

5. The Arizona Department of Environmental Quality's review of this application was subject to the requirements of the licensing time frames ("LTF") statute under Arizona Revised Statutes ("A.R.S.") § 41-1072 through § 41-1079 and the LTF rules under Arizona Administrative Code ("A.A.C.") R18-1-501 through R18-1-525. This Notice is being issued within the overall time frame for your application.

   ADEQ hereby approves your application for Approval to Construct Water Facilities under A.R.S. § 49-351. Your copy is enclosed.

   This decision is an appealable agency action under A.R.S. § 41-1092. You have a right to request a hearing and file an appeal under A.R.S. § 41-1092.03(B). You must file a written Request for Hearing or Notice of Appeal within 30 days of your receipt of this Notice. A Request for Hearing or Notice of Appeal is filed when it is received by ADEQ's Hearing Administrator as follows:

   Office of Administrative Counsel
   Arizona Department of Environmental Quality
   1110 W. Washington Street
   Phoenix, AZ 85007

   The Request for Hearing or Notice of Appeal shall identify the party, the party's address, the agency and the action being appealed and shall contain a concise statement of the reasons for the appeal. Upon proper filing of a Request for Hearing or Notice of Appeal, ADEQ will serve a Notice of Hearing on all parties to the appeal. If you file a timely Request for Hearing or Notice of Appeal you have a right to request an informal settlement conference with ADEQ under A.R.S. § 41-1092.06. This request must be made in writing no later than 20 days before a scheduled hearing and must be filed with the Hearing Administrator at the above address.

   Please contact Adrian Dumitrescu at 602-771-4201 or ad4@azdeq.gov if you have questions regarding this Notice or the Certificate of Approval to Construct.

ADEQ Arizona Department of Environmental Quality

ENGINEERING REVIEW SECTION
DATA REQUIRED WITH ECC

Please complete the test data and submit this form with the Engineers Certificate of Completion. An Approval of Construction cannot be issued without the data identified below in accordance with Arizona Administrative Code (A.A.C.) R18-5-508(C). Please attach all supplemental information and calculations to this form.

DATA

1.

PRESSURE TEST DATA				
Indicate Segment Tested	All			
Pressure and Leakage Test Results (Pass/Fail)	Pass			
Date Tested	5-21-12			
Time Started	7:50 AM			
Time Finished	9:50 AM			
Pipe Diameter	6"			
Footage Tested	432			
Allowable Leakage	.52 gal			
Leakage Observed	None			
Pressure at Test Point	200 psi			
Employee Observing the Test (Please Print Legibly)	Kim Boucher			
Signature of Employee Observing the Test	KB			

2.

DISINFECTION SAMPLING					
Initial Sampling (Minimum 50 ppm available chlorine)	Date	5-17-12			
	Time	8:10 AM			
	ppm Cl_2	80			
After 24 Hours Detention Time (Minimum 10 ppm free chlorine)	Date	5-21-12			
	Time	10:05 AM			
	ppm Cl_2	30			
After Sufficient Flushing (Water is clear and system Cl_2 residual is measured)	Date	5-21-12			
	Time	1:00 PM			
	ppm Cl_2	.9			
Bacteriological Sampling(s):	Date	5-21-12	5-21-12		
	Time	2:00 AM	2:10 PM		
	Attached (Y/N)	Yes	Yes		
		Yes/No	Yes/No	Yes/No	Yes/No

3.

Certification

I, Lee Hetrick, certify that I have inspected the work performed and have found it to be satisfactory and in accordance with Arizona Administrative Code, Arizona Engineering Bulletins, and the approved specifications.

Authorized Persons Signature

May 25, 2012
Date

Professional Seal
As per A.A.C. R18-5-507(B)(1)

LEGEND Technical Services, Inc.
www.legend-group.com

17631 N. 25th Avenue • Phoenix, AZ 85023
P (602) 324-6100 • F (602) 324-6101

Regina Lynde
Arizona Water Company
3805 N. Black Canyon Hwy
Phoenix, AZ85015

Project: Specials
Project Number: 5/21/12

Reported:
05/25/12 09:08

Analyte

DRAFT: 09018 (PLCC Big Well) (2051636-01) Drinking Water (Grab) Sampled: 05/21/12 11:10 Received: 05/22/12 09:20

Analyte	Result	PQL	Units	Dilution	Batch	Prepared	Analyzed	Method	Notes
Legend Technical Services of Arizona, Inc.									
DRAFT: Microbiology									
E. coli	Absent		P/A	1	B2E0669	05/22/12 12:55	05/22/12 12:55	SM 9223B	
Total Coliforms	Absent		P/A	1	B2E0669	05/22/12 12:55	05/22/12 12:55	SM 9223B	

DRAFT: 09018 (PLCC Small Well) (2051636-02) Drinking Water (Grab) Sampled: 05/21/12 11:20 Received: 05/22/12 09:20

Analyte	Result	PQL	Units	Dilution	Batch	Prepared	Analyzed	Method	Notes
Legend Technical Services of Arizona, Inc.									
DRAFT: Microbiology									
E. coli	Absent		P/A	1	B2E0669	05/22/12 12:55	05/22/12 12:55	SM 9223B	
Total Coliforms	Absent		P/A	1	B2E0669	05/22/12 12:55	05/22/12 12:55	SM 9223B	

DRAFT: 09003, 1-2 (Hidden Pine North End) (2051638-01) Drinking Water (Grab) Sampled: 05/21/12 14:00 Received: 05/22/12 09:20

Analyte	Result	PQL	Units	Dilution	Batch	Prepared	Analyzed	Method	Notes
Legend Technical Services of Arizona, Inc.									
DRAFT: Microbiology									
E. coli	Absent		P/A	1	B2E0669	05/22/12 12:55	05/22/12 12:55	SM 9223B	
Total Coliforms	Absent		P/A	1	B2E0669	05/22/12 12:55	05/22/12 12:55	SM 9223B	

DRAFT: 09003, 2-2 (Hidden Pine South End) (2051638-02) Drinking Water (Grab) Sampled: 05/21/12 14:10 Received: 05/22/12 09:20

Analyte	Result	PQL	Units	Dilution	Batch	Prepared	Analyzed	Method	Notes
Legend Technical Services of Arizona, Inc.									
DRAFT: Microbiology									
E. coli	Absent		P/A	1	B2E0669	05/22/12 12:55	05/22/12 12:55	SM 9223B	
Total Coliforms	Absent		P/A	1	B2E0669	05/22/12 12:55	05/22/12 12:55	SM 9223B	

WA 1-4926

Lakeside

Federal Communications Commission
Public Safety and Homeland Security Bureau

VHF/UHF Narrowbanding Information for Public Safety Licensees

December 2010

Outline

- Narrowbanding Basics
- Narrowbanding Deadlines
- How to Prepare for Narrowbanding
- Modifying Licenses to Reflect Narrowbanding
- Additional Information Resources

Narrowbanding Basics

- Who is required to narrowband?
  - All Public Safety and Industrial/Business licensees in the 150-174 MHz (VHF) and 421-512 MHz (UHF) bands
- What is required?
  - By January 1, 2013, licensees must migrate their systems from 25 kHz (wideband) to 12.5 kHz (narrowband) channel bandwidth or a technology that achieves equivalent efficiency

Benefits of Narrowbanding

- Narrowbanding ensures more efficient use of the spectrum and greater spectrum access for public safety and non-public safety users
- Will relieve congestion in and result in increased channel availability for public safety VHF/UHF systems
- Narrowbanding has been consistently supported by the public safety community, including APCO, NPSTC, and other organizations

Outline

- Narrowbanding Basics
- Narrowbanding Deadlines
- How to Prepare for Narrowbanding
- Modifying Licenses to Reflect Narrowbanding
- Additional Information Resources

Narrowbanding Deadlines

- All licensees must complete narrowbanding to 12.5 kHz by January 1, 2013
  - FCC will also no longer allow manufacture or importation of equipment that includes a 25 kHz mode
- Some interim requirements take effect on January 1, 2011:
  - 12.5 kHz operation required for all new VHF/UHF systems or expansion of existing systems
  - FCC will not certify new equipment that includes a 25 KHz mode

Narrowbanding Timeline

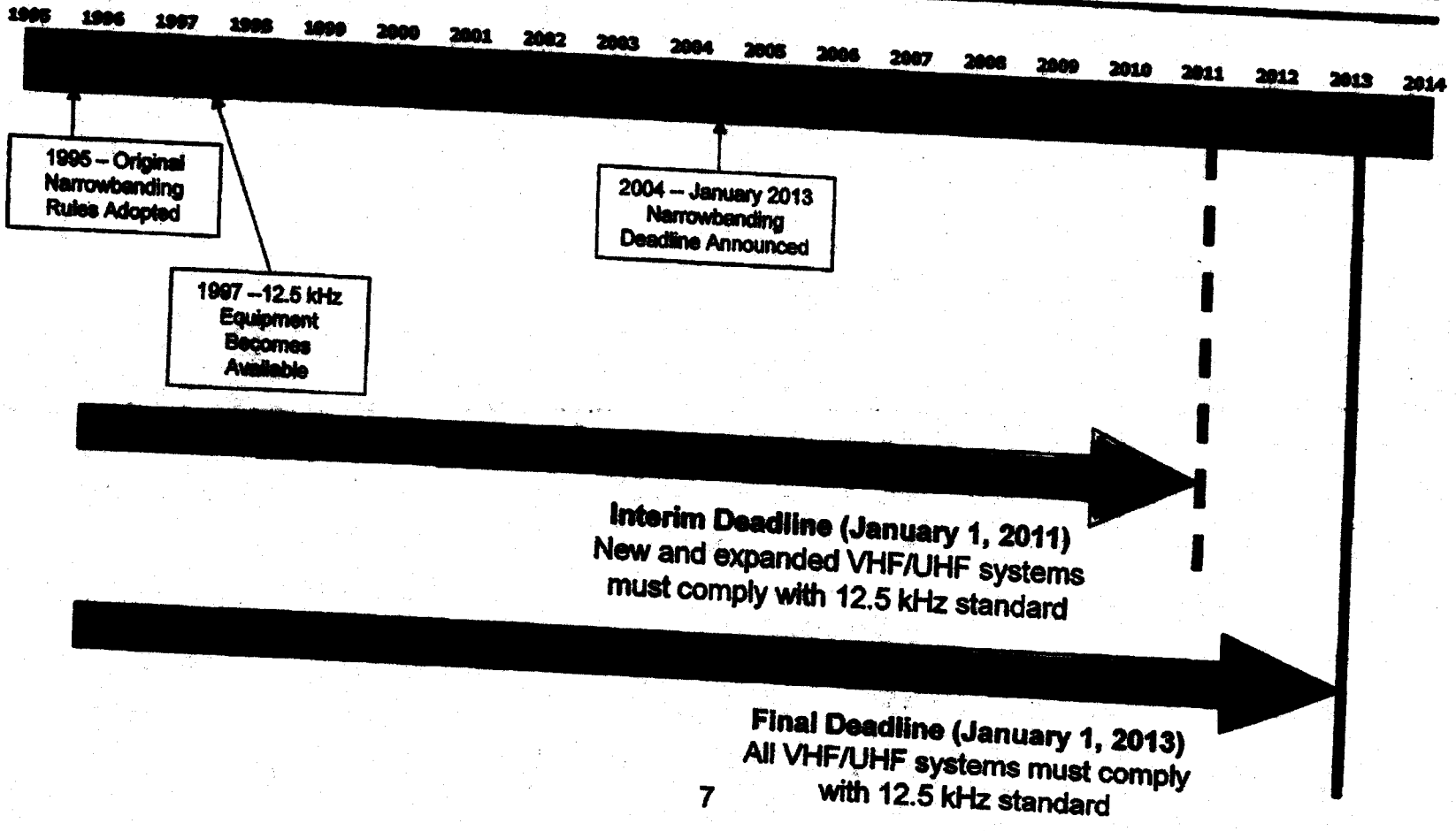

Why Meeting the Deadline Is Important

- After January 1, 2013, FCC interference rules will not protect non-compliant wideband systems from harmful interference
- Systems that fail to narrowband by the deadline could create interference or interoperability problems for systems that have narrowbanded
- Wideband equipment will not be available after January 1, 2013

The Deadline Will Not Be Extended

- The Commission has recently reaffirmed the January 1, 2013 deadline
- Licensees facing unique circumstances may request waivers, but waiver requests must meet a high standard and are not routinely granted
- Licensees concerned about meeting the deadline should focus on planning and preparation
- Informal contact with the Bureau is encouraged prior to any filing

Future Narrowbanding to 6.25 kHz Technology

- Narrowbanding rules provide for eventual migration from 12.5 kHz to 6.25 kHz bandwidth
  - Intended to further increase efficiency and channel availability
- The FCC has not set a deadline for 6.25 kHz implementation
  - No deadline will be established without further notice and comment
- Licensees may narrowband to 6.25 kHz voluntarily
  - All 150-174 MHz and 421-512 MHz equipment certified after January 1, 2013 must include 6.25 kHz capability

Outline

- Narrowbanding Basics
- Narrowbanding Deadlines
- How to Prepare for Narrowbanding
- Modifying Licenses to Reflect Narrowbanding
- Additional Information Resources

Preparing for Narrowbanding

- Prepare NOW – January 1, 2013 is approaching fast!
- Determine how narrowbanding will affect your system
  - Will existing equipment need replacement/retuning?
  - Will additional sites be needed to maintain coverage?
  - Is coordination with neighboring systems required?
- Develop a compliance plan
  - Timeline
  - Funding requirements
- Contact the Public Safety and Homeland Security Bureau with questions/concerns

Availability of Narrowband Equipment

- All VHF/UHF equipment certified since 1997 has 12.5 kHz capability
  - Many systems have equipment with dual 25 kHz/12.5 kHz capability, making the narrowbanding transition easier
- Check with your vendor to determine whether your existing system equipment is narrowband-capable or needs modification/replacement

Funding Considerations

- Cost of narrowbanding will vary depending on the nature of each licensee's existing system
  - Narrowbanding generally does not require a system upgrade, though licensees may combine narrowbanding with other scheduled upgrades or modifications
  - Narrowbanding costs may be more substantial for older systems that require replacement of existing equipment
- Funding to support narrowbanding may be available through federal grant programs (agency contact information provided in "Additional Information Resources" section)

Outline

- Narrowbanding Basics
- Narrowbanding Deadlines
- How to Prepare for Narrowbanding
- Modifying Licenses to Reflect Narrowbanding
- Additional Information Resources

Licensing Modifications

- Licensees should modify their licenses to add a narrowband emission designator prior to commencing narrowband operations
  - Licensees may maintain both narrowband and wideband designators on their licenses while they are transitioning their systems
- Once the narrowband transition is complete, licensees should modify their licenses by removing the wideband emission designator
- These actions can be completed online using ULS

Frequency Coordination

- Frequency coordination is <u>not</u> required for addition of narrowband emissions designator or removal of wideband emissions designator, provided no other changes are being made
  - For licensees north of Line A or west of Line C, reduction in bandwidth does not require Canadian coordination
- Frequency coordination <u>is</u> required when narrowbanding is combined with other modifications that alter a station's footprint
  - E.g., changes in location, antenna height, ERP, as well as when switching from analog to digital emissions

Outline

- Narrowbanding Basics
- Narrowbanding Deadlines
- How to Prepare for Narrowbanding
- Modifying Licenses to Reflect Narrowbanding
- Additional Information Resources

PSHSB Website and Contacts

Roberto Mussenden
202-418-1428
Roberto.Mussenden@fcc.gov
Zenji Nakazawa
202-418-7949
Zenji.Nakazawa@fcc.gov

Narrowbanding Mailbox: narrowbanding@fcc.gov

Bureau Website:

http://www.fcc.gov/pshs/public-safety-spectrum/narrowbanding.html

Other Resources

- http://www.aaacomm.com/fcc_licensing.htm
- http://www.mrfac.com/Mandatory-Narrowbanding.html
- http://www.npstc.org/narrowbanding.jsp
- http://www.IMSAsafety.org

Federal Resources

- DHS
  - Office of Emergency Communications (oec@hq.dhs.gov)
  - SAFECOM
    - http://www.safecomprogram.gov/SAFECOM/grant/default.htm
- FEMA
  - www.fema.gov/grants
  - http://www.fema.gov/government/grant/iecgp/index.shtm
    Interoperable Emergency Communications Grant Program
- DOJ National Institute of Justice
  - http://www.ojp.usdoj.gov/nij/topics/technology/communication/radios/fcc-narrowbanding.htm

ARIZONA WATER COMPANY
WORK AUTHORIZATION

W.A. NUMBER: 1-4926
P.E. NUMBER:
BUDGET ITEM NO.: B-1
SHEET NO.: 1 of 2

SYSTEM: LAKESIDE/OVERGAARD
DIVISION: NAVAJO
TAX CODE: 3293

WORK TO START BY: UPON AUTHORIZATION
WORK TO BE FINISHED BY: WITHIN 180 DAYS

DESCRIPTION OF WORK:

Replace radios at 14 sites to be compliant with FCC narrow band requirement. Sites include: Lakeside Office, Pine Lakes Tank, Pinetop Lakes Million Gallon Tank, Pinetop Lakes Country Club Tank and Booster, Lower Woodland Well No. 6, Sandy 40 Nate Well No. 7, Rim Tank, Larson Road Well No. 4, Timber Lake Pines Tank, Pine Meadows Well No. 2, Holliday Forest Well No. 4, Mogollon Well No. 5, Zane Grey Well No. 3, and Overgaard Office. Construct in accordance with attached drawings and/or Arizona Water Company specifications.

FACTORS JUSTIFYING WORK:

APPROVED 2012 BUDGET ITEM ($80,000)
The FCC narrow banding mandate requires that all existing radios that operate on channel bandwidths of 25 kHz be converted to 12.5 kHz or less on or before January 1, 2013. These radio replacements and modifications are needed in order for the Company to provide safe, reliable, and adequate water service.

COST ESTIMATE	
COST OF WORK:	
MATERIAL	0
LABOR	8,800
CONTRACT PORTION	64,032
OVERHEAD	8,012
TOTAL AUTHORIZED EXPENDITURES CHARGEABLE TO THIS W.A.	$ 80,844
FUNDS RECEIVED:	
CONTRIBUTIONS RECEIVED	0
REFUNDABLE ADVANCES RECEIVED	0
TOTAL CONTRIBUTIONS/ADVANCES	0
NET CASH REQUIRED	$ 80,844

AUTHORIZATION	DATE
PREPARED BY: Mike Loggins ML 5-4-12	4-26-12
REVIEWED FOR ERRATA/FLOW VERIFICATION: Charles Briggs CB 05-04-2012	05-04-2012
REVIEWED BY: Andy Hess AJH 5-7-12	4-26-12
APPROVED BY ENGINEERING: Fredrick Schneider 5-4-12	5-1-12
APPROVED BY PRESIDENT: Joseph Harris	5/2/12
AUTHORIZED BY PRESIDENT: William Garfield	5-4-2012

COMMENTS:

There are two separate contracts with Global Data Specialists associated with this WA:
1. Lakeside
2. Overgaard

CONSTRUCTION RELEASE:

RELEASED TO CONSTRUCTION
Authorized by FRED SCHNEIDER
Date 5/9/2012

AFH

ARIZONA WATER COMPANY

WORK AUTHORIZATION - DETAIL SHEET

W.A. NUMBER: 1-4926
P.E. NUMBER:
BUDGET ITEM NO.: B-1
SHEET NO.: 2 of 2

RETIREMENT PROPERTY UNITS	PLANT PROP ACCT	UNIT DESCRIPTION	QUANTITY	UNIT RETIREMENT COST

PROJECT DESCRIPTION:

Replace radios at 14 sites to be compliant with FCC narrow band requirement. Sites include: Lakeside Office, Pine Lakes Tank, Pinetop Lakes Million Gallon Tank, Pinetop Lakes Country Club Tank and Booster, Lower Woodland Well No. 6, Sandy 40 Nate Well No. 7, Rim Tank, Larson Road Well No. 4, Timber Lake Pines Tank, Pine Meadows Well No. 2, Holliday Forest Well No. 4, Mogollon Well No. 5, Zane Grey Well No. 3, and Overgaard Office.

	DESCRIPTION	PLANT PROP ACCT	QUANTITY	UNIT COST	TOTAL
CONTRACT WORK	Configure RTU and onsite integration for Overgaard	397.2	1	$ 9,525.00	$ 9,525
	Purchase to power radio for Overgaard	397.2	1	450.00	450
	Radio programming for Overgaard	397.2	1	95.00	95
	Purchase DPSK card for Overgaard	397.2	2	180.00	360
	Purchase Ace radio for Overgaard	397.2	4	3,671.50	14,686
	Electrical install	397.2	1	6,975.00	6,975
	Configure RTU and onsite integration for Lakeside	397.2	1	8,925.00	8,925
	Purchase to power radio for Lakeside	397.2	6	450.00	2,700
	Purchase DPSK card for Lakeside	397.2	6	180.00	1,080
	Purchase Ace radio for Lakeside	397.2	2	3,477.50	6,955
	Electrical install	397.2	1	4,260.00	4,260
	Shipping, bonds, and tax for Overgaard	397.2	1	3,686.76	3,687
	Shipping, bonds, and tax for Lakeside	397.2	1	2,833.51	2,834
	Replace Base Station Radio	397.1	2	655.00	1,310
TOTAL CONTRACT WORK					$ 64,092
MATERIALS					
	SERVICE CONNECTIONS: DOUBLE-LONG	345			
	SERVICE CONNECTIONS: DOUBLE-SHORT	345			
	SERVICE CONNECTIONS: SINGLE-LONG	345			
	SERVICE CONNECTIONS: SINGLE-SHORT	345			
	METERS	346			
TOTAL MATERIALS					$ -
LABOR	Engineering Design	397.2	40	$ 55.00	$ 2,200
	Project Management	397.2	40	55.00	2,200
	TESTING FEE				
	PERMIT FEE				
	SURVEY FEE				
	FIELD INSPECTION	397.2	80	55.00	4,400
	INSTALL SERVICE CONNECTIONS: DOUBLE-LONG	345			
	INSTALL SERVICE CONNECTIONS: DOUBLE-SHORT	345			
	INSTALL SERVICE CONNECTIONS: SINGLE-LONG	345			
	INSTALL SERVICE CONNECTIONS: SINGLE-SHORT	345			
TOTAL LABOR					$ 8,800
SUBTOTAL - CONTRACT WORK, MATERIALS, AND LABOR					$ 72,892
OVERHEAD					8,012
TOTAL	REFUNDABLE PORTION ☐	NON-REFUNDABLE PORTION ☐		COST ESTIMATE	$ 80,844

AFH

WA 1-4926 - Replace 21 Wireless Telemetry and Voice Communication Units to Comply with FCC Mandate

ID	Task Name	Duration	Start	Finish	Predecessors
1	**Navajo FCC Narrow Band Schedule**	**235 days**	**Mon 2/6/12**	**Fri 12/28/12**	
2	Update Quotes	30 days	Mon 2/6/12	Fri 3/16/12	
3	Execute Contract Documents	30 days	Mon 3/19/12	Fri 4/27/12	2
4	Procure Materials	60 days	Mon 4/30/12	Fri 7/20/12	3
5	Program Radios	60 days	Mon 4/30/12	Fri 7/20/12	3
6	Install Radio Controls, Conduit, and Appurtenances	50 days	Mon 7/23/12	Fri 9/28/12	4
7	Start-Up	30 days	Mon 10/1/12	Fri 11/9/12	6,5
8	Field Troubleshooting	20 days	Mon 11/12/12	Fri 12/7/12	7
9	Project Close Out	15 days	Mon 12/10/12	Fri 12/28/12	8
10	In Service	0 days	Fri 12/28/12	Fri 12/28/12	9

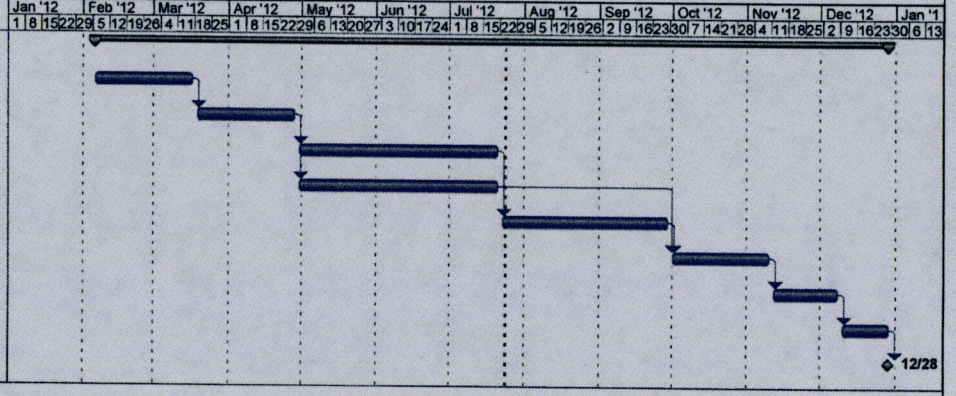

Project: Navajo FCC Narrow Band Sch
Date: Tue 7/24/12

Task | Split | Progress | Milestone | Summary | Project Summary | External Tasks | External Milestone | Deadline

ARIZONA WATER COMPANY

Nevada Division
1846 N. White Mountain Blvd.
Lakeside, AZ 85929 Ph: 928-368-6622

PROPOSAL/CONTRACT

CONTRACTOR: Global Data Specialists	SYSTEM: Lakeside
ADDRESS: 1815 W. First Avenue, Suite 110	WA No(s): 1-4926
CITY-ST-ZIP: Mesa, Arizona 85202	BID DUE DATE: March 31, 2012

CONTRACTOR SUBMITS this PROPOSAL/CONTRACT to ARIZONA WATER COMPANY, an Arizona corporation (the "Company"), to perform the work and complete the project described on Page 2 (the "Project"), upon acceptance of same by Company.

1. Contractor certifies that it has a complete copy of, and has read, understands and accepts, the Company's General Conditions of Contract, and the Company's Construction Requirements and Standard Specification Drawings, (the "Specifications"), all of which are attached hereto. Contractor has examined the special plans and related construction drawings for the Project (the "Drawings"), copies of which are also attached hereto. The General Conditions of Contract, Specifications and Drawings are incorporated into this Proposal/Contract. Contractor affirms that all work and materials to be furnished or purchased for the Project will be in strict conformance with the General Conditions of Contract, Specifications and Drawings.

2. Contractor represents and warrants that it has satisfied and complied with the provisions of Section 6, Contractor Understands Work and Working Conditions, of the General Conditions of Contract prior to submitting this Proposal/Contract.

3. Contractor represents that this Proposal/Contract is fair and honest in all respects, is submitted in good faith and is not submitted in collusion with any other company, entity or person.

4. Contractor acknowledges that one hundred percent (100%) Performance and Payment Bonds are required and must be provided to the Company prior to the commencement of work.

5. Prior to the commencement of work, Contractor will submit to the Company a list of all materials to be used in the Project. The materials list will include the manufacturer, part number, price and quantity included in this Proposal/Contract.

6. Contractor will furnish all labor, tools, equipment and materials required to complete the Project according to the General Conditions of Contract, Specifications and Drawings. No materials purchased by Contractor for incorporation into the Project are subject to tax at the time of purchase and Contractor will not charge the Company for any such tax. Contractor will pay the applicable transaction privilege tax (the "Contracting Tax") on the Project after Contractor receives payment of the final Project invoice from the Company. The cost of materials incorporated into the Project which are exempt by Arizona Revised State Statutes ("A.R.S.") from the Contracting Tax, for example, pipes or valves having a diameter of four (4) inches or greater, including equipment, fittings and any other related part that is used to assemble the pipes or valves (A.R.S. §42-5061 B.2.), will not be included in the total cost of the Project and materials upon which the Contracting Tax is computed. Contractor shall be fully responsible and obligated to pay the Contracting Tax and will defend and indemnify the Company against any demand or obligation to pay the Contracting Tax.

7. Contractor will maintain detailed accounting records of all materials purchased and incorporated into the Project. Such records will include all supporting original vendor invoices for all materials purchased. Following completion of the Project, Contractor will submit an itemized accounting to the Company which will include all supporting original vendor invoices and bookkeeping evidence of payment thereof. The Company will not pay Contractor for materials not actually incorporated into the Project, and the disposition of such materials will remain Contractor's responsibility.

8. The Estimated Total Cost of the Project, as set forth herein, is based on estimated labor and material quantities to be furnished. It includes an estimate of the Contracting Tax and the cost of the required Performance and Payment Bonds. Contractor will not cancel, modify or withdraw this Proposal/Contract during a ninety-day (90) period commencing on the Bid Due Date. The Company may accept this Proposal/Contract by signing and mailing, or otherwise delivering, a copy hereof to Contractor during such ninety-day (90) period. If the Company does not accept this Proposal/Contract during such ninety-day (90) period, Contractor may cancel this Proposal/Contract by giving written notice of cancellation to the Company.

9. Prior to the commencement of work, Contractor will provide the Company with a detailed construction schedule, in either Gantt or CPM form, identifying all tasks to be performed from the date of the written Commencement Notice through completion of the Project, including testing, training of Company Personnel and final Project Invoicing. Contractor will provide the Company with a copy of such construction schedule documenting the progress of work on the Project at least monthly.

10. Contractor will not commence work on the Project until the Company gives Contractor a written Commencement Notice. Contractor will complete the Project within 180 calendar days after the Commencement Notice is issued.

11. Following the Company's written notice of satisfactory completion of the Project, and upon receipt of the final Project invoice from Contractor, the Company shall pay Contractor the actual total cost of the Project, which will be established as shown on Page 2, except that actual labor and material quantities, installation/construction will be substituted for the estimated labor and materials quantities and the Contracting Tax will be recalculated based on such actual labor and material quantities.

12. The amount of applicable liquidated damages for Contractor's failure to deliver or perform within the time limit stated in Paragraph 10 may be deducted from the Company's payment of the final Project Invoice. This provision shall not limit the Company's ability to terminate this Proposal/Contract for Contractor's unsatisfactory performance or failure to perform as provided in the General Conditions of Contract, Specifications or Drawings, or in this Proposal/Contract.

SPECIAL CONDITIONS:

CONTRACTOR	PROPOSAL/CONTRACT ACCEPTED:
Global Data Specialists	ARIZONA WATER COMPANY
By:	By:
Print Name: Duane Moore	Print Name: Fredrick K. Schneider, PE
Title: Sales Manager	Title: Vice President - Engineering
Date: 4-23-12	Date: 5-4-2012

APH

ARIZONA WATER COMPANY

Navajo Division
1969 North White Mountain Blvd.
Lakeside, AZ 85929 PH: 928-368-5991

PROPOSAL/CONTRACT

CONTRACTOR: Global Data Specialists	SYSTEM: Lakeside
AZ CONTRACTOR LICENSE NO: CLASSIFICATION:	W.A. NUM: 1-4926
ADDRESS: 1815 W. First Avenue, Suite 110	BID DUE DATE: March 31, 2012
CITY ST ZIP Mesa, Arizona 85202	BID BOND REQUIRED ☐ Yes ☑ No

DESCRIPTION OF PROJECT: Provide Narrow Banding upgrade for the Lakeside Water System Radio Controls.

1-2. MATERIALS EXEMPT FROM CONTRACTING TAX (per Paragraph 6)	QUANTITY	UNIT PRICE LABOR	UNIT PRICE MATERIALS	TOTAL COST LABOR	TOTAL COST MATERIALS
3. Total Labor to Install Exempt Materials (add the amounts in column 1)				3 0	
4. Total Exempt Materials (add the amounts in column 2)					4 0

5-6. NON-EXEMPT MATERIALS	QUANTITY	UNIT PRICE LABOR	UNIT PRICE MATERIALS	TOTAL COST LABOR	TOTAL COST MATERIALS
Configure the RTU application software	1	4860		4860	
On-Site Integration	1	4065		4065	
Lo power replacement radios	6		460		2700
DPSK Card FRN 5907	6		180		1080
Electrical Install	1	4250		4250	
ACE Radio	2		3115		6230
Misc equipment	1		675		675
SHIPPING & HANDLING			150		150
7. Total Labor to Install Non-Exempt Materials (add the amounts in column 5)				7 13175 0	10935
8. Total Non-Exempt Materials (add the amounts in column 6)					8 $
9. Subtotal A (add lines 3, 7 and 8)					9 24110
10. Contracting Tax Base (multiply the amount on line 9 by 0.66)				10 15606.60	
11. Applicable Contracting Tax Rate				11 9.05	
12. Contracting Tax (multiply the amount on line 10 by line 11)					12 1412.39
13. Subtotal B (add lines 4, 9 and 12)					13 25522.39
14. 100% Performance and Payment Bonds Cost					14 1871.12
15. Estimated Total Cost (add lines 13 and 14)					15 27634

NOTE: The Estimated Total Cost includes all labor and materials for backfill, pavement replacement, chip seal, and traffic control necessary for the Project.

ARIZONA WATER COMPANY

COMMENCEMENT NOTICE

CONTRACTOR:

Mr. Duane Moody
Global Data Specialists
1815 W. First Avenue, Suite 110
Mesa, Arizona 85202

DATE: April 25, 2012
DIVISION: NAVAJO
SYSTEM: LAKESIDE
W.A.: 1-4926

THIS IS YOUR NOTICE TO PROCEED WITH THE FOLLOWING PROJECT(S):

DESCRIPTION OF WORK:

Provide narrow banding upgrade for the Lakeside water system radio controls

PERFORMANCE AND PAYMENT BONDS REQUIRED: [X] Yes [X] No

TOTAL DAYS ALLOWED: 180

COMPLETION DATE: October 23, 2012

Prior to the start of construction, please call Lee Hetrick, Division Manager at 928-368-6992 to schedule a pre-construction meeting.

RECEIVED
MAY 14 2012
ARIZONA WATER COMPANY
PHOENIX - ENGINEERING

ARIZONA WATER COMPANY
Company

By
Title Vice President - Engineering

GLOBAL DATA SPECIALISTS
Contractor (type name)

By
Title

APN

ARIZONA WATER COMPANY

SPECIFICATIONS

GENERAL CONDITIONS OF CONTRACT: E-4-1

CONSTRUCTION SPECIFICATIONS: E-8-1

STANDARD SPECIFICATION DRAWINGS: E-9-1

2007 EDITION WITH 2010 REVISIONS

ARIZONA WATER COMPANY

GENERAL CONDITIONS OF CONTRACT: E-4-1

ARIZONA WATER COMPANY

E-4-1

GENERAL CONDITIONS OF CONTRACT

DEFINITIONS

A. Company. The words "Company" or "Arizona Water Company" mean Arizona Water Company, and where applicable, any division of Arizona Water Company, whose principal place of business is located at 3805 North Black Canyon Highway, Phoenix, Arizona 85015-5351 (Post Office Box 29006, Phoenix, Arizona 85038-9006).

B. Company's Authorized Representative. The words "Company's Authorized Representative" mean any officer of the Company, and any of the Company's Engineers, any Division Manager or Superintendent of the Company and/or such other person(s) designated in writing as the "Company's Authorized Representative" by the President or any Vice President of the Company.

C. Contractor. The word "Contractor" means either an individual or other entity employed to do the work as shown on the Construction Drawings and as specified herein.

D. Construction Drawings. The words "Construction Drawings" mean plans prepared by or on behalf of Arizona Water Company.

E. Invitation to Bid. The term "Invitation to Bid" means the current copy of Arizona Water Company's Form E-3-11-4 Request for Proposal/Contract or Form E-3-12-2 Invitation to Bid.

F. Contract. The word "Contract" means the written document titled "Contract" or "Proposal/Contract" when such document has been signed by an officer or other authorized representative of both the Contractor and the Company.

G. Inspector. The word "Inspector" means the Company's Authorized Representative or a person designated in writing by the Company's Authorized Representative.

GENERAL CONDITIONS OF CONTRACT

1. GENERAL

These General Conditions of Contract govern all works of installation and construction unless deviations are provided for on the Construction Drawings or in the Contract.

2. BONDS

The Contractor shall, upon request by the Company, furnish a performance bond and a material payment bond in the amount of 100% of the Contract price, in a form and from a surety acceptable to the Company.

3. LABOR AND/OR MATERIAL RELEASES

The Contractor shall supply labor and/or material releases satisfactory to the Company when requested to do so. Forms will be provided by the Company.

4. LICENSE

The Contractor shall have, as may be required by law, a valid license applicable to the work to be performed.

5. INSURANCE

The Contractor shall maintain in full force and effect insurance at no less than the following minimum amounts:

WORKER'S COMPENSATION	In accordance with requirements of the laws of the State of Arizona.
COMPREHENSIVE GENERAL LIABILITY (Including contractual liability covering death, bodily injury and property damage)	Combined single limit of not less than $1,000,000 for each occurrence.
AUTOMOTIVE LIABILITY (Including owned, non-owned and hired vehicles)	Combined single limit of not less than $1,000,000 for each occurrence.
SUBCONTRACTOR'S PUBLIC LIABILITY AND PROPERTY DAMAGE INSURANCE AND VEHICLE LIABILITY INSURANCE	Contractor shall either require each of its subcontractors to procure and to maintain Subcontractor's Public Liability and Property Damage Insurance and Vehicle Liability Insurance of the type and in the amounts specified in this Section 5 or insure the activities of its subcontractors in Contractor's own policy, in like amounts.

Such insurance shall name the Company, its officers, agents, and employees as additional insured and be primary for all purposes.

The Company will at all times have the right to require that all of such insurance be placed with insurance companies that are satisfactory to it. The Contractor shall file with the Company a certificate evidencing that each policy of insurance for the above coverages in the minimum amounts specified has been purchased and is in good standing.

Such certificate shall provide that notice be given to the Company at least thirty (30) days prior to cancellation or material change in the form of such policies or any of them. Such certificates shall be kept on file by the Company and the Company must have current certificates on file, or a certificate must accompany any bid proposal, before that proposal will be accepted by the Company.

6. CONTRACTOR UNDERSTANDS WORK AND WORKING CONDITIONS

By executing a Contract with the Company, the Contractor warrants that it has, by careful examination, satisfied itself as to the nature and location of the work, including soil conditions, the character, quality and quantity of the materials to be encountered, the character of the equipment and facilities needed preliminary to and during prosecution of the work, the general and local conditions, and all other matters which can in any way be expected to affect its work under the Contract. Verbal agreements or conversations with any officer, agent or employee of the Company, either before or after the execution of the Contract, are not binding upon the Company and shall not affect or modify any of the terms or obligations herein contained.

7. SPECIFICATIONS AND DRAWINGS

The Contractor shall keep on the job a complete copy of all drawings and specifications furnished by the Company which are applicable to the Contract with the Company. Anything mentioned in the specifications and not shown on the drawings or shown on the drawings and not mentioned in the specifications shall be of like effect as if shown or mentioned in both. In case of a discrepancy between the figures, drawings or specifications and physical conditions of the job, the matter shall be immediately submitted to the Company's Authorized Representative for decision as to adjustments, if any, because of the discrepancy; without a decision from the Company's Authorized Representative no discrepancy shall be adjusted by the Contractor, save only at its own risk and expense. Any deviation from the specifications must be approved in writing by the Company's Authorized Representative.

8. PROPERTY PROTECTION

Trees, fences, poles, underground structures and all other property shall be protected unless their removal is authorized on the Construction Drawings. Any property damaged shall be restored by the Contractor, at its expense, to the owner's satisfaction.

9. SPECIAL PERMITS, LICENSES AND INSURANCE

The Company shall obtain all permits for railroad, county, state, city and irrigation district rights-of-way as well as Forest Service, State Land Department and Bureau of Land Management permits. (Pipeline Contractors)

Whenever blasting is required, the Contractor shall obtain all permits, licenses and insurance required at its expense. (All Contractors)

The Contractor will be required to obtain, and shall certify in writing to the Company that it has obtained, all additional permits required to perform the work including, but not limited to, a National Pollution Discharge Elimination System Permit and/or an Aquifer Protection Permit as those permits relate to disposal of drilling, development and test waters and/or any other discharge or similar activity. (Well Drilling Contractors)

10. SURVEYS

The Company shall be responsible, or arrange, for all surveys required for the work covered in the Contract, unless otherwise specified.

11. BENCH MARKS, PROPERTY STAKES AND SURVEY STAKES

Bench marks, property stakes and survey stakes shall be preserved by the Contractor; in case they are destroyed or removed by Contractor or its employees, the Company will replace them at the Contractor's expense, and the Contractor and its sureties shall be liable therefore.

12. TOOLS, EQUIPMENT AND MATERIALS

The Contractor shall furnish all of the necessary tools, equipment, and pipeline materials required for the work. All material furnished by the Contractor shall be of the quality specified by the Company in its Construction Specifications (E-8-1).

13. SUPERINTENDENCE BY CONTRACTOR

The Contractor shall assure adequate superintendence of the work by a competent foreman or superintendent (with full authority to act on behalf of Contractor) satisfactory to the Company, who will be on the job at all times when work is in progress.

14. ORDER AND DISCIPLINE

The Contractor shall at all times enforce strict discipline and good order among its employees.

15. INDEPENDENT CONTRACTOR

The Contractor is an independent contractor and any provisions in the Contract, the specifications, or these General Conditions of Contract and Arizona Water Company's Construction Specifications which may appear to give the Company the right to direct the Contractor as to the details of the doing of any work to be performed by the Contractor, or to exercise a measure of control over said work, shall be deemed to mean and shall

mean, that the Contractor shall follow the desires of the Company in the results of the work only and not in the means whereby said work is to be accomplished, and the Contractor shall use its own discretion and shall have complete and authoritative control over the work and as to the details of the doing of the work.

16. PUBLIC SAFETY AND CONVENIENCE

Contractor shall at all times conduct its work so as to ensure the least possible obstruction to traffic and other inconvenience to the general public and the residents and businesses in the vicinity of the work, and to ensure the protection of persons and property.

To protect persons from injury and to avoid property damage, Contractor shall provide and maintain adequate barricades as required during the progress of the work and until it is safe to use the property for its intended purpose. The rules and regulations of the local governmental agencies and specific permit requirements respecting safety provisions shall be observed at all times.

In the case of blasting, the Contractor shall exercise extreme caution to protect the general public and personal and public property from harm or damage.

17. PROPERTY PROTECTION

Trees, fences, poles, and all other property shall be protected unless their removal is authorized by the Company. Any property damaged shall be restored by Contractor, at his expense, to Company's satisfaction.

18. RESPONSIBILITY OF CONTRACTOR

The work shall be under Contractor's responsible care and charge. Contractor shall bear all loss and damage whatsoever and from whatsoever cause, except that caused solely by the act of Company, which may occur on or to the work during the fulfillment of the Contract. If any loss or damage occurs, Contractor shall immediately make good any such loss or damage, and in the event of Contractor refusing or neglecting to do so, Company may, or by the employment of some other person, make good any such loss or damage, and the cost and expense of so doing shall be charged to Contractor.

The mention of any specific responsibility or liability imposed upon Contractor shall not be construed as a limitation or restriction of any general liability or duty imposed upon Contractor by the Contract. The reference to any specific duty or liability being made herein is merely for the purpose of explanation.

Contractor alone shall at all times be responsible for the safety of Contractor, Contractor's employees, and its subcontractors' employees, and for Contractor and its subcontractors' plant and equipment and the method of performing the work.

19. ERRORS AND OMISSIONS

If Contractor, in the course of the work, becomes aware of any errors or omissions in the Contract Documents or in the instructions, or if Contractor becomes aware of any discrepancy between the Contract Documents and the physical conditions of the site of

the work, Contractor shall immediately inform Company in writing. Any work done by Contractor after such discovery, until authorized by Company, will be done at Contractor's risk.

20. LAWS, REGULATIONS

Contractor shall give all notices required by law and comply with all laws, ordinances, rules and regulations, including, but not limited to, all applicable federal, state, local and other legally required health and safety standards, orders, rules, regulations or other laws, pertaining to the conduct of the work. Contractor shall be liable for, and shall defend and indemnify Company against and hold it harmless from, all violations of any law, ordinance, rule, regulation, standard, or order in connection with work furnished by or on behalf of Contractor. If Contractor observes that the Contract Documents are at variance with any law, ordinance, rule, regulation, standard, or order it shall promptly notify Company in writing and any necessary changes shall be adjusted as provided in the Contract for changes in the work. Contractor shall not perform any work contrary to such laws ordinances, rules, regulations, standards, or orders.

21. PERMITS, FEES AND INSPECTIONS

Permits and licenses necessary for the prosecution of the work, including, but not limited to, any National Pollution Discharge Elimination Systems (NPDES) Permits required by U.S. Environmental Protection Agency or the Arizona Department of Environmental Quality shall be secured, paid for, and complied with by Contractor.

Contractor shall be responsible for its actions and shall abide by all conditions and/or restrictions set forth in the NPDES Permit and any other permit or license required for this project.

Company shall at all times have access to the work whenever it is in preparation or in progress and Contractor shall provide proper facilities for such access and for all inspections. If the Contract Documents, the General Superintendent's instructions, laws, ordinances or any public authority require any work to be inspected or approved, Contractor shall give timely notice of its readiness for inspection.

Inspection of the work shall not relieve Contractor of any of its obligations even if defective work or unsuitable materials may have been previously overlooked by Company and accepted or estimated for payment. If any work is found not in accordance with the Contract Documents, Contractor, at its sole cost and expense, shall promptly make good such defective work.

22. CONSTRUCTION MARKING (PIPELINE ONLY)

Each job shall be marked and/or barricaded by the Contractor in such a manner that the construction is clearly visible at all times.

23. EXTRA WORK AND/OR MATERIALS

Except as otherwise herein provided, no charge for any extra work and/or material will be allowed unless the same has been ordered in writing by the Company's Authorized Representative, and the price stated in such order.

24. CHANGES

The Company shall have the right to make any changes in the work that it may determine to be necessary. If such changes affect the cost of the work, an equitable adjustment shall be negotiated. Changes shall in no way affect or void the obligations of both parties under the original Contract.

25. INSPECTION

All work and material shall be open at all times to inspection and acceptance or rejection by the Company's Inspector. Any work covered up by the Contractor prior to inspection and acceptance by the Company shall be subject to being uncovered at the expense of the Contractor for inspection by the Company. The Contractor shall give the Company reasonable notice of starting new work and shall provide, without extra charge, reasonable and necessary facilities for inspection, even to the extent of taking out portions of finished work. In case any such finished work removed is found satisfactory, however, the actual direct cost of such removal and replacement, plus 15% of such cost, will be paid by the Company; in addition, if completion of the work has been delayed thereby, the Contractor shall be granted a suitable extension of time on account of the additional work involved.

26. DEFECTIVE WORK OR MATERIAL

The Contractor shall remove, at its own expense, any work or material found defective by the Company's Inspector and shall rebuild and replace the same without extra charge; in default thereof, the same may be done by the Company at the Contractor's expense.

27. ASSIGNMENT

Neither party to the Contract may assign the Contract or sublet it in whole or in part without the written consent of the other, nor shall the Contractor assign any monies due or which may become due hereunder without the previous written consent of the Company, nor shall such consent release the Contractor from any of its obligations and liabilities under the Contract.

28. RIGHTS OF VARIOUS INTERESTS

Whenever work that is being done for the Company other than by the Contractor is contiguous to work being done by the Contractor, the respective rights of the various interests involved shall be established by the Company to secure the completion of the various portions of the work in general harmony.

29. SUSPENSION OF WORK

The Company's Authorized Representative may at any time and for any reason suspend all or any portion of the work under the Contract. This right to suspend work shall not be construed as denying the Contractor compensation for actual, reasonable and necessary expenses due to suspension to which it may be entitled.

The Company's Authorized Representative may order the Contractor to suspend any work because of certain conditions, such as inclement weather, or because the

Contractor is in violation of these General Conditions of Contract or the Construction Specifications. It is understood that compensation for expenses will not be allowed for such suspension when ordered by the Company's Authorized Representative on account of such conditions.

30. PROCEDURE OF WORK (PIPELINE ONLY)

All work under the Contract shall be planned and performed so as to cause a minimum of interference with normal vehicular and pedestrian traffic. At no time shall the Contractor completely obstruct the traffic to any business establishment during normal work hours of that business. It shall be the Contractor's responsibility to maintain facilities for ingress and egress to any business establishment. When crossing any street, not more than one-half of the street may be blocked at one time. All federal, state, county and city laws, rules and regulations relating to this subject are to be obeyed.

The Contractor shall complete any portion or portions of the work in such order of time as the Company may require. The Company shall have the right to take possession of and use any completed or partially completed portions of the work. If such prior possession or use increases the cost of or delays the work, the Contractor will be entitled to extra compensation or extension of time or both, as the Company may determine.

31. DISPUTES

All questions or controversies which arise between the Contractor and the Company, under, or in reference to, the Contract, shall be decided by the Company's Authorized Representative and a representative of the Contractor, and their decision shall be final and conclusive upon both parties.

32. CONNECTION TO EXISTING SYSTEM (PIPELINE ONLY)

Unless approved in writing by the Company's Authorized Representative, no tie-in or hot tap on the existing system shall be made unless the Company's Inspector is present. When the tie-in requires the operation of an existing valve or other control equipment, the conditions of Paragraph(s) 30 and 33 shall be complied with. The Contractor shall notify the Company twenty-four (24) hours prior to tie-in as to the exact time the Contractor plans to make tie-in so that the Company's Inspector will have sufficient time to locate valves and make necessary preliminary arrangements for shut down.

33. PLANNED INTERRUPTION OF WATER SERVICE (PIPELINE ONLY)

No valve or other control on an existing Company water system shall be operated for any purpose by the Contractor without approval of the Company's Inspector. All of the Company's water customers whose service is interrupted by a planned interruption, other than in cases of emergency, shall be notified by the Contractor at least twenty-four (24) hours before the planned interruption and advised of the probable time when the service will be restored.

34. EXISTING UTILITY FACILITIES (PIPELINE ONLY)

The Contractor shall notify all known utilities in the area of the work to be performed under the Contract and shall make arrangements to have their facilities marked in

accordance with A.R.S. 40-360.022 ("Blue Stake Law"). The Contractor shall be responsible for locating and preserving all marked facilities. Any damages to these marked facilities shall be repaired at the expense of the Contractor.

The Company will pay the cost to relocate its or other structures when such structures are found occupying the physical space of the proposed installation. It is understood that the Contractor will be reimbursed for such work only when written authorization from the Company has been obtained in advance of such work.

35. CLEANING UP

The Contractor shall remove from the Company's property and from all public and private property, at its own expense, all temporary structures, rubbish and waste materials resulting from its operations. In the event Contractor fails to do so, the Company may remove same at the expense of the Contractor.

36. WORKING HOURS (PIPELINE ONLY)

Unless stated to the contrary in the Invitation to Bid and/or so stated on the Construction Drawings, or agreed to by the Company during a Pre-Construction Conference, the Contractor shall not be permitted to perform work on Saturdays, Sundays, or Company holidays, or commence work such as tie-ins that cannot be completed during normal working hours.

37. INDEMNITY

A. The Contractor shall indemnify the Company against, and save and hold it harmless from, any and all liability, claims, demands, loss, actions, causes of action, expense, penalties, fines, assessments, damages and costs of every kind and nature for injury to or death of any and all persons, including, without limitation, employees or representatives of the Company or of the Contractor or of any subcontractor, or any other person or persons, and for damage, destruction or loss, consequential or otherwise, to or of any and all property, real or personal, including, without limitation, property of the Company or of the Contractor or of any subcontractor, or of any other person or persons, and the violation of any law, ordinance, rule, regulation, standard, or order resulting from or in any manner arising out of or in connection with the performance of the work under the Contract, howsoever same may be caused, including, without limitation, the Company's active or passive negligence. The Contractor shall also, upon request by the Company, and at no expense to the Company, defend the Company in any and all suits, concerning such injury to or death of any and all persons, and concerning such damage, destruction or loss, consequential or otherwise, to or of any and all property, real or personal, including, without limitation, suits by employees or representatives of the Company or of the Contractor or of any subcontractor, or any other person or persons, or concerning any court or administrative proceeding concerning the violation of any law, ordinance, rule, regulation, standard, or order. Excluded from this paragraph are only those injuries to or deaths of persons and damage, destruction or loss, to or of property arising from the sole negligence or willful misconduct of the Company.

B. Contractor shall indemnify the Company against, and save and hold it harmless from, any and all liability, claims, demands, damages, costs, expenses and attorney's fees, suffered or incurred on account of any breach of any obligation, covenant or other

provision of this contract, including without limitation, breach of the indemnity provisions of subsection A of this Section 37.

C. Contractor further agrees to defend, indemnify and hold harmless the Company, its directors, officers, employees, and agents, from and against any and all costs, damages, claims, expenses, violations, notices of violations, penalties, liens, assessments, and liabilities of every kind and nature, foreseeable or unforeseeable, directly or indirectly, arising from any release, removal, generation, use, storage or disposal on, under, around, or from the well site of any material, substance, or waste, hazardous or non-hazardous, including, without limitation, drilling fluids, mud, cuttings and development and test water howsoever same may be caused, including, without limitation, the Company's active or passive negligence.

38. LIENS

If at any time there shall be evidence of any lien or claim for which the Company might become liable and which is chargeable to the Contractor, the Company shall have the right to retain out of any payment then due or thereafter to become due, an amount sufficient to completely indemnify the Company against such lien or claim. If the Company determines that such lien or claim is valid, the Company may pay and discharge the same, and deduct the amount so paid from any monies which may be or become due and payable to the Contractor.

39. PAYMENT

Upon completion of the installation or construction, the Company will, within thirty (30) days after receipt of proper invoice and labor and material releases, pay the amount due the Contractor. If the Company believes that additional work, such as clean up, is required, it may deduct the total cost of such additional work from the amount to be paid to Contractor.

40. COMPANY'S RIGHT TO TERMINATE CONTRACT: DAMAGES DUE TO DELAY

If the Company finds the Contractor to be in material violation of any section of these General Conditions of Contract, Construction Specifications or Standard Specification Drawings or if the Contractor refuses or fails to prosecute the work, or any separable part thereof, with such diligence as will insure its completion within the time specified or any extension thereof, or fails to complete said work within such time, or when any other cause exists to justify such action, the Company may, without prejudice to any other right or remedy, by written notice to the Contractor, terminate its right to proceed with the work or such part of the work as to which there has been such violation, delay or other cause.

In the event the Contractor's right to proceed is terminated, the Company may take over the work and take possession of, and utilize in completing the work, such materials as may be on the site of the work and necessary therefore and prosecute said work to completion by whatever method it may deem expedient. The Contractor and its sureties shall be liable to the Company for any excess cost caused thereby.

In the event the Contractor's right to proceed with the work is terminated, the Contractor shall not be entitled to receive any further payment until the work is completed or the job is canceled. If the unpaid balance of the Contract price exceeds the expense of finishing

the work, including compensation for additional managerial and administrative services, such excess shall be paid to the Contractor. If such expenses exceed such unpaid balance, the Contractor shall pay the difference to the Company.

41. GUARANTEE

The Contractor shall guarantee all labor and workmanship and any materials it installs for a period of one year following the date of completion and acceptance by the Company. If any portion of the work or any of the materials become defective within the guarantee period, the Company will notify the Contractor of such defect. The Contractor must repair any defect within fifteen (15) days of such notification. If repairs are not completed within this time period, the Company may repair the defect, or cause such defect to be repaired, and the cost of such repairs shall be paid by the Contractor. The Company reserves the right to determine which defects are the result of poor labor and workmanship and which are caused by defective materials.

42. LIQUIDATED DAMAGES FOR NON PERFORMANCE; REQUEST FOR EXTENSION(S) OF TIME

Time is of the essence in the Contract. The time period required for completion of the work will be specified in the Contract. The Contractor agrees that the Company will suffer substantial damages in the event the Contractor fails to complete the work within the agreed upon time period. The Contractor and the Company agree that since it would be impracticable or extremely difficult to precisely fix such damages, a reasonable approximation of such actual damages suffered by the Company shall be a sum equal to 0.5% of the Contract price for each working day beyond the time period for completion of the work specified in the Contract.

Request by the Contractor for extensions of the time period shall be in writing and shall not become effective until approved in writing by the Company's Authorized Representative.

43. PAYMENT FOR REQUIRED TESTING

Whenever testing is required by any governmental agency or by the Company to assure conformance of the Contractor's work with the appropriate standard, it will be paid for as follows:

a. For testing required under permits obtained by the Company or testing specifically requested by the Company, the cost of the first test will be paid for by the Company. In the event of failure of the first test, the cost of all further testing associated with the failure will be paid by the Contractor.

b. For testing required under permits obtained by the Contractor, all costs will be paid by the Contractor. Testing of the pipeline for pressure and leakage will be included in the Contract price.

44. CONTRACT DEADLINES AND BONDS REQUIREMENTS

The time limits to be allowed for the completion of any work covered in the Contract shall be established as follows: In the proposal submitted to the Company, in response to the Invitation to Bid, the Contractor shall state the number of calendar days required for completion of the work. The time required will become a part of the Contract. When the Company is ready to proceed with the work, a Commencement Notice will be issued by the Company to the Contractor by mail. The Commencement Notice will allow the time required in the Contract plus ten (10) calendar days and will indicate the final day of the time allowed. The work cannot begin until the Company has received a performance bond and materials payment bond for the Contract price unless the bonds have been waived under the special conditions section of the Contract. The additional ten (10) days is the allowance for time to deliver the Commencement Notice to the Contractor and for the Contractor to return the performance bond and materials payment bond to the Company. Time extensions will be granted if warranted, and only at the time of the delay, thus extending the final day of the time allowed.

If the Company elects not to require a performance bond and a material payment bond for the work, the cost of the bonds will be deducted from the proposed total cost and the Contract will reflect this reduced cost and the bonds requirements will be waived under special conditions of the Contract.

ARIZONA WATER COMPANY

CONSTRUCTION SPECIFICATIONS: E-8-1

ERRATA 2010

CONSTRUCTION SPECIFICATIONS FOR THE INSTALLATION OF WATER DISTRIBUTION SYSTEMS DUCTILE IRON

DEFINITIONS

A. Company. The words "Company" or "Arizona Water Company" mean Arizona Water Company, and where applicable, any division of Arizona Water Company, whose principal place of business is located at 3805 North Black Canyon Highway, Phoenix, Arizona 85015-5351 (Post Office Box 29006, Phoenix, Arizona 85038-9006).

B. Company's Authorized Representative. The words "Company's Authorized Representative" mean any officer of the Company, and any of the Company's Engineers, any Division Manager or Superintendent of the Company and/or such other person(s) designated in writing as the "Company's Authorized Representative" by the President or any Vice President of the Company.

C. Contractor. The word "Contractor" means either an individual or other entity employed to do the work as shown on the Construction Drawings and as specified herein.

D. Construction Drawings. The words "Construction Drawings" mean plans prepared by or on behalf of Arizona Water Company.

E. Contract. The word "Contract" means the written document titled "Proposal/Contract" when such document has been signed by an officer or other authorized representative of both the Contractor and the Company.

CONSTRUCTION SPECIFICATIONS
FOR THE INSTALLATION OF WATER DISTRIBUTION SYSTEMS
DUCTILE IRON

1. GENERAL

All work is to be completed in a safe, workmanlike manner and in accordance with these Construction Specifications; any deviation therefrom must be approved in writing by the Company.

Installations must conform with the requirements of all governmental regulating agencies and the cost of conforming to such regulations must be included in the unit bid prices. Examples of such regulations, without attempting to be inclusive, are:

a. Special compaction and paving for street crossing.
b. Shoring when required because of the trench depth.
c. Closing a trench in those areas where no open trench is allowed overnight.
d. Barricading and traffic control as required.

2. LOCATION MARKING

Alignment stakes as required in the opinion of the Company shall be furnished by the Company to the Contractor and shall be set by the Company at agreed upon intervals and offsets. Under normal circumstances these will reference the pipeline location five feet (5') into the right-of-way measured from property pins. Grade stakes will be provided only when the Construction Drawings show a pipeline depth other than covered in these Specifications. It is the responsibility of the Contractor to preserve all survey work.

3. TRENCH EXCAVATION

The trench location is to be determined by the Construction Drawings.

FOR 8-INCH OR SMALLER PIPE: The depth of the trench prior to pipe laying shall be such that the finished pipeline shall have between thirty-six inches (36") and forty-two inches (42") of cover unless otherwise specified on the Construction Drawings.

FOR 12-INCH AND LARGER PIPE: The depth of the trench prior to pipe laying shall be such that the finished pipeline shall have between forty-eight inches (48") and sixty inches (60") of cover unless otherwise specified on the Construction Drawings.

The width of the trench at and below the level at the top of the pipe shall be a minimum of twelve inches (12") plus the outside diameter of the pipe barrel and a maximum of twenty-four inches (24") plus the outside diameter of the pipe barrel.

The bottom of the trench shall be accurately graded to provide a uniform bearing for each length of pipe for the full length of the pipe. If the native material on the trench bottom can be reasonably dug by hand, bell holes shall be dug for the joints so that the joints in no way support the pipe. When native materials such as rock are encountered during trenching that will not provide a uniform support for the pipe, the trench will be over-excavated an additional six inches (6") and suitable bedding material will be placed in the trench.

Bedding material will be placed by hand in four-inch (4") lifts and compacted to ensure uniform compaction and to eliminate any voids under the pipe. When the space between the pipe and trench bottom varies, this must be backfilled and compacted in four-inch (4") lifts to the mid-section of the pipe.

Whenever the trench is over-excavated for whatever reason, the trench bottom will be brought up to the correct depth at the Contractor's expense using either method (a) or (b) as follows:

a. A.B.C. material shall be used and compacted to a uniform density of not less than 80% of the maximum density as determined by AASHTO T-99 method A and T-191.

b. Native material 100% of which will pass through a one and one-half inch (1½") screen and at least 20% of which will pass through a number-8 screen shall be used and compacted to a uniform density of not less than 85% of the maximum density as determined by AASHTO T-99 method A and T-191.

4. MATERIALS TO BE PROVIDED BY CONTRACTOR

Unless otherwise specified on the Construction Drawings or in the Contract, the Contractor will supply all of the necessary materials which will become a permanent and integral part of the water distribution system, including concrete blocking, anchors, backfill material, paving material and supplies used during the prosecution of the work. All materials provided by the Contractor to construct the water distribution system must be NSF Standard 61 approved. All potable water pipes and fittings shall have NSF-PW seal. Construction materials used in the water system shall be lead free as defined at AAC R26-4-504 and R18-1-101. The Contractor will provide the following m aterials:

a. FIRE HYDRANTS: Mueller Super Centurion 250 Fire Hydrant, meets ANSI/AWWA C502 Standard, Model No. A-423, 5¼" main valve opening, three way, 6" Mechanical Joint Shoe, 1½" pentagon operating nut, color - yellow, drain open, open direction - left, 4' or 4'6" bury depending on application. For pumper and hose nozzle inform ation see below.

(1) 1 - 4" Pumper Nozzle, NST and 2 – 2½" Hose Nozzles, NST. (These locations only: Ajo, Casa Grande, Coolidge and San M anuel.)

(2) 1 – 4½" Pumper Nozzle, NST and 2 – 2½ " Hose Nozzles, NST. (These locations only: Apache Junction, Arizona City, Lakeside, Oracle, Overgaard, Pinewood, Rimrock, Sedona, Sierra Vista, White Tank and Winkelman.)

(3) 1 – 4½" Pumper Nozzle, NST and 2 – 2½" Hose Nozzles, NPT (Bisbee only.)

(4) 1 - 3" Pumper Nozzle GA 6-350 (6 threads per inch, 3.50 pitch diameter) and 2 – 2½" Hose Nozzles, NPT (Miami only.)

(5) 1 – 3½" Pumper Nozzle GA 6-411 (6 threads per inch, 4.11 pitch diameter) and 2 – 2½" Hose Nozzle, NST (Superior only.)

b. FITTINGS: Manufactured by Tyler or Union. Crosses, Elbows, Tees, Cap, Reducer, Adapter, Plug, Blind Flange and Tapped Flange; Ductile Iron, Class 350, SSB, Cast Iron Cement Lined.

(1) Foster Adaptors for MJ, made by Infact Corporation: Available in size 4" to 16". Part No. 4" = 4FA-BC, 6" = 6FA-BC, 8" = 8FA-BC, 10" = 10FA-BC, 12" = 12FA-BC, 16" = 16FA-BC.

c. DETECTOR CHECK VALVE: Mueller/ Hersey EDC III, iron body, including 5/8" x ¾" Trim Kit. Trim Kit Part No.: 4" = 282080, 6" = 282082, 8" = 282085, 10" = 282496.

d. GATE VALVES: Mueller Resilient Wedge Gate Valves, meets AWWA C509 specification, 250 psig, Non-rising stem, Part No. A-2360 sizes 4" through 12"; Part No. A-2361 sizes 14" through 36", low zinc stems, epoxy coated inside and outside to meet the NSF 61 rating. The bonnet and stuffing box shall have 304 stainless steel bolts/nuts.

e. TRACER WIRE and WARNING TAPE:

1. TRACER WIRE: Shall be direct bury AWG #14 solid copper wire, Color: Blue.

2. WARNING TAPE: Reef Industries, Standard Terra Tape in 3" widths. Color: Blue and imprinted 'Arizona Water Company'.

f. AIR RELEASE VALVE: Crispin Model AR10 with 1" NPT inlet and ½" NPT outlet, cast iron body and top flange; with a 5/64" orifice with stainless steel valve sealing faces and BUNA-N rubber.

g. PRESSURE RELIEF VALVE: Watts 174A, Model M, 2" inlet, 2" outlet, Bronze Body, 30lb. to 150lb. pressure range.

h. MEGA LUG: Mechanical Joint restraint made of ductile iron conforming to ASTM 536-80, 250 psi made by EBAA Iron, Inc., series 1100 or equal.

i. METER BOXES:

(1) Concrete Box with a steel regular lid, Number 1: Tucson specification.

(2) Concrete Box with a steel regular lid, Number 2, 3, and 4: Phoenix specification.

j. PIPE, COPPER: Type K soft copper in 60 or 100-foot coils, per ASTM B88.

k. PIPE, DUCTILE IRON: Ductile Iron Pipe, Cement Lined, Push-on, conform to current ANSI/AWWA Specification A21.51/C151, Pressure Class 350 (sizes 4" through 12"), Pressure Class 250 (sizes 14" through 20"), or Pressure Class 200 for 24" through 36" pipe. Vendors:

(1) Pacific States Cast Iron Pipe Company
(2) Griffin Pipe
(3) United States Pipe and Foundry Company
(4) American Ductile Iron Pipe
(5) Clow Pipe (McWane, Inc.)

l. PIPE, PLASTIC: Plastic pipe, C-900 PVC per ANSI/AWWA C900, Class 150, sizes 6" through 12". NSF61 approved. Furnished in laying lengths of 20'. The barrel shall conform to the outside dimensions of steel pipe (IPS) or cast iron (CI) pipe equivalent and the wall thickness of dimension-ratio (DR) 18.

m. POLYETHYLENE ENCASEMENT (Polywrap): For all pipeline and related fittings installed, EXCEPT for the Coolidge Division. Minimum 8 Mil. and installed per AWWA C105/A21.5-93 and ASTM A-674-89. Manufactured by the Pacific States Cast Iron Pipe Company. The wrapping tape shall be minimum 10 mil. vinyl tape. No duct tape shall be used.

n. COUPLING: Mueller, straight three part union, tested to meet ANSI/AWWA C800, H15403, conductive com pression.

Mueller, H15428, straight coupling, conductive compression by male iron pipe, tested to meet ANSI/AWWA C800 specification. Size: 2".

Mueller, H15451, straight coupling, conductive compression by female iron pipe, tested to meet ANSI/AWWA C800 specification. Size: 2".

Viking Johnson brand, sold by Mueller: MaxiFit Straight (2"-24"), MaxiFitXtra Straight (4"-8") or MaxiStep Transition, tested to meet AWWA/ANSI C.219-91 specifications – certified to ISO 9001:1994 / Smith – Blair Quantum.

o. STOP, ANGLE METER, BALL: Mueller, valve, B24258, conductive compression by meter swivel nut, tested to meet ANSI/AWWA C800, size 5/8 " x ¾" x ¾" for a ¾" service or size 1" for a 1" service.

Mueller, valve, B24265, female pipe thread by meter swivel nut, tested to meet ANSI/AWWA C800, size 5/8" x ¾" x ¾" for a ¾" service or size 1" for a 1" service.

p. STOP, CORP: Mueller, ball valve, B25008, taper thread by conductive compression, tested to meet ANSI/AWWA C800 specification, sizes: ¾", 1" and 2".

Mueller, ball valve, B25028, iron pipe thread by conductive compression, tested to meet ANSI/AWWA C800 specification. Sizes ¾", 1", and 2".

Mueller, 300 Ball Curb Valve, B-25122, taper thread by conductive compression, tested to meet ANSI/AWWA C800 specifications, size: 2". (2" service)

q. STOP, CURB: Oriseal valve, H10291, iron pipe thread by iron pipe thread, quarter turn check, brass, tested to 300 psi working pressure, tested to meet ANSI/AWWA C800 specification, size: 2".

Mueller, B20283, Mueller 300 ball curb valve, female iron pipe by female iron pipe, quarter turn check, tested to meet ANSI/AWWA C800 specification. Size: 2". (Blow-off E-9-8-1).

r. TAPPING SADDLE: Smith Blair, Cast Bronze ASTM-B584 85-5-5-5, double strap, iron pipe threads, Models 321 and 323. Washers are silicon bronze, ASTM-B36. Gaskets are grade 60 Buna N, or Mueller bronze double strap service saddle, BR 2 B series, cast bronze, ASTM-B585, 85-5-5-5, or H16084, 200 psig, meets ANSI/AWWA C800.

s. TAPPING SLEEVE: Mueller H304 Stainless Steel Tapping Sleeve, JCM 432 18-8 Type 304 Stainless Steel Tapping Sleeve, Romac "SST" Type 304 Stainless Steel Tapping Sleeve or CASCADE-style CST-EX stainless steel pressure-rated tapping sleeve.

t. TAPPING VALVE: Mueller Resilient Wedge tapping valve, Catalog Number T-2360-16, Class 125, sizes 4" through 12"; T-2361-16, Class 125, sizes 14" to 36" all with Type 304 stainless steel fasteners; bypass valves are required on 18" – 36" valves flange by mechanical joint per ANSI/AWWA C111, iron wedge, non-rising stem. Epoxy coated interior/exterior per ANSI/AWWA C550 for NSF 61 compliance. 250 PSI range for valves 4" to 12". 150 PSI range for valves 14" to 36".

u. U-BRANCH: Mueller, H15364, 1" male iron pipe by ¾" male iron pipe, tested to meet ANSI/AWWA C800 specification. Size: 1" x ¾" x 13½", straight line.

v. VALVE BOXES: Valve Box with Cover, adjustable, Tyler 562-A or equal, made of cast iron.

w. VAULTS: Utility Vault Company, Chandler, AZ.

(1) 4484-WA concrete vault with a 3660 aluminum double torsion door with a recessed padlock hasp, two - 18" x 24" center knockouts.

(2) 575-WA concrete vault with a 4874 aluminum double torsion door with a recessed padlock hasp, two - 18" x 24" center knock outs and adjustable frame.

(3) 612-5X-WA concrete vault with a 4874 aluminum double torsion door with a recessed padlock hasp, two - 18" x 24" center knockouts.

x. VALVE, METER: Mueller, B24265-1, Mueller 300 ball angle meter valve, female iron pipe by meter nut, quarter turn check, lock wing, tested to meet ANSI/AWWA C800 specification. Size: 1".

Mueller, B25170, Mueller 300 ball straight valve, conductive compression by female iron pipe, quarter turn check, lock wing, tested to meet ANSI/AWWA C800 specification. Size: 1".

y. YOKES, METER: Relocator type copper meter yoke with horizontal inlet and outlet and meter thread ends, B24118, with lock wing Mueller 300 angle ball valve, full port, sizes: 1" x 12", 5/8" x ¾" x 7", 5/8 x ¾" x 9".

Mueller, 2" copper meter yoke with horizontal inlet and outlet and female iron pipe threads, B2423-99000, with lock wing Mueller 300 ball angle meter valves on inlet and outlet risers. Raised 1" by-pass with lock wing Mueller 300 ball valve.

The Contractor also will be required to provide the following materials, the cost of which will be included in its unit bid price:

All material and concrete for thrust blocks, other anchors, reinforcing steel; all gravel, crushed stone, A.B.C., earth, sand, or screened material which may be required; all material for bracing and shoring trenches and for construction of forms; all barricades and traffic control equipment; all material for paving replacement and any water used for compaction of backfill.

5. INSTALLATION OF MATERIALS

All materials are to be installed in accordance with manufacturer's recommendations unless otherwise directed by these S pecifications.

All pipe, fittings and valves shall be laid true to the lines, grades and locations established by the Specifications and the Construction Drawings.

The ends and inside of the pipe shall be thoroughly cleaned and inspected for damage. No damaged materials shall be installed in the water distribution system .

Whenever the work ceases for any reason, all open pipeline ends shall be tightly plugged by the Contractor. Plugs shall be watertight and approved by the company.

Concrete thrust blocks of the sizes required by the plans and specifications are to be provided at all valves, changes in direction or size, or at any other point where an unbalanced thrust due to water pressure would exist. Thrust blocks are to be formed to prevent any concrete from spilling over or into a joint.

Trench curves as shown on the Construction Drawings may be made without fittings when using push on joint pipe up to twelve inches (12") in diameter, if the deflection of the pipe does not exceed five degrees (5°) or nineteen inches (19") per eighteen-foot (18') length of pipe. The minimum radius of such curves will be two hundred five feet (205').

Prior to construction, the appropriate agency(ies) will be notified as required by the permit(s).

It shall be the Contractor's responsibility to uncover all existing water lines being connected to, and to verify the location, depth and size of pipe befor e any construction begins.

Any construction performed without the knowledge of the duly authorized representative is liable for removal and replacem ent at the Contractor's expense.

All fire hydrants, frames, covers and valve boxes, etc. shall be adjusted to finished grade prior to the placing of the asphalt concrete surface course by the Contractor (where applicable).

Air release valves shall be installed at water system high points per Standard Detail E-9-8-2.

All water services shall be set a minimum of two feet (2') on the customer's property, preferably within the P.U.E. and not within right-of-way.

Unless otherwise specified on the construction drawings, all water mains shall be installed five feet (5') from the property line inside the right-of-way or easement.

Water valves shall be spaced not more than five hundred feet (500') in commercial districts and not more than eight hundred feet (800') in other districts. Variations may be required for transmission mains or special applications.

Installation of water line casing shall be per Standard Speci fication E-9-24-1.

Tracer Wire and Warning Tape are to be installed on all mains, tees, crosses, ells and fire hydrant laterals. They will not be installed on service lines. The tracer wire will be installed on the water main 45 degrees from the vertical centerline of the pipe and shall be taped to the fittings directly and on the main every 10 feet using a minimum 10 mil vinyl tape. The tracer wire shall be placed between the valve riser and box with a minimum of 12" of wire inside. The warning tape shall be installed a minimum of two feet below the surface, being measured from final grade, directly over the center of the pipe. Any splices in the tracer wire shall be joined using waterproof connectors. Any splices in the warning tape shall be joined using minimum 10 mil vinyl tape. The tracer wire shall be tested for continuity after backfill and compaction, but before paving. Any detected damages to the wire shall be repaired before paving will be allowed.

6. BACKFILL OF WATER MAIN TRENCHES

Backfill of any excavation shall conform to the requirements of any of the governmental agencies having jurisdiction over the location. If no governmental agency having such jurisdiction specifies backfill or compaction requirements, and no special requirements are shown on the Construction Drawings, the procedure set forth in this section will apply for water line trenches.

The bedding material above the pipe and backfill material shall be compacted to a minimum of 70% compaction within a utility easement and 80% compaction within a right-of-way as determined by AASHTO T-99 method A and T-191. If water settling is used for compaction, it is the responsibility of the Contractor to prevent the pipe from floating.

The bedding material shall be either native material, 100% of which will pass through a one and one-half inch (1½") screen and at least 20% of which will pass through a number-8 screen, or imported material which conforms to M.A.G. specifications for A.B.C. or type-B

select materials. Bedding material shall be used below and around the pipe and a minimum of twelve inches (12") above the pipe. Shade and bedding material to be mechanically compacted prior to remainder of trench back-fill.

The remainder of the trench shall be backfilled with native or imported material which shall be of sound earthen material free from broken concrete, wood, broken pavement, or other unsuitable substances. Except as otherwise specified, backfill may be material containing no pieces larger than six inches (6") in greatest dimension.

Where settlement occurs, additional backfill material shall be placed and compacted and the trench shall be brought to final grade.

7. HYDROSTATIC TESTING OF COMPLETED PIPELINES

Hydrostatic testing of water pipelines will be completed before the new system is connected into the existing water system so that all testing can be done against all new materials.

The completed section of water pipeline to be tested shall be slowly filled with water with care being taken to expel all air from the pipe. If necessary, the pipe will be tapped at high points to vent air.

The Contractor shall provide all equipment and labor necessary to accomplish this testing and the price shall be included in the unit prices. The Contractor shall notify the Company in advance of the testing so that the Company can schedule a duly authorized representative to be at the site during testing. The Contractor, at its own expense, shall make any necessary repairs to the system being tested in order to cause the section being tested to meet the test limits set below. The Contractor may request authorization of the Company to connect the new pipelines to the existing system prior to completion of pressure testing when, in the Company's sole opinion and judgment, conditions warrant such connection.

The Contractor shall assume all responsibility to complete pressure testing to Company's specifications after such connection, including, but not limited to, isolation of the new pipelines from the existing system, if necessary.

Connections prior to completion of pressure testing shall not be made unless prior Company authorization has been obtained, and any extra expenses resulting from such connections shall be the sole responsibility of the Contractor.

Leakage tests will be for a period of two hours at 200± 5 psi at the point of lowest elevation; leakage may not exceed 0.1 gallons per hour per one thousand feet (1,000') of pipe per inch of diameter. If dry utilities are not installed, a second pressure test is required.

8. STERILIZATION AND FLUSHING OF COMPLETED WATER PIPELINES

Sterilization and flushing will conform to recommendations of Arizona State Department of Health Services Engineering Bulletin Number 8, latest edition, or any future Arizona Department of Environmental Quality bulletins. Contractor to follow all conditions of any discharge permit.

9. NO OTHER UTILITIES ALLOWED IN OR NEAR WATER PIPELINE TRENCHES

No other utility installations will be permitted in the water pipeline trench or within five feet (5') of the Company's water pipeline when running parallel to the water pipelines.

10. PROTECTION OF WATER MAINS NEAR SEWERS

In order to protect water mains from contamination by sewers, the installation of the water mains must conform to the following requirements:

a. Horizontal - When water lines and sewers are laid parallel with each other, the horizontal distance between them shall not be less than six feet (6'). Each line shall be laid on undisturbed or bedded material in a separate trench. Where conditions prevent the minimum horizontal separation set forth above, extra protection will be required. Extra protection shall consist of constructing the sewer main with mechanical joint ductile iron pipe or with slip-joint ductile iron pipe if joint restraint is provided, or encasing both the water main and sewer main in concrete. See Detail E-9-30-1 and E-9-30-2

The Construction Drawings shall indicate the installation requirements. The drawings showing these exceptions shall have been approved by the appropriate state and/or county health department. Refer to the diagram below for clarification.

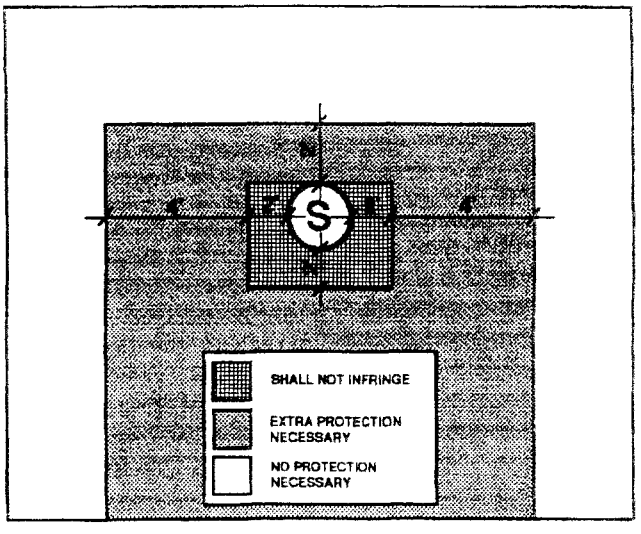

Under no circumstances will the horizontal separation between sewer mains and water mains be less than two feet (2'). All distances are to be measured from the outside of the sewer main to the outside of the water main.

b. Vertical - When a water main is parallel with or crosses a sewer main within two feet (2') above the sewer or greater than two feet (2') below the sewer, extra protection will be required. Extra protection shall consist of constructing the sewer main with mechanical joint ductile iron pipe or with slip-joint ductile iron pipe if joint restraint is provided, or encasing both the water main and sewer main in concrete. See Detail E-9-30-1 and E-9-30-2.

The Construction Drawings shall indicate the installation requirements. The drawings showing these exceptions shall have been approved by the appropriate state and/or county health department.

Under no circumstances will the vertical separation of a sewer main installed above a water main be less than two feet (2'). All distances are to be measured from the outside of the sewer main to the outside of the water main. Refer to the diagram above for clarification.

c. When unusual conditions such as, but not limited to, highway or bridge crossings prevent the water and sewer main separations required from being met, the appropriate state and/or county health department will review and may approve requests for authorization to use alternate construction techniques, materials and joints on a case-by-case basis.

d. No water pipe shall pass through or come into contact with any part of a sewer manhole. The minimum horizontal separation between water mains and manholes shall be six feet (6'), measured from the center of the manhole.

e. The minimum separation between force mains or pressure sewers and water mains shall be two feet (2') vertically and six feet (6') horizontally under all conditions. Where a sewer force main crosses above, or less than six feet (6') below, a water line, the sewer main shall be encased in at least six inches (6") of concrete for ten feet (10') on either side of the water main. Refer to the diagram below for clarification.

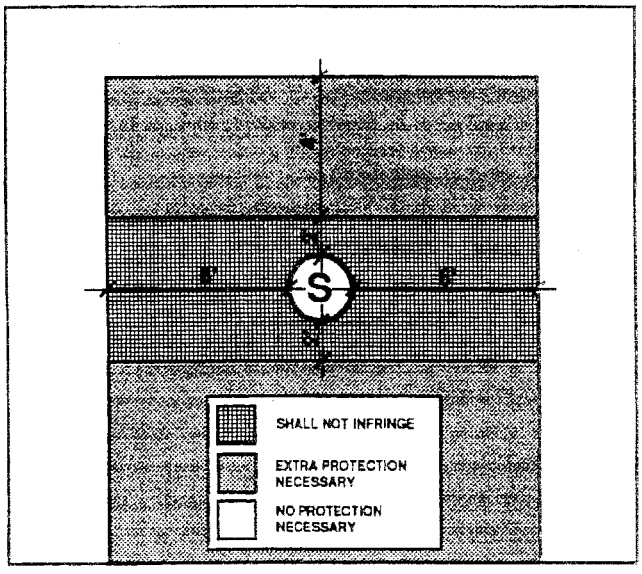

f. Sewer mains (gravity, pressure, force) shall be kept a minimum of fifty feet (50') from drinking water wells, unless the following conditions are met:

1. Water main pipe, pressure tested in place to 50 psi without excessive leakage, may be used for gravity sewers at distances greater than twenty feet (20') from drinking water wells.

2. Water main pipe, pressure tested in place to 150 psi without excessive leakage, may be used for pressure sewers and force mains at distances greater than twenty feet (20') from drinking water wells.

g. No septic tank/disposal field system shall be constructed within one hundred feet (100') of a drinking water well.

h. All distances are measured perpendicularly from the outside of the sewer main to the outside of the water main. These separation requirements do not apply to building, plumbing or individual house service connections.

i. Use Mechanical Joint ductile iron pipe with Megalug thrust restraints a minimum of ten (10') feet on each side of a sewer or storm drain crossing.

11. COMPACTION

When crossing existing water mains a minimum of 95% compaction is required to the bottom of existing mains.

Arizona Water Company requires that no slurry be permitted to contact existing cement/asbestos or ductile iron pipes, unless authorized by the company. Slurry may be poured in the bottom of the sewer trench stopping three inches (3") below the existing water main. The backfill used around the main should be AB in sufficient depth to prevent slurry from contacting existing main.

12. WATER MAIN MATERIAL SPECIFICATIONS

Ductile iron pipe (Push-on type) minimum class 350, cement lined and conform to AWWA C151.

All main line valves shall conform to AWWA C500 with a minimum working pressure of 200 psi.

All cast iron fittings to be cement lined in accordance with AWWA C104 and shall conform to AWWA C110 with a minimum working pressure of 250 psi. Except for the Coolidge System – See Note 4L.

Maximum joint deflection for 6" mechanical joint ductile iron pipe is seven degrees, seven minutes (7°, 7') or twenty-seven inches (27") per eighteen-foot (18') length pipe, for a maximum curve of one hundred forty-five feet (145').
Maximum joint deflection for 8" and 12" mechanical joint ductile iron pipe is five degrees, twenty-one minutes (5° 21') or twenty inches (20") per eighteen-foot (18') length pipe, for a maximum curve of one hundred ninety-five feet (195').

Maximum joint deflection for 6", 8" and 12" push-on joint ductile iron pipe is five degrees (5°) or nineteen inches (19") per eighteen-foot (18') length pipe for a maximum curve of two hundred five feet (205').

ARIZONA WATER COMPANY

3805 N. BLACK CANYON HIGHWAY, PHOENIX, ARIZONA 85015-5351 • P.O. BOX 29006, PHOENIX, ARIZONA 85038-9006
PHONE: (602) 240-6860 • FAX: (602) 240-6878 • WWW.AZWATER.COM

November 24, 2010

Mr. Tony Geiger
US Pipe – Waterworks Marketing Consultants
34522 N. Scottsdale Road
Scottsdale, Arizona 85226

Re: US Pipe Sentinel Fire Hydrants and Resilient Wedge Gate Valves

Dear Mr. Geiger:

Thank you for your interest in working with Arizona Water Company (the "Company") to add US Pipe Sentinel Fire Hydrants and Resilient Wedge Gate Valves to the Company's material and equipment specifications. Based on the US Pipe product information you provided and your field presentations to our operations and engineering staff, the Company is pleased to inform you that the following items are approved for use in the Company's water systems in Arizona.

Sentinel Fire Hydrant:

- Model Sentinel 250
  - 5¼" MVO
  - 4½" pumper
  - 2½" hose
  - Meets AWWA C-502 standard and approval by ULFM

Resilient Wedge Gate Valves:

- Model US Pipe A-USP0
  - Meets AWWA C-509 Full Body Cast Iron includes 304 SS Nuts, Bolts & Low Zinc Bronze Stem
  - Size range 2" thru 12"
- Model US Pipe A-USP1
  - Meets AWWA C-515 Reduced Wall Ductile Iron includes 304 SS Nuts, Bolts & Low Zinc Bronze Stem
  - Size range 14" thru 48"

We look forward to developing a long-term relationship with you and the US Pipe products. If I can be of any assistance, please call me.

Very truly yours,

Fredrick K. Schneider
Vice President – Engineering

afh

VIA EMAIL: TGEIGER4@COX.NET

ARIZONA WATER COMPANY

3805 N. BLACK CANYON HIGHWAY, PHOENIX, ARIZONA 85015-5351 • P.O. BOX 29006, PHOENIX, ARIZONA 85038-9006
PHONE: (602) 240-6860 • FAX: (602) 240-6878 • WWW.AZWATER.COM

October 19, 2010

Mr. Jim Ryan
Clow Valve Company
8121 N. 10th Avenue
Phoenix, Arizona 85021

Re: Clow Medallion Fire Hydrants and Resilient Wedge Gate Valves

Dear Mr. Ryan:

Thank you for your interest in working with Arizona Water Company (the "Company") to add Clow Medallion Fire Hydrants and Resilient Wedge Gate Valves to the Company's material and equipment specifications. Based on the Clow product information you provided and your field presentations to our operations and engineering staff, the Company is pleased to inform you that the following items are approved for use in the Company's water systems in Arizona.

Medallion Fire Hydrant:

- Model F-2545
  - 5¼" MVO
  - 4½" pumper
  - 2½" hose
  - Meets AWWA C-502 standard and approval by ULFM

Resilient Wedge Gate Valves:

- Model 2639 & 2640
  - Meets AWWA C-509 Full Body Cast Iron includes 304 SS Nuts, Bolts & Low Zinc Bronze Stem
  - Size range 2½" thru 12"
- Model 2638
  - Meets AWWA C-515 Reduced Wall Ductile Iron includes 304 SS Nuts, Bolts & Low Zinc Bronze Stem
  - Size range 14" thru 48"

We look forward to developing a long-term relationship with you and the Clow products. If I can be of any assistance, please call me.

Very truly yours,

Fredrick K. Schneider
Vice President – Engineering

lar

VIA EMAIL: JIM.RYAN@CLOWVALVE.COM

February 21, 2012

Contractor

Re: Fitting Specifications

Dear Contractor:

Effective March 1, 2012, Arizona Water Company (the "Company") has changed its fitting specifications for Ductile Iron Fittings and Ductile Iron Flanged Fittings ("Fittings"). All Fittings purchased by the Company, on the Company's behalf or installed with the intent of being conveyed to the Company, must comply with the requirements noted below.

Previous Fitting Specifications:

Fittings

Manufactured by Tyler or Union, Crosses, Elbows, Tees, Cap Reducer, Adapter, Plug, Blind Flange and Tapped Flange: Ductile Iron, Class 350, SSB, and Cast Iron Cement Lined.

New Fitting Specification:

Ductile Iron Fittings (Push-On and Mechanical Joint)

Ductile Iron Push-On and Mechanical Joint ("MJ") fittings for water lines shall be made of ductile iron per ASTM A536 and be cast in the United States of America. Fittings shall have USA cast on the fitting to designate they are made in the United States. All fittings will be manufactured and tested in accordance with ANSI/AWWA C153/A21.53 for compact design and ANSI/AWWA C110/A21.10 for full body design. In accordance with ANSI/AWWA C104/A21.4 fittings 2" – 3" will be single thickness cement mortar lined and 4" – 64" will be cement mortar lined. Fittings will be Asphaltic seal coated on the exterior in accordance with ANSI/AWWA C104/A21.4. MJ fittings with flanged end(s) will match ANSI/AWWA C115/A21.15 and ANSI B16.1 class 125 flanges. All fittings shall be NSF-61 listed for use with potable water.

Ductile Iron Flanged Fittings

Ductile Iron flanged fittings for water lines shall be made of ductile iron per ASTM A536 and be cast in the United States of America. Fittings shall have USA cast on the fitting to designate they are made in the United States. All fittings will be manufactured and tested in accordance with ANSI/AWWA C110/A21.10 design. Flange ends will match ANSI/AWWA C115/A21.15 and ANSI B16.1 class 125 flanges. In accordance with ANSI/AWWA C104/A21.4 fittings 2" – 3" will be single thickness lined and 4" – 64" will be cement mortar lined. Fittings will be Asphaltic seal coated on the exterior in accordance with ANSI/AWWA C104/A21.4. All fittings shall be NSF-61 listed for use with potable water.

If you have any questions or require further information, please contact me at 602-240-6860.

Very truly yours,

Fredrick K. Schneider, PE
Vice President - Engineering
engineering@azwater.com

afh
Enclosure

ARIZONA WATER COMPANY

STANDARD SPECIFICATION DRAWINGS: E-9-1

ERRATA 2010

ARIZONA WATER COMPANY

STANDARD SPECIFICATION DRAWINGS - DUCTILE IRON

INDEX (E-9)

E-9-1	TYPICAL GATE VALVE LOCATIONS
E-9-2	INSTALLATION OF TYPICAL VERTICAL AND HORIZONTAL GATE VALVES
E-9-3	INSTALLATION OF TYPICAL TAPPING SLEEVE AND VALVE
E-9-4	INSTALLATION OF TYPICAL VALVE SUBJECT TO NON-VEHICULAR AND VEHICULAR TRAFFIC
E-9-5	INSTALLATION OF TYPICAL THRUST BLOCKING SCHEDULE THRUST BLOCK FOR VERTICAL BENDS, AND MEGALUG THRUST RESTRAINTS
E-9-6	INSTALLATION OF TYPICAL PERPENDICULAR FIRE HYDRANT
E-9-7	INSTALLATION OF TYPICAL PARALLEL FIRE HYDRANT
E-9-8	INSTALLATION OF TYPICAL 2" BLOWOFF DEVICE, AND AIR RELEASE VALVE
E-9-9	INSTALLATION OF TYPICAL SINGLE SERVICE CONNECTION FOR A $^{3}/_{4}$" OR 1" METER
E-9-10	INSTALLATION OF TYPICAL DOUBLE SERVICE CONNECTION FOR A $^{3}/_{4}$" AND 1" METER
E-9-11	INSTALLATION OF TYPICAL 2" SERVICE CONNECTION
E-9-12	INSTALLATION OF 3" COMPOUND METER, 4" COMPOUND METER, 6" COMPOUND METER, 6" COMPOUND SERVICE, CONCRETE VAULT, AND NON-POTABLE PROPELLER METER
E-9-13	INSTALLATION OF TYPICAL 4" THRU 8" DETECTOR CHECK VALVES AND 3" THRU 10" REDUCED PRESSURE PRINCIPLE DETECTOR WITH BYPASS METER ASSEMBLY (RPDA) FOR FIRE LINE SERVICES
E-9-14	INSTALLATION OF TYPICAL PRESSURE RELIEF VALVE ASSEMBLY
E-9-15	INSTALLATION OF TYPICAL PRESSURE REDUCING STATION
E-9-16	PAINT COLOR SELECTION
E-9-17	STEEL WATER STORAGE TANK
E-9-18	HYDROPNEUMATIC TANK
E-9-19	INSTALLATION OF WELL SHELTER

E-9-20	INSTALLATION OF TYPICAL WELL WITH LINE SHAFT TURBINE PUMP
E-9-21	INSTALLATION OF TYPICAL WELL WITH SUBMERSIBLE TURBINE PUMP
E-9-22	INSTALLATION OF COLUMN PIPE, OIL TUBE AND LINE SHAFT
E-9-23	HOT TAP AND JUMPER METER CONNECTION
E-9-24	INSTALLATION OF TYPICAL WATER LINE ENCASEMENT
E-9-25	INSTALLATION OF CALCIUM HYPOCHLORITE TABLET CHLORINATOR
E-9-26	INSTALLATION OF CHAIN LINK FENCE
E-9-27	INSTALLATION OF SIDE HUNG WATER LINE SUSPENSION
E-9-28	PIPE WARNING TAPE, LOCATOR WIRE, AND LOCATOR WIRE TERMINATION
E-9-29	INSTALLATION OF A TYPICAL SAMPLING STATION
E-9-30-1	WATER AND SANITARY SEWER SEPARATION/PROTECTION PERPENDICULAR
E-9-30-2	WATER AND SANITARY SEWER SEPARATION/PROTECTION – PARALLEL

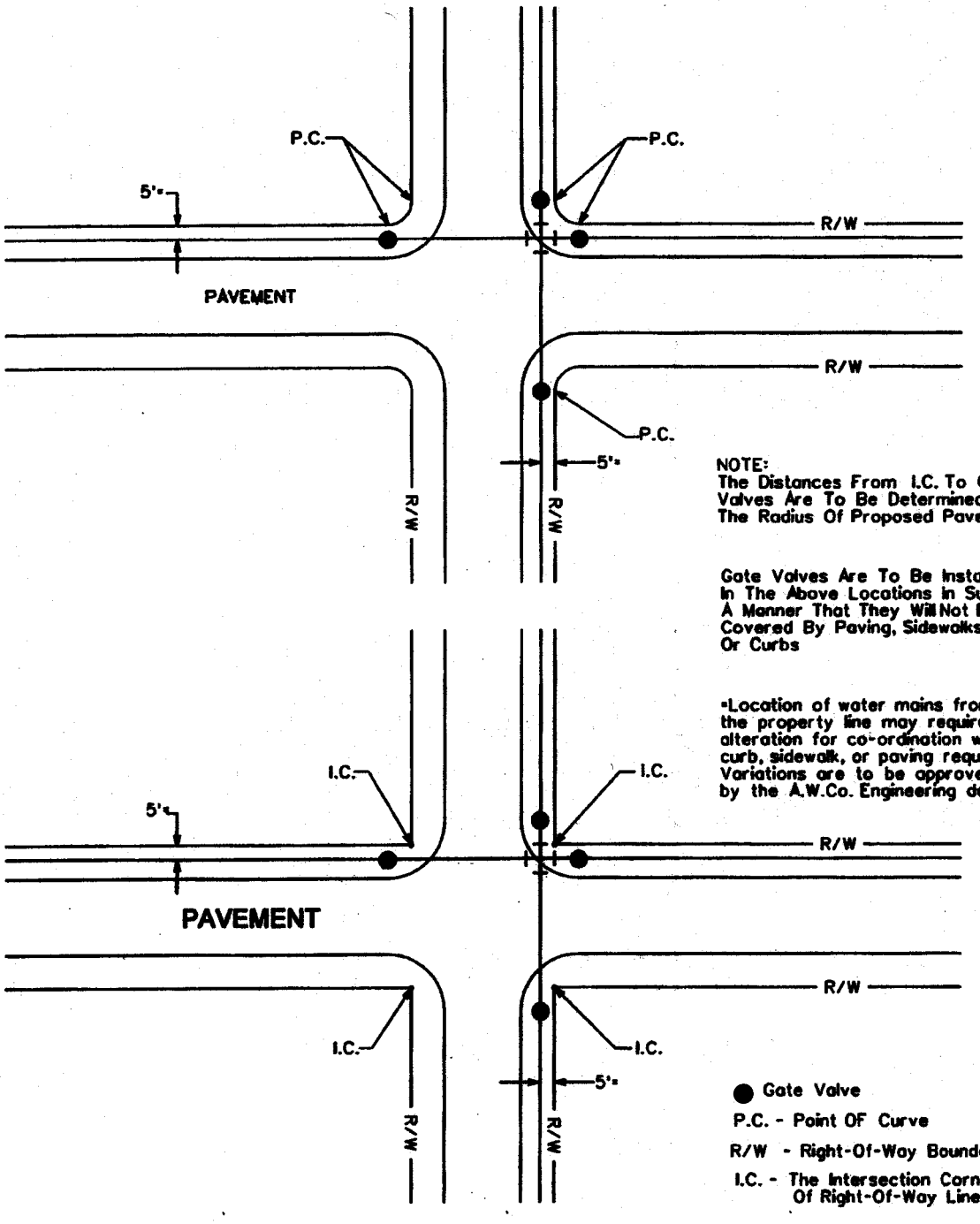

NOTE:
The Distances From I.C. To Gate Valves Are To Be Determined By The Radius Of Proposed Pavement.

Gate Valves Are To Be Installed In The Above Locations In Such A Manner That They Will Not Be Covered By Paving, Sidewalks, Or Curbs

*Location of water mains from the property line may require alteration for co-ordination with curb, sidewalk, or paving requirements. Variations are to be approved by the A.W.Co. Engineering dept.

● Gate Valve

P.C. - Point OF Curve

R/W - Right-Of-Way Boundary

I.C. - The Intersection Corner Of Right-Of-Way Lines

ARIZONA WATER COMPANY

STANDARD SPECIFICATION
FOR THE INSTALLATION OF

TYPICAL GATE VALVE LOCATIONS

DRAWN BY:	APPROVED BY:	DATE:	△	
CCO	M.W.	3/20/86	△ 1/31/2001	E-9-1-1

FOR 6" THROUGH 12" GATE VALVES

Mueller Resilient Wedge Gate Valves
Catalog Number A-2360-__
ANSI/AWWA C509 Compliant

FOR 14" THROUGH 16" GATE VALVES

Mueller Resilient Wedge Gate Valves
Catalog Number A-2361-__
ANSI/AWWA C509 Compliant

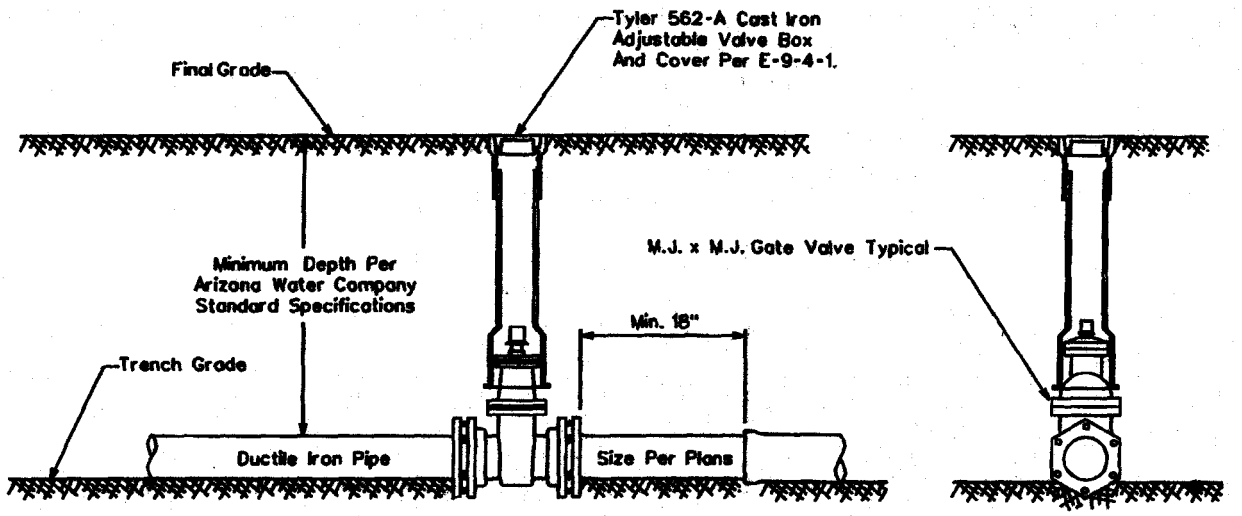

All Valves Installed On Pipe Five Feet (5') Deep And Greater Are To Be Installed With A Valve Operator Extension, Mueller Catalog No. A-26441.

ARIZONA WATER COMPANY

STANDARD SPECIFICATION
FOR THE INSTALLATION OF

TYPICAL VERTICAL GATE VALVES

DRAWN BY:	APPROVED BY:	DATE:	△ 08.23.2006	E-9-2-1
CB	MW	03.20.1986		

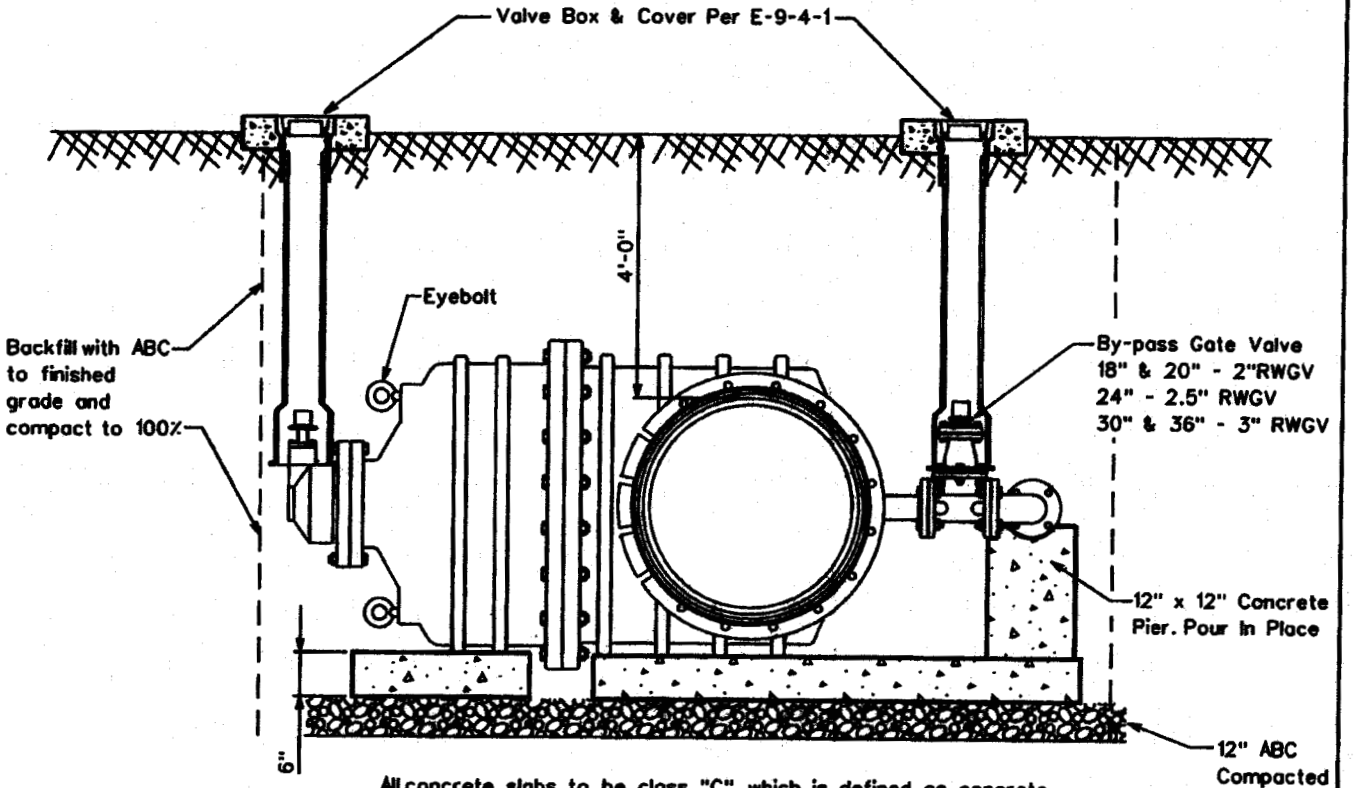

All concrete slabs to be class "C", which is defined as concrete whose minimum compressive strength at 14 days reaches 1600psi and at 28 days reaches 2000psi. per MAG Section 725, Table 725-1. Slabs to be formed and poured prior to valve installation.

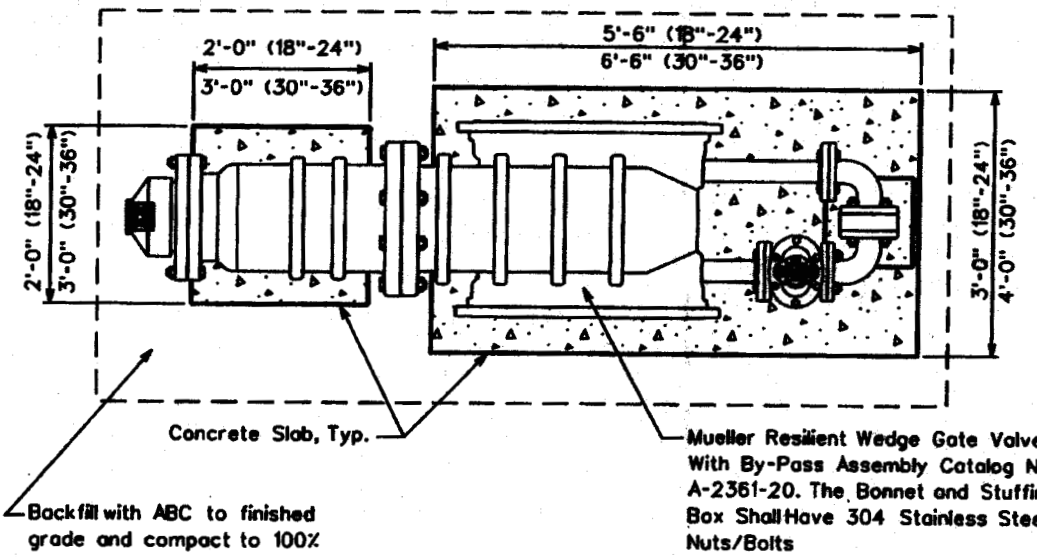

All valves installed on pipe five feet and greater are to be installed with a valve operator extension Mueller catalog No.A-26441 The distance is measured from the top of the operating nut to final grade.

ARIZONA WATER COMPANY

STANDARD SPECIFICATION

FOR THE INSTALLATION OF

INSTALLATION OF BEVEL GEARED HORIZONTAL GATE VALVES WITH BY-PASS FOR 18" AND LARGER VALVES

DRAWN BY:	APPROVED BY:	DATE:	△	E-9-2-2
CB		12.07.2004		

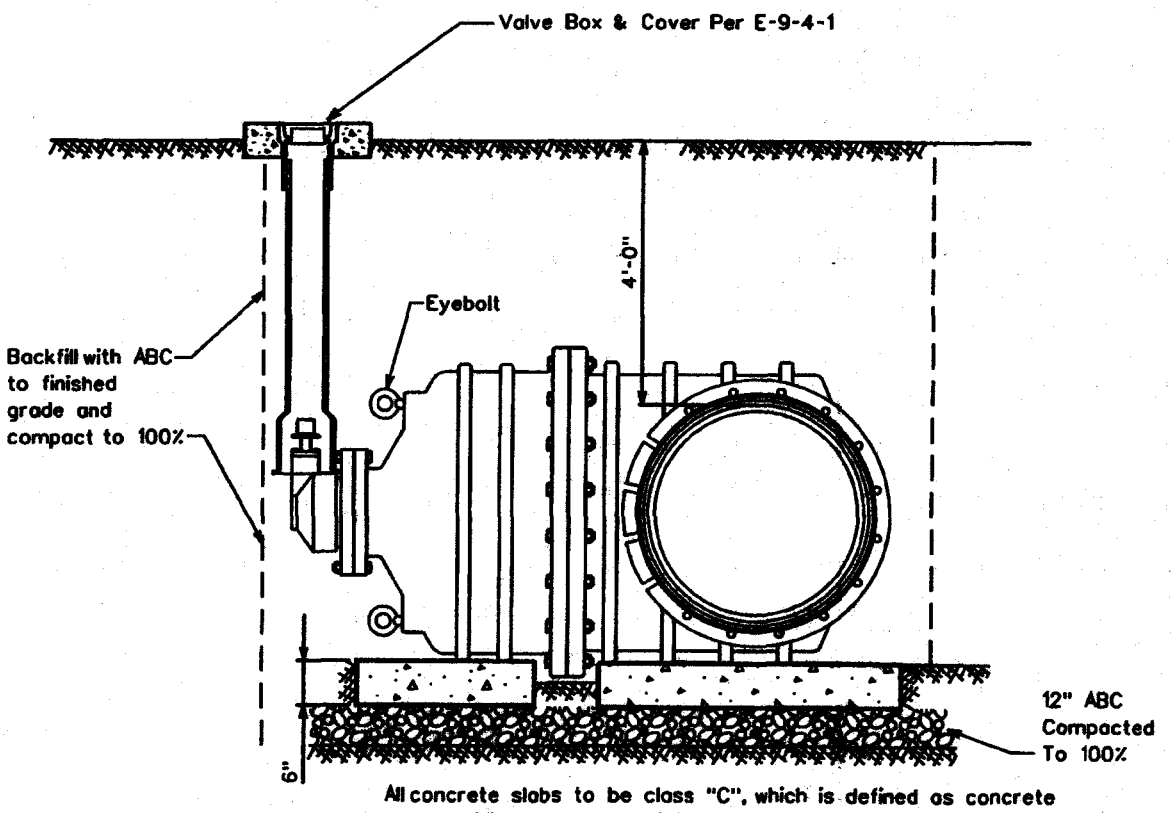

All concrete slabs to be class "C", which is defined as concrete whose minimum compressive strength at 14 days reaches 1600psi and at 28 days reaches 2000psi. per MAG Section 725, Table 725-1. Slabs to be formed and poured prior to valve installation.

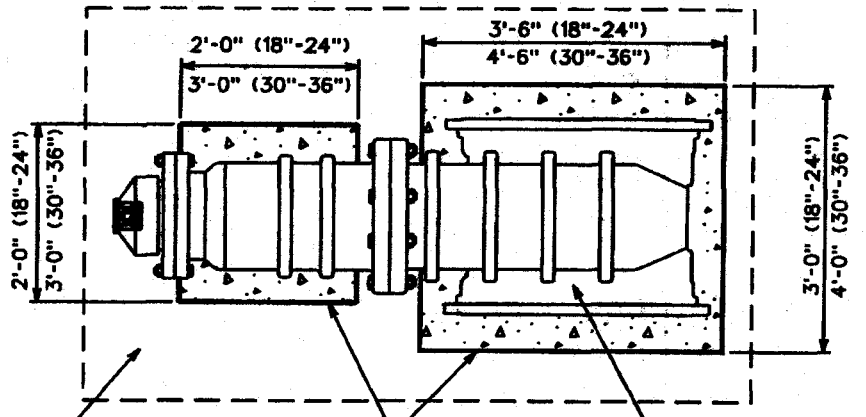

All valves installed on pipe five feet and greater are to be installed with a valve operator extension Mueller catalog No.A-26441 The distance is measured from the top of the operating nut to final grade.

ARIZONA WATER COMPANY

STANDARD SPECIFICATION

FOR THE INSTALLATION OF

INSTALLATION OF BEVEL GEARED HORIZONTAL GATE VALVES WITHOUT A BY-PASS FOR 18" AND LARGER VALVES

DRAWN BY:	APPROVED BY:	DATE:		
CB		12.07.2004	△ 5.13.2005	E-9-2-3

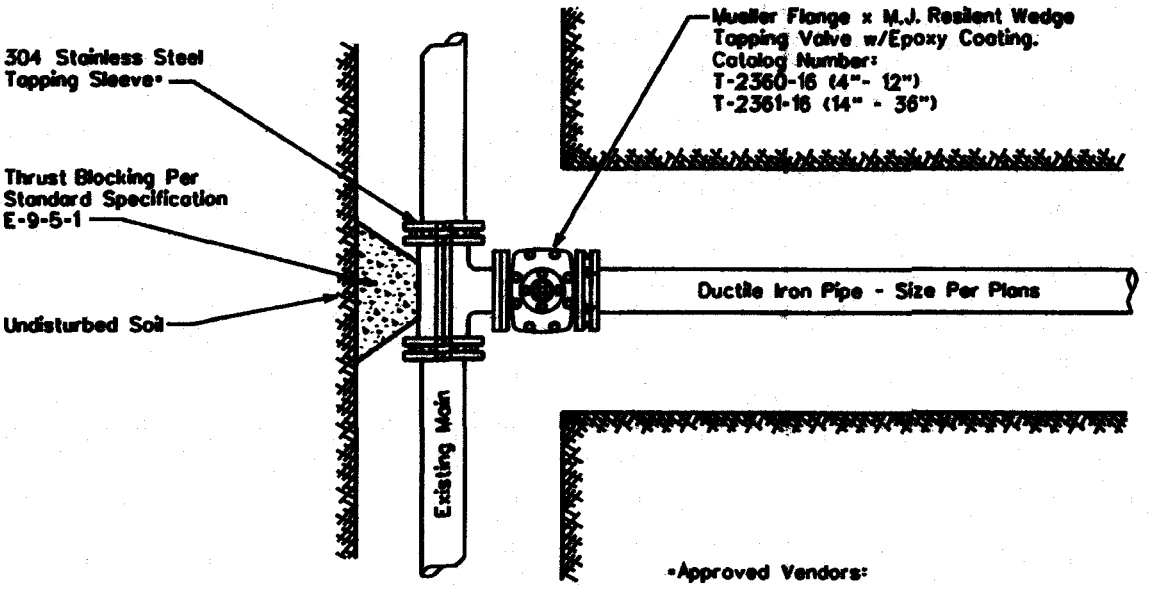

*Approved Vendors:

Mueller, Catalog No. H304, 304 Stainless Steel

JCM, Model 432, 304 Stainless Steel

Romac, 'SST', 304 Stainless Steel

Cascade, 'CST-EX', 304 Stainless Steel

NOTE:

1. All flanges, bolts, and nuts shall be kept free of concrete.
2. Air pressure test the tapping sleeve before the live tap is made.
3. Polywrap all new fittings

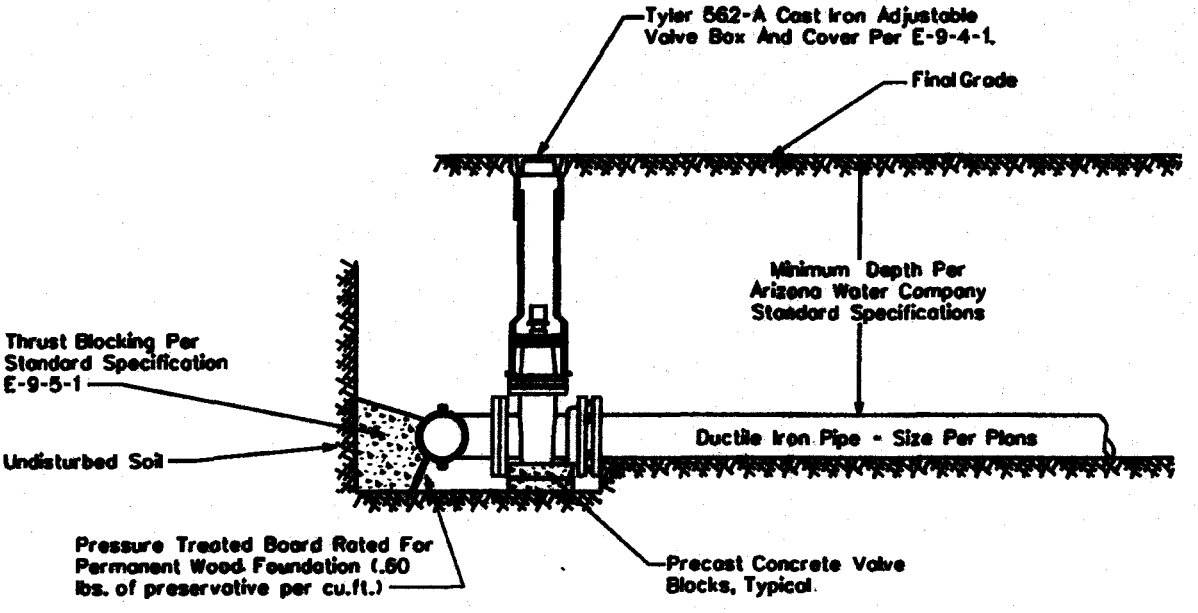

ARIZONA WATER COMPANY

STANDARD SPECIFICATION
FOR THE INSTALLATION OF

TYPICAL TAPPING SLEEVE AND VALVE

DRAWN BY:	APPROVED BY:	DATE:	△ 08.23.2006	E-9-5-1
CB	MW	03.20.1986		

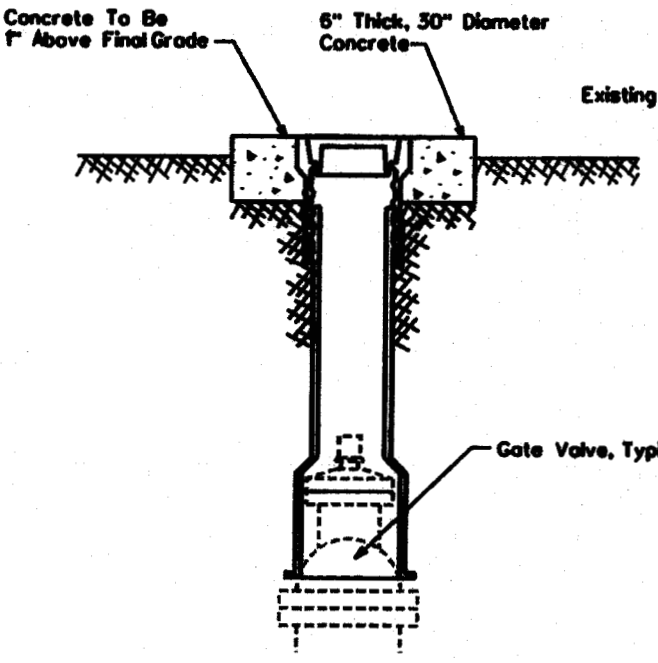

NON-VEHICULAR VALVE BOX

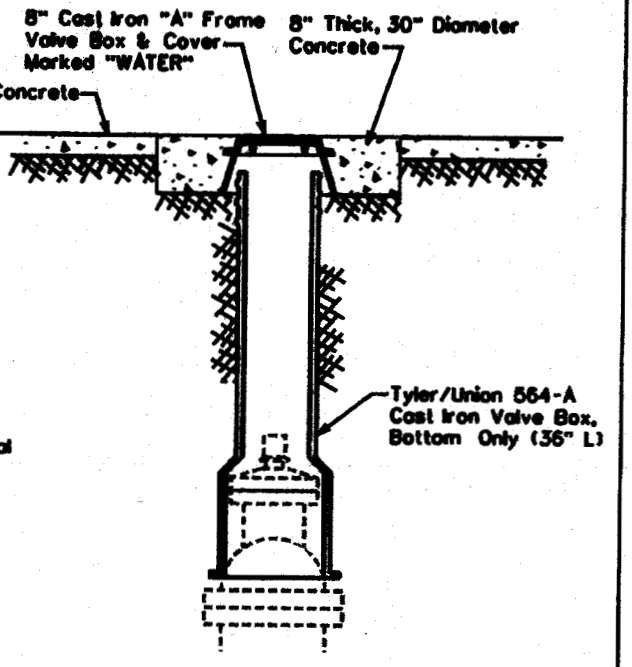

CONCRETE VALVE BOX

For Areas Subject To Vehicular Traffic

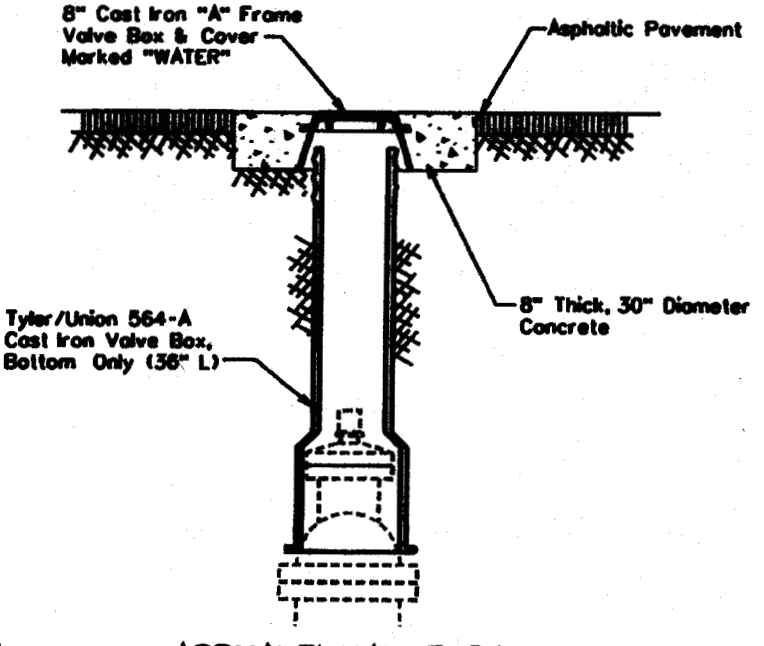

ASPHALT VALVE BOX

For Areas Subject To Vehicular Traffic

NOTE:

1. The Valve Box Shall Be Adjusted To Finished Grade Prior To Placing Of Asphalt And/Or Concrete.
2. For Non-Traffic Areas Use Tyler/Union 562-A, Two-Piece, 6855 Series Or Equivalent Adjustable Cast Iron Valve Box And Cover. Valves 4" To 12"

   For Traffic Areas, Use Tyler/Union 564-A Bottom Section Only With An 8" Cast Iron "A" Frame With Cover. Valves 4" To 12"
3. All Valves Installed Five Feet (5') Deep And Greater Are To Be Installed With A Valve Operator Extension, Mueller Catalog No. A-26441 And Shall Have A Debris Cap
4. Use Minimum Class 'C' Concrete which is defined as concrete whose minimum compressive strength at 14 days reaches 1600psi and at 28 days reaches 2000psi. per MAG Section 725, Table 725-1.

ARIZONA WATER COMPANY

STANDARD SPECIFICATION

FOR THE INSTALLATION OF

TYPICAL VALVE SUBJECT TO NON-VEHICULAR AND VEHICULAR TRAFFIC

DRAWN BY:	APPROVED BY:	DATE:	△ 8.24.2006	E-9-4-1
CB	MW	03.20.1986		

CROSSES

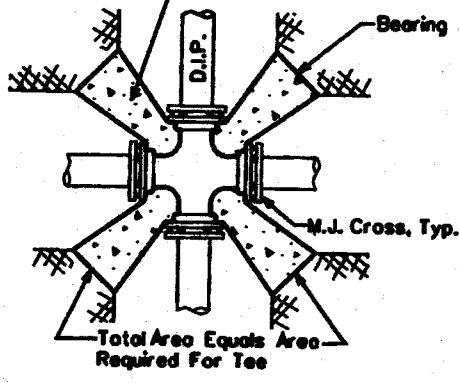

TEES

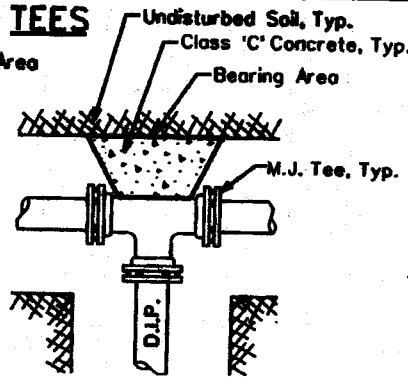

ELLS

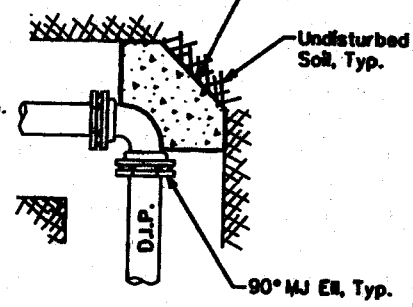

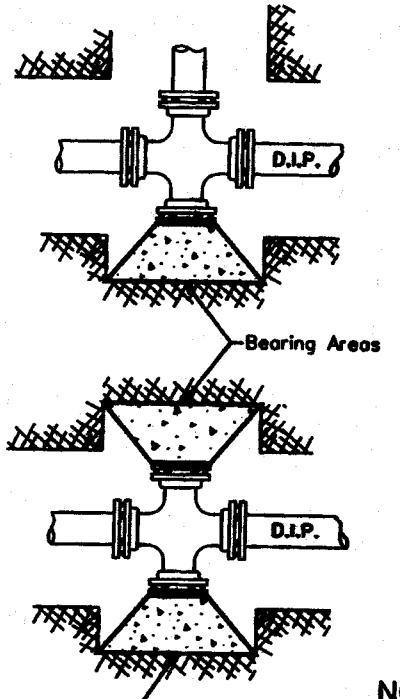

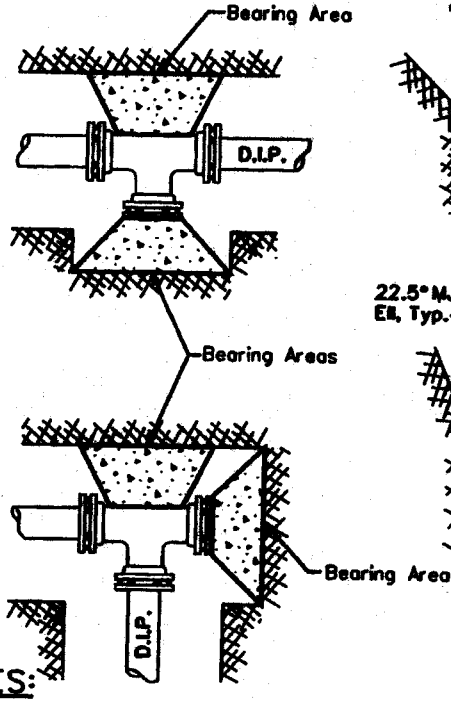

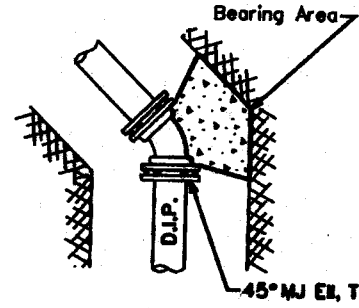

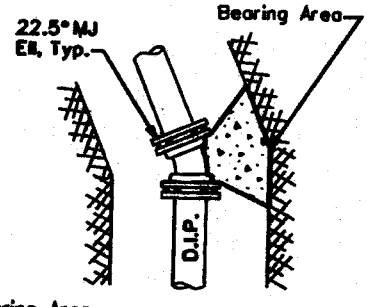

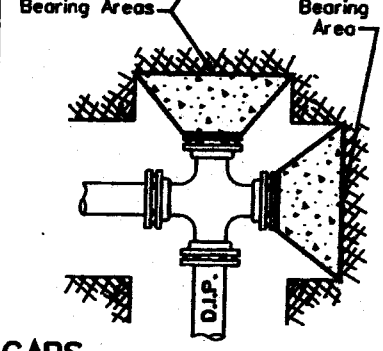

CROSS SECTION

TYPICAL

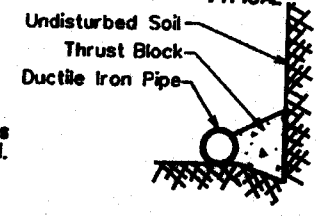

CAPS

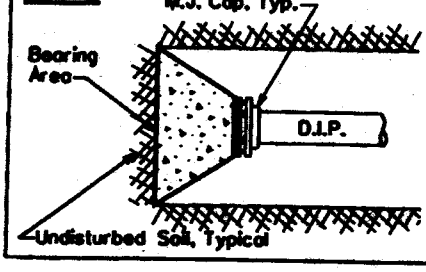

NOTES:

1. Use minimum Class 'C' concrete, which is defined as concrete whose minimum compressive strength at 14 days reaches 1600psi and at 28 days reaches 2000psi. per MAG Section 725, Table 725-1.
2. Thrust blocks are to bear on undisturbed earth with minimum bearing area as shown. If not undisturbed, areas will be increased as required.
3. Place the pressure treated form board in front of all plugs before pouring thrust blocks.
4. Form all non-bearing areas to prevent any concrete from entering any joint.
5. All flanges, bolts and nuts shall be kept free of concrete.
6. Center the bearing area on the pipe centerline and force line.
7. All pipe fittings to be wrapped with polyethylene pipe wrap prior to thrust block installation. (where applicable)

THRUST BLOCK SCHEDULE

PIPE SIZE	TEE, 45°, AND 22.5° ELLS, & PLUGS	90° ELLS
6" And Under	4 Sq.Ft.	6 Sq.Ft.
8"	6 Sq.Ft.	9 Sq.Ft.
12"	13 Sq.Ft.	20 Sq.Ft.
16"	23 Sq.Ft.	32 Sq.Ft.
18" And Larger	Calculated Per Project	

STANDARD SPECIFICATION

FOR THE INSTALLATION OF

TYPICAL THRUST BLOCKING SCHEDULE

DRAWN BY:	APPROVED BY:	DATE	△	
CB	MW	03.20.1986	△ 05.27.2005	E-9-5-1

NOTES

1. Bars In Conc. Thrust Block To Be Coated w/ 2 Coats Coal Tar Epoxy or by Other Approved Method.
2. Bars To Have 90° Hook @ Their Ends, As Per Table Below.

Pipe Size	Min. Bar Size	"A" Dimension (Hook)	* Min. Block Dimension (WxHxL)
6"	#6	6"	3'x3'x3'
8"	#6	9"	4'x3'x4'
12"	#8	9"	5'x4'x5'
16"	#9	12"	7'x6'x7'

* For 125 P.S.I. Working Pressure

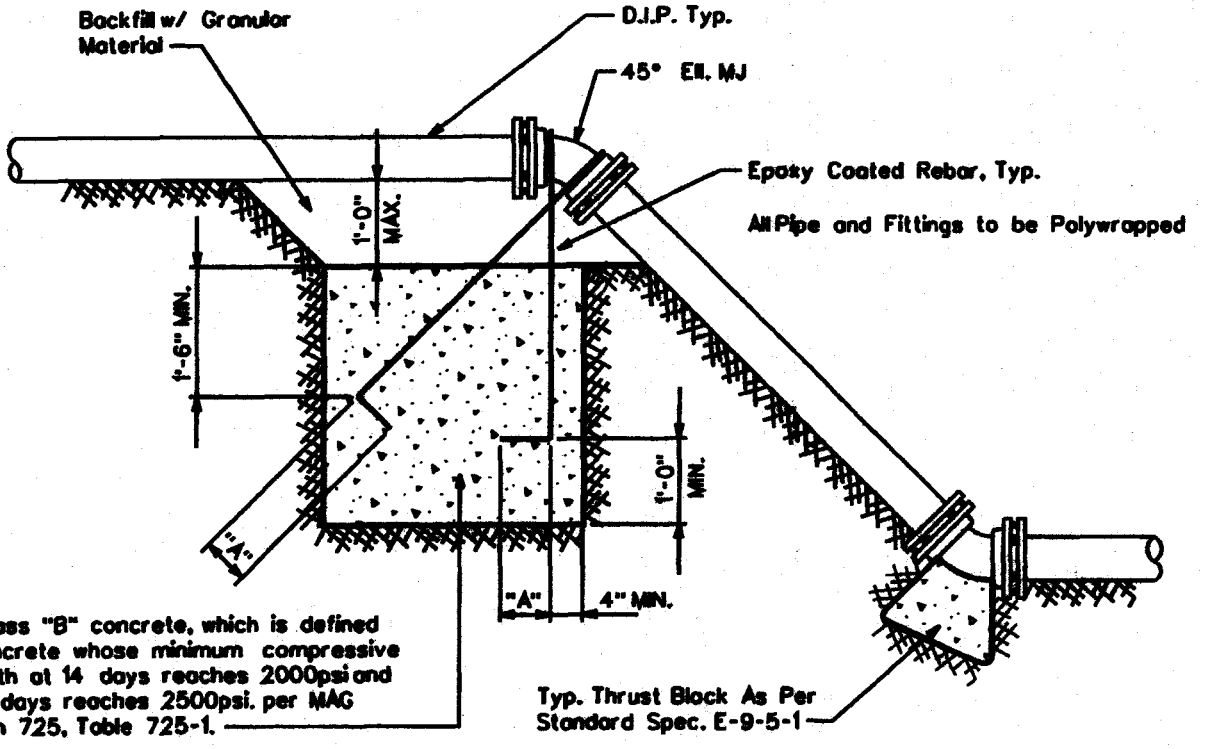

ARIZONA WATER COMPANY

STANDARD SPECIFICATION
FOR THE INSTALLATION OF

THRUST BLOCK FOR VERTICAL BENDS

DRAWN BY:	APPROVED BY:	DATE:	△ 01.16.2007	E-9-5-2
JPK	MJW	7-5-96		

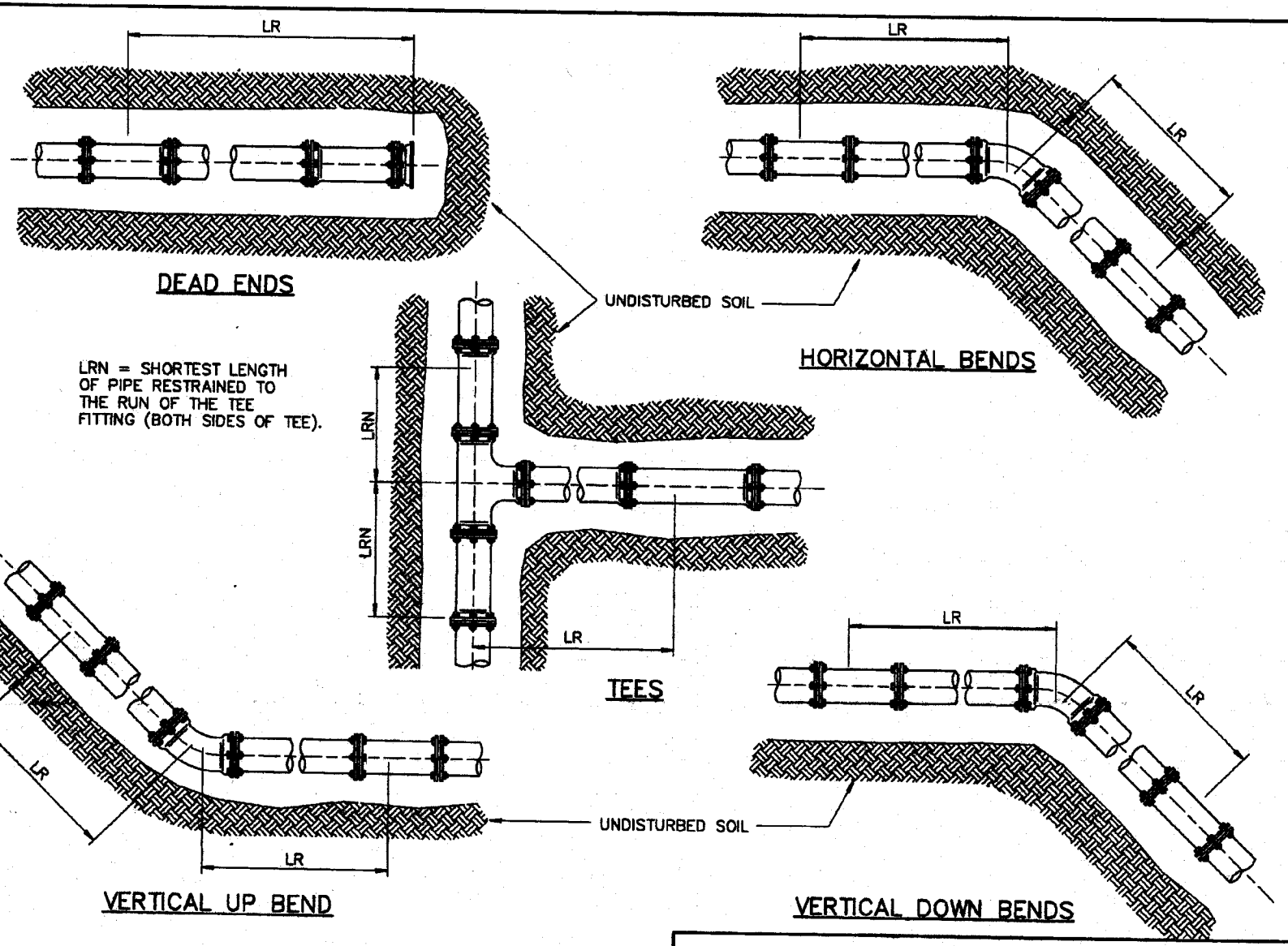

ARIZONA WATER COMPANY

STANDARD SPECIFICATION
FOR THE INSTALLATION OF

JOINT RESTRAINT FOR NEW DUCTILE IRON AND C-900 PVC MAINS

DRAWN BY:	APPROVED BY:	DATE:		
CB	MW	01.16.2007	△	E-9-5-3-1

RESTRAINED LENGTHS, LR, FOR DUCTILE IRON PIPE

NOMINAL PIPE SIZE INCHES	HORIZONTAL BENDS			TEES		VERTICAL OFFSETS						DEAD ENDS
						90° BEND FITTINGS		45° BEND FITTINGS		22-1/2° BEND FITTINGS		
	90°	45°	22-1/2°	LRN=0'	LRN=10'	DOWN BEND	UP BEND	DOWN BEND	UP BEND	DOWN BEND	UP BEND	
4	18	7	4	30	8	31	18	13	7	6	3	31
6	25	10	5	43	20	44	25	18	10	9	5	44
8	32	13	6	56	34	58	32	24	13	11	6	58
10	38	16	8	68	45	69	38	29	16	14	8	69
12	45	19	9	80	57	81	45	34	19	16	9	81
14	51	21	10	91	68	92	51	38	21	18	10	92
16	57	24	11	103	79	104	57	43	24	21	11	104
18	62	26	12	113	90	115	62	48	26	23	12	115
20	68	28	14	125	100	126	68	52	28	25	14	126
24	79	33	16	145	121	147	79	61	33	29	16	147

RESTRAINED LENGTHS, LR, FOR DUCTILE IRON PIPE WITH POLYETHYLENE WRAP

NOMINAL PIPE SIZE INCHES	HORIZONTAL BENDS			TEES		VERTICAL OFFSETS						DEAD ENDS
						90° BEND FITTINGS		45° BEND FITTINGS		22-1/2° BEND FITTINGS		
	90°	45°	22-1/2°	LRN=0'	LRN=10'	DOWN BEND	UP BEND	DOWN BEND	UP BEND	DOWN BEND	UP BEND	
4	26	11	5	69	18	72	26	30	11	14	5	72
6	36	15	7	99	47	102	36	42	15	20	7	102
8	47	19	9	130	78	133	47	55	19	26	9	133
10	56	23	11	157	103	159	56	66	23	32	11	159
12	65	27	13	185	131	187	65	77	27	37	13	187
14	74	31	15	211	156	214	74	89	31	42	15	214
16	82	34	16	238	183	241	82	100	34	48	16	241
18	90	37	18	263	207	266	90	110	38	53	18	266
20	98	41	20	289	233	292	98	121	41	58	20	292
24	113	47	22	337	280	340	113	141	47	68	22	340

NOTES:

1. ALL JOINTS WITHIN THE SPECIFIED LENGTH LR MUST BE RESTRAINED. ALL LENGTHS ARE GIVEN IN FEET.
2. THE MAXIMUM TEST PRESSURE SHALL NOT EXCEED 200 PSI
3. THE MINIMUM DEPTH OF BURY SHALL BE 3' TO TOP OF PIPE.
4. RESTRAINED LENGTHS MAY BE REDUCED WHEN SUPPORTED BY ENGINEERING CALCULATIONS.

ARIZONA WATER COMPANY

STANDARD SPECIFICATION
FOR THE INSTALLATION OF

JOINT RESTRAINT FOR NEW DUCTILE IRON AND C-900 PVC MAINS

DRAWN BY:	APPROVED BY:	DATE:	△	
CB	MW	01.16.2007		E-9-5-3-2

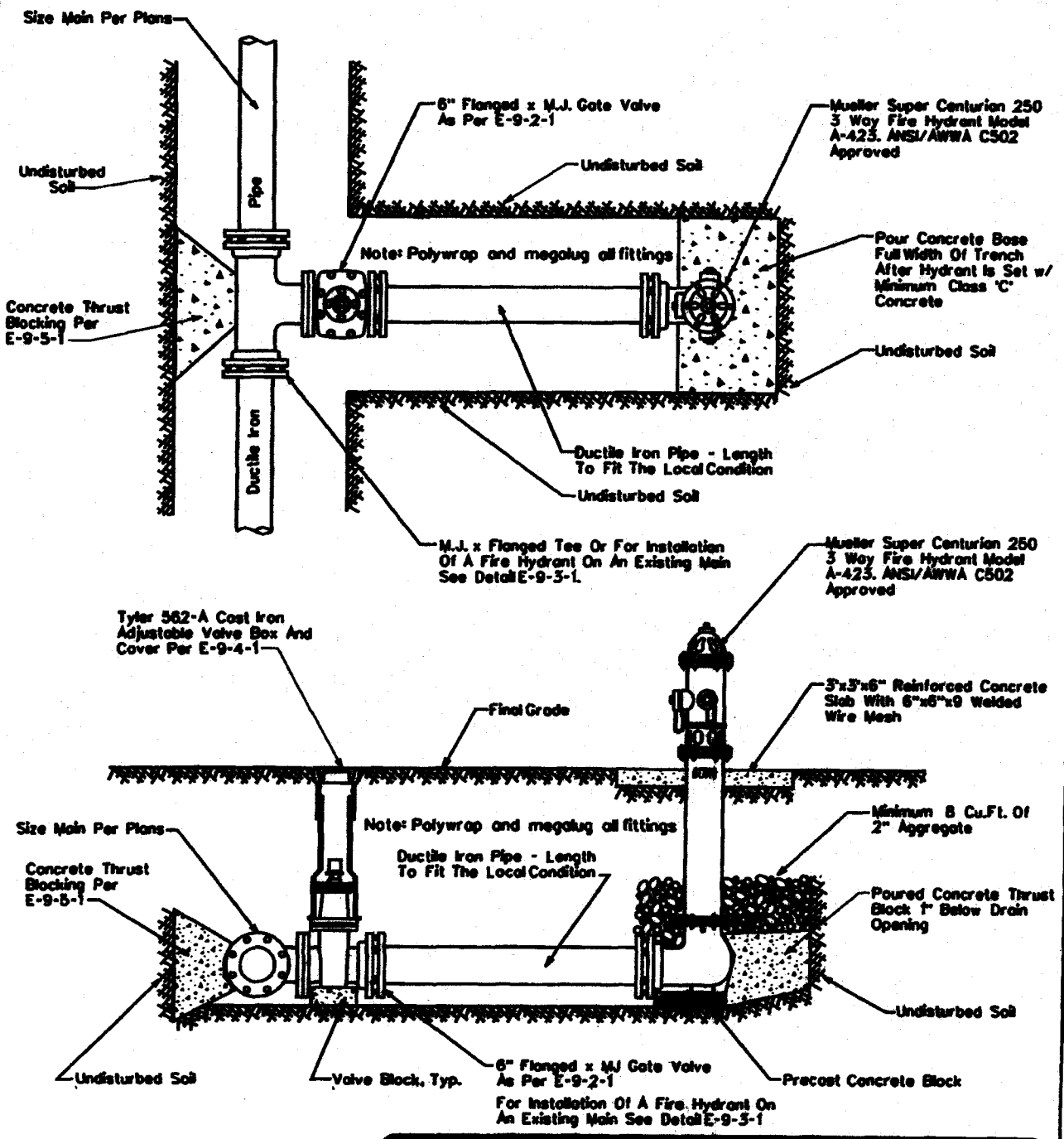

NOTE: All Flanges, Bolts, Nuts and Drain Holes Shall Be Kept Free Of Concrete

ARIZONA WATER COMPANY

STANDARD SPECIFICATION

FOR THE INSTALLATION OF

TYPICAL PERPENDICULAR FIRE HYDRANT

DRAWN BY:	APPROVED BY:	DATE:	△ 08.24.2006	E-9-6-1
CB	MW	1-28-91		

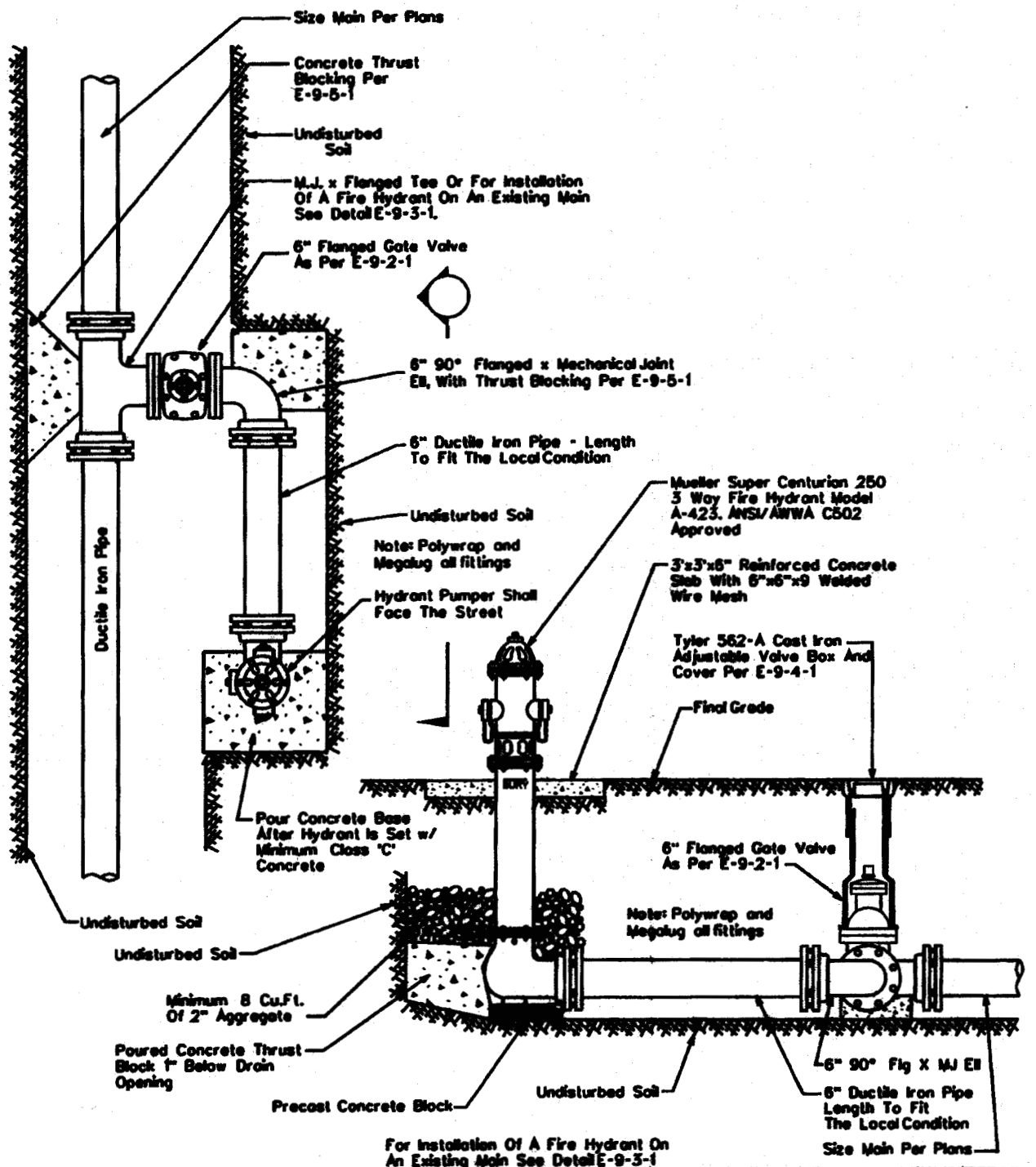

NOTE: All Flanges, Bolts, Nuts And Drain Holes Shall Be Kept Free Of Concrete.

ARIZONA WATER COMPANY

STANDARD SPECIFICATION

FOR THE INSTALLATION OF

TYPICAL PARALLEL FIRE HYDRANT

DRAWN BY:	APPROVED BY:	DATE	△	
JW	MW	03.20.1986	△ 08.24.2006	E-9-7-1

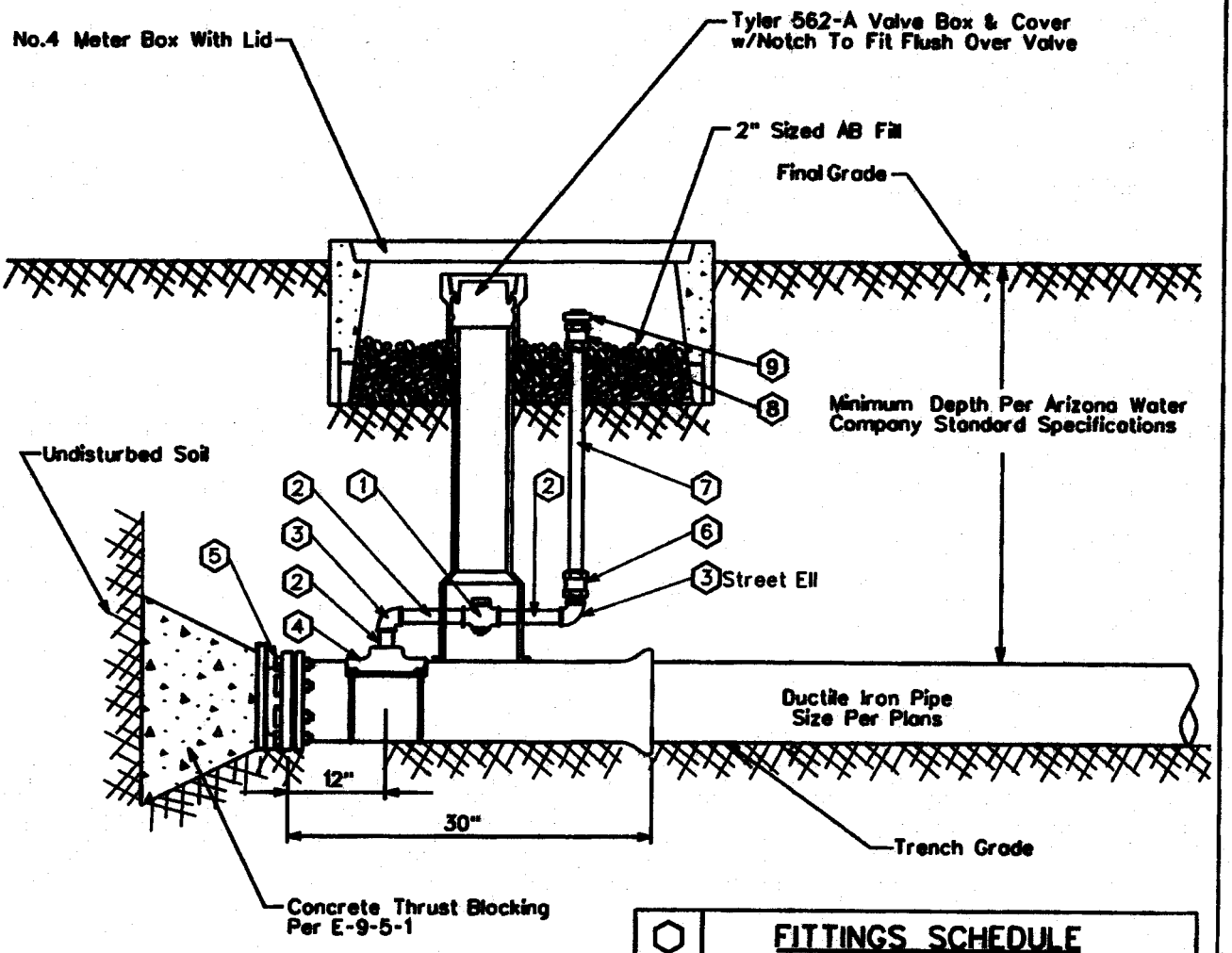

⬡	FITTINGS SCHEDULE
1.	2" Mueller 300 Ball Curb Valve B-20283 FIP x FIP W/ 2" Mueller Brass Square Wrench Nut Adapter B-20299
2.	2" Brass Nipple - Length To Fit Field Conditions
3.	2" Brass 90° Elbow, IPST
4.	Mueller Double Strap Bronze Service Saddle - BR2B
5.	M.J. Plug - Megalug Restraints May Be Required
6.	2" Straight Coupling CC x FIP H-15451
7.	2" Copper Pipe
8.	2" Straight Coupling CC x MIP H-15428
9.	2" Square Head Plug, MIP

ARIZONA WATER COMPANY

STANDARD SPECIFICATION
FOR THE INSTALLATION OF

2" BLOWOFF ASSEMBLY

DRAWN BY:	APPROVED BY:	DATE	△	
CB	MW	03.20.1986	△ 03.21.2006	E-9-8-1

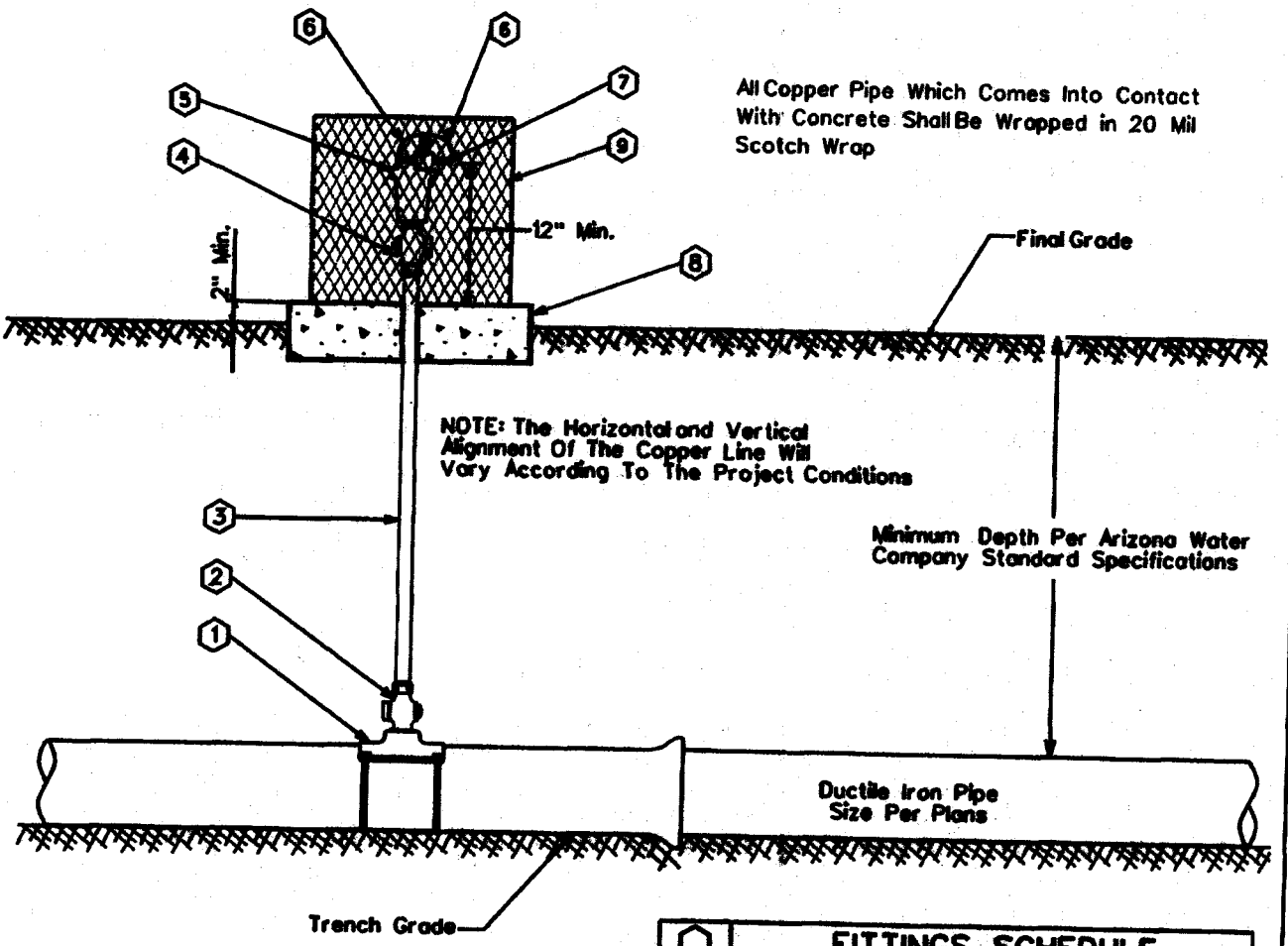

GENERAL NOTES:

1. The valve shall be installed at high points and on long runs to vent the accumulation of air with the line under pressure- see the construction plans for specific locations.
2. The valve shall have a 1/4" orifice with valve sealing faces of stainless steel and BUNA-N rubber.
3. The valve shall be Crispin model AR10 for 6" and larger water mains.
4. Crispin model AR10 valve construction consists of a 1" IPST inlet & 1/2" IPST outlet, cast iron body and top flange with stainless steel float and trim.
5. The air release assembly shall be located out of the path of traffic but within right-of-way or easement.

⬡	FITTINGS SCHEDULE
1.	Mueller BR2B Bronze Service Saddle - Double Strap
2.	1" Mueller B-25008 Taper x Comp. Ball Corp Stop
3.	1" Type 'K' Copper w/NO Splices - Field Fit
4.	1" Mueller B-25028 IP x Comp. Ball Corp Stop
5.	Crispin 1" Air Release Valve, Model AR10
6.	1/2" Brass Street Elbow
7.	No.16 Wire Mesh Screen (Non-Corrodible)
8.	4" Thick Concrete Pad - Class 'C' Concrete
9.	Guardshack, Model GS-1, Available From BPDI, Inc. Available in Leaf Green Or Desert Tan

ARIZONA WATER COMPANY

STANDARD SPECIFICATION
FOR THE INSTALLATION OF

TYPICAL AIR RELEASE VALVE

DRAWN BY:	APPROVED BY:	DATE:		
CB	MW	03.20.1997	△08.24.2006	E-9-8-2

All Copper Pipe Which Comes Into Contact With Concrete Shall Be Wrapped In 20 Mil Scotch Wrap

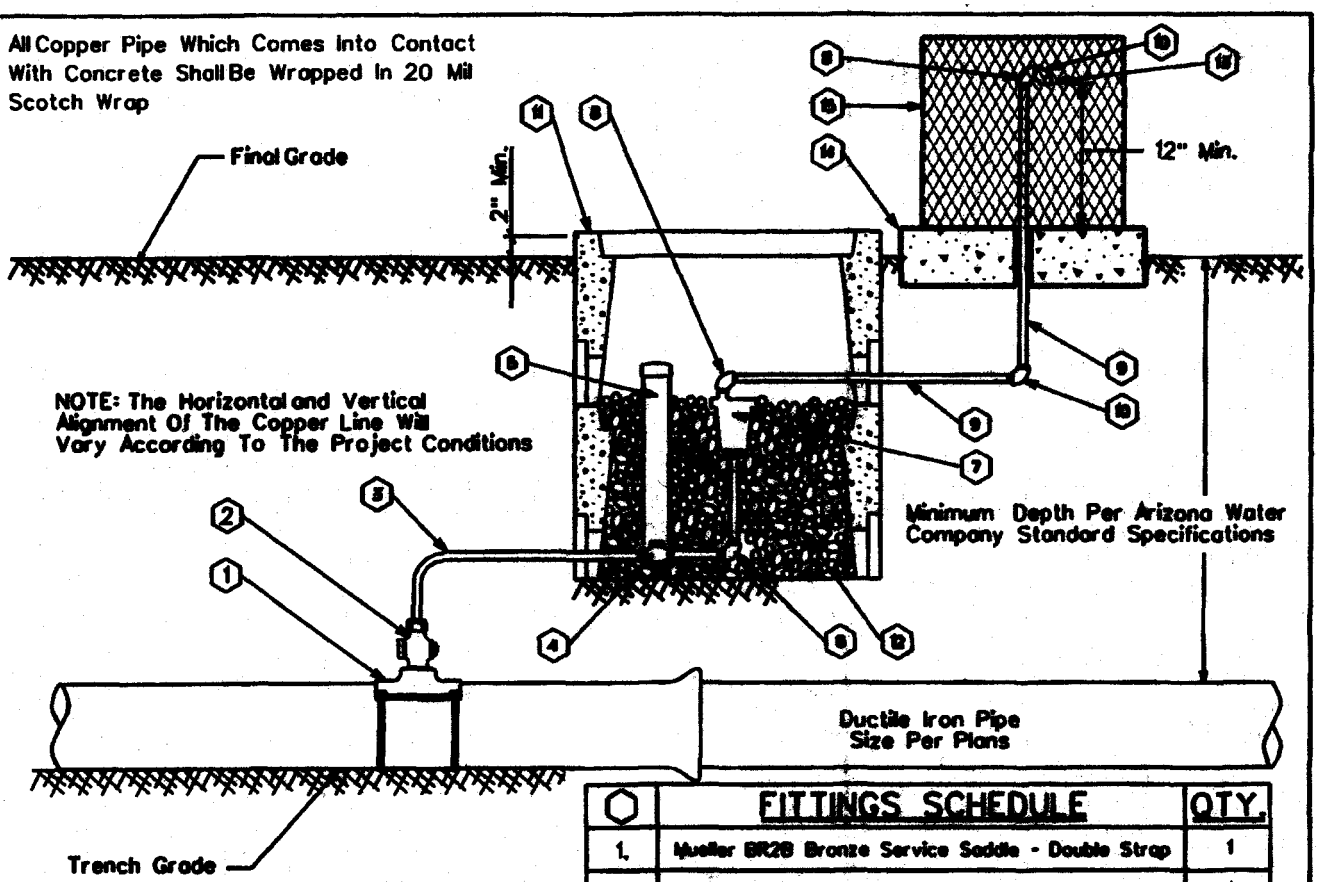

⬡	FITTINGS SCHEDULE	QTY.
1.	Mueller BR2B Bronze Service Saddle - Double Strap	1
2.	1" Mueller B-25008 Taper x Comp. Ball Corp Stop	1
3.	1" Type 'K' Copper w/NO Splices - Field Fit	As Req'd
4.	1" Mueller B-25028 IP x Comp. Ball Corp Stop	1
5.	3" PVC Pipe w/ Cap (Loose Fit)	1
6.	1" x 4" Brass Nipple w/90° Elbow	1
7.	Crispin 1" Air Release Valve, Model AR10	1
8.	½" Brass Street Elbow	2
9.	½" Galvanized Pipe - Length as req'd	2
10.	½" Galvanized 90° Ell	2
11.	Number 1 Meter Box	2
12.	2" Sized AB (Fill Meter Box To The Top Of The Air Release Valve)	As Req'd
13.	No.16 Wire Mesh Screen (Non-Corrodible)	1
14.	4" Thick Concrete Pad - Class 'C' Concrete	1
15.	Guardshack, Model GS-1, Available From BPDI, Inc. Available In Leaf Green Or Desert Tan	1

GENERAL NOTES:

1. The valve shall be installed at high points and on long runs to vent the accumulation of air with the line under pressure- see the construction plans for specific locations.
2. The valve shall have a 5/64" orifice with valve sealing faces of stainless steel and BUNA-N rubber.
3. The valve shall be Crispin model AR10 for 6" and larger water mains.
4. Crispin model AR10 valve construction consists of a 1" IPST inlet & ½" IPST outlet, cast iron body and top flange with stainless steel float and trim.
5. The air release assembly shall be located out of the path of traffic but within the right-of-way or easement.

ARIZONA WATER COMPANY

STANDARD SPECIFICATION
FOR THE INSTALLATION OF

AIR RELEASE VALVE FOR THE NORTHERN REGION

DRAWN BY:	APPROVED BY:	DATE:		
CB	MW	03.20.1997	△08.24.2006	E-9-8-3

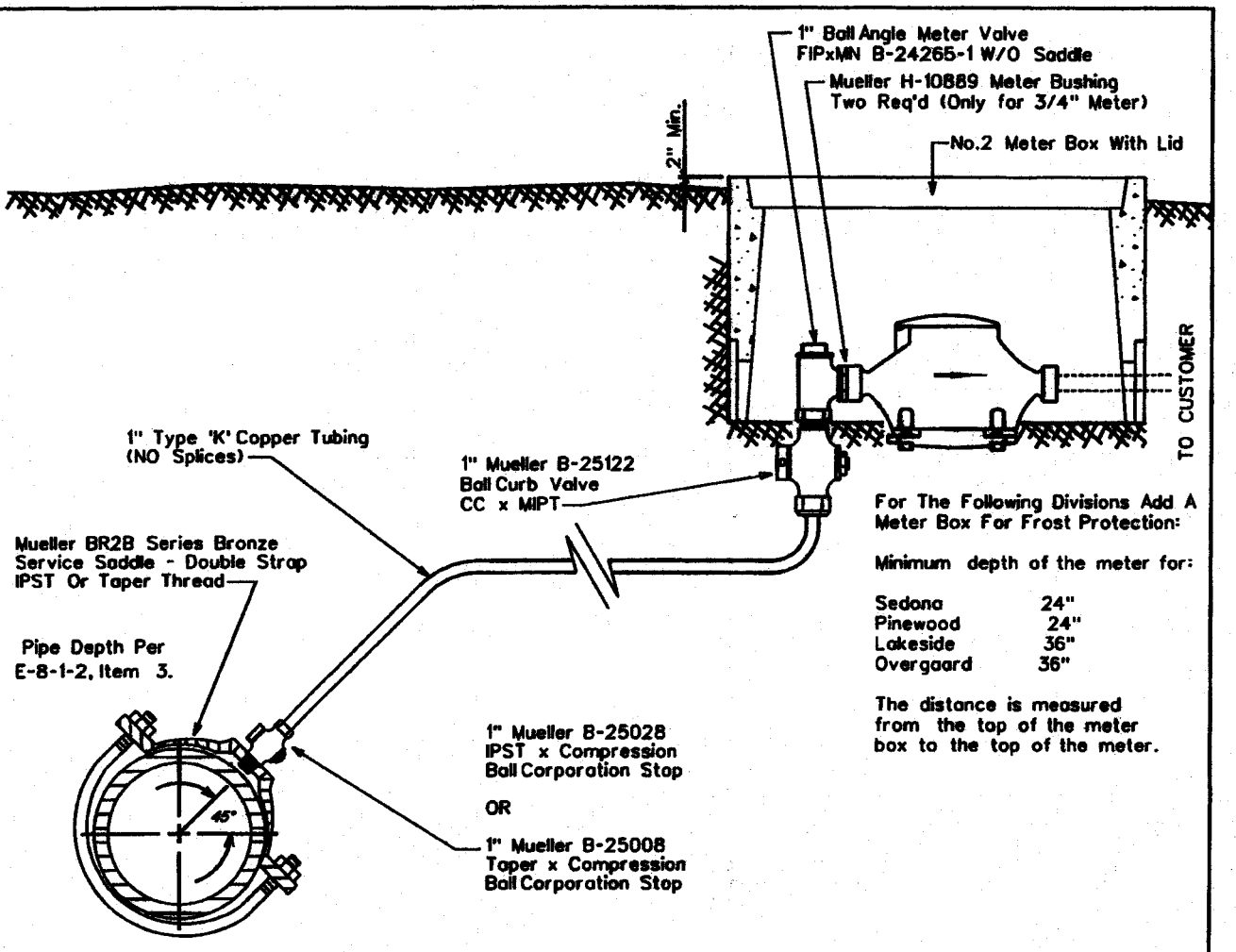

For The Following Divisions Add A Meter Box For Frost Protection:

Minimum depth of the meter for:

Sedona	24"
Pinewood	24"
Lakeside	36"
Overgaard	36"

The distance is measured from the top of the meter box to the top of the meter.

SADDLE TAP TO CA, PVC, OR DI PIPE

NOTE: The minimum distance between taps on mains other than ductile iron is 12"

NOTE:
Only the meter is supplied by Arizona Water Company

ARIZONA WATER COMPANY

STANDARD SPECIFICATION
FOR THE INSTALLATION OF

SINGLE SERVICE CONNECTION FOR A 3/4" OR 1" METER

DRAWN BY:	APPROVED BY:	DATE:	△ 03.17.2006	E-9-9-1
CCO	M.W.	3/20/86		

For The Following Divisions Add A Meter Box For Frost Protection:

Minimum depth of the meter for:

Sedona	24"
Pinewood	24"
Lakeside	36"
Overgaard	36"

The distance is measured from the top of the meter box to the top of the meter.

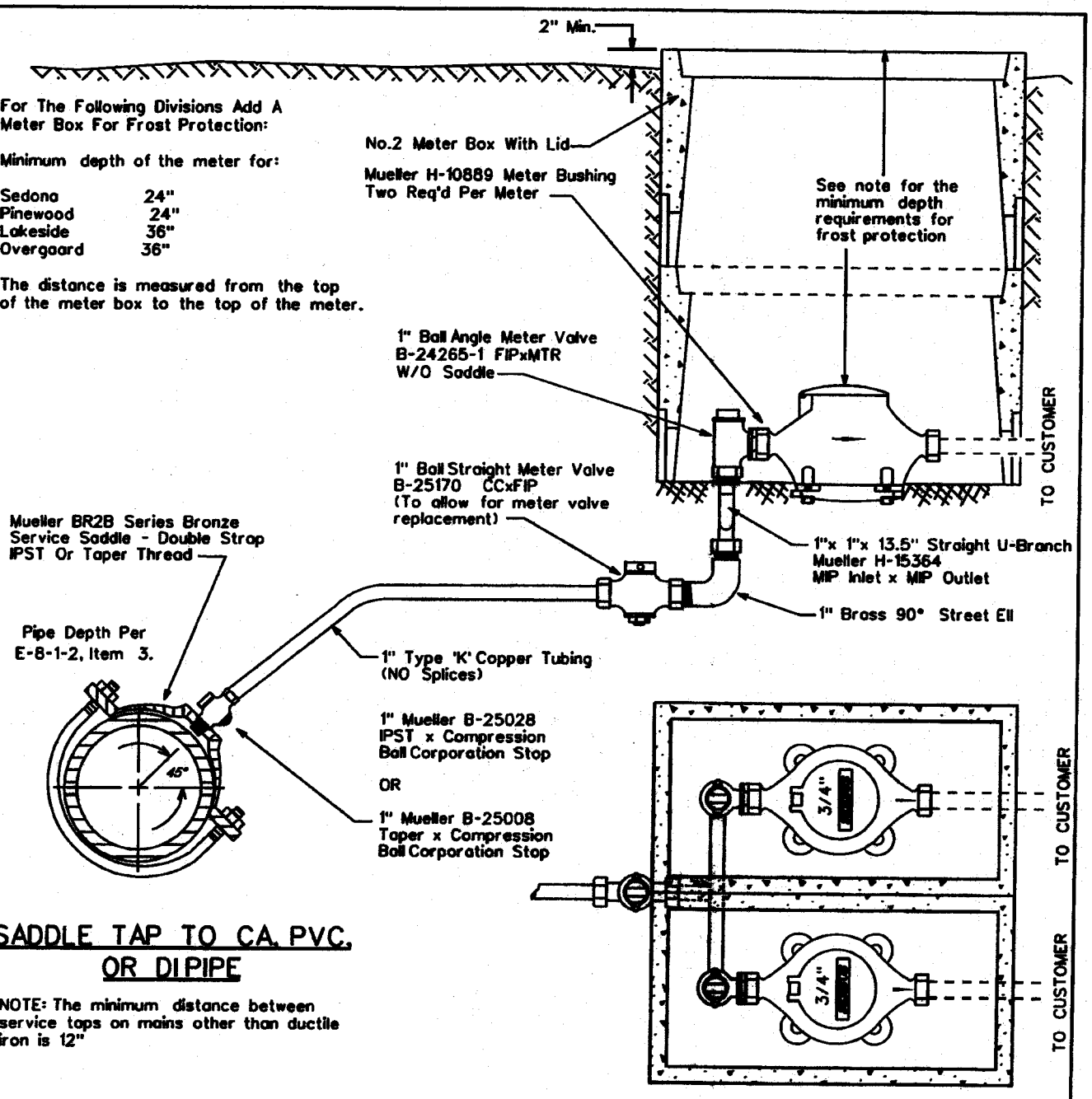

SADDLE TAP TO CA, PVC, OR DI PIPE

NOTE: The minimum distance between service taps on mains other than ductile iron is 12"

NOTE:
Only the meter is supplied by Arizona Water Company

ARIZONA WATER COMPANY

STANDARD SPECIFICATION
FOR THE INSTALLATION OF

DOUBLE SERVICE CONNECTION FOR 3/4" METERS

DRAWN BY:	APPROVED BY:	DATE:	△ 08.25.2006	E-9-10-1
CCO	M.W.	3-20-86		

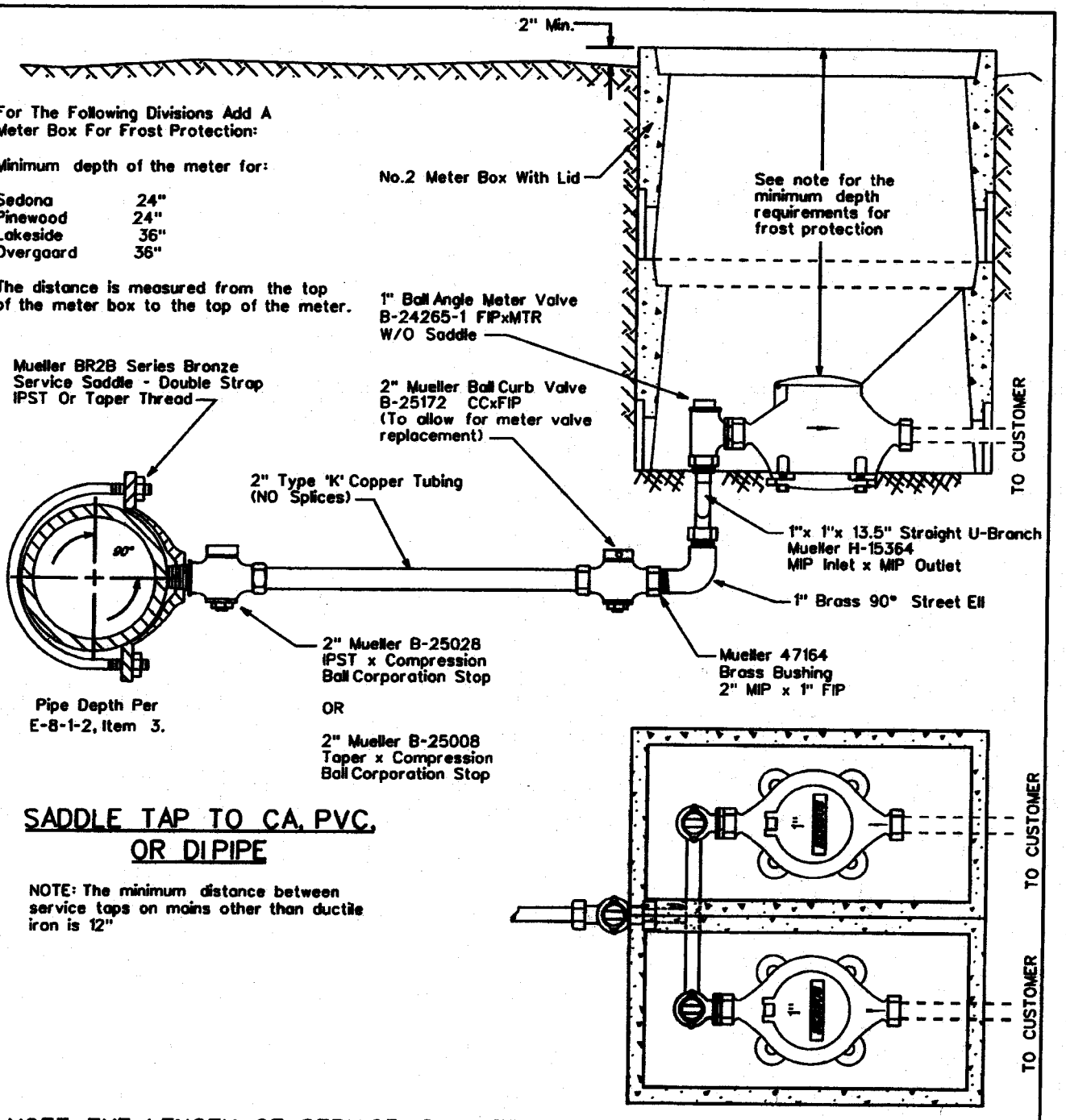

SADDLE TAP TO CA, PVC, OR DI PIPE

NOTE: The minimum distance between service taps on mains other than ductile iron is 12"

NOTE: THE LENGTH OF SERVICE IS LIMITED TO COMMERICIALLY AVAILABLE ROLLS, TYPICALLY 60 FEET

NOTE:
Only the meter is supplied by Arizona Water Company

ARIZONA WATER COMPANY

STANDARD SPECIFICATION
FOR THE INSTALLATION OF

DOUBLE SERVICE CONNECTION FOR 1" METERS

DRAWN BY:	APPROVED BY:	DATE:	△ 08.29.2006	E-9-10-2
CB	M.W.	03.17.2006		

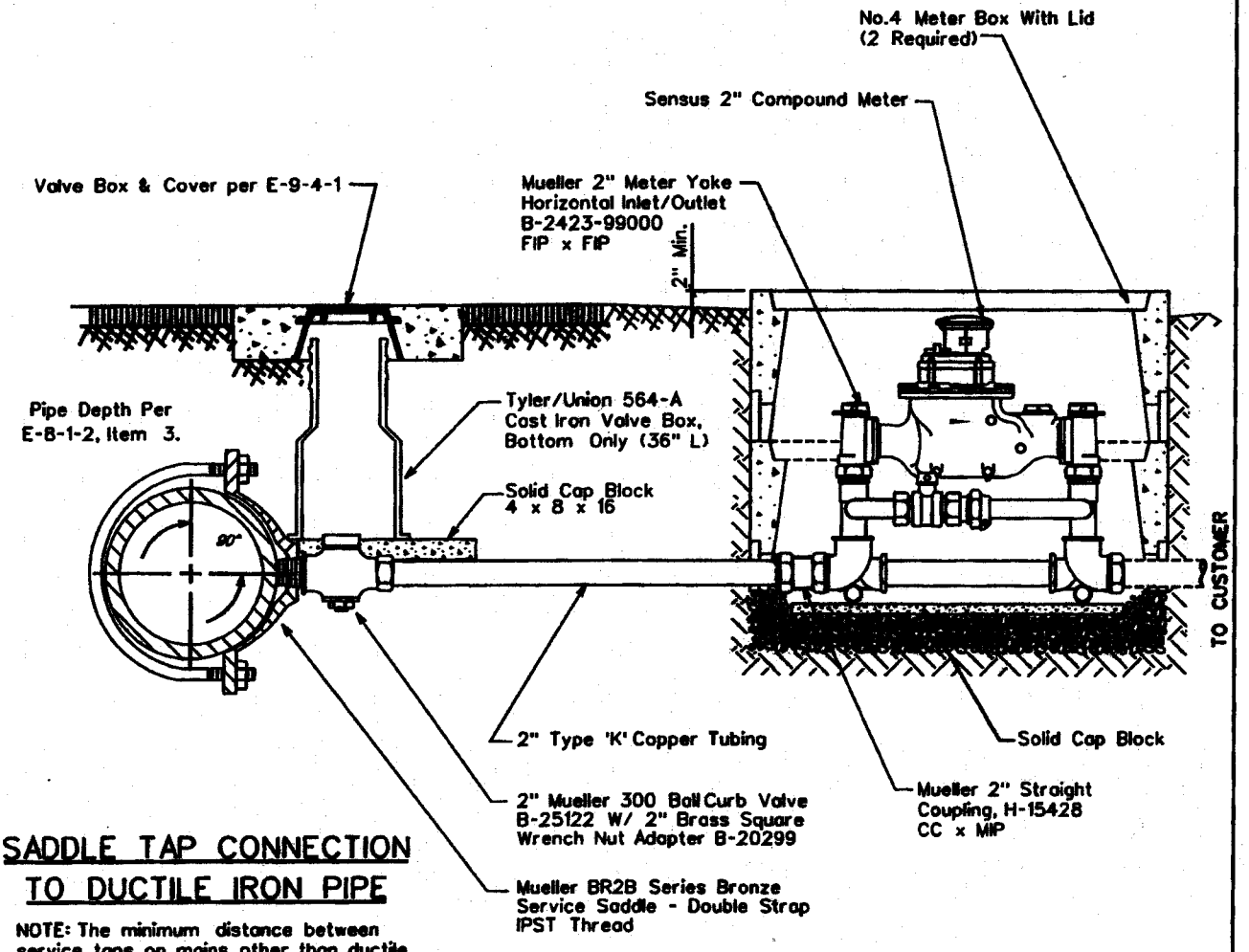

SADDLE TAP CONNECTION TO DUCTILE IRON PIPE

NOTE: The minimum distance between service taps on mains other than ductile iron is 12"

NOTE: THE LENGTH OF SERVICE IS LIMITED TO COMMERICIALLY AVAILABLE ROLLS, TYPICALLY 60 FEET

NOTE:

Only the meter is supplied by Arizona Water Company

ARIZONA WATER COMPANY

STANDARD SPECIFICATION
FOR THE INSTALLATION OF

TYPICAL 2" SERVICE CONNECTIONS

DRAWN BY:	APPROVED BY:	DATE:	△ 08.29.2006	E-9-11-1
JW	M.W.	3/20/86		

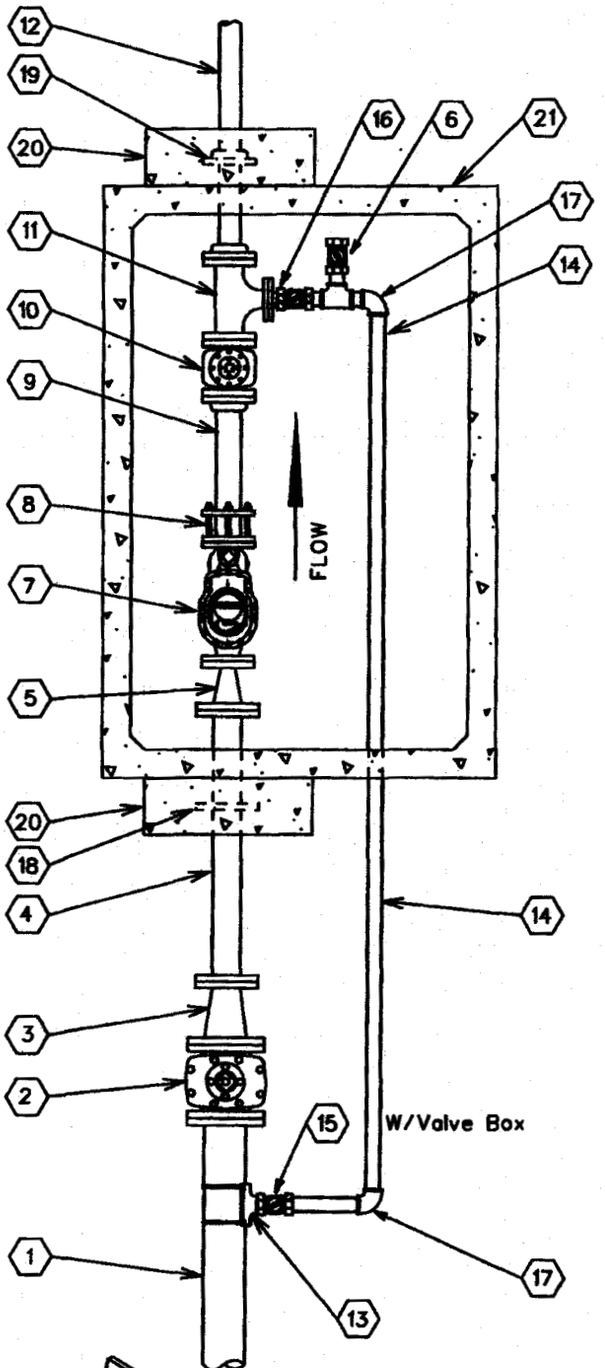

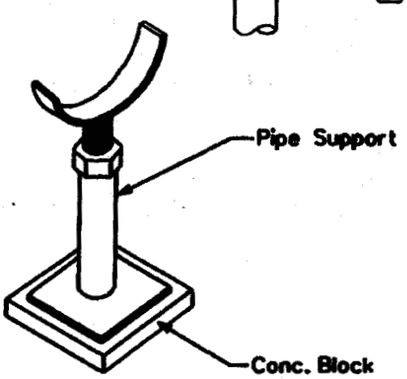

No.	FITTINGS SCHEDULE
1.	6" D.I.P.
2.	6" G.V.B.&C. mj x flng
3.	6"x4" Reducer flng. x mj
4.	4"x3'-0" D.I.P. Spool flng x pe
5.	4" x 3" Reducer flng
6.	2" Test Port
7.	3" Compound Meter
8.	3" F.C.A.
9.	3"x2'-0" D.I. Spool flng x pe
10.	3" Gate Valve flng
11.	3"x2" Flg Tee w/ 2" Companion Flange
12.	3"x4'-0" D.I. Spool flng x pe
13.	6"x2" Tapping Saddle
14.	2" Copper Pipe
15.	2" Mueller B25122 Ball Valve w/B20299 Nut
16.	2" Locking Ball Valve (normally closed)
17.	2" Mueller H-15526 90° Ell CC x CC
18.	4" Megalug
19.	3" Slip-On Welding Flange
20.	24"x24"x8" Conc. Thrust Block P.I.P.
21.	575-LA Conc. Vault

NOTE:

1. Use Rowley pipe supports or equivalent as needed (See detail below).
2. Pipe support locations to be determined by field personnel.
3. All copper pipe that comes in contact with concrete to be wrapped w/10-20 Mil. Scotchwrap corrosion protection tape.
4. All mechanical joint fittings are to be megalugged.
5. Use deflection fittings (45° Ells.) to achieve necessary depths & cover as shown on the standard specification for the installation of a concrete vault (E-9-12-5).

ARIZONA WATER COMPANY

STANDARD SPECIFICATION

FOR THE INSTALLATION OF

3" COMPOUND METER

DRAWN BY:	APPROVED BY:	DATE:	△08.29.2006	E-9-12-1
CCO	MW	10/5/1993		

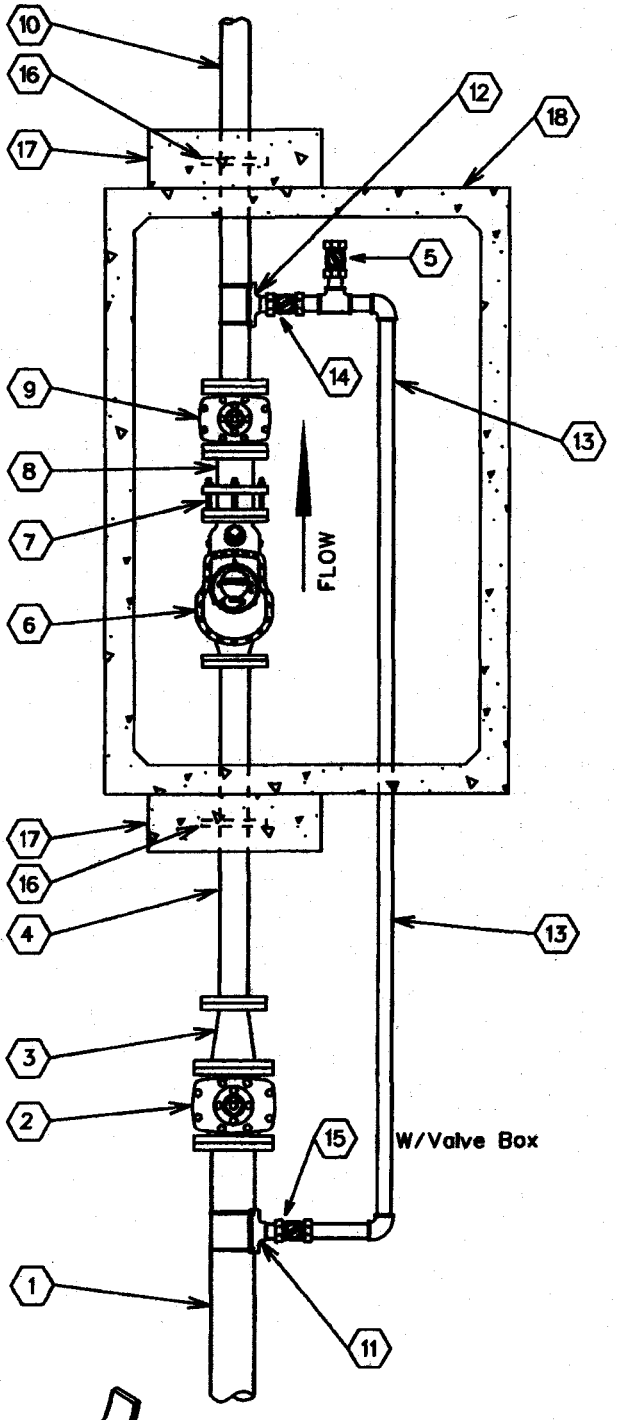

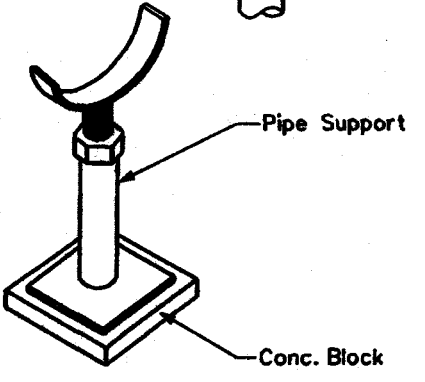

No.	FITTINGS SCHEDULE
1.	6" D.I.P.
2.	6" G.V.B.&C. mj x flng
3.	6"x4" Reducer flng x mj
4.	4"x3'-0" D.I.P. Spool flng x pe
5.	2" Test Port
6.	4" Compound Meter
7.	4" F.C.A.
8.	4"x1'-0" D.I.P. Spool flng x pe
9.	4" Gate Valve flng
10.	4"x4'-0" D.I.P. Spool flng x pe
11.	6"x2" Tapping Saddle
12.	4"x2" Tapping Saddle
13.	2" Copper Pipe
14.	2" Ball Valve / Locking (Normally Closed)
15.	2" Mueller B25122 Ball Valve w/B20299 Nut
16.	4" Megalug
17.	24"x24"x8" Conc. Thrust Block P.I.P.
18.	575-LA Conc. Vault

NOTE:

1. Use Rowley pipe supports or equivalent as needed (See detail below).
2. Pipe support locations to be determined by field personnel.
3. All copper pipe that comes in contact with concrete to be wrapped w/10-20 Mil. Scotchwrap corrosion protection tape.
4. All mechanical joint fittings are to be megalugged.
5. Use deflection fittings (45° Ells.) to achieve necessary depths & cover as shown on the standard specification for the installation of a concrete vault (E-9-12-5).

ARIZONA WATER COMPANY

STANDARD SPECIFICATION

FOR THE INSTALLATION OF

4" COMPOUND METER

DRAWN BY:	APPROVED BY:	DATE:		
CCO	MW	10/5/1993	△08.29.2006	E-9-12-2 .

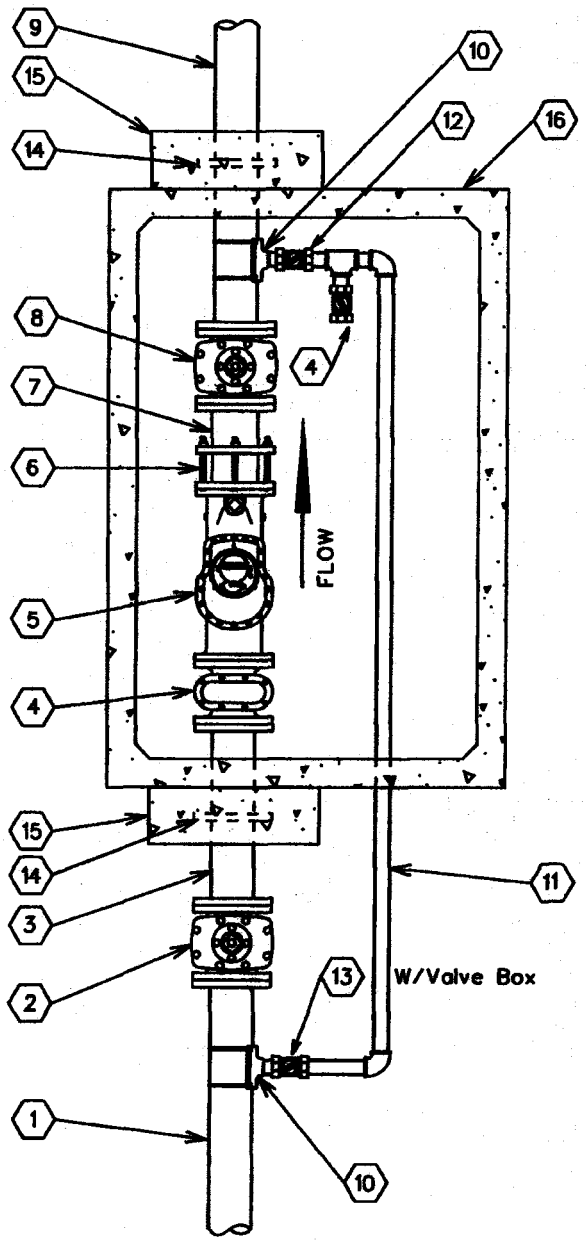

No.	FITTINGS SCHEDULE
1.	6" D.I.P.
2.	6" G.V.B.&C. mj
3.	6"x 3'-0" D.I.P. Spool flng x pe
4.	2" Test Port
5.	6" Compound Meter
6.	6" F.C.A.
7.	6"x 1'-0" D.I.P. Spool flng x pe
8.	6" Gate Valve flng
9.	6"x 4'-0" D.I.P. Spool flng x pe
10.	6"x2" Tapping Saddle
11.	2" Copper Pipe
12.	2" Ball Valve / Locking (Normally Closed)
13.	2" Mueller B25122 Ball Valve w/B20299 Nut
14.	6" Megalug
15.	24"x24"x8" Conc. Thrust Block P.I.P.
16.	575-LA Conc. Vault

NOTE:

1. Use Rowley pipe supports or equivalent as needed (See detail below).
2. Pipe support locations to be determined by field personnel.
3. All copper pipe that comes in contact with concrete to be wrapped w/10-20 Mil. Scotchwrap corrosion protection tape.
4. All mechanical joint fittings are to be megalugged.
5. Use deflection fittings (45° Ells.) to achieve necessary depths & cover as shown on the standard specification for the installation of a concrete vault (E-9-12-5).

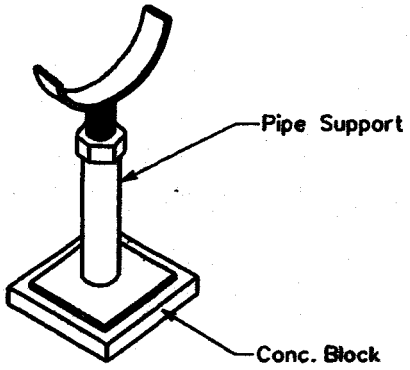

ARIZONA WATER COMPANY

STANDARD SPECIFICATION
FOR THE INSTALLATION OF

6" COMPOUND METER

DRAWN BY:	APPROVED BY:	DATE:		
CCO	MW	10/5/1993	△08.29.2006	E-9-12-3

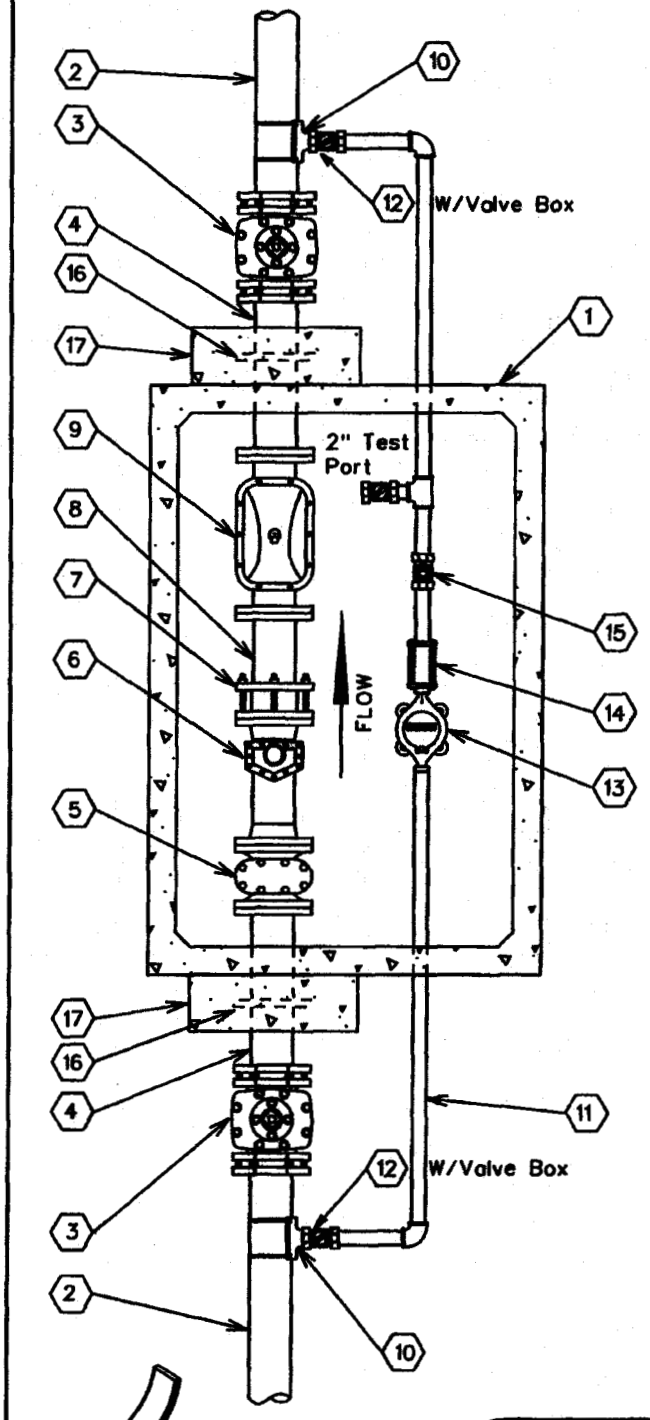

No.	FITTINGS SCHEDULE
1.	575-LA Conc. Vault
2.	6" D.I.P.
3.	6" G.V.B.&C. m.j.
4.	6" x 3'-0" D.I.P. SPool Piece flng x pe
5.	6" Strainer
6.	6" Turbo Meter
7.	6" F.C.A.
8.	6" x 2'-0" D.I.P. Spool Piece flng x pe (TRIM SPOOL PIECE TO 3x THE PIPE DIA.)
9.	6" Detector Check
10.	6"x*N" Tapping Saddle
11.	*N" Copper Pipe
12.	*N" Ball Valve (Locking)
13.	*N" Meter
14.	*N" Coup. Adapt.
15.	*N" Flapper Check Valve
16.	6" Megalug
17.	24"x24"x8" Conc. Thrust Block P.I.P.

*N - Size To Be determined By A.W.Co.

NOTE:

1. Use Rowley pipe supports or equivalent as needed (See detail below).
2. Pipe support locations to be determined by field personnel.
3. All copper pipe that comes in contact with concrete to be wrapped w/10-20 Mil. Scotchwrap corrosion protection tape.
4. All mechanical joint fittings are to be megalugged.
5. Use deflection fittings (45° Ells.) to achieve necessary depths & cover as shown on the standard specification for the installation of a concrete vault (E-9-12-5).
6. To change from a 6" service to a 4" service, change all listed 6" materials to 4" materials.

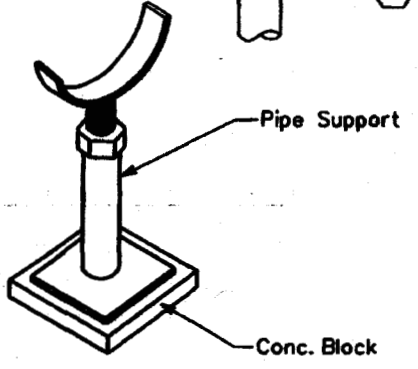

ARIZONA WATER COMPANY

STANDARD SPECIFICATION
FOR THE INSTALLATION OF

6" COMPOUND SERVICE

DRAWN BY:	APPROVED BY:	DATE:		
CCO	MW	10/05/1993	△08.29.2006	E-9-12-4

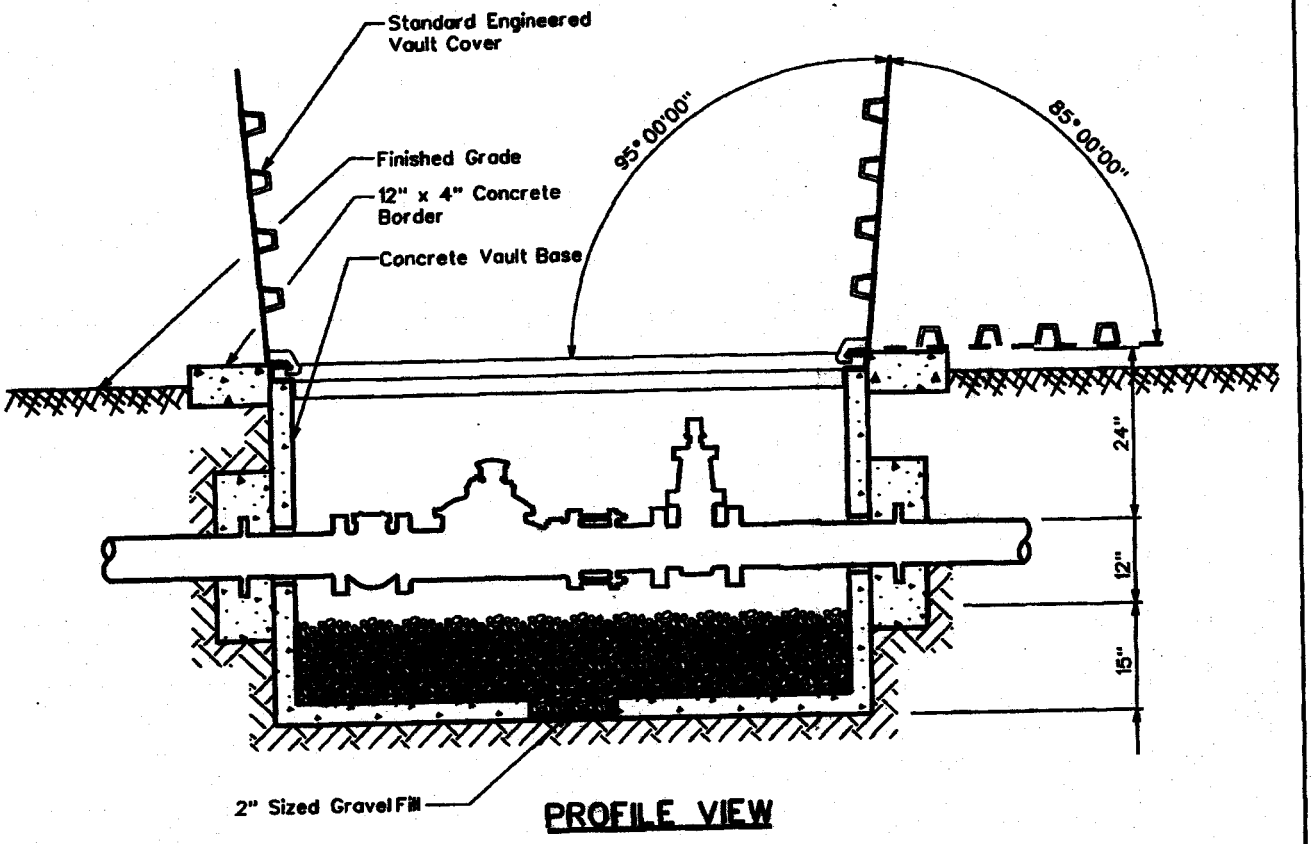

PROFILE VIEW

CONCRETE VAULT & COVER SPECIFICATIONS

Vault - Base No. 575-BL
Cover - Standard Engineered Vault Cover
- .4874 Aluminum Diamond Plate Cover For Non-Traffic Loading Areas
  Or
- .4874 Galvanized Steel Diamond Plate Cover W/ H-20 Traffic Loading
- Double Torsion Spring Assisted Doors W/ Recessed Hasp & Safety Latches

NOTES

1. Total Depth Of Concrete Vault To Be A Maximum Of 3'-0" From Top Of Vault Cover To Top Of Gravel Fill.
2. Service Connections Larger Than 6" In Diameter Will Conform To The Same Vault & Cover Specifications. Size Of Vault & Cover To Be Determined By A.W.Co. Engineers.

ARIZONA WATER COMPANY

STANDARD SPECIFICATION
FOR THE INSTALLATION OF

CONCRETE VAULT

DRAWN BY:	APPROVED BY:	DATE:	△	
CCO	MW	10/5/1993	05.17.2001	E-9-12-5

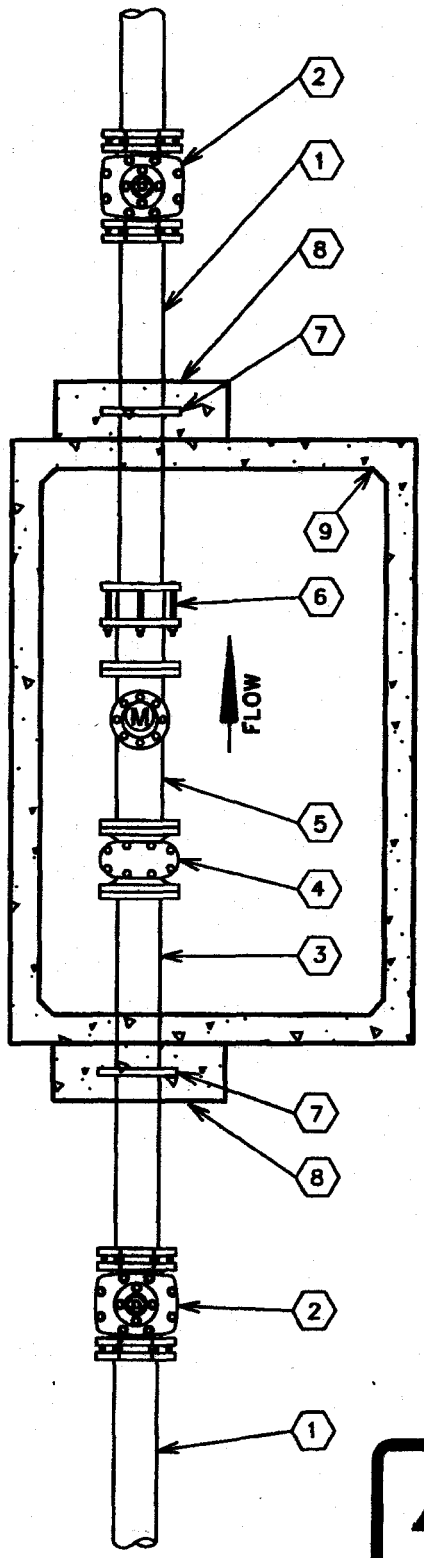

No.	FITTINGS SCHEDULE
1.	Ductile Iron Pipe
2.	Gate Valve M.J.
3.	D.I.P. Spool Piece Flg x Pe (10xDia.)
4.	Meter Strainer
5.	Propeller Meter
6.	Flanged Coupling Adapter
7.	Megalug Gland (Thrust Anchor)
8.	Concrete Thrust Block P.I.P.
9.	Concrete Vault

NOTE:

1. Use Rowley pipe supports or equivalent as needed (See E-9-12-4).
2. Pipe support locations to be determined by field personnel.
3. All Sched. 40 Stl. pipe outside of vault to be wrapped w/10-20 Mil. Scotchwrap corrosion protection tape.
4. All mechanical joint fittings to are to be megalugged.
5. Use deflection fittings (45° Ells.) to achieve necessary depths & cover as shown on the standard specification for the installation of a concrete vault (E-9-12-5).

ARIZONA WATER COMPANY

STANDARD SPECIFICATION

FOR THE INSTALLATION OF

NON-POTABLE PROPELLER METER

DRAWN BY:	APPROVED BY:	DATE:	△	
JPK	MW	7-20-95		E-9-12-6

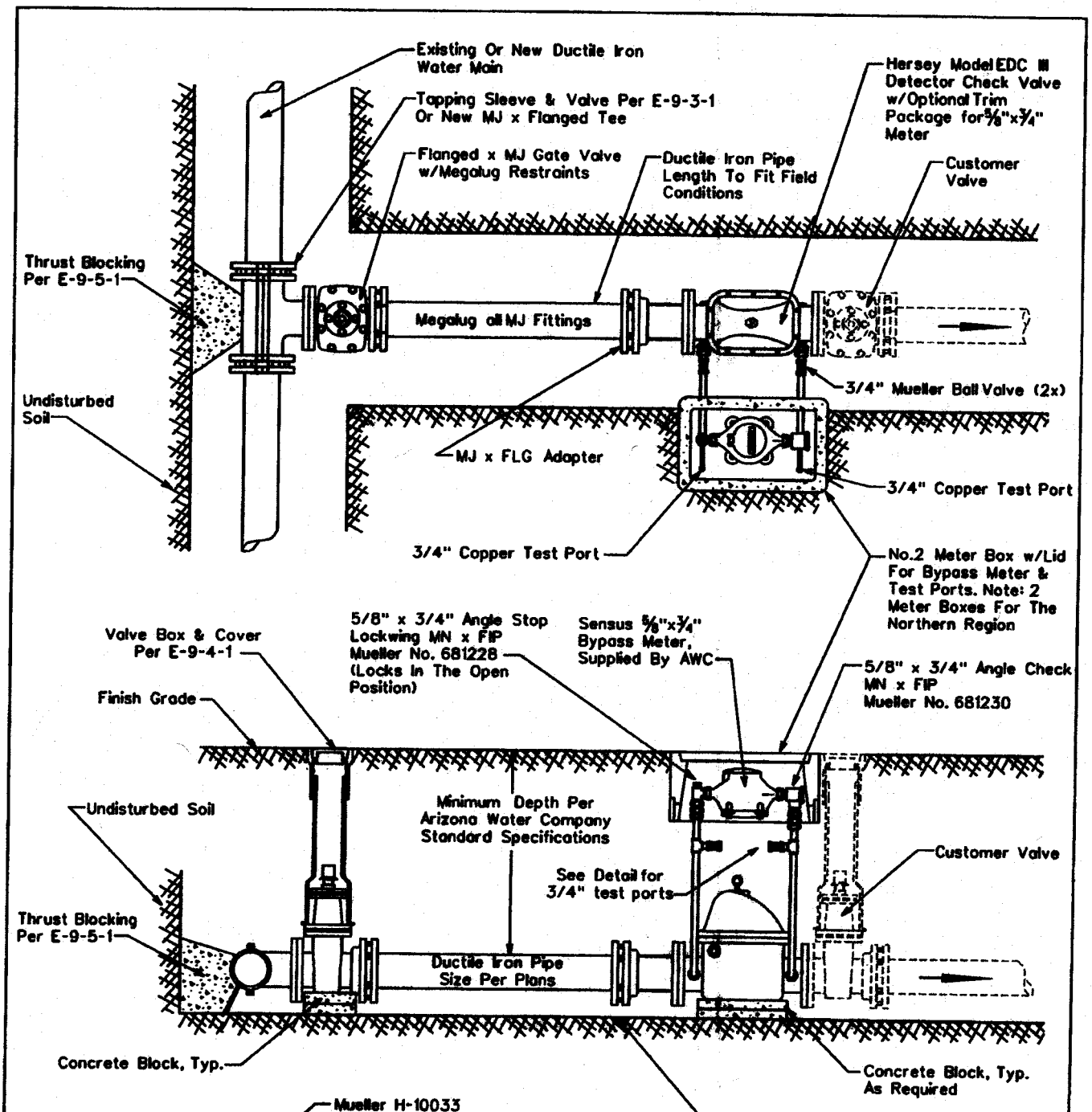

ARIZONA WATER COMPANY

STANDARD SPECIFICATION

FOR THE INSTALLATION OF

TYPICAL 4" THRU 8" DETECTOR CHECK VALVES

DRAWN BY:	APPROVED BY:	DATE:	△03.09.2007	E-9-13-1
CB	MW	10.16.1990		

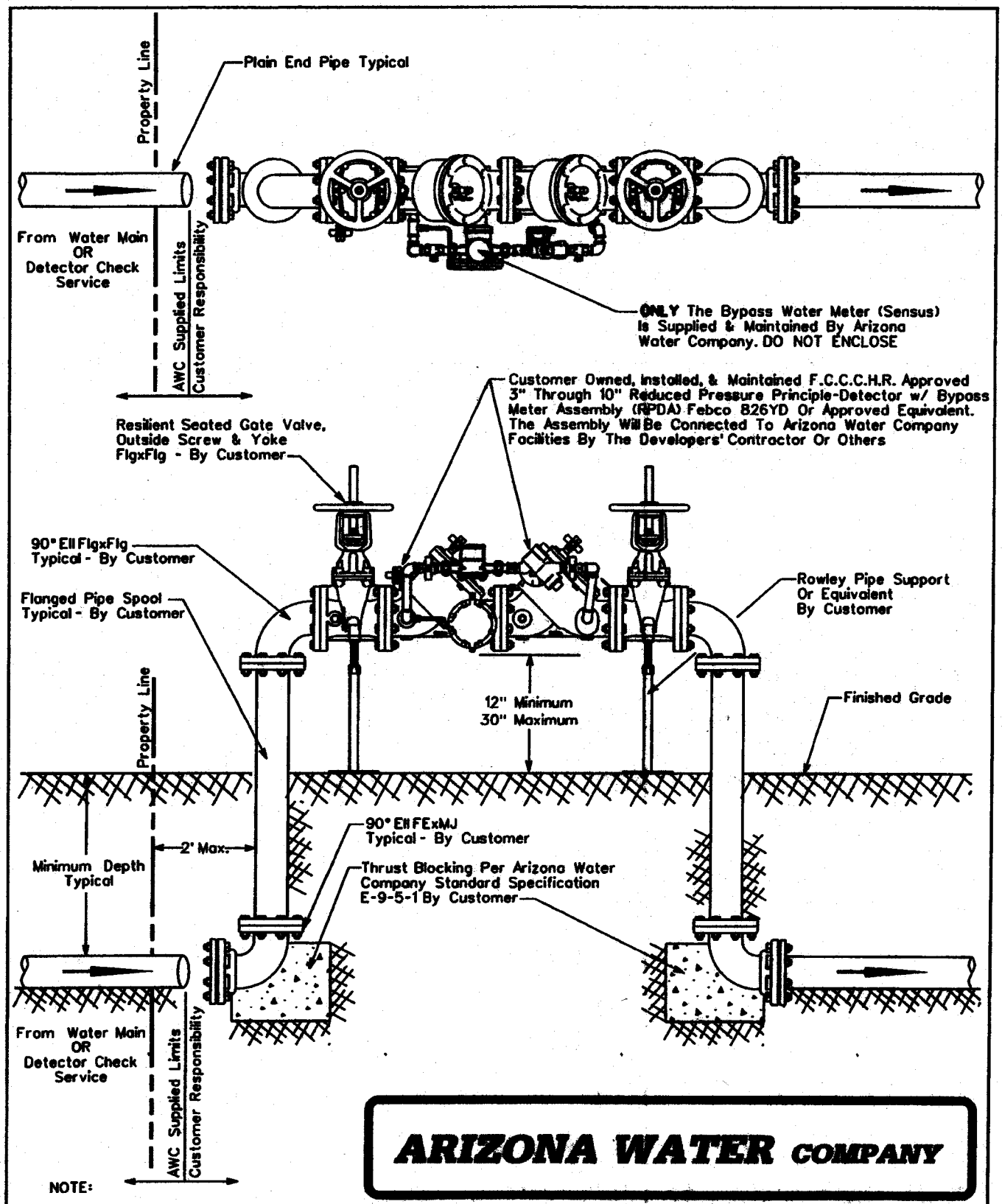

NOTE:

Minimum Depth Of Cover Over 6" & 8" Mains is 36 Inches, 12" & Greater is 48 Inches Unless Otherwise Specified

ARIZONA WATER COMPANY

STANDARD SPECIFICATION

FOR THE INSTALLATION OF

3" THRU 10" REDUCED PRESSURE PRINCIPLE-DETECTOR WITH BYPASS METER ASSEMBLY (RPDA) FOR FIRELINE SERVICES

DRAWN BY:	APPROVED BY:	DATE:		
CB	MW	10-13-98	△1-19-2000	E-9-13-2

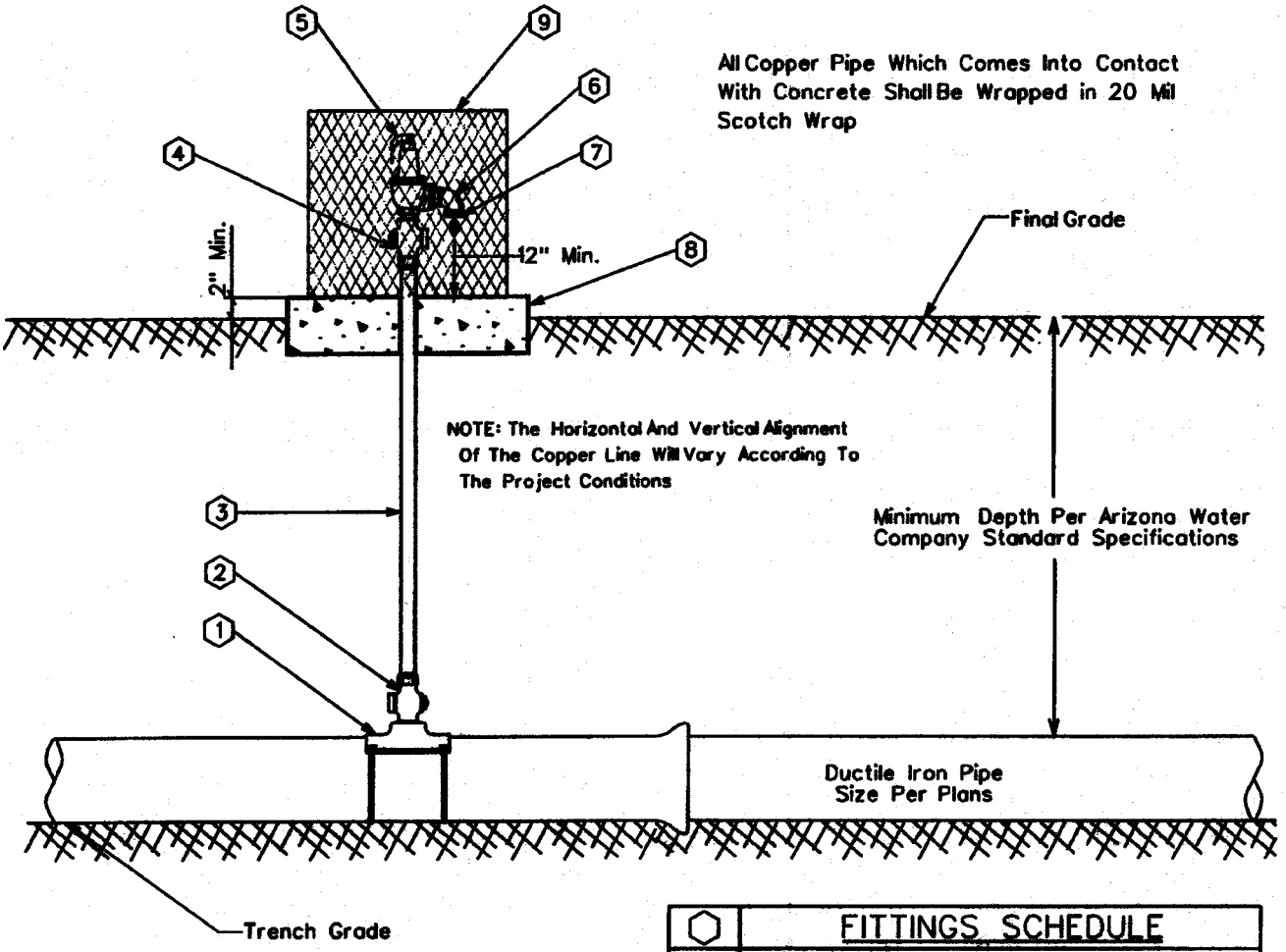

⬡	FITTINGS SCHEDULE
1.	Mueller BR2B Bronze Service Saddle - Double Strap
2.	2" Mueller B-25008 Taper x Comp. Ball Corp Stop
3.	2" Type 'K' Copper w/NO Splices - Field Fit
4.	2" Mueller B-25028 IP x Comp. Ball Corp Stop
5.	2" Pressure Relief Valve Watts 174A With A 2" Inlet / 2" Outlet 30-150 psi W/ Bronze Body
6.	2" Brass Street Elbow
7.	No.16 Wire Mesh Screen (Non-Corrodible)
8.	4" Thick Concrete Pad - Class 'C' Concrete
9.	Vandal enclosure to be centered on the concrete pad

NOTE:

1. Pressure relief valves are typically located just down stream of a pressure reducing station or where system conditions might be subject to greater than allowable pressures.
2. The relief valve assembly and vandal enclosure shall be located out of the roadway, but within the right-of-way or easement.

ARIZONA WATER COMPANY

STANDARD SPECIFICATION

FOR THE INSTALLATION OF

TYPICAL PRESSURE RELIEF VALVE ASSEMBLY

DRAWN BY:	APPROVED BY:	DATE:	△	
CCO	MW	3/20/1986	△ 08.29.2006	E-9-14-1

All Copper Pipe Which Comes Into Contact With Concrete Shall Be Wrapped in 20 Mil Scotch Wrap

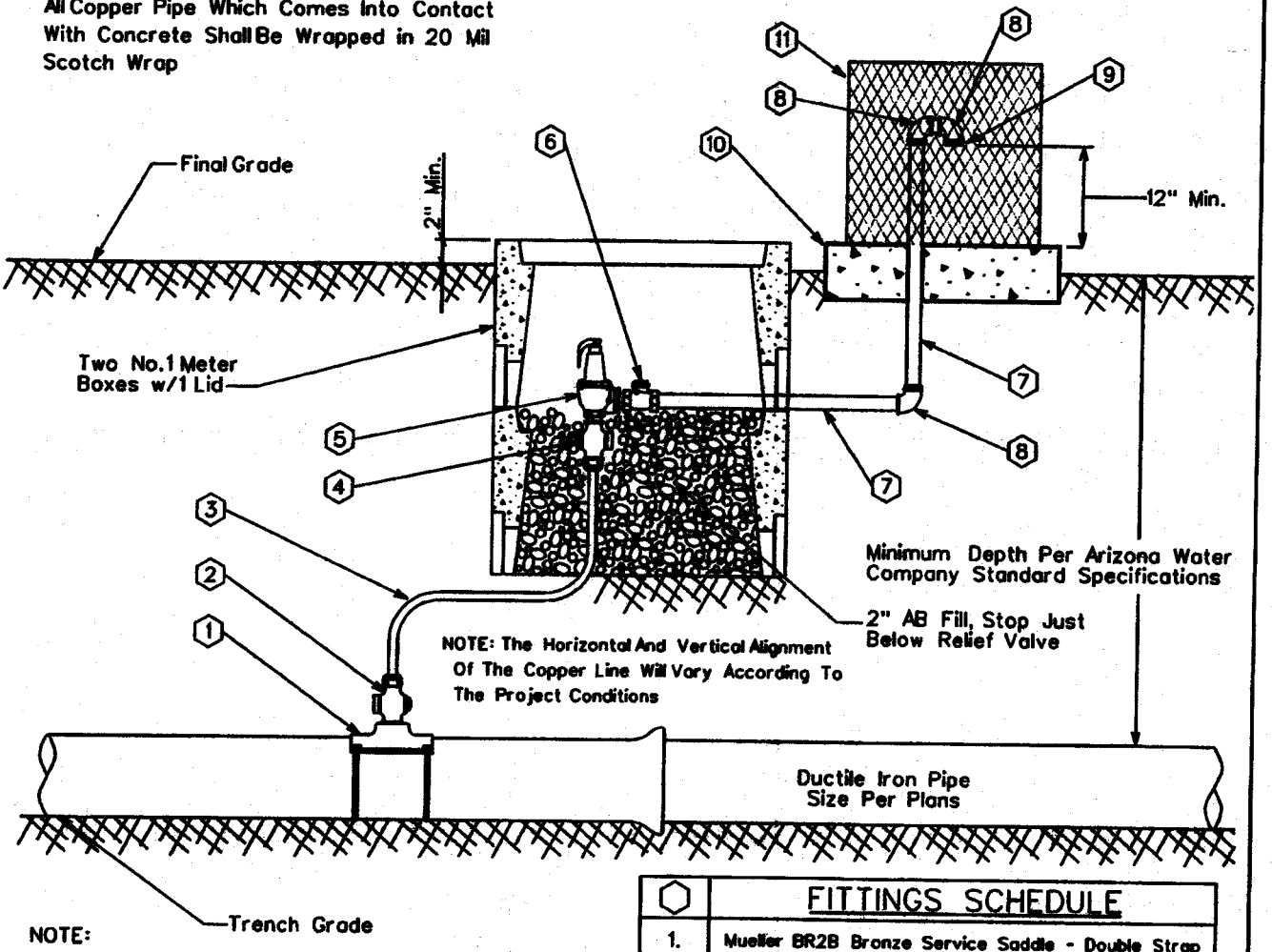

NOTE:

1. Pressure relief valves are typically located just down stream of a pressure reducing station or where system conditions might be subject to greater than allowable pressures.
2. The relief valve assembly and vandal enclosure shall be located out of the roadway, but within the right-of-way or easement.

⬡	FITTINGS SCHEDULE
1.	Mueller BR2B Bronze Service Saddle - Double Strap
2.	2" Mueller B-25008 Taper x Comp. Ball Corp Stop
3.	2" Type 'M' Rigid Copper w/NO Splices - Field Fit
4.	2" Mueller B-25028 IP x Comp. Ball Corp Stop
5.	2" Pressure Relief Valve Watts 174A With A 2" Inlet / 2" Outlet 30-150 psi W/ Bronze Body
6.	2" Bronze Check Valve Watts Series CV
7.	2" Schedule 40 Cut Pipe - Field Fit
8.	2" Brass Street Elbow
9.	No.16 Wire Mesh Screen (Non-Corrodible)
10.	4" Thick Concrete Pad - Class 'C' Concrete
11.	Guardshack, Model GS-1, Available From BPDI, Inc. Available In Leaf Green Or Desert Tan

ARIZONA WATER COMPANY

STANDARD SPECIFICATION
FOR THE INSTALLATION OF

PRESSURE RELIEF VALVE - NORTHERN REGION

DRAWN BY:	APPROVED BY:	DATE		
CCO	MW	3/20/1986	△08.29.2006	E-9-14-2

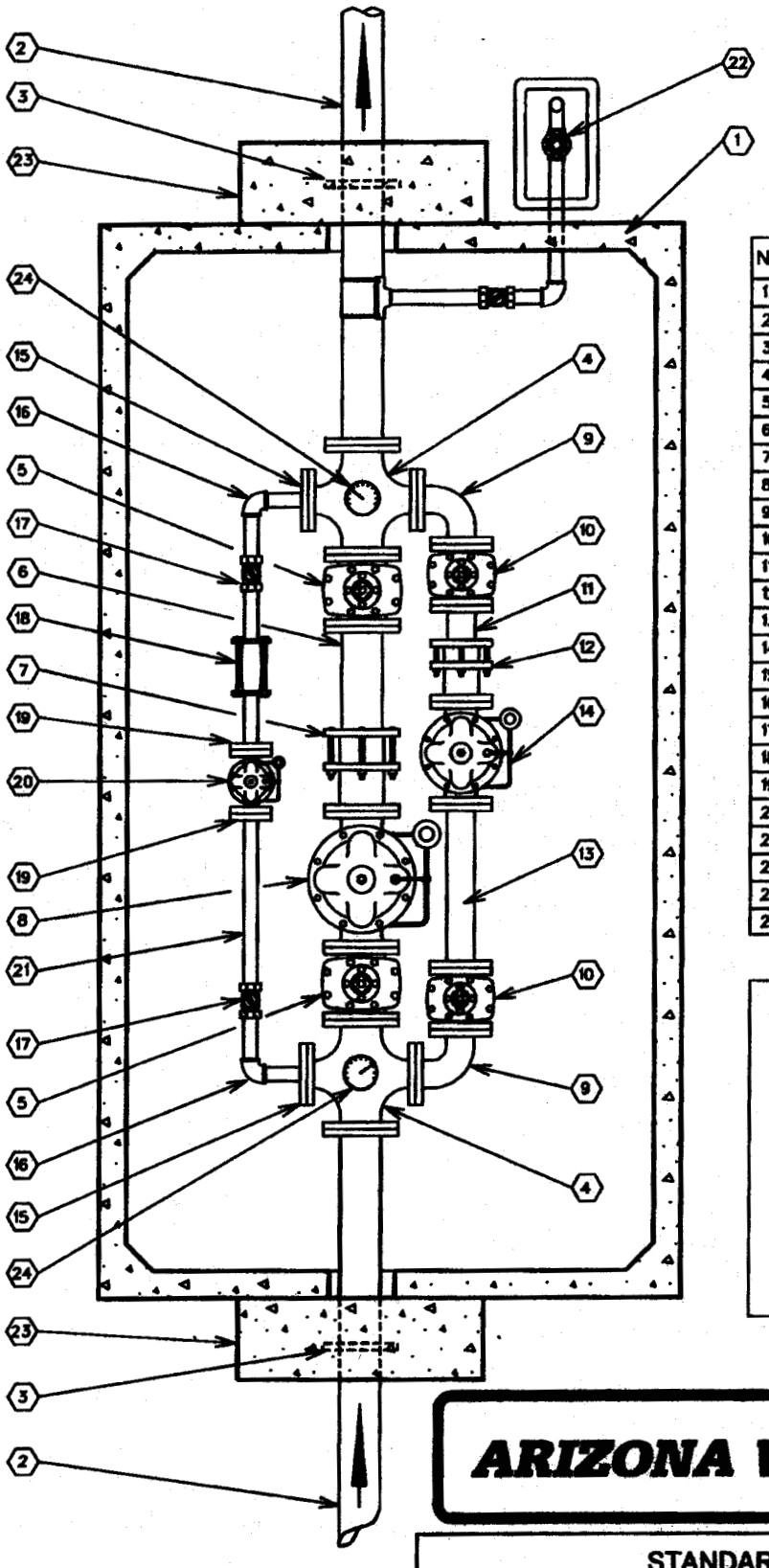

No.	FITTINGS SCHEDULE
1.	612 LA Conc. Vault (See Note 3)
2.	6"x6'-0" D.I.P. Spool Flg.xP.E.
3.	6" Megalug (Thrust Anchor)
4.	6"x4" Cross Flg.
5.	6" Gate Valve Flg.
6.	6"x2'-0" D.I.P. Spool Flg.xP.E.
7.	6" Flg. Coup. Adapt. (Rockwell 913)
8.	6" High Flow Pressure Reducing Valve Flg.
9.	4" 90° Ell. Flg.
10.	4" Gate Valve Flg.
11.	4"x1'-0" D.I.P. Spool Flg.xP.E.
12.	4" Flg. Coup. Adapt. (Rockwell 913)
13.	4"x2'-0" D.I.P. Spool Flg.
14.	4" Medium Flow Pressure Reducing Valve Flg.
15.	2"x9" O.D. Reducing Flg. (I.P.T.)
16.	2" 90° Ell. F.I.P.
17.	2" Ball Valve F.I.P.
18.	2" Comp. Coup. (Rockwell 411)
19.	2" Companion Flg. (I.P.T.)
20.	2" Low Flow Pressure Reducing Valve Flg.
21.	2" Sched. 40 Stl. Pipe
22.	2" Pressure Relief Valve (See E-9-14-1)
23.	12"x36"x36" Conc. Thrust Block P.I.P.
24.	Pressure Gauge w/shut off valve

NOTE:

1. Use Rowley pipe supports or equivalent as needed. (See E-9-12-4)
2. Pipe support locations to be determined by field personnel.
3. Vault-612 LA top section w/12" Dia. sump hole. Cover-concrete slab top w/(4) 4'-0" x2'-6" aluminum spring loaded hinged style covers for non-traffic loading areas. For areas w/low density traffic, cover is to be designed for H-20 traffic loading.
4. All Sched. 40 Stl. pipe outside of vault to be wrapped w/10-20 MIL Scotchwrap corrosion protection tape.
5. Use deflection fittings (45° Ells.) to achieve necessary depths & cover as shown on the standard specification for the installation of a concrete vault (E-9-12-5).

ARIZONA WATER COMPANY

STANDARD SPECIFICATION

FOR THE INSTALLATION OF

PRESSURE REDUCING STATION

DRAWN BY:	APPROVED BY:	DATE:	△ 9-27-95	E-9-15-1
JPK	MW	11-16-88		

1. Specific Items To Be Painted Deer-O Pure White Enamel:

A. All Booster Pumps.
B. All Electrical Motors And Gas Engines.
C. Well Pump Discharge Heads.
D. Electrical Panel.

2. Specific Items To Be Painted Frost Cap White Or Deer-O Pure White Enamel:

A. Well Shelter.

3. Specific Items To Be Painted OSHA Orange:

A. Electrical Conduit.

4. All Other Items To Be Painted With Either:
(At Manager's Discretion)

A. Cholla Green
B. Forest Green
C. Sonora Beige
D. Red Rock
E. Rock Brown
F. Deer-O Pure White
G. Elkhorn Cactus

ARIZONA WATER COMPANY

STANDARD SPECIFICATION
FOR THE INSTALLATION OF

PAINT COLOR SELECTION

DRAWN BY:	APPROVED BY:	DATE:	△	
CCO		3/20/1986	△ 2/13/2001	E-9-16-1

1. Tank shall conform to AWWA Specification D100-84 with exceptions noted below.

*2. ¼" minimum shell plate.

3. Minimum of 12" diameter roof vent, screened with No. 16 non-corrodible wire mesh, to be located on a 24" diameter round hinged manhole opening at the center of the tank to provide access to the outer plate.

4. Overflow pipe shall be the same diameter as the inlet pipe and shall terminate 12 to 24 inches above splash pad or a minimum of 2 overflow pipe diameters above weir box high water level.

5. Storage tank shall be placed upon adequately compacted base material.

6. 6" minimum floor mounted tank drain outlet to be located close to the outer shell.

7. Tank and related fittings shall be enclosed with a 6 foot chain link fence with lockable gates and anti-personnel wire on top of fence.

8. Liquid level shall be indicated by a target and target board on the outside surface of the tank.

9. 24 inch diameter manholes shall be provided on the roof and on the shell near the bottom of the tank. The roof manhole cover shall overlap the manhole by at least 2 inches to provide a rain tight closure. Roof manhole shall be hinged and equipped with a lock. Shell manhole cover to be hinged and bolted in place. *Tanks larger than a 80 foot diameter require 2 shell manholes.

10. Inside and outside ladders shall be located at the roof manhole. Outside ladder shall be caged with locking trap door. Bottom 8 feet of cage shall be enclosed to within 9½" of shell with 10 gauge sheet steel.

11. Finished tank shall be disinfected in accordance with Arizona Department of Health Services Engineering Bulletin No. 8 before being placed into service.

12. The following information will be included with application for approval to construct:

1. Tank location_____
2. Tank height_____
3. Tank diameter_____
4. Tank capacity_____
5. Method of water level control_____

_____

13. The storage tank will not be constructed within the 100 year flood plain and the tank site will be graded to slope away from the tank.

14. The welded steel storage tank will be coated as per AWWA Specification D102, and N.S.F. Standard 61.

*Exceptions to AWWA Specification D100-84

FOUNDATION NOTES

1. FINISH CONCRETE SURFACE MUST SLOPE UPWARDS FROM THE STEEL BAND APPROX. 1" IN 10'-0".

2. TOP OF STEEL BAND MUST BE MAINTAINED LEVEL TO WITHIN ½".

3. INSTALL 6-2" DIA.x10'-0" P.V.C. WEEP LINES, EQUALLY SPACED (EVERY 48") L. PERFORATE 8'-0" OF LINE WITH ½" DIA. HOLES @ 6" O.C. PLUG INTERIOR END OF LINE w/2" CAP.

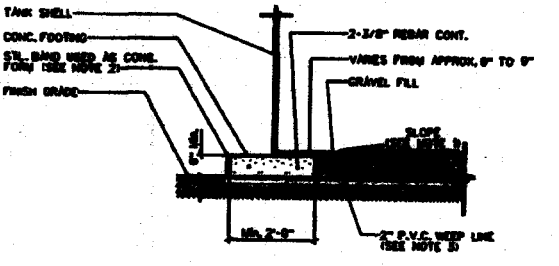

FOUNDATION DETAIL

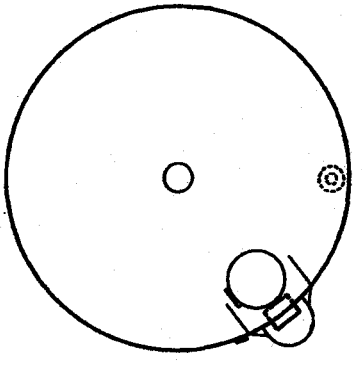

PLAN VIEW

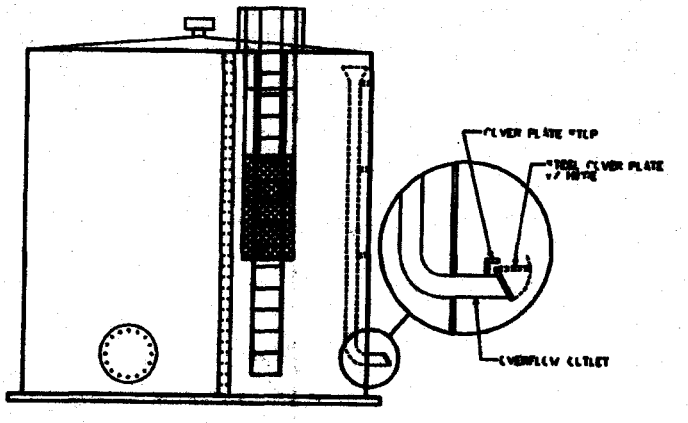

PROFILE VIEW

ARIZONA WATER COMPANY

STANDARD SPECIFICATION

FOR THE INSTALLATION OF

STEEL WATER STORAGE TANK

DRAWN BY:	APPROVED BY:	DATE:	△	
JPK	MJW	10-17-88	2-12-96	E-9-17-1

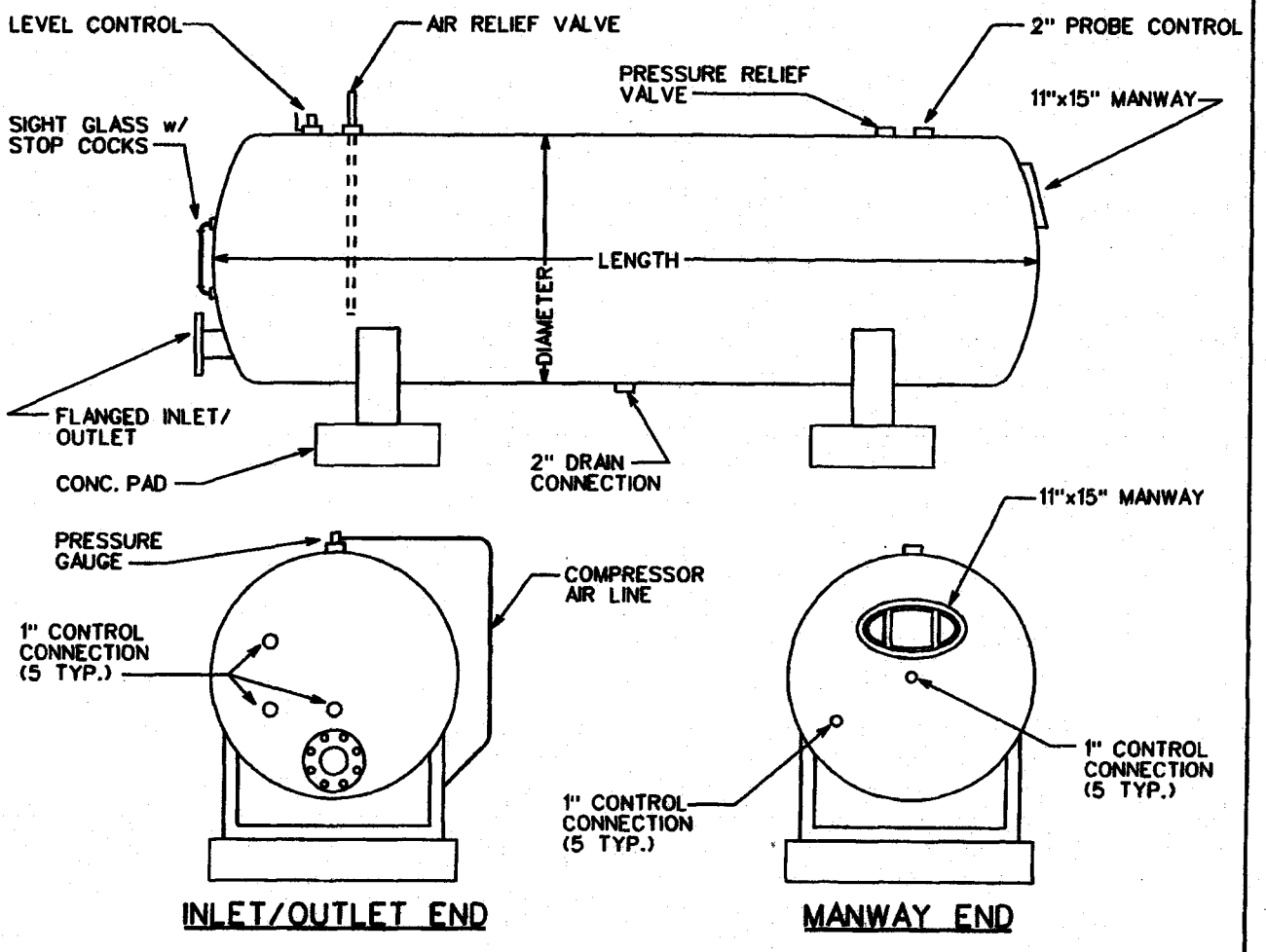

1. ALL HYDROPNEUMATIC TANKS SHALL BE DESIGNED & CONSTRUCTED IN ACCORDANCE WITH THE CURRENT REQUIREMENTS OF THE ASME CODE FOR UNFIRED PRESSURE VESSELS, SECTION VIII, DIVISION 1.
2. FINISHED TANK SHALL BE DISINFECTED IN ACCORDANCE WITH ADEQ BULLETIN No. 8 BEFORE BEING PLACED INTO SERVICE.
3. THE WELDED STEEL HYDROPNEUMATIC TANK WILL BE COATED AS PER AWWA SPECIFICATION D102 & NSF STANDARD 61.
4. THE FOLLOWING INFORMATION WILL BE INCLUDED WITH THE APPLICATION FOR APPROVAL TO CONSTRUCT.
   1. Tank Location _____
   2. Tank Length _____
   3. Tank Diameter _____
   4. Tank Capacity _____
   5. Maximum Working Pressure _____

ARIZONA WATER COMPANY

STANDARD SPECIFICATION FOR THE INSTALLATION OF HYDROPNEUMATIC TANK				
DRAWN BY: JPK	APPROVED BY: MW	DATE: 3-20-1986	△ 01.16.2007	E-9-18-1

NOT
CONVERTED
TO
CAD

ARIZONA WATER COMPANY

STANDARD SPECIFICATION
FOR THE INSTALLATION OF

WELL SHELTER

DRAWN BY:	APPROVED BY:	DATE:		
CB		03.20.1986	△04.03.2001	E-9-19-1

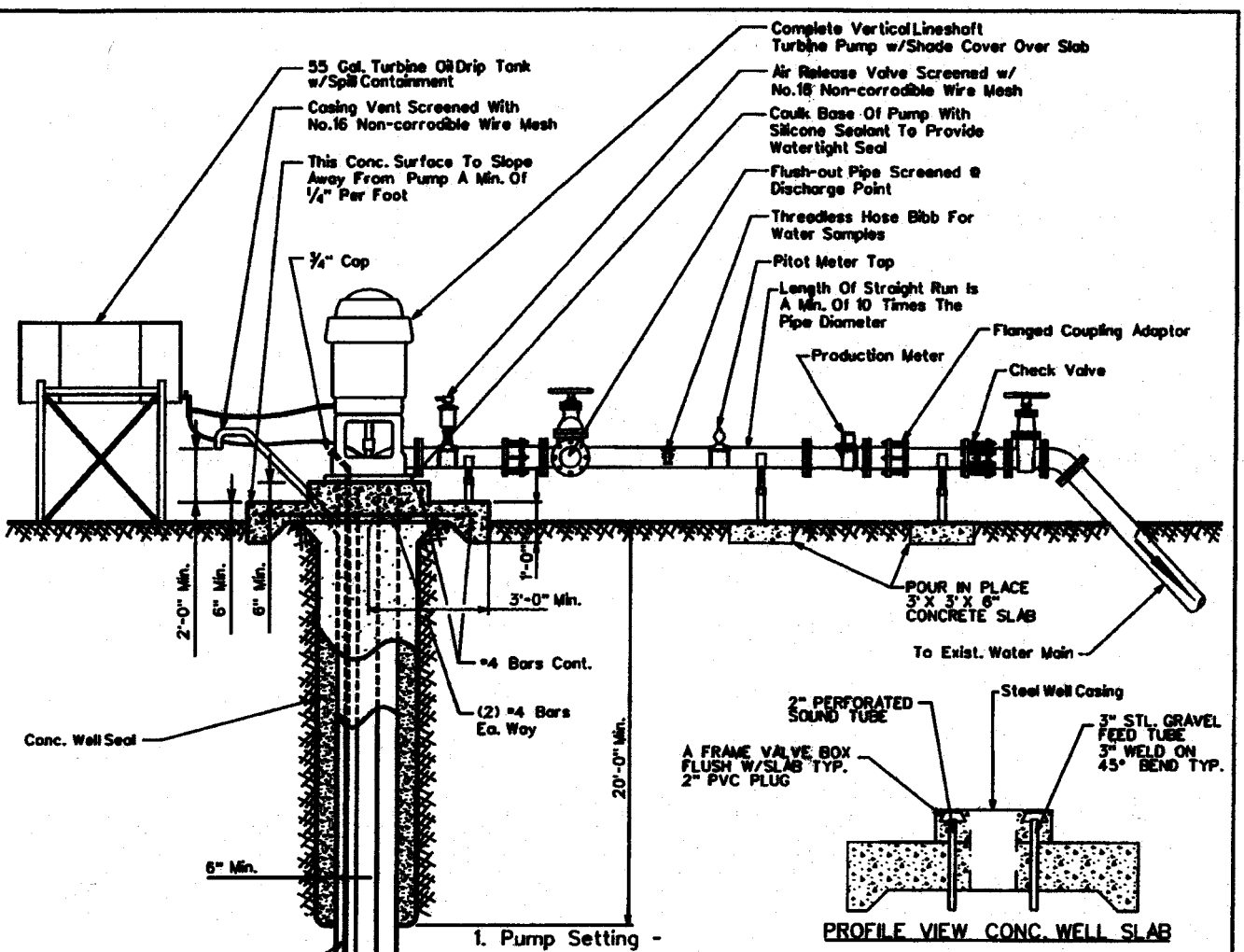

PROFILE VIEW CONC. WELL SLAB

1. Pump Setting -
2. System Pressure @ Water Main -
3. Design G.P.M. -
4. Pump Controlled By -
5. Well Does Not Lie Within The 100 Year Flood Plain.
6. Well Does Not Lie Within 100 Feet Of A Septic Tank.
7. Well Does Not Lie Within 50 Feet Of A Sewer Line.
8. Well Does Not Lie Within 100 Feet Of A Discharge Activity Which Requires An APP.
9. Well Does Not Lie Within 100 Feet Of An Underground Storage Tank.
10. Well Does Not Lie Within 100 Feet Of A Hazardous Waste Facility.
11. All Water Related Fittings Will Conform to N.S.F. Standard 61.
12. The Well Is Not Located Within 500 Feet Of Surface Water.
13. The Site Will Be Graded To Provide Adequate Drainage Away From The Well.
14. 6.88 lbs. of Davis #8084 Grey Dye, Per Yard, For 2500 PSI Concrete

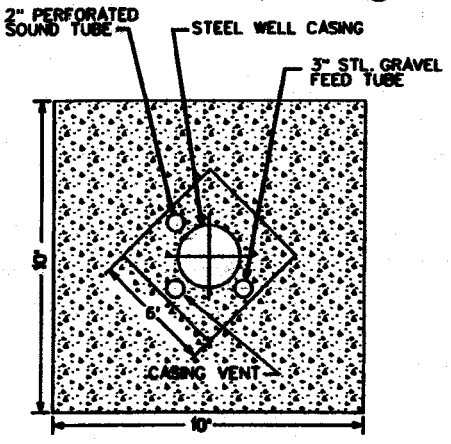

PLAN VIEW CONC. WELL SLAB

ARIZONA WATER COMPANY

STANDARD SPECIFICATION

FOR THE INSTALLATION OF

TYPICAL WELL W/ LINESHAFT TURBINE PUMP

DRAWN BY:	APPROVED BY:	DATE:		
JW	M.W.	3-20-86	△ 9/15/04	E-9-20-1

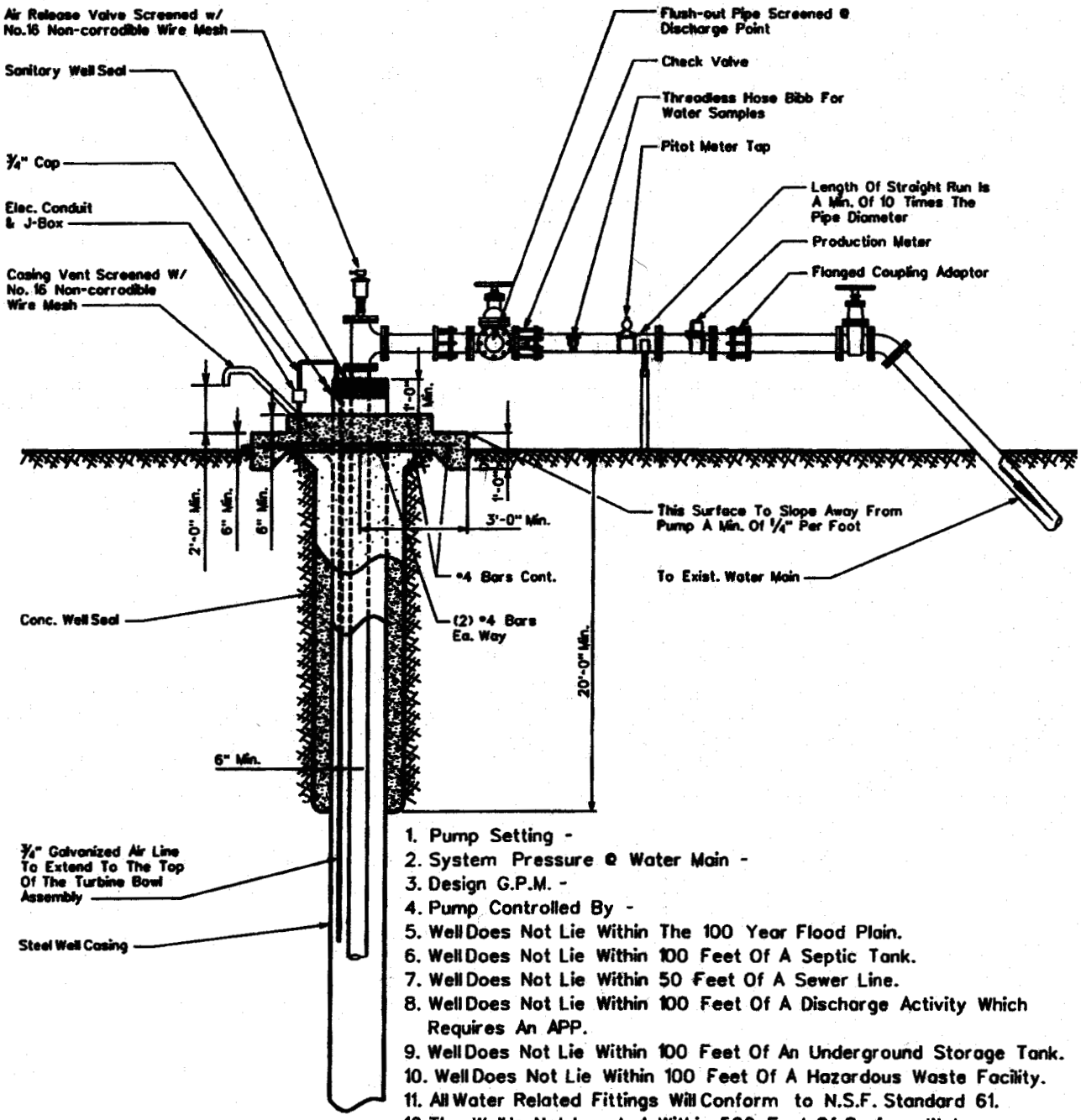

1. Pump Setting -
2. System Pressure @ Water Main -
3. Design G.P.M. -
4. Pump Controlled By -
5. Well Does Not Lie Within The 100 Year Flood Plain.
6. Well Does Not Lie Within 100 Feet Of A Septic Tank.
7. Well Does Not Lie Within 50 Feet Of A Sewer Line.
8. Well Does Not Lie Within 100 Feet Of A Discharge Activity Which Requires An APP.
9. Well Does Not Lie Within 100 Feet Of An Underground Storage Tank.
10. Well Does Not Lie Within 100 Feet Of A Hazardous Waste Facility.
11. All Water Related Fittings Will Conform to N.S.F. Standard 61.
12. The Well Is Not Located Within 500 Feet Of Surface Water.
13. The Site Will Be Graded To Provide Adequate Drainage Away From The Well.

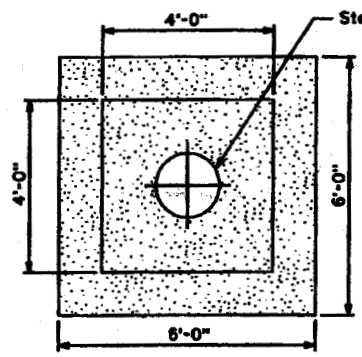

PLAN VIEW CONC. WELL SLAB

ARIZONA WATER COMPANY

STANDARD SPECIFICATION

FOR THE INSTALLATION OF

TYPICAL WELL W/ SUBMERSIBLE TURBINE PUMP

DRAWN BY:	APPROVED BY:	DATE:	△	
jpk	M.W.	3-20-86	2-16-01	E-9-21-1

All New Purchases To Conform To The Following:

Column Pipe

4" I.D. - 8	Threads	Per	Inch	Tapered	3/4"	Per	Foot	Right	Hand
6" I.D. - 8	"	"	"	"	"	"	"	"	"
8" I.D. - 8	"	"	"	"	"	"	"	"	"
10" I.D.- 8	"	"	"	"	"	"	"	"	"
12" I.D.- 8	"	"	"	"	"	"	"	"	"
14" I.D.- 8	"	"	"	"	"	"	"	"	"

Oil Tube - Peerless Type

1 1/2" O.D. - 14	Threads	Per	Inch	Right	Hand
2" O.D. - 12	"	"	"	"	"
2 1/2" O.D. - 10	"	"	"	"	"
3" O.D. - 10	"	"	"	"	"
3 1/2" O.D. - 10	"	"	"	"	"
4" O.D. - 10	"	"	"	"	"

Line Shaft

3/4" O.D. - 10	Threads	Per	Inch	Left	Hand
1" O.D. - 14	"	"	"	"	"
1-3/16" O.D. - 10	"	"	"	"	"
1-1/2" O.D. - 10	"	"	"	"	"
1-11/16" O.D. - 10	"	"	"	"	"
1-15/16" O.D. - 10	"	"	"	"	"
2-3/16" O.D. - 10	"	"	"	"	"
2-7/16" O.D. - 8	"	"	"	"	"

ARIZONA WATER COMPANY

STANDARD SPECIFICATION
FOR THE INSTALLATION OF

COLUMN PIPE, OIL TUBE AND LINE SHAFT

DRAWN BY:	APPROVED BY:	DATE	△	
CCO		3/20/1996	△ 2/13/2001	E-9-22-1

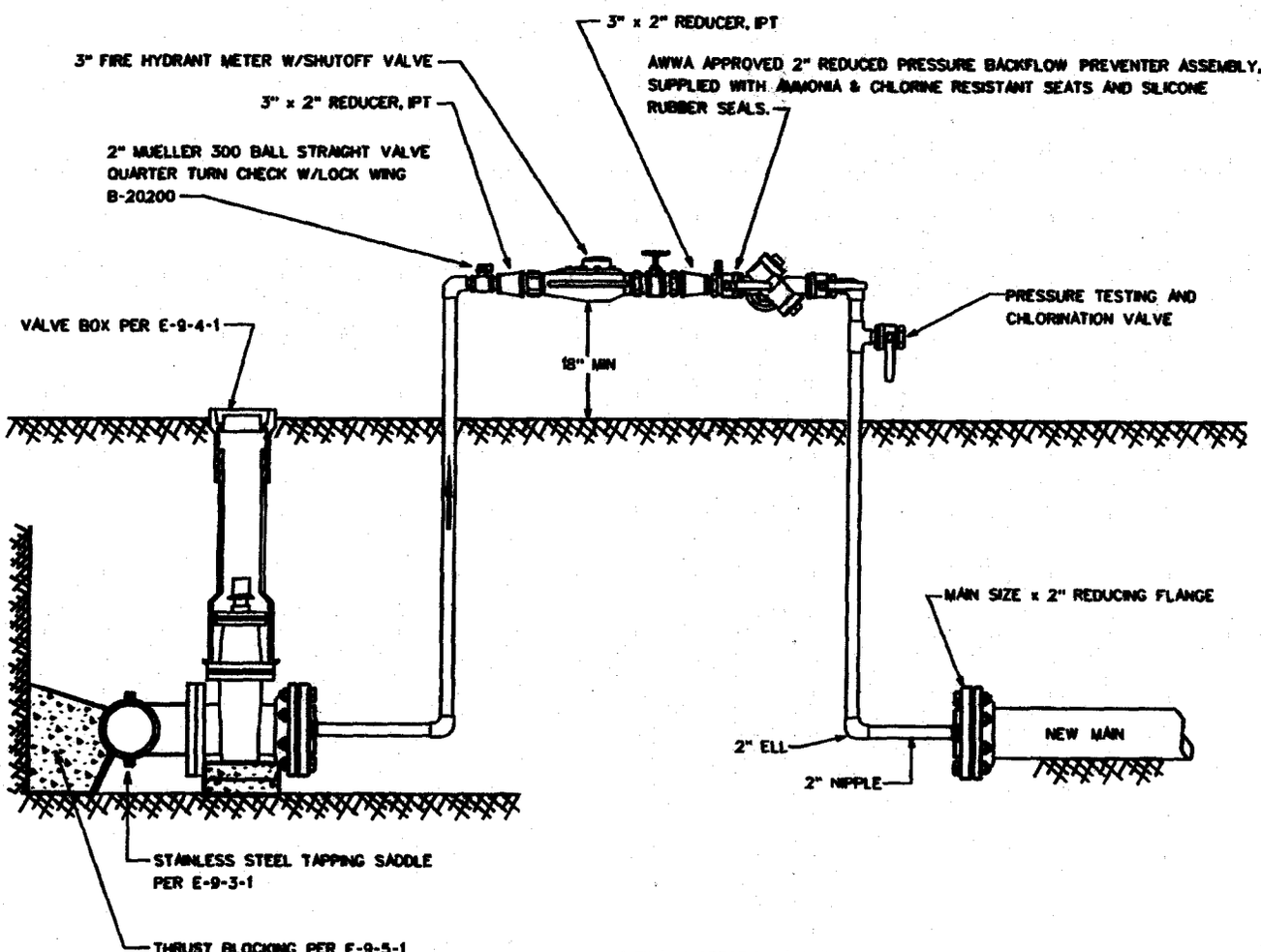

1. FINAL INSPECTION AND CONNECTION TO BE WITNESSED BY AN ARIZONA WATER COMPANY REPRESENTATIVE.
2. REDUCING FLANGES TO BE PROPERLY RESTRAINED.
3. INSTALL JUMPER TAP FOR TEMPORARY METER DOWNSTREAM OF THE REDUCING FLANGE FOR PRESSURE AND BACTEE TESTING.
4. JUMPER ASSEMBLY MUST BE A MINIMUM OF 18" ABOVE FINISHED GRADE.
5. BACKFLOW ASSEMBLY REQUIRES CERTIFICATION.
6. ASSEMBLY NOT TO BE REMOVED AND SPOOL PIECE INSTALLED FOR FINAL CONNECTION UNTIL ALL TESTING, BACTERIAL CLEARANCE AND FINAL INSPECTIONS HAVE BEEN OBTAINED.
7. ALL NEW PIPING SHALL BE PROPERLY RESTRAINED.

ARIZONA WATER COMPANY

STANDARD SPECIFICATION
FOR THE INSTALLATION OF

HOT TAP & JUMPER METER CONNECTION

DRAWN BY:	APPROVED BY:	DATE:	△	
CB	MJW	05.14.2004		E-9-23-1

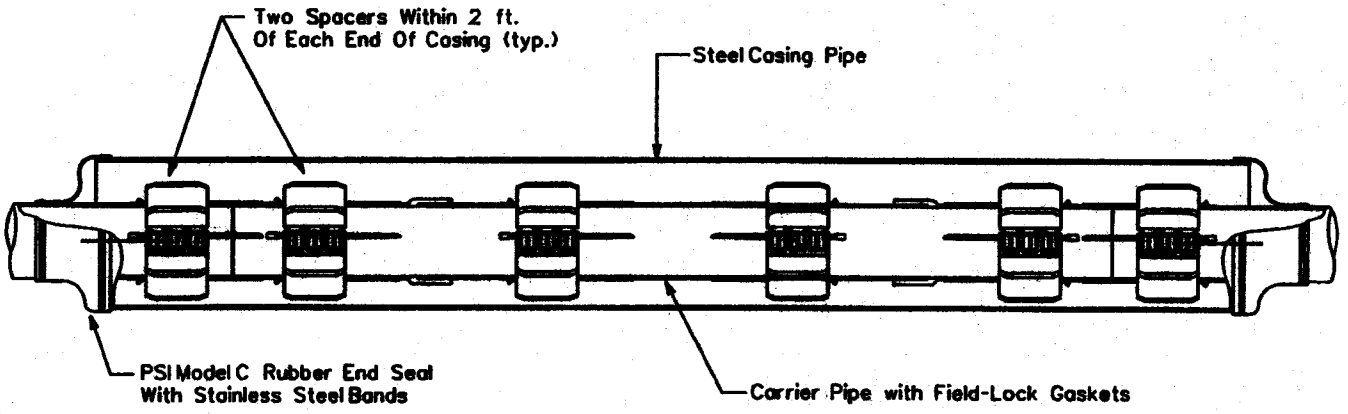

CROSS SECTION

The casing spacers shall be the PSI Ranger II Casing Spacers as manufactured by Pipeline Seal and Insulator, Inc., Houston, Texas.

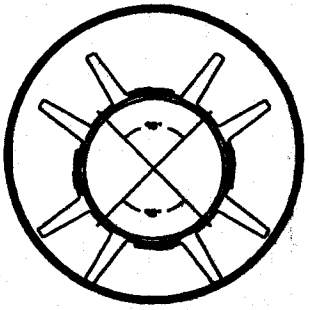

SECTION CUT

End Seals

After insertion of the carrier pipe into the casing, the ends of the casing shall be closed by installing 1/8" thick synthetic rubber end seals equal to the PSI Model "C" end seal as manufactured by Pipeline Seal and Insulator, Inc., Houston, Texas.

NOTE: The Carrier Pipe Shall Be Polywrapped Prior To The Skid Installation & Insertion Into The Carrier Casing For Divisions Requiring Polywrapped Pipe.

OD Push On Joint Bell	OD M.J. BELL
6" - 8.66"	6" - 11.12"
8" - 10.82"	8" - 13.37"
12" - 15.05"	12" - 17.94"
16" - 19.74"	16" - 22.56"
20" - 23.98"	20" - 27.08"
24" - 28.16"	24" - 31.58"
30" - 35.40"	30" - 39.12"
36" - 41.84"	36" - 46.00"
48" - 55.94"	48" - 60.00"

*Thickness Of Skid To Extend A Minimum of 1/2" Above The O.D. Of The Pipe Bell or Gland.

PIPE SIZE	CASING SIZE	CASING SIZE ID	CASING SCHEDULE	WALL THICKNESS	SKID SIZE
6"	16"	15.25"	STD.	.375	*x4x12
8"	18"	18.25"	STD.	.375	*x4x12
12"	22"	21.25"	STD.	.375	*x4x12
16"	28"	27.25"	STD.	.375	*x4x12
20"	32"	31.25"	STD.	.375	*x4x12
24"	36"	35.25"	STD.	.375	*x4x12
30"	48"	47.25"	STD.	.375	*x4x12
36"	54"	53.25"	STD.	.375	*x4x12
48"	66"	65.25"	STD.	.375	*x4x12

ARIZONA WATER COMPANY

STANDARD SPECIFICATION

FOR THE INSTALLATION OF

TYPICAL WATER LINE ENCASEMENT

DRAWN BY:	APPROVED BY:	DATE:	△	
CB		3/20/1996	△ 09.27.2006	E-9-24-1

CALCIUM HYPOCHLORITE TABLET CHLORINATOR FEEDER SPECIFICATIONS

SCOPE - This specification describes a ARCH Chemicals Calcium Hypochlorite Tablet Chlorination System as manufactured by ARCH Chemicals, 501 Merritt Seven, P.O. Box 5204, Norwalk, CT, 06856-5204.

DESCRIPTION - The chlorination system shall be completely assembled, ready to install. The chlorination system shall be a ARCH Chemicals Calcium Hypochlorite Tablet Feeder, or its equivalent, and shall be supplied with all its components factory mounted.

COMPONENTS - The Chlorination system shall have the following components:
- A. 1-3/8" ARCH Chemical solid calcium hypochlorite tablet feeder
- B. Polyethylene system enclosure
- C. Integrated, level controlled solution tank
- D. Adjustable flow control valve
- E. Manual on/off valve (at inlet)
- F. Chemical metering pump
- G. On/off pump control switch
- H. Waterproof electrical junction box
- I. Corrosion resistant schedule 40 piping
- J. Reverse flow check valves
- K. Total solution output control valve

ELECTRICAL FIXTURES - The following electrical fixtures shall be provided:
A. Safety switch, 2 pole, fused for 30 Amps, for 120 Volts, 60 cycle, single phase power.

CHLORINATOR DESIGN - The chlorination facility shall be designed and constructed in accordance with Arizona State Department of Health Engineering Bulletin Number 8 - "Disinfection of Water Systems". Latest Revision.

CHLORINATION EQUIPMENT - The chlorination equipment shall be a ARCH Chemicals Calcium Hypochlorite tablet chlorinator, approved by NSF Standard 61.

CHLORINATOR OPERATION - The chlorination facility shall be operated in accordance with Arizona State Department of Health Engineering Bulletin Number 8, "Disinfection of Water Systems". Table 1. latest revision.

CHLORINATOR SYSTEM DESCRIPTION - ARCH Chemicals tablet chlorinator systems incorporate a patented chlorinator which is designed to utilize ARCH Chemicals 1-¼" solid calcium hypochlorite tablets (Approved NSF Standard 60). Meets AWWA Standard B-300, EPA Registration # 1258-1179. The chlorinator is mounted on a polyethylene system enclosure. The inlet water is sprayed on the calcium hypochlorite tablet and collected in a solution tank. This chlorinated solution is then pumped out of the tank through a chemical metering pump. This metering pump is then adjusted to obtain the desired CL residual.

ARCH Chemicals Calcium Hypochlorite Tablet Chlorinator

NTS

HYPOCHLORINATOR COMPONENTS:

1. Chemical Metering Pump
2. Pump Suction Connection
3. Pump Discharge Connection
4. Inlet Water Assembly
5. Inlet Water Solenoid Valve
6. Inlet Shut-Off Valve
7. Inlet Pressure Regulator
8. Inlet Water Pressure Gauge
9. Spray Nozzle Water Pressure Gauge
10. Inlet Strainer
11. Inlet Tubing Connection
12. Dry Chemical Hopper
13. Suction Line
14. Electrical Control Box With Power On/Off
15. Electric Mixer
16. Solution Discharge Connection
17. Tank Drain Valve
18. Observation Port
19. Mixed Chemical Holding Tank
20. Pressure Relief Valve
21. Pump Speed Control
22. High Level Shut-Off Float Switch
23. Water Spray Nozzles

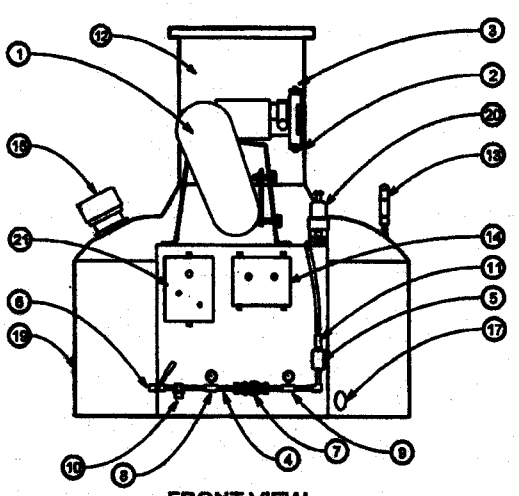

FRONT VIEW

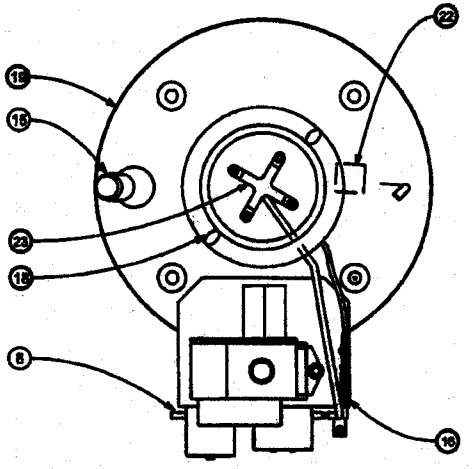

TOP VIEW

HOPPER REMOVED FOR CLARITY

Chlorinator Fluid Schematic

NTS

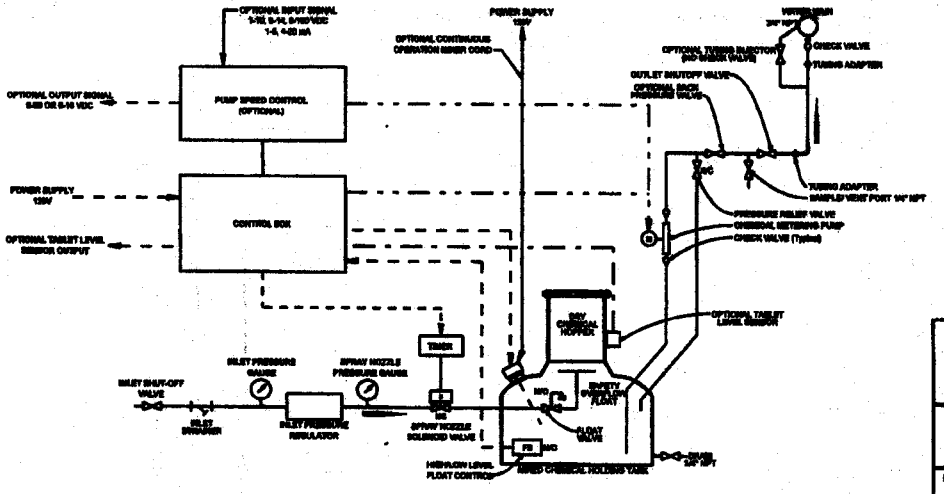

ARIZONA WATER COMPANY

STANDARD SPECIFICATION

FOR THE INSTALLATION OF

CALCIUM HYPOCHLORITE TABLET CHLORINATOR

DRAWN BY:	APPROVED BY:	DATE:	△	
CB	MW	02-09-2000		E-9-25-1

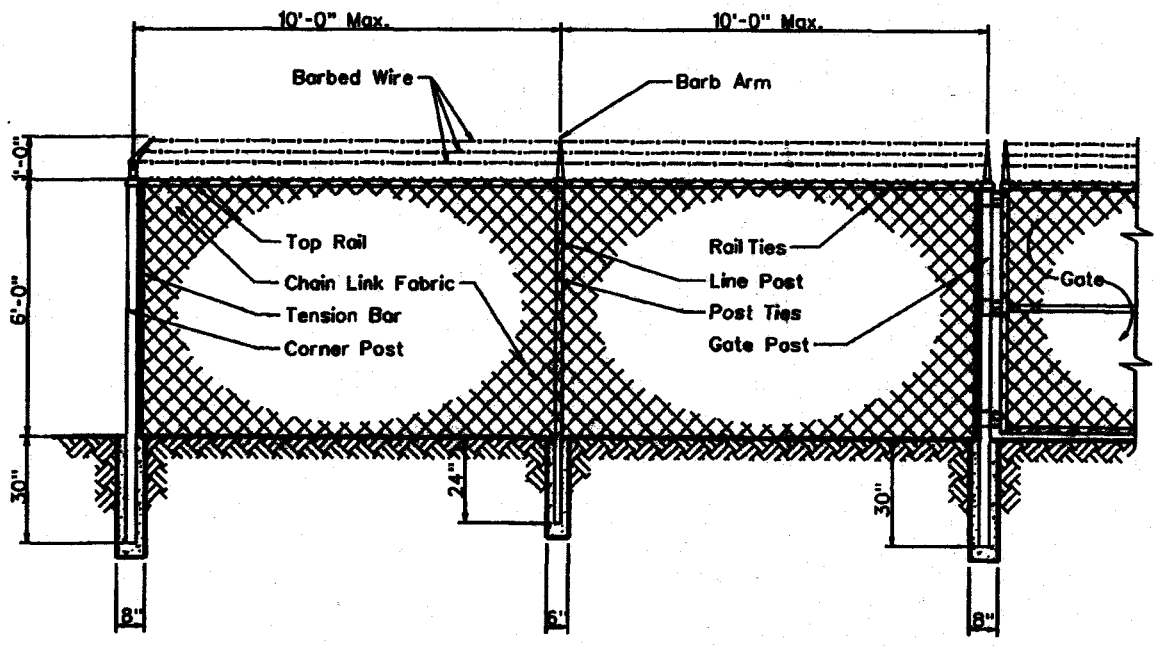

Line Post:	1-7/8" O.D.	1.74 lbs. P/L.F.	ASTM A-256
End Post:	2-7/8" O.D.	4.64 lbs. P/L.F.	ASTM A-256
Corner Post:	2-7/8" O.D.	4.64 lbs. P/L.F.	ASTM A-256
Gate Post:	2-7/8" O.D.	4.64 lbs. P/L.F.	ASTM A-256
Top Rail:	1-5/8" O.D.	4.64 lbs. P/L.F.	ASTM A-256
Chain Link Fabric:	9 Ga. 2" Mesh Galv. Before Weave		
Selvage:	Barb/Knuckle		
Fittings:	Pressed Steel		
Barb Wire:	2-1/2 Ga./2 Point		
Barb Arm:	1 Piece/45° Arm		
Tension Wire:	9 Ga./Galv.		
Line Post Set:	6"x24" In Concrete		
Terminal Post Set:	8"x30" In Concrete		

ARIZONA WATER COMPANY

STANDARD SPECIFICATION
FOR THE INSTALLATION OF

CHAIN LINK FENCE

DRAWN BY:	APPROVED BY:	DATE:	△	
CCO	MW	7/7/1992	2/9/2001	E-9-26-1

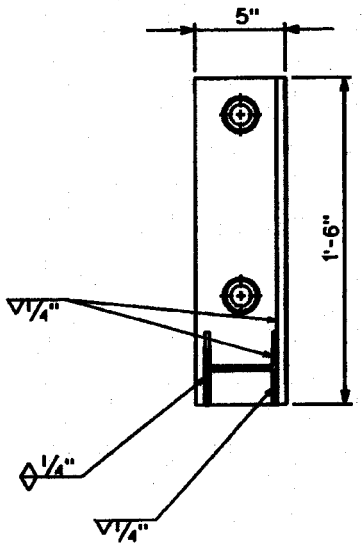

SECTION X-X

NOTES

1. Minimum 2 Supports Per Joint Of Pipe.
2. All Bolts Shall Have A Lock Washer Under The Nut.
3. All Nuts Shall Be Stainless Steel Series 304.

PIPE SIZE	A	B
8"	8"	15"
10"	9"	17"
12"	10"	19"

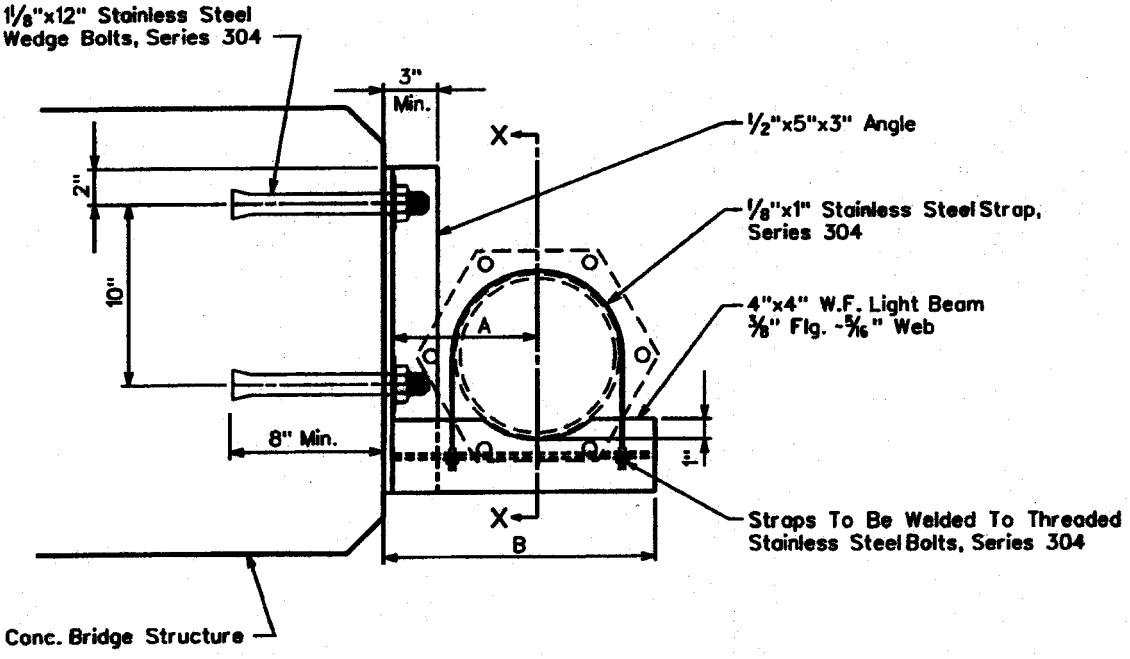

SUSPENSION DETAIL

ARIZONA WATER COMPANY

STANDARD SPECIFICATION
FOR THE INSTALLATION OF

SIDE HUNG WATER LINE SUSPENSION

DRAWN BY:	APPROVED BY:	DATE:	△	
JPK	MJW	7-12-96		E-9-27-1

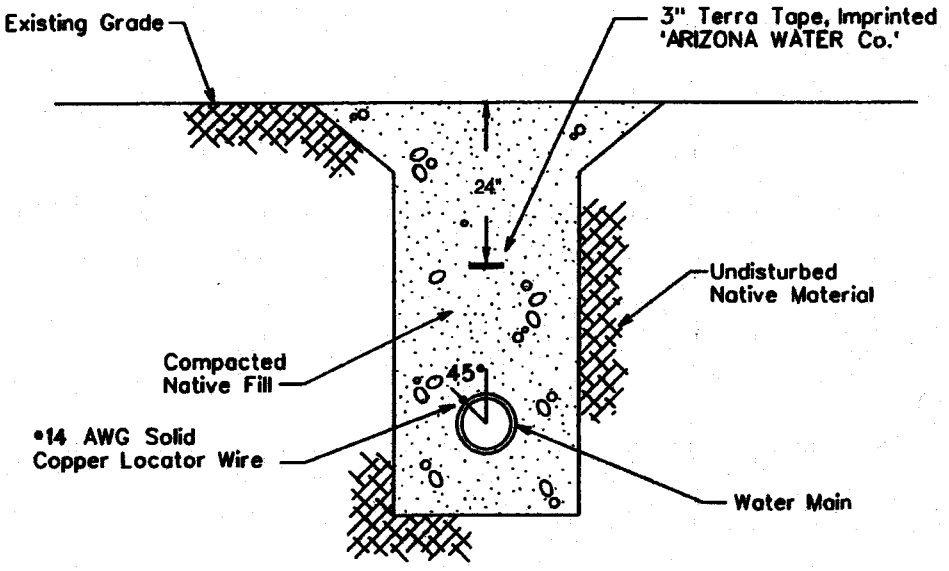

TYPICAL WATER TRENCH DETAIL

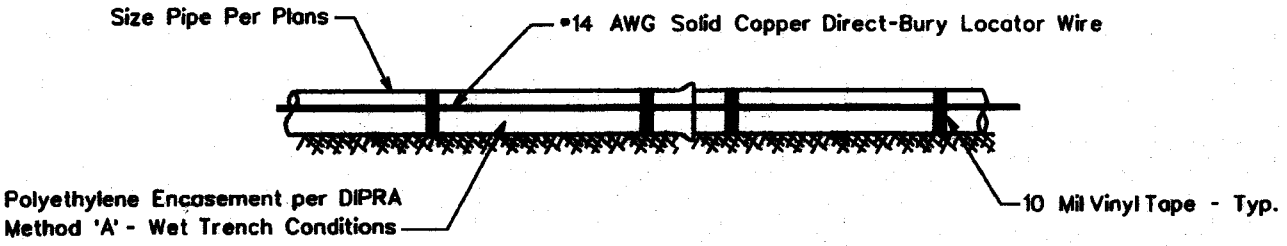

TYPICAL PROFILE VIEW

WIRE GENERAL NOTES:

1. All pipe shall have #14 AWG Solid Copper Direct-Bury Locator Wire Installed Directly To The Polywrap At 45° From The Vertical Center Of The Pipe and Shall Be Attached Using 10 Mil Vinyl Tape.
2. The Locating Wire Shall Terminate At the Top Of Each Valve Box and Be Capable of Extending 12" Above the Top Of The Box In Such A Manner So As Not To Interfere With Valve Operation.

TAPE GENERAL NOTES:

1. Use Terra Tape 3" Marking Tape As Manufactured By Reef Industries Inc. Of Houston, Texas (1-800-231-2417)
2. The Tape Is Blue & Imprinted 'ARIZONA WATER Co.'
3. INSTALLATION: The Pipe Warning Tape Shall Be Installed Over All Water Mains And Shall Be Buried 24 Inches Below The Surface Over The Center Of The Pipe.
   A) The Backfill Shall Be Sufficiently Leveled So That The Tape Is Installed On A Flat Surface.
   B) The Tape Shall Be Centered In The Trench With The Printed Side Up.
   C) Care Shall Be Exercised To Avoid Movement Of The Tape While The Remaining Backfill Is Moved Into The Trench.

ARIZONA WATER COMPANY

STANDARD SPECIFICATION
FOR THE INSTALLATION OF
PIPE WARNING TAPE AND LOCATOR WIRE

DRAWN BY:	APPROVED BY:	DATE:		
CB		03.24.1997	△09.27.2006	E-9-28-1

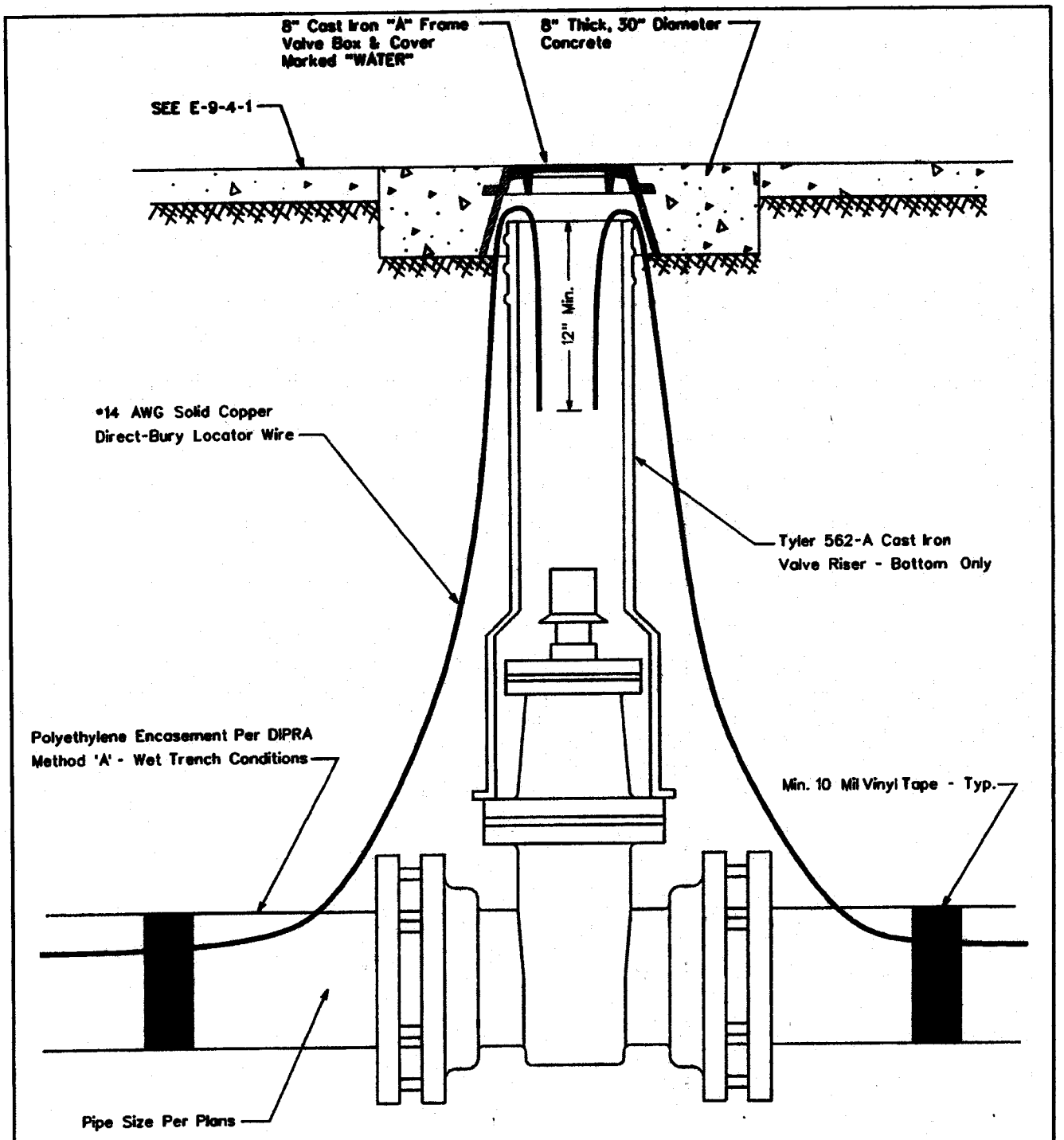

ARIZONA WATER COMPANY

STANDARD SPECIFICATION
FOR THE INSTALLATION OF

LOCATOR WIRE TERMINATION

DRAWN BY:	APPROVED BY:	DATE:	△	
CB		09.27.2006		E-9-28-2

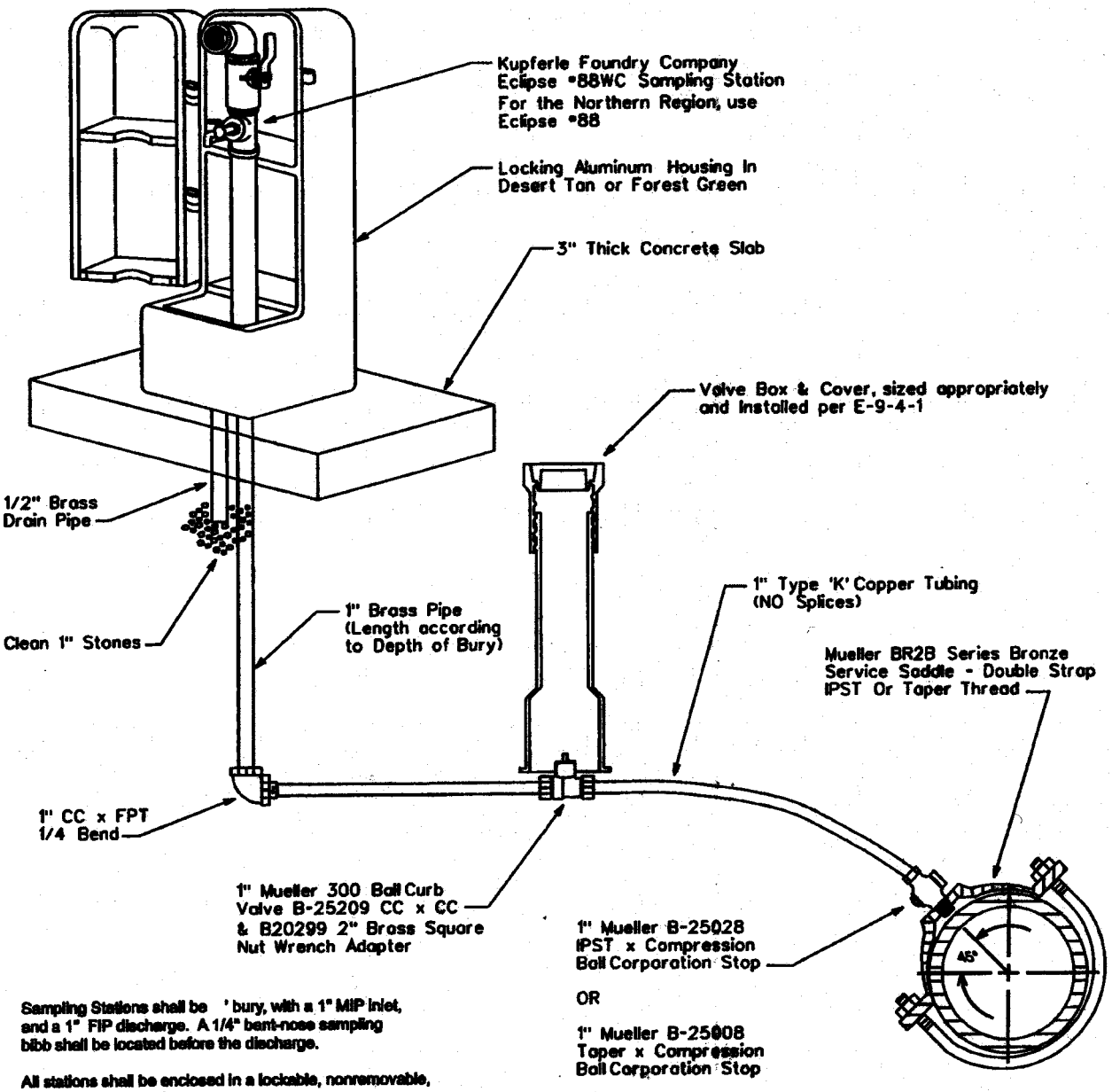

Sampling Stations shall be ' bury, with a 1" MIP inlet, and a 1" FIP discharge. A 1/4" bent-nose sampling bibb shall be located before the discharge.

All stations shall be enclosed in a lockable, nonremovable, aluminum-cast housing.

When opened, the station shall require no key for operation, and the water will flow in an all brass waterway.

All working parts will be of brass and serviceable from above ground with no digging. (OPTIONAL: if desired, a 1/2" brass drain tube will be provided within the locking cover).

A 1" ball valve will control the water flow, and be located before (or after) the sampling bibb, as manufactured by Kupferle Foundry, St. Louis, MO 63102.

SADDLE TAP TO CA, PVC, OR DI PIPE

NOTE: The minimum distance between taps on mains other than ductile iron is 12"

Pipe Depth Per
E-8-1-2, Item 3.

ARIZONA WATER COMPANY

STANDARD SPECIFICATION

FOR THE INSTALLATION OF

SAMPLING STATION

DRAWN BY:	APPROVED BY:	DATE:	△	
CB	MW	01.24.2007		E-8-29-1

ENCASEMENT FOR PIPE CROSSING

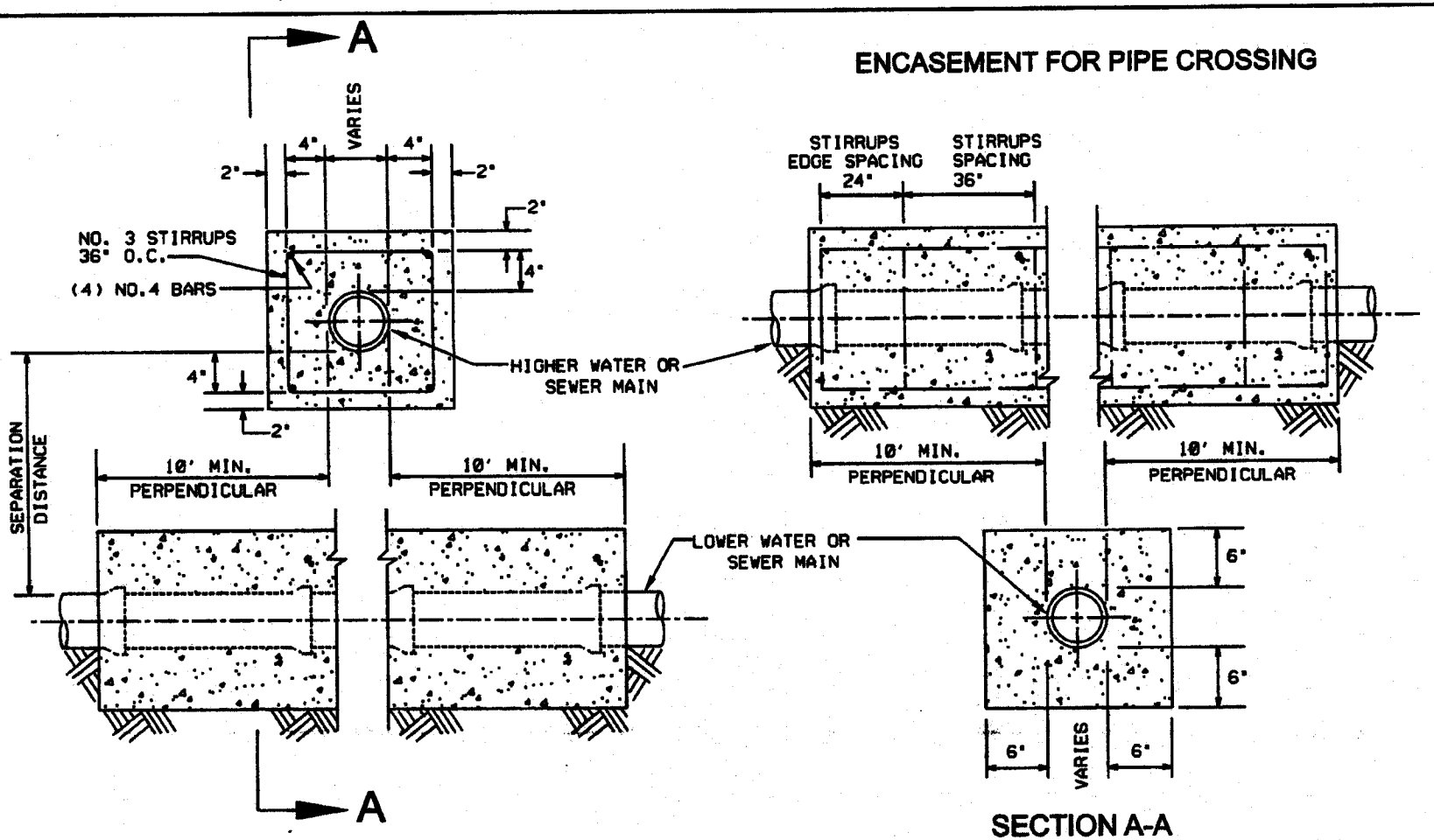

SECTION A-A

NOTES:

1. 2,000 PSI CONCRETE
2. SEPARATION DISTANCES AND/OR OTHER EXTRA PROTECTION SHALL BE REQUIRED TO PROTECT WATER MAINS FROM CONTAMINATION BY SANITARY SEWER MAINS. SEE AWC STANDARD SPECIFICATION PAGES E-8-1-9 AND E-8-1-10.
3. SEE CROSS SECTION DETAIL FOR LIMITS OF SEPARATION/EXTRA PROTECTION. ALL DISTANCES ARE MEASURED PERPENDICULARLY FROM THE OUTSIDE OF THE PIPES.
4. RECLAIMED WATER SHALL BE CONSIDERED A SANITARY SEWER WHEN PLACED NEXT TO A POTABLE WATER MAIN.

ARIZONA WATER COMPANY

STANDARD SPECIFICATION
FOR THE INSTALLATION OF
WATER AND SANITARY SEWER
SEPARATION/PROTECTION

DRAWN BY:	APPROVED BY:	DATE	△	E-9-30-1
CB	JW	04.07.2008		

NOTES:

1. 2,000 PSI CONCRETE

2. SEPARATION DISTANCES AND/OR OTHER EXTRA PROTECTION SHALL BE REQUIRED TO PROTECT WATER MAINS FROM CONTAMINATION BY SANITARY SEWER MAINS. SEE AWC STANDARD SPECIFICATION PAGES E-8-1-9 AND E-8-1-10.

3. SEE CROSS SECTION DETAIL FOR LIMITS OF SEPARATION/EXTRA PROTECTION. ALL DISTANCES ARE MEASURED PERPENDICULARLY FROM THE OUTSIDE OF THE PIPES.

4. RECLAIMED WATER SHALL BE CONSIDERED A SANITARY SEWER WHEN PLACED NEXT TO A POTABLE WATER MAIN.

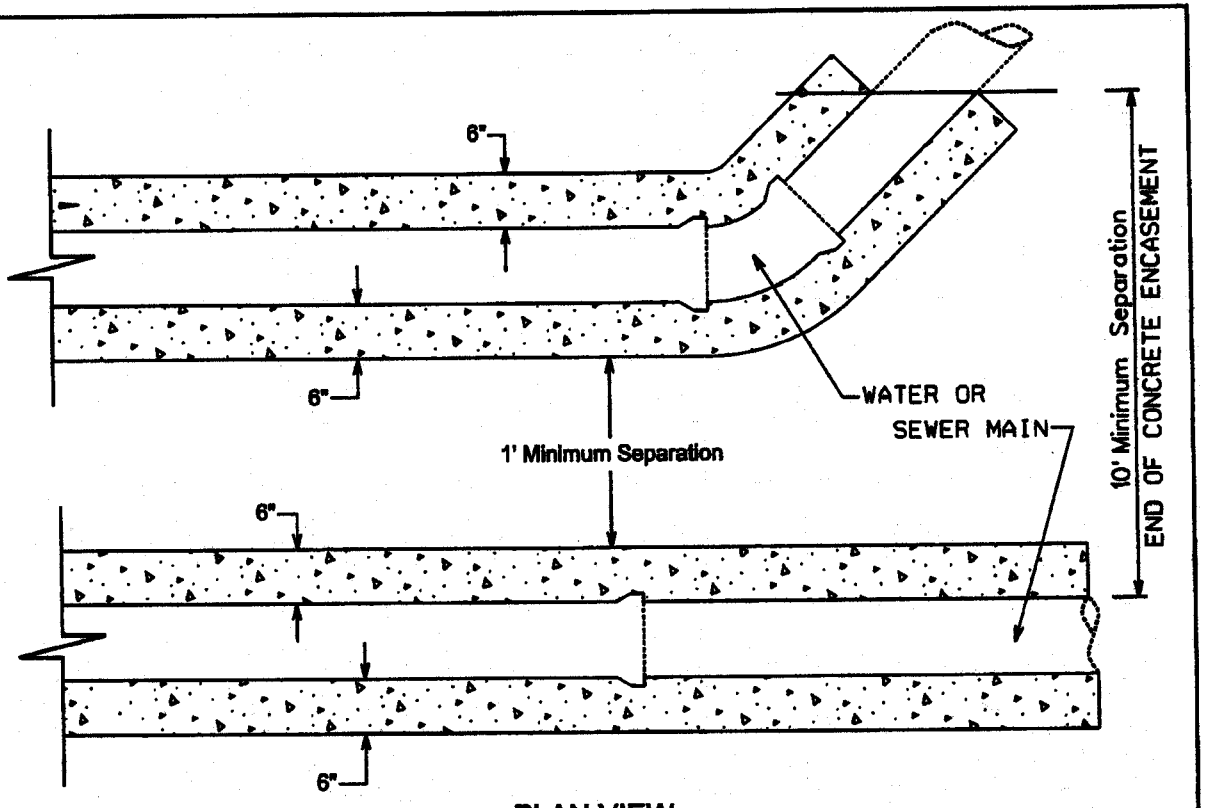

PLAN VIEW

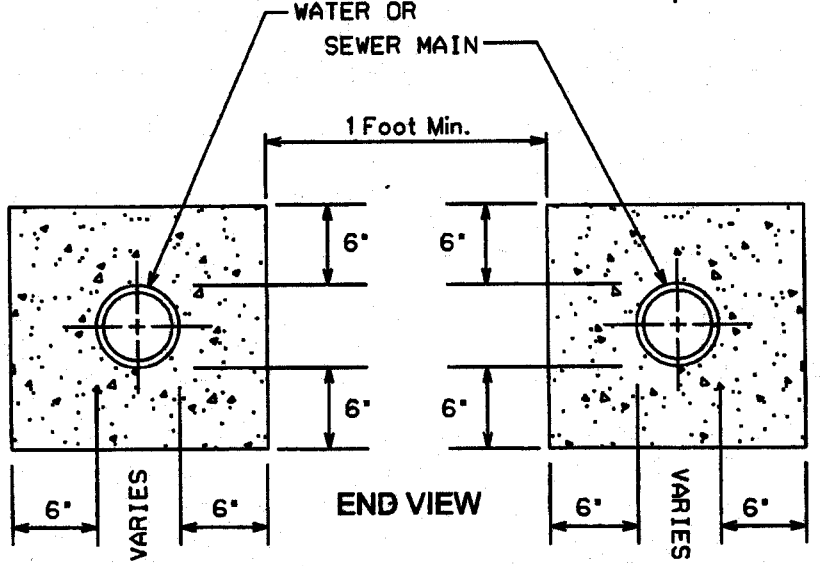

END VIEW

ENCASEMENT FOR PARALLEL PIPES

ARIZONA WATER COMPANY

STANDARD SPECIFICATION
FOR THE INSTALLATION OF
WATER AND SANITARY SEWER
SEPARATION/PROTECTION

DRAWN BY:	APPROVED BY:	DATE:	△	E-9-30-2
CB	JW	04.07.2008		

Performa[illegible] (Private Work)

RECEIVED
JUN 11 2012
ARIZONA WATER COMPANY
PHOENIX - ENGINEERING

Contractors Bonding
and Insurance Company
1213 Valley Street
P.O. Box 9271
Seattle, WA 98109-0271
For the CBIC branch
nearest you, call Toll Free
(800) 283-2242
(800) 283-2848 FAX

Bond Number: CBB000108

Know All Persons By These Presents, That we, Global Data Specialists,
called the Principal, and Contractors Bonding and Insurance Company, a Washington corporation, called the Surety, are held and firmly bound unto Arizona Water Company,
called the Obligee, in the sum of Twenty Six Thousand Six Hundred Ninety Three and 51/100-- Dollars ($ 26,693.51)
for the payment whereof said Principal and Surety bind themselves firmly by these presents.

Whereas, the Principal has entered into a contract with the Obligee, dated April 25, 2012, for Lakeside Radio Controls W.A. NO. 1-4028 ("Contract").

Now, Therefore, the condition of this obligation is such that if the Principal shall promptly and faithfully perform the construction work to be done under the Contract and shall promptly make payment to all Claimants, as hereinafter defined, for all labor and material used, consumed or incorporated in the performance of the Contract, then this obligation shall be null and void; otherwise to remain in full force and effect.

Whenever Principal shall be, and be declared by Obligee to be in default under the Contract for failing to perform the construction work, the Obligee having performed Obligee's obligations thereunder, Surety shall, within a reasonable time:

1. Upon entering into an acceptable takeover agreement with the Obligee, undertake to complete the construction work to be done under the Contract; or

2. Obtain bids or negotiated proposals from qualified contractors for completion of the construction work to be done under the Contract, and arrange for a contract to be prepared for execution by the Obligee and the contractor, to be secured with performance and payment bonds executed by a qualified surety; or

3. Waive its right to perform and complete, arrange for completion, or obtain a new contractor.

4. The Contract balance, as defined below, shall be credited against the reasonable cost of completing the construction work to be performed under the Contract. If completed by the Obligee pursuant to paragraphs 2 or 3 above, and the reasonable cost exceeds the Contract balance, the Surety shall pay to the Obligee such excess, but in no event shall the aggregate liability of the Surety exceed the amount of this bond. If the Surety completes the work pursuant to paragraph 1 above, that portion of the Contract balance as may be required to complete the construction work to be done under the Contract and to reimburse the Surety for its outlays shall be paid to the Surety at the times and in the manner as said sums would have been payable to Principal had there been no default under the Contract; provided, however, that to the extent that the Surety's outlays exceed the balance of the Contract price paid to Surety by Obligee, the Surety shall be entitled to a dollar for dollar reduction of its liability under this bond, and the Surety's aggregate liability shall not exceed the penal sum of this bond. The term "Contract balance," as used in this paragraph, shall mean the total amount payable by Obligee under the Contract and any amendments thereto, less the amounts heretofore properly paid by Obligee under the Contract. The term "construction work" as used herein shall mean the providing by the Principal of all labor and/or material necessary to complete the Principal's scope of work under the Contract. Notwithstanding any language in the Contract to the contrary, the Surety shall not be liable to the Obligee or others for obligations of the Principal that are unrelated to the performance of the construction work under the Contract, and the Contract balance shall not be reduced or set off on account of any such unrelated obligations, nor for any related obligations that would not be covered under this bond.

5. Any suit by the Obligee under this bond must be instituted before the earlier of: (a) the expiration of one year from the date of substantial completion of the work, or (b) one year after the Principal ceased performing the construction work under the Contract. If the limitation set forth in this bond is void or prohibited by law, the minimum period of limitation available to sureties as a defense in the jurisdiction of the suit shall be applicable.

6. A Claimant is defined as one other than the Obligee having both (a) a direct contract with the Principal or with a direct subcontractor of the principal for labor and/or materials used, consumed or incorporated in the performance of the construction work under the Contract and (b) an enforceable lien on the property improved under the Contract for labor and/or materials used, consumed or incorporated in the performance of the construction work under the Contract.

7. The above-named Principal and Surety hereby jointly and severally agree with the Obligee that every Claimant as herein defined, who has not been paid in full before the expiration of a period of ninety (90) days after the later of (a) the date on which the last of such claimant's work or labor was done or performed or materials were furnished by such claimant, or (b) the date the Claimant filed an enforceable lien, may sue on this bond, prosecute the suit to final judgment for the amount due under Claimant's contract for the labor and/or materials supplied by the Claimant which were used, consumed or incorporated in the performance of the work, and have execution thereon. The Obligee shall not be liable for the payment of any costs or expenses of any such suit.

8. No suit or action shall be commenced hereunder by any Claimant after the expiration of one (1) year after the day on which the Claimant last supplied the labor and/or materials for which the claim is made. If this limitation is void or prohibited by law, then the minimum period of limitation available to sureties as a defense in the jurisdiction of the suit shall be applicable.

9. No suit or action shall be commenced hereunder by the Obligee or any Claimant other than in a court of competent jurisdiction in the county or other political subdivision of the state in which the project, or any part thereof, is situated, or in the United States District Court for the district in which the project, or any part thereof, is situated, and not elsewhere.

10. The amount of this bond shall be reduced by and to the extent of any payment or payments made by Surety in good faith hereunder whether made directly to Obligee or Claimant(s) or otherwise in discharge of Principal's obligations. The Surety's liability hereunder to the Obligee and all Claimants is limited, singly, or in the aggregate, to the penal sum of the bond set forth herein. The Surety may, at its option, discharge all obligations under this bond by interpleading into the registry of any court of competent jurisdiction of the full unencumbered penal sum of this bond, or such portion thereof that will satisfy the obligations owed to the Obligee and/or the Claimant(s). This bond shall not be liable for any liability of the Principal for tortious acts, whether or not said liability is direct or is imposed by the Contract, and shall not serve as or be a substitute for or supplemental to any liability or other insurance required by the Contract.

Signed and sealed this 1 day of June, 2012.

Global Data Specialists
(Principal's name)

By: M. Mayfield

Its GENERAL MANAGER

Contractors Bonding and Insurance Company

By: Melanie L. Warnock
Melanie L. Warnock, Attorney-in-fact

Contractors Bonding and Insurance Company
1213 Valley Street
P.O. Box 9271
Seattle, WA 98109-9271

POWER OF ATTORNEY
Contractors Bonding and Insurance Company

Know All Men by These Presents:

That this Power of Attorney is not valid or in effect unless attached to the bond which it authorizes executed, but may be detached by the approving officer if desired.

That Contractors Bonding and Insurance Company, a Washington corporation, does hereby make, constitute and appoint:
Jorge L. Mendez, Melanie L. Warnock, Jessika Gulliver, jointly or severally

in the City of Phoenix, State of Arizona its true and lawful Agent and Attorney in Fact, with full power and authority hereby conferred, to sign, execute, acknowledge and deliver for and on its behalf as Surety, the following described bond.

Any and all bonds, undertakings, and recognizances in an amount not to exceed Ten Million and 00/100 Dollars ($10,000,000.00) for any single obligation.

The acknowledgment and execution of such bond by the said Attorney in Fact shall be as binding upon this Company as if such bond had been executed and acknowledged by the regularly elected officers of this Company.

The Contractors Bonding and Insurance Company further certifies that the following is a true and exact copy of the Resolution adopted by the Board of Directors of Contractors Bonding and Insurance Company, and now in force to-wit:

"All bonds, policies, undertakings, Powers of Attorney or other obligations of the Corporation shall be executed in the corporate name of the Corporation by the President, Secretary, any Assistant Secretary, Treasurer, or any Vice President, or by such other officers as the Board of Directors may authorize. The President, any Vice President, Secretary, any Assistant Secretary, or the Treasurer may appoint Attorneys in Fact or Agents who shall have authority to issue bonds, policies or undertakings in the name of the Corporation. The corporate seal is not necessary for the validity of any bonds, policies, undertakings, Powers of Attorney or other obligations of the Corporation. The signature of any such officer and the corporate seal may be printed by facsimile or other electronic image."

IN WITNESS WHEREOF, the Contractors Bonding and Insurance Company has caused these presents to be executed by its Vice President with its corporate seal affixed this 6th day of June, 2011.

CORPORATE SEAL 1979

Contractors Bonding and Insurance Company

Roy C. Die — Vice President

State of Washington } SS
County of King }

On this 6th day of June, 2011, before me, a Notary Public, personally appeared Roy C. Die, who being by me duly sworn, acknowledged that he signed the above Power of Attorney as the aforesaid officer of the Contractors Bonding and Insurance Company and acknowledged said instrument to be the voluntary act and deed of said corporation.

Joseph B. Miller — Notary Public

Notary Public
State of Washington
JOSEPH B. MILLER
MY COMMISSION EXPIRES
March 28, 2012

CERTIFICATE

I, the undersigned officer of Contractors Bonding and Insurance Company, a stock corporation of the State of Washington, do hereby certify that the attached Power of Attorney is in full force and effect and is irrevocable; and furthermore, that the Resolution of the Company as set forth in the Power of Attorney, is now in force. In testimony whereof, I have hereunto set my hand and affixed the seal of the Contractors Bonding and Insurance Company this _____, day of June, 2012.

Contractors Bonding and Insurance Company

Roy C. Die — Vice President

08/2008/000012

A0059513

ENGINEERING SERVICES

Configuration, RTU Application Software (Globe Miami): $9,600
The System Engineer will configure the RTU application according to the system requirements.

Integration, On-site at Customer Location (Globe Miami): $8,850
· Test communications between RTUs
· Test and Debug as needed
· Obtain signoff and acceptance

Configuration, RTU Application Software (Lakeside): $4,800
The System Engineer will configure the RTU application according to the system requirements.

Integration, On-site at Customer Location (Lakeside): $4,065
· Test communications between RTUs
· Test and Debug as needed
· Obtain signoff and acceptance

Configuration, RTU Application Software (Heber): $4,800
The System Engineer will configure the RTU application according to the system requirements.

Integration, On-site at Customer Location (Heber): $4,665
· Test communications between RTUs
· Test and Debug as needed
· Obtain signoff and acceptance

Configuration, RTU Application Software (Superior): $4,800
The System Engineer will configure the RTU application according to the system requirements.

Integration, On-site at Customer Location (Superior): $2,900
· Test communications between RTUs
· Test and Debug as needed
· Obtain signoff and acceptance

Configuration, RTU Application Software (Sedona): $9,600
The System Engineer will configure the RTU application according to the system requirements.

Integration, On-site at Customer Location (Sedona): $6,275
· Test communications between RTUs
· Test and Debug as needed
· Obtain signoff and acceptance

Configuration, RTU Application Software (Bisbee): $9,600
The System Engineer will configure the RTU application according to the system requirements.

Integration, On-site at Customer Location (Bisbee): $4,665
· Test communications between RTUs
· Test and Debug as needed
· Obtain signoff and acceptance

Configuration, RTU Application Software (Casa Grande): $9,600
The System Engineer will configure the RTU application according to the system requirements.

Lakeside: $ 14,595.00

QTY	Part No	Description	Unit Price	Extended
0006	GD5188	Lo Power Replacement Radio Kits (Lakeside Office, Pine Lakes Tank, Pinetop Lakes Million Gallon Tank, Pinetop Lakes Country Club Tank and Booster, Lower Woodland Well 6, Sandy Forty Nate Well,)	$ 450.00	$ 2,700.00
0006	FRN5907	DPSK BOARD (Lakeside Office, Pine Lakes Tank, Pinetop Lakes Million Gallon Tank, Pinetop Lakes Country Club Tank and Booster, Lower Woodland Well 6, Sandy Forty Nate Well)	$ 180.00	$ 1,080.00
0001	GD2421	Electrical Install	$ 4,250.00	$ 4,250.00
0001	F7563	ACE3600 WITH CDM750 136-174 MHZ (Rim Tank)	$ 1,850.00	$ 1,850.00
0001	V103	ADD: 3 I/O SLOTS FRAME	$ 70.00	$ 70.00
0001	V228	ADD: 50X50 CM PAINTED METAL HOUSING	$ 300.00	$ 300.00
0001	V224	ADD: HOUSING TAMPER SWITCH	$ 40.00	$ 40.00
0001	V480	ADD: 16 DO / DI FET	$ 250.00	$ 250.00
0001	V261	ADD: AC PS 85-264 V WITH BATTERY CHARGER	$ 310.00	$ 310.00
0001	V114	ADD: 6.5 AH BACKUP BATTERY	$ 140.00	$ 140.00
0001	GD3572-16DI/FET	16 DI/DO FET I/O Interface Kit (16DI)	$ 255.00	$ 255.00
0001	F7563	ACE3600 WITH CDM750 136-174 MHZ (Larson Road Well 4)	$ 1,850.00	$ 1,850.00
0001	V103	ADD: 3 I/O SLOTS FRAME	$ 70.00	$ 70.00
0001	V228	ADD: 50X50 CM PAINTED METAL HOUSING	$ 300.00	$ 300.00
0001	V508	ADD: 8 DO EE RELAY 2A	$ 260.00	$ 260.00
0001	V261	ADD: AC PS 85-264 V WITH BATTERY CHARGER	$ 310.00	$ 310.00
0001	V114	ADD: 6.5 AH BACKUP BATTERY	$ 140.00	$ 140.00
0001	GD3572-8DO	8 DO I/O Interface Kit	$ 420.00	$ 420.00

Heber: $ 21,895.00

QTY	Part No	Description	Unit Price	Extended
0001	GD5188	Lo Power Replacement Radio Kits (Timber Lake Tank)	$ 450.00	$ 450.00
0001	GD6266	Radio Reprogramming (Pine Meadows Well)	$ 95.00	$ 95.00
0002	FRN5907	DPSK BOARD (Timber Lake Tank, Pine Meadows Well)	$ 180.00	$ 360.00
0001	GD2421	Electrical Install	$ 6,975.00	$ 6,975.00
0003	F7563	ACE3600 WITH CDM750 136-174 MHZ (Holliday Forest Well, Mogollon Well Site, Zane Grey)	$ 1,850.00	$ 5,550.00

0003	V103	ADD: 3 I/O SLOTS FRAME	$ 70.00	$ 210.00
0003	V228	ADD: 50X50 CM PAINTED METAL HOUSING	$ 300.00	$ 900.00
0003	V508	ADD: 8 DO EE RELAY 2A	$ 260.00	$ 780.00
0003	V261	ADD: AC PS 85-264 V WITH BATTERY CHARGER	$ 310.00	$ 930.00
0003	V114	ADD: 6.5 AH BACKUP BATTERY	$ 140.00	$ 420.00
0003	GD3572-8DO	8 DO I/O Interface Kit	$ 420.00	$ 1,260.00

0001	F7563	ACE3600 WITH CDM750 136-174 MHZ (Heber Office)	$ 1,850.00	$ 1,850.00
0001	V103	ADD: 3 I/O SLOTS FRAME	$ 70.00	$ 70.00
0001	V228	ADD: 50X50 CM PAINTED METAL HOUSING	$ 300.00	$ 300.00
0001	V224	ADD: HOUSING TAMPER SWITCH	$ 40.00	$ 40.00
0001	V480	ADD: 16 DO / DI FET	$ 250.00	$ 250.00
0001	V118	ADD: 4 AO MODULE	$ 495.00	$ 495.00
0001	V261	ADD: AC PS 85-264 V WITH BATTERY CHARGER	$ 310.00	$ 310.00
0001	V114	ADD: 6.5 AH BACKUP BATTERY	$ 140.00	$ 140.00
0001	GD3572-16DI/FET	16 DI/DO FET I/O Interface Kit (16DI)	$ 255.00	$ 255.00
0001	GD3572-4AO	4 AO I/O Interface Kit	$ 255.00	$ 255.00

Superior: $ 7,620.00

QTY	Part No	Description	Unit Price	Extended
0003	GD6266	Radio Reprogramming (Warehouse, Town Tank, Queen Creek Tank)	$ 95.00	$ 285.00
0002	FRN5708D	DPSK BOARD (Warehouse, Queen Creek Tank)	$ 180.00	$ 360.00
0001	FRN5907	DPSK BOARD (Town Tank)	$ 180.00	$ 180.00
0001	GD2421	Electrical Install	$ 1,725.00	$ 1,725.00

0001	F7563	ACE3600 WITH CDM750 136-174 MHZ (Florence Junction Desert Station)	$ 1,850.00	$ 1,850.00
0001	V105	ADD: 5 I/O SLOTS FRAME	$ 195.00	$ 195.00
0001	V228	ADD: 50X50 CM PAINTED METAL HOUSING	$ 300.00	$ 300.00
0001	V224	ADD: HOUSING TAMPER SWITCH	$ 40.00	$ 40.00
0001	V480	ADD: 16 DO / DI FET	$ 250.00	$ 250.00
0001	V616	ADD: 16 DO EE RELAY 2A	$ 330.00	$ 330.00

GLOBAL
DATA SPECIALISTS

1815 W. First Ave., Suite 110, Mesa, AZ 85202
Phone: 480-461-3401 FAX: 480-461-3411

QUOTE: **MDM04063C** **September 27, 2011**

by Duane Moody
480-461-3401, Ext. 223, duane@gbl-data.com
Expires 26-Dec-11

Quoted To: **Mike Loggins, James Wilson, Andy Haas**

Arizona Water
3805 N. Black Canyon Hwy.
Phoenix, AZ 85015
Phone: 602-240-6860
FAX: 602-240-6878

End User: **Arizona Water System, Narrow Band Upgrade**

Description

Global Data Specialists is pleased to provide you with the following Budgetary quotation for the Narrow Banding Upgrade for your Motorola SCADA system.

The quote includes any installation/electrical charges associated with installing any new ACE3600 RTU's and the removal of old equipment.

Engineering services are also included for the reprogramming of the RTU's as needed.

Electrical Installation Scope of Work

A. Furnish control technician to de-terminate all associated field wiring to existing Motorola RTU.
B. Vacuum and wipe down cabinet (where applicable) for new RTU.
C. Install new Motorola RTU, provided by Global Data Specialists.
D. Reconnect existing wiring to new RTU and label.
E. Test signals back to new RTU and verify functionality.
F. Scope is typical for multiple locations.

1. Permitting, Construction, and Demolition
a. All work performed will conform to NEC requirements and requirements of the Authorities having Jurisdiction to assure a code compliant facility.
b. Demolish and dispose of existing equipment and materials in accordance with approved drawings.
c. Furnish trash containers and sanitary facilities so as to provide a clean and sanitary work site.
d. Provide grounding, lighting, power distribution, and instrumentation construction services in accordance with approved plans and specifications.

2. Exclusions and Clarifications
a. Proposal is based on re-using existing wiring and devices.
b. Delays or additional work that are found as a result of existing field conditions, may require a change order.
c. Only work, equipment, and materials explicitly stated in this document are part of this proposal. Electrician accepts the responsibility for the coordination and furnishing of small and incidental equipment and services normally associated with this type of work and for coordination with other disciplines. Any additional significant equipment, materials, or services will be furnished only upon execution of a change order.
d. All other equipment and services not specifically mentioned in this scope of work nor defined above shall be the responsibility of others.
e. This proposal is based upon electrician executing their work in reasonable coordination with other disciplines and entities. Additional electrician costs due to significant or extraordinary delays by others will be grounds for change orders.

3. Taxes and Freight
a. Taxes are not included in this proposal. Upon request, electrician will furnish an estimate of taxes for this work. Owner to furnish electrician with tax exempt information.
b. Unless noted differently, this proposal includes freight cost for delivery of electrician manufactured products to the project site.
c. Unless noted differently, freight cost for equipment shipped FOB manufacturer's facility or FOB port-of-entry is not included in this proposal.

4. Warranty:
a. The warranty period for electrician manufactured electrical and control equipment is 18 months from ship date or 12 months from startup date. During this period, electrician will repair or replace at no cost to owner any failed component or system.
b. Unless noted differently, electrician will honor a manufacturer's warranty for all purchased equipment and will coordinate with the manufacturer to repair or replace the equipment in accordance with the manufacturer's warranty.
c. The electrician warranty covers only electrician furnished equipment and explicitly excludes all costs of lost production, loss of facility availability, and any and all other incidental costs.
d. Electrician will make every effort to honor the warranty in a timely manner. Delays in getting parts or equipment from manufacturers may affect the time to implement repairs or replacement.

If you have any questions or need additional information please let me know.

Also please note that tax and shipping has not been included in this proposal.

Best Regards,

Duane Moody
Sales Manager

TERMS

1. Validity of quotation: This quotation is valid for 30 days, and is based on the information provided to us at the time of quotation. We are not responsible for incorrect or missing information. New information provided to us after the quotation is generated may result in a revised quotation containing additional products or services required.
2. Delivery date: Delivery dates are not guaranteed. Orders are generally delivered in the most expeditious manner possible. A planned delivery schedule will be provided upon order placement. Change orders placed subsequent to the original PO may delay delivery.
3. Order placement: We reserve the right to reject orders that do not contain all quoted products and services except those items indicated in the optional products and services section. For radio programming, please provide radio frequencies at the time of order placement.
4. Invoicing: Orders are invoiced only when they are ready for delivery. The only exception to this policy is when the customer requests early billing.
5. Payment: 100% payment is due within 30 days of the invoice date. Invoices not paid within 30 days are subject to interest at the rate of 1.5% monthly, and your placement on COD basis for future orders. Early pay discount is not available.
6. Payment method: We accept payment by bank transfer (ACH), Check, and Cards (Visa and MasterCard only). Card payments must be processed on the same date that the invoice is generated. Payments made after the invoice date can be made only via ACH or Check.
7. New Customers: Credit application and references required for all new customers. Alternatively, you may pay by one of the payment methods above on the date of order delivery.
8. Shipment FOB: Global Data Specialists, 1815 W 1st Ave, Suite 110, Mesa, AZ. For Dataradio drop-shipped orders shipment FOB is CalAmp, Waseca, MN.
9. Shipping charges: If the quotation includes shipping, handling or delivery fees, it is only an estimate. Actual shipping charges will be determined only at the time of order shipment.
10. Taxes: Applicable sales taxes will be added to all orders unless a valid tax exemption certificate is presented at the time of order placement.
11. Warranty is specific to the policies of each respective OEM (Original Equipment Manufacturer). No additional warranties are expressed or implied. Please contact us for all warranty and non-warranty repairs with the exception of Dataradio. For Dataradio warranty and non-warranty repairs, call 800-992-7774 x6707. Warranty service includes standard depot repair only, and does not include shipping charges or service calls to remove, repair or reinstall equipment. Emergency repair and swap service costs extra and is subject to parts availability. Warranty labor includes direct in-house labor costs only. If warranty service requires our personnel to travel out of our office, additional time and materials charges will be invoiced separately.
12. Order cancellation: The following order cancellation charges shall apply:
    - ..... Prior to 30 days of planned delivery date: 25% of the quoted amount shall be invoiced.
    - ..... Less than 30 days of planned delivery date: 50% of the quoted amount shall be invoiced.
    - ..... After order is ready for delivery: 100% of the quoted amount shall be invoiced.
13. Contractors: At our discretion, we will file a pre-lien when required. Please provide full project name and number, project location, and General Contractor and owner information at the time of order placement.
14. Delinquent pick up: You will be notified when the order is ready for pick up. Orders not picked up within 7 days of notification date are subject to storage fees of $25 per unit per day.

WA 1-4927

ARIZONA WATER COMPANY
WORK AUTHORIZATION

W.A. NUMBER: 1-4927
P.E. NUMBER:
BUDGET ITEM NO.: B-1
SHEET NO.: 1 of 2

SYSTEM: NAVAJO
DIVISION: NAVAJO
TAX CODE: 3293

WORK TO START BY: UPON AUTHORIZATION
WORK TO BE FINISHED BY: WITHIN 60 DAYS

DESCRIPTION OF WORK:

Install approximately 950 LF of 6-inch DIP and relocate 2 services along Green Valley Road and Rim Road. Construct in accordance with attached drawings and/or Arizona Water Company specifications.

FACTORS JUSTIFYING WORK:

APPROVED 2012 BUDGET ITEM ($60,000)
Customers in this area experience low pressures at the meter when fire hydrants are flowed along the highway. This water main installation will extend the pressure zone in this area and help provide adequate system pressures in this area during such events as fire flows.

COST ESTIMATE	
COST OF WORK:	
MATERIAL	0
LABOR	5,750
CONTRACT PORTION	48,573
OVERHEAD	5,976
TOTAL AUTHORIZED EXPENDITURES CHARGEABLE TO THIS W.A.	$ 60,299
FUNDS RECEIVED:	
CONTRIBUTIONS RECEIVED	0
REFUNDABLE ADVANCES RECEIVED	0
TOTAL CONTRIBUTIONS/ADVANCES	0
NET CASH REQUIRED	$ 60,299

COMMENTS:

AUTHORIZATION	DATE
PREPARED BY: Andy Haas 4-16-12	4-20-12
REVIEWED FOR EQUITROW VERIFICATION: Charles Briggs	04-19-2012
REVIEWED BY: Mike Loggins ML 4-26-12	4-23-12
APPROVED BY ENGINEERING: Fredrick Schneider FS 5-1-12	4-23-12
APPROVED BY FINANCE: Joseph Harris	4/24/12
AUTHORIZED BY PRESIDENT: William Garfield	4-25-12

CONSTRUCTION RELEASE:

RELEASED TO CONSTRUCTION
Authorized by FRED SCHNEIDER
Date 5/2/2012

APH

ARIZONA WATER COMPANY

WORK AUTHORIZATION - DETAIL SHEET

W.A. NUMBER: 1-4927
P.E. NUMBER:
BUDGET ITEM NO.: B-1
SHEET NO.: 2 of 2

RETIREMENT PROPERTY UNITS	PLANT PROPERTY ACCOUNT	UNIT DESCRIPTION	QUANTITY	WORK INSTALLED FOR W.A. NUMBER

PROJECT DESCRIPTION:

Install approximately 950 LF of 8-inch DIP and relocate 2 services along Green Valley Road and Rim Road.

	DESCRIPTION	PLANT PROP ACCT	QUANTITY	UNIT COST	TOTAL
CONTRACT WORK	Install 8" DIP w/polywrap, tie-ins, and related fittings	343	950	$ 42.00	$ 39,900
	Install 8" Mega-Lug joint restraints	343	8	50.00	400
	Install 8" vertical realignment	343	2	600.00	1,200
	Tie-over customer service lines	345	2	550.00	1,100
	Install 1" air release valve	343	1	600.00	600
	Asphalt replacement	343	32	20.00	640
	Contracting Tax	343	1	752.63	753
	100% Performance and Payment Bonds	343	1	1,379.77	1,380
	SERVICE CONNECTIONS COMPLETE: DOUBLE-LONG	345			
	SERVICE CONNECTIONS COMPLETE: DOUBLE-SHORT	345			
	SERVICE CONNECTIONS COMPLETE: SINGLE-LONG	345	2	1,300.00	2,600
	SERVICE CONNECTIONS COMPLETE: SINGLE-SHORT	345			
TOTAL CONTRACT WORK					$ 48,573
MATERIALS					
	SERVICE CONNECTIONS: DOUBLE-LONG	345			
	SERVICE CONNECTIONS: DOUBLE-SHORT	345			
	SERVICE CONNECTIONS: SINGLE-LONG	345			
	SERVICE CONNECTIONS: SINGLE-SHORT	345			
	METERS	346			
TOTAL MATERIALS					$ -
LABOR	Engineering Design/Project Management	343	8	$ 50.00	$ 400
	TESTING FEE	343	1	$ 250.00	250
	PERMIT FEE	343	1	2,000.00	2,000
	SURVEY FEE	343	1	1,100.00	1,100
	FIELD INSPECTION	343	40	50.00	2,000
	INSTALL SERVICE CONNECTIONS: DOUBLE-LONG	345			
	INSTALL SERVICE CONNECTIONS: DOUBLE-SHORT	345			
	INSTALL SERVICE CONNECTIONS: SINGLE-LONG	345			
	INSTALL SERVICE CONNECTIONS: SINGLE-SHORT	345			
TOTAL LABOR					$ 5,750
SUBTOTAL - CONTRACT WORK, MATERIALS, AND LABOR					$ 54,323
OVERHEAD					5,976
TOTAL	REFUNDABLE PORTION ☐	NON-REFUNDABLE PORTION ☐		COST ESTIMATE	$ 60,299

AFH

RECORD OF SURVEY

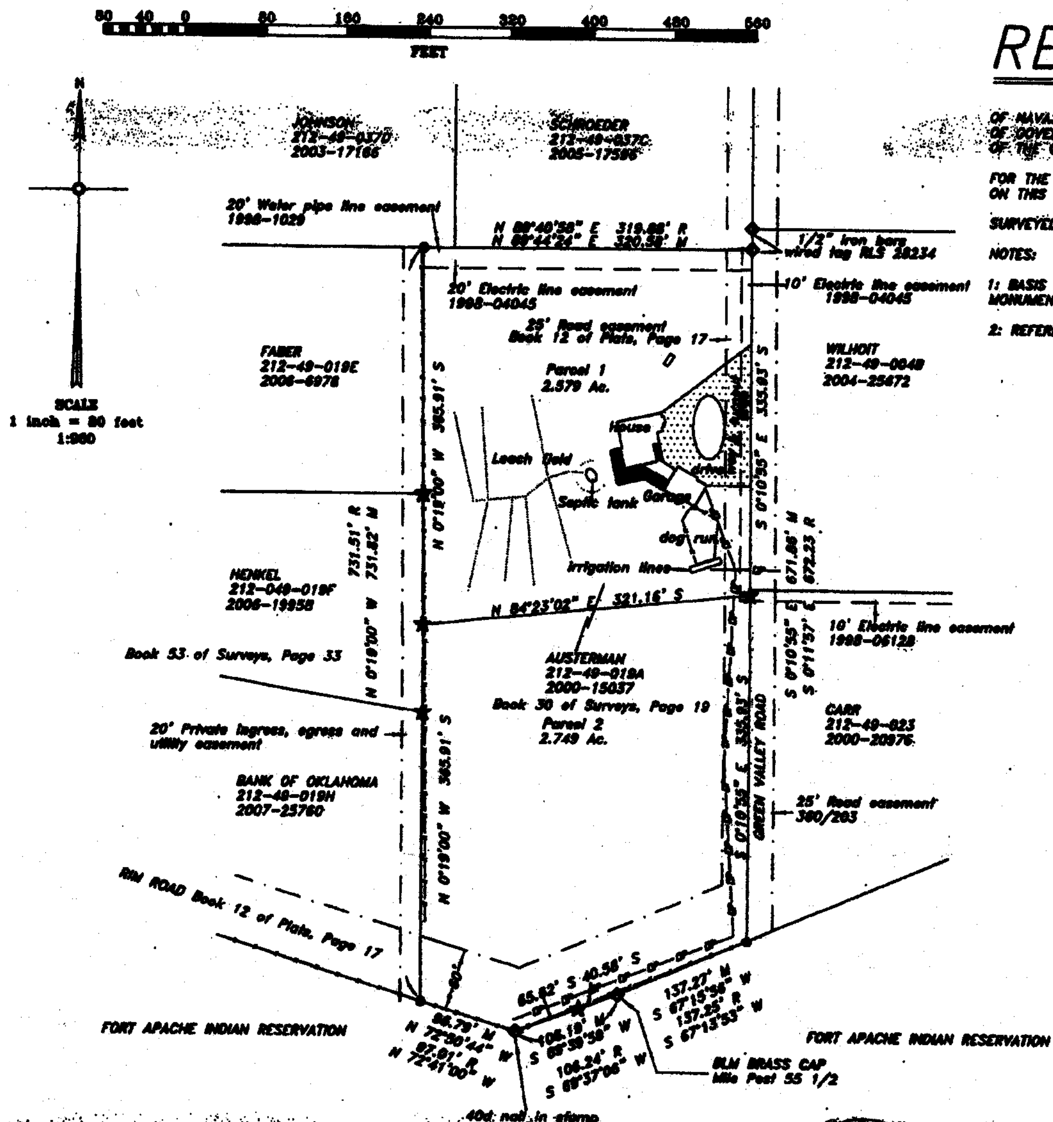

OF NAVAJO COUNTY ASSESSOR'S PARCEL NO. 212-49-019A, ALSO KNOWN AS A PORTION OF GOVERNMENT LOT 2, LOCATED IN SECTION 21, TOWNSHIP [illegible] NORTH, RANGE 22 EAST OF THE GILA AND SALT RIVER MERIDIAN, NAVAJO COUNTY, ARIZONA.

FOR THE PURPOSE OF RETRACINGTHE BOUNDARY AND DIVIDING INTO 2 PARTS AS SHOWN ON THIS SURVEY.

SURVEYED FOR JOHN R. MC KEE AND DARLA AUSTERMAN, OWNERS OF RECORD.

NOTES:

1: BASIS OF BEARINGS: THE WEST LINE OF THE SUBJECT PROPERTY, BASED ON FOUND MONUMENTS IN THE FIELD, ACCORDING TO BOOK 53 OF SURVEYS, PAGE 33.

2: REFERENCES: BOOK 30 OF SURVEYS, PAGE 19
BOOK 53 OF SURVEYS, PAGE 33
BOOK 51 OF SURVEYS, PAGE 62
BOOK 12 OF PLATS, PAGE 17
SITE PLAN DRAWN BY K. CROLL DATED 10/17/2003

FEE# 2010-4810
RECORDED AT THE REQUEST OF:
Steele Geographical
Date 3/26/10 Time 1050
OFFICIAL RECORDS OF NAVAJO COUNTY, ARIZONA
LAURETTE JUSTMAN, RECORDER

LEGEND

- R — Record Bearing and distance
- M — Measured Bearing and distance
- S — Set Bearing and distance
- ● — Found 1/2" iron bar capped RLS 13013
- ★ — Set 1/2" iron bar, cap SGS RLS 28234
- ◇ — Found as noted on plat
- 000-00-000 — Assessor's Parcel Number
- 000/000 — Docket and Page of Conveyance
- 0000-00000 — Fee No. of Conveyance
- —x—x— — Fence
- — — — Electric line and other easements
- — — — Road easements
- —P—P— — Overhead Power line

DWG: [illegible]

CERTIFICATION:

I CERTIFY THAT THIS SURVEY WAS MADE UNDER MY DIRECT SUPERVISION AND THAT ALL THE INFORMATION SHOWN ON THIS PLAT IS TRUE AND CORRECT TO THE BEST OF MY KNOWLEDGE AND BELIEF.

Felix G. Steele 3-25-2010
FELIX G. STEELE, RLS 28234

Felix G. Steele
Expires 9-30-2012

STEELE GEOGRAPHICAL SERVICES
FELIX G. STEELE, RLS
P. O. BOX 1139
LAKESIDE, ARIZONA 85929
928 368-2914

MASTER AGREEMENT
FOR ONGOING CONSULTING AND ENGINEERING SERVICES
BETWEEN ARIZONA WATER COMPANY
AND HANSEN ENGINEERING & LAND SURVEYING, INC.

THIS AGREEMENT is made and entered into on this 25 day of January, 2011, by and between Arizona Water Company, an Arizona corporation, hereinafter referred to as "Client," and Hansen Engineering & Land Surveying, an Arizona corporation hereinafter referred to as "Consultant."

RECITALS:

WHEREAS, Client desires that from time to time Consultant furnish Client certain consulting services;

WHEREAS, Consultant has available and offers to provide personnel and facilities necessary to perform the services desired under this Agreement;

NOW, THEREFORE, Client and Consultant agree as follows:

I. DESCRIPTION OF PROJECT

Services to be provided shall be as described in written task orders made pursuant to and referencing this Agreement; the form of such task order is attached hereto as Exhibit A.

II. SCOPE OF CONSULTANT SERVICES

Consultant agrees to perform those basic services described in separate written task order(s) signed by Client and Consultant (the "Services"). This Agreement provides the terms, obligations and conditions which shall control all work under such task orders(s). The printed terms and conditions, if any, contained on the reverse side(s) of an accepted task order shall not apply to services provided under this Agreement. Unless modified in writing by both parties, duties of Consultant shall not exceed those service specifically described in each task order. Any work authorized by Client prior to the issuance of a written task order must be authorized in writing and any services then performed by Consultant will be presumed to have been completed under the terms of this Agreement.

III. RESPONSIBILITIES OF CLIENT

In addition to payment for the Services performed under this Agreement, Client shall:

1. Assist and cooperate with Consultant in any manner necessary and within its ability to facilitate Consultant's performance under this Agreement.

2. Designate in writing a person to act as Client's representative with respect to this Agreement. Such person shall have complete authority to transmit instructions, receive information, interpret and define Client's policies, make decisions and execute documents on Client's behalf.

3. Furnish Consultant with all technical data in Client's possession including, but not limited to, maps, surveys, drawings, soils or geotechnical reports, and any other information required by or useful to, Consultant in performance of the Services under this Agreement. Consultant shall be entitled to rely upon the information supplied by Client.

4. Notify Consultant of any known or potential health or safety hazards existing at or near the project site.

5. Provide access to and/or obtain permission for Consultant to enter upon all projects whether or not owned by Client, as required to perform and complete the Services.

IV. AMERICANS WITH DISABILITIES ACT

Any other provision of this Agreement to the contrary notwithstanding, unless otherwise specified in the Scope of Services, Client's contractors shall have sole responsibility as between Client and Consultant for compliance with the Americans With Disabilities Act ("ADA") 42 U.S.C. 12101 et. Seq. and the related regulations. Consultant shall provide client with applicable ADA criteria which maybe required.

V. AUTHORIZATION AND COMPLETION

In signing this Agreement, Client grants Consultant specific authorization to proceed with work as described in Scope of Work and under the terms of this Agreement.

VI. COMPENSATION

For the Services described in each task order, Client agrees to pay, and Consultant agrees to accept the total compensation in accordance with compensation terms included in the task order. Where Consultant has provided Client with a breakdown of the total compensation into subtasks, such breakdowns are estimates only. Consultant may re-allocate compensation between tasks, provided total compensation is not exceeded without the written approval of Client. Time charges shall be in accordance with the Hourly Rate Schedule contained in Exhibit B. The rate schedule may be revised annually by mutual written Agreement. Annual revisions to the Hourly Rate Schedule shall be submitted prior to the date that they take effect. Compensation shall be billed monthly in summary form. Payment to Consultant is due upon presentation of invoice to Client.

As long as Consultant has not defaulted under this Agreement, Client shall pay Consultant within 30 days of the date of Consultant's invoices for services performed and reimbursable expenses incurred under this Agreement. Client may contest any portion of any such invoice, amounts questioned or contested shall be identified and notice given to Consultant within 15 days of the date of the invoice. Any portion of any invoice not contested shall be deemed to be accepted and approved for payment and shall be paid to Consultant within 30 days of the date of the invoice.

The Consultant agrees to cooperate with Client in a mutual effort to resolve promptly any contested portions of the Consultant's invoices.

In the event any uncontested portions of any invoice are not paid within 30 days of the date of Consultant's invoice, interest on the unpaid balance shall accrue beginning with the 31st day at the maximum interest rate permitted by law, and Consultant shall have the right to suspend work per Article XV, Suspension of Work.

VII. RESPONSIBILITY OF CONSULTANT

A. Standard of Care Professional Services

Subject to the limitations inherent in the agreed scope of work as to the degree of care, amount of time and expenses to be incurred, and subject to any other limitations contained in this Agreement, Consultant shall perform its Services in accordance with generally accepted standards and practices customarily utilized by competent engineering firms in effect at the time Consultant's Services are rendered. Consultant does not expressly or impliedly warrant or guarantee its Services.

B. Reliance upon Information Provided by Others

If Consultant's performance of services hereunder requires Consultant to rely on information provided by other parties (excepting Consultant's subcontractors), Consultant shall not independently verify the validity, completeness, or accuracy of such information unless otherwise expressly engaged to do so in writing by Client.

C. Consultant's Opinion of Costs

Client acknowledges that construction cost estimates, financial analyses and feasibility projections are subject to many influences including, but not limited to, price of labor and materials, unknown or latent conditions of existing equipment or structures, and time or quality of performance by third parties. Client acknowledges that such influences may not be precisely forecasted and are beyond the control of Consultant and that actual costs incurred may vary substantially from the estimates prepared by Consultant. Consultant does not warrant or guarantee the accuracy of construction or development cost estimates.

D. Construction Phase Services

1. Consultant's Activities at Construction Site. The presence of Consultant's personnel at a construction site, whether as on-site representative, resident engineer, construction manager, or otherwise, does not make Consultant responsible for those duties that belong to Client and/or construction contractors or others, and does not relieve construction contractors or others of their obligations, duties, and responsibilities, including, but not limited to, construction methods, means, techniques, sequences, and procedures necessary for completing all portions of the construction work in accordance with the contract documents, any health or safety programs and precautions required by such construction work, and any compliance with applicable laws and regulations. Any inspection or observation of the contractor's work is solely for the purpose of determining that the work is generally proceeding in conformance with the intent of the project specifications and

contract documents. Except for its own Contractors, Consultant makes no warranty or guarantee with respect to the performance of a contractor. Consultant has no authority to exercise control over any construction contractor in connection with their work or health or safety programs and precautions. Except to protect Consultant's own personnel and except as may be expressly required elsewhere in the scope of services, Consultant has no duty to inspect, observe, correct, or report on health or safety deficiencies of the construction contractor.

2. Shop Drawing and Submittal Review. If required by Consultant's Scope of Services, Consultant shall review shop drawings or other contractor submittals for general conformance with the intent of the contract documents. Except for its own Contractors, Consultant shall not be required to verify dimensions, to engineer contractor's shop drawings or submittals, nor to coordinate shop drawings or other submittals with other shop drawings or submittals provided by contractor.

3. Record Drawings. Record drawings, if required, will be prepared, in part, on the basis of information compiled and furnished by others, and may not always represent the exact location, type of various components, or exact manner in which the Project was finally constructed. Except for its own Contractors, Consultant is not responsible for any errors or omissions in the information from others that are incorporated into the record drawings.

VIII. ASSIGNMENT OF TASKS TO AFFILIATES

If the authorized scope of work requires professional services to be performed in a jurisdiction in which Consultant renders professional services solely through a locally registered engineering affiliate for purposed of compliance with professional licensing requirements in that jurisdiction, Consultant may, in its discretion, upon notice to Client, assign its contractual rights and obligations with respect to such services to such locally registered engineering affiliate.

IX. ASBESTOS / HAZARDOUS MATERIALS

Consultant and Consultant's subcontractors shall have no responsibility for the discovery, handling, removal, or disposal of or exposure of persons to asbestos or hazardous or toxic materials that are present in any form at the Project site. Professional services related to or in any way connected with the investigation, detection, abatement, replacement, use, specification, or removal of products, materials, or processes containing asbestos or hazardous or toxic materials are beyond the scope of this Agreement. Client shall be solely responsible for notifying all appropriate governmental agencies, including the potentially effected public, of the existence of any hazardous or toxic materials located on or at the project site any any time.

In the event Consultant encounters asbestos or hazardous materials at the jobsite, Consultant may, at its option and without liability for damages, suspend the performance of services on the Project until such time as Client and Consultant mutually agree on an amendment to this Agreement to address the issue, or Client retains another specialist consultant or contractor to identify, classify, abate and/or remove the asbestos and/or hazardous materials.

X. CONSULTANT'S WORK PRODUCT

A. Scope

Consultant's work product which is prepared solely for the purposes of this Agreement, including, but not limited to, drawings, test results, recommendations and technical specifications, whether in hard copy or electronic form, shall become the property of Client when Consultant has been fully compensated as set forth herein. Consultant may keep copies of all work product(s) for its records.

Consultant and Client recognize that Consultant's work product submitted in performance of this Agreement is intended only for the project described in this Agreement. Client's alteration of Consultant's work product or its use by Client for any other purpose shall be at Client's sole risk, and Client shall hold harmless and indemnify Consultant against all losses, damages, costs and expense, including attorneys' fees, arising out of or related to any such alteration or unauthorized use.

B. Electronic Copies

If requested, solely as an aid and accommodation to Client, Consultant may provide copies of its work product documents in computer-readable media ("electronic copies," "CADD"). These documents will duplicate the documents provided as work product, but will not bear the signature and professional seals of the registered professionals responsible for the work. Client is cautioned that the accuracy of electronic copies and CADD documents may be compromised by electronic media degradation, errors in format translation, file corruption, printing errors and incompatibilities, operator inexperience and file modification. Consultant will maintain the original copy, which shall serve as the official, archived record of the electronic and CADD documents. Client agrees to hold harmless, indemnify and defend Consultant from any claims arising out of or relating to any change or alteration of electronic copies and CADD documents authorized by the Client, Client's personnel, or Client's Contractor's.

XI. INDEMNIFICATION

A. Indemnification of Client

Consultant agrees to indemnify and hold Client harmless from and against any liability to the extent arising out of the negligent errors or negligent omissions of Consultant, its agents, employees, or representatives, in the performance of Consultant's duties under this Agreement.

B. Consequential Damages.

Regardless of any other term of this Agreement, in no event shall either party be responsible or liable to the other for any incidental, consequential, or other indirect damages.

XII. CONSULTANT'S INSURANCE

Consultant shall procure and maintain the following minimum insurance:

1. Commercial general liability insurance, including personal injury liability, blanket contractual liability and broad-form property damage liability coverage. The combined single limit for bodily injury and property damage shall be not less than $1,000,000.

2. Automobile bodily injury and property damage liability insurance covering owned, non-owned, rented, and hired cars. The combined single limit for bodily injury and property damage shall be not less than $1,000,000.

3. Statutory workers' compensation and employer's liability insurance as required by state law.

4. Professional liability insurance. The policy limit shall be not less than $1,000,000.

Client shall be named as additional insured on polices 1 and 2 above. Upon execution of this Agreement, Consultant will provide a certificate of insurance to Client. Consultant will keep the certificate current at all times while this Agreement is in effect. The Consultant will provide a 30-day written notice in the event the above policies are cancelled.

XIII. CONFIDENTIALITY

Consultant agrees it will maintain the confidentiality of all material it receives from Client which Client has clearly identified as "Confidential" and will not disclose, distribute, or publish to any third party such confidential information without the prior permission of Client. Notwithstanding the foregoing, Consultant shall have no confidentiality obligation with respect to information that:

1) becomes generally available to the public other than as a result of disclosure by Consultant or its agents or employees;

2) was available to Consultant prior to its disclosure by Client;

3) becomes available to Consultant from a third party who is not, to the knowledge of Consultant, bound to retain such information in confidence.

In the event Consultant is compelled by subpoena, court order, or administrative order to disclose any confidential information, Consultant shall promptly notify Client and shall cooperate with Client prior to disclosure so that Client may take necessary actions to protect such confidential information from disclosure.

XIV. SUBCONTRACTS

Consultant shall be entitled, to the extent determined appropriate by Consultant, to subcontract any portion of the services to be performed under this Agreement.

XV. SUSPENSION OF WORK

Work under this Agreement may be suspended as follows:

1. By Client. By written notice to Consultant, Client may suspend all or a portion of the Work under this Agreement if unforeseen circumstances beyond Client's control make normal progress of the Work impracticable. Consultant shall be compensated for its reasonable expenses resulting from such suspension including mobilization and demobilization. If suspension is greater than 90 days, then Consultant shall have the right to terminate this Agreement in accordance with Article IVI, Termination of Work.

2. By Consultant. By written notice to Client, Consultant may suspend the Work if Consultant reasonably determines that working conditions at the Site (outside Consultant's control) are unsafe, or in violation of applicable laws, or in the event Client has not made timely payment in accordance with Article VI, Compensation, or for other circumstances not caused by Consultant that are interfering with the normal progress of the Work. Consultant's suspension of Work hereunder shall be without prejudice to any other remedy of Consultant at law or equity.

XVI. TERMINATION OF WORK

A. This Agreement may be terminated by Client as follows: (1) for its convenience on 15 days' notice to Consultant, or (2) for cause, if Consultant materially breaches this Agreement through no fault of Client and Consultant neither cures such material breach nor makes reasonable progress toward cure within 15 days after Client has given written notice of the alleged breach to Consultant.

B. This Agreement may be terminated by Consultant as follows: (1) for cause, if Client materially breaches this Agreement through no fault of Consultant and Client neither cures such material breach nor makes reasonable progress toward cure within 15 days after Consultant has given written notice of the alleged breach to Client, or (2) upon five days' notice if work under this Agreement has been suspended by either Client or Consultant for more than 90 days in the aggregate.

C. Payment upon Termination

In the event of termination, Consultant shall perform such additional work as is reasonably necessary for the orderly closing of the Work. Consultant shall be compensated for all work performed prior to the effective date of termination, plus work required for the orderly closing of the Work, including: (1) authorized work performed up to the termination date plus termination expenses, including all labor and expenses, at Consultant's standard billing rates, directly attributable to termination; (2) all efforts necessary to document the work completed or in progress; and (3) any termination reports requested by Client.

XVII. ASSIGNMENT

This Agreement is binding on the heirs, successors, and assigns of the parties hereto. Except as otherwise set forth under Article VIII, Assignment of Tasks to Affiliates, this Agreement may not be assigned by Client or Consultant without prior, written consent of the other.

XVIII. NO BENEFIT FOR THIRD PARTIES

The services to be performed by Consultant are intended solely for the benefit of Client, and no benefit is conferred on, nor contractual relationship established with any person or entity not a party to this Agreement. No such person or entity shall be entitled to rely on Consultant's services, opinions, recommendations, plans, or specifications without the express written consent of Consultant. No right to assert a claim against the Consultant, its officers, employees, agents, or consultants shall accrue to the construction Contractor or to any subcontractor, supplier, manufacturer, lender, insurer, surety, or any other third party as a result of this Agreement or the performance or nonperformance of the Consultant's services hereunder.

XIX. FORCE MAJEURE

Consultant shall not be responsible for delays caused by circumstances beyond their reasonable control, including, but not limited to (1) strikes, lockouts, work slowdowns or stoppages, or accidents, (2) acts of God, (3) failure of Client to furnish timely information or to approve or disapprove Consultant's instruments of service promptly, and (4) faulty performance or nonperformance by Client, Client's independent consultants or contractors, or governmental agencies. Consultant shall not be liable for damages arising out of any such delay, nor shall the Consultant or Client be deemed to be in breach of this Agreement as a result thereof.

XX. INTEGRATION

This Agreement represents the entire understanding of Client and Consultant as to those matters contained herein. No prior oral or written understanding shall be of any force or effect with respect to those matters covered herein. This Agreement may not be modified or altered except in writing signed by both parties. Any purchase order issued by Client, whether or not signed by Consultant, and any terms and conditions contained in such purchase order which are inconsistent with this Agreement shall be of no force and effect.

XXI. SEVERABILITY

If any part of this Agreement is found unenforceable under applicable laws, such part shall be inoperative, null, and void insofar as it conflicts with said laws, but the remainder of this Agreement shall be in full force and effect.

XXI. CHOICE OF LAW/JURISDICTION

This Agreement shall be administered and interpreted under the laws of the State of Arizona Jurisdiction of litigation arising from the Agreement shall be in the State of Arizona.

XXIII. ATTORNEYS' FEES

In the event either party commences legal proceedings against the other, then the prevailing party shall, in addition to any other recovery, be entitled to recover its reasonable attorneys' fees and all other costs of such proceeding.

XXIV. NOTICES

All notices required under this Agreement shall be delivered by personal delivery or first class mail and shall be addressed to the following persons:

Mr. Taylor Hansen
President
Hansen Engineering & Land Surveying, Inc.
115 S. Main Street
Coolidge, Arizona 85128

Mr. Fred Schneider
Vice President - Engineering
Arizona Water Company
P.O. Box 29006
Phoenix, Arizona 85038

Notice shall be effective upon delivery to the above addresses. Project related instructions may be delivered by electronic mail. Either party may notify the other that a new person has been designated by it to receive notices, or that the address for the delivery of such notices has been changed, provided that, until such time as the other party receives such notice in the manner provided for herein, any notice addressed to the previously-designated person and/or delivered to the previously-designated address shall be effective.

XXV AUTHORIZATION

The persons executing this Agreement on behalf of the parties hereto represent and warrant that the parties have all legal authority and authorization necessary to enter into this Agreement, and that such persons have been duly authorized to execute this Agreement on their behalf.

IN WITNESS WHEREOF, the parties hereto have executed this Agreement as of the date first above written.

HANSEN ENGINEERING & SURVEYING, INC.

Signature Taylor Hansen

Printed Name Taylor Hansen

Title President

Federal Tax ID number: 37-1519309

ARIZONA WATER COMPANY

Signature

Printed Name Mr. Fred Schneider

Title Vice-President - Engineering

AGREEMENT FOR GENERAL ENGINEERING SERVICES BETWEEN ARIZONA WATER COMPANY AND HANSEN LAND SURVEYING, INC.

TASK ORDER AUTHORIZATION

Hansen Land Surveying Project Number 120009a

AWC Project Number WA 1-4927 Green Valley Road Survey

Arizona Water Company
P. O. Box 29006
Phoenix, Arizona 85038-9006

Effective Date of Authorization APRIL 30th, 2012

Upon execution of this Task Order, and effective as of the date shown above, the parties agree that Hansen Land Surveying shall perform the following services:

SCOPE OF SERVICES

As per the attached "Agreement for Professional Services" Stake Easement for project #120009, located in a portion of the NE/4 of Sec 21, T9N, R22E in Lakeside, AZ Exhibit A.

COMPENSATION

As per the attached "Agreement for Professional Services" dated April 12, 2012

GENERAL TERMS AND CONDITIONS

Hansen Land Surveying's services shall be governed by the Master Agreement dated January 25, 2011 together with this Task Order and any Exhibits attached hereto.

The services performed within this Task Order shall commence on or about April 30, 2012, and shall be complete on or before May 14, 2012.

Hansen Land Surveying's Representative in charge of the services is Jeremy Dalmacio, who may be contacted at 520-723-3261 and jeremyd@hansensurvey.com. Client's Representative in charge of the services is Charles Briggs, who may be contacted at 602-240-6860 and cbriggs@azwater.com.

Arizona Water Company	HANSEN LAND SURVEY
By C B	By
Title REAL PROPERTY SPECIALIST	Title RLS PROJECT MANAGER
Date APRIL 30th, 2012	Date 4/20/12

EXHIBIT A

Agreement For Professional Services

HANSEN
ENGINEERING & SURVEYING
115 South Main Street
Coolidge, AZ 85128
520-723-5581 520-723-5739 (f)
www.hansensurvey.com

Date: 4/18/12

Owner/Client: Arizona Water

Address: PO Box 29006
Phoenix, AZ 85038-9006

Phone: 520-836-8785 Fax:

Contact: Charles Briggs Alt:

Email: cbriggs@azwater.com

Order Taken by: st

Estimated Completion Date:

Contract Amount or T&M: $1,100.00

Recording Fee Per Page: 18"x24"=$28 24"x36"=$34

Standard Payment Terms:
- 20% Due Prior to Start
- Balance Due Upon Completion of Survey &/or Preliminary MLD
- Interest Charged after 30 Day Grace Period

SPECIAL NOTES *→ A signed proposal commissions a project with or without a deposit. → Only a written cancellation, with confirmation of receipt, will terminate this commitment. → Surveys will not be given out until account is paid in full. → Late Fees, Finance Charges &/or Interest will begin accruing immediately upon completion of project until account is paid in full. →T&M Rates: 2 Man Crew $130/Hr / 3 Man Crew $155/Hr / Auto Cad 2 $65.00 / Auto Cad 1 $55.00 / Engineering Tech 1 $55/Hr / Engineering Tech 2 $65/Hr / Land Surveyor $105/Hr / Engineer $105/Hr*

SCOPE OF SERVICE

Scope of Work: Stake Easements APN#: Project #120809

Legal Description: A portion of the NE/4 of Sec 21, T9N, R22E

Project Address/Location: Greenvalley Rd. Lakeside Arizona

Remarks: Stake easements on project # 120809.

The above-described services to be performed in a professional manner within a reasonable time commensurate with good Surveying and Engineering Practices. Original drawings and ideas contained therein remain the property of Hansen Engineering & Surveying. Copies of plans or drawings will be furnished as necessary and appropriate for the Client's use for a nominal price during the extent of this contract.

By:_____

Taylor Hansen, R.L.S., President

The undersigned person hereby acknowledges: (1) That he/she is the owner and/or has the right to contract for materials and services to be provided on and for the above designed premises, (2) That, when the work is complete as described above, he/she will promptly pay Hansen Engineering & Surveying , LLC or cause to be paid, the sums stipulated by it as fees for the above designated work and/or for any additional work or materials provided by it, subject to authorization granted subsequent hereto, (3) That he/she will, in the event that the services of an attorney and/or collection agency are required to collect any sums due hereunder, whether suit is brought or not, pay such attorney/collection agency Fees. By signing below, the signer hereby absolutely personally guarantees the payment of all monies that may become due as a result or consequence of the above Agreement for Professional Services for and on behalf of the above referenced Client.

Client Signature Date If signing on behalf of another party, List Client Print or Type Signer's Name

AGREEMENT FOR GENERAL ENGINEERING SERVICES BETWEEN ARIZONA WATER COMPANY AND HANSEN LAND SURVEYING, INC.

TASK ORDER AUTHORIZATION

Hansen Land Surveying Project Number 1200096

AWC Project Number WA 1-4927 Green Valley Road AWC Easement Staking

Arizona Water Company
P. O. Box 29006
Phoenix, Arizona 85038-9006

Effective Date of Authorization MAY 14th, 2012

Upon execution of this Task Order, and effective as of the date shown above, the parties agree that Hansen Land Surveying shall perform the following services:

SCOPE OF SERVICES

As per the attached " Exhibit A.

COMPENSATION

As per the attached "Exhibit A" dated May 14, 2012

GENERAL TERMS AND CONDITIONS

Hansen Land Surveying's services shall be governed by the Master Agreement dated January 25, 2011 together with this Task Order and any Exhibits attached hereto.

The services performed within this Task Order shall commence on or about May 16, 2012, and shall be complete on or before May 16, 2012

Hansen Land Surveying's Representative in charge of the services is Jeremy Dalmacio, who may be contacted at 520-723-3261 and jeremyd@hansensurvey.com. Client's Representative in charge of the services is Charles Briggs, who may be contacted at 602-240-6860 and cbriggs@azwater.com.

Arizona Water Company	HANSEN LAND SURVEY
By [signature]	By [signature]
Title REAL PROPERTY SPECIALIST	Title RLS Project Manager
Date MAY 14th, 2012	Date 5/15/12

Exhibit A

Scope of Services

May 14th, 2012

Stake four (4) Arizona Water Company Easements along Green Valley Road in such a manner not to be confused with the roadway easements already staked.

Easement 1 - Samuel J. and Melissa A. Odom, AWC# LK-2480

Easement 2 - John R. McKee and Darla Austerman, AWC# LK-2486

Easement 3 - John Carr, AWC# LK-2487

Easement 4 - Jim and Sherrill Wilhoit, AWC# LK-2489

Cost not to exceed $1,000.00

Hansen Land Surveying, Inc.
Item Price List
January 20, 2011

EXHIBIT B

Item	Description	Price
1MC	1-Man Survey Crew. .	105.00
2MC	2-Man Survey Crew....	130.00
3MC	3-Man Survey Crew....	155.00
AC1	AutoCad Tech....	55.00
AC2	AutoCad Sr. Tech....	65.00
EN	Engineer....	105.00
ET1	Engineering Tech 1....	60.00
ET2	Engineering Tech 2....	75.00
GO	General Office...	40.00
JP	Job Prep....	40.00
LS	Land Surveyor....	105.00
MGMT	Principal/Management....	140.00
PM	Project Manager...	105.00
SFT	Sr. Field Tech....	80.00
SM	Survey Manager....	100.00
SR EN	Senior Engineer	155.00

00616949

2012-01339
Page 1 of 3
Requested By: Arizona Water Company
Navajo County Recorder - Lauretta Justman
01-30-2012 10:42 AM Recording Fee $10.00

Recording Requested By:
ARIZONA WATER COMPANY

When Recorded, Mail To:
Arizona Water Company
P.O. Box 29006
Phoenix, Arizona 85038-9006

ABOVE SPACE RESERVED FOR COUNTY RECORDER

GRANT OF EASEMENT

SAMUEL J. ODOM and MELISSA A. ODOM, husband and wife (hereinafter referred to as "Grantor"), for a valuable consideration, receipt of which is hereby acknowledged, grants to ARIZONA WATER COMPANY, an Arizona corporation, its successors and assigns (hereinafter referred to as "Grantee"), a perpetual non-exclusive easement and the right to excavate for, install, operate, maintain, remove or replace one or more pipelines, including valves, hydrants, meters and other equipment and appurtenances, for the purpose of conveying water for domestic use, fire protection and irrigation, ingress and egress, or other purposes, and to use the same for such purposes, on that certain real property described in Fee 2010-20828 in the County of Navajo, State of Arizona, said real property described as follows:

A parcel of land located in Government Lot 2 of Section 21, Township 9 North, Range 22 East of the Gila and Salt River Base and Meridian, Navajo County, Arizona, and more particularly described as follows:

Parcel 1, according to Record of Survey recorded in Fee No. 2010-4810, records of Navajo County, Arizona

EASEMENT DESCRIPTION

The East 10.00 feet above-described parcel of land.

GRANTOR agrees for itself, its successors and assigns that no building or other structure will be constructed, or other obstruction placed, over this easement or over any facilities of Grantee; provided, however, that with Grantee's prior consent, Grantor may build over this easement after first paying to Grantee the cost of relocating the facilities and granting an alternative easement satisfactory to Grantee and without additional cost to Grantee.

GRANTEE, its agents and employees, shall at all times have the right of unobstructed ingress and egress to said real property, and free access to said pipelines, equipment and appurtenances for the purpose of maintaining, operating, removing or replacing same including the right to trim or remove any trees or shrubs that in Grantee's judgment interfere with the rights herein granted. Grantee agrees to use reasonable care to avoid damage to the property of Grantor in the exercise of this easement.

LK-2480

The individuals signing this Grant of Easement warrant that they have read this Grant of Easement, have the authority to execute this Grant of Easement, and will furnish such evidence reasonably necessary to validate such authority upon request.

EXECUTED this 23 **day of** Sept, **year of** 2011.

Samuel J. Odom

Melissa A. Odom

STATE OF AZ)
) ss
COUNTY OF Navajo)

This foregoing instrument was acknowledged before me this 23 **day of** Sept **in the year** 2011 **by Samuel J. Odom and Melissa A. Odom, husband and wife.**

My Commission Expires: 2-28-14

Notary Public

DALE R. HANSEN
NOTARY PUBLIC - ARIZONA
NAVAJO COUNTY
My Commission Expires
February 28, 2014

LK-2480

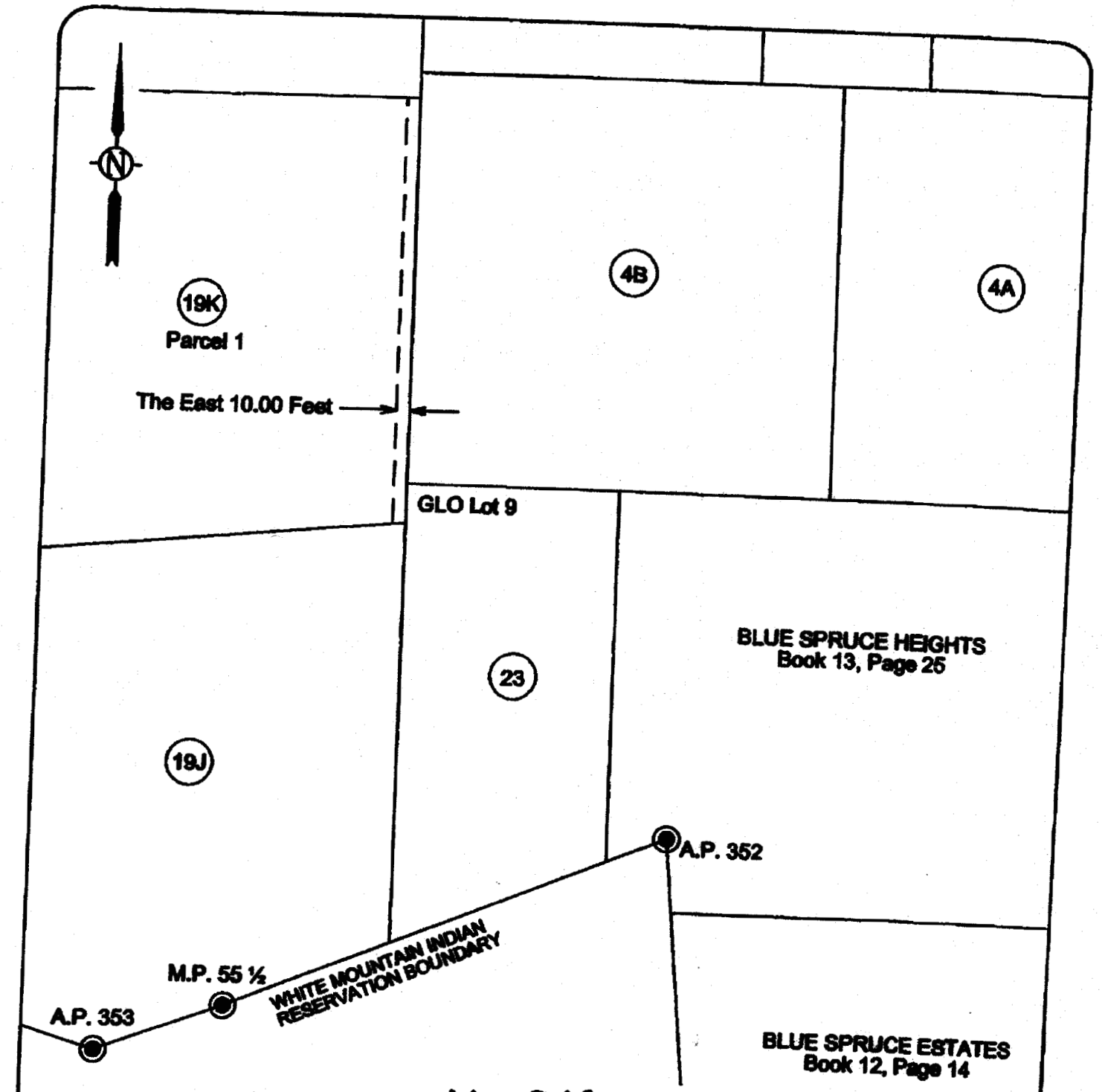

LK-2480

Reference Documents:

>R.O.S. 30-19
>Plat 12-17
>R.O.S. 2010-4810
>G.L.O. Partial Resurvey
11/4/1918 #00341
>Patent 02-72-0042
Dkt. 356, Pg. 349

ARIZONA WATER COMPANY

EASEMENT LOCATION DRAWING

Easement Location: Northeast quarter Section 21, T.9N.,R.22E.		
Assessors Parcel: 212-49-019K		
Property Owner: Samuel J. and Melissa A. Odom		
Date: 09.15.2011	Scale: 1"= 100'	Drawn by: CS

00616948

2012-01338
Page 1 of 3
Requested By: Arizona Water Company
Navajo County Recorder - Lauretta Justman
01-30-2012 10:41 AM Recording Fee $10.00

Recording Requested By:
ARIZONA WATER COMPANY

When Recorded, Mail To:
Arizona Water Company
P.O. Box 29006
Phoenix, Arizona 85038-9006

ABOVE SPACE RESERVED FOR COUNTY RECORDER

GRANT OF EASEMENT

JOHN R. MCKEE and DARLA AUSTERMAN, husband and wife (hereinafter referred to as "Grantor"), for a valuable consideration, receipt of which is hereby acknowledged, grants to ARIZONA WATER COMPANY, an Arizona corporation, its successors and assigns (hereinafter referred to as "Grantee"), a perpetual non-exclusive easement and the right to excavate for, install, operate, maintain, remove or replace one or more pipelines, including valves, hydrants, meters and other equipment and appurtenances, for the purpose of conveying water for domestic use, fire protection and irrigation, ingress and egress, or other purposes, and to use the same for such purposes, on that certain real property described in Fee 2000-15036 in the County of Navajo, State of Arizona, said real property described as follows:

A parcel of land located in Government Lot 2 of Section 21, Township 9 North, Range 22 East of the Gila and Salt River Base and Meridian, Navajo County, Arizona, and more particularly described as follows:

Parcel 2, according to Record of Survey recorded in Fee No. 2010-4810, records of Navajo County, Arizona

EASEMENT DESCRIPTION

The East 10.00 feet above-described parcel of land.

GRANTOR agrees for itself, its successors and assigns that no building or other structure will be constructed, or other obstruction placed, over this easement or over any facilities of Grantee; provided, however, that with Grantee's prior consent, Grantor may build over this easement after first paying to Grantee the cost of relocating the facilities and granting an alternative easement satisfactory to Grantee and without additional cost to Grantee.

GRANTEE, its agents and employees, shall at all times have the right of unobstructed ingress and egress to said real property, and free access to said pipelines, equipment and appurtenances for the purpose of maintaining, operating, removing or replacing same including the right to trim or remove any trees or shrubs that in Grantee's judgment interfere with the rights herein granted. Grantee agrees to use reasonable care to avoid damage to the property of Grantor in the exercise of this easement.

LK-2486

The individuals signing this Grant of Easement warrant that they have read this Grant of Easement, have the authority to execute this Grant of Easement, and will furnish such evidence reasonably necessary to validate such authority upon request.

EXECUTED this 5 **day of** January, **year of** 2012.

John R. McKee

Darla Austerman

STATE OF Idaho)
) ss
COUNTY OF Nezperce)

This foregoing instrument was acknowledged before me this 5th **day of** January **in the year** 2012 **by John R. McKee and Darla Austerman, husband and wife.**

My Commission Expires: 1/16/15

Notary Public

LK-2486

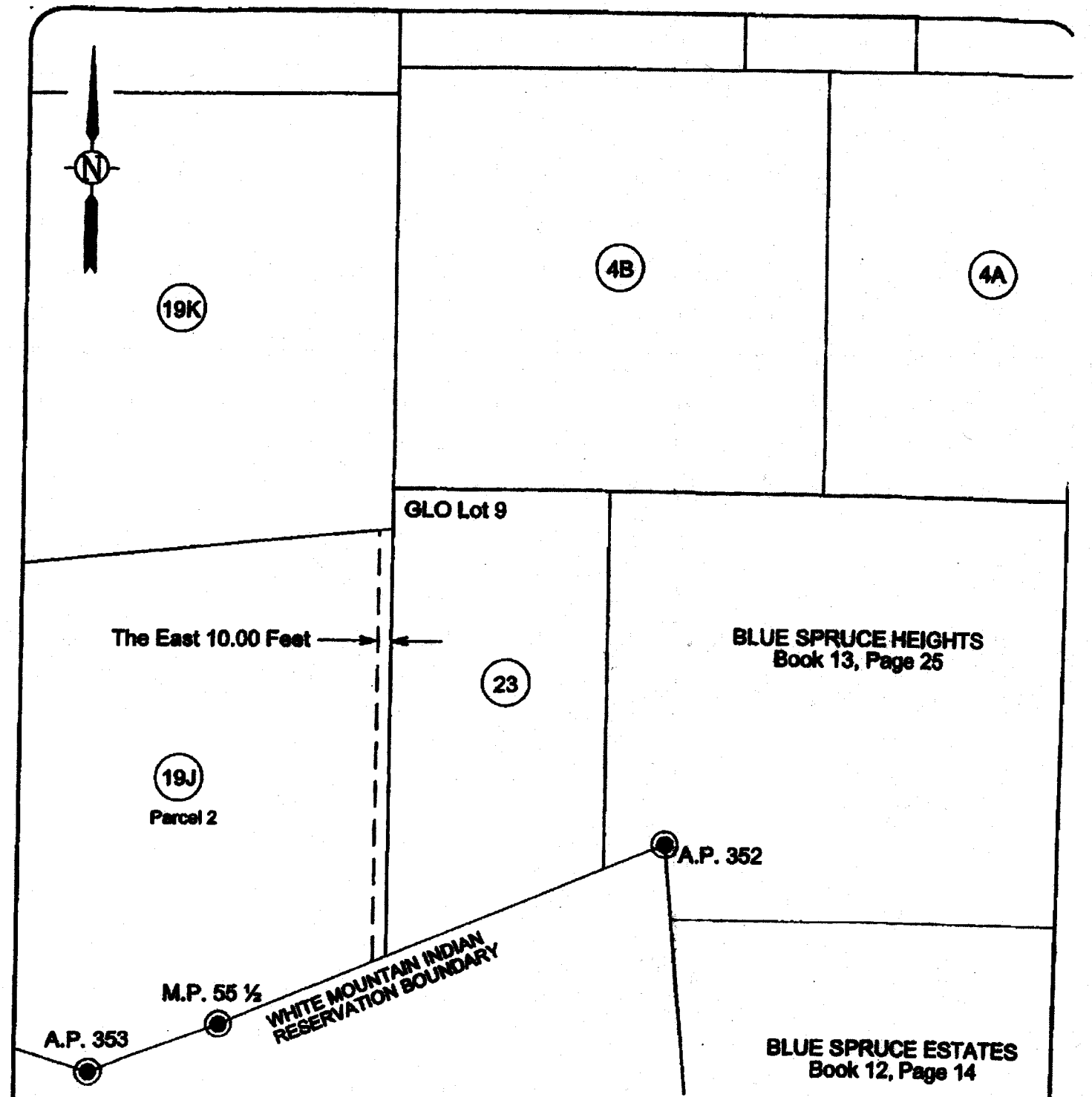

LK-2486

Reference Documents:

>R.O.S. 30-19
>Plat 12-17
>R.O.S. 2010-4810
>G.L.O. Partial Resurvey 11/4/1918 #00341
>Patent 02-72-0042 Dkt. 356, Pg. 349

ARIZONA WATER COMPANY

EASEMENT LOCATION DRAWING

Easement Location: Northeast quarter Section 21, T.9N.,R.22E.		
Assessors Parcel: 212-49-019J		
Property Owner: John R. McKee and Darla Ausserman		
Date: 07.18.2011	Scale: 1"= 100'	Drawn By: CB

2012-04100
Page 1 of 3
Requested By: Arizona Water Company
Navajo County Recorder - Lauretta Justman
03-19-2012 11:29 AM Recording Fee $10.00

Recording Requested By:
ARIZONA WATER COMPANY

When Recorded, Mail To:
Arizona Water Company
P.O. Box 29006
Phoenix, Arizona 85038-9006

ABOVE SPACE RESERVED FOR COUNTY RECORDER

GRANT OF EASEMENT

JOHN L. CARR, TRUSTEE and PEGGY A. CARR, TRUSTEE OR THEIR SUCCESSORS IN TRUST UNDER THE JOHN L. CARR AND PEGGY A CARR LIVING TRUST DATED JUNE 29, 2000 (hereinafter referred to as "Grantor"), for a valuable consideration, receipt of which is hereby acknowledged, grants to ARIZONA WATER COMPANY, an Arizona corporation, its successors and assigns (hereinafter referred to as "Grantee"), a perpetual non-exclusive easement and the right to excavate for, install, operate, maintain, remove or replace one or more pipelines, including valves, hydrants, meters and other equipment and appurtenances, for the purpose of conveying water for domestic use, fire protection and irrigation, ingress and egress, or other purposes, and to use the same for such purposes, on that certain real property described in Fee 2000-20977 in the County of Navajo, State of Arizona, said real property described as follows:

The West 165.61 feet of the North half of the North half of Government Lot 9, Section 21, Township 9 North, Range 22 East of the Gila and Salt River Base and Meridian, Navajo County, Arizona.

EASEMENT DESCRIPTION

The West 10.00 feet, together with:

The South 25.00 feet of the above-described parcel of land lying North of and parallel with the White Mountain Indian Reservation Boundary.

GRANTOR agrees for itself, its successors and assigns that no building or other structure will be constructed, or other obstruction placed, over this easement or over any facilities of Grantee; provided, however, that with Grantee's prior consent, Grantor may build over this easement after first paying to Grantee the cost of relocating the facilities and granting an alternative easement satisfactory to Grantee and without additional cost to Grantee.

GRANTEE, its agents and employees, shall at all times have the right of unobstructed ingress and egress to said real property, and free access to said pipelines, equipment and appurtenances for the purpose of maintaining, operating, removing or replacing same, including the right to trim or remove any trees or shrubs that in Grantee's judgment interfere with the rights herein granted. Grantee agrees to use reasonable care to avoid damage to the property of Grantor in the exercise of this easement.

LK-2487

The individuals signing this Grant of Easement warrant that they have read this Grant of Easement, have the authority to execute this Grant of Easement, and will furnish such evidence reasonably necessary to validate such authority upon request.

EXECUTED this 6 day of March, year of 12.

John L. Carr, Trustee

Peggy A. Carr, Trustee

STATE OF AZ)
) ss
COUNTY OF Cochise)

This foregoing instrument was acknowledged before me this 6th day of March in the year 2012 by John L. Carr and Peggy A. Carr, as Trustees of the JOHN L. CARR AND PEGGY A. CARR LIVING TRUST DATED JUNE 29, 2000, for and on behalf of said Living Trust.

My Commission Expires:

Notary Public

OFFICIAL SEAL
ELIZABETH N. FOURNIER
NOTARY PUBLIC - State of Arizona
COCHISE COUNTY
My Comm. Expires Nov. 28, 2014

LH:CB:CB

LK-2487

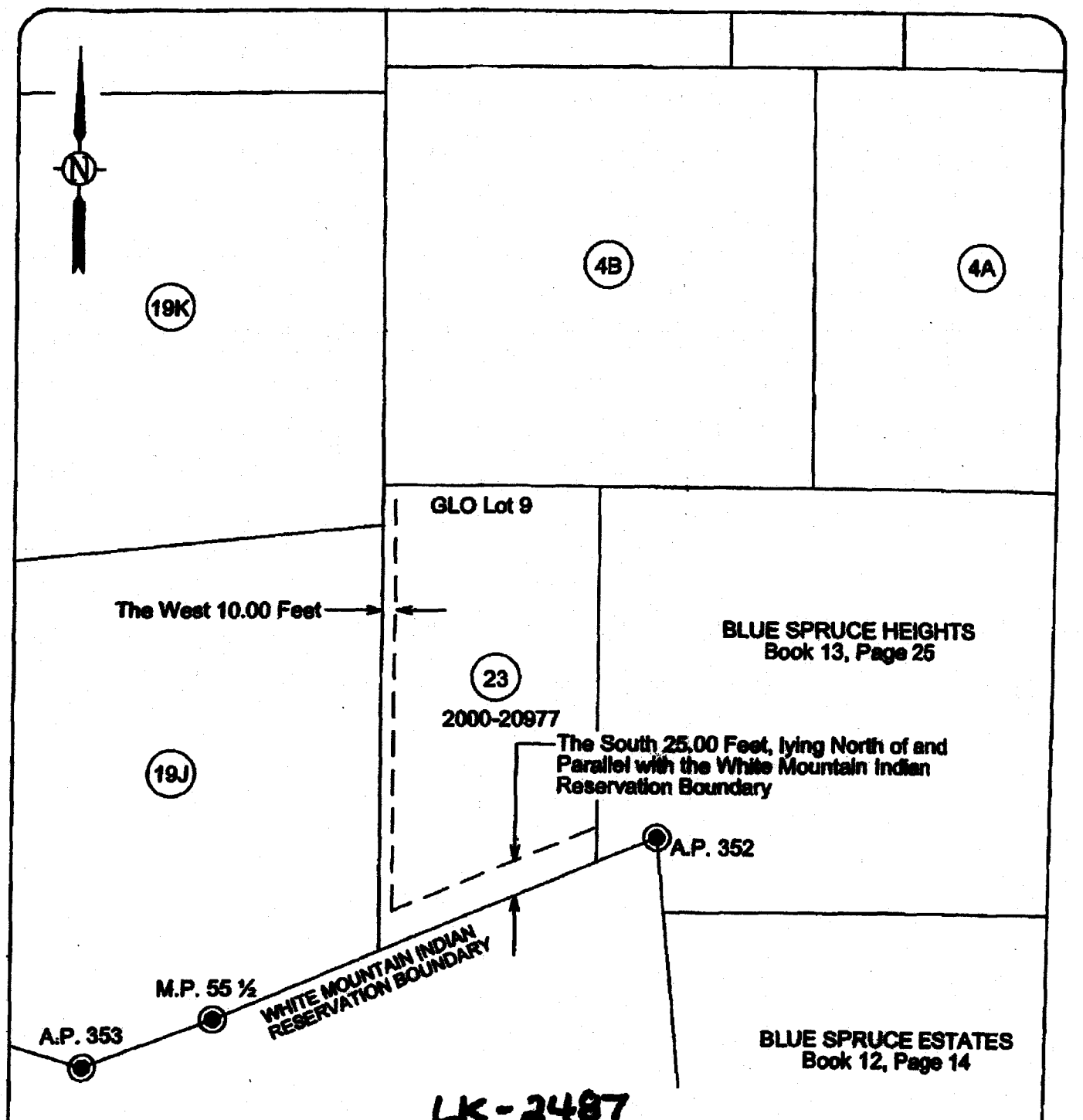

LK-2487

Reference Documents:

>R.O.S. 30-19
>Plat 12-17
>R.O.S. 2010-4610
>G.L.O. Partial Resurvey 11/4/1918 #00341
>Patent 02-72-0042 Dkt: 356; Pg. 649

ARIZONA WATER COMPANY

EASEMENT LOCATION DRAWING

Easement Location:	Northeast quarter Section 21, T.9N.,R.22E.
Assessors Parcel:	212-40-023
Property Owner:	John L. Carr and Peggy A. Carr, Trustees of the John L. Carr and Peggy A. Carr Living Trust, dated June 29, 2000

Date: 07.18.2011	Scale: 1"= 100'	Drawn By: CB

00620448

Recording Requested By:
ARIZONA WATER COMPANY

When Recorded, Mail To:
Arizona Water Company
P.O. Box 29006
Phoenix, Arizona 85038-9006

2012-04542
Page 1 of 3
Requested By: Arizona Water Company
Navajo County Recorder - Laurette Justman
03-26-2012 12:24 PM Recording Fee $10.00

ABOVE SPACE RESERVED FOR COUNTY RECORDER

GRANT OF EASEMENT

JIMMIE JOE WILHOIT and SHERRILL ANNE WILHOIT and their successors in trust, Trustees of the WILHOIT FAMILY TRUST, dated September 6, 2000, as amended (hereinafter referred to as "Grantor"), for a valuable consideration, receipt of which is hereby acknowledged, grants to ARIZONA WATER COMPANY, an Arizona corporation, its successors and assigns (hereinafter referred to as "Grantee"), a perpetual non-exclusive easement and the right to excavate for, install, operate, maintain, remove or replace one or more pipelines, including valves, hydrants, meters and other equipment and appurtenances, for the purpose of conveying water for domestic use, fire protection and irrigation, ingress and egress, or other purposes, and to use the same for such purposes, on that certain real property described in Fee 2004-25672 in the County of Navajo, State of Arizona, said real property described as follows:

The West half of the South half of the Southwest quarter of the Northeast quarter of the Northeast quarter of Section 21, Township 9 North, Range 22 East of the Gila and Salt River Base and Meridian, Navajo County, Arizona.

EASEMENT DESCRIPTION

The West 10.00 feet of the above-described parcel of land.

GRANTOR agrees for itself, its successors and assigns that no building or other structure will be constructed, or other obstruction placed, over this easement or over any facilities of Grantee; provided, however, that with Grantee's prior consent, Grantor may build over this easement after first paying to Grantee the cost of relocating the facilities and granting an alternative easement satisfactory to Grantee and without additional cost to Grantee.

However, nothing in this Grant of Easement shall preclude Grantor, its successors and assigns from maintaining or using the road currently known as Green Valley Road or having current or future access to said Green Valley Road from the real property defined above, regardless of whether Grantee's improvements are placed in the roadway currently known as Green Valley Road. Provided however, that any maintenance or use shall not include placing any building or structure over or any paving of the easement described above.

LK-2489

GRANTEE, its agents and employees, shall at all times have the right of unobstructed ingress and egress to said easement, and free access to said pipelines, equipment and appurtenances for the purpose of maintaining, operating, removing or replacing same including the right to trim or remove any trees or shrubs that in Grantee's judgment interfere with the rights herein granted. Grantee agrees to use reasonable care to avoid damage to the property of Grantor in the exercise of this easement.

The individuals signing this Grant of Easement warrant that they have read this Grant of Easement, have the authority to execute this Grant of Easement, and will furnish such evidence reasonably necessary to validate such authority upon request.

EXECUTED this 31 day of October, year of 2011.

Jimmie Joe Wilhoit, Trustee

Sherrill Anne Wilhoit, Trustee

STATE OF Arizona)
) ss
COUNTY OF Maricopa)

This foregoing instrument was acknowledged before me this 31 day of October in the year 2011 by Jimmie Joe Wilhoit and Sherrill Anne Wilhoit, Trustees of the WILHOIT FAMILY TRUST, DATED SEPTEMBER 6, 2000, AS AMENDED, for and on behalf of said Family Trust.

My Commission Expires: June 23 2013

Notary Public

LAUREN E CHARTIER
Notary Public - Arizona
Maricopa County
My Commission Expires
June 23, 2013

LK-2489

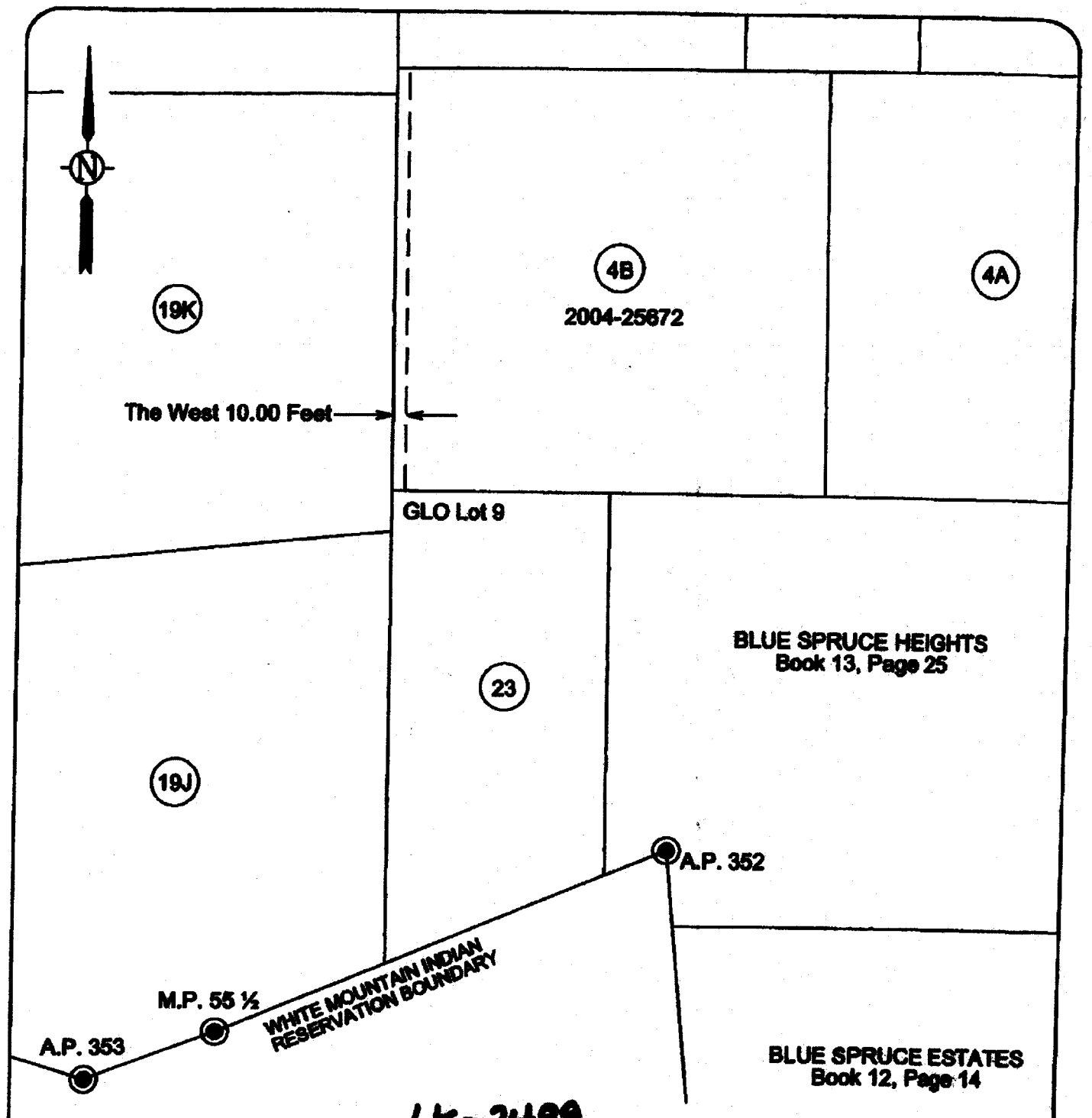

LK-2489

Reference Documents:

>R.O.S. 30-19
>Plat 12-17
>R.O.S. 2010-4810
>G.L.O. Partial Resurvey 11/4/1918 #00341
>Patent 02-72-0042 Dkt. 356, Pg. 349

ARIZONA WATER COMPANY

EASEMENT LOCATION DRAWING

Easement Location:	Northeast quarter Section 21, T.9N.,R.22E.	
Assessors Parcel:	212-49-004b	
Property Owner:	Jimmie Joe Willcott and Sherrill Anne Willcott, Trustees of the Willcott Family Trust, dated September 8, 2000, as amended	
Date: 07.18.2011	Scale: 1"= 100'	Drawn By: CB

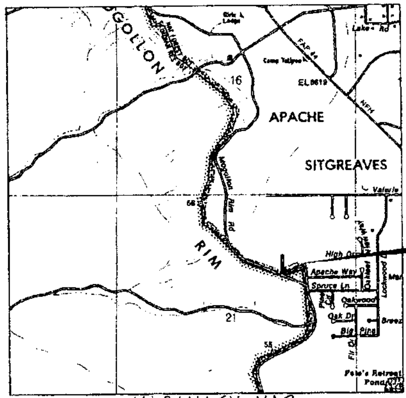

VICINITY MAP
N.T.S.

WATERLINE INSTALLATION PLANS PROVIDED BY ARIZONA WATER COMPANY TO SERVE

GREEN VALLEY ROAD

QUANTITIES LIST			
	ITEM DESCRIPTION	QTY. IN R/W	QTY. TOTAL
1	INSTALL 6" DIP w/POLYWRAP		950 LF
2	INSTALL 6" MJ GATE VALVE		4 EA.
3	INSTALL 6" 90" MJ TEE w/MEGALUGS		1 EA.
4	INSTALL 6" MJ CAP w/MEGALUGS		1 EA.
5	TIE INTO EXISTING 6" TEE		2 EA.
6	INSTALL 6" 22.5° MJ ELL w/MEGALUGS		1 EA.
7	INSTALL 2" BLOWOFF VALVE PER AWC STD. SPEC. E-4-4-1		1 EA.
8	RELOCATE SINGLE SERVICE AND TIE OVER CUSTOMER		2 EA.

GENERAL NOTES

1. All work and materials shall conform to current County Health Department Standards and Revisions, Arizona Water Company Standard Specifications and Details, and Arizona Department of Health Services Engineering Bulletin No. 10
2. Permits required will be secured from the appropriate agency, I.E. county permit in county right-of-way.
3. Prior to construction, the appropriate agency(ies) will be notified as required by the permit(s).
4. All backfill, compaction, and testing shall be per current County, City, State, ADOT, and Arizona Water Company standards and specifications
5. All water lines 8" and less are to have a minimum cover of 36 inches & all water lines 12" and greater are to have 48" of minimum cover over the top of pipe to finished grade, unless otherwise specified on the construction drawings.
6. All frames, covers, valve boxes, etc shall be adjusted to finished grade prior to placing of asphaltic concrete surface course by the contractor (where applicable)
7. All water lines shall be pressure and leakage tested in accordance with AWWA C-600 or MAG 610-14.
8. All water lines are to be disinfected per ADEQ Engineering Bulletin No 8 and AWWA C651-92
9. Air release valves are required at water system high points per Arizona Water Company standard details.
10. Water/sewer separation shall be per current Arizona Water Company standards and ADEQ AAC R18-4-502-C.
11. It shall be the contractors responsibility to uncover all existing water lines being connected to, and to verify the location, depth and size of pipe before any construction begins
12. Any construction performed without the knowledge of the inspector or his representative is liable for removal and replacement at the contractor's expense
13. In accordance with AAC R18-4-213, all materials added after January 1, 1993 which may come in contact with drinking water, shall conform to National Sanitation Foundation Standards 60 and 61.
14. All water services shall be set a minimum of 2 Feet on the customers property and NOT within right-of-way
15. Unless otherwise specified on the construction drawings, all water mains are to be installed 5 Feet from the property line inside the right-of-way or easement.
16. Water valves shall be spaced not more than 500 Feet in commercial districts and not more than 800 Feet in other districts. Variations may be required for transmission mains or special applications. Sufficient valving is required where water lines cross streams, railroads and major highways
17. Maximum Joint Deflection For 6" Mechanical Joint Ductile Iron Pipe Is 7°-7' Or 27" For 18 Foot Length Pipe, For A Maximum Curve Of 145 Feet.
18. Maximum Joint Deflection For 6", 8", & 12" Push-On Joint Ductile Iron Pipe Is 5° Or 19" For 18 Foot Length Pipe, For A Maximum Curve Of 205 Feet.
19. Maximum Joint Deflection For 8" & 12" Mechanical Joint Ductile Iron Pipe is 5°-21' Or 20" For 18 Foot Length Pipe, For A Maximum Curve Of 195 Feet

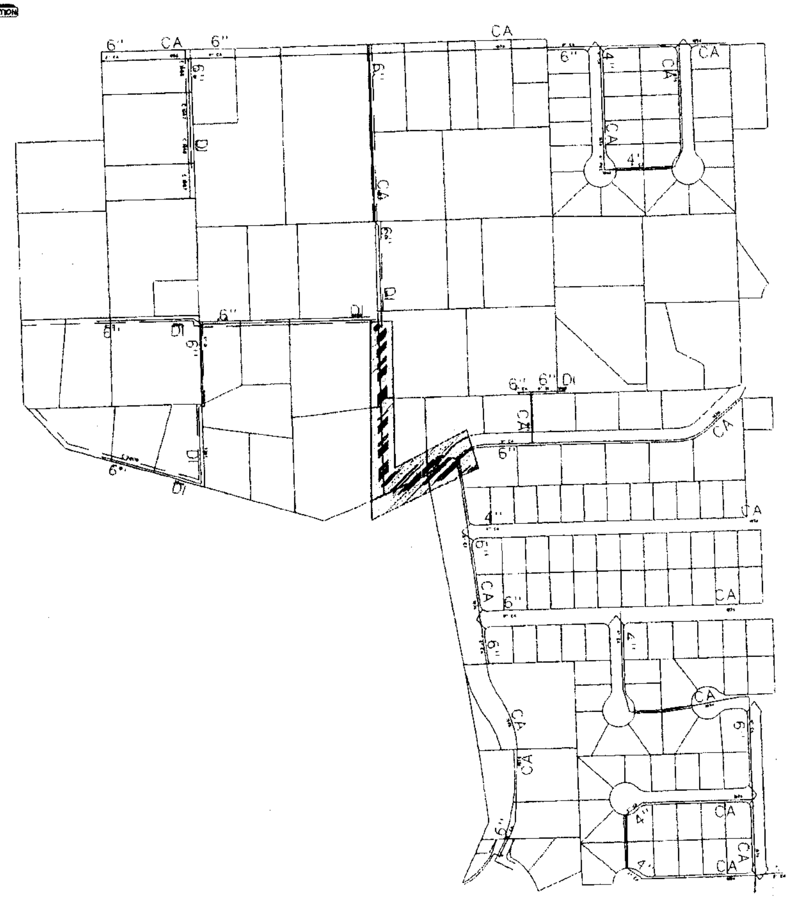

The installation shown is to be installed in accordance with the Arizona Water Company standard specifications on file with the Arizona Department of Environmental Quality

263-1100
1-800-STAKE-IT

ARIZONA WATER COMPANY
3805 N. BLACK CANYON HWY. POST OFFICE BOX 29006
PHOENIX, ARIZONA 85038-9006
(602) 240-6860

W.O. No.	1-4927
SYSTEM	NAVAJO
LEGAL DESC.	NE1/4 SEC.21-T.9N., R.22E.
TAX DIST	3293
DATE	3/21/2012
SCALE	AS SHOWN
DRAWN BY	JS
CHECKED BY	AH
PROJECT DESC	INSTALL APPROX. 950 LF OF 6" DIP w/RELATED FITTINGS AND RELOCATE 2 SERVICES ALONG GREEN VALLEY ROAD.
PROJECT SHEET DESC	COVER SHEET

26338 FREDRICK K. SCHNEIDER ARIZONA, U.S.A.
Expires 9/30/2013

DWG. No. NV-0007
SHEET 1 OF 4

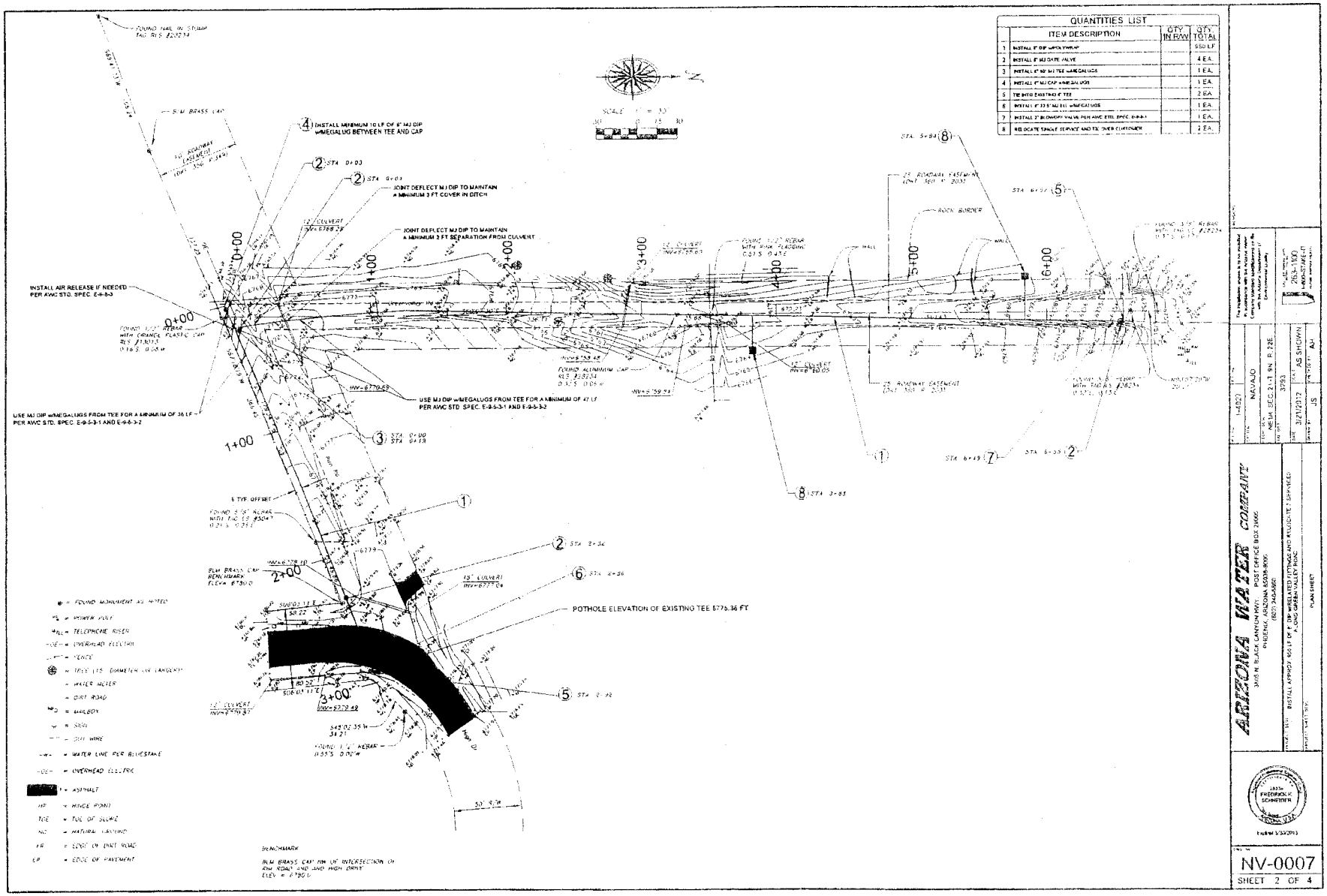
QUANTITIES LIST
ITEM DESCRIPTION
QTY. IN R/W
QTY. TOTAL
1 INSTALL 8" DIP w/POLYWRAP 950 LF
2 INSTALL 8" MJ GATE VALVE 4 EA.
3 INSTALL 8"x8"x8" MJ TEE w/MEGALUGS 1 EA.
4 INSTALL 8" MJ CAP w/MEGALUGS 1 EA.
5 TIE INTO EXISTING 8" TEE 2 EA.
6 INSTALL 8" 22.5° MJ ELL w/MEGALUGS 1 EA.
7 INSTALL 2" BLOWOFF VALVE PER AWC ETEL SPEC. E-9-8-1 1 EA.
8 RELOCATE SINGLE SERVICE AND TIE OVER CURB/MTR 2 EA.
INSTALL MINIMUM 10 LF OF 8" MJ DIP w/MEGALUG BETWEEN TEE AND CAP
JOINT DEFLECT MJ DIP TO MAINTAIN A MINIMUM 3 FT COVER IN DITCH
JOINT DEFLECT MJ DIP TO MAINTAIN A MINIMUM 3 FT SEPARATION FROM CULVERT
INSTALL AIR RELEASE IF NEEDED PER AWC STD. SPEC. E-9-8-3
USE MJ DIP w/MEGALUGS FROM TEE FOR A MINIMUM OF 36 LF PER AWC STD. SPEC. E-9-5-3-1 AND E-9-5-3-2
USE MJ DIP w/MEGALUGS FROM TEE FOR A MINIMUM OF 47 LF PER AWC STD. SPEC. E-9-5-3-1 AND E-9-5-3-2
POTHOLE ELEVATION OF EXISTING TEE 5776.36 FT
BENCHMARK
BLM BRASS CAP ON LIP OF INTERSECTION OF KAI ROAD AND HIGH DRIVE
ELEV. = 6790.0'
SCALE 1" = 30'
ARIZONA WATER COMPANY
3805 N. BLACK CANYON HWY. POST OFFICE BOX 29006
PHOENIX, ARIZONA 85038-9006
(602) 240-6860
INSTALL APPROX. 950 LF OF 8" DIP w/RELATED FITTINGS AND APPURTENANCES
ALONG GREEN VALLEY ROAD
PLAN SHEET
NAVAJO
SEC. 16, T. 9N., R. 23E.
3793
3/21/2012
AS SHOWN
JS
AU
1" = 30'
NV-0007
SHEET 2 OF 4

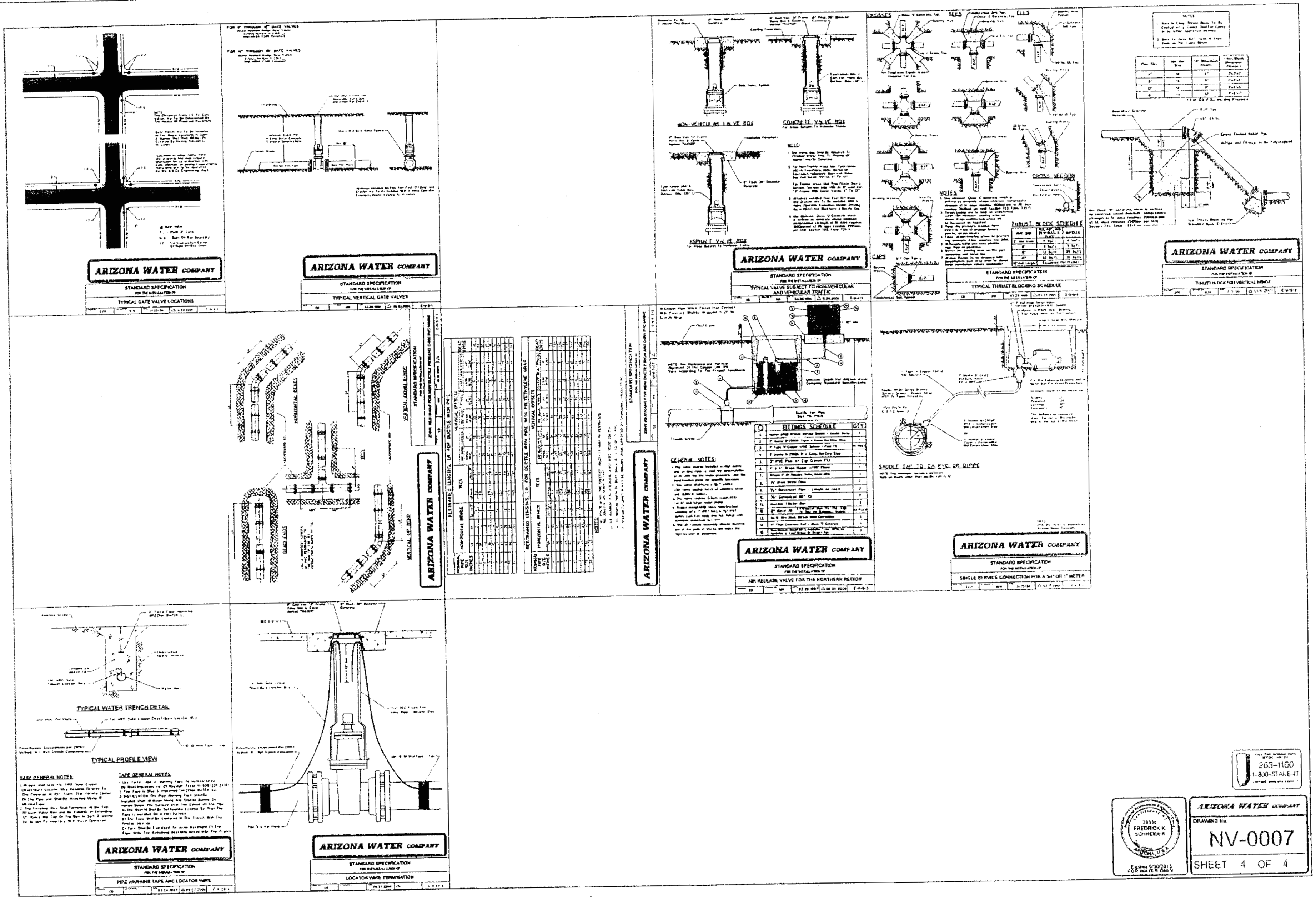
ARIZONA WATER COMPANY
STANDARD SPECIFICATION
TYPICAL GATE VALVE LOCATIONS
TYPICAL VERTICAL GATE VALVES
NON-VEHICULAR VALVE BOX
CONCRETE VALVE BOX
ASPHALT VALVE BOX
TYPICAL VALVE SUBJECT TO NON-VEHICULAR AND VEHICULAR TRAFFIC
CROSSES
TEES
ELLS
CAPS
CROSS SECTION
NOTES
THRUST BLOCK SCHEDULE
TYPICAL THRUST BLOCKING SCHEDULE
THRUST BLOCK FOR VERTICAL BENDS
DEAD ENDS
HORIZONTAL BENDS
VERTICAL UP BEND
VERTICAL DOWN BENDS
TEES
RESTRAINED LENGTHS, L.F. FOR DUCTILE IRON PIPE
RESTRAINED LENGTHS, L.F. FOR DUCTILE IRON PIPE WITH POLYETHYLENE WRAP
HORIZONTAL BENDS
VERTICAL OFFSETS
DEAD ENDS
FITTINGS SCHEDULE
GENERAL NOTES
AIR RELEASE VALVE FOR THE NORTHERN REGION
SADDLE TAP TO C.I., PVC OR DIPIPE
SINGLE SERVICE CONNECTION FOR A 3/4" OR 1" METER
TYPICAL WATER TRENCH DETAIL
TYPICAL PROFILE VIEW
WIRE GENERAL NOTES
TAPE GENERAL NOTES
PIPE WARNING TAPE AND LOCATOR WIRE
LOCATOR WIRE TERMINATION
263-1100
1-800-STAKE-IT
FREDRICK K. SCHNEIDER
ARIZONA WATER COMPANY
DRAWING No.
NV-0007
SHEET 4 OF 4

C.B.

CONSTRUCTION SPECIFICATIONS
FOR THE INSTALLATION OF WATER DISTRIBUTION SYSTEMS
DUCTILE IRON

DEFINITIONS

A. Company. The words "Company" or "Arizona Water Company" mean Arizona Water Company and where applicable any division of Arizona Water Company whose principal place of business is located at 3805 North Black Canyon Highway, Phoenix, Arizona 85015-5351 (Post Office Box 29006, Phoenix, Arizona 85038-9006).

B. Company's Authorized Representative. The words "Company's Authorized Representative" mean any officer of the Company, and any of the Company's Engineers, any Division Manager or Superintendent of the Company and/or such other person(s) designated in writing by the Company's Authorized Representative by the President or any Vice President of the Company.

C. Contractor. The word "Contractor" means either an individual or other entity employed to do the work as shown on the Construction Drawings and as specified herein.

D. Construction Drawings. The words "Construction Drawings" mean plans prepared by or on behalf of Arizona Water Company.

E. Contract. The word "Contract" means the written document titled "Proposal/Contract" when such document has been signed by an officer or other authorized representative of both the Contractor and the Company.

1. GENERAL

All work is to be completed in a safe workmanlike manner and in accordance with these Construction Specifications; any deviation therefrom must be approved in writing by the Company.

Installations must conform with the requirements of all governmental regulating agencies and the cost of conforming to such regulations must be included in the unit bid prices. Examples of such regulations, without attempting to be inclusive, are:

a. Special compaction and paving for street crossing
b. Shoring when required because of the trench depth
c. Closing a trench in those areas ...

PROFILE VIEW

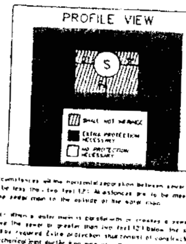

PROFILE VIEW

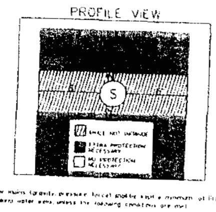

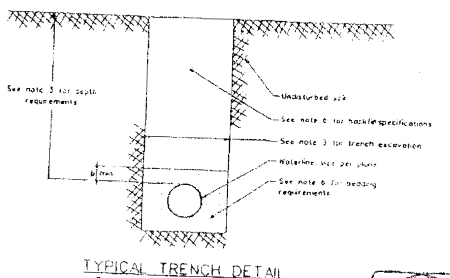

TYPICAL TRENCH DETAIL
Per MAG Detail 601, 601.4.2, 601.4.B

263-1100
1-800-STAKE-IT

28338
FREDRICK K.
SCHNEIDER
ARIZONA, U.S.A.
Expires 6/30/2015
FOR WATER ONLY

ARIZONA WATER COMPANY
DRAWING No.
NV-0007
SHEET 3 OF 4

ARIZONA DEPARTMENT OF ENVIRONMENTAL QUALITY
CERTIFICATE OF APPROVAL TO CONSTRUCT
WATER FACILITIES

ADEQ File No: 20120061	**LTF No:** 55744
System Name: Az Water Co-Lakeside	**System Number:** 09-003
Project Owner: Arizona Water Company	
Address: P O Box 29006, Phoenix, AZ 85038	
Project Location: Lakeside	**County :** Navajo
Description: INSTALLATION OF APPROXIMATELY 950-L.F. OF 6-IN D.I.P. AND RELOCATION OF TWO SERVICES ALONG GREEN VALLEY ROAD, LAKESIDE, NAVAJO COUNTY.	

Approval to construct the above-described facilities as represented in the approved documents on file with the Arizona Department of Environmental Quality is hereby given subject to provisions 1 through 5 continued on page 2 through 2

1. This project must be constructed in accordance with all applicable laws, including Title 49, Chapter 2, Article 9 of the Arizona Revised Statutes and Title 18, Chapter 5, Article 5 of the Arizona Administrative Code.

2. Upon completion of construction, the engineer shall fill out the Engineer's Certificate of Completion and forward it to the Central Regional Office located in Phoenix. If all requirements have been completed, that unit will issue a Certificate of Approval of Construction. R18-5-507(B), Ariz. Admin.Code. At the project owner's request, the Department may conduct the final inspection required pursuant to R18-5-507(B); such a request must be made in writing in accordance with the time requirements of R18-5-507(C), Ariz. Admin. Code.

3. This certificate will be void if construction has not started within one year after the Certificate of Approval to Construct is issued, there is a halt in construction of more than one year, or construction is not completed within three years of the approval date. Upon receipt of a written request for an extension of time, the Department may grant an extension of time; an extension of time must be in writing. R18-5-505(E), Ariz. Admin. Code.

4. Operation of a newly constructed facility shall not begin until a Certificate of Approval of Construction has been issued by the Department. R18-5-507(A), Ariz. Admin. Code.

Reviewed by: AD4

By: Janak K. Desai 4/3/2012
Janak K. Desai, P.E. Unit Manager Date
Engineering Review Section
Water Quality Division

cc: File No: 20120061
Regional Office: Central
Owner: Arizona Water Company
County Health Department: Navajo
Engineer: Arizona Water Company
Planning and Zoning/Az Corp. Commission
Engineering Review Database - Ehr021

5. The Arizona Department of Environmental Quality's review of this application was subject to the requirements of the licensing time frames ("LTF") statute under Arizona Revised Statutes ("A.R.S.") § 41-1072 through § 41-1079 and the LTF rules under Arizona Administrative Code ("A.A.C.") R18-1-501 through R18-1-525. This Notice is being issued within the overall time frame for your application.

ADEQ hereby approves your application for Approval to Construct Water Facilities under A.R.S. § 49-351. Your copy is enclosed.

This decision is an appealable agency action under A.R.S. § 41-1092. You have a right to request a hearing and file an appeal under A.R.S. § 41-1092.03(B). You must file a written Request for Hearing or Notice of Appeal within **30 days** of your receipt of this Notice. A Request for Hearing or Notice of Appeal is filed when it is received by ADEQ's Hearing Administrator as follows:

Office of Administrative Counsel
Arizona Department of Environmental Quality
1110 W. Washington Street
Phoenix, AZ 85007

The Request for Hearing or Notice of Appeal shall identify the party, the party's address, the agency and the action being appealed and shall contain a concise statement of the reasons for the appeal. Upon proper filing of a Request for Hearing or Notice of Appeal, ADEQ will serve a Notice of Hearing on all parties to the appeal. If you file a timely Request for Hearing or Notice of Appeal you have a right to request an informal settlement conference with ADEQ under A.R.S. § 41-1092.06. This request must be made in writing no later than **20 days** before a scheduled hearing and must be filed with the Hearing Administrator at the above address.

Please contact Adrian Dumitrescu at 602-771-4201 or ad4@azdeq.gov if you have questions regarding this Notice or the Certificate of Approval to Construct.

ARIZONA WATER COMPANY

INPUT DIVISION INFORMATION
DIVISION ADDRESS
DIVISION PHONE NUMBERS

PROPOSAL/CONTRACT

CONTRACTOR: Apache Underground & Excavating, LLC	SYSTEM: Lakeside
ADDRESS: P. O. Box 113	W.A. No(s): 1-4927
CITY ST ZIP: Lakeside, AZ 85929	BID DUE DATE: April 17, 2012

CONTRACTOR SUBMITS this PROPOSAL/CONTRACT to ARIZONA WATER COMPANY, an Arizona corporation (the "Company"), to perform the work and complete the project described on Page 2 (the "Project"), as an independent prime contractor.

1. Contractor certifies that it has a complete copy of, and has read, understands and accepts, the Company's General Conditions of Contract, and the Company's Construction Specifications and Standard Specification Drawings, (the "Specifications"), all of which are attached hereto. Contractor has examined the specific plans and related construction drawings for the Project (the "Drawings"), copies of which are also attached hereto. The General Conditions of Contract, Specifications and Drawings are incorporated into this Proposal/Contract. Contractor affirms that all work and materials to be furnished or purchased for the Project will be in strict conformance with the General Conditions of Contract, Specifications and Drawings.

2. Contractor represents and warrants that it has satisfied and complied with the provisions of Section 6, Contractor Understands Work and Working Conditions, of the General Conditions of Contract prior to submitting this Proposal/Contract.

3. Contractor represents that this Proposal/Contract is fair and honest in all respects, is submitted in good faith and is not submitted in collusion with any other company, entity or person.

4. Contractor acknowledges that one hundred percent (100%) Performance and Payment Bonds are required and must be provided to the Company prior to the commencement of work.

5. Prior to the commencement of work, Contractor will submit to the Company a list of all materials to be used in the Project. The materials list will include the manufacturer, part number, price and quantity included in this Proposal/Contract.

6. Contractor will furnish all labor, tools, equipment and materials required to complete the Project according to the General Conditions of Contract, Specifications and Drawings. No materials purchased by Contractor to be incorporated into the Project are subject to tax at the time of purchase and Contractor will not charge the Company for any such tax. Contractor will pay the applicable transaction privilege tax (the "Contracting Tax") on the Project after Contractor receives payment of the final Project invoice from the Company. The cost of materials incorporated into the Project which are exempt by Arizona Revised State Statutes ("A.R.S.") from the Contracting Tax, for example, pipes or valves having a diameter of four (4) inches or larger, including equipment, fittings and any other related part that is used in operating the pipes or valves (A.R.S. §42-5061 B.6.), will not be included in the total cost of the labor and materials upon which the Contracting Tax is computed. Contractor retains full liability and obligation to pay the Contracting Tax and will defend and indemnify the Company against any demand or obligation to pay the Contracting Tax.

7. Contractor will maintain detailed accounting records of all materials purchased and incorporated into the Project. Such records will include all supporting original vendor invoices for all materials purchased. Following completion of the Project, Contractor will submit an itemized accounting to the Company which will include all supporting original vendor invoices and satisfactory evidence of payment thereof. The Company will not pay Contractor for materials not actually incorporated into the Project, and the disposition of such materials will remain Contractor's responsibility.

8. The Estimated Total Cost of the Project, shown on Page 2, is based on estimated labor and material quantities to be furnished. It includes an estimate of the Contracting Tax and the cost of the required Performance and Payment Bonds. Contractor will not cancel, modify or withdraw this Proposal/Contract during a ninety-day (90) period commencing on the Bid Due Date. The Company may accept this Proposal/Contract by signing and mailing, or otherwise delivering, a copy hereof to Contractor during such ninety-day (90) period. If the Company does not accept this Proposal/Contract during such ninety-day (90) period, Contractor may cancel this Proposal/Contract by giving written notice of cancellation to the Company.

9. Prior to the commencement of work, Contractor will provide the Company with a detailed construction schedule, in either Gantt or CPM form, identifying all tasks to be performed from the date of the written Commencement Notice through completion of the Project, including testing, training of Company Personnel and final Project invoicing. Contractor will provide the Company with a copy of such construction schedule documenting the progress of work on the Project at least monthly.

10. Contractor will not commence work on the Project until the Company gives Contractor a written Commencement Notice. Contractor will complete the Project within ___30___ calendar days after the Commencement Notice is issued.

11. Following the Company's written notice of satisfactory completion of the Project, and upon receipt of the final Project invoice from Contractor, the Company shall pay Contractor the actual total cost of the Project, which will be calculated as shown on Page 2, except that actual labor and material quantities installed/constructed will be substituted for the estimated labor and materials quantities and the Contracting Tax will be recalculated based on such actual labor and materials quantities.

12. The amount of applicable liquidated damages for Contractor's failure to deliver or perform within the time limit shown in Paragraph 10 may be deducted from the Company's payment of the final Project invoice. This provision shall not limit the Company's ability to terminate this Proposal/Contract for Contractor's unsatisfactory performance or failure to perform as provided in the General Conditions of Contract, Specifications or Drawings, or in this Proposal/Contract.

SPECIAL CONDITIONS:

(1.) Contractor will supply, install, and remove a jumper meter connection (AWC, E-9-28-1) (2.) Do not include (*double side*) thrust block vertical bends for realignment in "TOTAL COST." Line item price only. (3.) Coordination and planning required to minimize service interruptions. (4.) All backfill cost to be included in pipeline linear foot price. (5.) * "Related fittings" includes all valves, boxes, tees, reducers, elbows, couplings, blow-offs.

CONTRACTOR	PROPOSAL/CONTRACT ACCEPTED:
Apache Underground & Excavating LLC	ARIZONA WATER COMPANY
By: [signature]	By: [signature]
Print Name: Melinda Gardner	Print Name: Fredrick K. Schneider, PE
Title: member	Title: Vice President - Engineering
Date: 4/17/12	Date: 5-2-2012

ARIZONA WATER COMPANY

INPUT DIVISION INFORMATION
DIVISION ADDRESS
DIVISION PHONE NUMBERS

PROPOSAL/CONTRACT

CONTRACTOR: Apache Underground and Excavating, LLC	SYSTEM: Lakeside
AZ CONTRACTOR LICENSE NO: AZROC 253882 CLASSIFICATION: A. General	W.A. No(s): 1-4927
ADDRESS: P.O. Box 113	BID DUE DATE: April 17, 2012
CITY ST ZIP Lakeside AZ 85929	BID BOND REQUIRED: ☑ Yes ☐ No

DESCRIPTION OF PROJECT: Install approximately 950 L.F. of 6" DIP along Green Valley Rd./Rim Road, install service connections, tie-over customer lines and remove two existing services.

1-2. MATERIALS EXEMPT FROM CONTRACTING TAX (see Paragraph 6)	QUANTITY	UNIT PRICE LABOR	UNIT PRICE MATERIALS	TOTAL COST LABOR	TOTAL COST MATERIALS
Install 6" DIP w/polywrap, tie-ins, and related fittings*	950 LF	21.00	21.00	19,950.00	19,950.00
Install 6" Mega-Lug joint restraints	8 ea.	25.00	25.00	200.00	200.00
Double side thrust block vertical realignment (AWC, E-8-5-2) line item price	1 ea.	300.00	300.00	XXXXXXXXX	XXXXXXXXX
3. Total Labor to Install Exempt Materials (add the amounts in column 1)				3 20,150.00	
4. Total Exempt Materials (add the amounts in column 2)					4 20,150.00

5-6. NON-EXEMPT MATERIALS	QUANTITY	UNIT PRICE LABOR	UNIT PRICE MATERIALS	TOTAL COST LABOR	TOTAL COST MATERIALS
Relocate 3/4" single service connections	2 ea.	500.00	800.00	1,000.00	1,600.00
Tie-over customer lines	2 ea.	300.00	250.00	600.00	500.00
Install 1" air release valve	1 ea.	300.00	300.00	300.00	300.00
Blacktop replacement (priced per linear foot but complete)	32 L.F.	10.00	10.00	320.00	320.00
7. Total Labor to Install Non-Exempt Materials (add the amounts in column 5)				7 2,220.00	
8. Total Non-Exempt Materials (add the amounts in column 6)					8 2,720.00
9. Subtotal A (add lines 3, 7 and 8)					9 25,090.00
10. Contracting Tax Base (multiply the amount on line 9 by 0.65)				10 16,308.50	
11. Applicable Contracting Tax Rate				11 4.615%	
12. Contracting Tax (multiply the amount on line 10 by line 11)					12 752.63
13. Subtotal B (add lines 4, 9 and 12)					13 45,992.63
14. 100% Performance and Payment Bonds Cost					14 1,379.77
15. Estimated Total Cost (add lines 13 and 14)					15 47,372.40

NOTE: The Estimated Total Cost includes all labor and materials for backfill, pavement replacement, chip seal, and traffic control necessary for the Project.

ARIZONA WATER COMPANY

COMMENCEMENT NOTICE

CONTRACTOR:

Ms. Melinda Gardner
Apache Junction Underground & Excavating, LLC
P. O. Box 113
Lakeside, AZ 85929

DATE: April 27, 2012
DIVISION: NAVAJO
SYSTEM: LAKESIDE
W.A.: 1-4927

THIS IS YOUR NOTICE TO PROCEED WITH THE FOLLOWING PROJECT(S):

DESCRIPTION OF WORK:

Install approximately 950 LF of 6-inch DIP along Green Valley Road and Rim Road, install service connections, tie-over customer lines and remove two existing services.

PERFORMANCE AND PAYMENT BONDS REQUIRED: [X] Yes [ ] No

TOTAL DAYS ALLOWED: 30

COMPLETION DATE: May 28, 2012

Prior to the start of construction, please call Ted Millspaugh, Division Manager at 480-982-2201 to schedule a pre-construction meeting.

ARIZONA WATER COMPANY	APACHE UNDERGROUND & EXCAVATING, LLC
Company	Contractor (type name)
By [signature]	By _____
Title Vice President - Engineering	Title _____

APH

W:\PROJECTS\NAVAJO\1-4927 GREEN VALLEY ROAD\AGREEMENTS\CONTRACTS\E-3-16-2 APACHE UNDERGROUND COMMENCEMENT NOTICE 1-4927 GREEN VALLEY ROAD.DOCX 1/16/09 | FKB:sdh | E-3-16-2.

ARIZONA WATER COMPANY

SPECIFICATIONS

GENERAL CONDITIONS OF CONTRACT: E-4-1

CONSTRUCTION SPECIFICATIONS: E-8-1

STANDARD SPECIFICATION DRAWINGS: E-9-1

2007 EDITION WITH 2010 REVISIONS

ARIZONA WATER COMPANY

GENERAL CONDITIONS OF CONTRACT: E-4-1

ARIZONA WATER COMPANY

E-4-1

GENERAL CONDITIONS OF CONTRACT

DEFINITIONS

A. Company. The words "Company" or "Arizona Water Company" mean Arizona Water Company, and where applicable, any division of Arizona Water Company, whose principal place of business is located at 3805 North Black Canyon Highway, Phoenix, Arizona 85015-5351 (Post Office Box 29006, Phoenix, Arizona 85038-9006).

B. Company's Authorized Representative. The words "Company's Authorized Representative" mean any officer of the Company, and any of the Company's Engineers, any Division Manager or Superintendent of the Company and/or such other person(s) designated in writing as the "Company's Authorized Representative" by the President or any Vice President of the Company.

C. Contractor. The word "Contractor" means either an individual or other entity employed to do the work as shown on the Construction Drawings and as specified herein.

D. Construction Drawings. The words "Construction Drawings" mean plans prepared by or on behalf of Arizona Water Company.

E. Invitation to Bid. The term "Invitation to Bid" means the current copy of Arizona Water Company's Form E-3-11-4 Request for Proposal/Contract or Form E-3-12-2 Invitation to Bid.

F. Contract. The word "Contract" means the written document titled "Contract" or "Proposal/Contract" when such document has been signed by an officer or other authorized representative of both the Contractor and the Company.

G. Inspector. The word "Inspector" means the Company's Authorized Representative or a person designated in writing by the Company's Authorized Representative.

GENERAL CONDITIONS OF CONTRACT

1. GENERAL

These General Conditions of Contract govern all works of installation and construction unless deviations are provided for on the Construction Drawings or in the Contract.

2. BONDS

The Contractor shall, upon request by the Company, furnish a performance bond and a material payment bond in the amount of 100% of the Contract price, in a form and from a surety acceptable to the Company.

3. LABOR AND/OR MATERIAL RELEASES

The Contractor shall supply labor and/or material releases satisfactory to the Company when requested to do so. Forms will be provided by the Company.

4. LICENSE

The Contractor shall have, as may be required by law, a valid license applicable to the work to be performed.

5. INSURANCE

The Contractor shall maintain in full force and effect insurance at no less than the following minimum amounts:

WORKER'S COMPENSATION	In accordance with requirements of the laws of the State of Arizona.
COMPREHENSIVE GENERAL LIABILITY (Including contractual liability covering death, bodily injury and property damage)	Combined single limit of not less than $1,000,000 for each occurrence.
AUTOMOTIVE LIABILITY (Including owned, non-owned and hired vehicles)	Combined single limit of not less than $1,000,000 for each occurrence.
SUBCONTRACTOR'S PUBLIC LIABILITY AND PROPERTY DAMAGE INSURANCE AND VEHICLE LIABILITY INSURANCE	Contractor shall either require each of its subcontractors to procure and to maintain Subcontractor's Public Liability and Property Damage Insurance and Vehicle Liability Insurance of the type and in the amounts specified in this Section 5 or insure the activities of its subcontractors in Contractor's own policy, in like amounts.

Such insurance shall name the Company, its officers, agents, and employees as additional insured and be primary for all purposes.

The Company will at all times have the right to require that all of such insurance be placed with insurance companies that are satisfactory to it. The Contractor shall file with the Company a certificate evidencing that each policy of insurance for the above coverages in the minimum amounts specified has been purchased and is in good standing.

Such certificate shall provide that notice be given to the Company at least thirty (30) days prior to cancellation or material change in the form of such policies or any of them. Such certificates shall be kept on file by the Company and the Company must have current certificates on file, or a certificate must accompany any bid proposal, before that proposal will be accepted by the Company.

6. CONTRACTOR UNDERSTANDS WORK AND WORKING CONDITIONS

By executing a Contract with the Company, the Contractor warrants that it has, by careful examination, satisfied itself as to the nature and location of the work, including soil conditions, the character, quality and quantity of the materials to be encountered, the character of the equipment and facilities needed preliminary to and during prosecution of the work, the general and local conditions, and all other matters which can in any way be expected to affect its work under the Contract. Verbal agreements or conversations with any officer, agent or employee of the Company, either before or after the execution of the Contract, are not binding upon the Company and shall not affect or modify any of the terms or obligations herein contained.

7. SPECIFICATIONS AND DRAWINGS

The Contractor shall keep on the job a complete copy of all drawings and specifications furnished by the Company which are applicable to the Contract with the Company. Anything mentioned in the specifications and not shown on the drawings or shown on the drawings and not mentioned in the specifications shall be of like effect as if shown or mentioned in both. In case of a discrepancy between the figures, drawings or specifications and physical conditions of the job, the matter shall be immediately submitted to the Company's Authorized Representative for decision as to adjustments, if any, because of the discrepancy; without a decision from the Company's Authorized Representative no discrepancy shall be adjusted by the Contractor, save only at its own risk and expense. Any deviation from the specifications must be approved in writing by the Company's Authorized Representative.

8. PROPERTY PROTECTION

Trees, fences, poles, underground structures and all other property shall be protected unless their removal is authorized on the Construction Drawings. Any property damaged shall be restored by the Contractor, at its expense, to the owner's satisfaction.

9. SPECIAL PERMITS, LICENSES AND INSURANCE

The Company shall obtain all permits for railroad, county, state, city and irrigation district rights-of-way as well as Forest Service, State Land Department and Bureau of Land Management permits. (Pipeline Contractors)

Whenever blasting is required, the Contractor shall obtain all permits, licenses and insurance required at its expense. (All Contractors)

The Contractor will be required to obtain, and shall certify in writing to the Company that it has obtained, all additional permits required to perform the work including, but not limited to, a National Pollution Discharge Elimination System Permit and/or an Aquifer Protection Permit as those permits relate to disposal of drilling, development and test waters and/or any other discharge or similar activity. (Well Drilling Contractors)

10. SURVEYS

The Company shall be responsible, or arrange, for all surveys required for the work covered in the Contract, unless otherwise specified.

11. BENCH MARKS, PROPERTY STAKES AND SURVEY STAKES

Bench marks, property stakes and survey stakes shall be preserved by the Contractor; in case they are destroyed or removed by Contractor or its employees, the Company will replace them at the Contractor's expense, and the Contractor and its sureties shall be liable therefore.

12. TOOLS, EQUIPMENT AND MATERIALS

The Contractor shall furnish all of the necessary tools, equipment, and pipeline materials required for the work. All material furnished by the Contractor shall be of the quality specified by the Company in its Construction Specifications (E-8-1).

13. SUPERINTENDENCE BY CONTRACTOR

The Contractor shall assure adequate superintendence of the work by a competent foreman or superintendent (with full authority to act on behalf of Contractor) satisfactory to the Company, who will be on the job at all times when work is in progress.

14. ORDER AND DISCIPLINE

The Contractor shall at all times enforce strict discipline and good order among its employees.

15. INDEPENDENT CONTRACTOR

The Contractor is an independent contractor and any provisions in the Contract, the specifications, or these General Conditions of Contract and Arizona Water Company's Construction Specifications which may appear to give the Company the right to direct the Contractor as to the details of the doing of any work to be performed by the Contractor, or to exercise a measure of control over said work, shall be deemed to mean and shall

mean, that the Contractor shall follow the desires of the Company in the results of the work only and not in the means whereby said work is to be accomplished, and the Contractor shall use its own discretion and shall have complete and authoritative control over the work and as to the details of the doing of the work.

16. PUBLIC SAFETY AND CONVENIENCE

Contractor shall at all times conduct its work so as to ensure the least possible obstruction to traffic and other inconvenience to the general public and the residents and businesses in the vicinity of the work, and to ensure the protection of persons and property.

To protect persons from injury and to avoid property damage, Contractor shall provide and maintain adequate barricades as required during the progress of the work and until it is safe to use the property for its intended purpose. The rules and regulations of the local governmental agencies and specific permit requirements respecting safety provisions shall be observed at all times.

In the case of blasting, the Contractor shall exercise extreme caution to protect the general public and personal and public property from harm or damage.

17. PROPERTY PROTECTION

Trees, fences, poles, and all other property shall be protected unless their removal is authorized by the Company. Any property damaged shall be restored by Contractor, at his expense, to Company's satisfaction.

18. RESPONSIBILITY OF CONTRACTOR

The work shall be under Contractor's responsible care and charge. Contractor shall bear all loss and damage whatsoever and from whatsoever cause, except that caused solely by the act of Company, which may occur on or to the work during the fulfillment of the Contract. If any loss or damage occurs, Contractor shall immediately make good any such loss or damage, and in the event of Contractor refusing or neglecting to do so, Company may, or by the employment of some other person, make good any such loss or damage, and the cost and expense of so doing shall be charged to Contractor.

The mention of any specific responsibility or liability imposed upon Contractor shall not be construed as a limitation or restriction of any general liability or duty imposed upon Contractor by the Contract. The reference to any specific duty or liability being made herein is merely for the purpose of explanation.

Contractor alone shall at all times be responsible for the safety of Contractor, Contractor's employees, and its subcontractors' employees, and for Contractor and its subcontractors' plant and equipment and the method of performing the work.

19. ERRORS AND OMISSIONS

If Contractor, in the course of the work, becomes aware of any errors or omissions in the Contract Documents or in the instructions, or if Contractor becomes aware of any discrepancy between the Contract Documents and the physical conditions of the site of

the work, Contractor shall immediately inform Company in writing. Any work done by Contractor after such discovery, until authorized by Company, will be done at Contractor's risk.

20. LAWS, REGULATIONS

Contractor shall give all notices required by law and comply with all laws, ordinances, rules and regulations, including, but not limited to, all applicable federal, state, local and other legally required health and safety standards, orders, rules, regulations or other laws, pertaining to the conduct of the work. Contractor shall be liable for, and shall defend and indemnify Company against and hold it harmless from, all violations of any law, ordinance, rule, regulation, standard, or order in connection with work furnished by or on behalf of Contractor. If Contractor observes that the Contract Documents are at variance with any law, ordinance, rule, regulation, standard, or order it shall promptly notify Company in writing and any necessary changes shall be adjusted as provided in the Contract for changes in the work. Contractor shall not perform any work contrary to such laws ordinances, rules, regulations, standards, or orders.

21. PERMITS, FEES AND INSPECTIONS

Permits and licenses necessary for the prosecution of the work, including, but not limited to, any National Pollution Discharge Elimination Systems (NPDES) Permits required by U.S. Environmental Protection Agency or the Arizona Department of Environmental Quality shall be secured, paid for, and complied with by Contractor.

Contractor shall be responsible for its actions and shall abide by all conditions and/or restrictions set forth in the NPDES Permit and any other permit or license required for this project.

Company shall at all times have access to the work whenever it is in preparation or in progress and Contractor shall provide proper facilities for such access and for all inspections. If the Contract Documents, the General Superintendent's instructions, laws, ordinances or any public authority require any work to be inspected or approved, Contractor shall give timely notice of its readiness for inspection.

Inspection of the work shall not relieve Contractor of any of its obligations even if defective work or unsuitable materials may have been previously overlooked by Company and accepted or estimated for payment. If any work is found not in accordance with the Contract Documents, Contractor, at its sole cost and expense, shall promptly make good such defective work.

22. CONSTRUCTION MARKING (PIPELINE ONLY)

Each job shall be marked and/or barricaded by the Contractor in such a manner that the construction is clearly visible at all times.

23. EXTRA WORK AND/OR MATERIALS

Except as otherwise herein provided, no charge for any extra work and/or material will be allowed unless the same has been ordered in writing by the Company's Authorized Representative, and the price stated in such order.

24. CHANGES

The Company shall have the right to make any changes in the work that it may determine to be necessary. If such changes affect the cost of the work, an equitable adjustment shall be negotiated. Changes shall in no way affect or void the obligations of both parties under the original Contract.

25. INSPECTION

All work and material shall be open at all times to inspection and acceptance or rejection by the Company's Inspector. Any work covered up by the Contractor prior to inspection and acceptance by the Company shall be subject to being uncovered at the expense of the Contractor for inspection by the Company. The Contractor shall give the Company reasonable notice of starting new work and shall provide, without extra charge, reasonable and necessary facilities for inspection, even to the extent of taking out portions of finished work. In case any such finished work removed is found satisfactory, however, the actual direct cost of such removal and replacement, plus 15% of such cost, will be paid by the Company; in addition, if completion of the work has been delayed thereby, the Contractor shall be granted a suitable extension of time on account of the additional work involved.

26. DEFECTIVE WORK OR MATERIAL

The Contractor shall remove, at its own expense, any work or material found defective by the Company's Inspector and shall rebuild and replace the same without extra charge; in default thereof, the same may be done by the Company at the Contractor's expense.

27. ASSIGNMENT

Neither party to the Contract may assign the Contract or sublet it in whole or in part without the written consent of the other, nor shall the Contractor assign any monies due or which may become due hereunder without the previous written consent of the Company, nor shall such consent release the Contractor from any of its obligations and liabilities under the Contract.

28. RIGHTS OF VARIOUS INTERESTS

Whenever work that is being done for the Company other than by the Contractor is contiguous to work being done by the Contractor, the respective rights of the various interests involved shall be established by the Company to secure the completion of the various portions of the work in general harmony.

29. SUSPENSION OF WORK

The Company's Authorized Representative may at any time and for any reason suspend all or any portion of the work under the Contract. This right to suspend work shall not be construed as denying the Contractor compensation for actual, reasonable and necessary expenses due to suspension to which it may be entitled.

The Company's Authorized Representative may order the Contractor to suspend any work because of certain conditions, such as inclement weather, or because the

Contractor is in violation of these General Conditions of Contract or the Construction Specifications. It is understood that compensation for expenses will not be allowed for such suspension when ordered by the Company's Authorized Representative on account of such conditions.

30. PROCEDURE OF WORK (PIPELINE ONLY)

All work under the Contract shall be planned and performed so as to cause a minimum of interference with normal vehicular and pedestrian traffic. At no time shall the Contractor completely obstruct the traffic to any business establishment during normal work hours of that business. It shall be the Contractor's responsibility to maintain facilities for ingress and egress to any business establishment. When crossing any street, not more than one-half of the street may be blocked at one time. All federal, state, county and city laws, rules and regulations relating to this subject are to be obeyed.

The Contractor shall complete any portion or portions of the work in such order of time as the Company may require. The Company shall have the right to take possession of and use any completed or partially completed portions of the work. If such prior possession or use increases the cost of or delays the work, the Contractor will be entitled to extra compensation or extension of time or both, as the Company may determine.

31. DISPUTES

All questions or controversies which arise between the Contractor and the Company, under, or in reference to, the Contract, shall be decided by the Company's Authorized Representative and a representative of the Contractor, and their decision shall be final and conclusive upon both parties.

32. CONNECTION TO EXISTING SYSTEM (PIPELINE ONLY)

Unless approved in writing by the Company's Authorized Representative, no tie-in or hot tap on the existing system shall be made unless the Company's Inspector is present. When the tie-in requires the operation of an existing valve or other control equipment, the conditions of Paragraph(s) 30 and 33 shall be complied with. The Contractor shall notify the Company twenty-four (24) hours prior to tie-in as to the exact time the Contractor plans to make tie-in so that the Company's Inspector will have sufficient time to locate valves and make necessary preliminary arrangements for shut down.

33. PLANNED INTERRUPTION OF WATER SERVICE (PIPELINE ONLY)

No valve or other control on an existing Company water system shall be operated for any purpose by the Contractor without approval of the Company's Inspector. All of the Company's water customers whose service is interrupted by a planned interruption, other than in cases of emergency, shall be notified by the Contractor at least twenty-four (24) hours before the planned interruption and advised of the probable time when the service will be restored.

34. EXISTING UTILITY FACILITIES (PIPELINE ONLY)

The Contractor shall notify all known utilities in the area of the work to be performed under the Contract and shall make arrangements to have their facilities marked in

accordance with A.R.S. 40-360.022 ("Blue Stake Law"). The Contractor shall be responsible for locating and preserving all marked facilities. Any damages to these marked facilities shall be repaired at the expense of the Contractor.

The Company will pay the cost to relocate its or other structures when such structures are found occupying the physical space of the proposed installation. It is understood that the Contractor will be reimbursed for such work only when written authorization from the Company has been obtained in advance of such work.

35. CLEANING UP

The Contractor shall remove from the Company's property and from all public and private property, at its own expense, all temporary structures, rubbish and waste materials resulting from its operations. In the event Contractor fails to do so, the Company may remove same at the expense of the Contractor.

36. WORKING HOURS (PIPELINE ONLY)

Unless stated to the contrary in the Invitation to Bid and/or so stated on the Construction Drawings, or agreed to by the Company during a Pre-Construction Conference, the Contractor shall not be permitted to perform work on Saturdays, Sundays, or Company holidays, or commence work such as tie-ins that cannot be completed during normal working hours.

37. INDEMNITY

A. The Contractor shall indemnify the Company against, and save and hold it harmless from, any and all liability, claims, demands, loss, actions, causes of action, expense, penalties, fines, assessments, damages and costs of every kind and nature for injury to or death of any and all persons, including, without limitation, employees or representatives of the Company or of the Contractor or of any subcontractor, or any other person or persons, and for damage, destruction or loss, consequential or otherwise, to or of any and all property, real or personal, including, without limitation, property of the Company or of the Contractor or of any subcontractor, or of any other person or persons, and the violation of any law, ordinance, rule, regulation, standard, or order resulting from or in any manner arising out of or in connection with the performance of the work under the Contract, however same may be caused, including, without limitation, the Company's active or passive negligence. The Contractor shall also, upon request by the Company, and at no expense to the Company, defend the Company in any and all suits, concerning such injury to or death of any and all persons, and concerning such damage, destruction or loss, consequential or otherwise, to or of any and all property, real or personal, including, without limitation, suits by employees or representatives of the Company or of the Contractor or of any subcontractor, or any other person or persons, or concerning any court or administrative proceeding concerning the violation of any law, ordinance, rule, regulation, standard, or order. Excluded from this paragraph are only those injuries to or deaths of persons and damage, destruction or loss, to or of property arising from the sole negligence or willful misconduct of the Company.

B. Contractor shall indemnify the Company against, and save and hold it harmless from, any and all liability, claims, demands, damages, costs, expenses and attorney's fees, suffered or incurred on account of any breach of any obligation, covenant or other

provision of this contract, including without limitation, breach of the indemnity provisions of subsection A of this Section 37.

C. Contractor further agrees to defend, indemnify and hold harmless the Company, its directors, officers, employees, and agents, from and against any and all costs, damages, claims, expenses, violations, notices of violations, penalties, liens, assessments, and liabilities of every kind and nature, foreseeable or unforeseeable, directly or indirectly, arising from any release, removal, generation, use, storage or disposal on, under, around, or from the well site of any material, substance, or waste, hazardous or non-hazardous, including, without limitation, drilling fluids, mud, cuttings and development and test water howsoever same may be caused, including, without limitation, the Company's active or passive negligence.

38. LIENS

If at any time there shall be evidence of any lien or claim for which the Company might become liable and which is chargeable to the Contractor, the Company shall have the right to retain out of any payment then due or thereafter to become due, an amount sufficient to completely indemnify the Company against such lien or claim. If the Company determines that such lien or claim is valid, the Company may pay and discharge the same, and deduct the amount so paid from any monies which may be or become due and payable to the Contractor.

39. PAYMENT

Upon completion of the installation or construction, the Company will, within thirty (30) days after receipt of proper invoice and labor and material releases, pay the amount due the Contractor. If the Company believes that additional work, such as clean up, is required, it may deduct the total cost of such additional work from the amount to be paid to Contractor.

40. COMPANY'S RIGHT TO TERMINATE CONTRACT: DAMAGES DUE TO DELAY

If the Company finds the Contractor to be in material violation of any section of these General Conditions of Contract, Construction Specifications or Standard Specification Drawings or if the Contractor refuses or fails to prosecute the work, or any separable part thereof, with such diligence as will insure its completion within the time specified or any extension thereof, or fails to complete said work within such time, or when any other cause exists to justify such action, the Company may, without prejudice to any other right or remedy, by written notice to the Contractor, terminate its right to proceed with the work or such part of the work as to which there has been such violation, delay or other cause.

In the event the Contractor's right to proceed is terminated, the Company may take over the work and take possession of, and utilize in completing the work, such materials as may be on the site of the work and necessary therefore and prosecute said work to completion by whatever method it may deem expedient. The Contractor and its sureties shall be liable to the Company for any excess cost caused thereby.

In the event the Contractor's right to proceed with the work is terminated, the Contractor shall not be entitled to receive any further payment until the work is completed or the job is canceled. If the unpaid balance of the Contract price exceeds the expense of finishing

the work, including compensation for additional managerial and administrative services, such excess shall be paid to the Contractor. If such expenses exceed such unpaid balance, the Contractor shall pay the difference to the Company.

41. GUARANTEE

The Contractor shall guarantee all labor and workmanship and any materials it installs for a period of one year following the date of completion and acceptance by the Company. If any portion of the work or any of the materials become defective within the guarantee period, the Company will notify the Contractor of such defect. The Contractor must repair any defect within fifteen (15) days of such notification. If repairs are not completed within this time period, the Company may repair the defect, or cause such defect to be repaired, and the cost of such repairs shall be paid by the Contractor. The Company reserves the right to determine which defects are the result of poor labor and workmanship and which are caused by defective materials.

42. LIQUIDATED DAMAGES FOR NON PERFORMANCE; REQUEST FOR EXTENSION(S) OF TIME

Time is of the essence in the Contract. The time period required for completion of the work will be specified in the Contract. The Contractor agrees that the Company will suffer substantial damages in the event the Contractor fails to complete the work within the agreed upon time period. The Contractor and the Company agree that since it would be impracticable or extremely difficult to precisely fix such damages, a reasonable approximation of such actual damages suffered by the Company shall be a sum equal to 0.5% of the Contract price for each working day beyond the time period for completion of the work specified in the Contract.

Request by the Contractor for extensions of the time period shall be in writing and shall not become effective until approved in writing by the Company's Authorized Representative.

43. PAYMENT FOR REQUIRED TESTING

Whenever testing is required by any governmental agency or by the Company to assure conformance of the Contractor's work with the appropriate standard, it will be paid for as follows:

a. For testing required under permits obtained by the Company or testing specifically requested by the Company, the cost of the first test will be paid for by the Company. In the event of failure of the first test, the cost of all further testing associated with the failure will be paid by the Contractor.

b. For testing required under permits obtained by the Contractor, all costs will be paid by the Contractor. Testing of the pipeline for pressure and leakage will be included in the Contract price.

44. CONTRACT DEADLINES AND BONDS REQUIREMENTS

The time limits to be allowed for the completion of any work covered in the Contract shall be established as follows: In the proposal submitted to the Company, in response to the Invitation to Bid, the Contractor shall state the number of calender days required for completion of the work. The time required will become a part of the Contract. When the Company is ready to proceed with the work, a Commencement Notice will be issued by the Company to the Contractor by mail. The Commencement Notice will allow the time required in the Contract plus ten (10) calendar days and will indicate the final day of the time allowed. The work cannot begin until the Company has received a performance bond and materials payment bond for the Contract price unless the bonds have been waived under the special conditions section of the Contract. The additional ten (10) days is the allowance for time to deliver the Commencement Notice to the Contractor and for the Contractor to return the performance bond and materials payment bond to the Company. Time extensions will be granted if warranted, and only at the time of the delay, thus extending the final day of the time allowed.

If the Company elects not to require a performance bond and a material payment bond for the work, the cost of the bonds will be deducted from the proposed total cost and the Contract will reflect this reduced cost and the bonds requirements will be waived under special conditions of the Contract.

ARIZONA WATER COMPANY

CONSTRUCTION SPECIFICATIONS: E-8-1

ERRATA 2010

CONSTRUCTION SPECIFICATIONS FOR THE INSTALLATION OF WATER DISTRIBUTION SYSTEMS DUCTILE IRON

DEFINITIONS

A. Company. The words "Company" or "Arizona Water Company" mean Arizona Water Company, and where applicable, any division of Arizona Water Company, whose principal place of business is located at 3805 North Black Canyon Highway, Phoenix, Arizona 85015-5351 (Post Office Box 29006, Phoenix, Arizona 85038-9006).

B. Company's Authorized Representative. The words "Company's Authorized Representative" mean any officer of the Company, and any of the Company's Engineers, any Division Manager or Superintendent of the Company and/or such other person(s) designated in writing as the "Company's Authorized Representative" by the President or any Vice President of the Company.

C. Contractor. The word "Contractor" means either an individual or other entity employed to do the work as shown on the Construction Drawings and as specified herein.

D. Construction Drawings. The words "Construction Drawings" mean plans prepared by or on behalf of Arizona Water Company.

E. Contract. The word "Contract" means the written document titled "Proposal/Contract" when such document has been signed by an officer or other authorized representative of both the Contractor and the Company.

CONSTRUCTION SPECIFICATIONS
FOR THE INSTALLATION OF WATER DISTRIBUTION SYSTEMS
DUCTILE IRON

1. GENERAL

All work is to be completed in a safe, workmanlike manner and in accordance with these Construction Specifications; any deviation therefrom must be approved in writing by the Company.

Installations must conform with the requirements of all governmental regulating agencies and the cost of conforming to such regulations must be included in the unit bid prices. Examples of such regulations, without attempting to be inclusive, are:

a. Special compaction and paving for street crossing.
b. Shoring when required because of the trench depth.
c. Closing a trench in those areas where no open trench is allowed overnight.
d. Barricading and traffic control as required.

2. LOCATION MARKING

Alignment stakes as required in the opinion of the Company shall be furnished by the Company to the Contractor and shall be set by the Company at agreed upon intervals and offsets. Under normal circumstances these will reference the pipeline location five feet (5') into the right-of-way measured from property pins. Grade stakes will be provided only when the Construction Drawings show a pipeline depth other than covered in these Specifications. It is the responsibility of the Contractor to preserve all survey work.

3. TRENCH EXCAVATION

The trench location is to be determined by the Construction Drawings.

FOR 8-INCH OR SMALLER PIPE: The depth of the trench prior to pipe laying shall be such that the finished pipeline shall have between thirty-six inches (36") and forty-two inches (42") of cover unless otherwise specified on the Construction Drawings.

FOR 12-INCH AND LARGER PIPE: The depth of the trench prior to pipe laying shall be such that the finished pipeline shall have between forty-eight inches (48") and sixty inches (60") of cover unless otherwise specified on the Construction Drawings.

The width of the trench at and below the level at the top of the pipe shall be a minimum of twelve inches (12") plus the outside diameter of the pipe barrel and a maximum of twenty-four inches (24") plus the outside diameter of the pipe barrel.

The bottom of the trench shall be accurately graded to provide a uniform bearing for each length of pipe for the full length of the pipe. If the native material on the trench bottom can be reasonably dug by hand, bell holes shall be dug for the joints so that the joints in no way support the pipe. When native materials such as rock are encountered during trenching that will not provide a uniform support for the pipe, the trench will be over-excavated an additional six inches (6") and suitable bedding material will be placed in the trench.

Bedding material will be placed by hand in four-inch (4") lifts and compacted to ensure uniform compaction and to eliminate any voids under the pipe. When the space between the pipe and trench bottom varies, this must be backfilled and compacted in four-inch (4") lifts to the mid-section of the pipe.

Whenever the trench is over-excavated for whatever reason, the trench bottom will be brought up to the correct depth at the Contractor's expense using either method (a) or (b) as follows:

a. A.B.C. material shall be used and compacted to a uniform density of not less than 80% of the maximum density as determined by AASHTO T-99 method A and T-191.

b. Native material 100% of which will pass through a one and one-half inch (1½") screen and at least 20% of which will pass through a number-8 screen shall be used and compacted to a uniform density of not less than 85% of the maximum density as determined by AASHTO T-99 method A and T-191.

4. MATERIALS TO BE PROVIDED BY CONTRACTOR

Unless otherwise specified on the Construction Drawings or in the Contract, the Contractor will supply all of the necessary materials which will become a permanent and integral part of the water distribution system, including concrete blocking, anchors, backfill material, paving material and supplies used during the prosecution of the work. All materials provided by the Contractor to construct the water distribution system must be NSF Standard 61 approved. All potable water pipes and fittings shall have NSF-PW seal. Construction materials used in the water system shall be lead free as defined at AAC R28-4-504 and R18-1-101. The Contractor will provide the following m aterials:

a. FIRE HYDRANTS: Mueller Super Centurion 250 Fire Hydrant, meets ANSI/AWWA C502 Standard, Model No. A-423, 5¼" main valve opening, three way, 6" Mechanical Joint Shoe, 1½" pentagon operating nut, color - yellow, drain open, open direction - left, 4' or 4'6" bury depending on application. For pumper and hose nozzle inform ation see below.

(1) 1 - 4" Pumper Nozzle, NST and 2 – 2½" Hose Nozzles, NST. (These locations only: Ajo, Casa Grande, Coolidge and San M anuel.)

(2) 1 – 4½" Pumper Nozzle, NST and 2 – 2½ " Hose Nozzles, NST. (These locations only: Apache Junction, Arizona City, Lakeside, Oracle, Overgaard, Pinewood, Rimrock, Sedona, Sierra Vista, White Tank and Winkelman.)

(3) 1 – 4½" Pumper Nozzle, NST and 2 – 2½" Hose Nozzles, NPT (Bisbee only.)

(4) 1 - 3" Pumper Nozzle GA 6-350 (6 threads per inch, 3.50 pitch diameter) and 2 – 2½" Hose Nozzles, NPT (Miami only.)

(5) 1 – 3½" Pumper Nozzle GA 6-411 (6 threads per inch, 4.11 pitch diameter) and 2 – 2½" Hose Nozzle, NST (Superior only.)

b. FITTINGS: Manufactured by Tyler or Union. Crosses, Elbows, Tees, Cap, Reducer, Adapter, Plug, Blind Flange and Tapped Flange; Ductile Iron, Class 350, SSB, Cast Iron Cement Lined.

(1) Foster Adaptors for MJ, made by Infact Corporation: Available in size 4" to 16". Part No. 4" = 4FA-BC, 6" = 6FA-BC, 8" = 8FA-BC, 10" = 10FA-BC, 12" = 12FA-BC, 16" = 16FA-BC.

c. DETECTOR CHECK VALVE: Mueller/ Hersey EDC III, iron body, including 5/8" x ¾" Trim Kit. Trim Kit Part No.: 4" = 282080, 6" = 282082, 8" = 282085, 10" = 282496.

d. GATE VALVES: Mueller Resilient Wedge Gate Valves, meets AWWA C509 specification, 250 psig, Non-rising stem, Part No. A-2360 sizes 4" through 12"; Part No. A-2361 sizes 14" through 36", low zinc stems, epoxy coated inside and outside to meet the NSF 61 rating. The bonnet and stuffing box shall have 304 stainless steel bolts/nuts.

e. TRACER WIRE and WARNING TAPE:

1. TRACER WIRE: Shall be direct bury AWG #14 solid copper wire, Color: Blue.

2. WARNING TAPE: Reef Industries, Standard Terra Tape in 3" widths. Color: Blue and imprinted 'Arizona Water Company'.

f. AIR RELEASE VALVE: Crispin Model AR10 with 1" NPT inlet and ½" NPT outlet, cast iron body and top flange; with a 5/64" orifice with stainless steel valve sealing faces and BUNA-N rubber.

g. PRESSURE RELIEF VALVE: Watts 174A, Model M, 2" inlet, 2" outlet, Bronze Body, 30lb. to 150lb. pressure range.

h. MEGA LUG: Mechanical Joint restraint made of ductile iron conforming to ASTM 536-80, 250 psi made by EBAA Iron, Inc., series 1100 or equal.

i. METER BOXES:

(1) Concrete Box with a steel regular lid, Number 1: Tucson specification.

(2) Concrete Box with a steel regular lid, Number 2, 3, and 4: Phoenix specification.

j. PIPE, COPPER: Type K soft copper in 60 or 100-foot coils, per ASTM B88.

k. PIPE, DUCTILE IRON: Ductile Iron Pipe, Cement Lined, Push-on, conform to current ANSI/AWWA Specification A21.51/C151, Pressure Class 350 (sizes 4" through 12"), Pressure Class 250 (sizes 14" through 20"), or Pressure Class 200 for 24" through 36" pipe. Vendors:

(1) Pacific States Cast Iron Pipe Company
(2) Griffin Pipe
(3) United States Pipe and Foundry Company
(4) American Ductile Iron Pipe
(5) Clow Pipe (McWane, Inc.)

l. PIPE, PLASTIC: Plastic pipe, C-900 PVC per ANSI/AWWA C900, Class 150, sizes 6" through 12". NSF61 approved. Furnished in laying lengths of 20'. The barrel shall conform to the outside dimensions of steel pipe (IPS) or cast iron (CI) pipe equivalent and the wall thickness of dimension-ratio (DR) 18.

m. POLYETHYLENE ENCASEMENT (Polywrap): For all pipeline and related fittings installed, EXCEPT for the Coolidge Division. Minimum 8 Mil. and installed per AWWA C105/A21.5-93 and ASTM A-674-89. Manufactured by the Pacific States Cast Iron Pipe Company. The wrapping tape shall be minimum 10 mil. vinyl tape. No duct tape shall be used.

n. COUPLING: Mueller, straight three part union, tested to meet ANSI/AWWA C800, H15403, conductive com pression.

Mueller, H15428, straight coupling, conductive compression by male iron pipe, tested to meet ANSI/AWWA C800 specification. Size: 2".

Mueller, H15451, straight coupling, conductive compression by female iron pipe, tested to meet ANSI/AWWA C800 specification. Size: 2".

Viking Johnson brand, sold by Mueller: MaxiFit Straight (2"-24"), MaxiFitXtra Straight (4"-8") or MaxiStep Transition, tested to meet AWWA/ANSI C.219-91 specifications – certified to ISO 9001:1994 / Smith – Blair Quantum.

o. STOP, ANGLE METER, BALL: Mueller, valve, B24258, conductive compression by meter swivel nut, tested to meet ANSI/AWWA C800, size 5/8 " x ¾" x ¾" for a ¾" service or size 1" for a 1" service.

Mueller, valve, B24265, female pipe thread by meter swivel nut, tested to meet ANSI/AWWA C800, size 5/8" x ¾" x ¾" for a ¾" service or size 1" for a 1" service.

p. STOP, CORP: Mueller, ball valve, B25008, taper thread by conductive compression, tested to meet ANSI/AWWA C800 specification, sizes: ¾", 1" and 2".

Mueller, ball valve, B25028, iron pipe thread by conductive compression, tested to meet ANSI/AWWA C800 specification. Sizes ¾", 1", and 2".

Mueller, 300 Ball Curb Valve, B-25122, taper thread by conductive compression, tested to meet ANSI/AWWA C800 specifications, size: 2". (2" service)

q. STOP, CURB: Oriseal valve, H10291, iron pipe thread by iron pipe thread, quarter turn check, brass, tested to 300 psi working pressure, tested to meet ANSI/AWWA C800 specification, size: 2".

Mueller, B20283, Mueller 300 ball curb valve, female iron pipe by female iron pipe, quarter turn check, tested to meet ANSI/AWWA C800 specification. Size: 2". (Blow-off E-9-8-1).

r. TAPPING SADDLE: Smith Blair, Cast Bronze ASTM-B584 85-5-5-5, double strap, iron pipe threads, Models 321 and 323. Washers are silicon bronze, ASTM-B36. Gaskets are grade 60 Buna N, or Mueller bronze double strap service saddle, BR 2 B series, cast bronze, ASTM-B585, 85-5-5-5, or H16084, 200 psig, meets ANSI/AWWA C800.

s. TAPPING SLEEVE: Mueller H304 Stainless Steel Tapping Sleeve, JCM 432 18-8 Type 304 Stainless Steel Tapping Sleeve, Romac "SST" Type 304 Stainless Steel Tapping Sleeve or CASCADE-style CST-EX stainless steel pressure-rated tapping sleeve.

t. TAPPING VALVE: Mueller Resilient Wedge tapping valve, Catalog Number T-2360-16, Class 125, sizes 4" through 12"; T-2361-16, Class 125, sizes 14" to 36" all with Type 304 stainless steel fasteners; bypass valves are required on 18" – 36" valves flange by mechanical joint per ANSI/AWWA C111, iron wedge, non-rising stem. Epoxy coated interior/exterior per ANSI/AWWA C550 for NSF 61 compliance. 250 PSI range for valves 4" to 12". 150 PSI range for valves 14" to 36".

u. U-BRANCH: Mueller, H15364, 1" male iron pipe by ¾" male iron pipe, tested to meet ANSI/AWWA C800 specification. Size: 1" x ¾" x 13½", straight line.

v. VALVE BOXES: Valve Box with Cover, adjustable, Tyler 562-A or equal, made of cast iron.

w. VAULTS: Utility Vault Company, Chandler, AZ.

(1) 4484-WA concrete vault with a 3660 aluminum double torsion door with a recessed padlock hasp, two - 18" x 24" center knockouts.

(2) 575-WA concrete vault with a 4874 aluminum double torsion door with a recessed padlock hasp, two - 18" x 24" center knock outs and adjustable frame.

(3) 612-5X-WA concrete vault with a 4874 aluminum double torsion door with a recessed padlock hasp, two - 18" x 24" center knockouts.

x. VALVE, METER: Mueller, B24265-1, Mueller 300 ball angle meter valve, female iron pipe by meter nut, quarter turn check, lock wing, tested to meet ANSI/AWWA C800 specification. Size: 1".

Mueller, B25170, Mueller 300 ball straight valve, conductive compression by female iron pipe, quarter turn check, lock wing, tested to meet ANSI/AWWA C800 specification. Size: 1".

y. YOKES, METER: Relocator type copper meter yoke with horizontal inlet and outlet and meter thread ends, B24118, with lock wing Mueller 300 angle ball valve, full port, sizes: 1" x 12", 5/8" x ¾" x 7", 5/8 x ¾" x 9".

Mueller, 2" copper meter yoke with horizontal inlet and outlet and female iron pipe threads, B2423-99000, with lock wing Mueller 300 ball angle meter valves on inlet and outlet risers. Raised 1" by-pass with lock wing Mueller 300 ball valve.

The Contractor also will be required to provide the following materials, the cost of which will be included in its unit bid price:

All material and concrete for thrust blocks, other anchors, reinforcing steel; all gravel, crushed stone, A.B.C., earth, sand, or screened material which may be required; all material for bracing and shoring trenches and for construction of forms; all barricades and traffic control equipment; all material for paving replacement and any water used for compaction of backfill.

5. INSTALLATION OF MATERIALS

All materials are to be installed in accordance with manufacturer's recommendations unless otherwise directed by these S pecifications.

All pipe, fittings and valves shall be laid true to the lines, grades and locations established by the Specifications and the Construction Drawings.

The ends and inside of the pipe shall be thoroughly cleaned and inspected for damage. No damaged materials shall be installed in the water distribution system .

Whenever the work ceases for any reason, all open pipeline ends shall be tightly plugged by the Contractor. Plugs shall be watertight and approved by the company.

Concrete thrust blocks of the sizes required by the plans and specifications are to be provided at all valves, changes in direction or size, or at any other point where an unbalanced thrust due to water pressure would exist. Thrust blocks are to be formed to prevent any concrete from spilling over or into a joint.

Trench curves as shown on the Construction Drawings may be made without fittings when using push on joint pipe up to twelve inches (12") in diameter, if the deflection of the pipe does not exceed five degrees (5°) or nineteen inches (19") per eighteen-foot (18') length of pipe. The minimum radius of such curves will be two hundred five feet (205').

Prior to construction, the appropriate agency(ies) will be notified as required by the permit(s).

It shall be the Contractor's responsibility to uncover all existing water lines being connected to, and to verify the location, depth and size of pipe befor e any construction begins.

Any construction performed without the knowledge of the duly authorized representative is liable for removal and replacem ent at the Contractor's expense.

All fire hydrants, frames, covers and valve boxes, etc. shall be adjusted to finished grade prior to the placing of the asphalt concrete surface course by the Contractor (where applicable).

Air release valves shall be installed at water system high points per Standard Detail E-9-8-2.

All water services shall be set a minimum of two feet (2') on the customer's property, preferably within the P.U.E. and not within right-of-way.

Unless otherwise specified on the construction drawings, all water mains shall be installed five feet (5') from the property line inside the right-of-way or easement.

Water valves shall be spaced not more than five hundred feet (500') in commercial districts and not more than eight hundred feet (800') in other districts. Variations may be required for transmission mains or special applications.

Installation of water line casing shall be per Standard Speci fication E-9-24-1.

Tracer Wire and Warning Tape are to be installed on all mains, tees, crosses, ells and fire hydrant laterals. They will not be installed on service lines. The tracer wire will be installed on the water main 45 degrees from the vertical centerline of the pipe and shall be taped to the fittings directly and on the main every 10 feet using a minimum 10 mil vinyl tape. The tracer wire shall be placed between the valve riser and box with a minimum of 12" of wire inside. The warning tape shall be installed a minimum of two feet below the surface, being measured from final grade, directly over the center of the pipe. Any splices in the tracer wire shall be joined using waterproof connectors. Any splices in the warning tape shall be joined using minimum 10 mil vinyl tape. The tracer wire shall be tested for continuity after backfill and compaction, but before paving. Any detected damages to the wire shall be repaired before paving will be allowed.

6. BACKFILL OF WATER MAIN TRENCHES

Backfill of any excavation shall conform to the requirements of any of the governmental agencies having jurisdiction over the location. If no governmental agency having such jurisdiction specifies backfill or compaction requirements, and no special requirements are shown on the Construction Drawings, the procedure set forth in this section will apply for water line trenches.

The bedding material above the pipe and backfill material shall be compacted to a minimum of 70% compaction within a utility easement and 80% compaction within a right-of-way as determined by AASHTO T-99 method A and T-191. If water settling is used for compaction, it is the responsibility of the Contractor to prevent the pipe from floating.

The bedding material shall be either native material, 100% of which will pass through a one and one-half inch (1½") screen and at least 20% of which will pass through a number-8 screen, or imported material which conforms to M.A.G. specifications for A.B.C. or type-B

select materials. Bedding material shall be used below and around the pipe and a minimum of twelve inches (12") above the pipe. Shade and bedding material to be mechanically compacted prior to remainder of trench back-fill.

The remainder of the trench shall be backfilled with native or imported material which shall be of sound earthen material free from broken concrete, wood, broken pavement, or other unsuitable substances. Except as otherwise specified, backfill may be material containing no pieces larger than six inches (6") in greatest dimension.

Where settlement occurs, additional backfill material shall be placed and compacted and the trench shall be brought to final grade.

7. HYDROSTATIC TESTING OF COMPLETED PIPELINES

Hydrostatic testing of water pipelines will be completed before the new system is connected into the existing water system so that all testing can be done against all new materials.

The completed section of water pipeline to be tested shall be slowly filled with water with care being taken to expel all air from the pipe. If necessary, the pipe will be tapped at high points to vent air.

The Contractor shall provide all equipment and labor necessary to accomplish this testing and the price shall be included in the unit prices. The Contractor shall notify the Company in advance of the testing so that the Company can schedule a duly authorized representative to be at the site during testing. The Contractor, at its own expense, shall make any necessary repairs to the system being tested in order to cause the section being tested to meet the test limits set below. The Contractor may request authorization of the Company to connect the new pipelines to the existing system prior to completion of pressure testing when, in the Company's sole opinion and judgment, conditions warrant such connection.

The Contractor shall assume all responsibility to complete pressure testing to Company's specifications after such connection, including, but not limited to, isolation of the new pipelines from the existing system, if necessary.

Connections prior to completion of pressure testing shall not be made unless prior Company authorization has been obtained, and any extra expenses resulting from such connections shall be the sole responsibility of the Contractor.

Leakage tests will be for a period of two hours at 200± 5 psi at the point of lowest elevation; leakage may not exceed 0.1 gallons per hour per one thousand feet (1,000') of pipe per inch of diameter. If dry utilities are not installed, a second pressure test is required.

8. STERILIZATION AND FLUSHING OF COMPLETED WATER PIPELINES

Sterilization and flushing will conform to recommendations of Arizona State Department of Health Services Engineering Bulletin Number 8, latest edition, or any future Arizona Department of Environmental Quality bulletins. Contractor to follow all conditions of any discharge permit.

9. NO OTHER UTILITIES ALLOWED IN OR NEAR WATER PIPELINE TRENCHES

No other utility installations will be permitted in the water pipeline trench or within five feet (5') of the Company's water pipeline when running parallel to the water pipelines.

10. PROTECTION OF WATER MAINS NEAR SEWERS

In order to protect water mains from contamination by sewers, the installation of the water mains must conform to the following requirements:

a. Horizontal - When water lines and sewers are laid parallel with each other, the horizontal distance between them shall not be less than six feet (6'). Each line shall be laid on undisturbed or bedded material in a separate trench. Where conditions prevent the minimum horizontal separation set forth above, extra protection will be required. Extra protection shall consist of constructing the sewer main with mechanical joint ductile iron pipe or with slip-joint ductile iron pipe if joint restraint is provided, or encasing both the water main and sewer main in concrete. See Detail E-9-30-1 and E-9-30-2

The Construction Drawings shall indicate the installation requirements. The drawings showing these exceptions shall have been approved by the appropriate state and/or county health department. Refer to the diagram below for clarification.

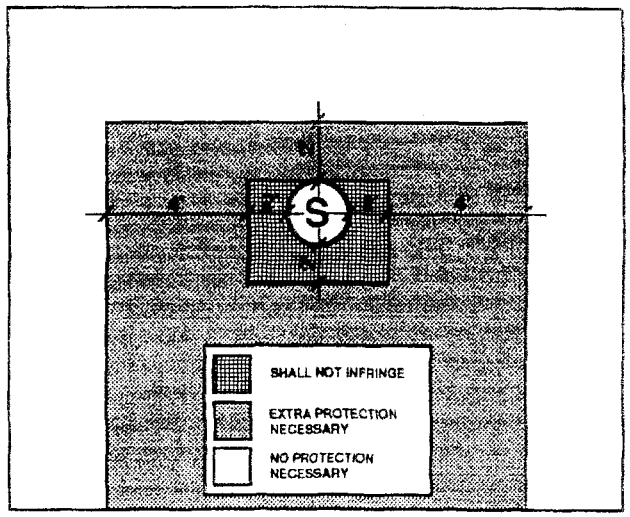

Under no circumstances will the horizontal separation between sewer mains and water mains be less than two feet (2'). All distances are to be measured from the outside of the sewer main to the outside of the water main.

b. Vertical - When a water main is parallel with or crosses a sewer main within two feet (2') above the sewer or greater than two feet (2') below the sewer, extra protection will be required. Extra protection shall consist of constructing the sewer main with mechanical joint ductile iron pipe or with slip-joint ductile iron pipe if joint restraint is provided, or encasing both the water main and sewer main in concrete. See Detail E-9-30-1 and E-9-30-2.

The Construction Drawings shall indicate the installation requirements. The drawings showing these exceptions shall have been approved by the appropriate state and/or county health department.

Under no circumstances will the vertical separation of a sewer main installed above a water main be less than two feet (2'). All distances are to be measured from the outside of the sewer main to the outside of the water main. Refer to the diagram above for clarification.

c. When unusual conditions such as, but not limited to, highway or bridge crossings prevent the water and sewer main separations required from being met, the appropriate state and/or county health department will review and may approve requests for authorization to use alternate construction techniques, materials and joints on a case-by-case basis.

d. No water pipe shall pass through or come into contact with any part of a sewer manhole. The minimum horizontal separation between water mains and manholes shall be six feet (6'), measured from the center of the manhole.

e. The minimum separation between force mains or pressure sewers and water mains shall be two feet (2') vertically and six feet (6') horizontally under all conditions. Where a sewer force main crosses above, or less than six feet (6') below, a water line, the sewer main shall be encased in at least six inches (6") of concrete for ten feet (10') on either side of the water main. Refer to the diagram below for clarification.

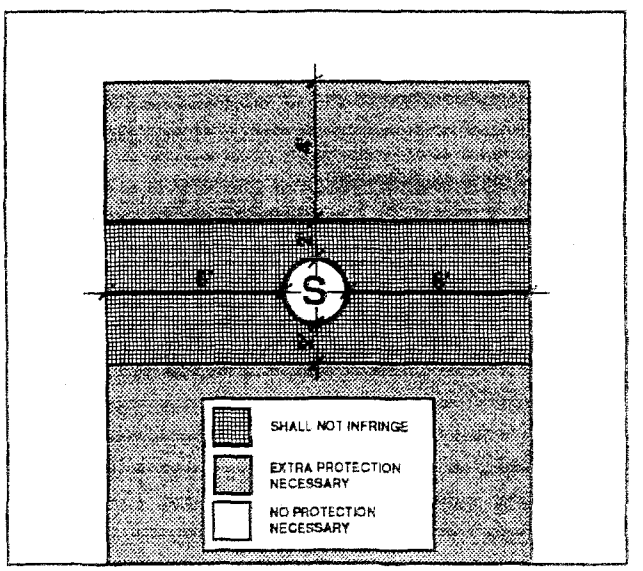

f. Sewer mains (gravity, pressure, force) shall be kept a minimum of fifty feet (50') from drinking water wells, unless the following conditions are met:

1. Water main pipe, pressure tested in place to 50 psi without excessive leakage, may be used for gravity sewers at distances greater than twenty feet (20') from drinking water wells.

2. Water main pipe, pressure tested in place to 150 psi without excessive leakage, may be used for pressure sewers and force mains at distances greater than twenty feet (20') from drinking water wells.

g. No septic tank/disposal field system shall be constructed within one hundred feet (100') of a drinking water well.

h. All distances are measured perpendicularly from the outside of the sewer main to the outside of the water main. These separation requirements do not apply to building, plumbing or individual house service connections.

i. Use Mechanical Joint ductile iron pipe with Megalug thrust restraints a minimum of ten (10') feet on each side of a sewer or storm drain crossing.

11. COMPACTION

When crossing existing water mains a minimum of 95% compaction is required to the bottom of existing mains.

Arizona Water Company requires that no slurry be permitted to contact existing cement/asbestos or ductile iron pipes, unless authorized by the company. Slurry may be poured in the bottom of the sewer trench stopping three inches (3") below the existing water main. The backfill used around the main should be AB in sufficient depth to prevent slurry from contacting existing main.

12. WATER MAIN MATERIAL SPECIFICATIONS

Ductile iron pipe (Push-on type) minimum class 350, cement lined and conform to AWWA C151.

All main line valves shall conform to AWWA C500 with a minimum working pressure of 200 psi.

All cast iron fittings to be cement lined in accordance with AWWA C104 and shall conform to AWWA C110 with a minimum working pressure of 250 psi. Except for the Coolidge System – See Note 4L.

Maximum joint deflection for 6" mechanical joint ductile iron pipe is seven degrees, seven minutes (7°, 7') or twenty-seven inches (27") per eighteen-foot (18') length pipe, for a maximum curve of one hundred forty-five feet (145').
Maximum joint deflection for 8" and 12" mechanical joint ductile iron pipe is five degrees, twenty-one minutes (5° 21') or twenty inches (20") per eighteen-foot (18') length pipe, for a maximum curve of one hundred ninety-five feet (195').

Maximum joint deflection for 6", 8" and 12" push-on joint ductile iron pipe is five degrees (5°) or nineteen inches (19") per eighteen-foot (18') length pipe for a maximum curve of two hundred five feet (205').

ARIZONA WATER COMPANY

3805 N. BLACK CANYON HIGHWAY, PHOENIX, ARIZONA 85015-5351 • P.O. BOX 29006, PHOENIX, ARIZONA 85038-9006
PHONE: (602) 240-6860 • FAX: (602) 240-6878 • WWW.AZWATER.COM

November 24, 2010

Mr. Tony Geiger
US Pipe – Waterworks Marketing Consultants
34522 N. Scottsdale Road
Scottsdale, Arizona 85226

Re: US Pipe Sentinel Fire Hydrants and Resilient Wedge Gate Valves

Dear Mr. Geiger:

Thank you for your interest in working with Arizona Water Company (the "Company") to add US Pipe Sentinel Fire Hydrants and Resilient Wedge Gate Valves to the Company's material and equipment specifications. Based on the US Pipe product information you provided and your field presentations to our operations and engineering staff, the Company is pleased to inform you that the following items are approved for use in the Company's water systems in Arizona.

Sentinel Fire Hydrant:

- Model Sentinel 250
  - 5¼" MVO
  - 4½" pumper
  - 2½" hose
  - Meets AWWA C-502 standard and approval by ULFM

Resilient Wedge Gate Valves:

- Model US Pipe A-USP0
  - Meets AWWA C-509 Full Body Cast Iron includes 304 SS Nuts, Bolts & Low Zinc Bronze Stem
  - Size range 2" thru 12"
- Model US Pipe A-USP1
  - Meets AWWA C-515 Reduced Wall Ductile Iron includes 304 SS Nuts, Bolts & Low Zinc Bronze Stem
  - Size range 14" thru 48"

We look forward to developing a long-term relationship with you and the US Pipe products. If I can be of any assistance, please call me.

Very truly yours,

Fredrick K. Schneider
Vice President – Engineering

afh

VIA EMAIL: TGEIGER4@COX.NET

ARIZONA WATER COMPANY

3805 N. BLACK CANYON HIGHWAY, PHOENIX, ARIZONA 85015-5351 • P.O. BOX 29006, PHOENIX, ARIZONA 85038-9006
PHONE: (602) 240-6860 • FAX: (602) 240-6878 • WWW.AZWATER.COM

October 19, 2010

Mr. Jim Ryan
Clow Valve Company
8121 N. 10th Avenue
Phoenix, Arizona 85021

Re: Clow Medallion Fire Hydrants and Resilient Wedge Gate Valves

Dear Mr. Ryan:

Thank you for your interest in working with Arizona Water Company (the "Company") to add Clow Medallion Fire Hydrants and Resilient Wedge Gate Valves to the Company's material and equipment specifications. Based on the Clow product information you provided and your field presentations to our operations and engineering staff, the Company is pleased to inform you that the following items are approved for use in the Company's water systems in Arizona.

Medallion Fire Hydrant:

- Model F-2545
  - 5¼" MVO
  - 4½" pumper
  - 2½" hose
  - Meets AWWA C-502 standard and approval by ULFM

Resilient Wedge Gate Valves:

- Model 2639 & 2640
  - Meets AWWA C-509 Full Body Cast Iron includes 304 SS Nuts, Bolts & Low Zinc Bronze Stem
  - Size range 2½" thru 12"
- Model 2638
  - Meets AWWA C-515 Reduced Wall Ductile Iron includes 304 SS Nuts, Bolts & Low Zinc Bronze Stem
  - Size range 14" thru 48"

We look forward to developing a long-term relationship with you and the Clow products. If I can be of any assistance, please call me.

Very truly yours,

Fredrick K. Schneider
Vice President – Engineering

lar

VIA EMAIL: JIM.RYAN@CLOWVALVE.COM

February 21, 2012

Contractor

Re: Fitting Specifications

Dear Contractor:

Effective March 1, 2012, Arizona Water Company (the "Company") has changed its fitting specifications for Ductile Iron Fittings and Ductile Iron Flanged Fittings ("Fittings"). All Fittings purchased by the Company, on the Company's behalf or installed with the intent of being conveyed to the Company, must comply with the requirements noted below.

Previous Fitting Specifications:

Fittings

Manufactured by Tyler or Union, Crosses, Elbows, Tees, Cap Reducer, Adapter, Plug, Blind Flange and Tapped Flange: Ductile Iron, Class 350, SSB, and Cast Iron Cement Lined.

New Fitting Specification:

Ductile Iron Fittings (Push-On and Mechanical Joint)

Ductile Iron Push-On and Mechanical Joint ("MJ") fittings for water lines shall be made of ductile iron per ASTM A536 and be cast in the United States of America. Fittings shall have USA cast on the fitting to designate they are made in the United States. All fittings will be manufactured and tested in accordance with ANSI/AWWA C153/A21.53 for compact design and ANSI/AWWA C110/A21.10 for full body design. In accordance with ANSI/AWWA C104/A21.4 fittings 2" – 3" will be single thickness cement mortar lined and 4" – 64" will be cement mortar lined. Fittings will be Asphaltic seal coated on the exterior in accordance with ANSI/AWWA C104/A21.4. MJ fittings with flanged end(s) will match ANSI/AWWA C115/A21.15 and ANSI B16.1 class 125 flanges. All fittings shall be NSF-61 listed for use with potable water.

Ductile Iron Flanged Fittings

Ductile Iron flanged fittings for water lines shall be made of ductile iron per ASTM A536 and be cast in the United States of America. Fittings shall have USA cast on the fitting to designate they are made in the United States. All fittings will be manufactured and tested in accordance with ANSI/AWWA C110/A21.10 design. Flange ends will match ANSI/AWWA C115/A21.15 and ANSI B16.1 class 125 flanges. In accordance with ANSI/AWWA C104/A21.4 fittings 2" – 3" will be single thickness lined and 4" – 64" will be cement mortar lined. Fittings will be Asphaltic seal coated on the exterior in accordance with ANSI/AWWA C104/A21.4. All fittings shall be NSF-61 listed for use with potable water.

If you have any questions or require further information, please contact me at 602-240-6860.

Very truly yours,

Fredrick K. Schneider, PE
Vice President - Engineering
engineering@azwater.com

afh
Enclosure

ARIZONA WATER COMPANY

STANDARD SPECIFICATION DRAWINGS: E-9-1

ERRATA 2010

ARIZONA WATER COMPANY

STANDARD SPECIFICATION DRAWINGS - DUCTILE IRON

INDEX (E-9)

E-9-1	TYPICAL GATE VALVE LOCATIONS
E-9-2	INSTALLATION OF TYPICAL VERTICAL AND HORIZONTAL GATE VALVES
E-9-3	INSTALLATION OF TYPICAL TAPPING SLEEVE AND VALVE
E-9-4	INSTALLATION OF TYPICAL VALVE SUBJECT TO NON-VEHICULAR AND VEHICULAR TRAFFIC
E-9-5	INSTALLATION OF TYPICAL THRUST BLOCKING SCHEDULE THRUST BLOCK FOR VERTICAL BENDS, AND MEGALUG THRUST RESTRAINTS
E-9-6	INSTALLATION OF TYPICAL PERPENDICULAR FIRE HYDRANT
E-9-7	INSTALLATION OF TYPICAL PARALLEL FIRE HYDRANT
E-9-8	INSTALLATION OF TYPICAL 2" BLOWOFF DEVICE, AND AIR RELEASE VALVE
E-9-9	INSTALLATION OF TYPICAL SINGLE SERVICE CONNECTION FOR A $^{3}/_{4}$" OR 1" METER
E-9-10	INSTALLATION OF TYPICAL DOUBLE SERVICE CONNECTION FOR A $^{3}/_{4}$" AND 1" METER
E-9-11	INSTALLATION OF TYPICAL 2" SERVICE CONNECTION
E-9-12	INSTALLATION OF 3" COMPOUND METER, 4" COMPOUND METER, 6" COMPOUND METER, 6" COMPOUND SERVICE, CONCRETE VAULT, AND NON-POTABLE PROPELLER METER
E-9-13	INSTALLATION OF TYPICAL 4" THRU 8" DETECTOR CHECK VALVES AND 3" THRU 10" REDUCED PRESSURE PRINCIPLE DETECTOR WITH BYPASS METER ASSEMBLY (RPDA) FOR FIRE LINE SERVICES
E-9-14	INSTALLATION OF TYPICAL PRESSURE RELIEF VALVE ASSEMBLY
E-9-15	INSTALLATION OF TYPICAL PRESSURE REDUCING STATION
E-9-16	PAINT COLOR SELECTION
E-9-17	STEEL WATER STORAGE TANK
E-9-18	HYDROPNEUMATIC TANK
E-9-19	INSTALLATION OF WELL SHELTER

E-9-20	INSTALLATION OF TYPICAL WELL WITH LINE SHAFT TURBINE PUMP
E-9-21	INSTALLATION OF TYPICAL WELL WITH SUBMERSIBLE TURBINE PUMP
E-9-22	INSTALLATION OF COLUMN PIPE, OIL TUBE AND LINE SHAFT
E-9-23	HOT TAP AND JUMPER METER CONNECTION
E-9-24	INSTALLATION OF TYPICAL WATER LINE ENCASEMENT
E-9-25	INSTALLATION OF CALCIUM HYPOCHLORITE TABLET CHLORINATOR
E-9-26	INSTALLATION OF CHAIN LINK FENCE
E-9-27	INSTALLATION OF SIDE HUNG WATER LINE SUSPENSION
E-9-28	PIPE WARNING TAPE, LOCATOR WIRE, AND LOCATOR WIRE TERMINATION
E-9-29	INSTALLATION OF A TYPICAL SAMPLING STATION
E-9-30-1	WATER AND SANITARY SEWER SEPARATION/PROTECTION PERPENDICULAR
E-9-30-2	WATER AND SANITARY SEWER SEPARATION/PROTECTION – PARALLEL

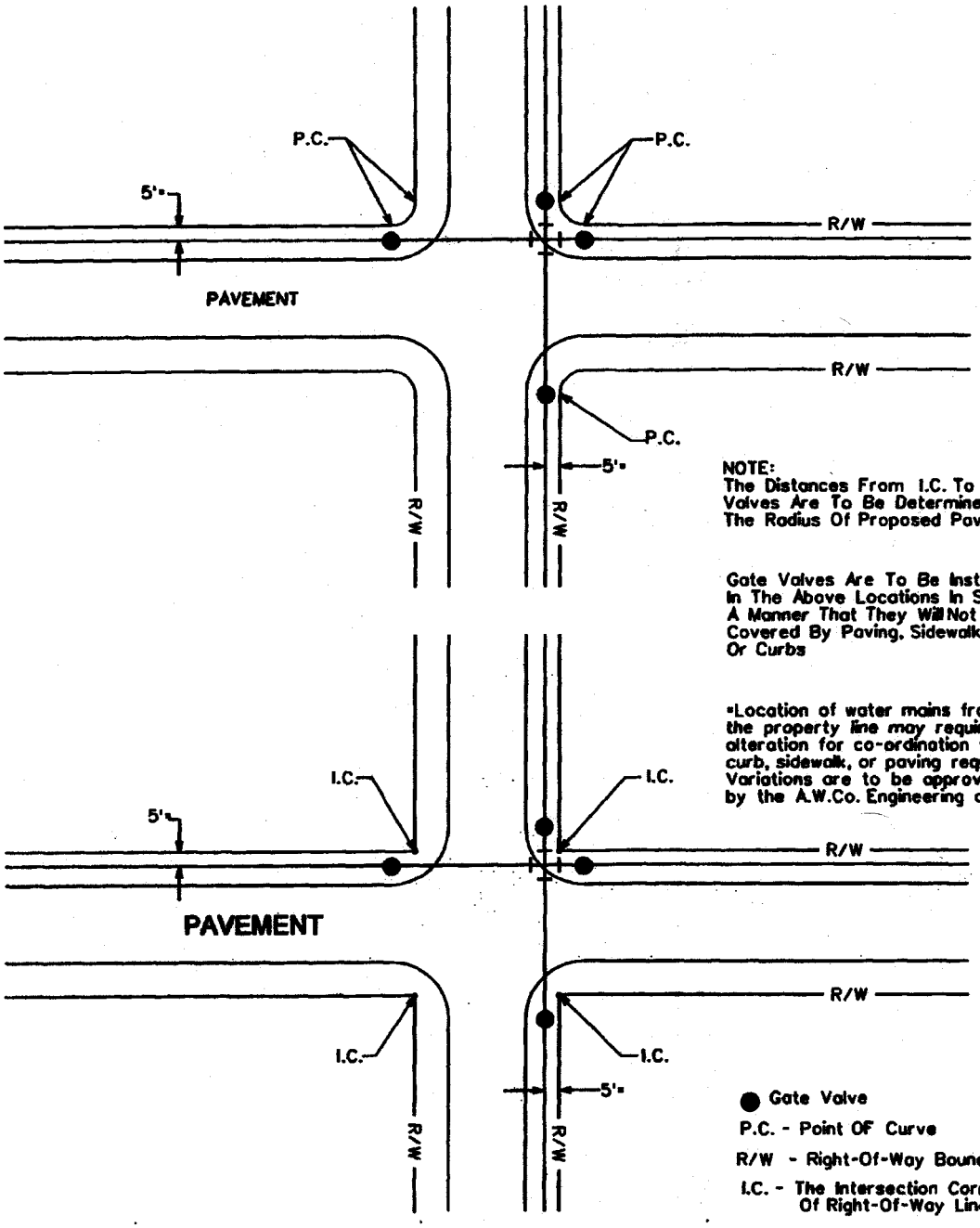

NOTE:
The Distances From I.C. To Gate Valves Are To Be Determined By The Radius Of Proposed Pavement.

Gate Valves Are To Be Installed In The Above Locations In Such A Manner That They Will Not Be Covered By Paving, Sidewalks, Or Curbs

*Location of water mains from the property line may require alteration for co-ordination with curb, sidewalk, or paving requirements. Variations are to be approved by the A.W.Co. Engineering dept.

● Gate Valve

P.C. - Point Of Curve

R/W - Right-Of-Way Boundary

I.C. - The Intersection Corner Of Right-Of-Way Lines

ARIZONA WATER COMPANY

STANDARD SPECIFICATION

FOR THE INSTALLATION OF

TYPICAL GATE VALVE LOCATIONS

DRAWN BY:	APPROVED BY:	DATE:	△ 1/31/2001	
CCO	M.W.	3/20/86		E-9-1-1

FOR 6" THROUGH 12" GATE VALVES

Mueller Resilient Wedge Gate Valves
Catalog Number A-2360-__
ANSI/AWWA C509 Compliant

FOR 14" THROUGH 16" GATE VALVES

Mueller Resilient Wedge Gate Valves
Catalog Number A-2361-__
ANSI/AWWA C509 Compliant

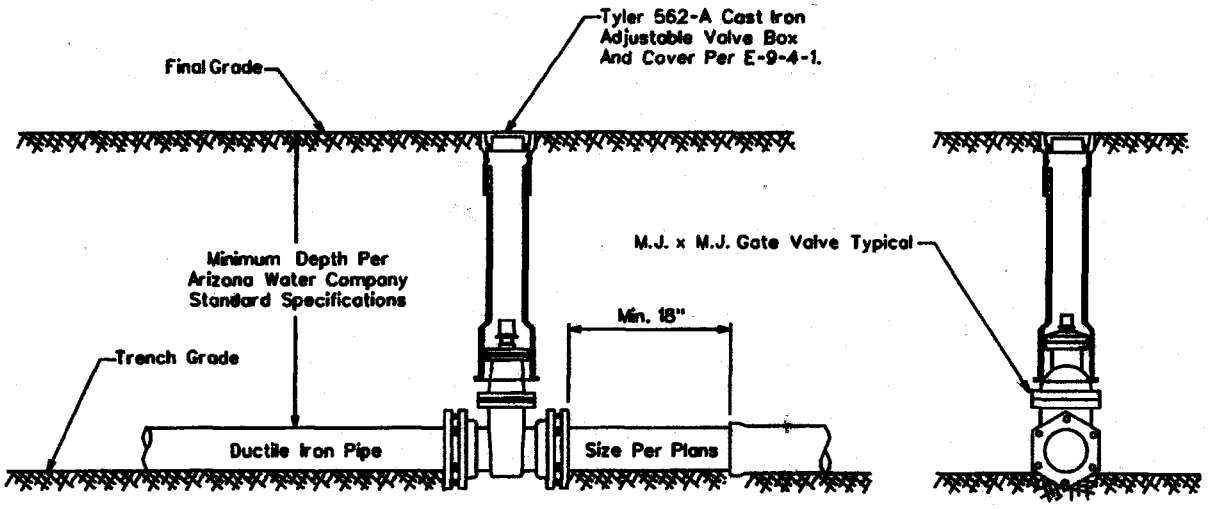

All Valves Installed On Pipe Five Feet (5') Deep And Greater Are To Be Installed With A Valve Operator Extension, Mueller Catalog No. A-26441.

ARIZONA WATER COMPANY

STANDARD SPECIFICATION
FOR THE INSTALLATION OF

TYPICAL VERTICAL GATE VALVES

DRAWN BY:	APPROVED BY:	DATE:		
CB	MW	03.20.1986	△ 08.23.2006	E-9-2-1

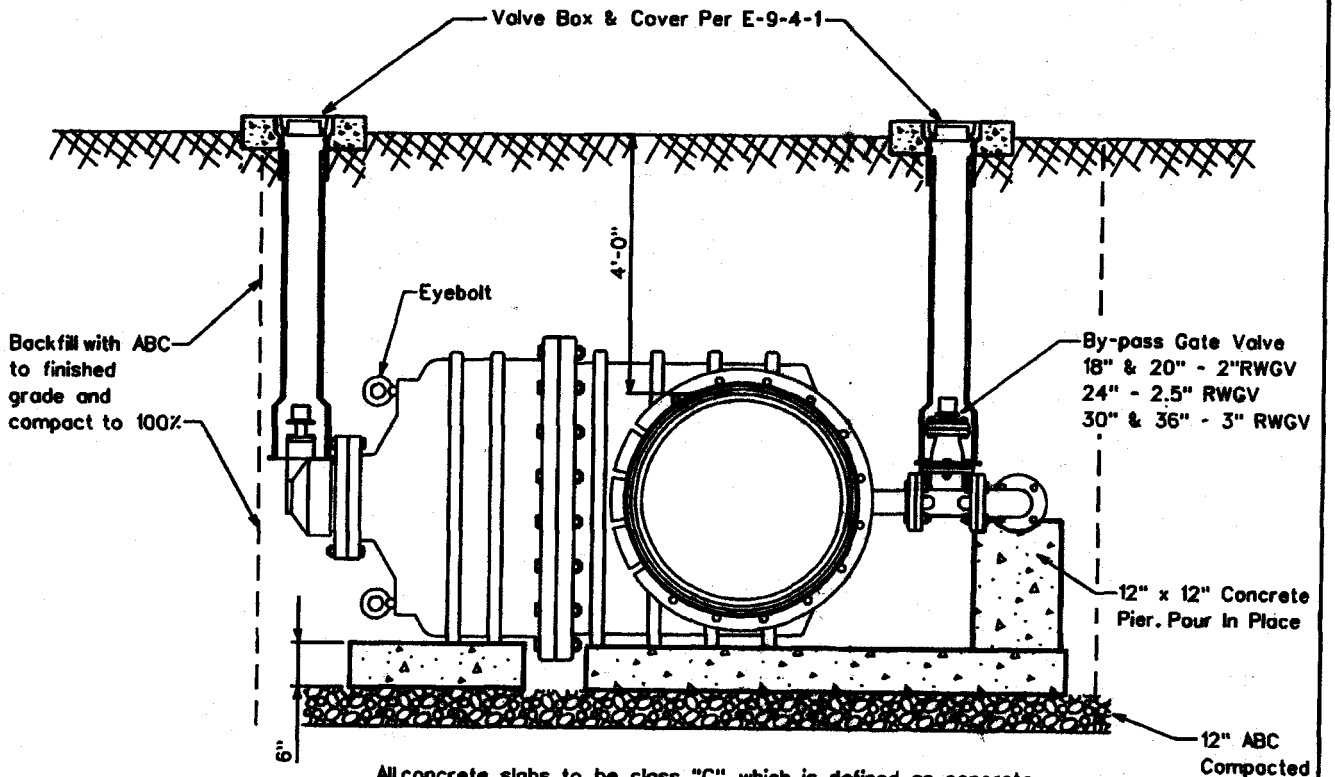

All concrete slabs to be class "C", which is defined as concrete whose minimum compressive strength at 14 days reaches 1600psi and at 28 days reaches 2000psi. per MAG Section 725, Table 725-1. Slabs to be formed and poured prior to valve installation.

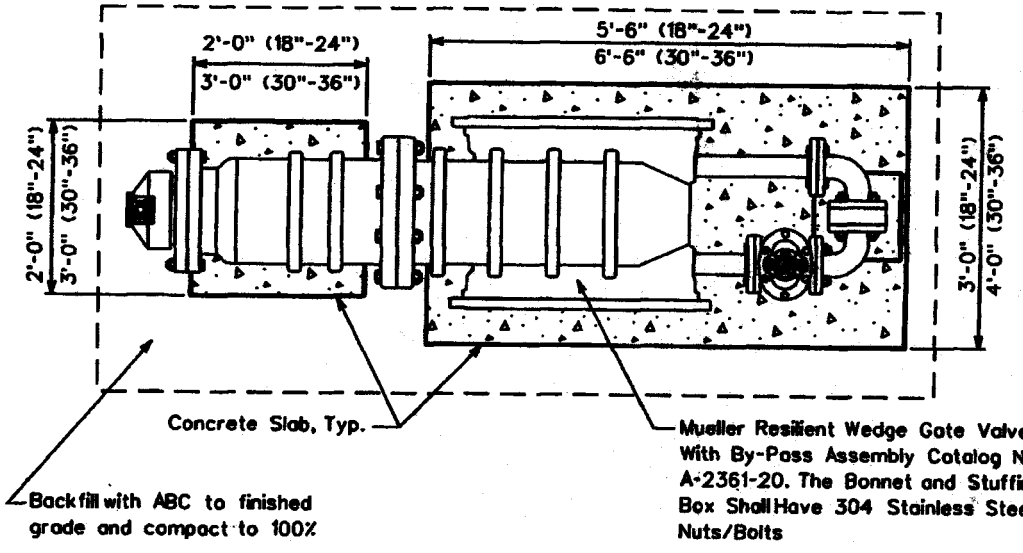

All valves installed on pipe five feet and greater are to be installed with a valve operator extension Mueller catalog No.A-26441 The distance is measured from the top of the operating nut to final grade.

ARIZONA WATER COMPANY

STANDARD SPECIFICATION

FOR THE INSTALLATION OF

INSTALLATION OF BEVEL GEARED HORIZONTAL GATE VALVES WITH BY-PASS FOR 18" AND LARGER VALVES

DRAWN BY:	APPROVED BY:	DATE:	△	E-9-2-2
CB		12.07.2004		

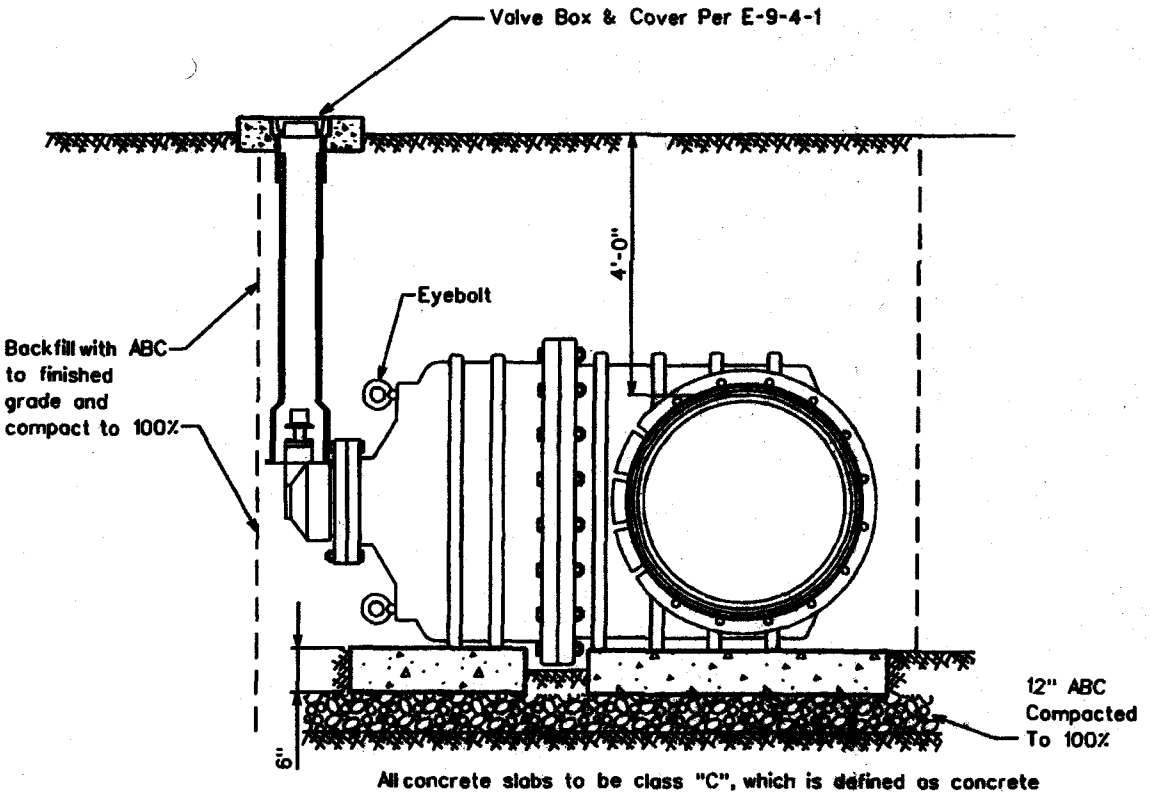

All concrete slabs to be class "C", which is defined as concrete whose minimum compressive strength at 14 days reaches 1600psi and at 28 days reaches 2000psi. per MAG Section 725, Table 725-1. Slabs to be formed and poured prior to valve installation.

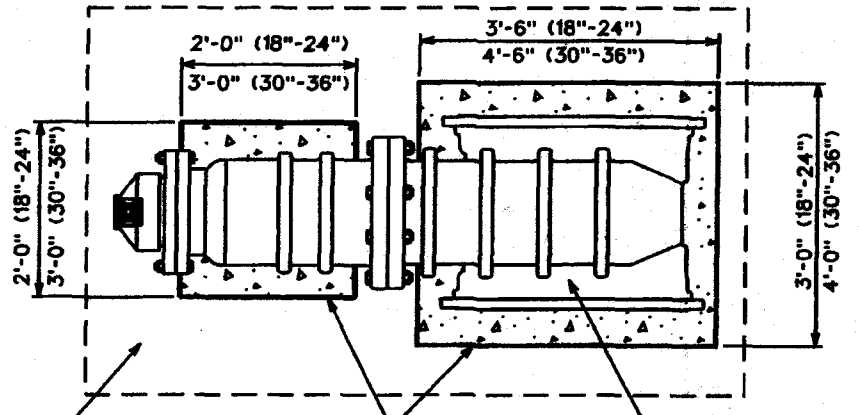

All valves installed on pipe five feet and greater are to be installed with a valve operator extension Mueller catalog No.A-26441 The distance is measured *from the top of the operating nut to* final grade.

ARIZONA WATER COMPANY

STANDARD SPECIFICATION

FOR THE INSTALLATION OF

INSTALLATION OF BEVEL GEARED HORIZONTAL GATE VALVES WITHOUT A BY-PASS FOR 18" AND LARGER VALVES

DRAWN BY:	APPROVED BY:	DATE:	△ 5.13.2005	E-9-2-3
CB		12.07.2004		

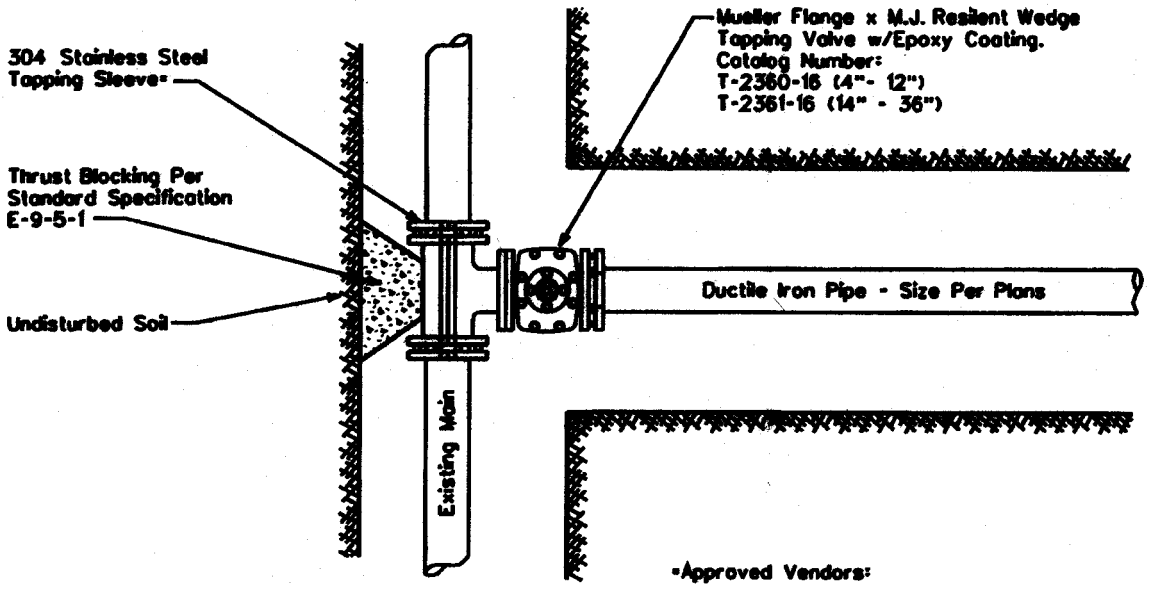

*Approved Vendors:

Mueller, Catalog No. H304, 304 Stainless Steel

JCM, Model 432, 304 Stainless Steel

Romac, "SST", 304 Stainless Steel

Cascade, "CST-EX", 304 Stainless Steel

NOTE:

1. All flanges, bolts, and nuts shall be kept free of concrete.
2. Air pressure test the tapping sleeve before the live tap is made.
3. Polywrap all new fittings

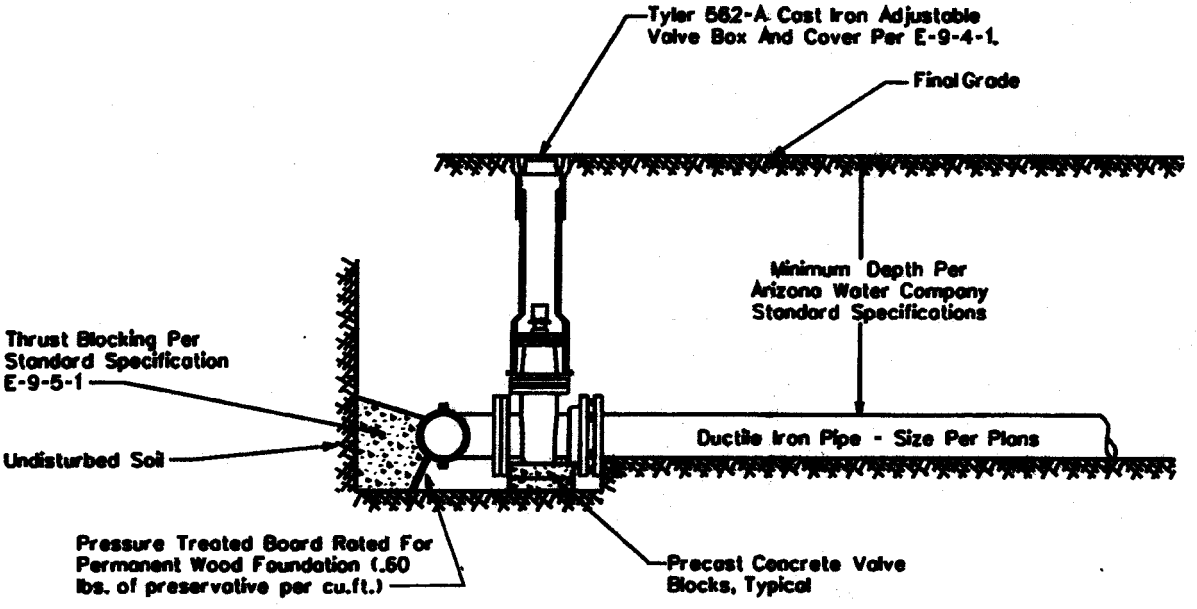

ARIZONA WATER COMPANY

STANDARD SPECIFICATION
FOR THE INSTALLATION OF

TYPICAL TAPPING SLEEVE AND VALVE

DRAWN BY:	APPROVED BY:	DATE:	△ 08.23.2006	E-9-3-1
CB	MW	03.20.1986		

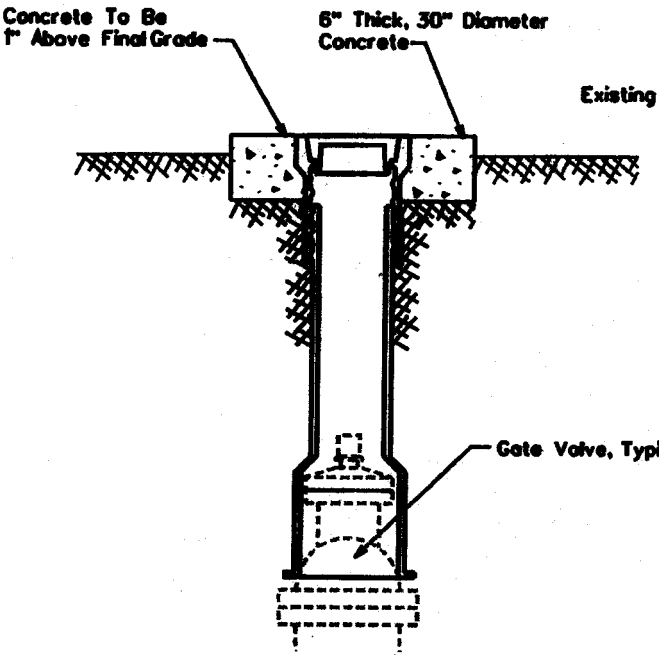

NON-VEHICULAR VALVE BOX

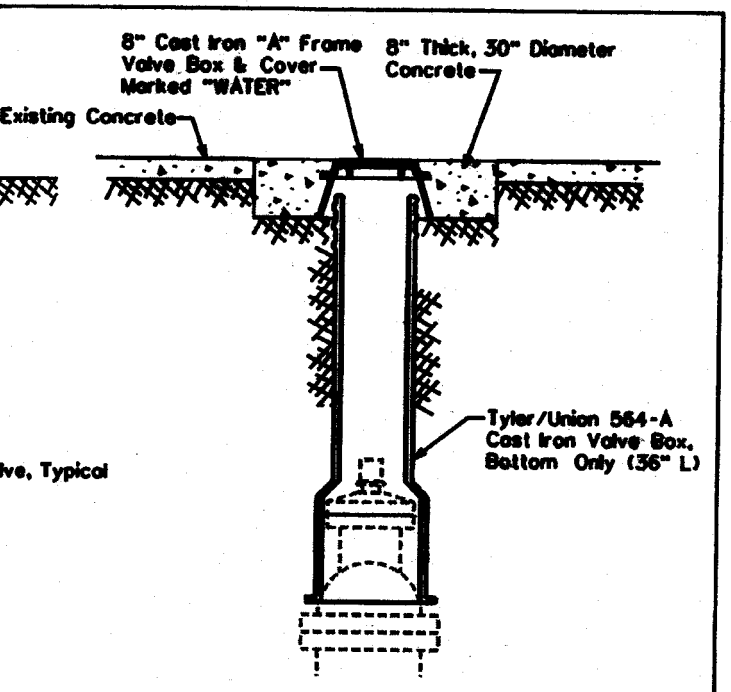

CONCRETE VALVE BOX

For Areas Subject To Vehicular Traffic

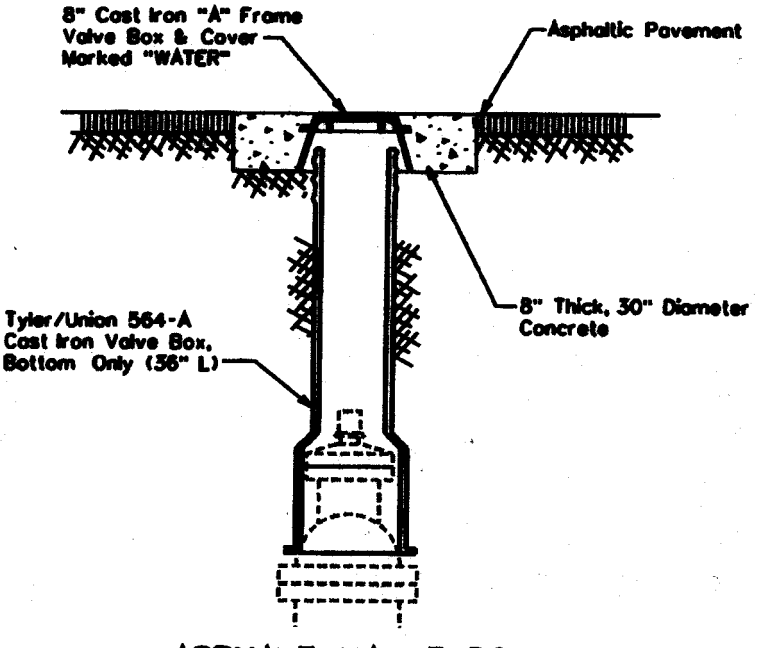

ASPHALT VALVE BOX

For Areas Subject To Vehicular Traffic

NOTE:

1. The Valve Box Shall Be Adjusted To Finished Grade Prior To Placing Of Asphalt And/Or Concrete.
2. For Non-Traffic Areas Use Tyler/Union 562-A, Two-Piece, 6855 Series Or Equivalent Adjustable Cast Iron Valve Box And Cover. Valves 4" To 12"

   For Traffic Areas, Use Tyler/Union 564-A Bottom Section Only With An 8" Cast Iron "A" Frame With Cover. Valves 4" To 12"
3. All Valves Installed Five Feet (5') Deep And Greater Are To Be Installed With A Valve Operator Extension, Mueller Catalog No. A-26441 And Shall Have A Debris Cap
4. Use Minimum Class 'C' Concrete which is defined as concrete whose minimum compressive strength at 14 days reaches 1600psi and at 28 days reaches 2000psi. per MAG Section 725, Table 725-1.

ARIZONA WATER COMPANY

STANDARD SPECIFICATION

FOR THE INSTALLATION OF

TYPICAL VALVE SUBJECT TO NON-VEHICULAR AND VEHICULAR TRAFFIC

DRAWN BY:	APPROVED BY:	DATE:	△ 8.24.2006	E-9-4-1
CB	MW	03.20.1986		

CROSSES

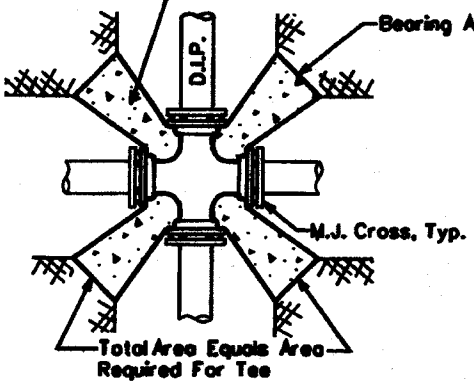

TEES

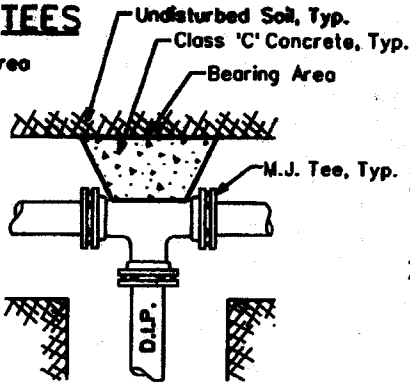

ELLS

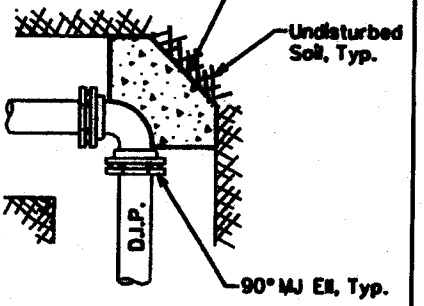

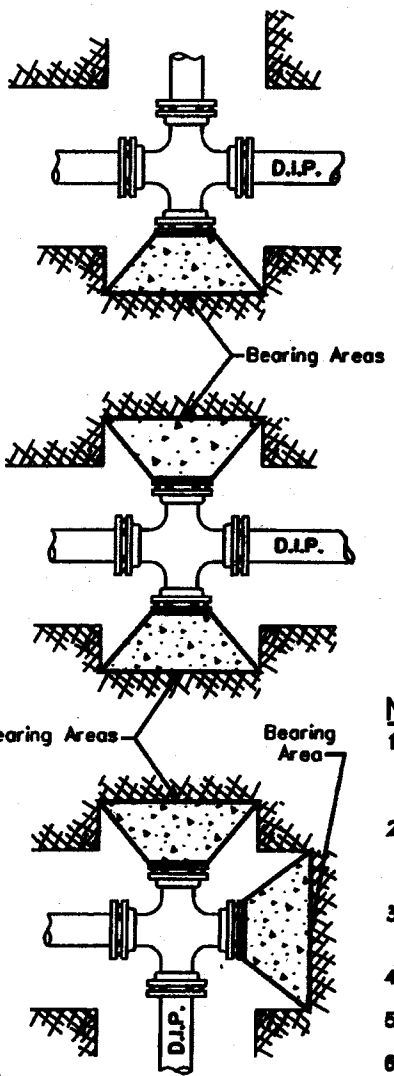

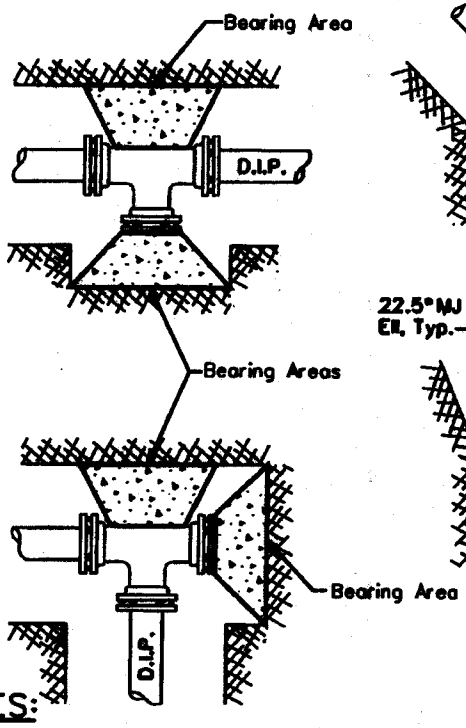

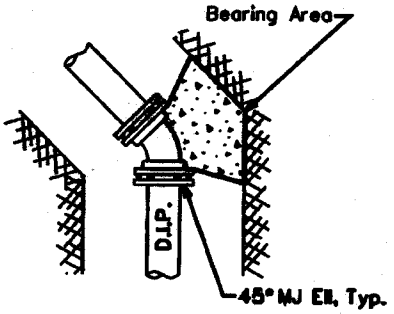

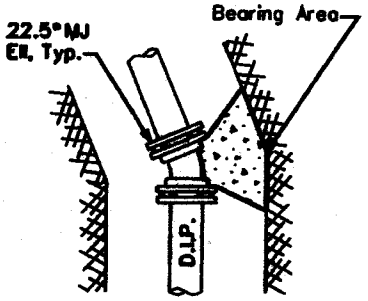

CROSS SECTION

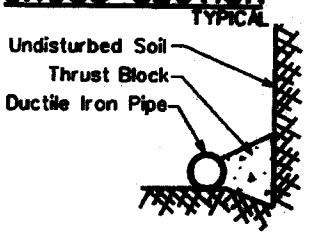

NOTES:

1. Use minimum Class 'C' concrete, which is defined as concrete whose minimum compressive strength at 14 days reaches 1600psi and at 28 days reaches 2000psi. per MAG Section 725, Table 725-1.
2. Thrust blocks are to bear on undisturbed earth with minimum bearing area as shown. If not undisturbed, areas will be increased as required.
3. Place the pressure treated form board in front of all plugs before pouring thrust blocks.
4. Form all non-bearing areas to prevent any concrete from entering any joint.
5. All flanges, bolts and nuts shall be kept free of concrete.
6. Center the bearing area on the pipe centerline and force line.
7. All pipe fittings to be wrapped with polyethylene pipe wrap prior to thrust block installation. (where applicable)

THRUST BLOCK SCHEDULE

PIPE SIZE	TEE, 45°, AND 22.5° ELLS, & PLUGS	90° ELLS
6" And Under	4 Sq.Ft.	6 Sq.Ft.
8"	6 Sq.Ft.	9 Sq.Ft.
12"	13 Sq.Ft.	20 Sq.Ft.
16"	23 Sq.Ft.	32 Sq.Ft.
18" And Larger	Calculated Per Project	

CAPS

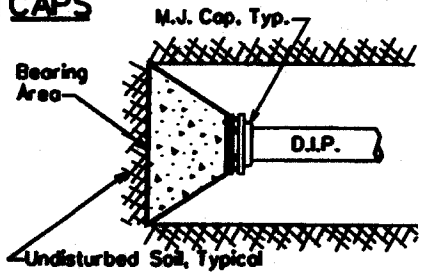

STANDARD SPECIFICATION

FOR THE INSTALLATION OF

TYPICAL THRUST BLOCKING SCHEDULE

DRAWN BY:	APPROVED BY:	DATE	△ 05.27.2005	E-9-5-1
CB	MW	03.20.1986		

NOTES

1. Bars In Conc. Thrust Block To Be Coated w/ 2 Coats Coal Tar Epoxy or by Other Approved Method.
2. Bars To Have 90° Hook @ Their Ends, As Per Table Below.

Pipe Size	Min. Bar Size	"A" Dimension (Hook)	* Min. Block Dimension (WxHxL)
6"	#6	6"	3'x3'x3'
8"	#6	9"	4'x3'x4'
12"	#8	9"	5'x4'x5'
16"	#9	12"	7'x6'x7'

* For 125 P.S.I. Working Pressure

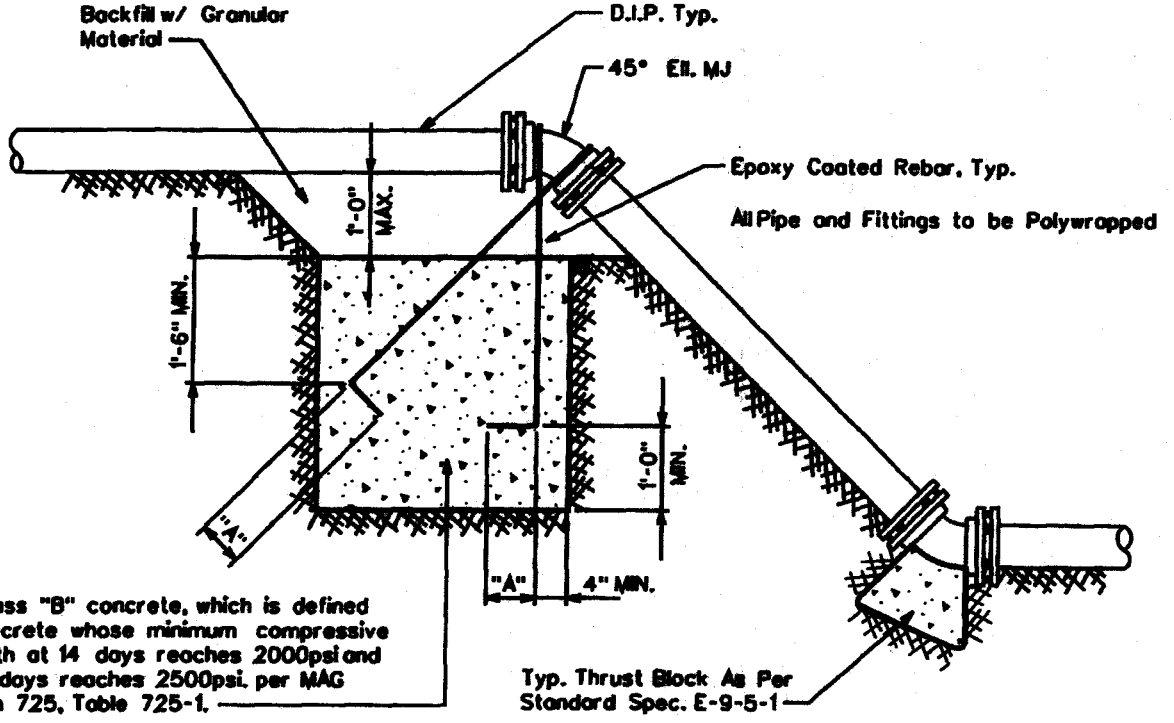

ARIZONA WATER COMPANY

STANDARD SPECIFICATION
FOR THE INSTALLATION OF

THRUST BLOCK FOR VERTICAL BENDS

DRAWN BY:	APPROVED BY:	DATE:	△ 01.16.2007	E-9-5-2
JPK	MJW	7-5-96		

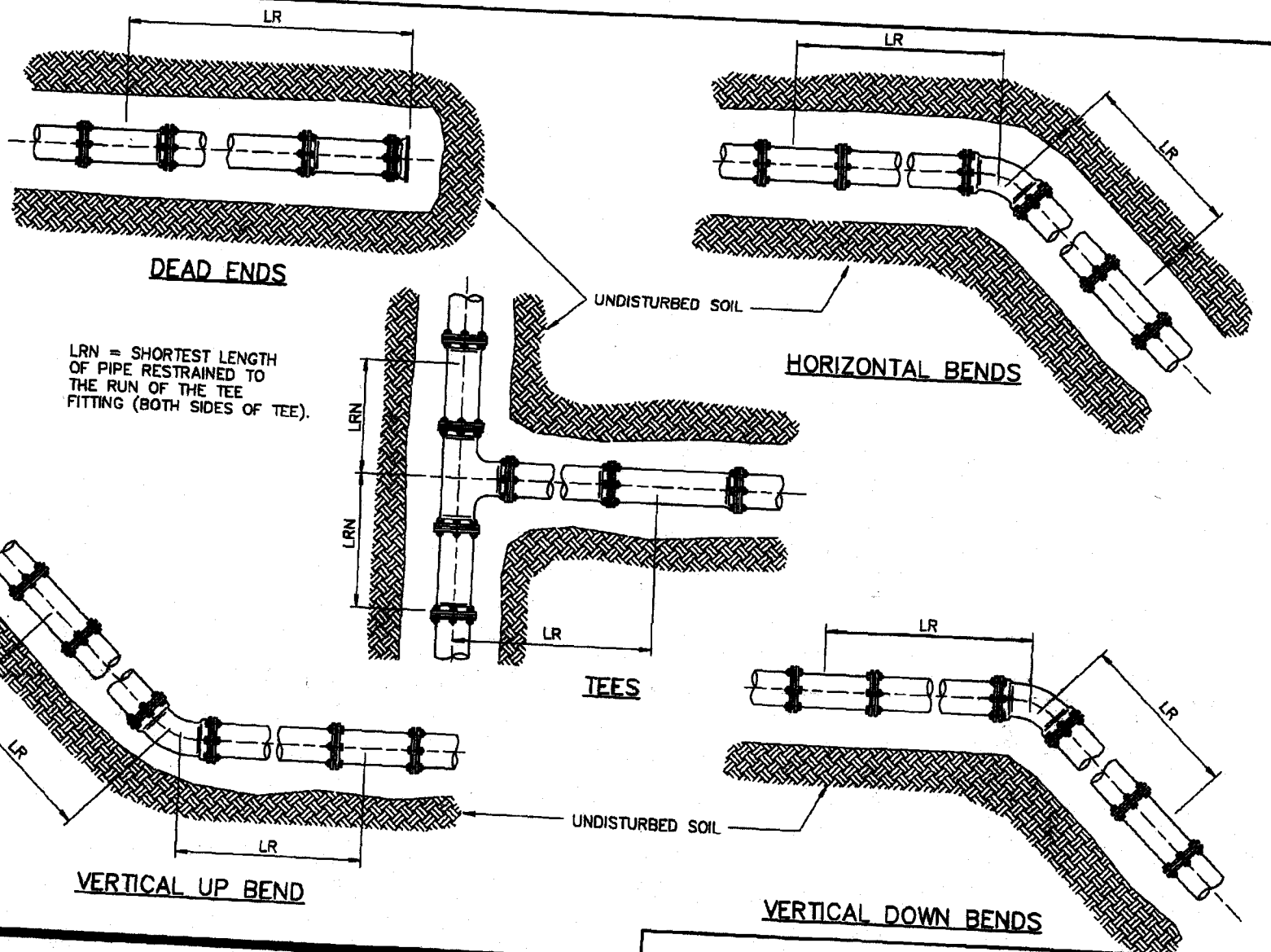

ARIZONA WATER COMPANY

STANDARD SPECIFICATION
FOR THE INSTALLATION OF

JOINT RESTRAINT FOR NEW DUCTILE IRON AND C-900 PVC MAINS

DRAWN BY:	APPROVED BY:	DATE:	△	
CB	MW	01.16.2007		E-9-5-3-1

RESTRAINED LENGTHS, LR, FOR DUCTILE IRON PIPE

NOMINAL PIPE SIZE INCHES	HORIZONTAL BENDS			TEES		VERTICAL OFFSETS						DEAD ENDS
						90° BEND FITTINGS		45° BEND FITTINGS		22-1/2° BEND FITTINGS		
	90°	45°	22-1/2°	LRN=0'	LRN=10'	DOWN BEND	UP BEND	DOWN BEND	UP BEND	DOWN BEND	UP BEND	
4	18	7	4	30	8	31	18	13	7	6	3	31
6	25	10	5	43	20	44	25	18	10	9	5	44
8	32	13	6	56	34	58	32	24	13	11	6	58
10	38	16	8	68	45	69	38	29	16	14	8	69
12	45	19	9	80	57	81	45	34	19	16	9	81
14	51	21	10	91	68	92	51	38	21	18	10	92
16	57	24	11	103	79	104	57	43	24	21	11	104
18	62	26	12	113	90	115	62	48	26	23	12	115
20	68	28	14	125	100	126	68	52	28	25	14	126
24	79	33	16	145	121	147	79	61	33	29	16	147

RESTRAINED LENGTHS, LR, FOR DUCTILE IRON PIPE WITH POLYETHYLENE WRAP

NOMINAL PIPE SIZE INCHES	HORIZONTAL BENDS			TEES		VERTICAL OFFSETS						DEAD ENDS
						90° BEND FITTINGS		45° BEND FITTINGS		22-1/2° BEND FITTINGS		
	90°	45°	22-1/2°	LRN=0'	LRN=10'	DOWN BEND	UP BEND	DOWN BEND	UP BEND	DOWN BEND	UP BEND	
4	26	11	5	69	18	72	26	30	11	14	5	72
6	36	15	7	99	47	102	36	42	15	20	7	102
8	47	19	9	130	78	133	47	55	19	26	9	133
10	56	23	11	157	103	159	56	66	23	32	11	159
12	65	27	13	185	131	187	65	77	27	37	13	187
14	74	31	15	211	156	214	74	89	31	42	15	214
16	82	34	16	238	183	241	82	100	34	48	16	241
18	90	37	18	263	207	266	90	110	38	53	18	266
20	98	41	20	289	233	292	98	121	41	58	20	292
24	113	47	22	337	280	340	113	141	47	68	22	340

NOTES:

1. ALL JOINTS WITHIN THE SPECIFIED LENGTH LR MUST BE RESTRAINED. ALL LENGTHS ARE GIVEN IN FEET.
2. THE MAXIMUM TEST PRESSURE SHALL NOT EXCEED 200 PSI
3. THE MINIMUM DEPTH OF BURY SHALL BE 3' TO TOP OF PIPE.
4. RESTRAINED LENGTHS MAY BE REDUCED WHEN SUPPORTED BY ENGINEERING CALCULATIONS.

ARIZONA WATER COMPANY

STANDARD SPECIFICATION
FOR THE INSTALLATION OF

JOINT RESTRAINT FOR NEW DUCTILE IRON AND C-900 PVC MAINS

DRAWN BY:	APPROVED BY:	DATE:	△	
CB	MW	01.16.2007		E-9-5-3-2

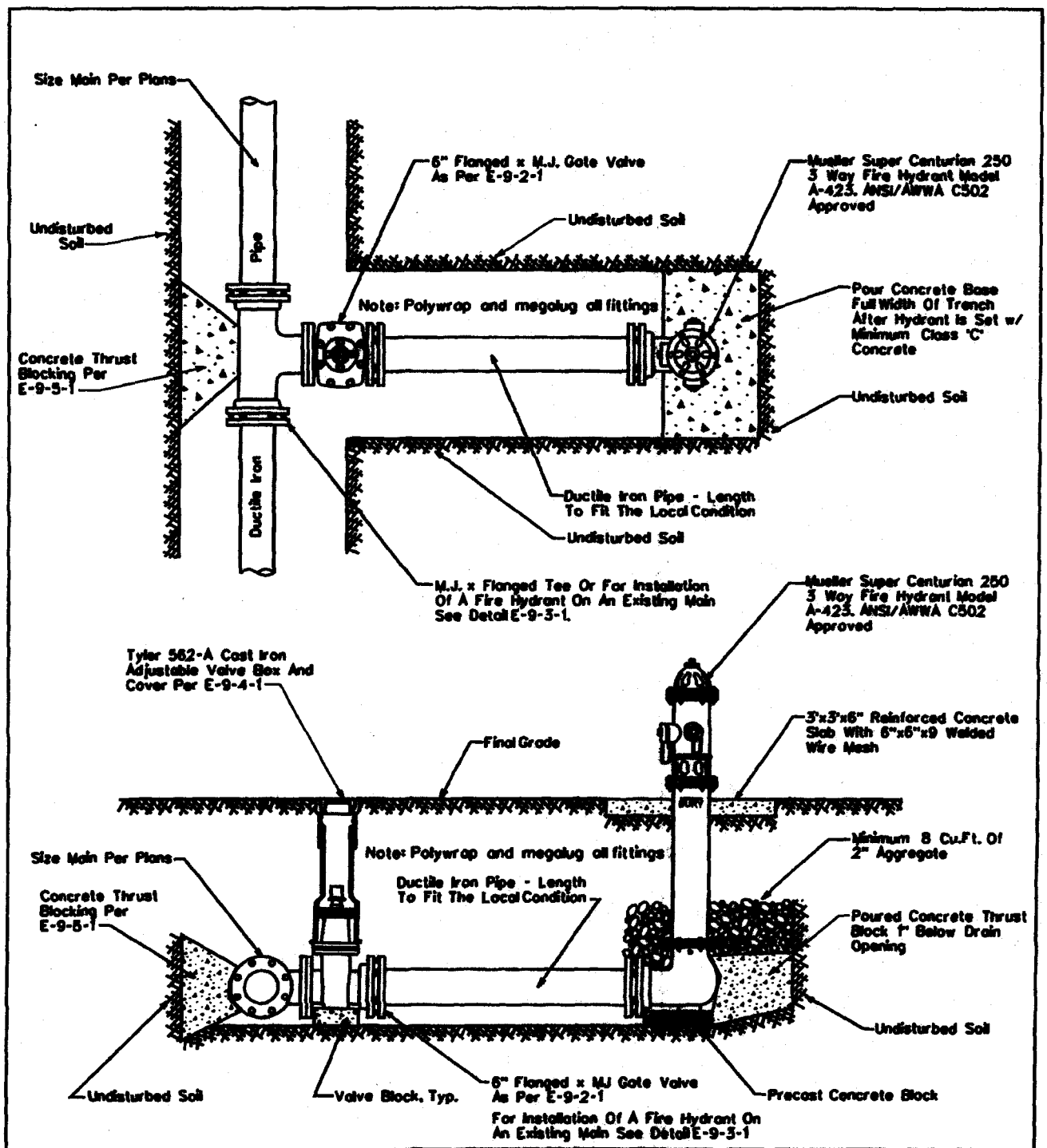

NOTE: All Flanges, Bolts, Nuts and Drain Holes Shall Be Kept Free Of Concrete

ARIZONA WATER COMPANY

STANDARD SPECIFICATION

FOR THE INSTALLATION OF

TYPICAL PERPENDICULAR FIRE HYDRANT

DRAWN BY:	APPROVED BY:	DATE:	△ 08.24.2006	E-9-6-1
CB	MW	1-28-91		

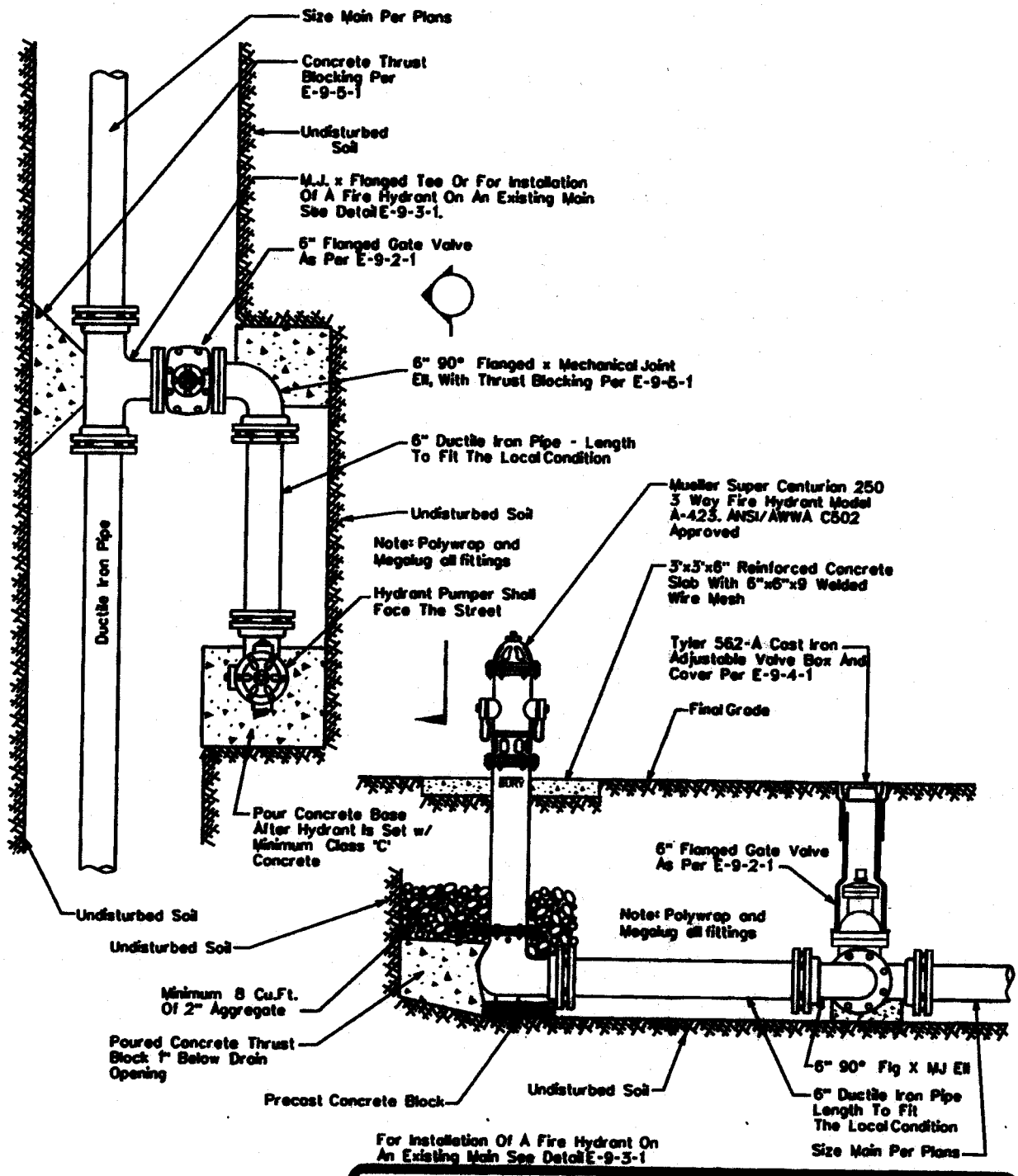

NOTE: All Flanges, Bolts, Nuts And Drain Holes Shall Be Kept Free Of Concrete.

ARIZONA WATER COMPANY

STANDARD SPECIFICATION

FOR THE INSTALLATION OF

TYPICAL PARALLEL FIRE HYDRANT

DRAWN BY:	APPROVED BY:	DATE:	△	
JW	MW	03.20.1986	△ 08.24.2006	E-9-7-1

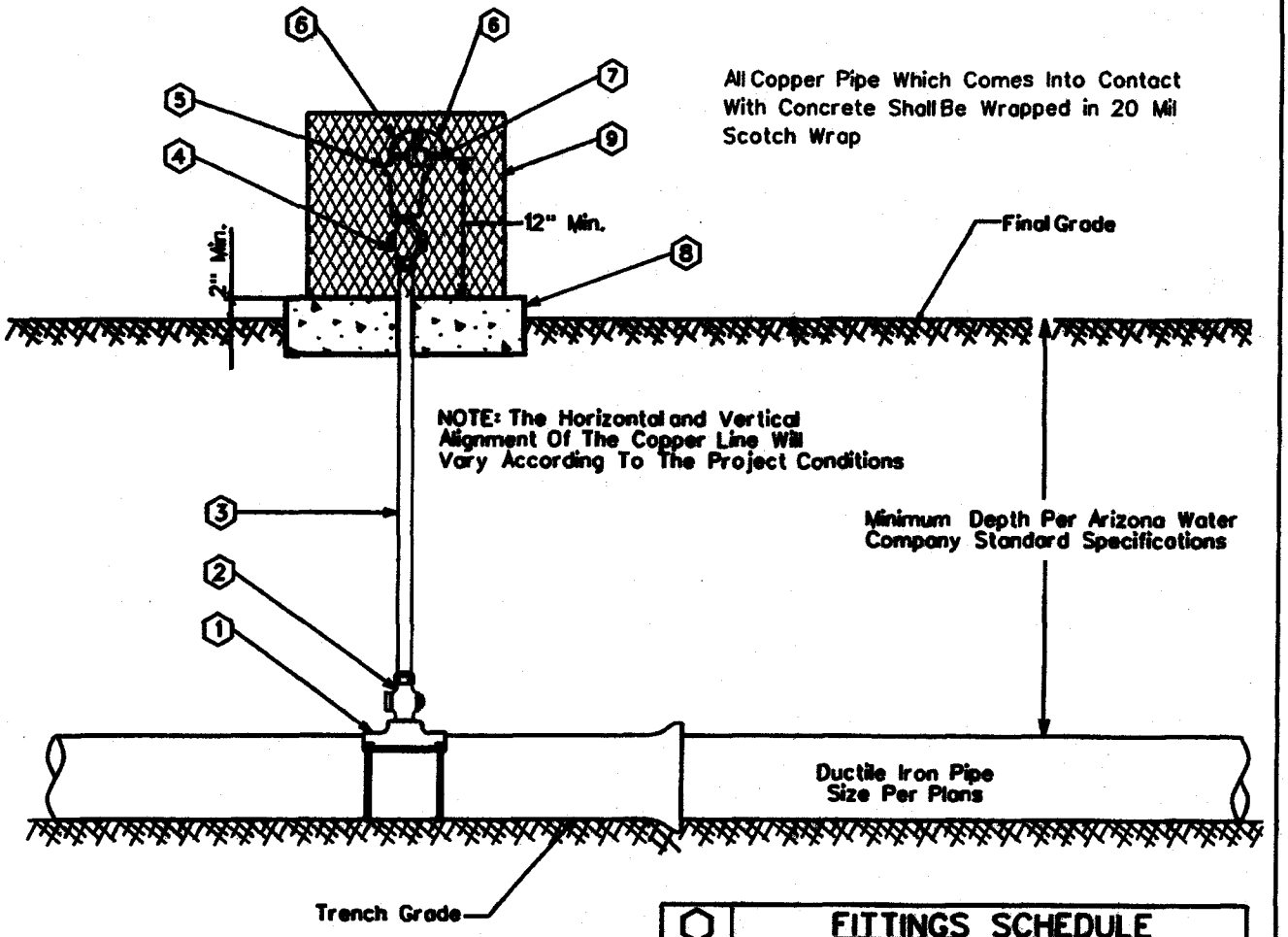

⬡	FITTINGS SCHEDULE
1.	Mueller BR2B Bronze Service Saddle - Double Strap
2.	1" Mueller B-25008 Taper x Comp. Ball Corp Stop
3.	1" Type 'K' Copper w/NO Splices - Field Fit
4.	1" Mueller B-25028 IP x Comp. Ball Corp Stop
5.	Crispin 1" Air Release Valve, Model AR10
6.	½" Brass Street Elbow
7.	No.16 Wire Mesh Screen (Non-Corrodible)
8.	4" Thick Concrete Pad - Class 'C' Concrete
9.	Guardshack, Model GS-1, Available From BPDI, Inc. Available In Leaf Green Or Desert Tan

GENERAL NOTES:

1. The valve shall be installed at high points and on long runs to vent the accumulation of air with the line under pressure- see the construction plans for specific locations.
2. The valve shall have a 5/64" orifice with valve sealing faces of stainless steel and BUNA-N rubber.
3. The valve shall be Crispin model AR10 for 6" and larger water mains.
4. Crispin model AR10 valve construction consists of a 1" IPST inlet & ½" IPST outlet, cast iron body and top flange with stainless steel float and trim.
5. The air release assembly shall be located out of the path of traffic but within right-of-way or easement.

ARIZONA WATER COMPANY

STANDARD SPECIFICATION
FOR THE INSTALLATION OF
TYPICAL AIR RELEASE VALVE

DRAWN BY:	APPROVED BY:	DATE		
CB	MW	03.20.1997	△06.24.2006	E-9-8-2

All Copper Pipe Which Comes Into Contact With Concrete Shall Be Wrapped In 20 Mil Scotch Wrap

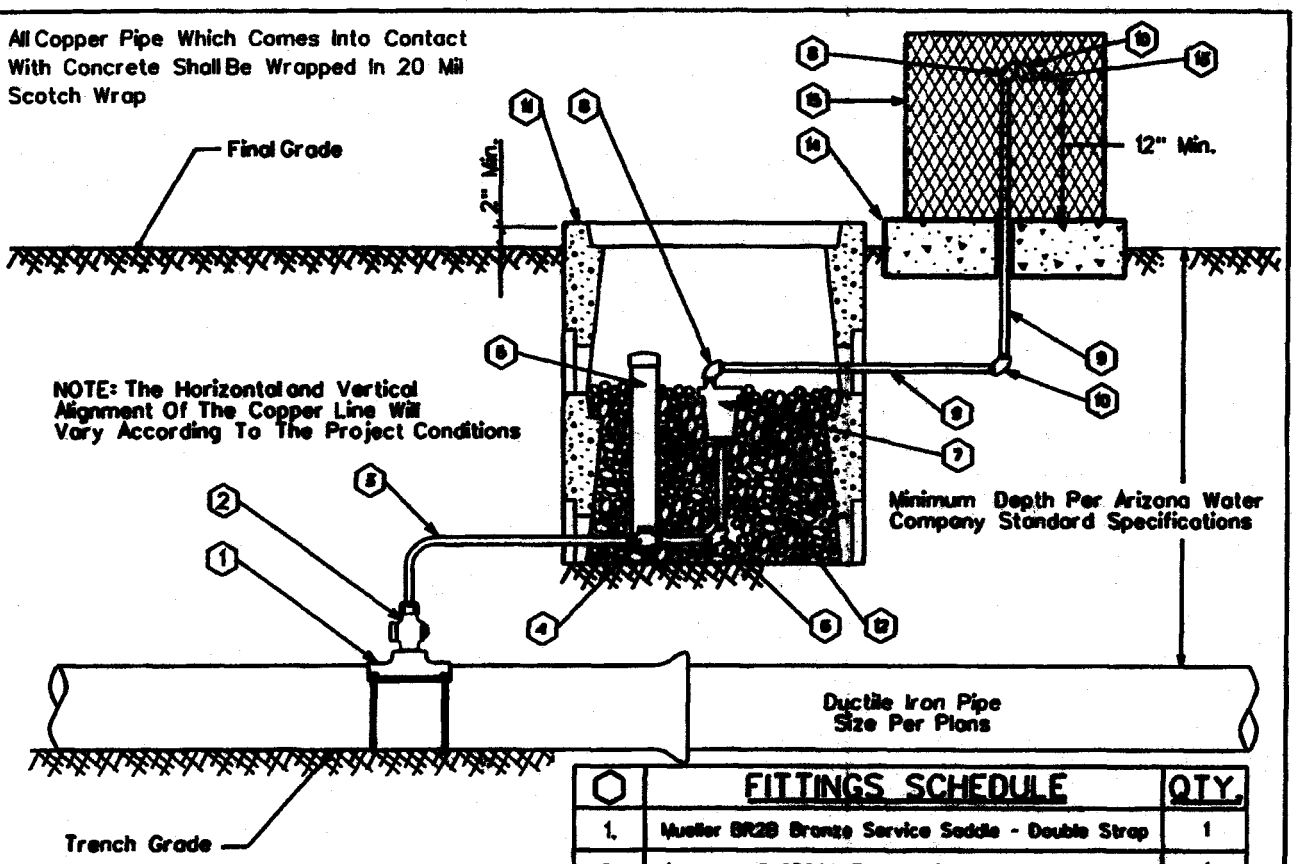

⬡	FITTINGS SCHEDULE	QTY.
1.	Mueller BR2B Bronze Service Saddle - Double Strap	1
2.	1" Mueller B-25008 Taper x Comp. Ball Corp Stop	1
3.	1" Type 'K' Copper w/NO Splices - Field Fit	As Req'd
4.	1" Mueller B-25028 IP x Comp. Ball Corp Stop	1
5.	3" PVC Pipe w/ Cap (Loose Fit)	1
6.	1" x 4" Brass Nipple w/90° Elbow	1
7.	Crispin 1" Air Release Valve, Model AR10	1
8.	½" Brass Street Elbow	2
9.	½" Galvanized Pipe - Length as req'd	2
10.	½" Galvanized 90° Ell	2
11.	Number 1 Meter Box	2
12.	2" Sized AB (Fill Meter Box To The Top Of The Air Release Valve)	As Req'd
13.	No.16 Wire Mesh Screen (Non-Corrodible)	1
14.	4" Thick Concrete Pad - Class 'C' Concrete	1
15.	Guardshack, Model GS-1, Available From BPDI, Inc. Available In Leaf Green Or Desert Tan	1

GENERAL NOTES:

1. The valve shall be installed at high points and on long runs to vent the accumulation of air with the line under pressure- see the construction plans for specific locations.
2. The valve shall have a 9/64 " orifice with valve sealing faces of stainless steel and BUNA-N rubber.
3. The valve shall be Crispin model AR10 for 6" and larger water mains.
4. Crispin model AR10 valve construction consists of a 1" IPST inlet & ½" IPST outlet, cast iron body and top flange with stainless steel float and trim.
5. The air release assembly shall be located out of the path of traffic but within the right-of-way or easement.

ARIZONA WATER COMPANY

STANDARD SPECIFICATION
FOR THE INSTALLATION OF

AIR RELEASE VALVE FOR THE NORTHERN REGION

DRAWN BY:	APPROVED BY:	DATE	△	
CB	MW	03.20.1997	△08.24.2006	E-9-8-3

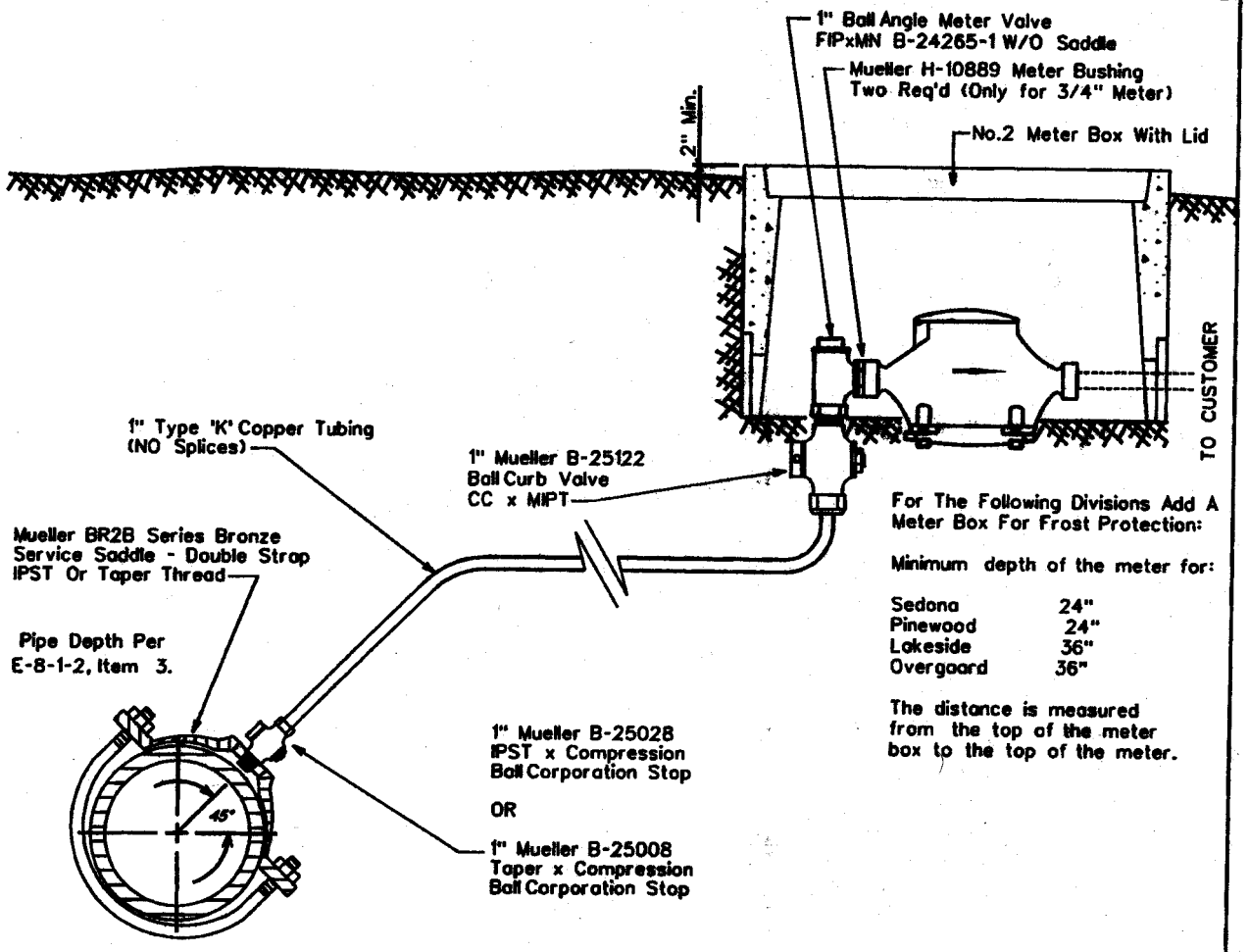

For The Following Divisions Add A Meter Box For Frost Protection:

Minimum depth of the meter for:

Sedona	24"
Pinewood	24"
Lakeside	36"
Overgaard	36"

The distance is measured from the top of the meter box to the top of the meter.

SADDLE TAP TO CA, PVC, OR DI PIPE

NOTE: The minimum distance between taps on mains other than ductile iron is 12"

NOTE:
Only the meter is supplied by Arizona Water Company

ARIZONA WATER COMPANY

STANDARD SPECIFICATION
FOR THE INSTALLATION OF

SINGLE SERVICE CONNECTION FOR A 3/4" OR 1" METER

DRAWN BY:	APPROVED BY:	DATE:	△ 03.17.2006	E-9-9-1
CCO	M.W.	3/20/86		

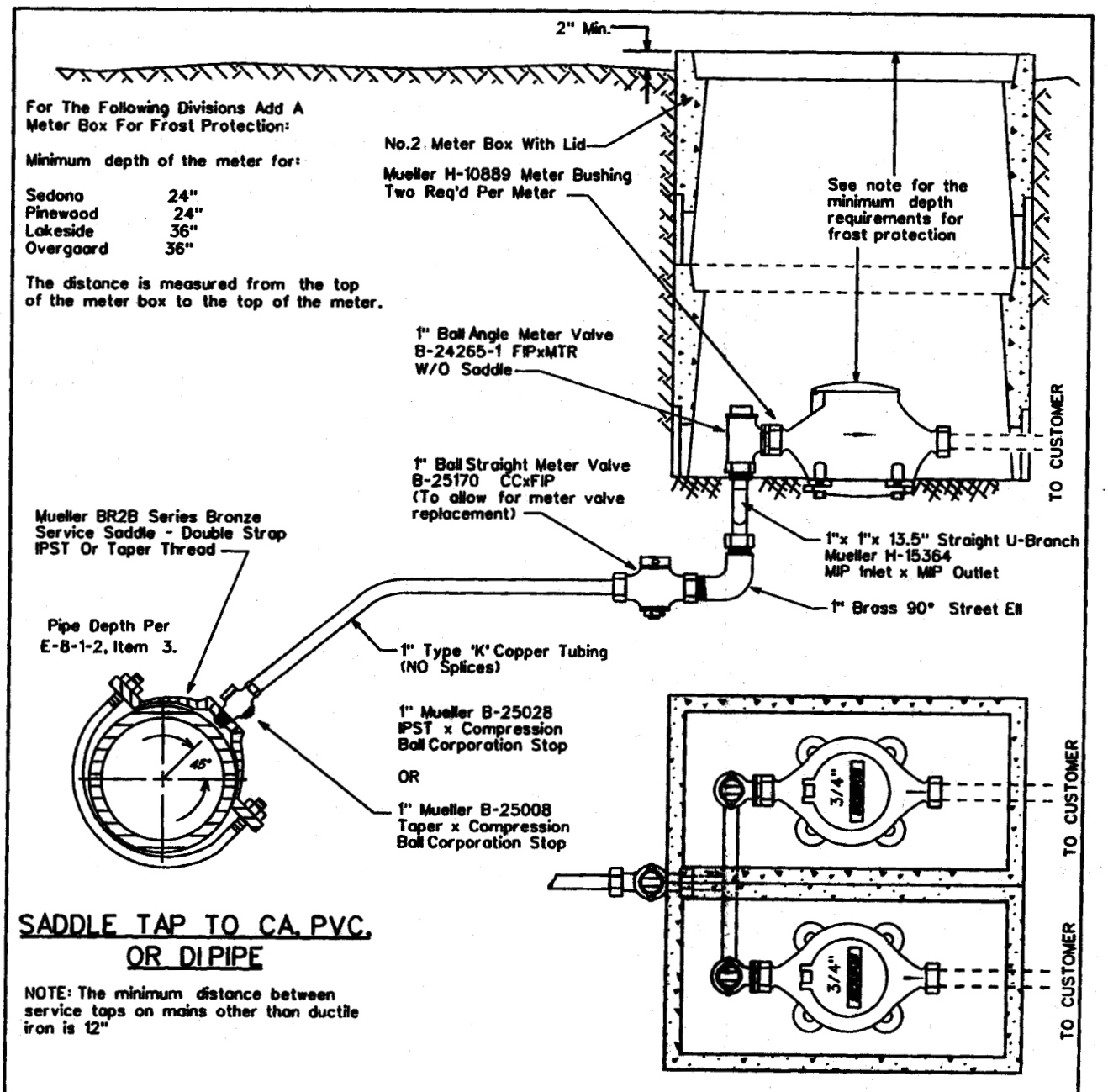

SADDLE TAP TO CA. PVC. OR DI PIPE

NOTE: The minimum distance between service taps on mains other than ductile iron is 12"

NOTE:
Only the meter is supplied by Arizona Water Company

ARIZONA WATER COMPANY

STANDARD SPECIFICATION
FOR THE INSTALLATION OF

DOUBLE SERVICE CONNECTION FOR 3/4" METERS

DRAWN BY:	APPROVED BY:	DATE:	△ 08.25.2006	E-9-10-1
CCO	M.W.	3-20-86		

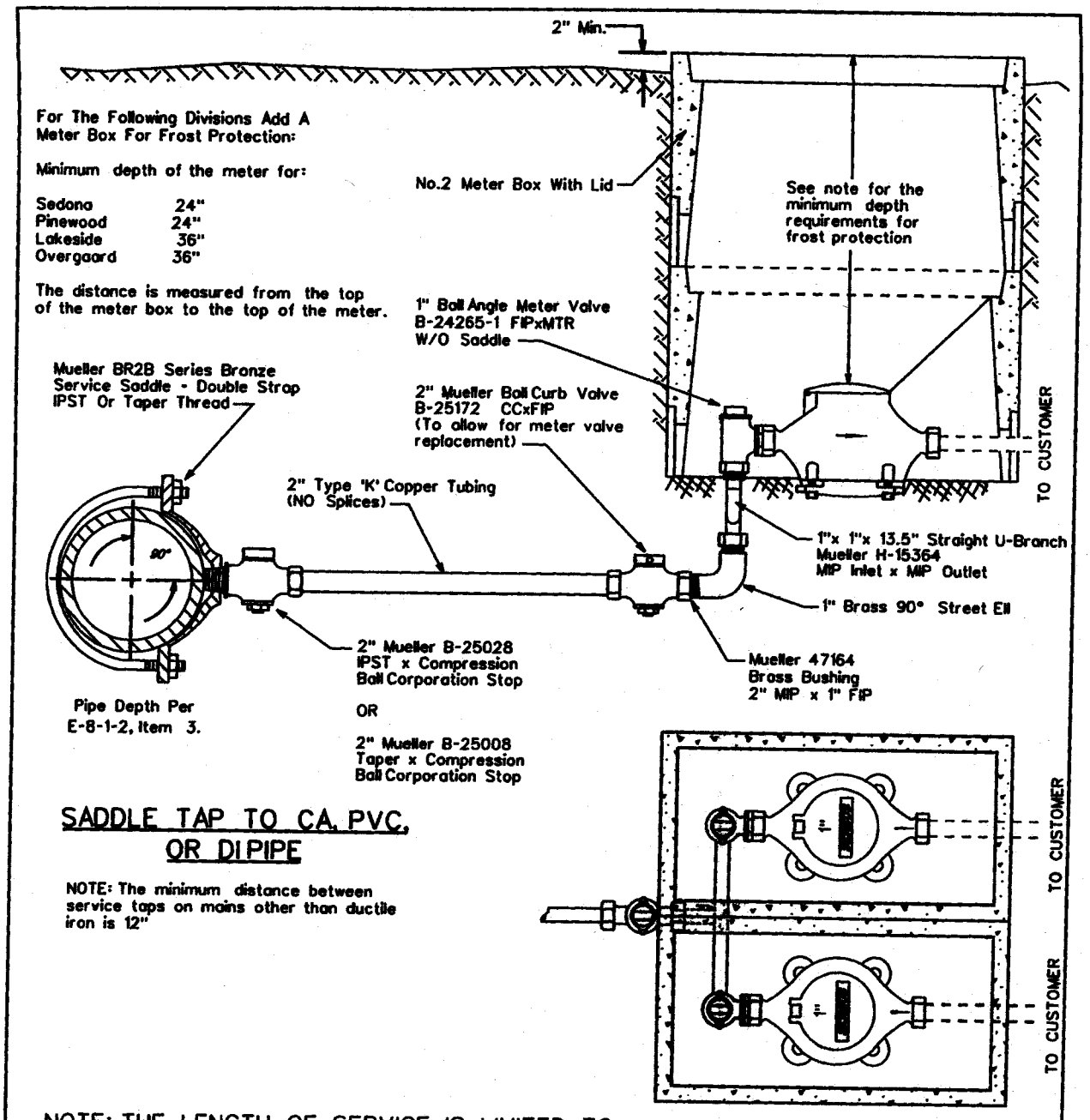

SADDLE TAP TO CA, PVC, OR DIPIPE

NOTE: The minimum distance between service taps on mains other than ductile iron is 12"

NOTE: THE LENGTH OF SERVICE IS LIMITED TO COMMERICIALLY AVAILABLE ROLLS, TYPICALLY 60 FEET

NOTE:
Only the meter is supplied by Arizona Water Company

ARIZONA WATER COMPANY

STANDARD SPECIFICATION
FOR THE INSTALLATION OF

DOUBLE SERVICE CONNECTION FOR 1" METERS

DRAWN BY:	APPROVED BY:	DATE:	△ 08.29.2006	E-9-10-2
CB	M.W.	03.17.2006		

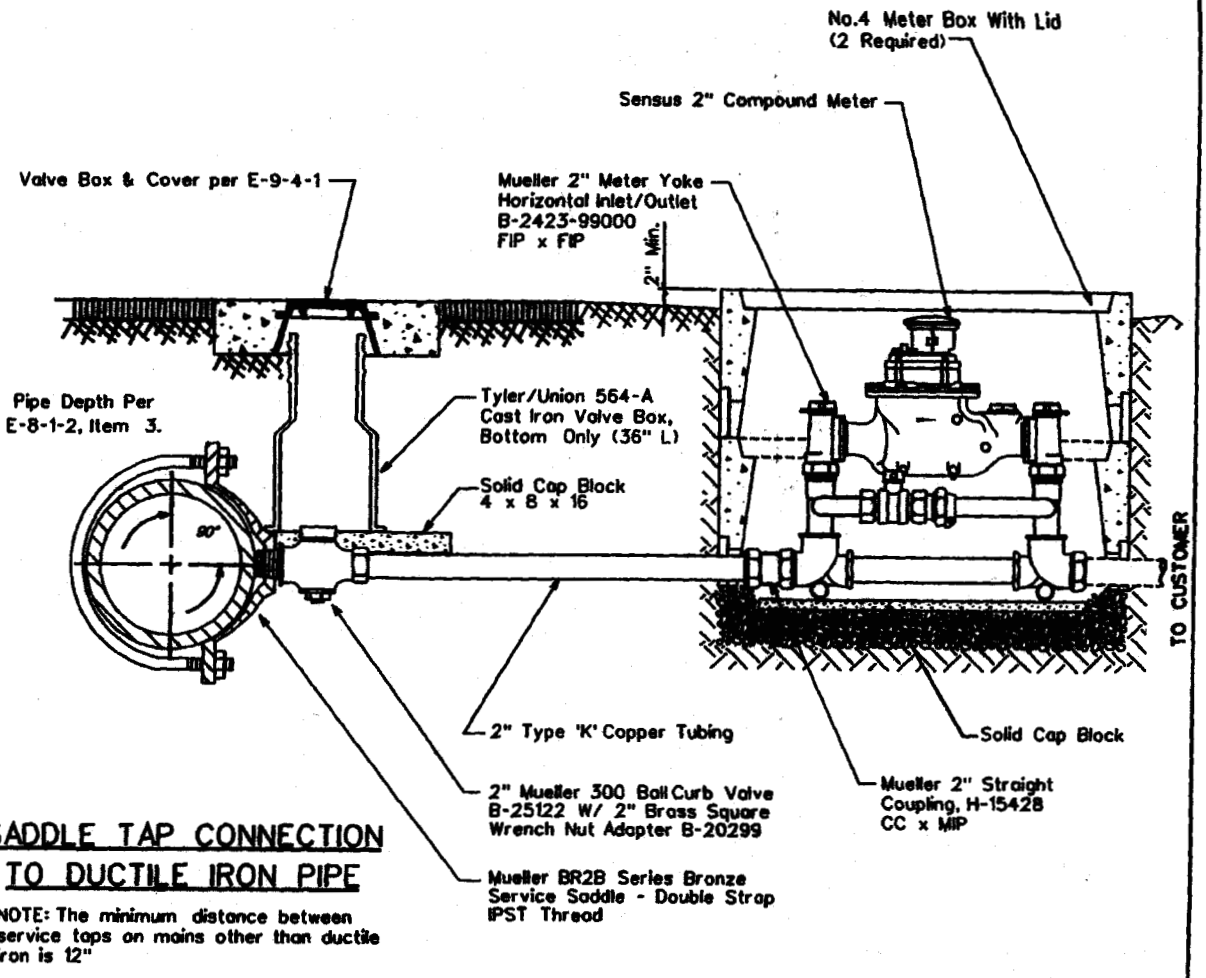

SADDLE TAP CONNECTION TO DUCTILE IRON PIPE

NOTE: The minimum distance between service taps on mains other than ductile iron is 12"

NOTE: THE LENGTH OF SERVICE IS LIMITED TO COMMERICIALLY AVAILABLE ROLLS, TYPICALLY 60 FEET

NOTE:

Only the meter is supplied by Arizona Water Company

ARIZONA WATER COMPANY

STANDARD SPECIFICATION
FOR THE INSTALLATION OF

TYPICAL 2" SERVICE CONNECTIONS

DRAWN BY:	APPROVED BY:	DATE:	△ 08.29.2006	E-9-11-1
JW	M.W.	3/20/86		

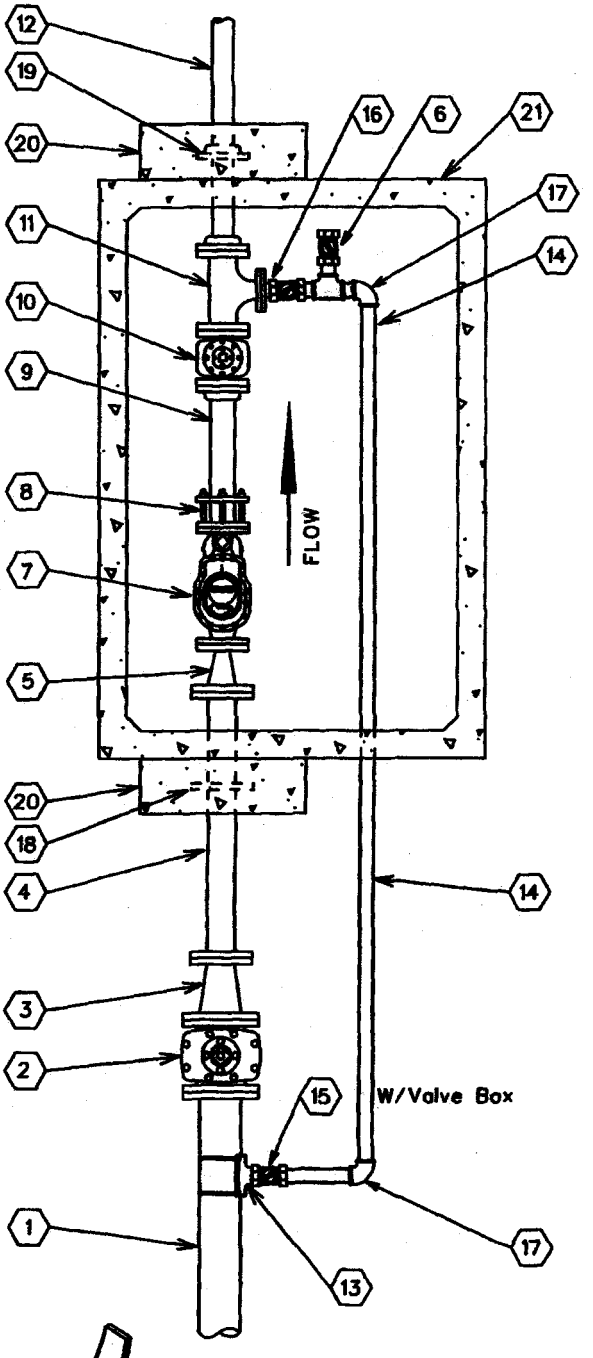

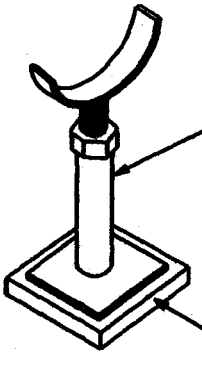

No.	FITTINGS SCHEDULE
1.	6" D.I.P.
2.	6" G.V.B.&C. mj x flng
3.	6"x4" Reducer flng x mj
4.	4"x3'-0" D.I.P. Spool flng x pe
5.	4" x 3" Reducer flng
6.	2" Test Port
7.	3" Compound Meter
8.	3" F.C.A.
9.	3"x2'-0" D.I. Spool flng x pe
10.	3" Gate Valve flng
11.	3"x2" Flg Tee w/ 2" Companion Flange
12.	3"x4'-0" D.I. Spool flng x pe
13.	6"x2" Tapping Saddle
14.	2" Copper Pipe
15.	2" Mueller B25122 Ball Valve w/B20299 Nut
16.	2" Locking Ball Valve (normally closed)
17.	2" Mueller H-15526 90° Ell CC x CC
18.	4" Megalug
19.	3" Slip-On Welding Flange
20.	24"x24"x8" Conc. Thrust Block P.I.P.
21.	575-LA Conc. Vault

NOTE:

1. Use Rowley pipe supports or equivalent as needed (See detail below).
2. Pipe support locations to be determined by field personnel.
3. All copper pipe that comes in contact with concrete to be wrapped w/10-20 Mil. Scotchwrap corrosion protection tape.
4. All mechanical joint fittings are to be megalugged.
5. Use deflection fittings (45° Ells.) to achieve necessary depths & cover as shown on the standard specification for the installation of a concrete vault (E-9-12-5).

ARIZONA WATER COMPANY

STANDARD SPECIFICATION

FOR THE INSTALLATION OF

3" COMPOUND METER

DRAWN BY:	APPROVED BY:	DATE:		
CCO	MW	10/5/1993	△08.29.2006	E-9-12-1

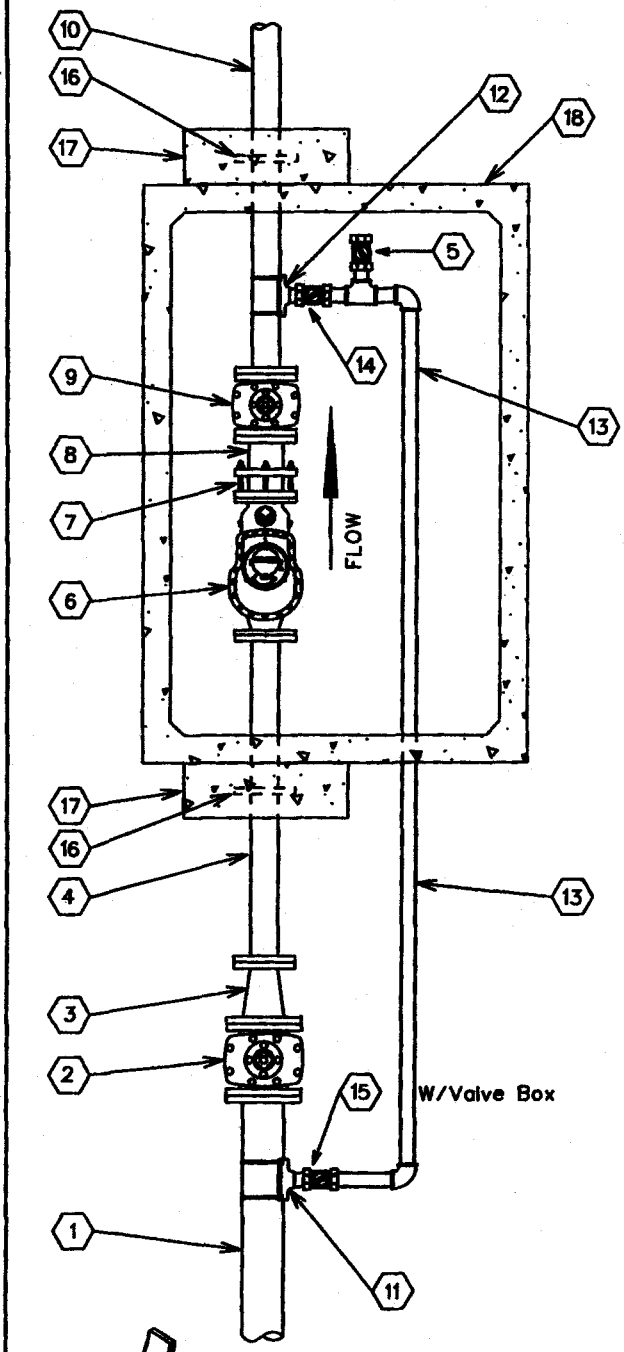

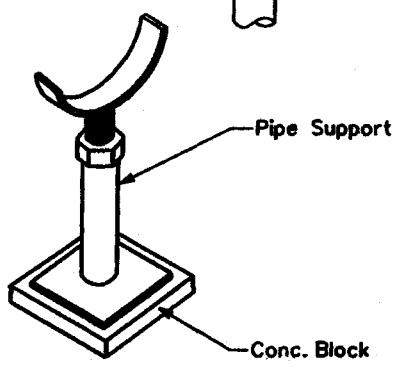

No.	FITTINGS SCHEDULE
1.	6" D.I.P.
2.	6" G.V.B.&C. mj x flng
3.	6"x4" Reducer flng x mj
4.	4"x3'-0" D.I.P. Spool flng x pe
5.	2" Test Port
6.	4" Compound Meter
7.	4" F.C.A.
8.	4"x1'-0" D.I.P. Spool flng x pe
9.	4" Gate Valve flng
10.	4"x4'-0" D.I.P. Spool flng x pe
11.	6"x2" Tapping Saddle
12.	4"x2" Tapping Saddle
13.	2" Copper Pipe
14.	2" Ball Valve / Locking (Normally Closed)
15.	2" Mueller B25122 Ball Valve w/B20299 Nut
16.	4" Megalug
17.	24"x24"x8" Conc. Thrust Block P.I.P.
18.	575-LA Conc. Vault

NOTE:

1. Use Rowley pipe supports or equivalent as needed (See detail below).
2. Pipe support locations to be determined by field personnel.
3. All copper pipe that comes in contact with concrete to be wrapped w/10-20 Mil. Scotchwrap corrosion protection tape.
4. All mechanical joint fittings are to be megalugged.
5. Use deflection fittings (45° Ells.) to achieve necessary depths & cover as shown on the standard specification for the installation of a concrete vault (E-9-12-5).

ARIZONA WATER COMPANY

STANDARD SPECIFICATION
FOR THE INSTALLATION OF

4" COMPOUND METER

DRAWN BY:	APPROVED BY:	DATE		
CCO	MW	10/5/1993	△08.29.2006	E-9-12-2

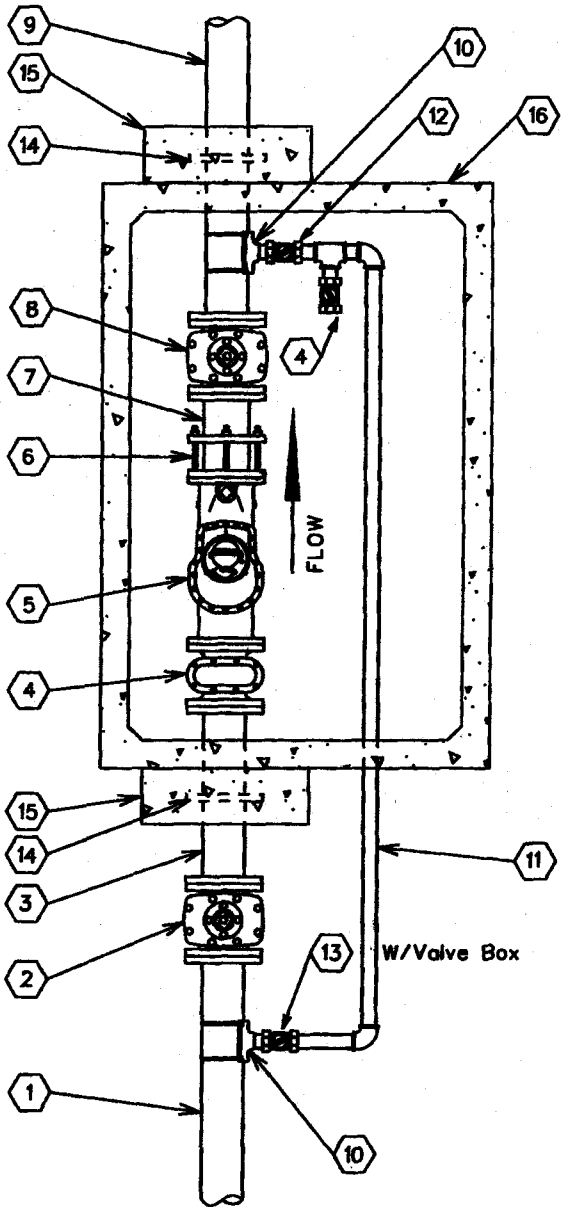

No.	FITTINGS SCHEDULE
1.	6" D.I.P.
2.	6" G.V.B.&C. mj
3.	6"x 3'-0" D.I.P. Spool flng x pe
4.	2" Test Port
5.	6" Compound Meter
6.	6" F.C.A.
7.	6"x 1'-0" D.I.P. Spool flng x pe
8.	6" Gate Valve flng
9.	6"x 4'-0" D.I.P. Spool flng x pe
10.	6"x2" Tapping Saddle
11.	2" Copper Pipe
12.	2" Ball Valve / Locking (Normally Closed)
13.	2" Mueller B25122 Ball Valve w/B20299 Nut
14.	6" Megalug
15.	24"x24"x8" Conc. Thrust Block P.I.P.
16.	575-LA Conc. Vault

NOTE:

1. Use Rowley pipe supports or equivalent as needed (See detail below).
2. Pipe support locations to be determined by field personnel.
3. All copper pipe that comes in contact with concrete to be wrapped w/10-20 Mil. Scotchwrap corrosion protection tape.
4. All mechanical joint fittings are to be megalugged.
5. Use deflection fittings (45° Ells.) to achieve necessary depths & cover as shown on the standard specification for the installation of a concrete vault (E-9-12-5).

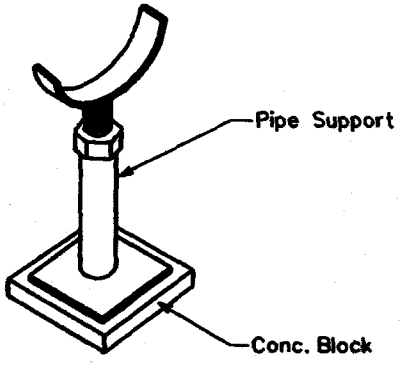

ARIZONA WATER COMPANY

STANDARD SPECIFICATION
FOR THE INSTALLATION OF

6" COMPOUND METER

DRAWN BY:	APPROVED BY:	DATE:		
CCO	MW	10/5/1993	△08.29.2006	E-9-12-3

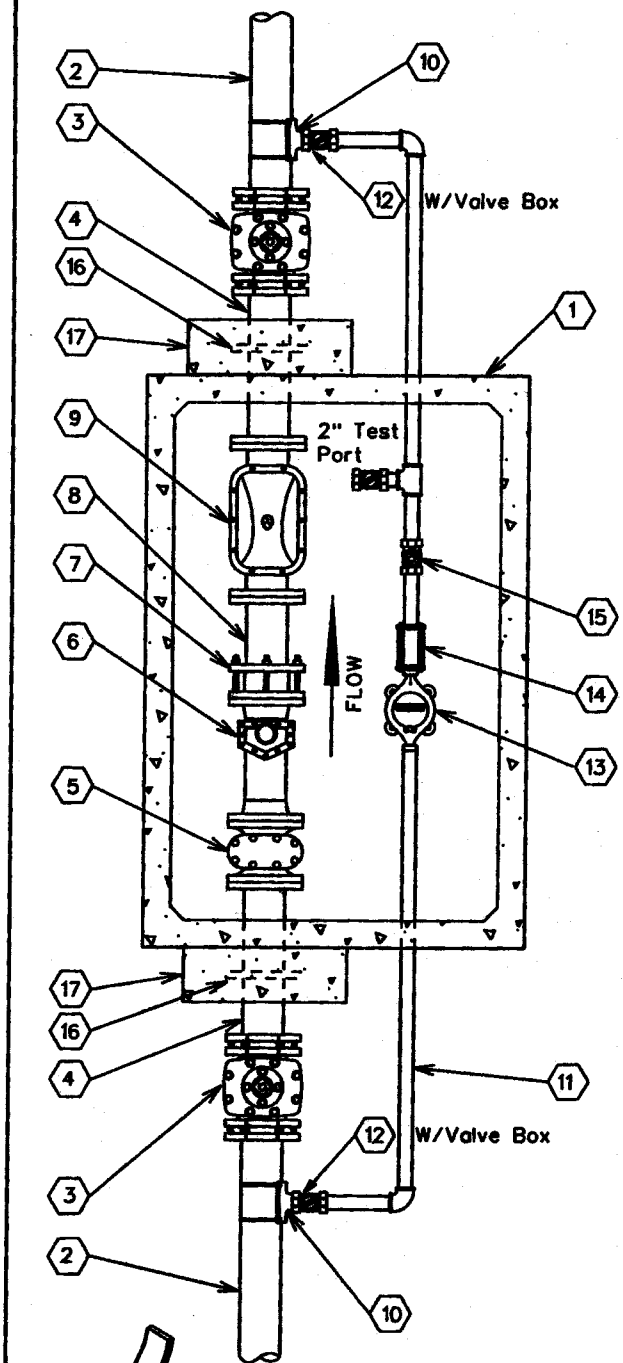

No.	FITTINGS SCHEDULE
1.	575-LA Conc. Vault
2.	6" D.I.P.
3.	6" G.V.B.&C. m.j.
4.	6" x 3'-0" D.I.P. SPool Piece flng x pe
5.	6" Strainer
6.	6" Turbo Meter
7.	6" F.C.A.
8.	6" x 2'-0" D.I.P. Spool Piece flng x pe (TRIM SPOOL PIECE TO 3x THE PIPE DIA.)
9.	6" Detector Check
10.	6"x=N" Tapping Saddle
11.	=N" Copper Pipe
12.	=N" Ball Valve (Locking)
13.	=N" Meter
14.	=N" Coup. Adapt.
15.	=N" Flapper Check Valve
16.	6" Megalug
17.	24"x24"x8" Conc. Thrust Block P.I.P.

=N - Size To Be determined By A.W.Co.

NOTE:

1. Use Rowley pipe supports or equivalent as needed (See detail below).
2. Pipe support locations to be determined by field personnel.
3. All copper pipe that comes in contact with concrete to be wrapped w/10-20 Mil. Scotchwrap corrosion protection tape.
4. All mechanical joint fittings are to be megalugged.
5. Use deflection fittings (45° Ells.) to achieve necessary depths & cover as shown on the standard specification for the installation of a concrete vault (E-9-12-5).
6. To change from a 6" service to a 4" service, change all listed 6" materials to 4" materials.

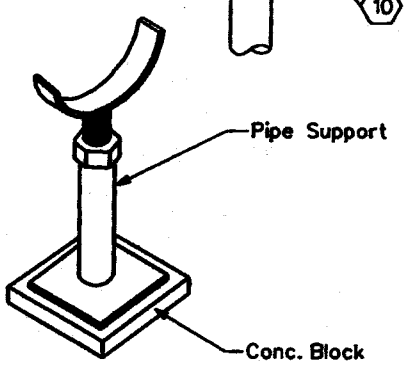

ARIZONA WATER COMPANY

STANDARD SPECIFICATION

FOR THE INSTALLATION OF

6" COMPOUND SERVICE

DRAWN BY:	APPROVED BY:	DATE:		
CCO	MW	10/05/1993	△08.29.2006	E-9-12-4

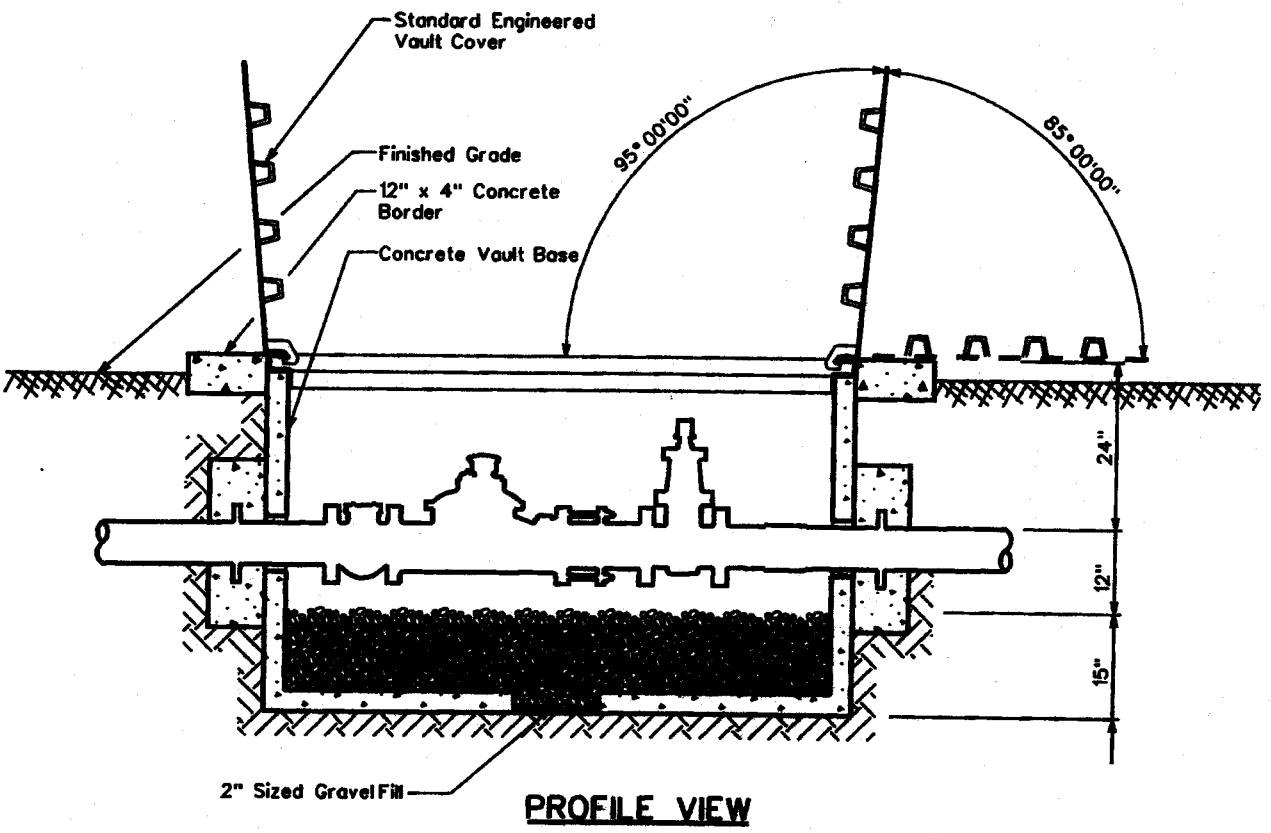

PROFILE VIEW

CONCRETE VAULT & COVER SPECIFICATIONS

Vault - Base No. 575-BL
Cover - Standard Engineered Vault Cover
. 4874 Aluminum Diamond Plate Cover For Non-Traffic Loading Areas
Or
. 4874 Galvanized Steel Diamond Plate Cover W/ H-20 Traffic Loading
. Double Torsion Spring Assisted Doors W/ Recessed Hasp & Safety Latches

NOTES

1. Total Depth Of Concrete Vault To Be A Maximum Of 3'-0" From Top Of Vault Cover To Top Of Gravel Fill.
2. Service Connections Larger Than 6" In Diameter Will Conform To The Same Vault & Cover Specifications. Size Of Vault & Cover To Be Determined By A.W.Co. Engineers.

ARIZONA WATER COMPANY

STANDARD SPECIFICATION
FOR THE INSTALLATION OF

CONCRETE VAULT

DRAWN BY:	APPROVED BY:	DATE:	△	
CCO	MW	10/5/1993	△ 05.17.2001	E-9-12-5

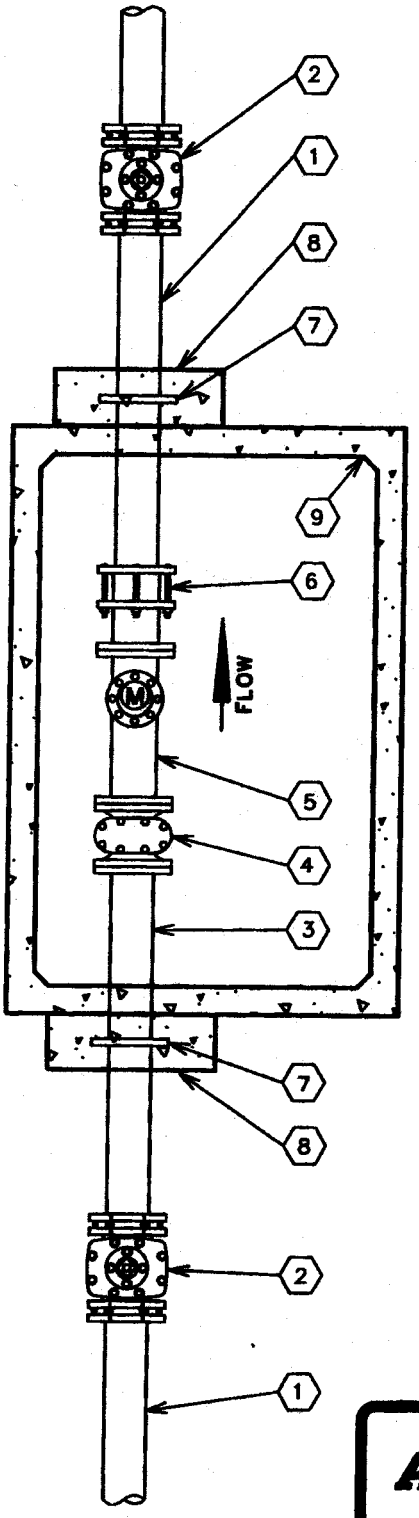

No.	FITTINGS SCHEDULE
1.	Ductile Iron Pipe
2.	Gate Valve M.J.
3.	D.I.P. Spool Piece Flg x Pe (10xDia.)
4.	Meter Strainer
5.	Propeller Meter
6.	Flanged Coupling Adapter
7.	Megalug Gland (Thrust Anchor)
8.	Concrete Thrust Block P.I.P.
9.	Concrete Vault

NOTE:

1. Use Rowley pipe supports or equivalent as needed (See E-9-12-4).
2. Pipe support locations to be determined by field personnel.
3. All Sched. 40 Stl. pipe outside of vault to be wrapped w/10-20 Mil. Scotchwrap corrosion protection tape.
4. All mechanical joint fittings to are to be megalugged.
5. Use deflection fittings (45° Ells.) to achieve necessary depths & cover as shown on the standard specification for the installation of a concrete vault (E-9-12-5).

ARIZONA WATER COMPANY

STANDARD SPECIFICATION
FOR THE INSTALLATION OF

NON-POTABLE PROPELLER METER

DRAWN BY:	APPROVED BY:	DATE:	△	
JPK	MW	7-20-95		E-9-12-6

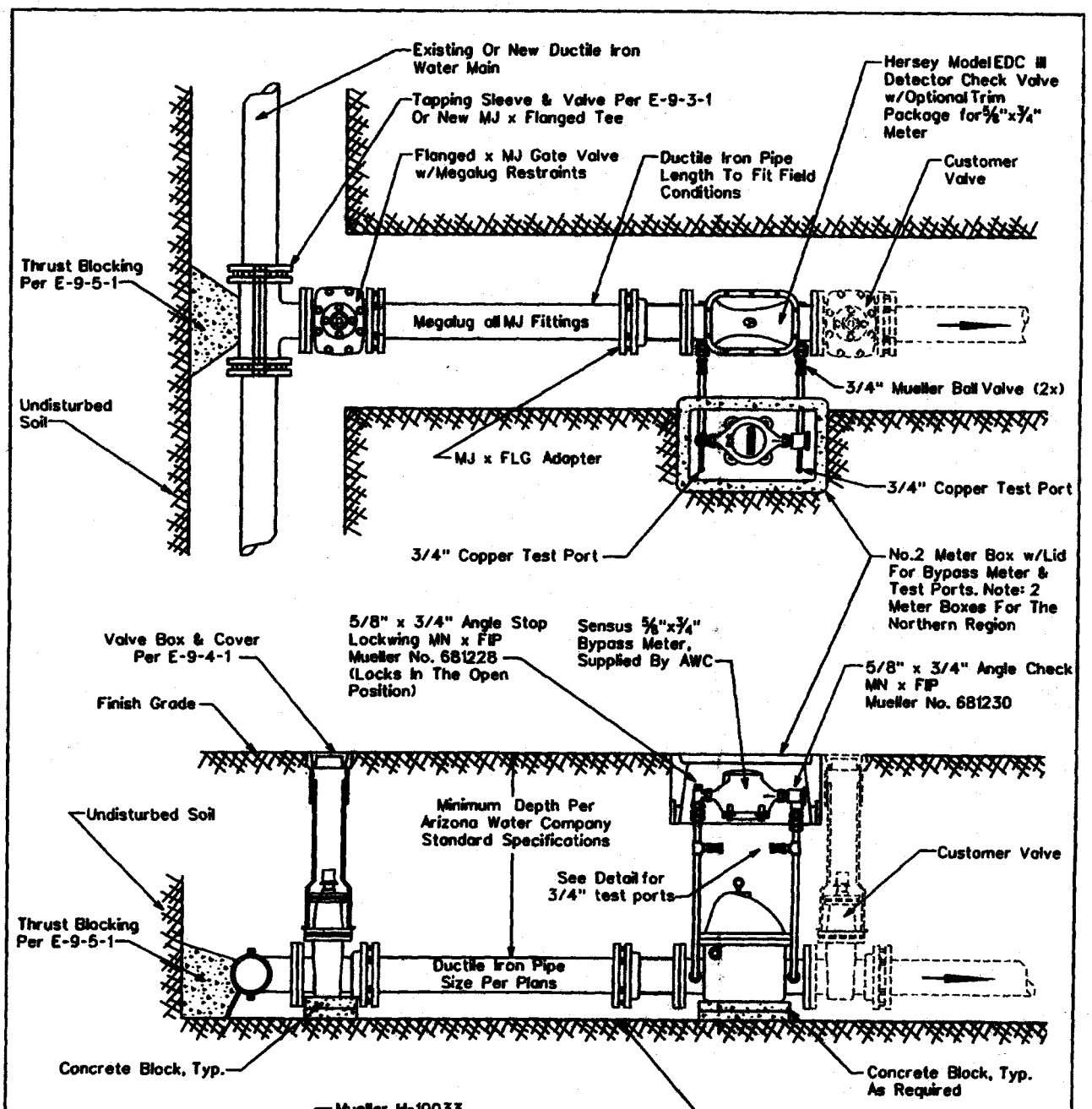

ARIZONA WATER COMPANY

STANDARD SPECIFICATION

FOR THE INSTALLATION OF

TYPICAL 4" THRU 8" DETECTOR CHECK VALVES

DRAWN BY:	APPROVED BY:	DATE:	△03.09.2007	E-9-13-1
CB	MW	10.16.1990		

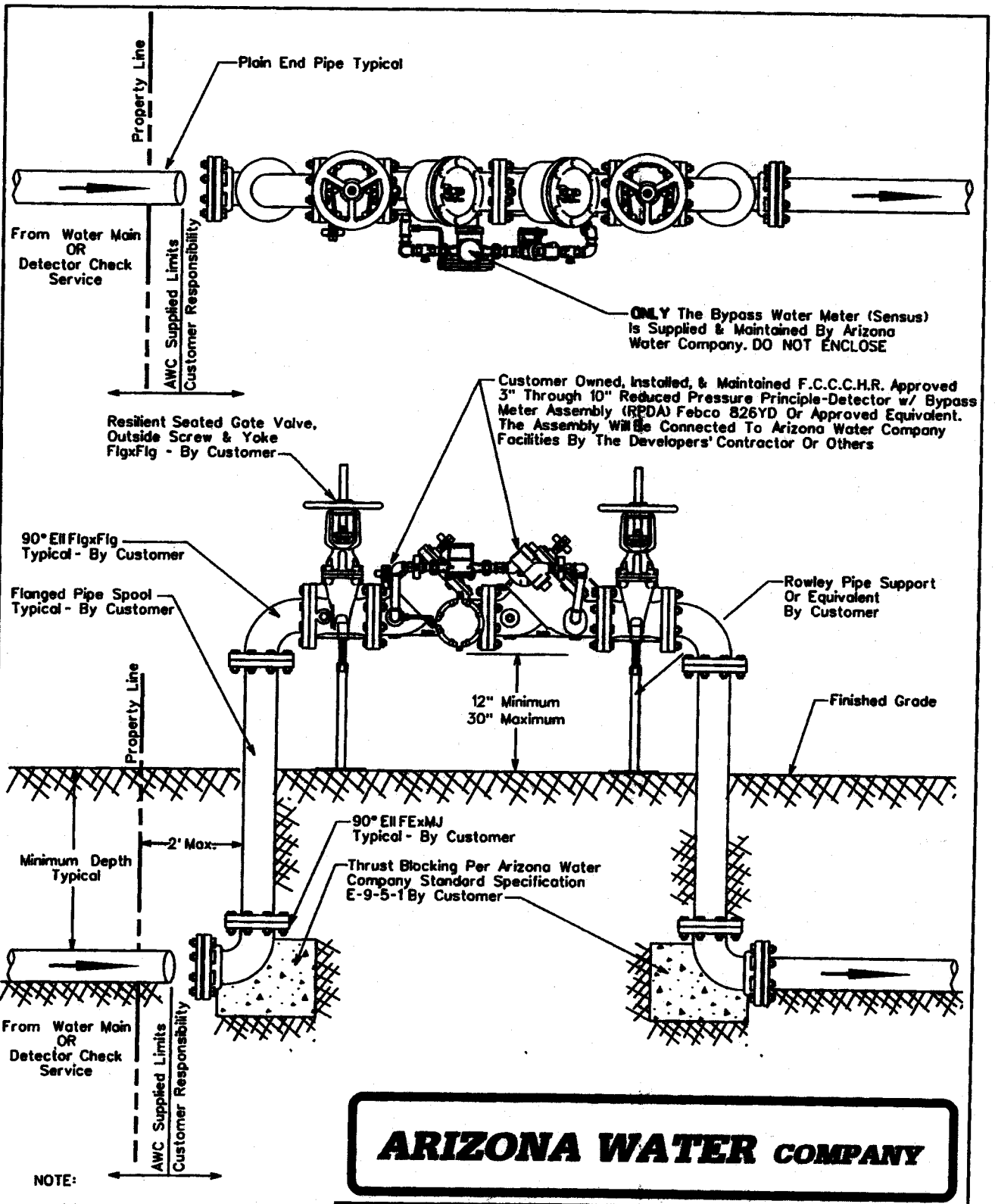

NOTE:

Minimum Depth Of Cover Over 6" & 8" Mains is 36 Inches, 12" & Greater is 48 Inches Unless Otherwise Specified

ARIZONA WATER COMPANY

STANDARD SPECIFICATION

FOR THE INSTALLATION OF

3" THRU 10" REDUCED PRESSURE PRINCIPLE-DETECTOR WITH BYPASS METER ASSEMBLY (RPDA) FOR FIRELINE SERVICES

DRAWN BY:	APPROVED BY:	DATE:		
CB	MW	10-13-98	△1-19-2000	E-9-13-2

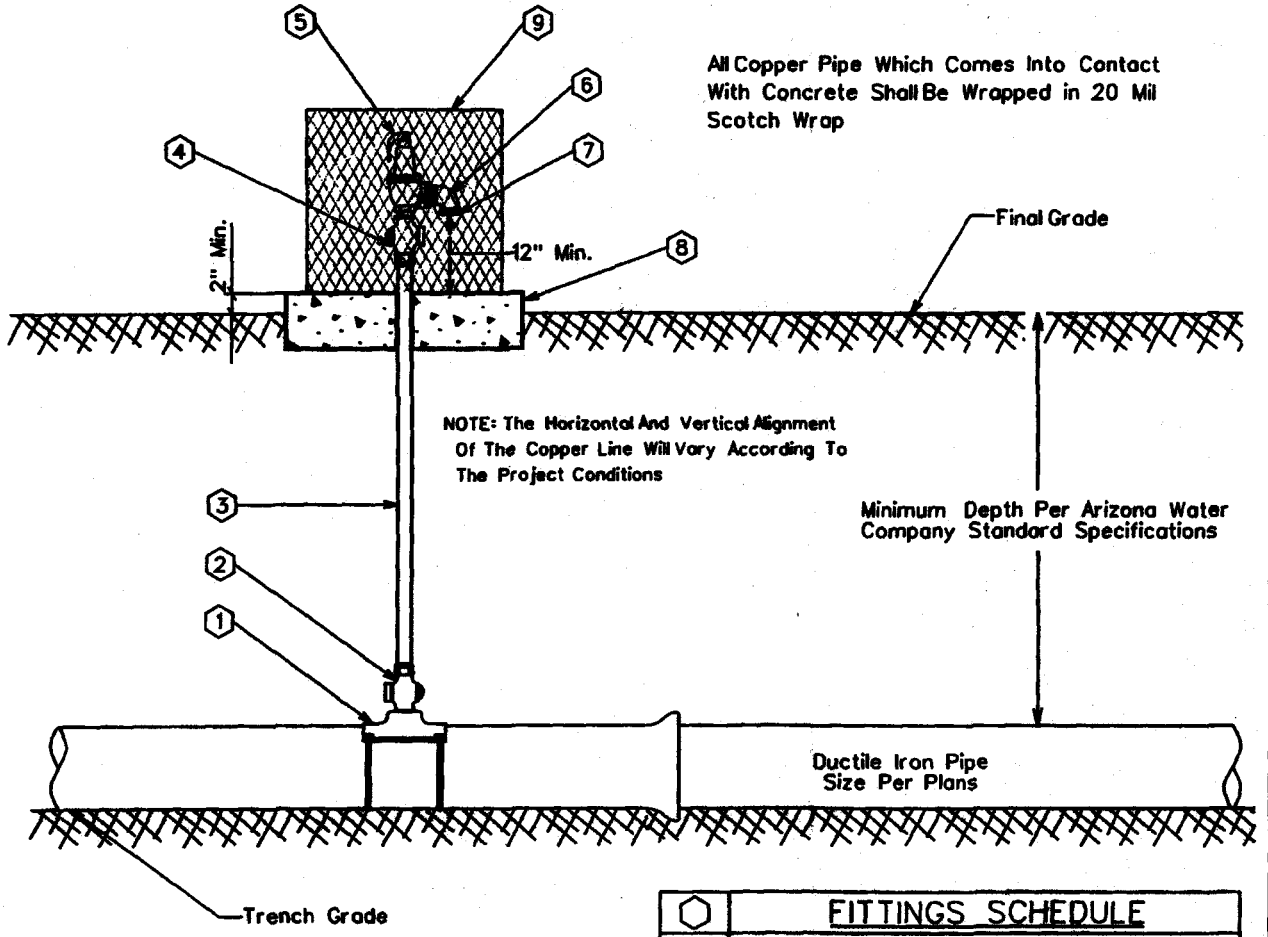

⬡	FITTINGS SCHEDULE
1.	Mueller BR2B Bronze Service Saddle - Double Strap
2.	2" Mueller B-25008 Taper x Comp. Ball Corp Stop
3.	2" Type 'K' Copper w/NO Splices - Field Fit
4.	2" Mueller B-25028 IP x Comp. Ball Corp Stop
5.	2" Pressure Relief Valve Watts 174A With A 2" Inlet / 2" Outlet 30-150 psi W/ Bronze Body
6.	2" Brass Street Elbow
7.	No.16 Wire Mesh Screen (Non-Corrodible)
8.	4" Thick Concrete Pad - Class 'C' Concrete
9.	Vandal enclosure to be centered on the concrete pad

NOTE:

1. Pressure relief valves are typically located just down stream of a pressure reducing station or where system conditions might be subject to greater than allowable pressures.
2. The relief valve assembly and vandal enclosure shall be located out of the roadway, but within the right-of-way or easement.

ARIZONA WATER COMPANY

STANDARD SPECIFICATION
FOR THE INSTALLATION OF

TYPICAL PRESSURE RELIEF VALVE ASSEMBLY

DRAWN BY:	APPROVED BY:	DATE:	△	
CCO	MW	3/20/1986	△ 08.29.2006	E-9-14-1

All Copper Pipe Which Comes Into Contact With Concrete Shall Be Wrapped in 20 Mil Scotch Wrap

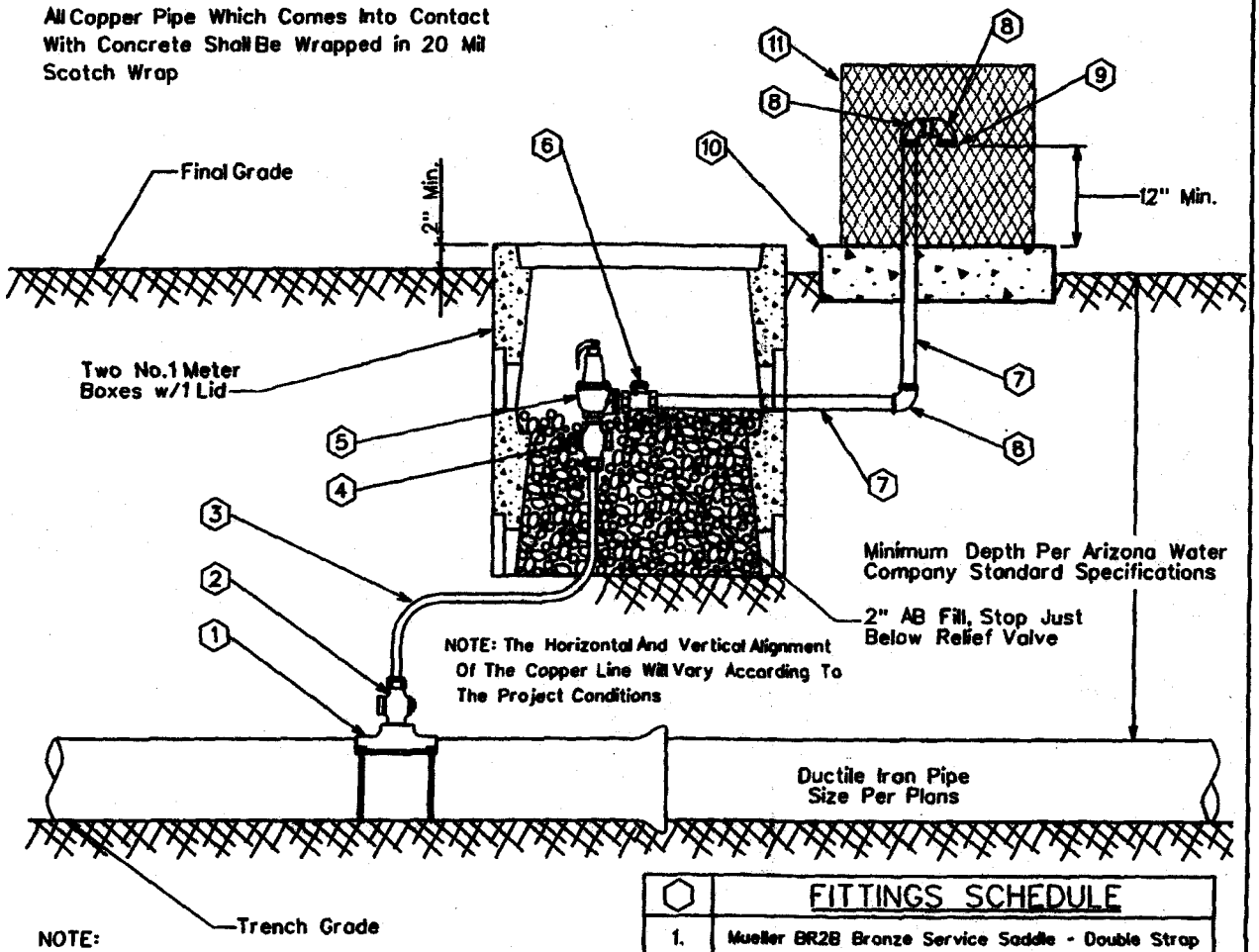

NOTE:

1. Pressure relief valves are typically located just down stream of a pressure reducing station or where system conditions might be subject to greater than allowable pressures.
2. The relief valve assembly and vandal enclosure shall be located out of the roadway, but within the right-of-way or easement.

⬡	FITTINGS SCHEDULE
1.	Mueller BR2B Bronze Service Saddle - Double Strap
2.	2" Mueller B-25008 Taper x Comp. Ball Corp Stop
3.	2" Type 'M' Rigid Copper w/NO Splices - Field Fit
4.	2" Mueller B-25028 IP x Comp. Ball Corp Stop
5.	2" Pressure Relief Valve Watts 174A With A 2" Inlet / 2" Outlet 30-150 psi W/ Bronze Body
6.	2" Bronze Check Valve Watts Series CV
7.	2" Schedule 40 Cut Pipe - Field Fit
8.	2" Brass Street Elbow
9.	No.16 Wire Mesh Screen (Non-Corrodible)
10.	4" Thick Concrete Pad - Class 'C' Concrete
11.	Guardshack, Model GS-1, Available From BPDI, Inc. Available In Leaf Green Or Desert Tan

ARIZONA WATER COMPANY

STANDARD SPECIFICATION
FOR THE INSTALLATION OF

PRESSURE RELIEF VALVE - NORTHERN REGION

DRAWN BY:	APPROVED BY:	DATE		
CCO	MW	3/20/1986	△08.29.2006	E-9-14-2

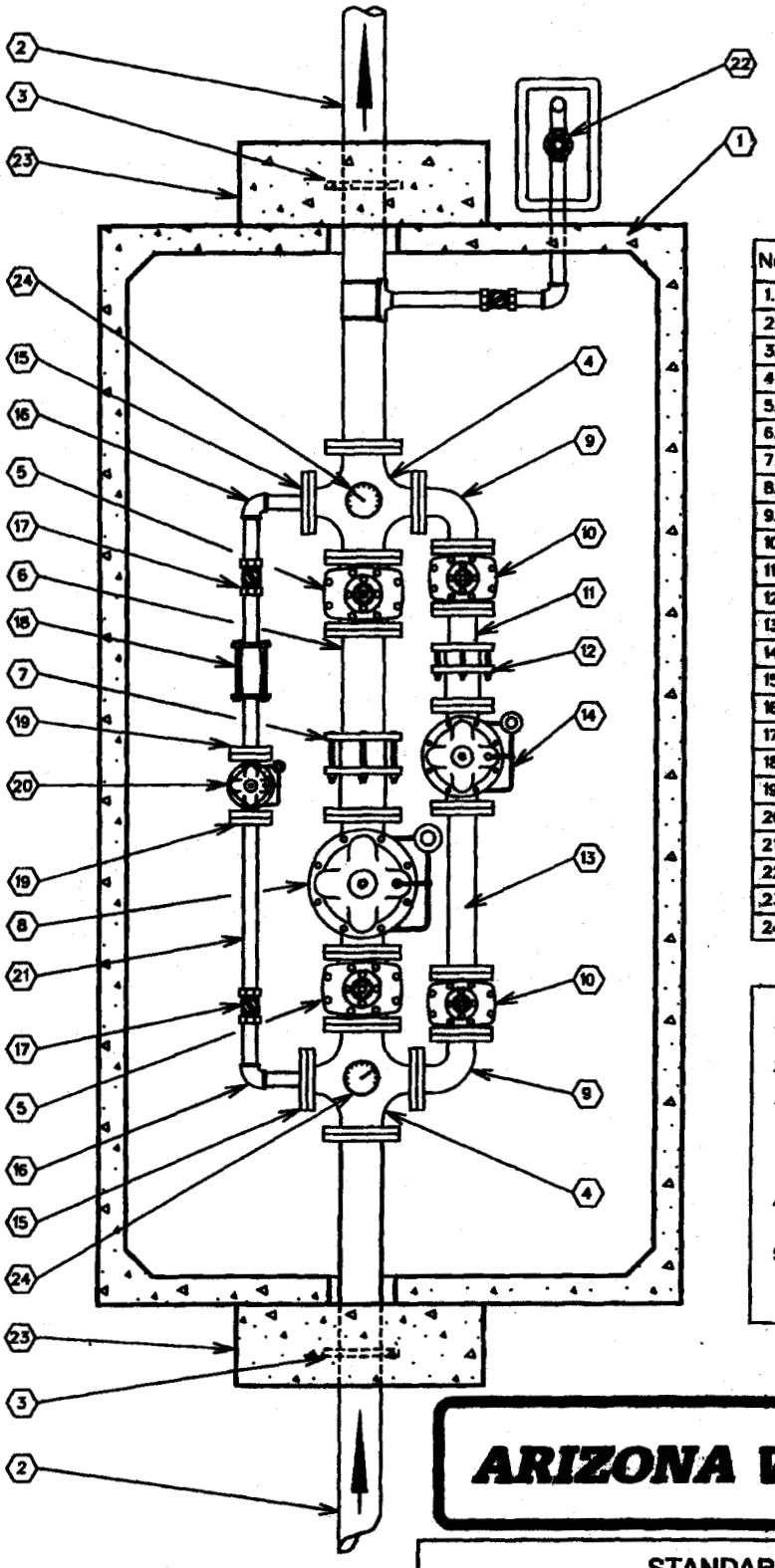

No.	FITTINGS SCHEDULE
1.	612 LA Conc. Vault (See Note 3)
2.	6"x8'-0" D.I.P. Spool Flg.xP.E.
3.	6" Megalug (Thrust Anchor)
4.	6"x4" Cross Flg.
5.	6" Gate Valve Flg.
6.	6"x2'-0" D.I.P. Spool Flg.xP.E.
7.	6" Flg. Coup. Adapt. (Rockwell 913)
8.	6" High Flow Pressure Reducing Valve Flg.
9.	4" 90° Ell. Flg.
10.	4" Gate Valve Flg.
11.	4"x1'-0" D.I.P. Spool Flg.xP.E.
12.	4" FLg. Coup. Adapt. (Rockwell 913)
13.	4"x2'-0" D.I.P. Spool Flg.
14.	4" Medium Flow Pressure Reducing Valve Flg.
15.	2"x9" O.D. Reducing Flg. (I.P.T.)
16.	2" 90° Ell. F.I.P.
17.	2" Ball Valve F.I.P.
18.	2" Comp. Coup. (Rockwell 411)
19.	2" Companion Flg. (I.P.T.)
20.	2" Low Flow Pressure Reducing Valve Flg.
21.	2" Sched. 40 Stl. Pipe
22.	2" Pressure Relief Valve (See E-9-14-1)
23.	12"x36"x36" Conc. Thrust Block P.I.P.
24.	Pressure Gauge w/shut off valve

NOTE:

1. Use Rowley pipe supports or equivalent as needed. (See E-9-12-4)
2. Pipe support locations to be determined by field personnel.
3. Vault-612 LA top section w/12" Dia. sump hole. Cover-concrete slab top w/(4) 4'-0" x2'-6" aluminum spring loaded hinged style covers for non-traffic loading areas. For areas w/low density traffic, cover is to be designed for H-20 traffic loading.
4. All Sched. 40 Stl. pipe outside of vault to be wrapped w/10-20 Mil. Scotchwrap corrosion protection tape.
5. Use deflection fittings (45° Ells.) to achieve necessary depths & cover as shown on the standard specification for the installation of a concrete vault (E-9-12-5).

ARIZONA WATER COMPANY

STANDARD SPECIFICATION

FOR THE INSTALLATION OF

PRESSURE REDUCING STATION

DRAWN BY:	APPROVED BY:	DATE:	△ 9-27-95	E-9-15-1
JPK	MW	11-16-88		

1. Specific Items To Be Painted Deer-O Pure White Enamel:

A. All Booster Pumps.
B. All Electrical Motors And Gas Engines.
C. Well Pump Discharge Heads.
D. Electrical Panel.

2. Specific Items To Be Painted Frost Cap White Or Deer-O Pure White Enamel:

A. Well Shelter.

3. Specific Items To Be Painted OSHA Orange:

A. Electrical Conduit.

4. All Other Items To Be Painted With Either:
(At Manager's Discretion)

A. Cholla Green
B. Forest Green
C. Sonora Beige
D. Red Rock
E. Rock Brown
F. Deer-O Pure White
G. Elkhorn Cactus

ARIZONA WATER COMPANY

STANDARD SPECIFICATION
FOR THE INSTALLATION OF

PAINT COLOR SELECTION

DRAWN BY:	APPROVED BY:	DATE:	△	
CCO		3/20/1986	△ 2/13/2001	E-9-16-1

1. Tank shall conform to AWWA Specification D100-84 with exceptions noted below.

*2. ¼" minimum shell plate.

3. Minimum of 12" diameter roof vent, screened with No. 16 non-corrodible wire mesh, to be located on a 24" diameter round hinged manhole opening at the center of the tank to provide access to the roller plate.

4. Overflow pipe shall be the same diameter as the inlet pipe and shall terminate 12 to 24 inches above splash pad or a minimum of 2 overflow pipe diameters above weir box high water level.

5. Storage tank shall be placed upon adequately compacted base material.

6. 6" minimum floor mounted tank drain outlet to be located close to the outer shell.

7. Tank and related fittings shall be enclosed with a 6 foot chain link fence with lockable gates and anti-personnel wire on top of fence.

8. Liquid level shall be indicated by a target and target board on the outside surface of the tank.

9. 24 inch diameter manholes shall be provided on the roof and on the shell near the bottom of the tank. The roof manhole cover shall overlap the manhole by at least 2 inches to provide a rain tight closure. Roof manhole shall be hinged and equipped with a lock. Shell manhole cover to be hinged and bolted in place. *Tanks larger than a 80 foot diameter require 2 shell manholes.

10. Inside and outside ladders shall be located at the roof manhole. Outside ladder shall be caged with locking trap door. Bottom 8 feet of cage shall be enclosed to within 9½" of shell with 10 gauge sheet steel.

11. Finished tank shall be disinfected in accordance with Arizona Department of Health Services Engineering Bulletin No. 8 before being placed into service.

12. The following information will be included with application for approval to construct:

1. Tank location_____
2. Tank height_____
3. Tank diameter_____
4. Tank capacity_____
5. Method of water level control_____

_____

13. The storage tank will not be constructed within the 100 year flood plain and the tank site will be graded to slope away from the tank.

14. The welded steel storage tank will be coated as per AWWA Specification D102, and N.S.F. Standard 61.

*Exceptions to AWWA Specification D100-84

FOUNDATION NOTES

1. FINISH CONCRETE SURFACE MUST SLOPE UPWARDS FROM THE STEEL BAND APPROX. 9" IN 10'-0".

2. TOP OF STEEL BAND MUST BE MAINTAINED LEVEL TO WITHIN ½".

3. INSTALL 8-2" DIA.x10'-0" P.V.C. WEEP LINES, EQUALLY SPACED (EVERY 45°), PERFORATE 6'-0" OF LINE WITH ½" DIA. HOLES @ 6" O.C. PLUG INTERIOR END OF LINE w/2" CAP.

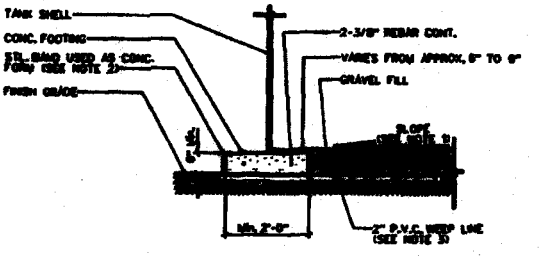

FOUNDATION DETAIL

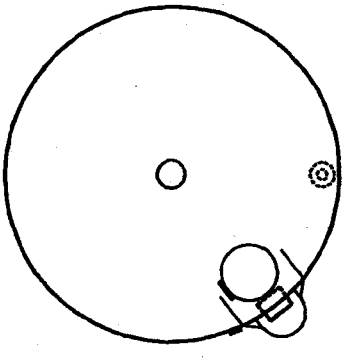

PLAN VIEW

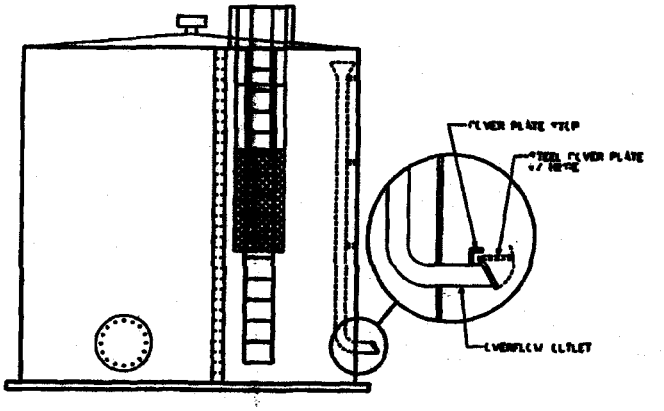

PROFILE VIEW

ARIZONA WATER COMPANY

STANDARD SPECIFICATION
FOR THE INSTALLATION OF

STEEL WATER STORAGE TANK

DRAWN BY:	APPROVED BY:	DATE:	△	
JPK	MJW	10-17-88	2-12-96	E-9-17-1

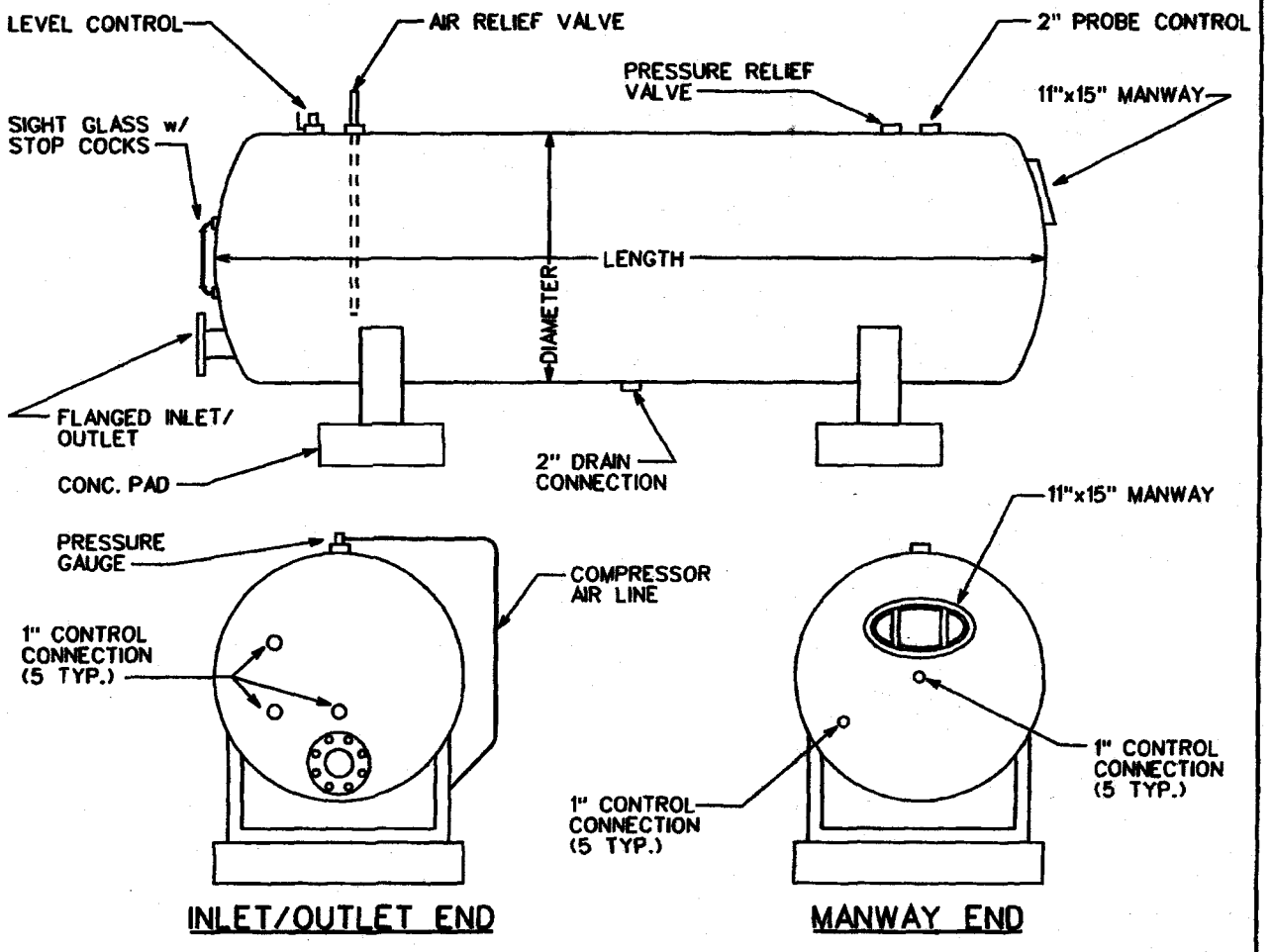

1. ALL HYDROPNEUMATIC TANKS SHALL BE DESIGNED & CONSTRUCTED IN ACCORDANCE WITH THE CURRENT REQUIREMENTS OF THE ASME CODE FOR UNFIRED PRESSURE VESSELS, SECTION VIII, DIVISION 1.
2. FINISHED TANK SHALL BE DISINFECTED IN ACCORDANCE WITH ADEQ BULLETIN No. 8 BEFORE BEING PLACED INTO SERVICE.
3. THE WELDED STEEL HYDROPNEUMATIC TANK WILL BE COATED AS PER AWWA SPECIFICATION D102 & NSF STANDARD 61.
4. THE FOLLOWING INFORMATION WILL BE INCLUDED WITH THE APPLICATION FOR APPROVAL TO CONSTRUCT.
   1. Tank Location _____
   2. Tank Length _____
   3. Tank Diameter _____
   4. Tank Capacity _____
   5. Maximum Working Pressure _____

ARIZONA WATER COMPANY

STANDARD SPECIFICATION
FOR THE INSTALLATION OF

HYDROPNEUMATIC TANK

DRAWN BY:	APPROVED BY:	DATE:	△ 01.16.2007	E-9-18-1
JPK	MW	3-20-1986		

NOT
CONVERTED
TO
CAD

ARIZONA WATER COMPANY

STANDARD SPECIFICATION
FOR THE INSTALLATION OF

WELL SHELTER

DRAWN BY:	APPROVED BY:	DATE:		
CB		03.20.1986	△04.03.2001	E-9-19-1

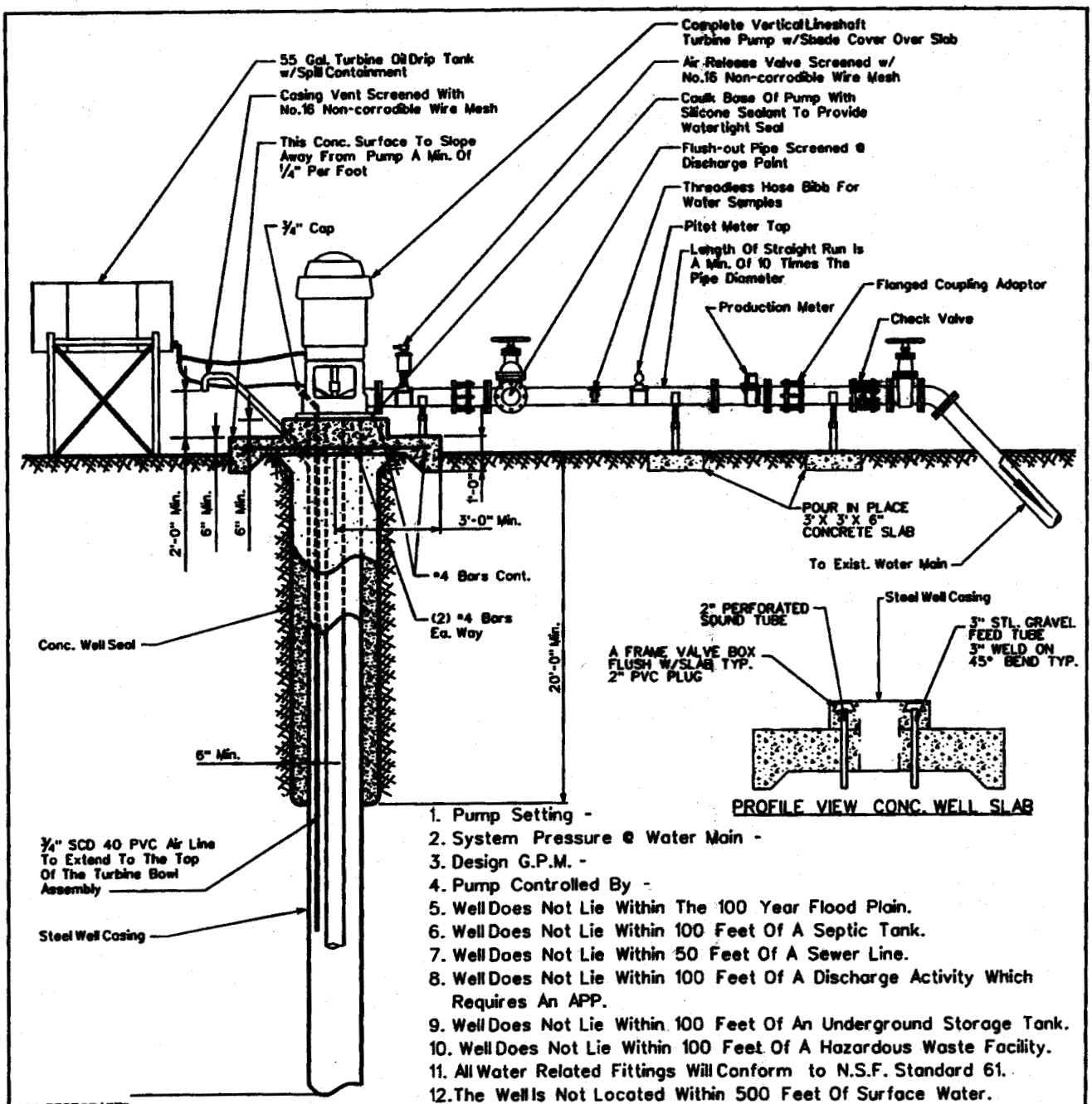

PROFILE VIEW CONC. WELL SLAB

1. Pump Setting -
2. System Pressure @ Water Main -
3. Design G.P.M. -
4. Pump Controlled By -
5. Well Does Not Lie Within The 100 Year Flood Plain.
6. Well Does Not Lie Within 100 Feet Of A Septic Tank.
7. Well Does Not Lie Within 50 Feet Of A Sewer Line.
8. Well Does Not Lie Within 100 Feet Of A Discharge Activity Which Requires An APP.
9. Well Does Not Lie Within 100 Feet Of An Underground Storage Tank.
10. Well Does Not Lie Within 100 Feet Of A Hazardous Waste Facility.
11. All Water Related Fittings Will Conform to N.S.F. Standard 61.
12. The Well Is Not Located Within 500 Feet Of Surface Water.
13. The Site Will Be Graded To Provide Adequate Drainage Away From The Well.
14. 6.88 lbs. of Davis #8084 Grey Dye, Per Yard, For 2500 PSI Concrete

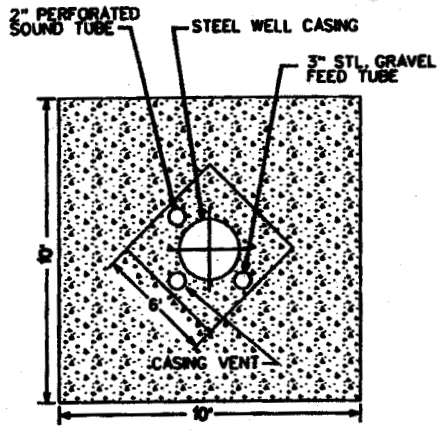

PLAN VIEW CONC. WELL SLAB

ARIZONA WATER COMPANY

STANDARD SPECIFICATION

FOR THE INSTALLATION OF

TYPICAL WELL W/ LINESHAFT TURBINE PUMP

DRAWN BY:	APPROVED BY:	DATE:	△	
JW	M.W.	3-20-86	△ 9/15/04	E-9-20-1

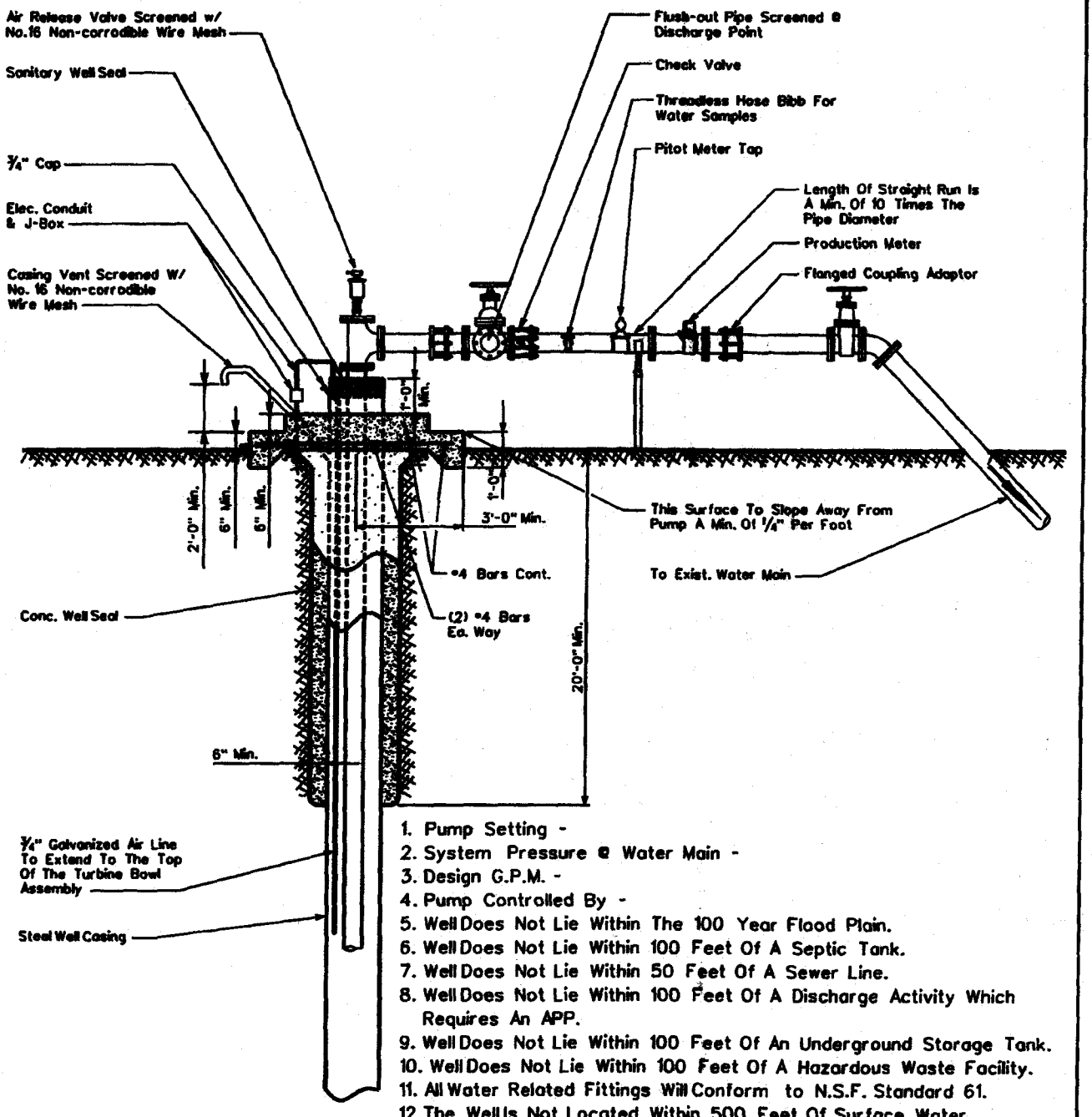

1. Pump Setting -
2. System Pressure @ Water Main -
3. Design G.P.M. -
4. Pump Controlled By -
5. Well Does Not Lie Within The 100 Year Flood Plain.
6. Well Does Not Lie Within 100 Feet Of A Septic Tank.
7. Well Does Not Lie Within 50 Feet Of A Sewer Line.
8. Well Does Not Lie Within 100 Feet Of A Discharge Activity Which Requires An APP.
9. Well Does Not Lie Within 100 Feet Of An Underground Storage Tank.
10. Well Does Not Lie Within 100 Feet Of A Hazardous Waste Facility.
11. All Water Related Fittings Will Conform to N.S.F. Standard 61.
12. The Well Is Not Located Within 500 Feet Of Surface Water.
13. The Site Will Be Graded To Provide Adequate Drainage Away From The Well.

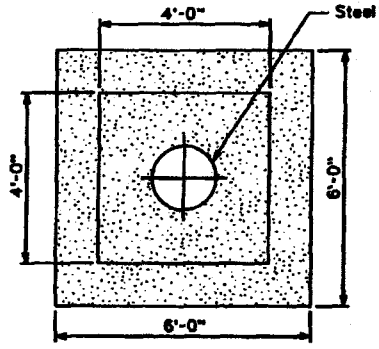

PLAN VIEW CONC. WELL SLAB

ARIZONA WATER COMPANY

STANDARD SPECIFICATION

FOR THE INSTALLATION OF

TYPICAL WELL W/ SUBMERSIBLE TURBINE PUMP

DRAWN BY:	APPROVED BY:	DATE:	△	
jpk	M.W.	3-20-86	2-16-01	E-9-21-1

All New Purchases To Conform To The Following:

Column Pipe

4" I.D. - 8	Threads	Per	Inch	Tapered	3/4"	Per	Foot	Right	Hand
6" I.D. - 8	"	"	"	"	"	"	"	"	"
8" I.D. - 8	"	"	"	"	"	"	"	"	"
10" I.D.- 8	"	"	"	"	"	"	"	"	"
12" I.D.- 8	"	"	"	"	"	"	"	"	"
14" I.D.- 8	"	"	"	"	"	"	"	"	"

Oil Tube - Peerless Type

1 1/2" O.D. - 14	Threads	Per	Inch	Right	Hand
2" O.D. - 12	"	"	"	"	"
2 1/2" O.D. - 10	"	"	"	"	"
3" O.D. - 10	"	"	"	"	"
3 1/2" O.D. - 10	"	"	"	"	"
4" O.D. - 10	"	"	"	"	"

Line Shaft

3/4" O.D. - 10	Threads	Per	Inch	Left	Hand
1" O.D. - 14	"	"	"	"	"
1-3/16" O.D. - 10	"	"	"	"	"
1-1/2" O.D. - 10	"	"	"	"	"
1-11/16" O.D. - 10	"	"	"	"	"
1-15/16" O.D. - 10	"	"	"	"	"
2-3/16" O.D. - 10	"	"	"	"	"
2-7/16" O.D. - 8	"	"	"	"	"

ARIZONA WATER COMPANY

STANDARD SPECIFICATION
FOR THE INSTALLATION OF

COLUMN PIPE, OIL TUBE AND LINE SHAFT

DRAWN BY:	APPROVED BY:	DATE:	△	
CCO		3/20/1996	△ 2/13/2001	E-9-22-1

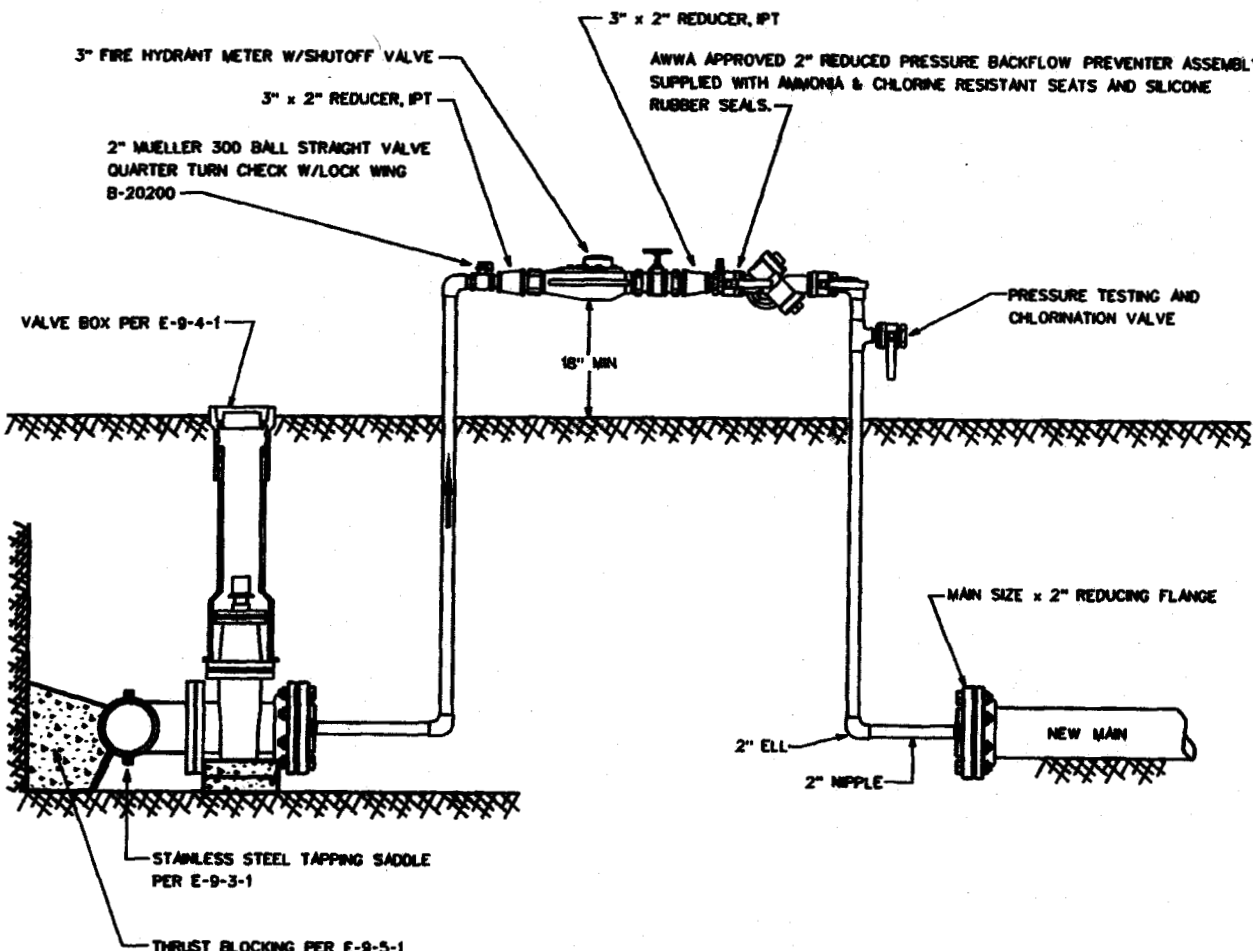

1. FINAL INSPECTION AND CONNECTION TO BE WITNESSED BY AN ARIZONA WATER COMPANY REPRESENTATIVE.
2. REDUCING FLANGES TO BE PROPERLY RESTRAINED.
3. INSTALL JUMPER TAP FOR TEMPORARY METER DOWNSTREAM OF THE REDUCING FLANGE FOR PRESSURE AND BACTEE TESTING.
4. JUMPER ASSEMBLY MUST BE A MINIMUM OF 18" ABOVE FINISHED GRADE.
5. BACKFLOW ASSEMBLY REQUIRES CERTIFICATION.
6. ASSEMBLY NOT TO BE REMOVED AND SPOOL PIECE INSTALLED FOR FINAL CONNECTION UNTIL ALL TESTING, BACTERIAL CLEARANCE AND FINAL INSPECTIONS HAVE BEEN OBTAINED.
7. ALL NEW PIPING SHALL BE PROPERLY RESTRAINED.

ARIZONA WATER COMPANY

STANDARD SPECIFICATION
FOR THE INSTALLATION OF

HOT TAP & JUMPER METER CONNECTION

DRAWN BY:	APPROVED BY:	DATE:	△	
CB	MJW	05.14.2004		E-9-23-1

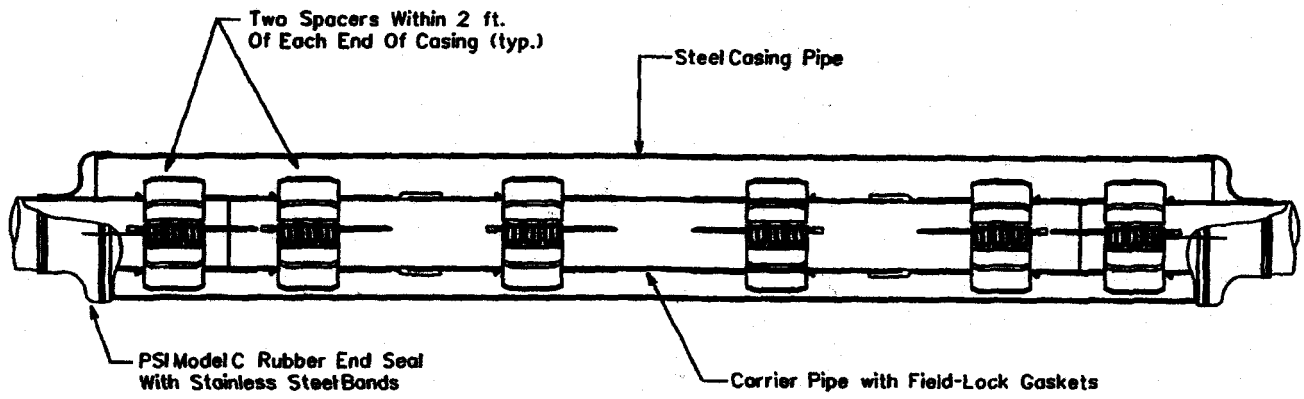

CROSS SECTION

The casing spacers shall be the PSI Ranger II Casing Spacers as manufactured by Pipeline Seal and Insulator, Inc., Houston, Texas.

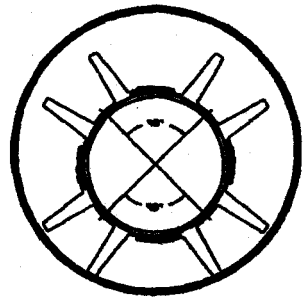

SECTION CUT

End Seals

After insertion of the carrier pipe into the casing, the ends of the casing shall be closed by installing 1/8" thick synthetic rubber end seals equal to the PSI Model "C" end seal as manufactured by Pipeline Seal and Insulator, Inc., Houston, Texas.

NOTE: The Carrier Pipe Shall Be Polywrapped Prior To The Skid Installation & Insertion Into The Carrier Casing For Divisions Requiring Polywrapped Pipe.

OD Push On Joint Bell	OD M.J. BELL
6" - 8.66"	6" - 11.12"
8" - 10.82"	8" - 13.37"
12" - 15.05"	12" - 17.94"
16" - 19.74"	16" - 22.56"
20" - 23.98"	20" - 27.08"
24" - 28.16"	24" - 31.58"
30" - 35.40"	30" - 39.12"
36" - 41.84"	36" - 46.00"
48" - 55.94"	48" - 60.00"

*Thickness Of Skid To Extend A Minimum of 1/2" Above The O.D. Of The Pipe Bell or Gland.

PIPE SIZE	CASING SIZE	CASING SIZE ID	CASING SCHEDULE	WALL THICKNESS	SKID SIZE
6"	16"	15.25"	STD.	.375	*x4x12
8"	18"	18.25"	STD.	.375	*x4x12
12"	22"	21.25"	STD.	.375	*x4x12
16"	28"	27.25"	STD.	.375	*x4x12
20"	32"	31.25"	STD.	.375	*x4x12
24"	36"	35.25"	STD.	.375	*x4x12
30"	48"	47.25"	STD.	.375	*x4x12
36"	54"	53.25"	STD.	.375	*x4x12
48"	66"	65.25"	STD.	.375	*x4x12

ARIZONA WATER COMPANY

STANDARD SPECIFICATION

FOR THE INSTALLATION OF

TYPICAL WATER LINE ENCASEMENT

DRAWN BY:	APPROVED BY:	DATE	△ 09.27.2006	E-9-24-1
CB		3/20/1996		

CALCIUM HYPOCHLORITE TABLET CHLORINATOR FEEDER SPECIFICATIONS

SCOPE - This specification describes a ARCH Chemicals Calcium Hypochlorite Tablet Chlorination System as manufactured by ARCH Chemicals, 501 Merritt Seven, P.O. Box 5204, Norwalk, CT, 06856-5204.

DESCRIPTION - The chlorination system shall be completely assembled, ready to install. The chlorination system shall be a ARCH Chemicals Calcium Hypochlorite Tablet Feeder, or its equivalent, and shall be supplied with all its components factory mounted.

COMPONENTS - The Chlorination system shall have the following components:
A. 1-½" ARCH Chemical solid calcium hypochlorite tablet feeder
B. Polyethylene system enclosure
C. Integrated, level controlled solution tank
D. Adjustable flow control valve
E. Manual on/off valve (at inlet)
F. Chemical metering pump
G. On/off pump control switch
H. Waterproof electrical junction box
I. Corrosion resistant polyolefin 40 piping
J. Reverse flow check valves
K. Total solution output control valve

ELECTRICAL FIXTURES - The following electrical fixtures shall be provided:
A. Safety switch, 2 pole, fused for 30 Amps, for 120 Volts, 60 cycle, single phase power.

CHLORINATOR DESIGN - The chlorination facility shall be designed and constructed in accordance with Arizona State Department of Health Engineering Bulletin Number 8 - "Disinfection of Water Systems". Latest Revision.

CHLORINATION EQUIPMENT - The chlorination equipment shall be a ARCH Chemicals Calcium Hypochlorite tablet chlorinator, approved by NSF Standard 61.

CHLORINATOR OPERATION - The chlorination facility shall be operated in accordance with Arizona State Department of Health Engineering Bulletin Number 8, "Disinfection of Water Systems", Table 1. latest revision.

CHLORINATOR SYSTEM DESCRIPTION - ARCH Chemicals tablet chlorinator systems incorporate a patented chlorinator which is designed to utilize ARCH Chemicals 1-½" solid calcium hypochlorite tablets (Approved NSF Standard 60). Meets AWWA Standard B-300, EPA Registration # 1258-1179.The chlorinator is mounted on a polyethylene system enclosure. The inlet water is sprayed on the calcium hypochlorite tablet and collected in a solution tank. This chlorinated solution is then pumped out of the tank through a chemical metering pump. This metering pump is then adjusted to obtain the desired CL residual.

ARCH Chemicals Calcium Hypochlorite Tablet Chlorinator

NTS

HYPOCHLORINATOR COMPONENTS:

1. Chemical Metering Pump
2. Pump Suction Connection
3. Pump Discharge Connection
4. Inlet Water Assembly
5. Inlet Water Solenoid Valve
6. Inlet Shut-Off Valve
7. Inlet Pressure Regulator
8. Inlet Water Pressure Gauge
9. Spray Nozzle Water Pressure Gauge
10. Inlet Strainer
11. Inlet Tubing Connection
12. Dry Chemical Hopper
13. Suction Line
14. Electrical Control Box With Power On/Off
15. Electric Mixer
16. Solution Discharge Connection
17. Tank Drain Valve
18. Observation Port
19. Mixed Chemical Holding Tank
20. Pressure Relief Valve
21. Pump Speed Control
22. High Level Shut-Off Float Switch
23. Water Spray Nozzles

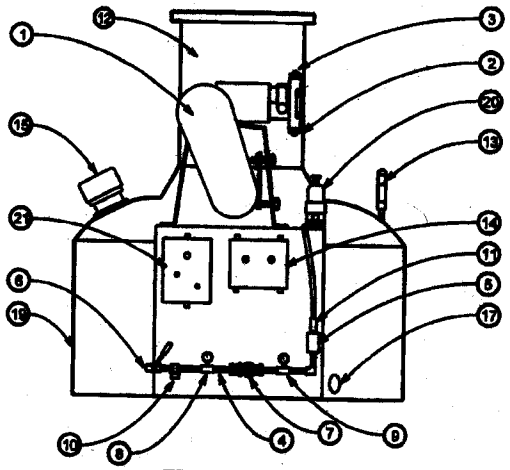

FRONT VIEW

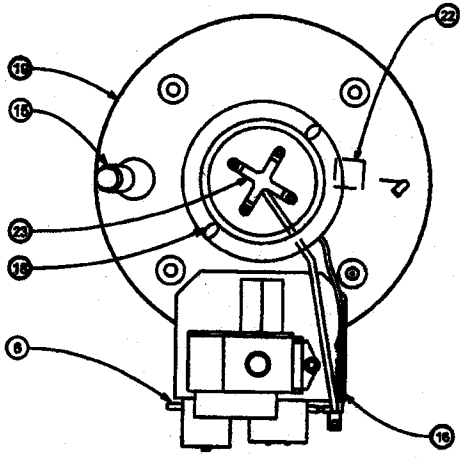

TOP VIEW
HOPPER REMOVED FOR CLARITY

Chlorinator Fluid Schematic

NTS

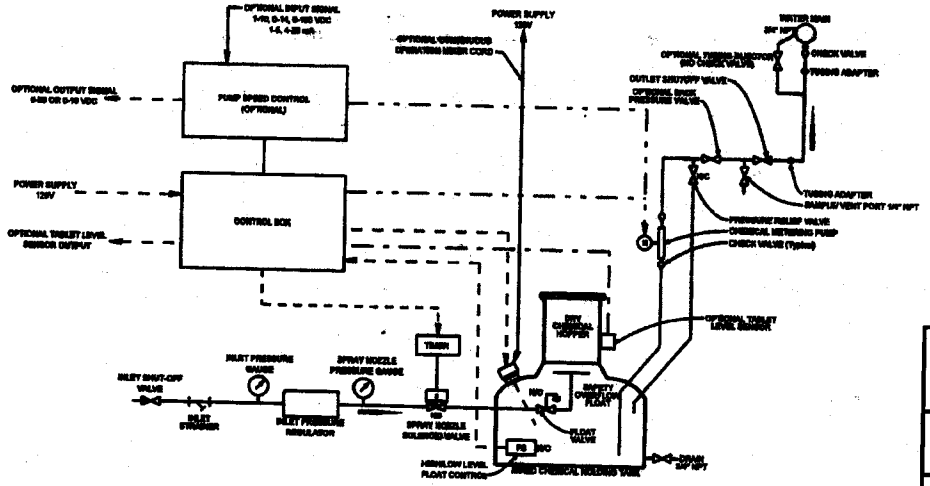

ARIZONA WATER COMPANY

STANDARD SPECIFICATION
FOR THE INSTALLATION OF

CALCIUM HYPOCHLORITE TABLET CHLORINATOR

DRAWN BY:	APPROVED BY:	DATE:	△	
CB	MW	02-09-2000		E-9-25-1

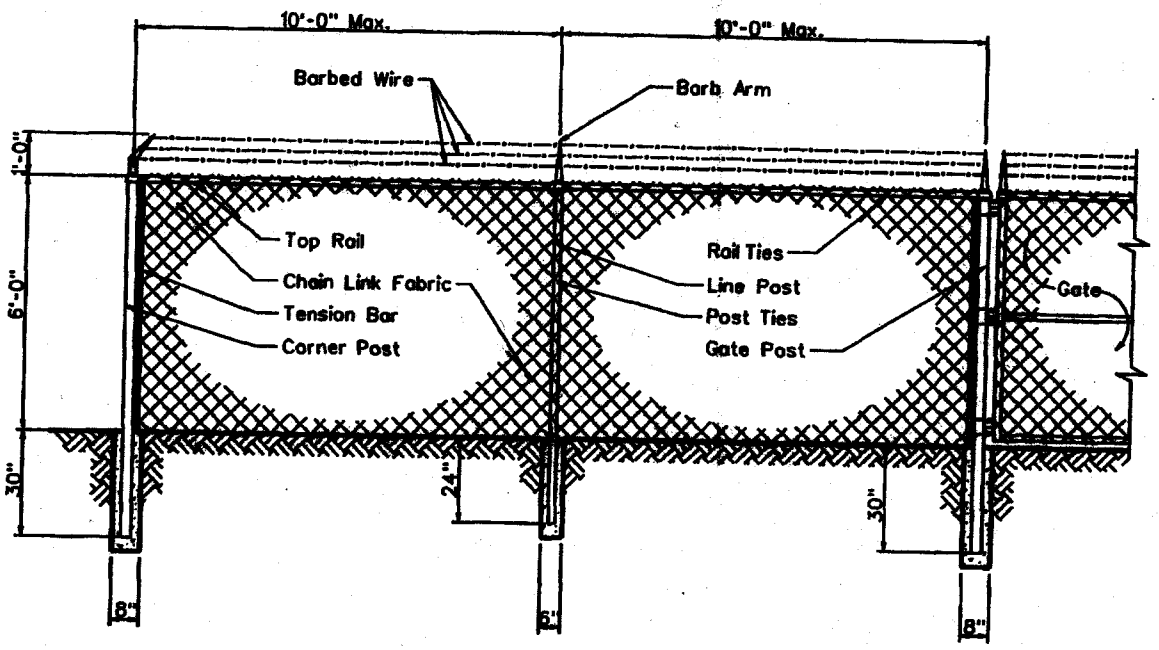

Line Post:	1-7/8" O.D.	1.74 lbs. P/L.F.	ASTM A-256
End Post:	2-7/8" O.D.	4.64 lbs. P/L.F.	ASTM A-256
Corner Post:	2-7/8" O.D.	4.64 lbs. P/L.F.	ASTM A-256
Gate Post:	2-7/8" O.D.	4.64 lbs. P/L.F.	ASTM A-256
Top Rail:	1-5/8" O.D.	4.64 lbs. P/L.F.	ASTM A-256
Chain Link Fabric:	9 Ga. 2" Mesh Galv. Before Weave		
Selvage:	Barb/Knuckle		
Fittings:	Pressed Steel		
Barb Wire:	2-1/2 Ga./2 Point		
Barb Arm:	1 Piece/45° Arm		
Tension Wire:	9 Ga./Galv.		
Line Post Set:	6"x24" In Concrete		
Terminal Post Set:	8"x30" In Concrete		

ARIZONA WATER COMPANY

STANDARD SPECIFICATION
FOR THE INSTALLATION OF

CHAIN LINK FENCE

DRAWN BY:	APPROVED BY:	DATE:	△	
CCO	MW	7/7/1992	2/9/2001	E-9-26-1

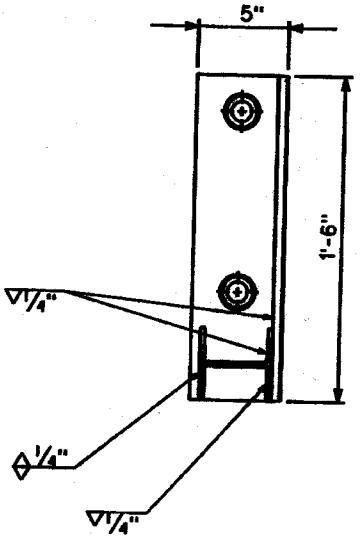

NOTES

1. Minimum 2 Supports Per Joint Of Pipe.
2. All Bolts Shall Have A Lock Washer Under The Nut.
3. All Nuts Shall Be Stainless Steel Series 304.

PIPE SIZE	A	B
8"	8"	15"
10"	9"	17"
12"	10"	19"

SECTION X-X

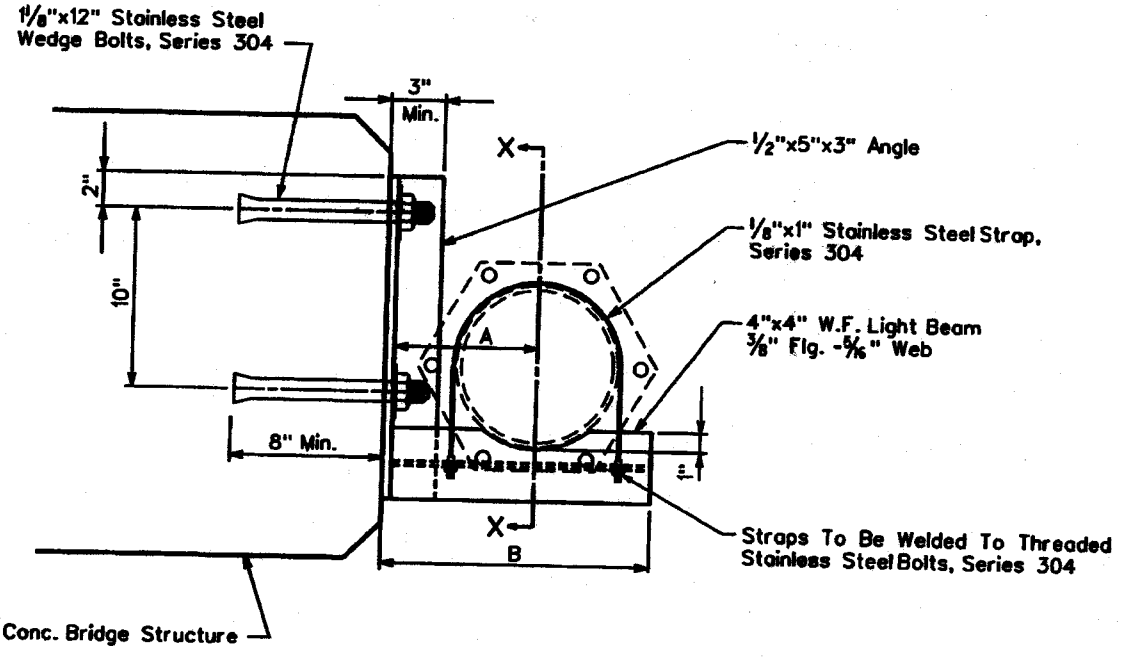

SUSPENSION DETAIL

ARIZONA WATER COMPANY

STANDARD SPECIFICATION
FOR THE INSTALLATION OF
SIDE HUNG WATER LINE SUSPENSION

DRAWN BY:	APPROVED BY:	DATE:	△	E-9-27-1
JPK	MJW	7-12-96		

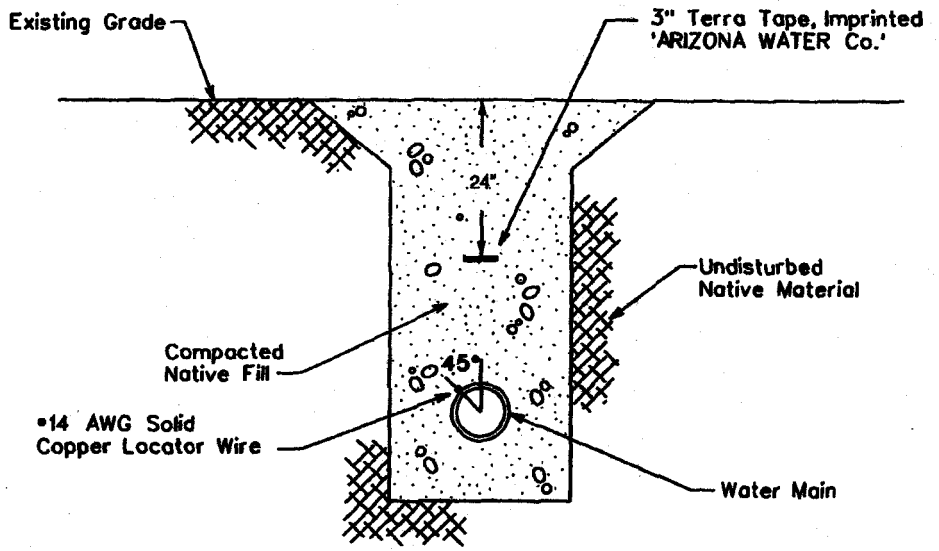

TYPICAL WATER TRENCH DETAIL

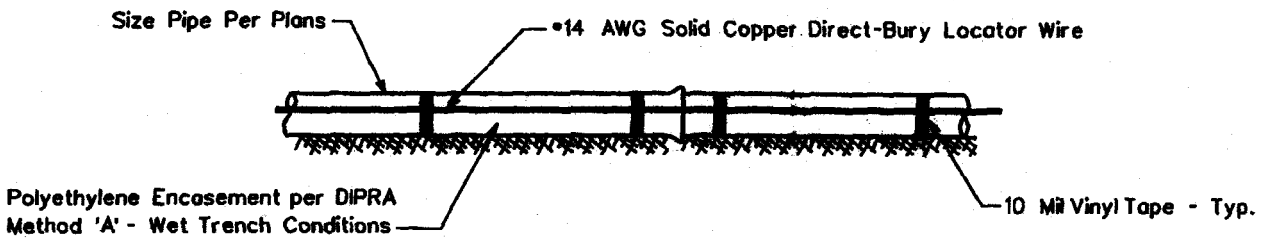

TYPICAL PROFILE VIEW

WIRE GENERAL NOTES:

1. All pipe shall have #14 AWG Solid Copper Direct-Bury Locator Wire Installed Directly To The Polywrap At 45° From The Vertical Center Of The Pipe and Shall Be Attached Using 10 Mil Vinyl Tape.
2. The Locating Wire Shall Terminate At the Top Of Each Valve Box and Be Capable of Extending 12" Above the Top Of The Box In Such A Manner So As Not To Interfere With Valve Operation.

TAPE GENERAL NOTES:

1. Use Terra Tape 3" Marking Tape As Manufactured By Reef Industries Inc. Of Houston, Texas (1-800-231-2417)
2. The Tape Is Blue & Imprinted 'ARIZONA WATER Co.'
3. INSTALLATION: The Pipe Warning Tape Shall Be Installed Over All Water Mains And Shall Be Buried 24 Inches Below The Surface Over The Center Of The Pipe.
   A) The Backfill Shall Be Sufficiently Leveled So That The Tape Is Installed On A Flat Surface.
   B) The Tape Shall Be Centered In The Trench With The Printed Side Up.
   C) Care Shall Be Exercised To Avoid Movement Of The Tape While The Remaining Backfill Is Moved Into The Trench.

ARIZONA WATER COMPANY

STANDARD SPECIFICATION
FOR THE INSTALLATION OF

PIPE WARNING TAPE AND LOCATOR WIRE

DRAWN BY:	APPROVED BY:	DATE	△	
CB		03.24.1997	△09.27.2006	E-9-28-1

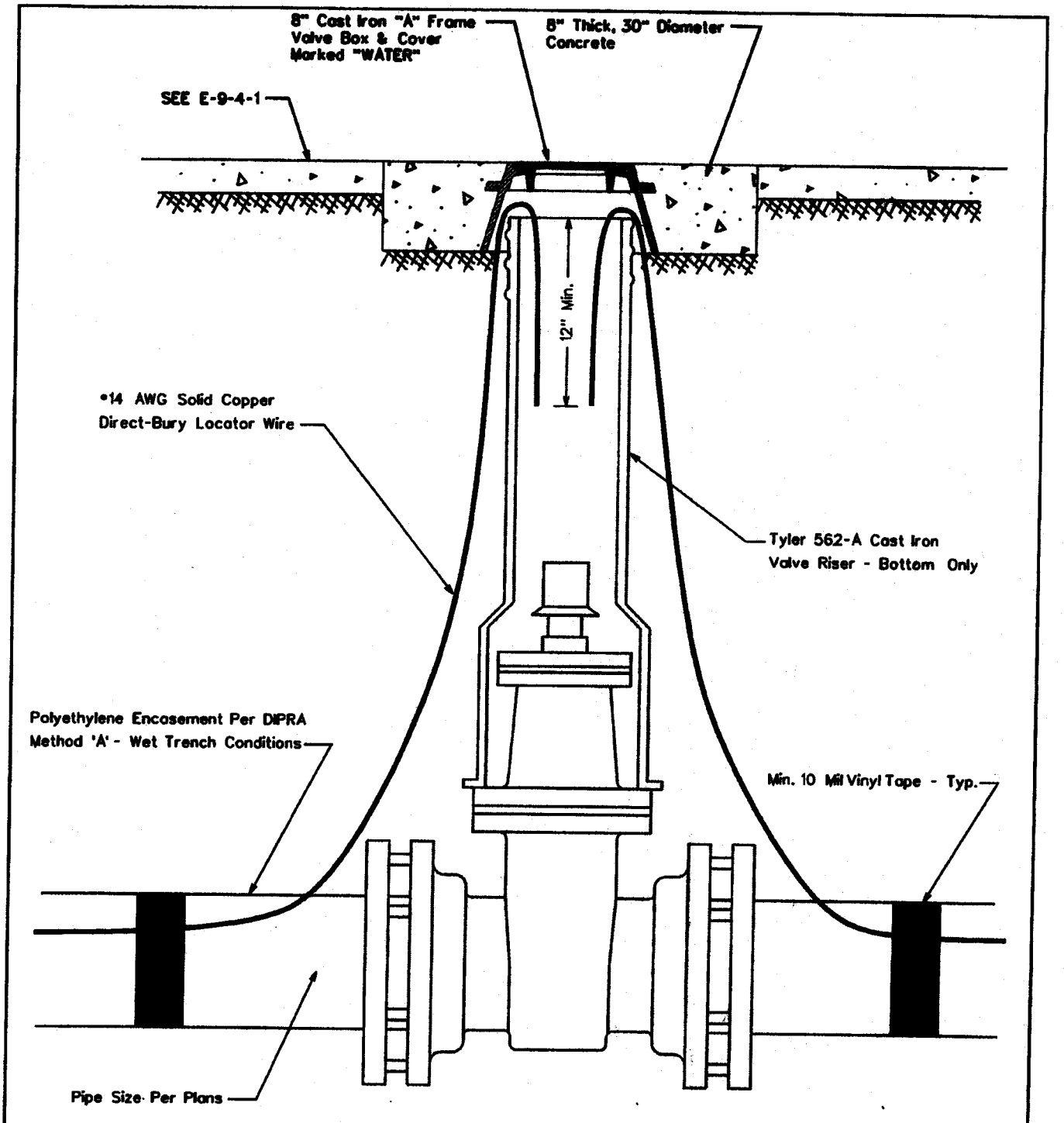

ARIZONA WATER COMPANY

STANDARD SPECIFICATION
FOR THE INSTALLATION OF

LOCATOR WIRE TERMINATION

DRAWN BY:	APPROVED BY:	DATE		
CB		09.27.2006	△	E-9-28-2

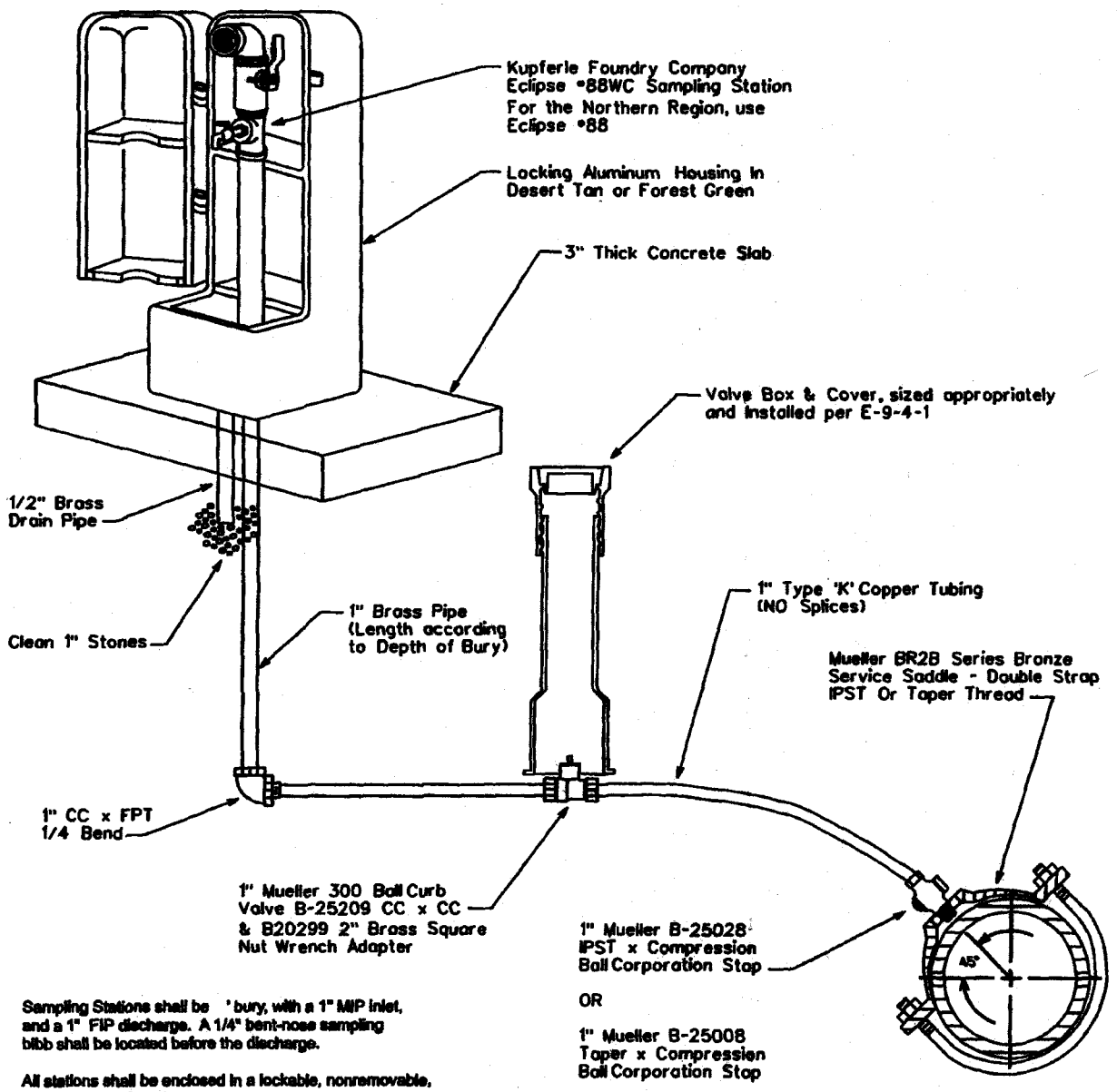

Sampling Stations shall be ' bury, with a 1" MIP inlet, and a 1" FIP discharge. A 1/4" bent-nose sampling bibb shall be located before the discharge.

All stations shall be enclosed in a lockable, nonremovable, aluminum-cast housing.

When opened, the station shall require no key for operation, and the water will flow in an all brass waterway.

All working parts will be of brass and serviceable from above ground with no digging. (OPTIONAL: If desired, a 1/2" brass drain tube will be provided within the locking cover).

A 1" ball valve will control the water flow, and be located before (or after) the sampling bibb, as manufactured by Kupferle Foundry, St. Louis, MO 63102.

SADDLE TAP TO CA, PVC, OR DI PIPE

NOTE: The minimum distance between taps on mains other than ductile iron is 12"

Pipe Depth Per
E-8-1-2, Item 3.

ARIZONA WATER COMPANY

STANDARD SPECIFICATION

FOR THE INSTALLATION OF

SAMPLING STATION

DRAWN BY:	APPROVED BY:	DATE:	△	
CB	MW	01.24.2007		E-8-29-1

ENCASEMENT FOR PIPE CROSSING

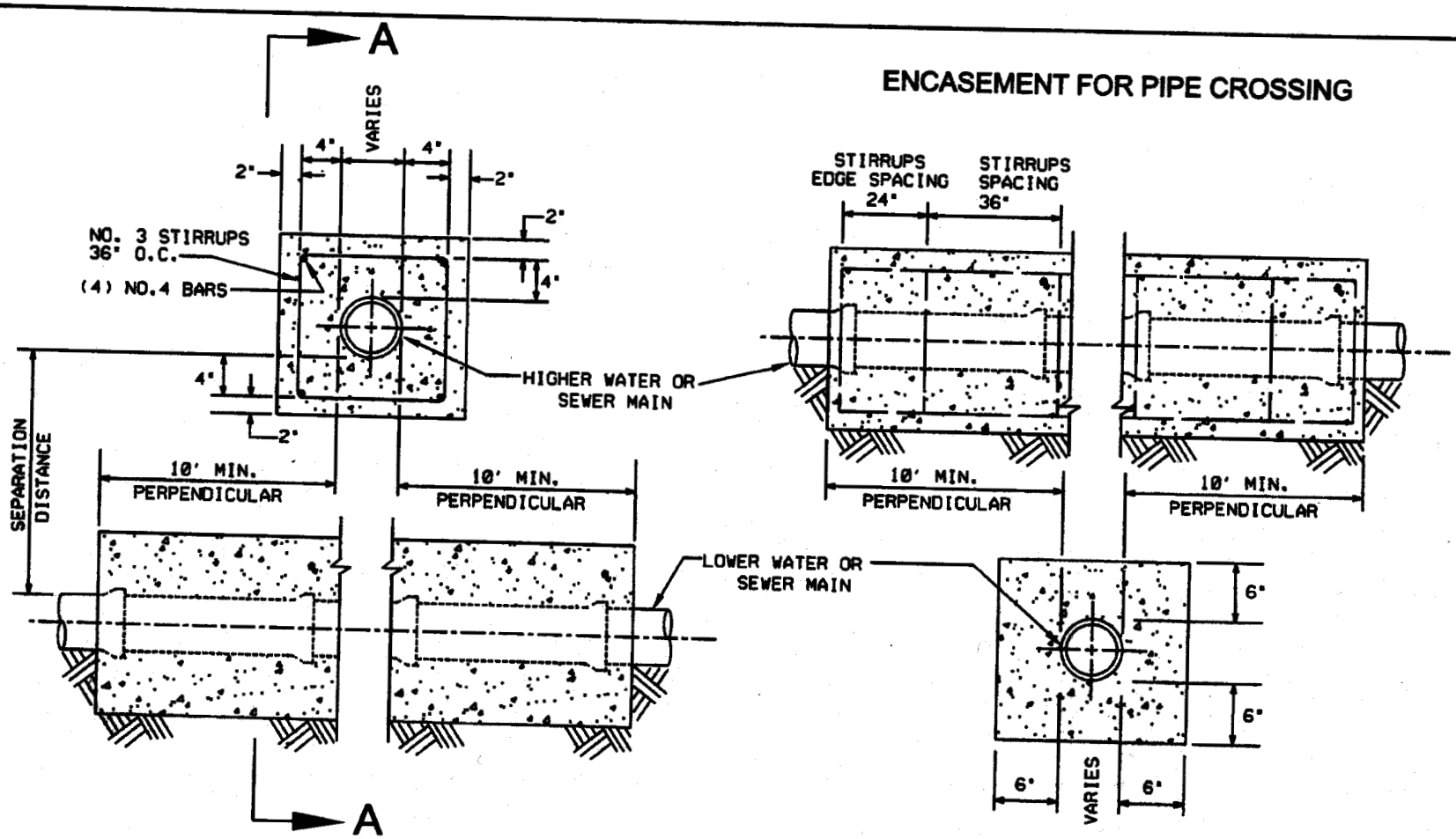

SECTION A-A

NOTES:

1. 2,000 PSI CONCRETE
2. SEPARATION DISTANCES AND/OR OTHER EXTRA PROTECTION SHALL BE REQUIRED TO PROTECT WATER MAINS FROM CONTAMINATION BY SANITARY SEWER MAINS. SEE AWC STANDARD SPECIFICATION PAGES E-8-1-9 AND E-8-1-10.
3. SEE CROSS SECTION DETAIL FOR LIMITS OF SEPARATION/EXTRA PROTECTION. ALL DISTANCES ARE MEASURED PERPENDICULARLY FROM THE OUTSIDE OF THE PIPES.
4. RECLAIMED WATER SHALL BE CONSIDERED A SANITARY SEWER WHEN PLACED NEXT TO A POTABLE WATER MAIN.

ARIZONA WATER COMPANY

STANDARD SPECIFICATION
FOR THE INSTALLATION OF
WATER AND SANITARY SEWER
SEPARATION/PROTECTION

DRAWN BY:	APPROVED BY:	DATE:	△	E-9-30-1
CB	JW	04.07.2008		

NOTES:

1. 2,000 PSI CONCRETE

2. SEPARATION DISTANCES AND/OR OTHER EXTRA PROTECTION SHALL BE REQUIRED TO PROTECT WATER MAINS FROM CONTAMINATION BY SANITARY SEWER MAINS. SEE AWC STANDARD SPECIFICATION PAGES E-8-1-9 AND E-8-1-10.

3. SEE CROSS SECTION DETAIL FOR LIMITS OF SEPARATION/EXTRA PROTECTION. ALL DISTANCES ARE MEASURED PERPENDICULARLY FROM THE OUTSIDE OF THE PIPES.

4. RECLAIMED WATER SHALL BE CONSIDERED A SANITARY SEWER WHEN PLACED NEXT TO A POTABLE WATER MAIN.

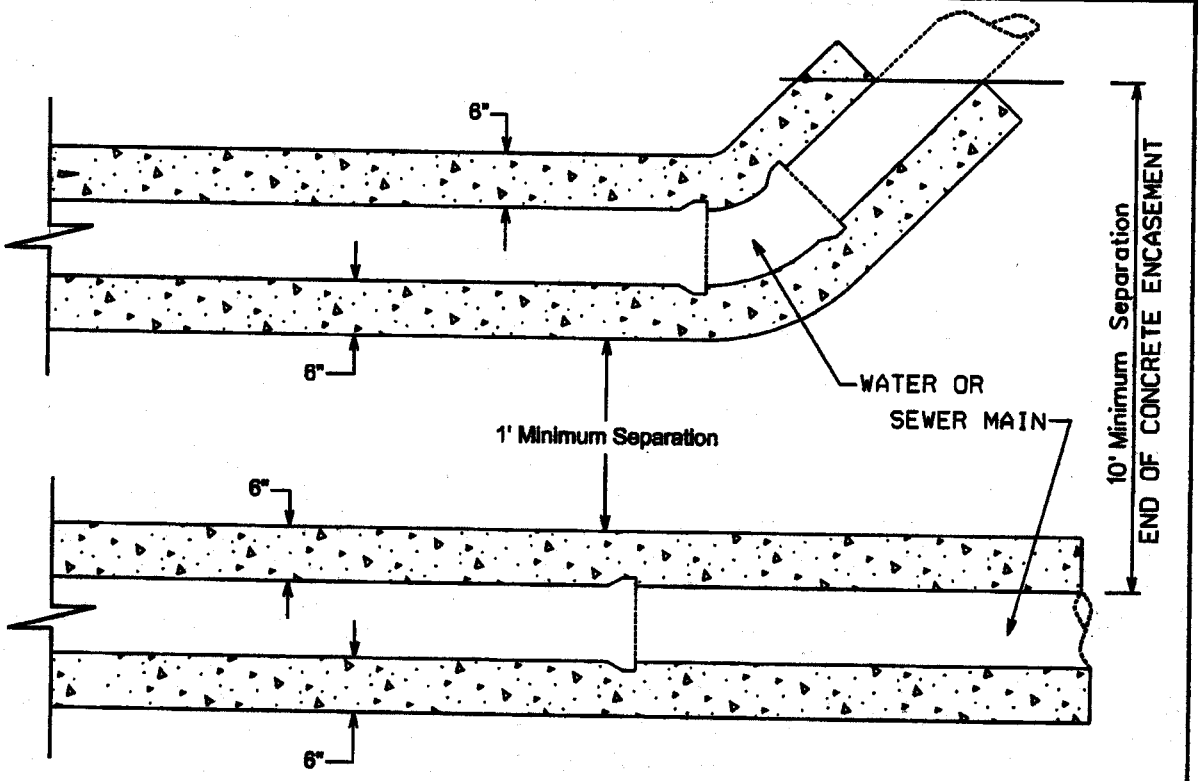

PLAN VIEW

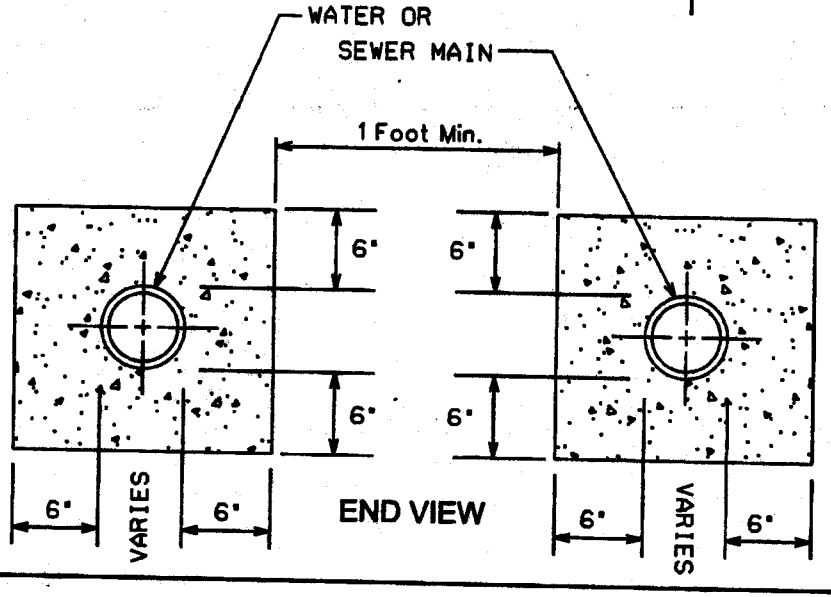

END VIEW

ENCASEMENT FOR PARALLEL PIPES

ARIZONA WATER COMPANY

STANDARD SPECIFICATION
FOR THE INSTALLATION OF
WATER AND SANITARY SEWER SEPARATION/PROTECTION

DRAWN BY:	APPROVED BY:	DATE:	△	E-9-30-2
CB	JW	04.07.2008		

ENGINEER'S CERTIFICATE OF COMPLETION AND FINAL INSPECTION "ECC"

ARIZONA DEPARTMENT OF ENVIRONMENTAL QUALITY (ADEQ) – WATER QUALITY DIVISION 5/01

ADEQ FILE NO.: 20120061 → X DRINKING WATER DESIGN *(Now separate form now used for WASTEWATER DESIGN)* If separate Drinking Water & Wastewater Approvals to Construct were issued, separate ECCs required	COUNTY: Navajo
	OWNER: ARIZONA WATER COMPANY

Project Name: Green Valley Road *(as shown on Approval to Construct)*

W.A. No.1-4927 SYSTEM No.09-003

Project Description: Installation of approximately 950 LF of 6-inch DIP and relocation of two services along Green Valley Road, Lakeside, Navajo County.

Two vertical realignments with an air release valve were added to maintain adequate separation from culvert and drainage ditch. Actual length of water main installed was 942 LF.

(as shown on Approval to Construct, unless completed project differed, in which case describe in detail)

I, Fredrick K. Schneider, a Professional Engineer registered in the State of Arizona, have inspected the construction of the above described project, and certify that *(check all applicable boxes, complete applicable blanks)*:

ITEMS 1) THRU 4) MUST BE COMPLETED

■ 1) The work on this project was completed on June 7, 2012 (date).

■ 2) On June 7, 2012 a final construction inspection was conducted by ☐ MYSELF [←check one→] ■ under MY DIRECT SUPERVISION by Bruce Rowell (print name).

■ 3) The materials utilized and the installation and construction of those materials and equipment are in conformance with the approved plans and specifications.

■ 4) All provisions listed in the ADEQ Approval to Construct for this project, a copy of which I have attached to this certificate, have been fully satisfied or exceptions are listed on the reverse side of this certificate.

■ 5) All construction and preoperational tests (infiltration, exfiltration, pressure, deflection, chlorination, bacti, etc.) *[circle types performed]* were properly conducted, met ADEQ requirements, and are represented in attachments to this Certificate. The total number of pages of test results attached is 1.

EITHER 6A) or 6B) MUST BE CHECKED

■ 6A) Any deviation from the approved plans and the ADEQ Certificate of Approval to Construct have been noted on the attached "As-Built" plans (as stipulated in the Approval to Construct provisions) prepared and sealed pursuant to A.R.S.§ 32-126 on 6-14-2012 (date). Of the total 4 sheets of "As-Built" plans attached, deviations from the approved plans are shown on sheets numbered 1 & 2. All deviations from the approved plans comply with the ADEQ minimum design and construction standards contained in statute, rule, bulletin or referenced codes, and with the key elements of the approved plans.

☐ 6B) The completed project did not deviate from the plans which received the Approval to Construct.

EITHER 7A) or 7B) MUST BE CHECKED

■ 7A) This project did not require the preparation of an Operation and Maintenance Manual.

(the only projects which do NOT require an O&M manual are gravity-only sewage collection systems, single-family residence septic systems, and drinking water distribution projects that include no source, storage, or pressurization facilities).

☐ 7B) A FINAL Operation and Maintenance Manual has been prepared for this project and a copy is attached. This manual meets all ADEQ minimum design and construction standards contained in statute, rule, bulletin, referenced codes, the key elements of the approved plans, and, if applicable, with Attachment B of the September 10, 1984 Engineering Advisory for Individual Alternate Systems.

EITHER 8A) or 8B) MUST BE CHECKED

■ 8A) Review of this project for Approval of Construction issuance does not require a fee because this project involves only drinking water, not wastewater.

☐ 8B) In accordance with A.A.C. R18-9-103 Schedule B, a check in the amount of $_____ is attached as initial fee for review of the submitted and other information for issuance of an Approval of Construction.

ADDITIONAL INFORMATION

☐ 9) Other, see additional information on reverse side.

↓ ENGINEER'S SEAL per AAC R4-30-304.B ↓

Engineer Address PO Box 29006, Phoenix, AZ 85038-9006

Phone 602-240-6860

AZ DEPARTMENT OF ENVIRONMENTAL QUALITY ACCEPTANCE

EMPLOYEE SIGNATURE (PRINTED NAME) DATE

1-4927

ADEQ Arizona Department of Environmental Quality

ENGINEERING REVIEW SECTION
DATA REQUIRED WITH ECC

Please complete the test data and submit this form with the Engineers Certificate of Completion. An Approval of Construction cannot be issued without the data identified below in accordance with Arizona Administrative Code (A.A.C.) R18-5-508(C). Please attach all supplemental information and calculations to this form.

DATA 6/11/12

1.

PRESSURE TEST DATA				
Indicate Segment Tested	ALL			
Pressure and Leakage Test Results (Pass/Fail)	PASS			
Date Tested	5/29/12			
Time Started	09:15			
Time Finished	11:15			
Pipe Diameter	6"			
Footage Tested	942			
Allowable Leakage	1.130			
Leakage Observed	LESS THAN ALLOWED			
Pressure at Test Point	200 psi			
Employee Observing the Test (Please Print Legibly)	KIM BOUCHER			
Signature of Employee Observing the Test	Kim Boucher			

2.

DISINFECTION SAMPLING					
Initial Sampling (Minimum 50 ppm available chlorine)	Date	5/25/12			
	Time	09:15			
	ppm Cl_2	130 PPM			
After 24 Hours Detention Time (Minimum 10 ppm free chlorine)	Date	5/29/12			
	Time	09:10			
	ppm Cl_2	40 PPM			
After Sufficient Flushing (Water is clear and system Cl_2 residual is measured)	Date	5/29/12			
	Time	10:30			
	ppm Cl_2	2.0			
Bacteriological Sampling(s):	Date	5/29/12			
	Time	10:30			
	Attached (Y/N)	Y			
		Yes/No	Yes/No	Yes/No	Yes/No

3.

Certification

I, Blaine Rawlins, certify that I have inspected the work performed and have found it to be satisfactory and in accordance with Arizona Administrative Code, Arizona Engineering Bulletins, and the approved specifications.

Blaine Rawlins 6/12/12
Authorized Persons Signature Date

Professional Seal
As per A.A.C. R4-30-301(X)

Registered Professional Engineer (Civil) FREDRICK K. SCHNEIDER Date Signed 6-14-12 ARIZONA, U.S.A.

Exp 9-30-13

L E G E N D
Technical Services, Inc.
www.legend-group.com

1603 324 6101 # 1/ 1
[illegible] N. 25th Avenue • Phoenix, AZ 85021
P (602) 324-6100 • F (602) 324-6101

Regina Lynde Arizona Water Company 3805 N. Black Canyon Hwy Phoenix, AZ85015	Project: Specials Project Number: 5/29/12 Reported: 06/01/12 11:36

Analyte

09-003.1-2 (Rim Rd & Green Valley) (20521115-01) Drinking Water (Grab) Sampled: 05/29/12 10:30 Received: 05/30/12 09:10

Analyte	Result	PQL	Units	Dilution	Batch	Prepared	Analyzed	Method	Notes
Legend Technical Services of Arizona, Inc.									
Microbiology									
E. coli	Absent		P/A	1	B2E0876	05/30/12 12:26	05/30/12 12:26	SM 9223B	
Total Coliforms	Absent		P/A	1	B2E0876	05/30/12 12:26	05/30/12 12:26	SM 9223B	

09-003.2-2 (Job WA081-34301-4927) (20521115-02) Drinking Water (Grab) Sampled: 05/29/12 10:35 Received: 05/30/12 09:10

Analyte	Result	PQL	Units	Dilution	Batch	Prepared	Analyzed	Method	Notes
Legend Technical Services of Arizona, Inc.									
Microbiology									
E. coli	Absent		P/A	1	B2E0876	05/30/12 12:26	05/30/12 12:26	SM 9223B	
Total Coliforms	Absent		P/A	1	B2E0876	05/30/12 12:26	05/30/12 12:26	SM 9223B	

Sample Condition Upon Receipt:

Temperature: 2.40 C
All samples were received in acceptable condition unless noted otherwise in the case narrative.

Case Narrative:

Holding Times: All holding times were met unless otherwise qualified.
QA/QC Criteria: All analyses met method requirements unless otherwise qualified.
Accreditations: **AZ(PHX)0004, AZ(TUC)0004, AIHA#102962, CDC ELITE Member.**
Accreditation is applicable only to the test methods specified on each scope of accreditation held by LEGEND.
Comments: There were no problems encountered during the processing of the samples, unless otherwise noted.
All samples were analyzed on a "wet" basis unless designated as "dry weight".

Not for compliance as indicated on the chain of custody. BF

Notes and Definitions

ARIZONA DEPARTMENT OF ENVIRONMENTAL QUALITY
CERTIFICATE OF APPROVAL TO CONSTRUCT
WATER FACILITIES

ADEQ File No: 20120061	**LTF No:** 55744
System Name: Az Water Co-Lakeside	**System Number:** 09-003
Project Owner: Arizona Water Company	
Address: P O Box 29006, Phoenix, AZ 85038	
Project Location: Lakeside	**County:** Navajo
Description: INSTALLATION OF APPROXIMATELY 950-L.F. OF 6-IN D.I.P. AND RELOCATION OF TWO SERVICES ALONG GREEN VALLEY ROAD, LAKESIDE, NAVAJO COUNTY.	

Approval to construct the above-described facilities as represented in the approved documents on file with the Arizona Department of Environmental Quality is hereby given subject to provisions 1 through 5 continued on page 2 through 2

1. This project must be constructed in accordance with all applicable laws, including Title 49, Chapter 2, Article 9 of the Arizona Revised Statutes and Title 18, Chapter 5, Article 5 of the Arizona Administrative Code.
2. Upon completion of construction, the engineer shall fill out the Engineer's Certificate of Completion and forward it to the Central Regional Office located in Phoenix. If all requirements have been completed, that unit will issue a Certificate of Approval of Construction. R18-5-507(B), Ariz. Admin.Code. At the project owner's request, the Department may conduct the final inspection required pursuant to R18-5-507(B); such a request must be made in writing in accordance with the time requirements of R18-5-507(C), Ariz. Admin. Code.
3. This certificate will be void if construction has not started within one year after the Certificate of Approval to Construct is issued, there is a halt in construction of more than one year, or construction is not completed within three years of the approval date. Upon receipt of a written request for an extension of time, the Department may grant an extension of time; an extension of time must be in writing. R18-5-505(B), Ariz. Admin. Code.
4. Operation of a newly constructed facility shall not begin until a Certificate of Approval of Construction has been issued by the Department. R18-5-507(A), Ariz. Admin. Code.

Reviewed by: AD4

By: _____ 6/8/2012
Jasek K. Dusel, P.E. Unit Manager — Date
Engineering Review Section
Water Quality Division

cc: File No: 20120061
Regional Office: Central
Owner: Arizona Water Company
County Health Department: Navajo
Engineer: Arizona Water Company
Planning and Zoning/Az Corp. Commission
Engineering Review Database - Rm021

5. The Arizona Department of Environmental Quality's review of this application was subject to the requirements of the licensing time frames ("LTF") statute under Arizona Revised Statutes ("A.R.S.") § 41-1072 through § 41-1079 and the LTF rules under Arizona Administrative Code ("A.A.C.") R18-1-501 through R18-1-525. This Notice is being issued within the overall time frame for your application.

ADEQ hereby approves your application for Approval to Construct Water Facilities under A.R.S. § 49-351. Your copy is enclosed.

This decision is an appealable agency action under A.R.S. § 41-1092. You have a right to request a hearing and file an appeal under A.R.S. § 41-1092.03(B). You must file a written Request for Hearing or Notice of Appeal within 30 days of your receipt of this Notice. A Request for Hearing or Notice of Appeal is filed when it is received by ADEQ's Hearing Administrator as follows:

Office of Administrative Counsel
Arizona Department of Environmental Quality
1110 W. Washington Street
Phoenix, AZ 85007

The Request for Hearing or Notice of Appeal shall identify the party, the party's address, the agency and the action being appealed and shall contain a concise statement of the reasons for the appeal. Upon proper filing of a Request for Hearing or Notice of Appeal, ADEQ will serve a Notice of Hearing on all parties to the appeal. If you file a timely Request for Hearing or Notice of Appeal you have a right to request an informal settlement conference with ADEQ under A.R.S. § 41-1092.06. This request must be made in writing no later than 20 days before a scheduled hearing and must be filed with the Hearing Administrator at the above address.

Please contact Adrian Dumitrescu at 602-771-4201 or add@azdeq.gov if you have questions regarding this Notice or the Certificate of Approval to Construct.

Janice K. Brewer
Governor

ARIZONA DEPARTMENT OF ENVIRONMENTAL QUALITY

1110 West Washington Street • Phoenix, Arizona 85007
(602) 771-2300 • azdeq.gov

Henry R. Darwin
Director

APPROVAL OF CONSTRUCTION

Project Description: AOC Permit for approximately 950 LF of 6-inch D.I.P. waterline and related fittings, along Green Valley Road, Lakeside, Navajo County.

Location: Lakeside, Navajo County, AZ

Project Owner: Arizona Water Company
Address: P.O. Box 29006, Phoenix, AZ 85038

The Arizona Department of Environmental Quality (ADEQ) hereby issues an Approval of Construction for the above-described facility based on the following provisions of Arizona Administrative Code (A.A.C.) R18-5-507 et seq.

On April 3, 2012, ADEQ issued a Certificate of Approval to Construct for the referenced project.

On June 14, 2012, Fredrick Schneider, P.E., certified the following:

- A final construction inspection was conducted on June 7, 2012;
- The referenced project was constructed according to the as-built plans and specifications and ADEQ's Certificate of Approval to Construct;
- Water system pressure and leakage tests were conducted on May 24, 2012, and the results were within the allowable leakage rates;
- The water storage system was disinfected according to an ADEQ-approved method; and
- The applicant has the right to appeal this AOC Permit. Appeal information is on reverse side of this Permit.

Microbiological samples were collected on May 29, 2012 and analyzed on May 30, 2012 by Legend Technical Services, ADHS License No. AZ0004. The sample results were negative for total coliform.

This Approval of Construction authorizes the owner to begin operating the above-described facilities as represented in the approved plan on file with the ADEQ. Be advised that A.A.C. R18-5-124 requires the owner of a public water system to maintain and operate all water production, treatment and distribution facilities in accordance with ADEQ Safe Drinking Water Rules.

AD4

PWS No.: 09-003
LTF No.: 56234

Janak K. Desai, P.E., Manager — Date Approved: 7/5/2012
Drinking Water Facilities Review Unit
Drinking Water Section

cc: TEU File No.: 20120061
CRO Approval of Construction File
Navajo County Health Department
Navajo County Planning & Zoning Department
AZ Corporation Commission
Engineer

RIGHT TO APPEAL INFORMATION

The Arizona Department of Environmental Quality's review of this application was subject to the requirements of the licensing time frames ("LTF") statute under Arizona Revised Statutes ("A.R.S.") § 41-1072 through § 41-1079 and the LTF rules under Arizona Administrative Code ("A.A.C.") R18-1-501 through R18-1-525. This Notice is being issued within the overall time frame for your application.

ADEQ hereby approves your application for Approval of Construction Drinking Water Facilities under A.R.S. § 49-351. Your copy of the Approval of Construction Permit is on the reverse side of this Right to Appeal Information sheet.

This decision is an appealable agency action under A.R.S. § 41-1092. You have a right to request a hearing and file an appeal under A.R.S. § 41-1092.03(B). You must file a written Request for Hearing or Notice of Appeal within **30 days** of your receipt of this Notice. A Request for Hearing or Notice of Appeal is filed when it is received by ADEQ's Hearing Administrator as follows:

Office of Administrative Counsel
Arizona Department of Environmental Quality
1110 W. Washington Street
Phoenix, AZ 85007

The Request for Hearing or Notice of Appeal shall identify the party, the party's address, the agency and the action being appealed and shall contain a concise statement of the reasons for the appeal. Upon proper filing of a Request for Hearing or Notice of Appeal, ADEQ will serve a Notice of Hearing on all parties to the appeal. If you file a timely Request for Hearing or Notice of Appeal you have a right to request an informal settlement conference with ADEQ under A.R.S. § 41-1092.06. This request must be made in writing no later than **20 days** before a scheduled hearing and must be filed with the Hearing Administrator at the above address.

Please contact Adrian Dumitrescu at (602) 771-4201 or ad4@azdeq.gov if you have questions regarding this Notice or the Certificate of Approved of Construction.

WA 1-4923

PRELIMINARY [X]

ACTUAL [ ]

ARIZONA WATER COMPANY
COST ESTIMATE WORKSHEET

DATE PREPARED: 11/10/2011

PREPARED BY: Andy Haas

SYSTEM: Navajo

SHEET 1 OF 1

PROJECT LOCATION:

DRAWING NO.

PROJECT DESCRIPTION:

Purchase additional property at Mogollon Well No.5 site for arsenic removal facility.

	DESCRIPTION	PLANT PROP ACCT	QUANTITY	UNIT COST	TOTAL
CONTRACT WORK	Purchase Property	310.3	1	$ 40,000.00	$ 40,000
	SERVICE CONNECTIONS: DOUBLE-LONG	345			
	SERVICE CONNECTIONS: DOUBLE-SHORT	345			
	TAXABLE SERVICE CONNECTIONS COMPLETE: SINGLE-LONG	345			
	TAXABLE SERVICE CONNECTIONS COMPLETE: SINGLE-SHORT	345			
					$ 40,000
MATERIALS					
	SERVICE CONNECTIONS: DOUBLE-LONG	345			
	SERVICE CONNECTIONS: DOUBLE-SHORT	345			
	TAXABLE SERVICE CONNECTIONS: SINGLE-LONG	345			
	TAXABLE SERVICE CONNECTIONS: SINGLE-SHORT	345			
	TAXABLE METERS	346			
	METERS	346			
TOTAL MATERIALS					$ -
LABOR	Engineering Design	310.3	20	$ 50.00	$ 1,000
	TESTING FEE				
	PERMIT FEE				
	SURVEY FEE				
	FIELD INSPECTION	310.3	20	50.00	1,000
	INSTALL SERVICE CONNECTIONS: DOUBLE-LONG	345			
	INSTALL SERVICE CONNECTIONS: DOUBLE-SHORT	345			
	INSTALL TAXABLE SERVICE CONNECTIONS: SINGLE-LONG	345			
	INSTALL TAXABLE SERVICE CONNECTIONS: SINGLE-SHORT	345			
TOTAL LABOR					$ 2,000
SUBTOTAL - CONTRACT WORK, MATERIALS, AND LABOR					$ 42,000
OVERHEAD					6,300
TOTAL	REFUNDABLE PORTION [ ]	NON-REFUNDABLE PORTION [ ]		COST ESTIMATE	$ 48,300

WA 1-4923 - Purchase Property at Mogollon No. 5 Well Site for Arsenic Removal Facility

ID	Task Name	Duration	Start	Finish	Predecessors
1	**Purchase Additional Property at Mogollon**	**295 days**	**Mon 11/14/11**	**Fri 12/28/12**	
2	Site Survey	25 days	Mon 11/14/11	Fri 12/16/11	
3	Preliminary Layout	60 days	Mon 12/19/11	Fri 3/9/12	2
4	Meet with Property Owners	40 days	Mon 3/12/12	Fri 5/4/12	3
5	Make Offer	50 days	Mon 5/7/12	Fri 7/13/12	4
6	Place Property in Escrow	80 days	Mon 7/16/12	Fri 11/2/12	5
7	Close on Property	40 days	Mon 11/5/12	Fri 12/28/12	6

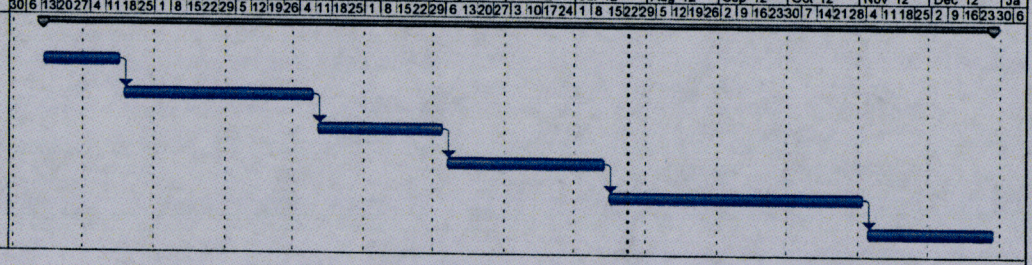

Project: Mogollon Property Schedule
Date: Tue 7/24/12

Task | Split | Progress | Milestone | Summary | Project Summary | External Tasks | External Milestone | Deadline

ARIZONA WATER COMPANY

3805 N. BLACK CANYON HIGHWAY, PHOENIX, ARIZONA 85015-5351 • P.O. BOX 29006, PHOENIX, AZ 85038-9006
PHONE: (602) 240-6860 • FAX: (602) 240-6874 • TOLL FREE: (800) 533-6023 • www.azwater.com

November 2, 2011

Mr. Jeremy Dalmacio
Hansen Land Surveying
115 S. Main Street
Coolidge, Arizona 85228

Re: Mogollon Well Site #5

Dear Mr. Dalmacio:

Enclosed is your copy of the Task Order for the above referenced project, which has been accepted by Arizona Water Company (the "Company").

If you have any questions, please call me at this office.

Very truly yours,

Charles Briggs
Real Property Specialist
engineering@azwater.com

afh
Enclosure

AGREEMENT FOR GENERAL ENGINEERING SERVICES BETWEEN ARIZONA WATER COMPANY AND HANSEN LAND SURVEYING, INC.

TASK ORDER AUTHORIZATION

Hansen Land Surveying Project Number 110095

AWC Project Number Mogollon Well Site #5

Arizona Water Company
P. O. Box 29006
Phoenix, Arizona 85038-9006

Effective Date of Authorization November 2, 2011

Upon execution of this Task Order, and effective as of the date shown above, the parties agree that Hansen Land Surveying shall perform the following services:

SCOPE OF SERVICES

As per the attached "Scope of Services" Identify perimeter of existing well site and identify proposed optional sites with different colored lath marking the corners. Locate all above ground structures/improvements as defined in the Exhibit C thru F.

COMPENSATION

As per the attached "Scope of Services" dated October 20, 2011

GENERAL TERMS AND CONDITIONS

Hansen Land Surveying's services shall be governed by the Master Agreement dated January 25, 2011 together with this Task Order and any Exhibits attached hereto.

The services performed within this Task Order shall commence on or about November 4, 2011, and shall be complete on or before November 10, 2011.

Hansen Land Surveying's Representative in charge of the services is Jeremy Delmacio, who may be contacted at 520-723-3261 and jeremy@hansensurvey.com. Client's Representative in charge of the services is Charles Briggs, who may be contacted at 602-240-6860 and cbriggs@awwater.com.

Arizona Water Company	HANSEN LAND SURVEY
By C Q B	By
Title REAL PROPERTY SPECIALIST	Title President
Date 11/2/2011	Date 11/1/11

HANSEN

Exhibit A

Proposal For Survey

Client: Arizona Water Company
Attn: Charles Briggs
Project: Overgaard Arizona: Mogollon Well Site Topographic Survey and Proposed site Identification
Date: October 20, 2011

Scope of Services

Survey Scope
Overgaard, Arizona

Identify perimeter of existing well site and identify proposed optional sites with different colored lath marking the corners.

Locate all above-ground structures/improvements (including, but not limited to: curb, gutter, sidewalks, fences, posts, signs, poles, manholes, utility lines, etc.) and locate all utility bluestake markings (for underground utilities) within the "Survey Area" as defined in the Exhibit C drawings provided by Arizona Water Company.

Generate topography of the site, as depicted on Exhibit C, with 1 foot contours including spot elevations of all concrete or constructed slabs located within the well yard.

ADDITIONAL INFORMATION

Project Locations:
1. Overgaard, Arizona. Northeast quarter of Section 32, Township12 North, Range 17 East of the Gila and Salt River Base and Meridian, Navajo County, Arizona.

Warranty Deed, Docket 1063, Pages 745-746 (Exhibit B)
ALTA Survey, Book 9 of Surveys Pages, 9-10
Public Hwy Docket 347, Page 368

Deliverables:

1 complete printed set of the survey in its entirety on bond paper
Electronic file or files of the survey in its entirety in AutoCAD format

HANSEN

Exhibit B

Proposal For Survey

Client: Arizona Water Company
Attn: Charles Briggs
Project: Overgaard Arizona: Mogollon Well Site Topographic Survey and Proposed site identification
Date: October 20, 2011

Project Fee:

Mogollon Well Site	**$1,500.00**

Standard Time & Material Rates:

1MC	**=$105/Hr**
2MC	**=$130/Hr**
3MC	**=$155/Hr**
Auto Cad	**=$ 65/Hr**
Land Surveyor	**=$140/Hr**
Engineer	**=$140/Hr**

Thank you for your consideration,

Jeremy R. Delmastro RLS

EXHIBIT A

Scope of Services

Mogollon Well Site
APN 206-25-025B
Topographic Survey
Overgaard, Arizona

MOGOLLON WELL SITE

The purpose of the survey is to locate the existing property corners of Arizona Water Company's Mogollon Well Site described in Docket 1063, Page 745, attached hereto as Exhibit B and depicted on Exhibit C and how the site relates to two proposed site additions, Options A and B attached hereto as Exhibits D and E. The corners of each Option shall be set with a lath, spray painted in a different color to denote each Option.

The survey will locate and show all above-ground structures/improvements (including, but not limited to: fences, posts, signs, poles, trees, shrubs, guy lines, meter boxes, utility lines, buildings, walls, culverts, ditches, washes, etc.) and locate all utility bluestake markings (for underground utilities) within the area depicted on Exhibit F.

In addition, the survey will:

- Generate topography of the area, as depicted on Exhibit F, with 1 foot intervals including spot elevations of all concrete or constructed slabs located within the area depicted on Exhibit F.

ADDITIONAL INFORMATION

Project Location: Overgaard, Arizona. Northeast quarter of Section 32, Township 12 North, Range 17 East of the Gila and Salt River Base and Meridian, Navajo County, Arizona.

Warranty Deed, Docket 1063, Pages 745-746 (Exhibit B)
ALTA Survey, Book 9 of Surveys, Pages 9-10
Public Highway, Docket 347, Page 368

Deliverables:

A complete printed set of the survey in its entirety on bond paper
Electronic file or files of the survey in its entirety in AutoCAD format

EXHIBIT B

Recording Requested By:
FIRST AMERICAN TITLE

When Recorded Mail To:

Arizona Water Company
P O Box 29006
Phoenix, Az. 85038-9006
Attn: R.W. Geake

NAVAJO COUNTY RECORDER

FEE # 92 01191
RECORDED AT THE REQUEST OF
First American Title Ins.
ON JAN 22 '92-1 09PM
IN DOCKET 1063 PAGE(S) 745-746
OFFICIAL RECORDS OF NAVAJO COUNTY, ARIZONA
JAY M. TURLEY, RECORDER

MICROFILMED
INDEXED

Escrow No. 275-428-042761

CORPORATION
WARRANTY DEED

KNOW ALL MEN BY THESE PRESENTS: THAT

OVERGAARD ASSOCIATES, INC., an Arizona Corporation

for the consideration of TEN AND NO/100 DOLLARS, and other valuable considerations, the GRANTOR herein, does hereby convey to

ARIZONA WATER COMPANY, an Arizona Corporation

the GRANTEE,
the following described real property situate in Navajo County, Arizona:

SEE EXHIBIT "A" ATTACHED HERETO AND MADE A PART HEREOF.

SUBJECT TO: Existing taxes, assessments, liens, encumbrances, covenants, conditions, restrictions, rights of way and easements of record.

And the GRANTOR does warrant the title against all persons whomsoever, subject to the matters above set forth.

IN WITNESS WHEREOF, the GRANTOR has caused its corporate name to be signed by the undersigned officer.

DATED: December 12, 1991

OVERGAARD ASSOCIATES, INC., an Az. Corp.

By: Kenneth O'Haire PRES

STATE OF ARIZONA)
) ss.
County of Navajo)

This instrument was acknowledged and executed before me this 6th day of January, 1992 by Kenneth O'Haire who acknowledged to be the Pres of OVERGAARD ASSOCIATES, INC., an Arizona Corp., and that as such officer, being authorized so to do, signed the name of the corporation as such officer.

Notary Public

My Commission Expires:
3-22-92

OFFICIAL SEAL
LYNNE GRELL
NOTARY PUBLIC - STATE OF ARIZONA
NAVAJO COUNTY
My Comm. Expires March 22, 1992

RECEIVED
ARIZONA WATER CO.
FEB - 3 1992
PHOENIX
OFFICE

FAT-AZ 6056 (Rev. 1/91)lj

AMENDED

EXHIBIT B 275-42761A

EXHIBIT "A"

LEGAL DESCRIPTION

That part of the Northeast quarter of the Northeast quarter of Section 32 and H.E.S. 181, Township 12 North, Range 17 East of the Gila and Salt River Base and Meridian, Navajo County, Arizona described as follows:

COMMENCING at Corner No. 1 of said H.E.S. 181; thence North 89° 57' 37" West along the line between corner No. 1 and corner No. 8 of said H.E.S. 181, a distance of 568.39 feet to the TRUE POINT OF BEGINNING; thence South 13° 48' 58" West a distance of 60.00 feet; thence North 89° 57' 37" West, a distance of 52.00 feet to the Easterly Right-of-way line of Mogollon Drive; thence North 13° 48' 58" East along said Easterly Right-of-way line, a distance of 60.00 feet to said line between corner No. 1 and corner No. 8; thence continuing South 89° 57' 37" East along said line between corner No. 1 and corner No. 8, a distance of 52.00 feet to the TRUE POINT OF BEGINNING.

19.04

OV

EXHIBIT C

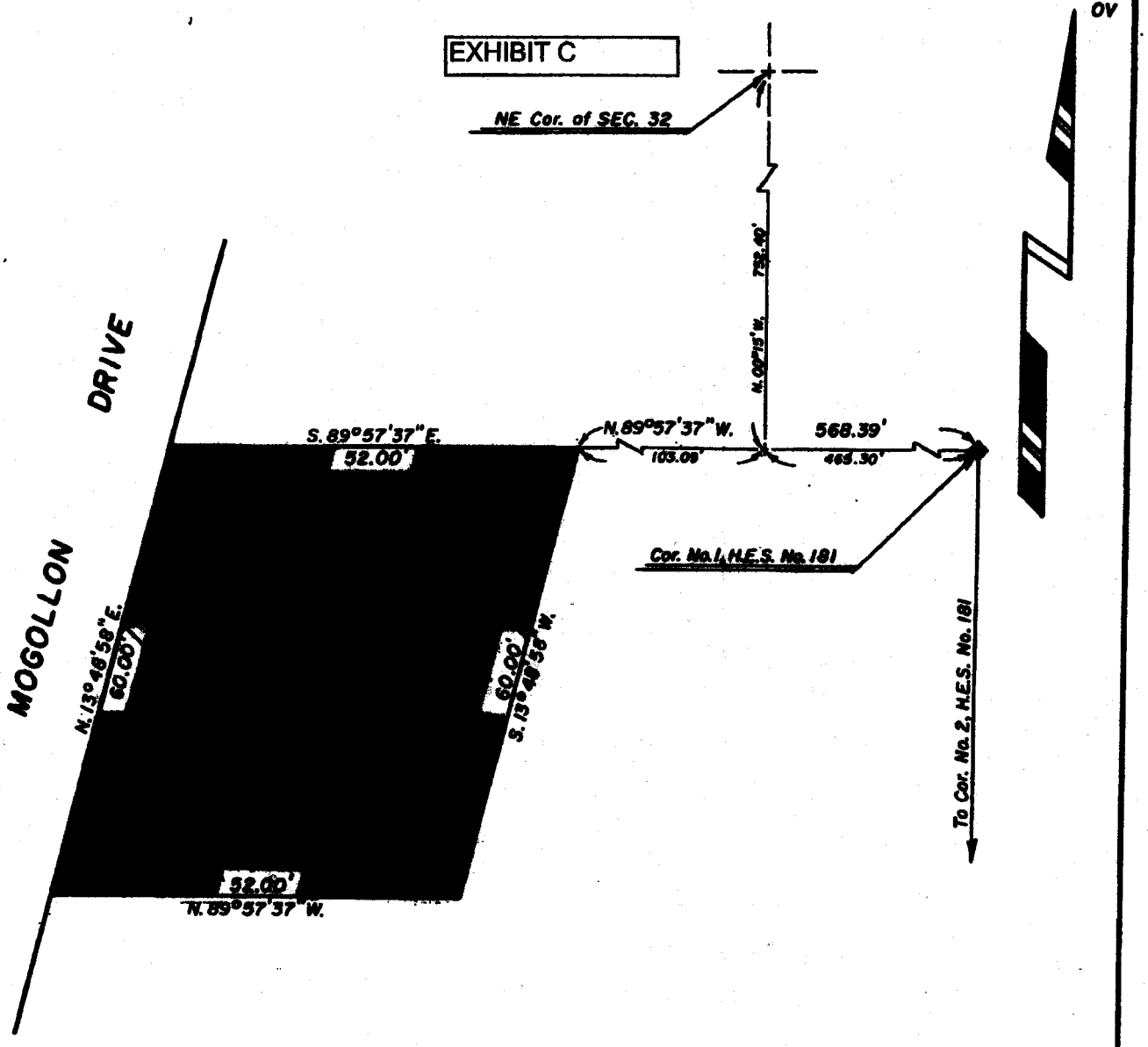

NOTE:
TITLE REFERENCE
Warranty Deed in Docket 1063,
Pages 745-746,
Dated 1-22-92

0.07 Acre MOGOLLON #5

DESIGNATION	WELL SITE
INDENTURE No.	19.04
PLEDGED TO BOND SERIES	
TAX ASSESSMENT No.	206-25-025B
Drawn GRS	Checked
Approved MW	

ARIZONA WATER COMPANY

PROPERTY PLAT

PART OF	NE ¼ SEC. 32 - T.12N., R.17E.
COUNTY OF	NAVAJO
SCALE	1" = 20'
DATE	4-20-92

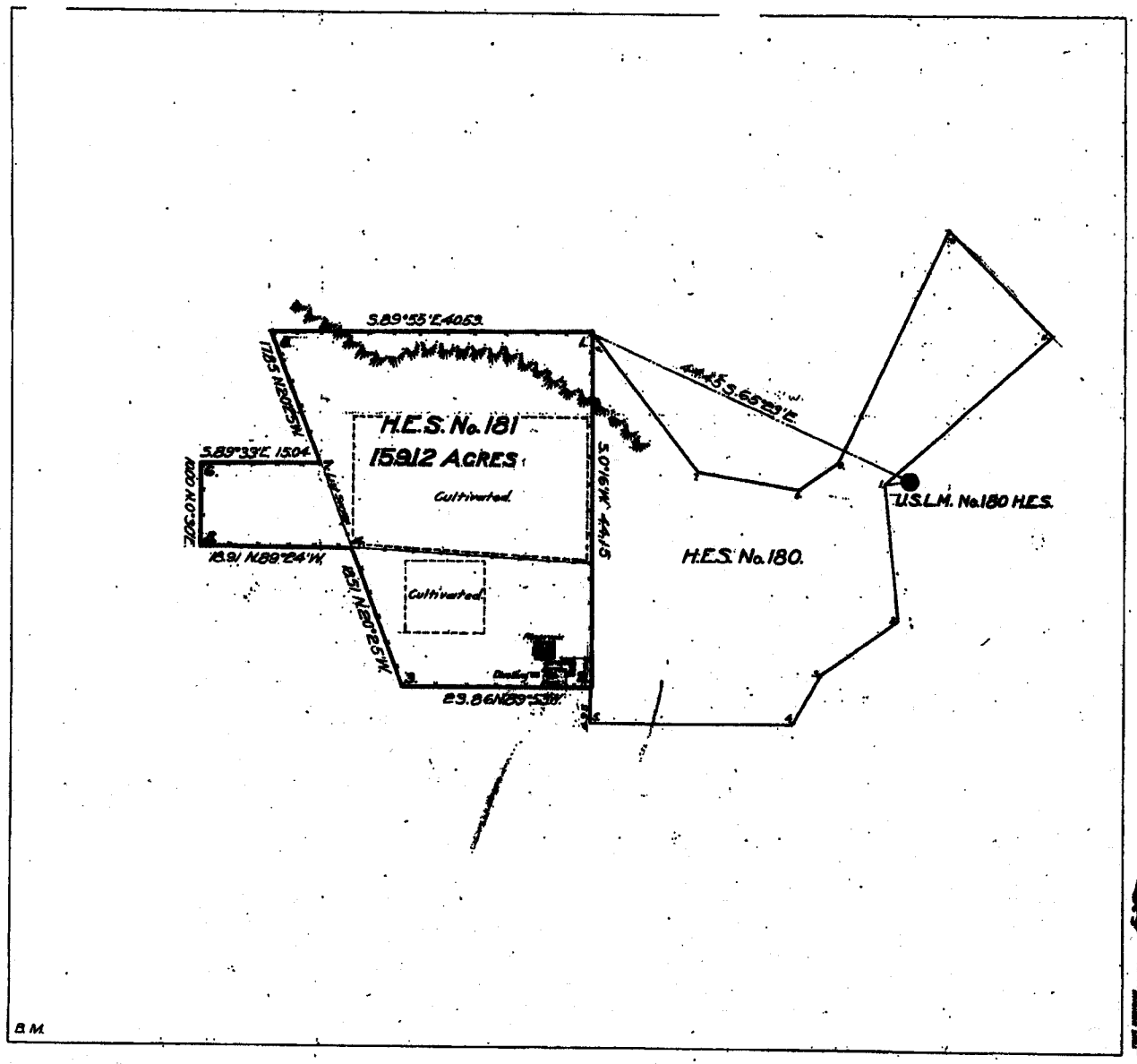

Plat of

HOMESTEAD ENTRY SURVEY

No. 181

in the

SITGREAVES NATIONAL FOREST

Section 32 unsurveyed, T. 12 N. R. 17 E.
Section 33 unsurveyed, T. 12 N. R. 17 E.

GILA AND SALT RIVER BASE AND MERIDIAN ARIZONA

This plat of Homestead Entry Survey No. 181 State of Arizona is strictly conformable to the field notes thereof on file in this office, which have been examined and approved.

U. S. Surveyor General's Office.

Phoenix Arizona

June 12, 1916.

Frank A. Hoch
U. S. Surveyor General
For Arizona

SCALE 10 chains to 1 inch

Survey Designated	By whom Surveyed	Instr. Contr. Group No.	Instr. Contr. Group Date	Work Surveyed Begun	Work Surveyed Completed	Date of Approval
H.E. Survey No. 180	W. G. Turley		June 10 1914	Aug 3 1914	Aug 4 1914	
H.E. Survey No. 181	W. G. Turley		June 10 1914	Aug 3 1914	Aug 6 1914	
	Surveyor For. Ser.					

	Areas in Acres	
H.E. Survey No. 181		Conflicts
In Section		
In Section		
In Section		
In Section		
Total Area	159.12 Acres.	

Act of June 11, 1906 Act of June 30, 1914.
Plat No. 3-906 Dated Dec. 12, 1910
List No. 3-1560 Dated May 13, 1911
Latitude 34° 24' 21" N
Longitude 110° 53' 51" W
Mean Mag. Decl. 14° 46' E.
At Corner No. 1

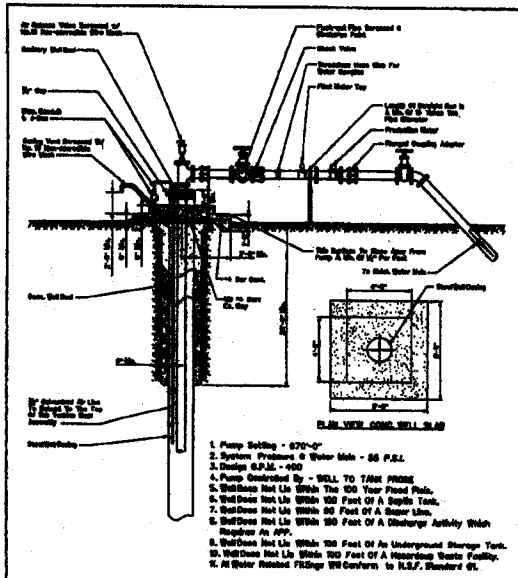

1. Pump Setting - 670'-0"
2. System Pressure @ Water Main - 55 P.S.I.
3. Design G.P.M. - 400
4. Pump Controlled By - WELL TO TANK PROBE
5. Well Does Not Lie Within The 100 Year Flood Path.
6. Well Does Not Lie Within 100 Feet Of A Septic Tank.
7. Well Does Not Lie Within 50 Feet Of A Sewer Line.
8. Well Does Not Lie Within 100 Feet Of A Discharge Activity Which Requires An APP.
9. Well Does Not Lie Within 100 Feet Of An Underground Storage Tank.
10. Well Does Not Lie Within 100 Feet Of A Hazardous Waste Facility.
11. All Water Related Fittings Will Conform to N.S.F. Standard 61.

TYPICAL WELL W/ SUBMERSIBLE PUMP

N.T.S.

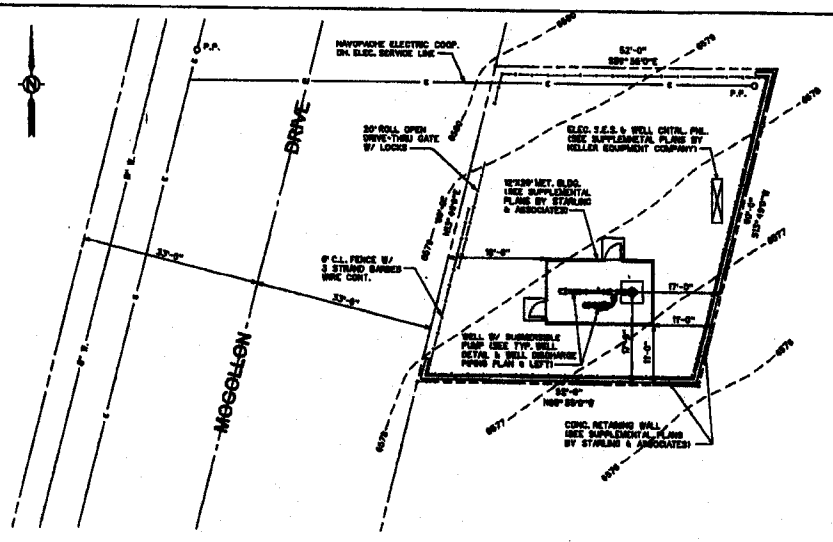

SITE PLAN

SCALE 1"=10'-0"

SITE LOCATION

N.T.S.

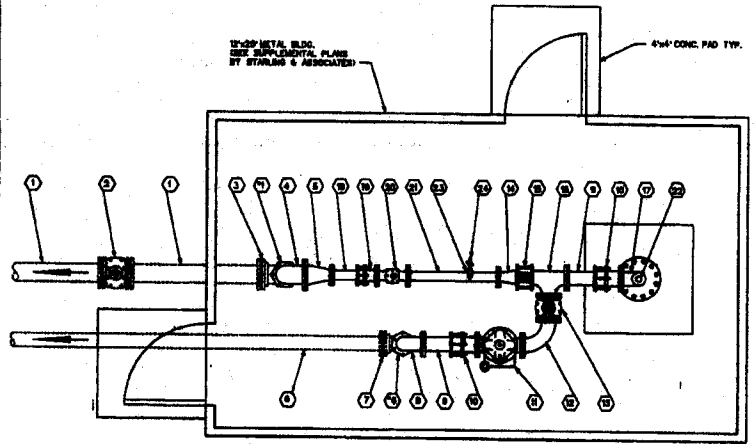

WELL DISCHARGE PIPING PLAN

SCALE ½"=1'-0"

FITTING SCHEDULE

No.	Fitting Description	Qty.	Supplied By
1	8" D.I.P.	30 L.F.	Contractor
2	8" G.V.S.S.C. M.J.	1	Contractor
3	8" 90° EL. M.J.	1	Contractor
4	8" 90° EL. M.J.xFlg.	1	Contractor
5	8"x4" Reducer Flg.	1	Contractor
6	4" D.I.P.	30 L.F.	Contractor
7	4" 90° EL. M.J.	1	Contractor
8	4" 90° EL. M.J.xFlg.	1	Contractor
9	4" D.I.P. Spool Flg.xP.E.	8	Contractor
10	4" Flg. Coup. Adapt. (Smith-Blair 913)	2	Contractor
11	4" Check Valve Flg.	1	A.W.Co.
12	4" 90° EL. Flg. Long Radius	1	Contractor
13	4" Gate Valve Flg.	1	Contractor
14	6"x4" Reducer Flg.	1	Contractor
15	6" Water Check	1	Contractor
16	6" Tee Flg.	1	Contractor
17	Ductile Iron Retrained Tee Flg.	1	Pump Contr.
18	4"x3'-0" D.I.P. Spool Flg.xP.E.	1	Contractor
19	4" Flg. Coup. Adapt. (Smith-Blair 913)	1	Contractor
20	4" Turbo Meter Flg.	1	A.W.Co.
21	4"x3'-4" D.I.P. Spool Flg.	1	Contractor
22	1" Deep Well Air Valve (Crispin Model No. DL10)	1	A.W.Co.
23	4"x4" Stanley Saddle	1	A.W.Co.
24	Threadless Hose Bib	1	A.W.Co.
	2" Mega-Lug	6	Contractor
	6" Mega-Lug	3	Contractor
	Ready Flex Support or Equivalent	2	Contractor

* Not Shown on Plan View

NOTES

1. NEW WELL HEADWORK PIPING SHALL BE DISINFECTED IN ACCORDANCE WITH ADEQ ENGINEERING BULLETIN No. 8 BEFORE BEING PLACED IN SERVICE.
2. ALL MATERIALS AND PRODUCTS USED IN WATER SYSTEM, INCLUDING SURFACE COATINGS & PAINTS, SHALL CONFORM TO NSF STANDARD 61 & CURRENT ADEQ DIRS.
3. CONSTRUCTION MATERIALS USED IN WATER SYSTEM SHALL BE LEAD-FREE AS PER A.A.C. R18-4-604 AND R18-4-101 (43).
4. ALL 6" & 8" MECH. JOINT FITTINGS ARE TO BE MEGA-LUGGED.
5. POLYWRAP ALL DIP BELOW GRADE.

Blue Stake, Inc. 263-7100 1-800-STAKE-IT

ARIZONA WATER COMPANY

3805 N. BLACK CANYON HWY. POST OFFICE BOX 29006
PHOENIX, ARIZONA 85038-9006
(602) 240-6860

DRILL AND EQUIP WELL @ EDELLEN DRIVE WELL SITE IN OVERGAARD, ARIZONA

JOB NO. 1-6798	DWG. NO. OV-309	This above installation is to be installed in accordance with the Arizona Water Company standard specifications on file with the Arizona Department of Environmental Quality
DRAWN OVERGAARD		
SEC. 18 T. 12 N. R. 17 E.		
DATE 10-10-2000	SCALE AS SHOWN	
DRAWN BY JAK	SHEET 1 OF 1	SEE No. OV-309

FOR WATER ONLY

EXHIBIT E

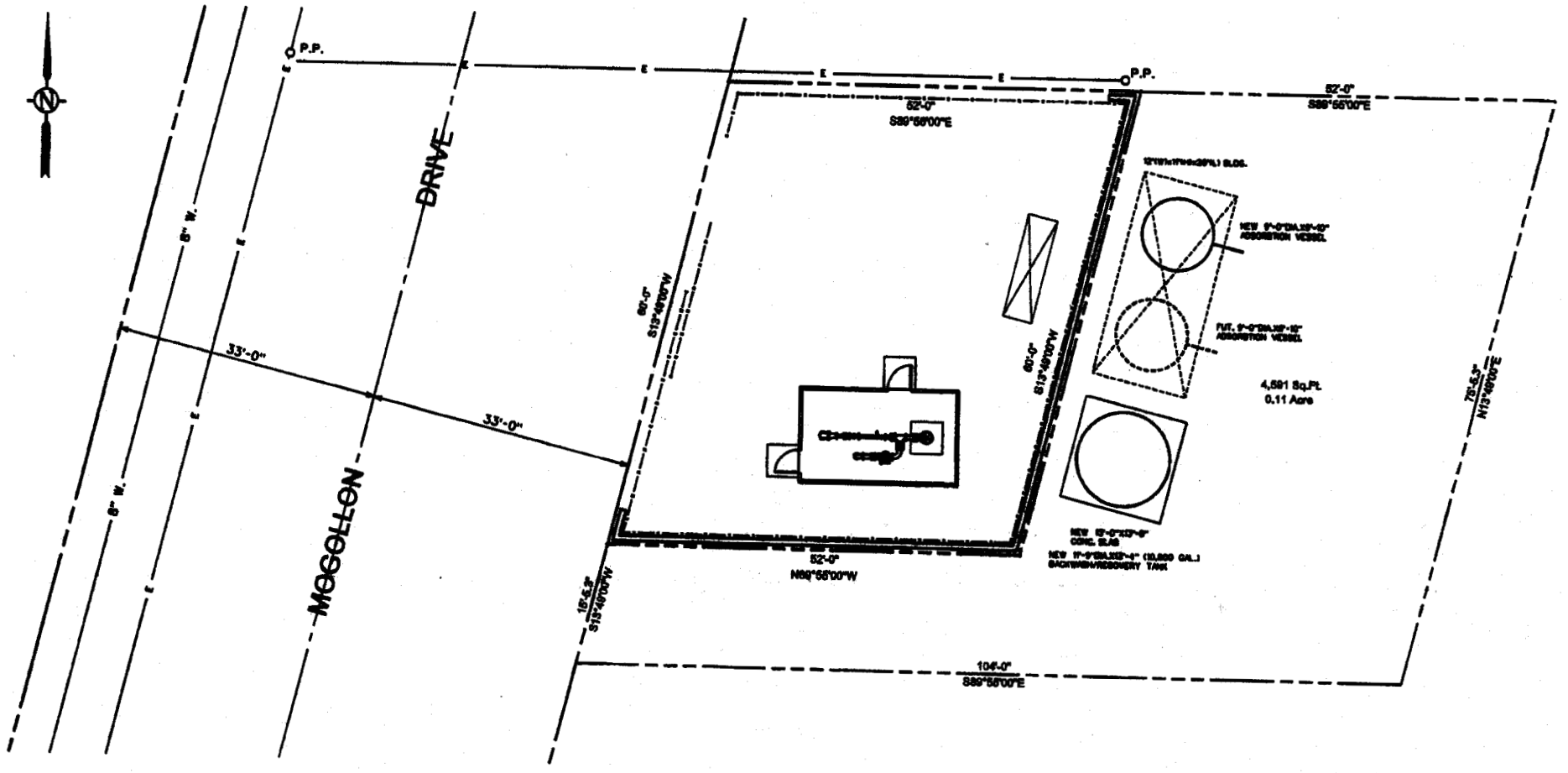

OPTION B

NGER
P OUT
IN CASE OF
EMERGENCY
CALL:
928-535-4469
OR
1-800-789-9456
ANGER
EMICAL
ORAGE
ARIZ
WAT
COMPA

DANGER
KEEP OUT
IN CASE OF EMERGENCY CALL:
928-535-4469
OR
1-800-789-9456
DANGER
CHEMICAL STORAGE

OVERGAARD SYSTEM
MOGOLLON WELL #5/EPDS 005
ARSENIC DATA

Sample Date	Result in mg/L
16-Apr-03	0.0073
24-Apr-06	0.01
05-Aug-09	0.0091
04-Nov-09	0.0093
30-Dec-09	0.0092
25-Jan-10	0.0076
09-Feb-10	0.0087
09-Mar-10	0.0076
13-Apr-10	0.0064
24-May-10	0.0112
08-Jun-10	0.0082
13-Jul-10	0.0082
03-Aug-10	0.0088
07-Sep-10	0.0086
12-Oct-10	0.0087
08-Nov-10	0.009
08-Dec-10	0.0078
12-Jan-11	0.0089
15-Feb-11	0.0086
08-Mar-11	0.009
19-Apr-11	0.0091
10-May-11	0.0082
14-Jun-11	0.008
12-Jul-11	0.0083
08-Aug-11	0.0086
12-Sep-11	0.0079
11-Oct-11	0.0086