OPEN MEETING AGENDA ITEM

ORIGINAL

0000150620

BEFORE THE ARIZONA CORPORA

AZ CORP COMMISSION
DOCKET CONTROL
2013 DEC 31 PM 12 13

COMMISSIONERS
BOB STUMP, CHAIRMAN
GARY PIERCE
BRENDA BURNS
BOB BURNS
SUSAN BITTER SMITH

Arizona Corporation Commission
DOCKETED
DEC 31 2013

DOCKETED BY

IN THE MATTER OF THE APPLICATION OF UNS ELECTRIC, INC. FOR THE ESTABLISHMENT OF JUST AND REASONABLE RATES AND CHARGES DESIGNED TO REALIZE A REASONABLE RATE OF RETURN ON THE FAIR VALUE OF THE PROPERTIES OF UNS ELECTRIC, INC. DEVOTED TO ITS OPERATIONS THROUGHOUT THE STATE OF ARIZONA, AND FOR RELATED APPROVALS.	)	DOCKET NO. E-04204A-12-0504 **NOTICE OF FILING COMPLIANCE**

UNS Electric, Inc., through undersigned counsel, hereby files the following compliance documents:

1. UNS Electric's Tariffs;
2. Plan of Administration for the Lost Fixed Cost Recovery Mechanism;
3. Plan of Administration for the Purchased Power and Fuel Adjustment Clause;
4. Plan of Administration for the Transmission Cost Adjustor; and
5. UNS Electric's Rules and Regulations

These documents are being filed in compliance with the rate case order approved by the Commission in this docket at the December 17, 2013 Open Meeting. UNS Electric will submit updated compliance filings as appropriate to reflect the decision number assigned to that order once the decision number is available.

RESPECTFULLY SUBMITTED this 31st day of December 2013.

UNS ELECTRIC, INC.

By _____

Bradley S. Carroll
Kimberly A. Ruht
UNS Electric, Inc.
88 East Broadway, MS HQE910
P.O. Box 711
Tucson, Arizona 85702

and

Michael W. Patten
Jason D. Gellman
Roshka DeWulf & Patten, PLC
One Arizona Center
400 East Van Buren Street, Suite 800
Phoenix, Arizona 85004

Attorneys for UNS Electric, Inc.

Original and 13 copies of the foregoing
filed this 31st day of December 2013, with:

Docket Control
Arizona Corporation Commission
1200 West Washington Street
Phoenix, Arizona 85007

Copies of the foregoing hand-delivered/mailed
this 31st day of December 2013, to:

Brian Bozzo
Compliance, Utilities Division
Arizona Corporation Commission
1200 West Washington Street
Phoenix, Arizona 85007

By Mary Ippolito

TARIFFS

UniSourceEnergy SERVICES

UNS Electric, Inc.

1st Substitute Original Sheet No.: 101
Superseding: Original Sheet No. 101

Residential Service (RES-01)

AVAILABILITY
Available throughout the Company's entire electric service area where the facilities of the Company are of adequate capacity and are adjacent to the premises.

APPLICABILITY
To all single-phase (subject to availability at point of delivery) residential electric service in individual private dwellings and individually metered apartments when all service is supplied at one point of delivery and energy is metered through one meter.

Not applicable to resale, breakdown, temporary, standby, auxiliary service, or service to individual motors exceeding 40 amperes at a rating of 230 volts or which will cause excessive voltage fluctuations.

CHARACTER OF SERVICE
The service shall be single-phase, 60 Hertz, and at one standard nominal voltage as mutually agreed and subject to availability at point of delivery.

RATE
A monthly bill at the following rate plus any adjustments incorporated herein:

BUNDLED STANDARD OFFER SERVICE - SUMMARY OF CUSTOMER AND ENERGY CHARGES

Customer Charges:
Standard
Customer Charge and minimum bill — $10.00 per month

Lost Fixed Cost Recovery (LFCR) Fixed Charge Option
Customer Charge with usage less than 2,000 kWh — $12.50 per month
Customer Charge with usage of 2,000 kWh or more — $16.50 per month

Energy Charges (per kWh):

	Delivery Services-Energy[1]	Power Supply Charges[2]		Total[3]
		Base Power	PPFAC[2]	
0 - 400 kWh	$0.019300	$0.064510	Varies	$0.083810
401 – 1,000 kWh	$0.034350	$0.064510	Varies	$0.098860
Over 1,000 kwh	$0.038499	$0.064510	Varies	$0.103009

1. Delivery Services-Energy is a bundled charge that includes: Local Delivery, Generation Capacity and Transmission.
2. The Power Supply Charge shall be comprised of the Base Power Charge and the Purchased Power and Fuel Adjustment Clause (PPFAC), a per kWh adjustment in accordance with Rate Rider-1. The PPFAC reflects increases or decreases in the cost to the Company for energy either generated or purchased above or below the base cost per kWh sold. Please see Rider-1 for current rate.
3. Total is calculated above for illustrative purposes, and excludes PPFAC, because the PPFAC changes monthly pursuant to Rider-1 PPFAC. While only non-variable components are included in the illustration above, a Customer's actual bill in any given billing month will reflect the applicable PPFAC for that billing month.

LOST FIXED COST RECOVERY (LFCR) – RIDER 8

For those Customers who choose not to participate in the percentage based recovery of lost revenues associated with energy efficiency and distributed generation, a higher monthly Customer Charge will apply and the percentage based LFCR will not be included on the bill. All other Customers will pay the Standard monthly Customer Charge and the percentage based LFCR. Customers can choose the fixed charge option one (1) time per calendar year. Once the Customer chooses to contribute to the LFCR through a fixed charge they must pay the higher monthly Customer Charge for a complete twelve (12) month period. During the first twelve (12) months subsequent to the effective date of the LFCR, the Customer may choose to change back to the percentage based option without being on the fixed option for a full twelve (12) months. After one full year of the LFCR in effect, a Customer must remain on an option for a full twelve (12) months.

DIRECT ACCESS

A Customer's Direct Access bill will include all unbundled components except those services provided by a qualified third party. Those services may include Metering (Installation, Maintenance and/or Equipment), Meter Reading, Billing and Collection, Transmission and Generation. If any of these services are not available from a third party supplier and must be obtained from the Company, the rates for Unbundled Components set forth in this Tariff will be applied to the Customer's bill.

UNS ELECTRIC STATEMENT OF CHARGES

For all additional charges and assessments approved by the Arizona Corporation Commission see the UNS Electric Statement of Charges which is available on UNS Electric's website at www.uesaz.com.

TAX CLAUSE

To the charges computed under the above rate, including any adjustments, shall be added the applicable proportionate part of any taxes or governmental impositions which are or may in the future be assessed on the basis of gross revenues of the Company and/or the price or revenue from the electric energy or service sold and/or the volume of energy generated or purchased for sale and/or sold hereunder.

RULES AND REGULATIONS

The standard Rules and Regulations of the Company as on file with the Arizona Corporation Commission shall apply where not inconsistent with this Rate.

BUNDLED STANDARD OFFER SERVICE CONSISTS OF THE FOLLOWING UNBUNDLED COMPONENTS:

Customer Charge Components (Unbundled):

Standard	
Description	
Meter Services	$ 1.83 per month
Meter Reading	$ 2.08 per month
Billing & Collection	$ 4.92 per month
Customer Delivery	$ 1.17 per month
Total	$10.00 per month

Lost Fixed Cost Recovery (LFCR) Fixed Charge Option - usage less than 2,000 kWh	
Description	
Meter Services	$ 1.83 per month
Meter Reading	$ 2.08 per month
Billing & Collection	$ 4.92 per month
Customer Delivery	$ 1.17 per month
LFCR	$ 2.50 per month
Total	$12.50 per month

Lost Fixed Cost Recovery (LFCR) Fixed Charge Option - usage of 2,000 kWh or more	
Description	
Meter Services	$ 1.83 per month
Meter Reading	$ 2.08 per month
Billing & Collection	$ 4.92 per month
Customer Delivery	$ 1.17 per month
LFCR	$ 6.50 per month
Total	$16.50 per month

Energy Charge Components (per kWh) (Unbundled):

Local Delivery	Rate
0 – 400 kWh	$0.005271
401 – 1,000 kWh	$0.020321
Over 1,000 kWh	$0.024470
Generation Capacity	$0.008325
Transmission	$0.005704

Power Supply Charges (per kWh):

Component	Rate
Base Power Supply	$0.064510
PPFAC (see Rider-1 for current rate)	Varies

UniSourceEnergy SERVICES

UNS Electric, Inc.

Original Sheet No.: 102
Superseding:

Residential Service Time-of-Use (RES-01 TOU)

AVAILABILITY
Available throughout the Company's entire electric service area where the facilities of the Company are of adequate capacity and are adjacent to the premises.

APPLICABILITY
To all single-phase (subject to availability at point of delivery) residential electric service in individual private dwellings and individually metered apartments when all service is supplied at one point of delivery and energy is metered through one meter.

Customers must stay on this rate for a minimum period of one (1) year. Not applicable to resale, breakdown, temporary, standby, auxiliary service, or service to individual motors exceeding 40 amperes at a rating of 230 volts or which will cause excessive voltage fluctuations.

CHARACTER OF SERVICE
The service shall be single-phase, 60 Hertz, and at one standard nominal voltage as mutually agreed and subject to availability at point of delivery.

RATE
A monthly bill at the following rate plus any adjustments incorporated herein:

BUNDLED STANDARD OFFER SERVICE - SUMMARY OF CUSTOMER AND ENERGY CHARGES

Customer Charges:
Standard
Customer Charge and minimum bill — $11.50 per month

Lost Fixed Cost Recovery (LFCR) Fixed Charge Option
Customer Charge with usage less than 2,000 kWh — $14.00 per month
Customer Charge with usage of 2,000 kWh or more — $18.00 per month

Energy Charges (per kWh):

Summer (May – October)	Delivery Services-Energy[1]	Power Supply Charges[2] Base Power	PPFAC[2]	Total[3]
On-Peak	$0.030350	$0.129605	Varies	$0.159955
Off-Peak	$0.030350	$0.039605	Varies	$0.069955

Winter (November – April)	Delivery Services-Energy[1]	Power Supply Charges[2] Base Power	PPFAC[2]	Total[3]
On-Peak	$0.030350	$0.129605	Varies	$0.159955
Off-Peak	$0.030350	$0.031385	Varies	$0.061735

1. Delivery Services-Energy is a bundled charge that includes: Local Delivery, Generation Capacity and Transmission.
2. The Power Supply Charge shall be comprised of the Base Power Charge and the Purchased Power and Fuel Adjustment Clause (PPFAC), a per kWh adjustment in accordance with Rate Rider-1. The PPFAC reflects increases or decreases in the cost to the Company for energy either generated or purchased above or below the base cost per kWh sold. Please see Rider-1 for current rate.
3. Total is calculated above for illustrative purposes, and excludes PPFAC, because the PPFAC changes monthly pursuant to Rider-1 PPFAC. While only non-variable components are included in the illustration above, a Customer's actual bill in any given billing month will reflect the applicable PPFAC for that billing month.

TIME-OF-USE TIME PERIODS

The Summer On-Peak period is 2:00 p.m. to 8:00 p.m., Monday through Friday (excluding Memorial Day, Independence Day, and Labor Day).

The Winter On-Peak periods are 5:00 a.m. - 9:00 a.m. and 5:00 p.m. - 9:00 p.m., Monday through Friday (excluding Thanksgiving Day, Christmas Day, and New Year's Day).

All other hours are Off-Peak. If a holiday falls on Saturday, the preceding Friday is designated Off-Peak; if a holiday falls on Sunday, the following Monday is designated Off-Peak.

LOST FIXED COST RECOVERY (LFCR) – RIDER 8

For those Customers who choose not to participate in the percentage based recovery of lost revenues associated with energy efficiency and distributed generation, a higher monthly Customer Charge will apply and the percentage based LFCR will not be included on the bill. All other Customers will pay the Standard monthly Customer Charge and the percentage based LFCR. Customers can choose the fixed charge option one (1) time per calendar year. Once the Customer chooses to contribute to the LFCR through a fixed charge they must pay the higher monthly Customer Charge for a complete twelve (12) month period. During the first twelve (12) months subsequent to the effective date of the LFCR, the Customer may choose to change back to the percentage based option without being on the fixed option for a full twelve (12) months. After one full year of the LFCR in effect, a Customer must remain on an option for a full twelve (12) months.

DIRECT ACCESS

A Customer's Direct Access bill will include all unbundled components except those services provided by a qualified third party. Those services may include Metering (Installation, Maintenance and/or Equipment), Meter Reading, Billing and Collection, Transmission and Generation. If any of these services are not available from a third party supplier and must be obtained from the Company, the rates for Unbundled Components set forth in this tariff will be applied to the Customer's bill.

UNS ELECTRIC STATEMENT OF CHARGES

For all additional charges and assessments approved by the Arizona Corporation Commission see the UNS Electric Statement of Charges which is available on UNS Electric's website at www.uesaz.com.

TAX CLAUSE

To the charges computed under the above rate, including any adjustments, shall be added the applicable proportionate part of any taxes or governmental impositions which are or may in the future be assessed on the basis of gross revenues of the Company and/or the price or revenue from the electric energy or service sold and/or the volume of energy generated or purchased for sale and/or sold hereunder.

RULES AND REGULATIONS
The standard Rules and Regulations of the Company as on file with the Arizona Corporation Commission shall apply where not inconsistent with this Rate.

BUNDLED STANDARD OFFER SERVICE CONSISTS OF THE FOLLOWING UNBUNDLED COMPONENTS:

Customer Charge Components (Unbundled):

Standard	
Description	
Meter Services	$ 2.11 per month
Meter Reading	$ 2.39 per month
Billing & Collection	$ 5.66 per month
Customer Delivery	$ 1.34 per month
Total	$11.50 per month

Lost Fixed Cost Recovery (LFCR) Fixed Charge Option - usage less than 2,000 kWh	
Description	
Meter Services	$ 2.11 per month
Meter Reading	$ 2.39 per month
Billing & Collection	$ 5.66 per month
Customer Delivery	$ 1.34 per month
LFCR	$ 2.50 per month
Total	$14.00 per month

Lost Fixed Cost Recovery (LFCR) Fixed Charge Option - usage of 2,000 kWh or more	
Description	
Meter Services	$ 2.11 per month
Meter Reading	$ 2.39 per month
Billing & Collection	$ 5.66 per month
Customer Delivery	$ 1.34 per month
LFCR	$ 6.50 per month
Total	$18.00 per month

Energy Charge Components (per kWh) (Unbundled):

Summer (May – October)	On-Peak	Off-Peak
Local Delivery	$0.016321	$0.016321
Generation	$0.008325	$0.008325
Transmission	$0.005704	$0.005704

Power Supply Charge (per kWh):

Summer (May – October)	On-Peak	Off-Peak
Base Power Component	$0.129605	$0.039605
PPFAC	(See Rider -1 for current rate)	

Energy Charge Components (per kWh) (Unbundled):

Winter (November – April)	On-Peak	Off-Peak
Local Delivery	$0.016321	$0.016321
Generation Capacity	$0.008325	$0.008325
Transmission	$0.005704	$0.005704

Power Supply Charge (per kWh):

Winter (November – April)	On-Peak	Off-Peak
Base Power Component	$0.129605	$0.031385
PPFAC	(See Rider -1 for current rate)	

UniSourceEnergy SERVICES

UNS Electric, Inc.

Original Sheet No.: 103
Superseding:

Customer Assistance Residential Energy Support (CARES)

AVAILABILITY
Available throughout the Company's entire electric service area where the facilities of the Company are of adequate capacity and are adjacent to the premises.

APPLICABILITY
To all single-phase (subject to availability at point of delivery) residential electric service in individual private dwellings and individually metered apartments when all service is supplied at one point of delivery and energy is metered through one meter.

Not applicable to resale, breakdown, temporary, standby, auxiliary service, or service to individual motors exceeding 40 amperes at a rating of 230 volts or which will cause excessive voltage fluctuations.

ELIGIBILITY
1. The UNS Electric account must be in the Customer's name applying for a CARES discount.
2. Applicant must be a UNS Electric residential Customer residing at the premise.
3. Applicant must have a combined household income at or below 150% of the federal poverty level. See Income Guidelines Chart on UNS Electric's website at www.uesaz.com or contact a UNS Electric customer care representative.

CHARACTER OF SERVICE
The service shall be single-phase, 60 Hertz, and at one standard nominal voltage as mutually agreed and subject to availability at point of delivery.

RATE
A monthly bill at the following rate plus any adjustments incorporated herein:

BUNDLED STANDARD OFFER SERVICE - SUMMARY OF CUSTOMER AND ENERGY CHARGES

Customer Charges:
Standard
Customer Charge and minimum bill $4.90 per month

Lost Fixed Cost Recovery (LFCR) Fixed Charge Option
Customer Charge with usage less than 2,000 kWh $ 7.40 per month
Customer Charge with usage of 2,000 kWh or more $11.40 per month

Energy Charges (per kWh):

	Delivery Services-Energy[1]	Power Supply Charges[2]		Total[3]
		Base Power	PPFAC[2]	
First 400 kWh	$0.018973	$0.061700	Varies	$0.080673
All Additional kWh	$0.035400	$0.061700	Varies	$0.097100

1. Delivery Services-Energy is a bundled charge that includes: Local Delivery, Generation Capacity and Transmission.
2. The Power Supply Charge shall be comprised of the Base Power Charge and the Purchased Power and Fuel Adjustment Clause (PPFAC), a per kWh adjustment in accordance with Rate Rider-1. The PPFAC reflects increases or decreases in the cost to the Company for energy either generated or purchased above or below the base cost per kWh sold. Please see Rider-1 for current rate.
3. Total is calculated above for illustrative purposes, and excludes PPFAC, because the PPFAC changes monthly pursuant to Rider-1 PPFAC. While only non-variable components are included in the illustration above, a Customer's actual bill in any given billing month will reflect the applicable PPFAC for that billing month.

MONTHLY CUSTOMER ASSISTANCE RESIDENTIAL ENERGY SUPPORT (CARES) DISCOUNT

The following monthly discount applies to the rate incorporated herein:

For Bills with Usage of:	Monthly Discount will be applied to the Standard Customer Charge, Delivery Charges, and Power Supply Charges:
0 – 300 kWh	30%
301 – 600 kWh	20%
601- 1,000 kWh	10%
Over 1,000 kWh	$8.00

LOST FIXED COST RECOVERY (LFCR) – RIDER 8

For those Customers who choose not to participate in the percentage based recovery of lost revenues associated with energy efficiency and distributed generation, a higher monthly Customer Charge will apply and the percentage based LFCR will not be included on the bill. All other Customers will pay the Standard monthly Customer Charge and the percentage based LFCR. Customers can choose the fixed charge option one (1) time per calendar year. Once the Customer chooses to contribute to the LFCR through a fixed charge they must pay the higher monthly Customer Charge for a complete twelve (12) month period. During the first twelve (12) months subsequent to the effective date of the LFCR, the Customer may choose to change back to the percentage based option without being on the fixed option for a full twelve (12) months. After one full year of the LFCR in effect, a Customer must remain on an option for a full twelve (12) months.

DIRECT ACCESS

A Customer's Direct Access bill will include all unbundled components except those services provided by a qualified third party. Those services may include Metering (Installation, Maintenance and/or Equipment), Meter Reading, Billing and Collection, Transmission and Generation. If any of these services are not available from a third party supplier and must be obtained from the Company, the rates for Unbundled Components set forth in this Tariff will be applied to the Customer's bill.

UNS ELECTRIC STATEMENT OF CHARGES

For all additional charges and assessments approved by the Arizona Corporation Commission see the UNS Electric Statement of Charges which is available on UNS Electric's website at www.uesaz.com.

TAX CLAUSE

To the charges computed under the above Rate, including any adjustments, shall be added the applicable proportionate part of any taxes or governmental impositions which are or may in the future be assessed on the basis of gross revenues of the Company and/or the price or revenue from the electric energy or service sold and/or the volume of energy generated or purchased for sale and/or sold hereunder.

RULES AND REGULATIONS
The standard Rules and Regulations of the Company as on file with the Arizona Corporation Commission shall apply where not inconsistent with this Rate.

BUNDLED STANDARD OFFER SERVICE CONSISTS OF THE FOLLOWING UNBUNDLED COMPONENTS:

Customer Charge Components (Unbundled):

Standard	
Description	
Meter Services	$0.90 per month
Meter Reading	$1.02 per month
Billing & Collection	$2.41 per month
Customer Delivery	$0.57 per month
Total	$4.90 per month

Lost Fixed Cost Recovery (LFCR) Fixed Charge Option - usage less than 2,000 kWh	
Description	
Meter Services	$0.90 per month
Meter Reading	$1.02 per month
Billing & Collection	$2.41 per month
Customer Delivery	$0.57 per month
LFCR	$2.50 per month
Total	$7.40 per month

Lost Fixed Cost Recovery (LFCR) Fixed Charge Option - usage of 2,000 kWh or more	
Description	
Meter Services	$ 0.90 per month
Meter Reading	$ 1.02 per month
Billing & Collection	$ 2.41 per month
Customer Delivery	$ 0.57 per month
LFCR	$ 6.50 per month
Total	$11.40 per month

UniSourceEnergy SERVICES

UNS Electric, Inc.

Original Sheet No.: 103-3
Superseding:

Energy Charge Components (per kWh) (Unbundled):

Local Delivery	Rate
First 400 kWh	$0.004255
All remaining kWh	$0.020682
Generation Capacity	$0.008223
Transmission	$0.006495

Power Supply Charges (per kWh):

Component	Rate
Base Power Supply	$0.061700
PPFAC (see Rider-1 for current rate)	Varies

UniSourceEnergy SERVICES

UNS Electric, Inc.

Original Sheet No.: 104
Superseding:

Customer Assistance Residential Energy Support Low Income Medical Life Support Program (CARES-MF)

AVAILABILITY
New Customers, including those who move are not eligible for service under this Rate.

APPLICABILITY
To all single-phase (subject to availability at point of delivery) residential electric service in individual private dwellings and individually metered apartments when all service is supplied at one point of delivery and energy is metered through one meter.

This CARES Low Income Medical Life Support Program is available to all qualified CARES residential customers who are medically life-support dependent and who meet the eligibility requirements.

Not applicable to resale, breakdown, temporary, standby, auxiliary service, or service to individual motors exceeding 40 amperes at a rating of 230 volts or which will cause excessive voltage fluctuations.

ELIGIBILITY REQUIREMENTS
To be eligible for the CARES Low Income Medical Life Support Program, a Customer must meet the following requirements:

A. Require the use of medical equipment that is considered essential for sustaining life and is operated at the residence;
B. Submit to UNS Electric a statement signed by the attending physician that verifies that the customer is medically life-support dependent and states the type of essential medical equipment in use at the residence; and
C. Submit to UNS Electric verification by the physician to remain eligible for the program beyond two years.

The following equipment is representative of that which may be qualified as being essential under the program:

- Ventilator
- Oxygen concentrator
- Peritoneal Dialysis Cycler
- Hemo Dialysis Equipment
- Feeding Pump
- Infusion Pump
- Suction Machine
- Small Volume Nebulizer
- Oximeter

CHARACTER OF SERVICE
The service shall be single-phase, 60 Hertz, and at one standard nominal voltage as mutually agreed and subject to availability at point of delivery.

RATE
A monthly bill at the following rate plus any adjustments incorporated herein:

BUNDLED STANDARD OFFER SERVICE - SUMMARY OF CUSTOMER AND ENERGY CHARGES

Customer Charges:	
Standard	
Customer Charge and minimum bill	$4.90 per month
Lost Fixed Cost Recovery (LFCR) Fixed Charge Option	
Customer Charge with usage less than 2,000 kWh	$ 7.40 per month
Customer Charge with usage of 2,000 kWh or more	$11.40 per month

Energy Charges (per kWh):

	Delivery Services-Energy[1]	Power Supply Charges[2]		Total[3]
		Base Power	PPFAC[2]	
First 400 kWh	$0.018973	$0.061700	Varies	$0.080673
All Additional kWh	$0.035400	$0.061700	Varies	$0.097100

1. Delivery Services-Energy is a bundled charge that includes: Local Delivery, Generation Capacity and Transmission.
2. The Power Supply Charge shall be comprised of the Base Power Charge and the Purchased Power and Fuel Adjustment Clause (PPFAC), a per kWh adjustment in accordance with Rate Rider-1. The PPFAC reflects increases or decreases in the cost to the Company for energy either generated or purchased above or below the base cost per kWh sold. Please see Rider-1 for current rate.
3. Total is calculated above for illustrative purposes, and excludes PPFAC, because the PPFAC changes monthly pursuant to Rider-1 PPFAC. While only non-variable components are included in the illustration above, a Customer's actual bill in any given billing month will reflect the applicable PPFAC for that billing month.

CARES LOW INCOME MEDICAL LIFE SUPPORT PROGRAM DISCOUNT

The monthly bill for customers eligible under the CARES Low Income Medical Life Support Program shall be computed in accordance to the Rates above including the following discount:

For Bills with Usage of:	Monthly Discount will be applied to the Standard Customer Charge, Delivery Charges, and Power Supply Charges:
0 – 600 kWh	30%
601 – 1,200 kWh	20%
1,201- 2,000 kWh	10%
Over 2,000 kWh	$8.00

LOST FIXED COST RECOVERY (LFCR) – RIDER 8

For those Customers who choose not to participate in the percentage based recovery of lost revenues associated with energy efficiency and distributed generation, a higher monthly Customer Charge will apply and the percentage based LFCR will not be included on the bill. All other Customers will pay the Standard monthly Customer Charge and the percentage based LFCR. Customers can choose the fixed charge option one (1) time per calendar year. Once the Customer chooses to contribute to the LFCR through a fixed charge they must pay the higher monthly Customer Charge for a complete twelve (12) month period. During the first twelve (12) months subsequent to the effective date of the LFCR, the Customer may choose to change back to the percentage based option without being on the fixed option for a full twelve (12) months. After one full year of the LFCR in effect, a Customer must remain on an option for a full twelve (12) months.

DIRECT ACCESS

A Customer's Direct Access bill will include all unbundled components except those services provided by a qualified third party. Those services may include Metering (Installation, Maintenance and/or Equipment), Meter Reading, Billing and Collection, Transmission and Generation. If any of these services are not available from a third party supplier and must be obtained from the Company, the rates for Unbundled Components set forth in this Tariff will be applied to the Customer's bill.

UNS ELECTRIC STATEMENT OF CHARGES

For all additional charges and assessments approved by the Arizona Corporation Commission see the UNS Electric Statement of Charges which is available on UNS Electric's website at www.uesaz.com.

TAX CLAUSE

To the charges computed under the above rate, including any adjustments, shall be added the applicable proportionate part of any taxes or governmental impositions which are or may in the future be assessed on the basis of gross revenues of the Company and/or the price or revenue from the electric energy or service sold and/or the volume of energy generated or purchased for sale and/or sold hereunder.

RULES AND REGULATIONS

The standard Rules and Regulations of the Company as on file with the Arizona Corporation Commission shall apply where not inconsistent with this Rate.

BUNDLED STANDARD OFFER SERVICE CONSISTS OF THE FOLLOWING UNBUNDLED COMPONENTS:

Customer Charge Components (Unbundled):

Standard	
Description	
Meter Services	$0.90 per month
Meter Reading	$1.02 per month
Billing & Collection	$2.41 per month
Customer Delivery	$0.57 per month
Total	$4.90 per month

Lost Fixed Cost Recovery (LFCR) Fixed Charge Option - usage less than 2,000 kWh	
Description	
Meter Services	$0.90 per month
Meter Reading	$1.02 per month
Billing & Collection	$2.41 per month
Customer Delivery	$0.57 per month
LFCR	$2.50 per month
Total	$7.40 per month

Lost Fixed Cost Recovery (LFCR) Fixed Charge Option - usage of 2,000 kWh or more	
Description	
Meter Services	$ 0.90 per month
Meter Reading	$ 1.02 per month
Billing & Collection	$ 2.41 per month
Customer Delivery	$ 0.57 per month
LFCR	$ 6.50 per month
Total	$11.40 per month

UniSourceEnergy SERVICES

UNS Electric, Inc.

Original Sheet No.: 104-3
Superseding:

Energy Charge Components (per kWh) (Unbundled):

Local Delivery	Rate
First 400 kWh	$0.004255
All remaining kWh	$0.020682
Generation Capacity	$0.008223
Transmission	$0.006495

Power Supply Charges (per kWh):

Component	Rate
Base Power Supply	$0.061700
PPFAC (see Rider-1 for current rate)	Varies

UniSourceEnergy SERVICES

UNS Electric, Inc.

Original Sheet No.: 201
Superseding:

Small General Service (SGS-10)

AVAILABILITY
Available throughout the Company's entire electric service area where the facilities of the Company are of adequate capacity and are adjacent to the premises.

APPLICABILITY
To all general power and lighting service unless otherwise addressed by specific Rates, when all energy is supplied at one point of delivery and through one metered service.

The supply of electric service under a residential Rate to a dwelling involving some business or professional activity will be permitted only where such activity is of only occasional occurrence, or where the electricity used in connection with such activity is small in amount and used only by equipment which would normally be in use if the space were used as living quarters. Where the portion of a dwelling is used regularly for business, professional or other gainful purposes, and any considerable amount of electricity is used for other than domestic purposes, or electrical equipment not normally used in living quarters is installed in connection with such activities referred to above, the entire premises must be classified as non-residential and the appropriate general service Rate will be applied.

Only available to Customers with imputed demand less than 500 KW. However, service is available for customer-owned, operated, and maintained area, street, or stadium lighting, and for firm irrigation service with a maximum monthly demand less than 25 kW.

Not applicable to resale, breakdown, temporary, standby, or auxiliary service.

Customers must stay on this rate for a minimum period of one (1) year.

Customers using 12,000 or more kWh in consecutive months under the Small General Service tariff henceforth shall receive service under the Large General Service tariff.

CHARACTER OF SERVICE
The service shall be single-phase or three-phase, 60 Hertz, and at one standard nominal voltage as mutually agreed and subject to availability at point of delivery.

RATE
A monthly bill at the following rate plus any adjustments incorporated herein:

BUNDLED STANDARD OFFER SERVICE - SUMMARY OF CUSTOMER AND ENERGY CHARGES

Customer Charge: $14.50 per month

Energy Charges (per kWh):

	Delivery Services-Energy[1]	Power Supply Charges[2]		Total[3]
		Base Power	PPFAC[2]	
0 - 400 kWh	$0.030176	$0.058241	Varies	$0.088417
401 – 7,500 kWh	$0.041042	$0.058241	Varies	$0.099283
Over 7,500 kwh	$0.076042	$0.058241	Varies	$0.134283

1. Delivery Services-Energy is a bundled charge that includes: Local Delivery, Generation Capacity and Transmission.
2. The Power Supply Charge shall be comprised of the Base Power Charge and the Purchased Power and Fuel Adjustment Clause (PPFAC), a per kWh adjustment in accordance with Rate Rider-1. The PPFAC reflects increases or decreases in the cost to the Company for energy either generated or purchased above or below the base cost per kWh sold. Please see Rider-1 for current rate.
3. Total is calculated above for illustrative purposes, and excludes PPFAC, because the PPFAC changes monthly pursuant to Rider-1 PPFAC. While only non-variable components are included in the illustration above, a Customer's actual bill in any given billing month will reflect the applicable PPFAC for that billing month

DIRECT ACCESS

A Customer's Direct Access bill will include all unbundled components except those services provided by a qualified third party. Those services may include Metering (Installation, Maintenance and/or Equipment), Meter Reading, Billing and Collection, Transmission and Generation. If any of these services are not available from a third party supplier and must be obtained from the Company, the rates for Unbundled Components set forth in this Tariff will be applied to the Customer's bill.

UNS ELECTRIC STATEMENT OF CHARGES

For all additional charges and assessments approved by the Arizona Corporation Commission see the UNS Electric Statement of Charges which is available on UNS Electric's website at www.uesaz.com.

TAX CLAUSE

To the charges computed under the above rate, including any adjustments, shall be added the applicable proportionate part of any taxes or governmental impositions which are or may in the future be assessed on the basis of gross revenues of the Company and/or the price or revenue from the electric energy or service sold and/or the volume of energy generated or purchased for sale and/or sold hereunder.

RULES AND REGULATIONS

The standard Rules and Regulations of the Company as on file with the Arizona Corporation Commission shall apply where not inconsistent with this Rate.

BUNDLED STANDARD OFFER SERVICE CONSISTS OF THE FOLLOWING UNBUNDLED COMPONENTS

Customer Charge Components (Unbundled):

Description	Customer Charge
Meter Services	$ 2.37 per month
Meter Reading	$ 4.60 per month
Billing & Collection	$ 6.35 per month
Customer Delivery	$ 1.18 per month
Total	$14.50 per month

Energy Charge Components (per kWh) (Unbundled):

Local Delivery	Rate
0 – 400 kWh	$0.013662
401 – 7,500 kWh	$0.024528
Over 7,500 kWh	$0.059528
Generation Capacity	$0.010400
Transmission	$0.006114

Power Supply Charges (per kWh):

Component	Rate
Base Power Supply	$0.058241
PPFAC (see Rider-1 for current rate)	Varies

Small General Service Time-of-Use (SGS-10 TOU)

AVAILABILITY
Available throughout the Company's entire electric service area where the facilities of the Company are of adequate capacity and are adjacent to the premises.

APPLICABILITY
To all general power and lighting service unless otherwise addressed by specific Rates, when all energy is supplied at one point of delivery and through one metered service.

The supply of electric service under a residential Rate to a dwelling involving some business or professional activity will be permitted only where such activity is of only occasional occurrence, or where the electricity used in connection with such activity is small in amount and used only by equipment which would normally be in use if the space were used as living quarters. Where the portion of a dwelling is used regularly for business, professional or other gainful purposes, and any considerable amount of electricity is used for other than domestic purposes, or electrical equipment not normally used in living quarters is installed in connection with such activities referred to above, the entire premises must be classified as non-residential and the appropriate general service Rate will be applied.

Only available to Customers with imputed demand less than 500 kW; however, service is available for customer-owned, operated, and maintained area, street, or stadium lighting, and for firm irrigation service with a maximum monthly demand less than 25 kW.

Service under this Rate will commence when the appropriate meter has been installed.

Not applicable to resale, breakdown, temporary, standby, or auxiliary service.

Customers must stay on this rate for a minimum period of one (1) year.

CHARACTER OF SERVICE
The service shall be single-phase or three-phase, 60 Hertz, and at one standard nominal voltage as mutually agreed and subject to availability at point of delivery.

RATE
A monthly bill at the following rate plus any adjustments incorporated herein:

UniSourceEnergy SERVICES

UNS Electric, Inc.

Original Sheet No.: 202-1
Superseding:

BUNDLED STANDARD OFFER SERVICE - SUMMARY OF CUSTOMER AND ENERGY CHARGES

Customer Charge: $16.50 per month

Energy Charges (per kWh):

Summer (May – October)	Delivery Services-Energy[1]	Power Supply Charges[2] Base Power	PPFAC[2]	Total[3]
0 - 400 kWh				
On-Peak	$0.030176	$0.129605	Varies	$0.159781
Off-Peak	$0.030176	$0.039605	Varies	$0.069781
401 – 7,500 kWh				
On-Peak	$0.043176	$0.129605	Varies	$0.172781
Off-Peak	$0.043176	$0.039605	Varies	$0.082781
Over 7,500 kWh				
On-Peak	$0.076042	$0.129605	Varies	$0.205647
Off-Peak	$0.076042	$0.039605	Varies	$0.115647

Winter (November – April)	Delivery Services-Energy[1]	Power Supply Charges[2] Base Power	PPFAC[2]	Total[3]
0 - 400 kWh				
On-Peak	$0.030176	$0.129605	Varies	$0.159781
Off-Peak	$0.030176	$0.031385	Varies	$0.061561
401 – 7,500 kWh				
On-Peak	$0.043176	$0.129605	Varies	$0.172781
Off-Peak	$0.043176	$0.031385	Varies	$0.074561
Over 7,500 kWh				
On-Peak	$0.076042	$0.129605	Varies	$0.205647
Off-Peak	$0.076042	$0.031385	Varies	$0.107427

1. Delivery Services-Energy is a bundled charge that includes: Local Delivery, Generation Capacity and Transmission.
2. The Power Supply Charge shall be comprised of the Base Power Charge and the Purchased Power and Fuel Adjustment Clause (PPFAC), a per kWh adjustment in accordance with Rate Rider-1. The PPFAC reflects increases or decreases in the cost to the Company for energy either generated or purchased above or below the base cost per kWh sold. Please see Rider-1 for current rate.
3. Total is calculated above for illustrative purposes, and excludes PPFAC, because the PPFAC changes monthly pursuant to Rider-1 PPFAC. While only non-variable components are included in the illustration above, a Customer's actual bill in any given billing month will reflect the applicable PPFAC for that billing month

TIME-OF-USE TIME PERIODS
The Summer On-Peak period is 2:00 p.m. to 8:00 p.m., Monday through Friday (excluding Memorial Day, Independence Day, and Labor Day).

The Winter On-Peak periods are 5:00 a.m. - 9:00 a.m. and 5:00 p.m. - 9:00 p.m., Monday through Friday (excluding Thanksgiving Day, Christmas Day, and New Year's Day).

All other hours are Off-Peak. If a holiday falls on Saturday, the preceding Friday is designated Off-Peak; if a holiday falls on Sunday, the following Monday is designated Off-Peak.

DIRECT ACCESS
A Customer's Direct Access bill will include all unbundled components except those services provided by a qualified third party. Those services may include Metering (Installation, Maintenance and/or Equipment), Meter Reading, Billing and Collection, Transmission and Generation. If any of these services are not available from a third party supplier and must be obtained from the Company, the rates for Unbundled Components set forth in this Tariff will be applied to the Customer's bill.

UNS ELECTRIC STATEMENT OF CHARGES
For all additional charges and assessments approved by the Arizona Corporation Commission see the UNS Electric Statement of Charges which is available on UNS Electric's website at www.uesaz.com.

TAX CLAUSE
To the charges computed under the above rate, including any adjustments, shall be added the applicable proportionate part of any taxes or governmental impositions which are or may in the future be assessed on the basis of gross revenues of the Company and/or the price or revenue from the electric energy or service sold and/or the volume of energy generated or purchased for sale and/or sold hereunder.

RULES AND REGULATIONS
The standard Rules and Regulations of the Company as on file with the Arizona Corporation Commission shall apply where not inconsistent with this Rate.

BUNDLED STANDARD OFFER SERVICE CONSISTS OF THE FOLLOWING UNBUNDLED COMPONENTS

Customer Charge Components (Unbundled):

Description	Customer Charge
Meter Services	$ 2.69 per month
Meter Reading	$ 5.24 per month
Billing & Collection	$ 7.23 per month
Customer Delivery	$ 1.34 per month
Total	$16.50 per month

Energy Charge Components (per kWh) (Unbundled):

Local Delivery	Rate
0 – 400 kWh	$0.013662
401 – 7,500 kWh	$0.026662
Over 7,500 kWh	$0.059528
Generation Capacity	$0.010400
Transmission	$0.006114

Power Supply Charges (per kWh):

Component	Rate
Base Power Supply Summer (May – October) On-Peak	$0.129605
Base Power Supply Summer (May – October) Off-Peak	$0.039605
Base Power Supply Winter (November – April) On-Peak	$0.129605
Base Power Supply Winter (November – April) Off-Peak	$0.031385
PPFAC (see Rider -1 for current rate)	Varies

UniSourceEnergy SERVICES

UNS Electric, Inc.

Original Sheet No.: 203
Superseding:

Time-of-Use for Small General Service Schools (SGS-10 TOU-S)

AVAILABILITY
Available throughout the Company's entire electric service area where the facilities of the Company are of adequate capacity and are adjacent to the premises.

APPLICABILITY
To all private and public schools (K-12) unless otherwise addressed by specific Rates, when all energy is supplied at one point of delivery and through one metered service.

Service under this Rate will commence when the appropriate meter has been installed.

Only available to Customers with imputed demand less than 500 KW.

Not applicable to resale, breakdown, temporary, standby, or auxiliary service.

Customers must stay on this rate for a minimum period of one (1) year.

CHARACTER OF SERVICE
The service shall be single-phase or three-phase, 60 Hertz, and at one standard nominal voltage as mutually agreed and subject to availability at point of delivery.

RATE
A monthly bill at the following rate plus any adjustments incorporated herein:

BUNDLED STANDARD OFFER SERVICE - SUMMARY OF CUSTOMER AND ENERGY CHARGES

Customer Charge: $16.50 per month

Energy Charges (per kWh):

Summer (May – October)	Delivery Services-Energy[1]	Power Supply Charges[2] Base Power	PPFAC[2]	Total[3]
0 - 400 kWh				
On-Peak	$0.030176	$0.137405	Varies	$0.167581
Off-Peak	$0.030176	$0.047405	Varies	$0.077581
401 – 7,500 kWh				
On-Peak	$0.043176	$0.137405	Varies	$0.180581
Off-Peak	$0.043176	$0.047405	Varies	$0.090581
Over 7,500 kWh				
On-Peak	$0.076042	$0.137405	Varies	$0.213447
Off-Peak	$0.076042	$0.047405	Varies	$0.123447

Winter (November – April)	Delivery Services-Energy[1]	Power Supply Charges[2] Base Power	PPFAC[2]	Total[3]
0 - 400 kWh				
On-Peak	$0.030176	$0.137405	Varies	$0.167581
Off-Peak	$0.030176	$0.039185	Varies	$0.069361
401 – 7,500 kWh				
On-Peak	$0.043176	$0.137405	Varies	$0.180581
Off-Peak	$0.043176	$0.039185	Varies	$0.082361
Over 7,500 kWh				
On-Peak	$0.076042	$0.137405	Varies	$0.213447
Off-Peak	$0.076042	$0.039185	Varies	$0.115227

1. Delivery Services-Energy is a bundled charge that includes: Transmission, Sub-transmission, Local Delivery Energy and Production not included in Power Supply.
2. The Power Supply Charge shall be comprised of the Base Power Charge and the Purchased Power and Fuel Adjustment Clause (PPFAC), a per kWh adjustment in accordance with Rate Rider-1. The PPFAC reflects increases or decreases in the cost to the Company for energy either generated or purchased above or below the base cost per kWh sold. Please see Rider-1 for current rate.
3. Total is calculated above for illustrative purposes, and excludes PPFAC, because the PPFAC changes monthly pursuant to Rider-1 PPFAC. While only non-variable components are included in the illustration above, a Customer's actual bill in any given billing month will reflect the applicable PPFAC for that billing month.

TIME-OF-USE PERIODS

The Summer On-Peak period is 3:00 p.m. to 7:00 p.m., Monday through Friday (excluding Memorial Day, Independence Day, and Labor Day).

The Winter On-Peak periods are 5:00 a.m. - 9:00 a.m. and 5:00 p.m. - 9:00 p.m., Monday through Friday (excluding Thanksgiving Day, Christmas Day, and New Year's Day).

All other hours are Off-Peak. If a holiday falls on Saturday, the preceding Friday is designated Off-Peak; if a holiday falls on Sunday, the following Monday is designated Off-Peak.

DIRECT ACCESS

A Customer's Direct Access bill will include all unbundled components except those services provided by a qualified third party. Those services may include Metering (Installation, Maintenance and/or Equipment), Meter Reading, Billing and Collection, Transmission and Generation. If any of these services are not available from a third party supplier and must be obtained from the Company, the rates for Unbundled Components set forth in this Tariff will be applied to the Customer's bill.

UNS ELECTRIC STATEMENT OF CHARGES

For all additional charges and assessments approved by the Arizona Corporation Commission see the UNS Electric Statement of Charges which is available on UNS Electric's website at www.uesaz.com.

TAX CLAUSE

To the charges computed under the above rate, including any adjustments, shall be added the applicable proportionate part of any taxes or governmental impositions which are or may in the future be assessed on the basis of gross revenues of the Company and/or the price or revenue from the electric energy or service sold and/or the volume of energy generated or purchased for sale and/or sold hereunder.

RULES AND REGULATIONS

The standard Rules and Regulations of the Company as on file with the Arizona Corporation Commission shall apply where not inconsistent with this Rate.

BUNDLED STANDARD OFFER SERVICE CONSISTS OF THE FOLLOWING UNBUNDLED COMPONENTS

Customer Charge Components (Unbundled):

Description	Customer Charge
Meter Services	$ 2.69 per month
Meter Reading	$ 5.24 per month
Billing & Collection	$ 7.23 per month
Customer Delivery	$ 1.34 per month
Total	$16.50 per month

Energy Charge Components (per kWh) (Unbundled):

Local Delivery	Rate
0 – 400 kWh	$0.013662
401 – 7,500 kWh	$0.026662
Over 7,500 kWh	$0.059528
Generation Capacity	$0.010400
Transmission	$0.006114

Power Supply Charges (per kWh):

Component	Rate
Base Power Supply Summer (May – October) On-Peak	$0.137405
Base Power Supply Summer (May – October) Off-Peak	$0.047405
Base Power Supply Winter (November – April) On-Peak	$0.137405
Base Power Supply Winter (November – April) Off-Peak	$0.039185
PPFAC (see Rider -1 for current rate)	Varies

UniSourceEnergy SERVICES

UNS Electric, Inc.

Original Sheet No.: 204
Superseding:

Large General Service (LGS)

AVAILABILITY
Available throughout the Company's entire electric service area where the facilities of the Company are of adequate capacity and are adjacent to the premises.

APPLICABILITY
To all general power and lighting service on an optional basis when all energy is supplied at one point of delivery and through one metered service.

Not applicable to resale, breakdown, temporary, standby or auxiliary service.

Customers must stay on this rate for a minimum period of one (1) year.

CHARACTER OF SERVICE
The service shall be single-phase or three-phase, 60 Hertz, and at one standard nominal voltage as mutually agreed and subject to availability at point of delivery.

Primary metering shall be required for new installations with service requirements in excess of 2,500 kW.

RATE
A monthly bill at the following rate plus any adjustments incorporated herein:

BUNDLED STANDARD OFFER SERVICE - SUMMARY OF CUSTOMER AND ENERGY CHARGES

Customer Charge: $50.00 per month

Demand Charge: $12.81 per kW

Energy Charge (per kWh):

	Delivery Services-Energy[1]	Power Supply Charges[2]		Total[3]
		Base Power	PPFAC[2]	
All kWh	$0.005470	$0.056603	Varies	$0.062073

1. Delivery Services-Energy is a bundled charge that includes: Local Delivery, Generation Capacity and Transmission.
2. The Power Supply Charge shall be comprised of the Base Power Charge and the Purchased Power and Fuel Adjustment Clause (PPFAC), a per kWh adjustment in accordance with Rate Rider-1. The PPFAC reflects increases or decreases in the cost to the Company for energy either generated or purchased above or below the base cost per kWh sold. Please see Rider-1 for current rate.
3. Total is calculated above for illustrative purposes, and excludes PPFAC, because the PPFAC changes monthly pursuant to Rider-1 PPFAC. While only non-variable components are included in the illustration above, a Customer's actual bill in any given billing month will reflect the applicable PPFAC for that billing month.

BILLING DEMAND
The monthly billing demand shall be the greatest of the following:

1. The maximum 15 minute measured demand in the billing month;
2. 75% of the maximum demand used for billing purposes in the preceding 11 months; or
3. The contract demand amount, not to be less than 20 kW.

DIRECT ACCESS
A Customer's Direct Access bill will include all unbundled components except those services provided by a qualified third party. Those services may include Metering (Installation, Maintenance and/or Equipment), Meter Reading, Billing and Collection, Transmission and Generation. If any of these services are not available from a third party supplier and must be obtained from the Company, the rates for Unbundled Components set forth in this Tariff will be applied to the Customer's bill.

UNS ELECTRIC STATEMENT OF CHARGES
For all additional charges and assessments approved by the Arizona Corporation Commission see the UNS Electric Statement of Charges which is available on UNS Electric's website at www.uesaz.com.

TAX CLAUSE
To the charges computed under the above rate, including any adjustments, shall be added the applicable proportionate part of any taxes or governmental impositions which are or may in the future be assessed on the basis of gross revenues of the Company and/or the price or revenue from the electric energy or service sold and/or the volume of energy generated or purchased for sale and/or sold hereunder.

RULES AND REGULATIONS
The standard Rules and Regulations of the Company as on file with the Arizona Corporation Commission shall apply where not inconsistent with this Rate.

ADDITIONAL NOTES
Additional charges may be directly assigned to a customer based on the type of facilities (e.g., metering) dedicated to the customer or pursuant to the customer's contract, if applicable. Additional or alternate Direct Access charges may be assessed pursuant to any Direct Access fee schedule authorized.

UniSourceEnergy SERVICES

UNS Electric, Inc.

Original Sheet No.: 204-2
Superseding:

BUNDLED STANDARD OFFER SERVICE CONSISTS OF THE FOLLOWING UNBUNDLED COMPONENTS

Customer Charge Components (Unbundled):

Description	Customer Charge
Meter Services	$ 7.28 per month
Meter Reading	$ 18.59 per month
Billing & Collection	$ 19.59 per month
Customer Delivery	$ 4.54 per month
Total	$50.00 per month

Demand Charges (per kW) (Unbundled):

Component	Rate
Demand Delivery	$ 7.64
Generation Capacity	$ 3.09
Transmission	$ 2.08

Energy Charge Components (per kWh) (Unbundled):

	Rate
Local Delivery	$0.002909
Generation	$0.002394
Transmission	$0.000167

Power Supply Charges (per kWh):

Component	Rate
Base Power Supply	$0.056603
PPFAC (see Rider-1 for current rate)	Varies

UniSourceEnergy SERVICES

UNS Electric, Inc.

Original Sheet No.: 205
Superseding:

Large General Service Time of Use (LGS TOU)

AVAILABILITY
Available throughout the Company's entire electric service area where the facilities of the Company are of adequate capacity and are adjacent to the premises.

APPLICABILITY
To all general power and lighting service on an optional basis when all energy is supplied at one point of delivery and through one metered service. Not applicable to resale, breakdown, temporary, standby or auxiliary service. Customers must stay on this rate for a minimum period of one (1) year.

CHARACTER OF SERVICE
The service shall be single-phase or three-phase, 60 Hertz, and at one standard nominal voltage as mutually agreed and subject to availability at point of delivery.

Primary metering shall be required for new installations with service requirements in excess of 2,500 kW.

RATE
A monthly bill at the following rate plus any adjustments incorporated herein:

BUNDLED STANDARD OFFER SERVICE - SUMMARY OF CUSTOMER AND ENERGY CHARGES

Customer Charge: $52.00 per month

Demand Charge: $12.81 per kW

Energy Charges (per kWh):

Summer (May – October)	Delivery Services-Energy[1]	Power Supply Charges[2] Base Power	PPFAC[2]	Total[3]
On-Peak	$0.005470	$0.114886	Varies	$0.120356
Off-Peak	$0.005470	$0.039886	Varies	$0.045356

Winter (November – April)	Delivery Services-Energy[1]	Power Supply Charges[2] Base Power	PPFAC[2]	Total[3]
On-Peak	$0.005470	$0.114886	Varies	$0.120356
Off-Peak	$0.005470	$0.026168	Varies	$0.031638

1. Delivery Services-Energy is a bundled charge that includes: Local Delivery, Generation Capacity and Transmission.
2. The Power Supply Charge shall be comprised of the Base Power Charge and the Purchased Power and Fuel Adjustment Clause (PPFAC), a per kWh adjustment in accordance with Rate Rider-1. The PPFAC reflects increases or decreases in the cost to the Company for energy either generated or purchased above or below the base cost per kWh sold. Please see Rider-1 for current rate.
3. Total is calculated above for illustrative purposes, and excludes PPFAC, because the PPFAC changes monthly pursuant to Rider-1 PPFAC. While only non-variable components are included in the illustration above, a Customer's actual bill in any given billing month will reflect the applicable PPFAC for that billing month.

BILLING DEMAND
The monthly billing demand shall be the greatest of the following:

1. The maximum 15 minute measured demand in the billing month;
2. 75% of the maximum demand used for billing purposes in the preceding 11 months; or
3. The contract demand amount, not to be less than 20 kW.

TIME-OF-USE TIME PERIODS
The Summer On-Peak period is 2:00 p.m. to 8:00 p.m., Monday through Friday (excluding Memorial Day, Independence Day, and Labor Day).

The Winter On-Peak periods are 5:00 a.m. - 9:00 a.m. and 5:00 p.m. - 9:00 p.m., Monday through Friday (excluding Thanksgiving Day, Christmas Day, and New Year's Day).

All other hours are Off-Peak. If a holiday falls on Saturday, the preceding Friday is designated Off-Peak; if a holiday falls on Sunday, the following Monday is designated Off-Peak.

DIRECT ACCESS
A Customer's Direct Access bill will include all unbundled components except those services provided by a qualified third party. Those services may include Metering (Installation, Maintenance and/or Equipment), Meter Reading, Billing and Collection, Transmission and Generation. If any of these services are not available from a third party supplier and must be obtained from the Company, the rates for Unbundled Components set forth in this Tariff will be applied to the Customer's bill.

UNS ELECTRIC STATEMENT OF CHARGES
For all additional charges and assessments approved by the Arizona Corporation Commission see the UNS Electric Statement of Charges which is available on UNS Electric's website at www.uesaz.com.

TAX CLAUSE
To the charges computed under the above rate, including any adjustments, shall be added the applicable proportionate part of any taxes or governmental impositions which are or may in the future be assessed on the basis of gross revenues of the Company and/or the price or revenue from the electric energy or service sold and/or the volume of energy generated or purchased for sale and/or sold hereunder.

RULES AND REGULATIONS
The standard Rules and Regulations of the Company as on file with the Arizona Corporation Commission shall apply where not inconsistent with this Rate.

ADDITIONAL NOTES
Additional charges may be directly assigned to a customer based on the type of facilities (e.g., metering) dedicated to the customer or pursuant to the customer's contract, if applicable. Additional or alternate Direct Access charges may be assessed pursuant to any Direct Access fee schedule authorized.

UniSourceEnergy SERVICES

UNS Electric, Inc.

Original Sheet No.: 205-2
Superseding:

BUNDLED STANDARD OFFER SERVICE CONSISTS OF THE FOLLOWING UNBUNDLED COMPONENTS

Customer Charge Components (Unbundled):

Description	Customer Charge
Meter Services	$ 7.57 per month
Meter Reading	$ 19.33 per month
Billing & Collection	$ 20.38 per month
Customer Delivery	$ 4.72 per month
Total	$ 52.00 per month

Demand Charge (per kW) (Unbundled):

Component	Rate
Demand Delivery	$ 7.64
Generation Capacity	$ 3.09
Transmission	$ 2.08

Energy Charge Components (per kWh) (Unbundled):

	Rate
Local Delivery	$0.002909
Generation	$0.002394
Transmission	$0.000167

Power Supply Charges (per kWh):

Component	Rate
Base Power Supply Summer (May – October) On-Peak	$0.114886
Base Power Supply Summer (May – October) Off-Peak	$0.039886
Base Power Supply Winter (November – April) On-Peak	$0.114886
Base Power Supply Winter (November – April) Off-Peak	$0.026168
PPFAC (see Rider -1 for current rate)	Varies

UniSourceEnergy SERVICES

UNS Electric, Inc.

Original Sheet No.: 206
Superseding:

Time of Use for Large General Service Schools (LGS-TOU-S)

AVAILABILITY
Available throughout the Company's entire electric service area where the facilities of the Company are of adequate capacity and are adjacent to the premises.

APPLICABILITY
To all private and public schools (K-12) unless otherwise addressed by specific rate schedules, when all energy is supplied at one point of delivery and through one metered service.

Service under this rate will commence when the appropriate meter has been installed.

Not applicable to resale, breakdown, temporary, standby, or auxiliary service.

Customers must stay on this rate for a minimum period of one (1) year.

CHARACTER OF SERVICE
The service shall be single-phase or three-phase, 60 Hertz, and at one standard nominal voltage as mutually agreed and subject to availability at point of delivery.

Primary metering shall be required for new installations with service requirements in excess of 2,500 kW.

RATE
A monthly bill at the following rate plus any adjustments incorporated herein:

BUNDLED STANDARD OFFER SERVICE - SUMMARY OF CUSTOMER AND ENERGY CHARGES

Customer Charge: $52.00 per month

Demand Charge: $12.81 per kW

Energy Charges (per kWh):

Summer (May – October)	Delivery Services-Energy[1]	Power Supply Charges[2] Base Power	PPFAC[2]	Total[3]
On-Peak	$0.005470	$0.120586	Varies	$0.126056
Off-Peak	$0.005470	$0.045586	Varies	$0.051056

Winter (November – April)	Delivery Services-Energy[1]	Power Supply Charges[2] Base Power	PPFAC[2]	Total[3]
On-Peak	$0.005470	$0.120586	Varies	$0.126056
Off-Peak	$0.005470	$0.031868	Varies	$0.037338

1. Delivery Services-Energy is a bundled charge that includes: Transmission, Sub-transmission, Local Delivery Energy and Production not included in Power Supply.
2. The Power Supply Charge shall be comprised of the Base Power Charge and the Purchased Power and Fuel Adjustment Clause (PPFAC), a per kWh adjustment in accordance with Rate Rider-1. The PPFAC reflects increases or decreases in the cost to the Company for energy either generated or purchased above or below the base cost per kWh sold. Please see Rider-1 for current rate.
3. Total is calculated above for illustrative purposes, and excludes PPFAC, because the PPFAC changes monthly pursuant to Rider-1 PPFAC. While only non-variable components are included in the illustration above, a Customer's actual bill in any given billing month will reflect the applicable PPFAC for that billing month

BILLING DEMAND

The monthly billing demand shall be the greatest of the following:

1. The maximum 15 minute measured demand in the billing month;
2. 75% of the maximum demand used for billing purposes in the preceding 11 months; or
3. The contract demand amount, not to be less than 20 kW.

TIME-OF-USE PERIODS

The Summer On-Peak period is 3:00 p.m. to 7:00 p.m., Monday through Friday (excluding Memorial Day, Independence Day, and Labor Day).

The Winter On-Peak periods are 5:00 a.m. - 9:00 a.m. and 5:00 p.m. - 9:00 p.m., Monday through Friday (excluding Thanksgiving Day, Christmas Day, and New Year's Day).

All other hours are Off-Peak. If a holiday falls on Saturday, the preceding Friday is designated Off-Peak; if a holiday falls on Sunday, the following Monday is designated Off-Peak.

DIRECT ACCESS

A Customer's Direct Access bill will include all unbundled components except those services provided by a qualified third party. Those services may include Metering (Installation, Maintenance and/or Equipment), Meter Reading, Billing and Collection, Transmission and Generation. If any of these services are not available from a third party supplier and must be obtained from the Company, the rates for Unbundled Components set forth in this Tariff will be applied to the Customer's bill.

UNS ELECTRIC STATEMENT OF CHARGES

For all additional charges and assessments approved by the Arizona Corporation Commission see the UNS Electric Statement of Charges which is available on UNS Electric's website at www.uesaz.com.

TAX CLAUSE

To the charges computed under the above rate, including any adjustments, shall be added the applicable proportionate part of any taxes or governmental impositions which are or may in the future be assessed on the basis of gross revenues of the Company and/or the price or revenue from the electric energy or service sold and/or the volume of energy generated or purchased for sale and/or sold hereunder.

RULES AND REGULATIONS
The standard Rules and Regulations of the Company as on file with the Arizona Corporation Commission shall apply where not inconsistent with this Rate.

ADDITIONAL NOTES
Additional charges may be directly assigned to a customer based on the type of facilities (e.g., metering) dedicated to the customer or pursuant to the customer's contract, if applicable. Additional or alternate Direct Access charges may be assessed pursuant to any Direct Access fee schedule authorized.

BUNDLED STANDARD OFFER SERVICE CONSISTS OF THE FOLLOWING UNBUNDLED COMPONENTS

Customer Charge Components (Unbundled):

Description	Customer Charge
Meter Services	$ 7.57 per month
Meter Reading	$ 19.33 per month
Billing & Collection	$ 20.38 per month
Customer Delivery	$ 4.72 per month
Total	$ 52.00 per month

Demand Charge (per kW) (Unbundled):

Component	Rate
Demand Delivery	$ 7.64
Generation Capacity	$ 3.09
Transmission	$ 2.08

Energy Charge Components (per kWh) (Unbundled):

	Rate
Local Delivery	$0.002909
Generation	$0.002394
Transmission	$0.000167

Power Supply Charges (per kWh):

Component	Rate
Base Power Supply Summer (May – October) On-Peak	$0.120586
Base Power Supply Summer (May – October) Off-Peak	$0.045586
Base Power Supply Winter (November – April) On-Peak	$0.120586
Base Power Supply Winter (November – April) Off-Peak	$0.031868
PPFAC (see Rider -1 for current rate)	Varies

UniSourceEnergy SERVICES

UNS Electric, Inc.

Original Sheet No.: 301
Superseding:

Large Power Service (LPS)

AVAILABILITY
Available throughout the Company's entire electric service area where the facilities of the Company are of adequate capacity and are adjacent to the premises.

APPLICABILITY
To all general power and lighting service on an optional basis when all energy is supplied at one point of delivery and through one metered service.

Not applicable to resale, breakdown, temporary, standby or auxiliary service.

CHARACTER OF SERVICE
The service shall be three-phase, 60 Hertz, and at the Company's standard transmission or distribution voltages that are available within the vicinity of the Customer's premises.

Primary metering shall be required for new installations with service requirements in excess of 2,500 kW.

RATE
A monthly bill at the following rate plus any adjustments incorporated herein:

BUNDLED STANDARD OFFER SERVICE - SUMMARY OF CUSTOMER AND ENERGY CHARGES

Customer Charge:	$1,200.00 per month
Demand Charges:	
Demand Charge (<69 kV Service)	$22.00 per kW per month
Demand Charge (≥69 kV Service)	$17.00 per kW per month

Energy Charge (per kWh):

	Delivery Services-Energy[1]	Power Supply Charges[2]		Total[3]
		Base Power	PPFAC[2]	
All kWh	$0.000462	$0.041880	Varies	$0.042342

1. Delivery Services-Energy is a bundled charge that includes: Local Delivery, Generation Capacity and Transmission.
2. The Power Supply Charge shall be comprised of the Base Power Charge and the Purchased Power and Fuel Adjustment Clause (PPFAC), a per kWh adjustment in accordance with Rate Rider-1. The PPFAC reflects increases or decreases in the cost to the Company for energy either generated or purchased above or below the base cost per kWh sold. Please see Rider-1 for current rate.
3. Total is calculated above for illustrative purposes, and excludes PPFAC, because the PPFAC changes monthly pursuant to Rider-1 PPFAC. While only non-variable components are included in the illustration above, a Customer's actual bill in any given billing month will reflect the applicable PPFAC for that billing month.

A credit of three percent (3%) will be applied to the demand charge if the Customer receives Distribution Service at primary voltage.

In the event a Customer achieves permanent, verifiable demand reduction through involvement in UNS Electric's Demand-Side Management (DSM) programs, such reductions will be applicable to adjusted demands billed during the eleven (11) month period prior to the installation of the DSM measures.

BILLING DEMAND

The monthly billing demand shall be the higher of:

1. the highest measured fifteen-minute integrated reading of the demand meter during all hours of the billing period;
2. the highest demand metered during the preceding eleven (11) months; or
3. the contract capacity or 500 kW, whichever is higher.

POWER FACTOR ADJUSTMENT

(Maximum Demand / (.05 + PF)) - Maximum Demand) x Demand Charge Where Maximum Demand is the highest measured fifteen (15) minute demand in kilowatts during the billing period.

POWER FACTOR

1. The Company may require the Customer by written notice to either maintain a specified minimum lagging power factor or the Company may after thirty (30) days install power factor corrective equipment and bill the Customer for the total costs of this equipment and installation.
2. In the case of apparatus and devices having low power factor, now in service, which may hereafter be replaced, and all similar equipment hereafter installed or replaced, served under general commercial schedules, the Company may require the Customer to provide, at the Customer's own expense, power factor corrective equipment to increase the power factor of any such devices to not less than ninety (90) percent.
3. If the Customer installs and owns the capacitors needed to supply his reactive power requirements, then the Customer must equip them with suitable disconnecting switches, so installed that the capacitors will be disconnected from the Company's lines whenever the Customer's load is disconnected from the Company's facilities.
4. Gaseous tube installations totaling more than one thousand (1,000) volt-amperes must be equipped with capacitors of sufficient rating to maintain a minimum of ninety percent (90%) lagging power factor.
5. Company installation and removal of metering equipment to measure power factor will be at the discretion of the Company.

DIRECT ACCESS

A Customer's Direct Access bill will include all unbundled components except those services provided by a qualified third party. Those services may include Metering (Installation, Maintenance and/or Equipment), Meter Reading, Billing and Collection, Transmission and Generation. If any of these services are not available from a third party supplier and must be obtained from the Company, the rates for Unbundled Components set forth in this Tariff will be applied to the Customer's bill.

UNS ELECTRIC STATEMENT OF CHARGES

For all additional charges and assessments approved by the Arizona Corporation Commission see the UNS Electric Statement of Charges which is available on UNS Electric's website at www.uesaz.com.

TAX CLAUSE

To the charges computed under the above rate, including any adjustments, shall be added the applicable proportionate part of any taxes or governmental impositions which are or may in the future be assessed on the basis of gross revenues of the Company and/or the price or revenue from the electric energy or service sold and/or the volume of energy generated or purchased for sale and/or sold hereunder.

RULES AND REGULATIONS

The standard Rules and Regulations of the Company as on file with the Arizona Corporation Commission shall apply where not inconsistent with this Rate.

ADDITIONAL NOTES

Additional charges may be directly assigned to a customer based on the type of facilities (e.g., metering) dedicated to the Customer or pursuant to the Customer's contract, if applicable. Additional or alternate Direct Access charges may be assessed pursuant to any Direct Access fee schedule authorized.

OTHER PROVISIONS

Service hereunder shall remain in full force and in effect until terminated by the Customer unless otherwise provided for in the Service Agreement. Termination of service requires twelve (12) months advance notice in writing to the Company.

Service hereunder may require the Customer to enter into a Service Agreement with the Company for a term of two (2) years or longer, with a minimum contract demand capacity at the Company's option in view of the anticipated demand of the Customer.

UniSourceEnergy SERVICES

UNS Electric, Inc.

Original Sheet No.: 301-3
Superseding:

BUNDLED STANDARD OFFER SERVICE CONSISTS OF THE FOLLOWING UNBUNDLED COMPONENTS

Customer Charge Components (Unbundled):

Description	Customer Charge
Meter Services	$ 184.69 per month
Meter Reading	$ 364.17 per month
Billing & Collection	$ 498.49 per month
Customer Delivery	$ 152.65 per month
Total	$ 1,200.00 per month

Demand Charge <69kW (Unbundled):

Component	Rate
Delivery Services- All kW	
Local Delivery	$ 17.50
Generation	$ 2.07
Transmission	$ 2.43

Demand Charge ≥69kW (Unbundled):

Component	Rate
Delivery Services- All kW	
Local Delivery	$ 12.73
Generation Capacity	$ 2.07
Transmission	$ 2.20

Energy Charge Components (per kWh) (Unbundled):

	Rate
Local Delivery	$0.000343
Generation	$0.000100
Transmission	$0.000019

Power Supply Charges (per kWh):

Component	Rate
Base Power Supply	$0.041880
PPFAC (see Rider-1 for current rate)	Varies

UniSourceEnergy SERVICES

UNS Electric, Inc.

Original Sheet No.: 302
Superseding:

Large Power Service Time-of-Use (LPS-TOU)

AVAILABILITY
Available throughout the Company's entire electric service area where the facilities of the Company are of adequate capacity and are adjacent to the premises.

APPLICABILITY
To all general power and lighting service on an optional basis when all energy is supplied at one point of delivery and through one metered service.

Not applicable to resale, breakdown, temporary, standby or auxiliary service.

CHARACTER OF SERVICE
The service shall be three-phase, 60 Hertz, and at the Company's standard transmission or distribution voltages that are available within the vicinity of the Customer's premises.

Primary metering shall be required for new installations with service requirements in excess of 2,500 kW.

RATE
A monthly bill at the following rate plus any adjustments incorporated herein:

BUNDLED STANDARD OFFER SERVICE - SUMMARY OF CUSTOMER AND ENERGY CHARGES

Customer Charge:	$1,200.00 per month
Demand Charges:	
Demand Charge (<69 kV Service)	$22.00 per kW per month
Demand Charge (≥69 kV Service)	$17.00 per kW per month

Energy Charges (per kWh):

Summer (May – October)	Delivery Services-Energy[1]	Power Supply Charges[2] Base Power	PPFAC[2]	Total[3]
On-Peak	$0.000462	$0.123580	Varies	$0.124042
Off-Peak	$0.000462	$0.024716	Varies	$0.025178

Winter (November – April)	Delivery Services-Energy[1]	Power Supply Charges[2] Base Power	PPFAC[2]	Total[3]
On-Peak	$0.000462	$0.093880	Varies	$0.094342
Off-Peak	$0.000462	$0.022105	Varies	$0.022567

1. Delivery Services-Energy is a bundled charge that includes: Local Delivery, Generation Capacity and Transmission.

2. The Power Supply Charge shall be comprised of the Base Power Charge and the Purchased Power and Fuel Adjustment Clause (PPFAC), a per kWh adjustment in accordance with Rate Rider-1. The PPFAC reflects increases or decreases in the cost to the Company for energy either generated or purchased above or below the base cost per kWh sold. Please see Rider-1 for current rate.
3. Total is calculated above for illustrative purposes, and excludes PPFAC, because the PPFAC changes monthly pursuant to Rider-1 PPFAC. While only non-variable components are included in the illustration above, a Customer's actual bill in any given billing month will reflect the applicable PPFAC for that billing month.

A credit of three percent (3%) will be applied to the demand charge if the Customer receives Distribution Service at primary voltage.

In the event a Customer achieves permanent, verifiable demand reduction through involvement in UNS Electric's Demand-Side Management (DSM) programs, such reductions will be applicable to adjusted demands billed during the eleven (11) month period prior to the installation of the DSM measures.

BILLING DEMAND

The monthly billing demand shall be the higher of:

1. the highest measured fifteen-minute integrated reading of the demand meter during the on-peak hours of the billing period;
2. one-half the highest measured fifteen minute integrated reading of the demand meter during the off-peak hours;
3. the higher of (1) or (2) above during the preceding eleven (11) months; or
4. the contract capacity or 500 kW, whichever is higher.

TIME-OF-USE TIME PERIODS

The Summer On-Peak period is 2:00 p.m. to 8:00 p.m., Monday through Friday (excluding Memorial Day, Independence Day, and Labor Day).

The Winter On-Peak periods are 6:00 a.m. - 12:00 p.m., Monday through Friday (excluding Thanksgiving Day, Christmas Day, and New Year's Day).

All other hours are Off-Peak. If a holiday falls on Saturday, the preceding Friday is designated Off-Peak; if a holiday falls on Sunday, the following Monday is designated Off-Peak.

POWER FACTOR ADJUSTMENT

(Maximum Demand / (.05 + PF)) - Maximum Demand) x Demand Charge Where Maximum Demand is the highest measured fifteen (15) minute demand in kilowatts during the billing period.

POWER FACTOR

1. The Company may require the Customer by written notice to either maintain a specified minimum lagging power factor or the Company may after thirty (30) days install power factor corrective equipment and bill the Customer for the total costs of this equipment and installation.

2. In the case of apparatus and devices having low power factor, now in service, which may hereafter be replaced, and all similar equipment hereafter installed or replaced, served under general commercial schedules, the Company may require the Customer to provide, at the Customer's own expense, power factor corrective equipment to increase the power factor of any such devices to not less than ninety (90) percent.
3. If the Customer installs and owns the capacitors needed to supply his reactive power requirements, then the Customer must equip them with suitable disconnecting switches, so installed that the capacitors will be disconnected from the Company's lines whenever the Customer's load is disconnected from the Company's facilities.
4. Gaseous tube installations totaling more than one thousand (1,000) volt-amperes must be equipped with capacitors of sufficient rating to maintain a minimum of ninety percent (90%) lagging power factor.
5. Company installation and removal of metering equipment to measure power factor will be at the discretion of the Company.

DIRECT ACCESS

A Customer's Direct Access bill will include all unbundled components except those services provided by a qualified third party. Those services may include Metering (Installation, Maintenance and/or Equipment), Meter Reading, Billing and Collection, Transmission and Generation. If any of these services are not available from a third party supplier and must be obtained from the Company, the rates for Unbundled Components set forth in this Tariff will be applied to the Customer's bill.

UNS ELECTRIC STATEMENT OF CHARGES

For all additional charges and assessments approved by the Arizona Corporation Commission see the UNS Electric Statement of Charges which is available on UNS Electric's website at www.uesaz.com.

TAX CLAUSE

To the charges computed under the above rate, including any adjustments, shall be added the applicable proportionate part of any taxes or governmental impositions which are or may in the future be assessed on the basis of gross revenues of the Company and/or the price or revenue from the electric energy or service sold and/or the volume of energy generated or purchased for sale and/or sold hereunder.

RULES AND REGULATIONS

The standard Rules and Regulations of the Company as on file with the Arizona Corporation Commission shall apply where not inconsistent with this Rate.

ADDITIONAL NOTES

Additional charges may be directly assigned to a customer based on the type of facilities (e.g., metering) dedicated to the Customer or pursuant to the Customer's contract, if applicable. Additional or alternate Direct Access charges may be assessed pursuant to any Direct Access fee schedule authorized.

OTHER PROVISIONS

Service hereunder shall remain in full force and in effect until terminated by the Customer unless otherwise provided for in the Service Agreement. Termination of service requires twelve (12) months advance notice in writing to the Company.

Service hereunder may require the Customer to enter into a Service Agreement with the Company for a term of two (2) years or longer, with a minimum contract demand capacity at the Company's option in view of the anticipated demand of the Customer.

UniSourceEnergy SERVICES

UNS Electric, Inc.

Original Sheet No.: 302-3
Superseding:

BUNDLED STANDARD OFFER SERVICE CONSISTS OF THE FOLLOWING UNBUNDLED COMPONENTS

Customer Charge Components (Unbundled):

Description	Customer Charge
Meter Services	$ 184.69 per month
Meter Reading	$ 364.17 per month
Billing & Collection	$ 498.49 per month
Customer Delivery	$ 152.65 per month
Total	$1,200.00 per month

Demand Charge <69kV (Unbundled):

Component	Rate
Delivery Services- All kW	
Local Delivery	$ 17.50 per kW
Generation Capacity	$ 2.07 per kW
Transmission	$ 2.43 per kW

Demand Charge ≥69kV (Unbundled):

Component	Rate
Delivery Services- All kW	
Local Delivery	$ 12.73 per kW
Generation Capacity	$ 2.07 per kW
Transmission	$ 2.20 per kW

Energy Charge Components (per kWh) (Unbundled):

Summer (May – October)	On-Peak	Off-Peak
Local Delivery	$0.000343	$0.000343
Generation	$0.000100	$0.000100
Transmission	$0.000019	$0.000019

Power Supply Charge (per kWh):

Summer (May – October)	On-Peak	Off-Peak
Base Power Component	$0.123580	$0.024716
PPFAC	In accordance with Rider 1 - PPFAC	

Energy Charge Components (per kWh) (Unbundled):

Winter (November – April)	On-Peak	Off-Peak
Local Delivery Energy	$0.000343	$0.000343
Generation	$0.000100	$0.000100
Transmission	$0.000019	$0.000019

Power Supply Charge (per kWh):

Winter (November – April)	On-Peak	Off-Peak
Base Power Component	$0.093880	$0.022105
PPFAC	In accordance with Rider 1 - PPFAC	

Lighting Service (LTG)

AVAILABILITY
At any point where the Company in its judgment has facilities of adequate capacity and suitable voltage available.

APPLICABILITY
Applicable to any Customer for private and public street lighting or outdoor area lighting where this service can be supplied from existing facilities of the Company. The Company will install, own, operate, and maintain the complete lighting installation including lamp and globe replacements. Not applicable to resale service.

To any Customer, including public agencies, for the lighting of streets, alleys, thoroughfares, public parks, playgrounds, or other public or private property where such lighting is controlled by a photocell and a contract for service is entered into with the Company.

CHARACTER OF SERVICE
Service is supplied on Company-owned fixtures and poles which are maintained by the Company. The poles, fixtures, and lamps available are the standard items stocked by the Company, and service is rendered at standard available voltages. Multiple or series street lighting system at option of Company and at one standard nominal voltage.

RATE
A monthly bill at the following rate plus any adjustments incorporated herein:

BUNDLED STANDARD OFFER SERVICE– SUMMARY OF CUSTOMER AND ENERGY CHARGES:

The monthly bill shall be the sum of the following charges and adjustments for each light:

Service Charge (per month):	Overhead Service	Underground Service
Existing Wood Pole	$2.18	$2.18
New 30' Wood Pole (Class 6)	$4.34	$6.52
New 30' Metal or Fiberglass	$8.66	$10.81

Lighting Charge:
Based on the rated wattage value of each lamp installed per month: $0.051681 per watt

Base Power Supply Charge: based on the rated wattage value of each lamp installed per month: $0.010113 per kWh

The Power Supply Charge shall be comprised of the Base Power Charge and the Purchased Power and Fuel Adjustment Clause (PPFAC), a per kWh adjustment in accordance with Rider-1. The PPFAC reflects increases or decreases in the cost to the Company for energy either generated or purchased above or below the base cost per kWh sold. The PPFAC rate changes annually every June 1. Please see Rate Rider-1 for current rate.

CONTRACT PERIOD
All lighting installations will require a contract for service as follows:

Three (3) years initial term for installations on existing facilities.

TERMS AND CONDITIONS

1. For each light, overhead extensions beyond one hundred fifty (150) feet and underground extensions beyond one hundred (100) feet will require specific agreements providing adequate revenue or arrangements for construction financing.
2. The Customer is not authorized to make connections to the lighting circuit or make attachments or alterations to the Company-owned pole.
3. Should a Customer request a relocation of a dusk-to-dawn lighting installation, the costs of such relocation must be borne by the Customer.
4. The Customer is expected to notify the Company when lamp outages occur.
5. The Company will use diligence in maintaining service; however, monthly bills will not be reduced because of lamp outages.
6. The Company will require a non-refundable contribution for the installation of new construction for facilities of $150.00.
7. A late payment charge as stated in the general rules and regulations will be applied to account balances carried forward from prior billings.

DIRECT ACCESS
A customer's Direct Access bill will include all unbundled components except those services provided by a qualified third party. Those services may include Metering (Installation, Maintenance and/or Equipment), Meter Reading, Billing and Collection, Transmission and Generation. If any of these services are not available from a third party supplier and must be obtained from the Company, the rates for Unbundled Components set forth in this Tariff will be applied to the Customer's bill.

UNS ELECTRIC STATEMENT OF CHARGES
For all additional charges and assessments approved by the Arizona Corporation Commission see the UNS Electric Statement of Charges which is available on UNS Electric's website at www.uesaz.com.

TAX CLAUSE
To the charges computed under the above rate, including any adjustments, shall be added the applicable proportionate part of any taxes or governmental impositions which are or may in the future be assessed on the basis of gross revenues of the Company and/or the price or revenue from the electric energy or service sold and/or the volume of energy generated or purchased for sale and/or sold hereunder.

RULES AND REGULATIONS
The standard Rules and Regulations of the Company as on file with the Arizona Corporation Commission shall apply where not inconsistent with this Rate.

ADDITIONAL NOTES

Additional charges may be directly assigned to a customer based on the type of facilities (e.g., metering) dedicated to the customer or pursuant to the customer's contract, if applicable. Additional or alternate Direct Access charges may be assessed pursuant to any Direct Access fee schedule authorized.

BUNDLED STANDARD OFFER SERVICE CONSISTS OF THE FOLLOWING UNBUNDLED COMPONENTS:

New 30' Wood Pole (Class 6) - Overhead	
Billing and Collections	$1.57 per unit
Customer Delivery	$2.77 per unit
New 30' Metal or Fiberglass - Overhead	
Billing and Collections	$1.57 per unit
Customer Delivery	$7.09 per unit
Existing Wood Pole – Underground	
Billing and Collections	$1.57 per unit
Customer Delivery	$0.61 per unit
New 30' Wood Pole Class 6 – Underground	
Billing and Collections	$1.57 per unit
Customer Delivery	$4.95 per unit
New 30' Metal or Fiberglass – Underground	
Billing and Collections	$1.57 per unit
Customer Delivery	$9.24 per unit
Lighting Charge	
Local Delivery	$0.045641 per watt
Genergation Capacity	$0.003140 per watt
Transmission	$0.002900 per watt

UniSourceEnergy SERVICES

UNS Electric, Inc.

Original Sheet No.: 601
Superseding:

Interruptible Power Service (IPS)

AVAILABILITY
Available throughout the Company's entire electric service area where the facilities of the Company are of adequate capacity and are adjacent to the premises.

Any new Customers taking service under this Rate must furnish, install, own, and maintain at each point of delivery all necessary Company approved equipment which will enable the Company to interrupt service with its master control station.

TRANSITION PERIOD
Customers taking service under this Rate prior to January 1, 2014 will be given twenty-four (24) months from January 1, 2014 to furnish, install, own, and maintain at each point of delivery all necessary Company approved equipment which will enable the Company to interrupt service with its master control station. After December 31, 2015, if the Customer has not installed this equipment, they will be placed on the otherwise applicable firm Rate.

APPLICABILITY
This service is normally provided at one point of delivery measured through one meter. More than one service and meter may be provided in instances where such is permitted under 230.2 (A) through (D) of the National Electric Code with prior approval of the UNS Electric Engineering Department.

To any Customer with a minimum demand of 50 kW and is interruptible within fifteen (15) minutes of notice by the Company. The Customer must be able to interrupt service for up to eight (8) hours per day.

Not applicable to resale, breakdown, temporary, standby or auxiliary service.

CHARACTER OF SERVICE
Service shall be three phase, 60 hertz, at the Company's standard voltages that are available within the vicinity of the Customer's premises.

RATE
A monthly bill at the following rate plus any adjustments incorporated herein:

BUNDLED STANDARD OFFER SERVICE - SUMMARY OF CUSTOMER AND ENERGY CHARGES:

Customer Charge: $18.00 per month

Demand Charge: $5.00 per kW

Energy Charge (per kWh):

	Delivery Services-Energy[1]	Power Supply Charges[2]		Total[3]
		Base Power	PPFAC[2]	
All kWh	$0.019408	$0.043760	Varies	$0.063168

1. Delivery Services-Energy is a bundled charge that includes: Local Delivery, Generation Capacity and Transmission.
2. The Power Supply Charge shall be comprised of the Base Power Charge and the Purchased Power and Fuel Adjustment Clause (PPFAC), a per kWh adjustment in accordance with Rate Rider-1. The PPFAC reflects increases or decreases in the cost to the Company for energy either generated or purchased above or below the base cost per kWh sold. Please see Rider-1 for current rate.
3. Total is calculated above for illustrative purposes, and excludes PPFAC, because the PPFAC changes monthly pursuant to Rider-1 PPFAC. While only non-variable components are included in the illustration above, a Customer's actual bill in any given billing month will reflect the applicable PPFAC for that billing month.

PENALTY FOR FAILURE TO INTERRUPT:
In the event that the Customer fails to interrupt its load when requested to do so by the Company, the Customer shall pay an additional charge as follows:

Billing Demand Charge per kW @ $25.00
Unbundled $/kWh Charge is entirely a Delivery Charge

For a second failure to interrupt in any twelve (12) month period, the Customer will revert to the otherwise applicable firm Rate for a period of at least twelve (12) months.

DETERMINATION OF BILLING DEMAND
The monthly billing demand shall be the highest measured fifteen (15) minute integrated reading of the demand meter during the billing month. If demand is not metered, the billing demand shall be based on nameplate ratings of connected motors and equipment, or by a test as approved by the Company.

TERMS AND CONDITIONS
A late payment charge as stated in the Company's Rules and Regulations will be applied to account balances carried forward from prior billings.

The Company reserves the right to interrupt service to the Customer at any time.

Customers who qualify for service under this Rate must remain on the Rate for a twelve (12) month period, unless, in the judgment of the Company, conditions require a different strategy or approach. Service hereunder shall require the Customer to enter into a Service Agreement with the Company for a term of one (1) year or longer, with a minimum Contract Demand at the Company's option in view of the anticipated demand of the Customer.

The Company will endeavor to provide the Customer with as much advance notice as possible of the required interruptions. However, the Customer shall interrupt service within ten (10) minutes.

The Company reserves the right to have automatic equipment installed for immediate interruption of the Customer's load. Should the Company's automatic equipment fail to interrupt the load, no penalty will be assessed.

The Company shall not be responsible for any loss or damage caused by or resulting from interruption of service under this Rate.

Standby, supplemental or breakdown service shall not be rendered under this Rate.

Service under this Rate is for the exclusive use of the Customer and shall not be resold or shared with others, unless authorized by the Company.

DIRECT ACCESS

A Customer's Direct Access bill will include all unbundled components except those services provided by a qualified third party. Those services may include Metering (Installation, Maintenance and/or Equipment), Meter Reading, Billing and Collection, Transmission and Generation. If any of these services are not available from a third party supplier and must be obtained from the Company, the rates for Unbundled Components set forth in this Tariff will be applied to the Customer's bill.

UNS ELECTRIC STATEMENT OF CHARGES

For all additional charges and assessments approved by the Arizona Corporation Commission see the UNS Electric Statement of Charges which is available on UNS Electric's website at www.uesaz.com.

TAX CLAUSE

To the charges computed under the above rate, including any adjustments, shall be added the applicable proportionate part of any taxes or governmental impositions which are or may in the future be assessed on the basis of gross revenues of the Company and/or the price or revenue from the electric energy or service sold and/or the volume of energy generated or purchased for sale and/or sold hereunder.

RULES AND REGULATIONS

The standard Rules and Regulations of the Company as on file with the Commission shall apply where not inconsistent with this Rate.

BUNDLED STANDARD OFFER SERVICE CONSISTS OF THE FOLLOWING UNBUNDLED COMPONENTS:

Customer Charge Components (Unbundled):

Description	Customer Charge
Meter Services	$ 2.62 per month
Meter Reading	$ 6.69 per month
Billing & Collection	$ 7.05 per month
Customer Delivery	$ 1.64 per month
Total	$18.00 per month

Demand Charge (per kW) (Unbundled):

	Rate
Local Delivery	$2.95
Generation Capacity	$0.53
Transmission	$1.52

UniSourceEnergy SERVICES

UNS Electric, Inc.

Original Sheet No.: 601-3
Superseding:

Energy Charge Components (per kWh) (Unbundled):

	Rate
Local Delivery	$0.015400
Generation	$0.003841
Transmission	$0.000167

Power Supply Charges (per kWh):

Component	Rate
Base Power Supply	$0.043760
PPFAC (see Rider-1 for current rate)	Varies

Rider R-1
Purchased Power Fuel Adjustor Clause (PPFAC)

APPLICABILITY
The Purchased Power and Fuel Adjustment Clause (PPFAC) will be applied to all customers taking Standard Offer service from the Company pursuant to the Arizona Corporation Commission (ACC) Decision No 70360 dated May 27, 2008 and as updated and defined in the Company's PPFAC Plan of Administration approved in ACC Decision No. XXXXX.

RATE
The Customer monthly bill shall consist of the applicable Rate charges and adjustments in addition to the PPFAC. The PPFAC adjustor rate, as shown in the UNS Electric, Inc. Statement of Charges, is an amount expressed as a rate per kWh charge to reflect the cost to the Company for energy either generated or purchased.

UNS ELECTRIC INC. STATEMENT OF CHARGES
For all additional charges and assessments approved by the Arizona Corporation Commission see the UNS Electric, Inc. Statement of Charges which is available on UNS Electric Inc.'s website at www.uesaz.com.

TAX CLAUSE
To the charges computed under the above rate, including any adjustments, shall be added the applicable proportionate part of any taxes or governmental impositions which are or may in the future be assessed on the basis of gross revenues of the Company and/or the price or revenue from the electric energy or service sold and/or the volume of energy generated or purchased for sale and/or sold hereunder.

RULES AND REGULATIONS
This standard Rules and Regulations of the Company as on file with the ACC shall apply where not inconsistent with this Rider.

UniSourceEnergy SERVICES

UNS Electric, Inc.

Original Sheet No.: 701-1
Superseding:

Purchased Power Fuel Adjustment Clause
RIDER R-1

APPLICABILITY: To all Company Rates, unless otherwise specified.

Month/Year	Effective Date	Customer Class	PPFAC Rate This Period	PPFAC Surcharge/ Credit This Period	PPFAC Average Base Rate	Total Average Retail Fuel and Purchased Power Rate This Period	Total Average Retail Fuel and Purchased Power Rate Last Period	Change	% Change
January 2014	1/1/2014	All Sales	$0.0000	$0.0000	$0.057060	$0.057060	$0.0000	$0.000000	

Issued: January 1 2014
Month Day Year

Effective: January 1 2014
Month Day Year

Filed By: Kentton C. Grant
Title: Vice President
District: Entire Electric Service Area

Rate: R-1
Effective: January 1, 2014
Decision No.:

UniSourceEnergy SERVICES

UNS Electric, Inc.

Original Sheet No.: 702
Superseding:

Rider R-2
Demand Side Management Surcharge (DSMS)

APPLICABILITY
The Demand Side Management Surcharge (DSMS) applies to all customers, except customers who take service under the Customer Assistance Residential Energy Support (C.A.R.E.S) pricing plan or Low Income Medical Life Support Program (C.A.R.E.S.-M) pricing plan in all territory served by UNS Electric, Inc. as mandated by the Arizona Corporation Commission, unless otherwise specified. C.A.R.E.S. and C.A.R.E.S.-M customers are exempt from any DSM surcharge.

RATES
The DSMS shall be applied to all monthly net bills except for C.A.R.E.S. customers. The DSMS will be assessed on a per kWh basis. The Rates are shown in the UNS Electric Statement of Charges.

REQUIREMENTS
The 2014 UNS Electric DSMS is effective January 1, 2014 and will remain in effect until further ordered by the ACC.

UNS ELECTRIC STATEMENT OF CHARGES
For all additional charges and assessments approved by the ACC see the UNS Electric Statement of Charges which is available on UNS Electric's website at www.uesaz.com.

TAX CLAUSE
To the charges computed under the above rate, including any adjustments, shall be added the applicable proportionate part of any taxes or governmental impositions which are or may in the future be assessed on the basis of gross revenues of the Company, and/or the price of, or revenue from, gas sales or service sold and/or the volume of gas sales generated or purchased for sale and/or sold hereunder.

RULES AND REGULATIONS
The standard Rules and Regulations of the Company as on file from time to time with the ACC shall apply where not inconsistent with this Rate.

Rider-3
Market Cost of Comparable Conventional Generation (MCCCG) Calculation as Applicable to Rider-4 NM-PRS

AVAILABILITY

The Market Cost of Comparable Conventional Generation (MCCCG) calculation, Rider-3, is restricted solely to Rider-4, Net Metering for Certain Partial Requirements Service (NM-PRS). If for a billing month a Rider-4 NM-PRS Customer's generation facility's energy production exceeds the energy supplied by the Company, the Customer's bill for the next billing period shall be credited for the excess generation as described in Rider-4 NM-PRS. The excess kWh during the billing period shall be used to reduce the kWh supplied (not kW or kVA demand or customer/facilities charges) and billed by the Company during the following billing period. Each calendar year, for the customer bills produced in October (September usage) or a customer's "Final" bill - the Company shall credit the Customer for the positive balance of excess kWhs (if any) after netting against billing period usage. The payment for the purchase of the excess kWhs will be at the Company's applicable avoided cost, which for purposes of Rider-4 NM-PRS shall be the simple average of the hourly MCCCG as described below for the applicable year.

The Arizona Corporation Commission (ACC) provided guidance on defining MCCCG in the context of its REST Rules and identified the MCCCG as "the Affected Utility's energy and capacity cost of producing or procuring the incremental electricity that would be avoided by the resources used to meet the Annual Renewable Energy Requirement, taking into account hourly, seasonal and long term supply and demand circumstances. Avoided costs include any avoided transmission and distribution costs and any avoided environmental compliance costs." R14-2-1801.11.

CALCULATION/METHODOLOGY

For purposes of calculating credits to the Customer for Excess Generation, the unit price paid (Credit for Excess Generation) shall be the simple average of the MCCCG over the 8,760 hours (8,784 in a leap year) hours in the forecasted year. The MCCCG in each hour is based on whether native load requirements will be met by internally owned or contracted generation resources or if market purchases will be required to meet native load requirements. The following table provides a description of the MCCCG methodology. The hourly MCCCG cost determination criteria is based on the Market Condition and Dispatch Type. This method of cost determination is very data intensive and will be calculated annually by running UNS Electric's "Planning and Risk" modeling software, and the rate will be filed with the Commission by April 1 of each year.

RATE

The Customer monthly bill shall consist of the applicable Rate charges and adjustments in addition to the Credit for Excess Generation based on the MCCCG. The MCCCG rate is an amount expressed as a rate per kWh charge that is approved by the ACC on or before June 1 of each year and effective with the first billing cycle in June, as shown in the UNS Electric Statement of Charges.

UNS ELECTRIC STATEMENT OF CHARGES

For all additional charges and assessments approved by the ACC see the UNS Electric Statement of Charges which is available on UNS Electric's website at www.uesaz.com.

MCCCG Cost Determination Matrix

Market Condition and Dispatch Type	Selling to Market from In House Real and Contracted Generation Sources	MCCCG Cost Based on Incremental Production/Purchase Cost of Base Load Generation for that hour			
	No Market Transactions from/to In House and Contracted Generation Sources				
	Purchasing from Day Ahead Market, but not Spot Market, to meet Native Load Requirements	MCCCG Cost Based on Average Day Ahead Market Price of Purchased Power for that hour			
	Purchasing from Spot Market to meet Native Load Requirements	MCCCG Cost Based on Average Spot Market Price of Purchased Power for that hour			

Incremental Production / Purchase of Base Load - The cost of the next kWh (incremental) amount of load that has to be provided by UNS Electric generation sources and/or purchased power. This will be dependent on the season, month and time of day.

If Day Ahead Market or Spot Market purchases are being used to provide for reliability support capacity to meet native load requirements by freeing up in house or contracted generation resources for regulation or spinning reserve purposes for support of native load requirements, that would still represent a Market Purchase for purposes of determining which matrix box is applicable.

Rider-4
Net Metering for Certain
Partial Requirements Service (NM-PRS)

AVAILABILITY

Available throughout the Company's entire electric service area to any Customer with a facility for the production of electricity on its premises using Renewable Resources[1], a Fuel Cell [2] or Combined Heat and Power (CHP)[3] to generate electricity, which is operated by or on behalf of the Customer, is intended to provide all or part of the Customer's electricity requirements, has a generating capacity less than or equal to 125% of the Customer's total connected load at the metered premise, or in the absence of load data, has capacity less than the Customer's electric service drop capacity, and is interconnected with and can operate in parallel and in phase with the Company's existing distribution system. Customer shall comply with all applicable federal, state, and local laws, regulations, ordinances and codes governing the production and/or sale of electricity.

For purposes of this Rate, the following notes and/or definitions apply:

[1] Renewable Resources means natural resources that can be replenished by natural process. Renewable Resources include biogas, biomass, geothermal, hydroelectric, solar, or wind.

[2] Fuel Cell means a device that converts the chemical energy of a fuel directly into electricity without intermediate combustion or thermal cycles. The source of the chemical reaction must be derived from Renewable Resources.

[3] Combined Heat and Power (CHP) also known as cogeneration means a system that generates electricity and useful thermal energy in a single integrated system such that the useful power output of the facility plus one-half the useful thermal energy output during any 12-month period must be no less than 42.5 percent of the total energy input of fuel to the facility.

CHARACTER OF SERVICE

The service shall be single- or three-phase, 60 Hertz, at one standard nominal voltage as mutually agreed and subject to availability at the point of delivery. Primary metering will be used by mutual agreement between the Company and the Customer.

RATE

Customer Charges shall be billed pursuant to the Customer's standard offer Rate otherwise applicable under full requirements of service.

Power sales and special services supplied by the Company to the Customer in order to meet the Customer's supplemental or interruptible electric requirements will be priced pursuant to the Customer's standard offer Rate otherwise applicable under full requirements service.

Non-Time-of-Use Rates: For Customers taking service under a Standard Retail Rate that is not a time-of-use rate, the Customer Supplied kWh shall be credited against the Company Supplied kWh. The Customer's monthly bill shall be based on this net kWh amount. Any monthly Excess Generation will be treated in accordance with the provisions outlined below.

Time-of-Use Rates: For Customers taking service under a Standard Retail Rate that is a time-of-use rate, the Customer Supplied kWh during on-peak hours shall be credited against the Company Supplied kWh during on-peak hours. All Customer Supplied kWh during off-peak hours shall be credited against the Company Supplied kWh during off-peak hours. The Customer's monthly bill shall be based on this net kWh amount. Any monthly Excess Generation will be treated in accordance with the provisions outlined below.

EXCESS GENERATION

If for a billing month the Customer's generation facility's energy production exceeds the energy supplied by the Company, the Customer's bill for the next billing period shall be credited for the excess generation. That is, the excess kWh during the billing period shall be used to reduce the kWh supplied (not kW or kVA demand or customer/facilities charges) and billed by the Company during the following billing period. Customers taking service under a time-of-use rate who are to receive credit in a subsequent billing period for excess kWh generated shall receive such credit in the next billing period for the on-peak, or off-peak periods in which the kWh were generated by the Customer. Time-of-Use Customer's taking service in the billing month of April shall receive a credit to summer on-peak and summer off-peak usage in the billing month of May for any winter on-peak and/or winter off-peak excess generation for April.

Each calendar year, for the customer bills produced in October (September usage) or a customer's "Final" bill - the Company shall credit the Customer for the balance of excess kWhs after netting. The payment for the purchase of the excess kWhs will be at the Company's applicable avoided cost, which for purposes of this Rate shall be the simple average of the hourly Market Cost of Comparable Conventional Generation (MCCCG) Rider-3 for the applicable year. The MCCCG, as it applies to this Rate, is specified in Rider-3 MCCCG - Market Cost of Comparable Conventional Generation (MCCCG) Calculation as Applicable to Rider-4 NM-PRS (Net Metering for Certain Partial Requirements Service).

METERING

The Company will install a bi-directional meter at the point of delivery to the customer and meter at the point of output from each of the Customer's generators. At the Company's request a dedicated phone line will be provided by the customer to the metering to allow remote interegation of the meters at each site. If by mutal agreement between company and customer that a phone line is impractical or can not be provided - the customer will work with company to allow for the installation of equipment, on or with customer facilities or equipment to allow remote acces to each meter. Any additional cost of communication, such as but not limited too, cell phone service fees will be the responsibility of the customer.

UNS ELECTRIC STATEMENT OF CHARGES

For all additional charges and assessments approved by the Arizona Corporation Commission (ACC) see the UNS Electric Statement of Charges which is available on UNS Electric's website at www.uesaz.com.

TAX CLAUSE

To the charges computed under the above rate, including any adjustments, shall be added the applicable proportionate part of any taxes or governmental impositions which are or may in the future be assessed on the basis of gross revenues of the Company and/or the price or revenue from the electric energy or service sold and/or the volume of energy generated or purchased for sale and/or sold hereunder.

RULES AND REGULATIONS

The standard Rules and Regulations of the Company as on file with the ACC shall apply where not inconsistent with this Rate.

Rider-5
Electric Service Solar Rider
(Bright Arizona Community Solar™)

APPLICABILITY

Rider-5 is for individually metered Customers who wish to participate in the Bright Arizona Community Solar Program. Under Rider-5, customers will be able to purchase blocks of electricity from solar generation sources. Participation in Rider-5 is limited in the Company's sole discretion to the amount of solar generation available and subscription will be made on a first come, first served basis. In order to maximize subscription under Rider-5, the Company may limit the amount of solar block energy purchased by individual Customers. Rider-5 is further restricted to Customers being served under one of the following Rates:

1. Residential Electric Service, Pricing Plan R-01(RES-TOU is not applicable)
2. Small General Service, Pricing Plan SGS-10 (SGS-TOU is not applicable)
3. Large General Service, Pricing Plan LGS (LGS-TOU is not applicable)

Customers being served under self-generation riders or plans may not purchase power under Rider-5 (including, but not limited to Net Metering for Certain Partial Requirements Service Rider-4 and Non-Firm Power Purchase from Renewable Energy Resources and Qualifying Cogeneration Facilities of 100 kilowatts (kW) or Less Capacity Rider-101).

RATE

Customers can contract for a portion or up to their average annual usage in solar blocks of 150 kilowatt hours (kWh) each. Transmission and distribution charges will be applied to all energy delivered, including energy delivered under Rider-5. The Customer is responsible for paying (each month) all charges incurred under their applicable rate schedule, and the total solar energy contracted for multiplied by the applicable solar block energy rate. Any demand based charges under the Customer's current Rate will not be affected by elections under Rider-5. No discounts specified in any of the above-listed standard offer tariffs will apply to this rate. The Rates are shown in the UNS Electric Statement of Charges.

UNS ELECTRIC STATEMENT OF CHARGES

For all additional charges and assessments approved by the Arizona Corporation Commission (ACC) see the UNS Electric Statement of Charges which is available on UNS Electric's website at www.uesaz.com.

RULES AND REGULATIONS

The standard Rules and Regulations of the Company as on file with the ACC shall apply where not inconsistent with this Rate.

TAX CLAUSE

To the charges computed under the above Rate, including any adjustments, shall be added the applicable proportionate part of any taxes or governmental impositions which are or may in the future be assessed on the basis of gross revenues of the Company and/or the price or revenue from the electric energy or service sold and/or the volume of energy generated or purchased for sale and/or sold hereunder.

TERMS AND CONDITIONS

1. Customers may contract for a portion or up to their average annual usage in solar blocks of 150 kWh. If Customer's annual average usage is not available, UNS Electric will apply the appropriate class average. This limit can be reviewed annually at the request of the Customer.

2. Each solar block's energy rate will be maintained for twenty years from the date of purchase. For the purposes of the twenty year energy rate, solar blocks will be attributed to the Customer's original service address. Transfer of service under Rider-5 is prohibited. Should the Customer cancel service for any reason, his or her subscription under Rider-5 will expire.

3. Customers may add or delete solar blocks once within a twelve month period. Any addition of solar blocks will be at the then offered solar block energy rate.

4. Solar blocks will be applied to the actual energy usage each month. Electricity used in excess of the purchased solar blocks will be billed at the Customer's regular energy rate. If electricity usage is below the amount covered by the solar block(s), then the excess kWhs will be rolled forward and credited again the Customer's usage in the following month. The Customer will still be responsible for the full cost of the block(s) each month.

5. Customers will be credited for the balance of any excess kWhs annually, or on their final bill should the Customer terminate service under Rider-5. Each year, for the bills produced in October (September usage), UNS Electric will credit Customers their excess kWhs after netting and reset their balance to zero. Credit for excess kWhs will be at the energy rate of the oldest solar block.

6. All contracted solar block kWhs and associated charges in a billing month will be excluded from the calculation of PPFAC and REST charges and/or credits.

Rider-6
Renewable Energy Standard and Tariff (REST) Surcharge
REST-TS1 Renewable Energy Program Expense Recovery

APPLICABILITY
Mandatory, non-bypassable surcharge applied to all energy consumed by all customers throughout Company's entire electric service area.

RATES
For all energy billed which is supplied by the Company to the Customer. The REST surcharge shall be applied to all monthly bills. The REST rates are shown in the UNS Electric Statement of Charges.

Note: An industrial customer is one with monthly demand equal to or greater than 3,000 kW.

For non-metered services, the lesser of the load profile or otherwise estimated kWh required to provide the service in question, or the service's contract kWh shall be used in the calculation of the surcharge.

This charge will be a line item on customer bills reading "Renewable Energy Standard Tariff."

Per Decision No. 73638, effective March 21, 2013, any Customer who has received incentives under the REST Rules, shall pay the average of the REST surcharge paid by members of their customer class. This requirement shall apply to renewable systems reserved on and after January 1, 2012. Any Customer who has a renewable installation without incentives that is interconnected with UNS Electric's system shall pay the average of the REST surcharge paid by members of their customer class. This requirement shall apply to renewable systems reserved on and after February 1, 2013. The average price is shown in the UNS Electric Statement of Charges.

UNS ELECTRIC STATEMENT OF CHARGES
For all additional charges and assessments approved by the Arizona Corporation Commission (ACC) see the UNS Electric Statement of Charges which is available on UNS Electric's website at www.uesaz.com.

RULES AND REGULATIONS
The standard Rules and Regulations of the Company as on file with the ACC shall apply where not inconsistent with this pricing plan.

TAX CLAUSE
To the charges computed under the above rate, including any adjustments, shall be added the applicable proportionate part of any taxes or governmental impositions which are or may in the future be assessed on the basis of gross revenues of the Company and/or the price or revenue from the electric energy or service sold and/or the volume of energy generated or purchased for sale and/or sold hereunder.

UniSourceEnergy SERVICES

UNS Electric, Inc.

Original Sheet No.: 707
Superseding:

Rider-7
Customer Self-Directed Renewable Energy Option
REST-TS2 Renewable Energy Standard Tariff

AVAILABILITY
Open to all Eligible Customers as defined at A.A.C. R14-02-1801.H.

APPLICABILITY
Any Eligible Customer that applies to the Company under this program and receives approval shall participate at its option.

PARTICIPATION PROCESS
An Eligible Customer seeking to participate shall submit to the Company a written application that describes the Distributed Renewable Energy (DRE) resources or facilities that it proposes to install and the estimated costs of the project. The Company shall have sixty (60) calendar days to evaluate and respond in writing to the Eligible Customer, either accepting or declining the project. If accepted, the Customer shall be reimbursed up to the actual dollar amounts of customer surcharge paid under the REST-TS1Tariff in any calendar year in which DRE facilities are installed as part of the accepted project. To qualify for such funds, the Customer shall provide at least half of the funding necessary to complete the project described in the accepted application, and shall provide the Company with sufficient and reasonable written documentation of the project's costs. Customer shall submit their application prior to May 1 of a given year to apply for funding in the following calendar year.

FACILITIES INSTALLED
The maintenance and repair of the facilities installed by a Customer under this program shall be the responsibility of the Customer following completion of the project. In order to be accepted by the Company for reimbursement purposes, the project shall, at a minimum, conform to the Company's System Qualification standards on file with the Commission. (REST Impolementation Plan, Renewable Energy Credit Purchase Program – RECPP, Distributed Generation Interconnection Requirements, Net Metering Tariff, Company's Interconnection Manual)

PAYMENTS AND CREDITS
All funds reimbursed by the Company to the Customer for installation of approved DRE facilities shall be paid on an annual basis no later than March 30th of each calendar year. All Renewable Energy Credits derived from a project, including generation and Extra Credit Multipliers, shall become the property of the Company and shall be applied towards the Company's Annual Renewable Energy Requirement as defined in A.A.C. R14-2-1801.B.

RULES AND REGULATIONS
The standard Rules and Regulations of the Company as on file with the Arizona Corporation Commission shall apply where not inconsistent with this Rate.

RELATED SCHEDULES

- REST-TS1 - Renewable Energy Program Expense Recovery

Rider R-8
Lost Fixed Cost Recovery (LFCR)

APPLICABILITY
The Lost Fixed Cost Recovery (LFCR) will be applied to all Customers taking service from the Company other than lighting as defined in the Company's LFCR Plan of Administration (POA). As provided for in the POA, in the event a residential Customer chooses to contribute to this program by paying a fixed charge option, the monthly Customer Charge specified on the appropriate Standard Offer tariff will be charged in lieu of the percentage-based rate shown in the UNS Electric Statement of Charges.

CHANGE IN RATE
The LFCR recovers a portion of the authorized margin approved in the Company's most recent rate case that has been lost as the result of implementing Arizona Corporation Commission (ACC)-mandated Energy Efficiency and Distributed Generation programs. Each year, a percentage-based rate will be placed in effect and charged to the participating Rate classes for the 12-month period the LFCR adjustment is applicable. The total year-on-year adjustment cannot exceed 1% of the Company's most recent total combined retail calendar year revenues for all participating Rate classes. The LFCR Rate is shown in the UNS Electric Statement of Charges.

UNS ELECTRIC STATEMENT OF CHARGES
For all additional charges and assessments approved by the ACC see the UNS Electric Statement of Charges which is available on UNS Electric's website at www.uesaz.com.

TAX CLAUSE
To the charges computed under the above rate, including any adjustments, shall be added the applicable proportionate part of any taxes or governmental impositions which are or may in the future be assessed on the basis of gross revenues of the Company and/or the price or revenue from the energy or service sold and/or the volume of energy generated or purchased for sale and/or sold hereunder.

RULES AND REGULATIONS
The standard Rules and Regulations of the Company as on file with the ACC shall apply where not inconsistent with this Rate.

UniSourceEnergy SERVICES

UNS Electric, Inc.

Original Sheet No.: 709
Superseding:

Rider R-9
Transmission Cost Adjustor (TCA)

APPLICABILITY
The Transmission Cost Adjustor (TCA) will be applied to all Customers taking service from the Company as defined in the Company's TCA Plan of Administration (POA).

CHANGE IN RATE
The TCA recovers the change in transmission costs resulting from the Federal Energy Regulatory Commission (FERC) approved formula rate that is updated annually in accordance with the provisions of the Company's Open Access Transmission Tariff (OATT), available through the FERC eTariff website at: http://etariff.ferc.gov/TariffBrowser.aspx?tid=1697. The adjustment captures the difference between the level of transmission costs approved in the Company's last rate case and the amount calculated based on the FERC-approved formula rate. The adjustment can be a charge or a credit and will be updated annually as of the date set forth in the OATT.

> The TCA shall apply to all monthly bills either as a per kWh charge or as a per kW rate, depending on the Customer's effective service tariff, and is anticipated to become effective on the date the TCA is updated. The TCA Rates are shown in the UNS Electric Statement of Charges.

UNS ELECTRIC STATEMENT OF CHARGES
For all additional charges and assessments approved by the Arizona Corporation Commission (ACC) see the UNS Electric Statement of Charges which is available on UNS Electric's website at www.uesaz.com.

TAX CLAUSE
To the charges computed under the above rate, including any adjustments, shall be added the applicable proportionate part of any taxes or governmental impositions which are or may in the future be assessed on the basis of gross revenues of the Company and/or the price or revenue from the electric energy or service sold and/or the volume of energy generated or purchased for sale and/or sold hereunder.

RULES AND REGULATIONS
This standard Rules and Regulations of the Company as on file with the ACC shall apply where not inconsistent with this Rider.

UniSourceEnergy SERVICES

UNS Electric, Inc.

Original Sheet No.: 801

Superseding:

UNS ELECTRIC STATEMENT OF CHARGES

Fee No.	Description	Rate	Effective Date	Decision No.
1.	Service Transfer Fee	$26.00	January 1, 2014	PENDING
2.	Customer-Requested Meter Re-read	$26.00	January 1, 2014	PENDING
3.	Special Meter Reading Fee	$26.00	January 1, 2014	PENDING
4.	Service Establishment and Reestablishment under usual operating procedures During Regular Business Hours	$41.00	January 1, 2014	PENDING
5.	Service Establishment and Reestablishment under usual operating procedures After Regular Business Hours (includes Saturdays, Sundays and Holidays) – Single Phase Service	$137.00	January 1, 2014	PENDING
6.	Service Reestablishment under other than usual operating procedures	$150.00	January 1, 2014	PENDING
7.	Meter Test	$74.00	January 1, 2014	PENDING
8.	Returned Payment Fee	$10.00	January 1, 2014	PENDING
9.	Late Payment Finance Charge	1.5%	January 1, 2014	PENDING

UniSourceEnergy SERVICES

UNS Electric, Inc.

Original Sheet No.: 801-1

Superseding:

Description	Rate	Effective Date	Decision No.
Rider R-1 – Purchased Power and Fuel Adjustment Clause (PPFAC)	Varies–See Rider-1	January 1, 2014	PENDING
Rider R-2 – Demand Side Management Surcharge (DSMS)	$0.002660 per kWh	January 1, 2014	PENDING
Rider R-3 – Market Cost of Comparable Conventional Generation (MCCCG) Calculation as Applicable to Rider-4 NM-PRS	$0.036653 per kWh	June 27, 2013	73935
Rider R-5 – Electric Service Solar Rider (Bright Arizona Community Solar™) Solar Block Energy Rate for Residential Electric Service, Rate R-01 Solar Block Energy Rate for General Service, Rate SGS-10 Solar Block Energy Rate for Large General Service, Rate LGS	 $0.087445 per kWh $0.085495 per kWh $0.077991 per kWh	January 1, 2011 through December 31, 2013	72034
Rider R-5 – Electric Service Solar Rider (Bright Arizona Community Solar™) Solar Block Energy Rate for Residential Electric Service, Rate R-01 Solar Block Energy Rate for General Service, Rate SGS-10 Solar Block Energy Rate for Large General Service, Rate LGS	 $0.084510 per kWh $0.078241 per kWh $0.076603 per kWh	January 1, 2014	PENDING
Rider R-6 – Renewable Energy Standard and Tariff Surcharge REST-TS1 Renewable Energy Program Expense Recovery Monthly Cap For Residential Customers: For Commercial Customers: For Industrial Customers: For Lighting (PSHL):	$0.01000 per kWh Monthly Cap $3.50 per month $90.00 per month $10,000 per month $90.00 per month	January 1, 2014	74166
Rider R-6 – Renewable Energy Standard and Tariff Surcharge REST-TS1 Renewable Energy Program Expense Recovery Customers receiving incentives on or after January 1, 2012 shall pay the average of the REST surcharge paid by members of their customer class. Customer with renewable installations without incentives that is interconnected with UNSE's system on or after February 1, 2013 shall pay the average of the REST surcharge paid by members of their customer class. The average price by class shall be the following: Monthly Cap For Residential Customers: For Commercial Customers: For Industrial Customers: For Lighting (PSHL):	 Monthly Cap $3.04 per month $20.98 per month $9,911 per month $3.82 per month	January 1, 2014	74166

Filed By: Kentton C. Grant
Title: Vice President
District: Entire Electric Service Area

Rate: Statement of Charges
Effective: January 1, 2014
Decision No.:

UniSourceEnergy SERVICES

UNS Electric, Inc.

Original Sheet No.: 801-2

Superseding:

Description	Rate	Effective Date	Decision No.
Rider R-8 – Lost Fixed Cost Recovery (LFCR) Mechanism Lost Fixed Cost Recovery (LFCR) Mechanism	$X.XX per kW $X.XX per kW	PENDING	PENDING
Rider R-9 – Transmission Cost Adjustor (TCA) – $/kW charge	$X.XX per kW	PENDING	PENDING

UniSourceEnergy SERVICES

UNS Electric, Inc.

Original Sheet No.: 802
Superseding:

Bill Estimation Methodologies

UNS Electric, Inc. (UNS Electric) regularly encounters situations in which UNS Electric cannot obtain a complete and valid meter read. No matter the cause of the need to estimate the read, the following methods are used depending on the circumstances.

PREVIOUS YEAR FORMULA

SAME CUSTOMER WITH AT LEAST ONE YEAR OF HISTORY

UNS Electric would generate a bill based on customer usage from the previous year using the "PREVIOUS YEAR" formula as follows:

LAST YEAR'S USAGE FOR SAME MONTH / NUMBER OF DAYS IN BILLING PERIOD = PER DAY USAGE
(FOR "TIME OF USE" (TOU) THIS WOULD BE APPLIED TO EACH PERIOD)

PER DAY USAGE X NUMBER OF DAYS IN THIS MONTH'S CYCLE = ESTIMATED USAGE
(FOR TOU THIS WOULD BE APPLIED TO EACH PERIOD)

PREVIOUS MONTH FORMULA

SAME CUSTOMER AT SAME PREMISE WITH LESS THAN ONE YEAR OF HISTORY

UNS Electric would generate a bill based on customer usage from the previous month using the "PREVIOUS MONTH" formula as follows:

LAST MONTHS USAGE / NUMBER OF DAYS IN BILLING PERIOD = PER DAY USAGE
(FOR TOU THIS WOULD BE APPLIED TO EACH PERIOD)

PER DAY USAGE x NUMBER OF DAYS IN THIS MONTH'S CYCLE = ESTIMATED USAGE
(FOR TOU THIS WOULD BE APPLIED TO EACH PERIOD)

TREND FORMULA

NEW CUSTOMER AT SAME PREMISE

UNS Electric would generate a bill using the "TREND" formula, based on customer's usage trend as described below:

UNS Electric's customer information system (CIS) would generate a bill based on trend. Customers are assigned to a Trend area which differentiate consumption based on different geographic areas. Secondly, the customer is assigned to a Trend class which is used to differentiate consumption trends based on the type of service and type of property. An example of this would be residential, commercial, and industrial usage. Thirdly, all consumption is identified using unit of measure code and a time of use code. Within UNS Electric's CIS, a trend record is created from each billed service. This record becomes part of a trend table. During estimation, consumption from three prior bill cycles is compared to the consumption from the same cycle in the previous month to determine a trend. This trend, plus a tolerance, is used to create a usage amount for bill estimation.

CUSTOMER'S USAGE IN PREVIOUS PERIOD/ AVERAGE CUSTOMER'S USAGE IN PREVIOUS PERIOD X AVERAGE CUSTOMER'S USAGE IN CURRENT PERIOD = ESTIMATED CONSUMPTION FOR REGISTER READ

NO HISTORY

UNS Electric would not generate a bill until a good meter read was acquired then use known consumption to estimate previous bills.

Demand Estimate

For accounts that have a demand billing component UNS Electric collects interval data. This interval data is used to manually estimate demands using the following methodologies:

SAME CUSTOMER AT SAME PREMISE WITH AT LEAST ONE YEAR OF HISTORY

UNS Electric would generate a bill based on customer usage from the previous year using the following formula:

LAST YEAR'S DEMAND FOR SAME MONTH = ESTIMATED DEMAND

NEW CUSTOMER AT SAME PREMISE WITH AT LEAST ONE YEAR OF HISTORY

UNS Electric would generate a bill based on customer usage from the previous month using the following formula:

LAST MONTHS DEMAND = ESTIMATED DEMAND

SAME CUSTOMER AT SAME PREMISE WITH LESS THAN ONE YEAR OF HISTORY

UNS Electric would generate a bill based on customer usage from the previous month using the following formula:

LAST MONTHS DEMAND = ESTIMATED DEMAND

NEW CUSTOMER AT SAME PREMISE WITH LESS THAN ONE YEAR OF HISTORY

UNS Electric would generate a bill based on customer usage from the previous month using the following formula:

LAST MONTHS DEMAND = ESTIMATED DEMAND

NO HISTORY

UNS Electric would not generate a bill until a good demand read was acquired then use known demand to estimate previous bills.

GUIDELINES FOR ELECTRIC LOAD CURTAILMENT

INTRODUCTION

While UNS Electric, Inc. (UNS Electric) strives to provide an uninterrupted supply of electricity, conditions could exist on UNS Electric's electric power system where:

- The power supply would be insufficient to meet the electric load demands during peak period. This condition will be classified as a "Bulk Power Supply Emergency".
- The transmission delivery would be insufficient to meet electric load demands. This will be considered a "Transmission Emergency".

Should a "Bulk Power Supply Emergency" or a "Transmission Emergency" seem imminent the following steps will be implemented as appropriate.

1. Evaluate alternative power supplies or Company owned generation.
2. Call on Interruptible Customers to interrupt load.
3. Reschedule any scheduled maintenance of the transmission system.
4. Reduce all non-essential Company uses such as office lighting, electric cooling and heating, etc.
5. Contact Western Area Power Administration for possible assistance.
6. Contact Nevada Energy and Aha Macav Power Service for possible emergency assistance.
7. Reduce distribution feeder voltage up to 5%, where possible.

Should additional remedial action be warranted, UNS Electric will make a public appeal via local radio stations and television for the voluntary curtailment of electric consumption by its customers.

Should voluntary curtailment result in insufficient load reduction to mitigate the emergency, the Arizona Corporation Commission (ACC) has directed UNS Electric to institute mandatory involuntary curtailment, pursuant to ACC Decision No. 42097 and Arizona Administrative Code R14-2-208, Provision of Service, Paragraph E.

CUSTOMER LOAD DEFINITIONS

Essential Loads: Loads that are necessary to the health, safety and welfare of the public or some portion or member thereof, such as police, fire service, national defense, sewage facilities, domestic water facilities, hospitals, essential medical devices (such as iron lungs, oxygen pumps or similar uses) and where uninterrupted electric service is essential to the providing of such essential uses or services. These loads will not be interrupted unless an area needs to be dropped to maintain the stability of the electric system, or adequate on-site generation is available to cover the Essential load.

Critical Loads: That portion of the electric load of those non-residential customers which in the event of interruption of service would cause excessive damage to the equipment or material in process or perishable items or where such interruption would create grave hazards to the employee's or the public. These areas will not be interrupted unless an area needs to be dropped to maintain the stability of the electric system, or adequate on–site generation is available to cover the Critical load level.

Others: All customers not meeting the above definitions will be interrupted, with or without, notice if voluntary curtailment measures are not sufficient to alleviate the problem.

LOAD CURTAILMENT NOTIFICATION

UNS Electric's load is served primarily by Tucson Electric Power Company (TEP) under a Power Services Agreement. Energy from TEP resources is delivered to UNS Electric's load areas in Mohave and Santa Cruz Counties through the bulk power transmission system of the Western Area Power Administration (WAPA). UNS Electric's load is in the control area of TEP for Power Supply purposes and in WAPA's control area for Transmission purposes. Either control area could initiate a call for load curtailment due to a system or regional power supply or transmission emergency. Local Transmission Emergencies could occur, affecting portions of UNS Electric's service area only.

Should either voluntary or involuntary load curtailment become necessary:

1. UNS Electric's Mohave Dispatch Center will be notified of a regional curtailment emergency by either TEP's Energy Control Center or the WAPA's Transmission Dispatch Desk.

2. UNS Electric's Mohave Dispatch Center will notify Mohave Management of the nature and type of curtailment emergency.

3. Mohave Management will notify Company Management, District Operations Management and the ACC of the nature of the curtailment.

4. District Customer Service Personnel will, if time permits:

   - Notify Interruptible Customer to drop load;
   - Notify key customers of the nature of the curtailment and request voluntary load; reductions or activation of on-site generation (if any);
   - Call local radio stations to request public announcements;
   - Notify County Emergency Management, and;
   - Notify City and County Police and Fire Departments.

5. District Operations Personnel will notify supervisory and assigned staff to report to their respective duty stations.

VOLUNTARY LOAD CURTAILMENT

If conditions allow for advanced notification, UNS Electric shall evaluate activating its own generation and will ask the public for a voluntary curtailment. In addition, all Interruptible Customers and Large Load Customers will be called by pre-assigned individuals to request load interruption as provided for under the Tariff or voluntary load reduction where no tariff exists.

INVOLUNTARY LOAD CURTAILMENT

Should the voluntary curtailment result in an insufficient reduction in load, Division Operations Management will determine the amount of additional load to curtail. Blackout periods are to be approximately 30 to 60 minutes in duration.

After proper notification Division Operations Management will utilize the capabilities of the System Control and Data Acquisition System ("SCADA") and manual operation to shed load throughout the District operations areas (Kingman, Lake Havasu City and Santa Cruz) based on circuit classification, unless the emergency is of a local nature. Individual Distribution Circuits will be classified for curtailment, according to the type of customers served on that feeder, as defined in the Guide to Circuit Loading for each District.

DISTRIBUTION CIRCUIT CLASSIFICATIONS

Essential: Circuits that serve essential customers will be so identified and will not be interrupted, unless an area must be dropped to maintain electric system stability.

Critical: Circuits that serve critical customers will be so identified and will not be interrupted, unless an area must be dropped to maintain electric system stability. Critical Customers will be notified and required to curtail the non-critical portions of their load. If a customer with a critical load refuses or fails to curtail their electric consumption down to the critical load, the customer shall not be considered to have a critical load and can be curtailed 100%.

Large Load Customers:

1. Circuits that serve Large Load Customers will be so identified and will not be interrupted until proper notice is given, unless an area must be dropped to maintain electric system stability.

2. Customers, who can take 100 percent curtailment if given sufficient notice, will be rotated on the same schedule as the "Others" circuits until the emergency is terminated by UNS Electric.

3. Customers served by circuits that cannot be rotated* will be notified. They will be required to reduce their load to their pre-determined level, in a rotating order and with a frequency or repetition necessary to meet the emergency situation.

Others:

Circuits that serve all remaining customers will be so identified and rotated without notice. Rotation of these circuits will be for a duration and frequency necessary to meet the emergency situation.

Customers on a non-rotating circuit* who normally could be rotated, will be required to curtail load. If these customers do not curtail to the extent needed, UNS Electric may discontinue or disconnect service and refuse to re-establish service until after the emergency condition is terminated.

***Non-Rotating Circuits are so classified based on the specific nature of the electric distribution system or due to having critical or essential customers served by that feeder.**

EMERGENCY INVOLUNTARY CURTAILMENT

In the event a major electrical disturbance threatens the interconnected Southwest system with blackout conditions or/and unexpected shortages of power that do not allow for the implementation of the Electric Curtailment Plan, emergency devices such as under-frequency/under-voltage load shedding relays will automatically shed load to maintain system stability, and the Company will resort to emergency operating procedures. These circuits will remain out of service until the Company can move from the emergency procedure to the Electric Load Curtailment Plan or the emergency is resolved.

INVOLUNTARY CURTAILMENT BY TRANSMISSION PROVIDER

UNS Electric purchases transmission service from the WAPA to deliver its power supply requirements. WAPA's Transmission Dispatch Desk would notify the UNS Electric Arizona Dispatch Center of situations on the bulk transmission system requiring load curtailment in the Company's service area.

ELECTRIC LOAD AND CURTAILMENT PLAN

A detailed electric load and curtailment plan will be kept on file with the ACC. This plan will contain specific procedures for implementation of the above, along with the name(s) and telephone number(s) of the appropriate Company personnel to contact in the event implementation of the plan becomes necessary. Updates to the plan will be filed annually or when they occur. Its amendments will become effective upon submission to the ACC.

The Company will contact the Director of the Utilities Division, or their designee, as soon as practical for any curtailment pursuant to this Tariff.

UniSourceEnergy SERVICES

UNS Electric, Inc.

Original Sheet No.: 804
Superseding:

Rates for Power and Energy Transactions With Qualifying Facilities That Receive Full Requirements 100 kW or Less (QF-A)

AVAILABILITY
Throughout the entire area where the facilities of the Company are of adequate capacity and are adjacent to the premises. For all Qualifying Facilities (QF) that have entered into a Service Agreement with the Company.

APPLICABILITY
To all QFs with 100 kW or less operating in the Buy/Sell Mode for full requirements, supplemental power, stand-by power, and maintenance power service.

CHARACTER OF SERVICE
Electric sales to the Company must be single or three phase, 60 Hertz, at a standard voltage subject to availability at the premises. The QF will have the option to sell energy to the Company at a voltage level different from that for purchases from the Company, however, the QF will be responsible for all costs incurred to accommodate such an arrangement.

DEFINITIONS

1. Qualifying Facilities - Cogeneration and small power production facilities where the facility's generator(s) and load are located at the same premise and that otherwise meet qualifying criteria for size, fuel use, efficiency and ownership as promulgated in 18 C.F.R., Chapter I, Part 292, Subpart B of Federal Energy Regulatory Commission regulations.

2. Buy/Sell Mode of Operation - The QF's total generation output is delivered to the Company and the QF's full requirements for service are provided by the Company or no electric requirements are required by the QF.

3. Full Requirements Service - Any instance whereby the Company provides all the electric requirements of a QF.

4. Energy - Electric energy which is supplied by the QF.

5. Firm Capacity - Capacity available, upon demand, at all times (except for forced outages and scheduled maintenance) during the period covered by the Agreement from the QF with an availability factor of at least 80%, as defined by the North American Electric Reliability Council.

6. Net Energy - The total kilowatt hours (kWh) sold to the QF by the company less the total kWhs purchased by the Company from the QF.

7. Supplemental Power - Electric capacity and energy supplied by the Company regularly used by the QF in addition to that which the facility generates itself.

8. Stand-by Power - Electric capacity and energy supplied by the Company to replace energy ordinarily generated by a facility's own generation equipment during an unscheduled outage of the facility.

9. Maintenance Power - Electric capacity and energy supplied by the Company during scheduled outages of the QF.

10. Purchase Agreement - Agreements for the purchase of electric energy and capacity from and the sale of power to the QF entered into between the Company and QF.

Net Bill method:
The kWhs sold to the Company shall be subtracted from the kWhs purchased from the Company. If the calculation is positive, the Net Energy kWhs received from the Company will be priced at the applicable Electric Rate under which the QF would otherwise purchase its full requirements service. If the calculation is negative, the Net Energy kWhs delivered to the Company will be priced at the purchase rate shown below.

RATES FOR SALES TO QFsThe rates and billings for sales of energy and capacity to the QF shall be billed pursuant to the Customer's standard offer tariff otherwise applicable under full requirements service.

RATES FOR PURCHASES FROM QFs
Customer charges shall be billed pursuant to the Customer's standard offer tariff otherwise applicable under full requirements of service.

Rates for Energy purchased from the QF shall be priced at short-run avoided cost.

Rates for Firm Capacity purchased from the QF shall be priced at avoided cost based upon deferral of capacity additions indicated in Company's resource plan.

ADJUSTMENTS
Purchased Power Fuel Adjuster Clause (PPFAC) is a per kWh monthly adjustment in accordance with the PPFAC Rider No. 1. The PPFAC reflects increases or decreases in the cost to the Company of energy either generated or purchased above or below the base cost per kWh sold. See Rider-1 for current rate.

CONTRACT PERIOD
As provided for in the Service Agreement.

TERMS AND CONDITIONS
Subject to:

The Service Agreement, and

A delayed payment charge as stated in the general rules and regulations will be applied to account balances carried forward from prior billings.

METER CONFIGURATION

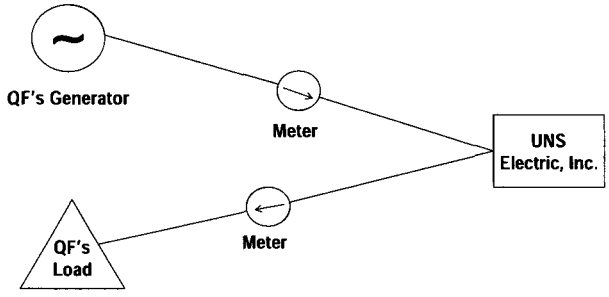

UNS ELECTRIC STATEMENT OF CHARGES

For all additional charges and assessments approved by the Arizona Corporation Commission (ACC) see the UNS Electric Statement of Charges which is available on UNS Electric's website at www.uesaz.com.

TAX CLAUSE

To the charges computed under the above rate, including any adjustments, shall be added the applicable proportionate part of any taxes or governmental impositions which are or may in the future be assessed on the basis of gross revenues of the Company and/or the price or revenue from the electric energy or service sold and/or the volume of energy generated or purchased for sale and/or sold hereunder.

RULES AND REGULATIONS

The standard Rules and Regulations of the Company as on file with the ACC shall apply where not inconsistent with this Rate.

UniSourceEnergy SERVICES

UNS Electric, Inc.

Original Sheet No.: 805
Superseding:

Rates for Power and Energy Transactions With Qualifying Facilities That Receive Partial Requirements 100 kW or Less (QF-B)

AVAILABILITY
Throughout the entire area where the facilities of the Company are of adequate capacity and are adjacent to the premises. For all Qualifying Facilities (QF) that have entered into a Service Agreement with the Company.

APPLICABILITY
To all QFs with 100 kW or less operating in the Partial Requirements Mode for partial requirements, supplemental power, stand-by power, and maintenance power service.

CHARACTER OF SERVICE
Electric sales to the Company must be single or three phase, 60 Hertz, at a standard voltage subject to availability at the premises. The QF will have the option to sell energy to the Company at a voltage level different from that for purchases from the Company, however, the QF will be responsible for all costs incurred to accommodate such an arrangement.

DEFINITIONS

1. Qualifying Facilities - Cogeneration and small power production facilities where the facility's generator(s) and load are located at the same premise and that otherwise meet qualifying criteria for size, fuel use, efficiency and ownership as promulgated in 18 C.F.R., Chapter I, Part 292, Subpart B of Federal Energy Regulatory Commission regulations.

2. Partial Requirements Mode of Operation - A QF's generation output first goes to supply its own electric requirements with any excess energy (over and above its own requirements) then being sold to the Company. The Company supplies the QF's electric requirements not met by the QF's own-generation facilities. This also may be referred to as the "parallel mode" of operation.

3. Energy - Electric energy which is supplied by the QF

4. Firm Capacity - Capacity available, upon demand, at all times (except for forced outages and scheduled maintenance) during the period covered by the Agreement from the QF with an availability factor of at least 80%, as defined by the North American Electric Reliability Council.

5. Net Energy - The total kilowatt hours (kWh) sold to the QF by the company less the total kWhs purchased by the Company from the QF.

6. Supplemental Power - Electric capacity and energy supplied by the Company regularly used by the QF in addition to that which the facility generates itself.

7. Stand-by Power - Electric capacity and energy supplied by the Company to replace energy ordinarily generated by a facility's own generation equipment during an unscheduled outage of the facility.

8. Maintenance Power - Electric capacity and energy supplied by the Company during scheduled outages of the QF.

9. Purchase Agreement - Agreements for the purchase of electric energy and capacity from and the sale of power to the QF entered into between the Company and QF.

RATES FOR SALES TO QFs
The rates and billings for sales of energy and capacity to the QF shall be billed pursuant to the Customer's standard offer tariff otherwise applicable under full requirements service.

RATES FOR PURCHASES FROM QFs
Customer charges shall be billed pursuant to the Customer's standard offer tariff otherwise applicable under full requirements of service.

Rates for Energy purchased from the QF shall be priced at short-run avoided cost.

Rates for Firm Capacity purchased from the QF shall be priced at avoided cost based upon deferral of capacity additions indicated in Company's resource plan.

ADJUSTMENTS
Purchased Power Fuel Adjuster Clause (PPFAC) is a per kWh monthly adjustment in accordance with the PPFAC Rider No. 1. The PPFAC reflects any increases or decreases in the cost to the Company of energy either generated or purchased above or below the base cost per kWh sold. See Rider-1 for current rate.

METER CONFIGURATION

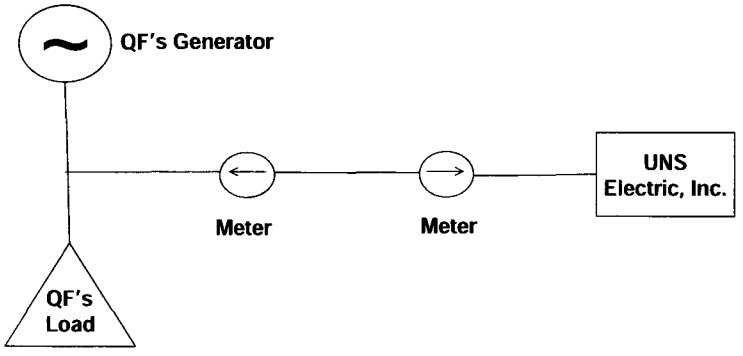

CONTRACT PERIOD
As provided for in the Service Agreement.

TERMS AND CONDITIONS
Subject to:

The Service Agreement, and

A delayed payment charge as stated in the general rules and regulations will be applied to account balances carried forward from prior billings.

UNS ELECTRIC STATEMENT OF CHARGES

For all additional charges and assessments approved by the Arizona Corporation Commission (ACC) see the UNS Electric Statement of Charges which is available on UNS Electric's website at www.uesaz.com.

TAX CLAUSE

To the charges computed under the above rate, including any adjustments, shall be added the applicable proportionate part of any taxes or governmental impositions which are or may in the future be assessed on the basis of gross revenues of the Company and/or the price or revenue from the electric energy or service sold and/or the volume of energy generated or purchased for sale and/or sold hereunder.

RULES AND REGULATIONS

The standard Rules and Regulations of the Company as on file with the ACC shall apply where not inconsistent with this Rate.

Rates for Power and Energy Transactions With Qualifying Facilities That Receive Optional Service Over 100 kW (QF-C)

AVAILABILITY
Throughout the entire area where the facilities of the Company are of adequate capacity and are adjacent to the premises. For all Qualifying Facilities (QF) that have entered into a Service Agreement with the Company.

APPLICABILITY
To all QFs with over 100 kW operating in the Partial Requirements Mode for partial requirements, supplemental power, stand-by power, and maintenance power service.

CHARACTER OF SERVICE
Electric sales to the Company must be single or three phase, 60 Hertz, at a standard voltage subject to availability at the premises. The QF will have the option to sell energy to the Company at a voltage level different from that for purchases from the Company, however, the QF will be responsible for all costs incurred to accommodate such an arrangement.

DEFINITIONS

1. Qualifying Facilities - Cogeneration and small power production facilities where the facility's generator(s) and load are located at the same premise and that otherwise meet qualifying criteria for size, fuel use, efficiency and ownership as promulgated in 18 C.F.R., Chapter I, Part 292, Subpart B of Federal Energy Regulatory Commission regulations.

2. Partial Requirements Mode of Operation - A QF's generation output first goes to supply its own electric requirements with any excess energy (over and above its own requirements) then being sold to the Company. The Company supplies the QF's electric requirements not met by the QF's own-generating facilities. This also may be referred to as the "parallel mode" of operation.

3. Energy - Electric energy which is supplied by the QF.

4. Firm Capacity - Capacity available, upon demand, at all times (except for forced outages and scheduled maintenance) during the period covered by the Agreement from the QF with an availability factor of at least 80%, as defined by the North American Electric Reliability Council.

5. Net Energy - The total kilowatt hours (kWh) sold to the QF by the company less the total kWhs purchased by the Company from the QF.

6. Supplemental Power - Electric capacity and energy supplied by the Company regularly used by the QF in addition to that which the facility generates itself.

7. Stand-by Power - Electric capacity and energy supplied by the Company to replace energy ordinarily generated by a facility's own generation equipment during an unscheduled outage of the facility.

8. Maintenance Power - Electric capacity and energy supplied by the Company during scheduled outages of the QF.

9. Purchase Agreement - Agreements for the purchase of electric energy and capacity from and the sale of power to the QF entered into between the Company and QF.

RATES FOR SALES TO QFs

Supplemental Service:

A. Service Charge - The service charge shall be the basic service charge using the otherwise applicable retail Rate.

B. Energy Charge - The energy charge shall be the energy charge using the otherwise applicable retail Rate.

C. Demand Charge - The demand charge shall be the demand charge using the otherwise applicable retail Rate and it shall apply only to supplemental power and not to total requirements.

Standby Service:

A. Service Charge - The service charge shall be the basic service charge using the otherwise applicable retail Rate.

B. Energy Charge - The energy charge is $0.045 per kWh per month.

C. Demand Charge - The demand charge shall be the product of $27.83 per kW per month and the probability (*) that the QF has an unscheduled outage at the time of the company's peak.

(*) This value is initially set at ten percent (10%) for the first year and reset annually based upon actual experience with the QF.

Maintenance Service:

A. Service Charge - The service charge shall be the basic service charge using the otherwise applicable retail Rate.

B. Energy Charge - The energy charge is $0.045 per kWh per month.

C. Maintenance Service - Must be scheduled with the Company and may only be scheduled during the period October through April.

Only one service charge will be applied for each billing period.

RATES FOR PURCHASES FROM QFs

Customer charges shall be billed pursuant to the Customer's standard offer tariff otherwise applicable under full requirements of service.

Rates for Firm Capacity purchased from the QF shall be priced at long-run avoided cost based upon deferral of capacity additions indicated in Company's resource plan.

Rates for capacity associated with Firm Capacity shall be as provided for in the Service Agreement.

ADJUSTMENTS

Purchased Power Fuel Adjuster Clause (PPFAC)is a per kWh monthly adjustment in accordance with the PPFAC Rider No. 1. The PPFAC reflects any increases or decreases in the cost to the Company of energy either generated or purchased above or below the base cost per kWh sold. See Rider-1 for current rate.

METER CONFIGURATION

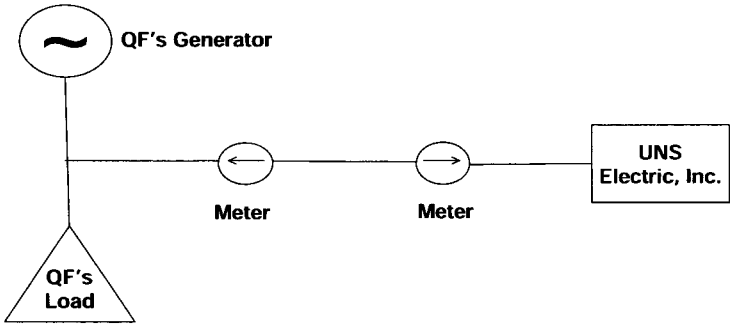

CONTRACT PERIOD
As provided for in the Service Agreement.

TERMS AND CONDITIONS
Subject to:

The Service Agreement, and

Shall be interconnected with and can operate in parallel and in phase with the Company's existing distribution system. The Interconnection must comply with the Company's interconnection requirements, and

Shall take service as a Primary Service and Metering Customer (the Company shall not provide voltage transformation on the customer's premise).

A delayed payment charge as stated in the general rules and regulations will be applied to account balances carried forward from prior billings.

UNS ELECTRIC STATEMENT OF CHARGES
For all additional charges and assessments approved by the Arizona Corporation Commission (ACC) see the UNS Electric Statement of Charges which is available on UNS Electric's website at www.uesaz.com.

TAX CLAUSE
To the charges computed under the above rate, including any adjustments, shall be added the applicable proportionate part of any taxes or governmental impositions which are or may in the future be assessed on the basis of gross revenues of the Company and/or the price or revenue from the electric energy or service sold and/or the volume of energy generated or purchased for sale and/or sold hereunder.

RULES AND REGULATIONS
The standard Rules and Regulations of the Company as on file with the ACC shall apply where not inconsistent with this Rate.

LOST FIXED COST RECOVERY MECHANISM

PLAN OF ADMINISTRATION

UNS Electric, Inc.
Lost Fixed Cost Recovery Mechanism
Plan of Administration

Table of Contents

1. General Description 1
2. Definitions 1
3. LFCR Annual Incremental Cap 3
4. Filing and Procedural Deadlines 4
5. Compliance Reports 4

1. General Description

This document describes the plan of administration for the Lost Fixed Cost Recovery Mechanism ("LFCR") mechanism approved for UNS Electric, Inc. ("UNS Electric" or "Company") by the Arizona Corporation Commission ("ACC") on xxx xx, xxxx in Decision No. xxxxx. The LFCR mechanism provides for the recovery of lost fixed costs, as measured by a reduction in non-fuel revenue, associated with the amount of energy efficiency ("EE") savings and distributed generation ("DG") that is authorized by the Commission and determined to have occurred. Costs to be recovered through the LFCR include the portion of transmission and distribution costs included in base rates exclusive of the Customer Charge and 50% of the demand rates in effect.

2. Definitions

Applicable Company Revenues – The amount of revenue generated by sales to retail customers, for all applicable rate schedules, less the amount attributable to sales to those residential customers who chose the Fixed Cost Option.

Current Period – The most recent adjustment year.

Demand Stability Factor – Fifty percent of Demand-based revenue (excluding any purchased power and fuel costs) produced by base rates.

Delivery Revenue – The amount of revenue determined at the conclusion of a rate case by multiplying each participating rate class' adjusted test year billing determinants (kWh or kW) by their approved distribution and transmission related charges. This will be determined by reducing each class' total retail revenue by the customer charge, generation related revenue, purchased power and fuel costs and the Demand Stability Factor.

Distributed Generation ("DG") Savings – The amount of kWh sales reduced by DG. UNS Electric will use meter data for determining the kWh or kW lost through the implementation of DG systems. Where the meter data is not available, the lost sales will be quantified using statistical verification, output profile or other Commission-authorized methods as appropriate. Each year, UNS Electric will use actual data through December to calculate the savings. The calculation of DG savings will consist of the following by class:

1. Cumulative Verified: The total kWh or kW reduction as metered each year less the total kWh or kW reduction metered in UNS Electric's most recent general rate case test year (July 1, 2011 through June 30, 2012). The initial Cumulative Verified term of the LFCR will begin on January 1, 2013.
2. Current Period: The annual kWh or kW produced by the cumulative total of DG installations since the end of the test year used in UNS Electric's most recent general rate case.
3. The only DG Savings that will be excluded from the calculated Lost Fixed Cost Revenue calculation are those kWh or kW that were lost as the result of actions by customers in excluded rate classes or that chose the Fixed Cost Option.

Fixed Cost Option – The rate schedule choice for residential customers who prefer contributing to the recovery of Lost Fixed Cost Revenue in the form of an optional fixed rate added as an incremental charge to the Customer Charge in the applicable residential tariff rate. The total dollars paid as an incremental amount added to the otherwise effective Customer Charge will be accumulated over the Current Period and used to reduce the total Lost Fixed Cost Revenue recovered as part of the LFCR adjustment. The variable LFCR adjustment shall not be applied to residential customers who choose the Fixed Cost option. This rate will be reflected as an incremental addition to the customer charge on the otherwise effective tariff and made available to customers at the time of the first LFCR adjustment. Customers choosing this fixed option within the first twelve months subsequent to the initial effective date of the LFCR will be allowed to change back to the volumetric option one time without any penalties. After the initial twelve month period, customer will be required to stay on whichever option they choose for twelve full months before a change can be made.

EE Programs – Any program approved in UNS Electric's Energy Efficiency/Demand Side Management ("EE/DSM") implementation plan or Energy Efficiency Resource Plan.

EE Savings – The amount of sales, expressed in kWh or kW, reduced by Energy Efficiency activities as demonstrated by the Measurement, Evaluation, and Report ("MER") conducted for UNS Electric's EE Programs. Since this process will be a thorough review of the Company's EE activities and will determine the total kWh or kW lost as a result of those activities. As part of this filing the Commission Staff will have the option of reviewing any portion of the filing they deem necessary to verify the filing's accuracy. EE Savings shall be quantified based on the accumulated lost kWh or kW occurring since January 1, 2013, and shall be reset based on EE related losses as of the end of the test year in each subsequent rate case. The calculation of EE Savings will consist of the following by class:

1. Cumulative Verified: The cumulative total kWh or kW reduction as determined by the MER recognizing that the cumulative total is reset (to zero) at the end of each of UNS Electric's most recent rate case. The first such reset will be July 1, 2012, (the end of the Test Year in Decision xxxxx, dated xx,). The initial Cumulative Verified term of the LFCR will begin on January 1, 2013.
2. Current Period: The annual EE related sales reductions (kWh or kW). Each year, UNS Electric will use actual MER data through December to calculate savings.

3. Excluded kWh reduction: The reduction of recoverable EE Savings calculated by subtracting the amount of EE savings actually achieved by customers on Excluded Rate Schedule if included in the total reported in the annual EE/DSM filing.

Effective Period – The twelve month period beginning with July 1 of each year.

Excluded Rate Schedule – The LFCR mechanism shall not apply to the lighting rate class.

LFCR Adjustment – An amount calculated by dividing Lost Fixed Cost Revenue (As reduced by the total incremental fixed cost option dollars paid by the residential customers who have chosen the Fixed Cost Option and will be based on the incremental increase in the customer charge they have paid over the twelve-months during the Current Period.) by the Current Period retail revenue (less the estimated sales to the residential customers who chose the Fixed Cost Option) during the Effective Period for the participating rate classes. This percentage based LFCR Adjustment will be presented on the customer's bills as two separate charges. These two charges will be developed by applying the weighted average proportion of the Energy Efficiency related lost revenues and the Distributed Generation related lost revenues as a proportion of total lost revenues falling under the 1% cap referenced herein. The weighted average proportions will be as shown on Schedule 3 of this Plan of Administration. These two separate percentage adjustment rates will be applied to all customer bills, excluding those on Excluded Rate Schedules.

Lost Fixed Cost Rate – A rate determined at the conclusion of a rate case by taking the sum of allowed Delivery Revenue (which excludes the Customer Charge, the generation component in rates and purchased power and fuel) for each rate class and dividing each by their respective class adjusted test year kWh and/or kW billing determinants.

Lost Fixed Cost Revenue – The amount of fixed costs not recovered by the utility because of EE Savings and DG Savings during the measurement period. This amount is calculated by multiplying the Lost Fixed Cost Rate by Recoverable kWh Savings, by rate class.

Prior Period – The twelve months in the calendar year preceding the Current Period.

Recoverable kWh Savings – The sum of EE Savings and DG Savings by applicable rate class.

3. LFCR Annual Incremental Cap

The total LFCR Adjustment will be subject to an annual 1% year over year cap based on Applicable Company Revenues. If the annual incremental LFCR Adjustment results in a surcharge in excess of 1%, in total, of Applicable Company Revenues, any amount in excess of the 1% cap will be deferred for collection until the next year its inclusion does not result in the 1% year-over-year cap being exceeded. Any deferred amounts will be collected in a subsequent year or rolled into the next rate case, whichever occurs first. Where the 1% cap limits the recovery of deferrals in any program year, and thus moves their recovery to the following year, a first-in, first-out ("FIFO") approach will be applied. In connection therewith, the new surcharge billed in the following year will first recover any such carried-over deferrals, and then recover new deferrals arising in that following year. The one-year Nominal Treasury Constant Maturities rate contained in the Federal Reserve Statistical Release H-15 or its successor publication will be applied annually to any deferred balance. The interest rate shall be adjusted annually and shall be that annual rate applicable to the first business day of the calendar year.

4. *Filing and Procedural Deadlines*

UNS Electric will file the calculated Annual LFCR Adjustments, including all Compliance Reports, with the Commission for the previous year by May 15th. Staff will use its best efforts to process the matter based on the results of the Company's annual EE/DSM and Renewable Energy Standard Tariff ("REST") filings such that the new LFCR Adjustments may go into effect by July 1st of each year. However, the new LFCR Adjustments will not go into effect until approved by the Commission.

5. *Compliance Reports*

UNS Electric will provide comprehensive compliance reports to Staff and the Residential Utility Consumer Office by May 15th of each year. The information contained in the Compliance Reports will consist of the following schedules:

- Schedule 1: LFCR Annual Percentage Adjustment Rate
- Schedule 2: LFCR Annual Incremental Cap Calculation
- Schedule 3: LFCR Calculation
- Schedule 4: LFCR Test Year Rate Calculation
- Schedule 5: Delivery Revenue Calculation

SCHEDULES

UNS Electric, Inc.
Lost Fixed Cost Recovery Mechanism
Schedule 1: LFCR Annual Adjustment Rate

Line No.	(A) Annual Adjustment	(B) Reference		(C) Total
	Energy Efficiency Related Adjustment			
1	Total Lost Fixed Cost Revenue for Current Period	Sch 2, Line 13 x Sch 3, Line 103, Col F	$	-
2	Forecast of Applicable Company's Revenues	Schedule 2, Line 1		-
3	Percentage Adjustment Applied to Customer's Bills for E	(Line 1 / Line 2)		0.0000%
	Distributed Generation Related Adjustment			
4	Total Lost Fixed Cost Revenue for Current Period	Sch 2, Line 13 x Sch 3, Line 104, col F	$	-
5	Forecast of Applicable Company's Revenues	Schedule 2, Line 1		-
6	Percentage Adjustment Applied to Customer's Bills for D	(Line 4 / Line 5)		0.0000%

UNS Electric, Inc.
Lost Fixed Cost Recovery Mechanism
Schedule 2: LFCR Annual Incremental Cap Calculation

Line No.	(A) LFCR Annual Incremental Cap Calculation	(B) Reference		(C) Totals
1	Applicable Company Revenues		$	
2	Allowed Cap %			1.00%
3	Maximum Allowed Incremental Recovery	(Line 1 * Line 2)	$	-
4	Total Lost Fixed Cost Revenue	Schedule 3, Line 105, Column C	$	-
5	Total Deferred Balance from Previous Period	Previous Filing, Schedule 2, Line 11, Column C		-
6	Annual Interest Rate			0.00%
7	Interest Accrued on Deferred Balance	(Line 5 * Line 6)		-
8	Total Lost Fixed Cost Revenue Current Period	(Line 4 + Line 5 + Line 7)	$	-
9	Lost Fixed Cost Revenue from Prior Period	Previous Filing, Schedule 2, Line 13, Column C	$	-
10	Total Incremental Lost Fixed Cost Revenue for Current Year	(Line 8 - Line 9)	$	-
11	Amount in Excess of Cap to Defer	(Line 10 - Line 3)	$	-
12	Incremental Period Adjustment	[(Line 10 - Line 11)/ Line 1]		-
13	Total Lost Fixed Cost Revenue for Current Period	(Line 8 - Line 11)	$	-

UNS Electric, Inc.
Lost Fixed Cost Recovery Mechanism
Schedule 3: LFCR Calculation

Line No.	(A) LFCR Fixed Cost Revenue Calculation	(B) Reference		(C) Totals	(D) Units	(E)	(F)
	Residential						
	Energy Efficiency Savings						
1	Current Period				kWh		
2	% of Residential Customers choosing fixed-option			0.0%			
3	Excluded kWh reduction	(Line 1 * Line 2)		-	kWh		
4	Net - Current Period	(Line 1 - Line 3)		-	kWh		
5	Prior Period kWh EE losses	Previous Filing, Schedule 3, Line 6, Column C		-	kWh		
6	Cumulative Recoverable kWh savings	(Previous Filing, Schedule 3, Line 6, Column C + Line 4)		-	kWh		
7	Total Recoverable EE Savings	Line 6		-	kWh		
8	Residential - Lost Fixed Cost Rate	Schedule 4, Line 3, Column C	$	0.0212	$/kWh		
9	Residential - Lost Fixed Cost Revenue Relating to EE	(Line 7 * Line 8)	$	-			
	Distributed Generation						
10	Current Period				kWh		
11	% of Residential Customers choosing fixed-option			0.0%			
12	Excluded kWh reduction	(Line 10 * Line 11)		-	kWh		
13	Net - Current Period	(Line 10 - Line 12)		-	kWh		
14	Prior Period kWh DG losses	Previous Filing, Schedule 3, Line 15, Column C		-	kWh		
15	Cumulative Recoverable kWh savings	(Previous Filing, Schedule 3, Line 15, Column C + Line 13)		-	kWh		
16	Total Recoverable DG Savings	Line 15		-	kWh		
17	Residential - Lost Fixed Cost Rate	Schedule 4, Line 3, Column C	$	0.0212	$/kWh		
18	Residential - Lost Fixed Cost Revenue Relating to DG	(Line 16 * Line 17)	$	-			
	Small General Service						
	Energy Efficiency Savings						
19	Current Period			-	kWh		
20	Prior Period kWh EE losses	Previous Filing, Schedule 3, Line 21, Column C		-	kWh		
21	Cumulative Recoverable kWh savings	(Previous Filing, Schedule 3, Line 21, Column C + Line 19)		-	kWh		
22	Total Recoverable EE Savings	Line 21		-	kWh		
23	Small General Service - Lost Fixed Cost Rate	Schedule 4, Line 6, Column C	$	0.0280	$/kWh		
24	Small General Service - Lost Fixed Cost Revenue Relating to EE	(Line 22 * Line 23)	$	-			
	Distributed Generation						
25	Current Period			-	kWh		
26	Prior Period kWh DG losses	Previous Filing, Schedule 3, Line 27, Column C		-	kWh		
27	Cumulative Recoverable kWh savings	(Previous Filing, Schedule 3, Line 27, Column C + Line 25)		-	kWh		
28	Total Recoverable DG Savings	Line 27		-	kWh		
29	Small General Service - Lost Fixed Cost Rate	Schedule 4, Line 6, Column C	$	0.0280	$/kWh		
30	Small General Service - Lost Fixed Cost Revenue Relating to DG	(Line 28 * Line 29)	$	-			
	Large General Service - Delivery Revenue - Demand						
	Energy Efficiency Savings						
31	Current Period			-	kW		
32	Prior Period kW EE losses	Previous Filing, Schedule 3, Line 33, Column C		-	kW		
33	Cumulative Recoverable kW savings	(Previous Filing, Schedule 3, Line 33, Column C + Line 31)		-	kW		
34	Total Recoverable EE Savings	Line 33		-	kW		
35	Large General Service - Lost Fixed Cost Rate	Schedule 4, Line 12, Column C	$	4.8600	$/kW		
36	Large General Service - Lost Fixed Cost Revenue Relating to EE	(Line 34 * Line 35)	$	-			
	Distributed Generation						
37	Current Period			-	kW		
38	Prior Period kW DG losses	Previous Filing, Schedule 3, Line 39, Column C		-	kW		
39	Cumulative Recoverable kW savings	(Previous Filing, Schedule 3, Line 39, Column C + Line 37)		-	kW		
40	Total Recoverable DG Savings	Line 39		-	kW		
41	Large General Service - Lost Fixed Cost Rate	Schedule 4, Line 12, Column C	$	4.8600	$/kW		
42	Large General Service - Lost Fixed Cost Revenue Relating to DG	(Line 40 * Line 41)	$	-			

Large General Service - Delivery Revenue

Energy Efficiency Savings

43	Current Period			-	kWh
44	Prior Period kWh EE losses	Previous Filing, Schedule 3, Line 45, Column C		-	kWh
45	Cumulative Recoverable kWh savings	(Previous Filing, Schedule 3, Line 45, Column C + Line 43)		-	kWh
46	Total Recoverable EE Savings	Line 45		-	kWh
47	Large General Service - Lost Fixed Cost Rate	Schedule 4, Line 9, Column C	$	0.0031	$/kWh
48	Large General Service - Lost Fixed Cost Revenue Relating to EE	(Line 46 * Line 47)	$	-	

Distributed Generation

49	Current Period			-	kWh
50	Prior Period kWh DG losses	Previous Filing, Schedule 3, Line 51, Column C		-	kWh
51	Cumulative Recoverable kWh savings	(Previous Filing, Schedule 3, Line 51, Column C + Line 49)		-	kWh
52	Total Recoverable DG Savings	Line 51		-	kWh
53	Large General Service - Lost Fixed Cost Rate	Schedule 4, Line 9, Column C	$	0.0031	$/kWh
54	Large General Service - Lost Fixed Cost Revenue Relating to DG	(Line 52 * Line 53)	$	-	

Interruptible Power Service - Delivery Revenue - Demand

Energy Efficiency Savings

55	Current Period			-	kW
56	Prior Period kW EE losses	Previous Filing, Schedule 3, Line 57, Column C		-	kW
57	Cumulative Recoverable kW savings	(Previous Filing, Schedule 3, Line 57, Column C + Line 55)		-	kW
58	Total Recoverable EE Savings	Line 57		-	kW
59	Interruptible - Lost Fixed Cost Rate	Schedule 4, Line 18, Column C	$	2.2350	$/kW
60	Interruptible - Lost Fixed Cost Revenue Relating to EE	(Line 58 * Line 59)	$	-	

Distributed Generation

61	Current Period			-	kW
62	Prior Period kW DG losses	Previous Filing, Schedule 3, Line 63, Column C		-	kW
63	Cumulative Recoverable kW savings	(Previous Filing, Schedule 3, Line 63, Column C + Line 61)		-	kW
64	Total Recoverable DG Savings	Line 63		-	kW
65	Interruptible - Lost Fixed Cost Rate	Schedule 4, Line 18, Column C	$	2.2350	$/kW
66	Interruptible - Lost Fixed Cost Revenue Relating to DG	(Line 64 * Line 65)	$	-	

Interruptible Power Service - Delivery Revenue

Energy Efficiency Savings

67	Current Period			-	kWh
68	Prior Period kWh EE losses	Previous Filing, Schedule 3, Line 69, Column C		-	kWh
69	Cumulative Recoverable kWh savings	(Previous Filing, Schedule 3, Line 69, Column C + Line 67)		-	kWh
70	Total Recoverable EE Savings	Line 69		-	kWh
71	Interruptible - Lost Fixed Cost Rate	Schedule 4, Line 15, Column C	$	0.0156	$/kWh
72	Interruptible - Lost Fixed Cost Revenue Relating to EE	(Line 70 * Line 71)	$	-	

Distributed Generation

73	Current Period			-	kWh
74	Prior Period kWh DG losses	Previous Filing, Schedule 3, Line 75, Column C		-	kWh
75	Cumulative Recoverable kWh savings	(Previous Filing, Schedule 3, Line 75, Column C + Line 73)		-	kWh
76	Total Recoverable DG Savings	Line 75		-	kWh
77	Interruptible - Lost Fixed Cost Rate	Schedule 4, Line 15, Column C	$	0.0156	$/kWh
78	Interruptible - Lost Fixed Cost Revenue Relating to DG	(Line 76 * Line 77)	$	-	

Large Power Service - Delivery Revenue - Demand

Energy Efficiency Savings

79	Current Period			-	kW
80	Prior Period kW EE losses	Previous Filing, Schedule 3, Line 81, Column C		-	kW
81	Cumulative Recoverable kW savings	(Previous Filing, Schedule 3, Line 81, Column C + Line 79)		-	kW
82	Total Recoverable EE Savings	Line 81		-	kW
83	Large Power Service - Lost Fixed Cost Rate	Schedule 4, Line 24, Column C	$	8.5037	$/kW
84	Large Power Service - Lost Fixed Cost Revenue Relating to EE	(Line 82 * Line 83)	$	-	

Distributed Generation

85	Current Period			-	kW
86	Prior Period kW DG losses	Previous Filing, Schedule 3, Line 87, Column C		-	kW
87	Cumulative Recoverable kW savings	(Previous Filing, Schedule 3, Line 87, Column C + Line 85)		-	kW
88	Total Recoverable DG Savings	Line 87		-	kW
89	Large Power Service - Lost Fixed Cost Rate	Schedule 4, Line 24, Column C	$	8.5037	$/kW
90	Large Power Service - Lost Fixed Cost Revenue Relating to DG	(Line 88 * Line 89)	$	-	

Large Power Service - Delivery Revenue

Energy Efficiency Savings

91	Current Period			-	kWh
92	Prior Period kWh EE losses	Previous Filing, Schedule 3, Line 93, Column C		-	kWh
93	Cumulative Recoverable kWh savings	(Previous Filing, Schedule 3, Line 93, Column C + Line 91)		-	kWh
94	Total Recoverable EE Savings	Line 93		-	kWh
95	Large Power Service - Lost Fixed Cost Rate	Schedule 4, Line 21, Column C	$	0.0004	$/kWh
96	Large Power Service - Lost Fixed Cost Revenue Relating to EE	(Line 94 * Line 95)	$	-	

Distributed Generation

97	Current Period			-	kWh
98	Prior Period kWh DG losses	Previous Filing, Schedule 3, Line 99, Column C		-	kWh
99	Cumulative Recoverable kWh savings	(Previous Filing, Schedule 3, Line 99, Column C + Line 97)		-	kWh
100	Total Recoverable DG Savings	Line 99		-	kWh
101	Large Power Service - Lost Fixed Cost Rate	Schedule 4, Line 21, Column C	$	0.0004	$/kWh
102	Large Power Service - Lost Fixed Cost Revenue Relating to DG	(Line 100 * Line 101)	$	-	
103	Total Lost Fixed Cost Revenue Related to Energy Efficiency	Sum Line 9 + 24 + 36 + 48 + 60 + 72 + 84 + 96	$	-	
104	Total Lost Fixed Cost Revenue Related to Distributed Generation	Sum Line 18 + 30 + 42 + 54 +66 + 78 + 90 + 102	$	-	
105	Total Lost Fixed Cost Revenue	Sum Line 103 + 104	$	-	

UNS Electric, Inc.
Lost Fixed Cost Recovery Mechanism
Schedule 4: LFCR Test Year Rate Calculation

Line No.	(A) LFCR Fixed Cost Calculation		(B) Reference		(C) Total
	Residential Customers				
1		Delivery Revenue	Schedule 5, Line 4, Column F	$	17,809,359.73
2		kWh Billed	actual		840,557,630
3		Lost Fixed Cost Rate	Line1 /Line2	$	0.0212
	Small General Service				
4		Delivery Revenue	Schedule 5, Line 8, Column F	$	3,304,275.12
5		kWh Billed	actual		117,999,247
6		Lost Fixed Cost Rate	Line 4 / Line 5	$	0.0280
	Large General Service				
7		Delivery Revenue	Schedule 5, Line 12, Column F	$	1,344,840.67
8		kWh billed	actual		437,204,380
9		Lost Fixed Cost Rate	(Line 7 / Line 8)	$	0.0031
	Large General Service				
10		Demand Revenue	Schedule 5, Line 22, Column F	$	7,131,625.89
11		kW billed	actual		1,467,413
12		Lost Fixed Cost Rate	(Line 10 / Line 11)	$	4.8600
	Interruptible Power Service				
13		Delivery Revenue	Schedule 5, Line 14, Column F	$	644,645.73
14		kWh billed	actual		41,411,045
15		Lost Fixed Cost Rate	(Line 13 / Line 14)	$	0.0156
	Interruptible Power Service				
16		Demand Revenue	Schedule 5, Line 24, Column F	$	281,623.36
17		kW billed	actual		126,006
18		Lost Fixed Cost Rate	(Line 16 / Line 17)	$	2.2350
	Large Power Service				
19		Delivery Revenue	Schedule 5, Line17, Column F	$	108,778.51
20		kWh billed	actual		300,493,132
21		Lost Fixed Cost Rate	(Line 19 / Line 20)	$	0.0004
	Large Power Service				
22		Demand Revenue	Schedule 5, Line 27, Column F	$	5,031,499.98
23		kW billed	actual		591,683
24		Lost Fixed Cost Rate	(Line 22 / Line 23)	$	8.5037

UNS Electric, Inc.
Lost Fixed Cost Recovery Mechanism
Schedule 5: Delivery Revenue Calculation

	(A)	(B)	(C)		(D)	(E)		(F)
								B x D x E
Line No.	Rate Schedule	Adjusted Test Year Billing Determinants	Units		Delivery Charge	Demand Stability Factor		Total Revenue
1	Residential Service (R-01)	768,641,945	kWh	$	0.0213	100%	$	16,355,164.81
2	Residential Service (R-01 TOU)	1,743,170	kWh	$	0.0220	100%	$	38,393.33
3	Residential Service (R-01 CARES)	70,172,515	kWh	$	0.0202	100%	$	1,415,801.59
4	subtotal	840,557,630	kWh	$	0.0212		$	17,809,359.73
5	Small General Service (SGS-10)	117,918,148	kWh	$	0.0280	100%	$	3,302,043.86
6	Small General Service (SGS-10 TOU)	81,099	kWh	$	0.0275	100%	$	2,231.25
7	Small General Service (SGS-10 TOU-S)	-	kWh	$	-	100%	$	-
8	subtotal	117,999,247	kWh		0.0280		$	3,304,275.12
	kWh related							
9	Large General Service (LGS)	437,204,380	kWh	$	0.0031	100%	$	1,344,840.67
10	Large General Service (LGS-TOU)	-	kWh	$	-	100%	$	-
11	Large General Service (LGS-TOU-S)	-	kWh	$	-	100%	$	-
12	subtotal	437,204,380	kWh	$	0.0031		$	1,344,840.67
13	Interruptible Power Service (IPS)	41,411,045	kWh	$	0.0156	100%	$	644,645.73
14	subtotal	41,411,045	kWh	$	0.0156		$	644,645.73
15	Large Power Service (LPS)	151,873,990	kWh	$	0.0004	100%	$	54,978.38
16	Large Power Service (LPS-TOU)	148,619,142	kWh	$	0.0004	100%	$	53,800.13
17	subtotal	300,493,132	kWh	$	0.0004		$	108,778.51
18	Total kWh	1,737,665,434	kWh				$	23,211,899.77
	kW related							
19	Large General Service (LGS)	1,467,413	kW	$	9.7200	50%	$	7,131,625.89
20	Large General Service (LGS-TOU)	-	kW	$	-	50%	$	-
21	Large General Service (LGS-TOU-S)	-	kW	$	-	50%	$	-
22	subtotal	1,467,413	kW	$	4.8600		$	7,131,625.89
23	Interruptible Power Service (IPS)	126,006	kW	$	4.4700	50%	$	281,623.36
24	subtotal	126,006	kW	$	2.2350		$	281,623.36
25	Large Power Service (LPS)	245,834	kW	$	19.9300	50%	$	2,449,733.42
26	Large Power Service (LPS-TOU)	345,850	kW	$	14.9300	50%	$	2,581,766.56
27	subtotal	591,683	kW	$	8.5037		$	5,031,499.98
28	Total kW	2,185,102	kW				$	12,444,749.23

PURCHASED POWER AND FUEL ADJUSTMENT CLAUSE

PLAN OF ADMINISTRATION

UNS Electric, Inc.
Purchased Power and Fuel Adjustment Clause
Plan of Administration

Table of Contents

1. General Description.....1
2. Definitions.....1
3. Calculation of the PPFAC rate.....3
4. Accumulated Bank Balance.....3
5. Verification and Audit.....3
6. Schedules.....3
7. Compliance Reports.....4
8. Allowable Costs.....5

1. GENERAL DESCRIPTION

This document describes the plan for administering the Purchased Power and Fuel Adjustment Clause ("PPFAC") the Arizona Corporation Commission ("Commission") approved for UNS Electric, Inc. ("UNS Electric") in Decision No. xx (xx, 2013).

The PPFAC described in this Plan of Administration ("POA") uses a historical twelve (12) month rolling average of actual fuel and purchased power costs to set a rate. The PPFAC rate is adjusted on a monthly basis. This POA describes the application of the PPFAC.

2. DEFINITIONS

Applicable Interest – Based on one-year Nominal Treasury Constant Maturities rate contained in the Federal Reserve Statistical Release H-15. The interest rate is adjusted annually on the first business day of the calendar year.

Applicable Twelve (12) Months – The historical 12-month period that ends two months prior to the monthly PPFAC rate change. For example, a January PPFAC rate is based on the 12 months ending November 30.

Base Cost of Fuel and Purchased Power – An amount generally expressed as a rate per kilowatt-hour ("kWh"), which reflects the fuel, purchased power and purchased transmission cost embedded in the base rates by customer class as approved by the Commission in UNS Electric's most recent rate case. The Base Cost of Fuel and Purchased Power revenue is the approved rate per kWh times the applicable sales volumes. Decision No. xxx set the average base cost at $0.05706 per kWh effective on January 1, 2014.

Brokerage Fees – The costs attributable to the use of brokers recorded in Federal Energy Regulatory Commission ("FERC") Account 557.

Fuel and Purchased Power Costs – The costs recorded for the fuel and purchased power used by UNS Electric to serve both Native Load Energy Sales and Off-System Sales. Wheeling costs are included.

Native Load Energy Sales – Retail Native Load Energy Sales and Wholesale Native Load Energy Sales in the UNS Electric control area for which UNS Electric has a generation service obligation.

Off-System Sales – Wholesale Sales made to non-Native Load customers, for the purpose of optimizing the UNS Electric system, using UNS Electric-owned or contracted generation and purchased power.

Off-System Sales Revenue – The revenue recorded from wholesale sales made to non-Native Load customers, for the purpose of optimizing the UNS Electric system, using UNS Electric-owned or contracted generation and purchased power.

PPFAC – The Purchased Power and Fuel Adjustment Clause was approved by the Commission in Decision No. 70360, and amended in Decision No. xxx. The PPFAC rate tracks the changes in the cost of obtaining power supplies based upon a historical 12-month rolling average of fuel, purchased power and purchased transmission costs. The PPFAC rate is adjusted monthly. The change in the PPFAC rate is banded, so the new monthly PPFAC rate cannot increase or decrease the Total Average Retail Fuel and Purchased Power Rate by more than 0.83% from the preceding month's rate, unless authorized by the Commission. Any over or under recovery of actual costs is recorded in the PPFAC bank balance. If the PPFAC bank balance becomes over collected by more than $10 million, UNS Electric must file for a PPFAC rate adjustment within 45 days, or contact Staff to discuss why a PPFAC rate adjustment is not necessary at that time. If the PPFAC bank balance is under collected, the Company has the right to file an application with the ACC requesting a surcharge.

Preference Power – Power allocated to UNS Electric wholesale customers by federal power agencies such as the Western Area Power Administration.

Retail Native Load Energy Sales – The portion of load from Native Load Energy Sales retail customers that are served by UNS Electric.

Short-term Sales – Wholesale sales with a duration of less than one-year made to non-Native Load customers for the purpose of optimizing the UNS Electric system, using UNS Electric owned or contracted generation and purchased power.

Short Term Sales Revenue – The revenue recorded from short term wholesale sales made to non-Native Load customers, for the purpose of optimizing the UNS Electric system, using UNS Electric owned or contracted generation and purchased power.

Total Average Retail Fuel and Purchased Power Rate – The average base cost of fuel and purchased power ($0.05706 per kWh) plus the appropriate PPFAC rate.

Wheeling Costs (FERC Account 565, Transmission of Electricity by Others) – Amounts payable to others for the transmission of UNS Electric's electricity over transmission facilities owned by others.

Wholesale Native Load Energy Sales – The portion of load from Native Load Energy Sales wholesale customers that is served by UNS Electric, excluding the load served with Preference Power.

Wholesale Sales – Sales to non-retail customers.

3. *CALCULATION OF THE PPFAC RATE*

The PPFAC rate is calculated based upon a historical rolling average of fuel and purchased power costs during the Applicable 12-Month period. All revenues from Short-Term Off-System Sales and sales of renewable energy credits that do not flow through the Renewable Energy Standard Tariff will be credited against fuel and purchased power costs. The PPFAC rate shall be reset monthly, beginning the second month new rates are in effect. For example, if new rates are effective January 1, 2014, the PPFAC rate will be $0.0000 per kWh in the month of January 2014 and a new PPFAC rate will be effective in February 2014 based on the Applicable 12-Month period ending December 31, 2013.

The new PPFAC rate will be effective with the first billing cycle of each month and will not be prorated. The change in the PPFAC rate is banded, so the new PPFAC rate for a month cannot increase or decrease the Total Average Retail Fuel and Purchased Power Rate by more than 0.83% from the prior month's rate. Any over or under recovery of actual costs is recorded in the PPFAC bank balance. The PPFAC rate shall be applied to the customer's bill as a monthly kWh charge that is the same for all customer classes.

4. *ACCUMULATED PPFAC BANK BALANCE*

UNS Electric shall maintain and report monthly the accumulated PPFAC bank balance. The PPFAC bank balance shall reflect any over or under recovery of actual purchased power and fuel costs compared with the amount recovered through the Base Fuel and Purchased Power and PPFAC rates.

5. *VERIFICATION AND AUDIT*

The amounts charged through the PPFAC will be subject to periodic audit to assure their completeness and accuracy and to assure that all fuel and purchased power costs were incurred reasonably and prudently. The Commission may, after notice and opportunity for hearing, make such adjustments to existing balances or to already recovered amounts as it finds necessary to correct any accounting or calculation errors or to address any costs found to be unreasonable or imprudent.

6. *SCHEDULES*

The following schedules are attached to this Plan of Administration:

Schedule 1: Total Average Retail Fuel and Purchased Power Rate Calculation
Schedule 2: PPFAC Rate Calculation
Schedule 3: Applicable 12-Month Total Average Fuel Account
Schedule 4: Surcharge/Credit Calculation
Schedule 5: Surcharge/Credit Tracking Account

7. ***COMPLIANCE REPORTS***

UNS Electric shall provide monthly information reports to Commission Staff's Compliance Section and to the Residential Utility Consumer Office detailing all calculations related to the PPFAC. A UNS Electric Officer shall certify under oath that all information provided in the reports itemized below is true and accurate to the best of his or her information and belief and that there have been no changes to the Allowable Costs recovered through the PPFAC without Commission approval. These monthly reports shall be due within 45 days of the end of the reporting period.

The publicly available reports will include at a minimum:

1. The Total Average Retail Fuel and Purchased Power Rate Calculation (Schedule 1) and the PPFAC Rate Calculation (Schedule 2). Additional information will provide other relative inputs and outputs such as:
   a. Total power and fuel costs.
   b. Customer sales in both MWh and thousands of dollars by customer class.
   c. Number of customers by customer class.
   d. A detailed listing of all items excluded from the PPFAC calculations.
   e. A detailed listing of any adjustments to the adjustor reports.
   f. Total off-system sales revenues.
   g. System losses in MWh.
   h. Monthly maximum retail demand in MW.

2. Identification of a contact person and phone number from UNS Electric for questions.

UNS Electric shall also provide to Commission Staff monthly reports containing the information listed below. These reports shall be due within 45 days of the end of the reporting period. All of these additional reports must be provided confidentially.

A. Information for each generating unit will include the following items:
   1. Net generation, in MWh per month, and 12 months cumulatively.
   2. Average heat rate, both monthly and 12-month average.
   3. Equivalent forced-outage rate, both monthly and 12-month average.
   4. Outage information for each month including, but not limited to, event type, start date and time, end date and time, and a description.
   5. Total fuel costs per month.
   6. The fuel cost per kWh per month.

B. Information on power purchases will include the following items per seller (information on economy interchange purchases may be aggregated):
   1. The quantity purchased in MWh.
   2. The demand purchased in MW to the extent specified in the contract.
   3. The total cost for demand to the extent specified in the contract.
   4. The total cost of energy.

C. Fuel purchase information shall include the following items:
   1. Natural gas interstate pipeline costs, itemized by pipeline and by individual cost components, such as reservation charge, usage, surcharges and fuel.
   2. Natural gas commodity costs, categorized by short-term purchases (one month or less) and longer term purchases, including price per therm, total cost, supply basin, and volume by contract.

D. UNS Electric will also provide:
   1. Monthly projections for the next 12-month period showing estimated (Over)/under collected amounts.
   2. A summary of unplanned outage costs by resource type.
   3. The data necessary to arrive at the System and Off-System Book Fuel and Purchased Power cost reflected in the non-confidential filing.
   4. The data necessary to arrive at the Native Load Energy Sales MWh reflected in the non-confidential filing.

Workpapers and other documents that contain proprietary or confidential information will be provided to the Commission Staff under a fully executed protective agreement. UNS Electric will keep fuel and purchased power invoices and contracts available for Commission review. The Commission has the right to review the prudence of fuel and power purchases and any calculations associated with the PPFAC at any time. Any costs flowed through the PPFAC are subject to refund, if those costs are found to be imprudently incurred.

8. ALLOWABLE COSTS

A. Accounts

The allowable PPFAC costs include fuel and purchased power costs incurred to provide service to retail customers. Additionally, the prudent direct costs of contracts used for hedging system fuel and purchased power will be recovered under the PPFAC. The allowable cost components include the following FERC accounts:

- 501 Fuel (Steam)
- 547 Fuel (Other Production)
- 555 Purchased Power
- 565 Wheeling (Transmission of Electricity by Others)

These accounts are subject to change if the FERC alters its accounting requirements or definitions.

B. Other Allowable Costs

- Brokerage Fees recorded in FERC Account 557

These accounts are subject to change if the FERC alters its accounting requirements or definitions.

No other costs or credits are allowed without approval from the Commission in an Order.

SCHEDULES

UNS Electric, Inc.
Purchased Power and Fuel Adjustment Clause
Monthly Information Filing

Schedule 1	**Total Average Retail Fuel and Purchased Power Rate Calculation Effective January 1, 2014 and Projected February 1, 2014**
Schedule 2	**PPFAC Rate Calculation Effective January 1, 2014 and Projected February 1, 2014**
Schedule 3	**Applicable 12 month Total Average Fuel Account - (Rate effective January 1, 2014 and Projected February 1, 2014)**
Schedule 4	**Surcharge/Credit Rate Calculation (If Applicable)**
Schedule 5	**Surcharge/Credit Tracking Account**

UNS-Electric Contact Information

Ray Robey **(520) 745-3360**
Manager, Fuels and Wholesale Marketing

UNS Electric, Inc.
Schedule 1
Total Average Retail Fuel and Purchased Power Rate Calculation Effective January 1, 2014
($/kWh)

Line No.	Total Average Retail Fuel and Purchased Power Rate Calculation	Current 1-Jan-14 [1]	Proposed 1-Feb-14	Increase / (Decrease) $.000000/kWh	%
1	PPFAC Rate (Sch. 2, L10) [4]	$ -		$ -	0.00%
2	Surcharge/Credit Rate (Sch. 4, L4) [2, 4]	$ -	$ -	$ -	0.00%
3	Total PPFAC Rate [4] (L1+L2)	$ -	$ -	$ -	0.00%
4	Average Base Rate[3]	$ 0.057060	$ 0.057060	$ -	0.00%
5	Total Average Retail Fuel and Purchased Power Rate (L3+L4)	$ 0.057060	$ 0.057060	$ -	0.00%

Notes:

1 See xxxx, 2013 PPFAC Filing and ACC Decision No. xxxxx.

2 A Surcharge/Credit is a figure which may be added/subtracted from the PPFAC Rate should the the Accumulated Bank Balance become less than negative $10 million or greater than $10 million

3 Average Base Rate as defined in supporting documents for ACC Decision No. xxxxx].

4 Negative value is PPFAC credit; positive value is PPFAC surcharge.

UNS Electric, Inc.
Schedule 2
PPFAC rate Effective January 1, 2014
($ in thousands)

Line No.	PPFAC Rate - Calculation	Current 1-Jan-14 [1]	Proposed 1-Feb-14
1	Applicable 12 Months Fuel and Purchased Power Costs [1]		$ -
2	Applicable 12 Months Short Term Sales Revenue Credit [2]		$ -
3	Applicable 12 Months Net Fuel and Purchased Power Cost (L1 + L2)	$ -	$ -
4	Applicable 12 Months Total Native Load Energy Sales (MWhs)	0	0
5	Calculated Total Average Retail Rate $/kWh (L3/L4)	$ -	$ -
6	Maximum Total Average Retail Rate [3]	$ -	$ -
7	Minimum Total Average Retail Rate[3]	$ -	$ -
8	Applicable Total Average Retail Rate[3]	$ -	$ -
9	Average Base Rate[3]	$ 0.057060	$ 0.057060
10	Eligible PPFAC Rate $/kWh (L8-L9) [3, 4]	$ -	$ (0.057060)

Notes:

1 See xxx, 2013 PPFAC Filing and ACC Decision No. xxxx.
2 Short Term Sales revenues are credited at 100% as approved by the Commission in Decision No. xxxxx.
3 Total Average Rate per kWh in ACC Decision No. xxxx. is limited in monthly variance to cause a maximum change of .83% in Total Average Retail Fuel and Purchased Power Rate
4 Negative value is PPFAC credit; positive value is PPFAC surcharge.

Schedule presentation will appear to roundup $'s and MWhs; however calculations are performed on an actual $ and MWh basis with resultant Rates/kWh roundup to $0.000000/kWh

UNS Electric, Inc.
Schedule 3
Total Average Retail Fuel Account
($ in thousands; PPFAC and Base Rate in $/kWh)
(Negative value is over-collected, Positive value is under-collected)

Line			Jan-13	Feb-13	Mar-13	Apr-13	May-13	Jun-13	Jul-13	Aug-13	Sep-13	Oct-13	Nov-13	Dec-13	Total
1	Prior Month Balance	(L16)	$ -	$ -	$ -	$ -	$ -	$ -	$ -	$ -	$ -	$ -	$ -	$ -	
1A	Beginning Balance Adjustment [10]	(L16)													
1B	Adjusted Beginning Balance	(L16)													
Energy Sales															
2	Retail Native Load Energy Sales (MWh)		0.00	0.00	0.00	0.00	0.00	0.00	0.00	0.00	0.00	0.00	0.00	0.00	$ -
2.5	Retail Native Load Energy Sales Less Community Solar Sales (MWh)		0.00	0.00	0.00	0.00	0.00	0.00	0.00	0.00	0.00	0.00	0.00	0.00	$ -
3	Retail Native Load Energy Sales including losses (MWh) [1]		0.00	0.00	0.00	0.00	0.00	0.00	0.00	0.00	0.00	0.00	0.00	0.00	$ -
4	Long Term Energy Sales (MWh)		0	0	0	0	0	0	0	0	0	0	0	0	$ -
5	Long Term Energy Sales including losses (MWh) [2]		0	0	0	0	0	0	0	0	0	0	0	0	$ -
6	Total Native Load Energy Sales (MWh)	(L2 + L4)	0.00	0.00	0.00	0.00	0.00	0.00	0.00	0.00	0.00	0.00	0.00	0.00	$ -
7	Total Native Load Energy Sales including losses (MWh)	(L3 + L5)	0.00	0.00	0.00	0.00	0.00	0.00	0.00	0.00	0.00	0.00	0.00	0.00	$ -
Fuel and Purchased Power Costs															
8	Fuel and Purchased Power Costs [3, 8]		$ -	$ -	$ -	$ -	$ -	$ -	$ -	$ -	$ -	$ -	$ -	$ -	$ -
9	Short Term / Off System Sales Revenue Credit [4]		$ -	$ -	$ -	$ -	$ -	$ -	$ -	$ -	$ -	$ -	$ -	$ -	$ -
10	Net Fuel and Purchased Power Costs	(L8+L9)	$ -	$ -	$ -	$ -	$ -	$ -	$ -	$ -	$ -	$ -	$ -	$ -	$ -
Base Fuel Rate & Forward Component Recovery															
11	PPFAC Retail Power Supply Costs	(L3 /L7*L10)	$ -	$ -	$ -	$ -	$ -	$ -	$ -	$ -	$ -	$ -	$ -	$ -	$ -
12	Base Rate Power Supply Recovery [5]		$ -	$ -	$ -	$ -	$ -	$ -	$ -	$ -	$ -	$ -	$ -	$ -	$ -
(Over) / Under Collections and Accrued Interest															
13	(Over)/Under Collections	(L11 -L12)	$ -	$ -	$ -	$ -	$ -	$ -	$ -	$ -	$ -	$ -	$ -	$ -	$ -
14	Interest [6, 8]	L1*(L19 /12)	$ -	$ -	$ -	$ -	$ -	$ -	$ -	$ -	$ -	$ -	$ -	$ -	$ -
15	Bank Balance	(L1 + L14 + L15)	$ -	$ -	$ -	$ -	$ -	$ -	$ -	$ -	$ -	$ -	$ -	$ -	$ -
	Bank Balance Including True-Up (Prior to 2014)		$0.00	$0.00	$0.00	$0.00	$0.00	$0.00	$0.00	$0.00	$ -				$0.00

16	Average Base Cost of Fuel & Purchased Power - $ per kWh	$0.057060
17	Forward Component Rate - $ per kWh	($0.016475)
18	Interest Rate (as of 1/2/2013) [7]	0.1500%

1 Retail energy losses are the difference between billed retail energy sales and UNS-Es Retail Sales per TEP's control area metering.
2 Long Term Energy Sales losses calculated using applicable EHV loss percentage as defined in appropriate OATT.
3 Includes total native load and short term fuel, purchased power and transmission.
4 Includes Short Term Sales Revenue at 100% per Decision 70360.
5 Base rate recovery is the actual recovery by customer class.
6 Based on one-year Nominal Treasury Constant Maturities rate contained in the Federal Reserve Statistical Release, H-15 on the first business day of the calendar year.
7 Tracking Account Balance Line 16 carried to Schedule 4, Line 1.
8 Fuel & Purchased Power Costs and Interest include true-up adjustments for prior periods that reduce expense and interest.

Schedule presentation will appear to roundup $'s and MWhs; however calculations are performed on an actual $ and MWh basis with resultant Rates/kWh roundup to $0.000000/kWh

UNS Electric, Inc.
Schedule 4
PPFAC Surcharge/Credit Rate Calculation
($ in thousands; Surcharge Rate is in $/kWh)

Line No.	PPFAC Bank Balance True-Up Rate - Calculation	Current 1-Jan-14 [1]	Proposed 1-Feb-14
1	Bank Balance (From Schedule 5, L6) [1]	$ -	$ -
2	Total Bank Balance Amount to be (refunded)/Collected Balance [2]	$ -	$ -
3	Projected Native Load Sales (MWh)	-	-
4	Bank Balance Surcharge/Credit Rate ($/kWh) (L2 / L3) [3]	$ -	$ -

Notes:

1 Bank Balance as of xxxx, including interest

2 See xxxxx, 2013 PPFAC Filing and ACC Decision No. xxxx.

3 Negative value is PPFAC credit, positive value is PPFAC surcharge.

Schedule presentation will appear to roundup $'s and MWhs; however calculations are performed on an actual $ and MWh basis with resultant Rates/kWh roundup to $0.000000/kWh

UNS Electric, Inc.
Schedule 5
PPFAC Surcharge/Credit Tracking Account
($ in thousands)
(Negative value is over-collected, Positive value is under-collected)

Line No.		Jan-13	Feb-13	Mar-13	Apr-13	May-13	Jun-13	Jul-13	Aug-13	Sep-13	Oct-13	Nov-13	Dec-13
1	TU Beginning Balance as of June 1, 2009 and thereafter	$ -	$ -	$ -	$ -	$ -	$ -	$ -	$ -	$ -	$ -	$ -	$ -
2	Revenue True-Up from November-May Estimate [2]	$ -	$ -	$ -	$ -	$ -	$ -	$ -	$ -	$ -	$ -	$ -	$ -
3	TU Adjusted Beginning Balance (L1 + L2) [1]	$ -	$ -	$ -	$ -	$ -	$ -	$ -	$ -	$ -	$ -	$ -	$ -
5	Retail Billed Sales Less Community Solar Sales (kWhs) [4]	-	-	-	-	-	-	-	-	-	-	-	-
6	Less Revenue from Application TU (L4 x L5) [5,7]	$ -	$ -	$ -	$ -	$ -	$ -	$ -	$ -	$ -	$ -	$ -	$ -
7	Monthly Interest (Line 3 * Int Rate/12) [6]	$ -	$ -	$ -	$ -	$ -	$ -	$ -	$ -	$ -	$ -	$ -	$ -
8	TU Ending Balance; (L3 - L6 + L7)	$ -	$ -	$ -	$ -	$ -	$ -	$ -	$ -	$ -	$ -	$ -	$ -

Notes:

1 The True-Up component value listed on Line 1 for June 2013 is the sum of the actual Forward Component and True-Up Component balances as of June 1, 2013.

2 The True-Up is the result of using estimated data for November through May for the proposed PPFAC rate filing made each February, since the actual amounts for all periods included in the filing are not available at the time of the PPFAC filing. Because the Forward Component rates are set based on estimates, the over/under-recovered amount that results from actual sales and revenue is an adjusttment to the True-Up Component Tracking Account at the end of each PPFAC cycle (the PPFAC cycle is June through May).

3 Historical Component, Prior Period PPFAC, Sch. 4, L5.

4 Sales amounts are for energy billed beginning with the first billing cycle of June.

5 Generally, Line 4 x Line 5 = Line 6; however, differences may occur due to billing adjustments.

6 Based on one-year Nominal Treasury Constant Maturities rate contained in the Federal Reserve Statistical Release, H-15 on the first business day of the calendar year. **0.1500%** **As of 1/2/2013**

Schedule presentation will appear to roundup $'s and MWhs; however calculations are performed on an actual $ and MWh basis with resultant Rates/kWh roundup to $0.000000/kWh

TRANMISSION COST ADJUSTOR

PLAN OF ADMINISTRATION

UNS Electric, Inc.
Transmission Cost Adjustor
Plan of Administration

Table of Contents

1. General Description..... 1
2. Calculations..... 1
3. Filing and Procedural Deadlines.....2

1. GENERAL DESCRIPTION

The purpose of the Transmission Cost Adjustor ("TCA") is to provide a mechanism to recover transmission costs associated with serving retail customers at the level approved by the Federal Energy Regulatory Commission ("FERC") at the same time as new transmission rates become effective for UNS Electric, Inc. ("UNS Electric" or "Company") transmission customers. UNS Electric shall make an annual filing with Docket Control that includes its revised TCA based on the Company's updated transmission service rates calculated pursuant to the Company's Open Access Transmission Tariff ("OATT"), including all supporting data and documentation used in calculating the formula rate ("Informational Filing") and the TCA. This Informational Filing shall be filed with the Commission no later than May 1.

The TCA applies to all UNS Electric Retail Electric Rate Schedules. For Standard Offer customers that are not demand billed, the TCA is applied to the bill as a monthly kWh charge. For Standard Offer customers that are demand billed, the TCA is applied as a kW charge. The charge and modifications to it will take effect in first billing cycle in June without proration.

UNS Electric's transmission service rates (the "Transmission Rates") are calculated annually in accordance with UNS Electric's formula rate. The formula rate calculation is specified within UNS Electric's OATT, as may be amended from time to time, as filed with and approved by FERC.

2. CALCULATIONS

The calculated Transmission Rates will be set forth in UNS Electric's Informational Filing. Transmission Rates are determined for the following classes:

Demand Billed Customers
Non-Demand Billed Customers

In addition to the Transmission Rate, UNS Electric will charge retail customers for other transmission-related services ("ancillary services") in accordance with its OATT ("Ancillary Services Rates") at such time that the Company provides these services. These additional ancillary services could include:

Scheduling, System Control and Dispatch Service
Regulation and Frequency Response Service
Energy Imbalance Service
Operating Reserve – Spinning Reserve Service
Operating Reserve – Supplemental Reserve Service

The total UNS Electric OATT rate is the sum of providing Transmission Rates and Ancillary Service Rates. The revenue requirement resulting from the UNS Electric OATT rate are collected by UNS Electric from its retail customers, partly in base rates and the remaining through the TCA rate. The table below is an example of the TCA calculation using the UNS Electric OATT rate in effect as of December 31, 2012.

Line	Service Type		
		$/kWh	$/kW
		(A)	(B)
1.	Transmission Rate	$0.0059	$2.3022
2.	Scheduling	N/A	N/A
3.	Regulation and Frequency	N/A	N/A
4.	Energy Imbalance	N/A	N/A
5.	Spinning Reserve	N/A	N/A
6.	Supplemental Reserve	N/A	N/A
7.	Total	$0.0059	$2.3022
8.	Included in Retail Base Rates per OATT	$0.0059	$2.3022
9.	TCA (Line 7) – (Line 8)	$0.0000	$0.0000

UNS Electric's Transmission Rate shown on line 1 will change annually, whereas the Ancillary Rates shown on lines 2 through 6 will change only through a separate filing with FERC by UNS Electric.

3. FILING AND PROCEDURAL DEADLINES

UNS Electric will file the Informational Filing, which includes the revised TCA and all supporting data and documentation used in calculating the formula rate with the Commission each year no later than May 1. The Commission Staff and interested parties shall have the opportunity to review UNS Electric's Informational Filing.

The new TCA rates proposed by UNS Electric shall be effective in first billing cycle in June unless Staff requests Commission review or otherwise ordered by the Commission. The TCA rates are not prorated.

RULES AND REGULATIONS

TABLE OF CONTENTS

SECTION	TITLE	SHEET NO.
1	APPLICABILITY OF RULES AND REGULATIONS AND DESCRIPTION OF SERVICE	901
2	DEFINITIONS	902
3	ESTABLISHMENT OF SERVICE	903
4	MINIMUM CUSTOMER INFORMATION REQUIREMENTS	904
5	MASTER METERING	905
6	SERVICE LINES AND ESTABLISHMENTS	906
7	LINE EXTENSIONS	907
8	PROVISION OF SERVICE	908
9	CHARACTER OF SERVICE – VOLTAGE, FREQUENCY AND PHASE	909
10	METER READING	910
11	BILLING AND COLLECTIONS	911
12	TERMINATION OF SERVICE	912
13	RECONNECTION OF SERVICE	913
14	ADMINISTRATIVE AND HEARING REQUIREMENTS	914

SECTION 1
APPLICABILITY OF RULES AND REGULATIONS AND DESCRIPTION OF SERVICE

A. UNS Electric, Inc. ("Company") is an electric utility operating within portions of the state of Arizona. The Company will provide service to any person, institution or business located within its service area in accordance with the provisions of its Rates and the terms and conditions of these Rules and Regulations.

B. All electricity delivered to any Customer is for the sole use of that Customer on that Customer's premises only. Electricity delivered by the Company will not be redelivered or resold, or the use thereof by others permitted unless otherwise expressly agreed to in writing by the Company. However, those Customers purchasing electricity for redistribution to the Customer's own tenants (only on the Customer's premises) may separately meter each tenant distribution point for the purpose of prorating the Customer's actual purchase price of electricity delivered among the various tenants on a per unit basis.

C. These Rules and Regulations will apply to all electricity service furnished by the Company to its Customers.

D. These Rules and Regulations are part of the Company's Rates on file with, and duly approved by, the Arizona Corporation Commission. These Rules and Regulations will remain in effect until modified, amended, or deleted by order of the ACC. No employee, agent or representative of the Company is authorized to modify the Company rules.

E. These Rules and Regulations will be applied uniformly to all similarly situated Customers.

F. In case of any conflict between these Rules and Regulations and the Arizona Corporation Commission's rules, these Rules and Regulations will apply.

G. Whenever the Company and an Applicant or a Customer are unable to agree on the terms and conditions under which the Applicant or Customer is to be served, or are unable to agree on the proper interpretation of these Rules and Regulations, either party may request assistance from the Consumer Services Section of the Utilities Division of the ACC. The Applicant or Customer also has the option to file an application with the ACC for a proper order, after notice and hearing.

H. The Company's supplying electric service to the Customer and the acceptance thereof by the Customer will be deemed to constitute an agreement by and between the Company and the Customer for delivery, acceptance of and payment for electric service under the Company's Rules and Regulations and applicable Rates.

SECTION 2
DEFINITIONS

A. In these Rules and Regulations, the following definitions will apply unless the context requires otherwise:

1. Actual Cost: The cost incurred by the Company for labor, materials and equipment including the cost of overheads.

2. Advance in Aid of Construction ("Advance"): Funds provided to the utility by the Applicant under the terms of a line extension agreement, the value of which may be refunded.

3. Applicant: A person requesting the Company to supply electric service.

4. Application: A request to the Company for electric service, as distinguished from an inquiry as to the availability or charges for such service.

5. Arizona Corporation Commission ("ACC" or "Commission"): The regulatory authority of the State of Arizona having jurisdiction over public service corporations operating in Arizona.

6. Billing Month: The period between any two (2) regular readings of the Company's meters at approximately thirty (30) day intervals.

7. Billing Period: The time interval between two (2) consecutive meter readings that are taken for billing purposes.

8. Company: UNS Electric, Inc. acting through its duly authorized officers or employees within the scope of their respective duties.

9. Contiguous Site: A single site not separated by private or public property, or public street, or right of way and operated as one integral unit under the same name and as a part of the same business.

10. Contributions in Aid of Construction ("Contribution"): Funds provided to the Company by the Applicant under the terms of a line extension agreement and/or service connections tariff, the value of which is not refundable.

11. Curtailment Priority: The order in which electric service is to be curtailed to various classifications of Customers, as set forth in the Company's filed Rates.

12. Customer: The person(s) or entity(ies) in whose name service is rendered, as evidenced by the request for electric service by the Applicant(s), or by the receipt and/or payment of bills regularly issued in the Customer's name regardless of the identity of the actual user of the service.

13. Customer Charge: The amount the Customer must pay the Company for the availability of electric service, excluding any electricity used, as specified in the Company's Rates.

14. Day: Calendar day.

SECTION 2
DEFINITIONS
(continued)

15. Demand: The rate at which power is delivered during any specified period of time. Demand may be expressed in kilowatts, kilovolt-amperes, or other suitable units.

16. Developer: One or more natural or artificial entities that own, improve, or remodel real estate.

17. Distribution Lines: The Company lines operated at distribution voltage, which are constructed along public roadways or other bona fide rights-of-way, including easements on Customer's property.

18. Electronic Billing: Optional billing service whereby Customers may elect to receive, view and pay their bills electronically.

19. Energy: Electric energy, expressed in kilowatt-hours.

20. Illness: A medical ailment or sickness for which a residential Customer obtains a verified document from a licensed medical physician stating the nature of the illness and that discontinuance of service would be especially dangerous to the Customer's health.

21. Interruptible Electric Service: Electric service that is subject to interruption as specified in the Company's Rate.

22. Kilowatt ("kW"): A unit of power equal to 1,000 watts.

23. Kilowatt-hour ("kWh"): Electric energy equivalent to the amount of electric energy delivered in one hour when delivery is at a constant rate of one (1) kilowatt.

24. Law: Any statute, rule, order or requirement established and enforced by government authorities.

25. Line Extension: The lines and equipment necessary to extend the electric distribution system of the Company to provide service to additional Customers.

26. Master Meter: A meter for measuring or recording the flow of electricity that has passed through it at a single location where said electricity is distributed to tenants or occupants for their usage.

27. Megawatt ("MW"): A unit of power equal to 1,000,000 watts.

28. Meter: The instrument for measuring and indicating or recording the flow of electricity that has passed through it.

29. Meter Tampering: A situation where a meter has been illegally altered. Common examples are meter bypassing, use of magnets to slow the meter recording, and broken meter seals.

30. Minimum Charge: The amount the Customer must pay for the availability of electric service, including an amount of usage, as specified in the Company's Rates.

SECTION 2
DEFINITIONS
(continued)

31. Month: The period between any two (2) regular readings of the Company's meters at approximately thirty (30) day intervals.

32. On-Site Generation: Any and all power production generated on or adjacent to a Customer's property that is controlled, utilized, sold, or consumed by that Customer or its agent.

33. Permanent Customer: A Customer who is a tenant or owner of a service location who applies for and receives permanent electric service.

34. Permanent Service: Service which, in the opinion of the Company, is of a permanent and established character. The use of electricity may be continuous, intermittent, or seasonal in nature.

35. Person: Any individual, partnership, corporation, governmental agency, or other organization operating as a single entity.

36. Point of Delivery: In all cases, unless otherwise specified, "point of delivery" is the location on the Customer's building, structure, or premises where all wires, conductors, or other current-carrying devices of the Customer join or connect with wires, conductors, or other current-carrying devices of the Company. The Company will determine the point of delivery in accordance and based on the specific design specifications, relevant and appropriate technical standards and specifications, Rates and construction standards as applicable to the specific situation. Location and type of metering facilities will be determined by the Company and may or may not be at the same location as the point of delivery.

37. Power: The rate of generating, transferring and/or using electric energy, usually expressed in kilowatts.

38. Power Factor: The ratio of real or active power ("kW") to apparent or reactive power ("kVA").

39. Premises: All of the real property and apparatus employed in a single enterprise on an integral parcel of land undivided by public streets, alleys or railways.

40. Primary Service and Metering: Service supplied directly from the Company's high voltage distribution or transmission lines without prior transformation to a secondary level.

41. Prorate: To divide, distribute, or assess proportionately.

42. Rates: The charge(s), related term(s) and conditions of the Company's Tariffs.

43. Residential Subdivision Development: Any tract of land which has been divided into four or more contiguous lots with an average size of one acre or less for use for the construction of residential buildings or permanent mobile homes for either single or multiple occupancy.

SECTION 2
DEFINITIONS
(continued)

44. Residential Use: Service to Customers using electricity for domestic purposes such as space heating, air conditioning, water heating, cooking, clothes drying, and other residential uses and includes use in apartment buildings, mobile home parks, and other multiunit residential buildings.

45. Revenue: Delivery charge, power supply charge, demand charge, and PPFAC charge collected from Customer.

46. Rules and Regulations or Company Rules: These Rules and Regulations, which are a part of the Company's Tariffs and Rates.

47. Secondary Service: Service supplied at secondary voltage levels from the load side of step-down transformers connected to the Company's high voltage distribution lines.

48. Service Area: The territory in which the Company has been granted a certificate of convenience and necessity and is authorized by the ACC to provide electric service.

49. Service Drop: The overhead service conductors from the last Company-owned pole or other aerial support to and including the splices, if any, connecting to the Customer's service entrance conductors at a building or other structure.

50. Service Establishment Charge: The charge as specified in the Company's Rates, which covers the cost of establishing a new account.

51. Service Line: The line extending from a distribution line or transformer to the Customer's premises or point of delivery.

52. Service Reconnection Charge: The charge as specified in the Company's Rates which must be paid by the Customer prior to reestablishment of electric service each time the electricity is disconnected for nonpayment or whenever service is discontinued for failure otherwise to comply with the Company's Rates or Rules.

53. Service Reestablishment Charge: A charge as specified in the Company's Rates for service in the same location where the same Customer had ordered a service disconnection within the preceding twelve (12) month period.

54. Single Family Dwelling: A house, an apartment, or a mobile home permanently affixed to a lot, or other permanent residential unit which is used as a permanent home.

55. Single-Phase Service: Three (3) wire service (usually 120/240 volts).

56. Tariffs: The terms and conditions of the services offered by the Company, including a schedule of the Rates and charges for those services.

SECTION 2
DEFINITIONS
(continued)

57. Temporary Service: Service to premises or enterprises which are temporary in character, or where it is known in advance that the service will be of limited duration. Service which, in the opinion of the Company, is for operations of a speculative character is also considered temporary service.

58. Three-Phase Service: Four (4) wire service (usually 120/208 volts).

59. Weather Especially Dangerous to Health: That period of time commencing with the scheduled termination date when the local weather forecast, as predicted by the National Oceanographic and Administration Service, indicates that the temperature will not exceed thirty-two (32) degrees Fahrenheit for the next day's forecast. The ACC may determine that other weather conditions are especially dangerous to health as the need arises.

SECTION 3
ESTABLISHMENT OF SERVICE

A. Information from New Applicants

1. The Company may obtain the following minimum information from each application for service:

   a. Name or names of Applicant(s);

   b. Service address or location and telephone number;

   c. Billing address/telephone number, if different than service address;

   d. Social Security Number or Driver's License number and date of birth to be consistent with verifiable information on legal identification;

   e. Address where service was provided previously;

   f. Date Applicant will be ready for service;

   g. Statement of whether premises have been supplied with electric service previously;

   h. Purpose for which service is to be used;

   i. Statement of whether Applicant is owner or tenant of or agent for the premises;

   j. Information concerning the energy and demand requirements of the Customer; and

   k. Type and kind of life-support equipment, if any, used by the Customer or at the service address.

2. Where service is requested by two (2) or more individuals, the Company will have the right to collect the full amount owed to the Company from any one of the Applicants.

3. The supplying of electric service by the Company and the Customer's acceptance of that electric service will be deemed to constitute an agreement by and between the Company and the Customer for delivery, acceptance of and payment for electric service under the Company's applicable Rates, and Rules and Regulations.

4. The term of any agreement not otherwise specified will become operative on the day the Customer's installation is connected to the Company's facilities for the purpose of taking electric energy.

5. The Company may require a written contract with special guarantees from Applicants whose unusual characteristics of load or location would require excessive investment in facilities or whose requirements for service are of a special nature.

6. Signed contracts may be required for service to commercial and industrial establishments. No contract or any modification of the contract will be binding upon the Company until executed by a duly authorized representative of the Company.

7. Where an occupant of the premises who owes a debt to the Company, but is not the Applicant or the Customer, the occupant shall also be jointly and severally liable for the bills rendered to the premises.

SECTION 3
ESTABLISHMENT OF SERVICE
(continued)

B. Deposits

1. The Company may require from any present or prospective Customer a deposit to guarantee payment of all bills. This deposit may be retained by the Company until service is discontinued and all bills have been paid; except as provided in Subsection B.3. below. Upon proper application by the Customer, the Company will then return said deposit, together with any unpaid interest accrued thereon from the date of commencement of service or the date of making the deposit, whichever is later. The Company will be entitled to apply said deposit together with any unpaid interest accrued thereon, to any indebtedness for the same class of service owed to the Company for electric service furnished to the Customer making the deposit. When said deposit has been applied to any such indebtedness, the Customer's electric service may be discontinued until all such indebtedness of the Customer is paid and a like deposit is again made with the Company by the Customer. No interest will accrue on any deposit after discontinuance of the service to which the deposit relates.

   The Company will not require a deposit from a new Applicant for residential service if the Applicant is able to meet any of the following requirements:

   a. The Applicant has had service of a comparable nature with the Company within the past two (2) years and was not delinquent in payment more than twice during the last twelve (12) consecutive months of service or was not disconnected for nonpayment; or

   b. The Applicant can produce a letter of credit or verification from an electric utility where service of a comparable nature was last received by Applicant, which states Applicant had a timely payment history at time of service discontinuation; or

   c. Instead of a deposit, the Company receives deposit guarantee notification from a social or governmental agency acceptable to the Company. A surety bond may be provided as security for the Company in an amount equal to the required deposit.

2. The Company may issue a non-assignable, non-negotiable receipt to the Applicant for the deposit. The inability of the Customer to produce his or her receipt will in no way impair the Customer's right to receive a refund of the deposit which is reflected on the Company records.

3. Cash deposits held by the Company twelve (12) months or longer will earn interest at the established one-year Treasury Constant Maturities rate, effective on the first business day of each year, as published in the Federal Reserve website.

   a. Residential Customers – Deposits or other instruments of credit will automatically expire or be refunded or credited to the Customer's account, after twelve (12) consecutive months of service during which time the Customer has not been delinquent more than two (2) times in a twelve (12) month period.

SECTION 3
ESTABLISHMENT OF SERVICE
(continued)

b. Non-Residential Customers – Deposits or other instruments of credit will automatically expire or be refunded or credited to the Customer's account after twenty-four (24) consecutive months of service during which the Customer has not been delinquent more than two (2) times or disconnected for non-payment in the most recent twelve (12) month period.

4. The Company may require a Customer to establish or reestablish a deposit if the Customer became delinquent in the payment of three (3) or more bills within a twelve (12) consecutive month period, or has been disconnected from service during the last twelve (12) months, or the Company has a reasonable belief that the Customer is not credit worthy based on a rating from a credit agency utilized by the Company.

5. The Company may review the Customer's usage after service has been connected and adjust the deposit amount based upon the Customer's actual usage.

6. A separate deposit may be required for each meter installed.

7. Residential Customer deposits will not exceed two (2) times that Customer's estimated average monthly bill. Non-residential Customer deposits will not exceed two and one-half (2.5) times that Customer's maximum estimated monthly bill. If actual usage history is available, then that usage, adjusted for normal weather, will be the basis for the estimate.

8. The posting of a deposit will not preclude the Company from terminating service when the termination is due to the Customer's failure to perform any obligation under the agreement for service or any of these Rules and Regulations.

C. Conditions for Supplying Service

The Company reserves the right to determine the conditions under which service will be provided. Conditions for service and extending service to the Customer will be based upon the following:

1. Customer has wired his premises in accordance with the National Electric Code, City, County and/or State codes, whichever are applicable.

2. If the Company determines that there is a reasonable basis to believe that the Customer's premises poses a safety risk to Company employees, then the Company may, at its option, install a meter or facilities with remote connect and/or disconnect capabilities.

3. Customer has installed the meter loop in a suitable location approved by the Company.

4. In the case of a mobile home, the meter loop must be attached to a meter pole or to an approved support.

SECTION 3
ESTABLISHMENT OF SERVICE
(continued)

5. In case of temporary construction service, the meter loop must be attached to an approved support.

6. All meter loop installations must be in accordance with the Company's specifications and located at an outdoor location accessible to the Company.

7. Individual Customers may be required to have their property corner pins and/or markers installed to establish proper right-of-way locations.

8. Developers must have all property corner pins and/or markers installed necessary to establish proper locations to supply electric service to individual lots within subdivisions.

9. Where the installation requires more than one meter for service to the premises, each meter panel must be permanently marked (not painted) by the contractor or Customer to properly identify the portion of the premises being served.

10. The identification will be the same as the apartment, office, etc., served by that meter socket. The identifying marking placed on each meter panel will be impressed into or raised from a tab of aluminum, brass or other approved non-ferrous metal with minimum one-fourth (1/4) inch-high letters. This tag must be riveted to the meter panel. The impression must be deep enough to prevent the identification(s) from being obscured by subsequent painting of the building and attached service equipment.

11. The Company may require the assistance of the Customer and/or the Customer's contractor to open the apartments or offices at the time the meters are set, in order to verify that each meter socket actually serves the apartment or office indicated by the marking tag. In the case of multiple buildings the building or unit number and street address will be identified on the pull section in the manner described above.

D. Grounds for Refusal of Service

The Company may refuse to establish service if any of the following conditions exist:

1. When the Applicant has an outstanding amount due for the same class of electric service with the Company and the Applicant is unwilling to make arrangements with the Company for payment, in such cases, the Company shall be entitled to transfer the balance due on the terminated service to any other active account of the Customer for the same class of service. The failure of the Customer to pay the active account shall result in the suspension or termination of service.

2. A condition exists which, in the Company's judgment, is unsafe or hazardous to the Applicant, the general population, or the Company's personnel or facilities;

SECTION 3
ESTABLISHMENT OF SERVICE
(continued)

3. The Applicant refuses to provide the Company with a deposit when the Customer has failed to meet the credit criteria for waiver of deposit requirements;

4. Customer is known to be in violation of the Company's Rates or Rules and Regulations;

5. Customer fails to furnish the funds, service, equipment, and/or rights-of-way necessary to serve the Customer and which have been specified by the Company as a condition for providing service;

6. Customer fails to provide safe access to the meter that would be serving the Customer;

7. Applicant falsifies his or her identity for the purpose of obtaining service;

8. Service is requested by an Applicant and a prior Customer, who is either living with the Applicant, or who is an occupant of the premises who owes a debt to the Company from the same class of service from the same or a prior service address;

9. The Applicant is acting as an agent for a prior Customer who is deriving benefits from the energy supplied and who owes a delinquent bill from the same class of service from the same or a prior service address;

10. There is evidence of tampering or energy diversion.

E. Service Establishment, Reestablishment or Reconnection Charge

1. The Company will make a charge, as approved by the ACC, for service transfer for meter reads only set forth as Fee No. 1 in the UNS Electric Statement of Charges.

2. The Company may make a charge, as approved by the ACC, for the establishment, reestablishment, or reconnection of service. The charge for establishment, reestablishment or reconnection of service during regular business hours is set forth as Fee No. 4 in the UNS Electric Statement of Charges.

3. Should service be established during a period other than the Company's regular business hours, at the Customer's request, the Customer may be required to pay an after-hour charge for the service connection set forth as Fee No. 5. Where the Company's scheduling will not permit service establishment on the same day as requested, the Customer can elect to pay the after-hour charge for establishment that day, or his service will be established on the next available business day. The after-hour charge is set forth as Fee No. 6 in the UNS Electric Statement of Charges. Even so, a Customer's request to have the Company establish service after-hours is subject to the Company having Staff available; there is no guarantee that the Company will have the staffing available for service establishment or reestablishment outside of regular business hours.

SECTION 3
ESTABLISHMENT OF SERVICE
(continued)

4. For the purpose of this Rule, the definition of service establishment is where the Customer's facilities are ready and acceptable to the Company, the Applicant has obtained all required permits and/or inspections indicating that the Applicant's facilities comply with local construction safety and governmental standards and regulations, and the Company needs only to install a meter, read a meter, or turn the service on.

5. Service Reconnection Charge

   Whenever the Company has discontinued service under its usual operating procedures because of any default by the Customer as provided herein, a reconnection charge, not to exceed the charge for the reestablishment of service as set forth as Fee Nos. 4–5 in the UNS Electric Statement of Charges, shall be made and may be collected by the Company before service is restored. When, due to the behavior of the Customer, it has been necessary to discontinue service utilizing other than usual operating procedures, the Company shall be entitled to charge and collect actual costs to restore service, as set forth in the UNS Electric Statement of Charges.

F. Temporary Service

1. Applicants for temporary service may be required to pay Line Extension charges in accordance with Section 7.C.9.d.

2. Where the duration of service is to be less than one (1) month, the Applicant will also be required to advance a sum of money equal to the estimated bill for service.

3. Where the duration of service is to exceed one (1) month, the Applicant may also be required to meet the deposit requirements of the Company, as outlined in Subsection B.1. above.

4. If at any time during the term of the agreement for service the character of a temporary Customer's operations changes so that, in the opinion of the Company, the Customer is classified as permanent, the terms of the Company's Line Extension rules will apply.

G. Identification of Load and Premises

Upon request of the Company, the electric load and premises to be served by the Company must be clearly identified by the Customer at the time of application. If the service address is not recognized in terms of commonly used identification system, the Customer may be required to provide specific written directions and/or legal descriptions before the Company will be required to act upon a request for electric service.

SECTION 3
ESTABLISHMENT OF SERVICE
(continued)

H. Identification of Responsible Party

Any person applying on behalf of another Customer for service to be connected in the name of or in care of another Customer must furnish to the Company written approval from that Customer guaranteeing payment of all bills under the account. The Customer is responsible in all cases for service supplied to the premises until the Company has received proper notice of the effective date of any change. The Customer shall also promptly notify the Company of any change in physical or electronic billing address.

I. Tampering With or Damaging Company Equipment

1. The Customer agrees, when accepting service, that no one except authorized Company employees or agents of the Company will be allowed to remove or replace any Company owned equipment installed on Customer's property.

2. No person, except an employee or agent acting on behalf of the Company shall alter, remove or make any connection to the Company's meter or service equipment.

3. No meter seal may be broken or removed by anyone other than an employee or agent acting on behalf of the Company; however, the Company may give its prior consent to break the seal by an approved electrician employed by a Customer when deemed necessary by the Company.

4. The Customer will be held responsible for any broken seals, tampering, or interfering with the Company's meter(s) or any other Company owned equipment installed on the Customer's premises. In cases of tampering with meter installations, interfering with the proper working thereof, or any tampering, interfering, theft, or service diversion, including the falsification of Customer read-meter readings, Customer will be subject to immediate discontinuance of service. The Company will be entitled to collect from the Customer whose name the service is in, under the appropriate Rate, for all power and energy not recorded on the meter as the result of such tampering, or other theft of service, and also additional security deposits as well as all expenses incurred by the Company for property damages, investigation of the illegal act, and all legal expenses and court costs incurred by the Company.

5. The Customer will be held liable for any loss or damage occasioned or caused by the Customer's negligence, want of proper care or wrongful act or omission on the part of any Customer's agents, employees, licensees or contractors.

SECTION 3
ESTABLISHMENT OF SERVICE
(continued)

J. Access

1. The Customer is responsible for providing safe access to Company facilities. The Company's authorized agents shall have satisfactory unassisted twenty-four (24) hour a day, seven (7) days a week access to the Company's equipment located on Customer's premise for the purpose of repair and service restoration work that the Company may need to perform.

2. If additional resources are required to gain safe access to perform service establishment, disconnection, meter reading, or routine maintenance, due to an affirmative, wrongful, and/or criminal act by the Customer, the Company will be entitled to collect from the Customer all expenses incurred by the Company for additional resources including: investigation of access, all legal expenses, and court costs.

SECTION 4
MINIMUM CUSTOMER INFORMATION REQUIREMENTS

A. Information for Customers

1. The Company will make available upon Customer request not later than sixty (60) days from the date of the request a concise summary of the Rate schedule applied for by the Customer. The summary will include the following:

   a. The monthly minimum Customer charge, identifying the amount of the charge and the specific amount of usage included in the minimum charge, where applicable;

   b. Rate blocks, where applicable;

   c. Any adjustment factor(s) and method of calculation; and

   d. Demand charge, where applicable.

2. Upon request of the Customer, either at the time of application or after, the Company will use its best efforts to assist the Customer in choosing an appropriate Rate. However, upon application or upon request for assistance, the Applicant or the Customer will elect the applicable Rate best suited to his requirements. The Company may assist in making this election, but will not be held responsible for notifying the Customer of the most favorable Rate and will not be required to refund the difference in charges under different Rates. The Customer is solely responsible for selecting the Rate the Customer believes is appropriate. If no Rate is selected; the Customer will be placed on the most common Rate for the class of service and the Company will not be liable to refund the difference in charges had the Customer been placed on different Rates.

3. Upon written notification of any material changes in the Customer's installation or load conditions, the Company will assist in determining if a change in Rate is desirable, but not more than one (1) such change at the Customer's request will be made within any twelve (12) month period.

4. The supply of electric service under a residential Rate to a dwelling involving some business or professional activity will be permitted only where this activity is only occurring occasionally at the dwelling, where the electricity used in connection with this activity is small in amount, and where the electricity is used only by equipment that would normally be in use if the space were used as living quarters. Where a portion of the dwelling is used regularly for business, professional and other gainful purposes, and any considerable amount of electricity is used for other than domestic purposes, or for electrical equipment not normally used in living quarters is installed in connection with the activities referenced above, then the entire premises will be classified as non-residential and the appropriate general service Rate will be applied. The Customer, may, at his option, provide separate wiring so that the residential uses can be metered and billed separately under the appropriate residential service rate schedule, and the other uses under the appropriate general service rate.

SECTION 4
MINIMUM CUSTOMER INFORMATION REQUIREMENTS
(continued)

5. In addition, the Company will make available upon Customer request, not later than sixty (60) days from date of service commencement, a concise summary of the Company's Rates or the ACC's Rules and Regulations concerning:

   a. Deposits;

   b. Termination of service;

   c. Billing and collection; and

   d. Complaint handling.

6. The Company, upon request of a Customer, will transmit a written statement of actual consumption by the Customer for each billing period during the prior twelve (12) months, unless this data is not reasonably ascertainable. But the Company will not be required to accept more than one such request from each Customer in a calendar year.

B. Information Required Due to Changes in Rates:

1. The Company will send to affected Customers a concise summary of any change in the Rates affecting those Customers.

2. This information will be sent to the affected Customer within sixty (60) days of the effective date of the change.

SECTION 5
MASTER METERING

A. Mobile Home Parks – New Construction/Expansion

1. The Company will refuse service to all new construction or expansion of existing permanent residential mobile home parks unless the construction or expansion is individually metered by the Company. Line extensions and service connections to serve this expansion will be governed by the Company's Line Extension and/or service connection policies of these Rules and Regulations.

2. Permanent residential mobile home parks for the purpose of this rule will mean mobile home parks where the average length of stay for an occupant is a minimum of six (6) months.

3. For the purposes of this rule, expansion means the acquisition of additional real property for permanent residential spaces in excess of that existing at the effective date of this rule.

B. Residential Apartment Complexes, Condominiums and other Multiunit Residential Buildings

1. Master metering will not be allowed for new construction of apartment complexes and condominiums unless the building or buildings will be served by a centralized heating, ventilation, or air conditioning system and the contractor can provide to the Company an analysis demonstrating that the central unit will result in a favorable cost/benefit relationship.

2. At a minimum, the cost/benefit analysis should consider the following elements for a central unit as compared to individual units:

   a. Equipment and labor costs;

   b. Financing costs;

   c. Maintenance costs;

   d. Estimated kWh usage;

   e. Estimated kW demand on a coincident demand and non-coincident demand basis (for individual units);

   f. Cost of meters and installation; and

   g. Customer accounting cost (one account vs. several accounts).

3. A Customer of any residential apartment complex, condominium, or other multiunit residential building taking service through a master meter is responsible for determining his or her own usage beyond the Company's meter.

SECTION 6
SERVICE LINES AND ESTABLISHMENTS

A. Priority and Timing of Service Establishments

1. After the Applicant has complied with the Company's application requirements and has been accepted for service by the Company, and obtained all required permits and/or inspections indicating that the Customer's facilities comply with local construction, safety and governmental standards or regulations, the Company will schedule that Customer for service establishment.

2. All charges are due and payable before the Company will schedule the Customer for service establishment.

3. Service establishments will be scheduled for completion within five (5) business days of the date the Customer has been accepted for service, except in those instances when the Customer requests service establishment beyond the five (5) business day limitation.

4. When the Company has made arrangements to meet with a Customer for service establishment purposes and the Company or the Customer cannot make the appointment during the prearranged time, the Company will reschedule the service establishment to the satisfaction of both parties.

5. The Company will schedule service establishment appointments within a maximum range of four (4) hours during normal business hours, unless another timeframe is mutually acceptable to both the Company and the Customer.

6. Service establishments will be made only by the Company.

7. For the purposes of the rule, service establishments are where the Customer's facilities are ready and acceptable to the Company and the Company needs only to install or read a meter or turn the service on.

8. A fee for service establishment, reestablishment, or reconnection of service may be charged at a rate on file with and approved by the ACC. Whenever an Applicant requests after-hours handling of his request, the Company will charge a fee set forth in the UNS Electric Statement of Charges, unless a special call-out is required. If a special call-out is required the charge will be for a minimum of two (2) hours at the Company's then-prevailing after-hours rate for the service work on the Customer's premises. Special handling of calls and the related charges will be made only upon request of the Applicant. Even so, a Customer's request to have the Company establish service after-hours is subject to the Company having staff available; there is no guarantee that the Company will have the staffing available for service establishment, reestablishment or reconnection after regular business hours.

SECTION 6
SERVICE LINES AND ESTABLISHMENTS
(continued)

B. Service Lines

1. Customer provided facilities

   a. Each Applicant for services will be responsible for all inside wiring including the service entrance and meter socket. For three-phase service, the Customer will provide, at the Customer's expense, all facilities including conductors and conduit, beyond the Company-designated point of delivery.

   b. Meters and service switches in conjunction with the meter will be installed in a location where the meters will be readily and safely accessible for reading, testing and inspection, where these activities will cause the least interference and inconvenience to the Customer. Location of metering facilities will be determined by the Company and may or may not be at the same location as the point of delivery. However, the meter locations will not be on the front exterior wall of the home, or in the carport or garage unless mutually agreed to between the Customer or homebuilder and the Company. Without cost to the Company, the Customer must provide, at a suitable and easily accessible location, sufficient and proper space for the installation of meters.

   c. Where the meter or service line location on the Customer's premises is changed at the request of the Customer or due to alterations on the Customer's premises, the Customer must provide and have installed, at the Customer's expense, all wiring and equipment necessary for relocating the meter and service line connection. The Company will charge the Customer for moving the meter and/or service lines.

   d. Customer will provide access to a main switch or breaker for disconnecting load to enable safe installation and removal of Company meters.

2. Company-Provided Facilities

   a. The Company will provide, at no charge, an overhead service line up to one hundred fifty (150) feet and no more than one carryover pole, if required, for each Customer. In areas where the Company maintains an underground distribution system, the Company will provide, install, and connect, at no charge, underground service cable up to one hundred fifty (150) feet for each residential Customer.

   b. The cost of any service line in excess of that allowed under 2.a. above will be paid for by the Customer as a contribution in aid of construction.

   c. A Customer requesting an underground service line in an area served by overhead facilities will pay for the difference between estimated cost of an equivalent overhead service connection and the actual cost of the underground connection as a non-refundable contribution.

SECTION 6
SERVICE LINES AND ESTABLISHMENTS
(continued)

3. Overhead Service Connection – Secondary Service

   a. For the initial service drop: Where the Company's distribution pole line is located on the Customer's premises, or on a street, highway, lane, alley, road, or private easement immediately contiguous thereto, the Company will, at its own expense, furnish and install a single span of service drop line (up to 550 feet in total) from its pole to the Customer's point of attachment, provided that this point of attachment is at the point of delivery and is of a type and so located that the service drop wires may be installed in a manner approved by the Company in accordance with good engineering practice, and in compliance with all applicable laws, ordinances, Rules and Regulations, including those governing clearances and points of attachment.

   b. Whenever any of the clearances required by the applicable laws, ordinances, rules or regulations of public authorities or standards of the Company from the service drops to the ground or any object becomes impaired by reason of any changes made by the owner or tenant of the premises, the Customer will, at his own expense, provide a new and approved support, in a location approved by the Company, for the termination of the Company's service drop wires and will also provide all service entrance corridors and equipment necessitated by the change of location.

   c. The cost of any service line footage, in excess of that allowed at no charge, will be paid for by the Customer as a contribution in aid of construction.

   d. For each overhead service connection, the Customer will furnish at their own expense a set of service entrance conductors that will extend from the point of service delivery at the point of termination of the Company's service drop on the Customer's support to the Customer's main disconnect switch. These service entrance conductors will be of a type and be in an enclosure that meets with the approval of the Company and any inspection authorities having jurisdiction.

4. Underground Service Connections – Secondary Service

   a. In areas where the Company maintains an underground distribution system, individual services will be underground.

   b. The cost of any underground service line footage, in excess of that allowed at no charge, will be paid for by the Customer and will be treated as a contribution in aid of construction.

   c. Whenever the Company's underground distribution system is not complete to the point designated by the Company where the service lateral is to be connected to the distribution system, the system may be extended in accordance with Section 7.

SECTION 6

SERVICE LINES AND ESTABLISHMENTS
(continued)

d. For an initial underground service connection of single-phase service, the Company will install a service lateral from its distribution line to the Customer's Company-approved termination facilities under the following conditions (unless otherwise agreed to by the Company and the Applicant):

   (i) The Customer, at his expense, will provide the necessary trenching, conduit, conduit installation, backfill, landscape restoration and paving and will also furnish, install, own and maintain termination facilities on or within the building to be served.

e. The Company, at its expense (up to 550 feet in total), will furnish, install, own and maintain the underground single-phase cables to Customer's Company-approved termination facilities.

f. The Company will determine the minimum size and type of conduit and conductor for the single-phase service. The Customer will furnish and install the conduit system, including suitable pull ropes as specified by the Company. The ownership of this conduit or duct will be conveyed to the Company, and the Company will thereafter maintain the conduit or duct. The maximum length of any lateral conductor will be determined by the Company in accordance with accepted engineering practice in determining voltage drop, voltage flicker, and other relevant considerations.

g. For three-phase service, the Customer will provide, at the Customer's expense, all facilities, including conductors and conduit, beyond the Company-designated point of delivery.

C. Easements and Rights-of-Way

1. At no cost to the Company, each Customer will grant adequate easements and rights-of-way that are satisfactory to ensure proper service connection and any additional easements and rights-of-way as may be necessary for electric system reliability. Failure on the part of the Customer to grant adequate easement and right-of-way will be grounds for the Company to refuse service.

2. When the Company discovers that a Customer or the Customer's Agent is performing work, has constructed facilities or has allowed vegetation to grow adjacent to or within an easement or right-of-way and this work, construction, vegetation or facility poses a hazard or is in violation of federal, state or local laws, ordinances, statutes, Rules or Regulations, or significantly interferes with the Company's access to equipment, the Company will notify the Customer or the Customer's Agent and will take whatever actions are necessary to eliminate the hazard, obstruction or violation at the Customer's expense.

SECTION 6
SERVICE LINES AND ESTABLISHMENTS
(continued)

D. Number of Services to be Installed

Unless otherwise provided herein, or in a Rate or contract, the Company will not install more than one service, either overhead or underground, for any one building or group of buildings on a single premise. Separate services may be installed for separate buildings or group of buildings where necessary for the operating convenience of the Company, where provided for in the Rates, or where required by law or local ordinance.

E. Multiple Service Points

Unless otherwise expressly provided herein, or in a Rate or contract, any person, firm, corporation, agency or other organization or governmental body receiving service from the Company at more than one location or for more than one separately operated business will be considered as a separate Customer at each location and for each business. If several buildings are occupied and used by a Customer in the operation of a single business, then the Company, upon proper application, will furnish service for the entire group of buildings through one service connection at one point of delivery, provided all of these buildings are at one location on the same lot or tract, or on adjoining lots or tracts that form a contiguous site (not separated by any public streets) wholly owned, or controlled, and occupied by the Customer in the operation of this single business. Dwelling units will be served, metered and billed separately, except at the option of the Company.

F. Temporary Service

For service that is temporary in nature or for operations of a speculative character or questionable permanency the Customer will be charged the Company's estimated cost of installing the service.

SECTION 7
LINE EXTENSIONS

Introduction

The Company will construct, own, operate and maintain lines along public streets, roads and highways which the Company has the legal right to occupy, and on public lands and private property across which rights-of-way and easements satisfactory to the Company may be obtained without cost to or condemnation by the Company.

A request for electric service often requires the construction of new distribution lines of varying distances. The distances and cost vary widely depending upon Customer's location and load size. With such a wide variation in extension requirements, it is necessary to establish conditions under which the Company will extend its electric facilities.

All extensions are subject to the availability of adequate capacity, voltage and Company facilities at the beginning point of an extension, as determined by the Company.

A standard policy has been adopted to provide service to Customers whose requirements are deemed by the Company to be economical and ordinary in nature.

All extensions are made on the basis of economic feasibility. Footage and revenue basis are offered below for use in circumstances where feasibility is generally accepted because of the number of extensions made within these footage and dollar units.

In unusual circumstances, when the application of the provisions of this policy appear impractical, or in case Customer's requirements exceed 100 kW, the Company will make a special study of the conditions to determine the basis on which service may be rendered.

A. General Requirements

1. Upon request by an Applicant for a line extension, the Company will prepare without charge, a preliminary electric design and a rough estimate of the cost of installation, if any, to be paid by said Applicant.

2. Any Applicant for a line extension requesting the Company to prepare detailed plans, specifications, or cost estimates will be required to make a non-refundable deposit with the Company in an amount equal to the estimated cost of preparation. The Company will make available within ninety (90) days after receipt of the deposit referred to above, those plans, specifications, and cost estimates for the proposed line extension. Where the Applicant authorizes the Company to proceed with construction of the extension, the deposit will be credited to the cost of construction. If the extension is to include over-sizing of facilities to be done at the Customer's expense, appropriate details will be set forth in the plans, specifications and cost estimates. Developers providing the Company with approved plats will be provided with plans, specifications, or cost estimates within ninety (90) days after receipt of the deposit referred to above.

   The Company will provide a copy of the Line Extension policy prior to the Applicant's acceptance of the utility's extension agreement.

SECTION 7
LINE EXTENSIONS
(continued)

3. All line extension agreements requiring payment of an advance by the Applicant will be in writing and signed by each party.

4. The provisions of this rule apply only to those Applicants who, in the Company's judgment, will be permanent Customers of the Company. Applications for temporary service will be governed by the Company's Rules concerning temporary service applications. The Company reserves the right to delay the extension of facilities until the satisfactory completion of required site improvements, as determined by the Company, and an approved service entrance to accept electric service has been installed.

B. Minimum Written Agreement Requirements

1. Each line extension agreement must, at a minimum, include the following information:

   a. Name and address of Applicant(s);

   b. Proposed service address(es) or location(s);

   c. Description of requested service;

   d. Description and sketch of the requested line extension;

   e. A cost estimate to include itemized material costs, labor, and other itemized costs as necessary; Calculations of estimated line extension costs will include the following:

      i. Material cost;

      ii. Direct labor cost; and

      iii. Overhead cost.

         1) Overhead costs are represented by all the costs which are proper capital charges in connection with construction, other than direct material and labor costs including but not limited to; indirect labor, engineering, transportation, taxes (e.g. FICA, State & Federal Unemployment which are properly allocated to construction), insurance, stores expense, general office expenses allocated to costs of construction, power operated equipment, employee pension and benefits, vacations and holidays, and miscellaneous expenses properly chargeable to construction.

   f. Payment terms;

   g. A concise explanation of any refunding provisions, if applicable;

   h. The Company's estimated start date and completion date for construction of the line extension; and

   i. A summary of the results of the economic feasibility analysis performed by the Company to determine the amount of the advance required from the Applicant for the proposed line extension.

2. Each Applicant will be provided with a copy of the written line extension agreement.

SECTION 7
LINE EXTENSIONS
(continued)

C. Line Extension Requirements

1. Overhead Extensions to Individual Residential Applicants

a. Line Extension Allowance

Upon the Applicant's satisfactory completion of required site improvements, the Company will make single-phase extensions from its existing facilities of proper voltage and adequate capacity at the Company's expense up to five hundred fifty (550) feet. The distance of five hundred fifty (550) feet is to be measured by the shortest feasible route along public streets, roads, highways, or suitable easements from the existing facilities to the Applicant's nearest point of delivery and inclusive of the service drop and is for initial site improvements, as determined by the Company, only.

b. Extensions in Excess of Line Extension Allowance Distance

The Company will make extensions in excess of five hundred fifty (550) feet per Customer upon receipt of a non-interest bearing, refundable cash deposit with the Company to cover the estimated costs of construction for the pro-rata share of the single-phase extension length over five hundred fifty (550) feet, for voltages up to 21kV.

The Company will install, own and maintain, on an individual project basis, the distribution facilities necessary to provide permanent service.

c. Method of Refund

i. Deposit refunds will be made to a depositor when separately metered Customers are served directly from the line extension originally constructed to serve said depositor, providing the new line extension is less than five hundred fifty (550) feet in distance, and the Customer to be served occupies a permanent structure designed for continued occupancy for either residential or business purposes, meeting established municipal, county or state codes as applicable.

The amount of the deposit refund will be equal to the estimated 'Cost per Foot' for the line extension project rate multiplied by five hundred fifty (550) feet less the actual footage of the new line extension required to serve the new Customer.

In no event will the total of the refund payments made by the Company to a depositor be in excess of the deposit amount advanced.

SECTION 7
LINE EXTENSIONS
(continued)

A pictorial explanation of the method of refund for a single-phase line extension is as follows (assume the 'Cost per Foot' rate for this Line Extension is $15.00 per foot):

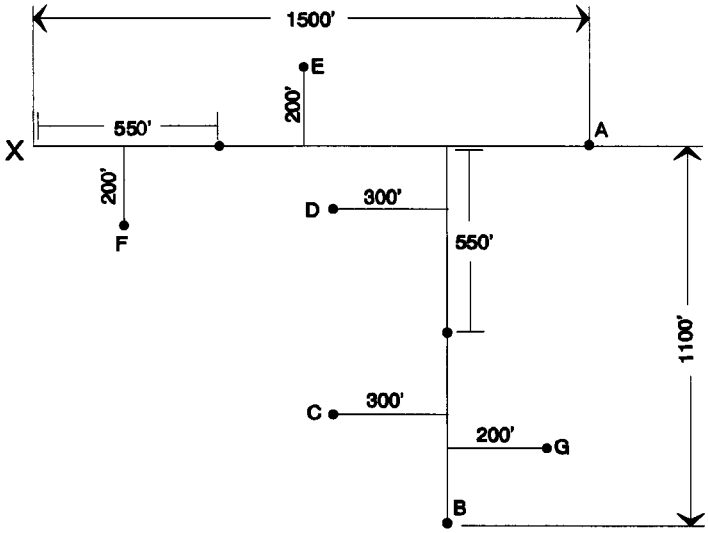

Applicant "A" – Customer makes refundable advance of $14,250 for footage over 550' at $15.00/foot.

Applicant "B" – Customer makes refundable advance of $8,250 for footage over 550' at $15.00/foot. No refund to A for B's connection because B is over 550'.

Applicant "C" – Customer gets line at no cost. Refund goes to B at $15.00 x 250', or $3,750 because C ties directly into B's line and is less than 550'.

Applicant "D" – Customer gets line at no cost. Refund goes to B at $15.00 x 250', or $3,750, because it ties directly into B's line and is less than 550'.

Applicant "E" – Customer gets line at no cost. Refund goes to A at $15.00 x 350', or $5,250 because E ties directly into A's line and is less than 550'.

Applicant "F" – Customer gets line at no cost. Refund goes to A at $15.00 x 350', or $5,250 because F ties directly into A's line and is less than 550'.

Applicant "G" – Customer gets line at no cost. Refund goes to B at $15.00 x 350', or $5,250; however, B receives $750 since this is the remaining balance of the initial deposit net of refunds. Total refunds cannot exceed the amount of the initial advance.

SECTION 7
LINE EXTENSIONS
(continued)

Note: The dollars in the example above are illustrative. This method requires that: a) The deposit advance made for an initial line extension cannot be refunded to the depositor unless a new line extension required to serve a new separately metered Customer is directly connected to the initial line extension; and b) the new line extension is less than 550 feet in length.

ii. Payment of eligible refunds will be made within ninety (90) days following receipt of notification to the Company that a qualifying permanent Customer has commenced receiving service from an extension.

iii. A Customer may request an annual survey to determine if additional Customers have been connected to and are using service from the extension.

iv. After a period of five (5) years from the date the Company is initially ready to render service from an extension, the Company will review the deposit and make appropriate refunds then due, if any. Any unrefunded amount remaining thereafter will become the property of the Company and will no longer be eligible for refund and will become a contribution in aid of construction.

2. Underground Facilities to Individual Residential Applicants

a. Underground line extensions will generally be made only where mutually agreed upon by the Company and the Applicant, or in areas where the Company does maintain underground distribution facilities for its operating convenience.

b. Underground extensions will be owned, operated and maintained by the Company, provided the Applicant pays in advance a non-refundable sum equal to the estimated difference between the cost, exclusive of meters and services, of the underground extension and an estimated equivalent overhead extension cost for voltages up to 21kV.

c. In addition to the non-refundable sum, the Applicant will (unless otherwise agreed to by the Company and the Applicant) make such refundable deposit (for voltages up to 21kV) in accordance with Subsection 7.C. as otherwise would have been required under these Rules and Regulations if the extension had been made by overhead construction.

d. Refunds of cash deposits will be made in the same manner as provided for overhead extensions to individual Applicants for service, in accordance with the applicable provisions of Subsection 7.C.

e. Underground services will be installed, owned, operated and maintained as provided in Section 6 of these Rules and Regulations.

SECTION 7
LINE EXTENSIONS
(continued)

3. Extensions to Non-Residential Customers

   a. Line Extensions less than 21kV

      i. For line extensions with voltages less than or equal to 21kV, the Company will install, own and maintain, on an individual project basis, the distribution facilities necessary to provide permanent service to a non-residential Customer. Prior to the installation of facilities, the Customer will be required to make a refundable non-interest-bearing cash advance to the Company for the estimated project cost less an allowance equal to 50% of the estimated two year Revenue. If the total of such charge is less than one hundred dollars ($100.00), the charge will be waived by the Company.

      ii. Upon completion of construction of the Company's facilities the total actual cost of the project will be compared to the total estimated cost advanced by the Applicant, and any difference will be either billed or refunded within ninety (90) days to the Customer.

      iii. After the initial twenty-four (24) month billing period the Company will compare the actual Revenue to the allowance, and any difference will be either billed or refunded within ninety (90) days to the Customer.

      iv. In no event shall the total of the refund payments made by the Company to the depositor be in excess of the deposit amount advanced.

      v. No refunds will be made after a period of two (2) years subsequent to the completion of construction of the Company's facilities. Any un-refunded amount remaining at the end of the two (2) year period will become the property of the Company and a nonrefundable contribution in aid of construction.

      vi. 550 foot line extension allowance does not apply.

   b. Line Extensions greater than 21kV to 69kV

      i. For line extensions with voltages greater than 21kV and less than or equal to 69kV, the Company will install, own and maintain, on an individual project basis, the distribution facilities necessary to provide permanent service to a non-residential Customer. Prior to the installation of facilities, the Customer will be required to make a refundable non-interest-bearing cash advance to the Company for the estimated project cost less an allowance equal to 50% of the estimated one year Revenue. If the total of such charge is less than one hundred dollars ($100.00), the charge will be waived by the Company.

      ii. Upon completion of construction of the Company's facilities the total actual cost of the project will be compared to the total estimated cost advanced by the Applicant, and any difference will be either billed or refunded within ninety (90) days to the Customer.

      iii. After the initial twelve (12) month billing period the Company will compare the actual Revenue to the allowance, and any difference will be either billed or refunded within ninety (90) days to the Customer.

SECTION 7
LINE EXTENSIONS
(continued)

iv. In no event shall the total of the refund payments made by the Company to the depositor be in excess of the deposit amount advanced.

v. No refunds will be made after a period of two (2) years subsequent to the completion of construction of the Company's facilities. Any un-refunded amount remaining at the end of the two (2) year period will become the property of the Company and a nonrefundable contribution in aid of construction.

vi. 550 foot line extension allowance does not apply.

4. Residential Subdivision Developers

a. General

Required distribution facilities up to and within a new duly recorded residential subdivision, including subdivision plats which are activated subsequent to their recordation, for permanent service to single and/or multi-family residences and/or unmetered area lighting, will be constructed, owned, operated and maintained by the Company in advance of applications for service by permanent Customers only after the Company and the Applicant have entered into a written contract ("Subdivision Agreement"), which (unless otherwise agreed to by the Company and the Applicant) provides that:

i. The total estimated installed cost of such overhead distribution facilities, exclusive of meters, services and exclusive of other costs as may be deemed as reasonable by the Company, will be advanced to the Company as a refundable non-interest bearing cash deposit to cover the Company's cost of construction.

ii. Refundable advances will become non-refundable at such time and in such manner as provided in Subsection 7.C.4.b.

iii. Upon completion of construction of the Company's facilities the total actual cost of the project will be compared to the total estimated cost advanced by the Applicant, and any difference will be either billed or refunded within ninety (90) days to the Customer.

iv. Where applicable, if distribution facilities must be constructed in excess of an average of five hundred fifty (550) feet per new permanent Customer within a duly recorded residential subdivision, a nonrefundable cash amount equal to that portion of the total estimated installed cost represented by those required line facilities in excess of five hundred fifty (550) feet per Customer average will be paid to the Company.

SECTION 7
LINE EXTENSIONS
(continued)

v. Underground Installations – Extensions of single-phase underground distribution lines necessary to furnish permanent electric service to new residential buildings or mobile homes within a subdivision, in which facilities for electric service have not been constructed, for which applications are made by a developer will be installed underground in accordance with the provisions set forth in this regulation except where it is not feasible from an engineering, operational, or economic standpoint. Extensions of single-phase underground distribution lines necessary to furnish permanent electric service within a new single family and/or multi-family residential subdivision will be made by the Company in advance of receipt of applications for service by permanent Customers in accordance with the following provisions (unless otherwise agreed to by the Company and the Applicant):

1) The subdivider or other Applicant will provide the trenching, bedding, backfill (including any imported backfill required), compaction, repaving and any earthwork for pull boxes and equipment and transformer pad sites required in accordance with the Company's specifications and subject to the Company's inspection and approval.

2) Right-of-way and easements satisfactory to the Company will be furnished by the Developer at no cost to the Company and in reasonable time to meet service requirements. No underground electric facilities will be installed by the Company until the final grades have been established and furnished to the Company. In addition the easements, alleys and/or streets must be graded to within six (6) inches of final grade by the Developer before the Company will commence construction. Such clearance and grading must be maintained by the Developer. If, subsequent to construction, the clearance or grade is changed in such a way as to require relocation of underground facilities or results in damage to such facilities, the cost of such relocation and/or resulting repairs will be borne by the developer.

3) If armored cable or special cable covering is required, the Customer or developer will make a non-refundable contribution equal to the additional cost of such cable or covering.

4) Underground service lines will be installed, owned, operated and maintained as provided in Section 6 of these Rules and Regulations.

5) Any underground electric distribution system requiring more than single-phase service is not governed by this Subsection, but rather will be constructed pursuant to Subsection 7.C.6.

vi. Underground extensions up to the duly recorded Subdivision will be owned, operated and maintained by the Company, provided the Applicant pays a non-refundable sum equal to the estimated difference between the cost of the underground extension and an equivalent estimated cost of an overhead extension.

SECTION 7
LINE EXTENSIONS
(continued)

b. Method of Refund

i. The Developer is eligible for a refund during the term of the Subdivision Agreement of up to 100% of the amount advanced provided the average length of the line extension per lot or per service location does not exceed five hundred fifty (550) feet. If distribution facilities must be constructed in excess of an average of five hundred fifty (550) feet per new permanent lot or service location within a duly recorded residential subdivision, that portion of the advanced total installed cost represented by those required line facilities in excess of five hundred fifty (550) feet per customer will be held by the Company as a non-refundable contribution.

ii. On or after one (1) year subsequent to the installation of the Company's facilities, and thereafter each year of the term of the Subdivision Agreement the Company will review the status of the subdivision to determine the percentage ratio that the number of lots or service locations occupied by permanent Customers bears to the number of lots identified in each Subdivision Agreement specified as the basis for refund. The ratio determined at the time of each review multiplied by the total refundable advance associated with the line extension agreement will represent that portion of the advance qualified for refund. If the foregoing calculation indicates a refund is due, an appropriate refund of cash deposit will be made. Payment will be made within ninety (90) days following each review.

iii. The total amount refunded over the term of the Subdivision Agreement cannot exceed the total amount advanced net of any non-refundable contribution and or cost of ownership.

iv. The Company will make a final review on the status after a period of five (5) years. No refunds will be made after a period of five (5) years subsequent to the completion of construction of the Company's facilities. Any unrefunded amount remaining at the ends of the five (5) year period will become the property of the Company and a nonrefundable contribution in aid of construction.

5. Non-Residential Developers

a. General

Required distribution facilities up to and within a new duly recorded non-residential development, including commercial plats which are activated subsequent to their recordation, for permanent service, will be constructed, owned, operated and maintained by the Company in advance of applications for service by permanent commercial customers only after the Company and the Applicant have entered into a written contract which (unless otherwise agreed to by the Company and the Applicant) provides that:

i. For line extensions with voltages less than or equal to 21kV, the Company will install, own and maintain, on an individual project basis, the distribution facilities necessary to provide permanent service to a non-residential Customer. Prior to the installation of facilities, the Customer will be required to make a refundable non interest-bearing cash advance to the Company for the estimated project cost less an allowance equal to 50% of the estimated two year Revenue. If the total of such charge is less than one hundred dollars ($100.00), the charge will be waived by the Company.

SECTION 7
LINE EXTENSIONS
(continued)

ii. Upon completion of construction of the Company's facilities the total actual cost of the project will be compared to the total estimated cost advanced by the Applicant, and any difference will be either billed or refunded within ninety (90) days to the Customer.

iii. Five-hundred fifty (550) foot line extension allowance does not apply.

iv. For line extensions with voltages greater than 21kV Subsection 7.C.3.b will apply.

b. Method of Refund

i. After the initial twenty-four (24) month billing period the Company will compare the actual Revenue to the allowance, and any difference will be either billed or refunded within ninety (90) days to the Customer.

ii. In no event shall the total of the refund payments made by the Company to the depositor be in excess of the deposit amount advanced.

iii. No refunds will be made after a period of two (2) years subsequent to the completion of construction of the Company's facilities. Any unrefunded amount remaining at the end of the two (2) year period will become the property of the Company and a nonrefundable contribution in aid of construction.

c. Underground Installations – Extensions of single-phase or three-phase underground distribution lines necessary to furnish permanent electric service to new commercial properties a commercial subdivision, in which facilities for electric service have not been constructed, for which applications are made by a developer will be installed underground in accordance with the provisions set forth in this regulation except where it is not feasible from an engineering, operational, or economic standpoint. Extensions of single-phase or three-phase underground distribution lines necessary to furnish permanent electric service will be made by the Company in advance of receipt of applications for service by permanent commercial customers in accordance with the following provisions (unless otherwise agreed to by the Company and the Applicant):

i. The subdivider or other Applicant will provide the trenching, bedding, backfill (including any imported backfill required), compaction, repaving and any earthwork for pull boxes and equipment and transformer pad sites required in accordance with the Company's specifications and subject to the Company's inspection and approval.

ii. Underground service will be installed, owned, operated and maintained as provided in Section 6 of these Rules and Regulations.

iii. Underground extensions up to the duly recorded Subdivision will be owned, operated and maintained by the Company, provided the Applicant pays a non-refundable sum equal to the estimated difference between the cost of the underground extension and an equivalent estimated cost of an overhead extension.

SECTION 7
LINE EXTENSIONS
(continued)

6. Replacement of Overhead with Underground Distribution Facilities

Where a Customer has requested that existing overhead distribution facilities be replaced with underground distribution facilities, the total cost of such replacement will be paid by the Customer.

7. Conversion from Single-Phase to Three-Phase Service

Where it is necessary to convert all or any portion of an existing overhead or underground distribution system from single-phase to three-phase service to a Customer, the total cost of such conversion will be paid by the Customer.

8. Long Term Rental Mobile Home Park, Townhouses, Condominiums and Apartment Complexes

Line extensions to long term rental mobile home parks, townhouses, condominiums and apartment complexes will be made by the Company under terms and conditions provided in Subsection 7.C.1. The Company will, when requested by the Customer, install, own and maintain internal distribution facilities and individual metering for said development in accordance with the provisions pertaining to duly recorded real estate subdivisions as stated in Subsection 7.C.2 hereof.

9. Special Conditions

a. Contracts

Each sub divider or other Applicant for service requesting an extension over the allowable footage allowance, or in advance of applications for service to permanent Customers, or in advance of completion of required site improvements will (unless otherwise agreed to by the Company and the Applicant) be required to execute contracts covering the terms under which the Company will install lines at its own expense, or contracts covering line extensions for which advance deposits will (unless otherwise agreed to by the Company and the Applicant) be made in accordance with the provisions of these Rules and Regulations or of the applicable rate schedules.

b. Primary Service and Metering

The Company will provide primary service to a point of delivery, such point of delivery to be determined by the Company. The Customer will provide the entire distribution system (including transformers) from the point of delivery to the load. The system will be treated as primary service for the purposes of billing. The Company reserves the right to approve or require modification to the Customer's distribution system prior to installation, and the Company will determine the voltage available for primary service. Instrument transformers, metering riser poles and associated equipment to be installed and maintained by the Company will be at the Customer's expense.

SECTION 7
LINE EXTENSIONS
(continued)

c. Advances under Previous Rules and Contracts

Amounts advanced under the conditions established by a rule previously in effect will be refunded in accordance with the requirements of such contract under which the advance was made.

d. Extensions for Temporary Service

Extensions for temporary service or for operations of a speculative character (mining, milling, irrigation and similar speculative businesses) or questionable permanency will be charged the applicable estimated charges for the installation and removal of temporary facilities. Temporary facilities will remain in service for a maximum of two (2) years.

e. Exceptional Cases

Where unusual terrain, location, soil conditions, or other unusual circumstances make the application of these line extension rules impractical or unjust to either party or in the case of extension of lines of other than standard distribution voltage, service under such circumstances will be negotiated under special agreements specifying terms and conditions covering such extensions.

f. Special or Excess Facilities

Under this rule, the Company will install only those facilities which it deems are necessary to render service in accordance with the rate schedules. Where the Customer requests facilities which are in addition to, or in substitution for, the standard facilities which the Company normally would install, the extra cost thereof will be paid by the Customer.

g. Unusual Loads

Line extensions to unusually small loads not consisting of a residence or permanent building (e.g. individual lights, wells, signs, etc.) will not be granted the five hundred fifty (550) foot allowance, but will instead be required to advance any costs of service.

10. Other Conditions

a. Rights-of-Way – All necessary easements or rights-of-way required by the Company for any portion of the extension which is either on premises owned, leased or otherwise controlled by the Customer, Developer, or others will be furnished in the Company's name by the Customer without cost to or condemnation by the Company and in reasonable time to meet proposed service requirements. All easements or rights-of-way obtained on behalf of the Company will contain only those terms and conditions that are acceptable to the Company.

SECTION 7
LINE EXTENSIONS
(continued)

b. Change of Grade – If subsequent to construction of electric distribution and/or transmission lines and services, the final grade established by the Customer or Developer is changed in such a way as to require relocation of the Company facilities or results in damage to those same facilities, the cost of relocation and/or resulting repairs will be borne by the Customer or Developer.

c. Relocation – When the Company is requested to relocate its facilities for the benefit and/or convenience of a Customer, the Customer will pay the Company for the total cost of the work to be performed prior to the start of construction.

d. Connecting or Disconnecting Customer's Service – Only duly authorized employees of the Company are allowed to connect the Customer's service to, or disconnect the same from, the Company's electric lines.

e. Maintenance of Customer's Equipment – The Customer will, at the Customer's own risk and expense, furnish, install and keep in good and safe condition all electrical wires, lines, machinery and apparatus which may be required for receiving electric energy from the Company, and for applying and utilizing that energy, including all necessary protective appliances and suitable building therefore, and the Company will not be responsible for any loss or damage occasioned or caused by the negligence, want of proper care, or wrongful act of the Customer or any of the Customer's agents, employees or licensees on the part of the Customer in installing, maintaining, using, operating or interfering with any such wires, lines, machinery or apparatus.

f. Removal of Company Property – As provided for in these Rules and Regulations, the Company will have the right to remove any and all of its property installed on the Customer's premises at the termination of service.

g. Change of Customer's Requirements – In the event that the Customer must make any material change either in the amount or character of the appliances or apparatus installed upon the Customer's premises to be supplied with electric energy by the Company, the Customer must immediately give the Company written notice to this effect.

h. Refunds – In no case will the total of any refund payments made by the Company exceed the amount of any construction advance

i. Collections – Nothing in these Rules and Regulations will be construed as limiting or in any way affecting the right of the Company to collect from the Customer any other additional sum of money which may become due and payable.

SECTION 7
LINE EXTENSIONS
(continued)

D. Construction / Facilities Related Income Taxes

1. Collection of Income Tax Gross Up

   a. Any federal, state or local income taxes resulting from the receipt of a Contribution or Advance in Aid of Construction in compliance with this rule is the responsibility of the Company and will be recorded as a deferred tax asset and reflected in the Company's rate base for ratemaking purposes.

   b. However, if the estimated contribution or advance for any service line or distribution main extension (as determined for each individual extension agreement) exceeds $500,000, the Company shall require the Applicant to include in the contribution or advance an amount (the "gross up amount") equal to the estimated federal, state or local income tax liability of the Company resulting from the contribution or advance computed as follows:

$$\text{Gross Up Amount} = \frac{\text{Advance or Contribution}}{(1 - \text{Statutory combined income tax rate})} - \text{Advance or Contribution}$$

   c. After the Company's tax returns for the year of receipt of the advance or contribution are completed, if the statutory combined income tax rate is less than the rate used to calculate the gross-up, the Company shall refund to the Applicant an amount equal to such excess.

   d. When a gross-up amount is to be collected in connection with an extension agreement, the contract will state the tax rate used to compute the gross up amount, and will also disclose the gross-up amount separately from the estimated cost of facilities.

2. Refund of Tax Gross Up

   a. In the case of construction advance refunds made pursuant to Subsection 7.C.3 a pro rata portion of the gross up will be refunded when the amount of the underlying contribution is refunded. Any remaining gross-up will be refunded on November 1 of each year as tax depreciation deductions are taken on the Company's tax returns. At the end of five (5) years from installation, the remaining gross up will be refunded at an amount that reflects the net present value of the Company's remaining tax depreciation deductions on the underlying advance discounted at the Company's authorized rate of return.

   b. In the case of all other advances or deferred construction deposit agreements, the gross up will be refunded, or the amount of required deferred construction deposit will be reduced, as follows:

      i. If the full amount of the advance is refunded prior to September 30th of the year following the year in which the advance is received, the entire amount of the gross-up will be refunded.

SECTION 7
LINE EXTENSIONS
(continued)

ii. For any amount of the advance not refunded as of September 30th of the year following the year in which the advance is received, on November 1st of each year a portion of the gross-up will be refunded based on the amount of the tax depreciation deductions taken by the Company on its federal and state income tax returns.

iii. When any advance is refunded after depreciation refunds pursuant to clause ii have begun, a pro rata portion of the gross up will be refunded reduced by the amount of depreciation refunds previously made for that portion of the gross up.

iv. For any advance that is not refunded at the end of the contract period, the remaining gross up will be refunded at an amount that reflects the net present value of the Company's remaining tax depreciation deductions on the underlying advance discounted at the Company's authorized rate of return.

3. Non-refundable Income Tax Gross Up

a. At the option of the Customer, a non-refundable gross-up may be calculated as follows:

$$\text{Non-refundable Gross Up Amount} = \frac{(\text{Contribution Amount} - \text{Present Value of Tax Depreciation})}{(1 - \text{Current Tax Rate})} - \text{Contribution Amount}$$

SECTION 8
PROVISION OF SERVICE

A. Company Responsibility

1. The Company will be responsible for the safe transmission and distribution of electricity until it passes the point of delivery to the Customer.

2. The Company will be responsible for maintaining in safe operating condition all meters, equipment and fixtures installed on the Customer's premises by the Company for the purpose of delivering electric service to the Customer. However, the Company will not be responsible for the condition of meters, equipment, and fixtures damaged or altered by the Customer.

3. The Company may, at its option, refuse service until the Customer has obtained all required permits and/or inspections indicating that the Customer's facilities comply with local construction and safety standards, including any applicable Company specifications.

4. The Company will determine, in its sole discretion, the type of service (including voltage and Point of Delivery) to be furnished for utilization by the Customer. This includes determinations involving: 1) requirements to take Primary Service and Metering; and 2) service voltage (including for any new on-site generation installations or generation retrofits at the Customer's premises).

B. Customer Responsibility

1. Each Customer will be responsible for maintaining in safe operating condition all Customer facilities on the Customer's side of the point of delivery.

2. Each Customer will be responsible for safeguarding all Company property installed in or on the Customer's premises for the purpose of supplying electric service to that Customer.

3. Each Customer will exercise all reasonable care to prevent loss or damage to Company property, excluding ordinary wear and tear. The Customer will be responsible for loss of or damage to Company property on the Customer's premises arising from neglect, carelessness, misuse, diversion, or tampering and will reimburse the Company for the cost of necessary repairs or replacements.

4. Each Customer, regardless of who owns the meter, will be responsible for payment for any equipment damage and/or estimated unmetered usage and all reasonable costs resulting from unauthorized breaking of seals, interfering, tampering or bypassing the Company meter.

5. Each Customer will be responsible for notifying the Company of any equipment failure identified in the Company's equipment.

SECTION 8
PROVISION OF SERVICE
(continued)

6. Each Customer will be responsible for informing the Company of, and meeting the Company's requirements regarding on-site or distributed generation (including distributed renewable resources and combined heat and power facilities) that the Customer or the Customer's agent intends to interconnect to the Company's transmission or distribution system. This includes compliance with all requirements contained within the Company's most current Interconnection Requirements for Distributed Generation, and the terms and conditions of the Company's Agreement for the Interconnection of Customer's Facility. Customer must also agree to enter into the Interconnection Agreement with the Company. Further, any interconnection must be in accordance with any applicable Commission regulation and order governing interconnection, as well as applicable laws.

7. The Customer, at his expense, may install, maintain and operate check-measuring equipment as desired and of a type approved by the Company, provided that this equipment will be installed so as not to interfere with operation of the Company's equipment. This is also provided that no electric energy will be remetered or submetered for resale to another or to others, except where such remetering will be done in accordance with the applicable orders of the Commission.

C. Continuity of Service

The Company will make reasonable efforts to supply a satisfactory and continuous level of service. However, the Company will not be responsible for any damage or claim of damage attributable to any interruption or discontinuation of service resulting from:

1. Any cause against which the Company could not have reasonably foreseen, or made provision for (*i.e* force majeure, see Subsection 8.E.);

2. Intentional service interruptions to make repairs or perform routine maintenance; or

3. Curtailment, including brownouts or blackouts.

D. Service Interruptions

1. The Company will make reasonable efforts to reestablish service within the shortest possible time when service interruptions occur.

2. In the event of a national emergency or local disaster resulting in disruption of normal service, the Company may, in the public interest, interrupt service to other Customers to provide necessary service to civil defense or other emergency service agencies on a temporary basis until normal service to these agencies can be restored.

SECTION 8
PROVISION OF SERVICE
(continued)

3. When the Company plans to interrupt service for more than four (4) hours to perform necessary repairs or maintenance, the Company will attempt to inform affected Customers at least twenty-four (24) hours in advance of the scheduled date and these repairs will be completed in the shortest possible time to minimize the inconvenience to the Customers of the Company.

4. The Commission will be notified of interruption in service affecting the entire system or any significant portion thereof. The interruption of service and cause will be reported by telephone to the Commission within four (4) hours after the responsible Company representative becomes aware of said interruption. A written report to the Commission will follow.

E. Interruption of Service and Force Majeure

1. The Company will make reasonable provision to supply a satisfactory and continuous electric service, but does not guarantee a constant or uninterrupted supply of electricity. The Company will not be liable for any damage or claim of damage attributable to any temporary, partial or complete interruption or discontinuance of electric service attributable to a force majeure condition as set forth in Subsections 8.E.4. and 8.E.5. or to any other cause which the Company could not have reasonably foreseen and made provision against, or which, in the Company's judgment, is necessary to permit repairs or changes to be made in the Company's electric generating, transmission, or distribution equipment, or to eliminate the possibility of damage to the Company's property or to the person or property of others.

2. Whenever the Company deems a condition exists that warrants interruption or limitation in the service being rendered, this limitation or interruption will not constitute a breach of contract and will not render the Company liable for damages suffered thereby or excuse the Customer from further fulfillment of the contract.

3. The use of electric energy upon the Customer's premises is at the risk of the Customer. The Company's liability will cease at the point where its facilities are connected to the Customer's wiring.

4. Neither the Company nor the Customer will be liable to the other for any act, omission, or circumstances (including, but not limited to, the Company's inability to provide electric service) occasioned by or in consequence of the following:

   a. flood, rain, wind, storm, lightning, earthquake, fire, landslide, washout or other acts of the elements;

   b. accident or explosion;

   c. war, rebellion, civil disturbance, mobs, riot, blockade or other act of the public enemy;

   d. acts of God;

   e. interference of civil and/or military authorities;

SECTION 8
PROVISION OF SERVICE
(continued)

f. strikes, lockouts, or other labor difficulties;

g. vandalism, sabotage, or malicious mischief;

h. usurpation of power, or the laws, rules, regulations, or orders made or adopted by any regulatory or other governmental agency or body (federal, state or local) having jurisdiction of any of the business or affairs of the Company or the Customer, direct or indirect;

i. breakage or accidents to equipment or facilities;

j. lack, limitation or loss of electrical or fuel supply; or

k. any other casualty or cause beyond the reasonable control of the Company or the Customer, whether or not specifically provided herein and without limitation to the types enumerated, and which by exercise of due diligence the Company or the Customer is unable to overcome.

5. A failure to settle or prevent any strike or other controversy with employees or with anyone purporting or seeking to represent employees will not be considered to be a matter within the control of the Company.

6. Nothing contained in this Section will excuse the Customer from the obligation of paying for electricity delivered or services rendered.

F. General Liability

1. Company will not be responsible for any third-party claims against Company that arise from Customer's use of Company's electric services, unless such claims are caused by the Company's willful misconduct or gross negligence.

2. Customer will indemnify, defend and hold harmless the Company (including the costs of reasonable attorney's fees) against all claims (including, without limitation, claims for damages to any business or property, or injury to, or death of, any person) arising out of any wrongful or negligent acts or omissions of the Customer, or the Customer's agents, in connection with the Company's service or facilities.

3. The liability of the Company for damages of any nature arising from errors, mistakes, omissions, interruptions, or delays of the Company, its agents, servants, or employees, in the course of establishing, furnishing, rearranging, moving, terminating, or changing the service or facilities or equipment shall not exceed an amount equal to the charges applicable under the Company's Rates (calculated on a proportionate basis where appropriate) to the period during which the error, mistake, omission, interruption or delay occurs, except if such damages are caused by the Company's willful misconduct or gross negligence.

SECTION 8
PROVISION OF SERVICE
(continued)

4. In no event will the Company be liable for any incidental, indirect, special, or consequential damages (including lost revenue or profits) of any kind whatsoever regardless of the cause or foreseeability thereof.

5. The Company will not be responsible in an occasion for any loss or damage caused by the negligence or wrongful act of the Customer or any of his agents, employees or licensees in installing, maintaining, using, operating or interfering with any electric facilities.

G. Construction Standards and Safety

The Company will construct all facilities in accordance with the provisions of the ANSI C2 Standards (National Electric Safety Code, 2007 edition, and other amended editions as are adopted by the ACC), the 2007 ANSI B31.1 Standards, the ASME Boiler and Pressure Vessel Code, and other applicable American National Standards Institute Codes and Standards, except for those changes the ACC makes or permits from time to time. In the case of conflict between codes and standards, the more rigid code or standard will apply.

SECTION 9
CHARACTER OF SERVICE - VOLTAGE, FREQUENCY AND PHASE

A. For Residential, Lighting and Miscellaneous Service – Energy supplied will be sixty (60) Hertz, single phase, alternating current, three-wire service, 120/240 volts for new service applications. The Company will provide 120 volts, two-wire for those Customers currently receiving that service.

B. Commercial and Industrial Service – Electric energy furnished under these Rules and Regulations will be sixty (60) Hertz alternating current energy, single or three (3) phase at the standard nominal voltages specified by the Company.

C. All electric energy supplied will be in accordance with ANSI voltage ratings for electric power systems and equipment.

D. All voltages referred to above are nominal voltages and may vary somewhat due to local conditions. The Company does not guarantee the constancy of its voltage or frequency, nor does it guarantee against its loss of one or more phases in a three-phase service. The Company will not be responsible for any damage to the Customer's equipment caused by any or all of these occurrences brought about by circumstances beyond its control.

E. Motor Protection

The following protective apparatus, to be provided by the Customer, is required on all motor installations:

1. No Voltage Protection: Motors that cannot be safely subjected to full voltage at starting must be provided with a device to insure that upon failure of voltage, the motors will be disconnected from the line. Said device should be provided with a suitable time delay relay;

2. Overload Protection: All motors whose voltage does not exceed 750 volts are to be provided with approved fuses of proper rating. Where the voltage exceeds 750 volts, protective devices are to be provided. In these cases it will be found desirable to install standard switching equipment. The installation of overload relays and no-voltage releases is recommended on all motors, not only as additional protection, but as a means of reducing the cost of refusing; and

3. Phase Reversal: Reverse phase relays and circuit breakers or equivalent devices are recommended on all polyphase installations to protect the installation in case of phase reversal or loss of one phase.

SECTION 9
CHARACTER OF SERVICE - VOLTAGE, FREQUENCY AND PHASE
(continued)

F. Load Fluctuation And Balance

1. Interference with Service: The Company reserves the right to refuse to supply loads of a character that may seriously impair service to any other Customers. In the case of hoist or elevator motors, welding machines, furnaces and other installations of like character where the use of electricity is intermittent or subject to violent fluctuations, the Company may require the Customer to provide at the Customer's own expense suitable equipment to reasonably limit those fluctuations.

2. The Company has the right to discontinue electric service to any Customer who continues to use appliances or other devices, equipment and apparati detrimental to the service after the Company notifies the Customer of his or her causing detriment to the service.

3. Allowable Instantaneous Starting Current Values: The instantaneous starting current (determined by tests or based on limits guaranteed by manufacturers) drawn from the line by any motor must not exceed a value (as determined by the Company) that may be deemed detrimental to the normal operation of the system. If the starting current of the motor exceeds that value, a starter must be used or other means employed to limit the current to the value specified. A reduced voltage starter may be required for polyphase motors.

4. When three-phase service supplied under a power rate includes incidental lighting, the Customer will supply any necessary lighting transformers and arrange its lighting to give a substantially balanced three-phase load.

G. Customer Responsibility for Equipment Used in Receiving Electric Energy

No statement or requirement in these Rules and Regulations can be construed as the assumption of any liability by the Company for any wiring of electrical equipment or the operation of same, installed in, upon, or about the Customer's premises, nor will the Company be responsible for any loss or damage occasioned or caused by the negligence, want of proper care or wrongful act of the Customer, or any of the Customer's agents or employees or licenses on the part of the Customer in installing, maintaining, using, operating, or interfering with any such wiring, machinery or apparatus.

SECTION 10
METER READING

A. Company or Customer Meter Reading

1. The Company may, at its discretion, permit Customer reading of meters.
2. It will be the Company's responsibility to inform the Customer how to properly read his or her meter.
3. Where a Customer reads his or her own meter the Company will read the Customer's meter at least once every four (4) months.
4. Where the Company must read the meter every four (4) months, the Customer shall pay Fee No. 3 as set forth in the UNS Electric Statement of Charges for every read.
5. The Company will provide the Customer with postage-paid cards or other methods to report the monthly meter reading to the Company.
6. The Company will specify the timing requirements for the Customer to submit his or her monthly meter reading to conform to the Company's billing cycle.
7. Meter readings will be scheduled for periods of not less than twenty-five (25) days or more than thirty-five (35) days. In the event the Customer fails to submit a reading within this ten (10) day period, the Company may issue the Customer an estimated bill.
8. In the event the Customer fails to submit monthly reads as designated above, the Company may estimate the usage for up to three (3) months.
9. The Company and the Customer shall mutually agree on a method to submit meter reads.
10. Where the Customer is providing their own meter reads, the Customer is responsible for all applicable charges as calculated from the point the Company last read the Customer's meter.
11. Meters will be read monthly on as close to the same day as practical.

B. Measuring of Service

1. All energy sold to Customers and all energy consumed by the Company – except that sold according to fixed charge schedules – will be measured by commercially acceptable measuring devices owned and maintained by the Company. This provision will not apply where it is impractical to install meters, such as street lighting or security lighting, or where otherwise authorized by the ACC.
2. When there is more than one meter at a location, the metering equipment will be so tagged or plainly marked as to indicate the circuit metered or metering equipment in accordance with Subsection 3.C.9.

SECTION 10
METER READING
(continued)

3. Meters which are not direct reading will have the multiplier plainly marked on the meter.

4. All charts taken from recording meters will be marked with the date of the record, the meter number, customer and chart multiplier.

5. Metering equipment will not be set "fast" or "slow" to compensate for supply transformer or line losses.

C. Customer-Requested Rereads

1. The Company will, at the request of a Customer, reread that Customer's meter within ten (10) business days after that request by the Customer.

2. Any reread may be charged to the Customer, at a rate set forth in the UNS Electric Statement of Charges, if the original reading was not in error.

3. When a reading is found to be in error, the Company will not charge the Customer for the reread.

D. Access to Customer Premises

The Company will at all times have the right of safe ingress to and egress from the Customer's premises at all reasonable hours for any purpose reasonably connected with the Company's property used in furnishing service and the exercise of any and all rights secured to it by law or these rules.

E. Meter Testing and Maintenance

1. The Company will replace any meter found to be damaged or associated with an inquiry into its accuracy, whether initiated by the Customer or Company, and which has been in service for more than sixteen years. Replaced meters will be tested for accuracy and will be acceptable if found to have an error margin within plus or minus three percent (±3%).

2. The Company will file an annual report with the Commission summarizing the results of meter maintenance and testing program for that year. At a minimum, the report should include the following data:

   a. Total number of meters tested at Company initiative or upon Customer request; and

   b. Number of meters tested that were outside the acceptable error allowance of ±3%.

SECTION 10
METER READING
(continued)

F. Customer-Requested Meter Tests

1. The Company will test a meter upon Customer request and the Company will be authorized to charge the Customer for the meter test. The charge for the meter test is set forth in the UNS Electric Statement of Charges. However, if the meter is found to be in error by more than three percent (3%), no meter testing fee will be charged to the Customer.

G. Demands

1. The Customers demand may be measured by a demand meter, under all Rates involving billings based on demand, unless appropriate investigation or tests indicate that the Customer's demand will not be such as to require a demand meter for correct application of the rate schedule. In cases where billings under a rate schedule requiring determination of the Customer's demand must be made before a demand meter can be installed, these billings may be made on an estimated demand basis pending installation of the demand meter. Billings made on the basis of estimated demands; however, will be appropriately adjusted, if actual demands recorded after demand meter is installed are greater or less than those estimated demands.

2. Demand meters may be installed at any metering location if the nature of the Customer's equipment and operation indicates that a demand meter is required for correct application of the rate schedule.

3. All demands used for billing purposes will be recorded or computed to the nearest whole kW.

SECTION 11
BILLING AND COLLECTIONS

A. Frequency and Estimated Bills

1. The Company will bill monthly for services rendered. Meter readings will be scheduled for periods of not less than twenty-five (25) days or more than thirty-five (35) days.

2. If the Company is unable to obtain the meter read on the scheduled meter read date, the Company will estimate the consumption for the billing period as set forth in the Company's Bill Estimation Methodologies Tariff.

3. Estimated bills will be issued only under the following conditions:

   a. Failure of a Customer who reads his or her own meter to deliver his or her meter reading card to the Company in accordance with the requirements of the billing cycle.

   b. Severe weather conditions which prevent the Company from reading the meter.

   c. Circumstances that make it dangerous or unnecessarily difficult to read the meter. These circumstances include, but are not limited to, locked gates, blocked meters, vicious or dangerous animals, or any force majeure condition as listed in Subsection 8.E.4.

   d. When an electronic meter reading is obtained, but the data cannot be transferred to a Customer Information System.

   e. A meter failure or malfunction with no reliable information retained by the meter.

   f. Meter tampering or energy diversion results in a lack of accurate metered consumption information.

   g. In the event the Customer fails to submit the reading within the designated ten (10) day meter reading window.

   h. In the event the Customer fails to submit monthly reads as designated above, the Company may estimate the usage for up to three (3) months.

4. After the second consecutive month of estimating the Customer's bill, the Company will attempt to secure an accurate reading of the meter.

5. Failure on the part of the Customer to comply with a reasonable request by the Company for access to its meter may lead to the discontinuance of service.

6. Each bill based on estimated usage will indicate that it is an estimated bill.

7. Estimates due to equipment malfunctions may exceed one month if the malfunction could not be reasonably discovered and/or corrected before additional bills were estimated.

8. A bill is not considered an estimated bill when the end read is based on an actual read.

SECTION 11
BILLING AND COLLECTIONS
(continued)

B. Combining Meters, Minimum Bill Information

1. Each meter at a Customer's premises will be considered separately for billing purposes, and the readings of two (2) or more meters will not be combined unless otherwise provided for in the Company's Rates.

2. Each bill for residential service will contain the following minimum information:

   a. Date and meter reading at the start of billing period or number of days in the billing period;

   b. Date and meter reading at the end of the billing period;

   c. Billing usage and demand (if applicable);

   d. Rate schedule number;

   e. Company's telephone number;

   f. Customer's name;

   g. Service account number;

   h. Amount due and due date;

   i. Past due amount;

   j. Purchased Power Fuel Adjuster Clause cost, where applicable;

   k. All applicable taxes; and

   l. The address for the Arizona Corporation Commission.

C. Billing Terms

1. All bills for electric service are due and payable no later than ten (10) days from the date the bill is rendered. Any payment not received within this time frame will be considered past due.

2. For purposes of this rule, the date a bill is rendered may be evidenced by:

   a. The postmark date for bills sent via U.S. Postal Service; or

   b. The mailing date; or

   c. The billing date shown on the bill (however, the billing date will not differ from the postmark or mailing date by more than two (2) days).

   d. An Electronic Bill will be considered rendered at the time it is electronically sent to the Customer.

SECTION 11
BILLING AND COLLECTIONS
(continued)

3. All past due bills for electric service are due and payable within fifteen (15) days. Any payment not received within this timeframe will be considered delinquent and will be issued a suspension of service notice. For Customers under the jurisdiction of a bankruptcy court, a more stringent payment or prepayment schedule may be required, if allowed by that court.

4. All delinquent bills for which payment has not been received within five (5) days will be subject to the provisions of the Company's termination procedures.

5. The amount of the late payment penalty will not exceed one and one-half percent (1.5%) of the delinquent bill, applied on a monthly basis.

6. All payments must be made at or sent via U.S. Postal Service to the Company's duly authorized representative.

7. A bill will be rendered in a form prescribed by the Company. If the Customer requests a bill in a form other than the one prescribed by the Company, the Company in its sole discretion may consider such request and charge the Customer any associated costs.

D. Applicable Rates, Prepayment, Failure to Receive, Commencement Date, Taxes

1. Each Customer will be billed under the applicable tariff indicated in the Customer's application for service.

2. Customers may pay for electrical service by making advance payments.

3. Failure to receive bills or notices that have been properly placed in the U.S. Postal Service or posted electronically will not prevent those bills from becoming delinquent nor relieve the Customer of his obligations therein.

4. Charges for service commence when the service is installed and connection made, whether used or not.

E. Meter Error Corrections

1. If any meter after testing is found to be more than three percent (3%) in error, either fast or slow, proper correction of the error will be made of previous readings and adjusted bills will be rendered according to the following terms:

   a. For the period of three (3) months immediately preceding the removal of such meter from service for test or from the time the meter was in service since last tested, but not exceeding three (3) months since the meter has been shown to be in error by the test; or

SECTION 11
BILLING AND COLLECTIONS
(continued)

b. From the date the error occurred, if the date of the cause can be definitely fixed. If the Customer has been underbilled, the Company will allow the Customer to repay this difference over an equal length of time that the under-billings occurred. The Customer may be allowed to pay the backbill without late payment penalties, unless there is evidence of meter tampering or energy diversion.

c. If it is determined that the Customer has been overbilled and there is no evidence of meter tampering or energy diversion, the Company will make prompt adjustment or refund in the difference between the original billing and the corrected billing within the next billing cycle.

2. No adjustment will be made by the Company except to the Customer last served by the meter tested.

F. Responsibility for Payment of Bills

1. The Customer is responsible for the payment of bills until service is ordered discontinued and the Company has had reasonable time to secure a final meter reading for those services involving energy usage, or if non-metered services are involved until the Company has had reasonable time to process the disconnect request.

2. When an error is found to exist in the billing rendered to the Customer, the Company shall correct such an error to refund any overbilling and may correct such an error to recover any underbilling. The UNS Electric Bill Estimation Methodologies tariff shall be applied when the Company cannot obtain a complete and valid meter read. Situations that result in an estimated meter read include inclement weather, lack of access to a Customer's meter, energy diversion, labor unavailability and equipment malfunction.

3. Except as specified below, corrected charges for underbillings shall be limited to three (3) months for residential accounts and six (6) months for non-residential accounts.

a. Where the account is billed on a special contract or non-metered rate, corrected charges for underbillings shall be billed in accordance with the contract or rate requirements and is not limited to three or six months as applicable.

b. Where service has been established but no bills have been rendered, corrected charges for underbillings shall go back to the date service was established.

c. Where there is evidence of meter tampering or energy diversion, corrected charges for underbillings shall go back to the date meter tampering or energy diversion began, as determined by the Company.

d. Where lack of access to the meter (caused by the Customer) has resulted in estimated bills, corrected charges for underbillings shall go back to the billing month of the last Company obtained meter read date.

SECTION 11
BILLING AND COLLECTIONS
(continued)

G. Returned Payments

1. The Company will be allowed to recover a fee, as set forth in the UNS Electric Statement of Charges, for each instance where a Customer tenders payment for electric service with a payment returned unpaid. This fee will also apply when an electronic funds transfer ("EFT") is denied for any reason.

2. When the Company is notified by the Customer's bank or other financial institution that a payment has been returned unpaid, or denied for any reason, the Company may require the Customer to make payment in cash, by money order, certified check, or other means which guarantee the Customer's payment to the Company.

3. A Customer, who tenders a payment which is returned unpaid, regardless of the reason or method used to pay, will not be relieved of the obligation to render payment to the Company under the original terms of the bill nor defer the Company's provision for termination of service for nonpayment of bills.

4. A Customer with two (2) returned payments within a twelve (12) month period may be required to pay with guaranteed funds, (i.e., cash, money order, or cashier's check) for any subsequent billing for twelve (12) months.

H. Budget Billing Plan

1. The Company may, at its option, offer its Customers a budget billing plan.

2. The Company will develop, upon Customer request, an estimate of the Customer's budget billing for a twelve (12)-month period based upon:

   a. Customer's actual consumption history, which may be adjusted for abnormal conditions such as weather variations;

   b. For new Customers, the Company will estimate consumption based on the Customer's anticipated load requirements; or

   c. The Company's Rates approved by the ACC applicable to that Customer's class of service.

3. The Company will provide the Customer a concise explanation of how the budget billing estimate was developed, the impact of budget billing on a Customer's monthly bill, and the Company's right to adjust the Customer's billing for any variation between the Company's estimated billing and actual billing.

SECTION 11
BILLING AND COLLECTIONS
(continued)

4. For those Customers being billed under a budget billing plan, the Company will show, at a minimum, the following information on the Customer's monthly bill:

   a. Actual consumption;

   b. Amount due for actual consumption;

   c. Budget billing amount due; and

   d. Accumulated variation in actual versus budget billing amount.

5. The Company may adjust the Customer's budget billing in the event the Company's estimate of the Customer's usage and/or cost should vary significantly from the Customer's actual usage and/or cost; such review to adjust the amount of the budget billing may be initiated by the Company or upon Customer request.

I. Deferred Payment Plan

1. The Company may, prior to termination, offer to qualifying Customers a deferred payment plan for the Customer to retire unpaid bills for electric service.

2. Each deferred payment agreement entered into between the Company and the Customer – due to the Customer's inability to pay an outstanding bill in full – will specify that service will not be discontinued if:

   a. Customer agrees to pay a reasonable amount of the outstanding bill at the time the parties enter into the deferred payment agreement;

   b. Customer agrees to pay all future bills for electric service in accordance with the Company's Rates; and

   c. Customer agrees to pay a reasonable portion of the remaining outstanding balance in installments over a period not to exceed six (6) months.

3. For the purpose of determining a reasonable installment payment schedule, under these rules, the Company and the Customer will give consideration to the following conditions:

   a. The size of the delinquent account;

   b. The Customer's ability to pay;

   c. The Customer's payment history;

   d. The length of time that the debt has been outstanding;

   e. The circumstances that resulted in the debt being outstanding; and

   f. Any other relevant factors related to the circumstances of the Customer.

SECTION 11
BILLING AND COLLECTIONS
(continued)

4. Any Customer who desires to enter into a deferred payment agreement must do so before the Company's scheduled termination date for nonpayment of bills. The Customer's failure to execute a deferred payment agreement prior to the scheduled service termination date will not prevent the Company from terminating service for nonpayment.

5. Deferred payment agreements may be in writing and may be signed by the Customer and an authorized Company representative.

6. A deferred payment agreement may include a finance charge of one and one-half percent (1.5%).

7. If a Customer has not fulfilled the terms of a deferred payment agreement, the Company will have the right to disconnect service pursuant to the Company's Termination of Service Rules (Section 12) and, under these circumstances, it will not be required to offer subsequent negotiation of a deferred payment agreement prior to disconnection.

J. Change of Occupancy

1. To order service to be discontinued or to change occupancy, the Customer must give the Company at least three (3) business days advance notice in person, in writing or by telephone.

2. The outgoing Customer will be responsible for all electric services provided and/or consumed up to the scheduled turn-off-date.

3. The outgoing Customer is responsible for providing access to the meter so that the Company may obtain a final meter reading. If access is unavailable, due to the action or inaction of the Customer, the outgoing Customer will be responsible for the services consumed until such time as access is provided and services can be turned-off.

K. Electronic Billing

1. Electronic Billing is an optional billing service whereby Customers may elect to receive, view, and pay their bills electronically. Electronic Billing includes the "UES e-bill" service and the Automatic Payment ("Auto Pay") service. The Company may modify its Electronic Billing services from time to time. A Customer electing an electronic billing service may receive an electronic bill in lieu of a paper bill.

2. Customers electing an electronic billing service may be required to complete additional forms and agreements.

3. Electronic Billing may be discontinued at any time by the Company or the Customer.

SECTION 11
BILLING AND COLLECTIONS
(continued)

4. An Electronic Bill will be considered rendered at the time it is electronically sent to the Customer. Failure to receive bills or notices which have been properly sent by an Electronic Billing system does not prevent these bills from becoming delinquent and does not relieve the Customer of the Customer's obligations therein.

5. Any notices that the Company is required to send to a Customer who has elected an Electronic Billing service may be sent by electronic means at the option of the Company.

6. Except as otherwise provided in this subsection, all other provisions of the Company's Rules and Regulations and other applicable Rates are applicable to Electronic Billing.

7. The Customer must provide the Company with a current email address for electronic bill delivery. If the Electronic Bill is electronically sent to the Customer at the email address that Customer provided to the Company, then the Electronic Bill will be considered properly sent. Further, the Customer will be responsible for updating the Company with any changes to this email address. Failure to do so will not excuse the Customer from timely paying the Company for electric service.

L. Collections

1. All unpaid closed accounts may be referred to a collection agency for collections.

2. If a collection agency referral is warranted for collection of unpaid final bills, Customer will be responsible for associated collection agency fees incurred. If the unpaid bill is referred to a credit bureau, the Company will not be held responsible to notify the Credit Bureau of any payment status.

M. Refunds

Customers will not be eligible for refunds, rebates or other Company program payments if the Customer has a delinquent Company balance.

N. Refund of Credit Balance Following Discontinuance of Service

Upon discontinuance of service, the Company shall refund the Customer any credit balance remaining on the account. With the consent of the Customer (when available), any credit balance remaining on the account that is less than $5.00, shall be donated to a low-income assistance program to be determined by the Company or as may be required by law.

SECTION 12
TERMINATION OF SERVICE

A. Please refer to the Arizona Administrative Code R14-2-211.A.

B. Termination of Service Without Notice

1. The Company may disconnect electric service without advance written notice under the following conditions:

   a. The existence of an obvious hazard to the safety or health of the Customer or the general population or the Company's personnel or facilities;

   b. The Company has evidence of meter tampering or fraud; or

   c. The Company has evidence of unauthorized resale or use of electric service; or

   d. Customer makes payment to avoid/stop disconnection for non-payment with a dishonored or fraudulent payment. The Company will not be required to restore service until the repayment of those funds and all other delinquent amounts are paid by cash, money order, cashier's check, certified funds or verified electronic payment; or

   e. Customer makes payment to reconnect service with a dishonored or fraudulent payment. The Company will not be required to restore service until the repayment of those funds and all other delinquent amounts are paid by cash, money order, cashier's check, certified funds or verified electronic payment; or

   f. Failure of a Customer to comply with the curtailment procedures imposed by the Company during supply shortages.

2. The Company will not be required to restore service until the conditions that led to the termination have been corrected to the satisfaction of the Company.

3. The Company will maintain a record of all terminations of service without notice. This record will be maintained for a minimum of one (1) year and will be available for inspection by the ACC.

C. Termination of Service With Notice

1. The Company may disconnect service to any Customer for any reason stated below, provided that the Company has met the notice requirements described in subsection 12.D. below:

   a. Customer violation of any of the Company's Rates;

   b. Failure of the Customer to pay a delinquent bill for electric service;

   c. Failure of a prior Customer to pay a delinquent bill for electric service where the prior Customer continues to reside on the premise;

   d. Failure of the Customer to meet agreed-upon deferred payment arrangements;

SECTION 12
TERMINATION OF SERVICE
(continued)

e. Failure to meet or maintain the Company's deposit requirements;

f. Failure of the Customer to provide the Company reasonable safe access to its equipment and property;

g. Customer breach of a written contract for service between the Company and Customer;

h. Returned or invalid payment;

i. When necessary for the Company to comply with an order of any governmental agency having jurisdiction;

j. When a hazard exists which is not imminent, but in the opinion of the Company, it may cause property damage;

k. Customer facilities that do not comply with Company requirements or specifications;

l. Failure to provide or retain rights-of-way or easements necessary to serve the Customer;

m. The Company learns of the existence of any condition in Section 3.D., Grounds for Refusal of Service.

2. The Company will maintain a record of all terminations of service with notice. This record will be maintained for one (1) year and be available for ACC inspection.

D. The Company will not be obligated to renotify the Customer of the termination of service, even if the Customer – after receiving the required termination of service notification – has made payment, yet the payment is returned within three (3) to five (5) business days of receipt for any reason. The original notification will apply.

E. Termination Notice Requirements

1. The Company will not terminate service to any of its Customers without providing advance written notice to the Customer of the Company's intent to disconnect service, except under these conditions specified in subsection 12.A. where advance written notice is not required.

2. This advance written notice will contain, at a minimum, the following information:

a. The name of the person whose service is to be terminated and the address where service is being rendered;

b. The Company's Rate(s) that was violated and explanation of the violation or the amount of the bill that the Customer has failed to pay in accordance with the payment policy of the Company, if applicable;

c. The date on or after which service may be terminated;

d. A statement advising the Customer to contact the Company at a specific phone number for information regarding any deferred payment or other procedures that the Company may offer or to work out some mutually agreeable solution to avoid termination of the Customer's service; and;

SECTION 12
TERMINATION OF SERVICE
(continued)

e. A statement advising the Customer that the Company's stated reason(s) for the termination of services may be disputed by contacting the Company at a specific address or phone number, advising the Company of the dispute and making arrangements to discuss the cause for termination with a responsible employee of the Company in advance of the scheduled date of termination. The responsible employee will be empowered to resolve the dispute and the Company will retain the option to terminate service after affording this opportunity for a meeting and concluding that the reason for termination is just and advising the Customer of his or her right to file a complaint with the ACC.

3. Where applicable, a copy of the termination notice will be simultaneously forwarded to designated third parties.

F. Timing of Terminations with Notice

1. The Company will give at least five (5) days advance written notice prior to the termination date. For Customers under the jurisdiction of a bankruptcy court, a shorter notice may be provided, if permitted by the court.

2. This notice will be considered to be given to the Customer when a copy of the notice is left with the Customer or posted first class via the U.S. Postal Service, addressed to the Customer's last known address.

3. If, after the period of time allowed by the notice has elapsed and the delinquent account has not been paid nor arrangements made with the Company for the payment of the bill – or in the case of a violation of the Company's rules the Customer has not satisfied the Company that this violation has ceased – then the Company may terminate service on or after the day specified in the notice without giving further notice.

4. The Company will have the right (but not the obligation) to remove any or all of its property installed on the Customer's premises upon the termination of service.

G. Landlord/Tenant Rule

In situations where service is rendered at an address different from the mailing address of the bill or where the Company knows that a landlord/tenant relationship exists and that the landlord is the Customer of the Company, and where the landlord as a Customer would otherwise be subject to disconnection of service, the Company will not disconnect service until the following actions have been taken:

1. Where it is feasible to so provide service, the Company will offer the occupant the opportunity to subscribe for service in the occupant's own name. If the occupant then declines to so subscribe, the Company may disconnect service pursuant to the rules.

2. The Company will not attempt to recover from a tenant or condition service to a tenant with the payment of any outstanding bills or other charges due upon the outstanding account of the landlord.

SECTION 13
RECONNECTION OF SERVICE

When service has been discontinued for any of the reasons set forth in these Rules and Regulations, the Company will not be required to restore service until the following conditions have been met by the Customer:

A. Where service was discontinued without notice:

1. The hazardous condition must be removed and the installation will conform to accepted standards.
2. All bills for service and/or applicable investigative costs due the Company by reason of fraudulent or unauthorized use, diversion or tampering must be paid and a deposit to guarantee the payment of future bills may be required.
3. Required arrangements for service must be made.

B. Where service was discontinued with notice:

1. The Customer must make arrangements for the payment of all bills and these arrangements must be satisfactory to the Company.
2. The Customer must furnish a satisfactory guarantee to pay all future bills.
3. The Customer must correct any and all violations of these Rules and Regulations.

SECTION 14
ADMINISTRATIVE AND HEARING REQUIREMENTS

A. Customer Service Complaints

1. The Company will make a full and prompt investigation of all service complaints made by its Customers, either directly or through the ACC.

2. The Company will respond to the complainant and/or the ACC representative within five (5) business days as to the status of the Company's investigation of the complaint.

3. The Company will notify the complainant and/or the ACC representative of the final disposition of each complaint. Upon request of the complainant or the ACC representative, the Company will report the findings of its investigation in writing.

4. The Company will inform the Customer of his right of appeal to the ACC.

5. The Company will keep a record of all written service complaints received that must contain, at a minimum, the following data:

   a. Name and address of complainant;

   b. Date and nature of the complaint;

   c. Disposition of the complaint; and

   d. A copy of any correspondence between the Company, the Customer, and/or the ACC.

6. This record will be maintained for a minimum period of one (1) year and will be available for inspection by the ACC.

B. Customer Bill Disputes

1. Any Customer who disputes a portion of a bill rendered for electric service must pay the undisputed portion of the bill and notify the Company's designated representative that any unpaid amount is in dispute prior to the delinquent date of the bill.

SECTION 14
ADMINISTRATIVE AND HEARING REQUIREMENTS
(continued)

2. Upon receipt of the Customer notice of dispute, the Company will:

   a. Notify the Customer within five (5) business days of the receipt of a written dispute notice;

   b. Initiate a prompt investigation as to the source of the dispute;

   c. Withhold disconnection of service until the investigation is completed and the Customer is informed of the results;

   d. Upon request of the Customer the Company will report the results of the investigation in writing; and

   e. Inform the Customer of his right of appeal to the ACC.

3. Once the Customer has received the results of the Company's investigation, the Customer will submit payment within five (5) business days to the Company for any disputed amounts. Failure to make full payment will be grounds for termination of service.

C. ACC Resolution of Service and/or Bill Disputes

1. In the event a Customer and the Company cannot resolve a service and/or bill dispute, the Customer will file a written statement of dissatisfaction with the ACC. By doing this, the Customer will be deemed to have filed an informal complaint against the Company.

2. Within thirty (30) days of the receipt of a written statement of Customer dissatisfaction related to a service or bill dispute, a designated representative of the ACC will attempt to resolve the dispute by correspondence and/or telephone with the Company and the Customer. If resolution of the dispute is not achieved within twenty (20) days of the ACC representative's initial effort, the ACC will then hold an informal hearing to arbitrate the resolution of the dispute. The informal hearing will be governed by the following rules:

   a. Each party may be represented by legal counsel, if desired;

   b. Every informal hearing may be recorded or held in the presence of a stenographer;

   c. All parties will have the opportunity to present written or oral evidentiary material to support the positions of the individual parties;

   d. All parties and the ACC's representative will be given the opportunity for cross-examination of the various parties; and

SECTION 14
ADMINISTRATIVE AND HEARING REQUIREMENTS
(continued)

e. The ACC's representative will render a written decision to all parties within five (5) business days after the date of the informal hearing. This written decision of the ACC's representative is not binding on any of the parties and the parties will still have the right to make a formal complaint to the ACC.

3. The Company may implement normal termination procedures if the Customer fails to pay all bills rendered during the resolution of the dispute by the ACC.

4. The Company will maintain a record of written statements of dissatisfaction and their resolution for a minimum of one (1) year and make these records available for ACC inspection.