APPLICATION
W-01445A-12-0348

0000139004

PART 6 OF 7
BARCODE # 0000139004

To review Part 1 please see:
BARCODE #0000138998

To review Part 2 please see:
BARCODE # 0000139000

To review Part 3 please see:
BARCODE # 0000139001

To review Part 4 please see:
BARCODE # 0000139002

To review Part 5 please see:
BARCODE #0000139003

To review Part 7 please see:
BARCODE #0000139005

WA 1-4932

Sedona

Federal Communications Commission
Public Safety and Homeland Security Bureau

VHF/UHF Narrowbanding Information for Public Safety Licensees

December 2010

Outline

- Narrowbanding Basics
- Narrowbanding Deadlines
- How to Prepare for Narrowbanding
- Modifying Licenses to Reflect Narrowbanding
- Additional Information Resources

Narrowbanding Basics

- Who is required to narrowband?
  - All Public Safety and Industrial/Business licensees in the 150-174 MHz (VHF) and 421-512 MHz (UHF) bands
- What is required?
  - By January 1, 2013, licensees must migrate their systems from 25 kHz (wideband) to 12.5 kHz (narrowband) channel bandwidth or a technology that achieves equivalent efficiency

Benefits of Narrowbanding

- Narrowbanding ensures more efficient use of the spectrum and greater spectrum access for public safety and non-public safety users
- Will relieve congestion in and result in increased channel availability for public safety VHF/UHF systems
- Narrowbanding has been consistently supported by the public safety community, including APCO, NPSTC, and other organizations

Outline

- Narrowbanding Basics
- Narrowbanding Deadlines
- How to Prepare for Narrowbanding
- Modifying Licenses to Reflect Narrowbanding
- Additional Information Resources

Narrowbanding Deadlines

- All licensees must complete narrowbanding to 12.5 kHz by January 1, 2013
  - FCC will also no longer allow manufacture or importation of equipment that includes a 25 kHz mode
- Some interim requirements take effect on January 1, 2011:
  - 12.5 kHz operation required for all new VHF/UHF systems or expansion of existing systems
  - FCC will not certify new equipment that includes a 25 KHz mode

Narrowbanding Timeline

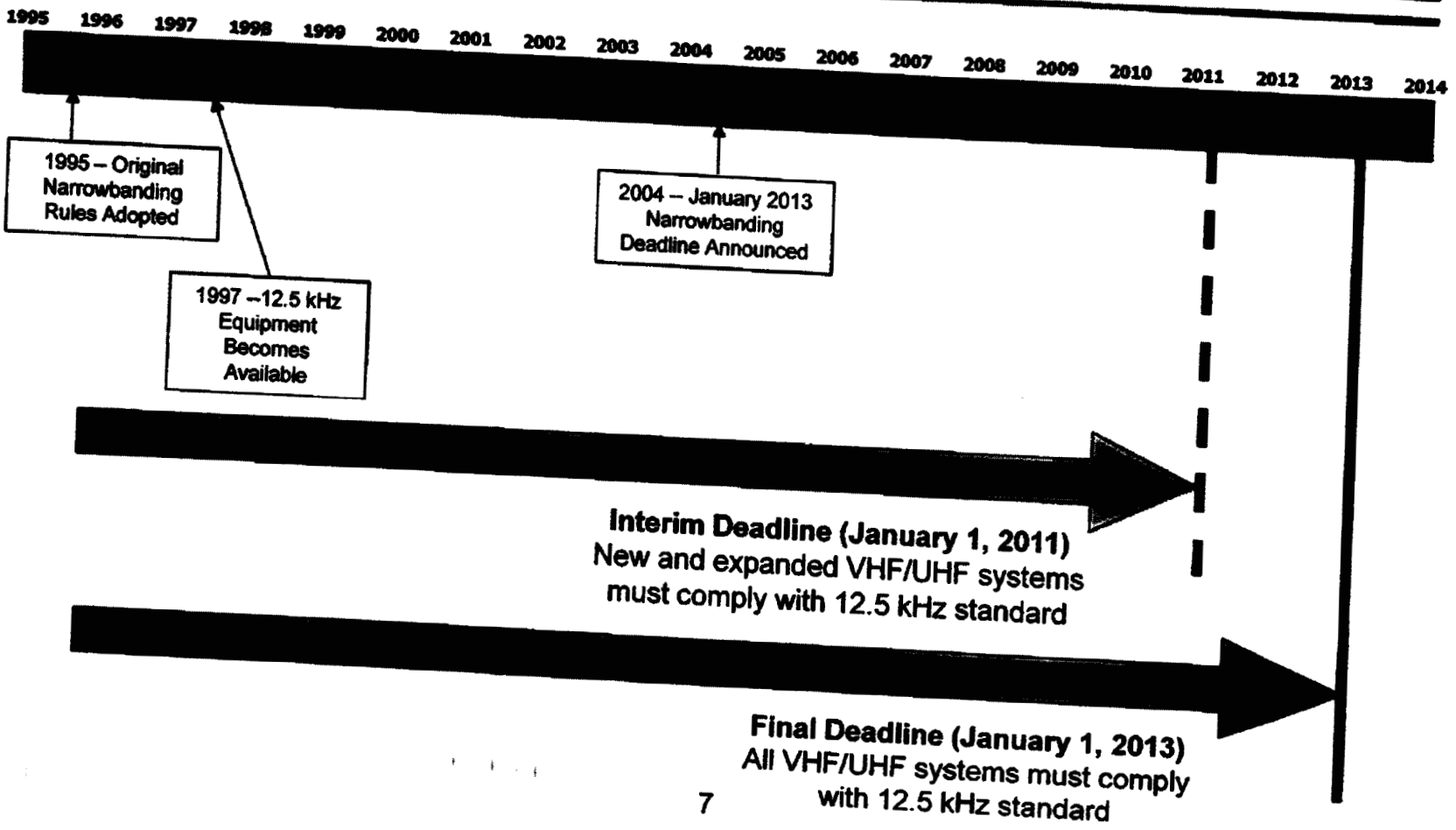

Why Meeting the Deadline Is Important

- After January 1, 2013, FCC interference rules will not protect non-compliant wideband systems from harmful interference
- Systems that fail to narrowband by the deadline could create interference or interoperability problems for systems that have narrowbanded
- Wideband equipment will not be available after January 1, 2013

The Deadline Will Not Be Extended

- The Commission has recently reaffirmed the January 1, 2013 deadline
- Licensees facing unique circumstances may request waivers, but waiver requests must meet a high standard and are not routinely granted
- Licensees concerned about meeting the deadline should focus on planning and preparation
- Informal contact with the Bureau is encouraged prior to any filing

Future Narrowbanding to 6.25 kHz Technology

- Narrowbanding rules provide for eventual migration from 12.5 kHz to 6.25 kHz bandwidth
  - Intended to further increase efficiency and channel availability
- The FCC has <u>not</u> set a deadline for 6.25 kHz implementation
  - No deadline will be established without further notice and comment
- Licensees may narrowband to 6.25 kHz voluntarily
  - All 150-174 MHz and 421-512 MHz equipment certified after January 1, 2013 must include 6.25 kHz capability

Outline

- Narrowbanding Basics
- Narrowbanding Deadlines
- How to Prepare for Narrowbanding
- Modifying Licenses to Reflect Narrowbanding
- Additional Information Resources

Preparing for Narrowbanding

- Prepare NOW – January 1, 2013 is approaching fast!
- Determine how narrowbanding will affect your system
  - Will existing equipment need replacement/retuning?
  - Will additional sites be needed to maintain coverage?
  - Is coordination with neighboring systems required?
- Develop a compliance plan
  - Timeline
  - Funding requirements
- Contact the Public Safety and Homeland Security Bureau with questions/concerns

Availability of Narrowband Equipment

- All VHF/UHF equipment certified since 1997 has 12.5 kHz capability
  - Many systems have equipment with dual 25 kHz/12.5 kHz capability, making the narrowbanding transition easier
- Check with your vendor to determine whether your existing system equipment is narrowband-capable or needs modification/replacement

Funding Considerations

- Cost of narrowbanding will vary depending on the nature of each licensee's existing system
  - Narrowbanding generally does not require a system upgrade, though licensees may combine narrowbanding with other scheduled upgrades or modifications
  - Narrowbanding costs may be more substantial for older systems that require replacement of existing equipment
- Funding to support narrowbanding may be available through federal grant programs (agency contact information provided in "Additional Information Resources" section)

Outline

- Narrowbanding Basics
- Narrowbanding Deadlines
- How to Prepare for Narrowbanding
- Modifying Licenses to Reflect Narrowbanding
- Additional Information Resources

Licensing Modifications

- Licensees should modify their licenses to add a narrowband emission designator prior to commencing narrowband operations
  - Licensees may maintain both narrowband and wideband designators on their licenses while they are transitioning their systems
- Once the narrowband transition is complete, licensees should modify their licenses by removing the wideband emission designator
- These actions can be completed online using ULS

Frequency Coordination

- Frequency coordination is <u>not</u> required for addition of narrowband emissions designator or removal of wideband emissions designator, provided no other changes are being made
  - For licensees north of Line A or west of Line C, reduction in bandwidth does not require Canadian coordination
- Frequency coordination <u>is</u> required when narrowbanding is combined with other modifications that alter a station's footprint
  - E.g., changes in location, antenna height, ERP, as well as when switching from analog to digital emissions

Outline

- Narrowbanding Basics
- Narrowbanding Deadlines
- How to Prepare for Narrowbanding
- Modifying Licenses to Reflect Narrowbanding
- Additional Information Resources

PSHSB Website and Contacts

Roberto Mussenden
202-418-1428
Roberto.Mussenden@fcc.gov

Zenji Nakazawa
202-418-7949
Zenji.Nakazawa@fcc.gov

Narrowbanding Mailbox: narrowbanding@fcc.gov

Bureau Website:
http://www.fcc.gov/pshs/public-safety-spectrum/narrowbanding.html

Other Resources

- http://www.aaacomm.com/fcc_licensing.htm
- http://www.mrfac.com/Mandatory-Narrowbanding.html
- http://www.npstc.org/narrowbanding.jsp
- http://www.IMSAsafety.org

Federal Resources

- DHS
  - Office of Emergency Communications (oec@hq.dhs.gov)
  - SAFECOM
    - http://www.safecomprogram.gov/SAFECOM/grant/default.htm
- FEMA
    - www.fema.gov/grants
    - http://www.fema.gov/government/grant/iecgp/index.shtm
      Interoperable Emergency Communications Grant Program
- DOJ National Institute of Justice
    - http://www.ojp.usdoj.gov/nij/topics/technology/communication/radios/fcc-narrowbanding.htm

ARIZONA WATER COMPANY
WORK AUTHORIZATION

W.A. NUMBER: 1-4932
P.E. NUMBER:
BUDGET ITEM NO.: B-1
SHEET NO.: 1 of 2

SYSTEM: SEDONA/VALLEY VISTA	WORK TO START BY: UPON AUTHORIZATION
DIVISION: VERDE VALLEY	WORK TO BE FINISHED BY: WITHIN 180 DAYS
TAX CODE: 0976	

DESCRIPTION OF WORK:

Replace radios at 16 sites to be compliant with FCC narrow band requirement. Sites Include: Sedona Office, Harmony High Park Tank, Rainbow Well No. 6, Williams Well No. 7, Southwest Center Well No. 8, Harmony Hills Well No. 12, Sedona Golf Resort Tank, Rancho Rojo Well, Sedona Golf Resort Well, Valley Vista Well No. 13, Montezuma Hills Tank, Wickiup Mesa Tank, Rimrock Well No. 1, Rimrock Well No. 2, Montezuma Haven Well No. 3, and Pinewood Unit 9 Tanks. Construct in accordance with attached drawings and/or Arizona Water Company specifications.

FACTORS JUSTIFYING WORK:

APPROVED 2012 BUDGET ITEM ($125,000)
The FCC narrow banding mandate requires that all existing radios that operate on channel bandwidths of 25 kHz be converted to 12.5 kHz or less on or before January 1, 2013. These radio replacements and modifications are needed in order for the Company to provide safe, reliable, and adequate water service.

COST ESTIMATE		AUTHORIZATION	DATE
COST OF WORK:		PREPARED BY: Mike Loggins ML 5-4-12	4-26-12
MATERIAL	11,000		
LABOR	8,400	REVIEWED FOR ESM/ROW VERIFICATION: Charles Briggs CB 5-4-2012	05-04-2012
CONTRACT PORTION	93,371		
OVERHEAD	12,405	REVIEWED BY: Andy Haas AJH 5-7-12	4-26-12
TOTAL AUTHORIZED EXPENDITURES CHARGEABLE TO THIS W.A.	$ 125,176		
FUNDS RECEIVED:		APPROVED BY ENGINEERING: Fredrick Schneider 5-4-12	5-1-2012
CONTRIBUTIONS RECEIVED	0		
REFUNDABLE ADVANCES RECEIVED	0	APPROVED BY FINANCE: Joseph Harris	5/2/12
TOTAL CONTRIBUTIONS/ADVANCES	0		
NET CASH REQUIRED	$ 125,176	AUTHORIZED BY PRESIDENT: William Garfield	5-4-2012

COMMENTS:

There are two separate contracts with Global Data Specialists associated with this WA:
1. Sedona
2. Valley Vista

CONSTRUCTION RELEASE:

RELEASED TO CONSTRUCTION
Authorized by FRED SCHNEIDER
Date 5/4/2012

AFH

ARIZONA WATER COMPANY

WORK AUTHORIZATION - DETAIL SHEET

W.A. NUMBER: 1-4932
P.E. NUMBER:
BUDGET ITEM NO.: B-1
SHEET NO.: 2 of 2

RETIREMENT PROPERTY UNITS	PLANT PROPERTY ACCOUNT	UNIT DESCRIPTION	QUANTITY	YEAR INSTALLED AND W.A. NUMBER

PROJECT DESCRIPTION:

Replace radios at 16 sites to be compliant with FCC narrow band requirement. Sites include: Sedona Office, Harmony High Park Tank, Rainbow Well No. 6, Williams Well No. 7, Southwest Center Well No. 8, Harmony Hills Well No. 12, Sedona Golf Resort Tank, Rancho Rojo Well, Sedona Golf Resort Well, Valley Vista Well No. 13, Montezuma Hills Tank, Wickiup Mesa Tank, Rimrock Well No. 1, Rimrock Well No. 2, Montezuma Haven Well No. 3, and Pinewood Unit 9 Tanks.

	DESCRIPTION	PLANT PROP ACCT	QUANTITY	UNIT COST	TOTAL
CONTRACT WORK	Configure RTU and onsite integration for Valley Vista	397.2	1	$ 6,525.00	$ 6,525
	Purchase Ace radio for Valley Vista	397.2	4	3,790.00	15,160
	Purchase OIT for Valley Vista	397.2	1	5,792.00	5,792
	Program and onsite integration of OIT for Valley Vista	397.2	1	5,760.00	5,760
	Conduct radio path survey for Sedona	397.2	1	4,420.00	4,420
	Electrical install for Valley Vista	397.2	1	6,500.00	6,500
	Configure RTU and onsite integration for Sedona	397.2	1	7,952.50	7,953
	Purchase Io power radio for Sedona	397.2	5	450.00	2,250
	Purchase DPSK card for Sedona	397.2	5	180.00	900
	Purchase Ace radio for Sedona	397.2	3	3,813.33	11,440
	Electrical install for Sedona	397.2	1	2,827.00	2,827
	Configure RTU and onsite integration for Rimrock	397.2	1	7,952.50	7,953
	Purchase Io power radio for Rimrock	397.2	5	450.00	2,250
	Purchase DPSK card for Rimrock	397.2	5	180.00	900
	Electrical install for Rimrock	397.2	1	2,828.00	2,828
	Shipping, bonds, and tax for Valley Vista	397.2	1	4,598.00	4,598
	Shipping, bonds, and tax for Sedona	397.2	1	2,329.50	2,330
	Shipping, bonds, and tax for Rimrock	397.2	1	2,329.50	2,330
	Replace Base Station Radio	397.1	1	655.00	655
TOTAL CONTRACT WORK					$ 93,371
MATERIALS	Purchase Wonderware software	397.2	1	$ 9,500.00	$ 9,500
	Purchase SCADA computer	397.2	1	1,500.00	1,500
	SERVICE CONNECTIONS: DOUBLE-LONG	345			
	SERVICE CONNECTIONS: DOUBLE-SHORT	345			
	SERVICE CONNECTIONS: SINGLE-LONG	345			
	SERVICE CONNECTIONS: SINGLE-SHORT	345			
	METERS	346			
TOTAL MATERIALS					$ 11,000
LABOR	Engineering Design	397.2	40	$ 50.00	$ 2,000
	Project Management	397.2	40	50.00	2,000
	TESTING FEE				
	PERMIT FEE				
	SURVEY FEE				
	FIELD INSPECTION	397.2	80	55.00	4,400
	INSTALL SERVICE CONNECTIONS: DOUBLE-LONG	345			
	INSTALL SERVICE CONNECTIONS: DOUBLE-SHORT	345			
	INSTALL SERVICE CONNECTIONS: SINGLE-LONG	345			
	INSTALL SERVICE CONNECTIONS: SINGLE-SHORT	345			
TOTAL LABOR					$ 8,400
SUBTOTAL - CONTRACT WORK, MATERIALS, AND LABOR					$ 112,771
OVERHEAD					12,405
TOTAL	REFUNDABLE PORTION ☐	NON-REFUNDABLE PORTION ☐		COST ESTIMATE	$ 125,176

AFH

WA 1-4932 - Replace 23 Wireless Telemetry and Voice Communication Units to Comply with FCC Narrowband Regulations

ID	Task Name	Duration	Start	Finish
1	**Sedona FCC Narrow Band Schedule**	**235 days**	**2/6/2012**	**12/28/2012**
2	Update Quotes	30 days	2/6/2012	3/16/2012
3	Execute Contract Documents	20 days	3/19/2012	4/13/2012
4	Procure Materials	60 days	4/16/2012	7/6/2012
5	Program Radios	60 days	4/16/2012	7/6/2012
6	Install Radio Controls, Conduit, and Appurtenances	50 days	7/9/2012	9/14/2012
7	Start-Up	30 days	9/17/2012	10/26/2012
8	Field Troubleshooting	30 days	10/29/2012	12/7/2012
9	Project Close Out	15 days	12/10/2012	12/28/2012
10	In Service	0 days	12/28/2012	12/28/2012

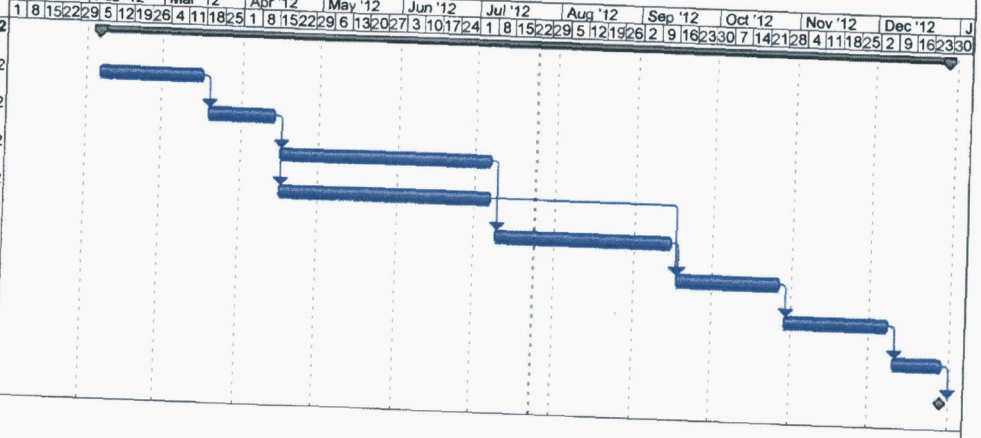

Project: Sedona FCC Narrow Band Sc
Date: 7/24/2012

Task | Split | Progress | Milestone | Summary | Project Summary | External Tasks | External Milestone | Deadline

ARIZONA WATER COMPANY

Verde Valley Division
65 Coffee Pot Dr. Suite 7
Sedona, AZ 86336 PH: 928-282-7092

PROPOSAL/CONTRACT

CONTRACTOR:	Global Data Specialists	SYSTEM:	Sedona
ADDRESS:	1815 W. First Avenue, Suite 110	W.A. No(s):	1-4932
CITY ST ZIP:	Mesa, Arizona 85202	BID DUE DATE:	March 31, 2012

CONTRACTOR SUBMITS this PROPOSAL/CONTRACT to ARIZONA WATER COMPANY, an Arizona corporation (the "Company"), to perform the work and complete the project described on Page 2 (the "Project"), as an independent prime contractor.

1. Contractor certifies that it has a complete copy of, and has read, understands and accepts, the Company's General Conditions of Contract, and the Company's Construction Specifications and Standard Specification Drawings, (the "Specifications"), all of which are attached hereto. Contractor has examined the specific plans and related construction drawings for the Project (the "Drawings"), copies of which are also attached hereto. The General Conditions of Contract, Specifications and Drawings are incorporated into this Proposal/Contract. Contractor affirms that all work and materials to be furnished or purchased for the Project will be in strict conformance with the General Conditions of Contract, Specifications and Drawings.
2. Contractor represents and warrants that it has satisfied and complied with the provisions of Section 6, Contractor Understands Work and Working Conditions, of the General Conditions of Contract prior to submitting this Proposal/Contract.
3. Contractor represents that this Proposal/Contract is fair and honest in all respects, is submitted in good faith and is not submitted in collusion with any other company, entity or person.
4. Contractor acknowledges that one hundred percent (100%) Performance and Payment Bonds are required and must be provided to the Company prior to the commencement of work.
5. Prior to the commencement of work, Contractor will submit to the Company a list of all materials to be used in the Project. This materials list will include the manufacturer, part number, price and quantity included in this Proposal/Contract.
6. Contractor will furnish all labor, tools, equipment and materials required to complete the Project according to the General Conditions of Contract, Specifications and Drawings. No materials purchased by Contractor to be incorporated into the Project are subject to tax at the time of purchase and Contractor will not charge the Company for any such tax. Contractor will pay the applicable transaction privilege tax (the "Contracting Tax") on the Project after Contractor receives payment of the final Project invoice from the Company. The cost of materials incorporated into the Project which are exempt by Arizona Revised State Statutes ("A.R.S.") from the Contracting Tax, for example, pipes or valves having a diameter of four (4) inches or larger, including equipment, fittings and any other related part that is used in operating the pipes or valves (A.R.S. §42-5061 B.6.), will not be included in the total cost of the labor and materials upon which the Contracting Tax is computed. Contractor retains full liability and obligation to pay the Contracting Tax and will defend and indemnify the Company against any demand or obligation to pay the Contracting Tax.
7. Contractor will maintain detailed accounting records of all materials purchased and incorporated into the Project. Such records will include all supporting original vendor invoices for all materials purchased. Following completion of the Project, Contractor will submit an itemized accounting to the Company which will include all supporting original vendor invoices and satisfactory evidence of payment thereof. The Company will not pay Contractor for materials not actually incorporated into the Project, and the disposition of such materials will remain Contractor's responsibility.
8. The Estimated Total Cost of the Project, shown on Page 2, is based on estimated labor and material quantities to be furnished. It includes an estimate of the Contracting Tax and the cost of the required Performance and Payment Bonds. Contractor will not cancel, modify or withdraw this Proposal/Contract during a ninety-day (90) period commencing on the Bid Due Date. The Company may accept this Proposal/Contract by signing and mailing, or otherwise delivering, a copy hereof to Contractor during such ninety-day (90) period. If the Company does not accept this Proposal/Contract during such ninety-day (90) period, Contractor may cancel this Proposal/Contract by giving written notice of cancellation to the Company.
9. Prior to the commencement of work, Contractor will provide the Company with a detailed construction schedule, in either Gantt or CPM form, identifying all tasks to be performed from the date of the written Commencement Notice through completion of the Project, including testing, training of Company Personnel and final Project invoicing. Contractor will provide the Company with a copy of such construction schedule documenting the progress of work on the Project at least monthly.
10. Contractor will not commence work on the Project until the Company gives Contractor a written Commencement Notice. Contractor will complete the Project within 180 calendar days after the Commencement Notice is issued.
11. Following the Company's written notice of satisfactory completion of the Project, and upon receipt of the final Project invoice from Contractor, the Company shall pay Contractor the actual total cost of the Project, which will be calculated as shown on Page 2, except that actual labor and material quantities installed/constructed will be substituted for the estimated labor and materials quantities and the Contracting Tax will be recalculated based on such actual labor and materials quantities.
12. The amount of applicable liquidated damages (or Contractor's failure to deliver or perform within the time limit shown in Paragraph 10 may be deducted from the Company's payment of the final Project invoice. This provision shall not limit the Company's ability to terminate this Proposal/Contract for Contractor's unsatisfactory performance or failure to perform as provided in the General Conditions of Contract, Specifications or Drawings, or in this Proposal/Contract.

SPECIAL CONDITIONS:

CONTRACTOR	PROPOSAL/CONTRACT ACCEPTED:
Global Data Specialists	ARIZONA WATER COMPANY
By:	By:
Print Name: Duane Moon	Print Name: Fredrick K. Schneider, PE
Title: Sales Manager	Title: Vice President - Engineering
Date: 4/23/12	Date: 5-4-12

AFH

ARIZONA WATER COMPANY

Verde Valley Division
65 Coffee Pot Dr., Suite 7
Sedona, AZ 86336 PH: 928-282-7092

PROPOSAL/CONTRACT

CONTRACTOR: Global Data Specialists	SYSTEM: Sedona
AZ CONTRACTOR LICENSE NO: CLASSIFICATION:	W.A. No(s): 1-4932
ADDRESS: 1815 W. First Avenue, Suite 110	BID DUE DATE: March 31, 2012
CITY ST ZIP: Mesa, Arizona 85202	BID BOND REQUIRED: ☐ Yes ☑ No

DESCRIPTION OF PROJECT: Provide Narrow Banding upgrade for the Sedona Water System Radio Controls.

1-2. MATERIALS EXEMPT FROM CONTRACTING TAX (per Paragraph 6)	QUANTITY	UNIT PRICE LABOR	UNIT PRICE MATERIALS		TOTAL COST LABOR		TOTAL COST MATERIALS
3. Total Labor to Install Exempt Materials (add the amounts in column 1)				3	0		
4. Total Exempt Materials (add the amounts in column 2)						4	0

5-6. NON-EXEMPT MATERIALS	QUANTITY	LABOR	MATERIALS		LABOR		MATERIALS
Configure the RTU application software	1	9630			9630		
On-Site Integration	1	6275			6275		
Lo Power Radio Replacement	10		450				4500
DPSK Card FRN 5907	10		180				1800
Electrical Install	1	5655			5655		
ACE Radio	3		3386.67				10160
Misc equipment	Lot		1280				1280
SHIPPING & HANDLING	1		240				240
7. Total Labor to Install Non-Exempt Materials (add the amounts in column 5)				7	21560	0	
8. Total Non-Exempt Materials (add the amounts in column 6)						8	17980
9. Subtotal A (add lines 3, 7 and 8)						9	39540
10. Contracting Tax Base (multiply the amount on line 9 by 0.65)				10	25701		
11. Applicable Contracting Tax Rate				11	9.05		
12. Contracting Tax (multiply the amount on line 10 by line 11)						12	2325.94
13. Subtotal B (add lines 4, 9 and 12)						13	41865.94
14. 100% Performance and Payment Bonds Cost						14	2093.30
15. Estimated Total Cost (add lines 13 and 14)						15	43959.24

NOTE: The Estimated Total Cost includes all labor and materials for backfill, pavement replacement, chip seal, and traffic control necessary for the Project.

ARIZONA WATER COMPANY

COMMENCEMENT NOTICE

CONTRACTOR:

Mr. Duane Moody
Global Data Specialists
1815 W. First Avenue, Suite 110
Mesa, Arizona 85202

DATE: April 25, 2012
DIVISION: VERDE VALLEY
SYSTEM: SEDONA
W.A.: 1-4932

THIS IS YOUR NOTICE TO PROCEED WITH THE FOLLOWING PROJECT(S):

DESCRIPTION OF WORK:

Provide narrow banding upgrade for the Sedona water system radio controls

PERFORMANCE AND PAYMENT BONDS REQUIRED: ☒ Yes ☒ No

TOTAL DAYS ALLOWED: 180

COMPLETION DATE: October 23, 2012

Prior to the start of construction, please call Keith Self, Division Manager at 928-282-7092 to schedule a pre-construction meeting.

RECEIVED
MAY 14 2012
ARIZONA WATER COMPANY
PHOENIX - ENGINEERING

ARIZONA WATER COMPANY
Company

By
Title Vice President - Engineering

GLOBAL DATA SPECIALISTS
Contractor *(type name)*

By
Title Sales Manager

AFH
W:\PROJECTS\2012\W\1-4932 SEDONA & VALLEY VISTA RADIO NARROW BAND\AGREEMENTS\CONTRACTS\E-3-16-2 GLOBAL DATA COMMENCEMENT NOTICE 1-4932 SEDONA RADIO CONTROLS.DOCX 1/15/09 | FKS:afh | E-

BONDS cbic INSURANCE

Performance and Payment Bond
(Private Work)

RECEIVED
JUN 11 2012

ARIZONA WATER COMPANY
PHOENIX - ENGINEERING

Contractors Bonding and Insurance Company
1213 Valley Street
P.O. Box 9271
Seattle, WA 98109-0271
For the CBIC branch nearest you, call Toll Free
(888) 283-2242
(888) 293-2242 FAX

Bond Number: CSB0000110

Know All Persons By These Presents, That we, Global Data Specialists, called the Principal, and **Contractors Bonding and Insurance Company**, a Washington corporation, called the Surety, are held and firmly bound unto Arizona Water Company, called the Obligee, in the sum of Forty Three Thousand Nine Hundred Fifty Nine and 24/100--- Dollars ($ 43,959.24) for the payment whereof said Principal and Surety bind themselves firmly by these presents.

Whereas, the Principal has entered into a contract with the Obligee, dated April 25, 2012, for Sedona Radio Controls W.A. NO. 1-4932 ("Contract").

Now, Therefore, the condition of this obligation is such that if the Principal shall promptly and faithfully perform the construction work to be done under the Contract and shall promptly make payment to all Claimants, as hereinafter defined, for all labor and material used, consumed or incorporated in the performance of the Contract, then this obligation shall be null and void; otherwise to remain in full force and effect.

Whenever Principal shall be, and be declared by Obligee to be in default under the Contract for failing to perform the construction work, the Obligee having performed Obligee's obligations thereunder, Surety shall, within a reasonable time:

1. Upon entering into an acceptable takeover agreement with the Obligee, undertake to complete the construction work to be done under the Contract; or
2. Obtain bids or negotiated proposals from qualified contractors for completion of the construction work to be done under the Contract, and arrange for a contract to be prepared for execution by the Obligee and the contractor, to be secured with performance and payment bonds executed by a qualified surety; or
3. Waive its right to perform and complete, arrange for completion, or obtain a new contractor.
4. The Contract balance, as defined below, shall be credited against the reasonable cost of completing the construction work to be performed under the Contract. If completed by the Obligee pursuant to paragraphs 2 or 3 above, and the reasonable cost exceeds the Contract balance, the Surety shall pay to the Obligee such excess, but in no event shall the aggregate liability of the Surety exceed the amount of this bond. If the Surety completes the work pursuant to paragraph 1 above, that portion of the Contract balance as may be required to complete the construction work to be done under the Contract and to reimburse the Surety for its outlays shall be paid to the Surety at the times and in the manner as said sums would have been payable to Principal had there been no default under the Contract; provided, however, that to the extent that the Surety's outlays exceed the balance of the Contract price paid to Surety by Obligee, the Surety shall be entitled to a dollar for dollar reduction of its liability under this bond, and the Surety's aggregate liability shall not exceed the penal sum of this bond. The term "Contract balance," as used in the paragraph, shall mean the total amount payable by Obligee under the Contract and any amendments thereto, less the amounts heretofore properly paid by Obligee under the Contract. The term "construction work" as used herein shall mean the providing by the Principal of all labor and/or material necessary to complete the Principal's scope of work under the Contract. Notwithstanding any language in the Contract to the contrary, the Surety shall not be liable to the Obligee or others for obligations of the Principal that are unrelated to the performance of the construction work under the Contract, and the Contract balance shall not be reduced or set off on account of any such unrelated obligations, nor for any related obligations that would not be covered under this bond.
5. Any suit by the Obligee under this bond must be instituted before the earlier of: (a) the expiration of one year from the date of substantial completion of the work, or (b) one year after the Principal ceased performing the construction work under the Contract. If the limitation set forth in this bond is void or prohibited by law, the minimum period of limitation available to sureties as a defense in the jurisdiction of the suit shall be applicable.
6. A Claimant is defined as one other than the Obligee having both (a) a direct contract with the Principal or with a direct subcontractor of the principal for labor and/or materials used, consumed or incorporated in the performance of the construction work under the Contract and (b) an enforceable lien on the property improved under the Contract for labor and/or materials used, consumed or incorporated in the performance of the construction work under the Contract.

7. The above-named Principal and Surety hereby jointly and severally agree with the Obligee that every Claimant as herein defined, who has not been paid in full before the expiration of a period of ninety (90) days after the later of (a) the date on which the last of such claimant's work or labor was done or performed or materials were furnished by such claimant, or (b) the date the Claimant filed an enforceable lien, may sue on this bond, prosecute the suit to final judgment for the amount due under Claimant's contract for the labor and/or materials supplied by the Claimant which were used, consumed or incorporated in the performance of the work, and have execution thereon. The Obligee shall not be liable for the payment of any costs or expenses of any such suit.

8. No suit or action shall be commenced hereunder by any Claimant after the expiration of one (1) year after the day on which the Claimant last supplied the labor and/or materials for which the claim is made. If this limitation is void or prohibited by law, then the minimum period of limitation available to sureties as a defense in the jurisdiction of the suit shall be applicable.

9. No suit or action shall be commenced hereunder by the Obligee or any Claimant other than in a court of competent jurisdiction in the county or other political subdivision of the state in which the project, or any part thereof, is situated, or in the United States District Court for the district in which the project, or any part thereof, is situated, and not elsewhere.

10. The amount of this bond shall be reduced by and to the extent of any payment or payments made by Surety in good faith hereunder whether made directly to Obligee or Claimant(s) or otherwise in discharge of Principal's obligations. The Surety's liability hereunder to the Obligee and all Claimants is limited, singly, or in the aggregate, to the penal sum of the bond set forth herein. The Surety may, at its option, discharge all obligations under this bond by interpleading into the registry of any court of competent jurisdiction of the full unencumbered penal sum of this bond, or such portion thereof that will satisfy the obligations owed to the Obligee and/or the Claimant(s). This bond shall not be liable for any liability of the Principal for tortious acts, whether or not said liability is direct or is imposed by the Contract, and shall not serve as or be a substitute for or supplemental to any liability or other insurance required by the Contract.

Signed and sealed this 1 day of June, 2012.

Global Data Specialists
(Principal's name)

By: M. Meyyappan

Its: GENERAL MANAGER

Contractors Bonding and Insurance Company

By: Melanie L. Warnock

Melanie L. Warnock, Attorney-in-fact

Contractors Bonding and Insurance Company
1213 Valley Street
P.O. Box 9271
Seattle, WA 98109-0271

POWER OF ATTORNEY
Contractors Bonding and Insurance Company

Know All Men by These Presents:

That this Power of Attorney is not valid or in effect unless attached to the bond which it authorizes executed, but may be detached by the approving officer if desired.

That **Contractors Bonding and Insurance Company**, a Washington corporation, does hereby make, constitute and appoint:
Jorge L. Mendez, Melanie L. Warnock, Jessika Gulliver, jointly or severally

in the City of Phoenix, State of Arizona its true and lawful Agent and Attorney in Fact, with full power and authority hereby conferred, to sign, execute, acknowledge and deliver for and on its behalf as Surety, the following described bond.

Any and all bonds, undertakings, and recognizances in an amount not to exceed Ten Million and 00/100 Dollars ($10,000,000.00) for any single obligation.

The acknowledgment and execution of such bond by the said Attorney in Fact shall be as binding upon this Company as if such bond had been executed and acknowledged by the regularly elected officers of this Company.

The **Contractors Bonding and Insurance Company** further certifies that the following is a true and exact copy of the Resolution adopted by the Board of Directors of **Contractors Bonding and Insurance Company**, and now in force to-wit:

> **"All bonds, policies, undertakings, Powers of Attorney or other obligations of the Corporation shall be executed in the corporate name of the Corporation by the President, Secretary, any Assistant Secretary, Treasurer, or any Vice President, or by such other officers as the Board of Directors may authorize. The President, any Vice President, Secretary, any Assistant Secretary, or the Treasurer may appoint Attorneys in Fact or Agents who shall have authority to issue bonds, policies or undertakings in the name of the Corporation. The corporate seal is not necessary for the validity of any bonds, policies, undertakings, Powers of Attorney or other obligations of the Corporation. The signature of any such officer and the corporate seal may be printed by facsimile or other electronic image."**

IN WITNESS WHEREOF, the **Contractors Bonding and Insurance Company** has caused these presents to be executed by its Vice President with its corporate seal affixed this 6th day of June, 2011.

CONTRACTORS BONDING AND INSURANCE COMPANY — CORPORATE SEAL 1979 — WASHINGTON

Contractors Bonding and Insurance Company

Roy C. Die — Vice President

State of Washington } SS
County of King

On this 6th day of June, 2011, before me, a Notary Public, personally appeared Roy C. Die, who being by me duly sworn, acknowledged that he signed the above Power of Attorney as the aforesaid officer of the **Contractors Bonding and Insurance Company** and acknowledged said instrument to be the voluntary act and deed of said corporation.

Joseph B. Muller — Notary Public

Notary Public
State of Washington
JOSEPH B. MULLER
MY COMMISSION EXPIRES
March 29, 2012

CERTIFICATE

I, the undersigned officer of **Contractors Bonding and Insurance Company**, a stock corporation of the State of Washington, do hereby certify that the attached Power of Attorney is in full force and effect and is irrevocable; and furthermore, that the Resolution of the Company as set forth in the Power of Attorney, is now in force. In testimony whereof, I have hereunto set my hand and the seal of the **Contractors Bonding and Insurance Company** this 1st day of June, 2012.

Contractors Bonding and Insurance Company

Roy C. Die — Vice President

0275381032912

A0059511

ARIZONA WATER COMPANY

SPECIFICATIONS

GENERAL CONDITIONS OF CONTRACT: E-4-1

CONSTRUCTION SPECIFICATIONS: E-8-1

STANDARD SPECIFICATION DRAWINGS: E-9-1

2007 EDITION WITH 2010 REVISIONS

ARIZONA WATER COMPANY

GENERAL CONDITIONS OF CONTRACT: E-4-1

ARIZONA WATER COMPANY

E-4-1

GENERAL CONDITIONS OF CONTRACT

DEFINITIONS

A. Company. The words "Company" or "Arizona Water Company" mean Arizona Water Company, and where applicable, any division of Arizona Water Company, whose principal place of business is located at 3805 North Black Canyon Highway, Phoenix, Arizona 85015-5351 (Post Office Box 29006, Phoenix, Arizona 85038-9006).

B. Company's Authorized Representative. The words "Company's Authorized Representative" mean any officer of the Company, and any of the Company's Engineers, any Division Manager or Superintendent of the Company and/or such other person(s) designated in writing as the "Company's Authorized Representative" by the President or any Vice President of the Company.

C. Contractor. The word "Contractor" means either an individual or other entity employed to do the work as shown on the Construction Drawings and as specified herein.

D. Construction Drawings. The words "Construction Drawings" mean plans prepared by or on behalf of Arizona Water Company.

E. Invitation to Bid. The term "Invitation to Bid" means the current copy of Arizona Water Company's Form E-3-11-4 Request for Proposal/Contract or Form E-3-12-2 Invitation to Bid.

F. Contract. The word "Contract" means the written document titled "Contract" or "Proposal/Contract" when such document has been signed by an officer or other authorized representative of both the Contractor and the Company.

G. Inspector. The word "Inspector" means the Company's Authorized Representative or a person designated in writing by the Company's Authorized Representative.

GENERAL CONDITIONS OF CONTRACT

1. GENERAL

These General Conditions of Contract govern all works of installation and construction unless deviations are provided for on the Construction Drawings or in the Contract.

2. BONDS

The Contractor shall, upon request by the Company, furnish a performance bond and a material payment bond in the amount of 100% of the Contract price, in a form and from a surety acceptable to the Company.

3. LABOR AND/OR MATERIAL RELEASES

The Contractor shall supply labor and/or material releases satisfactory to the Company when requested to do so. Forms will be provided by the Company.

4. LICENSE

The Contractor shall have, as may be required by law, a valid license applicable to the work to be performed.

5. INSURANCE

The Contractor shall maintain in full force and effect insurance at no less than the following minimum amounts:

WORKER'S COMPENSATION	In accordance with requirements of the laws of the State of Arizona.
COMPREHENSIVE GENERAL LIABILITY (Including contractual liability covering death, bodily injury and property damage)	Combined single limit of not less than $1,000,000 for each occurrence.
AUTOMOTIVE LIABILITY (Including owned, non-owned and hired vehicles)	Combined single limit of not less than $1,000,000 for each occurrence.
SUBCONTRACTOR'S PUBLIC LIABILITY AND PROPERTY DAMAGE INSURANCE AND VEHICLE LIABILITY INSURANCE	Contractor shall either require each of its subcontractors to procure and to maintain Subcontractor's Public Liability and Property Damage Insurance and Vehicle Liability Insurance of the type and in the amounts specified in this Section 5 or insure the activities of its subcontractors in Contractor's own policy, in like amounts.

Such insurance shall name the Company, its officers, agents, and employees as additional insured and be primary for all purposes.

The Company will at all times have the right to require that all of such insurance be placed with insurance companies that are satisfactory to it. The Contractor shall file with the Company a certificate evidencing that each policy of insurance for the above coverages in the minimum amounts specified has been purchased and is in good standing.

Such certificate shall provide that notice be given to the Company at least thirty (30) days prior to cancellation or material change in the form of such policies or any of them. Such certificates shall be kept on file by the Company and the Company must have current certificates on file, or a certificate must accompany any bid proposal, before that proposal will be accepted by the Company.

6. CONTRACTOR UNDERSTANDS WORK AND WORKING CONDITIONS

By executing a Contract with the Company, the Contractor warrants that it has, by careful examination, satisfied itself as to the nature and location of the work, including soil conditions, the character, quality and quantity of the materials to be encountered, the character of the equipment and facilities needed preliminary to and during prosecution of the work, the general and local conditions, and all other matters which can in any way be expected to affect its work under the Contract. Verbal agreements or conversations with any officer, agent or employee of the Company, either before or after the execution of the Contract, are not binding upon the Company and shall not affect or modify any of the terms or obligations herein contained.

7. SPECIFICATIONS AND DRAWINGS

The Contractor shall keep on the job a complete copy of all drawings and specifications furnished by the Company which are applicable to the Contract with the Company. Anything mentioned in the specifications and not shown on the drawings or shown on the drawings and not mentioned in the specifications shall be of like effect as if shown or mentioned in both. In case of a discrepancy between the figures, drawings or specifications and physical conditions of the job, the matter shall be immediately submitted to the Company's Authorized Representative for decision as to adjustments, if any, because of the discrepancy; without a decision from the Company's Authorized Representative no discrepancy shall be adjusted by the Contractor, save only at its own risk and expense. Any deviation from the specifications must be approved in writing by the Company's Authorized Representative.

8. PROPERTY PROTECTION

Trees, fences, poles, underground structures and all other property shall be protected unless their removal is authorized on the Construction Drawings. Any property damaged shall be restored by the Contractor, at its expense, to the owner's satisfaction.

9. SPECIAL PERMITS, LICENSES AND INSURANCE

The Company shall obtain all permits for railroad, county, state, city and irrigation district rights-of-way as well as Forest Service, State Land Department and Bureau of Land Management permits. (Pipeline Contractors)

Whenever blasting is required, the Contractor shall obtain all permits, licenses and insurance required at its expense. (All Contractors)

The Contractor will be required to obtain, and shall certify in writing to the Company that it has obtained, all additional permits required to perform the work including, but not limited to, a National Pollution Discharge Elimination System Permit and/or an Aquifer Protection Permit as those permits relate to disposal of drilling, development and test waters and/or any other discharge or similar activity. (Well Drilling Contractors)

10. SURVEYS

The Company shall be responsible, or arrange, for all surveys required for the work covered in the Contract, unless otherwise specified.

11. BENCH MARKS, PROPERTY STAKES AND SURVEY STAKES

Bench marks, property stakes and survey stakes shall be preserved by the Contractor; in case they are destroyed or removed by Contractor or its employees, the Company will replace them at the Contractor's expense, and the Contractor and its sureties shall be liable therefore.

12. TOOLS, EQUIPMENT AND MATERIALS

The Contractor shall furnish all of the necessary tools, equipment, and pipeline materials required for the work. All material furnished by the Contractor shall be of the quality specified by the Company in its Construction Specifications (E-8-1).

13. SUPERINTENDENCE BY CONTRACTOR

The Contractor shall assure adequate superintendence of the work by a competent foreman or superintendent (with full authority to act on behalf of Contractor) satisfactory to the Company, who will be on the job at all times when work is in progress.

14. ORDER AND DISCIPLINE

The Contractor shall at all times enforce strict discipline and good order among its employees.

15. INDEPENDENT CONTRACTOR

The Contractor is an independent contractor and any provisions in the Contract, the specifications, or these General Conditions of Contract and Arizona Water Company's Construction Specifications which may appear to give the Company the right to direct the Contractor as to the details of the doing of any work to be performed by the Contractor, or to exercise a measure of control over said work, shall be deemed to mean and shall

mean, that the Contractor shall follow the desires of the Company in the results of the work only and not in the means whereby said work is to be accomplished, and the Contractor shall use its own discretion and shall have complete and authoritative control over the work and as to the details of the doing of the work.

16. PUBLIC SAFETY AND CONVENIENCE

Contractor shall at all times conduct its work so as to ensure the least possible obstruction to traffic and other inconvenience to the general public and the residents and businesses in the vicinity of the work, and to ensure the protection of persons and property.

To protect persons from injury and to avoid property damage, Contractor shall provide and maintain adequate barricades as required during the progress of the work and until it is safe to use the property for its intended purpose. The rules and regulations of the local governmental agencies and specific permit requirements respecting safety provisions shall be observed at all times.

In the case of blasting, the Contractor shall exercise extreme caution to protect the general public and personal and public property from harm or damage.

17. PROPERTY PROTECTION

Trees, fences, poles, and all other property shall be protected unless their removal is authorized by the Company. Any property damaged shall be restored by Contractor, at his expense, to Company's satisfaction.

18. RESPONSIBILITY OF CONTRACTOR

The work shall be under Contractor's responsible care and charge. Contractor shall bear all loss and damage whatsoever and from whatsoever cause, except that caused solely by the act of Company, which may occur on or to the work during the fulfillment of the Contract. If any loss or damage occurs, Contractor shall immediately make good any such loss or damage, and in the event of Contractor refusing or neglecting to do so, Company may, or by the employment of some other person, make good any such loss or damage, and the cost and expense of so doing shall be charged to Contractor.

The mention of any specific responsibility or liability imposed upon Contractor shall not be construed as a limitation or restriction of any general liability or duty imposed upon Contractor by the Contract. The reference to any specific duty or liability being made herein is merely for the purpose of explanation.

Contractor alone shall at all times be responsible for the safety of Contractor, Contractor's employees, and its subcontractors' employees, and for Contractor and its subcontractors' plant and equipment and the method of performing the work.

19. ERRORS AND OMISSIONS

If Contractor, in the course of the work, becomes aware of any errors or omissions in the Contract Documents or in the instructions, or if Contractor becomes aware of any discrepancy between the Contract Documents and the physical conditions of the site of

the work, Contractor shall immediately inform Company in writing. Any work done by Contractor after such discovery, until authorized by Company, will be done at Contractor's risk.

20. LAWS, REGULATIONS

Contractor shall give all notices required by law and comply with all laws, ordinances, rules and regulations, including, but not limited to, all applicable federal, state, local and other legally required health and safety standards, orders, rules, regulations or other laws, pertaining to the conduct of the work. Contractor shall be liable for, and shall defend and indemnify Company against and hold it harmless from, all violations of any law, ordinance, rule, regulation, standard, or order in connection with work furnished by or on behalf of Contractor. If Contractor observes that the Contract Documents are at variance with any law, ordinance, rule, regulation, standard, or order it shall promptly notify Company in writing and any necessary changes shall be adjusted as provided in the Contract for changes in the work. Contractor shall not perform any work contrary to such laws ordinances, rules, regulations, standards, or orders.

21. PERMITS, FEES AND INSPECTIONS

Permits and licenses necessary for the prosecution of the work, including, but not limited to, any National Pollution Discharge Elimination Systems (NPDES) Permits required by U.S. Environmental Protection Agency or the Arizona Department of Environmental Quality shall be secured, paid for, and complied with by Contractor.

Contractor shall be responsible for its actions and shall abide by all conditions and/or restrictions set forth in the NPDES Permit and any other permit or license required for this project.

Company shall at all times have access to the work whenever it is in preparation or in progress and Contractor shall provide proper facilities for such access and for all inspections. If the Contract Documents, the General Superintendent's instructions, laws, ordinances or any public authority require any work to be inspected or approved, Contractor shall give timely notice of its readiness for inspection.

Inspection of the work shall not relieve Contractor of any of its obligations even if defective work or unsuitable materials may have been previously overlooked by Company and accepted or estimated for payment. If any work is found not in accordance with the Contract Documents, Contractor, at its sole cost and expense, shall promptly make good such defective work.

22. CONSTRUCTION MARKING (PIPELINE ONLY)

Each job shall be marked and/or barricaded by the Contractor in such a manner that the construction is clearly visible at all times.

23. EXTRA WORK AND/OR MATERIALS

Except as otherwise herein provided, no charge for any extra work and/or material will be allowed unless the same has been ordered in writing by the Company's Authorized Representative, and the price stated in such order.

24. CHANGES

The Company shall have the right to make any changes in the work that it may determine to be necessary. If such changes affect the cost of the work, an equitable adjustment shall be negotiated. Changes shall in no way affect or void the obligations of both parties under the original Contract.

25. INSPECTION

All work and material shall be open at all times to inspection and acceptance or rejection by the Company's Inspector. Any work covered up by the Contractor prior to inspection and acceptance by the Company shall be subject to being uncovered at the expense of the Contractor for inspection by the Company. The Contractor shall give the Company reasonable notice of starting new work and shall provide, without extra charge, reasonable and necessary facilities for inspection, even to the extent of taking out portions of finished work. In case any such finished work removed is found satisfactory, however, the actual direct cost of such removal and replacement, plus 15% of such cost, will be paid by the Company; in addition, if completion of the work has been delayed thereby, the Contractor shall be granted a suitable extension of time on account of the additional work involved.

26. DEFECTIVE WORK OR MATERIAL

The Contractor shall remove, at its own expense, any work or material found defective by the Company's Inspector and shall rebuild and replace the same without extra charge; in default thereof, the same may be done by the Company at the Contractor's expense.

27. ASSIGNMENT

Neither party to the Contract may assign the Contract or sublet it in whole or in part without the written consent of the other, nor shall the Contractor assign any monies due or which may become due hereunder without the previous written consent of the Company, nor shall such consent release the Contractor from any of its obligations and liabilities under the Contract.

28. RIGHTS OF VARIOUS INTERESTS

Whenever work that is being done for the Company other than by the Contractor is contiguous to work being done by the Contractor, the respective rights of the various interests involved shall be established by the Company to secure the completion of the various portions of the work in general harmony.

29. SUSPENSION OF WORK

The Company's Authorized Representative may at any time and for any reason suspend all or any portion of the work under the Contract. This right to suspend work shall not be construed as denying the Contractor compensation for actual, reasonable and necessary expenses due to suspension to which it may be entitled.

The Company's Authorized Representative may order the Contractor to suspend any work because of certain conditions, such as inclement weather, or because the

Contractor is in violation of these General Conditions of Contract or the Construction Specifications. It is understood that compensation for expenses will not be allowed for such suspension when ordered by the Company's Authorized Representative on account of such conditions.

30. PROCEDURE OF WORK (PIPELINE ONLY)

All work under the Contract shall be planned and performed so as to cause a minimum of interference with normal vehicular and pedestrian traffic. At no time shall the Contractor completely obstruct the traffic to any business establishment during normal work hours of that business. It shall be the Contractor's responsibility to maintain facilities for ingress and egress to any business establishment. When crossing any street, not more than one-half of the street may be blocked at one time. All federal, state, county and city laws, rules and regulations relating to this subject are to be obeyed.

The Contractor shall complete any portion or portions of the work in such order of time as the Company may require. The Company shall have the right to take possession of and use any completed or partially completed portions of the work. If such prior possession or use increases the cost of or delays the work, the Contractor will be entitled to extra compensation or extension of time or both, as the Company may determine.

31. DISPUTES

All questions or controversies which arise between the Contractor and the Company, under, or in reference to, the Contract, shall be decided by the Company's Authorized Representative and a representative of the Contractor, and their decision shall be final and conclusive upon both parties.

32. CONNECTION TO EXISTING SYSTEM (PIPELINE ONLY)

Unless approved in writing by the Company's Authorized Representative, no tie-in or hot tap on the existing system shall be made unless the Company's Inspector is present. When the tie-in requires the operation of an existing valve or other control equipment, the conditions of Paragraph(s) 30 and 33 shall be complied with. The Contractor shall notify the Company twenty-four (24) hours prior to tie-in as to the exact time the Contractor plans to make tie-in so that the Company's Inspector will have sufficient time to locate valves and make necessary preliminary arrangements for shut down.

33. PLANNED INTERRUPTION OF WATER SERVICE (PIPELINE ONLY)

No valve or other control on an existing Company water system shall be operated for any purpose by the Contractor without approval of the Company's Inspector. All of the Company's water customers whose service is interrupted by a planned interruption, other than in cases of emergency, shall be notified by the Contractor at least twenty-four (24) hours before the planned interruption and advised of the probable time when the service will be restored.

34. EXISTING UTILITY FACILITIES (PIPELINE ONLY)

The Contractor shall notify all known utilities in the area of the work to be performed under the Contract and shall make arrangements to have their facilities marked in

accordance with A.R.S. 40-360.022 ("Blue Stake Law"). The Contractor shall be responsible for locating and preserving all marked facilities. Any damages to these marked facilities shall be repaired at the expense of the Contractor.

The Company will pay the cost to relocate its or other structures when such structures are found occupying the physical space of the proposed installation. It is understood that the Contractor will be reimbursed for such work only when written authorization from the Company has been obtained in advance of such work.

35. CLEANING UP

The Contractor shall remove from the Company's property and from all public and private property, at its own expense, all temporary structures, rubbish and waste materials resulting from its operations. In the event Contractor fails to do so, the Company may remove same at the expense of the Contractor.

36. WORKING HOURS (PIPELINE ONLY)

Unless stated to the contrary in the Invitation to Bid and/or so stated on the Construction Drawings, or agreed to by the Company during a Pre-Construction Conference, the Contractor shall not be permitted to perform work on Saturdays, Sundays, or Company holidays, or commence work such as tie-ins that cannot be completed during normal working hours.

37. INDEMNITY

A. The Contractor shall indemnify the Company against, and save and hold it harmless from, any and all liability, claims, demands, loss, actions, causes of action, expense, penalties, fines, assessments, damages and costs of every kind and nature for injury to or death of any and all persons, including, without limitation, employees or representatives of the Company or of the Contractor or of any subcontractor, or any other person or persons, and for damage, destruction or loss, consequential or otherwise, to or of any and all property, real or personal, including, without limitation, property of the Company or of the Contractor or of any subcontractor, or of any other person or persons, and the violation of any law, ordinance, rule, regulation, standard, or order resulting from or in any manner arising out of or in connection with the performance of the work under the Contract, howsoever same may be caused, including, without limitation, the Company's active or passive negligence. The Contractor shall also, upon request by the Company, and at no expense to the Company, defend the Company in any and all suits, concerning such injury to or death of any and all persons, and concerning such damage, destruction or loss, consequential or otherwise, to or of any and all property, real or personal, including, without limitation, suits by employees or representatives of the Company or of the Contractor or of any subcontractor, or any other person or persons, or concerning any court or administrative proceeding concerning the violation of any law, ordinance, rule, regulation, standard, or order. Excluded from this paragraph are only those injuries to or deaths of persons and damage, destruction or loss, to or of property arising from the sole negligence or willful misconduct of the Company.

B. Contractor shall indemnify the Company against, and save and hold it harmless from, any and all liability, claims, demands, damages, costs, expenses and attorney's fees, suffered or incurred on account of any breach of any obligation, covenant or other

provision of this contract, including without limitation, breach of the indemnity provisions of subsection A of this Section 37.

C. Contractor further agrees to defend, indemnify and hold harmless the Company, its directors, officers, employees, and agents, from and against any and all costs, damages, claims, expenses, violations, notices of violations, penalties, liens, assessments, and liabilities of every kind and nature, foreseeable or unforeseeable, directly or indirectly, arising from any release, removal, generation, use, storage or disposal on, under, around, or from the well site of any material, substance, or waste, hazardous or non-hazardous, including, without limitation, drilling fluids, mud, cuttings and development and test water howsoever same may be caused, including, without limitation, the Company's active or passive negligence.

38. LIENS

If at any time there shall be evidence of any lien or claim for which the Company might become liable and which is chargeable to the Contractor, the Company shall have the right to retain out of any payment then due or thereafter to become due, an amount sufficient to completely indemnify the Company against such lien or claim. If the Company determines that such lien or claim is valid, the Company may pay and discharge the same, and deduct the amount so paid from any monies which may be or become due and payable to the Contractor.

39. PAYMENT

Upon completion of the installation or construction, the Company will, within thirty (30) days after receipt of proper invoice and labor and material releases, pay the amount due the Contractor. If the Company believes that additional work, such as clean up, is required, it may deduct the total cost of such additional work from the amount to be paid to Contractor.

40. COMPANY'S RIGHT TO TERMINATE CONTRACT: DAMAGES DUE TO DELAY

If the Company finds the Contractor to be in material violation of any section of these General Conditions of Contract, Construction Specifications or Standard Specification Drawings or if the Contractor refuses or fails to prosecute the work, or any separable part thereof, with such diligence as will insure its completion within the time specified or any extension thereof, or fails to complete said work within such time, or when any other cause exists to justify such action, the Company may, without prejudice to any other right or remedy, by written notice to the Contractor, terminate its right to proceed with the work or such part of the work as to which there has been such violation, delay or other cause.

In the event the Contractor's right to proceed is terminated, the Company may take over the work and take possession of, and utilize in completing the work, such materials as may be on the site of the work and necessary therefore and prosecute said work to completion by whatever method it may deem expedient. The Contractor and its sureties shall be liable to the Company for any excess cost caused thereby.

In the event the Contractor's right to proceed with the work is terminated, the Contractor shall not be entitled to receive any further payment until the work is completed or the job is canceled. If the unpaid balance of the Contract price exceeds the expense of finishing

the work, including compensation for additional managerial and administrative services, such excess shall be paid to the Contractor. If such expenses exceed such unpaid balance, the Contractor shall pay the difference to the Company.

41. GUARANTEE

The Contractor shall guarantee all labor and workmanship and any materials it installs for a period of one year following the date of completion and acceptance by the Company. If any portion of the work or any of the materials become defective within the guarantee period, the Company will notify the Contractor of such defect. The Contractor must repair any defect within fifteen (15) days of such notification. If repairs are not completed within this time period, the Company may repair the defect, or cause such defect to be repaired, and the cost of such repairs shall be paid by the Contractor. The Company reserves the right to determine which defects are the result of poor labor and workmanship and which are caused by defective materials.

42. LIQUIDATED DAMAGES FOR NON PERFORMANCE: REQUEST FOR EXTENSION(S) OF TIME

Time is of the essence in the Contract. The time period required for completion of the work will be specified in the Contract. The Contractor agrees that the Company will suffer substantial damages in the event the Contractor fails to complete the work within the agreed upon time period. The Contractor and the Company agree that since it would be impracticable or extremely difficult to precisely fix such damages, a reasonable approximation of such actual damages suffered by the Company shall be a sum equal to 0.5% of the Contract price for each working day beyond the time period for completion of the work specified in the Contract.

Request by the Contractor for extensions of the time period shall be in writing and shall not become effective until approved in writing by the Company's Authorized Representative.

43. PAYMENT FOR REQUIRED TESTING

Whenever testing is required by any governmental agency or by the Company to assure conformance of the Contractor's work with the appropriate standard, it will be paid for as follows:

a. For testing required under permits obtained by the Company or testing specifically requested by the Company, the cost of the first test will be paid for by the Company. In the event of failure of the first test, the cost of all further testing associated with the failure will be paid by the Contractor.

b. For testing required under permits obtained by the Contractor, all costs will be paid by the Contractor. Testing of the pipeline for pressure and leakage will be included in the Contract price.

44. CONTRACT DEADLINES AND BONDS REQUIREMENTS

The time limits to be allowed for the completion of any work covered in the Contract shall be established as follows: In the proposal submitted to the Company, in response to the Invitation to Bid, the Contractor shall state the number of calendar days required for completion of the work. The time required will become a part of the Contract. When the Company is ready to proceed with the work, a Commencement Notice will be issued by the Company to the Contractor by mail. The Commencement Notice will allow the time required in the Contract plus ten (10) calendar days and will indicate the final day of the time allowed. The work cannot begin until the Company has received a performance bond and materials payment bond for the Contract price unless the bonds have been waived under the special conditions section of the Contract. The additional ten (10) days is the allowance for time to deliver the Commencement Notice to the Contractor and for the Contractor to return the performance bond and materials payment bond to the Company. Time extensions will be granted if warranted, and only at the time of the delay, thus extending the final day of the time allowed.

If the Company elects not to require a performance bond and a material payment bond for the work, the cost of the bonds will be deducted from the proposed total cost and the Contract will reflect this reduced cost and the bonds requirements will be waived under special conditions of the Contract.

ARIZONA WATER COMPANY

CONSTRUCTION SPECIFICATIONS: E-8-1

ERRATA 2010

CONSTRUCTION SPECIFICATIONS FOR THE INSTALLATION OF WATER DISTRIBUTION SYSTEMS DUCTILE IRON

DEFINITIONS

A. Company. The words "Company" or "Arizona Water Company" mean Arizona Water Company, and where applicable, any division of Arizona Water Company, whose principal place of business is located at 3805 North Black Canyon Highway, Phoenix, Arizona 85015-5351 (Post Office Box 29006, Phoenix, Arizona 85038-9006).

B. Company's Authorized Representative. The words "Company's Authorized Representative" mean any officer of the Company, and any of the Company's Engineers, any Division Manager or Superintendent of the Company and/or such other person(s) designated in writing as the "Company's Authorized Representative" by the President or any Vice President of the Company.

C. Contractor. The word "Contractor" means either an individual or other entity employed to do the work as shown on the Construction Drawings and as specified herein.

D. Construction Drawings. The words "Construction Drawings" mean plans prepared by or on behalf of Arizona Water Company.

E. Contract. The word "Contract" means the written document titled "Proposal/Contract" when such document has been signed by an officer or other authorized representative of both the Contractor and the Company.

CONSTRUCTION SPECIFICATIONS
FOR THE INSTALLATION OF WATER DISTRIBUTION SYSTEMS
DUCTILE IRON

1. GENERAL

All work is to be completed in a safe, workmanlike manner and in accordance with these Construction Specifications; any deviation therefrom must be approved in writing by the Company.

Installations must conform with the requirements of all governmental regulating agencies and the cost of conforming to such regulations must be included in the unit bid prices. Examples of such regulations, without attempting to be inclusive, are:

a. Special compaction and paving for street crossing.
b. Shoring when required because of the trench depth.
c. Closing a trench in those areas where no open trench is allowed overnight.
d. Barricading and traffic control as required.

2. LOCATION MARKING

Alignment stakes as required in the opinion of the Company shall be furnished by the Company to the Contractor and shall be set by the Company at agreed upon intervals and offsets. Under normal circumstances these will reference the pipeline location five feet (5') into the right-of-way measured from property pins. Grade stakes will be provided only when the Construction Drawings show a pipeline depth other than covered in these Specifications. It is the responsibility of the Contractor to preserve all survey work.

3. TRENCH EXCAVATION

The trench location is to be determined by the Construction Drawings.

FOR 8-INCH OR SMALLER PIPE: The depth of the trench prior to pipe laying shall be such that the finished pipeline shall have between thirty-six inches (36") and forty-two inches (42") of cover unless otherwise specified on the Construction Drawings.

FOR 12-INCH AND LARGER PIPE: The depth of the trench prior to pipe laying shall be such that the finished pipeline shall have between forty-eight inches (48") and sixty inches (60") of cover unless otherwise specified on the Construction Drawings.

The width of the trench at and below the level at the top of the pipe shall be a minimum of twelve inches (12") plus the outside diameter of the pipe barrel and a maximum of twenty-four inches (24") plus the outside diameter of the pipe barrel.

The bottom of the trench shall be accurately graded to provide a uniform bearing for each length of pipe for the full length of the pipe. If the native material on the trench bottom can be reasonably dug by hand, bell holes shall be dug for the joints so that the joints in no way support the pipe. When native materials such as rock are encountered during trenching that will not provide a uniform support for the pipe, the trench will be over-excavated an additional six inches (6") and suitable bedding material will be placed in the trench.

Bedding material will be placed by hand in four-inch (4") lifts and compacted to ensure uniform compaction and to eliminate any voids under the pipe. When the space between the pipe and trench bottom varies, this must be backfilled and compacted in four-inch (4") lifts to the mid-section of the pipe.

Whenever the trench is over-excavated for whatever reason, the trench bottom will be brought up to the correct depth at the Contractor's expense using either method (a) or (b) as follows:

a. A.B.C. material shall be used and compacted to a uniform density of not less than 80% of the maximum density as determined by AASHTO T-99 method A and T-191.

b. Native material 100% of which will pass through a one and one-half inch (1½") screen and at least 20% of which will pass through a number-8 screen shall be used and compacted to a uniform density of not less than 85% of the maximum density as determined by AASHTO T-99 method A and T-191.

4. MATERIALS TO BE PROVIDED BY CONTRACTOR

Unless otherwise specified on the Construction Drawings or in the Contract, the Contractor will supply all of the necessary materials which will become a permanent and integral part of the water distribution system, including concrete blocking, anchors, backfill material, paving material and supplies used during the prosecution of the work. All materials provided by the Contractor to construct the water distribution system must be NSF Standard 61 approved. All potable water pipes and fittings shall have NSF-PW seal. Construction materials used in the water system shall be lead free as defined at AAC R28-4-504 and R18-1-101. The Contractor will provide the following m aterials:

a. FIRE HYDRANTS: Mueller Super Centurion 250 Fire Hydrant, meets ANSI/AWWA C502 Standard, Model No. A-423, 5¼" main valve opening, three way, 6" Mechanical Joint Shoe, 1½" pentagon operating nut, color - yellow, drain open, open direction - left, 4' or 4'6" bury depending on application. For pumper and hose nozzle inform ation see below.

(1) 1 - 4" Pumper Nozzle, NST and 2 – 2½" Hose Nozzles, NST. (These locations only: Ajo, Casa Grande, Coolidge and San M anuel.)

(2) 1 – 4½" Pumper Nozzle, NST and 2 – 2½ " Hose Nozzles, NST. (These locations only: Apache Junction, Arizona City, Lakeside, Oracle, Overgaard, Pinewood, Rimrock, Sedona, Sierra Vista, White Tank and Winkelman.)

(3) 1 – 4½" Pumper Nozzle, NST and 2 – 2½" Hose Nozzles, NPT (Bisbee only.)

(4) 1 - 3" Pumper Nozzle GA 6-350 (6 threads per inch, 3.50 pitch diameter) and 2 – 2½" Hose Nozzles, NPT (Miami only.)

(5) 1 – 3½" Pumper Nozzle GA 6-411 (6 threads per inch, 4.11 pitch diameter) and 2 – 2½" Hose Nozzle, NST (Superior only.)

b. FITTINGS: Manufactured by Tyler or Union. Crosses, Elbows, Tees, Cap, Reducer, Adapter, Plug, Blind Flange and Tapped Flange; Ductile Iron, Class 350, SSB, Cast Iron Cement Lined.

(1) Foster Adaptors for MJ, made by Infact Corporation: Available in size 4" to 16". Part No. 4" = 4FA-BC, 6" = 6FA-BC, 8" = 8FA-BC, 10" = 10FA-BC, 12" = 12FA-BC, 16" = 16FA-BC.

c. DETECTOR CHECK VALVE: Mueller/ Hersey EDC III, iron body, including 5/8" x ¾" Trim Kit. Trim Kit Part No.: 4" = 282080, 6" = 282082, 8" = 282085, 10" = 282496.

d. GATE VALVES: Mueller Resilient Wedge Gate Valves, meets AWWA C509 specification, 250 psig, Non-rising stem, Part No. A-2360 sizes 4" through 12" ; Part No. A-2361 sizes 14" through 36", low zinc stems, epoxy coated inside and outside to meet the NSF 61 rating. The bonnet and stuffing box shall have 304 stainless steel bolts/nuts.

e. TRACER WIRE and WARNING TAPE:

1. TRACER WIRE: Shall be direct bury AWG #14 solid copper wire, Color: Blue.

2. WARNING TAPE: Reef Industries, Standard Terra Tape in 3" widths. Color: Blue and imprinted 'Arizona Water Company'.

f. AIR RELEASE VALVE: Crispin Model AR10 with 1" NPT inlet and ½" NPT outlet, cast iron body and top flange; with a 5/64" orifice with stainless steel valve sealing faces and BUNA-N rubber.

g. PRESSURE RELIEF VALVE: Watts 174A, Model M, 2" inlet, 2" outlet, Bronze Body, 30lb. to 150lb. pressure range.

h. MEGA LUG: Mechanical Joint restraint made of ductile iron conforming to ASTM 536-80, 250 psi made by EBAA Iron, Inc., series 1100 or equal.

i. METER BOXES:

(1) Concrete Box with a steel regular lid, Number 1: Tucson specification.

(2) Concrete Box with a steel regular lid, Number 2, 3, and 4: Phoenix specification.

j. PIPE, COPPER: Type K soft copper in 60 or 100-foot coils, per ASTM B88.

k. PIPE, DUCTILE IRON: Ductile Iron Pipe, Cement Lined, Push-on, conform to current ANSI/AWWA Specification A21.51/C151, Pressure Class 350 (sizes 4" through 12"), Pressure Class 250 (sizes 14" through 20"), or Pressure Class 200 for 24" through 36" pipe. Vendors:

(1) Pacific States Cast Iron Pipe Company
(2) Griffin Pipe
(3) United States Pipe and Foundry Company
(4) American Ductile Iron Pipe
(5) Clow Pipe (McWane, Inc.)

l. PIPE, PLASTIC: Plastic pipe, C-900 PVC per ANSI/AWWA C900, Class 150, sizes 6" through 12". NSF61 approved. Furnished in laying lengths of 20'. The barrel shall conform to the outside dimensions of steel pipe (IPS) or cast iron (CI) pipe equivalent and the wall thickness of dimension-ratio (DR) 18.

m. POLYETHYLENE ENCASEMENT (Polywrap): For all pipeline and related fittings installed, EXCEPT for the Coolidge Division. Minimum 8 Mil. and installed per AWWA C105/A21.5-93 and ASTM A-674-89. Manufactured by the Pacific States Cast Iron Pipe Company. The wrapping tape shall be minimum 10 mil. vinyl tape. No duct tape shall be used.

n. COUPLING: Mueller, straight three part union, tested to meet ANSI/AWWA C800, H15403, conductive com pression.

Mueller, H15428, straight coupling, conductive compression by male iron pipe, tested to meet ANSI/AWWA C800 specification. Size: 2".

Mueller, H15451, straight coupling, conductive compression by female iron pipe, tested to meet ANSI/AWWA C800 specification. Size: 2".

Viking Johnson brand, sold by Mueller: MaxiFit Straight (2"-24"), MaxiFitXtra Straight (4"-8") or MaxiStep Transition, tested to meet AWWA/ANSI C.219-91 specifications – certified to ISO 9001:1994 / Smith – Blair Quantum.

o. STOP, ANGLE METER, BALL: Mueller, valve, B24258, conductive compression by meter swivel nut, tested to meet ANSI/AWWA C800, size 5/8 " x ¾" x ¾" for a ¾" service or size 1" for a 1" service.

Mueller, valve, B24265, female pipe thread by meter swivel nut, tested to meet ANSI/AWWA C800, size 5/8" x ¾" x ¾" for a ¾" service or size 1" for a 1" service.

p. STOP, CORP: Mueller, ball valve, B25008, taper thread by conductive compression, tested to meet ANSI/AWWA C800 specification, sizes: ¾", 1" and 2".

Mueller, ball valve, B25028, iron pipe thread by conductive compression, tested to meet ANSI/AWWA C800 specification. Sizes ¾", 1", and 2".

Mueller, 300 Ball Curb Valve, B-25122, taper thread by conductive compression, tested to meet ANSI/AWWA C800 specifications, size: 2". (2" service)

q. STOP, CURB: Oriseal valve, H10291, iron pipe thread by iron pipe thread, quarter turn check, brass, tested to 300 psi working pressure, tested to meet ANSI/AWWA C800 specification, size: 2".

Mueller, B20283, Mueller 300 ball curb valve, female iron pipe by female iron pipe, quarter turn check, tested to meet ANSI/AWWA C800 specification. Size: 2". (Blow-off E-9-8-1).

r. TAPPING SADDLE: Smith Blair, Cast Bronze ASTM-B584 85-5-5-5, double strap, iron pipe threads, Models 321 and 323. Washers are silicon bronze, ASTM-B36. Gaskets are grade 60 Buna N, or Mueller bronze double strap service saddle, BR 2 B series, cast bronze, ASTM-B585, 85-5-5-5, or H16084, 200 psig, meets ANSI/AWWA C800.

s. TAPPING SLEEVE: Mueller H304 Stainless Steel Tapping Sleeve, JCM 432 18-8 Type 304 Stainless Steel Tapping Sleeve, Romac "SST" Type 304 Stainless Steel Tapping Sleeve or CASCADE-style CST-EX stainless steel pressure-rated tapping sleeve.

t. TAPPING VALVE: Mueller Resilient Wedge tapping valve, Catalog Number T-2360-16, Class 125, sizes 4" through 12"; T-2361-16, Class 125, sizes 14" to 36" all with Type 304 stainless steel fasteners; bypass valves are required on 18" – 36" valves flange by mechanical joint per ANSI/AWWA C111, iron wedge, non-rising stem. Epoxy coated interior/exterior per ANSI/AWWA C550 for NSF 61 compliance. 250 PSI range for valves 4" to 12". 150 PSI range for valves 14" to 36".

u. U-BRANCH: Mueller, H15364, 1" male iron pipe by ¾" male iron pipe, tested to meet ANSI/AWWA C800 specification. Size: 1" x ¾" x 13½", straight line.

v. VALVE BOXES: Valve Box with Cover, adjustable, Tyler 562-A or equal, made of cast iron.

w. VAULTS: Utility Vault Company, Chandler, AZ.

(1) 4484-WA concrete vault with a 3660 aluminum double torsion door with a recessed padlock hasp, two - 18" x 24" center knockouts.

(2) 575-WA concrete vault with a 4874 aluminum double torsion door with a recessed padlock hasp, two - 18" x 24" center knock outs and adjustable frame.

(3) 612-5X-WA concrete vault with a 4874 aluminum double torsion door with a recessed padlock hasp, two - 18" x 24" center knockouts.

x. VALVE, METER: Mueller, B24265-1, Mueller 300 ball angle meter valve, female iron pipe by meter nut, quarter turn check, lock wing, tested to meet ANSI/AWWA C800 specification. Size: 1".

Mueller, B25170, Mueller 300 ball straight valve, conductive compression by female iron pipe, quarter turn check, lock wing, tested to meet ANSI/AWWA C800 specification. Size: 1".

y. YOKES, METER: Relocator type copper meter yoke with horizontal inlet and outlet and meter thread ends, B24118, with lock wing Mueller 300 angle ball valve, full port, sizes: 1" x 12", 5/8" x ¾" x 7", 5/8 x ¾" x 9".

Mueller, 2" copper meter yoke with horizontal inlet and outlet and female iron pipe threads, B2423-99000, with lock wing Mueller 300 ball angle meter valves on inlet and outlet risers. Raised 1" by-pass with lock wing Mueller 300 ball valve.

The Contractor also will be required to provide the following materials, the cost of which will be included in its unit bid price:

All material and concrete for thrust blocks, other anchors, reinforcing steel; all gravel, crushed stone, A.B.C., earth, sand, or screened material which may be required; all material for bracing and shoring trenches and for construction of forms; all barricades and traffic control equipment; all material for paving replacement and any water used for compaction of backfill.

5. INSTALLATION OF MATERIALS

All materials are to be installed in accordance with manufacturer's recommendations unless otherwise directed by these S pecifications.

All pipe, fittings and valves shall be laid true to the lines, grades and locations established by the Specifications and the Construction Drawings.

The ends and inside of the pipe shall be thoroughly cleaned and inspected for damage. No damaged materials shall be installed in the water distribution system .

Whenever the work ceases for any reason, all open pipeline ends shall be tightly plugged by the Contractor. Plugs shall be watertight and approved by the company.

Concrete thrust blocks of the sizes required by the plans and specifications are to be provided at all valves, changes in direction or size, or at any other point where an unbalanced thrust due to water pressure would exist. Thrust blocks are to be formed to prevent any concrete from spilling over or into a joint.

Trench curves as shown on the Construction Drawings may be made without fittings when using push on joint pipe up to twelve inches (12") in diameter, if the deflection of the pipe does not exceed five degrees (5°) or nineteen inches (19") per eighteen-foot (18') length of pipe. The minimum radius of such curves will be two hundred five feet (205').

Prior to construction, the appropriate agency(ies) will be notified as required by the permit(s).

It shall be the Contractor's responsibility to uncover all existing water lines being connected to, and to verify the location, depth and size of pipe befor e any construction begins.

Any construction performed without the knowledge of the duly authorized representative is liable for removal and replacem ent at the Contractor's expense.

All fire hydrants, frames, covers and valve boxes, etc. shall be adjusted to finished grade prior to the placing of the asphalt concrete surface course by the Contractor (where applicable).

Air release valves shall be installed at water system high points per Standard Detail E-9-8-2.

All water services shall be set a minimum of two feet (2') on the customer's property, preferably within the P.U.E. and not within right-of-way.

Unless otherwise specified on the construction drawings, all water mains shall be installed five feet (5') from the property line inside the right-of-way or easement.

Water valves shall be spaced not more than five hundred feet (500') in commercial districts and not more than eight hundred feet (800') in other districts. Variations may be required for transmission mains or special applications.

Installation of water line casing shall be per Standard Speci fication E-9-24-1.

Tracer Wire and Warning Tape are to be installed on all mains, tees, crosses, ells and fire hydrant laterals. They will not be installed on service lines. The tracer wire will be installed on the water main 45 degrees from the vertical centerline of the pipe and shall be taped to the fittings directly and on the main every 10 feet using a minimum 10 mil vinyl tape. The tracer wire shall be placed between the valve riser and box with a minimum of 12" of wire inside. The warning tape shall be installed a minimum of two feet below the surface, being measured from final grade, directly over the center of the pipe. Any splices in the tracer wire shall be joined using waterproof connectors. Any splices in the warning tape shall be joined using minimum 10 mil vinyl tape. The tracer wire shall be tested for continuity after backfill and compaction, but before paving. Any detected damages to the wire shall be repaired before paving will be allowed.

6. BACKFILL OF WATER MAIN TRENCHES

Backfill of any excavation shall conform to the requirements of any of the governmental agencies having jurisdiction over the location. If no governmental agency having such jurisdiction specifies backfill or compaction requirements, and no special requirements are shown on the Construction Drawings, the procedure set forth in this section will apply for water line trenches.

The bedding material above the pipe and backfill material shall be compacted to a minimum of 70% compaction within a utility easement and 80% compaction within a right-of-way as determined by AASHTO T-99 method A and T-191. If water settling is used for compaction, it is the responsibility of the Contractor to prevent the pipe from floating.

The bedding material shall be either native material, 100% of which will pass through a one and one-half inch (1½") screen and at least 20% of which will pass through a number-8 screen, or imported material which conforms to M.A.G. specifications for A.B.C. or type-B

select materials. Bedding material shall be used below and around the pipe and a minimum of twelve inches (12") above the pipe. Shade and bedding material to be mechanically compacted prior to remainder of trench back-fill.

The remainder of the trench shall be backfilled with native or imported material which shall be of sound earthen material free from broken concrete, wood, broken pavement, or other unsuitable substances. Except as otherwise specified, backfill may be material containing no pieces larger than six inches (6") in greatest dimension.

Where settlement occurs, additional backfill material shall be placed and compacted and the trench shall be brought to final grade.

7. HYDROSTATIC TESTING OF COMPLETED PIPELINES

Hydrostatic testing of water pipelines will be completed before the new system is connected into the existing water system so that all testing can be done against all new materials.

The completed section of water pipeline to be tested shall be slowly filled with water with care being taken to expel all air from the pipe. If necessary, the pipe will be tapped at high points to vent air.

The Contractor shall provide all equipment and labor necessary to accomplish this testing and the price shall be included in the unit prices. The Contractor shall notify the Company in advance of the testing so that the Company can schedule a duly authorized representative to be at the site during testing. The Contractor, at its own expense, shall make any necessary repairs to the system being tested in order to cause the section being tested to meet the test limits set below. The Contractor may request authorization of the Company to connect the new pipelines to the existing system prior to completion of pressure testing when, in the Company's sole opinion and judgment, conditi ons warrant such connection.

The Contractor shall assume all responsibility to complete pressure testing to Company's specifications after such connection, including, but not limited to, isolation of the new pipelines from the existing system, if necessary.

Connections prior to completion of pressure testing shall not be made unless prior Company authorization has been obtained, and any extra expenses resulting from such connections shall be the sole responsibi lity of the Contractor.

Leakage tests will be for a period of two hours at 200± 5 psi at the point of lowest elevation; leakage may not exceed 0.1 gallons per hour per one thousand feet (1,000') of pipe per inch of diameter. If dry utilities are not installed, a second pressure test is required.

8. STERILIZATION AND FLUSHING OF COMPLETED WATER PIPELINES

Sterilization and flushing will conform to recommendations of Arizona State Department of Health Services Engineering Bulletin Number 8, latest edition, or any future Arizona Department of Environmental Quality bulletins. Contractor to follow all conditions of any discharge permit.

9. NO OTHER UTILITIES ALLOWED IN OR NEAR WATER PIPELINE TRENCHES

No other utility installations will be permitted in the water pipeline trench or within five feet (5') of the Company's water pipeline when running parallel to the water pipelines.

10. PROTECTION OF WATER MAINS NEAR SEWERS

In order to protect water mains from contamination by sewers, the installation of the water mains must conform to the following requirements:

a. Horizontal - When water lines and sewers are laid parallel with each other, the horizontal distance between them shall not be less than six feet (6'). Each line shall be laid on undisturbed or bedded material in a separate trench. Where conditions prevent the minimum horizontal separation set forth above, extra protection will be required. Extra protection shall consist of constructing the sewer main with mechanical joint ductile iron pipe or with slip-joint ductile iron pipe if joint restraint is provided, or encasing both the water main and sewer main in concrete. See Detail E-9-30-1 and E-9-30-2

The Construction Drawings shall indicate the installation requirements. The drawings showing these exceptions shall have been approved by the appropriate state and/or county health department. Refer to the diagram below for clarification.

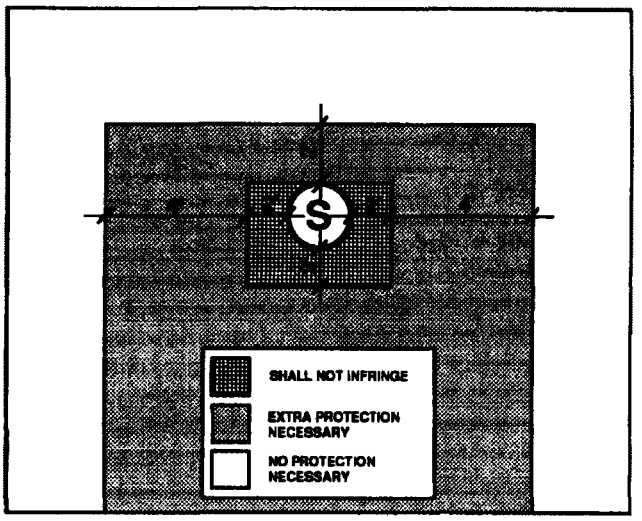

Under no circumstances will the horizontal separation between sewer mains and water mains be less than two feet (2'). All distances are to be measured from the outside of the sewer main to the outside of the water main.

b. Vertical - When a water main is parallel with or crosses a sewer main within two feet (2') above the sewer or greater than two feet (2') below the sewer, extra protection will be required. Extra protection shall consist of constructing the sewer main with mechanical joint ductile iron pipe or with slip-joint ductile iron pipe if joint restraint is provided, or encasing both the water main and sewer main in concrete. See Detail E-9-30-1 and E-9-30-2.

The Construction Drawings shall indicate the installation requirements. The drawings showing these exceptions shall have been approved by the appropriate state and/or county health department.

Under no circumstances will the vertical separation of a sewer main installed above a water main be less than two feet (2'). All distances are to be measured from the outside of the sewer main to the outside of the water main. Refer to the diagram above for clarification.

c. When unusual conditions such as, but not limited to, highway or bridge crossings prevent the water and sewer main separations required from being met, the appropriate state and/or county health department will review and may approve requests for authorization to use alternate construction techniques, materials and joints on a case-by-case basis.

d. No water pipe shall pass through or come into contact with any part of a sewer manhole. The minimum horizontal separation between water mains and manholes shall be six feet (6'), measured from the center of the manhole.

e. The minimum separation between force mains or pressure sewers and water mains shall be two feet (2') vertically and six feet (6') horizontally under all conditions. Where a sewer force main crosses above, or less than six feet (6') below, a water line, the sewer main shall be encased in at least six inches (6") of concrete for ten feet (10') on either side of the water main. Refer to the diagram below for clarification.

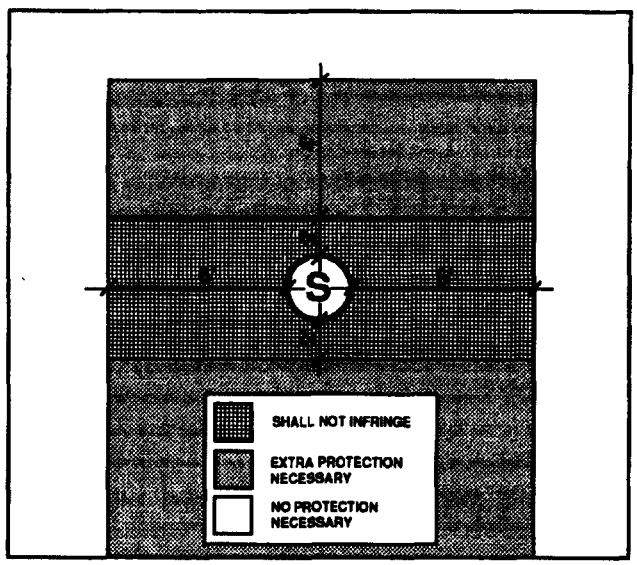

f. Sewer mains (gravity, pressure, force) shall be kept a minimum of fifty feet (50') from drinking water wells, unless the following conditions are met:

   1. Water main pipe, pressure tested in place to 50 psi without excessive leakage, may be used for gravity sewers at distances greater than twenty feet (20') from drinking water wells.

   2. Water main pipe, pressure tested in place to 150 psi without excessive leakage, may be used for pressure sewers and force mains at distances greater than twenty feet (20') from drinking water wells.

g. No septic tank/disposal field system shall be constructed within one hundred feet (100') of a drinking water well.

h. All distances are measured perpendicularly from the outside of the sewer main to the outside of the water main. These separation requirements do not apply to building, plumbing or individual house service connections.

i. Use Mechanical Joint ductile iron pipe with Megalug thrust restraints a minimum of ten (10') feet on each side of a sewer or storm drain crossing.

11. COMPACTION

When crossing existing water mains a minimum of 95% compaction is required to the bottom of existing mains.

Arizona Water Company requires that no slurry be permitted to contact existing cement/asbestos or ductile iron pipes, unless authorized by the company. Slurry may be poured in the bottom of the sewer trench stopping three inches (3") below the existing water main. The backfill used around the main should be AB in sufficient depth to prevent slurry from contacting existing main.

12. WATER MAIN MATERIAL SPECIFICATIONS

Ductile iron pipe (Push-on type) minimum class 350, cement lined and conform to AWWA C151.

All main line valves shall conform to AWWA C500 with a minimum working pressure of 200 psi.

All cast iron fittings to be cement lined in accordance with AWWA C104 and shall conform to AWWA C110 with a minimum working pressure of 250 psi. Except for the Coolidge System – See Note 4L.

Maximum joint deflection for 6" mechanical joint ductile iron pipe is seven degrees, seven minutes (7°, 7') or twenty-seven inches (27") per eighteen-foot (18') length pipe, for a maximum curve of one hundred forty-five feet (145').
Maximum joint deflection for 8" and 12" mechanical joint ductile iron pipe is five degrees, twenty-one minutes (5° 21') or twenty inches (20") per eighteen-foot (18') length pipe, for a maximum curve of one hundred ninety-five feet (195').

Maximum joint deflection for 6", 8" and 12" push-on joint ductile iron pipe is five degrees (5°) or nineteen inches (19") per eighteen-foot (18') length pipe for a maximum curve of two hundred five feet (205').

ARIZONA WATER COMPANY

3805 N. BLACK CANYON HIGHWAY, PHOENIX, ARIZONA 85015-5351 • P.O. BOX 29006, PHOENIX, ARIZONA 85038-9006
PHONE: (602) 240-6860 • FAX: (602) 240-6878 • WWW.AZWATER.COM

November 24, 2010

Mr. Tony Geiger
US Pipe – Waterworks Marketing Consultants
34522 N. Scottsdale Road
Scottsdale, Arizona 85226

Re: US Pipe Sentinel Fire Hydrants and Resilient Wedge Gate Valves

Dear Mr. Geiger:

Thank you for your interest in working with Arizona Water Company (the "Company") to add US Pipe Sentinel Fire Hydrants and Resilient Wedge Gate Valves to the Company's material and equipment specifications. Based on the US Pipe product information you provided and your field presentations to our operations and engineering staff, the Company is pleased to inform you that the following items are approved for use in the Company's water systems in Arizona.

Sentinel Fire Hydrant:

- Model Sentinel 250
  - 5¼" MVO
  - 4½" pumper
  - 2½" hose
  - Meets AWWA C-502 standard and approval by ULFM

Resilient Wedge Gate Valves:

- Model US Pipe A-USP0
  - Meets AWWA C-509 Full Body Cast Iron <u>includes</u> 304 SS Nuts, Bolts & Low Zinc Bronze Stem
  - Size range 2" thru 12"
- Model US Pipe A-USP1
  - Meets AWWA C-515 Reduced Wall Ductile Iron <u>includes</u> 304 SS Nuts, Bolts & Low Zinc Bronze Stem
  - Size range 14" thru 48"

We look forward to developing a long-term relationship with you and the US Pipe products. If I can be of any assistance, please call me.

Very truly yours,

Fredrick K. Schneider
Vice President – Engineering

afh

VIA EMAIL: TGEIGER4@COX.NET

ARIZONA WATER COMPANY

3805 N. BLACK CANYON HIGHWAY, PHOENIX, ARIZONA 85015-5351 • P.O. BOX 29006, PHOENIX, ARIZONA 85038-9006
PHONE: (602) 240-6860 • FAX: (602) 240-6878 • WWW.AZWATER.COM

October 19, 2010

Mr. Jim Ryan
Clow Valve Company
8121 N. 10th Avenue
Phoenix, Arizona 85021

Re: Clow Medallion Fire Hydrants and Resilient Wedge Gate Valves

Dear Mr. Ryan:

Thank you for your interest in working with Arizona Water Company (the "Company") to add Clow Medallion Fire Hydrants and Resilient Wedge Gate Valves to the Company's material and equipment specifications. Based on the Clow product information you provided and your field presentations to our operations and engineering staff, the Company is pleased to inform you that the following items are approved for use in the Company's water systems in Arizona.

Medallion Fire Hydrant:

- Model F-2545
  - 5¼" MVO
  - 4½" pumper
  - 2½" hose
  - Meets AWWA C-502 standard and approval by ULFM

Resilient Wedge Gate Valves:

- Model 2639 & 2640
  - Meets AWWA C-509 Full Body Cast Iron includes 304 SS Nuts, Bolts & Low Zinc Bronze Stem
  - Size range 2½" thru 12"
- Model 2638
  - Meets AWWA C-515 Reduced Wall Ductile Iron includes 304 SS Nuts, Bolts & Low Zinc Bronze Stem
  - Size range 14" thru 48"

We look forward to developing a long-term relationship with you and the Clow products. If I can be of any assistance, please call me.

Very truly yours,

Fredrick K. Schneider
Vice President – Engineering

lar

VIA EMAIL: JIM.RYAN@CLOWVALVE.COM

February 21, 2012

Contractor

Re: Fitting Specifications

Dear Contractor:

Effective March 1, 2012, Arizona Water Company (the "Company") has changed its fitting specifications for Ductile Iron Fittings and Ductile Iron Flanged Fittings ("Fittings"). All Fittings purchased by the Company, on the Company's behalf or installed with the intent of being conveyed to the Company, must comply with the requirements noted below.

Previous Fitting Specifications:

Fittings

Manufactured by Tyler or Union, Crosses, Elbows, Tees, Cap Reducer, Adapter, Plug, Blind Flange and Tapped Flange: Ductile Iron, Class 350, SSB, and Cast Iron Cement Lined.

New Fitting Specification:

Ductile Iron Fittings (Push-On and Mechanical Joint)

Ductile Iron Push-On and Mechanical Joint ("MJ") fittings for water lines shall be made of ductile iron per ASTM A536 and be cast in the United States of America. Fittings shall have USA cast on the fitting to designate they are made in the United States. All fittings will be manufactured and tested in accordance with ANSI/AWWA C153/A21.53 for compact design and ANSI/AWWA C110/A21.10 for full body design. In accordance with ANSI/AWWA C104/A21.4 fittings 2" – 3" will be single thickness cement mortar lined and 4" – 64" will be cement mortar lined. Fittings will be Asphaltic seal coated on the exterior in accordance with ANSI/AWWA C104/A21.4. MJ fittings with flanged end(s) will match ANSI/AWWA C115/A21.15 and ANSI B16.1 class 125 flanges. All fittings shall be NSF-61 listed for use with potable water.

Ductile Iron Flanged Fittings

Ductile Iron flanged fittings for water lines shall be made of ductile iron per ASTM A536 and be cast in the United States of America. Fittings shall have USA cast on the fitting to designate they are made in the United States. All fittings will be manufactured and tested in accordance with ANSI/AWWA C110/A21.10 design. Flange ends will match ANSI/AWWA C115/A21.15 and ANSI B16.1 class 125 flanges. In accordance with ANSI/AWWA C104/A21.4 fittings 2" – 3" will be single thickness lined and 4" – 64" will be cement mortar lined. Fittings will be Asphaltic seal coated on the exterior in accordance with ANSI/AWWA C104/A21.4. All fittings shall be NSF-61 listed for use with potable water.

If you have any questions or require further information, please contact me at 602-240-6860.

Very truly yours,

Fredrick K. Schneider, PE
Vice President - Engineering
engineering@azwater.com

afh
Enclosure

ARIZONA WATER COMPANY

STANDARD SPECIFICATION DRAWINGS: E-9-1

ERRATA 2010

ARIZONA WATER COMPANY

STANDARD SPECIFICATION DRAWINGS - DUCTILE IRON

INDEX (E-9)

E-9-1	TYPICAL GATE VALVE LOCATIONS
E-9-2	INSTALLATION OF TYPICAL VERTICAL AND HORIZONTAL GATE VALVES
E-9-3	INSTALLATION OF TYPICAL TAPPING SLEEVE AND VALVE
E-9-4	INSTALLATION OF TYPICAL VALVE SUBJECT TO NON-VEHICULAR AND VEHICULAR TRAFFIC
E-9-5	INSTALLATION OF TYPICAL THRUST BLOCKING SCHEDULE THRUST BLOCK FOR VERTICAL BENDS, AND MEGALUG THRUST RESTRAINTS
E-9-6	INSTALLATION OF TYPICAL PERPENDICULAR FIRE HYDRANT
E-9-7	INSTALLATION OF TYPICAL PARALLEL FIRE HYDRANT
E-9-8	INSTALLATION OF TYPICAL 2" BLOWOFF DEVICE, AND AIR RELEASE VALVE
E-9-9	INSTALLATION OF TYPICAL SINGLE SERVICE CONNECTION FOR A $^3/_4$" OR 1" METER
E-9-10	INSTALLATION OF TYPICAL DOUBLE SERVICE CONNECTION FOR A $^3/_4$" AND 1" METER
E-9-11	INSTALLATION OF TYPICAL 2" SERVICE CONNECTION
E-9-12	INSTALLATION OF 3" COMPOUND METER, 4" COMPOUND METER, 6" COMPOUND METER, 6" COMPOUND SERVICE, CONCRETE VAULT, AND NON-POTABLE PROPELLER METER
E-9-13	INSTALLATION OF TYPICAL 4" THRU 8" DETECTOR CHECK VALVES AND 3" THRU 10" REDUCED PRESSURE PRINCIPLE DETECTOR WITH BYPASS METER ASSEMBLY (RPDA) FOR FIRE LINE SERVICES
E-9-14	INSTALLATION OF TYPICAL PRESSURE RELIEF VALVE ASSEMBLY
E-9-15	INSTALLATION OF TYPICAL PRESSURE REDUCING STATION
E-9-16	PAINT COLOR SELECTION
E-9-17	STEEL WATER STORAGE TANK
E-9-18	HYDROPNEUMATIC TANK
E-9-19	INSTALLATION OF WELL SHELTER

E-9-20	INSTALLATION OF TYPICAL WELL WITH LINE SHAFT TURBINE PUMP
E-9-21	INSTALLATION OF TYPICAL WELL WITH SUBMERSIBLE TURBINE PUMP
E-9-22	INSTALLATION OF COLUMN PIPE, OIL TUBE AND LINE SHAFT
E-9-23	HOT TAP AND JUMPER METER CONNECTION
E-9-24	INSTALLATION OF TYPICAL WATER LINE ENCASEMENT
E-9-25	INSTALLATION OF CALCIUM HYPOCHLORITE TABLET CHLORINATOR
E-9-26	INSTALLATION OF CHAIN LINK FENCE
E-9-27	INSTALLATION OF SIDE HUNG WATER LINE SUSPENSION
E-9-28	PIPE WARNING TAPE, LOCATOR WIRE, AND LOCATOR WIRE TERMINATION
E-9-29	INSTALLATION OF A TYPICAL SAMPLING STATION
E-9-30-1	WATER AND SANITARY SEWER SEPARATION/PROTECTION PERPENDICULAR
E-9-30-2	WATER AND SANITARY SEWER SEPARATION/PROTECTION – PARALLEL

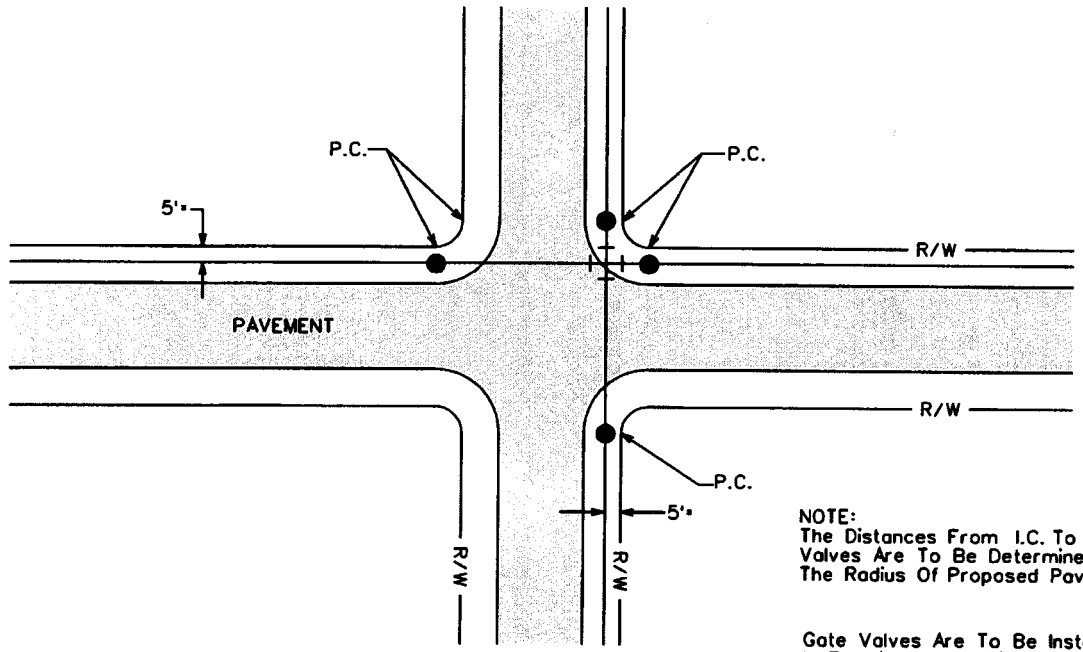

NOTE:
The Distances From I.C. To Gate Valves Are To Be Determined By The Radius Of Proposed Pavement.

Gate Valves Are To Be Installed In The Above Locations In Such A Manner That They Will Not Be Covered By Paving, Sidewalks, Or Curbs

*Location of water mains from the property line may require alteration for co-ordination with curb, sidewalk, or paving requirements. Variations are to be approved by the A.W.Co. Engineering dept.

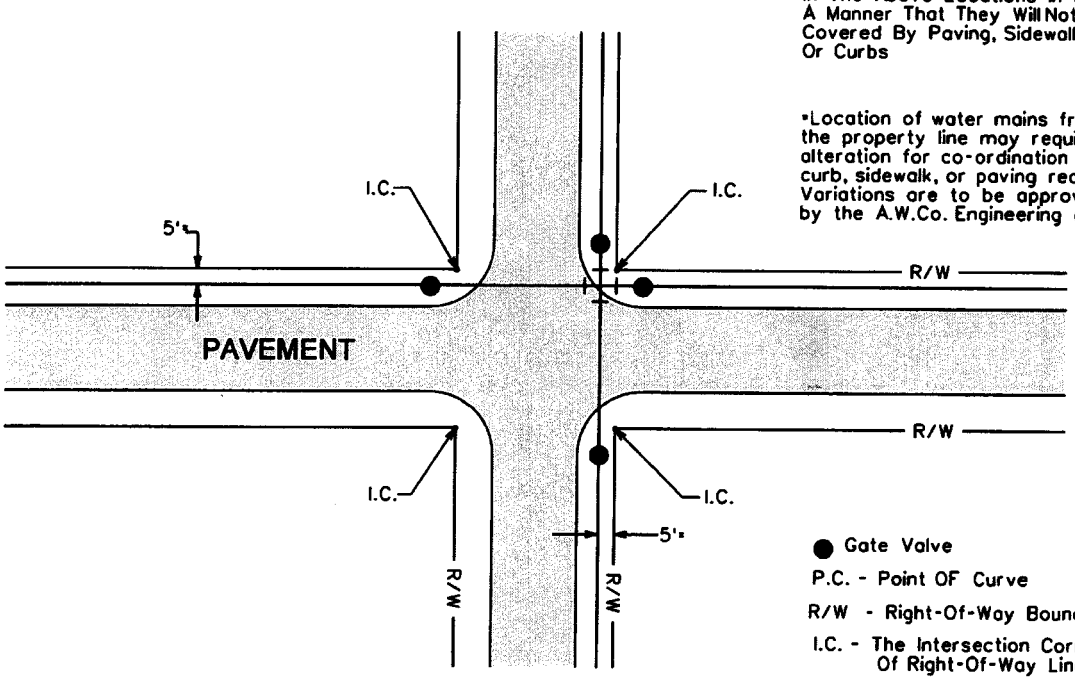

● Gate Valve

P.C. - Point OF Curve

R/W - Right-Of-Way Boundary

I.C. - The Intersection Corner Of Right-Of-Way Lines

ARIZONA WATER COMPANY

STANDARD SPECIFICATION
FOR THE INSTALLATION OF

TYPICAL GATE VALVE LOCATIONS

DRAWN BY:	APPROVED BY:	DATE:	△	
CCO	M.W.	3/20/86	1/31/2001	E-9-1-1

FOR 6" THROUGH 12" GATE VALVES

Mueller Resiliant Wedge Gate Valves
Catalog Number A-2360-__
ANSI/AWWA C509 Compliant

FOR 14" THROUGH 16" GATE VALVES

Mueller Resiliant Wedge Gate Valves
Catalog Number A-2361-__
ANSI/AWWA C509 Compliant

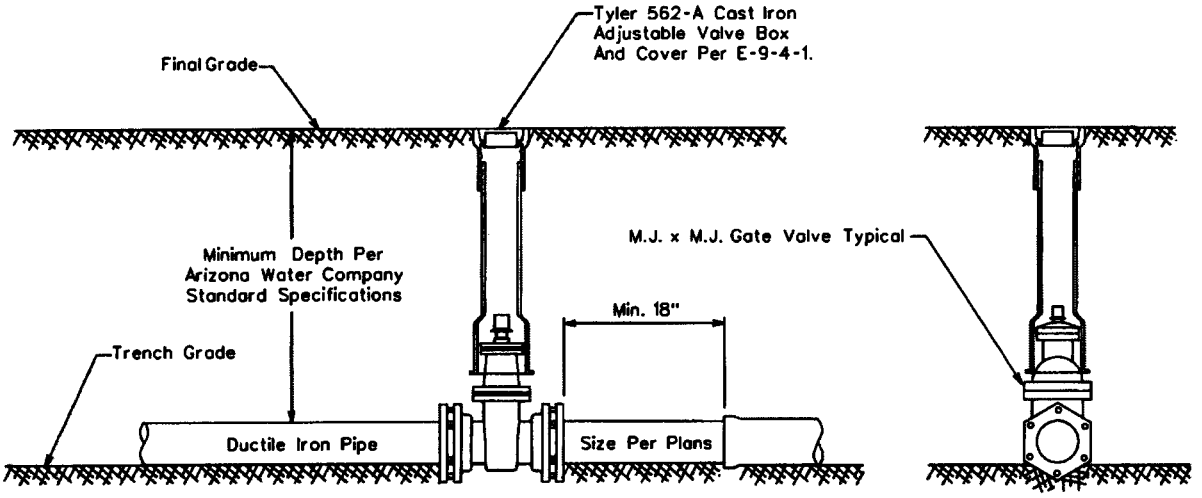

All Valves Installed On Pipe Five Feet (5') Deep And Greater Are To Be Installed With A Valve Operator Extension, Mueller Catalog No. A-26441.

ARIZONA WATER COMPANY

STANDARD SPECIFICATION
FOR THE INSTALLATION OF

TYPICAL VERTICAL GATE VALVES

DRAWN BY:	APPROVED BY:	DATE:	△	
CB	MW	03.20.1986	08.23.2006	E-9-2-1

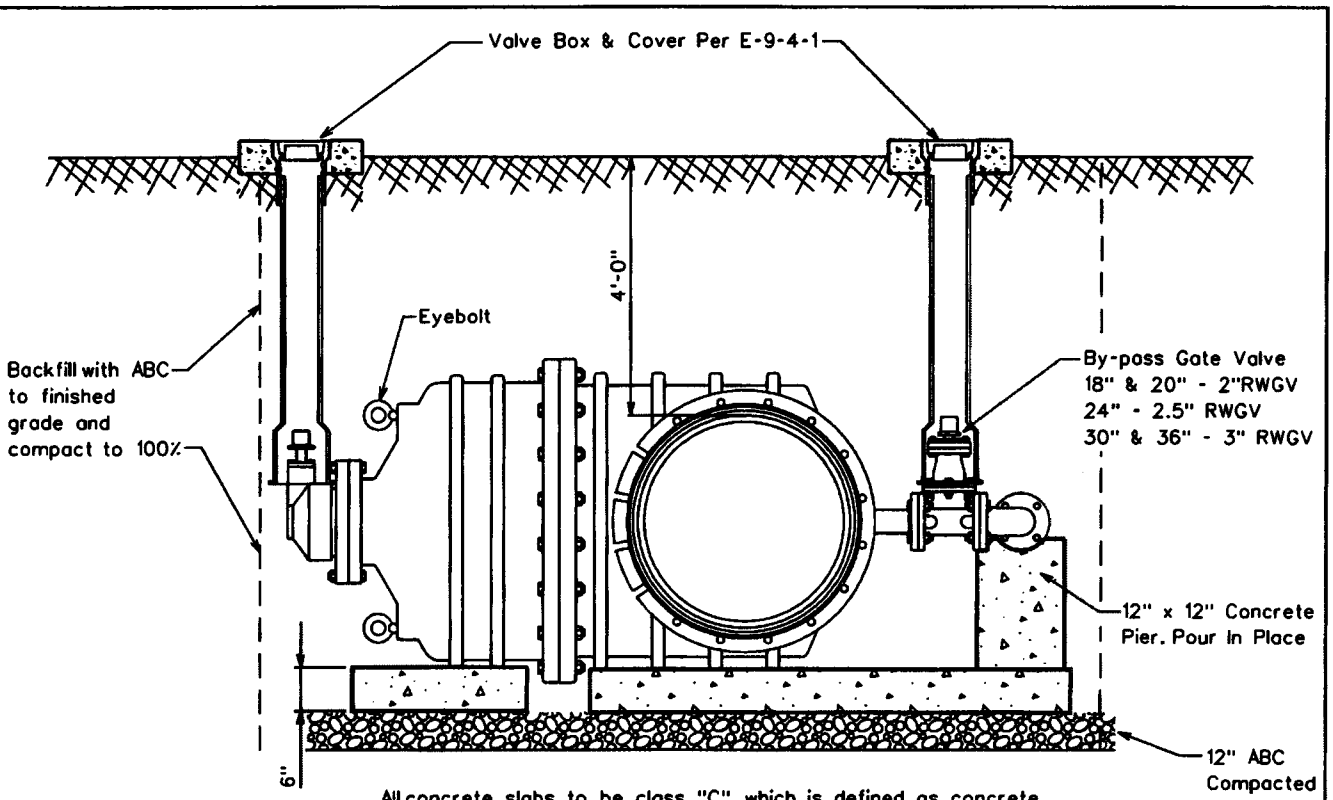

All concrete slabs to be class "C", which is defined as concrete whose minimum compressive strength at 14 days reaches 1600psi and at 28 days reaches 2000psi. per MAG Section 725, Table 725-1. Slabs to be formed and poured prior to valve installation.

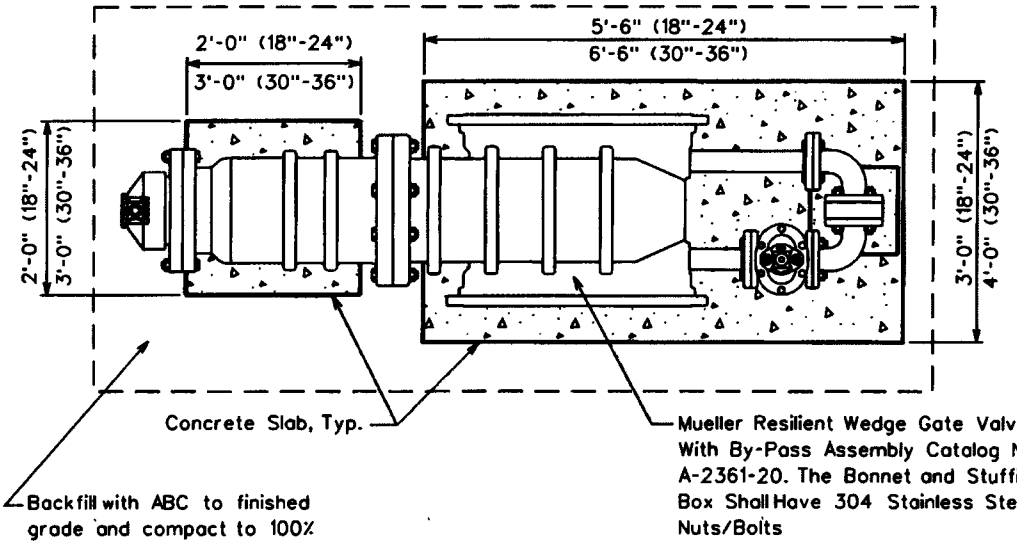

All valves installed on pipe five feet and greater are to be installed with a valve operator extension Mueller catalog No.A-26441 The distance is measured from the top of the operating nut to final grade.

ARIZONA WATER COMPANY

STANDARD SPECIFICATION

FOR THE INSTALLATION OF

INSTALLATION OF BEVEL GEARED HORIZONTAL GATE VALVES WITH BY-PASS FOR 18" AND LARGER VALVES

DRAWN BY:	APPROVED BY:	DATE:		
CB		12.07.2004	△	E-9-2-2

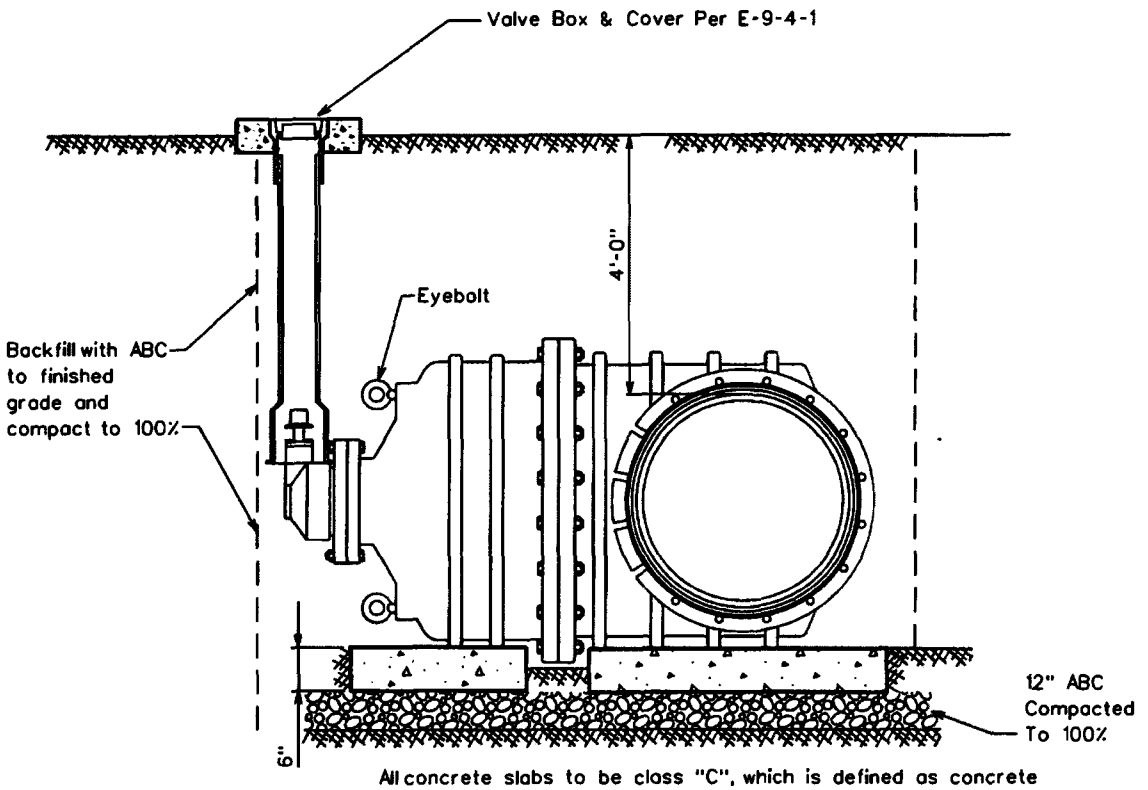

All concrete slabs to be class "C", which is defined as concrete whose minimum compressive strength at 14 days reaches 1600psi and at 28 days reaches 2000psi. per MAG Section 725, Table 725-1. Slabs to be formed and poured prior to valve installation.

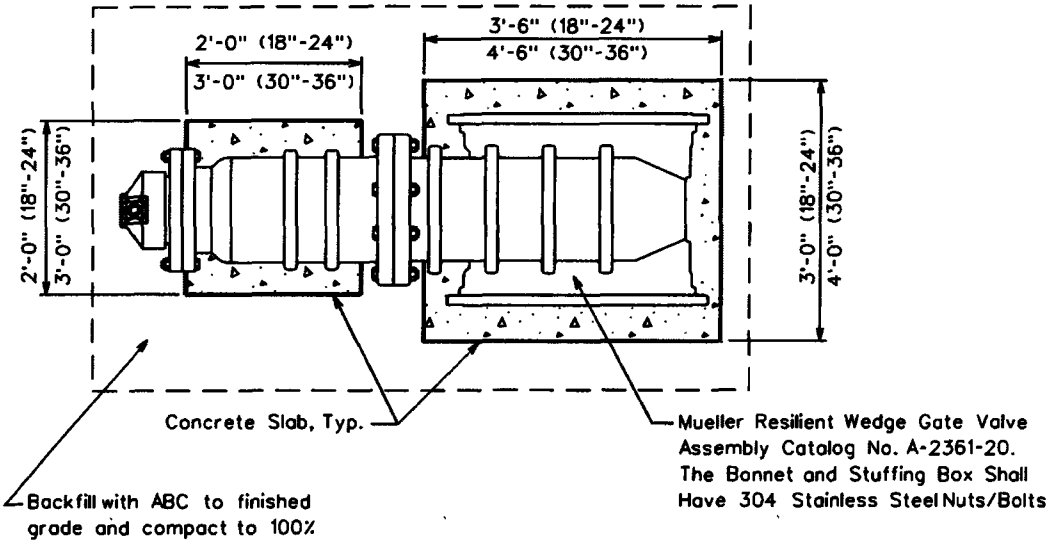

All valves installed on pipe five feet and greater are to be installed with a valve operator extension Mueller catalog No.A-26441 The distance is measured from the top of the operating nut to final grade.

ARIZONA WATER COMPANY

STANDARD SPECIFICATION

FOR THE INSTALLATION OF

INSTALLATION OF BEVEL GEARED HORIZONTAL GATE VALVES WITHOUT A BY-PASS FOR 18" AND LARGER VALVES

DRAWN BY:	APPROVED BY:	DATE:		
CB		12.07.2004	△ 5.13.2005	E-9-2-3

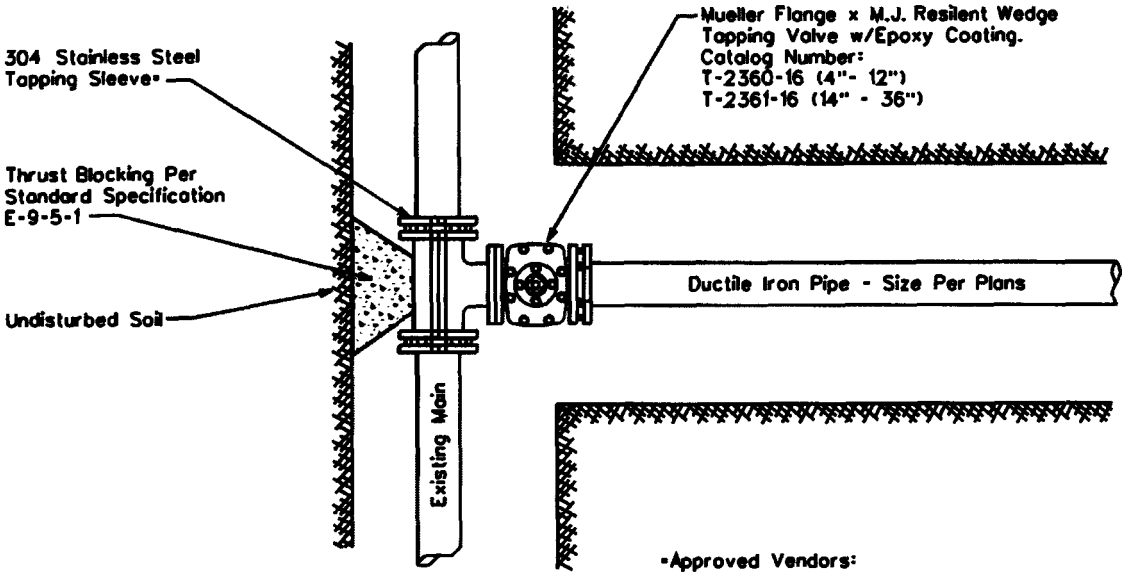

*Approved Vendors:

Mueller, Catalog No. H304, 304 Stainless Steel

JCM, Model 432, 304 Stainless Steel

Romac, 'SST', 304 Stainless Steel

Cascade, 'CST-EX', 304 Stainless Steel

NOTE:

1. All flanges, bolts, and nuts shall be kept free of concrete.
2. Air pressure test the tapping sleeve before the live tap is made.
3. Polywrap all new fittings

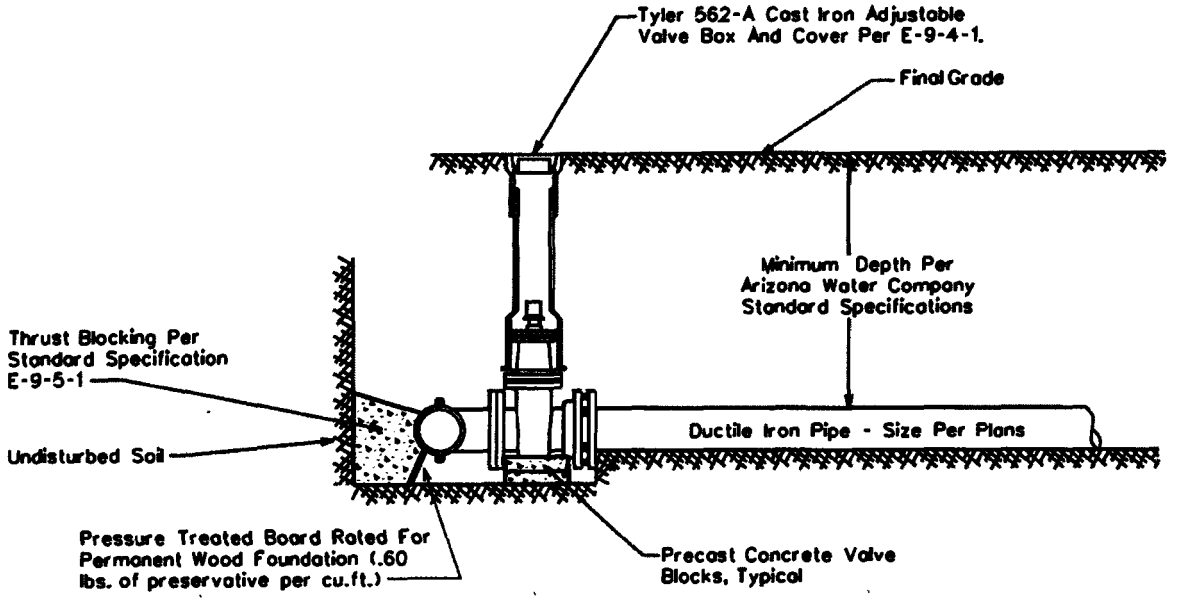

ARIZONA WATER COMPANY

STANDARD SPECIFICATION

FOR THE INSTALLATION OF

TYPICAL TAPPING SLEEVE AND VALVE

DRAWN BY:	APPROVED BY:	DATE:	△	
CB	MW	03.20.1986	△ 08.23.2006	E-9-3-1

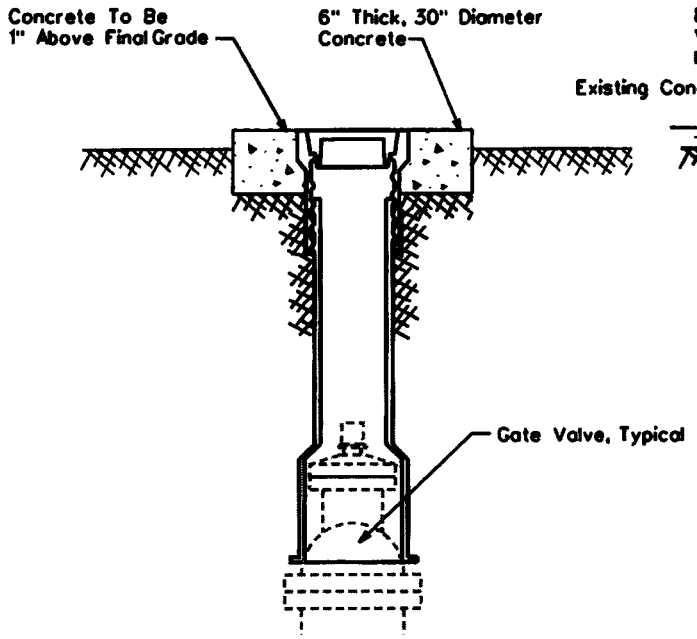

NON-VEHICULAR VALVE BOX

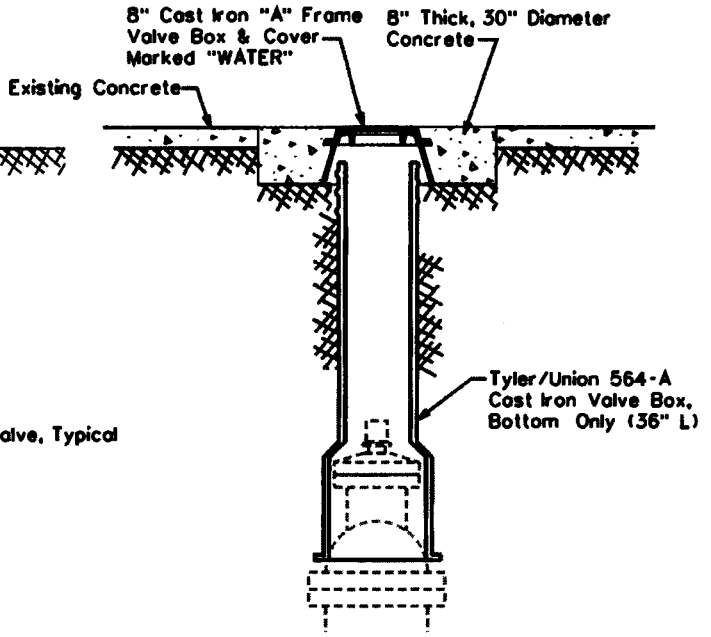

CONCRETE VALVE BOX

For Areas Subject To Vehicular Traffic

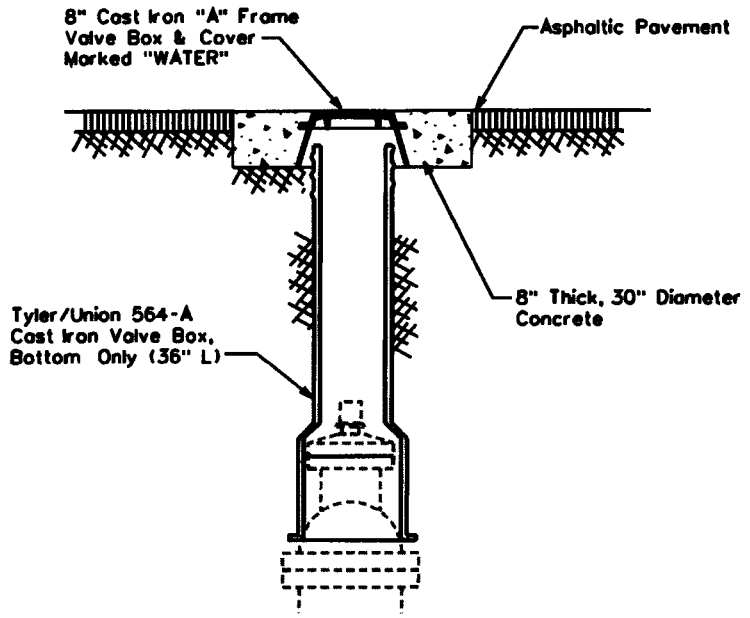

ASPHALT VALVE BOX

For Areas Subject To Vehicular Traffic

NOTE:

1. The Valve Box Shall Be Adjusted To Finished Grade Prior To Placing Of Asphalt And/Or Concrete.
2. For Non-Traffic Areas Use Tyler/Union 562-A, Two-Piece, 6855 Series Or Equivalent Adjustable Cast Iron Valve Box And Cover. Valves 4" To 12"

   For Traffic Areas, Use Tyler/Union 564-A Bottom Section Only With An 8" Cast Iron "A" Frame With Cover. Valves 4" To 12"
3. All Valves Installed Five Feet (5') Deep And Greater Are To Be Installed With A Valve Operator Extension, Mueller Catalog No. A-26441 And Shall Have A Debris Cap
4. Use Minimum Class 'C' Concrete which is defined as concrete whose minimum compressive strength at 14 days reaches 1600psi and at 28 days reaches 2000psi. per MAG Section 725, Table 725-1.

ARIZONA WATER COMPANY

STANDARD SPECIFICATION

FOR THE INSTALLATION OF

TYPICAL VALVE SUBJECT TO NON-VEHICULAR AND VEHICULAR TRAFFIC

DRAWN BY:	APPROVED BY:	DATE:		
CB	MW	03.20.1986	△ 8.24.2006	E-9-4-1

CROSSES

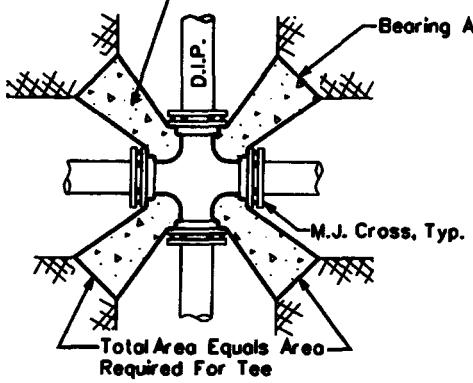

TEES

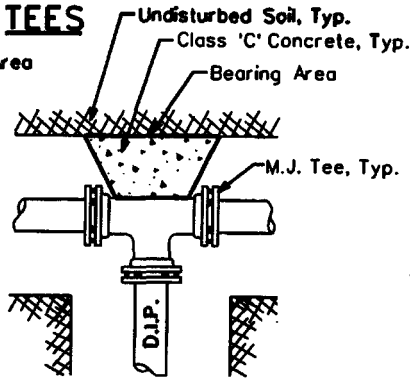

ELLS

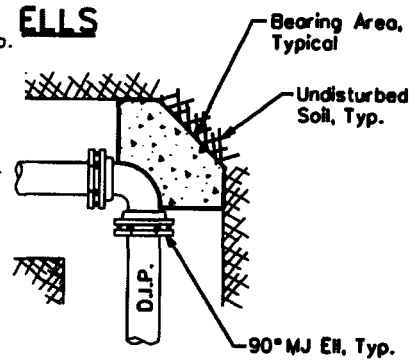

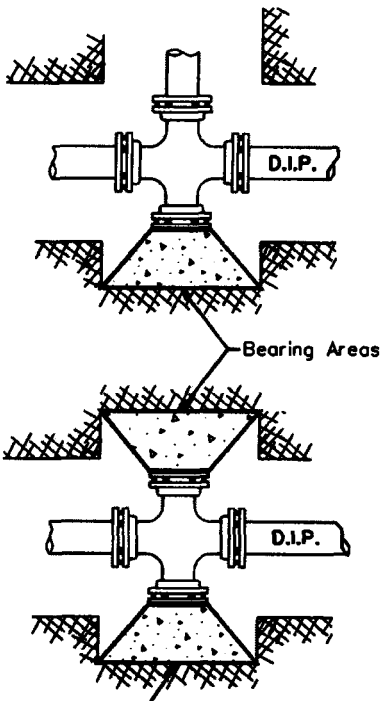

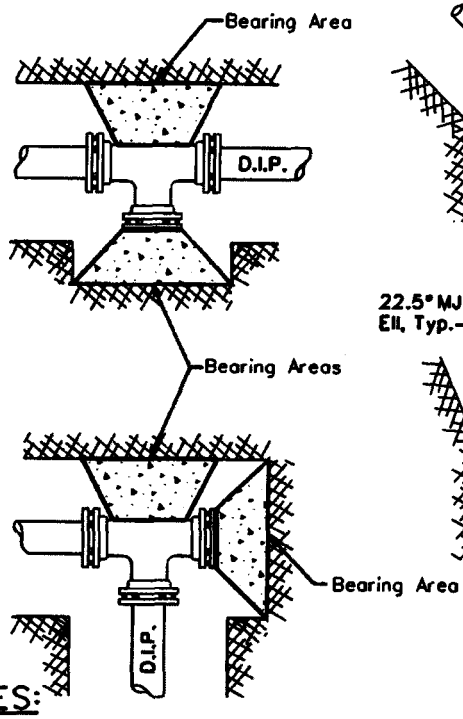

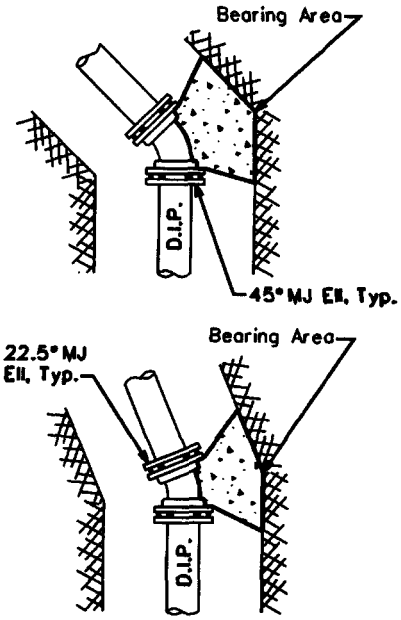

CROSS SECTION TYPICAL

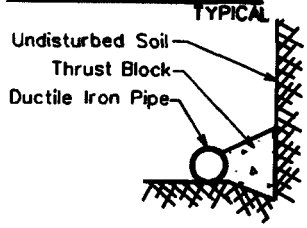

NOTES:

1. Use minimum Class 'C' concrete, which is defined as concrete whose minimum compressive strength at 14 days reaches 1600psi and at 28 days reaches 2000psi. per MAG Section 725, Table 725-1.
2. Thrust blocks are to bear on undisturbed earth with minimum bearing area as shown. If not undisturbed, areas will be increased as required.
3. Place the pressure treated form board in front of all plugs before pouring thrust blocks.
4. Form all non-bearing areas to prevent any concrete from entering any joint.
5. All flanges, bolts and nuts shall be kept free of concrete.
6. Center the bearing area on the pipe centerline and force line.
7. All pipe fittings to be wrapped with polyethylene pipe wrap prior to thrust block installation. (where applicable)

THRUST BLOCK SCHEDULE

PIPE SIZE	TEE, 45°, AND 22.5° ELLS, & PLUGS	90° ELLS
6" And Under	4 Sq.Ft.	6 Sq.Ft.
8"	6 Sq.Ft.	9 Sq.Ft.
12"	13 Sq.Ft.	20 Sq.Ft.
16"	23 Sq.Ft.	32 Sq.Ft.
18" And Larger	Calculated Per Project	

CAPS

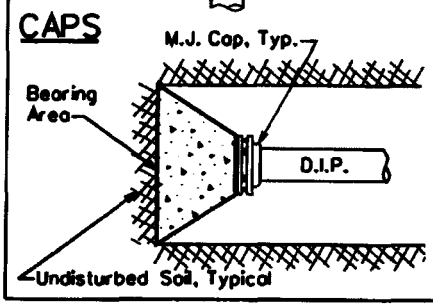

STANDARD SPECIFICATION

FOR THE INSTALLATION OF

TYPICAL THRUST BLOCKING SCHEDULE

DRAWN BY:	APPROVED BY:	DATE		
CB	MW	03.20.1986	△ 05.27.2005	E-9-5-1

NOTES

1. Bars In Conc. Thrust Block To Be Coated w/ 2 Coats Coal Tar Epoxy or by Other Approved Method.
2. Bars To Have 90° Hook @ Their Ends, As Per Table Below.

Pipe Size	Min. Bar Size	"A" Dimension (Hook)	* Min. Block Dimension (WxHxL)
6"	#6	6"	3'x3'x3'
8"	#6	9"	4'x3'x4'
12"	#8	9"	5'x4'x5'
16"	#9	12"	7'x6'x7'

* For 125 P.S.I. Working Pressure

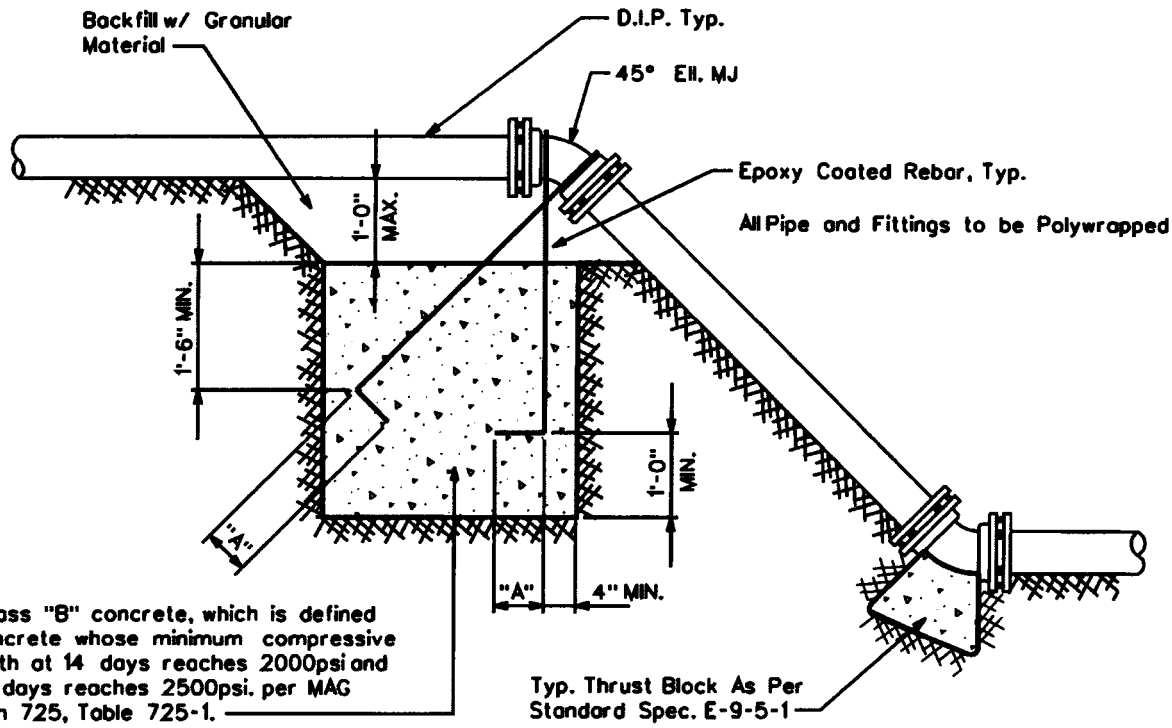

ARIZONA WATER COMPANY

STANDARD SPECIFICATION
FOR THE INSTALLATION OF

THRUST BLOCK FOR VERTICAL BENDS

DRAWN BY:	APPROVED BY:	DATE:		
JPK	MJW	7-5-96	△ 01.16.2007	E-9-5-2

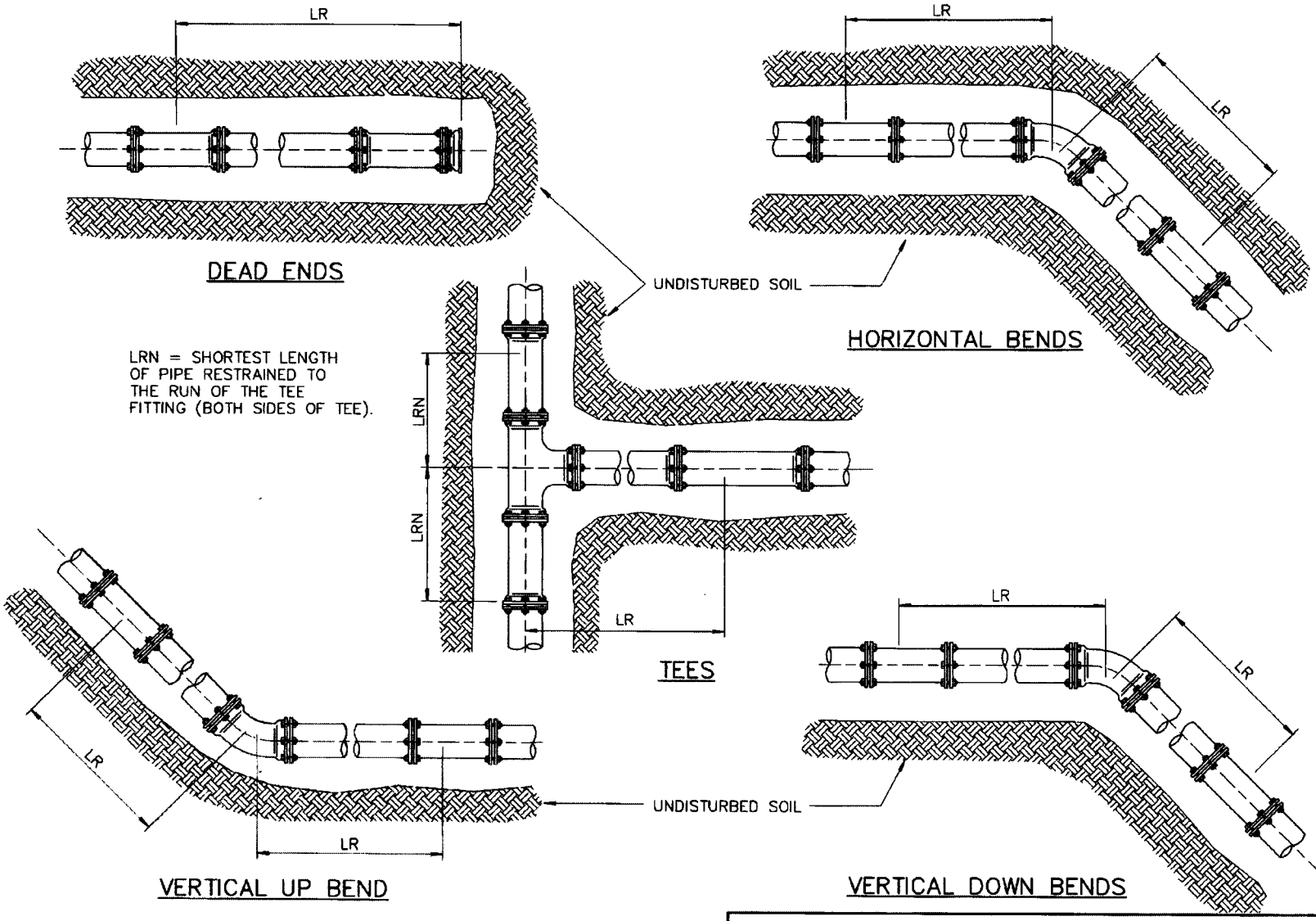

ARIZONA WATER COMPANY

STANDARD SPECIFICATION
FOR THE INSTALLATION OF

JOINT RESTRAINT FOR NEW DUCTILE IRON AND C-900 PVC MAINS

DRAWN BY:	APPROVED BY:	DATE:		
CB	MW	01.16.2007	△	E-9-5-3-1

RESTRAINED LENGTHS, LR, FOR DUCTILE IRON PIPE

NOMINAL PIPE SIZE INCHES	HORIZONTAL BENDS			TEES		VERTICAL OFFSETS						DEAD ENDS
						90° BEND FITTINGS		45° BEND FITTINGS		22-1/2° BEND FITTINGS		
	90°	45°	22-1/2°	LRN=0'	LRN=10'	DOWN BEND	UP BEND	DOWN BEND	UP BEND	DOWN BEND	UP BEND	
4	18	7	4	30	8	31	18	13	7	6	3	31
6	25	10	5	43	20	44	25	18	10	9	5	44
8	32	13	6	56	34	58	32	24	13	11	6	58
10	38	16	8	68	45	69	38	29	16	14	8	69
12	45	19	9	80	57	81	45	34	19	16	9	81
14	51	21	10	91	68	92	51	38	21	18	10	92
16	57	24	11	103	79	104	57	43	24	21	11	104
18	62	26	12	113	90	115	62	48	26	23	12	115
20	68	28	14	125	100	126	68	52	28	25	14	126
24	79	33	16	145	121	147	79	61	33	29	16	147

RESTRAINED LENGTHS, LR, FOR DUCTILE IRON PIPE WITH POLYETHYLENE WRAP

NOMINAL PIPE SIZE INCHES	HORIZONTAL BENDS			TEES		VERTICAL OFFSETS						DEAD ENDS
						90° BEND FITTINGS		45° BEND FITTINGS		22-1/2° BEND FITTINGS		
	90°	45°	22-1/2°	LRN=0'	LRN=10'	DOWN BEND	UP BEND	DOWN BEND	UP BEND	DOWN BEND	UP BEND	
4	26	11	5	69	18	72	26	30	11	14	5	72
6	36	15	7	99	47	102	36	42	15	20	7	102
8	47	19	9	130	78	133	47	55	19	26	9	133
10	56	23	11	157	103	159	56	66	23	32	11	159
12	65	27	13	185	131	187	65	77	27	37	13	187
14	74	31	15	211	156	214	74	89	31	42	15	214
16	82	34	16	238	183	241	82	100	34	48	16	241
18	90	37	18	263	207	266	90	110	38	53	18	266
20	98	41	20	289	233	292	98	121	41	58	20	292
24	113	47	22	337	280	340	113	141	47	68	22	340

NOTES:

1. ALL JOINTS WITHIN THE SPECIFIED LENGTH LR MUST BE RESTRAINED. ALL LENGTHS ARE GIVEN IN FEET.
2. THE MAXIMUM TEST PRESSURE SHALL NOT EXCEED 200 PSI
3. THE MINIMUM DEPTH OF BURY SHALL BE 3' TO TOP OF PIPE.
4. RESTRAINED LENGTHS MAY BE REDUCED WHEN SUPPORTED BY ENGINEERING CALCULATIONS.

ARIZONA WATER COMPANY

STANDARD SPECIFICATION
FOR THE INSTALLATION OF

JOINT RESTRAINT FOR NEW DUCTILE IRON AND C-900 PVC MAINS

DRAWN BY:	APPROVED BY:	DATE		
CB	MW	01.16.2007	△	E-9-5-3-2

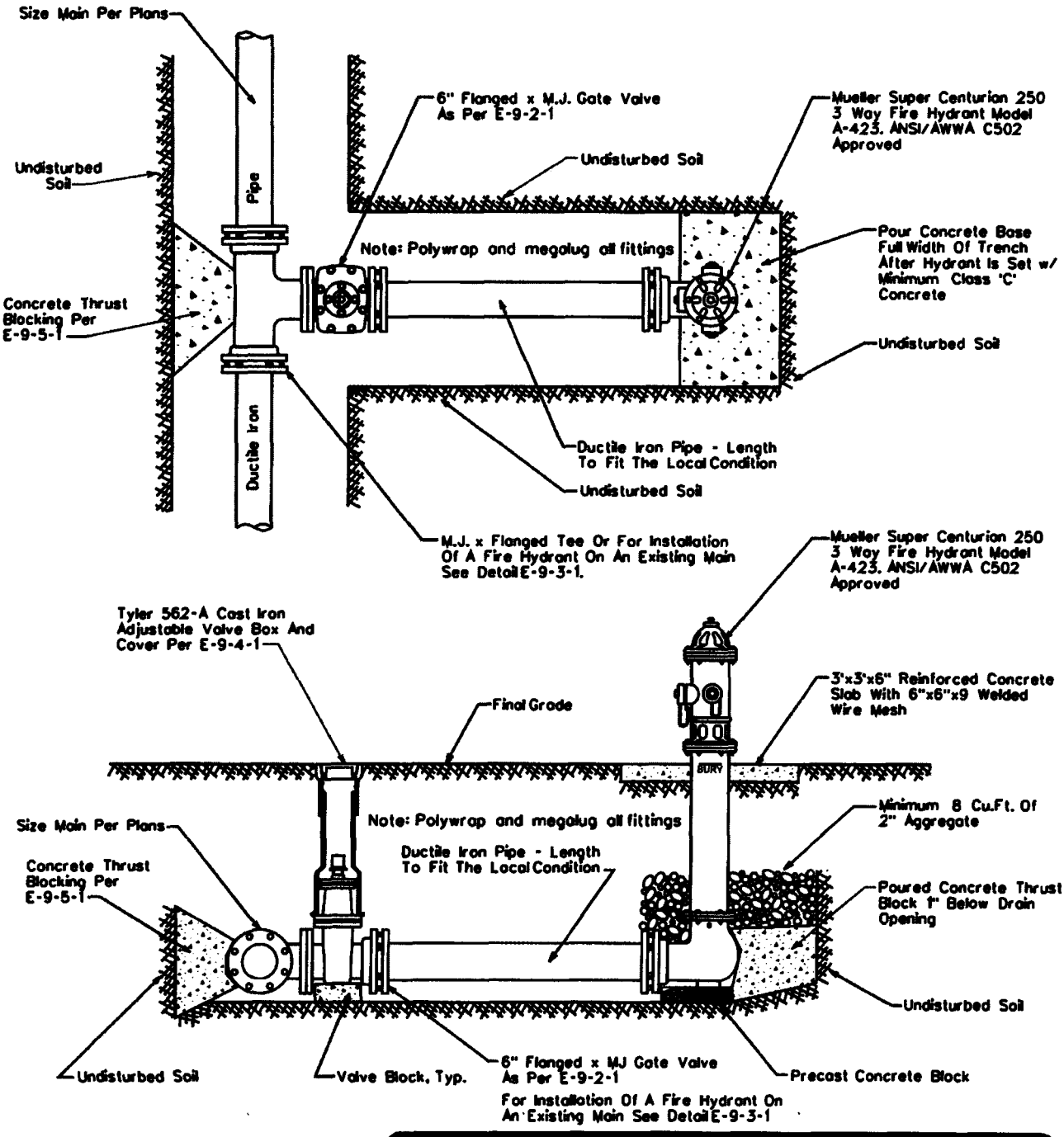

NOTE: All Flanges, Bolts, Nuts and Drain Holes Shall Be Kept Free Of Concrete

ARIZONA WATER COMPANY

STANDARD SPECIFICATION

FOR THE INSTALLATION OF

TYPICAL PERPENDICULAR FIRE HYDRANT

DRAWN BY:	APPROVED BY:	DATE:		
CB	MW	1-28-91	△ 08.24.2006	E-9-6-1

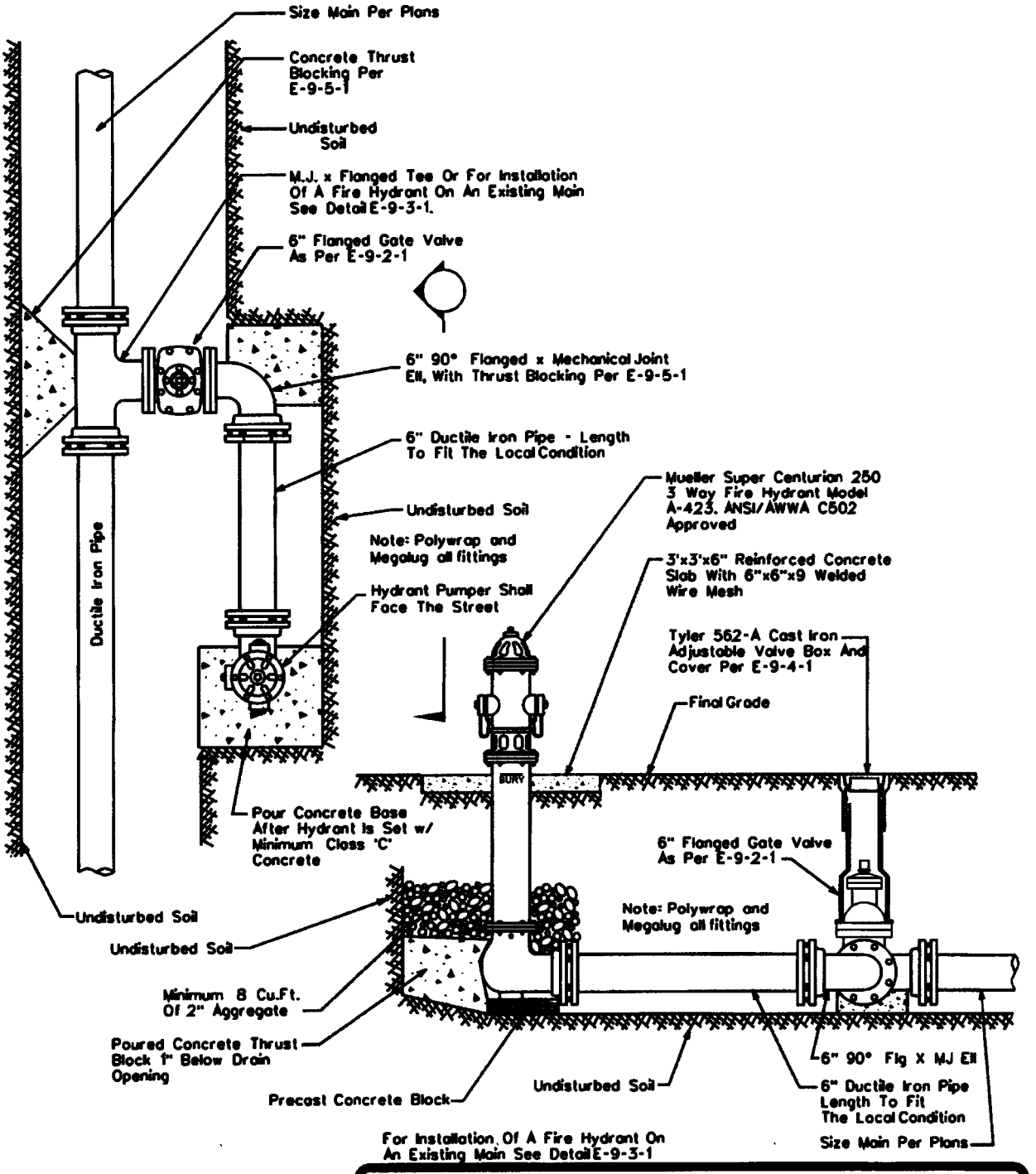

NOTE: All Flanges, Bolts, Nuts And Drain Holes Shall Be Kept Free Of Concrete.

ARIZONA WATER COMPANY

STANDARD SPECIFICATION

FOR THE INSTALLATION OF

TYPICAL PARALLEL FIRE HYDRANT

DRAWN BY:	APPROVED BY:	DATE:		
JW	MW	03.20.1986	△ 08.24.2006	E-9-7-1

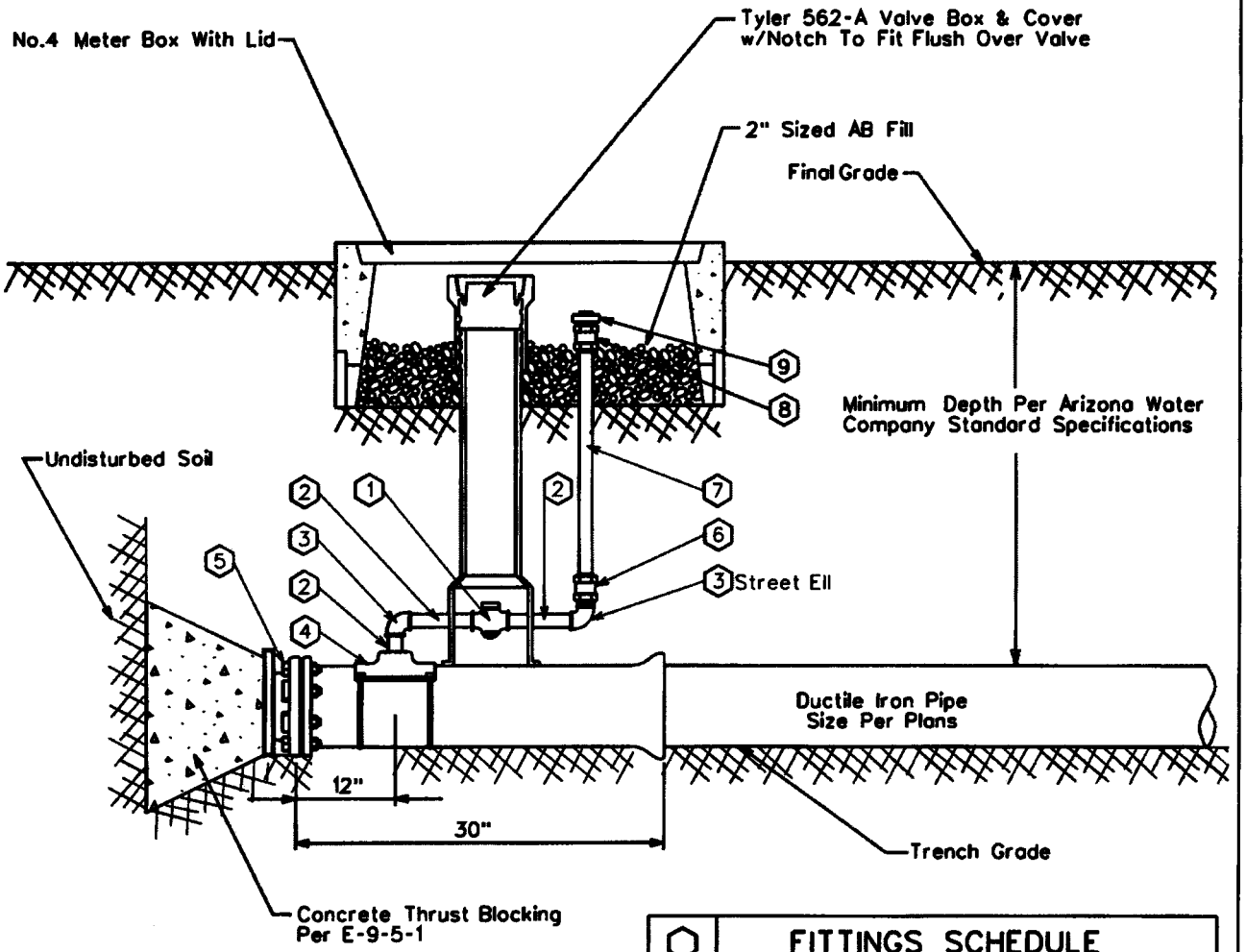

⬡	FITTINGS SCHEDULE
1.	2" Mueller 300 Ball Curb Valve B-20283 FIP x FIP W/ 2" Mueller Brass Square Wrench Nut Adapter B-20299
2.	2" Brass Nipple - Length To Fit Field Conditions
3.	2" Brass 90° Elbow, IPST
4.	Mueller Double Strap Bronze Service Saddle - BR2B
5.	M.J. Plug - Megalug Restraints May Be Required
6.	2" Straight Coupling CC x FIP H-15451
7.	2" Copper Pipe
8.	2" Straight Coupling CC x MIP H-15428
9.	2" Square Head Plug, MIP

ARIZONA WATER COMPANY

STANDARD SPECIFICATION
FOR THE INSTALLATION OF

2" BLOWOFF ASSEMBLY

DRAWN BY:	APPROVED BY:	DATE:		
CB	MW	03.20.1986	△ 03.21.2006	E-9-8-1

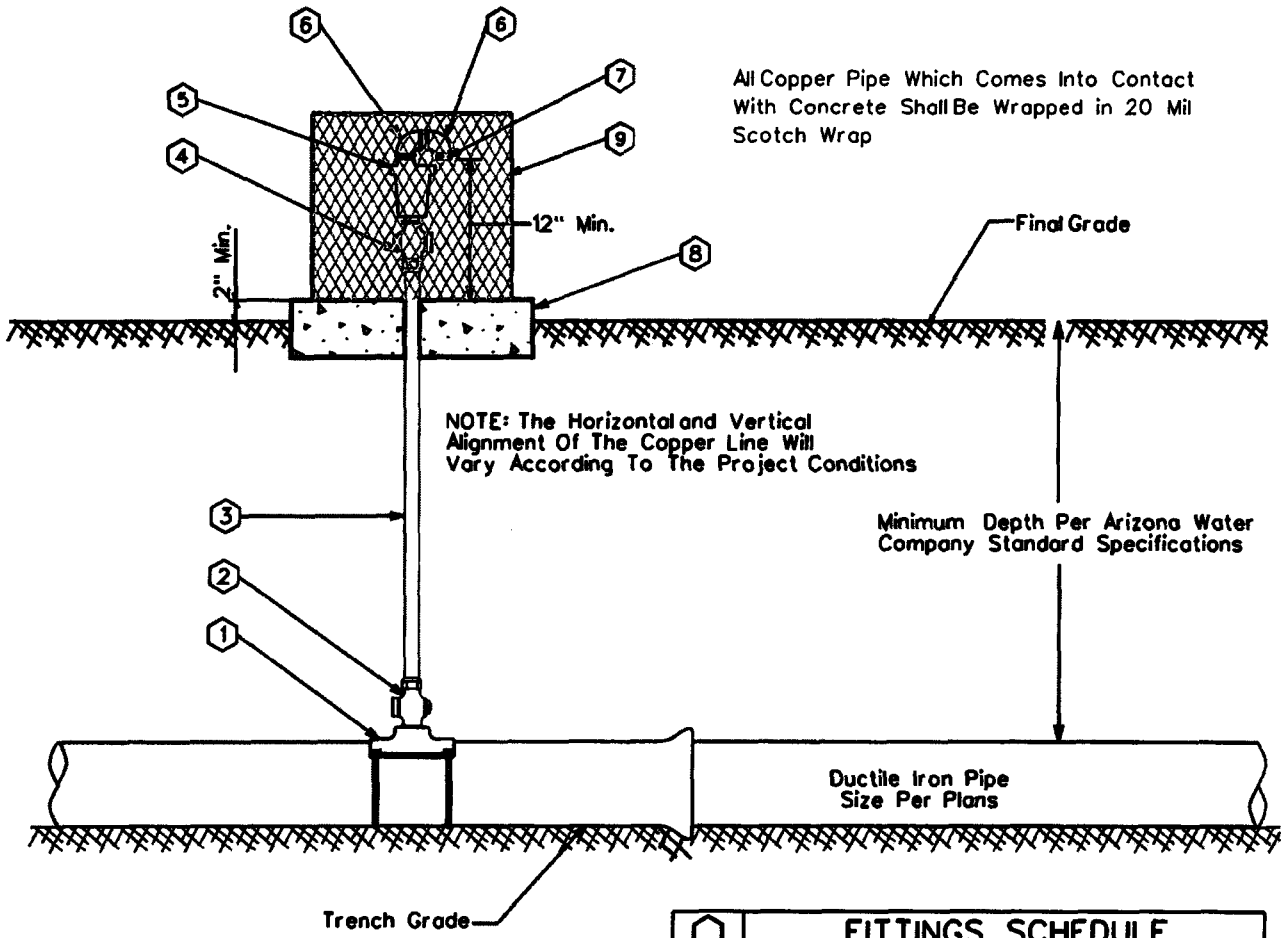

⬡	FITTINGS SCHEDULE
1.	Mueller BR2B Bronze Service Saddle - Double Strap
2.	1" Mueller B-25008 Taper x Comp. Ball Corp Stop
3.	1" Type 'K' Copper w/NO Splices - Field Fit
4.	1" Mueller B-25028 IP x Comp. Ball Corp Stop
5.	Crispin 1" Air Release Valve, Model AR10
6.	½" Brass Street Elbow
7.	No.16 Wire Mesh Screen (Non-Corrodible)
8.	4" Thick Concrete Pad - Class 'C' Concrete
9.	Guardshack, Model GS-1, Available From BPDI, Inc. Available In Leaf Green Or Desert Tan

GENERAL NOTES:

1. The valve shall be installed at high points and on long runs to vent the accumulation of air with the line under pressure- see the construction plans for specific locations.
2. The valve shall have a 3/64" orifice with valve sealing faces of stainless steel and BUNA-N rubber.
3. The valve shall be Crispin model AR10 for 6" and larger water mains.
4. Crispin model AR10 valve construction consists of a 1" IPST inlet & ½" IPST outlet, cast iron body and top flange with stainless steel float and trim.
5. The air release assembly shall be located out of the path of traffic but within right-of-way or easement.

ARIZONA WATER COMPANY

STANDARD SPECIFICATION
FOR THE INSTALLATION OF

TYPICAL AIR RELEASE VALVE

DRAWN BY:	APPROVED BY:	DATE:		
CB	MW	03.20.1997	△08.24.2006	E-9-8-2

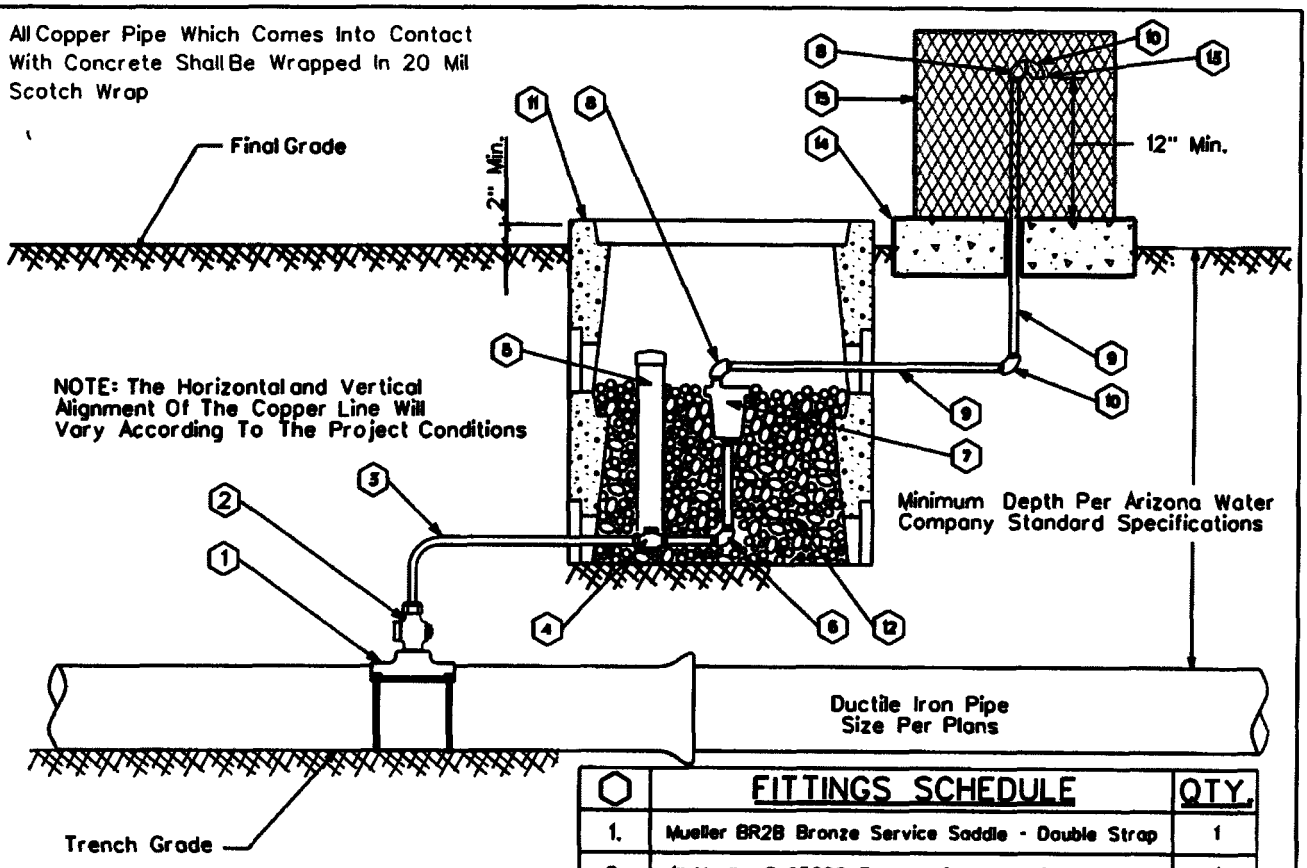

⬡	FITTINGS SCHEDULE	QTY.
1.	Mueller BR2B Bronze Service Saddle - Double Strap	1
2.	1" Mueller B-25008 Taper x Comp. Ball Corp Stop	1
3.	1" Type 'K' Copper w/NO Splices - Field Fit	As Req'd
4.	1" Mueller B-25028 IP x Comp. Ball Corp Stop	1
5.	3" PVC Pipe w/ Cap (Loose Fit)	1
6.	1" x 4" Brass Nipple w/90° Elbow	1
7.	Crispin 1" Air Release Valve, Model AR10	1
8.	½" Brass Street Elbow	2
9.	½" Galvanized Pipe - Length as req'd	2
10.	½" Galvanized 90° Ell	2
11.	Number 1 Meter Box	2
12.	2" Sized AB (Fill Meter Box To The Top Of The Air Release Valve)	As Req'd
13.	No.16 Wire Mesh Screen (Non-Corrodible)	1
14.	4" Thick Concrete Pad - Class 'C' Concrete	1
15.	Guardshack, Model GS-1, Available From BPDI, Inc. Available In Leaf Green Or Desert Tan	1

GENERAL NOTES:

1. The valve shall be installed at high points and on long runs to vent the accumulation of air with the line under pressure- see the construction plans for specific locations.
2. The valve shall have a 5/64" orifice with valve sealing faces of stainless steel and BUNA-N rubber.
3. The valve shall be Crispin model AR10 for 6" and larger water mains.
4. Crispin model AR10 valve construction consists of a 1" IPST inlet & ½" IPST outlet, cast iron body and top flange with stainless steel float and trim.
5. The air release assembly shall be located out of the path of traffic but within the right-of-way or easement.

ARIZONA WATER COMPANY

STANDARD SPECIFICATION
FOR THE INSTALLATION OF

AIR RELEASE VALVE FOR THE NORTHERN REGION

DRAWN BY:	APPROVED BY:	DATE:		
CB	MW	03.20.1997	△08.24.2006	E-9-8-3

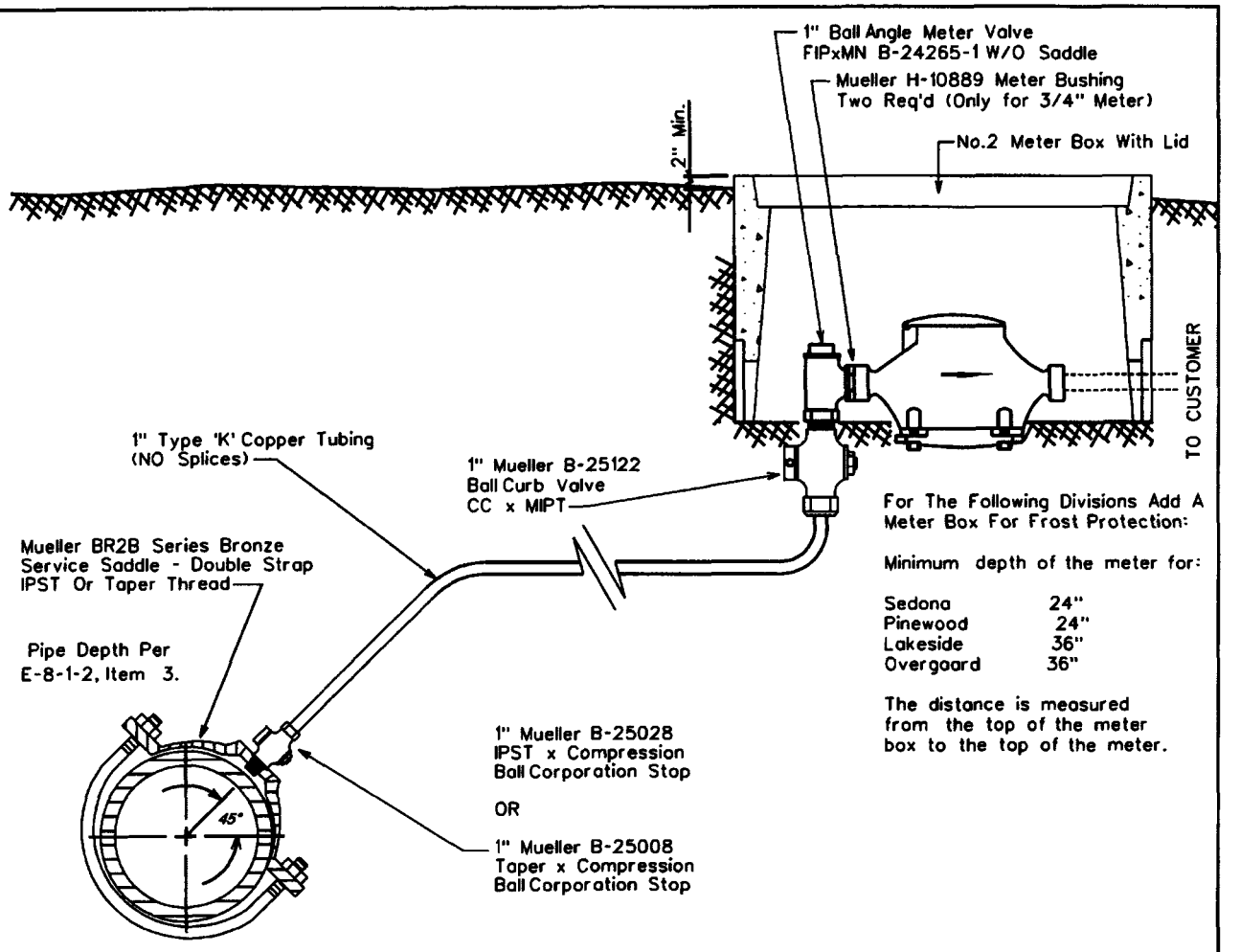

For The Following Divisions Add A Meter Box For Frost Protection:

Minimum depth of the meter for:

Sedona	24"
Pinewood	24"
Lakeside	36"
Overgaard	36"

The distance is measured from the top of the meter box to the top of the meter.

SADDLE TAP TO CA, PVC, OR DI PIPE

NOTE: The minimum distance between taps on mains other than ductile iron is 12"

NOTE:
Only the meter is supplied by Arizona Water Company

ARIZONA WATER COMPANY

STANDARD SPECIFICATION
FOR THE INSTALLATION OF

SINGLE SERVICE CONNECTION FOR A 3/4" OR 1" METER

DRAWN BY:	APPROVED BY:	DATE:		
CCO	M.W.	3/20/86	△ 03.17.2006	E-9-9-1

For The Following Divisions Add A Meter Box For Frost Protection:

Minimum depth of the meter for:

Sedona	24"
Pinewood	24"
Lakeside	36"
Overgaard	36"

The distance is measured from the top of the meter box to the top of the meter.

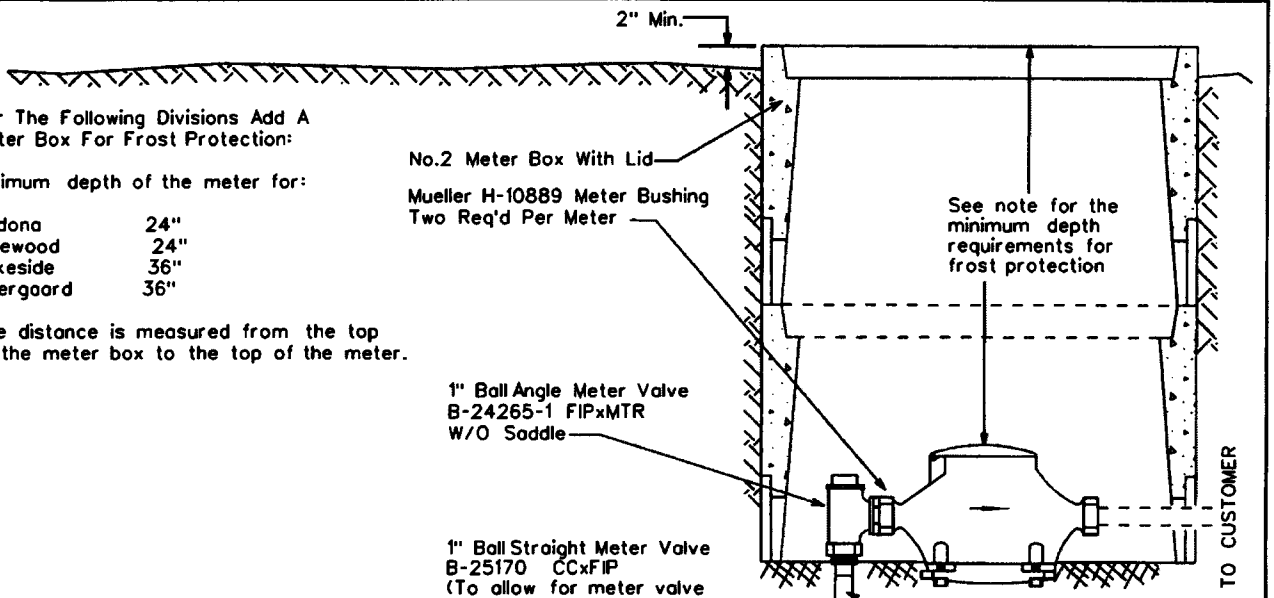

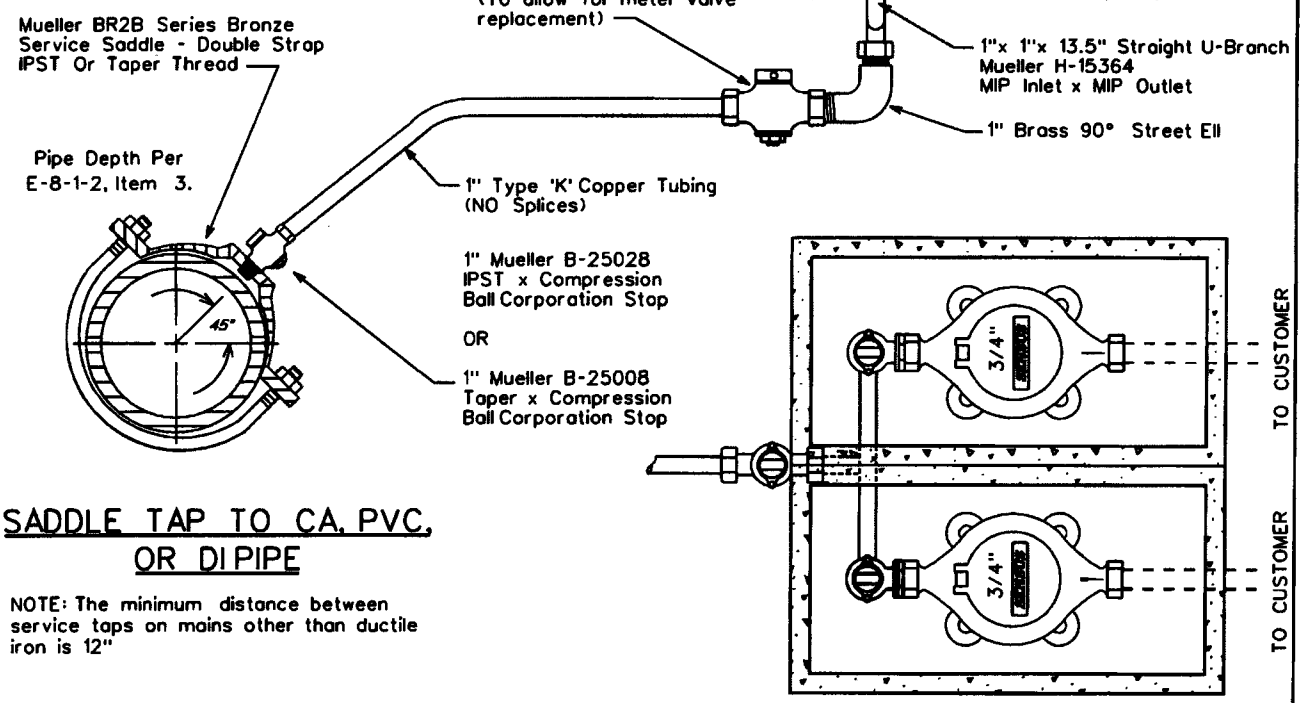

SADDLE TAP TO CA, PVC, OR DI PIPE

NOTE: The minimum distance between service taps on mains other than ductile iron is 12"

NOTE:
Only the meter is supplied by Arizona Water Company

ARIZONA WATER COMPANY

STANDARD SPECIFICATION
FOR THE INSTALLATION OF

DOUBLE SERVICE CONNECTION FOR 3/4" METERS

DRAWN BY:	APPROVED BY:	DATE:		
CCO	M.W.	3-20-86	△ 08.25.2006	E-9-10-1

For The Following Divisions Add A Meter Box For Frost Protection:

Minimum depth of the meter for:

Sedona	24"
Pinewood	24"
Lakeside	36"
Overgaard	36"

The distance is measured from the top of the meter box to the top of the meter.

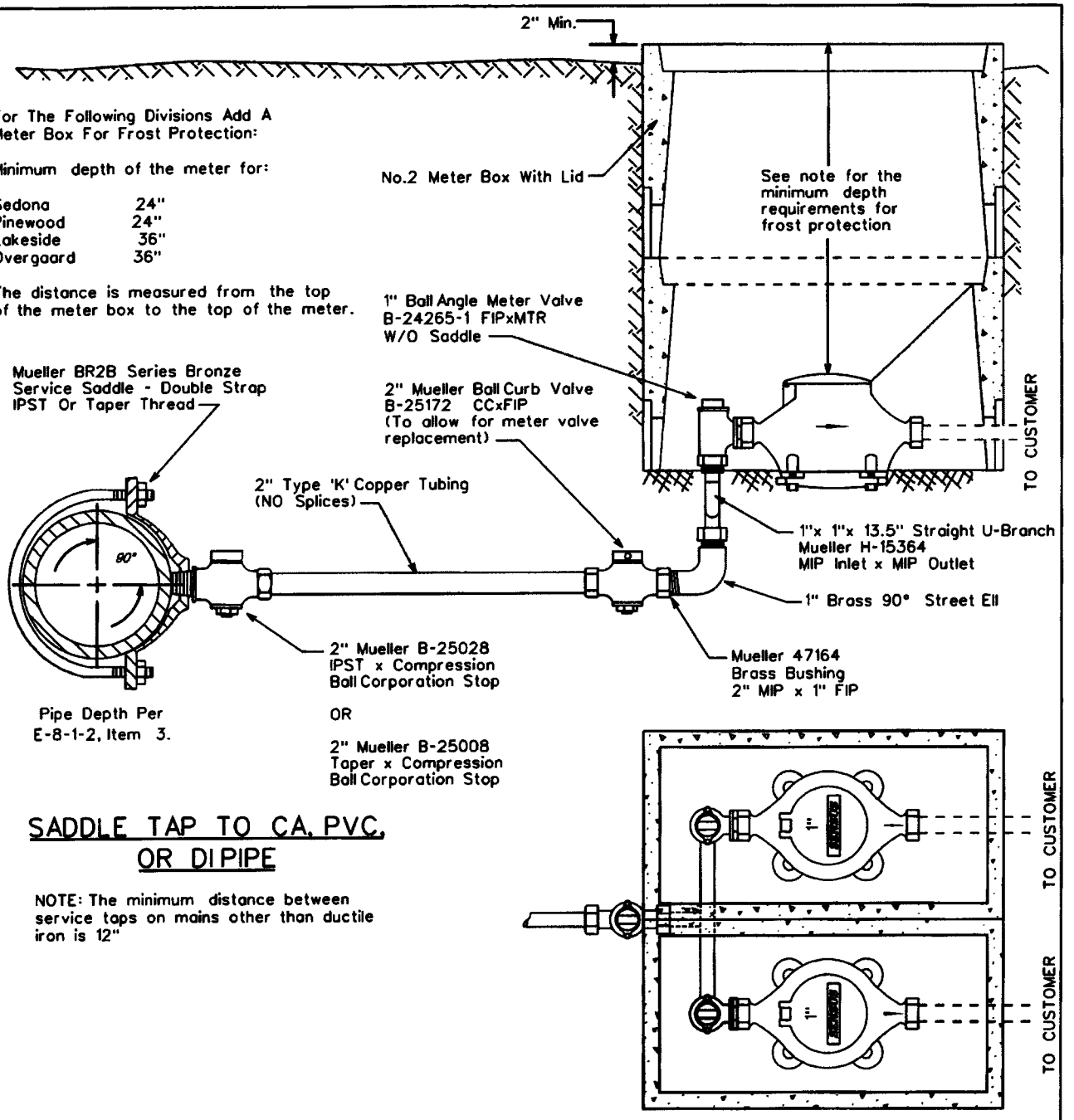

SADDLE TAP TO CA, PVC, OR DI PIPE

NOTE: The minimum distance between service taps on mains other than ductile iron is 12"

NOTE: THE LENGTH OF SERVICE IS LIMITED TO COMMERICIALLY AVAILABLE ROLLS, TYPICALLY 60 FEET

NOTE:
Only the meter is supplied by Arizona Water Company

ARIZONA WATER COMPANY

STANDARD SPECIFICATION
FOR THE INSTALLATION OF

DOUBLE SERVICE CONNECTION FOR 1" METERS

DRAWN BY:	APPROVED BY:	DATE		
CB	M.W.	03.17.2006	△ 08.29.2006	E-9-10-2

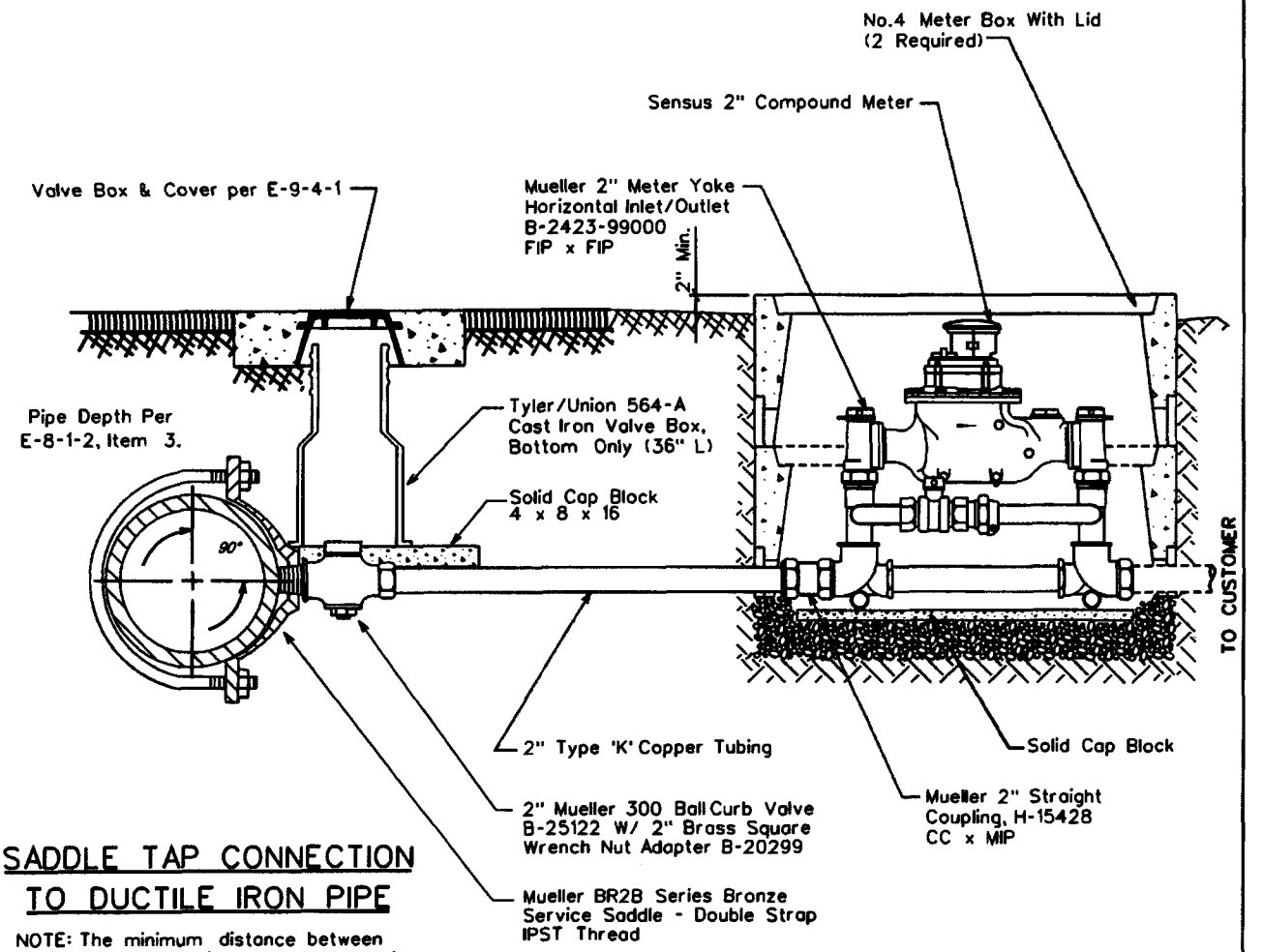

SADDLE TAP CONNECTION TO DUCTILE IRON PIPE

NOTE: The minimum distance between service taps on mains other than ductile iron is 12"

NOTE: THE LENGTH OF SERVICE IS LIMITED TO COMMERICIALLY AVAILABLE ROLLS, TYPICALLY 60 FEET

NOTE:

Only the meter is supplied by Arizona Water Company

ARIZONA WATER COMPANY

STANDARD SPECIFICATION
FOR THE INSTALLATION OF

TYPICAL 2" SERVICE CONNECTIONS

DRAWN BY:	APPROVED BY:	DATE:		
JW	M.W.	3/20/86	△ 08.29.2006	E-9-11-1

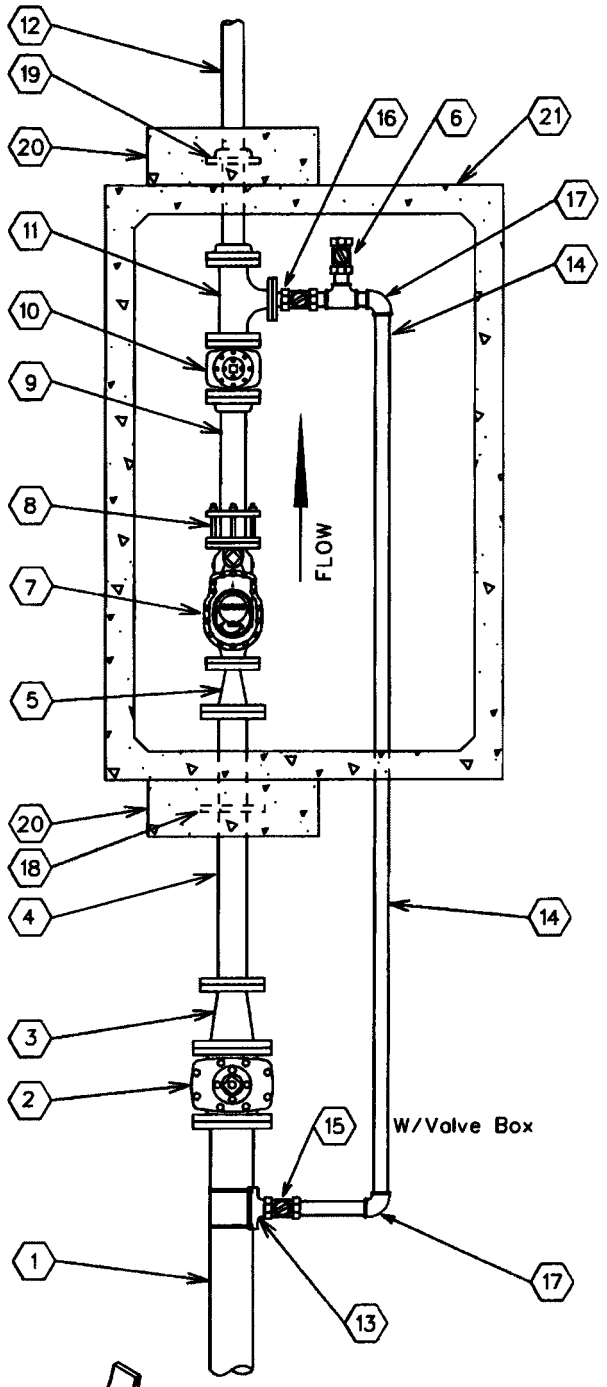

No.	FITTINGS SCHEDULE
1.	6" D.I.P.
2.	6" G.V.B.&C. mj x flng
3.	6"x4" Reducer flng x mj
4.	4"x3'-0" D.I.P. Spool flng x pe
5.	4" x 3" Reducer flng
6.	2" Test Port
7.	3" Compound Meter
8.	3" F.C.A.
9.	3"x2'-0" D.I. Spool flng x pe
10.	3" Gate Valve flng
11.	3"x2" Flg Tee w/ 2" Companion Flange
12.	3"x4'-0" D.I. Spool flng x pe
13.	6"x2" Tapping Saddle
14.	2" Copper Pipe
15.	2" Mueller B25122 Ball Valve w/B20299 Nut
16.	2" Locking Ball Valve (normally closed)
17.	2" Mueller H-15526 90° Ell CC x CC
18.	4" Megalug
19.	3" Slip-On Welding Flange
20.	24"x24"x8" Conc. Thrust Block P.I.P.
21.	575-LA Conc. Vault

NOTE:

1. Use Rowley pipe supports or equivalent as needed (See detail below).
2. Pipe support locations to be determined by field personnel.
3. All copper pipe that comes in contact with concrete to be wrapped w/10-20 Mil. Scotchwrap corrosion protection tape.
4. All mechanical joint fittings are to be megalugged.
5. Use deflection fittings (45° Ells.) to achieve necessary depths & cover as shown on the standard specification for the installation of a concrete vault (E-9-12-5).

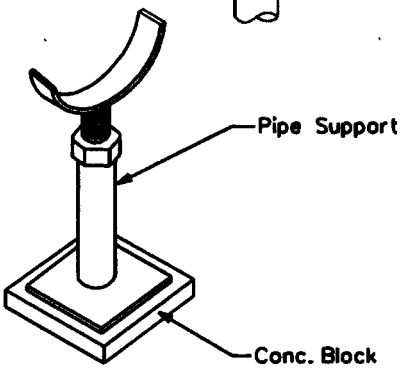

ARIZONA WATER COMPANY

STANDARD SPECIFICATION
FOR THE INSTALLATION OF

3" COMPOUND METER

DRAWN BY:	APPROVED BY:	DATE:		
CCO	MW	10/5/1993	△08.29.2006	E-9-12-1

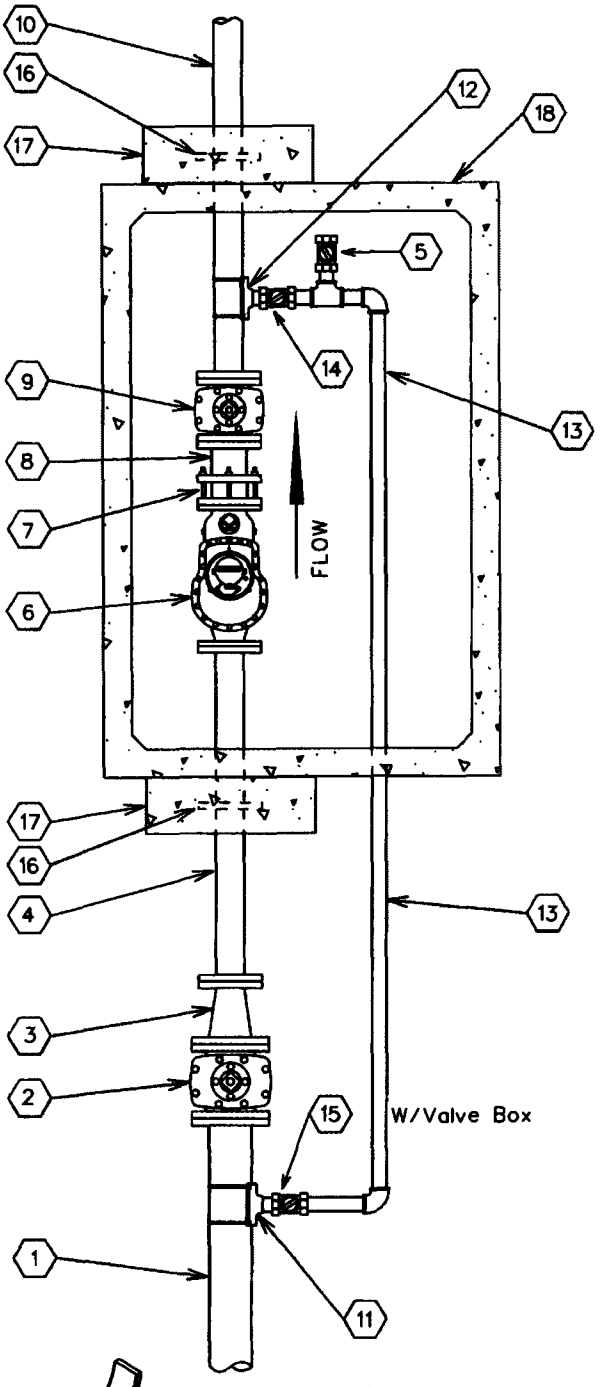

No.	FITTINGS SCHEDULE
1.	6" D.I.P.
2.	6" G.V.B.&C. mj x flng
3.	6"x4" Reducer flng x mj
4.	4"x3'-0" D.I.P. Spool flng x pe
5.	2" Test Port
6.	4" Compound Meter
7.	4" F.C.A.
8.	4"x1'-0" D.I.P. Spool flng x pe
9.	4" Gate Valve flng
10.	4"x4'-0" D.I.P. Spool flng x pe
11.	6"x2" Tapping Saddle
12.	4"x2" Tapping Saddle
13.	2" Copper Pipe
14.	2" Ball Valve / Locking (Normally Closed)
15.	2" Mueller B25122 Ball Valve w/B20299 Nut
16.	4" Megalug
17.	24"x24"x8" Conc. Thrust Block P.I.P.
18.	575-LA Conc. Vault

NOTE:

1. Use Rowley pipe supports or equivalent as needed (See detail below).
2. Pipe support locations to be determined by field personnel.
3. All copper pipe that comes in contact with concrete to be wrapped w/10-20 Mil. Scotchwrap corrosion protection tape.
4. All mechanical joint fittings are to be megalugged.
5. Use deflection fittings (45° Ells.) to achieve necessary depths & cover as shown on the standard specification for the installation of a concrete vault (E-9-12-5).

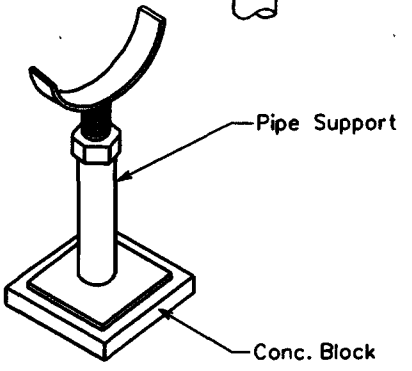

ARIZONA WATER COMPANY

STANDARD SPECIFICATION
FOR THE INSTALLATION OF

4" COMPOUND METER

DRAWN BY:	APPROVED BY:	DATE		
CCO	MW	10/5/1993	△08.29.2006	E-9-12-2

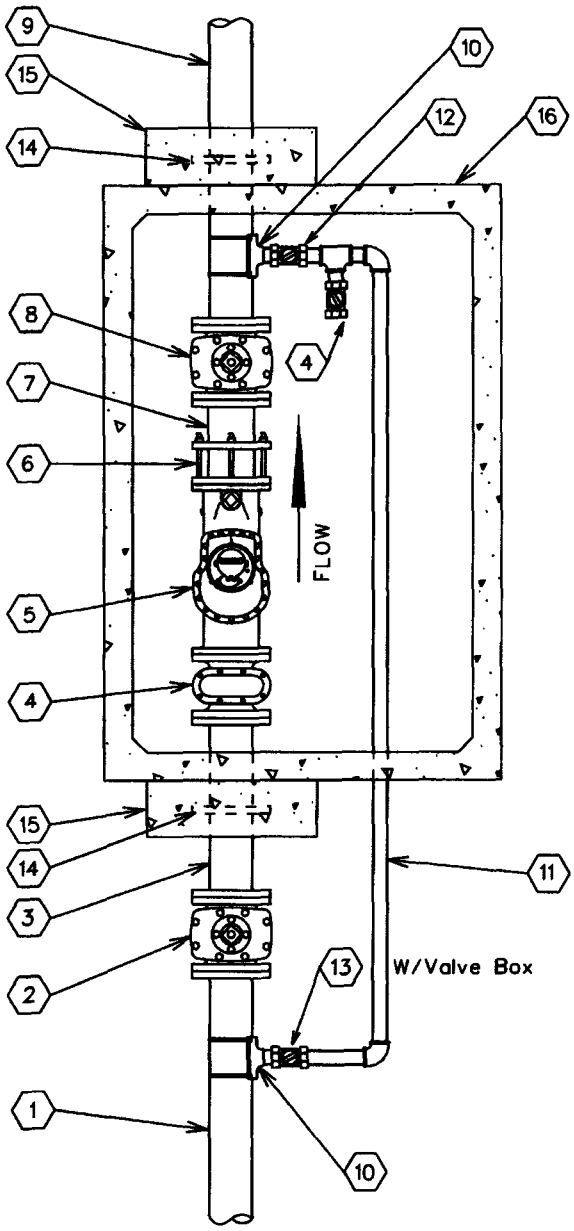

No.	FITTINGS SCHEDULE
1.	6" D.I.P.
2.	6" G.V.B.&C. mj
3.	6"x 3'-0" D.I.P. Spool flng x pe
4.	2" Test Port
5.	6" Compound Meter
6.	6" F.C.A.
7.	6"x 1'-0" D.I.P. Spool flng x pe
8.	6" Gate Valve flng
9.	6"x 4'-0" D.I.P. Spool flng x pe
10.	6"x2" Tapping Saddle
11.	2" Copper Pipe
12.	2" Ball Valve / Locking (Normally Closed)
13.	2" Mueller B25122 Ball Valve w/B20299 Nut
14.	6" Megalug
15.	24"x24"x8" Conc. Thrust Block P.I.P.
16.	575-LA Conc. Vault

NOTE:

1. Use Rowley pipe supports or equivalent as needed (See detail below).
2. Pipe support locations to be determined by field personnel.
3. All copper pipe that comes in contact with concrete to be wrapped w/10-20 Mil. Scotchwrap corrosion protection tape.
4. All mechanical joint fittings are to be megalugged.
5. Use deflection fittings (45° Ells.) to achieve necessary depths & cover as shown on the standard specification for the installation of a concrete vault (E-9-12-5).

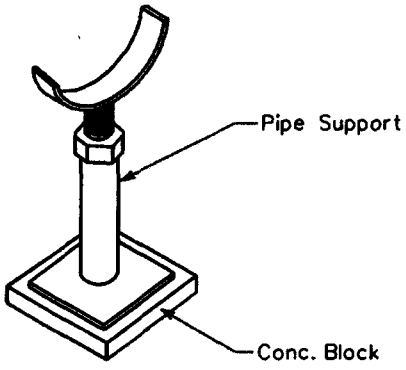

ARIZONA WATER COMPANY

STANDARD SPECIFICATION
FOR THE INSTALLATION OF

6" COMPOUND METER

DRAWN BY:	APPROVED BY:	DATE		
CCO	MW	10/5/1993	△08.29.2006	E-9-12-3

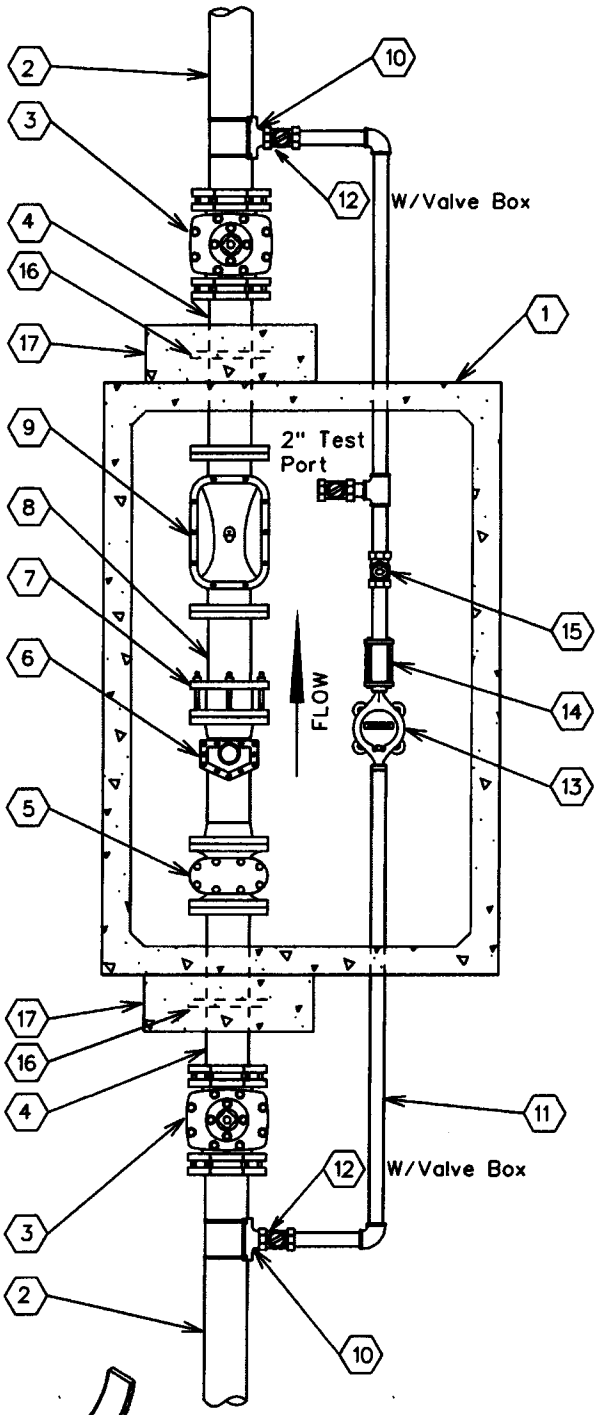

No.	FITTINGS SCHEDULE
1.	575-LA Conc. Vault
2.	6" D.I.P.
3.	6" G.V.B.&C. m.j.
4.	6" x 3'-0" D.I.P. SPool Piece flng x pe
5.	6" Strainer
6.	6" Turbo Meter
7.	6" F.C.A.
8.	6" x 2'-0" D.I.P. Spool Piece flng x pe (TRIM SPOOL PIECE TO 3x THE PIPE DIA.)
9.	6" Detector Check
10.	6"x*N" Tapping Saddle
11.	*N" Copper Pipe
12.	*N" Ball Valve (Locking)
13.	*N" Meter
14.	*N" Coup. Adapt.
15.	*N" Flapper Check Valve
16.	6" Megalug
17.	24"x24"x8" Conc. Thrust Block P.I.P.

*N - Size To Be determined By A.W.Co.

NOTE:

1. Use Rowley pipe supports or equivalent as needed (See detail below).
2. Pipe support locations to be determined by field personnel.
3. All copper pipe that comes in contact with concrete to be wrapped w/10-20 Mil. Scotchwrap corrosion protection tape.
4. All mechanical joint fittings are to be megalugged.
5. Use deflection fittings (45° Ells.) to achieve necessary depths & cover as shown on the standard specification for the installation of a concrete vault (E-9-12-5).
6. To change from a 6" service to a 4" service, change all listed 6" materials to 4" materials.

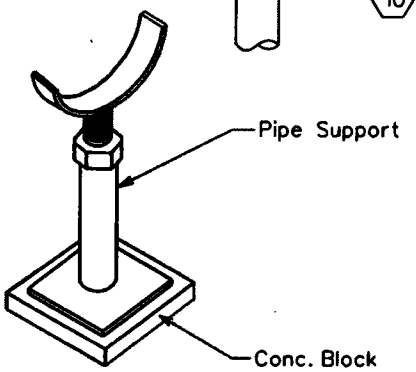

ARIZONA WATER COMPANY

STANDARD SPECIFICATION
FOR THE INSTALLATION OF

6" COMPOUND SERVICE

DRAWN BY:	APPROVED BY:	DATE:		
CCO	MW	10/05/1993	△08.29.2006	E-9-12-4

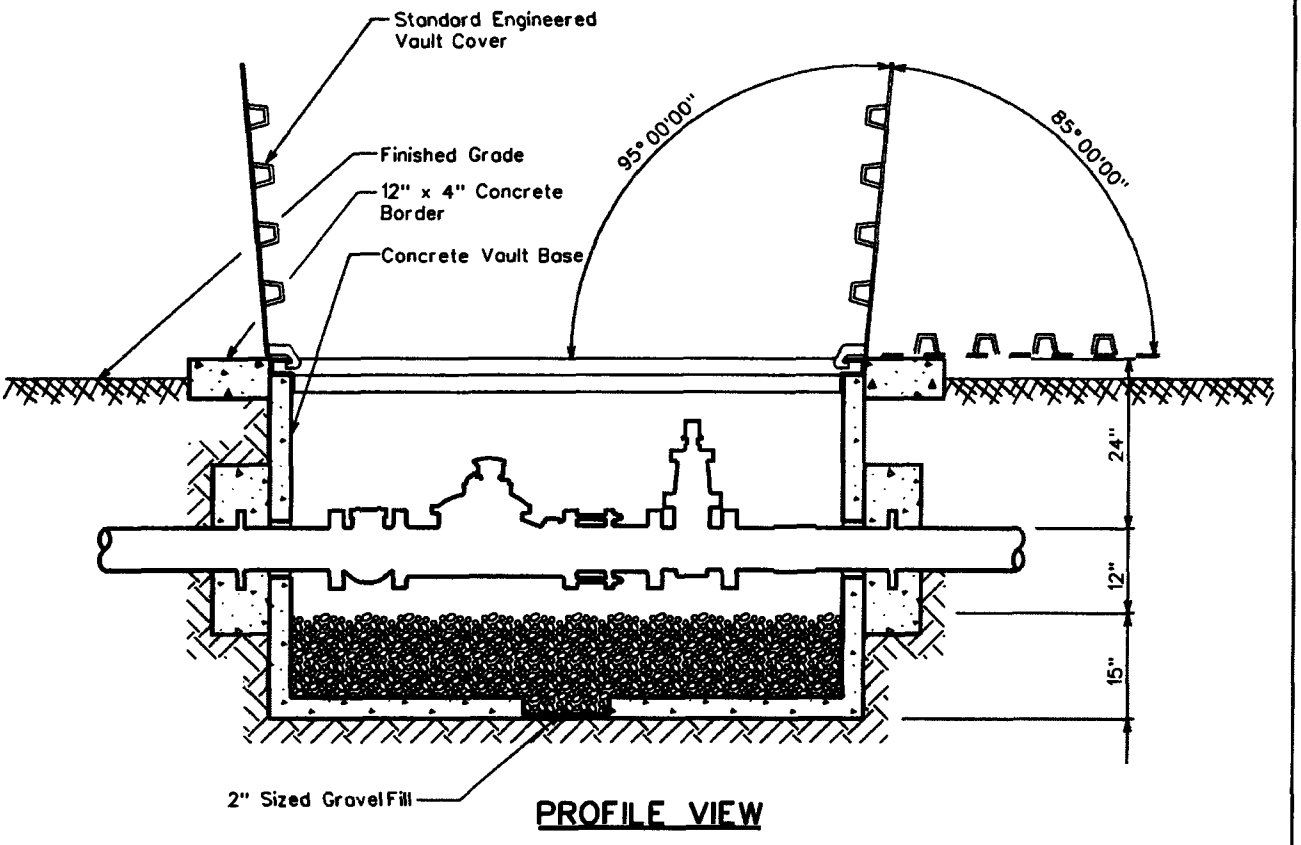

PROFILE VIEW

CONCRETE VAULT & COVER SPECIFICATIONS

Vault - Base No. 575-BL
Cover - Standard Engineered Vault Cover
- 4874 Aluminum Diamond Plate Cover For Non-Traffic Loading Areas
  Or
- 4874 Galvanized Steel Diamond Plate Cover W/ H-20 Traffic Loading
- Double Torsion Spring Assisted Doors W/ Recessed Hasp & Safety Latches

NOTES

1. Total Depth Of Concrete Vault To Be A Maximum Of 3'-0" From Top Of Vault Cover To Top Of Gravel Fill.
2. Service Connections Larger Than 6" In Diameter Will Conform To The Same Vault & Cover Specifications. Size Of Vault & Cover To Be Determined By A.W.Co. Engineers.

ARIZONA WATER COMPANY

STANDARD SPECIFICATION
FOR THE INSTALLATION OF

CONCRETE VAULT

DRAWN BY:	APPROVED BY:	DATE:		
CCO	MW	10/5/1993	△ 05.17.2001	E-9-12-5

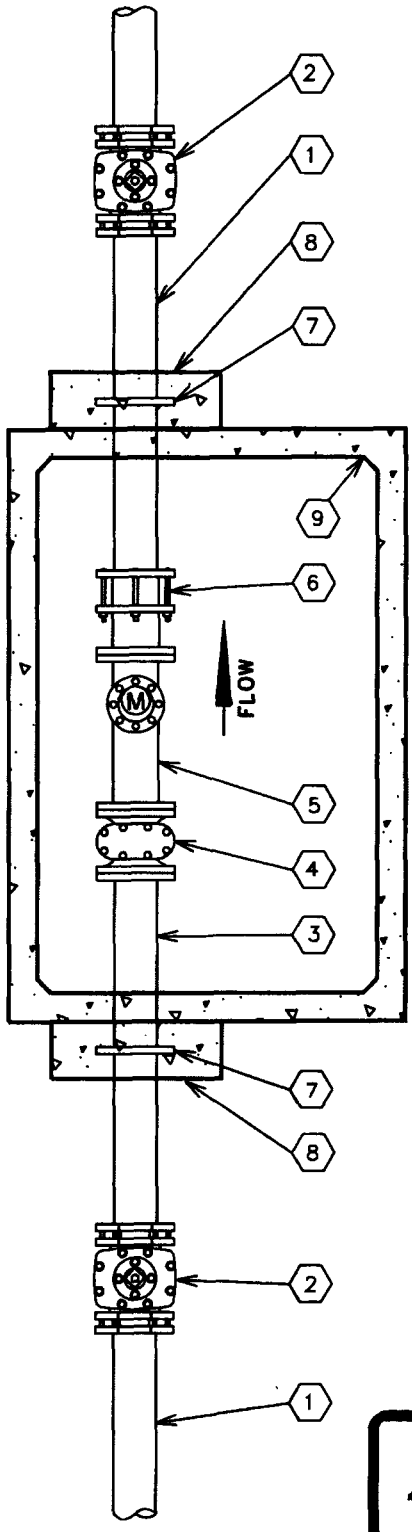

No.	FITTINGS SCHEDULE
1.	Ductile Iron Pipe
2.	Gate Valve M.J.
3.	D.I.P. Spool Piece Flg x Pe (10xDia.)
4.	Meter Strainer
5.	Propeller Meter
6.	Flanged Coupling Adapter
7.	Megalug Gland (Thrust Anchor)
8.	Concrete Thrust Block P.I.P.
9.	Concrete Vault

NOTE:

1. Use Rowley pipe supports or equivalent as needed (See E-9-12-4).
2. Pipe support locations to be determined by field personnel.
3. All Sched. 40 Stl. pipe outside of vault to be wrapped w/10-20 Mil. Scotchwrap corrosion protection tape.
4. All mechanical joint fittings to are to be megalugged.
5. Use deflection fittings (45° Ells.) to achieve necessary depths & cover as shown on the standard specification for the installation of a concrete vault (E-9-12-5).

ARIZONA WATER COMPANY

STANDARD SPECIFICATION
FOR THE INSTALLATION OF

NON-POTABLE PROPELLER METER

DRAWN BY:	APPROVED BY:	DATE:		
JPK	MW	7-20-95	△	E-9-12-6

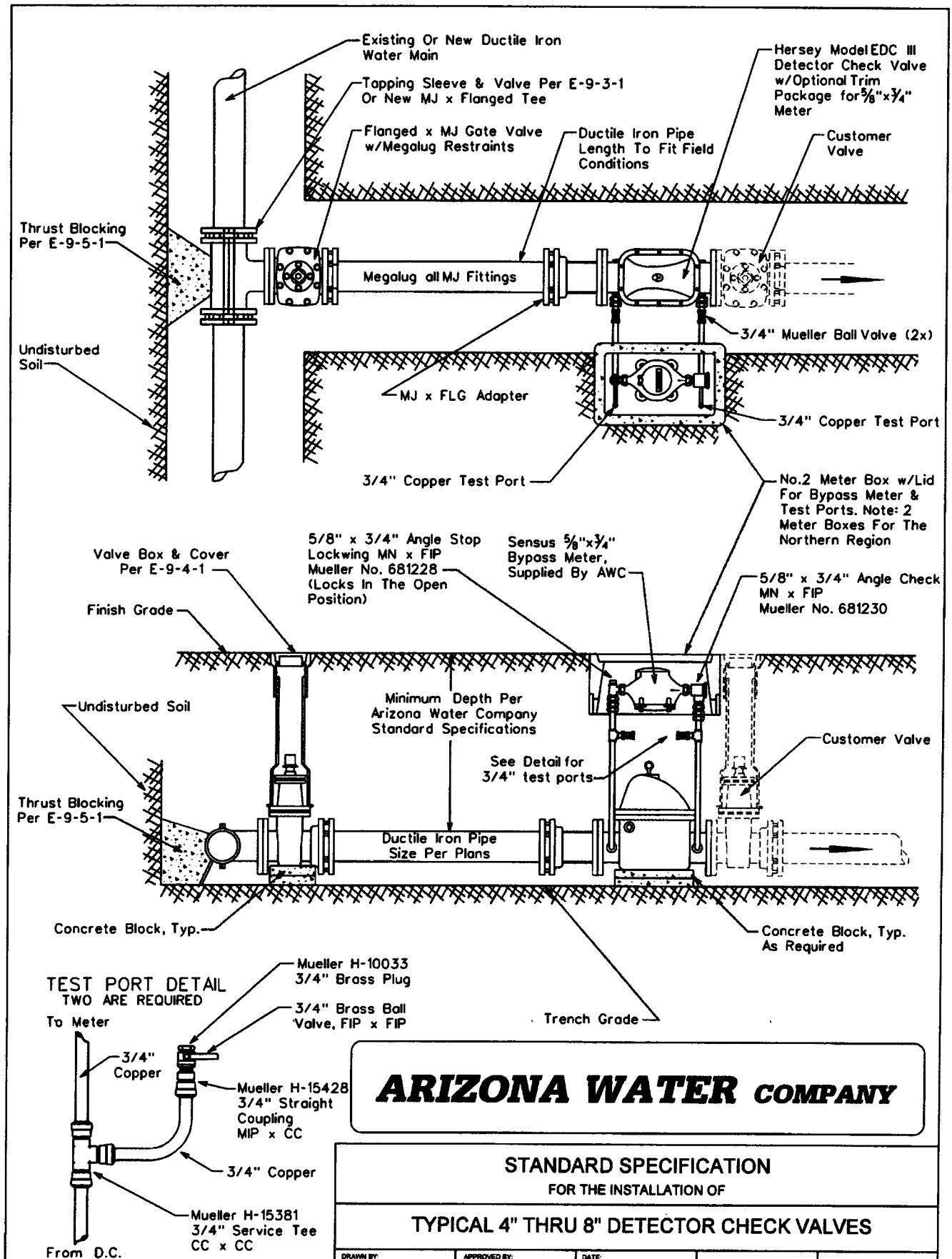

ARIZONA WATER COMPANY

STANDARD SPECIFICATION
FOR THE INSTALLATION OF

TYPICAL 4" THRU 8" DETECTOR CHECK VALVES

DRAWN BY:	APPROVED BY:	DATE:		
CB	MW	10.16.1990	△03.09.2007	E-9-13-1

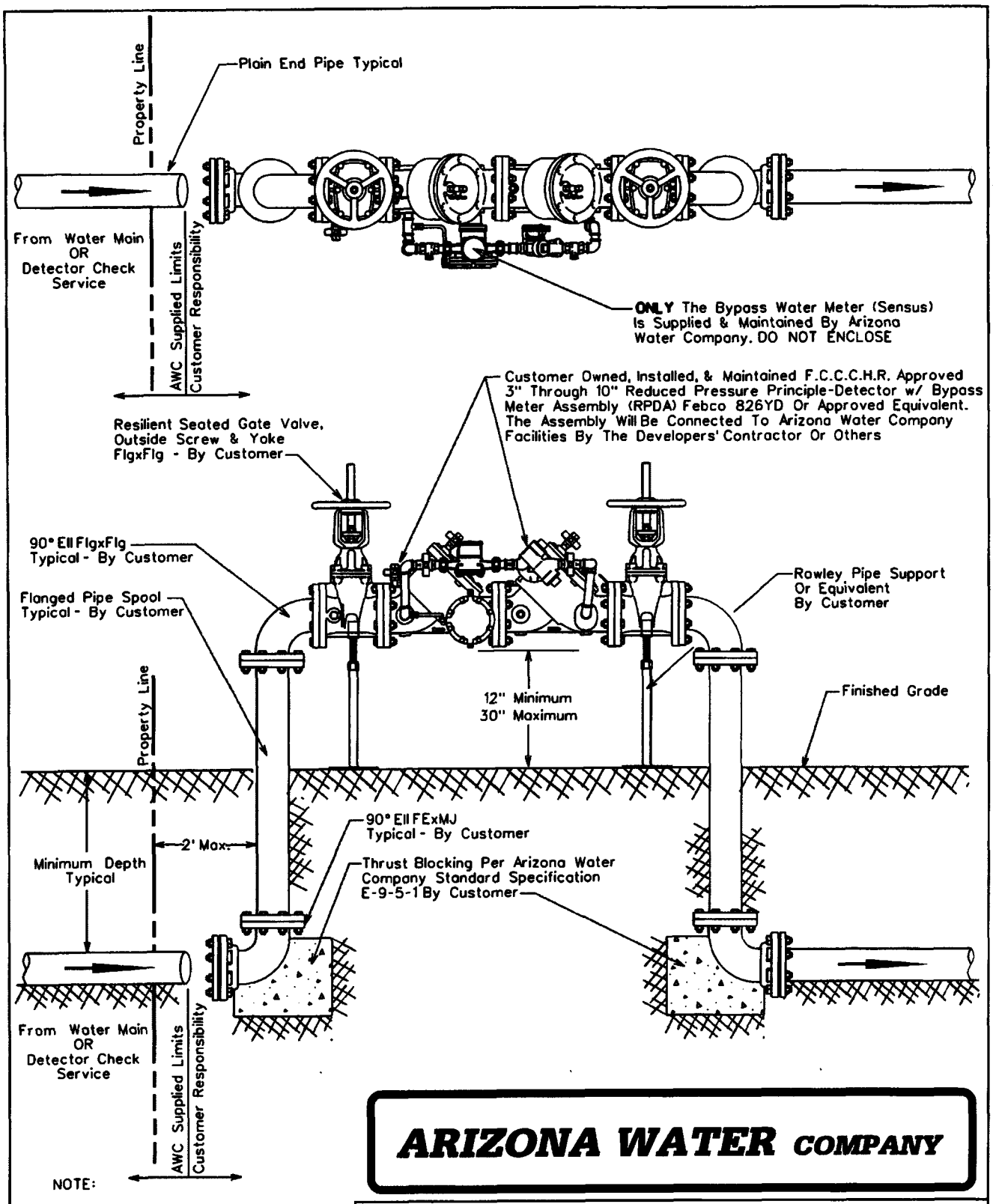

NOTE:

Minimum Depth Of Cover Over
6" & 8" Mains is 36 Inches,
12" & Greater is 48 Inches
Unless Otherwise Specified

ARIZONA WATER COMPANY

STANDARD SPECIFICATION

FOR THE INSTALLATION OF

3" THRU 10" REDUCED PRESSURE PRINCIPLE-DETECTOR
WITH BYPASS METER ASSEMBLY (RPDA) FOR FIRELINE SERVICES

DRAWN BY:	APPROVED BY:	DATE:		
CB	MW	10-13-98	△1-19-2000	E-9-13-2

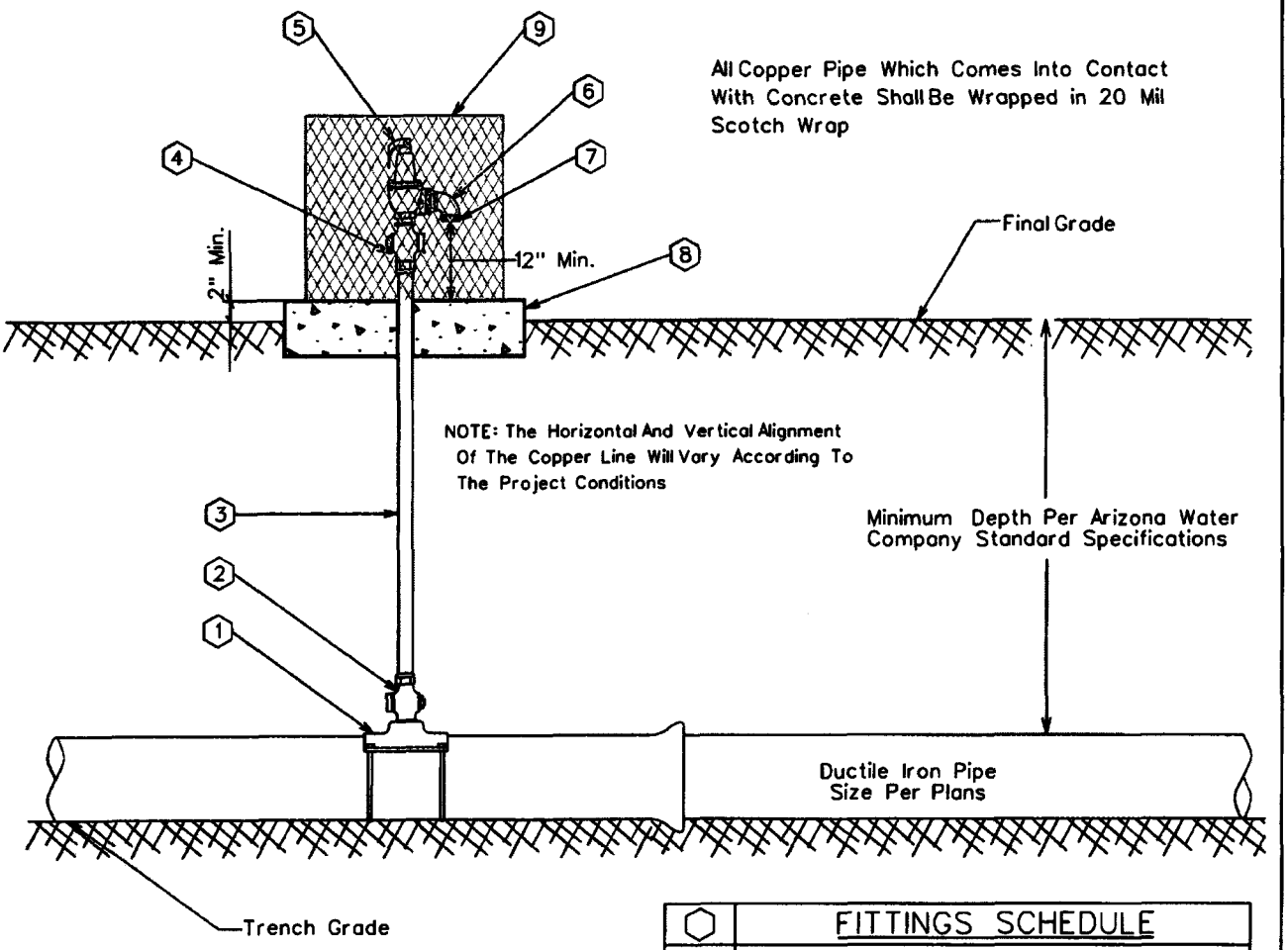

⬡	FITTINGS SCHEDULE
1.	Mueller BR2B Bronze Service Saddle - Double Strap
2.	2" Mueller B-25008 Taper x Comp. Ball Corp Stop
3.	2" Type 'K' Copper w/NO Splices - Field Fit
4.	2" Mueller B-25028 IP x Comp. Ball Corp Stop
5.	2" Pressure Relief Valve Watts 174A With A 2" Inlet / 2" Outlet 30-150 psi W/ Bronze Body
6.	2" Brass Street Elbow
7.	No.16 Wire Mesh Screen (Non-Corrodible)
8.	4" Thick Concrete Pad - Class 'C' Concrete
9.	Vandal enclosure to be centered on the concrete pad

NOTE:

1. Pressure relief valves are typically located just down stream of a pressure reducing station or where system conditions might be subject to greater than allowable pressures.
2. The relief valve assembly and vandal enclosure shall be located out of the roadway, but within the right-of-way or easement.

ARIZONA WATER COMPANY

STANDARD SPECIFICATION
FOR THE INSTALLATION OF

TYPICAL PRESSURE RELIEF VALVE ASSEMBLY

DRAWN BY:	APPROVED BY:	DATE:		
CCO	MW	3/20/1986	△ 08.29.2006	E-9-14-1

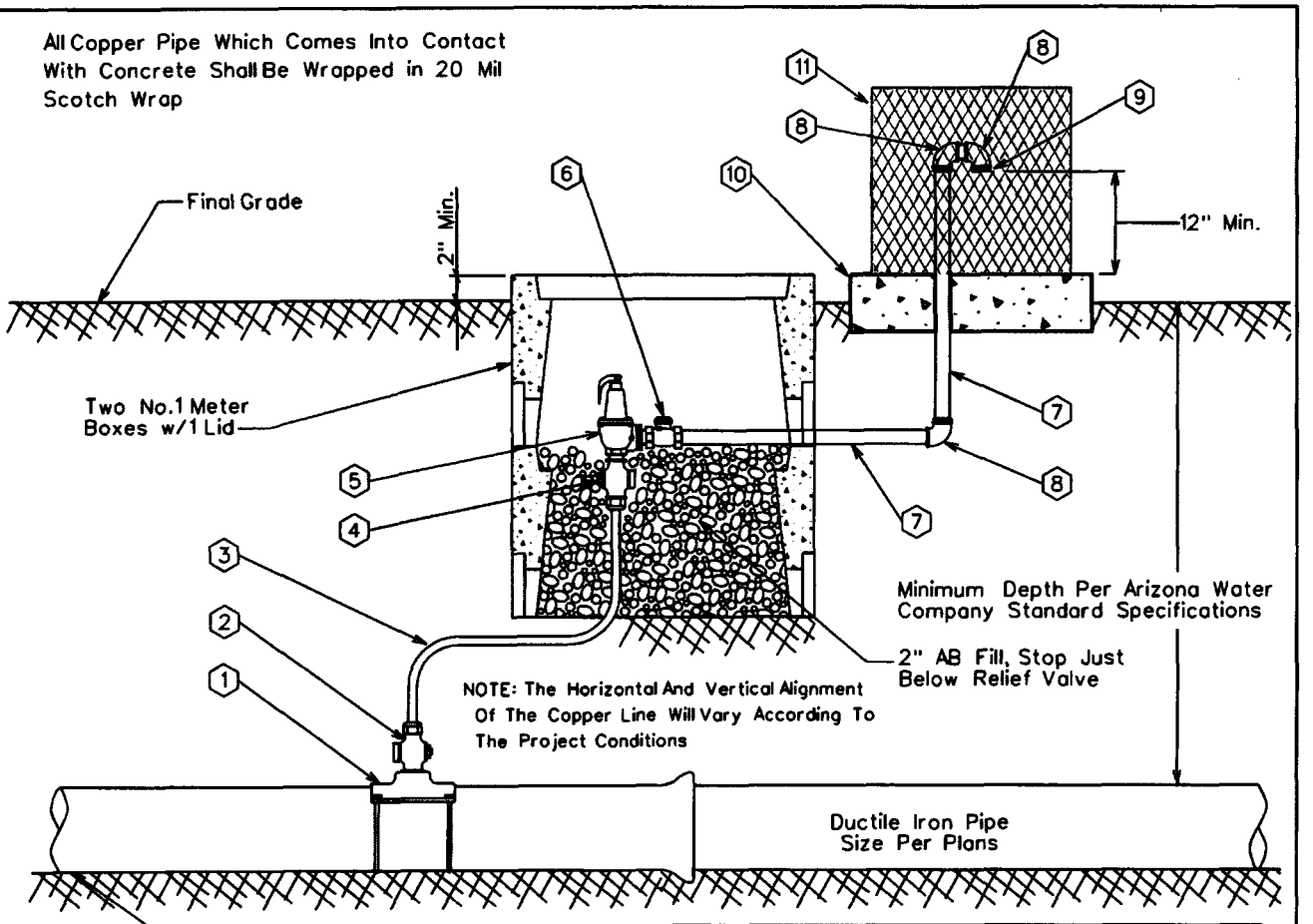

NOTE:

1. Pressure relief valves are typically located just down stream of a pressure reducing station or where system conditions might be subject to greater than allowable pressures.
2. The relief valve assembly and vandal enclosure shall be located out of the roadway, but within the right-of-way or easement.

⬡	FITTINGS SCHEDULE
1.	Mueller BR2B Bronze Service Saddle - Double Strap
2.	2" Mueller B-25008 Taper x Comp. Ball Corp Stop
3.	2" Type 'M' Rigid Copper w/NO Splices - Field Fit
4.	2" Mueller B-25028 IP x Comp. Ball Corp Stop
5.	2" Pressure Relief Valve Watts 174A With A 2" Inlet / 2" Outlet 30-150 psi W/ Bronze Body
6.	2" Bronze Check Valve Watts Series CV
7.	2" Schedule 40 Cut Pipe - Field Fit
8.	2" Brass Street Elbow
9.	No.16 Wire Mesh Screen (Non-Corrodible)
10.	4" Thick Concrete Pad - Class 'C' Concrete
11.	Guardshack, Model GS-1, Available From BPDI, Inc. Available In Leaf Green Or Desert Tan

ARIZONA WATER COMPANY

STANDARD SPECIFICATION
FOR THE INSTALLATION OF

PRESSURE RELIEF VALVE - NORTHERN REGION

DRAWN BY:	APPROVED BY:	DATE:		
CCO	MW	3/20/1986	△08.29.2006	E-9-14-2

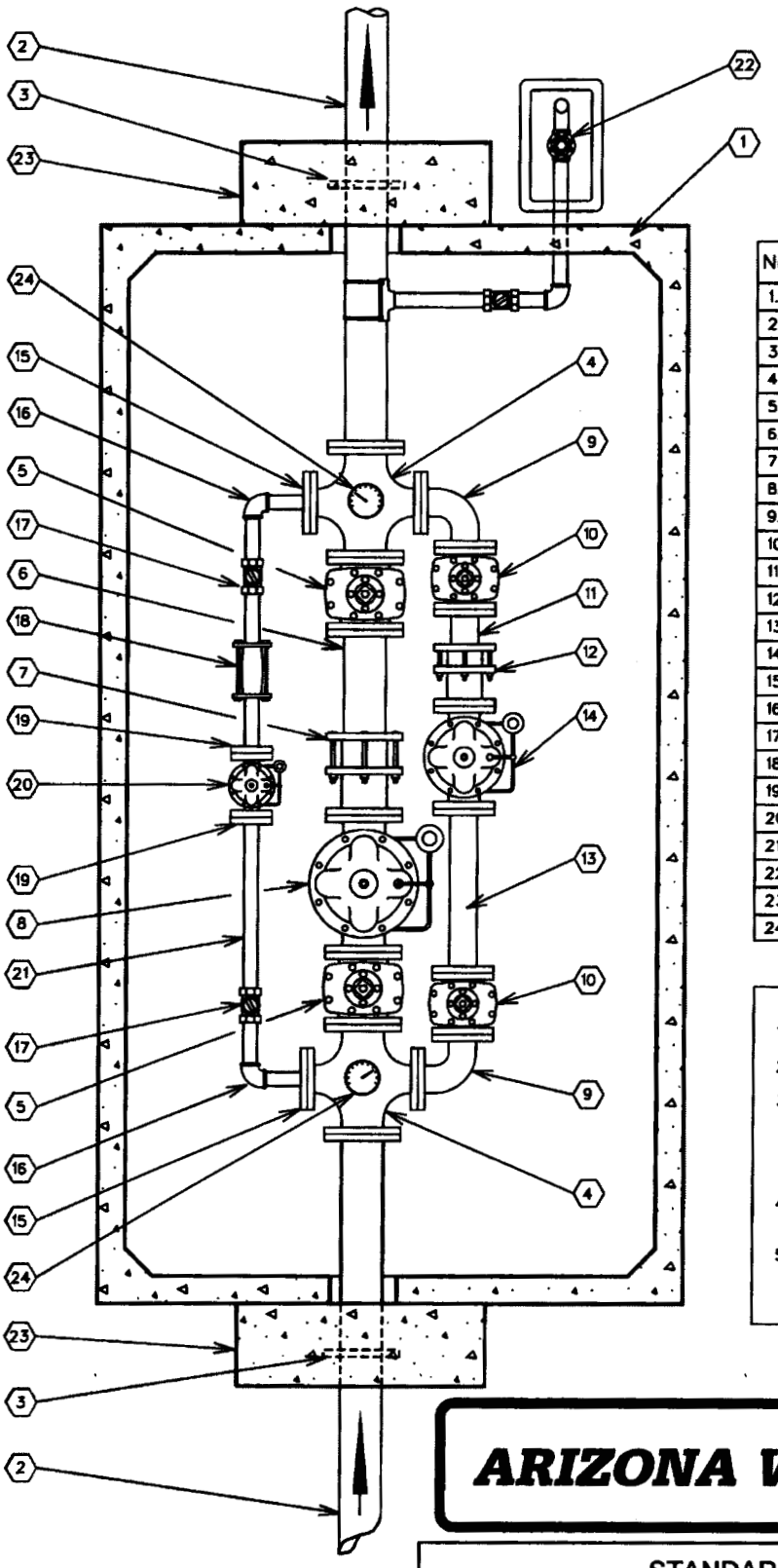

No.	FITTINGS SCHEDULE
1.	612 LA Conc. Vault (See Note 3)
2.	6"x6'-0" D.I.P. Spool Flg.xP.E.
3.	6" Megalug (Thrust Anchor)
4.	6"x4" Cross Flg.
5.	6" Gate Valve Flg.
6.	6"x2'-0" D.I.P. Spool Flg.xP.E.
7.	6" Flg. Coup. Adapt. (Rockwell 913)
8.	6" High Flow Pressure Reducing Valve Flg.
9.	4" 90° Ell. Flg.
10.	4" Gate Valve Flg.
11.	4"x1'-0" D.I.P. Spool Flg.xP.E.
12.	4" FLg. Coup. Adapt. (Rockwell 913)
13.	4"x2'-0" D.I.P. Spool Flg.
14.	4" Medium Flow Pressure Reducing Valve Flg.
15.	2"x9" O.D. Reducing Flg. (I.P.T.)
16.	2" 90° Ell. F.I.P.
17.	2" Ball Valve F.I.P.
18.	2" Comp. Coup. (Rockwell 411)
19.	2" Companion Flg. (I.P.T.)
20.	2" Low Flow Pressure Reducing Valve Flg.
21.	2" Sched. 40 Stl. Pipe
22.	2" Pressure Relief Valve (See E-9-14-1)
23.	12"x36"x36" Conc. Thrust Block P.I.P.
24.	Pressure Gauge w/shut off valve

NOTE:

1. Use Rowley pipe supports or equivalent as needed. (See E-9-12-4)
2. Pipe support locations to be determined by field personnel.
3. Vault-612 LA top section w/12" Dia. sump hole. Cover-concrete slab top w/(4) 4'-0" x2'-6" aluminum spring loaded hinged style covers for non-traffic loading areas. For areas w/low density traffic, cover is to be designed for H-20 traffic loading.
4. All Sched. 40 Stl. pipe outside of vault to be wrapped w/10-20 Mil. Scotchwrap corrosion protection tape.
5. Use deflection fittings (45° Ells.) to achieve necessary depths & cover as shown on the standard specification for the installation of a concrete vault (E-9-12-5).

ARIZONA WATER COMPANY

STANDARD SPECIFICATION

FOR THE INSTALLATION OF

PRESSURE REDUCING STATION

DRAWN BY:	APPROVED BY:	DATE:		
JPK	MW	11-16-88	△ 9-27-95	E-9-15-1

1. Specific Items To Be Painted Deer-O Pure White Enamel:

A. All Booster Pumps.
B. All Electrical Motors And Gas Engines.
C. Well Pump Discharge Heads.
D. Electrical Panel.

2. Specific Items To Be Painted Frost Cap White Or Deer-O Pure White Enamel:

A. Well Shelter.

3. Specific Items To Be Painted OSHA Orange:

A. Electrical Conduit.

4. All Other Items To Be Painted With Either:
(At Manager's Discretion)

A. Cholla Green
B. Forest Green
C. Sonora Beige
D. Red Rock
E. Rock Brown
F. Deer-O Pure White
G. Elkhorn Cactus

ARIZONA WATER COMPANY

STANDARD SPECIFICATION
FOR THE INSTALLATION OF

PAINT COLOR SELECTION

DRAWN BY:	APPROVED BY:	DATE:	△	
CCO		3/20/1986	2/13/2001	E-9-16-1

1. Tank shall conform to AWWA Specification D100-84 with exceptions noted below.

*2. 1/4" minimum shell plate.

3. Minimum of 12" diameter roof vent, screened with No. 16 non-corrodible wire mesh, to be located on a 24" diameter round hinged manhole opening at the center of the tank to provide access to the dollar plate.

4. Overflow pipe shall be the same diameter as the inlet pipe and shall terminate 12 to 24 inches above splash pad or a minimum of 2 overflow pipe diameters above weir box high water level.

5. Storage tank shall be placed upon adequately compacted base material.

6. 8" minimum floor mounted tank drain outlet to be located close to the outer shell.

7. Tank and related fittings shall be enclosed with a 6 foot chain link fence with lockable gates and anti-personnel wire on top of fence.

8. Liquid level shall be indicated by a target and target board on the outside surface of the tank.

9. 24 inch diameter manholes shall be provided on the roof and on the shell near the bottom of the tank. The roof manhole cover shall overlap the manhole by at least 2 inches to provide a rain tight closure. Roof manhole shall be hinged and equipped with a lock. Shell manhole cover to be hinged and bolted in place. *Tanks larger than a 80 foot diameter require 2 shell manholes.

10. Inside and outside ladders shall be located at the roof manhole. Outside ladder shall be caged with locking trap door. Bottom 8 feet of cage shall be enclosed to within 1/2" of shell with 10 gauge sheet steel.

11. Finished tank shall be disinfected in accordance with Arizona Department of Health Services Engineering Bulletin No. 8 before being placed into service.

12. The following information will be included with application for approval to construct:

    1. Tank location_____
    2. Tank height_____
    3. Tank diameter_____
    4. Tank capacity_____
    5. Method of water level control_____

13. The storage tank will not be constructed within the 100 year flood plain and the tank site will be graded to slope away from the tank.

14. The welded steel storage tank will be coated as per AWWA Specification D102, and N.S.F. Standard 61.

*Exceptions to AWWA Specification D100-84

FOUNDATION NOTES

1. FINISH CONCRETE SURFACE MUST SLOPE UPWARDS FROM THE STEEL BAND APPROX. 1" IN 10'-0".

2. TOP OF STEEL BAND MUST BE MAINTAINED LEVEL TO WITHIN 1/2".

3. INSTALL 8-2" DIA.x10'-0" P.V.C. WEEP LINES, EQUALLY SPACED (EVERY 45°). PERFORATE 8'-0" OF LINE WITH 1/2" DIA. HOLES @ 8" O.C. PLUG INTERIOR END OF LINE w/2" CAP.

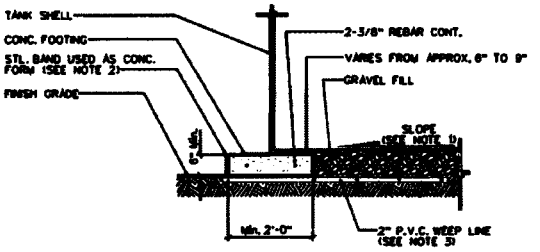

FOUNDATION DETAIL

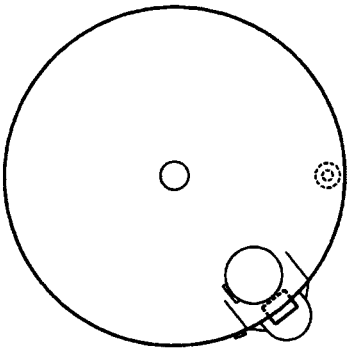

PLAN VIEW

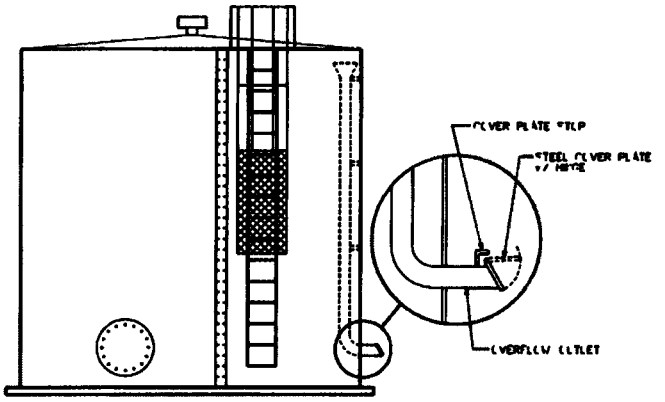

PROFILE VIEW

ARIZONA WATER COMPANY

STANDARD SPECIFICATION

FOR THE INSTALLATION OF

STEEL WATER STORAGE TANK

DRAWN BY:	APPROVED BY:	DATE:	△	
JPK	MJW	10-17-88	2-12-96	E-9-17-1

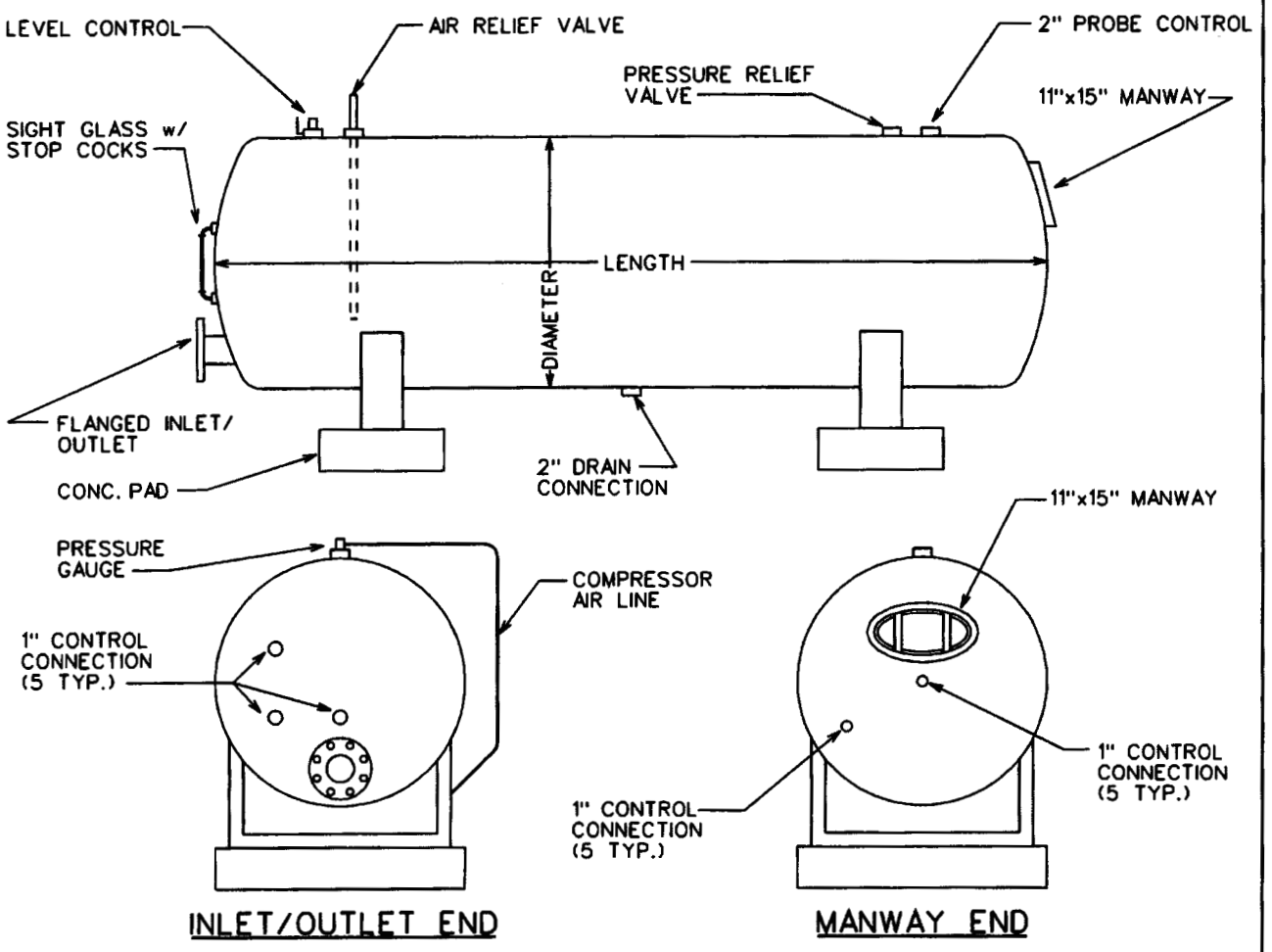

1. ALL HYDROPNEUMATIC TANKS SHALL BE DESIGNED & CONSTRUCTED IN ACCORDANCE WITH THE CURRENT REQUIREMENTS OF THE ASME CODE FOR UNFIRED PRESSURE VESSELS, SECTION VIII, DIVISION 1.
2. FINISHED TANK SHALL BE DISINFECTED IN ACCORDANCE WITH ADEQ BULLETIN No. 8 BEFORE BEING PLACED INTO SERVICE.
3. THE WELDED STEEL HYDROPNEUMATIC TANK WILL BE COATED AS PER AWWA SPECIFICATION D102 & NSF STANDARD 61.
4. THE FOLLOWING INFORMATION WILL BE INCLUDED WITH THE APPLICATION FOR APPROVAL TO CONSTRUCT.
   1. Tank Location _____
   2. Tank Length _____
   3. Tank Diameter _____
   4. Tank Capacity _____
   5. Maximum Working Pressure _____

ARIZONA WATER COMPANY

STANDARD SPECIFICATION
FOR THE INSTALLATION OF

HYDROPNEUMATIC TANK

DRAWN BY:	APPROVED BY:	DATE:		
JPK	MW	3-20-1986	△ 01.16.2007	E-9-18-1

NOT
CONVERTED
TO
CAD

ARIZONA WATER COMPANY

STANDARD SPECIFICATION
FOR THE INSTALLATION OF

WELL SHELTER

DRAWN BY:	APPROVED BY:	DATE:		
CB		03.20.1986	△04.03.2001	E-9-19-1

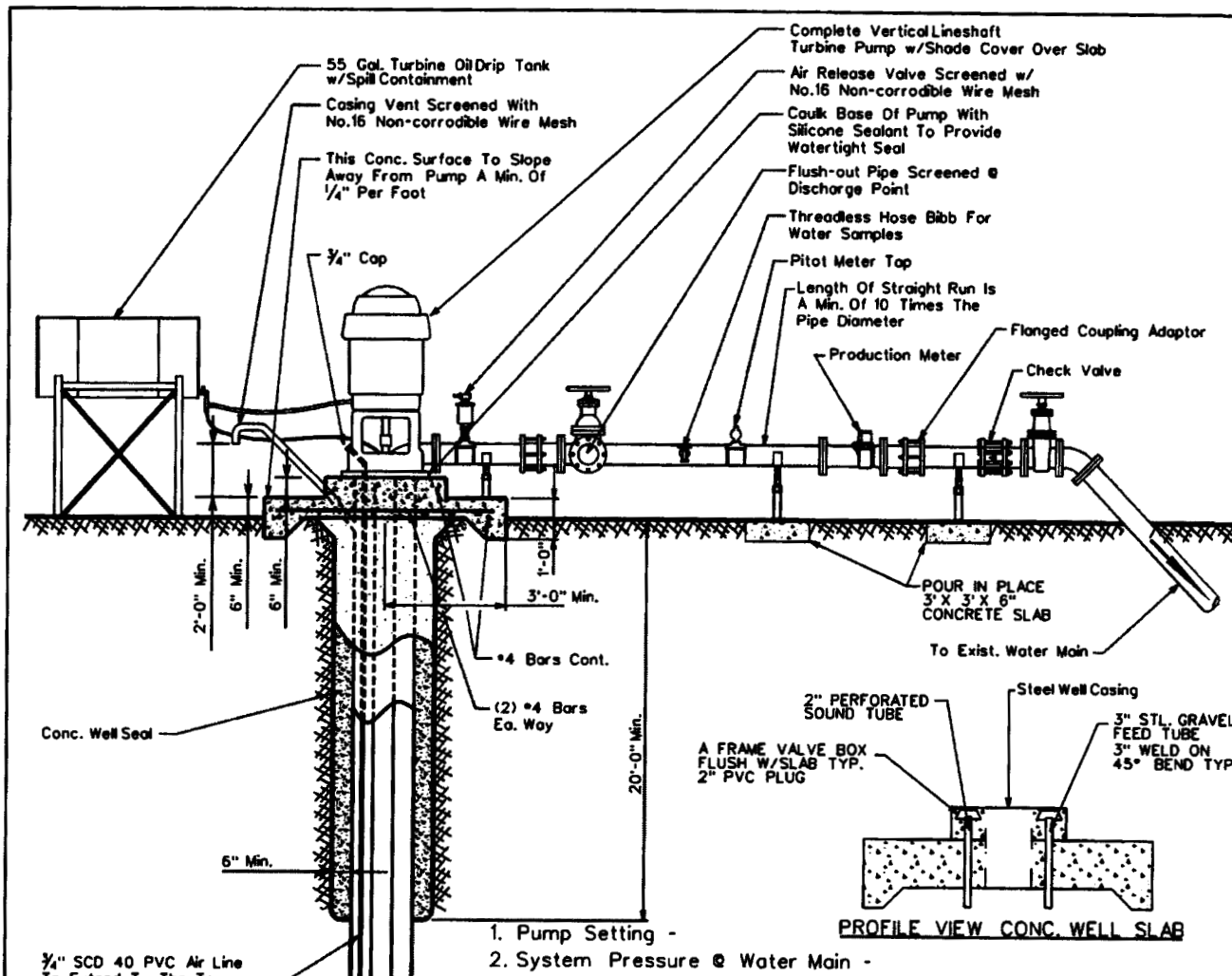

PROFILE VIEW CONC. WELL SLAB

1. Pump Setting -
2. System Pressure @ Water Main -
3. Design G.P.M. -
4. Pump Controlled By -
5. Well Does Not Lie Within The 100 Year Flood Plain.
6. Well Does Not Lie Within 100 Feet Of A Septic Tank.
7. Well Does Not Lie Within 50 Feet Of A Sewer Line.
8. Well Does Not Lie Within 100 Feet Of A Discharge Activity Which Requires An APP.
9. Well Does Not Lie Within 100 Feet Of An Underground Storage Tank.
10. Well Does Not Lie Within 100 Feet Of A Hazardous Waste Facility.
11. All Water Related Fittings Will Conform to N.S.F. Standard 61.
12. The Well Is Not Located Within 500 Feet Of Surface Water.
13. The Site Will Be Graded To Provide Adequate Drainage Away From The Well.
14. 6.88 lbs. of Davis #8084 Grey Dye, Per Yard, For 2500 PSI Concrete

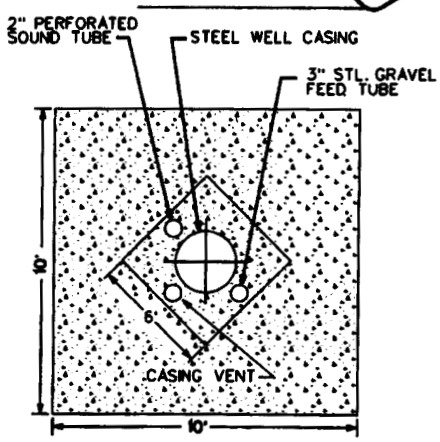

PLAN VIEW CONC. WELL SLAB

ARIZONA WATER COMPANY

STANDARD SPECIFICATION
FOR THE INSTALLATION OF

TYPICAL WELL W/ LINESHAFT TURBINE PUMP

DRAWN BY	APPROVED BY:	DATE		
JW	M.W.	3-20-86	△ 9/15/04	E-9-20-1

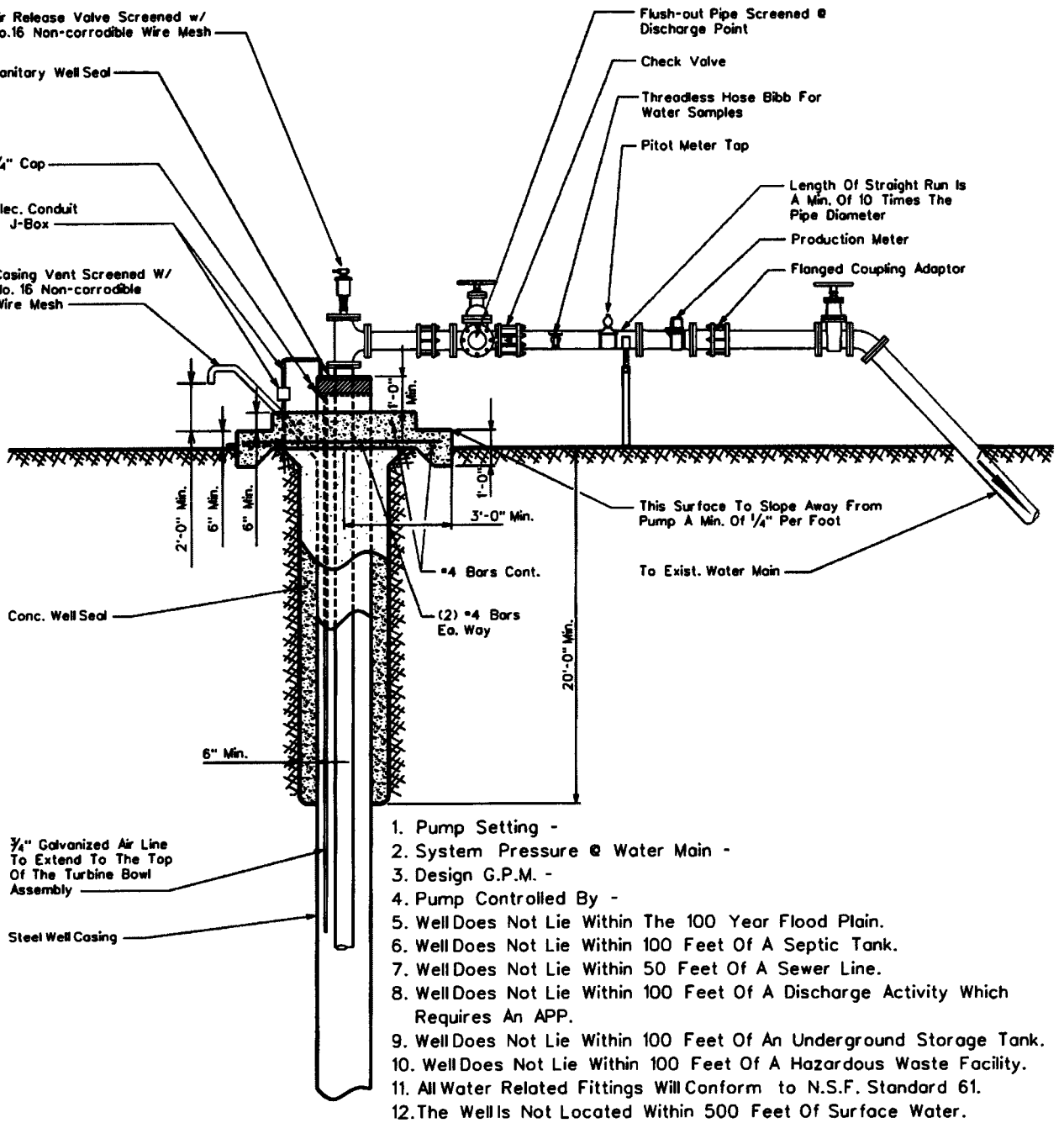

1. Pump Setting -
2. System Pressure @ Water Main -
3. Design G.P.M. -
4. Pump Controlled By -
5. Well Does Not Lie Within The 100 Year Flood Plain.
6. Well Does Not Lie Within 100 Feet Of A Septic Tank.
7. Well Does Not Lie Within 50 Feet Of A Sewer Line.
8. Well Does Not Lie Within 100 Feet Of A Discharge Activity Which Requires An APP.
9. Well Does Not Lie Within 100 Feet Of An Underground Storage Tank.
10. Well Does Not Lie Within 100 Feet Of A Hazardous Waste Facility.
11. All Water Related Fittings Will Conform to N.S.F. Standard 61.
12. The Well Is Not Located Within 500 Feet Of Surface Water.
13. The Site Will Be Graded To Provide Adequate Drainage Away From The Well.

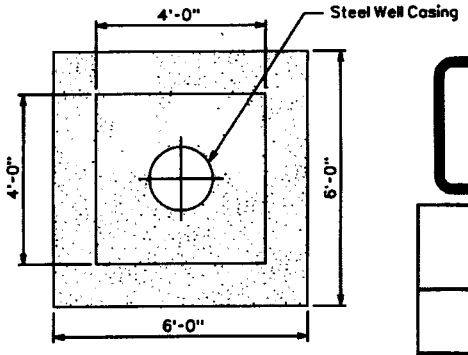

PLAN VIEW CONC. WELL SLAB

ARIZONA WATER COMPANY

STANDARD SPECIFICATION
FOR THE INSTALLATION OF

TYPICAL WELL W/ SUBMERSIBLE TURBINE PUMP

DRAWN BY	APPROVED BY:	DATE	△	
jpk	M.W.	3-20-86	2-16-01	E-9-21-1

All New Purchases To Conform To The Following:

Column Pipe

4" I.D. - 8	Threads	Per	Inch	Tapered	¾"	Per	Foot	Right	Hand
6" I.D. - 8	"	"	"	"	"	"	"	"	"
8" I.D. - 8	"	"	"	"	"	"	"	"	"
10" I.D.- 8	"	"	"	"	"	"	"	"	"
12" I.D.- 8	"	"	"	"	"	"	"	"	"
14" I.D.- 8	"	"	"	"	"	"	"	"	"

Oil Tube - Peerless Type

1½" O.D. - 14	Threads	Per	Inch	Right	Hand	
2" O.D. - 12	"	"	"	"	"	
2½" O.D. - 10	"	"	"	"	"	
3" O.D. - 10	"	"	"	"	"	
3½" O.D. - 10	"	"	"	"	"	
4" O.D. - 10	"	"	"	"	"	

Line Shaft

¾" O.D. - 10	Threads	Per	Inch	Left	Hand
1" O.D. - 14	"	"	"	"	"
1-3/16" O.D. - 10	"	"	"	"	"
1-1/2" O.D. - 10	"	"	"	"	"
1-11/16" O.D. - 10	"	"	"	"	"
1-15/16" O.D. - 10	"	"	"	"	"
2-3/16" O.D. - 10	"	"	"	"	"
2-7/16" O.D. - 8	"	"	"	"	"

ARIZONA WATER COMPANY

STANDARD SPECIFICATION
FOR THE INSTALLATION OF

COLUMN PIPE, OIL TUBE AND LINE SHAFT

DRAWN BY:	APPROVED BY:	DATE:		
CCO		3/20/1996	△ 2/13/2001	E-9-22-1

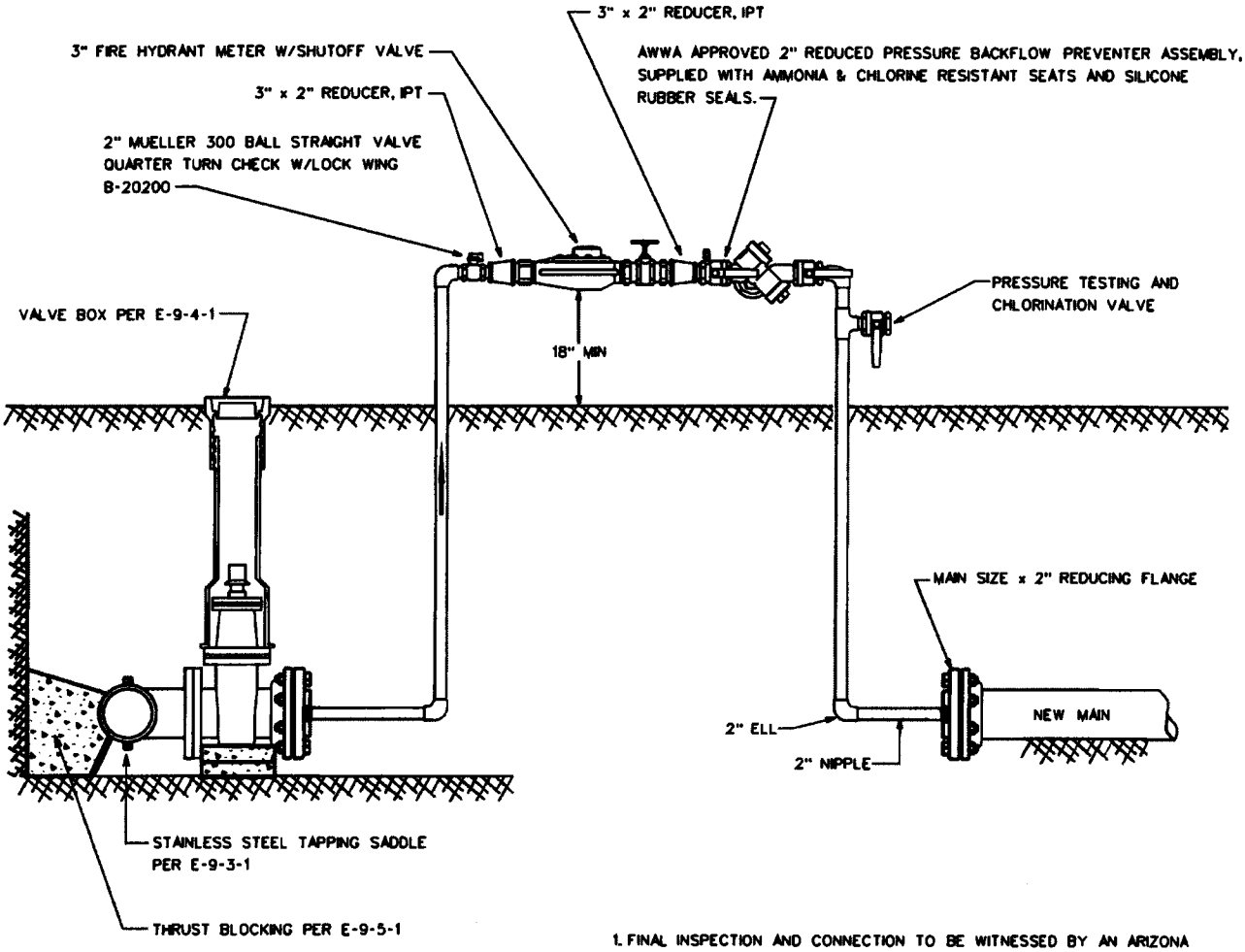

1. FINAL INSPECTION AND CONNECTION TO BE WITNESSED BY AN ARIZONA WATER COMPANY REPRESENTATIVE.
2. REDUCING FLANGES TO BE PROPERLY RESTRAINED.
3. INSTALL JUMPER TAP FOR TEMPORARY METER DOWNSTREAM OF THE REDUCING FLANGE FOR PRESSURE AND BACTEE TESTING.
4. JUMPER ASSEMBLY MUST BE A MINIMUM OF 18" ABOVE FINISHED GRADE.
5. BACKFLOW ASSEMBLY REQUIRES CERTIFICATION.
6. ASSEMBLY NOT TO BE REMOVED AND SPOOL PIECE INSTALLED FOR FINAL CONNECTION UNTIL ALL TESTING, BACTERIAL CLEARANCE AND FINAL INSPECTIONS HAVE BEEN OBTAINED.
7. ALL NEW PIPING SHALL BE PROPERLY RESTRAINED.

ARIZONA WATER COMPANY

STANDARD SPECIFICATION
FOR THE INSTALLATION OF

HOT TAP & JUMPER METER CONNECTION

DRAWN BY:	APPROVED BY:	DATE:		
CB	MJW	05.14.2004	△	E-9-23-1

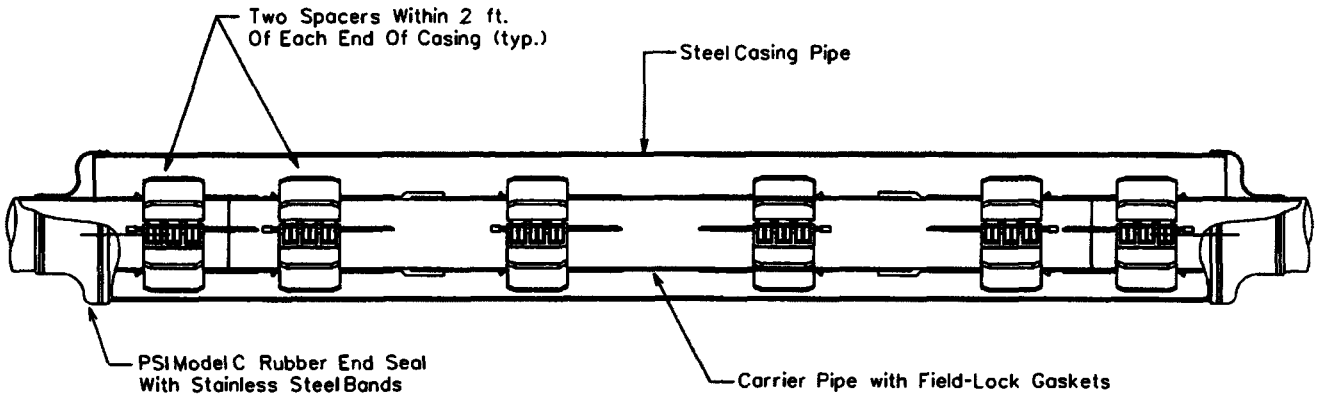

CROSS SECTION

The casing spacers shall be the PSI Ranger II Casing Spacers as manufactured by Pipeline Seal and Insulator, Inc., Houston, Texas.

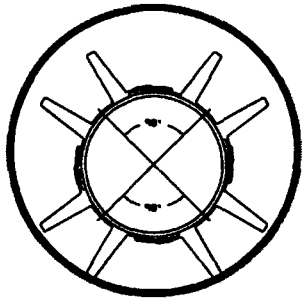

SECTION CUT

End Seals
After insertion of the carrier pipe into the casing, the ends of the casing shall be closed by installing 1/8" thick synthetic rubber end seals equal to the PSI Model "C" end seal as manufactured by Pipeline Seal and Insulator, Inc., Houston, Texas.

NOTE: The Carrier Pipe Shall Be Polywrapped Prior To The Skid Installation & Insertion Into The Carrier Casing For Divisions Requiring Polywrapped Pipe.

OD Push On Joint Bell	OD M.J. BELL
6" - 8.66"	6" - 11.12"
8" - 10.82"	8" - 13.37"
12" - 15.05"	12" - 17.94"
16" - 19.74"	16" - 22.56"
20" - 23.98"	20" - 27.08"
24" - 28.16"	24" - 31.58"
30" - 35.40"	30" - 39.12"
36" - 41.84"	36" - 46.00"
48" - 55.94"	48" - 60.00"

*Thickness Of Skid To Extend A Minimum of ½" Above The O.D. Of The Pipe Bell or Gland.

PIPE SIZE	CASING SIZE	CASING SIZE ID	CASING SCHEDULE	WALL THICKNESS	SKID SIZE
6"	16"	15.25"	STD.	.375	*x4x12
8"	18"	18.25"	STD.	.375	*x4x12
12"	22"	21.25"	STD.	.375	*x4x12
16"	28"	27.25"	STD.	.375	*x4x12
20"	32"	31.25"	STD.	.375	*x4x12
24"	36"	35.25"	STD.	.375	*x4x12
30"	48"	47.25"	STD.	.375	*x4x12
36"	54"	53.25"	STD.	.375	*x4x12
48"	66"	65.25"	STD.	.375	*x4x12

ARIZONA WATER COMPANY

STANDARD SPECIFICATION
FOR THE INSTALLATION OF

TYPICAL WATER LINE ENCASEMENT

DRAWN BY:	APPROVED BY:	DATE:	△	
CB		3/20/1996	09.27.2006	E-9-24-1

CALCIUM HYPOCHLORITE TABLET CHLORINATOR FEEDER SPECIFICATIONS

SCOPE - This specification describes a ARCH Chemicals Calcium Hypochlorite Tablet Chlorination System as manufactured by ARCH Chemicals, 501 Merritt Seven, P.O. Box 5204, Norwalk, CT, 06856-5204.

DESCRIPTION - The chlorination system shall be completely assembled, ready to install. The chlorination system shall be a ARCH Chemicals Calcium Hypochlorite Tablet Feeder, or its equivalent, and shall be supplied with all its components factory mounted.

COMPONENTS - The Chlorination system shall have the following components:
- A. 1-½" ARCH Chemical solid calcium hypochlorite tablet feeder
- B. Polyethylene system enclosure
- C. Integrated, level controlled solution tank
- D. Adjustable flow control valve
- E. Manual on/off valve (at inlet)
- F. Chemical metering pump
- G. On/off pump control switch
- H. Waterproof electrical junction box
- I. Corrosion resistant schedule 40 piping
- J. Reverse flow check valves
- K. Total solution output control valve

ELECTRICAL FIXTURES - The following electrical fixtures shall be provided:
- A. Safety switch, 2 pole, fused for 30 Amps, for 120 Volts, 60 cycle, single phase power.

CHLORINATOR DESIGN - The chlorination facility shall be designed and constructed in accordance with Arizona State Department of Health Engineering Bulletin Number 8 - "Disinfection of Water Systems". Latest Revision.

CHLORINATION EQUIPMENT - The chlorination equipment shall be a ARCH Chemicals Calcium Hypochlorite tablet chlorinator, approved by NSF Standard 61.

CHLORINATOR OPERATION - The chlorination facility shall be operated in accordance with Arizona State Department of Health Engineering Bulletin Number 8, "Disinfection of Water Systems", Table 1. latest revision.

CHLORINATOR SYSTEM DESCRIPTION - ARCH Chemicals tablet chlorinator systems incorporate a patented chlorinator which is designed to utilize ARCH Chemicals 1-½" solid calcium hypochlorite tablets (Approved NSF Standard 60). Meets AWWA Standard B-300, EPA Registration # 1258-1179.The chlorinator is mounted on a polyethylene system enclosure. The inlet water is sprayed on the calcium hypochlorite tablet and collected in a solution tank. This chlorinated solution is then pumped out of the tank through a chemical metering pump. This metering pump is then adjusted to obtain the desired CL residual.

ARCH Chemicals Calcium Hypochlorite Tablet Chlorinator

NTS

HYPOCHLORINATOR COMPONENTS:

1. Chemical Metering Pump
2. Pump Suction Connection
3. Pump Discharge Connection
4. Inlet Water Assembly
5. Inlet Water Solenoid Valve
6. Inlet Shut-Off Valve
7. Inlet Pressure Regulator
8. Inlet Water Pressure Gauge
9. Spray Nozzle Water Pressure Gauge
10. Inlet Strainer
11. Inlet Tubing Connection
12. Dry Chemical Hopper
13. Suction Line
14. Electrical Control Box With Power On/Off
15. Electric Mixer
16. Solution Discharge Connection
17. Tank Drain Valve
18. Observation Port
19. Mixed Chemical Holding Tank
20. Pressure Relief Valve
21. Pump Speed Control
22. High Level Shut-Off Float Switch
23. Water Spray Nozzles

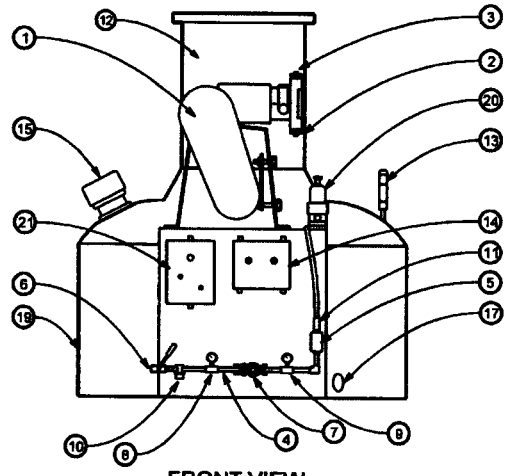

FRONT VIEW

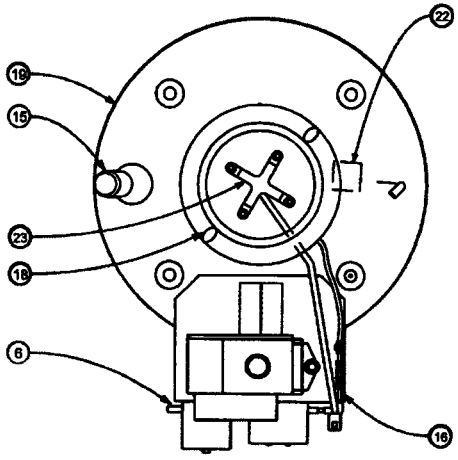

TOP VIEW

HOPPER REMOVED FOR CLARITY

Chlorinator Fluid Schematic

NTS

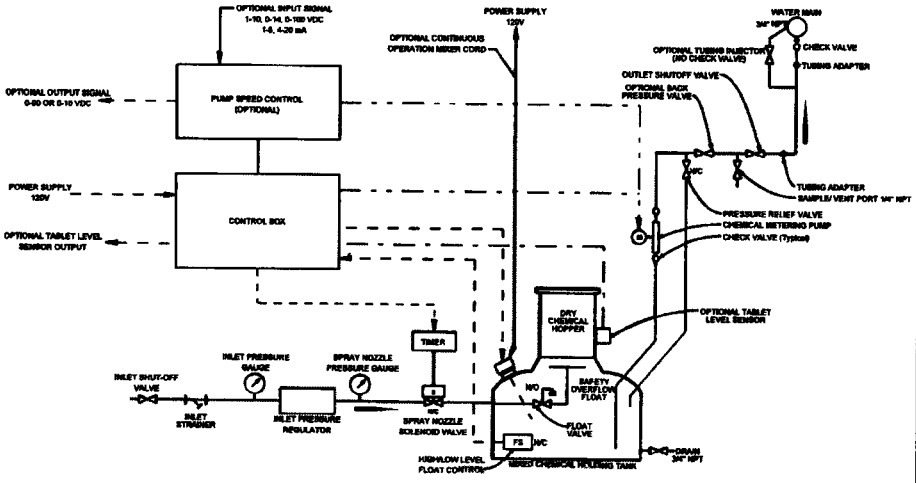

ARIZONA WATER COMPANY

STANDARD SPECIFICATION

FOR THE INSTALLATION OF

CALCIUM HYPOCHLORITE TABLET CHLORINATOR

DRAWN BY:	APPROVED BY:	DATE:		
CB	MW	02-09-2000	△	E-9-25-1

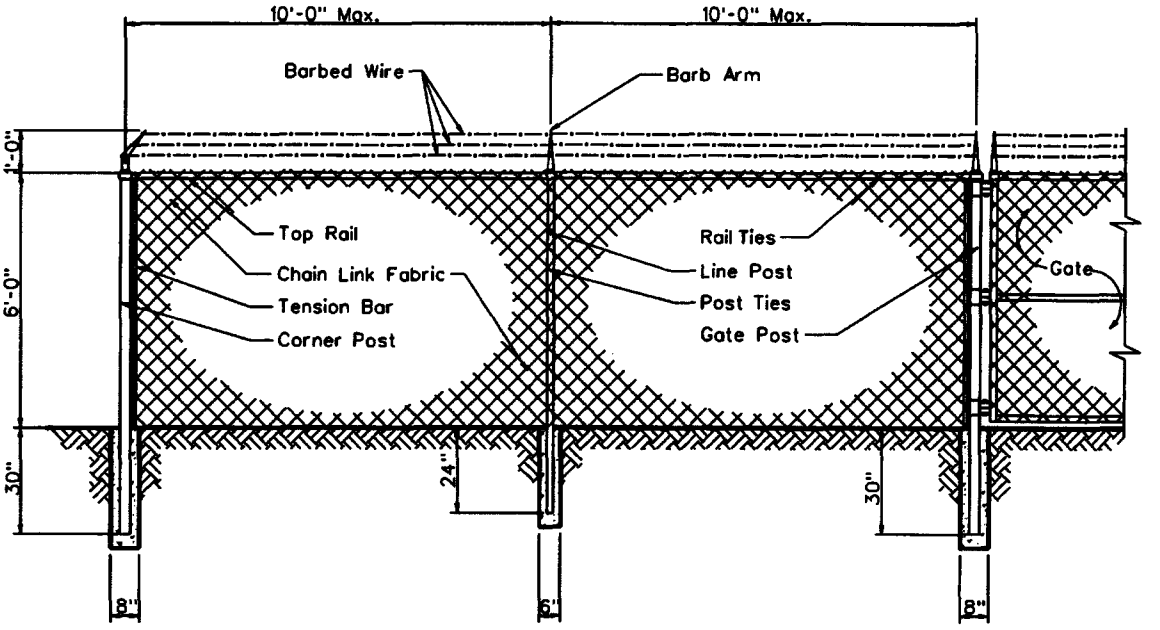

Line Post:	1-7/8" O.D.	1.74 lbs. P/L.F.	ASTM A-256
End Post:	2-7/8" O.D.	4.64 lbs. P/L.F.	ASTM A-256
Corner Post:	2-7/8" O.D.	4.64 lbs. P/L.F.	ASTM A-256
Gate Post:	2-7/8" O.D.	4.64 lbs. P/L.F.	ASTM A-256
Top Rail:	1-5/8" O.D.	4.64 lbs. P/L.F.	ASTM A-256
Chain Link Fabric:	9 Ga. 2" Mesh Galv. Before Weave		
Selvage:	Barb/Knuckle		
Fittings:	Pressed Steel		
Barb Wire:	2-1/2 Ga./2 Point		
Barb Arm:	1 Piece/45° Arm		
Tension Wire:	9 Ga./Galv.		
Line Post Set:	6"x24" In Concrete		
Terminal Post Set:	8"x30" In Concrete		

ARIZONA WATER COMPANY

STANDARD SPECIFICATION
FOR THE INSTALLATION OF

CHAIN LINK FENCE

DRAWN BY:	APPROVED BY:	DATE:		
CCO	MW	7/7/1992	△ 2/9/2001	E-9-26-1

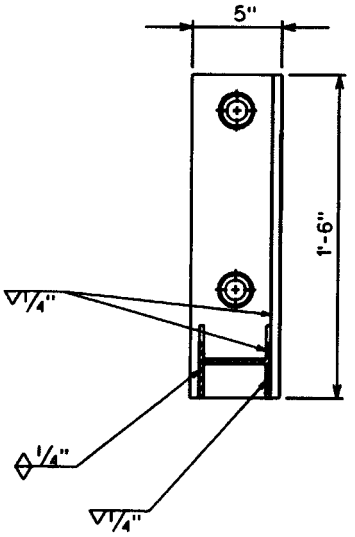

SECTION X-X

NOTES

1. Minimum 2 Supports Per Joint Of Pipe.
2. All Bolts Shall Have A Lock Washer Under The Nut.
3. All Nuts Shall Be Stainless Steel Series 304.

PIPE SIZE	A	B
8"	8"	15"
10"	9"	17"
12"	10"	19"

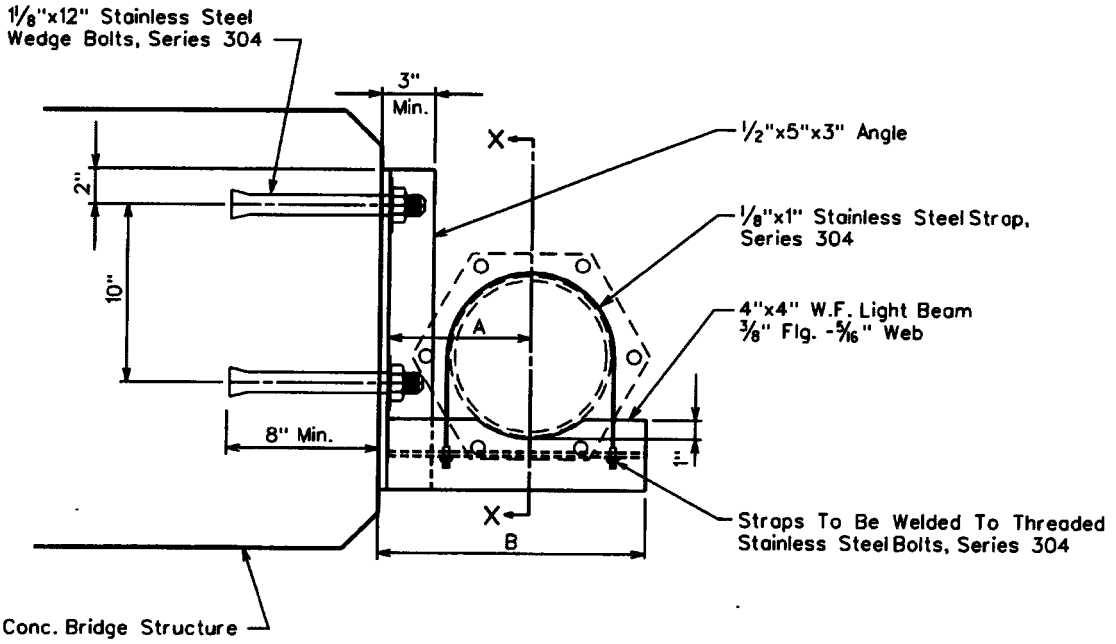

SUSPENSION DETAIL

ARIZONA WATER COMPANY

STANDARD SPECIFICATION
FOR THE INSTALLATION OF

SIDE HUNG WATER LINE SUSPENSION

DRAWN BY:	APPROVED BY:	DATE:		
JPK	MJW	7-12-96	△	E-9-27-1

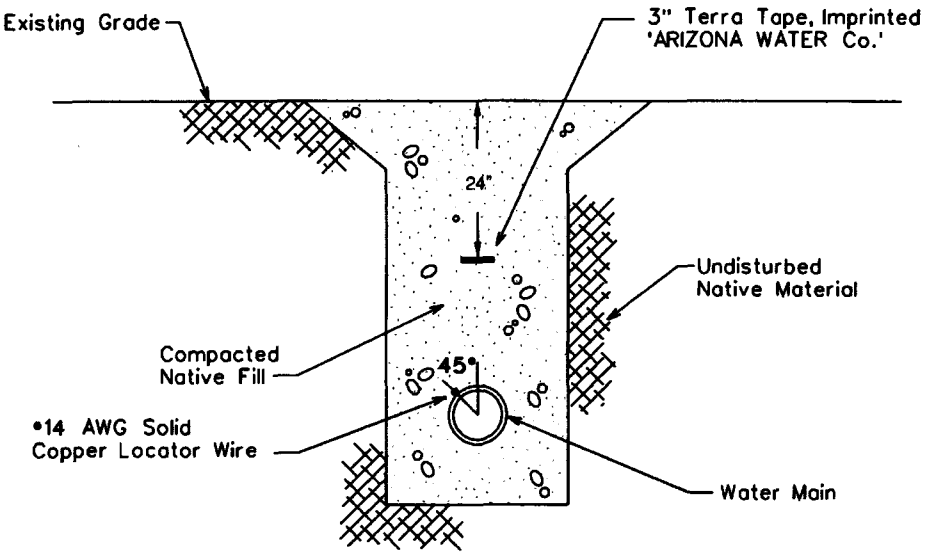

TYPICAL WATER TRENCH DETAIL

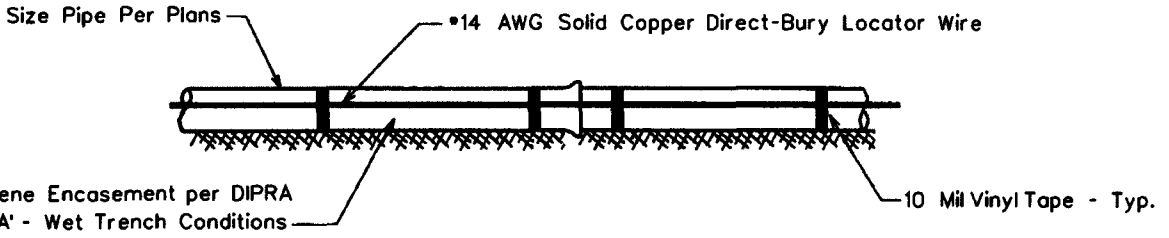

TYPICAL PROFILE VIEW

WIRE GENERAL NOTES:

1. All pipe shall have •14 AWG Solid Copper Direct-Bury Locator Wire Installed Directly To The Polywrap At 45° From The Vertical Center Of The Pipe and Shall Be Attached Using 10 Mil Vinyl Tape.
2. The Locating Wire Shall Terminate At the Top Of Each Valve Box and Be Capable of Extending 12" Above the Top Of The Box In Such A Manner So As Not To Interfere With Valve Operation.

TAPE GENERAL NOTES:

1. Use Terra Tape 3" Marking Tape As Manufactured By Reef Industries Inc. Of Houston, Texas (1-800-231-2417)
2. The Tape Is Blue & Imprinted 'ARIZONA WATER Co.'
3. INSTALLATION: The Pipe Warning Tape Shall Be Installed Over All Water Mains And Shall Be Buried 24 Inches Below The Surface Over The Center Of The Pipe.
   A) The Backfill Shall Be Sufficiently Leveled So That The Tape Is Installed On A Flat Surface.
   B) The Tape Shall Be Centered In The Trench With The Printed Side Up.
   C) Care Shall Be Exercised To Avoid Movement Of The Tape While The Remaining Backfill Is Moved Into The Trench.

ARIZONA WATER COMPANY

STANDARD SPECIFICATION
FOR THE INSTALLATION OF

PIPE WARNING TAPE AND LOCATOR WIRE

DRAWN BY:	APPROVED BY:	DATE:		
CB		03.24.1997	△09.27.2006	E-9-28-1

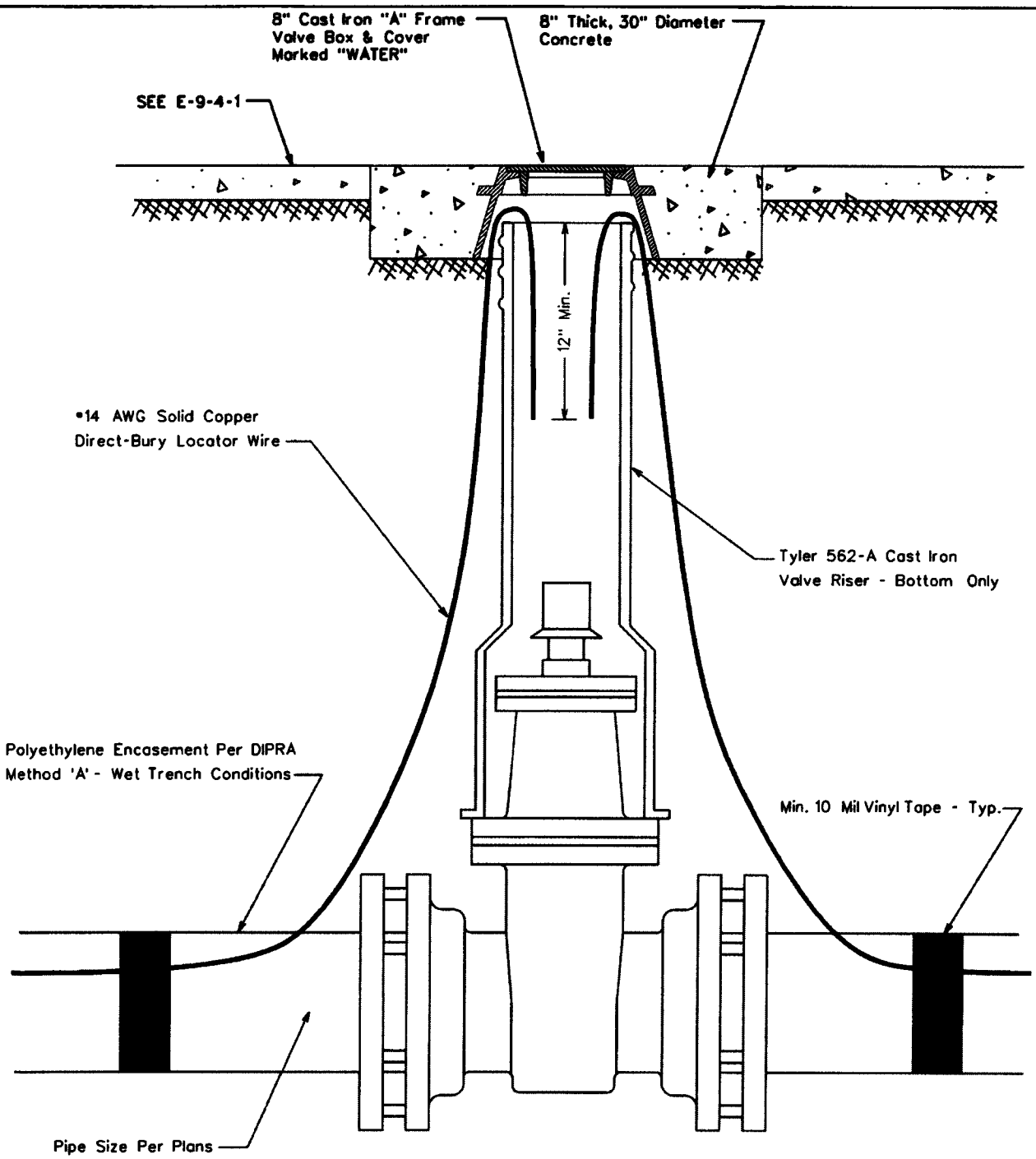

ARIZONA WATER COMPANY

STANDARD SPECIFICATION
FOR THE INSTALLATION OF

LOCATOR WIRE TERMINATION

DRAWN BY:	APPROVED BY:	DATE:		
CB		09.27.2006	△	E-9-28-2

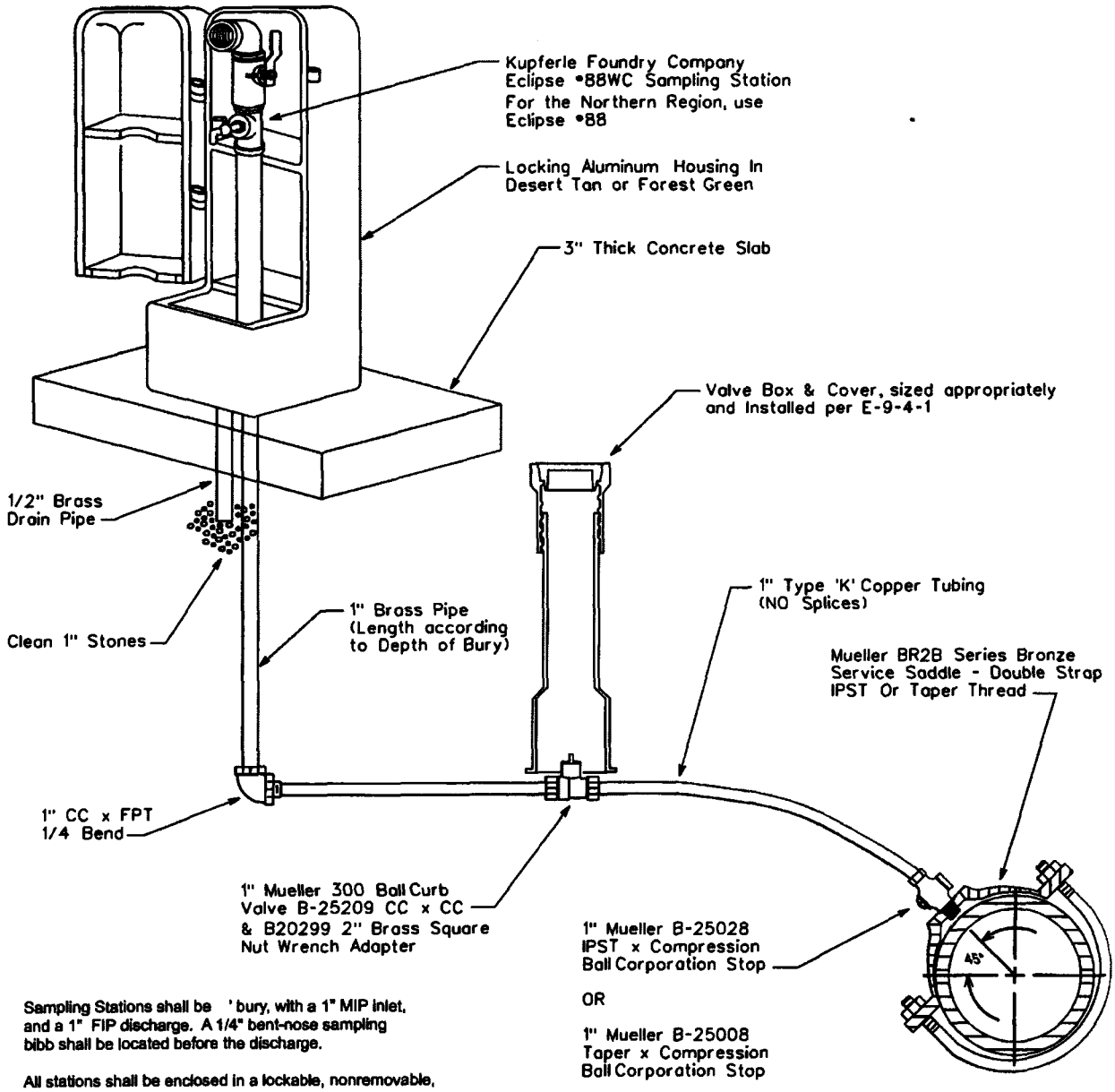

Sampling Stations shall be 'bury, with a 1" MIP inlet, and a 1" FIP discharge. A 1/4" bent-nose sampling bibb shall be located before the discharge.

All stations shall be enclosed in a lockable, nonremovable, aluminum-cast housing.

When opened, the station shall require no key for operation, and the water will flow in an all brass waterway.

All working parts will be of brass and serviceable from above ground with no digging. (OPTIONAL: if desired, a 1/2" brass drain tube will be provided within the locking cover).

A 1" ball valve will control the water flow, and be located before (or after) the sampling bibb, as manufactured by Kupferle Foundry, St. Louis, MO 63102.

SADDLE TAP TO CA, PVC, OR DI PIPE

NOTE: The minimum distance between taps on mains other than ductile iron is 12"

Pipe Depth Per
E-8-1-2, Item 3.

ARIZONA WATER COMPANY

STANDARD SPECIFICATION
FOR THE INSTALLATION OF

SAMPLING STATION

DRAWN BY:	APPROVED BY:	DATE:		
CB	MW	01.24.2007	△	E-9-29-1

ENCASEMENT FOR PIPE CROSSING

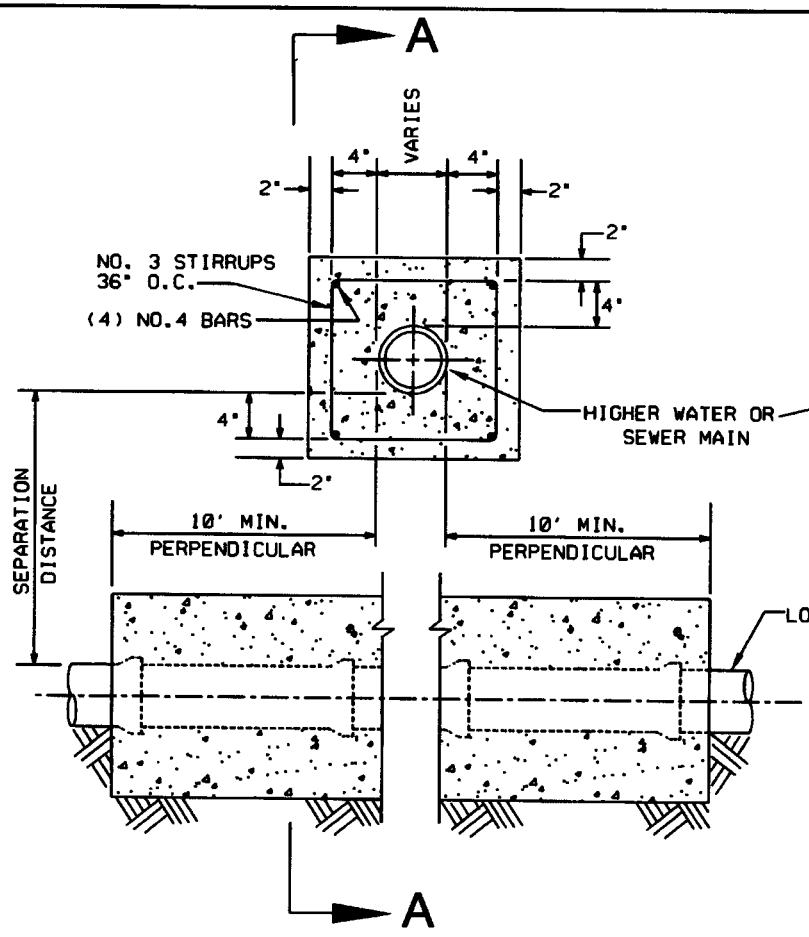

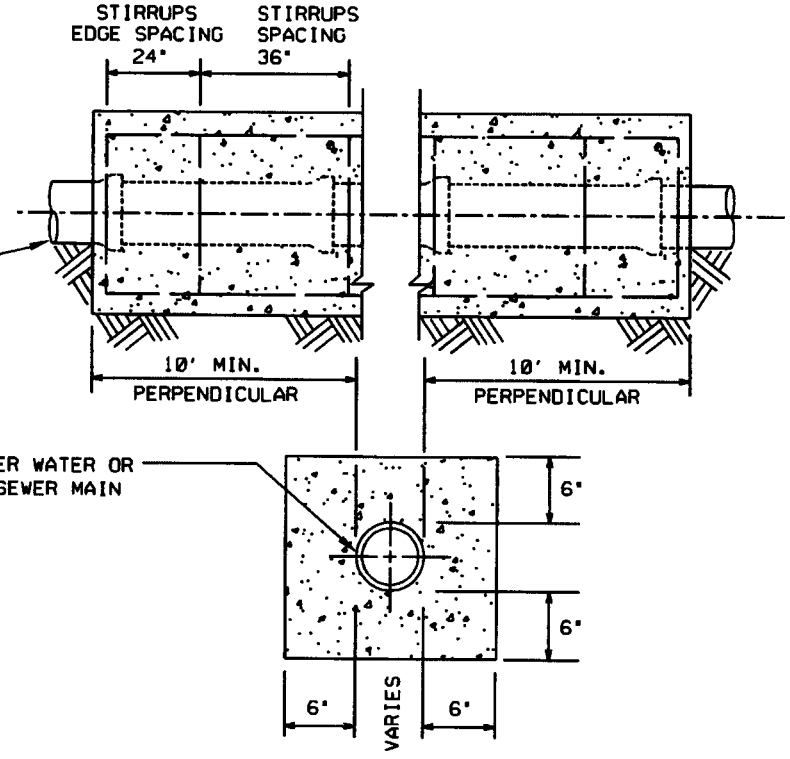

SECTION A-A

NOTES:

1. 2,000 PSI CONCRETE
2. SEPARATION DISTANCES AND/OR OTHER EXTRA PROTECTION SHALL BE REQUIRED TO PROTECT WATER MAINS FROM CONTAMINATION BY SANITARY SEWER MAINS. SEE AWC STANDARD SPECIFICATION PAGES E-8-1-9 AND E-8-1-10.
3. SEE CROSS SECTION DETAIL FOR LIMITS OF SEPARATION/EXTRA PROTECTION. ALL DISTANCES ARE MEASURED PERPENDICULARLY FROM THE OUTSIDE OF THE PIPES.
4. RECLAIMED WATER SHALL BE CONSIDERED A SANITARY SEWER WHEN PLACED NEXT TO A POTABLE WATER MAIN.

ARIZONA WATER COMPANY

STANDARD SPECIFICATION
FOR THE INSTALLATION OF
WATER AND SANITARY SEWER
SEPARATION/PROTECTION

DRAWN BY:	APPROVED BY:	DATE:	△	
CB	JW	04.07.2008		E-9-30-1

NOTES:

1. 2,000 PSI CONCRETE

2. SEPARATION DISTANCES AND/OR OTHER EXTRA PROTECTION SHALL BE REQUIRED TO PROTECT WATER MAINS FROM CONTAMINATION BY SANITARY SEWER MAINS. SEE AWC STANDARD SPECIFICATION PAGES E-8-1-9 AND E-8-1-10.

3. SEE CROSS SECTION DETAIL FOR LIMITS OF SEPARATION/EXTRA PROTECTION. ALL DISTANCES ARE MEASURED PERPENDICULARLY FROM THE OUTSIDE OF THE PIPES.

4. RECLAIMED WATER SHALL BE CONSIDERED A SANITARY SEWER WHEN PLACED NEXT TO A POTABLE WATER MAIN.

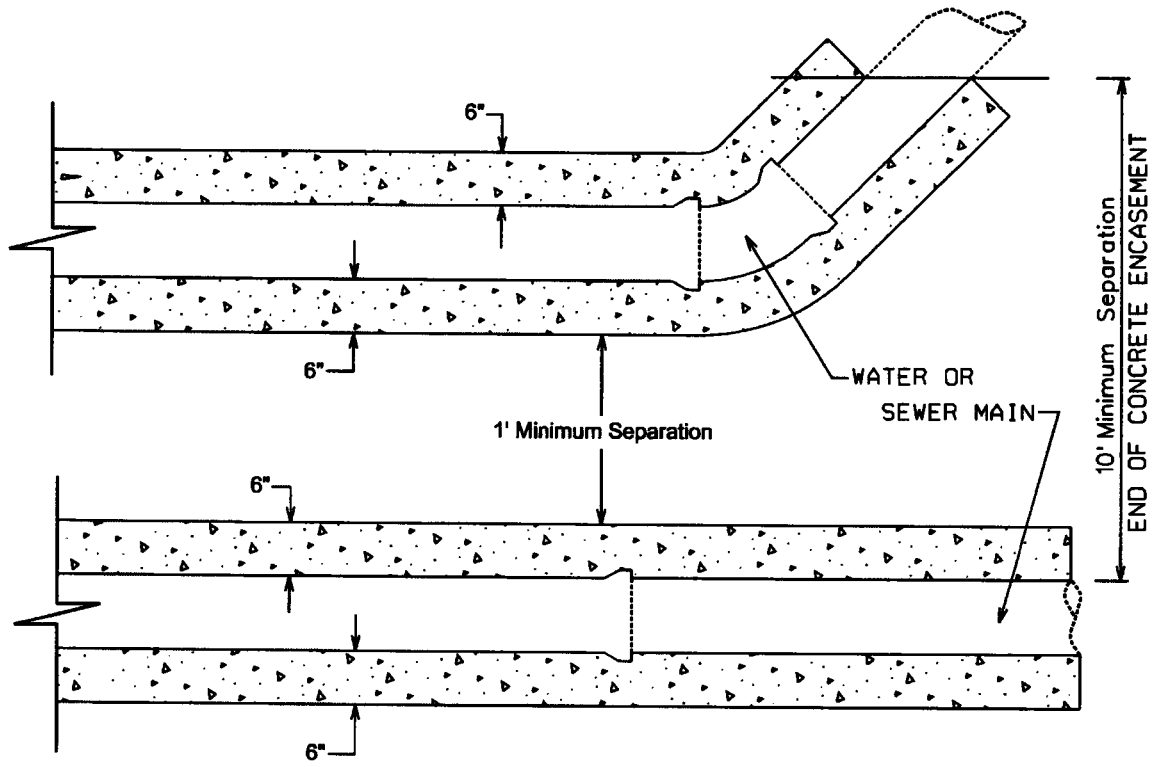

PLAN VIEW

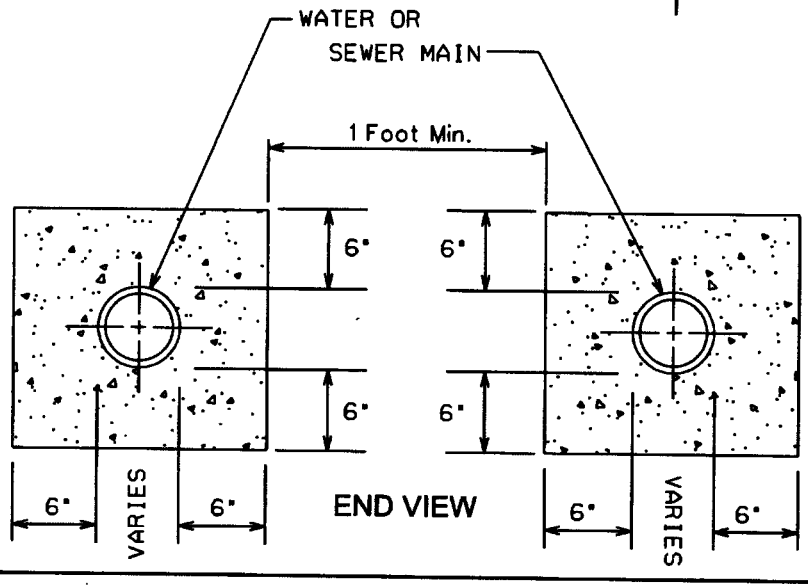

END VIEW

ENCASEMENT FOR PARALLEL PIPES

ARIZONA WATER COMPANY

STANDARD SPECIFICATION
FOR THE INSTALLATION OF
WATER AND SANITARY SEWER SEPARATION/PROTECTION

DRAWN BY:	APPROVED BY:	DATE		
CB	JW	04.07.2008	△	E-9-30-2

ENGINEERING SERVICES

Configuration, RTU Application Software (Globe Miami): $9,600
The System Engineer will configure the RTU application according to the system requirements.

Integration, On-site at Customer Location (Globe Miami): $8,850
· Test communications between RTUs
· Test and Debug as needed
· Obtain signoff and acceptance

Configuration, RTU Application Software (Lakeside): $4,800
The System Engineer will configure the RTU application according to the system requirements.

Integration, On-site at Customer Location (Lakeside): $4,065
· Test communications between RTUs
· Test and Debug as needed
· Obtain signoff and acceptance

Configuration, RTU Application Software (Heber): $4,800
The System Engineer will configure the RTU application according to the system requirements.

Integration, On-site at Customer Location (Heber): $4,665
· Test communications between RTUs
· Test and Debug as needed
· Obtain signoff and acceptance

Configuration, RTU Application Software (Superior): $4,800
The System Engineer will configure the RTU application according to the system requirements.

Integration, On-site at Customer Location (Superior): $2,900
· Test communications between RTUs
· Test and Debug as needed
· Obtain signoff and acceptance

Configuration, RTU Application Software (Sedona): $9,600
The System Engineer will configure the RTU application according to the system requirements.

Integration, On-site at Customer Location (Sedona): $6,275
· Test communications between RTUs
· Test and Debug as needed
· Obtain signoff and acceptance

Configuration, RTU Application Software (Bisbee): $9,600
The System Engineer will configure the RTU application according to the system requirements.

Integration, On-site at Customer Location (Bisbee): $4,665
· Test communications between RTUs
· Test and Debug as needed
· Obtain signoff and acceptance

Configuration, RTU Application Software (Casa Grande): $9,600
The System Engineer will configure the RTU application according to the system requirements.

0001	V118	ADD: 4 AO MODULE	$ 495.00	$ 495.00
0001	V261	ADD: AC PS 85-264 V WITH BATTERY CHARGER	$ 310.00	$ 310.00
0001	V114	ADD: 6.5 AH BACKUP BATTERY	$ 140.00	$ 140.00
0001	GD3572-16DI/FET	16 DI/DO FET I/O Interface Kit (16DI)	$ 255.00	$ 255.00
0001	GD3572-16DO	16 DO I/O Interface Kit	$ 650.00	$ 650.00
0001	GD3572-4AO	4 AO I/O Interface Kit	$ 255.00	$ 255.00

Sedona: $ 22,890.00

Note: Rancho Rojo Well, Sedona Golf Course Resort Tank, Sedona Golf Course Resort Well were previously quoted under a different project

QTY	Part No	Description	Unit Price	Extended
0010	GD5188	Lo Power Replacement Radio Kits (Southwest Center Well #8, Rainbow Well #6, Williams Well #7, Harmony High Park Tank, Valley Vista #13, Rimrock Well #2, Montezuma Haven Well #3, Montezuma Hills Tank, Rim Well #1, Harmony Well)	$ 450.00	$ 4,500.00
0010	FRN5907	DPSK BOARD (Southwest Center Well #8, Rainbow Well #6, Williams Well #7, Harmony High Park Tank, Valley Vista #13, Rimrock Well #2, Montezuma Haven Well #3, Montezuma Hills Tank, Rim Well #1, Harmony Well)	$ 180.00	$ 1,800.00
0001	GD2421	Electrical Install	$ 5,655.00	$ 5,655.00

0001	F7563	ACE3600 WITH CDM750 136-174 MHZ (Office)	$ 1,850.00	$ 1,850.00
0001	V103	ADD: 3 I/O SLOTS FRAME	$ 70.00	$ 70.00
0001	V228	ADD: 50X50 CM PAINTED METAL HOUSING	$ 300.00	$ 300.00
0001	V224	ADD: HOUSING TAMPER SWITCH	$ 40.00	$ 40.00
0001	V480	ADD: 16 DO / DI FET	$ 250.00	$ 250.00
0001	V118	ADD: 4 AO MODULE	$ 495.00	$ 495.00
0001	V261	ADD: AC PS 85-264 V WITH BATTERY CHARGER	$ 310.00	$ 310.00
0001	V114	ADD: 6.5 AH BACKUP BATTERY	$ 140.00	$ 140.00
0001	GD3572-16DI/FET	16 DI/DO FET I/O Interface Kit (16DI)	$ 255.00	$ 255.00
0001	GD3572-4AO	4 AO I/O Interface Kit	$ 255.00	$ 255.00

0002	F7563	ACE3600 WITH CDM750 136-174 MHZ (Wickiup Mesa Tank, Pinewood Tank)	$ 1,850.00	$ 3,700.00
0002	V103	ADD: 3 I/O SLOTS FRAME	$ 70.00	$ 140.00
0002	V228	ADD: 50X50 CM PAINTED METAL HOUSING	$ 300.00	$ 600.00
0002	V245	ADD: 16DI 4DO EE 4AI +/-20MA	$ 430.00	$ 860.00

0002	V261	ADD: AC PS 85-264 V WITH BATTERY CHARGER	$ 310.00	$ 620.00
0002	V114	ADD: 6.5 AH BACKUP BATTERY	$ 140.00	$ 280.00
0002	GD3572-Mixed	Mixed I/O Interface Kit	$ 385.00	$ 770.00

Bisbee: $ 15,341.00

QTY	Part No	Description	Unit Price	Extended
0009	GD4378	Hi Power Replacement Radio Kits (Tintown, Greaves Well, Stuart Pump Station, Fuller, Village Meadows, Sulger, Tombstone Canyon Tank, Spring Canyon Tank, Bisbee Office)	$ 733.00	$ 6,597.00
0003	GD6266	Radio Reprogramming (Tintown Booster, Naco, Tintown Tank)	$ 95.00	$ 285.00
0012	FRN5708	DPSK BOARD (Tintown, Greeves Well, Stuart Pump Station, Fuller, Village Meadows, Sulger, Tombstone Canyon Tank, Tintown Booster, Naco Tintown Tank, Spring Canyon Tank, Bisbee Office FIU)	$ 207.00	$ 2,484.00
0001	GD2421	Electrical Install	$ 2,625.00	$ 2,625.00

0001	F7563	ACE3600 WITH CDM750 136-174 MHZ (Naco MDLC (Formerly Intrac))	$ 1,850.00	$ 1,850.00
0001	V103	ADD: 3 I/O SLOTS FRAME	$ 70.00	$ 70.00
0001	V228	ADD: 50X50 CM PAINTED METAL HOUSING	$ 300.00	$ 300.00
0001	V508	ADD: 8 DO EE RELAY 2A	$ 260.00	$ 260.00
0001	V261	ADD: AC PS 85-264 V WITH BATTERY CHARGER	$ 310.00	$ 310.00
0001	V114	ADD: 6.5 AH BACKUP BATTERY	$ 140.00	$ 140.00
0001	GD3572-8DO	8 DO I/O Interface Kit	$ 420.00	$ 420.00

Casa Grande: $ 24,705.00

QTY	Part No	Description	Unit Price	Extended
0005	GD5188	Lo Power Replacement Radio Kits (Casa Grande Tank, North Park Tank, Pinal Booster Pump Site, Well 27, Well 29)	$ 450.00	$ 2,250.00
0003	GD6266	Radio Reprogramming (Stanfield Tank, Table Top, Tierra Grande Tank (spare))	$ 95.00	$ 285.00
0007	FRN5907	DPSK BOARD (Casa Grande Tank, North Park Tank, Pinal Booster Pump Site, Stanfield Tank, Table Top, Well 27, Well 29)	$ 180.00	$ 1,260.00
0001	GD2421	Electrical Install	$ 6,650.00	$ 6,650.00

0001	F7563	ACE3600 WITH CDM750 136-174 MHZ (Scott Drive Booster Station)	$ 1,850.00	$ 1,850.00
0001	V103	ADD: 3 I/O SLOTS FRAME	$ 70.00	$ 70.00
0001	V228	ADD: 50X50 CM PAINTED METAL HOUSING	$ 300.00	$ 300.00
0001	V245	ADD: 16DI 4DO EE 4AI +/-20MA	$ 430.00	$ 430.00

TERMS

1. Validity of quotation: This quotation is valid for 30 days, and is based on the information provided to us at the time of quotation. We are not responsible for incorrect or missing information. New information provided to us after the quotation is generated may result in a revised quotation containing additional products or services required.
2. Delivery date: Delivery dates are not guaranteed. Orders are generally delivered in the most expeditious manner possible. A planned delivery schedule will be provided upon order placement. Change orders placed subsequent to the original PO may delay delivery.
3. Order placement: We reserve the right to reject orders that do not contain all quoted products and services except those items indicated in the optional products and services section. For radio programming, please provide radio frequencies at the time of order placement.
4. Invoicing: Orders are invoiced only when they are ready for delivery. The only exception to this policy is when the customer requests early billing.
5. Payment: 100% payment is due within 30 days of the invoice date. Invoices not paid within 30 days are subject to interest at the rate of 1.5% monthly, and your placement on COD basis for future orders. Early pay discount is not available.
6. Payment method: We accept payment by bank transfer (ACH), Check, and Cards (Visa and MasterCard only). Card payments must be processed on the same date that the invoice is generated. Payments made after the invoice date can be made only via ACH or Check.
7. New Customers: Credit application and references required for all new customers. Alternatively, you may pay by one of the payment methods above on the date of order delivery.
8. Shipment FOB: Global Data Specialists, 1815 W 1st Ave, Suite 110, Mesa, AZ. For Dataradio drop-shipped orders shipment FOB is CalAmp, Waseca, MN.
9. Shipping charges: If the quotation includes shipping, handling or delivery fees, it is only an estimate. Actual shipping charges will be determined only at the time of order shipment.
10. Taxes: Applicable sales taxes will be added to all orders unless a valid tax exemption certificate is presented at the time of order placement.
11. Warranty is specific to the policies of each respective OEM (Original Equipment Manufacturer). No additional warranties are expressed or implied. Please contact us for all warranty and non-warranty repairs with the exception of Dataradio. For Dataradio warranty and non-warranty repairs, call 800-992-7774 x6707. Warranty service includes standard depot repair only, and does not include shipping charges or service calls to remove, repair or reinstall equipment. Emergency repair and swap service costs extra and is subject to parts availability. Warranty labor includes direct in-house labor costs only. If warranty service requires our personnel to travel out of our office, additional time and materials charges will be invoiced separately.
12. Order cancellation: The following order cancellation charges shall apply:

..... Prior to 30 days of planned delivery date: 25% of the quoted amount shall be invoiced.
..... Less than 30 days of planned delivery date: 50% of the quoted amount shall be invoiced.
..... After order is ready for delivery: 100% of the quoted amount shall be invoiced.

13. Contractors: At our discretion, we will file a pre-lien when required. Please provide full project name and number, project location, and General Contractor and owner information at the time of order placement.
14. Delinquent pick up: You will be notified when the order is ready for pick up. Orders not picked up within 7 days of notification date are subject to storage fees of $25 per unit per day.

GLOBAL
DATA SPECIALISTS

1815 W. First Ave., Suite 110, Mesa, AZ 85202
Phone: 480-461-3401 FAX: 480-461-3411

QUOTE: **MDM04063C** **September 27, 2011**
by Duane Moody
480-461-3401, Ext. 223, duane@gbl-data.com
Expires 26-Dec-11

Quoted To: **Mike Loggins, James Wilson, Andy Haas**

Arizona Water
3805 N. Black Canyon Hwy.
Phoenix, AZ 85015
Phone: 602-240-6860
FAX: 602-240-6878

End User: **Arizona Water System, Narrow Band Upgrade**

Description

Global Data Specialists is pleased to provide you with the following Budgetary quotation for the Narrow Banding Upgrade for your Motorola SCADA system.

The quote includes any installation/electrical charges associated with installing any new ACE3600 RTU's and the removal of old equipment.

Engineering services are also included for the reprogramming of the RTU's as needed.

Electrical Installation Scope of Work

A. Furnish control technician to de-terminate all associated field wiring to existing Motorola RTU.
B. Vacuum and wipe down cabinet (where applicable) for new RTU.
C. Install new Motorola RTU, provided by Global Data Specialists.
D. Reconnect existing wiring to new RTU and label.
E. Test signals back to new RTU and verify functionality.
F. Scope is typical for multiple locations.

1. Permitting, Construction, and Demolition
a. All work performed will conform to NEC requirements and requirements of the Authorities having Jurisdiction to assure a code compliant facility.
b. Demolish and dispose of existing equipment and materials in accordance with approved drawings.
c. Furnish trash containers and sanitary facilities so as to provide a clean and sanitary work site.
d. Provide grounding, lighting, power distribution, and instrumentation construction services in accordance with approved plans and specifications.

2. Exclusions and Clarifications
a. Proposal is based on re-using existing wiring and devices.
b. Delays or additional work that are found as a result of existing field conditions, may require a change order.
c. Only work, equipment, and materials explicitly stated in this document are part of this proposal. Electrician accepts the responsibility for the coordination and furnishing of small and incidental equipment and services normally associated with this type of work and for coordination with other disciplines. Any additional significant equipment, materials, or services will be furnished only upon execution of a change order.
d. All other equipment and services not specifically mentioned in this scope of work nor defined above shall be the responsibility of others.
e. This proposal is based upon electrician executing their work in reasonable coordination with other disciplines and entities. Additional electrician costs due to significant or extraordinary delays by others will be grounds for change orders.

3. Taxes and Freight
a. Taxes are not included in this proposal. Upon request, electrician will furnish an estimate of taxes for this work. Owner to furnish electrician with tax exempt information.
b. Unless noted differently, this proposal includes freight cost for delivery of electrician manufactured products to the project site.
c. Unless noted differently, freight cost for equipment shipped FOB manufacturer's facility or FOB port-of-entry is not included in this proposal.

4. Warranty:
a. The warranty period for electrician manufactured electrical and control equipment is 18 months from ship date or 12 months from startup date. During this period, electrician will repair or replace at no cost to owner any failed component or system.
b. Unless noted differently, electrician will honor a manufacturer's warranty for all purchased equipment and will coordinate with the manufacturer to repair or replace the equipment in accordance with the manufacturer's warranty.
c. The electrician warranty covers only electrician furnished equipment and explicitly excludes all costs of lost production, loss of facility availability, and any and all other incidental costs.
d. Electrician will make every effort to honor the warranty in a timely manner. Delays in getting parts or equipment from manufacturers may affect the time to implement repairs or replacement.

If you have any questions or need additional information please let me know.

Also please note that tax and shipping has not been included in this proposal.

Best Regards,

Duane Moody
Sales Manager

ENGINEERING SERVICES

Configuration, FIU and RTU Applications

'ıe System Engineer will configure the FIU and RTU applications according to the system requirements.

Integration, On-site at Customer Location

- Test communications and operation between OIT and RTU
- Test and Debug as needed
- Conduct operator training on OIT
- Obtain signoff and acceptance

Engineering Services Sub-Total $ 6,525.00

MATERIALS

Office FIU: $ 6,489.00

QTY	Part No	Description	Unit Price	Extended
0001	F7500	ACE3600 SYSTEM TOOL SUITE	$ 500.00	$ 500.00

ACE3600 software tools environment for system building and maintenance. Includes installation CD and RS-232 PC to RTU cable.

0001	GD5677-ACE	ACE3600 RTU/FIU Application Program	$ 2,600.00	$ 2,600.00
)01	F7509	ACE3600 BASIC MODEL NO RADIO	$ 1,150.00	$ 1,150.00
0001	V102	ADD: 2 I/O SLOTS FRAME	$ 50.00	$ 50.00
0001	V228	ADD: 50X50 CM PAINTED METAL HOUSING	$ 300.00	$ 300.00
0001	V118	ADD: 4 AO MODULE	$ 495.00	$ 495.00
0001	V261	ADD: AC PS 85-264 V WITH BATTERY CHARGER	$ 310.00	$ 310.00
0001	V328	ADD: 10 AH BACKUP BATTERY	$ 207.00	$ 207.00
0001	FRN5769	SHARED RADIO INTERFACE	$ 622.00	$ 622.00
0001	GD3572-4AO	4 AO I/O Interface Kit	$ 255.00	$ 255.00

Valley Vista System RTU's: $ 14,428.00

QTY	Part No	Description	Unit Price	Extended
0004	F7563	ACE3600 WITH CDM750 136-174 MHZ	$ 1,850.00	$ 7,400.00

The model default includes CDM750 136-174 MHz radio, radio installation kit, PS 12V DC, CPU3640 ,basic frame (no I/O slots) and plug-in radio port for CPU. Must be ordered with Metal chassis or housing option. CDM750 is only shipped to North America at this time

^004	V102	ADD: 2 I/O SLOTS FRAME	$ 50.00	$ 200.00
0004	V228	ADD: 50X50 CM PAINTED METAL HOUSING	$ 300.00	$ 1,200.00
0004	V245	ADD: 16DI 4DO EE 4AI +/-20MA		

			$ 430.00	$ 1,720.00
0004	V261	ADD: AC PS 85-264 V WITH BATTERY CHARGER	$ 310.00	$ 1,240.00
0004	V328	ADD: 10 AH BACKUP BATTERY	$ 207.00	$ 828.00
0004	FPN1653	ASSEMBLY,POWER SUPPLY,24V PS PLUG IN KIT	$ 75.00	$ 300.00
0004	GD3572-Mixed	Mixed I/O Interface Kit	$ 385.00	$ 1,540.00

OIT Option: $ 1,550.00

QTY	Part No	Description	Unit Price	Extended
0001	GD5370	Operator Interface Terminal: 5.6 inch Graphic HMI with High-Resolution Analog Touchscreen Color TFT Display. Includes 120VAC to 24 VDC power supply (159mmLx 97mmW x 38mmH), Software, 5ft OIT to PLC communications cable, and 5 pack of protective touch screens. Includes mounting hardware.	$ 1,550.00	$ 1,550.00

NOTE: Does not include installation of OIT or power supply, AC power cable/wiring, or power supply to OIT cable/wiring.

Shipping: $ 325.00

QTY	Part No	Description	Unit Price	Extended
0001	GD7336	Federal Express Ground	$ 325.00	$ 325.00

Materials Sub-Total $ 22,792.00

OTALS

Engineering Services	$ 6,525.00
Materials	$ 22,792.00
TOTAL	**$ 29,317.00**

OPTIONAL SERVICES (Not Included in Quote Totals)

Programming and On-Site Integration of OIT $ 5,760.00

The System Engineer will create the OIT Application Program for the levels and pump set point adjustment of the tank site.

On-Site Integration Includes
- Test communications and operation between OIT and RTU
- Test and Debug as needed
- Conduct operator training on OIT
- Obtain signoff and acceptance

Radio Path Survey $ 4,365.00

To conduct a radio path survey at all of the RTU sites in the Sedona system to evaluate and determine radio power requirements and optimal path considerations.

OPTIONAL MATERIALS (Not Included in Quote Totals)

QTY	Part No	Description	Unit Price	Extended
0001	Y1503	Antenna, Gold Anodized Directional Yagi 3 Element 7.1 dB Gain VHF	$ 183.00	$ 183.00
.50-174 MHz)				
0001	RG213	RG213 (Cost Per Foot)	$ 1.15	$ 1.15
0001	FSJ4-50B	1/2" Superflex (Cost Per Foot)	$ 3.58	$ 3.58
0001	GD1555-1	N-Male Connectors (ea) (1/2" Superflex)	$ 25.00	$ 25.00
0001	GD1555-2	N-Male Connectors (ea) (RG213)	$ 6.00	$ 6.00
0001	GDISB50LN-C2	Polyphaser (N-Male to N-Male) with 2ft Pigtail	$ 145.00	$ 145.00
0001	FG1683	Antenna, Fiberglass Omnidirectional 3 dB Gain VHF	$ 185.00	$ 185.00
0001	FM2	Mounting Bracket, Heavy Duty for Omni Fiberglass Base Antenna	$ 30.00	$ 30.00

Optional Wall Mount Housing for OIT and RTU (Includes mounting of OIT and RTU within enclsoure.: $ 4,642.00

QTY	Part No	Description	Unit Price	Extended
0001	GD3612	Lamax SST Housing (36x24x12), NEMA 4 Wall Mount (Painted Steel) with cutout for OIT. Includes installation and cabling of ACE3600 and OITas well as installation of the I/O interface kit. AC wiring to the OIT power supply is not included.	$ 4,242.00	$ 4,242.00

If this option is purchase, (1) V228 50x50cm housing can be deducted from the ACE3600 configuration. A V056 option \DD: 48 X 48 CM METAL CHASSIS, $100) will need to be substituted for the V228 option.

0001	GD7336	Shipping	$ 400.00	$ 400.00

TERMS

NOTE 1: Quote does not include shipping.
NOTE 2: Quote does not include taxes.

Payment:..... 100% Upon Receipt of Invoice, Net 30 Days. 1% discount if payment is received Net 15. We also accept Visa, Master Card, and American Express.
Delivery:..... TBD Upon Order Placement
Validity: ..... Quotation is valid for 90 days. The above quotation is based upon the information provided at the time of quotation. Global Data Specialists is not responsible for any information that is missing or incorrect. Any new information that is received after the quotation has been submitted may result in a revised quotation being issued to cover the costs of additional equipment or services as identified.
Shipment:..... Global Data Specialists, Mesa, AZ.
Warranty: ..... The Motorola equipment is warranted for 1 year upon shipment for parts and labor. Non-Motorola equipment warranties are vendor specific and will apply. No additional warranties are expressed or implied. Warranty labor does not include the cost associated with any out of the office related travel or hourly time expenses and will be billed separately.
Cancellation:.... 10% Penalty prior to 30 days of shipment, 25% Penalty less than 30 days prior to shipment.
Note: ..... Please reference quotation number on all correspondence.

GLOBAL
DATA SPECIALISTS

1815 W. First Ave., Suite 110, Mesa, AZ 85202
Phone: 480-461-3401 FAX: 480-461-3411

QUOTE: **MDM03931C** **June 09, 2011**
by Duane Moody
480-461-3401, Ext. 223, duane@gbl-data.com
Expires 07-Sep-11

Quoted To: **Andy Haas**
Email: ahaas@azwater.com

Arizona Water
3805 N. Black Canyon Hwy.
Phoenix, AZ 85015
Phone: 602-240-6860
FAX: 602-240-6878

End User: **Valley Vista System**

Description

Global Data Specialists is pleased to provide you with the following BUDGETARY quotation for the Sedona system as per your request. The quote includes as follows:

Replacing the RTUs communicating Intrac protocol at the Sedona Golf Course Resort Tank and 3 associated wells (Rancho Rojo, Sedona Golf Resort Well, and Valley Vista Well) with the Motorola ACE3600. This would also include another FIU at the office with analog output module for interface to a strip chart recorder (currently interfaced to Intrac FIU). The ACE3600 FIU would share the same radio as the current Intrac FIU.

An option for an Operator Interface Terminal (OIT) would be interfaced to the Tank as an option and would include the following:
a. OIT with software
b. 120VAC to 24VDC power supply needed for the OIT (159mmLx97mmWx38mmH)
c. A 5ft comm. cable from the OIT to the PLC
d. A 5 pack of protective screen covers for the touchscreen
e. The Engineering Services for programming of the OIT and RTU
NOTE: This Option can also be included with Option 3 below.

This will not include installation of the OIT in the housing/cabinet or AC to power supply or power supply to OIT wiring/cables. A separate housing for the OIT will need to be provided or a larger housing at the Tank may be needed to house the ACE3600 and OIT. A separate housing for installation of the OIT and RTU (wall mount) is included in the Optional Materials.

NOTE 1: The Optional Materials section of the quote lists a VHF Yagi antenna individual price for those sites that may need to be replaced as needed for optimal system operation. Also, please note that any sites requiring new coax cable will be included on the invoice. Coax cable types, with cost per foot, has been included in the Optional Materials section of the proposal. Optional connectors and other items are also included in this section.

NOTE 2: The Optional Services also includes the budgetary estimate for a radio path survey for the RTU sites at Wikiup, Pinewood, Harmony High Point, Sedona Golf Course Resort, and Montezuma Hills Tanks and associated wells/pump sites.. This will also include the central computer FIU. This will also determine the optimal location of the repeater as well as antenna height. The radio path survey is needed to evaluate and determine the radio communications path between the various sites to determine if a 5 watt VHF radio is sufficient or if a higher power radio configuration is required. If a higher power radio is needed, this will also determine if any hardware changes need to be made at the site(s) for larger power supply and larger radio.

NOTE 3: Quotation does not include RTU equipment installation.

To provide cost effective installation of the ACE3600 RTU, Global Data Specialists has created I/O interface kits that can be used for faster and easier installation of the equipment. The kit consists of DIN rail mounted terminal blocks and relay blocks, along with a direct interface connector to the front of the I/O module, and a 3 ft cable. Additional lengths are optional.

These kits have been designed for the Mixed I/O module, 8/16 AI module, 8/16 DO module, 16/32 DI module, 4 AO module, 4AO/8AI module, 16DI FET, 8 DI/8DO FET, 16DO FET, and the 16 DI 120-230V module. Additional modules can be designed upon request.

The kits can be mounted within a wall mount enclosure along with the ACE3600 RTU, or within a separate housing or for outside the enclosure mounting depending upon the site requirements.

In addition, these kits were created for the following issues.
a. The maximum wire size for the terminals on the ACE3600 I/O modules is 18 ga.
b. The relays in the DO and Mixed I/O modules do not have a high capacity compared to the MOSCAD RTU's or be able to drive external devices. As a result, interpose relays may need to be required. The interface kit includes relays that provide higher capacity relays than those included with the ACE I/O modules.
c. The terminals provided with the interface kit allow for easier installation and up to 12ga wiring. The terminals, "linkles" on the I/O modules can be hard to access within the module housing and can be cramped for the wiring to the module. The interface kit terminals can be installed for more readily available access and easier wire routing.

NOTE: The add-on power supply for the DI and AI modules will be needed to provide wetting voltage for the DI's and the AI loop power.

If you have any questions or need additional information please let me know.

Best Regards,

Duane Moody
Sales Manager

WA 1-4929

ARIZONA WATER COMPANY
WORK AUTHORIZATION

W.A. NUMBER: 1-4929
P.E. NUMBER:
BUDGET ITEM NO.: 1-4929
SHEET NO.: 1 of 2

SYSTEM:	PINEWOOD	WORK TO START BY:	UPON AUTHORIZATION
DIVISION:	VERDE VALLEY	WORK TO BE FINISHED BY:	WITHIN 60 days
TAX CODE:	0192		

DESCRIPTION OF WORK:

Replace water services in Pinewood Units 7 & 8 on Hopi Place, Zuni Place, Navajo Place, Kay Place, Acoma Place and San Felipe Place complete as per Arizona Water Company construction specifications E-8-1. Construct in accordance with attached drawings and/or Arizona Water Company specifications.

FACTORS JUSTIFYING WORK:

2012 Approved Budget Item ($100,000)
Water loss in the Pinewood system exceeds 10% and has been around 30% over the past few years. After gathering leak records for the Pinewood system, Company engineers determined that a service line replacement program is needed. This project is the first phase of the service line replacement program in the Pinewood system.

COST ESTIMATE		AUTHORIZATION	DATE
COST OF WORK:		PREPARED BY: Andrew J. Haas Andy Haas AJH 4-5-12	4-4-12
MATERIAL	0		
LABOR	2,500	REVIEWED FOR ESMT/ROW VERIFICATION: Charles Briggs CB 04-05-2012	04-04-2012
CONTRACT PORTION	182,905		
OVERHEAD	20,395	REVIEWED BY: Mike Loggins ML 04-5-12	4-4-12
TOTAL AUTHORIZED EXPENDITURES CHARGEABLE TO THIS W.A.	$ 205,800		
FUNDS RECEIVED:		APPROVED BY ENGINEERING: Frederick Schneider 4-5-12	4-5-12
CONTRIBUTIONS RECEIVED	0		
REFUNDABLE ADVANCES RECEIVED	0	APPROVED BY FINANCE: Joseph Harris	4/5/12
TOTAL CONTRIBUTIONS/ADVANCES	0		
NET CASH REQUIRED	$ 205,800	AUTHORIZED BY PRESIDENT: William M Garfield	4-5-12

COMMENTS:
$5,800 to be funded By WA 1-4928

The scope of work and budgeted funds from WA 1-4937 ($100,000) are being combined with WA 1-4929 into a single project.

CONSTRUCTION RELEASE:

RELEASED TO CONSTRUCTION
Authorized by FRED SCHNEIDER
Date 4/5/2012

AFH

ARIZONA WATER COMPANY

WORK AUTHORIZATION - DETAIL SHEET

W.A. NUMBER: 1-4929
P.E. NUMBER:
BUDGET ITEM NO.: 1-4929
SHEET NO.: 2 of 2

RETIREMENT PROPERTY UNITS	PLANT PROPERTY ACCOUNT	UNIT DESCRIPTION	QUANTITY	YEAR INSTALLED AND W.A. NUMBER

PROJECT DESCRIPTION:

Replace water services in Pinewood Units 7 & 8 on Hopi Place, Zuni Place, Navajo Place, Kay Place, Acoma Place and San Felipe Place complete as per Arizona Water Company construction specifications E-8-1.

	DESCRIPTION	PLANT PROP ACCT	QUANTITY	UNIT COST	TOTAL
CONTRACT WORK	Contracting Tax	345	1	$ 8,913.00	$ 8,913
	100% Performance and Payment Bonds	345	1	2,592.00	2,592
	SERVICE CONNECTIONS COMPLETE: DOUBLE-LONG	345	20	4,400.00	88,000
	SERVICE CONNECTIONS COMPLETE: DOUBLE-SHORT	345	16	3,000.00	48,000
	SERVICE CONNECTIONS COMPLETE: SINGLE-LONG	345	6	4,100.00	24,600
	SERVICE CONNECTIONS COMPLETE: SINGLE-SHORT	345	4	2,700.00	10,800
TOTAL CONTRACT WORK					$ 182,905
MATERIALS					
	SERVICE CONNECTIONS: DOUBLE-LONG	345			
	SERVICE CONNECTIONS: DOUBLE-SHORT	345			
	SERVICE CONNECTIONS: SINGLE-LONG	345			
	SERVICE CONNECTIONS: SINGLE-SHORT	345			
	METERS	346			
TOTAL MATERIALS					$ -
LABOR	Project Management	345	10	$ 50.00	$ 500
	TESTING FEE				
	PERMIT FEE				
	SURVEY FEE				
	FIELD INSPECTION	345	40	50.00	2,000
	INSTALL SERVICE CONNECTIONS: DOUBLE-LONG	345			
	INSTALL SERVICE CONNECTIONS: DOUBLE-SHORT	345			
	INSTALL SERVICE CONNECTIONS: SINGLE-LONG	345			
	INSTALL SERVICE CONNECTIONS: SINGLE-SHORT	345			
TOTAL LABOR					$ 2,500
SUBTOTAL - CONTRACT WORK, MATERIALS, AND LABOR					$ 185,405
OVERHEAD					20,395
TOTAL	REFUNDABLE PORTION ☐	NON-REFUNDABLE PORTION ☐		COST ESTIMATE	$ 205,800

AFH

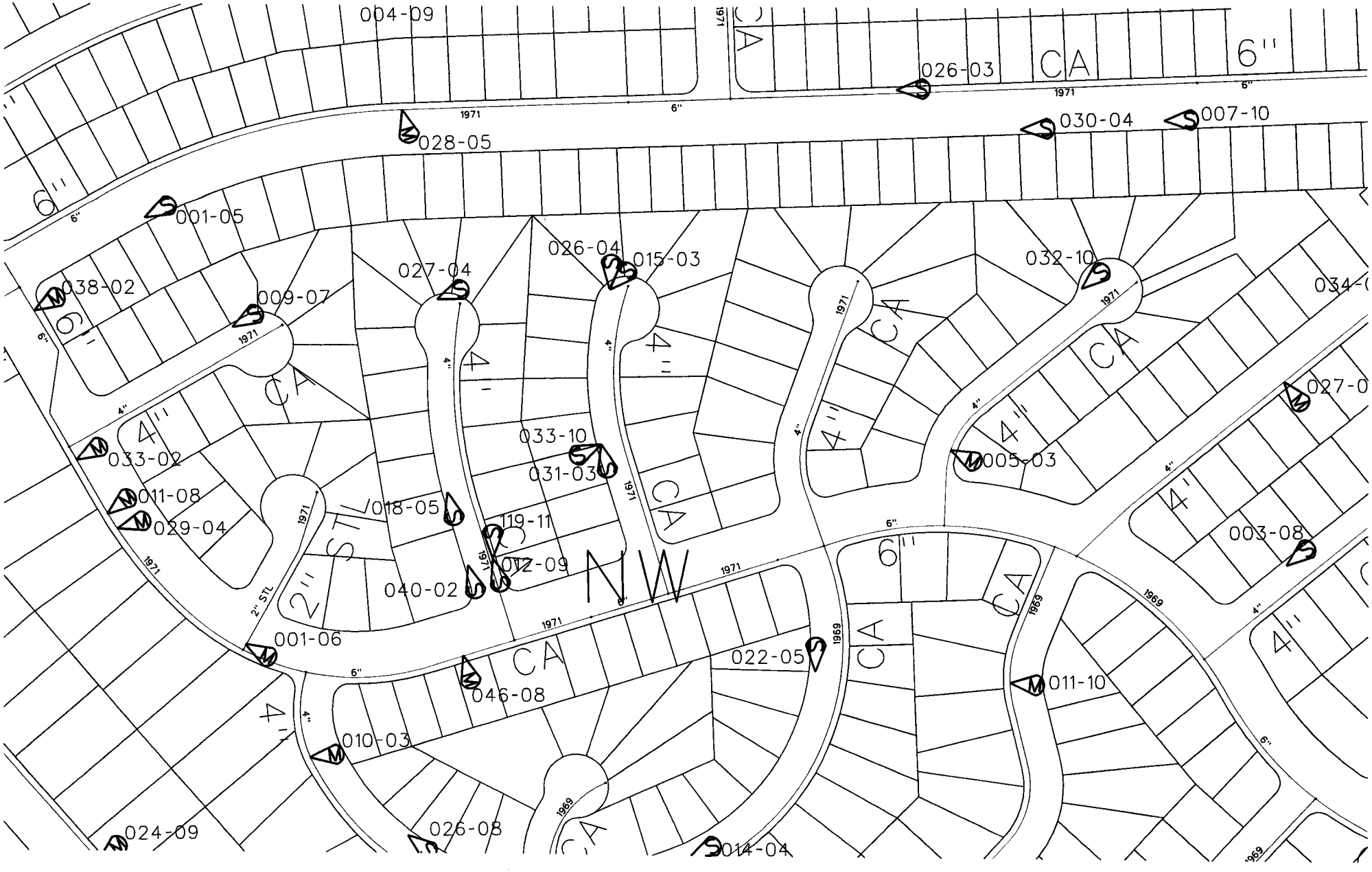
004-09
026-03
CA
6"
1971
028-05
030-04
007-10
001-05
038-02
009-07
027-04
026-04
015-03
032-10
034-
027-0
033-02
011-08
029-04
033-10
031-03
018-05
119-11
012-09
040-02
005-03
003-08
001-06
046-08
022-05
011-10
010-03
024-09
026-08
014-04
2" STL
1969
4"

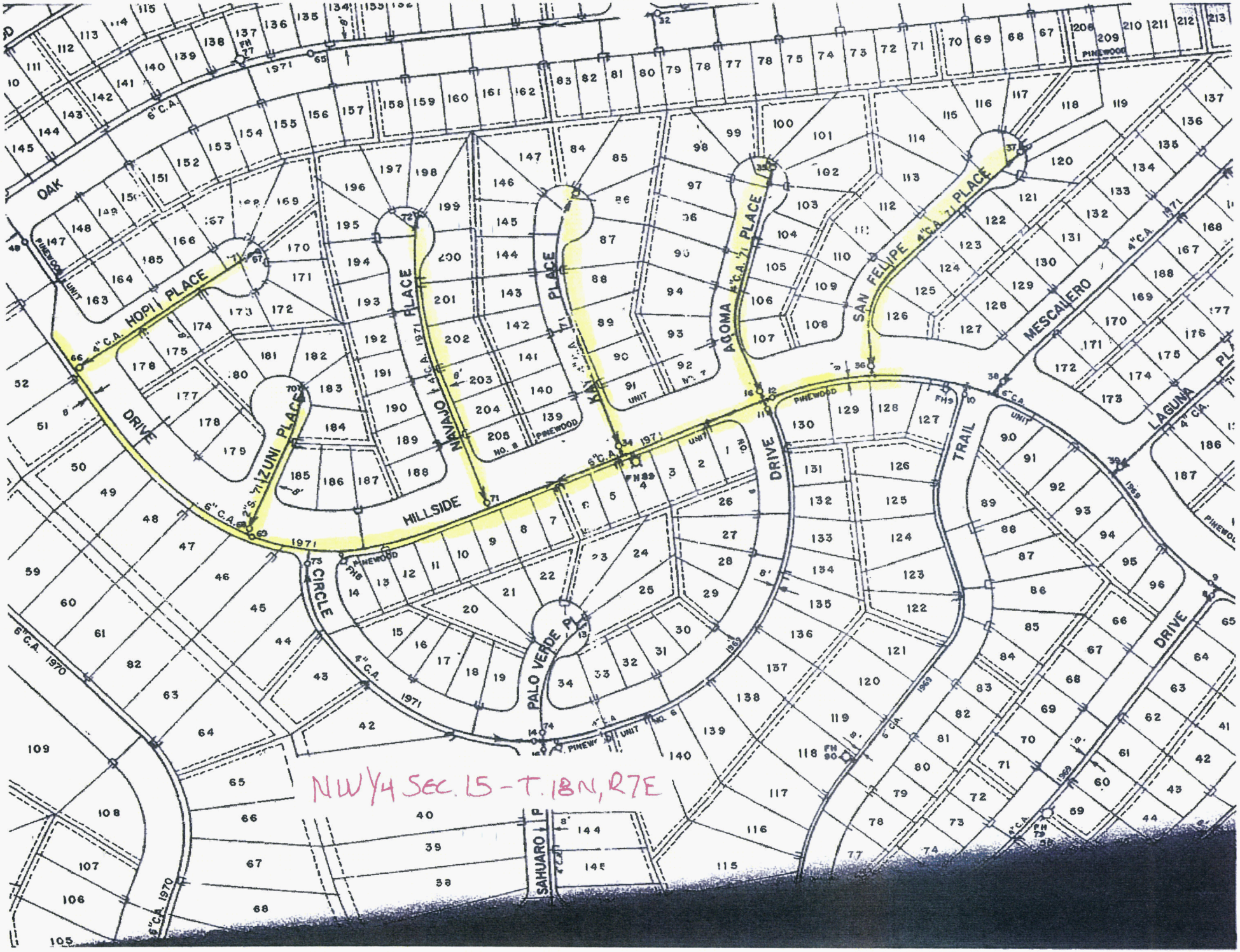
OAK
HOPI PLACE
ZUNI PLACE
NAVAJO PLACE
KAY PLACE
ACOMA PLACE
SAN FELIPE PLACE
MESCALERO
LAGUNA PL
HILLSIDE
DRIVE
CIRCLE
PALO VERDE PL
TRAIL
SAHUARO
PINEWOOD
NW 1/4 SEC. 15 - T. 18N, R7E

Dale D. Wegner, Jr. P.E.,
County Engineer

Randy Ryan
Assistant County Engineer

Galen C. Reed, Sr.
Bridgette Watson
Code Enforcement Officers

Public Works Department

"An American Public Works Accredited Department"

Encroachment Permits

** Special Events * Utilities *Commercial *Residential*

2500 N. Ft. Valley Rd.
Flagstaff, AZ 86001-1287
Phones (928) 226-2785 or 2786 FAX (928) 226-2718

WINTER CONDITIONS FOR EXCAVATION and CONSTRUCTION
Enforced November 1 through April 30

GENERAL CONDITIONS

A. Only short-term stationary work allowed (daytime, 1-12 hours duration; defined in MUTCD, Part VI, 6G-2a.) No open trench conditions allowed overnight.
Traffic control devices shall be equipped with Type A (low intensity) or Type B (high intensity) flashing lights.

B. No work allowed if soil is frozen or above optimum moisture.

C. No work allowed within 24 hours of 50% or greater chance of impending storms as predicted by the National Weather Service.

D. No work allowed within 72 hours after a storm in order to accommodate snow removal and cleanup operations.

E. No work allowed when visibility or weather conditions are such that safety to workers or the public is compromised, as determined by the Code Enforcement Officer (public works inspector) or authorized agent of Coconino County.

F. No construction material storage, parking of equipment or blocking of roadway allowed according to winter No Parking Ordinance 86-6.

PAVED ROADS

- No Cutting or trenching allowed
- Directional drilling **may** be allowed on a case by case basis; no potholing for utility location allowed.

UNIMPROVED ROADS

- Roadway cut: 2 sack CLSM backfill only

Coconino County
Public Works
5600 East Commerce Flagstaff, AZ 86004
(928) 679-8850/(928) 679-8852 Fax (928) 679-8883
http://www.coconino.az.gov

WORK AUTHORIZATION

APR - 9 2012

Permit Information:

Permit #: **PW-12-0013** **Parcel #**

Permit Type: Utility Encroachment Permit-simple (in

Project Name: Work consists of replacement of water services from water main to water meter in various locations on Hopi Pl, Zuni Pl, Navajo Pl, Kay Pl, Acoma Pl, and San Felipe Pl in Pinewood/Munds ParkUnit 7 and 8.

Project Description: Work consists of replacement of water services from water main to water meter in various locations on Hopi Pl, Zuni Pl, Navajo Pl, Kay Pl, Acoma Pl, and San Felipe Pl in Pinewood/Munds ParkUnit 7 and 8.

Site Address:

Dependent Permits: None Subdivision:

Contacts Associated with this Permit:

Type	Name	Phone #	Fax #	Email #
Applicant	Arizona Water Compan Allan Fredricks	(928) 282-7092	(928) 286-1238	

Contractors:

Name	Contact	Phone #	Fax #	License #
Wise Corp		480-883-8897		076422

Permit Details:

Project Locations: San Felipe Pl.
Acoma Pl
Kay Pl
Navajo Pl
Hopi Pl & Zuni Pl

Fee Information:

Encroachment Utility 200' OR LES	200.00
Encroachment Processing Fee	200.00
Total Fees:	$400.00

Receipt#:

Minimum Inspections Required:

Public Works - Pre-Construction
Public Works - Construction Progress
Public Works - Encroachment Final
Public Works - Right-of-Way

Inspection Contacts

Robert Hernandez, Code Enforcement Offi (928) 679-8882

Additional Comments:

Conditions: Please read conditions, initial next to them and provide copy to Encroachment Officer. **Initials**

Coconino County
Public Works
5600 East Commerce Flagstaff, AZ 86004
(928) 679-8850/(928) 679-8852 Fax (928) 679-8883
http://www.coconino.az.gov

WORK AUTHORIZATION

APR - 9 2012

Permit Information:

Permit #: **PW-12-0013** Parcel #

Conditions: Please read conditions, initial next to them and provide copy to Encroachment Officer. Initials

1. A. Any work requiring excavation under paved road shall be done as follows: Asphalt shall be saw cut, excavation will be backfilled with with 2-sack slurry (1-sack may be used upon request). Asphalt shall be patched using hot mix and t-topped. Contractor may patch road at a later date but will contact Robert Hernandez with proposed schedule. Any work done in the foreslope or backslope of ditch is to be backfilled with native material and compacted to as close to original condition as possible. Routine system maintenance, point repairs and service connections are included. New construction or extensions require individual permits and additional conditions at the discretion of the County Engineer or his/her authorized representative. Contact Robert Hernandez (928) 606-4132,should work under foreslope or pavement be reqiured. JLS

   B. Site plan or or construction diagram is required for each location. Specific conditions and details may be required for each installation.

   C. DO NOT CLOSE ROADWAY WITHOUT AUTHORIZATION. KEEP SAFE ACCESS AT ALL TIMES.

   D. RESTORE ROADWAY SHOULDER, SLOPES AND DRAINAGE CHANNELS TO ORIGINAL LINE AND GRADE

   E. CLEAN UP AREA TO ORIGINAL OR BETTER CONDITION; HAUL AWAY SPOIL MATERIAL IMMEDIATELY

   F. TA-6 MUTCD PART VI- MINIMUM REQUIRED TRAFFIC CONTROL IN R/W

2. Traffic Control shall be in accordance with the MANUAL on UNIFORM TRAFFIC CONTROL DEVICES-PART VI: Work Zones TA-6 "Shoulder Work.", immediate Flagging as needed. JLS

3. All construction within county rights of way shall comply with current permit conditions and for construction purposes, the following precedence of standards will prevail: JLS
   1) 2006 Coconino County Public Works Department Standards (including Engineering Design and Construction Criteria, Earthwork, Concrete, and Paving Standards).
   2) County approved project specific plans and specifications.
   3) Arizona Department of Transportation standards.
   4) Lastly, Maricopa Association of Government standards for issues not addressed by other standards.

   All construction projects including (but not limited to) driveways, utility improvements, retaining walls, or any material such as asphalt and concrete must have inspections performed on these types of projects by a geotechnical or engineering firm.
   All test results and final engineering reports must be submitted to Robert Hernandez at 928-606-4132.
   Should you need a county inspector to perform a site visit, contact Robert Hernandez at the above phone number at least 24 hours in advance.
   Once the required documentation has been reviewed and accepted by the county engineering department, then permits can be finaled.

   Copies of current County Engineering standards are available at:
   http://www.coconino.az.gob/publicworks.aspx?id=593

Coconino County
Public Works
5600 East Commerce Flagstaff, AZ 86004
(928) 679-8850/(928) 679-8852 Fax (928) 679-8883
http://www.coconino.az.gov

WORK AUTHORIZATION

APR - 9 2012

Permit Information:

Permit #: **PW-12-0013** **Parcel #**

Conditions: Please read conditions, initial next to them and provide copy to Encroachment Officer. **Initials**

4. Winter conditions for excavation and construction in force Novemember to April. Stay out of right of way for 72 hours after precipitation event or until Encroachment Officer indicates that the right of way is NOT to wet to work in. If snow is present in vicinity or above excavation area then no excating is allowed until snow is cleared and soil is not too wet. JLS

5. In the event of any excavation, the licensee must notify Arizona Blue Stake at 1-800-782-5348 (1-800-STAKE IT) a minimum od 48 hours prior to excavating. All Arizona laws and regulations relating to excavation shall apply while working within county rights-of-way. JLS

6. The Licensee assumes the responsibility and all liability for any injury or damage to said highway in a lawful manner, caused by or arising out of the exercise of this permit or license. JLS

7. All work done shall be at the sole cost and expense of the Licensee, and shall be done at such time and in such manner as to be least inconvenient to the traveling public, and as directed by the agent of the Licensor. Work must be finished in the time specified on the permit. JLS

8. When the proposed work is completed, the Licensee shall repair the roadbed and replace the surfacing material thereon and will leave the said road in as good a condition as it is now, so far as the road is affected by the Licensee. JLS

9. If the subject of the permit or license fails to pass the final inspection, the Licensee will remove or replace the same within such time as specified by written notice from the Licensor; or if at any time hereafter, any material used by the Licensee in replacing or reconstructing any part of said highway proves defective, the Licensee will replace the same with the kind and quality of material which the Licensor shall specify. JLS

10. If the title and possession of any property placed upon the Right-of-Way by the Licensee remains in said Licensee, the Licensee shall and will promptly perform all necessary repair work upon written notice from the Licensor, and will not permit or allow any condition to exist which would be a hazard or source of danger to the traveling public. JLS

11. If at any time hereafter the Right-of-Way, or any portion thereof, occupied or used by the Licensee may be needed or required by the Licensor, any permit or license granted in pursuance of this application may be revoked by the Licensor and all right thereunder terminated, and upon sufficient notice, the Licensee shall and will remove all property belonging to the said Licensee. JLS

12. In the event that the work to be done under the authority of the permit or license necessitates the creation of any hazard or source of danger to any person or vehicle using said highway, said Licensee shall and will provide and maintain at all times during the existence of said hazard sufficient barriers, danger signals, lanterns and detours and shall and will take such other measures of precaution as the Licensor shall direct. JLS

13. If the work to be undertaken is of such a nature or character that the Licensor deems it necessary that said work be laid out or inspected by the Licensor, said Licensee will defray any and all expenses incurred by said Licensor and herein agrees to reimburse the Licensor, and for that purpose will deposit with the Licensor a sum of money in the amount necessary to cover all cost incurred by the Licensor. JLS

Coconino County
Public Works

WORK AUTHORIZATION

5600 East Commerce Flagstaff, AZ 86004
(928) 679-8850/(928) 679-8852 Fax (928) 679-8883
http://www.coconino.az.gov

Permit Information: APR - 9 2012

Permit #: **PW-12-0013** **Parcel 1**

Conditions: Please read conditions, initial next to them and provide copy to Encroachment Officer. **Initials**

14. A Violation of any state, county or federal regulation, statute, code, standard, or policy at this location will constitute a violation of permit conditions and will be subject to STOP WORK ORDER, INSPECTION HOLD, CERTIFICATE OF OCCUPANCY HOLD, NO OCCUPANCY NOTICE, REVOCATION OF PERMIT, OR CEASE AND DESIST ORDER until such time as violation is corrected. JS.

Issuance of a permit by Coconino County does not imply or signify that the proposed work complies with the requirements or is allowed by other County ordinances, regulations or requirements, or state or federal laws. Applicant agrees to accept sole responsibility and liability for compliance with all state, federal and local rules, requirements, laws, ordinance and regulations. By signing below, applicant attests to being either the owner or the authorized agent of the owner of the subject property. This is not a Building or Planning & Zoning Permit.

Print Name John L Snickers **Signature** JL Snickers. **Date** 4-9-12.

Date Issued: APR - 9 2012 **Issued By:** R. HERNANDEZ **Date Expires:** 10/03/2012

VICINITY MAP
N.T.S.

REPLACE SERVICES ON HOPI PLACE, ZUNI PLACE, NAVAJO PLACE, KAY PLACE, ACOMA PLACE, AND SAN FELIPE PLACE

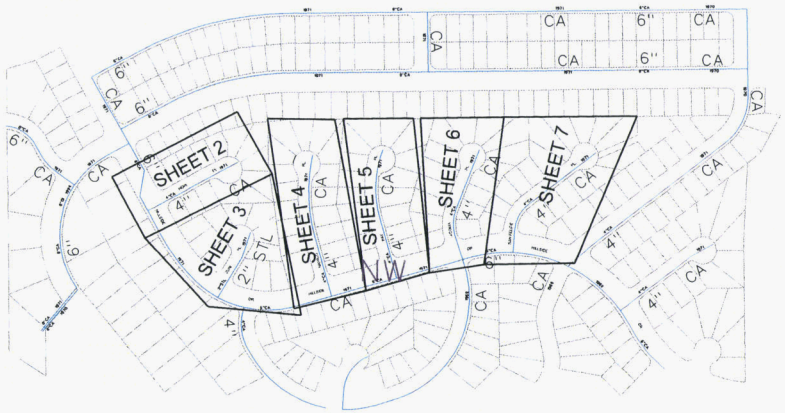

COCONINO COUNTY GENERAL NOTES:

1. Approval of these plans by the County Engineer is for a one-year period, subsequent to the date of approval. If construction work is not started within the one-year period, or has been discontinued for any reason for longer than one year, the plans shall be resubmitted for review and re-approval.
2. Plan review by the County does not extend to material quantities shown on the plans.
3. An, encroachment permit, issued by the Public Works Department is required for all work in County rights-of-way or easements. For construction of any improvements a grading permit will be required.
4. The County shall be notified forty-eight (48) hours prior to beginning different phases of construction so that County Inspectors may be scheduled.
5. All materials and workmanship shall comply with the current Coconino County Engineering Design and Construction Criteria and the current M.A.G. Uniform Standard specifications and Details for Public Works Construction, or other specifications approved by the County Engineer and with generally accepted good construction practice. All work and materials which do not conform to the standards and specifications are subject to removal and replacement at the contractors' expense.
6. Any work performed without the knowledge and approval of the County Engineer or his authorized representative, is subject to removal and replacement at the contractors' expense.
7. The County Engineer or authorized representative may suspend the work by written notice when, in their judgement, progress is unsatisfactory, work being done is unauthorized or defective, weather conditions are unsuitable, or there is danger to the public health or safety.
8. The County Engineer may order any or all materials used in the work to be tested according to the American Association of State Highway and Transportation Officials (AASHTO) and the American Society for Testing and Materials (ASTM) Standards. The Contractor shall, at his expense, supply all samples required for testing or supply test reports by a certified materials laboratory.
9. Local Fire Department, County Engineering Division and other emergency responders approval is required for obstruction of access or water system shutdown submission of traffic control plans are required.
10. The Contractor shall be responsible for maintenance of the streets and of partially completed portions of the work until final acceptance of the work. Any roads required to be closed for the construction activity shall be reopened within a reasonable time or upon order of County Engineer. The regulation and control of this traffic shall be as directed by the County Engineer or his authorized representative.
11. Approval of a portion of the work in progress does not guarantee its final acceptance. Testing and evaluation may continue until written final acceptance of a complete workable unit. Any defects which appear in the work within one year from the date of acceptance and which are due to improper workmanship or inferior materials supplied shall be corrected by or at the expense of the owner/developer or the contractor.
12. Acceptance of completed public improvements will not be given until defective or unauthorized work is removed, and final clean-up is complete.
13. Location of underground utilities before work is begun is to be accomplished in accordance with ARS 40-361-22.
14. If work is done on private property in relation to a project constructed under these standards, the contractor will provide the County with written authorization from the property owner to do so.
15. The establishment and use of temporary construction yards shall require written authorization from the County Public Works Department.

ADEQ APPROVAL

FILE No

DATE

COCONINO COUNTY WATER AND SEWER NOTES:

1. Rough grading shall be completed within one-tenth of a foot of plan grade prior to installation of underground utilities.
2. No trench shall be filled with bedding material or backfill until the excavation and pipe laying, respectively, have been approved by the County Engineers' authorized representative.
3. A water pressure test is required of all water lines and a hydrostatic or air test is required of all sewer lines. Tests are to be conducted after backfilling is complete and compacted. All testing will conform to standards established by the responsible utility.
4. Water line disinfection is to be accomplished as outlined in Arizona Department of Environmental Quality (A.D.E.Q.) Bulletin No. 8 or per requirements of the local utility.
5. In order to protect public water systems from possible contamination, a water main shall not:
a. Infringe upon an area which is within six feet of either side of a sewer main and shall not be below, at the same level as, or less than two feet above the top of the sewer main, unless extra protection is provided. Extra protection shall consist of constructing the sewer main with mechanical joint ductile iron pipe or with slip-joint ductile iron pipe. If joint restraint is provided it shall consist of encasing both the water and sewer mains in at least six inches of concrete.
b. Under any circumstances, infringe upon an area which is within two feet of either side of or two feet below the sewer main.
No water pipe shall pass through, or come into contact with any part of a sewer manhole. The minimum horizontal separation between water mains and manholes shall be six feet, measured from the center of the manhole. The minimum separation between force mains or pressure sewers and water mains shall be two feet vertically and six feet horisontally under all conditions. Where a sewer force main crosses above a water line, or less than six feet below it, the sewer main shall be encased in at least six inches of concrete for 10 feet on either side of the water main.
All distances are measured perpendicularly from the outside of the sewer main to the outside of the water main. These separation requirements do not apply to building plumbing or individual house service connections.
6. No water settling of trench fill material is allowed.
7. All water and sewer design and construction shall conform to the current Arizona Department of Environmental Quality (A.D.E.Q.) requirements. When A.D.E.Q. requirements are in conflict with these standards, the more restrictive shall apply.
8. Tracer wires and tapes shall be installed prior to testing the water or sewer main.

COCONINO COUNTY APPROVAL

The County approves these plans for concept only. All liability resulting from errors or omissions is the responsibility of the permittee and/or his consultants and employees. Coconino County does not verify or guarantee the measurements, calculations, ownership or conclusions indicated by the creator of these plans.

APPROVED BY:

REVISIONS:

The installation shown is to be installed in accordance with the Arizona Water Company Water Quality Plan and filed with the Arizona Department of Environmental Quality

Call Before You Dig
263-1100
1-800-STAKE-IT
Arizona Blue Stake, Inc.

A.F.N.:

PROJECT: VERDE VALLEY

LEG. DESC: NW1/4 SEC. 15 T.18N. R.7E.

AZ GRID: 0192

DATE: 9/8/2011 SCALE: AS SHOWN

DRAWN BY: JS CHECKED BY: AH

ARIZONA WATER COMPANY
3805 N. BLACK CANYON HWY POST OFFICE BOX 29006
PHOENIX, ARIZONA 85038-9006
(602) 240-6860

PROJECT DESC: REPLACE SERVICES ON HOPI PLACE, ZUNI PLACE, NAVAJO PLACE, KAY PLACE, ACOMA PLACE, AND SAN FELIPE PLACE

PROJECT SHEET DESC: OVERALL PROJECT

Registered Professional Engineer (Civil)
41046
JAMES T WILSON
ARIZONA, U.S.A.
Expires 6/30/13

DWG. No.: VV-0006

SHEET 1 OF 9

QUANTITIES LIST		
	ITEM DESCRIPTION	QTY. TOTAL
1	REPLACE SINGLE SERVICE	2 EA.
2	REPLACE DOUBLE SERVICE	4 EA.

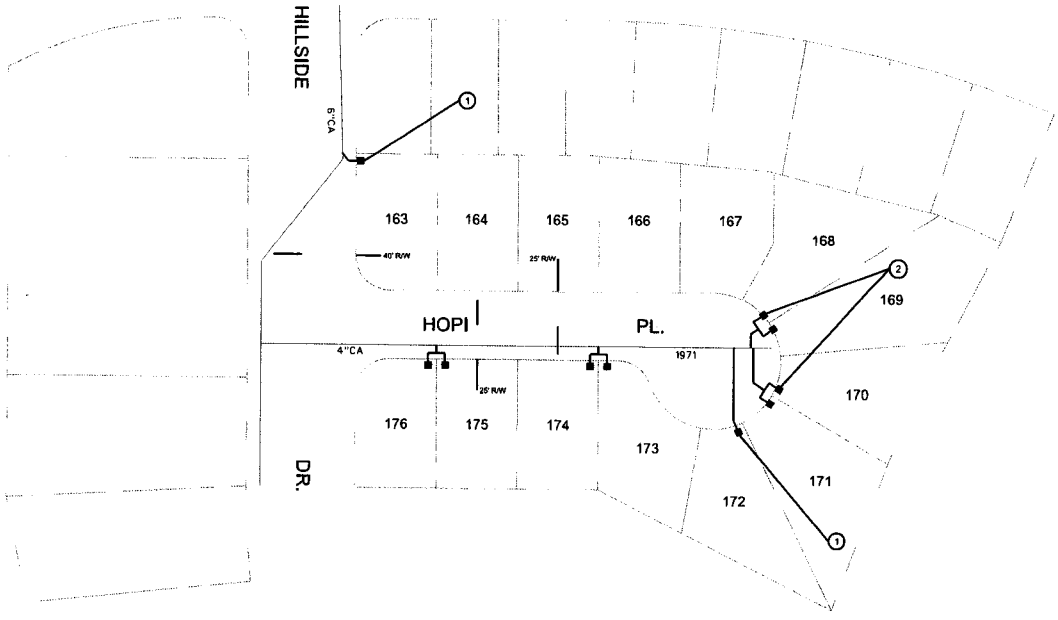

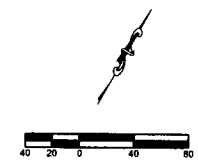

The installation shown is to be installed in accordance with the Arizona Water Company standard specifications on file with the Arizona Department of Environmental Quality

263-1100
1-800-STAKE-IT

DESIGN:	VERDE VALLEY
LEGAL DESC.:	NW1/4 SEC. 15 - T.18N., R. 7E.
AZ DIST.:	0192
DATE:	9/7/2011
SCALE:	AS SHOWN
DRAWN BY:	JS
CHECKED BY:	AH

ARIZONA WATER COMPANY
3805 N. BLACK CANYON HWY. POST OFFICE BOX 29006
PHOENIX, ARIZONA 85038-9006
(602) 240-6860

PROJECT DESC.: REPLACE SERVICES ON HOPI PLACE, ZUNI PLACE, NAVAJO PLACE, KAY PLACE, ACOMA PLACE, AND SAN FELIPE PLACE.

PROJECT SHEET DESC.: REPLACE 4 DOUBLE SERVICES AND 2 SINGLE SERVICES ON HOPI PLACE.

41045
JAMES T WILSON
ARIZONA, U.S.A.
Expires 6/30/13

DWG. No.: VV-0006

SHEET 2 OF 9

QUANTITIES LIST		
	ITEM DESCRIPTION	QTY. TOTAL
1	REPLACE SINGLE SERVICE	1 EA.
2	REPLACE DOUBLE SERVICE	4 EA.
3	INSTALL 2" VALVE	1 EA.

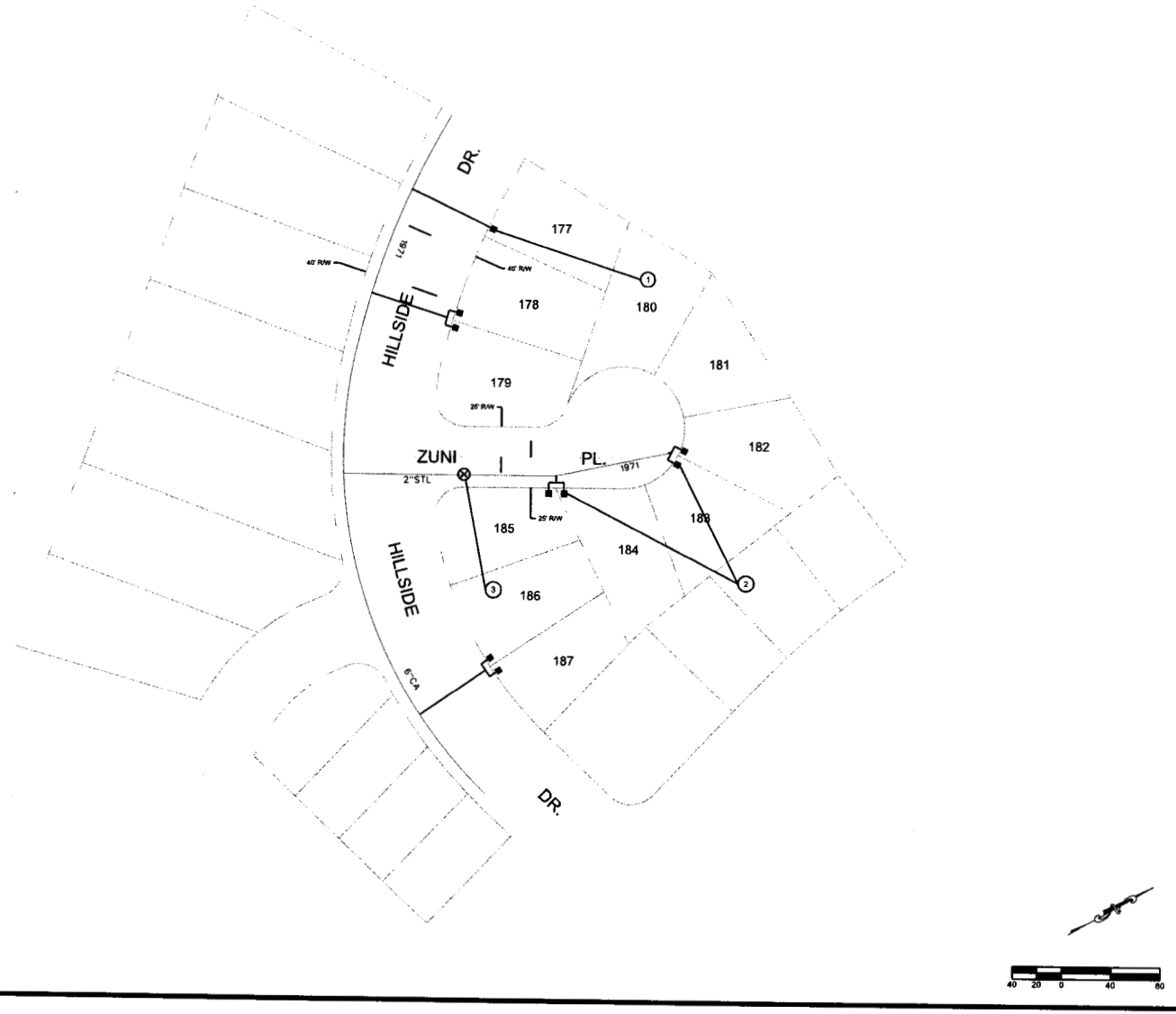

REVISIONS

The installation shown is to be installed in accordance with the Arizona Water Company standard specifications on file with the Arizona Department of Environmental Quality

1-800-STAKE-IT
263-1100

DWG. NO.	
APPROVED	
SYSTEM	VERDE VALLEY
LOCAL SEC.	NW1/4 SEC.15 -T.18N.,R. 7E.
FILE NO.	0192
DATE	9/7/2011
SCALE	AS SHOWN
DRAWN BY	JS
CHECKED BY	AH

ARIZONA WATER COMPANY
3805 N. BLACK CANYON HWY. POST OFFICE BOX 29008
PHOENIX, ARIZONA 85038-9006
(602) 240-6860

PROJECT DESC.: REPLACE SERVICES ON HOPI PLACE, ZUNI PLACE, NAVAJO PLACE, KAY PLACE, ACOMA PLACE, AND SAN FELIPE PLACE.

PROJECT SHEET DESC.: REPLACE 4 DOUBLE SERVICES, 1 SINGLE SERVICE AND INSTALL ONE 2" VALVE ON ZUNI PLACE AND HILLSIDE DRIVE.

41046 JAMES T WILSON ARIZONA, U.S.A.
Expires 6/30/13

DWG. No.: VV-0006

SHEET 3 OF 9

QUANTITIES LIST		
	ITEM DESCRIPTION	QTY. TOTAL
1	REPLACE SINGLE SERVICE	0 EA.
2	REPLACE DOUBLE SERVICE	7 EA.

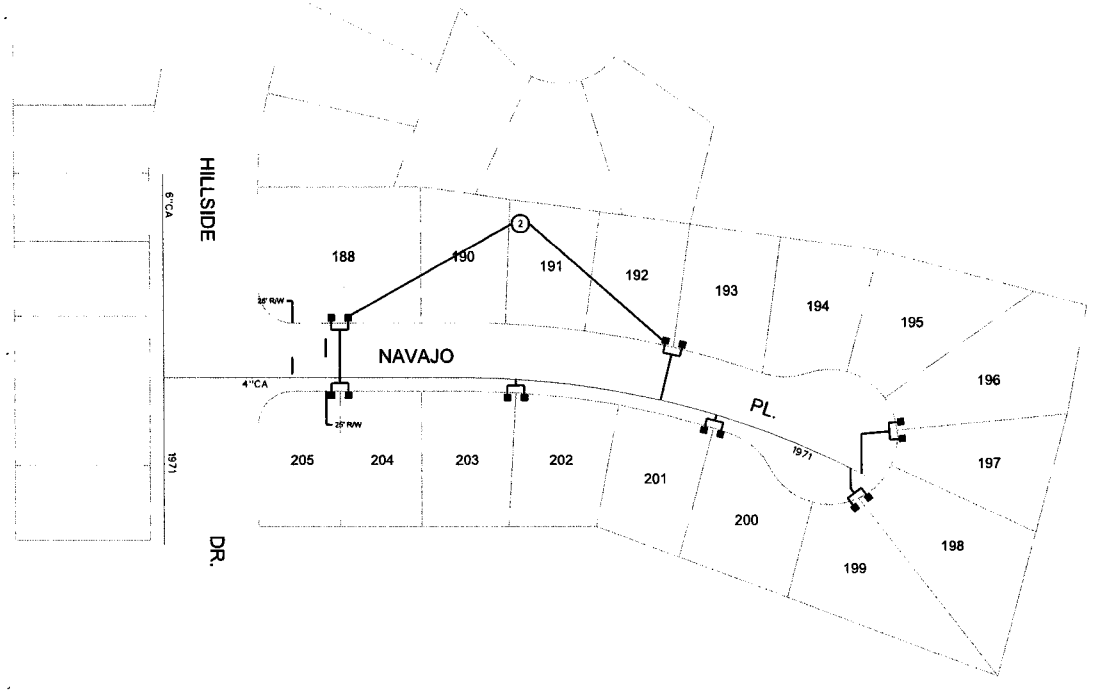

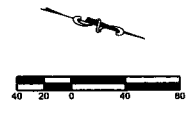

The installation shown is to be installed in accordance with the Arizona Water Company standard specifications on file with the Arizona Department of Environmental Quality

Call Before Digging Dial 263-1100 1-800-STAKE-IT

SYSTEM	VERDE VALLEY
LEGAL DESC.	NW1/4 SEC. 16-T.18N.,R. 7E.
AK DIST.	0192
DATE	9/7/2011
SCALE	AS SHOWN
DRAWN BY	JS
CHECKED BY	AH

ARIZONA WATER COMPANY
3805 N. BLACK CANYON HWY. POST OFFICE BOX 29006
PHOENIX, ARIZONA 85038-9006
(602) 240-6880

PROJECT DESC.: REPLACE SERVICES ON HOPI PLACE, ZUNI PLACE, NAVAJO PLACE, KAY PLACE, ACOMA PLACE, AND SAN FELIPE PLACE.

PROJECT SHEET DESC.: REPLACE 7 DOUBLE SERVICES ON NAVAJO PLACE.

Registered Professional Engineer (Civil) Certificate No. 41048 JAMES T. WILSON Date Signed Arizona, U.S.A. Expires 6/30/13

DWG. No. VV-0006

SHEET 4 OF 9

QUANTITIES LIST		
	ITEM DESCRIPTION	QTY. TOTAL
1	REPLACE SINGLE SERVICE	3 EA.
2	REPLACE DOUBLE SERVICE	7 EA.

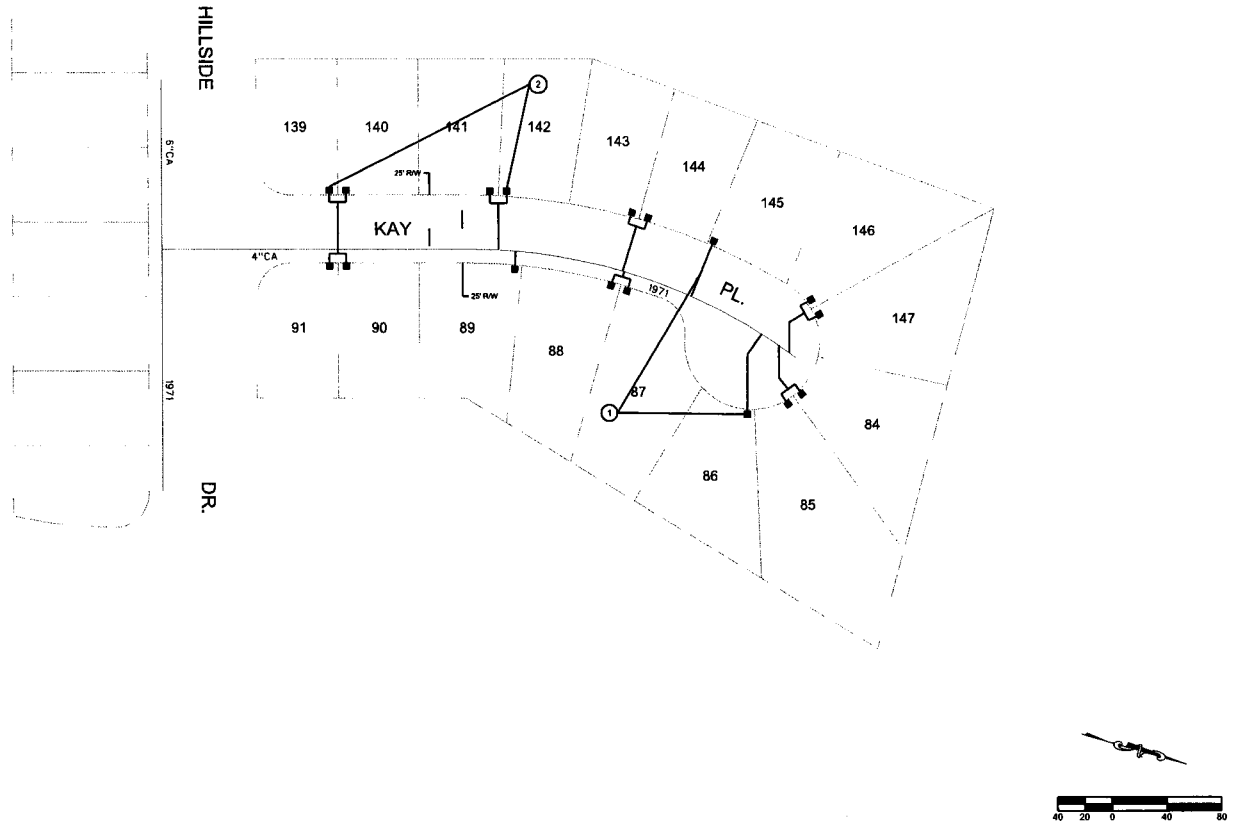

The installation shown is to be installed in accordance with the Arizona Water Company standard specifications on file with the Arizona Department of Environmental Quality

263-1100
1-800-STAKE-IT

SYSTEM	VERDE VALLEY
LOCAL DESC.	NW1/4 SEC. 15-T.18N.,R. 7E.
AM DEST.	0192
DATE	9/7/2011
SCALE	AS SHOWN
DRAWN BY	JS
CHECKED BY	AH

ARIZONA WATER COMPANY
3805 N. BLACK CANYON HWY. POST OFFICE BOX 29006
PHOENIX, ARIZONA 85038-9006
(602) 240-5860

PROJECT DESC.: REPLACE SERVICES ON HOPI PLACE, ZUNI PLACE, NAVAJO PLACE, KAY PLACE, ACOMA PLACE, AND SAN FELIPE PLACE.

PROJECT SHEET DESC: REPLACE 7 DOUBLE SERVICES AND 3 SINGLE SERVICES ON KAY PLACE.

41046
JAMES T. WILSON
ARIZONA, U.S.A.
Expires 6/30/13

DWG. No.
VV-0006
SHEET 5 OF 9

QUANTITIES LIST		
	ITEM DESCRIPTION	QTY. TOTAL
1	REPLACE SINGLE SERVICE	3 EA.
2	REPLACE DOUBLE SERVICE	6 EA.

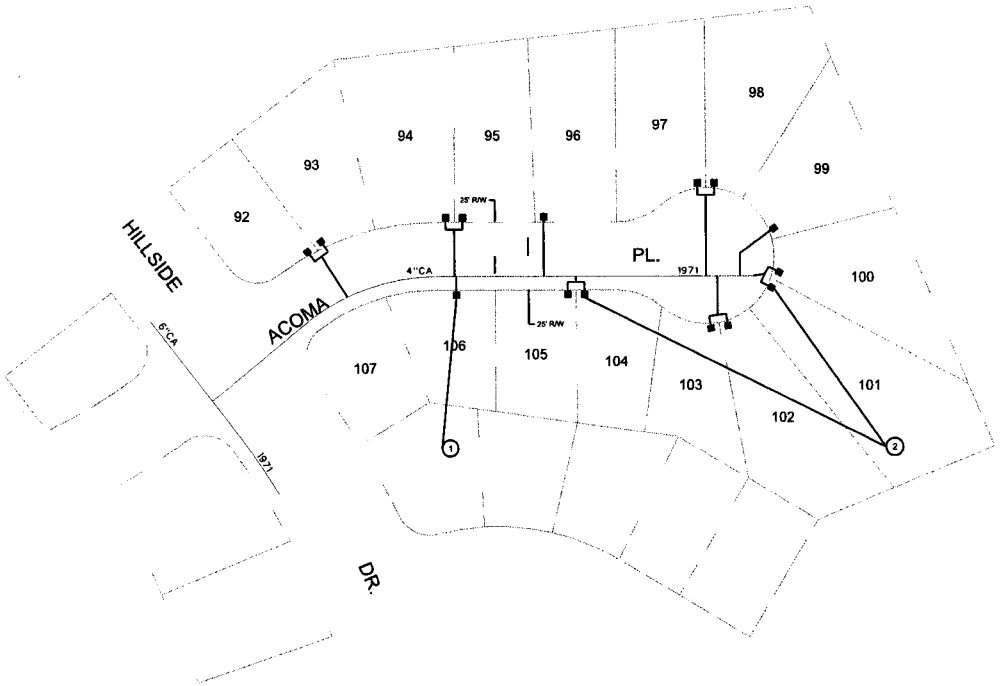

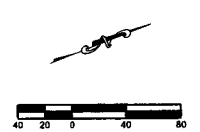

The installation shown is to be installed in accordance with the Arizona Water Company standard specifications on file with the Arizona Department of Environmental Quality

263-1100
1-800-STAKE-IT

DRAWN BY:	JS
CHECKED BY:	AH
DATE:	9/7/2011
SCALE:	AS SHOWN
APPROVED BY:	
SYSTEM:	VERDE VALLEY
LOCAL DATE:	NW1/4 SEC.15-T.18N.,R.7E.
AS BUILT:	0192

ARIZONA WATER COMPANY
3805 N. BLACK CANYON HWY. POST OFFICE BOX 29006
PHOENIX, ARIZONA 85038-9006
(602) 240-6860

PROJECT DESCRIPTION: REPLACE SERVICES ON HOPI PLACE, ZUNI PLACE, NAVAJO PLACE, KAY PLACE, ACOMA PLACE, AND SAN FELIPE PLACE.

PROJECT SHEET DESC: REPLACE 6 DOUBLE SERVICES AND 3 SINGLE SERVICES ON ACOMA PLACE.

Registered Professional Engineer (Civil) Certificate No. 41046 JAMES T WILSON Arizona, U.S.A.
Expires 6/30/13

DWG. No.: VV-0006

SHEET 6 OF 9

QUANTITIES LIST		
	ITEM DESCRIPTION	QTY. TOTAL
1	REPLACE SINGLE SERVICE	1 EA.
2	REPLACE DOUBLE SERVICE	8 EA.

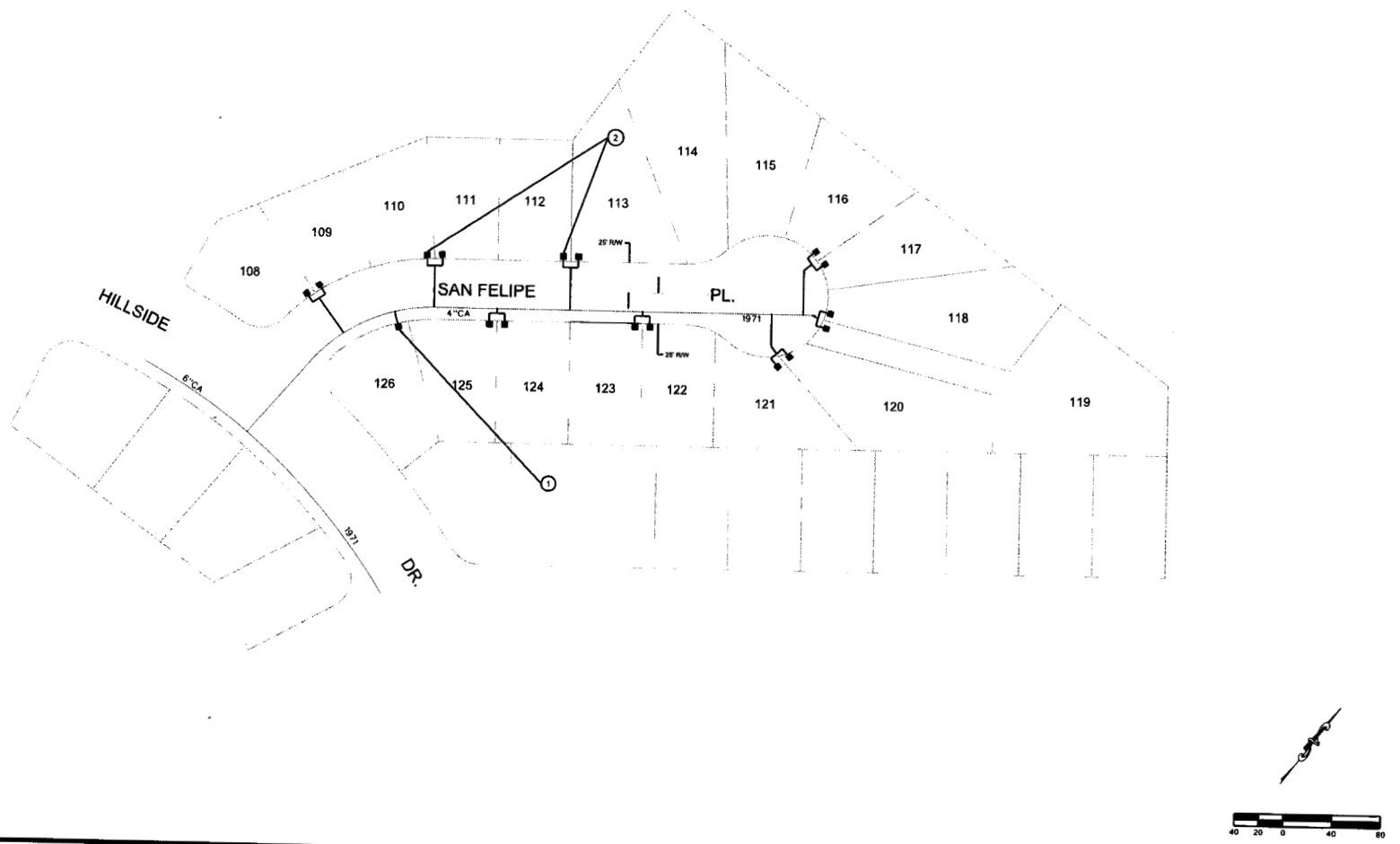

The installation shown is to be installed in accordance with the Arizona Water Company standard specifications on file with the Arizona Department of Environmental Quality

263-1100
1-800-STAKE-IT

SYSTEM:	VERDE VALLEY
LOCAL DESIG:	NW1/4 SEC.15-T.18N.,R. 7E.
PB DIST.:	0192
DATE:	9/7/2011
SCALE:	AS SHOWN
DRAWN BY:	JS
CHECKED BY:	AH

ARIZONA WATER COMPANY
3805 N. BLACK CANYON HWY. POST OFFICE BOX 29006
PHOENIX, ARIZONA 85038-9006
(602) 240-6860

PROJECT DESC: REPLACE SERVICES ON HOPI PLACE, ZUNI PLACE, NAVAJO PLACE, KAY PLACE, ACOMA PLACE, AND SAN FELIPE PLACE.

PROJECT SHEET DESC: REPLACE 8 DOUBLE SERVICES AND 1 SINGLE SERVICE ON SAN FELIPE PLACE.

41046
JAMES T. WILSON
Expires 6/30/13

DWG. No.: VV-0006

SHEET 7 OF 9

E-8-1
CONSTRUCTION SPECIFICATIONS
FOR THE INSTALLATION OF WATER DISTRIBUTION SYSTEMS
DUCTILE IRON

DEFINITIONS

A. Company. The words "Company" or "Arizona Water Company" mean Arizona Water Company, and where applicable, any division of Arizona Water Company, whose principal place of business is located at 3805 North Black Canyon Highway, Phoenix, Arizona 85015-5351 (Post Office Box 29006, Phoenix, Arizona 85038-9006).

B. Company's Authorized Representative. The words "Company's Authorized Representative" mean any officer of the Company, and any of the Company's Engineers, any Division Manager or Superintendent of the Company and/or such other person(s) designated in writing as the "Company's Authorized Representative" by the President or any Vice President of the Company.

C. Contractor. The word "Contractor" means either an individual or other entity employed to do the work as shown on the Construction Drawings and as specified herein.

D. Construction Drawings. The words "Construction Drawings" mean plans prepared by or on behalf of Arizona Water Company.

E. Contract. The word "Contract" means the written document titled "Proposal/Contract" when such document has been signed by an officer or other authorized representative of both the Contractor and the Company.

1. GENERAL

All work is to be completed in a safe, workmanlike manner and in accordance with these Construction Specifications: any deviation therefrom must be approved in writing by the Company.

Installations must conform with the requirements of all governmental regulating agencies and the cost of conforming to such regulations must be included in the unit bid prices. Examples of such regulations, without attempting to be inclusive, are:

a. Special compaction and paving for street crossing.
b. Shoring when required because of the trench depth.
c. Closing a trench in those areas where no open trench is allowed overnight.
d. Barricading and traffic control as required.

2. LOCATION MARKING

Alignment stakes as required in the opinion of the Company shall be furnished by the Company to the Contractor and shall be set by the Company at agreed upon intervals and offsets. Under normal circumstances these will reference the pipeline location five feet (5') into the right-of-way measured from property pins. Grade stakes will be provided only when the Construction Drawings show a pipeline depth other than covered in these Specifications. It is the responsibility of the Contractor to preserve all survey work.

3. TRENCH EXCAVATION

The trench location is to be determined by the Construction Drawings.

FOR 8-INCH OR SMALLER PIPE: The depth of the trench prior to pipe laying shall be such that the finished pipeline shall have between thirty-six inches (36") and forty-two inches (42") of cover unless otherwise specified on the Construction Drawings.

FOR 12-INCH AND LARGER PIPE: The depth of the trench prior to pipe laying shall be such that the finished pipeline shall have between forty-eight inches (48") and sixty inches (60") of cover unless otherwise specified on the Construction Drawings.

The width of the trench at and below the level at the top of the pipe shall be a minimum of twelve inches (12") plus the outside diameter of the pipe barrel and a maximum of twenty-four inches (24") plus the outside diameter of the pipe barrel.

The bottom of the trench shall be accurately graded to provide a uniform bearing for each length of pipe for the full length of the pipe. If the native material on the trench bottom can be reasonably dug by hand, bell holes shall be dug for the joints so that the joints in no way support the pipe. When native materials such as rock are encountered during trenching that will not provide a uniform support for the pipe, the trench will be over-excavated an additional six inches (6") and suitable bedding material will be placed in the trench.

Bedding material will be placed by hand in four-inch (4") lifts and compacted to ensure uniform compaction and to eliminate any voids under the pipe. When the space between the pipe and trench bottom varies, this must be backfilled and compacted in four-inch (4") lifts to the mid-section of the pipe.

Whenever the trench is over-excavated for whatever reason, the trench bottom will be brought up to the correct depth at the Contractor's expense using either method (a) or (b) as follows:

a. A.B.C. material shall be used and compacted to a uniform density of not less than 80% of the maximum density as determined by AASHTO T-99 method A and T-191.

b. Native material 100% of which will pass through a one and one-half inch (1-1/2") screen and at least 20% of which will pass through a number-8 screen shall be used and compacted to a uniform density of not less than 85% of the maximum density as determined by AASHTO T-99 method A and T-191.

4. MATERIALS TO BE PROVIDED BY CONTRACTOR

Unless otherwise specified on the Construction Drawings or in the Contract, the Contractor will supply all of the necessary materials which will become a permanent and integral part of the water distribution system, including concrete blocking, anchors, backfill material, paving material and supplies used during the prosecution of the work. All materials provided by the Contractor to construct the water distribution system must be NSF Standard 61 approved. All potable water pipes and fittings shall have NSF-PW seal. Construction materials used in the water system shall be lead free as defined at AAC R28-4-504 and R18-1-101. The Contractor will provide the following materials:

a. FIRE HYDRANTS: Mueller Super Centurion 250 Fire Hydrant, meets ANSI/AWWA C502 Standard, Model No. A-423, 5-1/4" main valve opening, three way, 6" Mechanical Joint Shoe, 1-1/2" pentagon operating nut, color - yellow, drain open, open direction - left, 4' or 4'-6" bury depending on application. For pumper and hose nozzle information see below.

(1) One - 4" Pumper Nozzle, NST and Two - 2-1/2" Hose Nozzles, NST. (These locations only: Ajo, Casa Grande, Coolidge and San Manuel.)

(2) One - 4-1/2" Pumper Nozzle, NST and Two - 2-1/2" Hose Nozzles, NST. (These locations only: Apache Junction, Arizona City, Lakeside, Oracle, Overgaard, Pinewood, Rimrock, Sedona, Sierra Vista, White Tank and Winkelman.)

(3) One - 4-1/2" Pumper Nozzle, NST and Two - 2-1/2" Hose Nozzles, NPT (Bisbee only.)

(4) One - 3" Pumper Nozzle GA 6-350 (6 threads per inch, 3.50 pitch diameter) and Two - 2-1/2" Hose Nozzles, NPT (Miami only.)

(5) One - 3-1/2" Pumper Nozzle GA 6-411 (6 threads per inch, 4.11 pitch diameter) and Two - 2-1/2" Hose Nozzle, NST (Superior only.)

b. FITTINGS: Manufactured by Tyler or Union. Crosses, Elbows, Tees, Cap, Reducer, Adapter, Plug, Blind Flange and Tapped Flange: Ductile Iron, Class 350, SSB, Cast Iron Cement Lined.

(1) Foster Adaptors for MJ made by Infact Corporation: Available in size 4" to 16". Part No. 4" - 4FA-BC, 6" - 6FA-BC, 8" - 8FA-BC, 10" - 10FA-BC, 12" - 12FA-BC, 16" - 16FA-BC.

c. DETECTOR CHECK VALVE: Mueller/ Hersey EDC III, iron body, including 5/8" x 3/4" Trim Kit. Trim Kit Part No.: 4" - 282080, 6" - 282082, 8" - 282085, 10" - 282496.

d. GATE VALVES: Mueller Resilient Wedge Gate Valves, meets AWWA C509 specification, 250 psig, Non-rising stem, Part No. A-2360 sizes 4" through 12"; Part No. A-2361 sizes 14" through 36", low zinc stems, epoxy coated inside and outside to meet the NSF 61 rating. The bonnet and stuffing box shall have 304 stainless steel bolts/nuts.

e. TRACER WIRE and WARNING TAPE:

(1) TRACER WIRE: Shall be direct bury AWG #14 solid copper wire, Color: Blue.

(2) WARNING TAPE: Reef Industries, Standard Terra Tape in 3" widths. Color: Blue and imprinted 'Arizona Water Company'.

f. AIR RELEASE VALVE: Crispin Model AR10 with 1" NPT inlet and 1/2" NPT outlet, cast iron body and top flange; with a 5/64" orifice with stainless steel valve seating faces and BUNA-N rubber.

g. PRESSURE RELIEF VALVE: Watts 174A, Model M, 2" inlet, 2" outlet, Bronze Body, 30lb. to 150lb. pressure range.

h. MEGALUG: Mechanical Joint restraint made of ductile iron conforming to ASTM 536-80, 250 psi made by EBAA Iron, Inc., series 1100 or equal.

i. METER BOXES:

(1) Concrete Box with a steel regular lid, Number 1: Tucson specification.

(2) Concrete Box with a steel regular lid, Number 2, 3, and 4: Phoenix specification.

j. PIPE, COPPER: Type K soft copper in 60 or 100-foot coils, per ASTM B88.

k. PIPE, DUCTILE IRON: Ductile Iron Pipe, Cement Lined, Push-on, conform to current ANSI/AWWA Specification A21.51/C151, Pressure Class 350 (sizes 4" through 12"), Pressure Class 250 (sizes 14" through 20"), or Pressure Class 200 for 24" through 36" pipe. Vendors:

(1) Pacific States Cast Iron Pipe Company
(2) Griffin Pipe
(3) United States Pipe and Foundry Company
(4) American Ductile Iron Pipe
(5) Clow Pipe (McWane, Inc.)

l. PIPE, PLASTIC: Plastic pipe, C-900 PVC per ANSI/AWWA C900, Class 150, sizes 6" through 12". NSF61 approved. Furnished in laying lengths of 20'. The barrel shall conform to the outside dimensions of steel pipe (IPS) or cast iron (CI) pipe equivalent and the wall thickness of dimension-ratio (DR) 18.

m. POLYETHYLENE ENCASEMENT (Polywrap): For all pipeline and related fittings installed, EXCEPT for the Coolidge Division. Minimum 8 Mil. and installed per AWWA C105/A21.5-93 and ASTM A-674-89. Manufactured by the Pacific States Cast Iron Pipe Company. The wrapping tape shall be minimum 10 mil. vinyl tape. No duct tape shall be used.

n. COUPLING: Mueller, straight three part union, tested to meet ANSI/AWWA C800, H15403, conductive compression.

Mueller, H15428, straight coupling, conductive compression by male iron pipe, tested to meet ANSI/AWWA C800 specification. Size: 2".

Mueller, H15451, straight coupling, conductive compression by female iron pipe, tested to meet ANSI/AWWA C800 specification. Size: 2".

Viking Johnson brand, sold by Mueller: MaxiFit Straight (2"-24"), MaxiFitXtra Straight (4"-8") or MaxiStep Transition, tested to meet AWWA/ANSI C.219-91 specifications - certified to ISO 9001:1994 / Smith - Blair Quantum.

o. STOP, ANGLE METER, BALL: Mueller, valve, B24258, conductive compression by meter swivel nut, tested to meet ANSI/AWWA C800, size 5/8" x 3/4" x 3/4" for a 3/4" service or size 1" for a 1" service.

Mueller, valve, B24265, female pipe thread by meter swivel nut, tested to meet ANSI/AWWA C800, size 5/8" x 3/4" x 3/4" for a 3/4" service or size 1" for a 1" service.

p. STOP, CORP: Mueller, ball valve, B25008, taper thread by conductive compression, tested to meet ANSI/AWWA C800 specification, sizes: 3/4", 1" and 2".

Mueller, ball valve, B25028, iron pipe thread by conductive compression, tested to meet ANSI/AWWA C800 specification. Sizes 3/4", 1", and 2".

Mueller, 300 Ball Curb Valve, B-25122, taper thread by conductive compression, tested to meet ANSI/AWWA C800 specifications, size: 2". (2" service)

q. STOP, CURB: Oriseal valve, H10291, iron pipe thread by iron pipe thread, quarter turn check, brass, tested to 300 psi working pressure, tested to meet ANSI/AWWA C800 specification, size: 2".

Mueller, B20283, Mueller 300 ball curb valve, female iron pipe by female iron pipe, quarter turn check, tested to meet ANSI/AWWA C800 specification. Size: 2". (Blow-off E-9-8-1).

r. TAPPING SADDLE: Smith Blair, Cast Bronze ASTM-B584 85-5-5-5, double strap, iron pipe threads, Models 321 and 323. Washers are silicon bronze, ASTM-B36. Gaskets are grade 60 Buna N, or Mueller bronze double strap service saddle, BR 2 B series, cast bronze, ASTM-B585, 85-5-5-5, or H16084, 200 psig, meets ANSI/AWWA C800.

s. TAPPING SLEEVE: Mueller H304 Stainless Steel Tapping Sleeve, JCM 432 18 8 Type 304 Stainless Steel Tapping Sleeve, Romac "SST" Type 304 Stainless Steel Tapping Sleeve or CASCADE-style CST-EX stainless steel pressure-rated tapping sleeve.

t. TAPPING VALVE: Mueller Resilient Wedge tapping valve, Catalog Number T-2360-16, Class 125, sizes 4" through 12"; T-2361-16, Class 125, sizes 14" to 36" all with Type 304 stainless steel fasteners; bypass valves are required on 18" - 36" valves flange by mechanical joint per ANSI/AWWA C111, iron wedge, non-rising stem. Epoxy coated interior/exterior per ANSI/AWWA C550 for NSF 61 compliance. 250 PSI range for valves 4" to 12". 150 PSI range for valves 14" to 36".

u. U-BRANCH: Mueller, H15364, 1" male iron pipe by 3/4" male iron pipe, tested to meet ANSI/AWWA C800 specification. Size: 1" x 3/4" x 13-1/2", straight line.

v. VALVE BOXES: Valve Box with Cover, adjustable, Tyler 562-A or equal, made of cast iron.

w. VAULTS: Utility Vault Company, Chandler, AZ.

(1) 4484-WA concrete vault with a 3660 aluminum double torsion door with a recessed padlock hasp, two - 18" x 24" center knockouts.

(2) 575-WA concrete vault with a 4874 aluminum double torsion door with a recessed padlock hasp, two - 18" x 24" center knock outs and adjustable frame.

(3) 612-SX-WA concrete vault with a 4874 aluminum double torsion door with a recessed padlock hasp, two - 18" x 24" center knockouts.

x. VALVE, METER: Mueller, B24265-1, Mueller 300 ball angle meter valve, female iron pipe by meter nut, quarter turn check, lock wing, tested to meet ANSI/AWWA C800 specification. Size: 1".

Mueller, B25170, Mueller 300 ball straight valve, conductive compression by female iron pipe, quarter turn check, lock wing, tested to meet ANSI/AWWA C800 specification. Size: 1".

y. YOKES, METER: Relocator type copper meter yoke with horizontal inlet and outlet and meter thread ends, B2411B, with lock wing Mueller 300 angle ball valve, full port, sizes: 1" x 12", 5/8" x 3/4" x 7", 5/8 x 3/4" x 9".

Mueller, 2" copper meter yoke with horizontal inlet and outlet and female iron pipe threads, B2423-99000, with lock wing Mueller 300 ball angle meter valves on inlet and outlet risers. Raised 1" by-pass with lock wing Mueller 300 ball valve.

The Contractor also will be required to provide the following materials, the cost of which will be included in its unit bid price:

All material and concrete for thrust blocks, other anchors, reinforcing steel; all gravel, crushed stone, A.B.C., earth, sand, or screened material which may be required; all material for bracing and shoring trenches and for construction of forms; all barricades and traffic control equipment; all material for paving replacement and any water used for compaction of backfill.

5. INSTALLATION OF MATERIALS

All materials are to be installed in accordance with manufacturers recommendations unless otherwise directed by these Specifications.

All pipe, fittings and valves shall be laid true to the lines, grades and locations established by the Specifications and the Construction Drawings.

The ends and inside of the pipe shall be thoroughly cleaned and inspected for damage. No damaged materials shall be installed in the water distribution system. Whenever the work ceases for any reason, all open pipeline ends shall be tightly plugged by the Contractor. Plugs shall be watertight and approved by the company.

Concrete thrust blocks of the sizes required by the plans and specifications are to be provided at all valves, changes in direction or size, or at any other point where an unbalanced thrust due to water pressure would exist. Thrust blocks are to be formed to prevent any concrete from spilling over or into a joint.

Trench curves as shown on the Construction Drawings may be made without fittings when using push on joint pipe up to twelve inches (12") in diameter, if the deflection of the pipe does not exceed five degrees (5°) or nineteen inches (19") per eighteen-foot (18') length of pipe. The minimum radius of such curves will be two hundred five feet (205').

Prior to construction, the appropriate agency(ies) will be notified as required by the permit(s).

It shall be the Contractor's responsibility to uncover all existing water lines being connected to, and to verify the location, depth and size of pipe before any construction begins.

Any construction performed without the knowledge of the duly authorized representative is liable for removal and replacement at the Contractor's expense.

All fire hydrants, frames, covers and valve boxes, etc. shall be adjusted to finished grade prior to the placing of the asphalt concrete surface course by the Contractor (where applicable).

Air release valves shall be installed at water system high points per Standard Detail E-9-8-2.

All water services shall be set a minimum of two feet (2') on the customer's property, preferably within the P.U.E. and not within right-of-way.

Unless otherwise specified on the construction drawings, all water mains shall be installed five feet (5') from the property line inside the right-of-way or easement.

Water valves shall be spaced not more than five hundred feet (500') in commercial districts and not more than eight hundred feet (800') in other districts. Variations may be required for transmission mains or special applications.

Installation of water line casing shall be per Standard Specification E-9-24-1.

Tracer Wire and Warning Tape are to be installed on all mains, tees, crosses, ells and fire hydrant laterals. They will not be installed on service lines. The tracer wire will be installed on the water main 45 degrees from the vertical centerline of the pipe and shall be taped to the fittings directly and on the main every 10 feet using a minimum 10 mil vinyl tape. The tracer wire shall be placed between the valve riser and box with a minimum of 12" of wire inside. The warning tape shall be installed a minimum of two feet below the surface, being measured from final grade, directly over the center of the pipe. Any splices in the tracer wire shall be joined using waterproof connectors. Any splices in the warning tape shall be joined using minimum 10 mil vinyl tape. The tracer wire shall be tested for continuity after backfill and compaction, but before paving. Any detected damages to the wire shall be repaired before paving will be allowed.

6. BACKFILL OF WATER MAIN TRENCHES

Backfill of any excavation shall conform to the requirements of any of the governmental agencies having jurisdiction over the location. If no governmental agency having such jurisdiction specifies backfill or compaction requirements, and no special requirements are shown on the Construction Drawings, the procedure set forth in this section will apply for water line trenches.

The bedding material above the pipe and backfill material shall be compacted to a minimum of 70% compaction within a utility easement and 80% compaction within a right-of-way as determined by AASHTO T-99 method A and T-191. If water settling is used for compaction, it is the responsibility of the Contractor to prevent the pipe from floating.

The bedding material shall be either native material, 100% of which will pass through a one and one-half inch (1-1/2") screen and at least 20% of which will pass through a number-8 screen, or imported material which conforms to M.A.G. specifications for A.B.C. or type-B select materials. Bedding material shall be used below and around the pipe and a minimum of twelve inches (12") above the pipe. Shade and bedding material to be mechanically compacted prior to remainder of trench back-fill.

The remainder of the trench shall be backfilled with native or imported material which shall be of sound earthen material free from broken concrete, wood, broken pavement, or other unsuitable substances. Except as otherwise specified, backfill may be material containing no pieces larger than six inches (6") in greatest dimension.

Where settlement occurs, additional backfill material shall be placed and compacted and the trench shall be brought to final grade.

7. HYDROSTATIC TESTING OF COMPLETED PIPELINES

Hydrostatic testing of water pipelines will be completed before the new system is connected into the existing water system so that all testing can be done against all new materials.

The completed section of water pipeline to be tested shall be slowly filled with water with care being taken to expel all air from the pipe. If necessary, the pipe will be tapped at high points to vent air.

The Contractor shall provide all equipment and labor necessary to accomplish this testing and the price shall be included in the unit prices. The Contractor shall notify the Company in advance of the testing so that the Company can schedule a duly authorized representative to be at the site during testing. The Contractor, at its own expense, shall make any necessary repairs to the system being tested in order to cause the section being tested to meet the test limits set below. The Contractor may request authorization of the Company to connect the new pipelines to the existing system prior to completion of pressure testing when, in the Company's sole opinion and judgment, conditions warrant such connection.

The Contractor shall assume all responsibility to complete pressure testing to Company's specifications after such connection, including, but not limited to, isolation of the new pipelines from the existing system, if necessary.

Connections prior to completion of pressure testing shall not be made unless prior Company authorization has been obtained, and any extra expenses resulting from such connections shall be the sole responsibility of the Contractor.

Leakage tests will be for a period of two hours at 200 + or - 5 psi at the point of lowest elevation; leakage may not exceed 0.1 gallons per hour per one thousand feet (1,000') of pipe per inch of diameter. If dry utilities are not installed, a second pressure test is required.

8. STERILIZATION AND FLUSHING OF COMPLETED WATER PIPELINES

Sterilization and flushing will conform to recommendations of Arizona State Department of Health Services Engineering Bulletin Number 8, latest edition, or any future Arizona Department of Environmental Quality bulletins. Contractor to follow all conditions of any discharge permit.

9. NO OTHER UTILITIES ALLOWED IN OR NEAR WATER PIPELINE TRENCHES

No other utility installations will be permitted in the water pipeline trench or within five feet (5') of the Company's water pipeline when running parallel to the water pipelines.

10. PROTECTION OF WATER MAINS NEAR SEWERS

In order to protect water mains from contamination by sewers, the installation of the water mains must conform to the following requirements:

a. Horizontal - When water lines and sewers are laid parallel with each other, the horizontal distance between them shall not be less than six feet (6'). Each line shall be laid on undisturbed or bedded material in a separate trench. Where conditions prevent the minimum horizontal separation set forth above, extra protection will be required. Extra protection shall consist of constructing the sewer main with mechanical joint ductile iron pipe or with slip-joint ductile iron pipe if joint restraint is provided, or encasing both water and sewer main in concrete. See AWC Standard Detail E-9-30-1 and E-9-30-2.

The Construction Drawings shall indicate the installation requirements. The drawings showing these exceptions shall have been approved by the appropriate state and/or county health department. Refer to the diagram below for clarification.

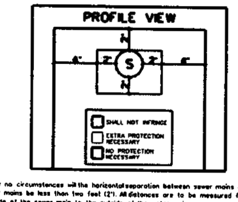

Under no circumstances will the horizontal separation between sewer mains and water mains be less than two feet (2'). All distances are to be measured from the outside of the sewer main to the outside of the water main.

b. Vertical - When a water main is parallel with or crosses a sewer main within two feet (2') above the sewer or greater than two feet (2') below the sewer, extra protection will be required. Extra protection shall consist of constructing the sewer main with mechanical joint ductile iron pipe or with slip-joint ductile iron pipe if joint restraint is provided, or encasing both water and sewer main in concrete. See AWC Standard Detail E-9-30-1 and E-9-30-2.

The Construction Drawings shall indicate the installation requirements. The drawings showing these exceptions shall have been approved by the appropriate state and/or county health department.

Under no circumstances will the vertical separation of a sewer main installed above a water main be less than two feet (2'). All distances are to be measured from the outside of the sewer main to the outside of the water main. Refer to the diagram above for clarification.

c. When unusual conditions such as, but not limited to, highway or bridge crossings prevent the water and sewer main separations required from being met, the appropriate state and/or county health department will review and may approve requests for authorization to use alternate construction techniques, materials and joints on a case-by-case basis.

d. No water pipe shall pass through or come into contact with any part of a sewer manhole. The minimum horizontal separation between water mains and manholes shall be six feet (6'), measured from the center of the manhole.

e. The minimum separation between force mains or pressure sewers and water mains shall be two feet (2') vertically and six feet (6') horizontally under all conditions. Where a sewer force main crosses above, or less than six feet (6') below, a water line, the sewer main shall be encased in at least six inches (6") of concrete for ten feet (10') on either side of the water main. Refer to the diagram below for clarification.

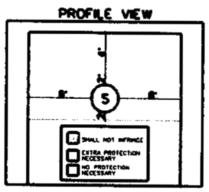

f. Sewer mains (gravity, pressure, force) shall be kept a minimum of fifty feet (50') from drinking water wells, unless the following conditions are met:

1. Water main pipe, pressure tested in place to 50 psi without excessive leakage, may be used for gravity sewers at distances greater than twenty feet (20') from drinking water wells.

2. Water main pipe, pressure tested in place to 150 psi without excessive leakage, may be used for pressure sewers and force mains at distances greater than twenty feet (20') from drinking water wells.

g. No septic tank/disposal field system shall be constructed within one hundred feet (100') of a drinking water well.

h. All distances are measured perpendicularly from the outside of the sewer main to the outside of the water main. These separation requirements do not apply to building, plumbing or individual house service connections.

i. Use Mechanical Joint ductile iron pipe with Megalug thrust restraints a minimum of ten (10') feet on each side of a sewer or storm drain crossing.

11. COMPACTION

When crossing existing water mains a minimum of 95% compaction is required to the bottom of existing mains.

Arizona Water Company requires that no slurry be permitted to contact existing cement/asbestos or ductile iron pipes, unless authorized by the company. Slurry may be poured in the bottom of the sewer trench stopping three inches (3") below the existing water main. The backfill used around the main should be AB in sufficient depth to prevent slurry from contacting existing main.

12. WATER MAIN MATERIAL SPECIFICATIONS

Ductile iron pipe (Push-on type) minimum class 350, cement lined and conform to AWWA C151.

All main line valves shall conform to AWWA C500 with a minimum working pressure of 200 psi.

All cast iron fittings to be cement lined in accordance with AWWA C104 and shall conform to AWWA C110 with a minimum working pressure of 250 psi. Except for the Coolidge System - See Note 4L.

Maximum joint deflection for 6" mechanical joint ductile iron pipe is seven degrees, seven minutes (7°,7') or twenty-seven inches (27") per eighteen-foot (18') length pipe, for a maximum curve of one hundred forty-five feet (145').

Maximum joint deflection for 8" and 12" mechanical joint ductile iron pipe is five degrees, twenty-one minutes (5°,21') or twenty inches (20") per eighteen-foot (18') length pipe, for a maximum curve of one hundred ninety-five feet (195').

Maximum joint deflection for 6", 8" and 12" push-on joint ductile iron pipe is five degrees (5°) or nineteen inches (19") per eighteen-foot (18') length pipe for a maximum curve of two hundred five feet (205').

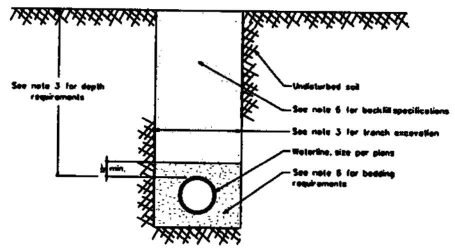

TYPICAL TRENCH DETAIL
Per MAG Detail 601, 601.4.2, 601.4.6

263-1100
1-800-STAKE-IT

41046
JAMES T WILSON
Expires 6/30/13
FOR WATER ONLY

ARIZONA WATER COMPANY
DRAWING No.
VV-0006
SHEET 8 OF 9

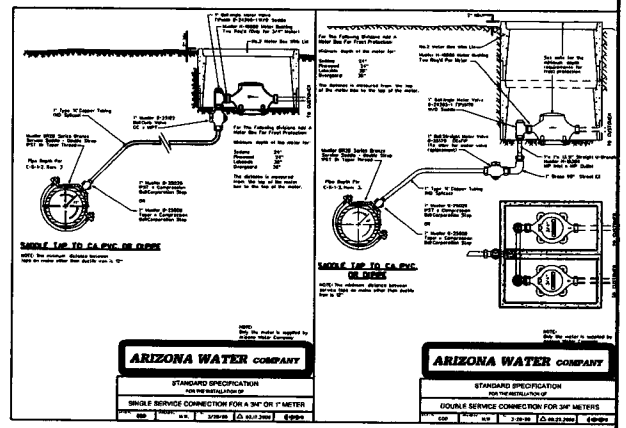

263-1100
1-800-STAKE-IT

41046
JAMES T. WILSON
ARIZONA, U.S.A.
Expires 6/30/13
FOR WATER ONLY

ARIZONA WATER COMPANY

DRAWING No
VV-0006

SHEET 9 OF 9

ARIZONA WATER COMPANY

Verde Valley Division
85 Coffee Pot Drive, Ste 7 Sedona, AZ 86336
928-282-6565 | FAX 928-282-4131

PROPOSAL/CONTRACT

CONTRACTOR: J Wise Corp	SYSTEM: Verde Valley/Pinewood
ADDRESS: 5851 S. Wilson Drive	W.A. Hole: 1-4929
CITY ST ZIP: Chandler, AZ 85249	BID DUE DATE: October 31, 2011

CONTRACTOR SUBMITS this PROPOSAL/CONTRACT to ARIZONA WATER COMPANY, an Arizona corporation (the "Company"), to perform the work and complete the project described on Page 2 (the "Project"), as an independent prime contractor.

1. Contractor certifies that it has a complete copy of, and has read, understands and accepts, the Company's General Conditions of Contract, and the Company's Construction Specifications and Standard Specification Drawings, (the "Specifications"), all of which are attached hereto. Contractor has examined the specific plans and related construction drawings for the Project (the "Drawings"), copies of which are also attached hereto. The General Conditions of Contract, Specifications and Drawings are incorporated into this Proposal/Contract. Contractor affirms that all work and materials to be furnished or purchased for the Project will be in strict conformance with the General Conditions of Contract, Specifications and Drawings.
2. Contractor represents and warrants that it has satisfied and complied with the provisions of Section 6, Contractor Understands Work and Working Conditions, of the General Conditions of Contract prior to submitting this Proposal/Contract.
3. Contractor represents that this Proposal/Contract is fair and honest in all respects, is submitted in good faith and is not submitted in collusion with any other company, entity or person.
4. Contractor acknowledges that one hundred percent (100%) Performance and Payment Bonds are required and must be provided to the Company prior to the commencement of work.
5. Prior to the commencement of work, Contractor will submit to the Company a list of all materials to be used in the Project. The materials list will include the manufacturer, part number, price and quantity included in this Proposal/Contract.
6. Contractor will furnish all labor, tools, equipment and materials required to complete the Project according to the General Conditions of Contract, Specifications and Drawings. No materials purchased by Contractor to be incorporated into the Project are subject to tax at the time of purchase and Contractor will not charge the Company for any such tax. Contractor will pay the applicable transaction privilege tax (the "Contracting Tax") on the Project after Contractor receives payment of the final Project invoice from the Company. The cost of materials incorporated into the Project which are exempt by Arizona Revised State Statues ("A.R.S.") from the Contracting Tax, for example, pipes or valves having a diameter of four (4) inches or larger, including equipment, fittings and any other related part that is used in operating the pipes or valves (A.R.S. §42-5061 B.5.), will not be included in the total cost of the labor and materials upon which the Contracting Tax is computed. Contractor retains full liability and obligation to pay the Contracting Tax and will defend and indemnify the Company against any demand or obligation to pay the Contracting Tax.
7. Contractor will maintain detailed accounting records of all materials purchased and incorporated into the Project. Such records will include all supporting original vendor invoices for all materials purchased. Following completion of the Project, Contractor will submit an itemized accounting to the Company which will include all supporting original vendor invoices and satisfactory evidence of payment thereof. The Company will not pay Contractor for materials not actually incorporated into the Project, and the disposition of such materials will remain Contractor's responsibility.
8. The Estimated Total Cost of the Project, shown on Page 2, is based on estimated labor and material quantities to be furnished. It includes an estimate of the Contracting Tax and the cost of the required Performance and Payment Bonds. Contractor will not cancel, modify or withdraw this Proposal/Contract during a ninety-day (90) period commencing on the Bid Due Date. The Company may accept this Proposal/Contract by signing and mailing, or otherwise delivering, a copy hereof to Contractor during such ninety-day (90) period. If the Company does not accept this Proposal/Contract during such ninety-day (90) period, Contractor may cancel this Proposal/Contract by giving written notice of cancellation to the Company.
9. Prior to the commencement of work, Contractor will provide the Company with a detailed construction schedule, in either Gantt or CPM form, identifying all tasks to be performed from the date of the written Commencement Notice through completion of the Project, including testing, training of Company Personnel and final Project invoicing. Contractor will provide the Company with a copy of such construction schedule documenting the progress of work on the Project at least monthly.
10. Contractor will not commence work on the Project until the Company gives Contractor a written Commencement Notice. Contractor will complete the Project within 60 calendar days after the Commencement Notice is issued.
11. Following the Company's written notice of satisfactory completion of the Project, and upon receipt of the final Project invoice from Contractor, the Company shall pay Contractor the actual total cost of the Project, which will be calculated as shown on Page 2, except that actual labor and material quantities installed/constructed will be substituted for the estimated labor and materials quantities and the Contracting Tax will be recalculated based on such actual labor and materials quantities.
12. The amount of applicable liquidated damages for Contractor's failure to deliver or perform within the time limit shown in Paragraph 10 may be deducted from the Company's payment of the final Project invoice. This provision shall not limit the Company's ability to terminate this Proposal/Contract for Contractor's unsatisfactory performance or failure to perform as provided in the General Conditions of Contract, Specifications or Drawings, or in this Proposal/Contract.

SPECIAL CONDITIONS:

- All services under asphalt to be encased in 2" schedule 40 PVC conduit
- Include road cuts and replacement in pricing where applicable
- All road cuts and replacements to comply with Coconino County Specifications
- Contractor is responsible for hot taps

CONTRACTOR	PROPOSAL/CONTRACT ACCEPTED:
J Wise Corp	ARIZONA WATER COMPANY
By: [signature]	By: [signature]
Print Name: Barry Weisenberger	Print Name: Fredrick K. Schneider, PE
Title: V.P.	Title: Vice President - Engineering
Date: 10-31-2011	Date: 4-9-2012

ARIZONA WATER COMPANY
Verde Valley Division
65 Coffee Pot Drive, Ste 7 Sedona, AZ 86336
928-282-5555 | FAX 928-282-6131

PROPOSAL/CONTRACT

CONTRACTOR: J Wise Corp	SYSTEM: Verde Valley/Pinewood
AZ CONTRACTOR LICENSE NO: 071422 CLASSIFICATION: A	W.A. No(s): 1-4929
ADDRESS: 5851 S. Wilson Drive	BID DUE DATE: October 31, 2011
CITY ST ZIP Chandler, AZ 85249	BID BOND REQUIRED ☑ Yes ☐ No

DESCRIPTION OF PROJECT: Replace water services in Pinewood on Hopi Place, Zuni Place, Navajo Place, Kay Place, Acoma Place and San Felipe Place complete as per Arizona Water Company construction specifications E-8-1.

1-2. MATERIALS EXEMPT FROM CONTRACTING TAX (per Paragraph 6)	QUANTITY	UNIT PRICE LABOR	UNIT PRICE MATERIALS	TOTAL COST LABOR	TOTAL COST MATERIALS
3. Total Labor to Install Exempt Materials (add the amounts in column 1)				3	
4. Total Exempt Materials (add the amounts in column 2)					4

5-6. NON-EXEMPT MATERIALS	QUANTITY	LABOR	MATERIALS	LABOR	MATERIALS
Replace 1" long double service complete, as per AWC Spec E-9-10-1	20	2400	2000	48,000	40,000
Replace 1" short double service complete, as per AWC Spec E-9-10-1	16	2200	800	35,200	12,800
Replace 3/4" short single service complete, as per AWC Spec E-9-9-1	4	2200	500	8800	2000
Replace 3/4" long single service complete, as per AWC Spec E-9-9-1	6	2400	1700	14,400	10,200
7. Total Labor to Install Non-Exempt Materials (add the amounts in column 5)				7 106,400	
8. Total Non-Exempt Materials (add the amounts in column 6)					8 $65,000
9. Subtotal A (add lines 3, 7 and 8)					9 $171,400
10. Contracting Tax Base (multiply the amount on line 9 by 0.65)				10 $14,410 -	
11. Applicable Contracting Tax Rate				11 .08 %	
12. Contracting Tax (multiply the amount on line 10 by line 11)					12 8913
13. Subtotal B (add lines 4, 9 and 12)					13 180,313
14. 100% Performance and Payment Bonds Cost					14 2592
15. Estimated Total Cost (add lines 13 and 14)					15 182,905

NOTE: The Estimated Total Cost includes all labor and materials for backfill, pavement replacement, chip seal, and traffic control necessary for the Project.

TT

CERTIFICATE OF LIABILITY INSURANCE

DATE (MM/DD/YYYY): 6/15/2011

THIS CERTIFICATE IS ISSUED AS A MATTER OF INFORMATION ONLY AND CONFERS NO RIGHTS UPON THE CERTIFICATE HOLDER. THIS CERTIFICATE DOES NOT AFFIRMATIVELY OR NEGATIVELY AMEND, EXTEND OR ALTER THE COVERAGE AFFORDED BY THE POLICIES BELOW. THIS CERTIFICATE OF INSURANCE DOES NOT CONSTITUTE A CONTRACT BETWEEN THE ISSUING INSURER(S), AUTHORIZED REPRESENTATIVE OR PRODUCER, AND THE CERTIFICATE HOLDER.

IMPORTANT: If the certificate holder is an ADDITIONAL INSURED, the policy(ies) must be endorsed. If SUBROGATION IS WAIVED, subject to the terms and conditions of the policy, certain policies may require an endorsement. A statement on this certificate does not confer rights to the certificate holder in lieu of such endorsement(s).

PRODUCER
GBP Risk Solutions
www.GBPrs.com
4544 E Camp Lowell Dr
Tucson AZ 85712-1282

CONTACT NAME: Laura Harder, CIC
PHONE (A/C, No, Ext): (520) 571-7737 FAX (A/C, No): (520) 571-9118
E-MAIL ADDRESS:
PRODUCER CUSTOMER ID #: 00002566

INSURED
J Wise Corporation
8987-309 E Tanque Verde #286
Tucson AZ 85749

INSURER(S) AFFORDING COVERAGE	NAIC #
INSURER A: Valley Forge Ins. Co.	20508
INSURER B: CNA Insurance Companies	020435
INSURER C: Continental Casualty Co.	20443
INSURER D:	
INSURER E:	
INSURER F:	

COVERAGES CERTIFICATE NUMBER: 11/12 GL/AL/UMB REVISION NUMBER:

THIS IS TO CERTIFY THAT THE POLICIES OF INSURANCE LISTED BELOW HAVE BEEN ISSUED TO THE INSURED NAMED ABOVE FOR THE POLICY PERIOD INDICATED. NOTWITHSTANDING ANY REQUIREMENT, TERM OR CONDITION OF ANY CONTRACT OR OTHER DOCUMENT WITH RESPECT TO WHICH THIS CERTIFICATE MAY BE ISSUED OR MAY PERTAIN, THE INSURANCE AFFORDED BY THE POLICIES DESCRIBED HEREIN IS SUBJECT TO ALL THE TERMS, EXCLUSIONS AND CONDITIONS OF SUCH POLICIES. LIMITS SHOWN MAY HAVE BEEN REDUCED BY PAID CLAIMS.

INSR LTR	TYPE OF INSURANCE	ADDL INSR	SUBR WVD	POLICY NUMBER	POLICY EFF (MM/DD/YYYY)	POLICY EXP (MM/DD/YYYY)	LIMITS	
A	GENERAL LIABILITY [X] COMMERCIAL GENERAL LIABILITY [ ] CLAIMS-MADE [X] OCCUR GEN'L AGGREGATE LIMIT APPLIES PER: [ ] POLICY [X] PRO-JECT [ ] LOC			2093128790	6/1/2011	6/1/2012	EACH OCCURRENCE	$ 1,000,000
							DAMAGE TO RENTED PREMISES (Ea occurrence)	$ 100,000
							MED EXP (Any one person)	$ 5,000
							PERSONAL & ADV INJURY	$ 1,000,000
							GENERAL AGGREGATE	$ 2,000,000
							PRODUCTS - COMP/OP AGG	$ 2,000,000
								$
B	AUTOMOBILE LIABILITY [X] ANY AUTO [ ] ALL OWNED AUTOS [ ] SCHEDULED AUTOS [X] HIRED AUTOS [X] NON-OWNED AUTOS			2093128770	6/1/2011	6/1/2012	COMBINED SINGLE LIMIT (Ea accident)	$ 1,000,000
							BODILY INJURY (Per person)	$
							BODILY INJURY (Per accident)	$
							PROPERTY DAMAGE (Per accident)	$
							Underinsured motorist bi single	$ 1,000,000
							Uninsured motorist bi-single	$ 1,000,000
C	[X] UMBRELLA LIAB [X] OCCUR [ ] EXCESS LIAB [ ] CLAIMS-MADE [ ] DEDUCTIBLE [X] RETENTION $ 10,000			2093128784	6/1/2011	6/1/2012	EACH OCCURRENCE	$ 2,000,000
							AGGREGATE	$ 2,000,000
								$
								$
	WORKERS COMPENSATION AND EMPLOYERS' LIABILITY ANY PROPRIETOR/PARTNER/EXECUTIVE OFFICER/MEMBER EXCLUDED? Y/N [ ] (Mandatory in NH) If yes, describe under DESCRIPTION OF OPERATIONS below		N/A				WC STATU-TORY LIMITS / OTH-ER	
							E.L. EACH ACCIDENT	$
							E.L. DISEASE - EA EMPLOYEE	$
							E.L. DISEASE - POLICY LIMIT	$

DESCRIPTION OF OPERATIONS / LOCATIONS / VEHICLES (Attach ACORD 101, Additional Remarks Schedule, if more space is required)

CERTIFICATE HOLDER

Arizona Water Company
Attn: John Snickers
P. O. Box 400
Apache Junction, AZ 85217

CANCELLATION

SHOULD ANY OF THE ABOVE DESCRIBED POLICIES BE CANCELLED BEFORE THE EXPIRATION DATE THEREOF, NOTICE WILL BE DELIVERED IN ACCORDANCE WITH THE POLICY PROVISIONS.

AUTHORIZED REPRESENTATIVE

L Beach, CIC/HARDER

© 1988-2009 ACORD CORPORATION. All rights reserved.
The ACORD name and logo are registered marks of ACORD

SCF Arizona
At work for you

Certificate of Insurance

Certificate Mailed To:

ARIZONA WATER CO.
3805 N. BLK CANYON HWY.
PHOENIX AZ 85015

Name of Insured:

J Wise Corp
8987 E Tanque Verde Rd
Ste 309 PMB 286
Tucson AZ 85749

Date Issued:	05/12/2011
Certificate Number:	108
Policy Number:	308775
Origin Date:	06/01/2000
Expiration Date:	06/01/2012
Liability Limits:	1000/1000/1000 (000 Omitted)

Proof of Coverage
Various AZ Location

Job Number: **Location:**

Should the above policy be canceled by the SCF ARIZONA before the expiration date thereof, the SCF ARIZONA will endeavor to mail 30 days written notice to the above named Certificate Holder, but failure to mail such notice shall impose no obligation or liability of any kind upon the SCF ARIZONA.

This Certificate is issued as a matter of information only and confers no rights upon the certificate holder. This certificate does not amend, extend or alter the coverage afforded by the policy listed hereon. This is to certify a workers' compensation policy has been issued to the insured listed hereon and is in force for the period referenced.

Certificate Issued To:

Arizona Water Co.
3805 N. Blk Canyon Hwy.
Phoenix AZ 85015

Authorized Representative

ARIZONA WATER COMPANY

COMMENCEMENT NOTICE

CONTRACTOR:

Mr. Barry Weisenberger
J Wise Corporation
5851 S. Wilson Drive
Chandler, AZ 85249

DATE: April 9, 2012
DIVISION: VERDE VALLEY
SYSTEM: VERDE VALLEY
W.A.: 1-4929

THIS IS YOUR NOTICE TO PROCEED WITH THE FOLLOWING PROJECT(S):

DESCRIPTION OF WORK:

Replace water services in Pinewood on Hopi Street, Zuni Place, Navajo Place, Kay Place, Acoma Place and San Felipe Place complete as per Arizona Water Company construction specifications E-8-1.

PERFORMANCE AND PAYMENT BONDS REQUIRED: [X] Yes [ ] No

TOTAL DAYS ALLOWED: 60

COMPLETION DATE: June 11, 2012

Prior to the start of construction, please call Keith Self, Division Manager at 928-282-7092 to schedule a pre-construction meeting.

ARIZONA WATER COMPANY	***J WISE CORPORATION***
Company	Contractor *(type name)*
By	By
Title Vice President - Engineering	Title

AFH
W:\PROJECTS\2012\VV\1-4929 PINEWOOD SERVICE REPLACEMENTS\AGREEMENTS\CONTRACTS\E-3-18-2 J WISE COMMENCEMENT NOTICE 1-4929 PINEWOOD SERVICES.DOCX 1/15/09 | FKS:afh | E-3-18-2

Bond No. CA4426355

GREAT AMERICAN INSURANCE GROUP

GREAT AMERICAN INSURANCE COMPANY
Ohio

CAUTION: You should use an original AIA document which has this caution printed in red. An original assures that changes will not be obscured as may occur when documents are reproduced.

AIA Document A312

Payment Bond

Any singular reference to Contractor, Surety, Owner or other party shall be considered plural where applicable.

CONTRACTOR (Name and Address):
J Wise Corporation
5851 S Wilson Drive
Chandler, AZ 85249

SURETY (Name and Principal Place of Business):

GREAT AMERICAN INSURANCE COMPANY
301 E. FOURTH STREET
CINCINNATI, OHIO 45202

OWNER (Name and Address):
Arizona Water Company
65 Coffee Pot Drive, Suite 7
Sedona, AZ 86336

CONSTRUCTION CONTRACT
Date: 4/9/2012
Amount: $182,905.00
Description (Name and Location): Replace Water Services in Pinewood on Hopi Place, Zuni Place, Navajo Place, Kay Place, Acoma Place and San Felipe Place

BOND
Date (Not earlier than Construction Contract Date): 4/11/2012
Amount: $182,905.00
Modifications to this Bond: ☐ None ☒ See Page 6

CONTRACTOR AS PRINCIPAL
Company: (Corporate Seal)
J Wise Corporation
Signature:
Name and Title: Barry Weisenberger
Vice President

SURETY **GREAT AMERICAN INSURANCE COMPANY**
Company: (Corporate Seal)
Signature: Christina M Tighe
Name and Title: Christina M. Tighe
Attorney-in-Fact

(Any additional signatures appear on page 6)

(FOR INFORMATION ONLY–*Name, Address and Telephone)*
AGENT or BROKER:
GBP Risk Solutions
4544 E Camp Lowell Dr., Suite 110
Tucson, AZ 85712

OWNER'S REPRESENTATIVE (Architect, Engineer or other party):

1 The Contractor and the Surety, jointly and severally, bind themselves, their heirs, executors, administrators, successors and assigns to the Owner to pay for labor, materials and equipment furnished for use in the performance of the Construction Contract, which is incorporated herein by reference.

2 With respect to the Owner, this obligation shall be null and void if the Contractor:

2.1 Promptly makes payment, directly or indirectly, for all sums due Claimants, and

2.2 Defends, indemnifies and holds harmless the Owner from claims, demands, liens or suits by any person or entity whose claim, demand, lien or suit is for the payment for labor, materials or equipment furnished for use in the performance of the Construction Contract, provided the Owner has promptly notified the Contractor and the Surety (at the address described in Paragraph 12) of any claims, demands, liens or suits and tendered defense of such claims, demands, liens or suits to the Contractor and the Surety, and provided there is no Owner Default.

3 With respect to Claimants, this obligation shall be null and void if the Contractor promptly makes payment, directly or indirectly, for all sums due.

4 The Surety shall have no obligation to Claimants under this Bond until:

4.1 Claimants who are employed by or have a direct contract with the Contractor have given notice to the Surety (at the address described in Paragraph 12) and sent a copy, or notice thereof, to the Owner, stating that a claim is being made under this Bond and, with substantial accuracy, the amount of the claim.

4.2 Claimants who do not have a direct contract with the Contractor:

.1 Have furnished written notice to the Contractor and sent a copy, or notice thereof, to the Owner, within 90 days after having last performed labor or last furnished materials or equipment included in the claim stating, with substantial accuracy, the amount of the claim and the name of the party to whom the materials were furnished or supplied or for whom the labor was done or performed; and

.2 Have either received a rejection in whole or in part from the Contractor, or not received within 30 days of furnishing the above notice any communication from the Contractor by which the Contractor has indicated the claim will be paid directly or indirectly; and

.3 Not having been paid within the above 30 days, have sent a written notice to the Surety (at the address described in Paragraph 12) and sent a copy, or notice thereof, to the Owner, stating that a claim is being made under this Bond and enclosing a copy of the previous written notice furnished to the Contractor.

5 If a notice required by Paragraph 4 is given by the Owner to the Contractor or to the Surety, that is sufficient compliance.

6 When the Claimant has satisfied the conditions of Paragraph 4, the Surety shall promptly and at the Surety's expense take the following actions:

6.1 Send an answer to the Claimant; with a copy to the Owner, within 45 days after receipt of the claim, stating the amounts that are undisputed and the basis for challenging any amounts that are disputed.

6.2 Pay or arrange for payment of any undisputed amounts.

7 The Surety's total obligation shall not exceed the amount of this Bond, and the amount of this Bond shall be credited for any payments made in good faith by the Surety.

8 Amounts owed by the Owner to the Contractor under the Construction Contract shall be used for the performance of the Construction Contract and to satisfy claims, if any, under any Construction Performance Bond. By the Contractor furnishing and the Owner accepting this Bond, they agree that all funds earned by the Contractor in the performance of the Construction Contract are dedicated to satisfy obligations of the Contractor and the Surety under this Bond, subject to the Owner's priority to use the funds for the completion of the work.

9 The Surety shall not be liable to the Owner, Claimants or others for obligations of the Contractor that are unrelated to the Construction Contract. The Owner shall not be liable for payment of any costs or expenses of any Claimant under this Bond, and shall have under this Bond no obligations to make payments to, give notices on behalf of, or otherwise have obligations to Claimants under this Bond.

10 The Surety hereby waives notice of any change, including changes of time, to the Construction Contract or to related subcontracts, purchase orders and other obligations.

11 No suit or action shall be commenced by a Claimant under this Bond other than in a court of competent jurisdiction in the location in which the work or part of the work is located or after the expiration of one year from the date (1) on which the Claimant gave the notice required by Subparagraph 4.1 or Clause 4.2 (iii), or (2) on which the last labor or service was performed by anyone or the last materials or equipment were furnished by anyone under the Construction Contract, whichever of (1) or (2) first occurs. If the provisions of this Paragraph are void or prohibited by law, the minimum period of limitation available to sureties as a defense in the jurisdiction of the suit shall be applicable.

12 Notice to the Surety, the Owner or the Contractor shall be mailed or delivered to the address shown on the signature page. Actual receipt of notice by Surety, the Owner or the Contractor, however accomplished, shall be sufficient compliance as of the date received at the address shown on the signature page.

13 When this Bond has been furnished to comply with a statutory or other legal requirement in the location where the construction was to be performed, any provision in this Bond conflicting with said statutory or legal requirement shall be deemed deleted herefrom and provisions conforming to such statutory or other legal requirement shall be deemed incorporated herein. The intent is that this

Bond shall be construed as a statutory bond and not as a common law bond.

14 Upon request by any person or entity appearing to be a potential beneficiary of this Bond, the Contractor shall promptly furnish a copy of this Bond or shall permit a copy to be made.

15 DEFINITIONS

15.1 Claimant: An individual or entity having a direct contract with the Contractor or with a subcontractor of the Contractor to furnish labor, materials or equipment for use in the performance of the Contract. The intent of this Bond shall be to include without limitation in the terms "labor, materials or equipment" that part of water, gas, power, light, heat, oil, gasoline, telephone service or rental equipment used in the Construction Contract, architectural and engineering services required for performance of the work of the Contractor and the Contractor's subcontractors, and all other items for which a mechanic's lien may be asserted in the jurisdiction where the labor, materials or equipment were furnished.

15.2 Construction Contract: The agreement between the Owner and the Contractor identified on the signature page, including all Contract Documents and changes thereto.

15.3 Owner Default: Failure of the Owner, which has neither been remedied nor waived, to pay the Contractor as required by the Construction Contract or to perform and complete or comply with the other terms thereof.

MODIFICATIONS TO THIS BOND ARE AS FOLLOWS:

1. Paragraph 5 above shall be amended to delete the word "or" and insert the word "and" in its place.

2. Paragraph 6 above is deleted in its entirety and replaced with the following:

"6. After the Claimant has satisfied the conditions of Paragraph 4 and submitted all supporting documentation and any proof of claim requested by the Surety, then the Surety shall, with reasonable promptness, (1) notify the Claimant of the amounts that are undisputed and the basis for challenging any amounts that are disputed, including, but not limited to, the lack of substantiating documentation to support the claim as to entitlement or amount, and (2) pay or make arrangements for payment of any undisputed amount. The failure of the Surety to timely discharge its obligations under this paragraph or to dispute or identify any specific defense to all or any part of a claim shall not be deemed to be an admission of liability by the Surety as to such claim or otherwise constitute a waiver of the Contractor's or Surety's defenses to, or right to dispute, such claim."

(Space is provided below for additional signatures of added parties, other than those appearing on the cover page.)

CONTRACTOR AS PRINCIPAL
Company: (Corporate Seal)
J Wise Corporation

Signature:
Name and Title: Barry Weisenberger, Vice-President
Address: 5851 S. Wilson Drive
Chandler, AZ 85249

SURETY **GREAT AMERICAN INSURANCE COMPANY**
Company: (Corporate Seal)

Signature:
Name and Title: Christina M. Tighe, Attorney-in-Fact
Address: 4544 E. Camp Lowell Dr., Suite 110
Tucson, AZ 85712

S1029AB (2/11)

GREAT AMERICAN INSURANCE COMPANY®

Administrative Office: 301 E 4TH STREET • CINCINNATI, OHIO 45202 • 513-369-5000 • FAX 513-723-2740

The number of persons authorized by
this power of attorney is not more than FOUR

No. 014295

POWER OF ATTORNEY

KNOW ALL MEN BY THESE PRESENTS: That the GREAT AMERICAN INSURANCE COMPANY, a corporation organized and existing under and by virtue of the laws of the State of Ohio, does hereby nominate, constitute and appoint the person or persons named below, each individually if more than one is named, its true and lawful attorney-in-fact, for it and in its name, place and stead to execute on behalf of the said Company, as surety, any and all bonds, undertakings and contracts of suretyship, or other written obligations in the nature thereof; provided that the liability of the said Company on any such bond, undertaking or contract of suretyship executed under this authority shall not exceed the limit stated below.

Name	Address	Limit of Power
RICHARD T. GREGSON LAWRENCE J. BEACH CHRISTINA M. TIGHE SHARON A. ESCANDON	ALL OF TUCSON, ARIZONA	ALL $75,000,000.00

This Power of Attorney revokes all previous powers issued in behalf of the attorney(s)-in-fact named above.

IN WITNESS WHEREOF the GREAT AMERICAN INSURANCE COMPANY has caused these presents to be signed and attested by its appropriate officers and its corporate seal hereunto affixed this 28th day of, APRIL, 2011.

Attest

GREAT AMERICAN INSURANCE COMPANY

DAVID C. KITCHIN (513-412-4602)

STATE OF OHIO, COUNTY OF HAMILTON - ss:

On this 28th day of APRIL, 2011, before me personally appeared DAVID C. KITCHIN, to me known, being duly sworn, deposes and says that he resides in Cincinnati, Ohio, that he is a Divisional Senior Vice President of the Bond Division of Great American Insurance Company, the Company described in and which executed the above instrument; that he knows the seal of the said Company; that the seal affixed to the said instrument is such corporate seal; that it was so affixed by authority of his office under the By-Laws of said Company, and that he signed his name thereto by like authority.

KAREN L. GROSHEIM
NOTARY PUBLIC, STATE OF OHIO
MY COMMISSION EXPIRES 02-20-16

This Power of Attorney is granted by authority of the following resolutions adopted by the Board of Directors of Great American Insurance Company by unanimous written consent dated June 9, 2008.

RESOLVED: That the Divisional President, the several Divisional Senior Vice Presidents, Divisional Vice Presidents and Divisional Assistant Vice Presidents, or any one of them, be and hereby is authorized, from time to time, to appoint one or more Attorneys-in-Fact to execute on behalf of the Company, as surety, any and all bonds, undertakings and contracts of suretyship, or other written obligations in the nature thereof; to prescribe their respective duties and the respective limits of their authority; and to revoke any such appointment at any time.

RESOLVED FURTHER: That the Company seal and the signature of any of the aforesaid officers and any Secretary or Assistant Secretary of the Company may be affixed by facsimile to any power of attorney or certificate of either given for the execution of any bond, undertaking, contract of suretyship, or other written obligation in the nature thereof, such signature and seal when so used being hereby adopted by the Company as the original signature of such officer and the original seal of the Company, to be valid and binding upon the Company with the same force and effect as though manually affixed.

CERTIFICATION

I, STEPHEN C. BERAHA, Assistant Secretary of Great American Insurance Company, do hereby certify that the foregoing Power of Attorney and the Resolutions of the Board of Directors of June 9, 2008 have not been revoked and are now in full force and effect.

Signed and sealed this 11th day of April, 2012.

ARIZONA WATER COMPANY

SPECIFICATIONS

GENERAL CONDITIONS OF CONTRACT: E-4-1

CONSTRUCTION SPECIFICATIONS: E-8-1

STANDARD SPECIFICATION DRAWINGS: E-9-1

2007 EDITION WITH 2010 REVISIONS

ARIZONA WATER COMPANY

GENERAL CONDITIONS OF CONTRACT: E-4-1

ARIZONA WATER COMPANY

E-4-1

GENERAL CONDITIONS OF CONTRACT

DEFINITIONS

A. Company. The words "Company" or "Arizona Water Company" mean Arizona Water Company, and where applicable, any division of Arizona Water Company, whose principal place of business is located at 3805 North Black Canyon Highway, Phoenix, Arizona 85015-5351 (Post Office Box 29006, Phoenix, Arizona 85038-9006).

B. Company's Authorized Representative. The words "Company's Authorized Representative" mean any officer of the Company, and any of the Company's Engineers, any Division Manager or Superintendent of the Company and/or such other person(s) designated in writing as the "Company's Authorized Representative" by the President or any Vice President of the Company.

C. Contractor. The word "Contractor" means either an individual or other entity employed to do the work as shown on the Construction Drawings and as specified herein.

D. Construction Drawings. The words "Construction Drawings" mean plans prepared by or on behalf of Arizona Water Company.

E. Invitation to Bid. The term "Invitation to Bid" means the current copy of Arizona Water Company's Form E-3-11-4 Request for Proposal/Contract or Form E-3-12-2 Invitation to Bid.

F. Contract. The word "Contract" means the written document titled "Contract" or "Proposal/Contract" when such document has been signed by an officer or other authorized representative of both the Contractor and the Company.

G. Inspector. The word "Inspector" means the Company's Authorized Representative or a person designated in writing by the Company's Authorized Representative.

GENERAL CONDITIONS OF CONTRACT

1. GENERAL

These General Conditions of Contract govern all works of installation and construction unless deviations are provided for on the Construction Drawings or in the Contract.

2. BONDS

The Contractor shall, upon request by the Company, furnish a performance bond and a material payment bond in the amount of 100% of the Contract price, in a form and from a surety acceptable to the Company.

3. LABOR AND/OR MATERIAL RELEASES

The Contractor shall supply labor and/or material releases satisfactory to the Company when requested to do so. Forms will be provided by the Company.

4. LICENSE

The Contractor shall have, as may be required by law, a valid license applicable to the work to be performed.

5. INSURANCE

The Contractor shall maintain in full force and effect insurance at no less than the following minimum amounts:

WORKER'S COMPENSATION	In accordance with requirements of the laws of the State of Arizona.
COMPREHENSIVE GENERAL LIABILITY (Including contractual liability covering death, bodily injury and property damage)	Combined single limit of not less than $1,000,000 for each occurrence.
AUTOMOTIVE LIABILITY (Including owned, non-owned and hired vehicles)	Combined single limit of not less than $1,000,000 for each occurrence.
SUBCONTRACTOR'S PUBLIC LIABILITY AND PROPERTY DAMAGE INSURANCE AND VEHICLE LIABILITY INSURANCE	Contractor shall either require each of its subcontractors to procure and to maintain Subcontractor's Public Liability and Property Damage Insurance and Vehicle Liability Insurance of the type and in the amounts specified in this Section 5 or insure the activities of its subcontractors in Contractor's own policy, in like amounts.

Such insurance shall name the Company, its officers, agents, and employees as additional insured and be primary for all purposes.

The Company will at all times have the right to require that all of such insurance be placed with insurance companies that are satisfactory to it. The Contractor shall file with the Company a certificate evidencing that each policy of insurance for the above coverages in the minimum amounts specified has been purchased and is in good standing.

Such certificate shall provide that notice be given to the Company at least thirty (30) days prior to cancellation or material change in the form of such policies or any of them. Such certificates shall be kept on file by the Company and the Company must have current certificates on file, or a certificate must accompany any bid proposal, before that proposal will be accepted by the Company.

6. CONTRACTOR UNDERSTANDS WORK AND WORKING CONDITIONS

By executing a Contract with the Company, the Contractor warrants that it has, by careful examination, satisfied itself as to the nature and location of the work, including soil conditions, the character, quality and quantity of the materials to be encountered, the character of the equipment and facilities needed preliminary to and during prosecution of the work, the general and local conditions, and all other matters which can in any way be expected to affect its work under the Contract. Verbal agreements or conversations with any officer, agent or employee of the Company, either before or after the execution of the Contract, are not binding upon the Company and shall not affect or modify any of the terms or obligations herein contained.

7. SPECIFICATIONS AND DRAWINGS

The Contractor shall keep on the job a complete copy of all drawings and specifications furnished by the Company which are applicable to the Contract with the Company. Anything mentioned in the specifications and not shown on the drawings or shown on the drawings and not mentioned in the specifications shall be of like effect as if shown or mentioned in both. In case of a discrepancy between the figures, drawings or specifications and physical conditions of the job, the matter shall be immediately submitted to the Company's Authorized Representative for decision as to adjustments, if any, because of the discrepancy; without a decision from the Company's Authorized Representative no discrepancy shall be adjusted by the Contractor, save only at its own risk and expense. Any deviation from the specifications must be approved in writing by the Company's Authorized Representative.

8. PROPERTY PROTECTION

Trees, fences, poles, underground structures and all other property shall be protected unless their removal is authorized on the Construction Drawings. Any property damaged shall be restored by the Contractor, at its expense, to the owner's satisfaction.

9. SPECIAL PERMITS, LICENSES AND INSURANCE

The Company shall obtain all permits for railroad, county, state, city and irrigation district rights-of-way as well as Forest Service, State Land Department and Bureau of Land Management permits. (Pipeline Contractors)

Whenever blasting is required, the Contractor shall obtain all permits, licenses and insurance required at its expense. (All Contractors)

The Contractor will be required to obtain, and shall certify in writing to the Company that it has obtained, all additional permits required to perform the work including, but not limited to, a National Pollution Discharge Elimination System Permit and/or an Aquifer Protection Permit as those permits relate to disposal of drilling, development and test waters and/or any other discharge or similar activity. (Well Drilling Contractors)

10. SURVEYS

The Company shall be responsible, or arrange, for all surveys required for the work covered in the Contract, unless otherwise specified.

11. BENCH MARKS, PROPERTY STAKES AND SURVEY STAKES

Bench marks, property stakes and survey stakes shall be preserved by the Contractor; in case they are destroyed or removed by Contractor or its employees, the Company will replace them at the Contractor's expense, and the Contractor and its sureties shall be liable therefore.

12. TOOLS, EQUIPMENT AND MATERIALS

The Contractor shall furnish all of the necessary tools, equipment, and pipeline materials required for the work. All material furnished by the Contractor shall be of the quality specified by the Company in its Construction Specifications (E-8-1).

13. SUPERINTENDENCE BY CONTRACTOR

The Contractor shall assure adequate superintendence of the work by a competent foreman or superintendent (with full authority to act on behalf of Contractor) satisfactory to the Company, who will be on the job at all times when work is in progress.

14. ORDER AND DISCIPLINE

The Contractor shall at all times enforce strict discipline and good order among its employees.

15. INDEPENDENT CONTRACTOR

The Contractor is an independent contractor and any provisions in the Contract, the specifications, or these General Conditions of Contract and Arizona Water Company's Construction Specifications which may appear to give the Company the right to direct the Contractor as to the details of the doing of any work to be performed by the Contractor, or to exercise a measure of control over said work, shall be deemed to mean and shall

mean, that the Contractor shall follow the desires of the Company in the results of the work only and not in the means whereby said work is to be accomplished, and the Contractor shall use its own discretion and shall have complete and authoritative control over the work and as to the details of the doing of the work.

16. PUBLIC SAFETY AND CONVENIENCE

Contractor shall at all times conduct its work so as to ensure the least possible obstruction to traffic and other inconvenience to the general public and the residents and businesses in the vicinity of the work, and to ensure the protection of persons and property.

To protect persons from injury and to avoid property damage, Contractor shall provide and maintain adequate barricades as required during the progress of the work and until it is safe to use the property for its intended purpose. The rules and regulations of the local governmental agencies and specific permit requirements respecting safety provisions shall be observed at all times.

In the case of blasting, the Contractor shall exercise extreme caution to protect the general public and personal and public property from harm or damage.

17. PROPERTY PROTECTION

Trees, fences, poles, and all other property shall be protected unless their removal is authorized by the Company. Any property damaged shall be restored by Contractor, at his expense, to Company's satisfaction.

18. RESPONSIBILITY OF CONTRACTOR

The work shall be under Contractor's responsible care and charge. Contractor shall bear all loss and damage whatsoever and from whatsoever cause, except that caused solely by the act of Company, which may occur on or to the work during the fulfillment of the Contract. If any loss or damage occurs, Contractor shall immediately make good any such loss or damage, and in the event of Contractor refusing or neglecting to do so, Company may, or by the employment of some other person, make good any such loss or damage, and the cost and expense of so doing shall be charged to Contractor.

The mention of any specific responsibility or liability imposed upon Contractor shall not be construed as a limitation or restriction of any general liability or duty imposed upon Contractor by the Contract. The reference to any specific duty or liability being made herein is merely for the purpose of explanation.

Contractor alone shall at all times be responsible for the safety of Contractor, Contractor's employees, and its subcontractors' employees, and for Contractor and its subcontractors' plant and equipment and the method of performing the work.

19. ERRORS AND OMISSIONS

If Contractor, in the course of the work, becomes aware of any errors or omissions in the Contract Documents or in the instructions, or if Contractor becomes aware of any discrepancy between the Contract Documents and the physical conditions of the site of

the work, Contractor shall immediately inform Company in writing. Any work done by Contractor after such discovery, until authorized by Company, will be done at Contractor's risk.

20. LAWS, REGULATIONS

Contractor shall give all notices required by law and comply with all laws, ordinances, rules and regulations, including, but not limited to, all applicable federal, state, local and other legally required health and safety standards, orders, rules, regulations or other laws, pertaining to the conduct of the work. Contractor shall be liable for, and shall defend and indemnify Company against and hold it harmless from, all violations of any law, ordinance, rule, regulation, standard, or order in connection with work furnished by or on behalf of Contractor. If Contractor observes that the Contract Documents are at variance with any law, ordinance, rule, regulation, standard, or order it shall promptly notify Company in writing and any necessary changes shall be adjusted as provided in the Contract for changes in the work. Contractor shall not perform any work contrary to such laws ordinances, rules, regulations, standards, or orders.

21. PERMITS, FEES AND INSPECTIONS

Permits and licenses necessary for the prosecution of the work, including, but not limited to, any National Pollution Discharge Elimination Systems (NPDES) Permits required by U.S. Environmental Protection Agency or the Arizona Department of Environmental Quality shall be secured, paid for, and complied with by Contractor.

Contractor shall be responsible for its actions and shall abide by all conditions and/or restrictions set forth in the NPDES Permit and any other permit or license required for this project.

Company shall at all times have access to the work whenever it is in preparation or in progress and Contractor shall provide proper facilities for such access and for all inspections. If the Contract Documents, the General Superintendent's instructions, laws, ordinances or any public authority require any work to be inspected or approved, Contractor shall give timely notice of its readiness for inspection.

Inspection of the work shall not relieve Contractor of any of its obligations even if defective work or unsuitable materials may have been previously overlooked by Company and accepted or estimated for payment. If any work is found not in accordance with the Contract Documents, Contractor, at its sole cost and expense, shall promptly make good such defective work.

22. CONSTRUCTION MARKING (PIPELINE ONLY)

Each job shall be marked and/or barricaded by the Contractor in such a manner that the construction is clearly visible at all times.

23. EXTRA WORK AND/OR MATERIALS

Except as otherwise herein provided, no charge for any extra work and/or material will be allowed unless the same has been ordered in writing by the Company's Authorized Representative, and the price stated in such order.

24. CHANGES

The Company shall have the right to make any changes in the work that it may determine to be necessary. If such changes affect the cost of the work, an equitable adjustment shall be negotiated. Changes shall in no way affect or void the obligations of both parties under the original Contract.

25. INSPECTION

All work and material shall be open at all times to inspection and acceptance or rejection by the Company's Inspector. Any work covered up by the Contractor prior to inspection and acceptance by the Company shall be subject to being uncovered at the expense of the Contractor for inspection by the Company. The Contractor shall give the Company reasonable notice of starting new work and shall provide, without extra charge, reasonable and necessary facilities for inspection, even to the extent of taking out portions of finished work. In case any such finished work removed is found satisfactory, however, the actual direct cost of such removal and replacement, plus 15% of such cost, will be paid by the Company; in addition, if completion of the work has been delayed thereby, the Contractor shall be granted a suitable extension of time on account of the additional work involved.

26. DEFECTIVE WORK OR MATERIAL

The Contractor shall remove, at its own expense, any work or material found defective by the Company's Inspector and shall rebuild and replace the same without extra charge; in default thereof, the same may be done by the Company at the Contractor's expense.

27. ASSIGNMENT

Neither party to the Contract may assign the Contract or sublet it in whole or in part without the written consent of the other, nor shall the Contractor assign any monies due or which may become due hereunder without the previous written consent of the Company, nor shall such consent release the Contractor from any of its obligations and liabilities under the Contract.

28. RIGHTS OF VARIOUS INTERESTS

Whenever work that is being done for the Company other than by the Contractor is contiguous to work being done by the Contractor, the respective rights of the various interests involved shall be established by the Company to secure the completion of the various portions of the work in general harmony.

29. SUSPENSION OF WORK

The Company's Authorized Representative may at any time and for any reason suspend all or any portion of the work under the Contract. This right to suspend work shall not be construed as denying the Contractor compensation for actual, reasonable and necessary expenses due to suspension to which it may be entitled.

The Company's Authorized Representative may order the Contractor to suspend any work because of certain conditions, such as inclement weather, or because the

Contractor is in violation of these General Conditions of Contract or the Construction Specifications. It is understood that compensation for expenses will not be allowed for such suspension when ordered by the Company's Authorized Representative on account of such conditions.

30. PROCEDURE OF WORK (PIPELINE ONLY)

All work under the Contract shall be planned and performed so as to cause a minimum of interference with normal vehicular and pedestrian traffic. At no time shall the Contractor completely obstruct the traffic to any business establishment during normal work hours of that business. It shall be the Contractor's responsibility to maintain facilities for ingress and egress to any business establishment. When crossing any street, not more than one-half of the street may be blocked at one time. All federal, state, county and city laws, rules and regulations relating to this subject are to be obeyed.

The Contractor shall complete any portion or portions of the work in such order of time as the Company may require. The Company shall have the right to take possession of and use any completed or partially completed portions of the work. If such prior possession or use increases the cost of or delays the work, the Contractor will be entitled to extra compensation or extension of time or both, as the Company may determine.

31. DISPUTES

All questions or controversies which arise between the Contractor and the Company, under, or in reference to, the Contract, shall be decided by the Company's Authorized Representative and a representative of the Contractor, and their decision shall be final and conclusive upon both parties.

32. CONNECTION TO EXISTING SYSTEM (PIPELINE ONLY)

Unless approved in writing by the Company's Authorized Representative, no tie-in or hot tap on the existing system shall be made unless the Company's Inspector is present. When the tie-in requires the operation of an existing valve or other control equipment, the conditions of Paragraph(s) 30 and 33 shall be complied with. The Contractor shall notify the Company twenty-four (24) hours prior to tie-in as to the exact time the Contractor plans to make tie-in so that the Company's Inspector will have sufficient time to locate valves and make necessary preliminary arrangements for shut down.

33. PLANNED INTERRUPTION OF WATER SERVICE (PIPELINE ONLY)

No valve or other control on an existing Company water system shall be operated for any purpose by the Contractor without approval of the Company's Inspector. All of the Company's water customers whose service is interrupted by a planned interruption, other than in cases of emergency, shall be notified by the Contractor at least twenty-four (24) hours before the planned interruption and advised of the probable time when the service will be restored.

34. EXISTING UTILITY FACILITIES (PIPELINE ONLY)

The Contractor shall notify all known utilities in the area of the work to be performed under the Contract and shall make arrangements to have their facilities marked in

accordance with A.R.S. 40-360.022 ("Blue Stake Law"). The Contractor shall be responsible for locating and preserving all marked facilities. Any damages to these marked facilities shall be repaired at the expense of the Contractor.

The Company will pay the cost to relocate its or other structures when such structures are found occupying the physical space of the proposed installation. It is understood that the Contractor will be reimbursed for such work only when written authorization from the Company has been obtained in advance of such work.

35. CLEANING UP

The Contractor shall remove from the Company's property and from all public and private property, at its own expense, all temporary structures, rubbish and waste materials resulting from its operations. In the event Contractor fails to do so, the Company may remove same at the expense of the Contractor.

36. WORKING HOURS (PIPELINE ONLY)

Unless stated to the contrary in the Invitation to Bid and/or so stated on the Construction Drawings, or agreed to by the Company during a Pre-Construction Conference, the Contractor shall not be permitted to perform work on Saturdays, Sundays, or Company holidays, or commence work such as tie-ins that cannot be completed during normal working hours.

37. INDEMNITY

A. The Contractor shall indemnify the Company against, and save and hold it harmless from, any and all liability, claims, demands, loss, actions, causes of action, expense, penalties, fines, assessments, damages and costs of every kind and nature for injury to or death of any and all persons, including, without limitation, employees or representatives of the Company or of the Contractor or of any subcontractor, or any other person or persons, and for damage, destruction or loss, consequential or otherwise, to or of any and all property, real or personal, including, without limitation, property of the Company or of the Contractor or of any subcontractor, or of any other person or persons, and the violation of any law, ordinance, rule, regulation, standard, or order resulting from or in any manner arising out of or in connection with the performance of the work under the Contract, howsoever same may be caused, including, without limitation, the Company's active or passive negligence. The Contractor shall also, upon request by the Company, and at no expense to the Company, defend the Company in any and all suits, concerning such injury to or death of any and all persons, and concerning such damage, destruction or loss, consequential or otherwise, to or of any and all property, real or personal, including, without limitation, suits by employees or representatives of the Company or of the Contractor or of any subcontractor, or any other person or persons, or concerning any court or administrative proceeding concerning the violation of any law, ordinance, rule, regulation, standard, or order. Excluded from this paragraph are only those injuries to or deaths of persons and damage, destruction or loss, to or of property arising from the sole negligence or willful misconduct of the Company.

B. Contractor shall indemnify the Company against, and save and hold it harmless from, any and all liability, claims, demands, damages, costs, expenses and attorney's fees, suffered or incurred on account of any breach of any obligation, covenant or other

provision of this contract, including without limitation, breach of the indemnity provisions of subsection A of this Section 37.

C. Contractor further agrees to defend, indemnify and hold harmless the Company, its directors, officers, employees, and agents, from and against any and all costs, damages, claims, expenses, violations, notices of violations, penalties, liens, assessments, and liabilities of every kind and nature, foreseeable or unforeseeable, directly or indirectly, arising from any release, removal, generation, use, storage or disposal on, under, around, or from the well site of any material, substance, or waste, hazardous or non-hazardous, including, without limitation, drilling fluids, mud, cuttings and development and test water howsoever same may be caused, including, without limitation, the Company's active or passive negligence.

38. LIENS

If at any time there shall be evidence of any lien or claim for which the Company might become liable and which is chargeable to the Contractor, the Company shall have the right to retain out of any payment then due or thereafter to become due, an amount sufficient to completely indemnify the Company against such lien or claim. If the Company determines that such lien or claim is valid, the Company may pay and discharge the same, and deduct the amount so paid from any monies which may be or become due and payable to the Contractor.

39. PAYMENT

Upon completion of the installation or construction, the Company will, within thirty (30) days after receipt of proper invoice and labor and material releases, pay the amount due the Contractor. If the Company believes that additional work, such as clean up, is required, it may deduct the total cost of such additional work from the amount to be paid to Contractor.

40. COMPANY'S RIGHT TO TERMINATE CONTRACT: DAMAGES DUE TO DELAY

If the Company finds the Contractor to be in material violation of any section of these General Conditions of Contract, Construction Specifications or Standard Specification Drawings or if the Contractor refuses or fails to prosecute the work, or any separable part thereof, with such diligence as will insure its completion within the time specified or any extension thereof, or fails to complete said work within such time, or when any other cause exists to justify such action, the Company may, without prejudice to any other right or remedy, by written notice to the Contractor, terminate its right to proceed with the work or such part of the work as to which there has been such violation, delay or other cause.

In the event the Contractor's right to proceed is terminated, the Company may take over the work and take possession of, and utilize in completing the work, such materials as may be on the site of the work and necessary therefore and prosecute said work to completion by whatever method it may deem expedient. The Contractor and its sureties shall be liable to the Company for any excess cost caused thereby.

In the event the Contractor's right to proceed with the work is terminated, the Contractor shall not be entitled to receive any further payment until the work is completed or the job is canceled. If the unpaid balance of the Contract price exceeds the expense of finishing

the work, including compensation for additional managerial and administrative services, such excess shall be paid to the Contractor. If such expenses exceed such unpaid balance, the Contractor shall pay the difference to the Company.

41. GUARANTEE

The Contractor shall guarantee all labor and workmanship and any materials it installs for a period of one year following the date of completion and acceptance by the Company. If any portion of the work or any of the materials become defective within the guarantee period, the Company will notify the Contractor of such defect. The Contractor must repair any defect within fifteen (15) days of such notification. If repairs are not completed within this time period, the Company may repair the defect, or cause such defect to be repaired, and the cost of such repairs shall be paid by the Contractor. The Company reserves the right to determine which defects are the result of poor labor and workmanship and which are caused by defective materials.

42. LIQUIDATED DAMAGES FOR NON PERFORMANCE: REQUEST FOR EXTENSION(S) OF TIME

Time is of the essence in the Contract. The time period required for completion of the work will be specified in the Contract. The Contractor agrees that the Company will suffer substantial damages in the event the Contractor fails to complete the work within the agreed upon time period. The Contractor and the Company agree that since it would be impracticable or extremely difficult to precisely fix such damages, a reasonable approximation of such actual damages suffered by the Company shall be a sum equal to 0.5% of the Contract price for each working day beyond the time period for completion of the work specified in the Contract.

Request by the Contractor for extensions of the time period shall be in writing and shall not become effective until approved in writing by the Company's Authorized Representative.

43. PAYMENT FOR REQUIRED TESTING

Whenever testing is required by any governmental agency or by the Company to assure conformance of the Contractor's work with the appropriate standard, it will be paid for as follows:

a. For testing required under permits obtained by the Company or testing specifically requested by the Company, the cost of the first test will be paid for by the Company. In the event of failure of the first test, the cost of all further testing associated with the failure will be paid by the Contractor.

b. For testing required under permits obtained by the Contractor, all costs will be paid by the Contractor. Testing of the pipeline for pressure and leakage will be included in the Contract price.

44. CONTRACT DEADLINES AND BONDS REQUIREMENTS

The time limits to be allowed for the completion of any work covered in the Contract shall be established as follows: In the proposal submitted to the Company, in response to the Invitation to Bid, the Contractor shall state the number of calendar days required for completion of the work. The time required will become a part of the Contract. When the Company is ready to proceed with the work, a Commencement Notice will be issued by the Company to the Contractor by mail. The Commencement Notice will allow the time required in the Contract plus ten (10) calendar days and will indicate the final day of the time allowed. The work cannot begin until the Company has received a performance bond and materials payment bond for the Contract price unless the bonds have been waived under the special conditions section of the Contract. The additional ten (10) days is the allowance for time to deliver the Commencement Notice to the Contractor and for the Contractor to return the performance bond and materials payment bond to the Company. Time extensions will be granted if warranted, and only at the time of the delay, thus extending the final day of the time allowed.

If the Company elects not to require a performance bond and a material payment bond for the work, the cost of the bonds will be deducted from the proposed total cost and the Contract will reflect this reduced cost and the bonds requirements will be waived under special conditions of the Contract.

ARIZONA WATER COMPANY

CONSTRUCTION SPECIFICATIONS: E-8-1

ERRATA 2010

CONSTRUCTION SPECIFICATIONS FOR THE INSTALLATION OF WATER DISTRIBUTION SYSTEMS DUCTILE IRON

DEFINITIONS

A. Company. The words "Company" or "Arizona Water Company" mean Arizona Water Company, and where applicable, any division of Arizona Water Company, whose principal place of business is located at 3805 North Black Canyon Highway, Phoenix, Arizona 85015-5351 (Post Office Box 29006, Phoenix, Arizona 85038-9006).

B. Company's Authorized Representative. The words "Company's Authorized Representative" mean any officer of the Company, and any of the Company's Engineers, any Division Manager or Superintendent of the Company and/or such other person(s) designated in writing as the "Company's Authorized Representative" by the President or any Vice President of the Company.

C. Contractor. The word "Contractor" means either an individual or other entity employed to do the work as shown on the Construction Drawings and as specified herein.

D. Construction Drawings. The words "Construction Drawings" mean plans prepared by or on behalf of Arizona Water Company.

E. Contract. The word "Contract" means the written document titled "Proposal/Contract" when such document has been signed by an officer or other authorized representative of both the Contractor and the Company.

CONSTRUCTION SPECIFICATIONS
FOR THE INSTALLATION OF WATER DISTRIBUTION SYSTEMS
DUCTILE IRON

1. GENERAL

All work is to be completed in a safe, workmanlike manner and in accordance with these Construction Specifications; any deviation therefrom must be approved in writing by the Company.

Installations must conform with the requirements of all governmental regulating agencies and the cost of conforming to such regulations must be included in the unit bid prices. Examples of such regulations, without attempting to be inclusive, are:

a. Special compaction and paving for street crossing.
b. Shoring when required because of the trench depth.
c. Closing a trench in those areas where no open trench is allowed overnight.
d. Barricading and traffic control as required.

2. LOCATION MARKING

Alignment stakes as required in the opinion of the Company shall be furnished by the Company to the Contractor and shall be set by the Company at agreed upon intervals and offsets. Under normal circumstances these will reference the pipeline location five feet (5') into the right-of-way measured from property pins. Grade stakes will be provided only when the Construction Drawings show a pipeline depth other than covered in these Specifications. It is the responsibility of the Contractor to preserve all survey work.

3. TRENCH EXCAVATION

The trench location is to be determined by the Construction Drawings.

FOR 8-INCH OR SMALLER PIPE: The depth of the trench prior to pipe laying shall be such that the finished pipeline shall have between thirty-six inches (36") and forty-two inches (42") of cover unless otherwise specified on the Construction Drawings.

FOR 12-INCH AND LARGER PIPE: The depth of the trench prior to pipe laying shall be such that the finished pipeline shall have between forty-eight inches (48") and sixty inches (60") of cover unless otherwise specified on the Construction Drawings.

The width of the trench at and below the level at the top of the pipe shall be a minimum of twelve inches (12") plus the outside diameter of the pipe barrel and a maximum of twenty-four inches (24") plus the outside diameter of the pipe barrel.

The bottom of the trench shall be accurately graded to provide a uniform bearing for each length of pipe for the full length of the pipe. If the native material on the trench bottom can be reasonably dug by hand, bell holes shall be dug for the joints so that the joints in no way support the pipe. When native materials such as rock are encountered during trenching that will not provide a uniform support for the pipe, the trench will be over-excavated an additional six inches (6") and suitable bedding material will be placed in the trench.

Bedding material will be placed by hand in four-inch (4") lifts and compacted to ensure uniform compaction and to eliminate any voids under the pipe. When the space between the pipe and trench bottom varies, this must be backfilled and compacted in four-inch (4") lifts to the mid-section of the pipe.

Whenever the trench is over-excavated for whatever reason, the trench bottom will be brought up to the correct depth at the Contractor's expense using either method (a) or (b) as follows:

a. A.B.C. material shall be used and compacted to a uniform density of not less than 80% of the maximum density as determined by AASHTO T-99 method A and T-191.

b. Native material 100% of which will pass through a one and one-half inch (1½") screen and at least 20% of which will pass through a number-8 screen shall be used and compacted to a uniform density of not less than 85% of the maximum density as determined by AASHTO T-99 method A and T-191.

4. MATERIALS TO BE PROVIDED BY CONTRACTOR

Unless otherwise specified on the Construction Drawings or in the Contract, the Contractor will supply all of the necessary materials which will become a permanent and integral part of the water distribution system, including concrete blocking, anchors, backfill material, paving material and supplies used during the prosecution of the work. All materials provided by the Contractor to construct the water distribution system must be NSF Standard 61 approved. All potable water pipes and fittings shall have NSF-PW seal. Construction materials used in the water system shall be lead free as defined at AAC R28-4-504 and R18-1-101. The Contractor will provide the following m aterials:

a. FIRE HYDRANTS: Mueller Super Centurion 250 Fire Hydrant, meets ANSI/AWWA C502 Standard, Model No. A-423, 5¼" main valve opening, three way, 6" Mechanical Joint Shoe, 1½" pentagon operating nut, color - yellow, drain open, open direction - left, 4' or 4'6" bury depending on application. For pumper and hose nozzle inform ation see below.

(1) 1 - 4" Pumper Nozzle, NST and 2 – 2½" Hose Nozzles, NST. (These locations only: Ajo, Casa Grande, Coolidge and San M anuel.)

(2) 1 – 4½" Pumper Nozzle, NST and 2 – 2½ " Hose Nozzles, NST. (These locations only: Apache Junction, Arizona City, Lakeside, Oracle, Overgaard, Pinewood, Rimrock, Sedona, Sierra Vista, White Tank and Winkelman.)

(3) 1 – 4½" Pumper Nozzle, NST and 2 – 2½" Hose Nozzles, NPT (Bisbee only.)

(4) 1 - 3" Pumper Nozzle GA 6-350 (6 threads per inch, 3.50 pitch diameter) and 2 – 2½" Hose Nozzles, NPT (Miami only.)

(5) 1 – 3½" Pumper Nozzle GA 6-411 (6 threads per inch, 4.11 pitch diameter) and 2 – 2½" Hose Nozzle, NST (Superior only.)

b. FITTINGS: Manufactured by Tyler or Union. Crosses, Elbows, Tees, Cap, Reducer, Adapter, Plug, Blind Flange and Tapped Flange; Ductile Iron, Class 350, SSB, Cast Iron Cement Lined.

(1) Foster Adaptors for MJ, made by Infact Corporation: Available in size 4" to 16". Part No. 4" = 4FA-BC, 6" = 6FA-BC, 8" = 8FA-BC, 10" = 10FA-BC, 12" = 12FA-BC, 16" = 16FA-BC.

c. DETECTOR CHECK VALVE: Mueller/ Hersey EDC III, iron body, including 5/8" x ¾" Trim Kit. Trim Kit Part No.: 4" = 282080, 6" = 282082, 8" = 282085, 10" = 282496.

d. GATE VALVES: Mueller Resilient Wedge Gate Valves, meets AWWA C509 specification, 250 psig, Non-rising stem, Part No. A-2360 sizes 4" through 12" ; Part No. A-2361 sizes 14" through 36", low zinc stems, epoxy coated inside and outside to meet the NSF 61 rating. The bonnet and stuffing box shall have 304 stainless steel bolts/nuts.

e. TRACER WIRE and WARNING TAPE:

1. TRACER WIRE: Shall be direct bury AWG #14 solid copper wire, Color: Blue.

2. WARNING TAPE: Reef Industries, Standard Terra Tape in 3" widths. Color: Blue and imprinted 'Arizona Water Company'.

f. AIR RELEASE VALVE: Crispin Model AR10 with 1" NPT inlet and ½" NPT outlet, cast iron body and top flange; with a 5/64" orifice with stainless steel valve sealing faces and BUNA-N rubber.

g. PRESSURE RELIEF VALVE: Watts 174A, Model M, 2" inlet, 2" outlet, Bronze Body, 30lb. to 150lb. pressure range.

h. MEGA LUG: Mechanical Joint restraint made of ductile iron conforming to ASTM 536-80, 250 psi made by EBAA Iron, Inc., series 1100 or equal.

i. METER BOXES:

(1) Concrete Box with a steel regular lid, Number 1: Tucson specification.

(2) Concrete Box with a steel regular lid, Number 2, 3, and 4: Phoenix specification.

j. PIPE, COPPER: Type K soft copper in 60 or 100-foot coils, per ASTM B88.

k. PIPE, DUCTILE IRON: Ductile Iron Pipe, Cement Lined, Push-on, conform to current ANSI/AWWA Specification A21.51/C151, Pressure Class 350 (sizes 4" through 12"), Pressure Class 250 (sizes 14" through 20"), or Pressure Class 200 for 24" through 36" pipe. Vendors:

(1) Pacific States Cast Iron Pipe Company
(2) Griffin Pipe
(3) United States Pipe and Foundry Company
(4) American Ductile Iron Pipe
(5) Clow Pipe (McWane, Inc.)

l. PIPE, PLASTIC: Plastic pipe, C-900 PVC per ANSI/AWWA C900, Class 150, sizes 6" through 12". NSF61 approved. Furnished in laying lengths of 20'. The barrel shall conform to the outside dimensions of steel pipe (IPS) or cast iron (CI) pipe equivalent and the wall thickness of dimension-ratio (DR) 18.

m. POLYETHYLENE ENCASEMENT (Polywrap): For all pipeline and related fittings installed, EXCEPT for the Coolidge Division. Minimum 8 Mil. and installed per AWWA C105/A21.5-93 and ASTM A-674-89. Manufactured by the Pacific States Cast Iron Pipe Company. The wrapping tape shall be minimum 10 mil. vinyl tape. No duct tape shall be used.

n. COUPLING: Mueller, straight three part union, tested to meet ANSI/AWWA C800, H15403, conductive com pression.

Mueller, H15428, straight coupling, conductive compression by male iron pipe, tested to meet ANSI/AWWA C800 specification. Size: 2".

Mueller, H15451, straight coupling, conductive compression by female iron pipe, tested to meet ANSI/AWWA C800 specification. Size: 2".

Viking Johnson brand, sold by Mueller: MaxiFit Straight (2"-24"), MaxiFitXtra Straight (4"-8") or MaxiStep Transition, tested to meet AWWA/ANSI C.219-91 specifications – certified to ISO 9001:1994 / Smith – Blair Quantum.

o. STOP, ANGLE METER, BALL: Mueller, valve, B24258, conductive compression by meter swivel nut, tested to meet ANSI/AWWA C800, size 5/8 " x ¾" x ¾" for a ¾" service or size 1" for a 1" service.

Mueller, valve, B24265, female pipe thread by meter swivel nut, tested to meet ANSI/AWWA C800, size 5/8" x ¾" x ¾" for a ¾" service or size 1" for a 1" service.

p. STOP, CORP: Mueller, ball valve, B25008, taper thread by conductive compression, tested to meet ANSI/AWWA C800 specification, sizes: ¾", 1" and 2".

Mueller, ball valve, B25028, iron pipe thread by conductive compression, tested to meet ANSI/AWWA C800 specification. Sizes ¾", 1", and 2".

Mueller, 300 Ball Curb Valve, B-25122, taper thread by conductive compression, tested to meet ANSI/AWWA C800 specifications, size: 2". (2" service)

q. STOP, CURB: Oriseal valve, H10291, iron pipe thread by iron pipe thread, quarter turn check, brass, tested to 300 psi working pressure, tested to meet ANSI/AWWA C800 specification, size: 2".

Mueller, B20283, Mueller 300 ball curb valve, female iron pipe by female iron pipe, quarter turn check, tested to meet ANSI/AWWA C800 specification. Size: 2". (Blow-off E-9-8-1).

r. TAPPING SADDLE: Smith Blair, Cast Bronze ASTM-B584 85-5-5-5, double strap, iron pipe threads, Models 321 and 323. Washers are silicon bronze, ASTM-B36. Gaskets are grade 60 Buna N, or Mueller bronze double strap service saddle, BR 2 B series, cast bronze, ASTM-B585, 85-5-5-5, or H16084, 200 psig, meets ANSI/AWWA C800.

s. TAPPING SLEEVE: Mueller H304 Stainless Steel Tapping Sleeve, JCM 432 18-8 Type 304 Stainless Steel Tapping Sleeve, Romac "SST" Type 304 Stainless Steel Tapping Sleeve or CASCADE-style CST-EX stainless steel pressure-rated tapping sleeve.

t. TAPPING VALVE: Mueller Resilient Wedge tapping valve, Catalog Number T-2360-16, Class 125, sizes 4" through 12"; T-2361-16, Class 125, sizes 14" to 36" all with Type 304 stainless steel fasteners; bypass valves are required on 18" – 36" valves flange by mechanical joint per ANSI/AWWA C111, iron wedge, non-rising stem. Epoxy coated interior/exterior per ANSI/AWWA C550 for NSF 61 compliance. 250 PSI range for valves 4" to 12". 150 PSI range for valves 14" to 36".

u. U-BRANCH: Mueller, H15364, 1" male iron pipe by ¾" male iron pipe, tested to meet ANSI/AWWA C800 specification. Size: 1" x ¾" x 13½", straight line.

v. VALVE BOXES: Valve Box with Cover, adjustable, Tyler 562-A or equal, made of cast iron.

w. VAULTS: Utility Vault Company, Chandler, AZ.

(1) 4484-WA concrete vault with a 3660 aluminum double torsion door with a recessed padlock hasp, two - 18" x 24" center knockouts.

(2) 575-WA concrete vault with a 4874 aluminum double torsion door with a recessed padlock hasp, two - 18" x 24" center knock outs and adjustable frame.

(3) 612-5X-WA concrete vault with a 4874 aluminum double torsion door with a recessed padlock hasp, two - 18" x 24" center knockouts.

x. VALVE, METER: Mueller, B24265-1, Mueller 300 ball angle meter valve, female iron pipe by meter nut, quarter turn check, lock wing, tested to meet ANSI/AWWA C800 specification. Size: 1".

Mueller, B25170, Mueller 300 ball straight valve, conductive compression by female iron pipe, quarter turn check, lock wing, tested to meet ANSI/AWWA C800 specification. Size: 1".

y. YOKES, METER: Relocator type copper meter yoke with horizontal inlet and outlet and meter thread ends, B24118, with lock wing Mueller 300 angle ball valve, full port, sizes: 1" x 12", 5/8" x ¾" x 7", 5/8 x ¾" x 9".

Mueller, 2" copper meter yoke with horizontal inlet and outlet and female iron pipe threads, B2423-99000, with lock wing Mueller 300 ball angle meter valves on inlet and outlet risers. Raised 1" by-pass with lock wing Mueller 300 ball valve.

The Contractor also will be required to provide the following materials, the cost of which will be included in its unit bid price:

All material and concrete for thrust blocks, other anchors, reinforcing steel; all gravel, crushed stone, A.B.C., earth, sand, or screened material which may be required; all material for bracing and shoring trenches and for construction of forms; all barricades and traffic control equipment; all material for paving replacement and any water used for compaction of backfill.

5. INSTALLATION OF MATERIALS

All materials are to be installed in accordance with manufacturer's recommendations unless otherwise directed by these S pecifications.

All pipe, fittings and valves shall be laid true to the lines, grades and locations established by the Specifications and the Construction Drawings.

The ends and inside of the pipe shall be thoroughly cleaned and inspected for damage. No damaged materials shall be installed in the water distribution system .

Whenever the work ceases for any reason, all open pipeline ends shall be tightly plugged by the Contractor. Plugs shall be watertight and approved by the company.

Concrete thrust blocks of the sizes required by the plans and specifications are to be provided at all valves, changes in direction or size, or at any other point where an unbalanced thrust due to water pressure would exist. Thrust blocks are to be formed to prevent any concrete from spilling over or into a joint.

Trench curves as shown on the Construction Drawings may be made without fittings when using push on joint pipe up to twelve inches (12") in diameter, if the deflection of the pipe does not exceed five degrees (5°) or nineteen inches (19") per eighteen-foot (18') length of pipe. The minimum radius of such curves will be two hundred five feet (205').

Prior to construction, the appropriate agency(ies) will be notified as required by the permit(s).

It shall be the Contractor's responsibility to uncover all existing water lines being connected to, and to verify the location, depth and size of pipe befor e any construction begins.

Any construction performed without the knowledge of the duly authorized representative is liable for removal and replacem ent at the Contractor's expense.

All fire hydrants, frames, covers and valve boxes, etc. shall be adjusted to finished grade prior to the placing of the asphalt concrete surface course by the Contractor (where applicable).

Air release valves shall be installed at water system high points per Standard Detail E-9-8-2.

All water services shall be set a minimum of two feet (2') on the customer's property, preferably within the P.U.E. and not within right-of-way.

Unless otherwise specified on the construction drawings, all water mains shall be installed five feet (5') from the property line inside the right-of-way or easement.

Water valves shall be spaced not more than five hundred feet (500') in commercial districts and not more than eight hundred feet (800') in other districts. Variations may be required for transmission mains or special applications.

Installation of water line casing shall be per Standard Speci fication E-9-24-1.

Tracer Wire and Warning Tape are to be installed on all mains, tees, crosses, ells and fire hydrant laterals. They will not be installed on service lines. The tracer wire will be installed on the water main 45 degrees from the vertical centerline of the pipe and shall be taped to the fittings directly and on the main every 10 feet using a minimum 10 mil vinyl tape. The tracer wire shall be placed between the valve riser and box with a minimum of 12" of wire inside. The warning tape shall be installed a minimum of two feet below the surface, being measured from final grade, directly over the center of the pipe. Any splices in the tracer wire shall be joined using waterproof connectors. Any splices in the warning tape shall be joined using minimum 10 mil vinyl tape. The tracer wire shall be tested for continuity after backfill and compaction, but before paving. Any detected damages to the wire shall be repaired before paving will be allowed.

6. BACKFILL OF WATER MAIN TRENCHES

Backfill of any excavation shall conform to the requirements of any of the governmental agencies having jurisdiction over the location. If no governmental agency having such jurisdiction specifies backfill or compaction requirements, and no special requirements are shown on the Construction Drawings, the procedure set forth in this section will apply for water line trenches.

The bedding material above the pipe and backfill material shall be compacted to a minimum of 70% compaction within a utility easement and 80% compaction within a right-of-way as determined by AASHTO T-99 method A and T-191. If water settling is used for compaction, it is the responsibility of the Contractor to prevent the pipe from floating.

The bedding material shall be either native material, 100% of which will pass through a one and one-half inch (1½") screen and at least 20% of which will pass through a number-8 screen, or imported material which conforms to M.A.G. specifications for A.B.C. or type-B

select materials. Bedding material shall be used below and around the pipe and a minimum of twelve inches (12") above the pipe. Shade and bedding material to be mechanically compacted prior to remainder of trench back-fill.

The remainder of the trench shall be backfilled with native or imported material which shall be of sound earthen material free from broken concrete, wood, broken pavement, or other unsuitable substances. Except as otherwise specified, backfill may be material containing no pieces larger than six inches (6") in greatest dimension.

Where settlement occurs, additional backfill material shall be placed and compacted and the trench shall be brought to final grade.

7. HYDROSTATIC TESTING OF COMPLETED PIPELINES

Hydrostatic testing of water pipelines will be completed before the new system is connected into the existing water system so that all testing can be done against all new materials.

The completed section of water pipeline to be tested shall be slowly filled with water with care being taken to expel all air from the pipe. If necessary, the pipe will be tapped at high points to vent air.

The Contractor shall provide all equipment and labor necessary to accomplish this testing and the price shall be included in the unit prices. The Contractor shall notify the Company in advance of the testing so that the Company can schedule a duly authorized representative to be at the site during testing. The Contractor, at its own expense, shall make any necessary repairs to the system being tested in order to cause the section being tested to meet the test limits set below. The Contractor may request authorization of the Company to connect the new pipelines to the existing system prior to completion of pressure testing when, in the Company's sole opinion and judgment, conditi ons warrant such connection.

The Contractor shall assume all responsibility to complete pressure testing to Company's specifications after such connection, including, but not limited to, isolation of the new pipelines from the existing system, if necessary.

Connections prior to completion of pressure testing shall not be made unless prior Company authorization has been obtained, and any extra expenses resulting from such connections shall be the sole responsibi lity of the Contractor.

Leakage tests will be for a period of two hours at 200± 5 psi at the point of lowest elevation; leakage may not exceed 0.1 gallons per hour per one thousand feet (1,000') of pipe per inch of diameter. If dry utilities are not installed, a second pressure test is required.

8. STERILIZATION AND FLUSHING OF COMPLETED WATER PIPELINES

Sterilization and flushing will conform to recommendations of Arizona State Department of Health Services Engineering Bulletin Number 8, latest edition, or any future Arizona Department of Environmental Quality bulletins. Contractor to follow all conditions of any discharge permit.

9. NO OTHER UTILITIES ALLOWED IN OR NEAR WATER PIPELINE TRENCHES

No other utility installations will be permitted in the water pipeline trench or within five feet (5') of the Company's water pipeline when running parallel to the water pipelines.

10. PROTECTION OF WATER MAINS NEAR SEWERS

In order to protect water mains from contamination by sewers, the installation of the water mains must conform to the following requirements:

a. Horizontal - When water lines and sewers are laid parallel with each other, the horizontal distance between them shall not be less than six feet (6'). Each line shall be laid on undisturbed or bedded material in a separate trench. Where conditions prevent the minimum horizontal separation set forth above, extra protection will be required. Extra protection shall consist of constructing the sewer main with mechanical joint ductile iron pipe or with slip-joint ductile iron pipe if joint restraint is provided, or encasing both the water main and sewer main in concrete. See Detail E-9-30-1 and E-9-30-2

The Construction Drawings shall indicate the installation requirements. The drawings showing these exceptions shall have been approved by the appropriate state and/or county health department. Refer to the diagram below for clarification.

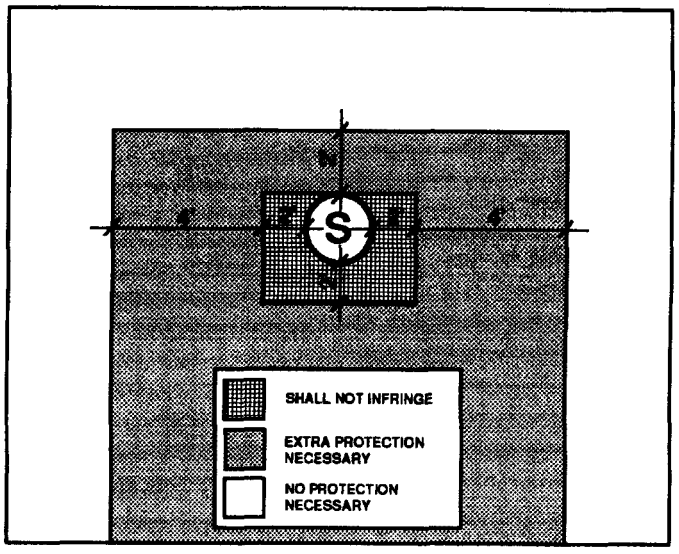

Under no circumstances will the horizontal separation between sewer mains and water mains be less than two feet (2'). All distances are to be measured from the outside of the sewer main to the outside of the water main.

b. Vertical - When a water main is parallel with or crosses a sewer main within two feet (2') above the sewer or greater than two feet (2') below the sewer, extra protection will be required. Extra protection shall consist of constructing the sewer main with mechanical joint ductile iron pipe or with slip-joint ductile iron pipe if joint restraint is provided, or encasing both the water main and sewer main in concrete. See Detail E-9-30-1 and E-9-30-2.

The Construction Drawings shall indicate the installation requirements. The drawings showing these exceptions shall have been approved by the appropriate state and/or county health department.

Under no circumstances will the vertical separation of a sewer main installed above a water main be less than two feet (2'). All distances are to be measured from the outside of the sewer main to the outside of the water main. Refer to the diagram above for clarification.

c. When unusual conditions such as, but not limited to, highway or bridge crossings prevent the water and sewer main separations required from being met, the appropriate state and/or county health department will review and may approve requests for authorization to use alternate construction techniques, materials and joints on a case-by-case basis.

d. No water pipe shall pass through or come into contact with any part of a sewer manhole. The minimum horizontal separation between water mains and manholes shall be six feet (6'), measured from the center of the manhole.

e. The minimum separation between force mains or pressure sewers and water mains shall be two feet (2') vertically and six feet (6') horizontally under all conditions. Where a sewer force main crosses above, or less than six feet (6') below, a water line, the sewer main shall be encased in at least six inches (6") of concrete for ten feet (10') on either side of the water main. Refer to the diagram below for clarification.

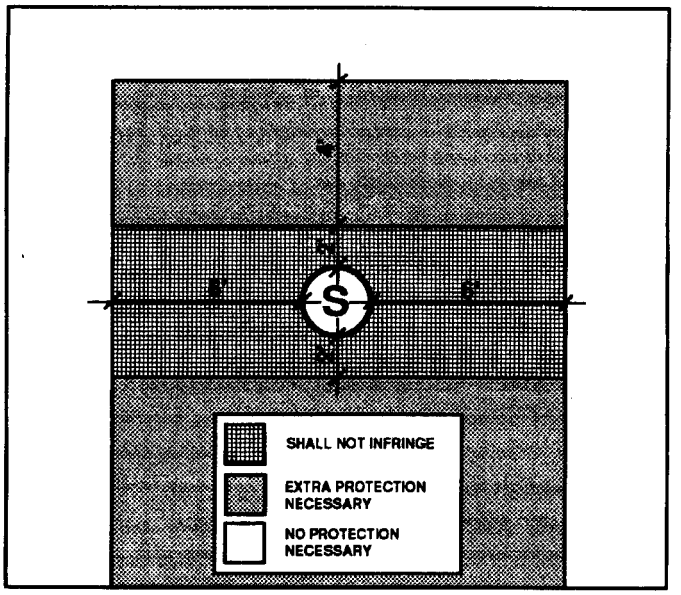

f. Sewer mains (gravity, pressure, force) shall be kept a minimum of fifty feet (50') from drinking water wells, unless the following conditions are met:

   1. Water main pipe, pressure tested in place to 50 psi without excessive leakage, may be used for gravity sewers at distances greater than twenty feet (20') from drinking water wells.

   2. Water main pipe, pressure tested in place to 150 psi without excessive leakage, may be used for pressure sewers and force mains at distances greater than twenty feet (20') from drinking water wells.

g. No septic tank/disposal field system shall be constructed within one hundred feet (100') of a drinking water well.

h. All distances are measured perpendicularly from the outside of the sewer main to the outside of the water main. These separation requirements do not apply to building, plumbing or individual house service connections.

i. Use Mechanical Joint ductile iron pipe with Megalug thrust restraints a minimum of ten (10') feet on each side of a sewer or storm drain crossing.

11. COMPACTION

When crossing existing water mains a minimum of 95% compaction is required to the bottom of existing mains.

Arizona Water Company requires that no slurry be permitted to contact existing cement/asbestos or ductile iron pipes, unless authorized by the company. Slurry may be poured in the bottom of the sewer trench stopping three inches (3") below the existing water main. The backfill used around the main should be AB in sufficient depth to prevent slurry from contacting existing main.

12. WATER MAIN MATERIAL SPECIFICATIONS

Ductile iron pipe (Push-on type) minimum class 350, cement lined and conform to AWWA C151.

All main line valves shall conform to AWWA C500 with a minimum working pressure of 200 psi.

All cast iron fittings to be cement lined in accordance with AWWA C104 and shall conform to AWWA C110 with a minimum working pressure of 250 psi. Except for the Coolidge System – See Note 4L.

Maximum joint deflection for 6" mechanical joint ductile iron pipe is seven degrees, seven minutes (7°, 7') or twenty-seven inches (27") per eighteen-foot (18') length pipe, for a maximum curve of one hundred forty-five feet (145').
Maximum joint deflection for 8" and 12" mechanical joint ductile iron pipe is five degrees, twenty-one minutes (5° 21') or twenty inches (20") per eighteen-foot (18') length pipe, for a maximum curve of one hundred ninety-five feet (195').

Maximum joint deflection for 6", 8" and 12" push-on joint ductile iron pipe is five degrees (5°) or nineteen inches (19") per eighteen-foot (18') length pipe for a maximum curve of two hundred five feet (205').

ARIZONA WATER COMPANY

3805 N. BLACK CANYON HIGHWAY, PHOENIX, ARIZONA 85015-5351 • P.O. BOX 29006, PHOENIX, ARIZONA 85038-9006
PHONE: (602) 240-6860 • FAX: (602) 240-6878 • WWW.AZWATER.COM

November 24, 2010

Mr. Tony Geiger
US Pipe – Waterworks Marketing Consultants
34522 N. Scottsdale Road
Scottsdale, Arizona 85226

Re: US Pipe Sentinel Fire Hydrants and Resilient Wedge Gate Valves

Dear Mr. Geiger:

Thank you for your interest in working with Arizona Water Company (the "Company") to add US Pipe Sentinel Fire Hydrants and Resilient Wedge Gate Valves to the Company's material and equipment specifications. Based on the US Pipe product information you provided and your field presentations to our operations and engineering staff, the Company is pleased to inform you that the following items are approved for use in the Company's water systems in Arizona.

Sentinel Fire Hydrant:

- Model Sentinel 250
  - 5¼" MVO
  - 4½" pumper
  - 2½" hose
  - Meets AWWA C-502 standard and approval by ULFM

Resilient Wedge Gate Valves:

- Model US Pipe A-USP0
  - Meets AWWA C-509 Full Body Cast Iron <u>includes</u> 304 SS Nuts, Bolts & Low Zinc Bronze Stem
  - Size range 2" thru 12"
- Model US Pipe A-USP1
  - Meets AWWA C-515 Reduced Wall Ductile Iron <u>includes</u> 304 SS Nuts, Bolts & Low Zinc Bronze Stem
  - Size range 14" thru 48"

E-MAIL mail@azwater.com

W:\Fred\US Pipe Ltr Tony Geiger 11 24.10.doc
FKS:elhalh | 11/24/2010 8:23 AM

We look forward to developing a long-term relationship with you and the US Pipe products. If I can be of any assistance, please call me.

Very truly yours,

Fredrick K. Schneider
Vice President – Engineering

afh

VIA EMAIL: TGEIGER4@COX.NET

ARIZONA WATER COMPANY

3805 N. BLACK CANYON HIGHWAY, PHOENIX, ARIZONA 85015-5351 • P.O. BOX 29006, PHOENIX, ARIZONA 85038-9006
PHONE: (602) 240-6860 • FAX: (602) 240-6878 • WWW.AZWATER.COM

October 19, 2010

Mr. Jim Ryan
Clow Valve Company
8121 N. 10th Avenue
Phoenix, Arizona 85021

Re: Clow Medallion Fire Hydrants and Resilient Wedge Gate Valves

Dear Mr. Ryan:

Thank you for your interest in working with Arizona Water Company (the "Company") to add Clow Medallion Fire Hydrants and Resilient Wedge Gate Valves to the Company's material and equipment specifications. Based on the Clow product information you provided and your field presentations to our operations and engineering staff, the Company is pleased to inform you that the following items are approved for use in the Company's water systems in Arizona.

Medallion Fire Hydrant:

- Model F-2545
  - 5¼" MVO
  - 4½" pumper
  - 2½" hose
  - Meets AWWA C-502 standard and approval by ULFM

Resilient Wedge Gate Valves:

- Model 2639 & 2640
  - Meets AWWA C-509 Full Body Cast Iron includes 304 SS Nuts, Bolts & Low Zinc Bronze Stem
  - Size range 2½" thru 12"
- Model 2638
  - Meets AWWA C-515 Reduced Wall Ductile Iron includes 304 SS Nuts, Bolts & Low Zinc Bronze Stem
  - Size range 14" thru 48"

We look forward to developing a long-term relationship with you and the Clow products. If I can be of any assistance, please call me.

Very truly yours,

Fredrick K. Schneider
Vice President – Engineering

lar

VIA EMAIL: JIM.RYAN@CLOWVALVE.COM

February 21, 2012

Contractor

Re: Fitting Specifications

Dear Contractor:

Effective March 1, 2012, Arizona Water Company (the "Company") has changed its fitting specifications for Ductile Iron Fittings and Ductile Iron Flanged Fittings ("Fittings"). All Fittings purchased by the Company, on the Company's behalf or installed with the intent of being conveyed to the Company, must comply with the requirements noted below.

Previous Fitting Specifications:

Fittings

Manufactured by Tyler or Union, Crosses, Elbows, Tees, Cap Reducer, Adapter, Plug, Blind Flange and Tapped Flange: Ductile Iron, Class 350, SSB, and Cast Iron Cement Lined.

New Fitting Specification:

Ductile Iron Fittings (Push-On and Mechanical Joint)

Ductile Iron Push-On and Mechanical Joint ("MJ") fittings for water lines shall be made of ductile iron per ASTM A536 and be cast in the United States of America. Fittings shall have USA cast on the fitting to designate they are made in the United States. All fittings will be manufactured and tested in accordance with ANSI/AWWA C153/A21.53 for compact design and ANSI/AWWA C110/A21.10 for full body design. In accordance with ANSI/AWWA C104/A21.4 fittings 2" – 3" will be single thickness cement mortar lined and 4" – 64" will be cement mortar lined. Fittings will be Asphaltic seal coated on the exterior in accordance with ANSI/AWWA C104/A21.4. MJ fittings with flanged end(s) will match ANSI/AWWA C115/A21.15 and ANSI B16.1 class 125 flanges. All fittings shall be NSF-61 listed for use with potable water.

Ductile Iron Flanged Fittings

Ductile Iron flanged fittings for water lines shall be made of ductile iron per ASTM A536 and be cast in the United States of America. Fittings shall have USA cast on the fitting to designate they are made in the United States. All fittings will be manufactured and tested in accordance with ANSI/AWWA C110/A21.10 design. Flange ends will match ANSI/AWWA C115/A21.15 and ANSI B16.1 class 125 flanges. In accordance with ANSI/AWWA C104/A21.4 fittings 2" – 3" will be single thickness lined and 4" – 64" will be cement mortar lined. Fittings will be Asphaltic seal coated on the exterior in accordance with ANSI/AWWA C104/A21.4. All fittings shall be NSF-61 listed for use with potable water.

If you have any questions or require further information, please contact me at 602-240-6860.

Very truly yours,

Fredrick K. Schneider, PE
Vice President - Engineering
engineering@azwater.com

afh
Enclosure

ARIZONA WATER COMPANY

STANDARD SPECIFICATION DRAWINGS: E-9-1

ERRATA 2010

ARIZONA WATER COMPANY

STANDARD SPECIFICATION DRAWINGS - DUCTILE IRON

INDEX (E-9)

E-9-1	TYPICAL GATE VALVE LOCATIONS
E-9-2	INSTALLATION OF TYPICAL VERTICAL AND HORIZONTAL GATE VALVES
E-9-3	INSTALLATION OF TYPICAL TAPPING SLEEVE AND VALVE
E-9-4	INSTALLATION OF TYPICAL VALVE SUBJECT TO NON-VEHICULAR AND VEHICULAR TRAFFIC
E-9-5	INSTALLATION OF TYPICAL THRUST BLOCKING SCHEDULE THRUST BLOCK FOR VERTICAL BENDS, AND MEGALUG THRUST RESTRAINTS
E-9-6	INSTALLATION OF TYPICAL PERPENDICULAR FIRE HYDRANT
E-9-7	INSTALLATION OF TYPICAL PARALLEL FIRE HYDRANT
E-9-8	INSTALLATION OF TYPICAL 2" BLOWOFF DEVICE, AND AIR RELEASE VALVE
E-9-9	INSTALLATION OF TYPICAL SINGLE SERVICE CONNECTION FOR A $^3/_4$" OR 1" METER
E-9-10	INSTALLATION OF TYPICAL DOUBLE SERVICE CONNECTION FOR A $^3/_4$" AND 1" METER
E-9-11	INSTALLATION OF TYPICAL 2" SERVICE CONNECTION
E-9-12	INSTALLATION OF 3" COMPOUND METER, 4" COMPOUND METER, 6" COMPOUND METER, 6" COMPOUND SERVICE, CONCRETE VAULT, AND NON-POTABLE PROPELLER METER
E-9-13	INSTALLATION OF TYPICAL 4" THRU 8" DETECTOR CHECK VALVES AND 3" THRU 10" REDUCED PRESSURE PRINCIPLE DETECTOR WITH BYPASS METER ASSEMBLY (RPDA) FOR FIRE LINE SERVICES
E-9-14	INSTALLATION OF TYPICAL PRESSURE RELIEF VALVE ASSEMBLY
E-9-15	INSTALLATION OF TYPICAL PRESSURE REDUCING STATION
E-9-16	PAINT COLOR SELECTION
E-9-17	STEEL WATER STORAGE TANK
E-9-18	HYDROPNEUMATIC TANK
E-9-19	INSTALLATION OF WELL SHELTER

E-9-20	INSTALLATION OF TYPICAL WELL WITH LINE SHAFT TURBINE PUMP
E-9-21	INSTALLATION OF TYPICAL WELL WITH SUBMERSIBLE TURBINE PUMP
E-9-22	INSTALLATION OF COLUMN PIPE, OIL TUBE AND LINE SHAFT
E-9-23	HOT TAP AND JUMPER METER CONNECTION
E-9-24	INSTALLATION OF TYPICAL WATER LINE ENCASEMENT
E-9-25	INSTALLATION OF CALCIUM HYPOCHLORITE TABLET CHLORINATOR
E-9-26	INSTALLATION OF CHAIN LINK FENCE
E-9-27	INSTALLATION OF SIDE HUNG WATER LINE SUSPENSION
E-9-28	PIPE WARNING TAPE, LOCATOR WIRE, AND LOCATOR WIRE TERMINATION
E-9-29	INSTALLATION OF A TYPICAL SAMPLING STATION
E-9-30-1	WATER AND SANITARY SEWER SEPARATION/PROTECTION PERPENDICULAR
E-9-30-2	WATER AND SANITARY SEWER SEPARATION/PROTECTION – PARALLEL

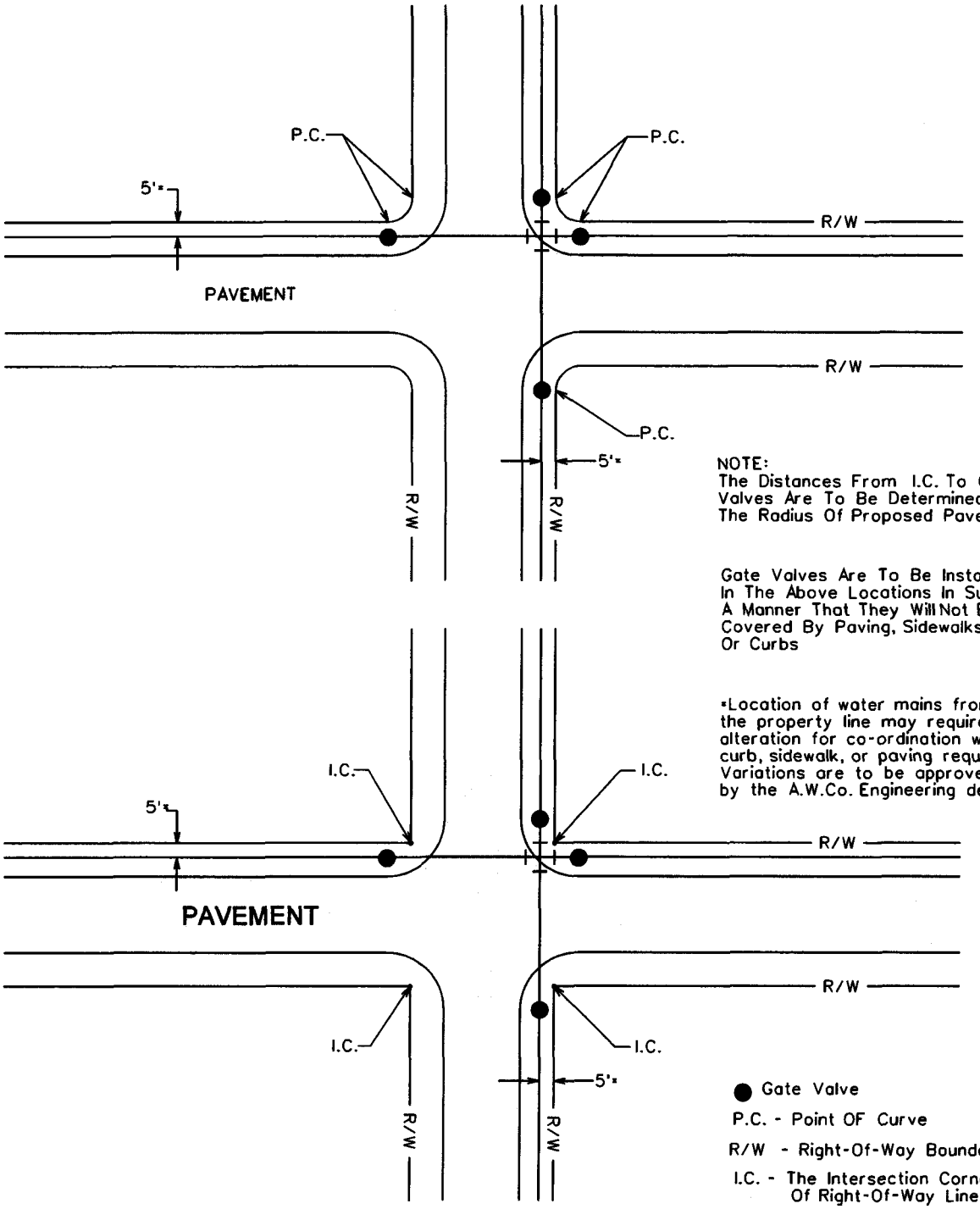

NOTE:
The Distances From I.C. To Gate Valves Are To Be Determined By The Radius Of Proposed Pavement.

Gate Valves Are To Be Installed In The Above Locations In Such A Manner That They Will Not Be Covered By Paving, Sidewalks, Or Curbs

*Location of water mains from the property line may require alteration for co-ordination with curb, sidewalk, or paving requirements. Variations are to be approved by the A.W.Co. Engineering dept.

● Gate Valve

P.C. - Point OF Curve

R/W - Right-Of-Way Boundary

I.C. - The Intersection Corner Of Right-Of-Way Lines

ARIZONA WATER COMPANY

STANDARD SPECIFICATION
FOR THE INSTALLATION OF

TYPICAL GATE VALVE LOCATIONS

DRAWN BY:	APPROVED BY:	DATE:	△	
CCO	M.W.	3/20/86	1/31/2001	E-9-1-1

FOR 6" THROUGH 12" GATE VALVES

Mueller Resiliant Wedge Gate Valves
Catalog Number A-2360-__
ANSI/AWWA C509 Compliant

FOR 14" THROUGH 16" GATE VALVES

Mueller Resiliant Wedge Gate Valves
Catalog Number A-2361-__
ANSI/AWWA C509 Compliant

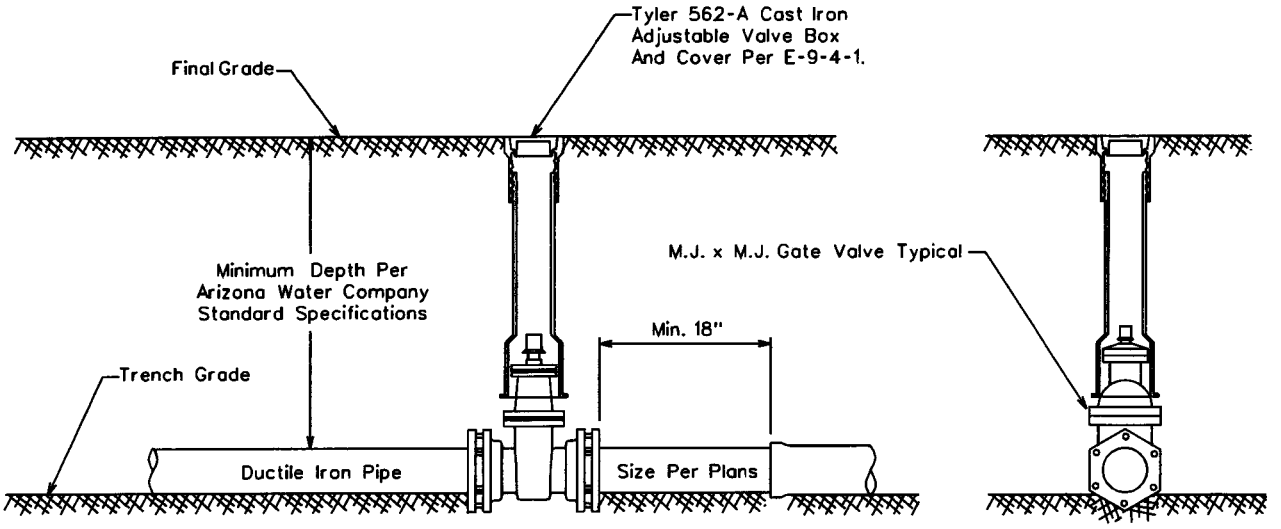

All Valves Installed On Pipe Five Feet (5') Deep And Greater Are To Be Installed With A Valve Operator Extension, Mueller Catalog No. A-26441.

ARIZONA WATER COMPANY

STANDARD SPECIFICATION
FOR THE INSTALLATION OF

TYPICAL VERTICAL GATE VALVES

DRAWN BY:	APPROVED BY:	DATE:	△	
CB	MW	03.20.1986	08.23.2006	E-9-2-1

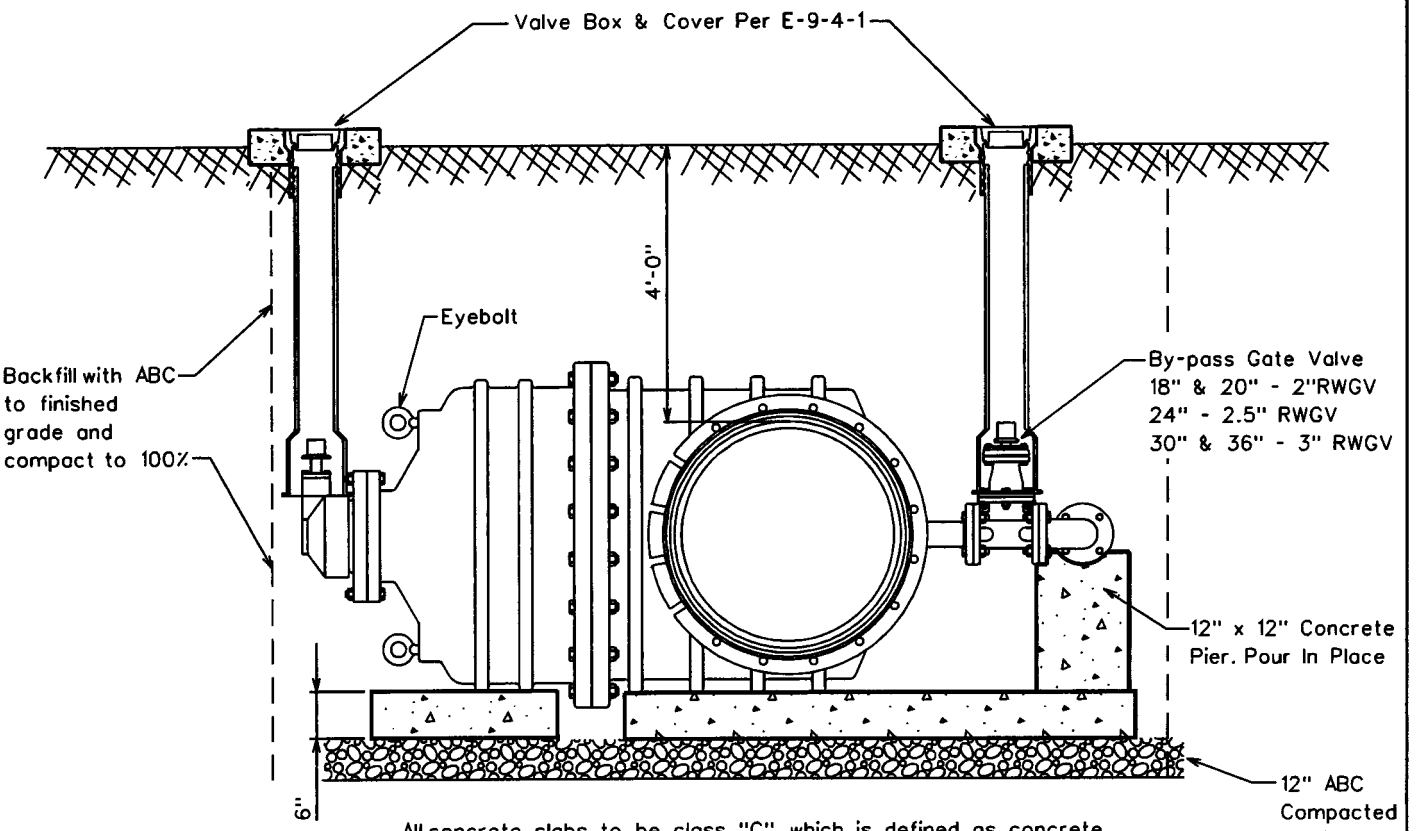

All concrete slabs to be class "C", which is defined as concrete whose minimum compressive strength at 14 days reaches 1600psi and at 28 days reaches 2000psi. per MAG Section 725, Table 725-1. Slabs to be formed and poured prior to valve installation.

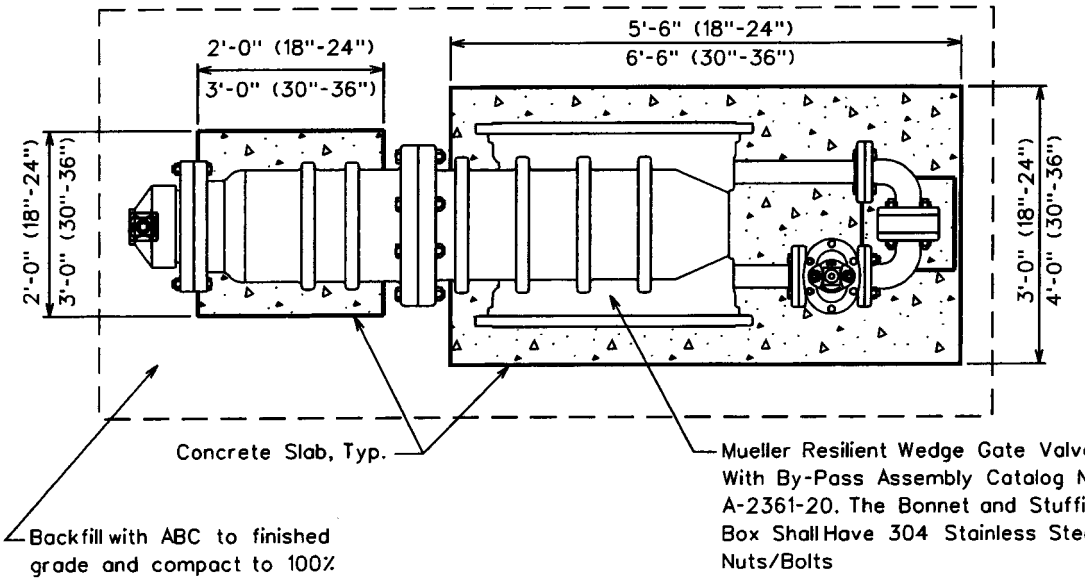

ARIZONA WATER COMPANY

All valves installed on pipe five feet and greater are to be installed with a valve operator extension Mueller catalog No.A-26441 The distance is measured from the top of the operating nut to final grade.

STANDARD SPECIFICATION

FOR THE INSTALLATION OF

INSTALLATION OF BEVEL GEARED HORIZONTAL GATE VALVES WITH BY-PASS FOR 18" AND LARGER VALVES

DRAWN BY:	APPROVED BY:	DATE:	△	
CB		12.07.2004		E-9-2-2

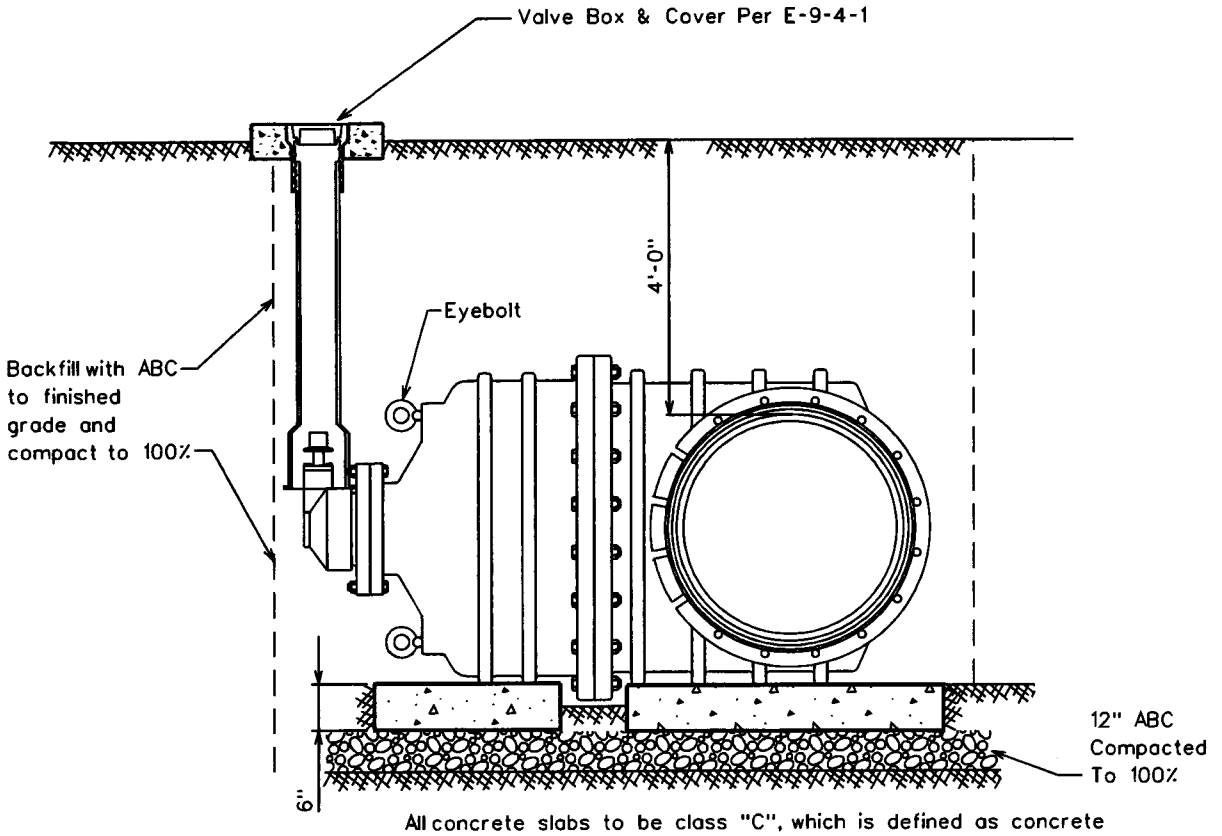

All concrete slabs to be class "C", which is defined as concrete whose minimum compressive strength at 14 days reaches 1600psi and at 28 days reaches 2000psi. per MAG Section 725, Table 725-1. Slabs to be formed and poured prior to valve installation.

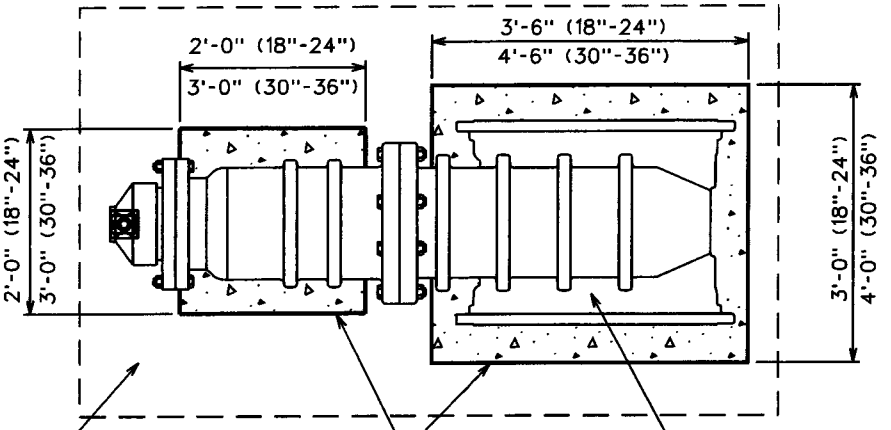

All valves installed on pipe five feet and greater are to be installed with a valve operator extension Mueller catalog No.A-26441 The distance is measured from the top of the operating nut to final grade.

ARIZONA WATER COMPANY

STANDARD SPECIFICATION

FOR THE INSTALLATION OF

INSTALLATION OF BEVEL GEARED HORIZONTAL GATE VALVES WITHOUT A BY-PASS FOR 18" AND LARGER VALVES

DRAWN BY:	APPROVED BY:	DATE:	△	
CB		12.07.2004	5.13.2005	E-9-2-3

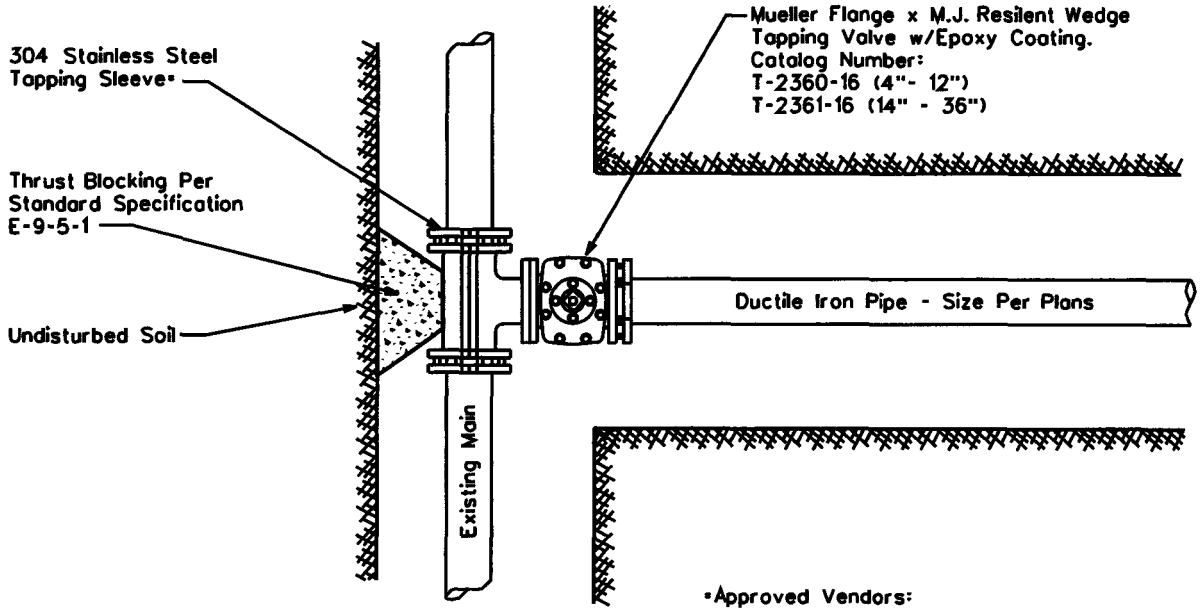

*Approved Vendors:

Mueller, Catalog No. H304, 304 Stainless Steel

JCM, Model 432, 304 Stainless Steel

Romac, 'SST', 304 Stainless Steel

Cascade, 'CST-EX', 304 Stainless Steel

NOTE:

1. All flanges, bolts, and nuts shall be kept free of concrete.
2. Air pressure test the tapping sleeve before the live tap is made.
3. Polywrap all new fittings

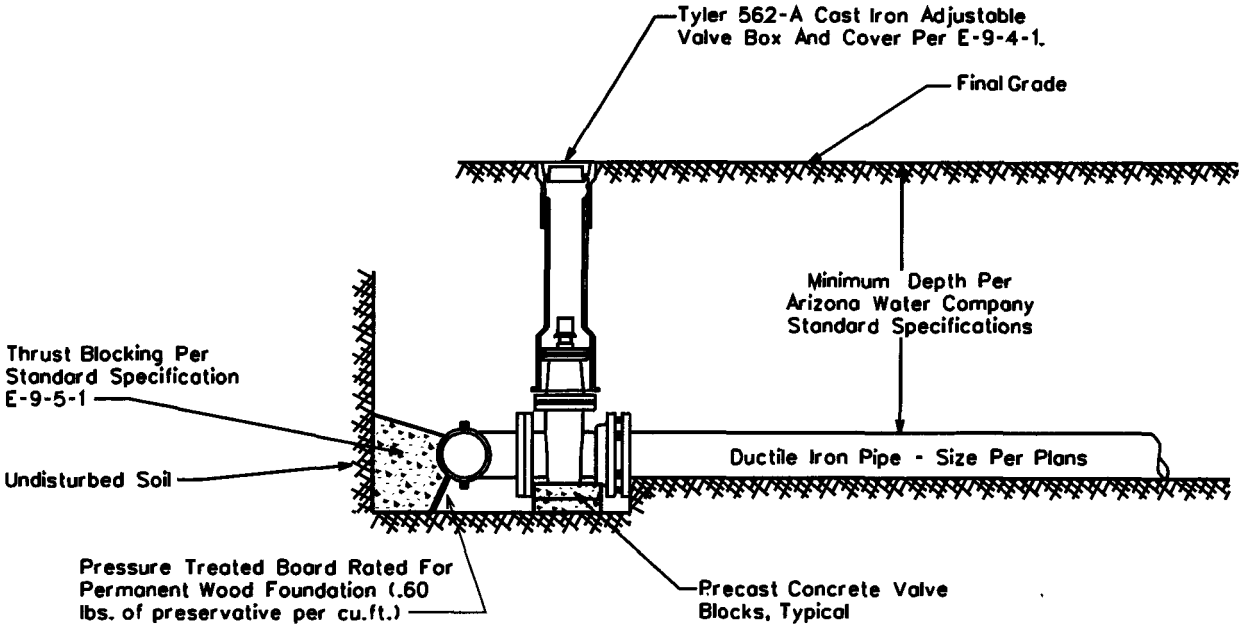

ARIZONA WATER COMPANY

STANDARD SPECIFICATION

FOR THE INSTALLATION OF

TYPICAL TAPPING SLEEVE AND VALVE

DRAWN BY:	APPROVED BY:	DATE:	△	
CB	MW	03.20.1986	△ 08.23.2006	E-9-3-1

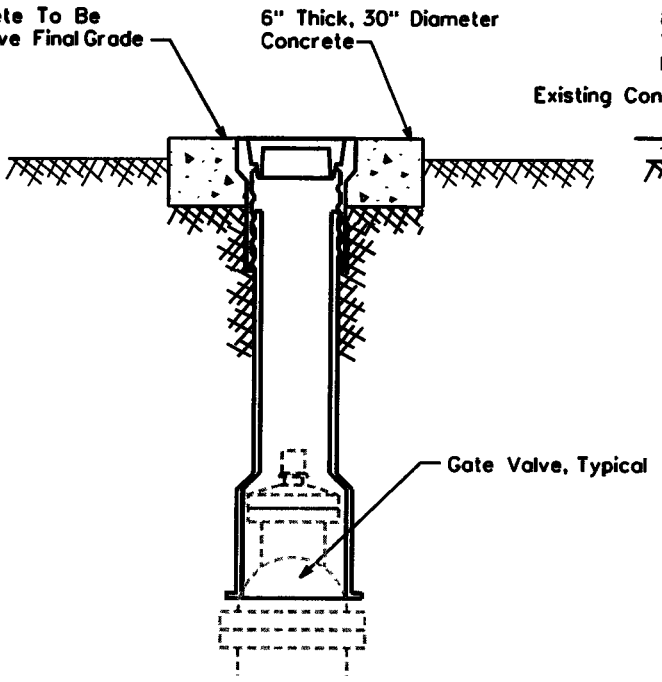

NON-VEHICULAR VALVE BOX

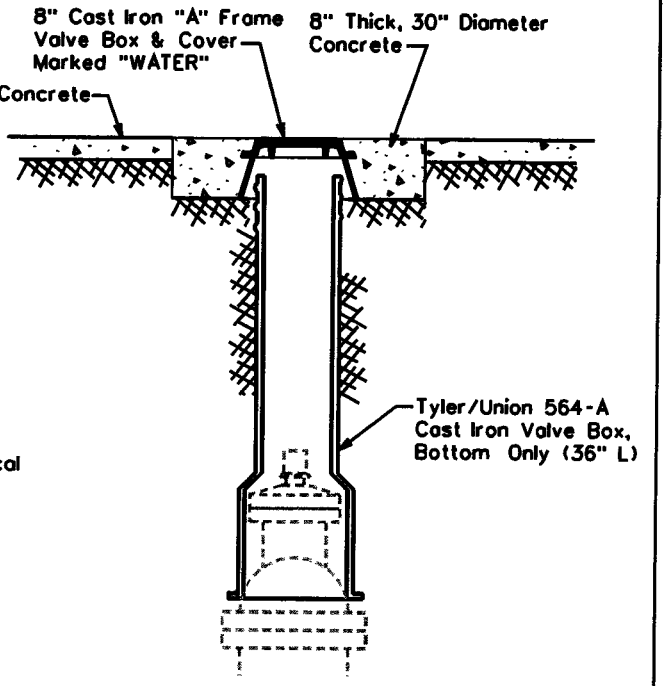

CONCRETE VALVE BOX

For Areas Subject To Vehicular Traffic

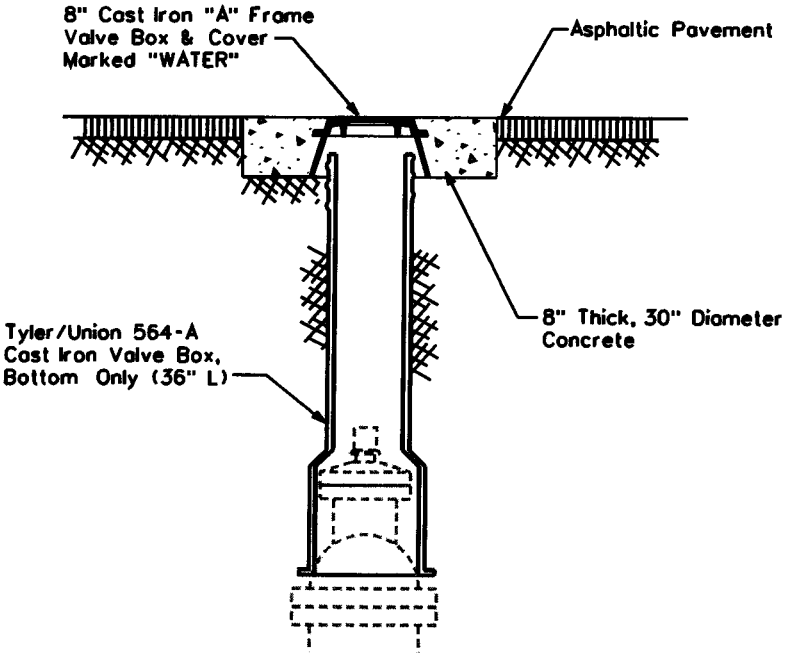

ASPHALT VALVE BOX

For Areas Subject To Vehicular Traffic

NOTE:

1. The Valve Box Shall Be Adjusted To Finished Grade Prior To Placing Of Asphalt And/Or Concrete.
2. For Non-Traffic Areas Use Tyler/Union 562-A, Two-Piece, 6855 Series Or Equivalent Adjustable Cast Iron Valve Box And Cover. Valves 4" To 12"

   For Traffic Areas, Use Tyler/Union 564-A Bottom Section Only With An 8" Cast Iron "A" Frame With Cover. Valves 4" To 12"
3. All Valves Installed Five Feet (5') Deep And Greater Are To Be Installed With A Valve Operator Extension, Mueller Catalog No. A-26441 And Shall Have A Debris Cap
4. Use Minimum Class 'C' Concrete which is defined as concrete whose minimum compressive strength at 14 days reaches 1600psi and at 28 days reaches 2000psi. per MAG Section 725, Table 725-1.

ARIZONA WATER COMPANY

STANDARD SPECIFICATION

FOR THE INSTALLATION OF

TYPICAL VALVE SUBJECT TO NON-VEHICULAR AND VEHICULAR TRAFFIC

DRAWN BY:	APPROVED BY:	DATE:	△ 8.24.2006	
CB	MW	03.20.1986		E-9-4-1

CROSSES

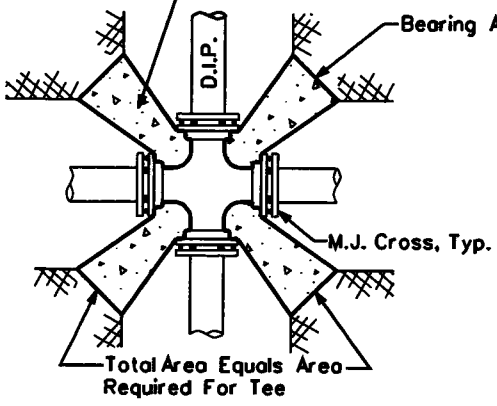

TEES

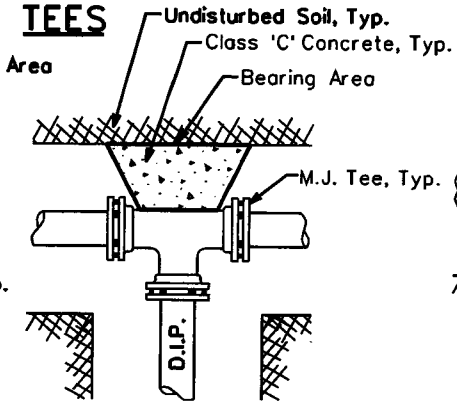

ELLS

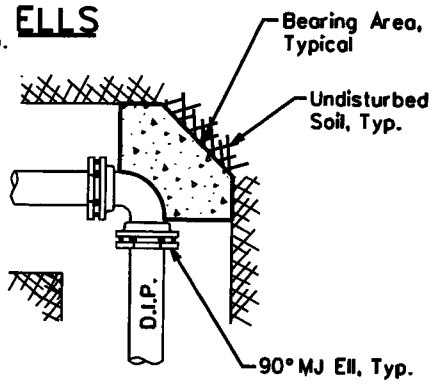

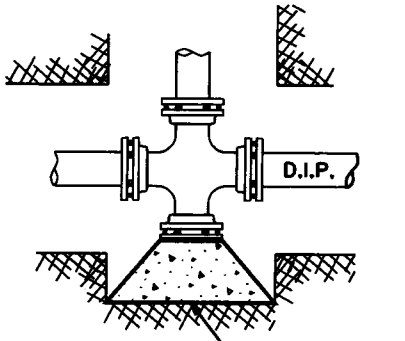

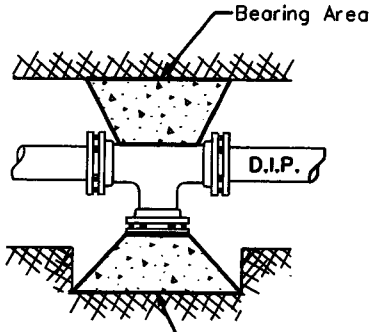

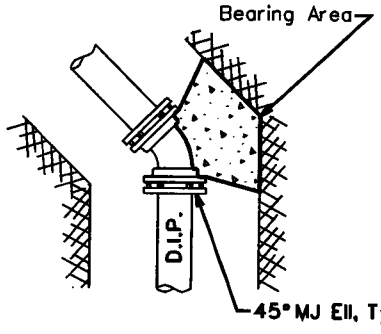

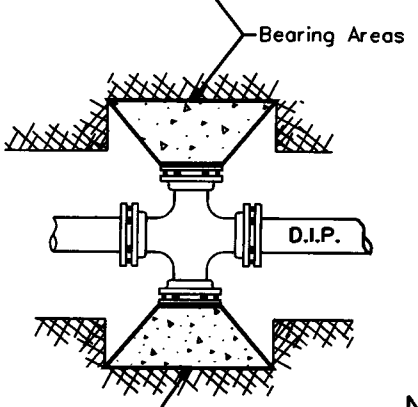

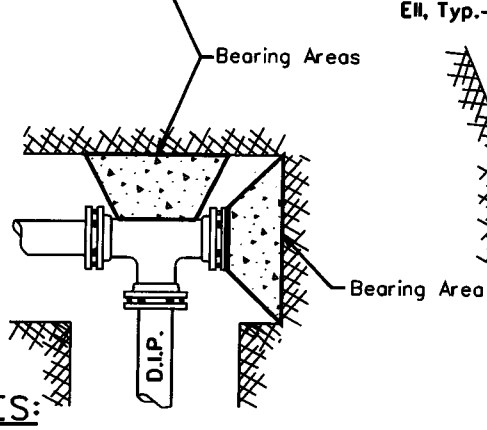

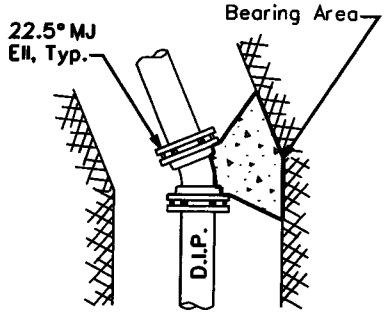

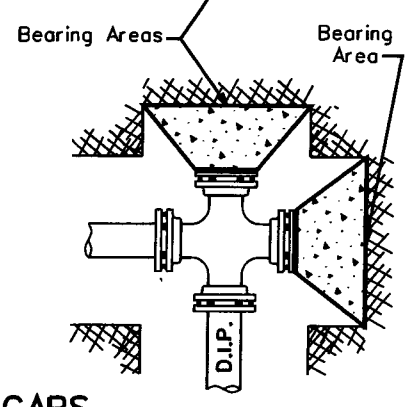

CROSS SECTION

TYPICAL

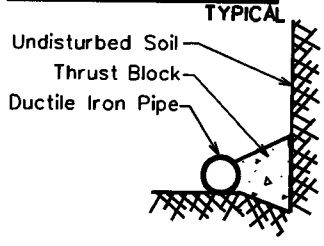

NOTES:

1. Use minimum Class 'C' concrete, which is defined as concrete whose minimum compressive strength at 14 days reaches 1600psi and at 28 days reaches 2000psi. per MAG Section 725, Table 725-1.
2. Thrust blocks are to bear on undisturbed earth with minimum bearing area as shown. If not undisturbed, areas will be increased as required.
3. Place the pressure treated form board in front of all plugs before pouring thrust blocks.
4. Form all non-bearing areas to prevent any concrete from entering any joint.
5. All flanges, bolts and nuts shall be kept free of concrete.
6. Center the bearing area on the pipe centerline and force line.
7. All pipe fittings to be wrapped with polyethylene pipe wrap prior to thrust block installation. (where applicable)

THRUST BLOCK SCHEDULE

PIPE SIZE	TEE, 45°, AND 22.5° ELLS, & PLUGS	90° ELLS
6" And Under	4 Sq.Ft.	6 Sq.Ft.
8"	6 Sq.Ft.	9 Sq.Ft.
12"	13 Sq.Ft.	20 Sq.Ft.
16"	23 Sq.Ft.	32 Sq.Ft.
18" And Larger	Calculated Per Project	

CAPS

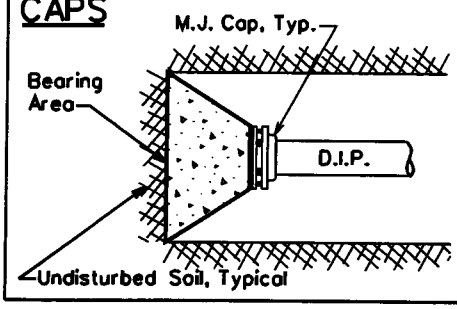

STANDARD SPECIFICATION

FOR THE INSTALLATION OF

TYPICAL THRUST BLOCKING SCHEDULE

DRAWN BY:	APPROVED BY:	DATE:		
CB	MW	03.20.1986	△ 05.27.2005	E-9-5-1

NOTES

1. Bars In Conc. Thrust Block To Be Coated w/ 2 Coats Coal Tar Epoxy or by Other Approved Method.

2. Bars To Have 90° Hook @ Their Ends, As Per Table Below.

Pipe Size	Min. Bar Size	"A" Dimension (Hook)	* Min. Block Dimension (WxHxL)
6"	#6	6"	3'x3'x3'
8"	#6	9"	4'x3'x4'
12"	#8	9"	5'x4'x5'
16"	#9	12"	7'x6'x7'

* For 125 P.S.I. Working Pressure

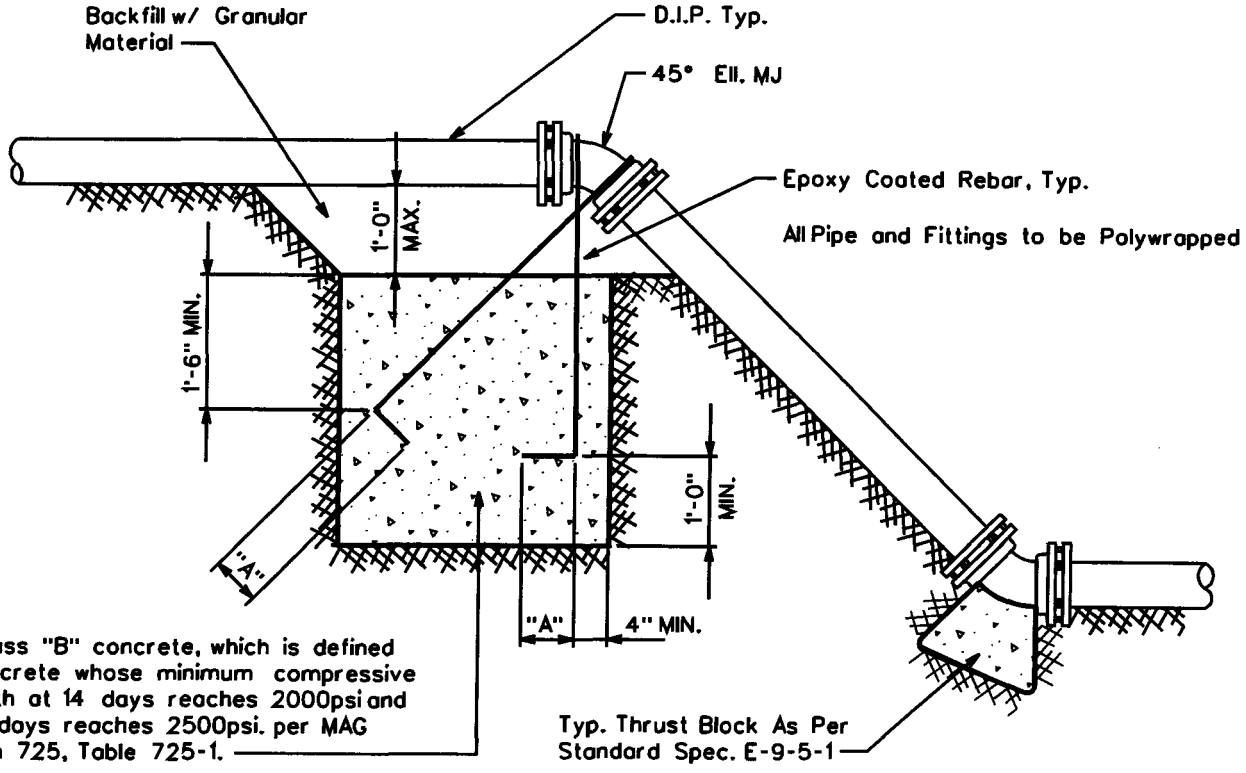

ARIZONA WATER COMPANY

STANDARD SPECIFICATION
FOR THE INSTALLATION OF

THRUST BLOCK FOR VERTICAL BENDS

DRAWN BY:	APPROVED BY:	DATE:		
JPK	MJW	7-5-96	△ 01.16.2007	E-9-5-2

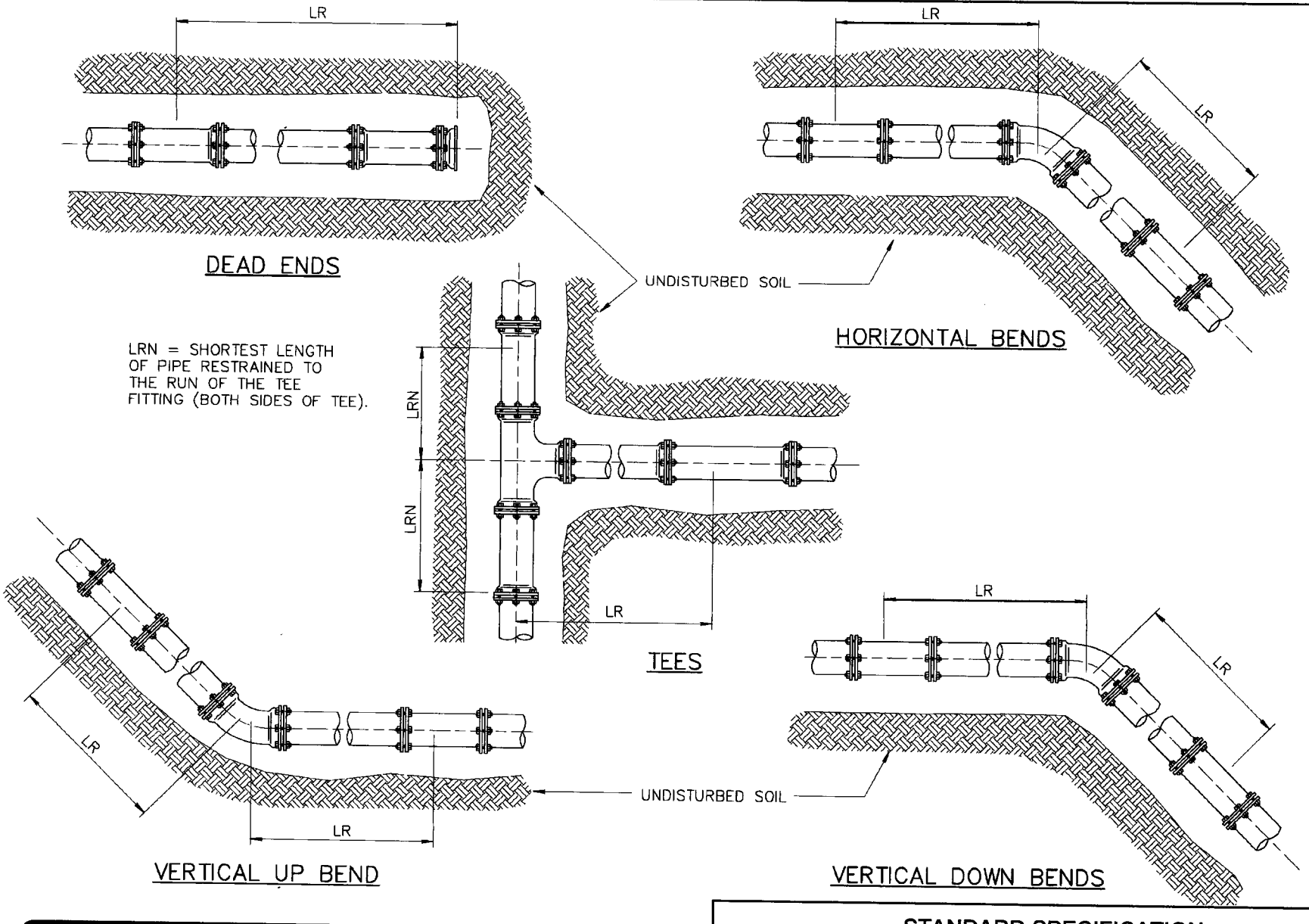

ARIZONA WATER COMPANY

STANDARD SPECIFICATION FOR THE INSTALLATION OF				
JOINT RESTRAINT FOR NEW DUCTILE IRON AND C-900 PVC MAINS				
DRAWN BY: CB	APPROVED BY: MW	DATE: 01.16.2007	△	E-9-5-3-1

RESTRAINED LENGTHS, LR, FOR DUCTILE IRON PIPE

NOMINAL PIPE SIZE INCHES	HORIZONTAL BENDS			TEES		VERTICAL OFFSETS						DEAD ENDS
						90° BEND FITTINGS		45° BEND FITTINGS		22-1/2° BEND FITTINGS		
	90°	45°	22-1/2°	LRN=0'	LRN=10'	DOWN BEND	UP BEND	DOWN BEND	UP BEND	DOWN BEND	UP BEND	
4	18	7	4	30	8	31	18	13	7	6	3	31
6	25	10	5	43	20	44	25	18	10	9	5	44
8	32	13	6	56	34	58	32	24	13	11	6	58
10	38	16	8	68	45	69	38	29	16	14	8	69
12	45	19	9	80	57	81	45	34	19	16	9	81
14	51	21	10	91	68	92	51	38	21	18	10	92
16	57	24	11	103	79	104	57	43	24	21	11	104
18	62	26	12	113	90	115	62	48	26	23	12	115
20	68	28	14	125	100	126	68	52	28	25	14	126
24	79	33	16	145	121	147	79	61	33	29	16	147

RESTRAINED LENGTHS, LR, FOR DUCTILE IRON PIPE WITH POLYETHYLENE WRAP

NOMINAL PIPE SIZE INCHES	HORIZONTAL BENDS			TEES		VERTICAL OFFSETS						DEAD ENDS
						90° BEND FITTINGS		45° BEND FITTINGS		22-1/2° BEND FITTINGS		
	90°	45°	22-1/2°	LRN=0'	LRN=10'	DOWN BEND	UP BEND	DOWN BEND	UP BEND	DOWN BEND	UP BEND	
4	26	11	5	69	18	72	26	30	11	14	5	72
6	36	15	7	99	47	102	36	42	15	20	7	102
8	47	19	9	130	78	133	47	55	19	26	9	133
10	56	23	11	157	103	159	56	66	23	32	11	159
12	65	27	13	185	131	187	65	77	27	37	13	187
14	74	31	15	211	156	214	74	89	31	42	15	214
16	82	34	16	238	183	241	82	100	34	48	16	241
18	90	37	18	263	207	266	90	110	38	53	18	266
20	98	41	20	289	233	292	98	121	41	58	20	292
24	113	47	22	337	280	340	113	141	47	68	22	340

NOTES:

1. ALL JOINTS WITHIN THE SPECIFIED LENGTH LR MUST BE RESTRAINED. ALL LENGTHS ARE GIVEN IN FEET.
2. THE MAXIMUM TEST PRESSURE SHALL NOT EXCEED 200 PSI
3. THE MINIMUM DEPTH OF BURY SHALL BE 3' TO TOP OF PIPE.
4. RESTRAINED LENGTHS MAY BE REDUCED WHEN SUPPORTED BY ENGINEERING CALCULATIONS.

ARIZONA WATER COMPANY

STANDARD SPECIFICATION
FOR THE INSTALLATION OF

JOINT RESTRAINT FOR NEW DUCTILE IRON AND C-900 PVC MAINS

DRAWN BY:	APPROVED BY:	DATE:		
CB	MW	01.16.2007	△	E-9-5-3-2

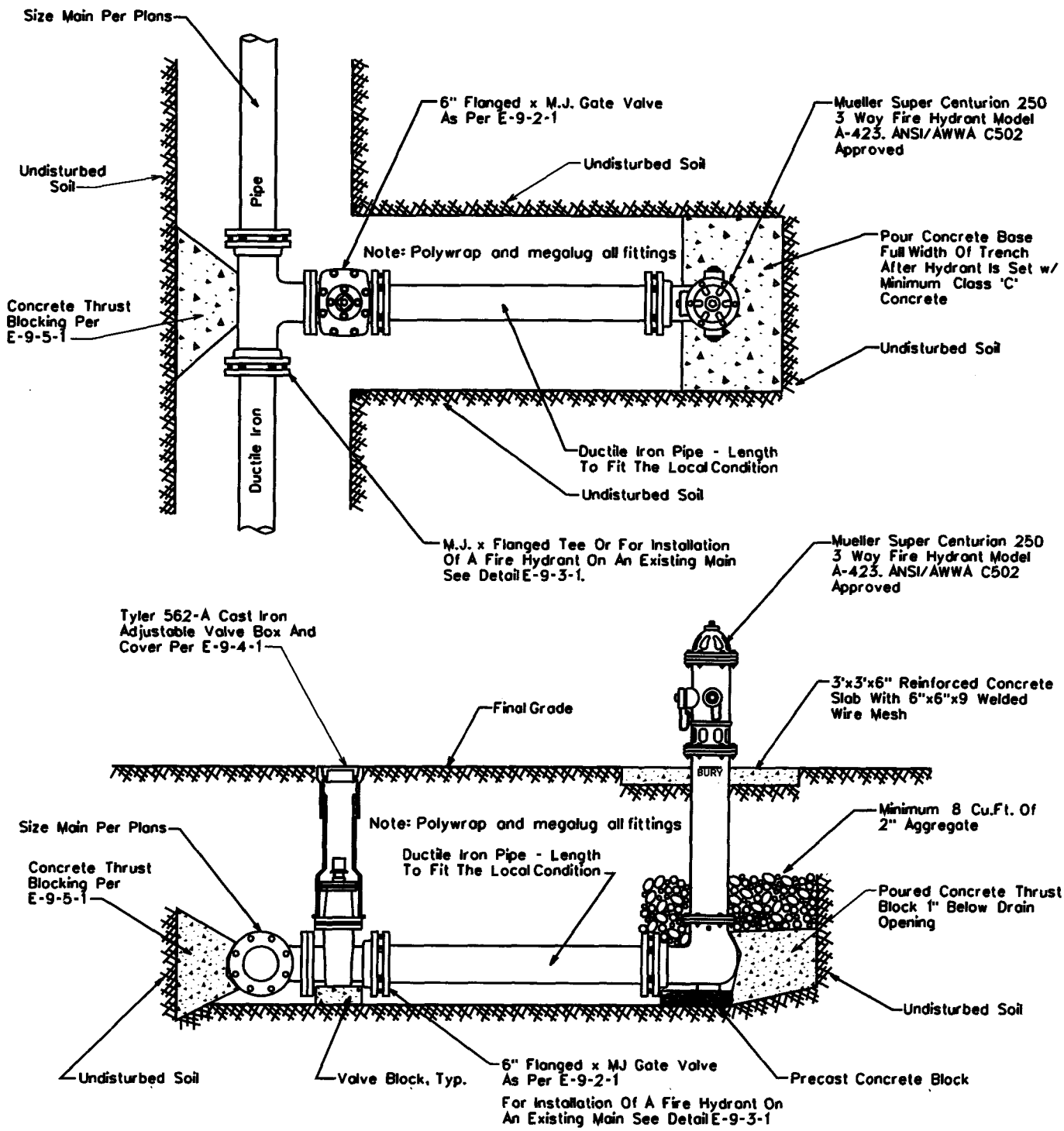

NOTE: All Flanges, Bolts, Nuts and Drain Holes Shall Be Kept Free Of Concrete

ARIZONA WATER COMPANY

STANDARD SPECIFICATION

FOR THE INSTALLATION OF

TYPICAL PERPENDICULAR FIRE HYDRANT

DRAWN BY:	APPROVED BY:	DATE:	△ 08.24.2006	E-9-6-1
CB	MW	1-28-91		

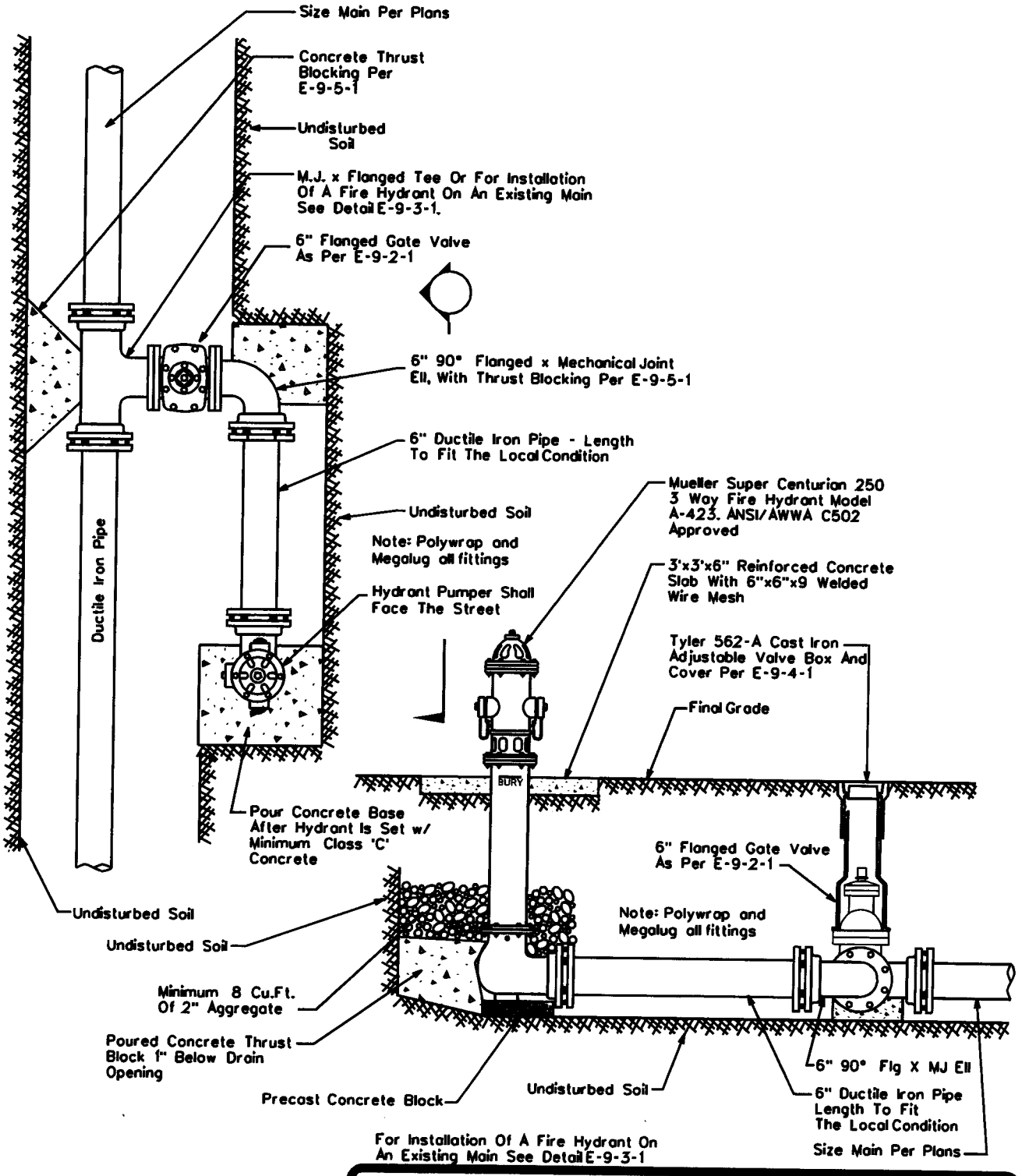

NOTE: All Flanges, Bolts, Nuts And Drain Holes Shall Be Kept Free Of Concrete.

ARIZONA WATER COMPANY

STANDARD SPECIFICATION

FOR THE INSTALLATION OF

TYPICAL PARALLEL FIRE HYDRANT

DRAWN BY:	APPROVED BY:	DATE:	△	
JW	MW	03.20.1986	08.24.2006	E-9-7-1

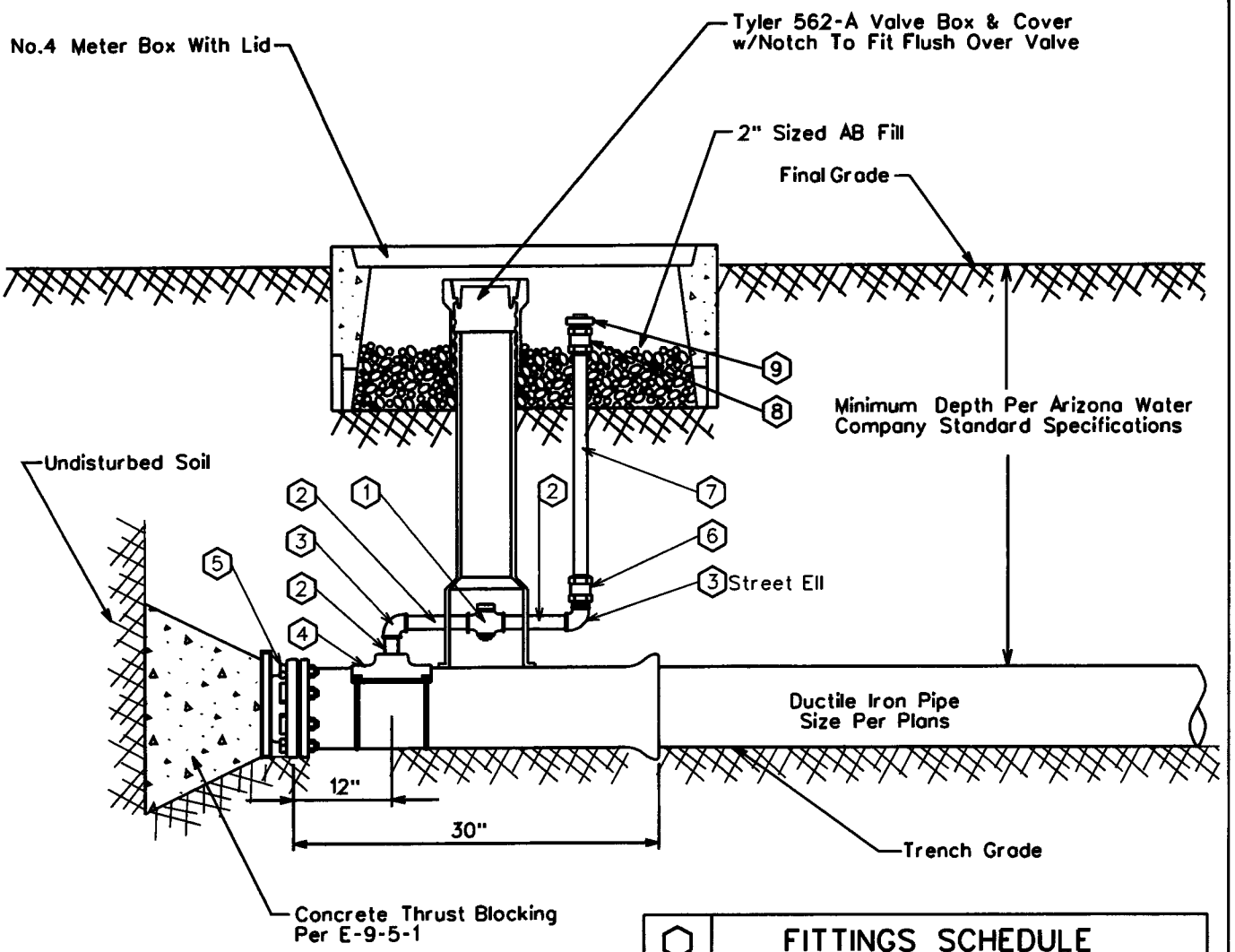

⬡	FITTINGS SCHEDULE
1.	2" Mueller 300 Ball Curb Valve B-20283 FIP x FIP W/ 2" Mueller Brass Square Wrench Nut Adapter B-20299
2.	2" Brass Nipple - Length To Fit Field Conditions
3.	2" Brass 90° Elbow, IPST
4.	Mueller Double Strap Bronze Service Saddle - BR2B
5.	M.J. Plug - Megalug Restraints May Be Required
6.	2" Straight Coupling CC x FIP H-15451
7.	2" Copper Pipe
8.	2" Straight Coupling CC x MIP H-15428
9.	2" Square Head Plug, MIP

ARIZONA WATER COMPANY

STANDARD SPECIFICATION
FOR THE INSTALLATION OF

2" BLOWOFF ASSEMBLY

DRAWN BY:	APPROVED BY:	DATE:	△	
CB	MW	03.20.1986	△ 03.21.2006	E-9-8-1

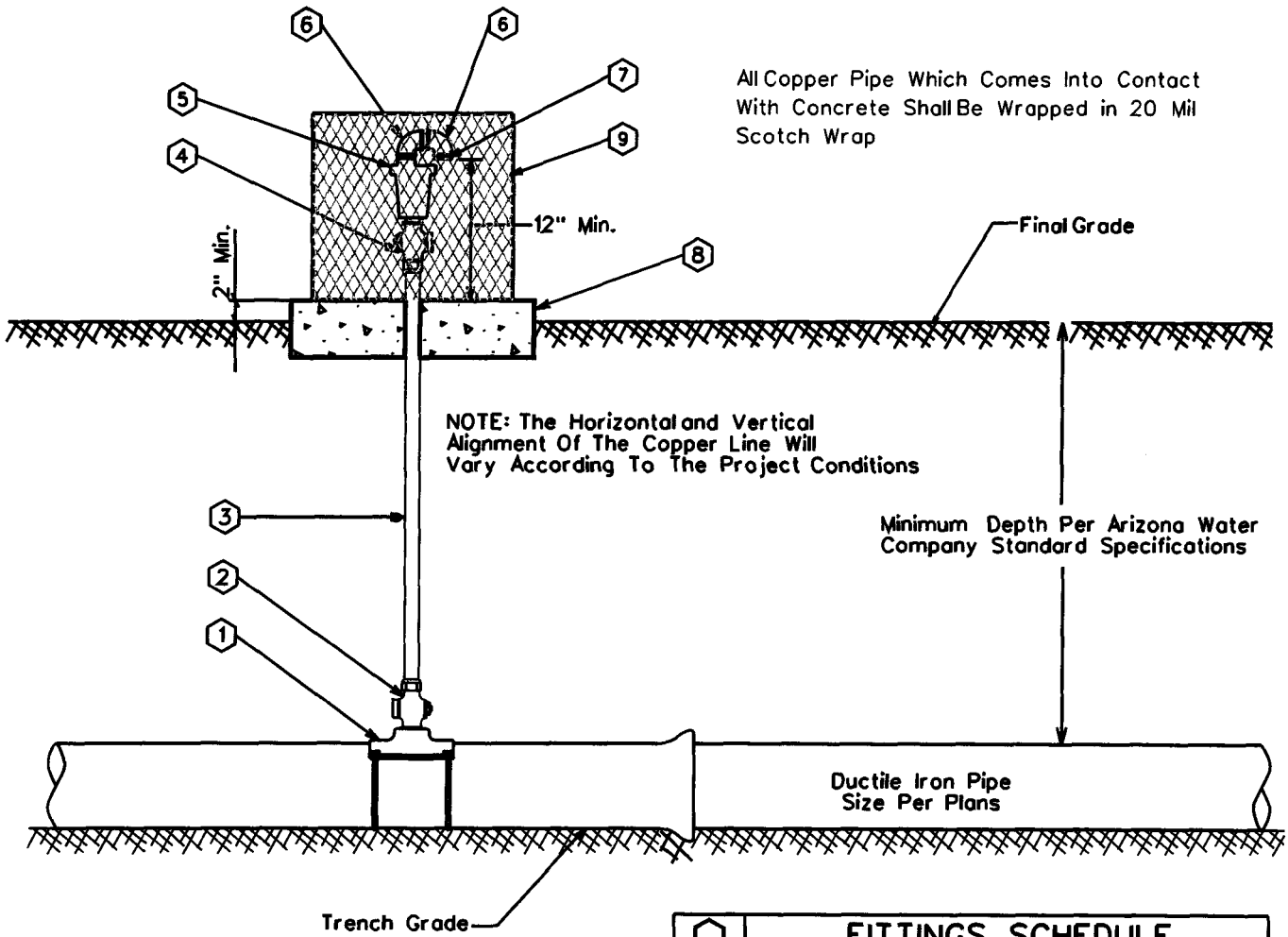

⬡	FITTINGS SCHEDULE
1.	Mueller BR2B Bronze Service Saddle - Double Strap
2.	1" Mueller B-25008 Taper x Comp. Ball Corp Stop
3.	1" Type 'K' Copper w/NO Splices - Field Fit
4.	1" Mueller B-25028 IP x Comp. Ball Corp Stop
5.	Crispin 1" Air Release Valve, Model AR10
6.	½" Brass Street Elbow
7.	No.16 Wire Mesh Screen (Non-Corrodible)
8.	4" Thick Concrete Pad - Class 'C' Concrete
9.	Guardshack, Model GS-1, Available From BPDI, Inc. Available In Leaf Green Or Desert Tan

GENERAL NOTES:

1. The valve shall be installed at high points and on long runs to vent the accumulation of air with the line under pressure- see the construction plans for specific locations.
2. The valve shall have a 5/64" orifice with valve sealing faces of stainless steel and BUNA-N rubber.
3. The valve shall be Crispin model AR10 for 6" and larger water mains.
4. Crispin model AR10 valve construction consists of a 1" IPST inlet & ½" IPST outlet, cast iron body and top flange with stainless steel float and trim.
5. The air release assembly shall be located out of the path of traffic but within right-of-way or easement.

ARIZONA WATER COMPANY

STANDARD SPECIFICATION
FOR THE INSTALLATION OF

TYPICAL AIR RELEASE VALVE

DRAWN BY:	APPROVED BY:	DATE:		
CB	MW	03.20.1997	△08.24.2006	E-9-8-2

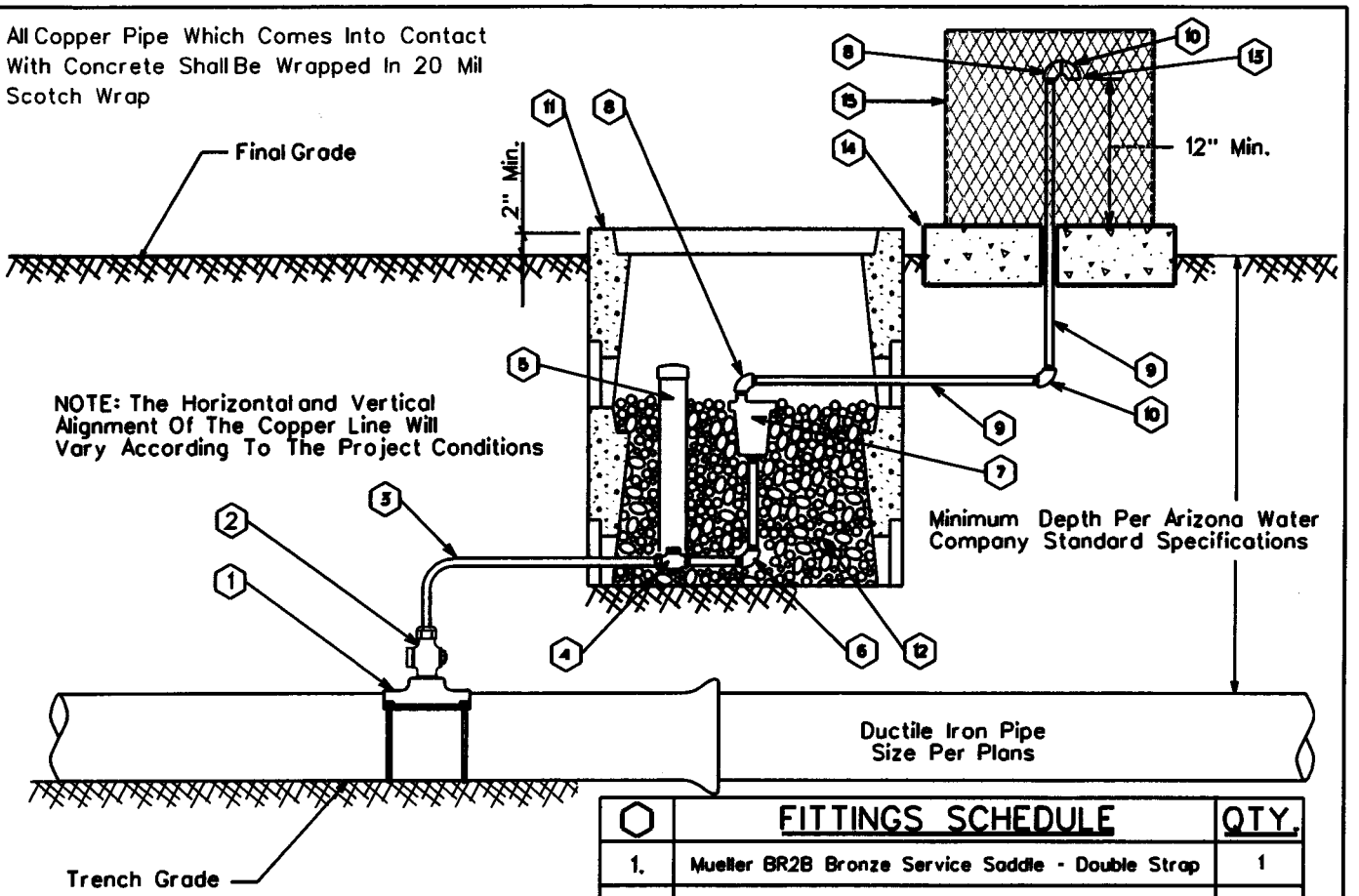

⬡	FITTINGS SCHEDULE	QTY.
1.	Mueller BR2B Bronze Service Saddle - Double Strap	1
2.	1" Mueller B-25008 Taper x Comp. Ball Corp Stop	1
3.	1" Type 'K' Copper w/NO Splices - Field Fit	As Req'd
4.	1" Mueller B-25028 IP x Comp. Ball Corp Stop	1
5.	3" PVC Pipe w/ Cap (Loose Fit)	1
6.	1" x 4" Brass Nipple w/90° Elbow	1
7.	Crispin 1" Air Release Valve, Model AR10	1
8.	½" Brass Street Elbow	2
9.	½" Galvanized Pipe - Length as req'd	2
10.	½" Galvanized 90° Ell	2
11.	Number 1 Meter Box	2
12.	2" Sized AB (Fill Meter Box To The Top Of The Air Release Valve)	As Req'd
13.	No.16 Wire Mesh Screen (Non-Corrodible)	1
14.	4" Thick Concrete Pad - Class 'C' Concrete	1
15.	Guardshack, Model GS-1, Available From BPDI, Inc. Available In Leaf Green Or Desert Tan	1

GENERAL NOTES:

1. The valve shall be installed at high points and on long runs to vent the accumulation of air with the line under pressure- see the construction plans for specific locations.
2. The valve shall have a 5/64" orifice with valve sealing faces of stainless steel and BUNA-N rubber.
3. The valve shall be Crispin model AR10 for 6" and larger water mains.
4. Crispin model AR10 valve construction consists of a 1" IPST inlet & ½" IPST outlet, cast iron body and top flange with stainless steel float and trim.
5. The air release assembly shall be located out of the path of traffic but within the right-of-way or easement.

ARIZONA WATER COMPANY

STANDARD SPECIFICATION
FOR THE INSTALLATION OF

AIR RELEASE VALVE FOR THE NORTHERN REGION

DRAWN BY:	APPROVED BY:	DATE:		
CB	MW	03.20.1997	△08.24.2006	E-9-8-3

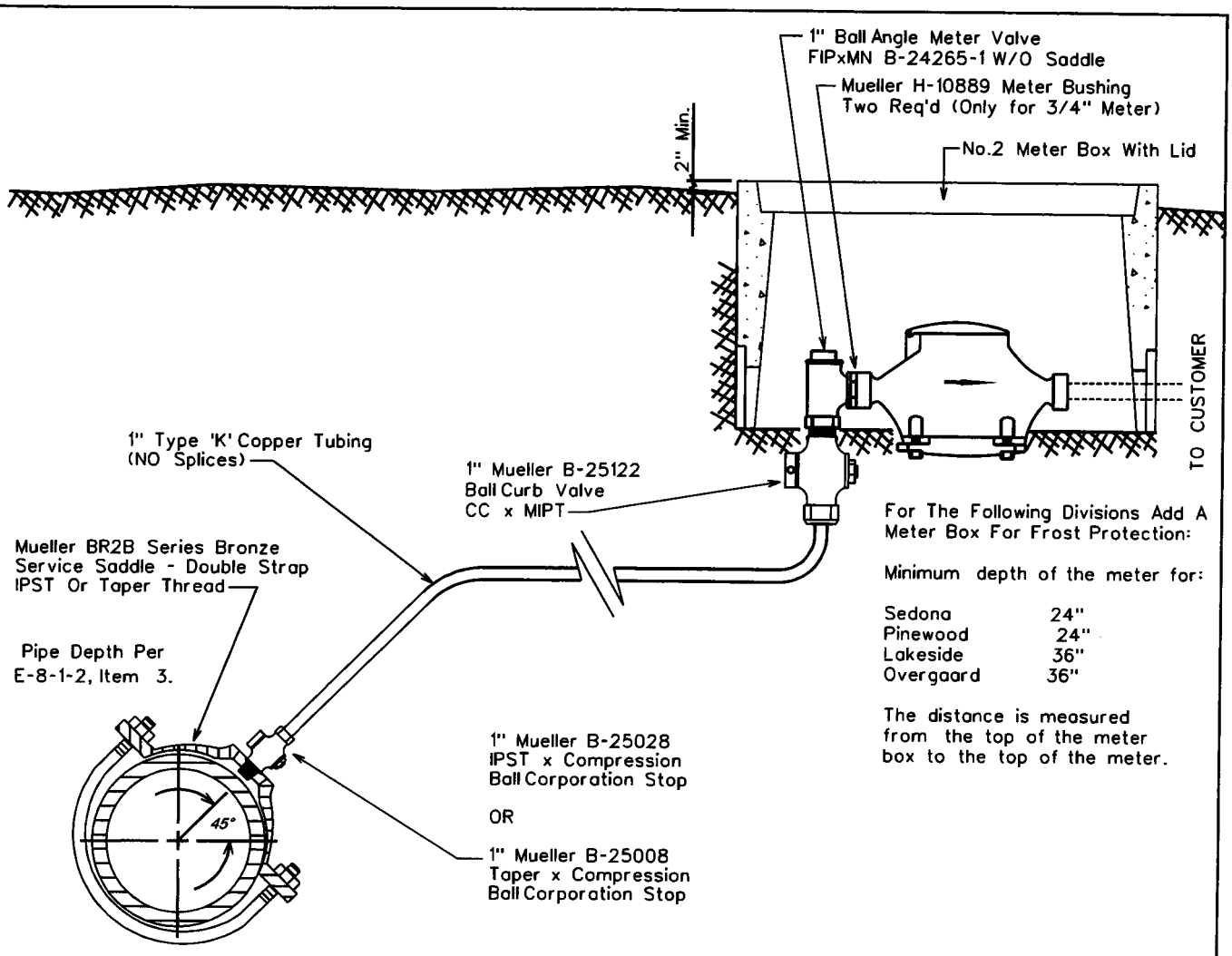

For The Following Divisions Add A Meter Box For Frost Protection:

Minimum depth of the meter for:

Sedona	24"
Pinewood	24"
Lakeside	36"
Overgaard	36"

The distance is measured from the top of the meter box to the top of the meter.

SADDLE TAP TO CA, PVC, OR DI PIPE

NOTE: The minimum distance between taps on mains other than ductile iron is 12"

NOTE:
Only the meter is supplied by Arizona Water Company

ARIZONA WATER COMPANY

STANDARD SPECIFICATION
FOR THE INSTALLATION OF

SINGLE SERVICE CONNECTION FOR A 3/4" OR 1" METER

DRAWN BY:	APPROVED BY:	DATE:	△ 03.17.2006	
CCO	M.W.	3/20/86		E-9-9-1

For The Following Divisions Add A Meter Box For Frost Protection:

Minimum depth of the meter for:

Sedona	24"
Pinewood	24"
Lakeside	36"
Overgaard	36"

The distance is measured from the top of the meter box to the top of the meter.

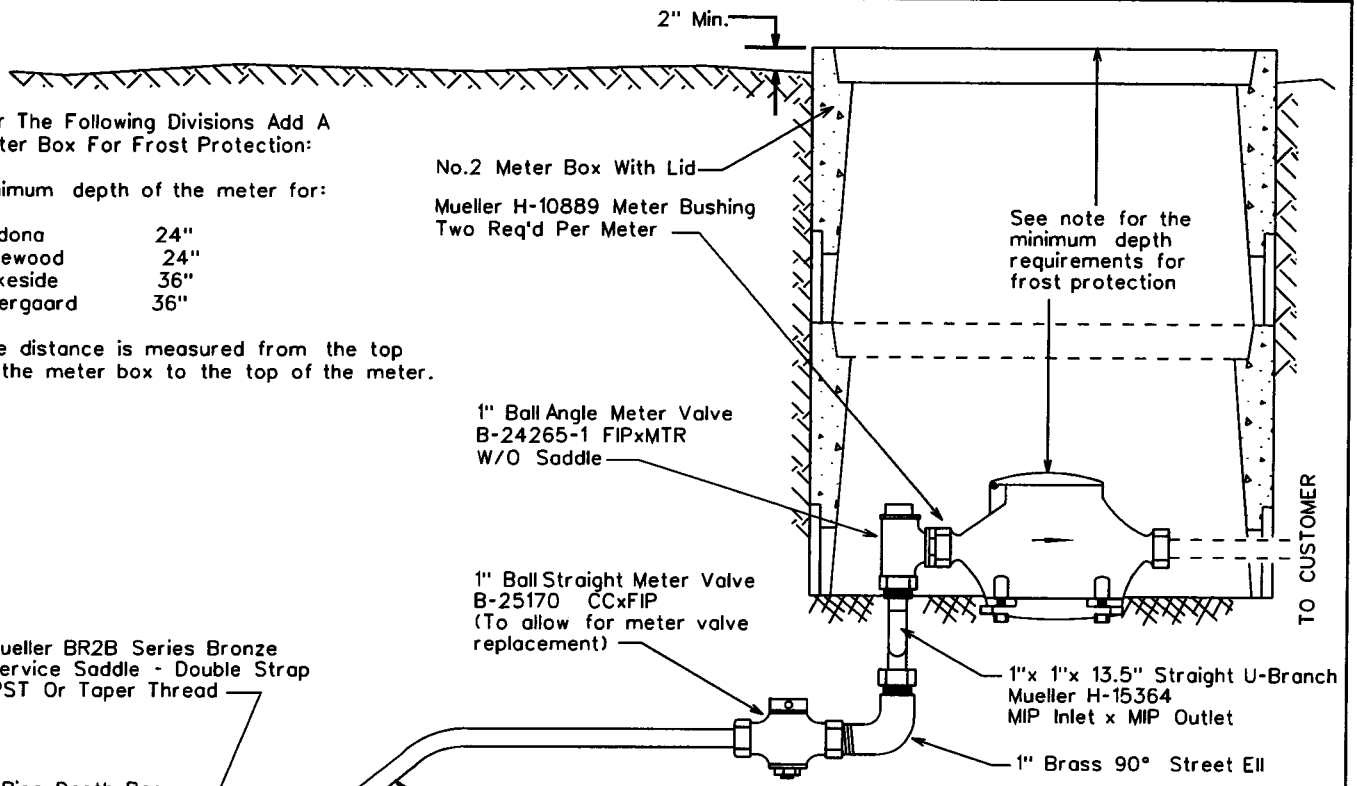

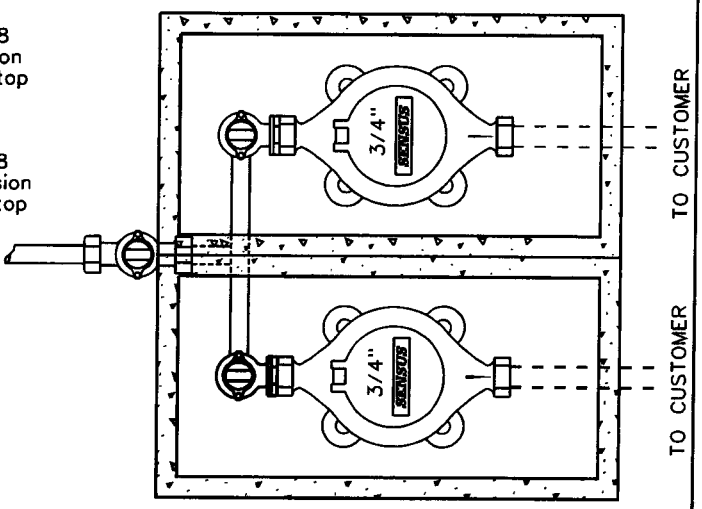

SADDLE TAP TO CA, PVC, OR DI PIPE

NOTE: The minimum distance between service taps on mains other than ductile iron is 12"

NOTE:
Only the meter is supplied by Arizona Water Company

ARIZONA WATER COMPANY

STANDARD SPECIFICATION
FOR THE INSTALLATION OF

DOUBLE SERVICE CONNECTION FOR 3/4" METERS

DRAWN BY:	APPROVED BY:	DATE:	△ 08.25.2006	E-9-10-1
CCO	M.W.	3-20-86		

For The Following Divisions Add A Meter Box For Frost Protection:

Minimum depth of the meter for:

Sedona	24"
Pinewood	24"
Lakeside	36"
Overgaard	36"

The distance is measured from the top of the meter box to the top of the meter.

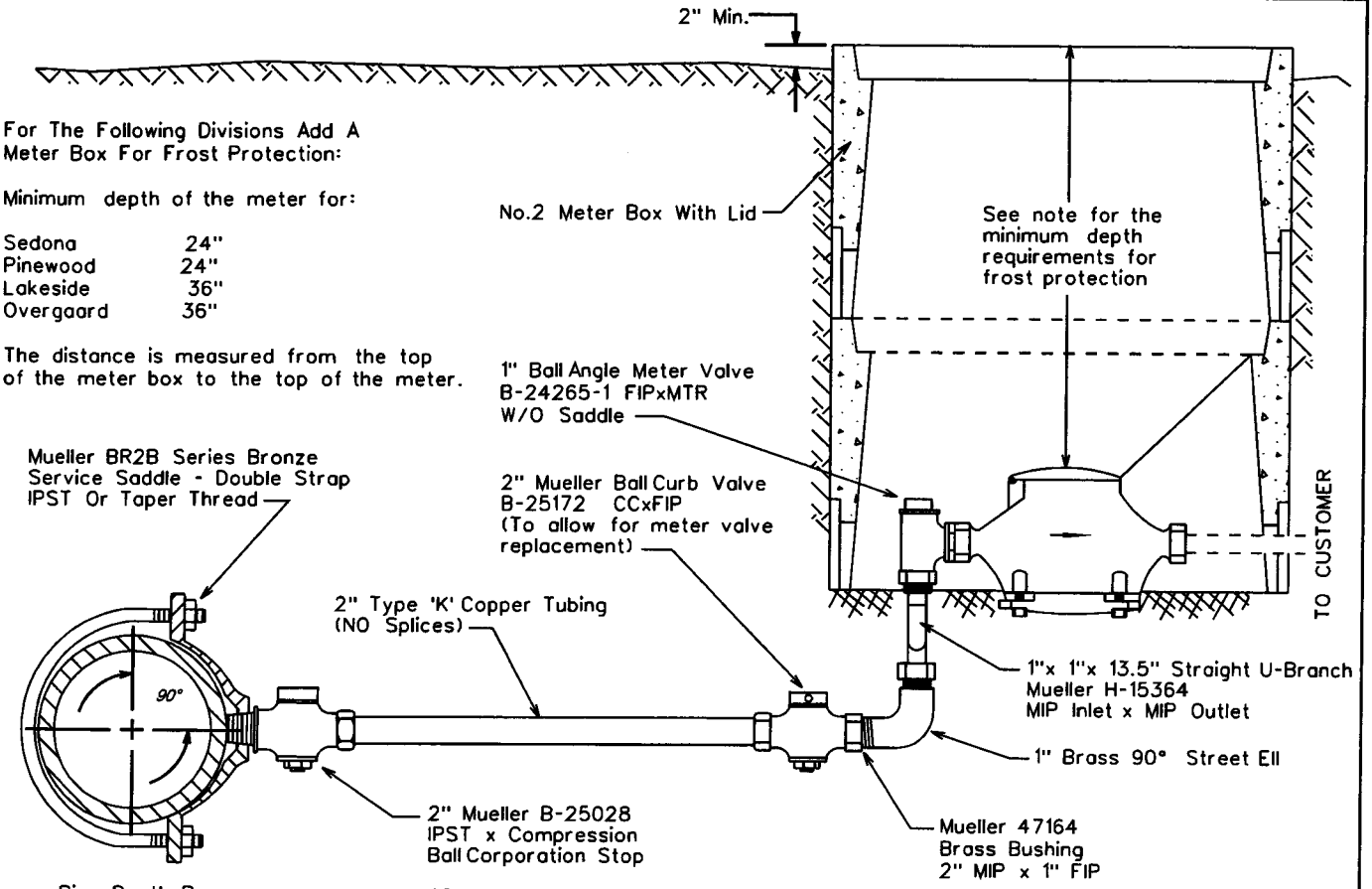

SADDLE TAP TO CA, PVC, OR DI PIPE

NOTE: The minimum distance between service taps on mains other than ductile iron is 12"

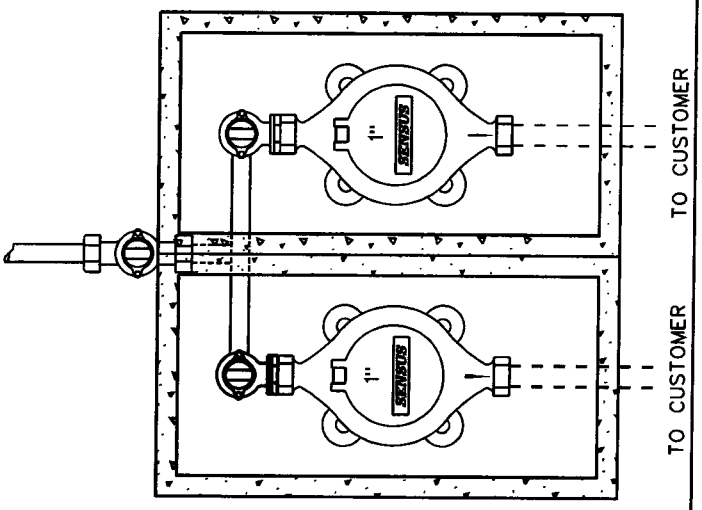

NOTE: THE LENGTH OF SERVICE IS LIMITED TO COMMERICIALLY AVAILABLE ROLLS, TYPICALLY 60 FEET

NOTE:
Only the meter is supplied by Arizona Water Company

ARIZONA WATER COMPANY

STANDARD SPECIFICATION
FOR THE INSTALLATION OF

DOUBLE SERVICE CONNECTION FOR 1" METERS

DRAWN BY:	APPROVED BY:	DATE:	△	
CB	M.W.	03.17.2006	08.29.2006	E-9-10-2

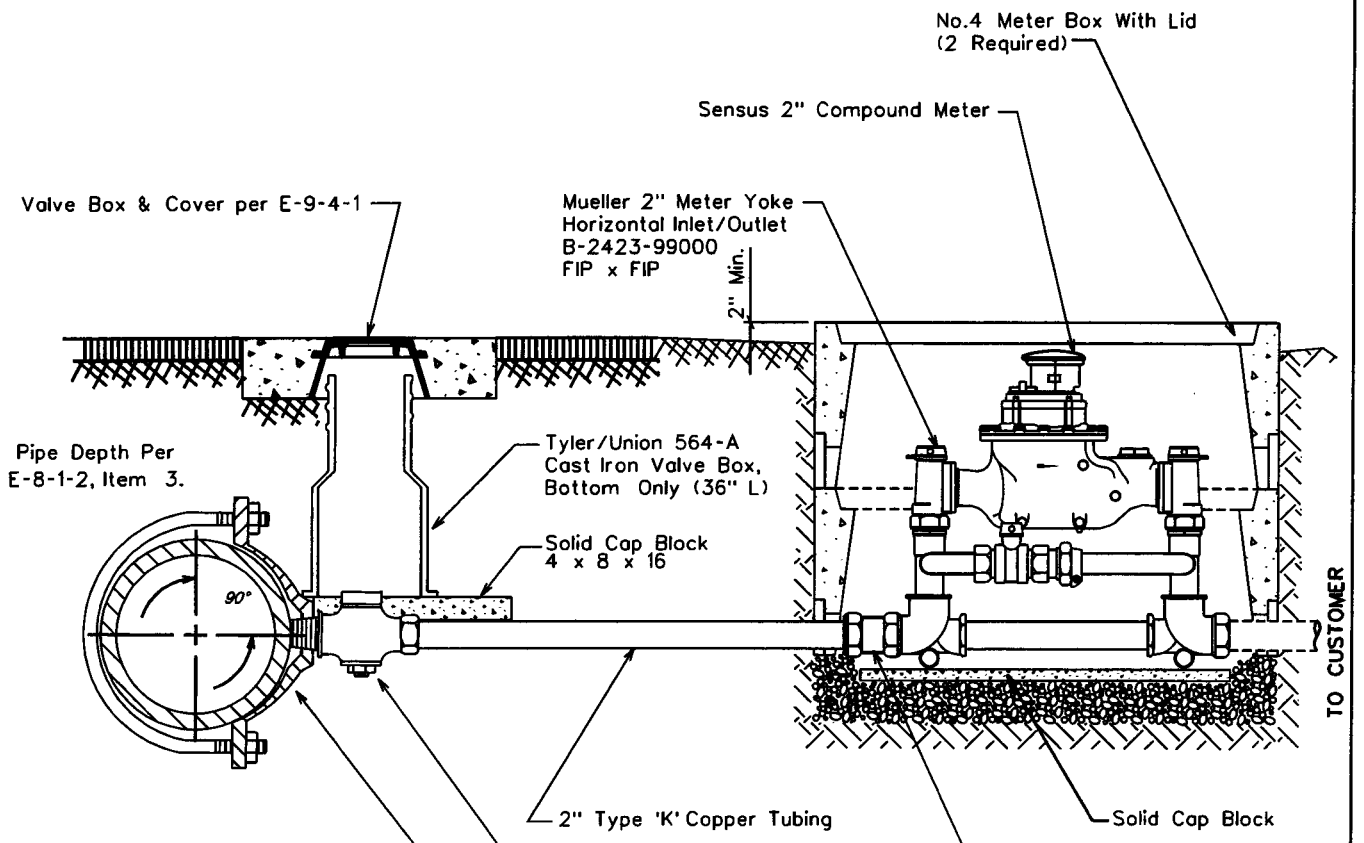

SADDLE TAP CONNECTION TO DUCTILE IRON PIPE

NOTE: The minimum distance between service taps on mains other than ductile iron is 12"

NOTE: THE LENGTH OF SERVICE IS LIMITED TO COMMERICIALLY AVAILABLE ROLLS, TYPICALLY 60 FEET

NOTE:

Only the meter is supplied by Arizona Water Company

ARIZONA WATER COMPANY

STANDARD SPECIFICATION
FOR THE INSTALLATION OF

TYPICAL 2" SERVICE CONNECTIONS

DRAWN BY:	APPROVED BY:	DATE:	△ 08.29.2006	
JW	M.W.	3/20/86		E-9-11-1

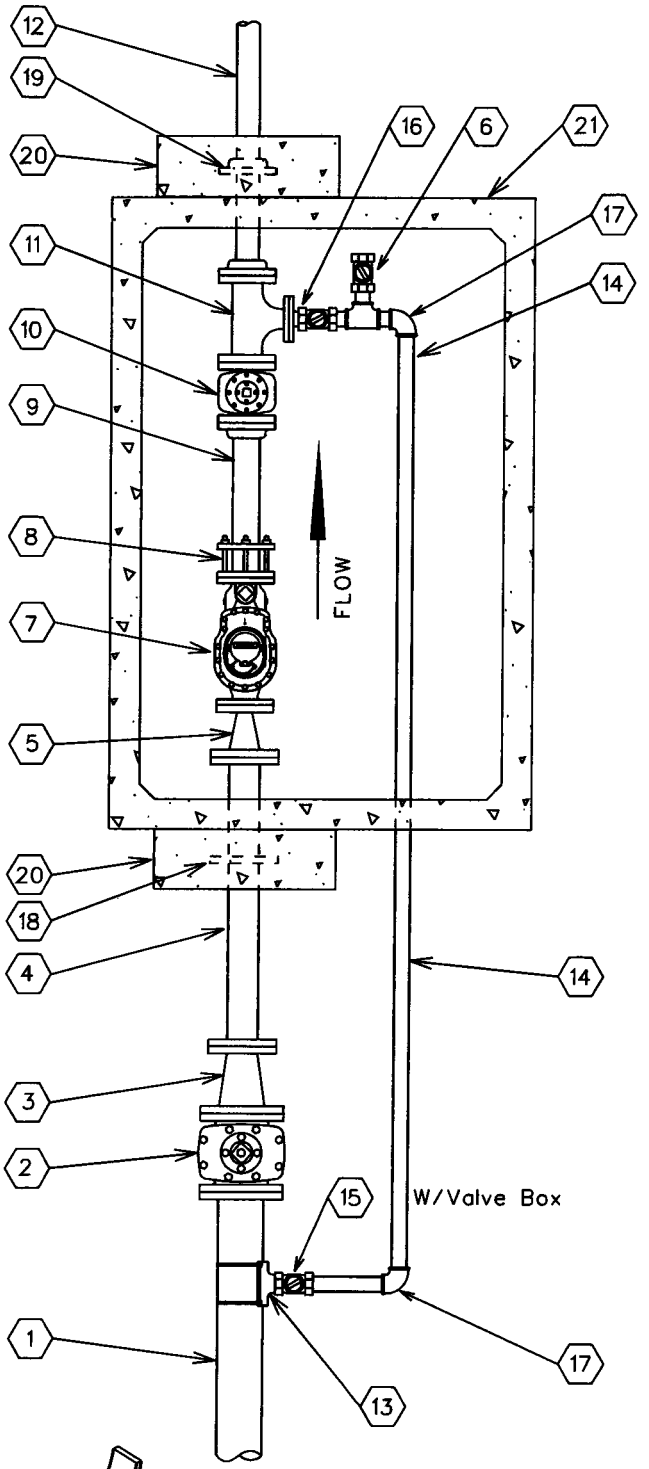

No.	FITTINGS SCHEDULE
1.	6" D.I.P.
2.	6" G.V.B.&C. mj x flng
3.	6"x4" Reducer flng x mj
4.	4"x3'-0" D.I.P. Spool flng x pe
5.	4" x 3" Reducer flng
6.	2" Test Port
7.	3" Compound Meter
8.	3" F.C.A.
9.	3"x2'-0" D.I. Spool flng x pe
10.	3" Gate Valve flng
11.	3"x2" Flg Tee w/ 2" Companion Flange
12.	3"x4'-0" D.I. Spool flng x pe
13.	6"x2" Tapping Saddle
14.	2" Copper Pipe
15.	2" Mueller B25122 Ball Valve w/B20299 Nut
16.	2" Locking Ball Valve (normally closed)
17.	2" Mueller H-15526 90° Ell CC x CC
18.	4" Megalug
19.	3" Slip-On Welding Flange
20.	24"x24"x8" Conc. Thrust Block P.I.P.
21.	575-LA Conc. Vault

NOTE:

1. Use Rowley pipe supports or equivalent as needed (See detail below).
2. Pipe support locations to be determined by field personnel.
3. All copper pipe that comes in contact with concrete to be wrapped w/10-20 Mil. Scotchwrap corrosion protection tape.
4. All mechanical joint fittings are to be megalugged.
5. Use deflection fittings (45° Ells.) to achieve necessary depths & cover as shown on the standard specification for the installation of a concrete vault (E-9-12-5).

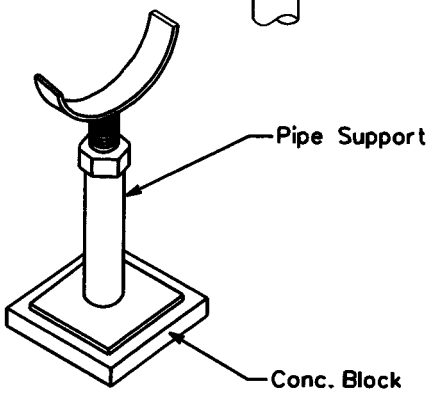

ARIZONA WATER COMPANY

STANDARD SPECIFICATION
FOR THE INSTALLATION OF

3" COMPOUND METER

DRAWN BY:	APPROVED BY:	DATE:		
CCO	MW	10/5/1993	△08.29.2006	E-9-12-1

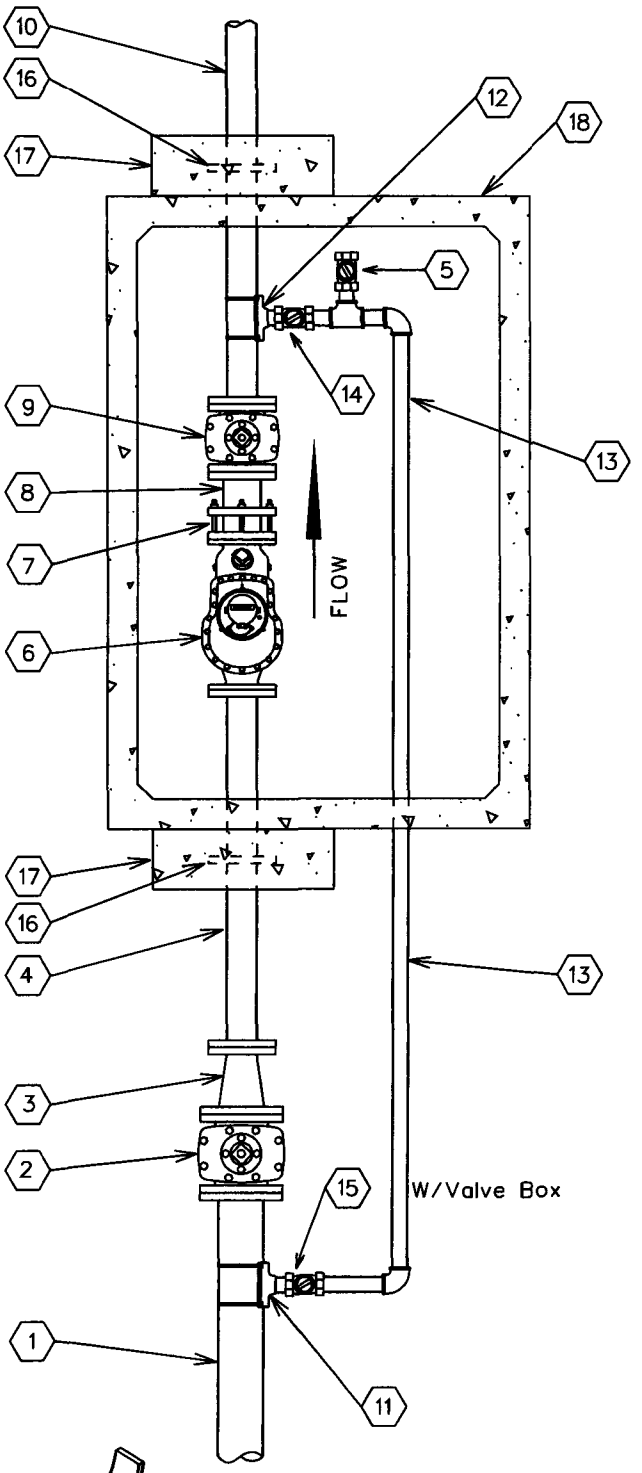

No.	FITTINGS SCHEDULE
1.	6" D.I.P.
2.	6" G.V.B.&C. mj x flng
3.	6"x4" Reducer flng x mj
4.	4"x3'-0" D.I.P. Spool flng x pe
5.	2" Test Port
6.	4" Compound Meter
7.	4" F.C.A.
8.	4"x1'-0" D.I.P. Spool flng x pe
9.	4" Gate Valve flng
10.	4"x4'-0" D.I.P. Spool flng x pe
11.	6"x2" Tapping Saddle
12.	4"x2" Tapping Saddle
13.	2" Copper Pipe
14.	2" Ball Valve / Locking (Normally Closed)
15.	2" Mueller B25122 Ball Valve w/B20299 Nut
16.	4" Megalug
17.	24"x24"x8" Conc. Thrust Block P.I.P.
18.	575-LA Conc. Vault

NOTE:

1. Use Rowley pipe supports or equivalent as needed (See detail below).
2. Pipe support locations to be determined by field personnel.
3. All copper pipe that comes in contact with concrete to be wrapped w/10-20 Mil. Scotchwrap corrosion protection tape.
4. All mechanical joint fittings are to be megalugged.
5. Use deflection fittings (45° Ells.) to achieve necessary depths & cover as shown on the standard specification for the installation of a concrete vault (E-9-12-5).

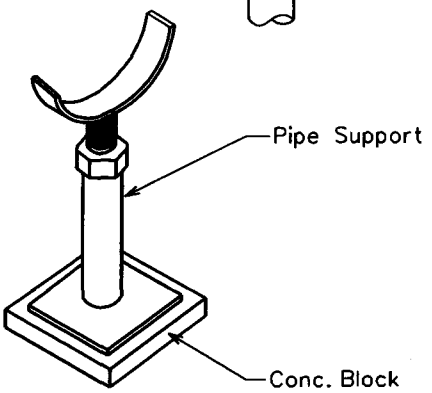

ARIZONA WATER COMPANY

STANDARD SPECIFICATION
FOR THE INSTALLATION OF

4" COMPOUND METER

DRAWN BY:	APPROVED BY:	DATE:		
CCO	MW	10/5/1993	△08.29.2006	E-9-12-2

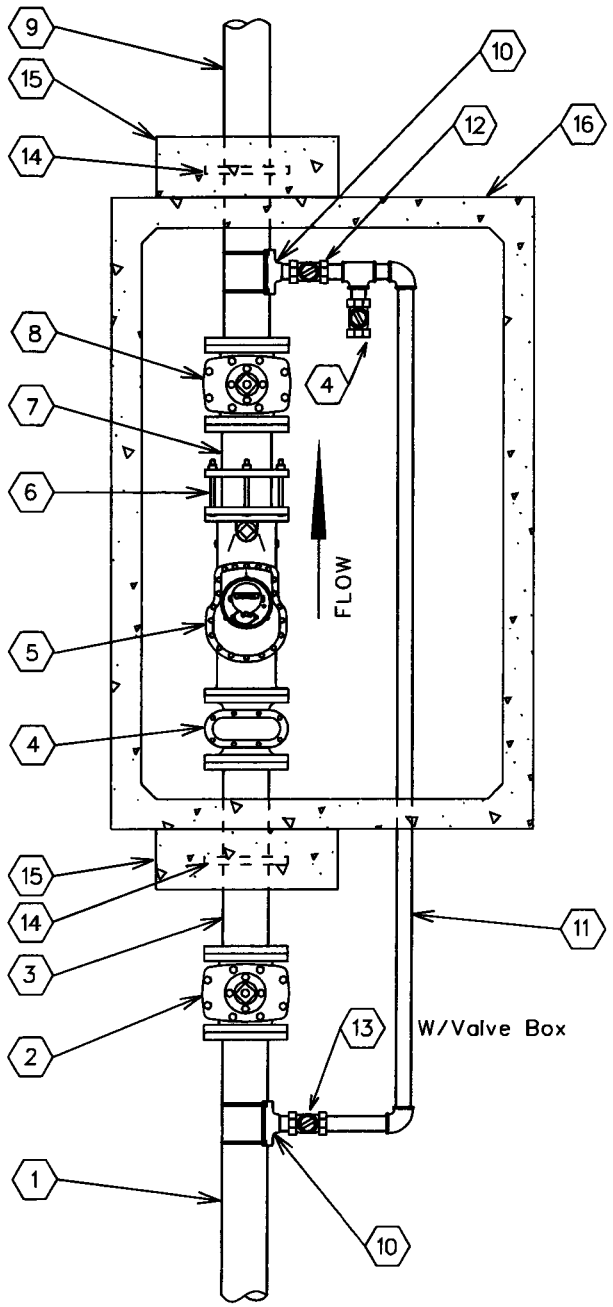

No.	FITTINGS SCHEDULE
1.	6" D.I.P.
2.	6" G.V.B.&C. mj
3.	6"x 3'-0" D.I.P. Spool flng x pe
4.	2" Test Port
5.	6" Compound Meter
6.	6" F.C.A.
7.	6"x 1'-0" D.I.P. Spool flng x pe
8.	6" Gate Valve flng
9.	6"x 4'-0" D.I.P. Spool flng x pe
10.	6"x2" Tapping Saddle
11.	2" Copper Pipe
12.	2" Ball Valve / Locking (Normally Closed)
13.	2" Mueller B25122 Ball Valve w/B20299 Nut
14.	6" Megalug
15.	24"x24"x8" Conc. Thrust Block P.I.P.
16.	575-LA Conc. Vault

NOTE:

1. Use Rowley pipe supports or equivalent as needed (See detail below).
2. Pipe support locations to be determined by field personnel.
3. All copper pipe that comes in contact with concrete to be wrapped w/10-20 Mil. Scotchwrap corrosion protection tape.
4. All mechanical joint fittings are to be megalugged.
5. Use deflection fittings (45° Ells.) to achieve necessary depths & cover as shown on the standard specification for the installation of a concrete vault (E-9-12-5).

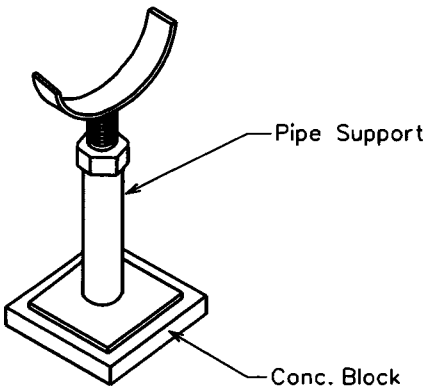

ARIZONA WATER COMPANY

STANDARD SPECIFICATION
FOR THE INSTALLATION OF

6" COMPOUND METER

DRAWN BY:	APPROVED BY:	DATE:	△08.29.2006	
CCO	MW	10/5/1993		E-9-12-3

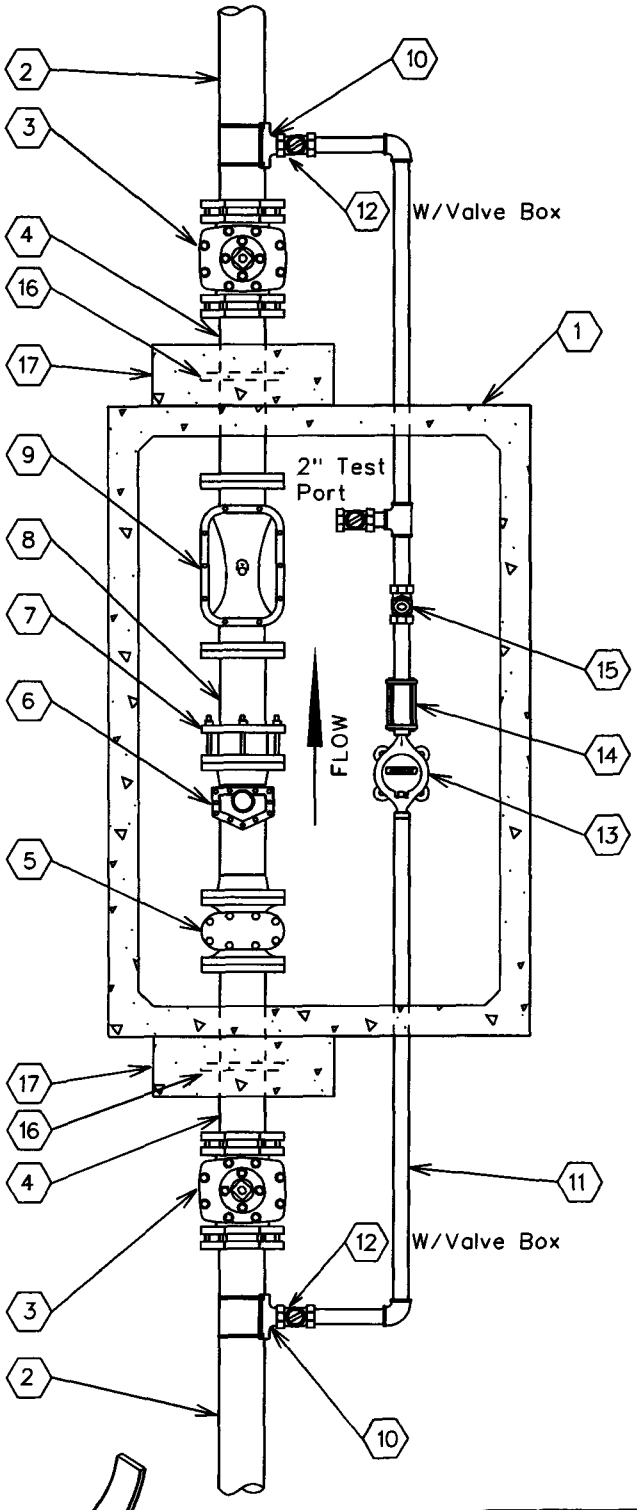

No.	FITTINGS SCHEDULE
1.	575-LA Conc. Vault
2.	6" D.I.P.
3.	6" G.V.B.&C. m.j.
4.	6" x 3'-0" D.I.P. SPool Piece flng x pe
5.	6" Strainer
6.	6" Turbo Meter
7.	6" F.C.A.
8.	6" x 2'-0" D.I.P. Spool Piece flng x pe (TRIM SPOOL PIECE TO 3x THE PIPE DIA.)
9.	6" Detector Check
10.	6"x*N" Tapping Saddle
11.	*N" Copper Pipe
12.	*N" Ball Valve (Locking)
13.	*N" Meter
14.	*N" Coup. Adapt.
15.	*N" Flapper Check Valve
16.	6" Megalug
17.	24"x24"x8" Conc. Thrust Block P.I.P.

*N - Size To Be determined By A.W.Co.

NOTE:

1. Use Rowley pipe supports or equivalent as needed (See detail below).
2. Pipe support locations to be determined by field personnel.
3. All copper pipe that comes in contact with concrete to be wrapped w/10-20 Mil. Scotchwrap corrosion protection tape.
4. All mechanical joint fittings are to be megalugged.
5. Use deflection fittings (45° Ells.) to achieve necessary depths & cover as shown on the standard specification for the installation of a concrete vault (E-9-12-5).
6. To change from a 6" service to a 4" service, change all listed 6" materials to 4" materials.

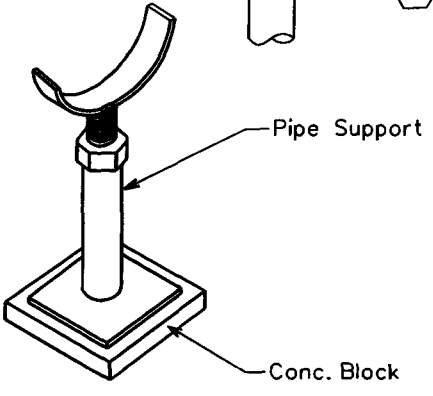

ARIZONA WATER COMPANY

STANDARD SPECIFICATION
FOR THE INSTALLATION OF

6" COMPOUND SERVICE

DRAWN BY:	APPROVED BY:	DATE:		
CCO	MW	10/05/1993	△08.29.2006	E-9-12-4

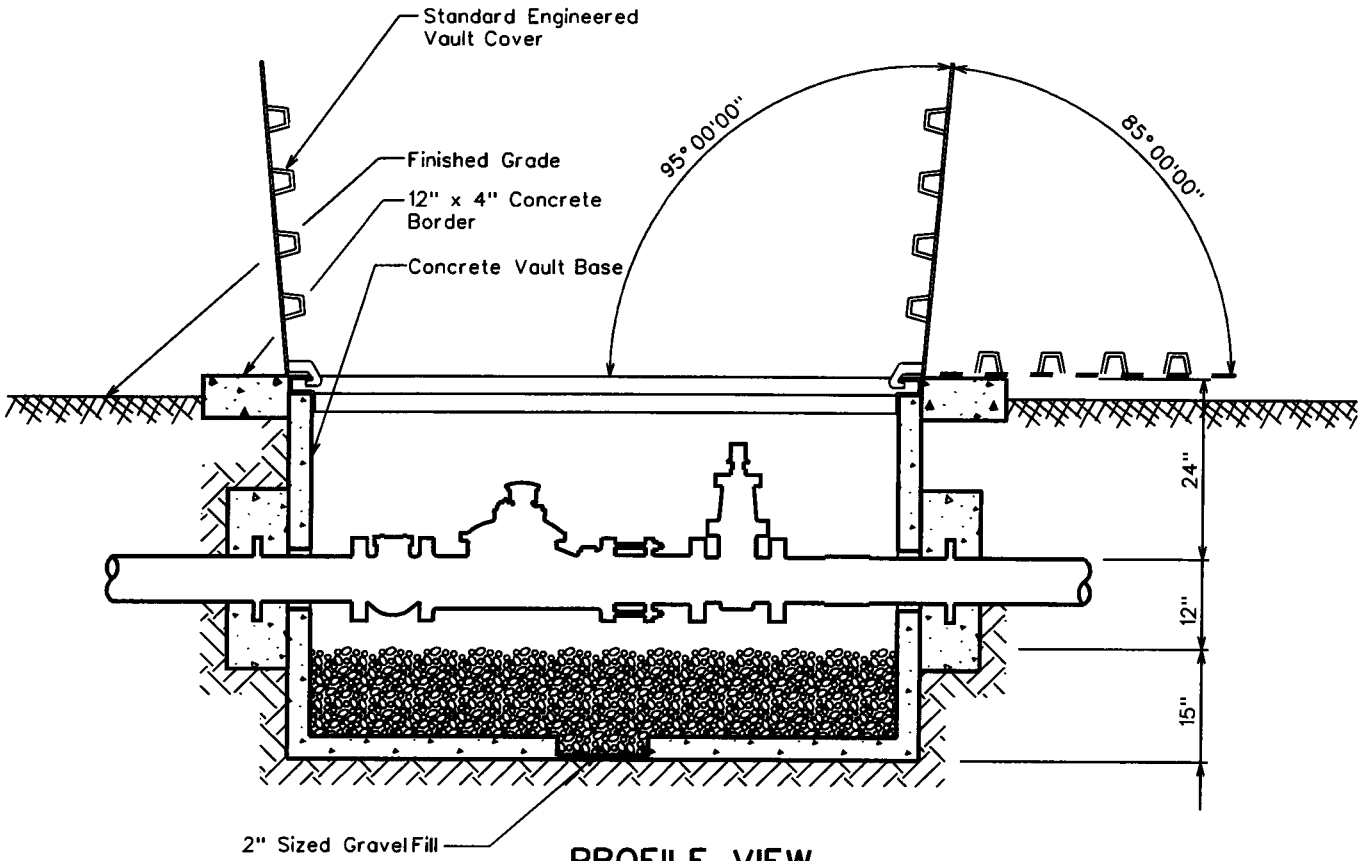

PROFILE VIEW

CONCRETE VAULT & COVER SPECIFICATIONS

Vault - Base No. 575-BL
Cover - Standard Engineered Vault Cover
- 4874 Aluminum Diamond Plate Cover For Non-Traffic Loading Areas
  Or
- 4874 Galvanized Steel Diamond Plate Cover W/ H-20 Traffic Loading
- Double Torsion Spring Assisted Doors W/ Recessed Hasp & Safety Latches

NOTES

1. Total Depth Of Concrete Vault To Be A Maximum Of 3'-0" From Top Of Vault Cover To Top Of Gravel Fill.
2. Service Connections Larger Than 6" In Diameter Will Conform To The Same Vault & Cover Specifications. Size Of Vault & Cover To Be Determined By A.W.Co. Engineers.

ARIZONA WATER COMPANY

STANDARD SPECIFICATION
FOR THE INSTALLATION OF

CONCRETE VAULT

DRAWN BY:	APPROVED BY:	DATE:	△	
CCO	MW	10/5/1993	05.17.2001	E-9-12-5

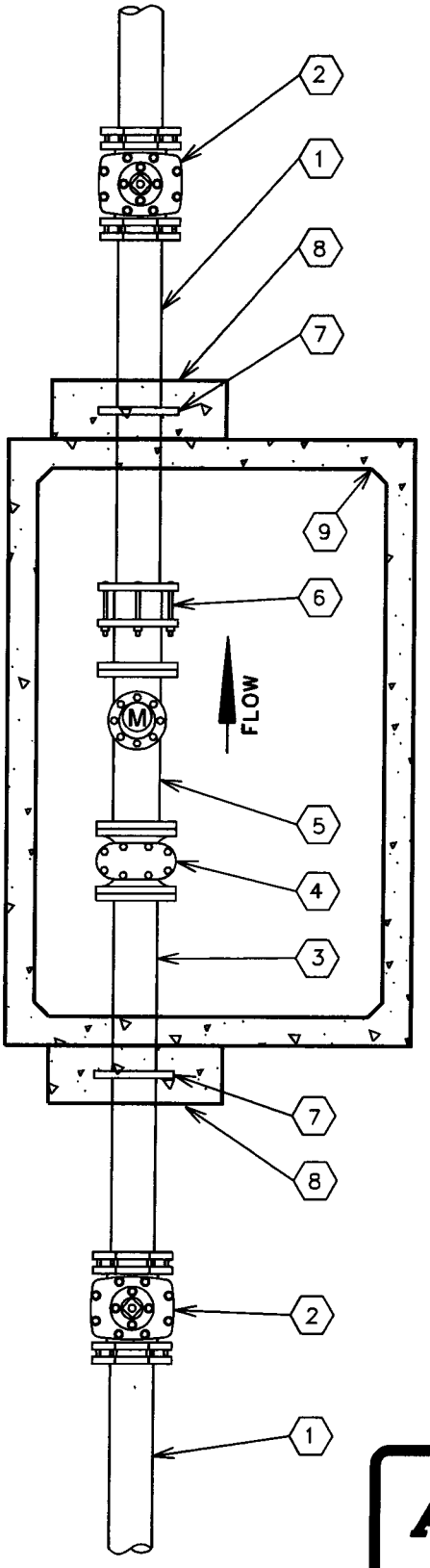

No.	FITTINGS SCHEDULE
1.	Ductile Iron Pipe
2.	Gate Valve M.J.
3.	D.I.P. Spool Piece Flg x Pe (10xDia.)
4.	Meter Strainer
5.	Propeller Meter
6.	Flanged Coupling Adapter
7.	Megalug Gland (Thrust Anchor)
8.	Concrete Thrust Block P.I.P.
9.	Concrete Vault

NOTE:

1. Use Rowley pipe supports or equivalent as needed (See E-9-12-4).
2. Pipe support locations to be determined by field personnel.
3. All Sched. 40 Stl. pipe outside of vault to be wrapped w/10-20 Mil. Scotchwrap corrosion protection tape.
4. All mechanical joint fittings to are to be megalugged.
5. Use deflection fittings (45° Ells.) to achieve necessary depths & cover as shown on the standard specification for the installation of a concrete vault (E-9-12-5).

ARIZONA WATER COMPANY

STANDARD SPECIFICATION

FOR THE INSTALLATION OF

NON-POTABLE PROPELLER METER

DRAWN BY:	APPROVED BY:	DATE:		
JPK	MW	7-20-95	△	E-9-12-6

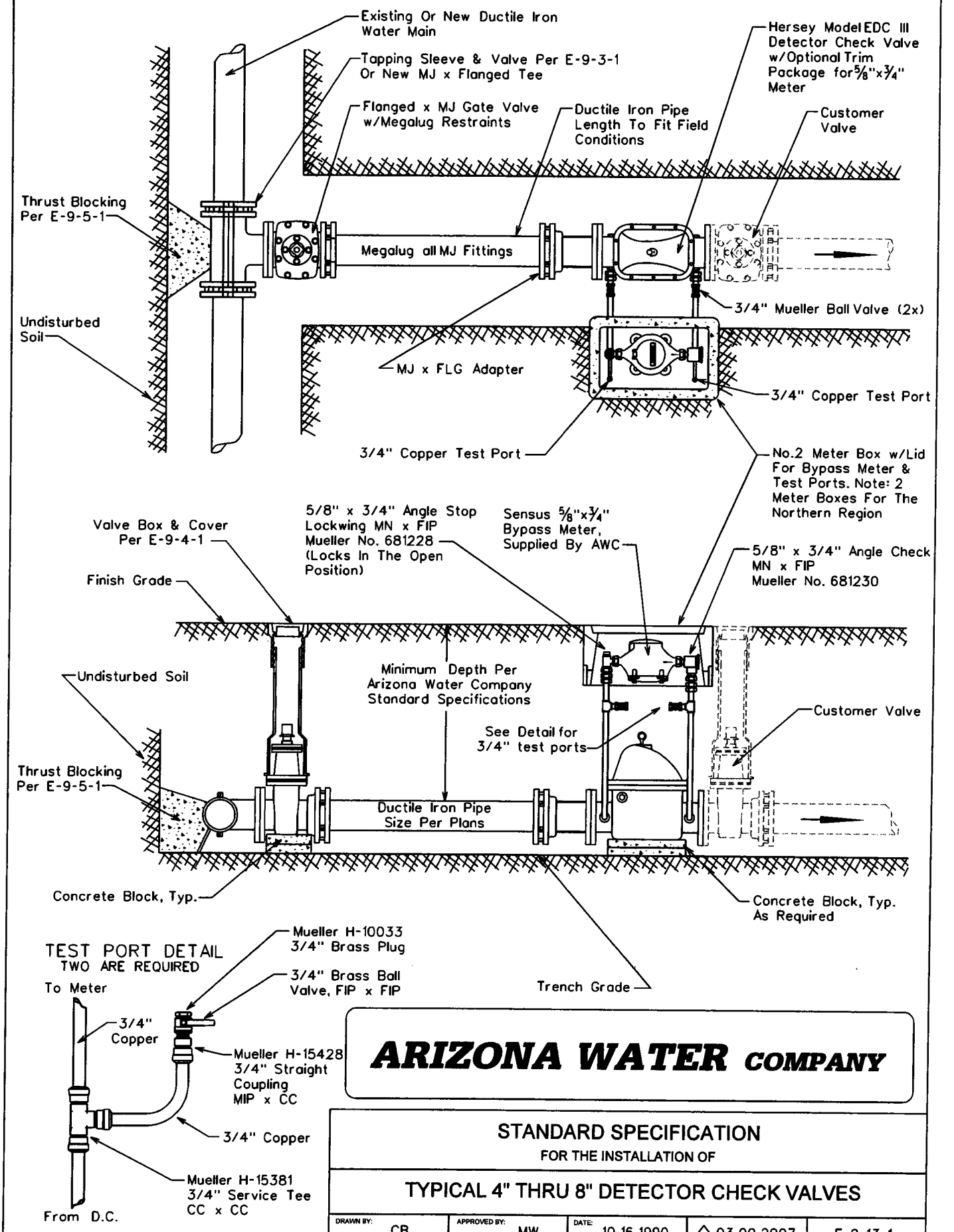

ARIZONA WATER COMPANY

STANDARD SPECIFICATION
FOR THE INSTALLATION OF

TYPICAL 4" THRU 8" DETECTOR CHECK VALVES

DRAWN BY:	APPROVED BY:	DATE:	△	
CB	MW	10.16.1990	△03.09.2007	E-9-13-1

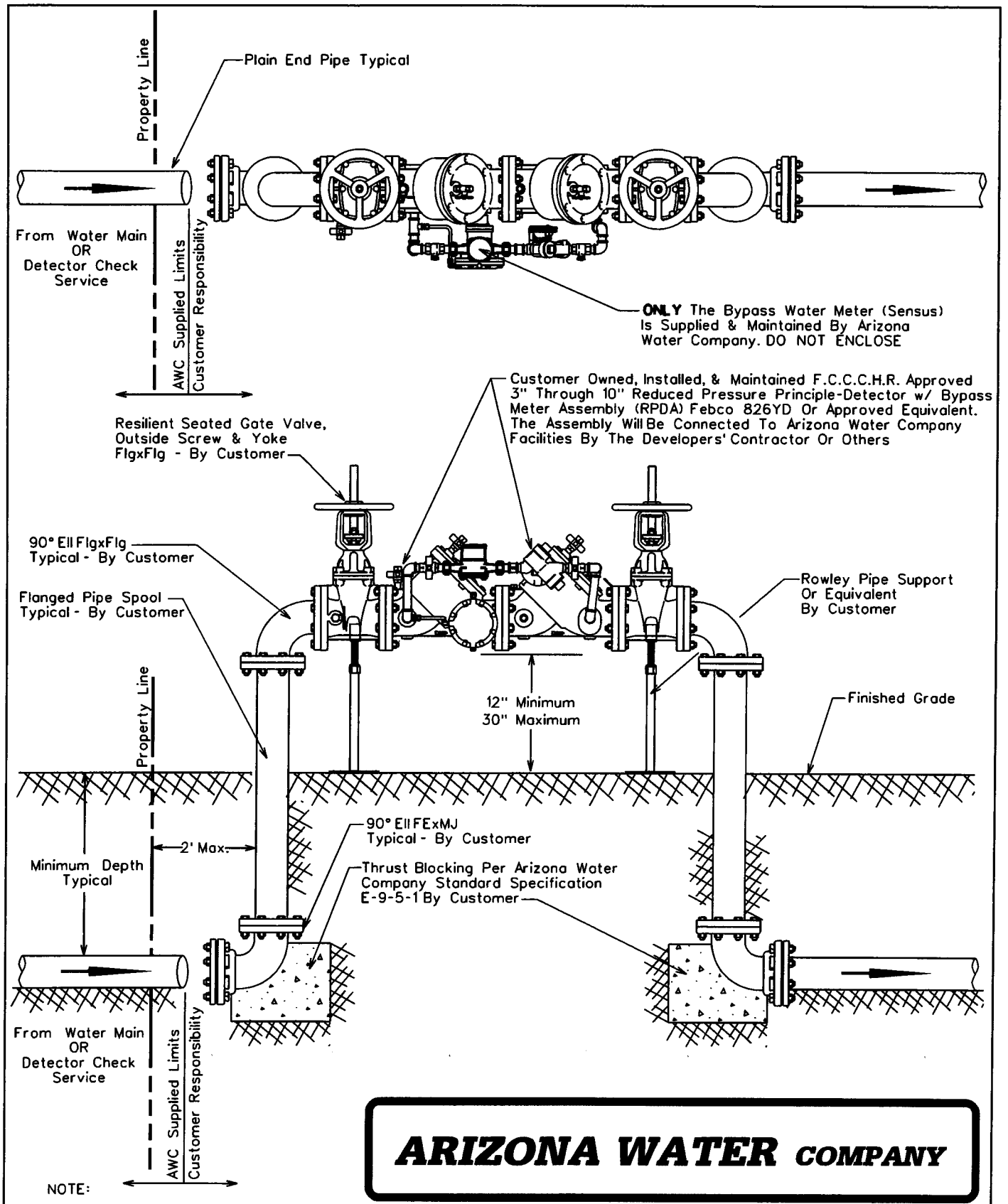

ARIZONA WATER COMPANY

NOTE:

Minimum Depth Of Cover Over
6" & 8" Mains is 36 Inches,
12" & Greater is 48 Inches
Unless Otherwise Specified

STANDARD SPECIFICATION

FOR THE INSTALLATION OF

3" THRU 10" REDUCED PRESSURE PRINCIPLE-DETECTOR
WITH BYPASS METER ASSEMBLY (RPDA) FOR FIRELINE SERVICES

DRAWN BY:	APPROVED BY:	DATE:	△1-19-2000	
CB	MW	10-13-98		E-9-13-2

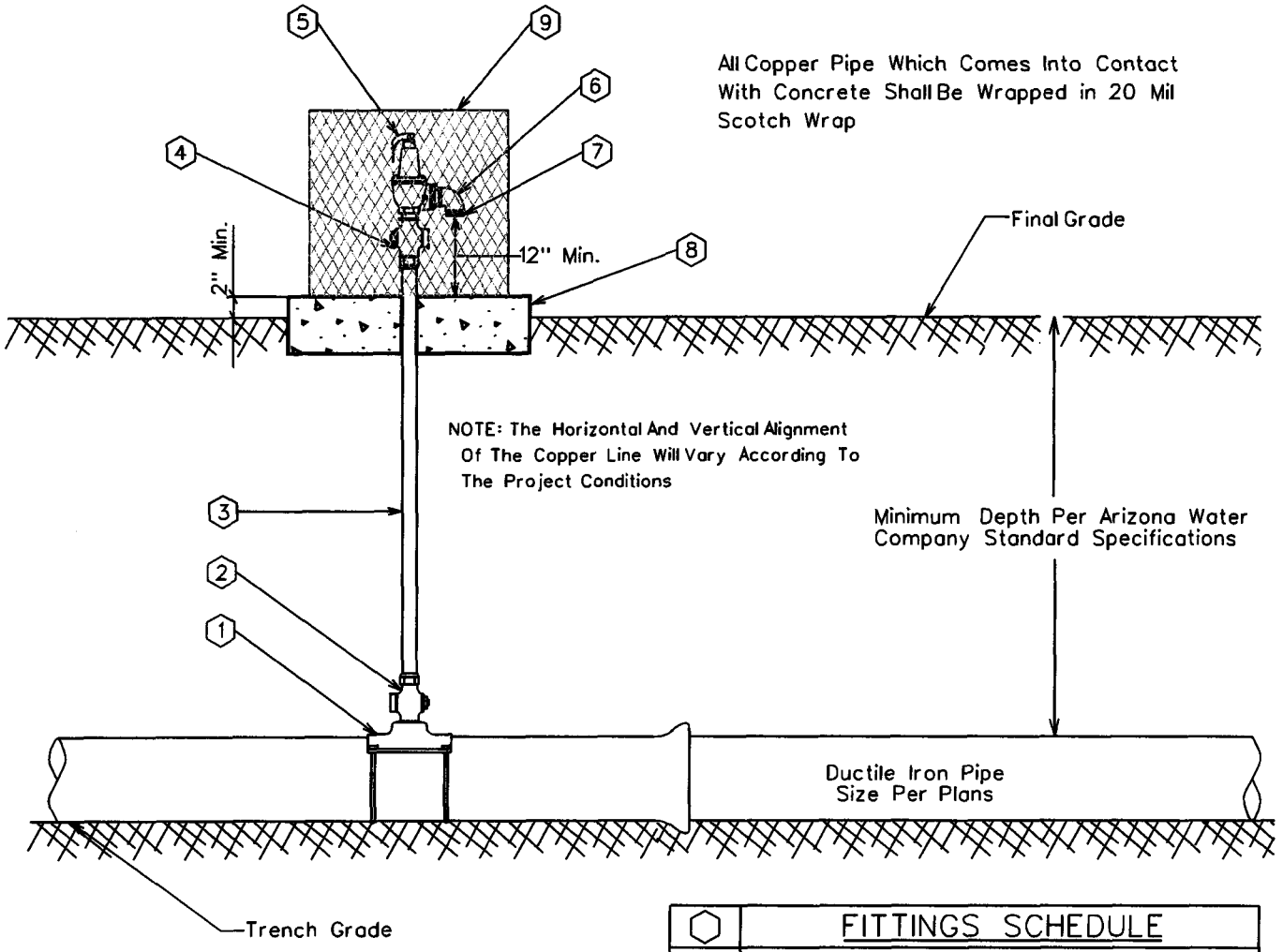

⬡	FITTINGS SCHEDULE
1.	Mueller BR2B Bronze Service Saddle - Double Strap
2.	2" Mueller B-25008 Taper x Comp. Ball Corp Stop
3.	2" Type 'K' Copper w/NO Splices - Field Fit
4.	2" Mueller B-25028 IP x Comp. Ball Corp Stop
5.	2" Pressure Relief Valve Watts 174A With A 2" Inlet / 2" Outlet 30-150 psi W/ Bronze Body
6.	2" Brass Street Elbow
7.	No.16 Wire Mesh Screen (Non-Corrodible)
8.	4" Thick Concrete Pad - Class 'C' Concrete
9.	Vandal enclosure to be centered on the concrete pad

NOTE:

1. Pressure relief valves are typically located just down stream of a pressure reducing station or where system conditions might be subject to greater than allowable pressures.
2. The relief valve assembly and vandal enclosure shall be located out of the roadway, but within the right-of-way or easement.

ARIZONA WATER COMPANY

STANDARD SPECIFICATION
FOR THE INSTALLATION OF

TYPICAL PRESSURE RELIEF VALVE ASSEMBLY

DRAWN BY:	APPROVED BY:	DATE:	△	
CCO	MW	3/20/1986	△ 08.29.2006	E-9-14-1

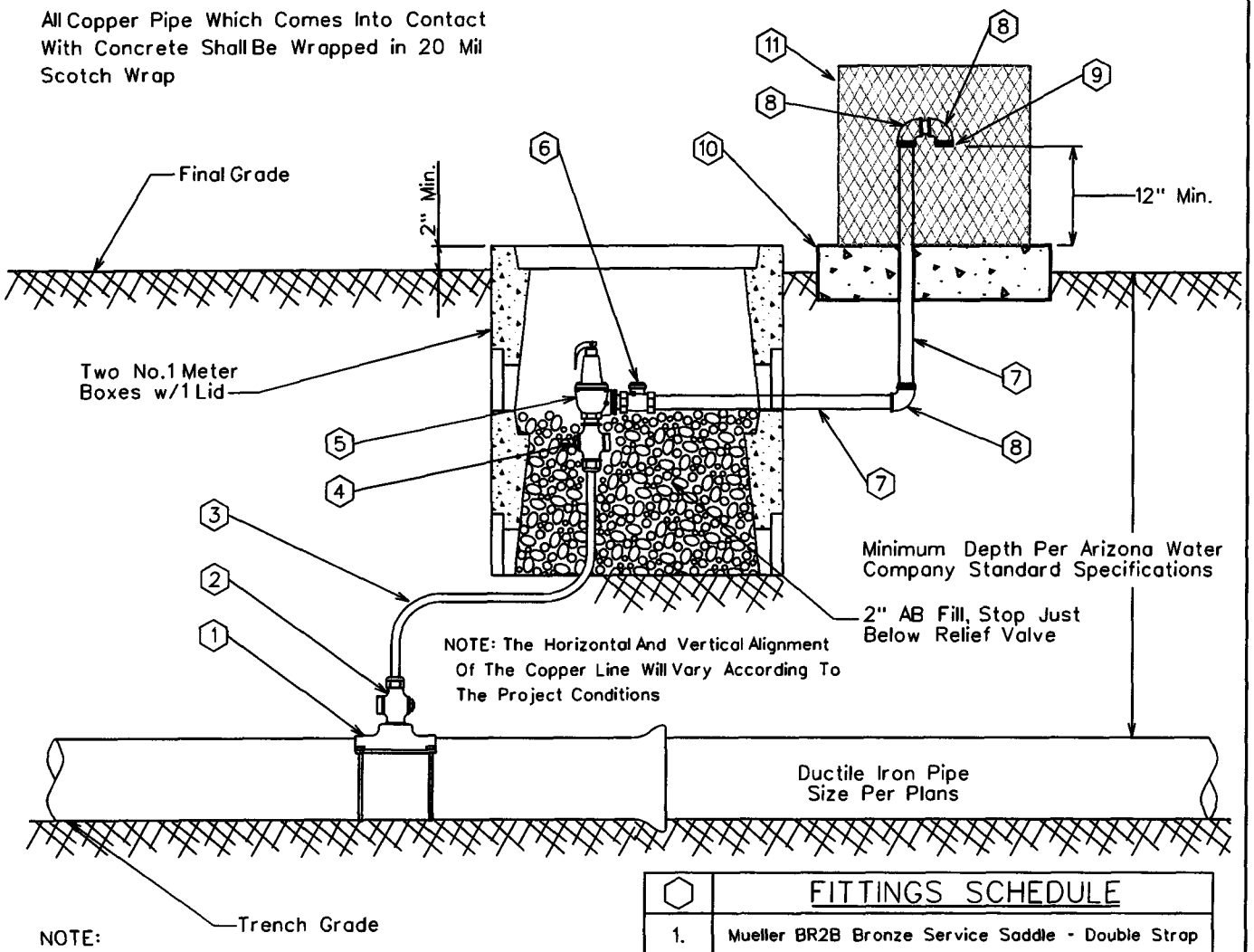

NOTE:

1. Pressure relief valves are typically located just down stream of a pressure reducing station or where system conditions might be subject to greater than allowable pressures.
2. The relief valve assembly and vandal enclosure shall be located out of the roadway, but within the right-of-way or easement.

⬡	FITTINGS SCHEDULE
1.	Mueller BR2B Bronze Service Saddle - Double Strap
2.	2" Mueller B-25008 Taper x Comp. Ball Corp Stop
3.	2" Type 'M' Rigid Copper w/NO Splices - Field Fit
4.	2" Mueller B-25028 IP x Comp. Ball Corp Stop
5.	2" Pressure Relief Valve Watts 174A With A 2" Inlet / 2" Outlet 30-150 psi W/ Bronze Body
6.	2" Bronze Check Valve Watts Series CV
7.	2" Schedule 40 Cut Pipe - Field Fit
8.	2" Brass Street Elbow
9.	No.16 Wire Mesh Screen (Non-Corrodible)
10.	4" Thick Concrete Pad - Class 'C' Concrete
11.	Guardshack, Model GS-1, Available From BPDI, Inc. Available In Leaf Green Or Desert Tan

ARIZONA WATER COMPANY

STANDARD SPECIFICATION

FOR THE INSTALLATION OF

PRESSURE RELIEF VALVE - NORTHERN REGION

DRAWN BY:	APPROVED BY:	DATE:		
CCO	MW	3/20/1986	△08.29.2006	E-9-14-2

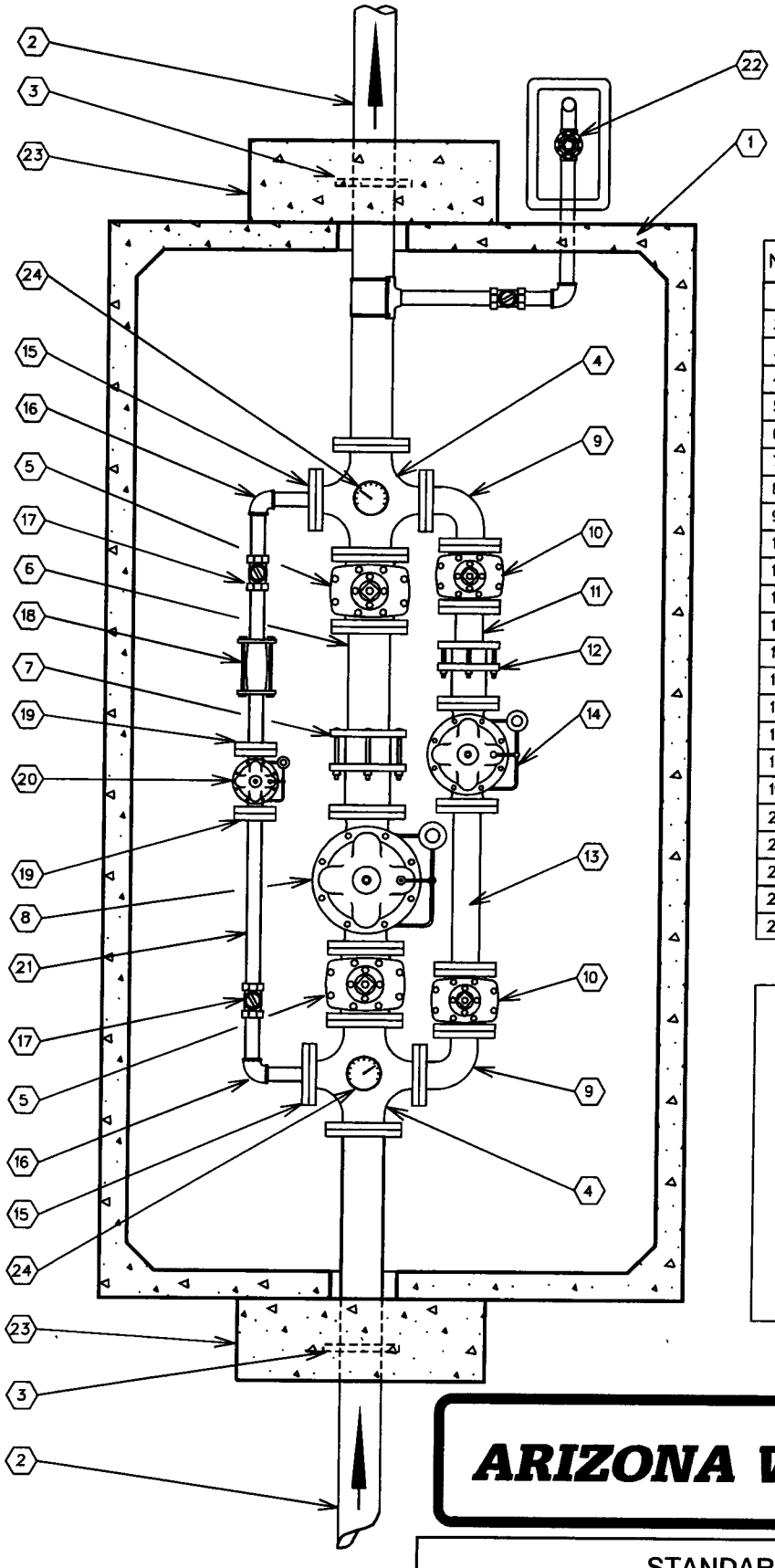

No.	FITTINGS SCHEDULE
1.	612 LA Conc. Vault (See Note 3)
2.	6"x6'-0" D.I.P. Spool Flg.xP.E.
3.	6" Megalug (Thrust Anchor)
4.	6"x4" Cross Flg.
5.	6" Gate Valve Flg.
6.	6"x2'-0" D.I.P. Spool Flg.xP.E.
7.	6" Flg. Coup. Adapt. (Rockwell 913)
8.	6" High Flow Pressure Reducing Valve Flg.
9.	4" 90° Ell. Flg.
10.	4" Gate Valve Flg.
11.	4"x1'-0" D.I.P. Spool Flg.xP.E.
12.	4" FLg. Coup. Adapt. (Rockwell 913)
13.	4"x2'-0" D.I.P. Spool Flg.
14.	4" Medium Flow Pressure Reducing Valve Flg.
15.	2"x9" O.D. Reducing Flg. (I.P.T.)
16.	2" 90° Ell. F.I.P.
17.	2" Ball Valve F.I.P.
18.	2" Comp. Coup. (Rockwell 411)
19.	2" Companion Flg. (I.P.T.)
20.	2" Low Flow Pressure Reducing Valve Flg.
21.	2" Sched. 40 Stl. Pipe
22.	2" Pressure Relief Valve (See E-9-14-1)
23.	12"x36"x36" Conc. Thrust Block P.I.P.
24.	Pressure Gauge w/shut off valve

NOTE:

1. Use Rowley pipe supports or equivalent as needed. (See E-9-12-4)
2. Pipe support locations to be determined by field personnel.
3. Vault-612 LA top section w/12" Dia. sump hole. Cover-concrete slab top w/(4) 4'-0" x2'-6" aluminum spring loaded hinged style covers for non-traffic loading areas. For areas w/low density traffic, cover is to be designed for H-20 traffic loading.
4. All Sched. 40 Stl. pipe outside of vault to be wrapped w/10-20 Mil. Scotchwrap corrosion protection tape.
5. Use deflection fittings (45° Ells.) to achieve necessary depths & cover as shown on the standard specification for the installation of a concrete vault (E-9-12-5).

ARIZONA WATER COMPANY

STANDARD SPECIFICATION

FOR THE INSTALLATION OF

PRESSURE REDUCING STATION

DRAWN BY:	APPROVED BY:	DATE:	△	
JPK	MW	11-16-88	9-27-95	E-9-15-1

1. Specific Items To Be Painted Deer-O Pure White Enamel:

A. All Booster Pumps.
B. All Electrical Motors And Gas Engines.
C. Well Pump Discharge Heads.
D. Electrical Panel.

2. Specific Items To Be Painted Frost Cap White Or Deer-O Pure White Enamel:

A. Well Shelter.

3. Specific Items To Be Painted OSHA Orange:

A. Electrical Conduit.

4. All Other Items To Be Painted With Either:
(At Manager's Discretion)

A. Cholla Green
B. Forest Green
C. Sonora Beige
D. Red Rock
E. Rock Brown
F. Deer-O Pure White
G. Elkhorn Cactus

ARIZONA WATER COMPANY

STANDARD SPECIFICATION
FOR THE INSTALLATION OF

PAINT COLOR SELECTION

DRAWN BY:	APPROVED BY:	DATE:	△	
CCO		3/20/1986	2/13/2001	E-9-16-1

1. Tank shall conform to AWWA Specification D100-84 with exceptions noted below.

*2. ¼" minimum shell plate.

3. Minimum of 12" diameter roof vent, screened with No. 16 non-corrodible wire mesh, to be located on a 24" diameter round hinged manhole opening at the center of the tank to provide access to the dollar plate.

4. Overflow pipe shall be the same diameter as the inlet pipe and shall terminate 12 to 24 inches above splash pad or a minimum of 2 overflow pipe diameters above weir box high water level.

5. Storage tank shall be placed upon adequately compacted base material.

6. 6" minimum floor mounted tank drain outlet to be located close to the outer shell.

7. Tank and related fittings shall be enclosed with a 6 foot chain link fence with lockable gates and anti-personnel wire on top of fence.

8. Liquid level shall be indicated by a target and target board on the outside surface of the tank.

9. 24 inch diameter manholes shall be provided on the roof and on the shell near the bottom of the tank. The roof manhole cover shall overlap the manhole by at least 2 inches to provide a rain tight closure. Roof manhole shall be hinged and equipped with a lock. Shell manhole cover to be hinged and bolted in place. *Tanks larger than a 60 foot diameter require 2 shell manholes.

10. Inside and outside ladders shall be located at the roof manhole. Outside ladder shall be caged with locking trap door. Bottom 8 feet of cage shall be enclosed to within ½" of shell with 10 gauge sheet steel.

11. Finished tank shall be disinfected in accordance with Arizona Department of Health Services Engineering Bulletin No. 8 before being placed into service.

12. The following information will be included with application for approval to construct:

    1. Tank location_____
    2. Tank height_____
    3. Tank diameter_____
    4. Tank capacity_____
    5. Method of water level control_____

13. The storage tank will not be constructed within the 100 year flood plain and the tank site will be graded to slope away from the tank.

14. The welded steel storage tank will be coated as per AWWA Specification D102, and N.S.F. Standard 61.

*Exceptions to AWWA Specification D100-84

FOUNDATION NOTES

1. FINISH CONCRETE SURFACE MUST SLOPE UPWARDS FROM THE STEEL BAND APPROX. 1" IN 10'-0".
2. TOP OF STEEL BAND MUST BE MAINTAINED LEVEL TO WITHIN ⅛".
3. INSTALL 8-2" DIA.x10'-0" P.V.C. WEEP LINES, EQUALLY SPACED (EVERY 45°). PERFORATE 8'-0" OF LINE WITH ½" DIA. HOLES @ 6" O.C. PLUG INTERIOR END OF LINE w/2" CAP.

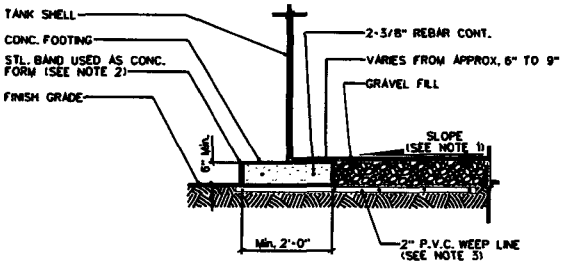

FOUNDATION DETAIL

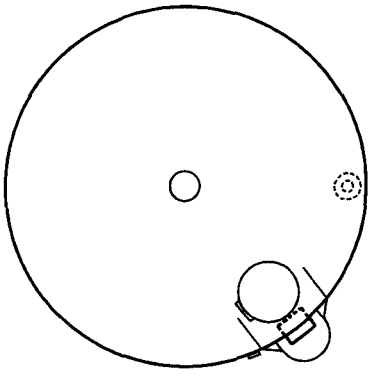

PLAN VIEW

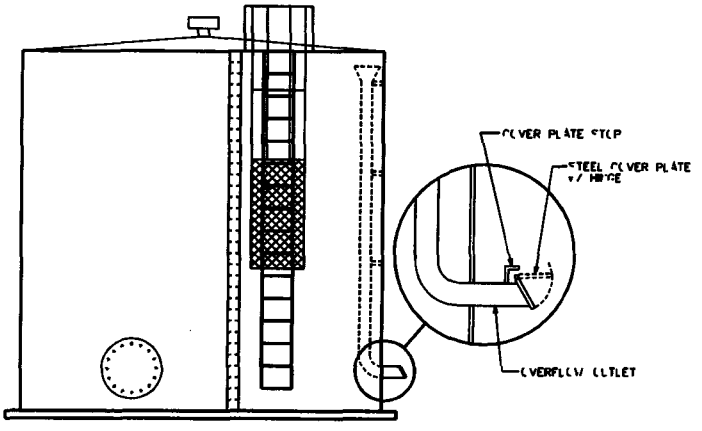

PROFILE VIEW

ARIZONA WATER COMPANY

STANDARD SPECIFICATION

FOR THE INSTALLATION OF

STEEL WATER STORAGE TANK

DRAWN BY:	APPROVED BY:	DATE:	△	
JPK	MJW	10-17-88	2-12-96	E-9-17-1

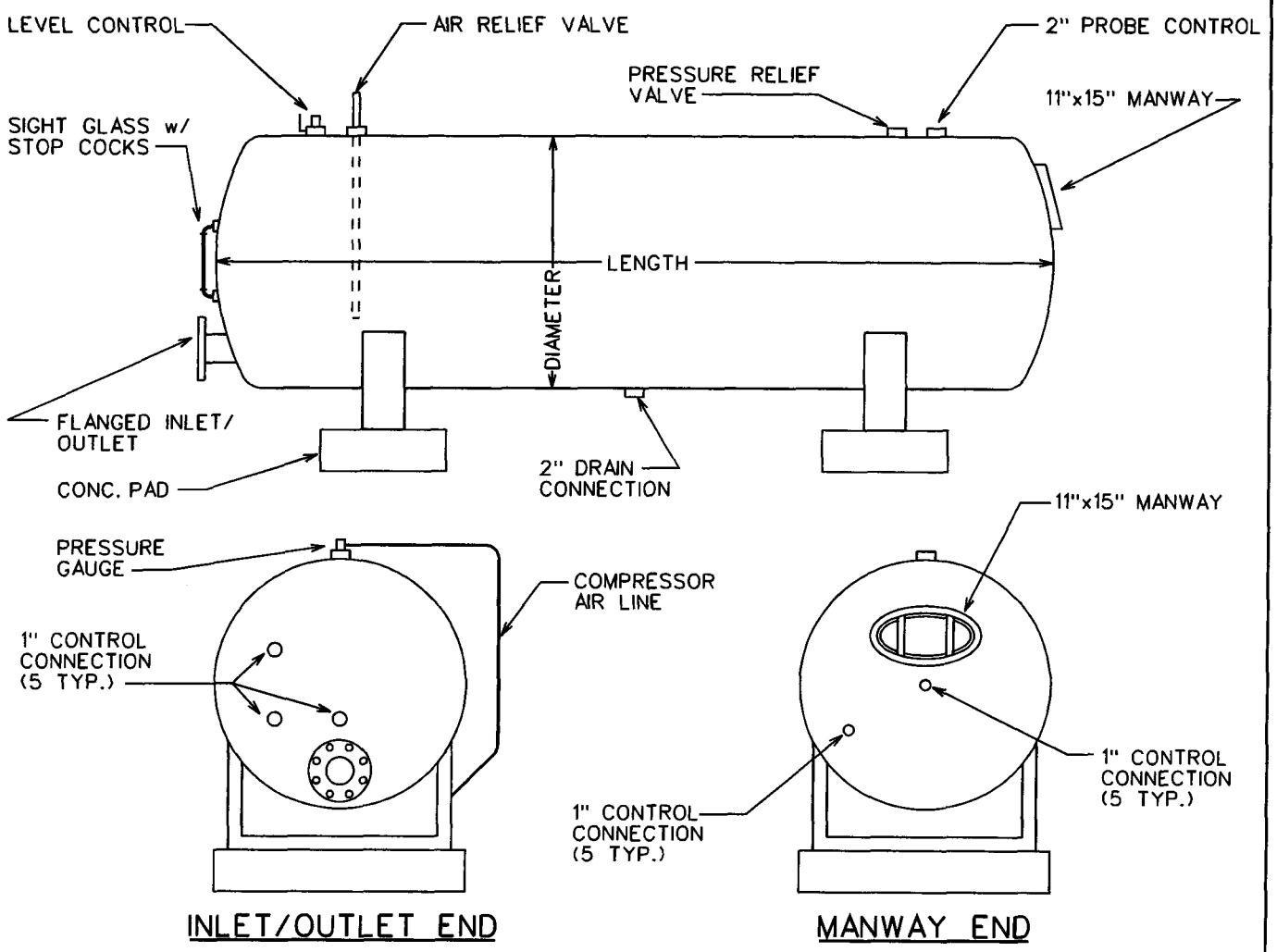

1. ALL HYDROPNEUMATIC TANKS SHALL BE DESIGNED & CONSTRUCTED IN ACCORDANCE WITH THE CURRENT REQUIREMENTS OF THE ASME CODE FOR UNFIRED PRESSURE VESSELS, SECTION VIII, DIVISION 1.
2. FINISHED TANK SHALL BE DISINFECTED IN ACCORDANCE WITH ADEQ BULLETIN No. 8 BEFORE BEING PLACED INTO SERVICE.
3. THE WELDED STEEL HYDROPNEUMATIC TANK WILL BE COATED AS PER AWWA SPECIFICATION D102 & NSF STANDARD 61.
4. THE FOLLOWING INFORMATION WILL BE INCLUDED WITH THE APPLICATION FOR APPROVAL TO CONSTRUCT.
   1. Tank Location _____
   2. Tank Length _____
   3. Tank Diameter _____
   4. Tank Capacity _____
   5. Maximum Working Pressure _____

ARIZONA WATER COMPANY

STANDARD SPECIFICATION
FOR THE INSTALLATION OF

HYDROPNEUMATIC TANK

DRAWN BY:	APPROVED BY:	DATE:	△	
JPK	MW	3-20-1986	01.16.2007	E-9-18-1

NOT
CONVERTED
TO
CAD

ARIZONA WATER COMPANY

STANDARD SPECIFICATION FOR THE INSTALLATION OF				
WELL SHELTER				
DRAWN BY: CB	APPROVED BY:	DATE: 03.20.1986	△04.03.2001	E-9-19-1

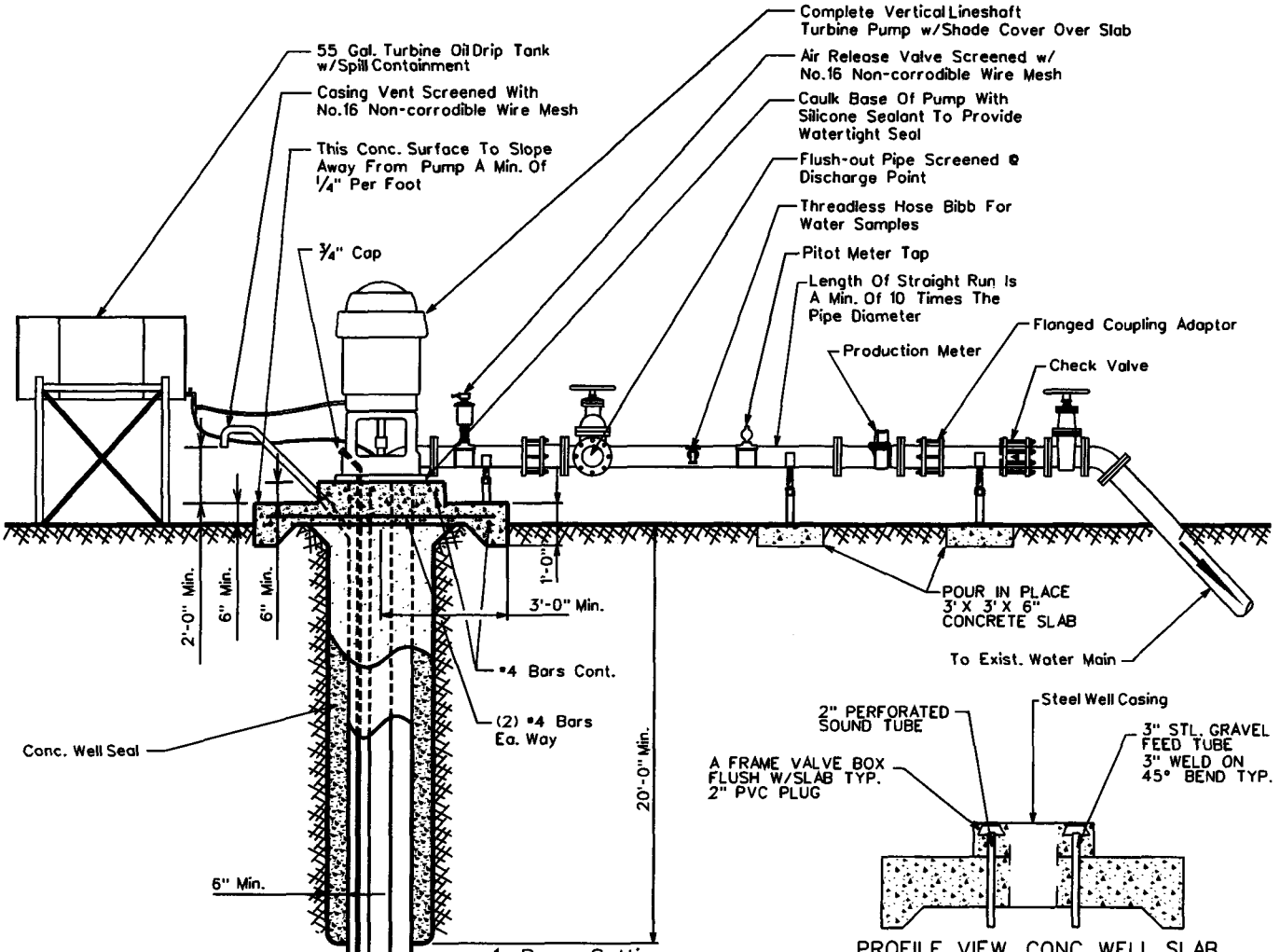

PROFILE VIEW CONC. WELL SLAB

1. Pump Setting -
2. System Pressure @ Water Main -
3. Design G.P.M. -
4. Pump Controlled By -
5. Well Does Not Lie Within The 100 Year Flood Plain.
6. Well Does Not Lie Within 100 Feet Of A Septic Tank.
7. Well Does Not Lie Within 50 Feet Of A Sewer Line.
8. Well Does Not Lie Within 100 Feet Of A Discharge Activity Which Requires An APP.
9. Well Does Not Lie Within 100 Feet Of An Underground Storage Tank.
10. Well Does Not Lie Within 100 Feet Of A Hazardous Waste Facility.
11. All Water Related Fittings Will Conform to N.S.F. Standard 61.
12. The Well Is Not Located Within 500 Feet Of Surface Water.
13. The Site Will Be Graded To Provide Adequate Drainage Away From The Well.
14. 6.88 lbs. of Davis #8084 Grey Dye, Per Yard, For 2500 PSI Concrete

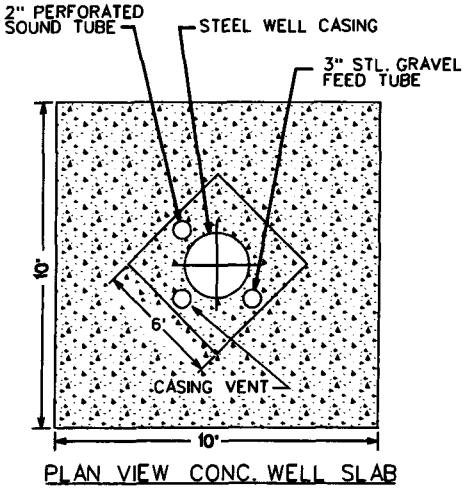

PLAN VIEW CONC. WELL SLAB

ARIZONA WATER COMPANY

STANDARD SPECIFICATION

FOR THE INSTALLATION OF

TYPICAL WELL W/ LINESHAFT TURBINE PUMP

DRAWN BY:	APPROVED BY:	DATE:	△	
JW	M.W.	3-20-86	9/15/04	E-9-20-1

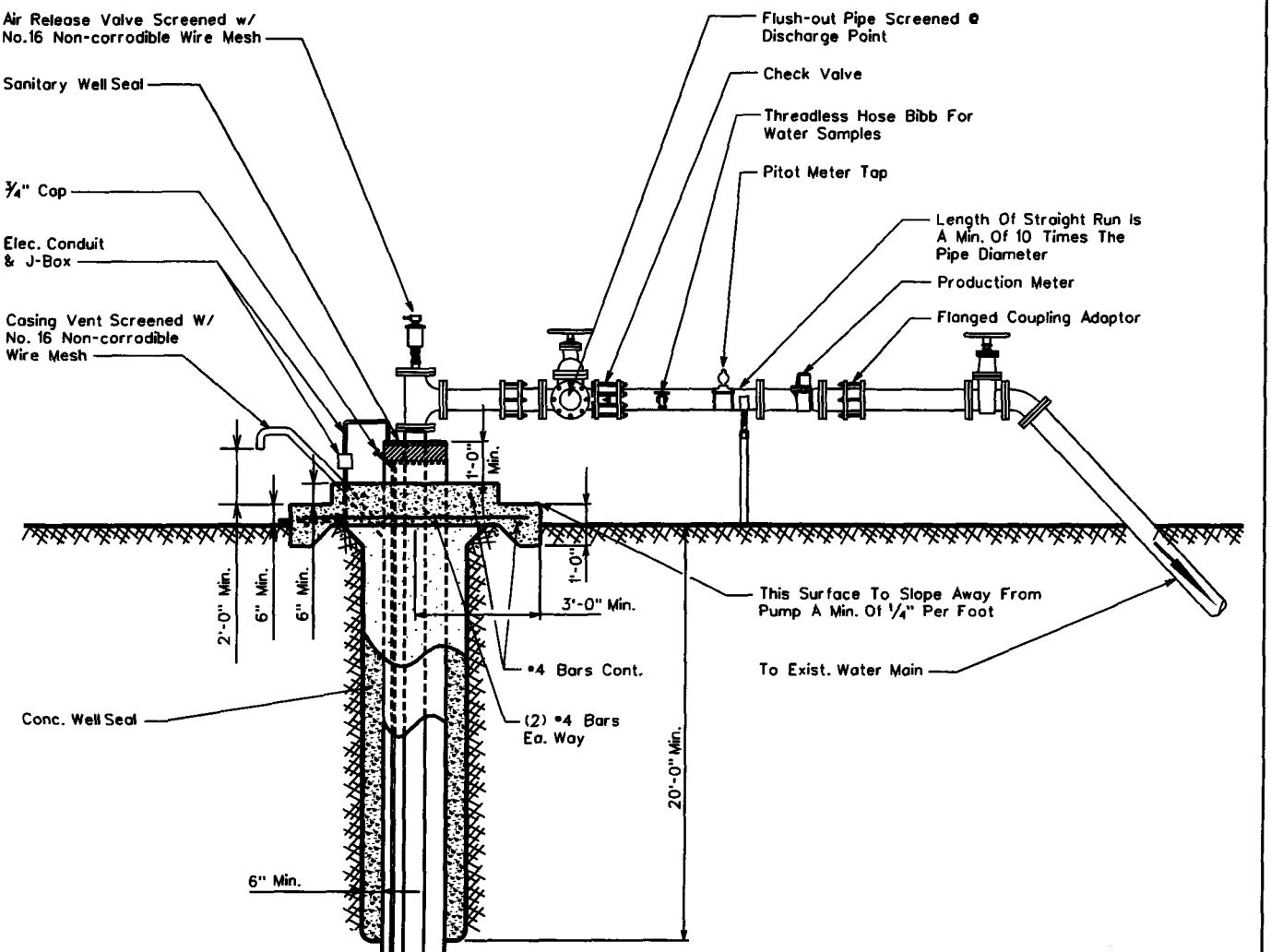

1. Pump Setting -
2. System Pressure @ Water Main -
3. Design G.P.M. -
4. Pump Controlled By -
5. Well Does Not Lie Within The 100 Year Flood Plain.
6. Well Does Not Lie Within 100 Feet Of A Septic Tank.
7. Well Does Not Lie Within 50 Feet Of A Sewer Line.
8. Well Does Not Lie Within 100 Feet Of A Discharge Activity Which Requires An APP.
9. Well Does Not Lie Within 100 Feet Of An Underground Storage Tank.
10. Well Does Not Lie Within 100 Feet Of A Hazardous Waste Facility.
11. All Water Related Fittings Will Conform to N.S.F. Standard 61.
12. The Well Is Not Located Within 500 Feet Of Surface Water.
13. The Site Will Be Graded To Provide Adequate Drainage Away From The Well.

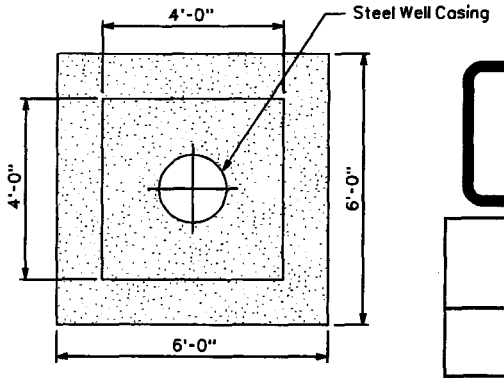

PLAN VIEW CONC. WELL SLAB

ARIZONA WATER COMPANY

STANDARD SPECIFICATION
FOR THE INSTALLATION OF

TYPICAL WELL W/ SUBMERSIBLE TURBINE PUMP

DRAWN BY:	APPROVED BY:	DATE:	△	
jpk	M.W.	3-20-86	2-16-01	E-9-21-1

All New Purchases To Conform To The Following:

Column Pipe

4" I.D. - 8	Threads	Per	Inch	Tapered	¾"	Per	Foot	Right	Hand
6" I.D. - 8	"	"	"	"	"	"	"	"	"
8" I.D. - 8	"	"	"	"	"	"	"	"	"
10" I.D.- 8	"	"	"	"	"	"	"	"	"
12" I.D.- 8	"	"	"	"	"	"	"	"	"
14" I.D.- 8	"	"	"	"	"	"	"	"	"

Oil Tube - Peerless Type

1½" O.D. - 14	Threads	Per	Inch	Right	Hand
2" O.D. - 12	"	"	"	"	"
2½" O.D. - 10	"	"	"	"	"
3" O.D. - 10	"	"	"	"	"
3½" O.D. - 10	"	"	"	"	"
4" O.D. - 10	"	"	"	"	"

Line Shaft

¾" O.D. - 10	Threads	Per	Inch	Left	Hand
1" O.D. - 14	"	"	"	"	"
1-3/16" O.D. - 10	"	"	"	"	"
1-1/2" O.D. - 10	"	"	"	"	"
1-11/16" O.D. - 10	"	"	"	"	"
1-15/16" O.D. - 10	"	"	"	"	"
2-3/16" O.D. - 10	"	"	"	"	"
2-7/16" O.D. - 8	"	"	"	"	"

ARIZONA WATER COMPANY

STANDARD SPECIFICATION
FOR THE INSTALLATION OF

COLUMN PIPE, OIL TUBE AND LINE SHAFT

DRAWN BY:	APPROVED BY:	DATE:		
CCO		3/20/1996	△ 2/13/2001	E-9-22-1

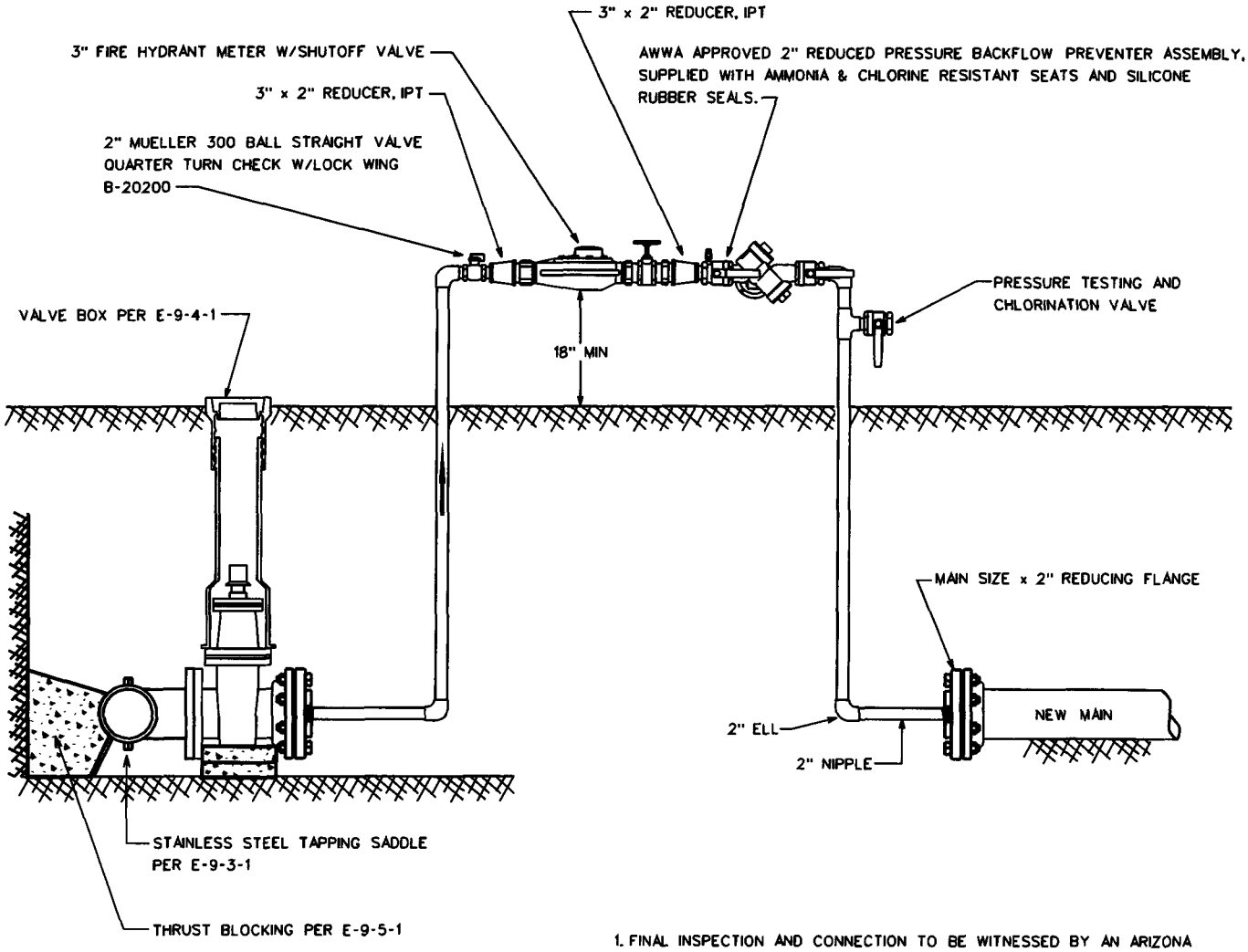

1. FINAL INSPECTION AND CONNECTION TO BE WITNESSED BY AN ARIZONA WATER COMPANY REPRESENTATIVE.
2. REDUCING FLANGES TO BE PROPERLY RESTRAINED.
3. INSTALL JUMPER TAP FOR TEMPORARY METER DOWNSTREAM OF THE REDUCING FLANGE FOR PRESSURE AND BACTEE TESTING.
4. JUMPER ASSEMBLY MUST BE A MINIMUM OF 18" ABOVE FINISHED GRADE.
5. BACKFLOW ASSEMBLY REQUIRES CERTIFICATION.
6. ASSEMBLY NOT TO BE REMOVED AND SPOOL PIECE INSTALLED FOR FINAL CONNECTION UNTIL ALL TESTING, BACTERIAL CLEARANCE AND FINAL INSPECTIONS HAVE BEEN OBTAINED.
7. ALL NEW PIPING SHALL BE PROPERLY RESTRAINED.

ARIZONA WATER COMPANY

STANDARD SPECIFICATION
FOR THE INSTALLATION OF

HOT TAP & JUMPER METER CONNECTION

DRAWN BY:	APPROVED BY:	DATE:	△	
CB	MJW	05.14.2004		E-9-23-1

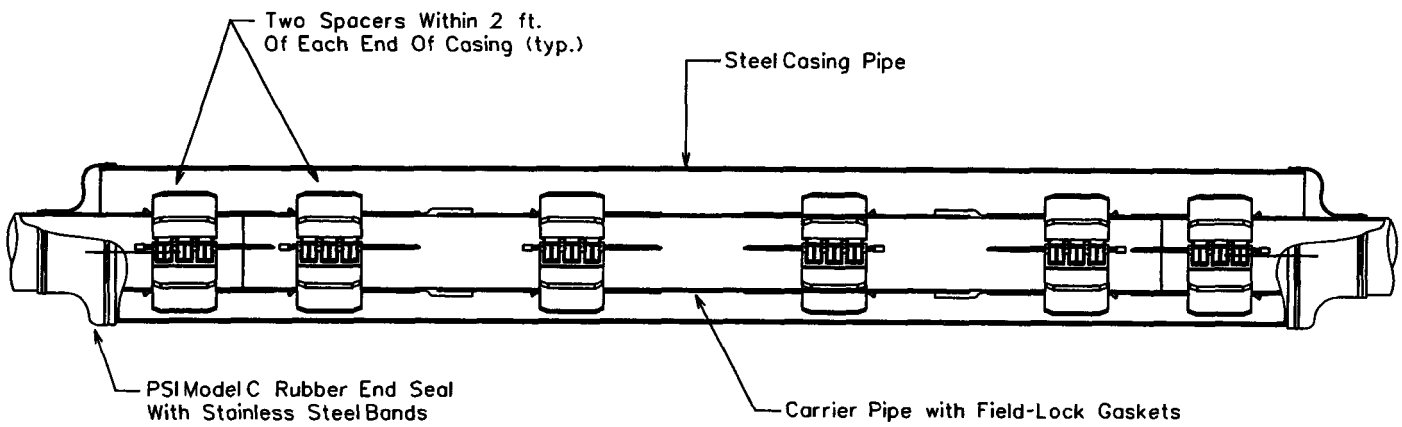

CROSS SECTION

The casing spacers shall be the PSI Ranger II Casing Spacers as manufactured by Pipeline Seal and Insulator, Inc., Houston, Texas.

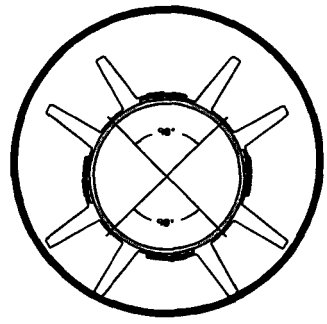

SECTION CUT

End Seals
After insertion of the carrier pipe into the casing, the ends of the casing shall be closed by installing 1/8" thick synthetic rubber end seals equal to the PSI Model "C" end seal as manufactured by Pipeline Seal and Insulator, Inc., Houston, Texas.

NOTE: The Carrier Pipe Shall Be Polywrapped Prior To The Skid Installation & Insertion Into The Carrier Casing For Divisions Requiring Polywrapped Pipe.

OD Push On Joint Bell	OD M.J. BELL
6" - 8.66"	6" - 11.12"
8" - 10.82"	8" - 13.37"
12" - 15.05"	12" - 17.94"
16" - 19.74"	16" - 22.56"
20" - 23.98"	20" - 27.08"
24" - 28.16"	24" - 31.58"
30" - 35.40"	30" - 39.12"
36" - 41.84"	36" - 46.00"
48" - 55.94"	48" - 60.00"

*Thickness Of Skid To Extend A Minimum of 1/2" Above The O.D. Of The Pipe Bell or Gland.

PIPE SIZE	CASING SIZE	CASING SIZE ID	CASING SCHEDULE	WALL THICKNESS	SKID SIZE
6"	16"	15.25"	STD.	.375	*x4x12
8"	18"	18.25"	STD.	.375	*x4x12
12"	22"	21.25"	STD.	.375	*x4x12
16"	28"	27.25"	STD.	.375	*x4x12
20"	32"	31.25"	STD.	.375	*x4x12
24"	36"	35.25"	STD.	.375	*x4x12
30"	48"	47.25"	STD.	.375	*x4x12
36"	54"	53.25"	STD.	.375	*x4x12
48"	66"	65.25"	STD.	.375	*x4x12

ARIZONA WATER COMPANY

STANDARD SPECIFICATION
FOR THE INSTALLATION OF

TYPICAL WATER LINE ENCASEMENT

DRAWN BY:	APPROVED BY:	DATE:	△ 09.27.2006	
CB		3/20/1996		E-9-24-1

CALCIUM HYPOCHLORITE TABLET CHLORINATOR FEEDER SPECIFICATIONS

SCOPE - This specification describes a ARCH Chemicals Calcium Hypochlorite Tablet Chlorination System as manufactured by ARCH Chemicals, 501 Merritt Seven, P.O. Box 5204, Norwalk, CT, 06856-5204.

DESCRIPTION - The chlorination system shall be completely assembled, ready to install. The chlorination system shall be a ARCH Chemicals Calcium Hypochlorite Tablet Feeder, or its equivalent, and shall be supplied with all its components factory mounted.

COMPONENTS - The Chlorination system shall have the following components:
- A. 1-¾" ARCH Chemical solid calcium hypochlorite tablet feeder
- B. Polyethylene system enclosure
- C. Integrated, level controlled solution tank
- D. Adjustable flow control valve
- E. Manual on/off valve (at inlet)
- F. Chemical metering pump
- G. On/off pump control switch
- H. Waterproof electrical junction box
- I. Corrosion resistant schedule 40 piping
- J. Reverse flow check valves
- K. Total solution output control valve

ELECTRICAL FIXTURES - The following electrical fixtures shall be provided:
- A. Safety switch, 2 pole, fused for 30 Amps, for 120 Volts, 60 cycle, single phase power.

CHLORINATOR DESIGN - The chlorination facility shall be designed and constructed in accordance with Arizona State Department of Health Engineering Bulletin Number 8 - "Disinfection of Water Systems". Latest Revision.

CHLORINATION EQUIPMENT - The chlorination equipment shall be a ARCH Chemicals Calcium Hypochlorite tablet chlorinator, approved by NSF Standard 61.

CHLORINATOR OPERATION - The chlorination facility shall be operated in accordance with Arizona State Department of Health Engineering Bulletin Number 8, "Disinfection of Water Systems", Table 1. latest revision.

CHLORINATOR SYSTEM DESCRIPTION - ARCH Chemicals tablet chlorinator systems incorporate a patented chlorinator which is designed to utilize ARCH Chemicals 1-¾" solid calcium hypochlorite tablets (Approved NSF Standard 60). Meets AWWA Standard B-300, EPA Registration # 1258-1179.The chlorinator is mounted on a polyethylene system enclosure. The inlet water is sprayed on the calcium hypochlorite tablet and collected in a solution tank. This chlorinated solution is then pumped out of the tank through a chemical metering pump. This metering pump is then adjusted to obtain the desired CL residual.

ARCH Chemicals Calcium Hypochlorite Tablet Chlorinator

NTS

HYPOCHLORINATOR COMPONENTS:

1. Chemical Metering Pump
2. Pump Suction Connection
3. Pump Discharge Connection
4. Inlet Water Assembly
5. Inlet Water Solenoid Valve
6. Inlet Shut-Off Valve
7. Inlet Pressure Regulator
8. Inlet Water Pressure Gauge
9. Spray Nozzle Water Pressure Gauge
10. Inlet Strainer
11. Inlet Tubing Connection
12. Dry Chemical Hopper
13. Suction Line
14. Electrical Control Box With Power On/Off
15. Electric Mixer
16. Solution Discharge Connection
17. Tank Drain Valve
18. Observation Port
19. Mixed Chemical Holding Tank
20. Pressure Relief Valve
21. Pump Speed Control
22. High Level Shut-Off Float Switch
23. Water Spray Nozzles

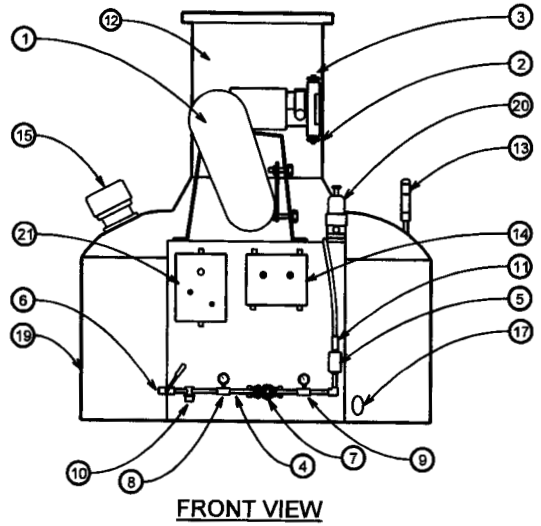

FRONT VIEW

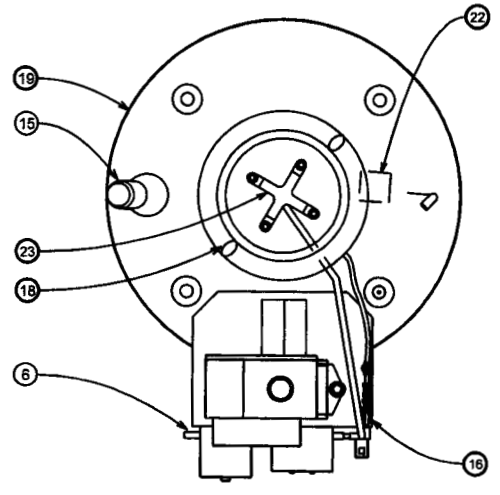

TOP VIEW

HOPPER REMOVED FOR CLARITY

Chlorinator Fluid Schematic

NTS

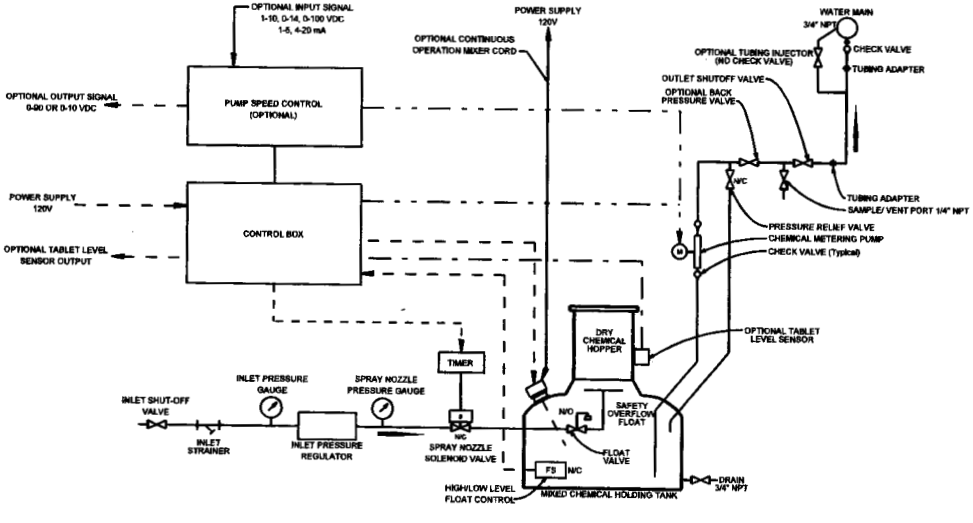

ARIZONA WATER COMPANY

STANDARD SPECIFICATION FOR THE INSTALLATION OF CALCIUM HYPOCHLORITE TABLET CHLORINATOR				
DRAWN BY: CB	APPROVED BY: MW	DATE: 02-09-2000	△	E-9-25-1

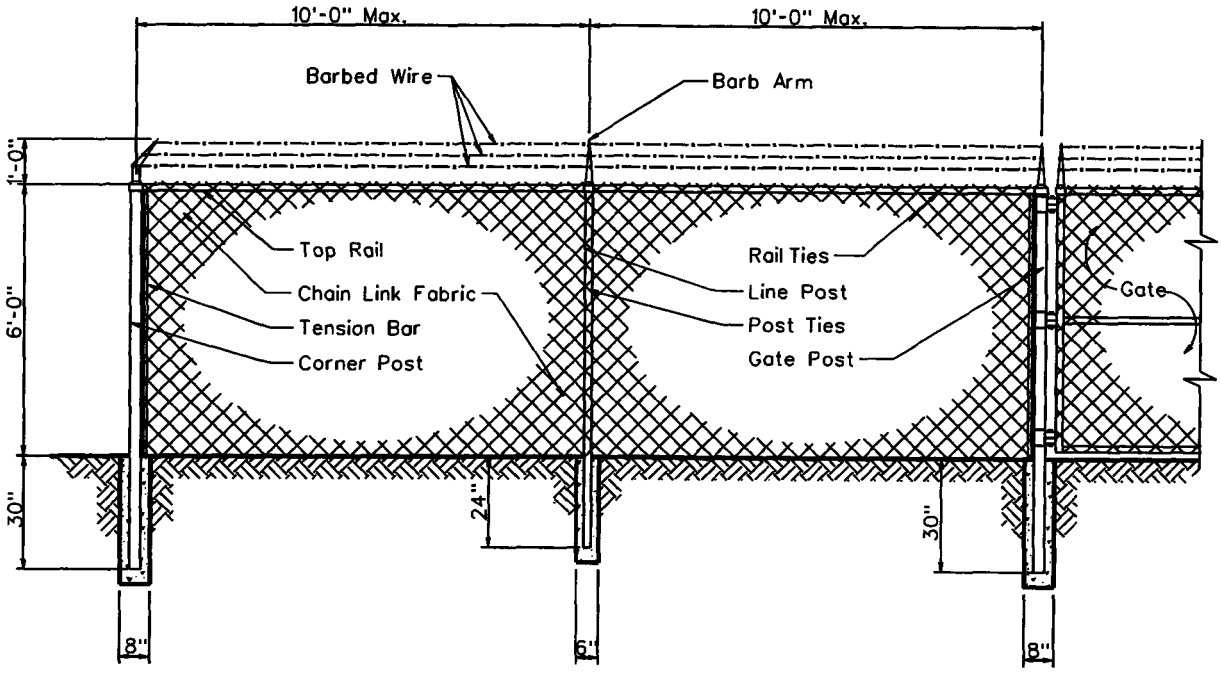

Line Post:	1-7/8" O.D.	1.74 lbs. P/L.F.	ASTM A-256
End Post:	2-7/8" O.D.	4.64 lbs. P/L.F.	ASTM A-256
Corner Post:	2-7/8" O.D.	4.64 lbs. P/L.F.	ASTM A-256
Gate Post:	2-7/8" O.D.	4.64 lbs. P/L.F.	ASTM A-256
Top Rail:	1-5/8" O.D.	4.64 lbs. P/L.F.	ASTM A-256
Chain Link Fabric:	9 Ga. 2" Mesh Galv. Before Weave		
Selvage:	Barb/Knuckle		
Fittings:	Pressed Steel		
Barb Wire:	2-1/2 Ga./2 Point		
Barb Arm:	1 Piece/45° Arm		
Tension Wire:	9 Ga./Galv.		
Line Post Set:	6"x24" In Concrete		
Terminal Post Set:	8"x30" In Concrete		

ARIZONA WATER COMPANY

STANDARD SPECIFICATION
FOR THE INSTALLATION OF

CHAIN LINK FENCE

DRAWN BY:	APPROVED BY:	DATE:	△	
CCO	MW	7/7/1992	2/9/2001	E-9-26-1

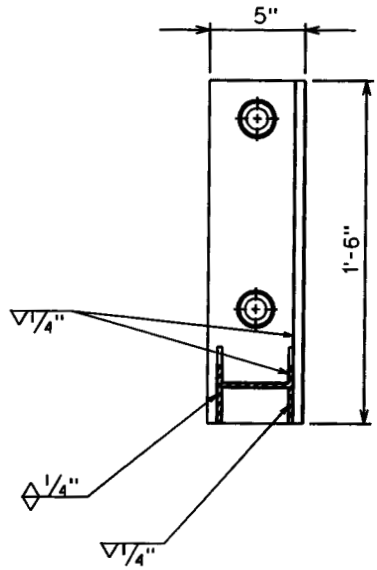

SECTION X-X

NOTES

1. Minimum 2 Supports Per Joint Of Pipe.
2. All Bolts Shall Have A Lock Washer Under The Nut.
3. All Nuts Shall Be Stainless Steel Series 304.

PIPE SIZE	A	B
8"	8"	15"
10"	9"	17"
12"	10"	19"

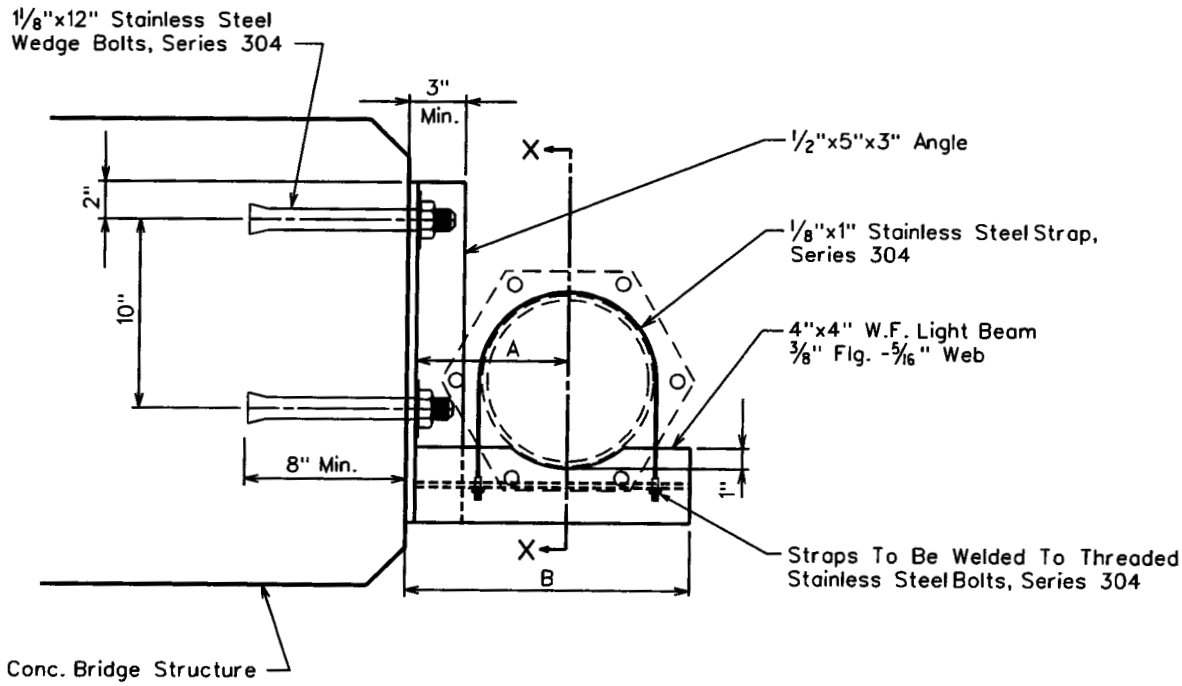

SUSPENSION DETAIL

ARIZONA WATER COMPANY

STANDARD SPECIFICATION
FOR THE INSTALLATION OF

SIDE HUNG WATER LINE SUSPENSION

DRAWN BY:	APPROVED BY:	DATE:		
JPK	MJW	7-12-96	△	E-9-27-1

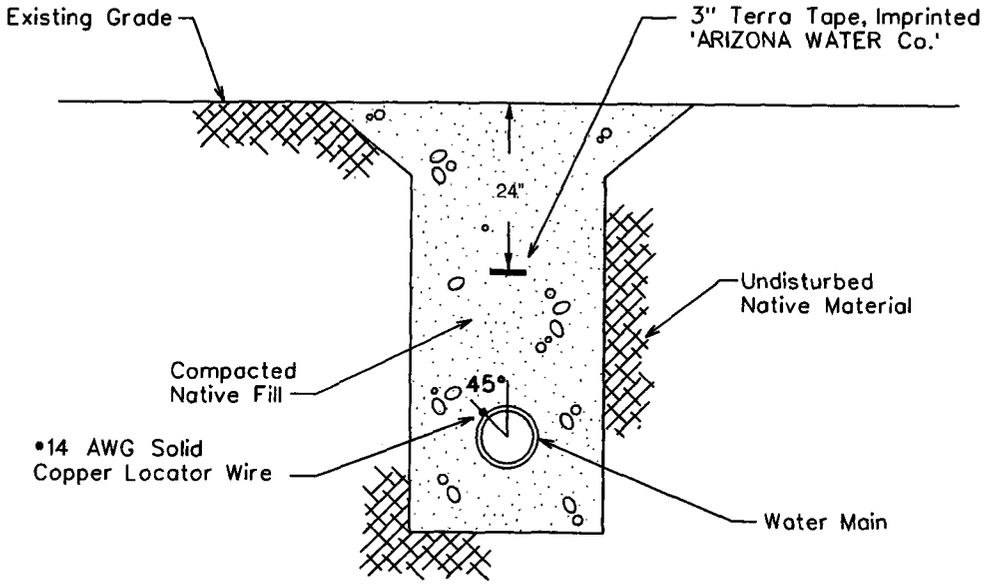

TYPICAL WATER TRENCH DETAIL

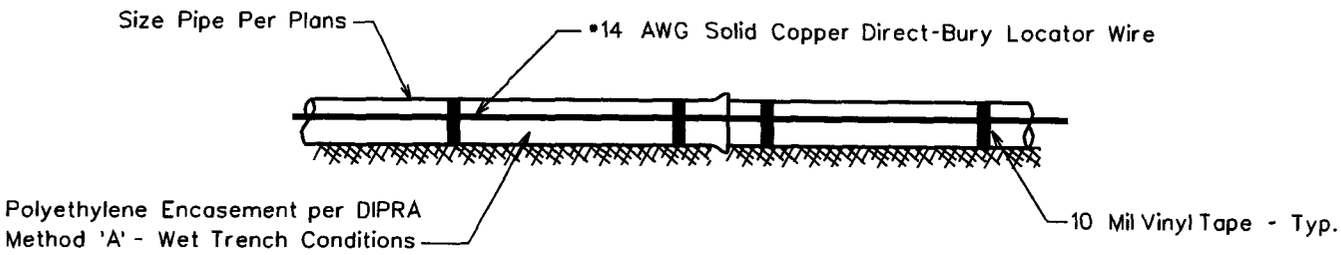

TYPICAL PROFILE VIEW

WIRE GENERAL NOTES:

1. All pipe shall have •14 AWG Solid Copper Direct-Bury Locator Wire Installed Directly To The Polywrap At 45° From The Vertical Center Of The Pipe and Shall Be Attached Using 10 Mil Vinyl Tape.
2. The Locating Wire Shall Terminate At the Top Of Each Valve Box and Be Capable of Extending 12" Above the Top Of The Box In Such A Manner So As Not To Interfere With Valve Operation.

TAPE GENERAL NOTES:

1. Use Terra Tape 3" Marking Tape As Manufactured By Reef Industries Inc. Of Houston, Texas (1-800-231-2417)
2. The Tape Is Blue & Imprinted 'ARIZONA WATER Co.'
3. INSTALLATION: The Pipe Warning Tape Shall Be Installed Over All Water Mains And Shall Be Buried 24 Inches Below The Surface Over The Center Of The Pipe.
   A) The Backfill Shall Be Sufficiently Leveled So That The Tape Is Installed On A Flat Surface.
   B) The Tape Shall Be Centered In The Trench With The Printed Side Up.
   C) Care Shall Be Exercised To Avoid Movement Of The Tape While The Remaining Backfill Is Moved Into The Trench.

ARIZONA WATER COMPANY

STANDARD SPECIFICATION
FOR THE INSTALLATION OF

PIPE WARNING TAPE AND LOCATOR WIRE

DRAWN BY:	APPROVED BY:	DATE:		
CB		03.24.1997	△09.27.2006	E-9-28-1

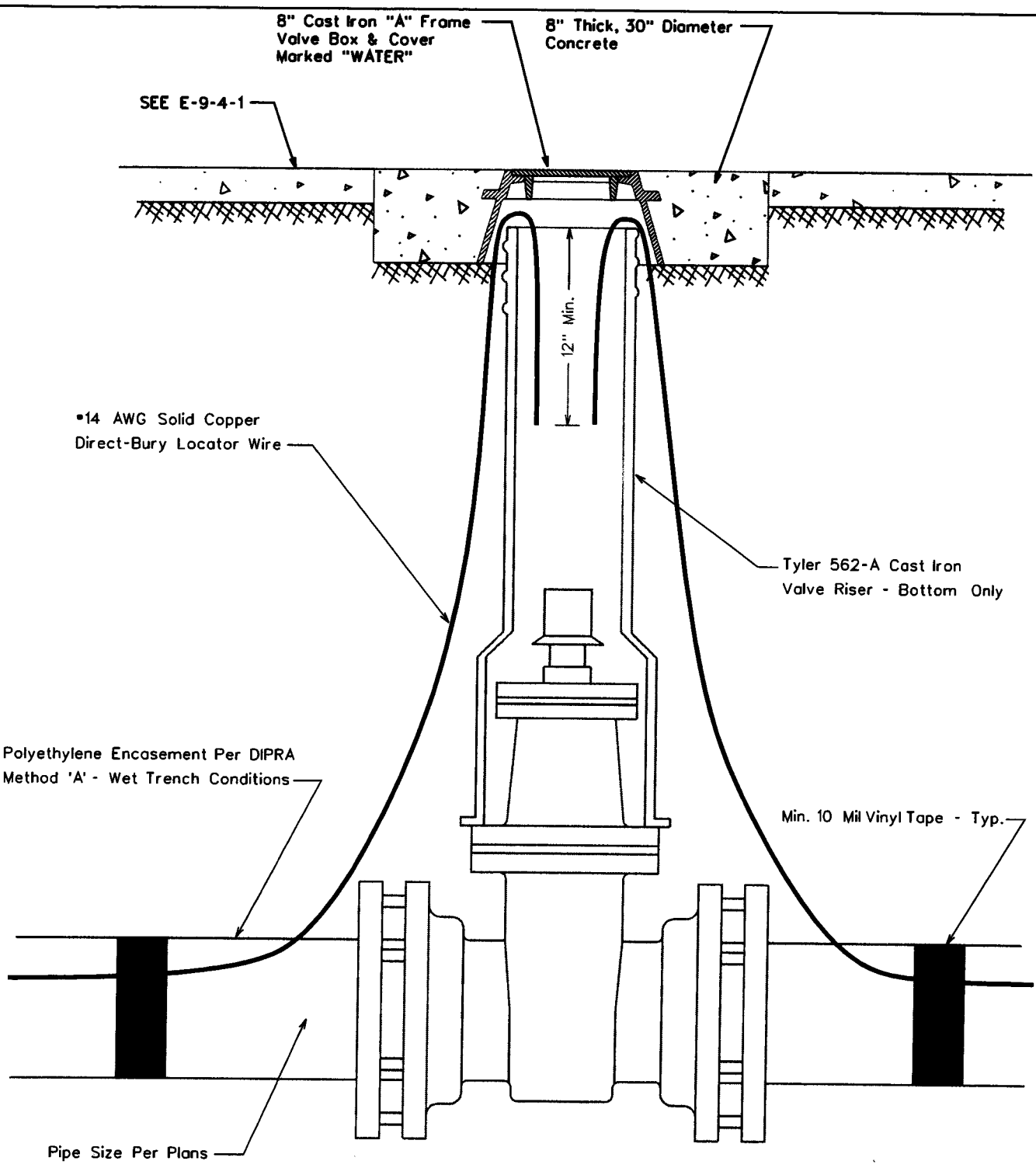

ARIZONA WATER COMPANY

STANDARD SPECIFICATION
FOR THE INSTALLATION OF

LOCATOR WIRE TERMINATION

DRAWN BY:	APPROVED BY:	DATE:	△	
CB		09.27.2006		E-9-28-2

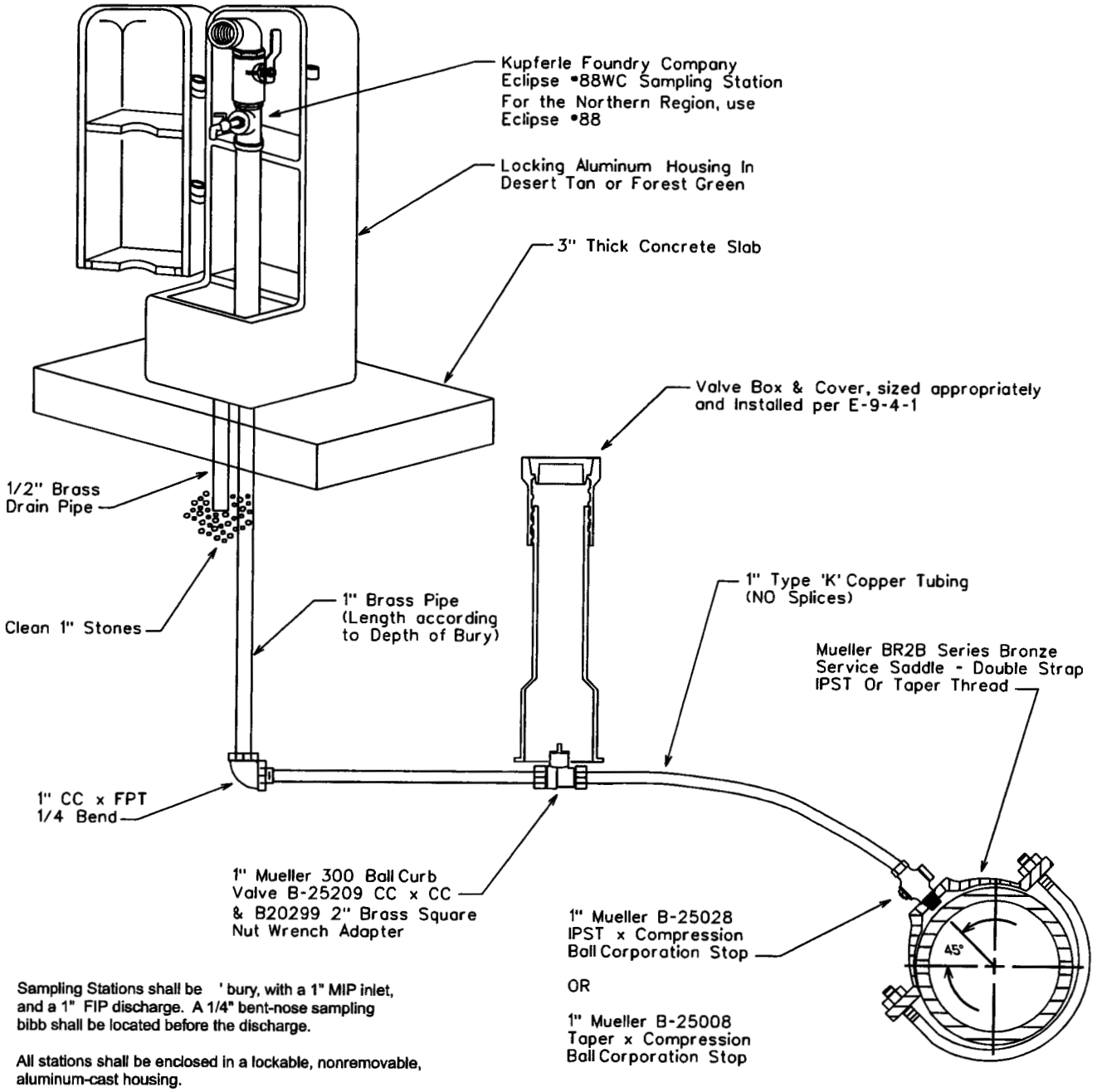

Sampling Stations shall be ' bury, with a 1" MIP inlet, and a 1" FIP discharge. A 1/4" bent-nose sampling bibb shall be located before the discharge.

All stations shall be enclosed in a lockable, nonremovable, aluminum-cast housing.

When opened, the station shall require no key for operation, and the water will flow in an all brass waterway.

All working parts will be of brass and serviceable from above ground with no digging. (OPTIONAL: if desired, a 1/2" brass drain tube will be provided within the locking cover).

A 1" ball valve will control the water flow, and be located before (or after) the sampling bibb, as manufactured by Kupferle Foundry, St. Louis, MO 63102.

SADDLE TAP TO CA, PVC, OR DI PIPE

NOTE: The minimum distance between taps on mains other than ductile iron is 12"

Pipe Depth Per
E-8-1-2, Item 3.

ARIZONA WATER COMPANY

STANDARD SPECIFICATION
FOR THE INSTALLATION OF

SAMPLING STATION

DRAWN BY:	APPROVED BY:	DATE:		
CB	MW	01.24.2007	△	E-9-29-1

ENCASEMENT FOR PIPE CROSSING

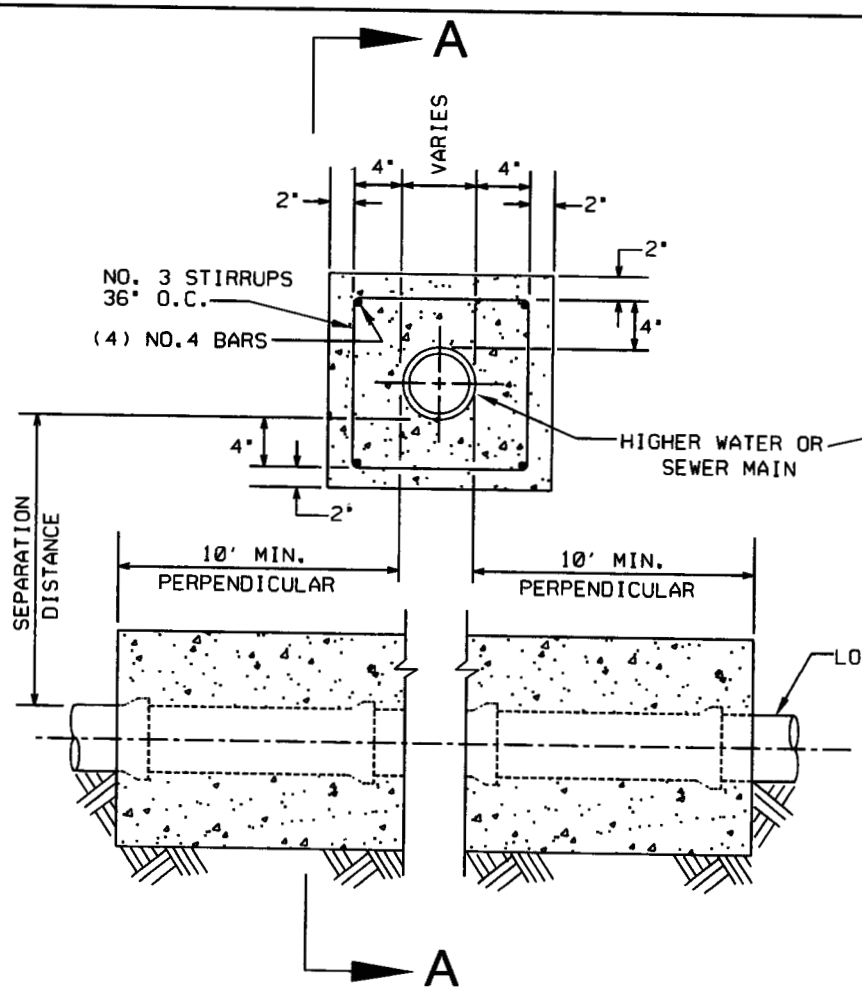

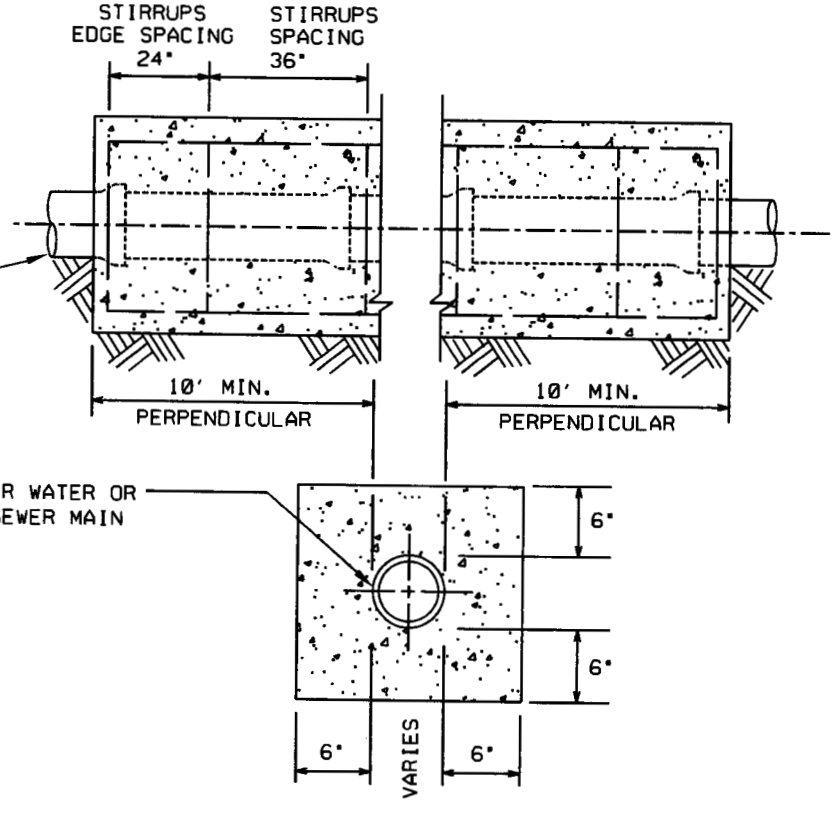

SECTION A-A

NOTES:

1. 2,000 PSI CONCRETE
2. SEPARATION DISTANCES AND/OR OTHER EXTRA PROTECTION SHALL BE REQUIRED TO PROTECT WATER MAINS FROM CONTAMINATION BY SANITARY SEWER MAINS. SEE AWC STANDARD SPECIFICATION PAGES E-8-1-9 AND E-8-1-10.
3. SEE CROSS SECTION DETAIL FOR LIMITS OF SEPARATION/EXTRA PROTECTION. ALL DISTANCES ARE MEASURED PERPENDICULARLY FROM THE OUTSIDE OF THE PIPES.
4. RECLAIMED WATER SHALL BE CONSIDERED A SANITARY SEWER WHEN PLACED NEXT TO A POTABLE WATER MAIN.

ARIZONA WATER COMPANY

STANDARD SPECIFICATION
FOR THE INSTALLATION OF
WATER AND SANITARY SEWER
SEPARATION/PROTECTION

DRAWN BY:	APPROVED BY:	DATE:		
CB	JW	04.07.2008	△	E-9-30-1

NOTES:

1. 2,000 PSI CONCRETE

2. SEPARATION DISTANCES AND/OR OTHER EXTRA PROTECTION SHALL BE REQUIRED TO PROTECT WATER MAINS FROM CONTAMINATION BY SANITARY SEWER MAINS. SEE AWC STANDARD SPECIFICATION PAGES E-8-1-9 AND E-8-1-10.

3. SEE CROSS SECTION DETAIL FOR LIMITS OF SEPARATION/EXTRA PROTECTION. ALL DISTANCES ARE MEASURED PERPENDICULARLY FROM THE OUTSIDE OF THE PIPES.

4. RECLAIMED WATER SHALL BE CONSIDERED A SANITARY SEWER WHEN PLACED NEXT TO A POTABLE WATER MAIN.

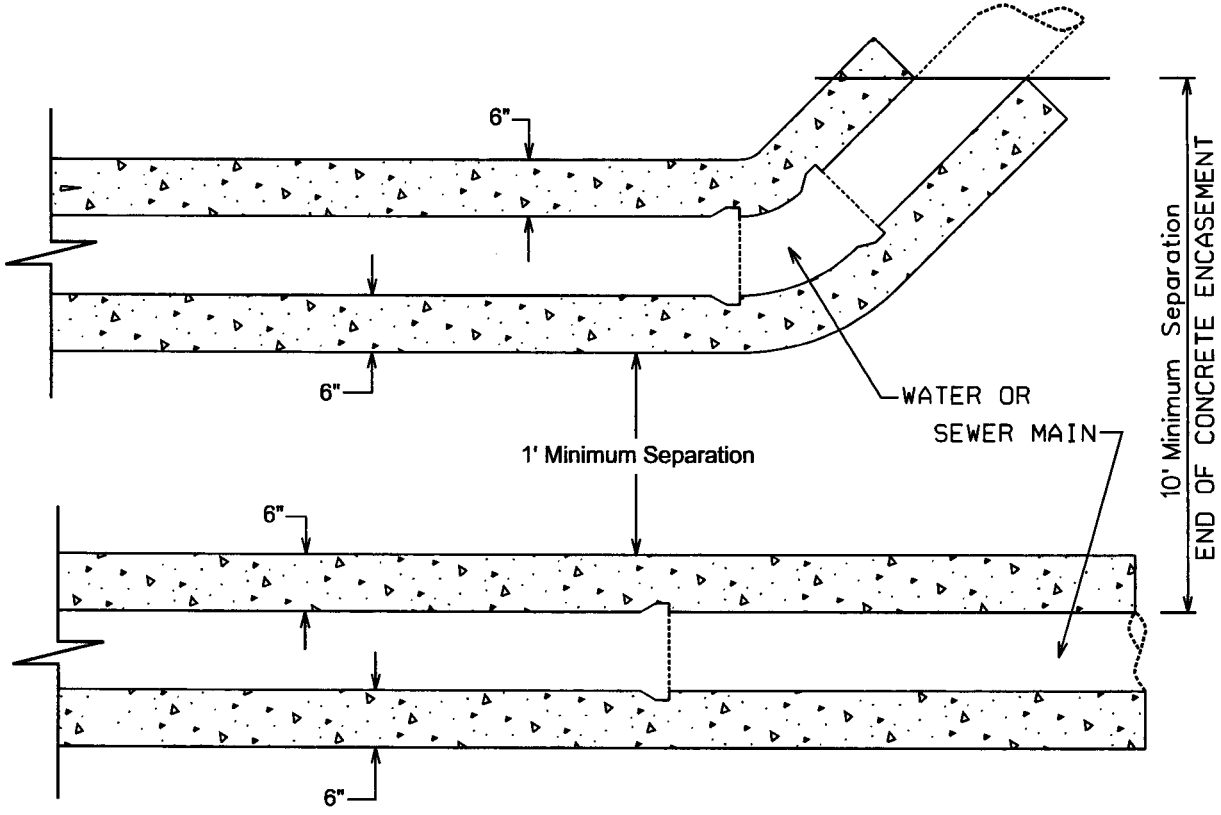

PLAN VIEW

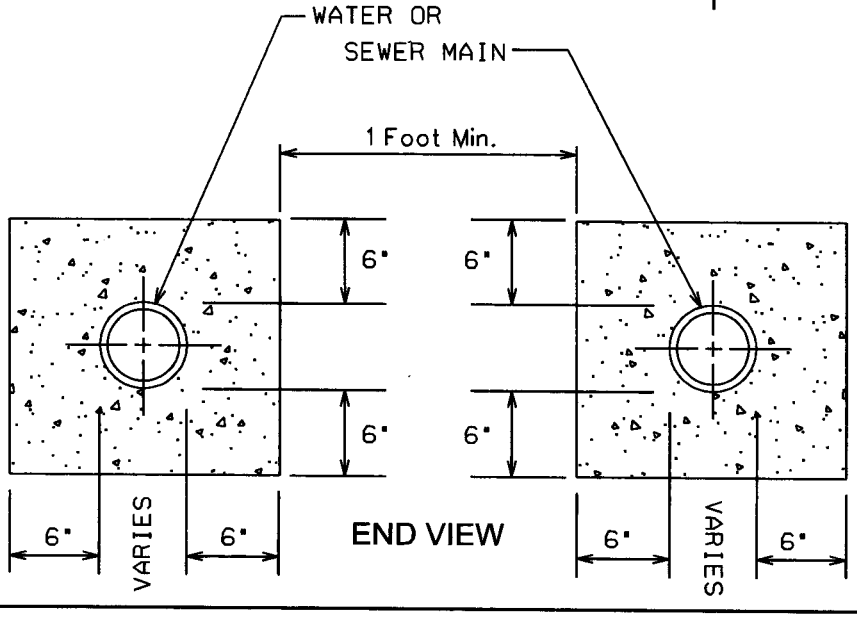

END VIEW

ENCASEMENT FOR PARALLEL PIPES

ARIZONA WATER COMPANY

STANDARD SPECIFICATION
FOR THE INSTALLATION OF
WATER AND SANITARY SEWER SEPARATION/PROTECTION

DRAWN BY:	APPROVED BY:	DATE:	△	
CB	JW	04.07.2008		E-9-30-2

WA 1-4932

Pinewood

Federal Communications Commission
Public Safety and Homeland Security Bureau

VHF/UHF Narrowbanding Information for Public Safety Licensees

December 2010

Outline

- Narrowbanding Basics
- Narrowbanding Deadlines
- How to Prepare for Narrowbanding
- Modifying Licenses to Reflect Narrowbanding
- Additional Information Resources

Narrowbanding Basics

- Who is required to narrowband?
  - All Public Safety and Industrial/Business licensees in the 150-174 MHz (VHF) and 421-512 MHz (UHF) bands
- What is required?
  - By January 1, 2013, licensees must migrate their systems from 25 kHz (wideband) to 12.5 kHz (narrowband) channel bandwidth or a technology that achieves equivalent efficiency

Benefits of Narrowbanding

- Narrowbanding ensures more efficient use of the spectrum and greater spectrum access for public safety and non-public safety users
- Will relieve congestion in and result in increased channel availability for public safety VHF/UHF systems
- Narrowbanding has been consistently supported by the public safety community, including APCO, NPSTC, and other organizations

Outline

- Narrowbanding Basics
- Narrowbanding Deadlines
- How to Prepare for Narrowbanding
- Modifying Licenses to Reflect Narrowbanding
- Additional Information Resources

Narrowbanding Deadlines

- All licensees must complete narrowbanding to 12.5 kHz by <u>January 1, 2013</u>
  - FCC will also no longer allow manufacture or importation of equipment that includes a 25 kHz mode
- Some interim requirements take effect on January 1, 2011:
  - 12.5 kHz operation required for all new VHF/UHF systems or expansion of existing systems
  - FCC will not certify new equipment that includes a 25 KHz mode

Narrowbanding Timeline

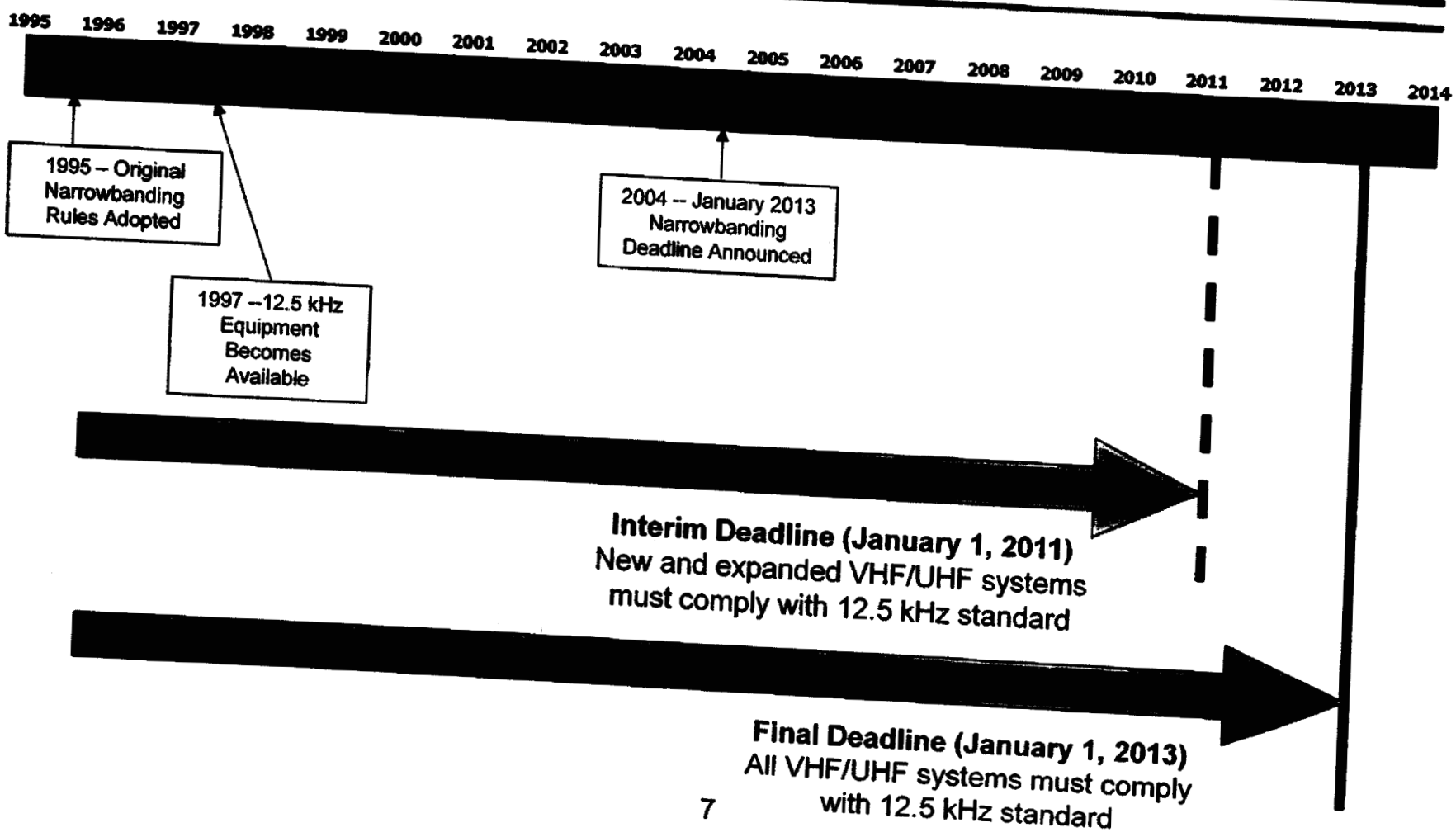

Why Meeting the Deadline Is Important

- After January 1, 2013, FCC interference rules will not protect non-compliant wideband systems from harmful interference
- Systems that fail to narrowband by the deadline could create interference or interoperability problems for systems that have narrowbanded
- Wideband equipment will not be available after January 1, 2013

The Deadline Will Not Be Extended

- The Commission has recently reaffirmed the January 1, 2013 deadline
- Licensees facing unique circumstances may request waivers, but waiver requests must meet a high standard and are not routinely granted
- Licensees concerned about meeting the deadline should focus on planning and preparation
- Informal contact with the Bureau is encouraged prior to any filing

Future Narrowbanding to 6.25 kHz Technology

- Narrowbanding rules provide for eventual migration from 12.5 kHz to 6.25 kHz bandwidth
  - Intended to further increase efficiency and channel availability
- The FCC has <u>not</u> set a deadline for 6.25 kHz implementation
  - No deadline will be established without further notice and comment
- Licensees may narrowband to 6.25 kHz voluntarily
  - All 150-174 MHz and 421-512 MHz equipment certified after January 1, 2013 must include 6.25 kHz capability

Outline

- Narrowbanding Basics
- Narrowbanding Deadlines
- How to Prepare for Narrowbanding
- Modifying Licenses to Reflect Narrowbanding
- Additional Information Resources

Preparing for Narrowbanding

- Prepare NOW – January 1, 2013 is approaching fast!
- Determine how narrowbanding will affect your system
  - Will existing equipment need replacement/retuning?
  - Will additional sites be needed to maintain coverage?
  - Is coordination with neighboring systems required?
- Develop a compliance plan
  - Timeline
  - Funding requirements
- Contact the Public Safety and Homeland Security Bureau with questions/concerns

Availability of Narrowband Equipment

- All VHF/UHF equipment certified since 1997 has 12.5 kHz capability
  - Many systems have equipment with dual 25 kHz/12.5 kHz capability, making the narrowbanding transition easier
- Check with your vendor to determine whether your existing system equipment is narrowband-capable or needs modification/replacement

Funding Considerations

- Cost of narrowbanding will vary depending on the nature of each licensee's existing system
  - Narrowbanding generally does not require a system upgrade, though licensees may combine narrowbanding with other scheduled upgrades or modifications
  - Narrowbanding costs may be more substantial for older systems that require replacement of existing equipment
- Funding to support narrowbanding may be available through federal grant programs (agency contact information provided in "Additional Information Resources" section)

Outline

- Narrowbanding Basics
- Narrowbanding Deadlines
- How to Prepare for Narrowbanding
- Modifying Licenses to Reflect Narrowbanding
- Additional Information Resources

Licensing Modifications

- Licensees should modify their licenses to add a narrowband emission designator prior to commencing narrowband operations
  - Licensees may maintain both narrowband and wideband designators on their licenses while they are transitioning their systems
- Once the narrowband transition is complete, licensees should modify their licenses by removing the wideband emission designator
- These actions can be completed online using ULS

Frequency Coordination

- Frequency coordination is <u>not</u> required for addition of narrowband emissions designator or removal of wideband emissions designator, provided no other changes are being made
  - For licensees north of Line A or west of Line C, reduction in bandwidth does not require Canadian coordination
- Frequency coordination <u>is</u> required when narrowbanding is combined with other modifications that alter a station's footprint
  - E.g., changes in location, antenna height, ERP, as well as when switching from analog to digital emissions

Outline

- Narrowbanding Basics
- Narrowbanding Deadlines
- How to Prepare for Narrowbanding
- Modifying Licenses to Reflect Narrowbanding
- Additional Information Resources

PSHSB Website and Contacts

Roberto Mussenden
202-418-1428
Roberto.Mussenden@fcc.gov

Zenji Nakazawa
202-418-7949
Zenji.Nakazawa@fcc.gov

Narrowbanding Mailbox: narrowbanding@fcc.gov

Bureau Website:
http://www.fcc.gov/pshs/public-safety-spectrum/narrowbanding.html

Other Resources

- http://www.aaacomm.com/fcc_licensing.htm
- http://www.mrfac.com/Mandatory-Narrowbanding.html
- http://www.npstc.org/narrowbanding.jsp
- http://www.IMSAsafety.org

Federal Resources

- DHS
  - Office of Emergency Communications (oec@hq.dhs.gov)
  - SAFECOM
    - http://www.safecomprogram.gov/SAFECOM/grant/default.htm
- FEMA
    - www.fema.gov/grants
    - http://www.fema.gov/government/grant/iecgp/index.shtm
      Interoperable Emergency Communications Grant Program
- DOJ National Institute of Justice
    - http://www.ojp.usdoj.gov/nij/topics/technology/communication/radios/fcc-narrowbanding.htm

ARIZONA WATER COMPANY
WORK AUTHORIZATION

W.A. NUMBER: 1-4932
P.E. NUMBER:
BUDGET ITEM NO.: B-1
SHEET NO.: 1 of 2

SYSTEM: SEDONA/VALLEY VISTA
DIVISION: VERDE VALLEY
TAX CODE: 0976

WORK TO START BY: UPON AUTHORIZATION
WORK TO BE FINISHED BY: WITHIN 180 DAYS

DESCRIPTION OF WORK:

Replace radios at 16 sites to be compliant with FCC narrow band requirement. Sites Include: Sedona Office, Harmony High Park Tank, Rainbow Well No. 6, Williams Well No. 7, Southwest Center Well No. 8, Harmony Hills Well No. 12, Sedona Golf Resort Tank, Rancho Rojo Well, Sedona Golf Resort Well, Valley Vista Well No. 13, Montezuma Hills Tank, Wickiup Mesa Tank, Rimrock Well No. 1, Rimrock Well No. 2, Montezuma Haven Well No. 3, and Pinewood Unit 9 Tanks. Construct in accordance with attached drawings and/or Arizona Water Company specifications.

FACTORS JUSTIFYING WORK:

APPROVED 2012 BUDGET ITEM ($125,000)
The FCC narrow banding mandate requires that all existing radios that operate on channel bandwidths of 25 kHz be converted to 12.5 kHz or less on or before January 1, 2013. These radio replacements and modifications are needed in order for the Company to provide safe, reliable, and adequate water service.

COST ESTIMATE		AUTHORIZATION	DATE
COST OF WORK:		PREPARED BY: Mike Loggins ML 5-4-12	4-26-12
MATERIAL	11,000		
LABOR	8,400	REVIEWED FOR ESMT/ROW VERIFICATION: Charles Briggs CB 5-4-2012	05-04-2012
CONTRACT PORTION	93,371		
OVERHEAD	12,405	REVIEWED BY: Andy Haas AJH 5-7-12	4-26-12
TOTAL AUTHORIZED EXPENDITURES CHARGEABLE TO THIS W.A.	$ 125,176		
FUNDS RECEIVED:		APPROVED BY ENGINEERING: Fredrick Schneider 5-4-12	5-1-2012
CONTRIBUTIONS RECEIVED	0		
REFUNDABLE ADVANCES RECEIVED	0	APPROVED BY FINANCE: Joseph Harris	5/2/12
TOTAL CONTRIBUTIONS/ADVANCES	0		
NET CASH REQUIRED	$ 125,176	AUTHORIZED BY PRESIDENT: William Garfield	5-4-2012

COMMENTS:

There are two separate contracts with Global Data Specialists associated with this WA:
1. Sedona
2. Valley Vista

CONSTRUCTION RELEASE:

RELEASED TO CONSTRUCTION
Authorized by FRED SCHNEIDER
Date 5/4/2012

AFH

ARIZONA WATER COMPANY

WORK AUTHORIZATION - DETAIL SHEET

W.A. NUMBER: 1-4932
P.E. NUMBER:
BUDGET ITEM NO.: B-1
SHEET NO.: 2 of 2

RETIREMENT PROPERTY UNITS	PLANT PROPERTY ACCOUNT	UNIT DESCRIPTION	QUANTITY	YEAR INSTALLED AND W.A. NUMBER

PROJECT DESCRIPTION:

Replace radios at 16 sites to be compliant with FCC narrow band requirement. Sites Include: Sedona Office, Harmony High Park Tank, Rainbow Well No. 6, Williams Well No. 7, Southwest Center Well No. 8, Harmony Hills Well No. 12, Sedona Golf Resort Tank, Rancho Rojo Well, Sedona Golf Resort Well, Valley Vista Well No. 13, Montezuma Hills Tank, Wickiup Mesa Tank, Rimrock Well No. 1, Rimrock Well No. 2, Montezuma Haven Well No. 3, and Pinewood Unit 9 Tanks.

	DESCRIPTION	PLANT PROP ACCT	QUANTITY	UNIT COST	TOTAL
CONTRACT WORK	Configure RTU and onsite integration for Valley Vista	397.2	1	$ 6,525.00	$ 6,525
	Purchase Ace radio for Valley Vista	397.2	4	3,790.00	15,160
	Purchase OIT for Valley Vista	397.2	1	5,792.00	5,792
	Program and onsite integration of OIT for Valley Vista	397.2	1	5,760.00	5,760
	Conduct radio path survey for Sedona	397.2	1	4,420.00	4,420
	Electrical install for Valley Vista	397.2	1	6,500.00	6,500
	Configure RTU and onsite integration for Sedona	397.2	1	7,952.50	7,953
	Purchase Io power radio for Sedona	397.2	5	450.00	2,250
	Purchase DPSK card for Sedona	397.2	5	180.00	900
	Purchase Ace radio for Sedona	397.2	3	3,813.33	11,440
	Electrical install for Sedona	397.2	1	2,827.00	2,827
	Configure RTU and onsite integration for Rimrock	397.2	1	7,952.50	7,953
	Purchase Io power radio for Rimrock	397.2	5	450.00	2,250
	Purchase DPSK card for Rimrock	397.2	5	180.00	900
	Electrical install for Rimrock	397.2	1	2,828.00	2,828
	Shipping, bonds, and tax for Valley Vista	397.2	1	4,598.00	4,598
	Shipping, bonds, and tax for Sedona	397.2	1	2,329.50	2,330
	Shipping, bonds, and tax for Rimrock	397.2	1	2,329.50	2,330
	Replace Base Station Radio	397.1	1	655.00	655
TOTAL CONTRACT WORK					$ 93,371
MATERIALS	Purchase Wonderware software	397.2	1	$ 9,500.00	$ 9,500
	Purchase SCADA computer	397.2	1	1,500.00	1,500
	SERVICE CONNECTIONS: DOUBLE-LONG	345			
	SERVICE CONNECTIONS: DOUBLE-SHORT	345			
	SERVICE CONNECTIONS: SINGLE-LONG	345			
	SERVICE CONNECTIONS: SINGLE-SHORT	345			
	METERS	346			
TOTAL MATERIALS					$ 11,000
LABOR	Engineering Design	397.2	40	$ 50.00	$ 2,000
	Project Management	397.2	40	50.00	2,000
	TESTING FEE				
	PERMIT FEE				
	SURVEY FEE				
	FIELD INSPECTION	397.2	80	55.00	4,400
	INSTALL SERVICE CONNECTIONS: DOUBLE-LONG	345			
	INSTALL SERVICE CONNECTIONS: DOUBLE-SHORT	345			
	INSTALL SERVICE CONNECTIONS: SINGLE-LONG	345			
	INSTALL SERVICE CONNECTIONS: SINGLE-SHORT	345			
TOTAL LABOR					$ 8,400
SUBTOTAL - CONTRACT WORK, MATERIALS, AND LABOR					$ 112,771
OVERHEAD					12,405
TOTAL	REFUNDABLE PORTION ☐	NON-REFUNDABLE PORTION ☐		COST ESTIMATE	$ 125,176

AFH

WA 1-4932 - Replace Five Wireless Telemetry and Voice Communication Units to Comply with FCC Narrowband Regulations

ID	Task Name	Duration	Start	Finish
1	**Pinewood FCC Narrow Band Schedule**	**235 days**	**2/6/2012**	**12/28/2012**
2	Update Quotes	30 days	2/6/2012	3/16/2012
3	Execute Contract Documents	20 days	3/19/2012	4/13/2012
4	Procure Materials	60 days	4/16/2012	7/6/2012
5	Program Radios	60 days	4/16/2012	7/6/2012
6	Install Radio Controls, Conduit, and Appurtenances	50 days	7/9/2012	9/14/2012
7	Start-Up	30 days	9/17/2012	10/26/2012
8	Field Troubleshooting	30 days	10/29/2012	12/7/2012
9	Project Close Out	15 days	12/10/2012	12/28/2012
10	In Service	0 days	12/28/2012	12/28/2012

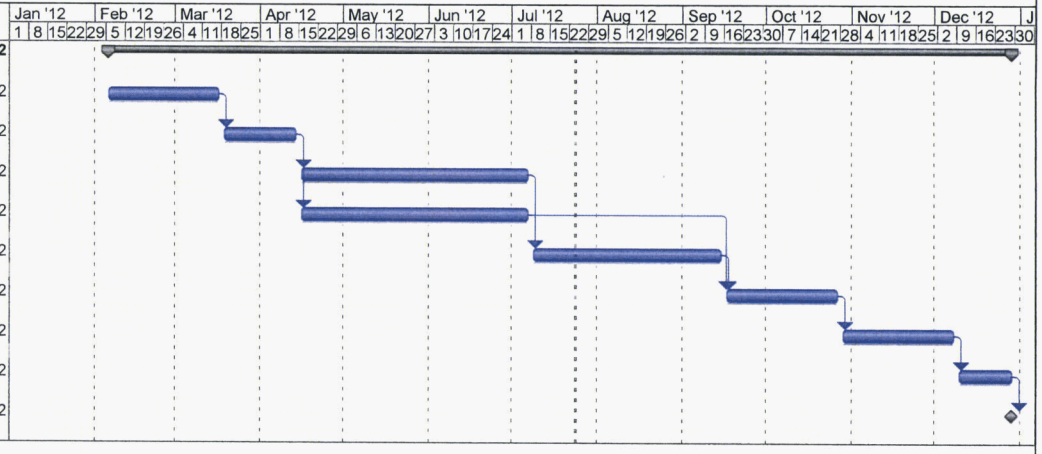

Project: Pinewood FCC Narrow Band S
Date: 7/24/2012

Task | Progress | Summary | External Tasks | Deadline
Split | Milestone | Project Summary | External Milestone

ARIZONA WATER COMPANY

Verde Valley Division
65 Coffee Pot Dr. Suite 7
Sedona, AZ 86336 PH: 928-282-7092

PROPOSAL/CONTRACT

CONTRACTOR: Global Data Specialists	SYSTEM: Sedona
ADDRESS: 1815 W. First Avenue, Suite 110	W.A. No(s): 1-4932
CITY ST ZIP: Mesa, Arizona 85202	BID DUE DATE: March 31, 2012

CONTRACTOR SUBMITS this PROPOSAL/CONTRACT to ARIZONA WATER COMPANY, an Arizona corporation (the "Company"), to perform the work and complete the project described on Page 2 (the "Project"), as an independent prime contractor.

1. Contractor certifies that it has a complete copy of, and has read, understands and accepts, the Company's General Conditions of Contract, and the Company's Construction Specifications and Standard Specification Drawings, (the "Specifications"), all of which are attached hereto. Contractor has examined the specific plans and related construction drawings for the Project (the "Drawings"), copies of which are also attached hereto. The General Conditions of Contract, Specifications and Drawings are incorporated into this Proposal/Contract. Contractor affirms that all work and materials to be furnished or purchased for the Project will be in strict conformance with the General Conditions of Contract, Specifications and Drawings.
2. Contractor represents and warrants that it has satisfied and complied with the provisions of Section 6, Contractor Understands Work and Working Conditions, of the General Conditions of Contract prior to submitting this Proposal/Contract.
3. Contractor represents that this Proposal/Contract is fair and honest in all respects, is submitted in good faith and is not submitted in collusion with any other company, entity or person.
4. Contractor acknowledges that one hundred percent (100%) Performance and Payment Bonds are required and must be provided to the Company prior to the commencement of work.
5. Prior to the commencement of work, Contractor will submit to the Company a list of all materials to be used in the Project. This materials list will include the manufacturer, part number, price and quantity included in this Proposal/Contract.
6. Contractor will furnish all labor, tools, equipment and materials required to complete the Project according to the General Conditions of Contract, Specifications and Drawings. No materials purchased by Contractor to be incorporated into the Project are subject to tax at the time of purchase and Contractor will not charge the Company for any such tax. Contractor will pay the applicable transaction privilege tax (the "Contracting Tax") on the Project after Contractor receives payment of the final Project invoice from the Company. The cost of materials incorporated into the Project which are exempt by Arizona Revised State Statues ("A.R.S.") from the Contracting Tax, for example, pipes or valves having a diameter of four (4) inches or larger, including equipment, fittings and any other related part that is used in operating the pipes or valves (A.R.S. §42-5061 B.6.), will not be included in the total cost of the labor and materials upon which the Contracting Tax is computed. Contractor retains full liability and obligation to pay the Contracting Tax and will defend and indemnify the Company against any demand or obligation to pay the Contracting Tax.
7. Contractor will maintain detailed accounting records of all materials purchased and incorporated into the Project. Such records will include all supporting original vendor invoices for all materials purchased. Following completion of the Project, Contractor will submit an itemized accounting to the Company which will include all supporting original vendor invoices and satisfactory evidence of payment thereof. The Company will not pay Contractor for materials not actually incorporated into the Project, and the disposition of such materials will remain Contractor's responsibility.
8. The Estimated Total Cost of the Project, shown on Page 2, is based on estimated labor and material quantities to be furnished. It includes an estimate of the Contracting Tax and the cost of the required Performance and Payment Bonds. Contractor will not cancel, modify or withdraw this Proposal/Contract during a ninety-day (90) period commencing on the Bid Due Date. The Company may accept this Proposal/Contract by signing and mailing, or otherwise delivering, a copy hereof to Contractor during such ninety-day (90) period. If the Company does not accept this Proposal/Contract during such ninety-day (90) period, Contractor may cancel this Proposal/Contract by giving written notice of cancellation to the Company.
9. Prior to the commencement of work, Contractor will provide the Company with a detailed construction schedule, in either Gantt or CPM form, identifying all tasks to be performed from the date of the written Commencement Notice through completion of the Project, including testing, training of Company Personnel and final Project invoicing. Contractor will provide the Company with a copy of such construction schedule documenting the progress of work on the Project at least monthly.
10. Contractor will not commence work on the Project until the Company gives Contractor a written Commencement Notice. Contractor will complete the Project within 180 calendar days after the Commencement Notice is issued.
11. Following the Company's written notice of satisfactory completion of the Project, and upon receipt of the final Project invoice from Contractor, the Company shall pay Contractor the actual total cost of the Project, which will be calculated as shown on Page 2, except that actual labor and material quantities installed/constructed will be substituted for the estimated labor and materials quantities and the Contracting Tax will be recalculated based on such actual labor and materials quantities.
12. The amount of applicable liquidated damages (or Contractor's failure to deliver or perform) within the time limit shown in Paragraph 10 may be deducted from the Company's payment of the final Project invoice. This provision shall not limit the Company's ability to terminate this Proposal/Contract for Contractor's unsatisfactory performance or failure to perform as provided in the General Conditions of Contract, Specifications or Drawings, or in this Proposal/Contract.

SPECIAL CONDITIONS:

CONTRACTOR	PROPOSAL/CONTRACT ACCEPTED:
Global Data Specialists	ARIZONA WATER COMPANY
By:	By:
Print Name: Duane Moon	Print Name: Fredrick K. Schneider, PE
Title: Sales Manager	Title: Vice President - Engineering
Date: 4/23/12	Date: 5-4-12

AFH

ARIZONA WATER COMPANY

Verde Valley Division
85 Coffee Pot Dr., Suite 7
Sedona, AZ 86336 PH: 928-282-7092

PROPOSAL/CONTRACT

CONTRACTOR: Global Data Specialists	SYSTEM: Sedona
AZ CONTRACTOR LICENSE NO: CLASSIFICATION:	W.A. No(s): 1-4932
ADDRESS: 1815 W. First Avenue, Suite 110	BID DUE DATE: March 31, 2012
CITY ST ZIP: Mesa, Arizona 85202	BID BOND REQUIRED: ☐ Yes ☑ No

DESCRIPTION OF PROJECT: Provide Narrow Banding upgrade for the Sedona Water System Radio Controls.

1-2. MATERIALS EXEMPT FROM CONTRACTING TAX (per Paragraph 6)	QUANTITY	UNIT PRICE LABOR	UNIT PRICE MATERIALS	TOTAL COST LABOR	TOTAL COST MATERIALS
3. Total Labor to Install Exempt Materials (add the amounts in column 1)				3 0	
4. Total Exempt Materials (add the amounts in column 2)					4 0

5-6. NON-EXEMPT MATERIALS	QUANTITY	LABOR	MATERIALS	LABOR	MATERIALS
Configure the RTU application software	1	9630		9630	
On-Site Integration	1	6275		6275	
Lo Power Radio Replacement	10		450		4500
DPSK Card FRN 5907	10		180		1800
Electrical Install	1	5655		5655	
ACE Radio	3		3386.67		10160
Misc equipment	Lot		1280		1280
SHIPPING & HANDLING	1		240		240

7. Total Labor to Install Non-Exempt Materials (add the amounts in column 5)	7 21560.0	
8. Total Non-Exempt Materials (add the amounts in column 6)		8 $ 17980
9. Subtotal A (add lines 3, 7 and 8)		9 39540
10. Contracting Tax Base (multiply the amount on line 9 by 0.65)	10 25701	
11. Applicable Contracting Tax Rate	11 9.05	
12. Contracting Tax (multiply the amount on line 10 by line 11)		12 2325.94
13. Subtotal B (add lines 4, 9 and 12)		13 41865.94
14. 100% Performance and Payment Bonds Cost		14 2093.30
15. Estimated Total Cost (add lines 13 and 14)		15 43959.24

NOTE: The Estimated Total Cost includes all labor and materials for backfill, pavement replacement, chip seal, and traffic control necessary for the Project.

ARIZONA WATER COMPANY

SPECIFICATIONS

GENERAL CONDITIONS OF CONTRACT: E-4-1

CONSTRUCTION SPECIFICATIONS: E-8-1

STANDARD SPECIFICATION DRAWINGS: E-9-1

2007 EDITION WITH 2010 REVISIONS

ARIZONA WATER COMPANY

GENERAL CONDITIONS OF CONTRACT: E-4-1

ARIZONA WATER COMPANY

E-4-1

GENERAL CONDITIONS OF CONTRACT

DEFINITIONS

A. Company. The words "Company" or "Arizona Water Company" mean Arizona Water Company, and where applicable, any division of Arizona Water Company, whose principal place of business is located at 3805 North Black Canyon Highway, Phoenix, Arizona 85015-5351 (Post Office Box 29006, Phoenix, Arizona 85038-9006).

B. Company's Authorized Representative. The words "Company's Authorized Representative" mean any officer of the Company, and any of the Company's Engineers, any Division Manager or Superintendent of the Company and/or such other person(s) designated in writing as the "Company's Authorized Representative" by the President or any Vice President of the Company.

C. Contractor. The word "Contractor" means either an individual or other entity employed to do the work as shown on the Construction Drawings and as specified herein.

D. Construction Drawings. The words "Construction Drawings" mean plans prepared by or on behalf of Arizona Water Company.

E. Invitation to Bid. The term "Invitation to Bid" means the current copy of Arizona Water Company's Form E-3-11-4 Request for Proposal/Contract or Form E-3-12-2 Invitation to Bid.

F. Contract. The word "Contract" means the written document titled "Contract" or "Proposal/Contract" when such document has been signed by an officer or other authorized representative of both the Contractor and the Company.

G. Inspector. The word "Inspector" means the Company's Authorized Representative or a person designated in writing by the Company's Authorized Representative.

GENERAL CONDITIONS OF CONTRACT

1. GENERAL

These General Conditions of Contract govern all works of installation and construction unless deviations are provided for on the Construction Drawings or in the Contract.

2. BONDS

The Contractor shall, upon request by the Company, furnish a performance bond and a material payment bond in the amount of 100% of the Contract price, in a form and from a surety acceptable to the Company.

3. LABOR AND/OR MATERIAL RELEASES

The Contractor shall supply labor and/or material releases satisfactory to the Company when requested to do so. Forms will be provided by the Company.

4. LICENSE

The Contractor shall have, as may be required by law, a valid license applicable to the work to be performed.

5. INSURANCE

The Contractor shall maintain in full force and effect insurance at no less than the following minimum amounts:

WORKER'S COMPENSATION	In accordance with requirements of the laws of the State of Arizona.
COMPREHENSIVE GENERAL LIABILITY (Including contractual liability covering death, bodily injury and property damage)	Combined single limit of not less than $1,000,000 for each occurrence.
AUTOMOTIVE LIABILITY (Including owned, non-owned and hired vehicles)	Combined single limit of not less than $1,000,000 for each occurrence.
SUBCONTRACTOR'S PUBLIC LIABILITY AND PROPERTY DAMAGE INSURANCE AND VEHICLE LIABILITY INSURANCE	Contractor shall either require each of its subcontractors to procure and to maintain Subcontractor's Public Liability and Property Damage Insurance and Vehicle Liability Insurance of the type and in the amounts specified in this Section 5 or insure the activities of its subcontractors in Contractor's own policy, in like amounts.

Such insurance shall name the Company, its officers, agents, and employees as additional insured and be primary for all purposes.

The Company will at all times have the right to require that all of such insurance be placed with insurance companies that are satisfactory to it. The Contractor shall file with the Company a certificate evidencing that each policy of insurance for the above coverages in the minimum amounts specified has been purchased and is in good standing.

Such certificate shall provide that notice be given to the Company at least thirty (30) days prior to cancellation or material change in the form of such policies or any of them. Such certificates shall be kept on file by the Company and the Company must have current certificates on file, or a certificate must accompany any bid proposal, before that proposal will be accepted by the Company.

6. CONTRACTOR UNDERSTANDS WORK AND WORKING CONDITIONS

By executing a Contract with the Company, the Contractor warrants that it has, by careful examination, satisfied itself as to the nature and location of the work, including soil conditions, the character, quality and quantity of the materials to be encountered, the character of the equipment and facilities needed preliminary to and during prosecution of the work, the general and local conditions, and all other matters which can in any way be expected to affect its work under the Contract. Verbal agreements or conversations with any officer, agent or employee of the Company, either before or after the execution of the Contract, are not binding upon the Company and shall not affect or modify any of the terms or obligations herein contained.

7. SPECIFICATIONS AND DRAWINGS

The Contractor shall keep on the job a complete copy of all drawings and specifications furnished by the Company which are applicable to the Contract with the Company. Anything mentioned in the specifications and not shown on the drawings or shown on the drawings and not mentioned in the specifications shall be of like effect as if shown or mentioned in both. In case of a discrepancy between the figures, drawings or specifications and physical conditions of the job, the matter shall be immediately submitted to the Company's Authorized Representative for decision as to adjustments, if any, because of the discrepancy; without a decision from the Company's Authorized Representative no discrepancy shall be adjusted by the Contractor, save only at its own risk and expense. Any deviation from the specifications must be approved in writing by the Company's Authorized Representative.

8. PROPERTY PROTECTION

Trees, fences, poles, underground structures and all other property shall be protected unless their removal is authorized on the Construction Drawings. Any property damaged shall be restored by the Contractor, at its expense, to the owner's satisfaction.

9. SPECIAL PERMITS, LICENSES AND INSURANCE

The Company shall obtain all permits for railroad, county, state, city and irrigation district rights-of-way as well as Forest Service, State Land Department and Bureau of Land Management permits. (Pipeline Contractors)

Whenever blasting is required, the Contractor shall obtain all permits, licenses and insurance required at its expense. (All Contractors)

The Contractor will be required to obtain, and shall certify in writing to the Company that it has obtained, all additional permits required to perform the work including, but not limited to, a National Pollution Discharge Elimination System Permit and/or an Aquifer Protection Permit as those permits relate to disposal of drilling, development and test waters and/or any other discharge or similar activity. (Well Drilling Contractors)

10. SURVEYS

The Company shall be responsible, or arrange, for all surveys required for the work covered in the Contract, unless otherwise specified.

11. BENCH MARKS, PROPERTY STAKES AND SURVEY STAKES

Bench marks, property stakes and survey stakes shall be preserved by the Contractor; in case they are destroyed or removed by Contractor or its employees, the Company will replace them at the Contractor's expense, and the Contractor and its sureties shall be liable therefore.

12. TOOLS, EQUIPMENT AND MATERIALS

The Contractor shall furnish all of the necessary tools, equipment, and pipeline materials required for the work. All material furnished by the Contractor shall be of the quality specified by the Company in its Construction Specifications (E-8-1).

13. SUPERINTENDENCE BY CONTRACTOR

The Contractor shall assure adequate superintendence of the work by a competent foreman or superintendent (with full authority to act on behalf of Contractor) satisfactory to the Company, who will be on the job at all times when work is in progress.

14. ORDER AND DISCIPLINE

The Contractor shall at all times enforce strict discipline and good order among its employees.

15. INDEPENDENT CONTRACTOR

The Contractor is an independent contractor and any provisions in the Contract, the specifications, or these General Conditions of Contract and Arizona Water Company's Construction Specifications which may appear to give the Company the right to direct the Contractor as to the details of the doing of any work to be performed by the Contractor, or to exercise a measure of control over said work, shall be deemed to mean and shall

mean, that the Contractor shall follow the desires of the Company in the results of the work only and not in the means whereby said work is to be accomplished, and the Contractor shall use its own discretion and shall have complete and authoritative control over the work and as to the details of the doing of the work.

16. PUBLIC SAFETY AND CONVENIENCE

Contractor shall at all times conduct its work so as to ensure the least possible obstruction to traffic and other inconvenience to the general public and the residents and businesses in the vicinity of the work, and to ensure the protection of persons and property.

To protect persons from injury and to avoid property damage, Contractor shall provide and maintain adequate barricades as required during the progress of the work and until it is safe to use the property for its intended purpose. The rules and regulations of the local governmental agencies and specific permit requirements respecting safety provisions shall be observed at all times.

In the case of blasting, the Contractor shall exercise extreme caution to protect the general public and personal and public property from harm or damage.

17. PROPERTY PROTECTION

Trees, fences, poles, and all other property shall be protected unless their removal is authorized by the Company. Any property damaged shall be restored by Contractor, at his expense, to Company's satisfaction.

18. RESPONSIBILITY OF CONTRACTOR

The work shall be under Contractor's responsible care and charge. Contractor shall bear all loss and damage whatsoever and from whatsoever cause, except that caused solely by the act of Company, which may occur on or to the work during the fulfillment of the Contract. If any loss or damage occurs, Contractor shall immediately make good any such loss or damage, and in the event of Contractor refusing or neglecting to do so, Company may, or by the employment of some other person, make good any such loss or damage, and the cost and expense of so doing shall be charged to Contractor.

The mention of any specific responsibility or liability imposed upon Contractor shall not be construed as a limitation or restriction of any general liability or duty imposed upon Contractor by the Contract. The reference to any specific duty or liability being made herein is merely for the purpose of explanation.

Contractor alone shall at all times be responsible for the safety of Contractor, Contractor's employees, and its subcontractors' employees, and for Contractor and its subcontractors' plant and equipment and the method of performing the work.

19. ERRORS AND OMISSIONS

If Contractor, in the course of the work, becomes aware of any errors or omissions in the Contract Documents or in the instructions, or if Contractor becomes aware of any discrepancy between the Contract Documents and the physical conditions of the site of

the work, Contractor shall immediately inform Company in writing. Any work done by Contractor after such discovery, until authorized by Company, will be done at Contractor's risk.

20. LAWS, REGULATIONS

Contractor shall give all notices required by law and comply with all laws, ordinances, rules and regulations, including, but not limited to, all applicable federal, state, local and other legally required health and safety standards, orders, rules, regulations or other laws, pertaining to the conduct of the work. Contractor shall be liable for, and shall defend and indemnify Company against and hold it harmless from, all violations of any law, ordinance, rule, regulation, standard, or order in connection with work furnished by or on behalf of Contractor. If Contractor observes that the Contract Documents are at variance with any law, ordinance, rule, regulation, standard, or order it shall promptly notify Company in writing and any necessary changes shall be adjusted as provided in the Contract for changes in the work. Contractor shall not perform any work contrary to such laws ordinances, rules, regulations, standards, or orders.

21. PERMITS, FEES AND INSPECTIONS

Permits and licenses necessary for the prosecution of the work, including, but not limited to, any National Pollution Discharge Elimination Systems (NPDES) Permits required by U.S. Environmental Protection Agency or the Arizona Department of Environmental Quality shall be secured, paid for, and complied with by Contractor.

Contractor shall be responsible for its actions and shall abide by all conditions and/or restrictions set forth in the NPDES Permit and any other permit or license required for this project.

Company shall at all times have access to the work whenever it is in preparation or in progress and Contractor shall provide proper facilities for such access and for all inspections. If the Contract Documents, the General Superintendent's instructions, laws, ordinances or any public authority require any work to be inspected or approved, Contractor shall give timely notice of its readiness for inspection.

Inspection of the work shall not relieve Contractor of any of its obligations even if defective work or unsuitable materials may have been previously overlooked by Company and accepted or estimated for payment. If any work is found not in accordance with the Contract Documents, Contractor, at its sole cost and expense, shall promptly make good such defective work.

22. CONSTRUCTION MARKING (PIPELINE ONLY)

Each job shall be marked and/or barricaded by the Contractor in such a manner that the construction is clearly visible at all times.

23. EXTRA WORK AND/OR MATERIALS

Except as otherwise herein provided, no charge for any extra work and/or material will be allowed unless the same has been ordered in writing by the Company's Authorized Representative, and the price stated in such order.

24. CHANGES

The Company shall have the right to make any changes in the work that it may determine to be necessary. If such changes affect the cost of the work, an equitable adjustment shall be negotiated. Changes shall in no way affect or void the obligations of both parties under the original Contract.

25. INSPECTION

All work and material shall be open at all times to inspection and acceptance or rejection by the Company's Inspector. Any work covered up by the Contractor prior to inspection and acceptance by the Company shall be subject to being uncovered at the expense of the Contractor for inspection by the Company. The Contractor shall give the Company reasonable notice of starting new work and shall provide, without extra charge, reasonable and necessary facilities for inspection, even to the extent of taking out portions of finished work. In case any such finished work removed is found satisfactory, however, the actual direct cost of such removal and replacement, plus 15% of such cost, will be paid by the Company; in addition, if completion of the work has been delayed thereby, the Contractor shall be granted a suitable extension of time on account of the additional work involved.

26. DEFECTIVE WORK OR MATERIAL

The Contractor shall remove, at its own expense, any work or material found defective by the Company's Inspector and shall rebuild and replace the same without extra charge; in default thereof, the same may be done by the Company at the Contractor's expense.

27. ASSIGNMENT

Neither party to the Contract may assign the Contract or sublet it in whole or in part without the written consent of the other, nor shall the Contractor assign any monies due or which may become due hereunder without the previous written consent of the Company, nor shall such consent release the Contractor from any of its obligations and liabilities under the Contract.

28. RIGHTS OF VARIOUS INTERESTS

Whenever work that is being done for the Company other than by the Contractor is contiguous to work being done by the Contractor, the respective rights of the various interests involved shall be established by the Company to secure the completion of the various portions of the work in general harmony.

29. SUSPENSION OF WORK

The Company's Authorized Representative may at any time and for any reason suspend all or any portion of the work under the Contract. This right to suspend work shall not be construed as denying the Contractor compensation for actual, reasonable and necessary expenses due to suspension to which it may be entitled.

The Company's Authorized Representative may order the Contractor to suspend any work because of certain conditions, such as inclement weather, or because the

Contractor is in violation of these General Conditions of Contract or the Construction Specifications. It is understood that compensation for expenses will not be allowed for such suspension when ordered by the Company's Authorized Representative on account of such conditions.

30. PROCEDURE OF WORK (PIPELINE ONLY)

All work under the Contract shall be planned and performed so as to cause a minimum of interference with normal vehicular and pedestrian traffic. At no time shall the Contractor completely obstruct the traffic to any business establishment during normal work hours of that business. It shall be the Contractor's responsibility to maintain facilities for ingress and egress to any business establishment. When crossing any street, not more than one-half of the street may be blocked at one time. All federal, state, county and city laws, rules and regulations relating to this subject are to be obeyed.

The Contractor shall complete any portion or portions of the work in such order of time as the Company may require. The Company shall have the right to take possession of and use any completed or partially completed portions of the work. If such prior possession or use increases the cost of or delays the work, the Contractor will be entitled to extra compensation or extension of time or both, as the Company may determine.

31. DISPUTES

All questions or controversies which arise between the Contractor and the Company, under, or in reference to, the Contract, shall be decided by the Company's Authorized Representative and a representative of the Contractor, and their decision shall be final and conclusive upon both parties.

32. CONNECTION TO EXISTING SYSTEM (PIPELINE ONLY)

Unless approved in writing by the Company's Authorized Representative, no tie-in or hot tap on the existing system shall be made unless the Company's Inspector is present. When the tie-in requires the operation of an existing valve or other control equipment, the conditions of Paragraph(s) 30 and 33 shall be complied with. The Contractor shall notify the Company twenty-four (24) hours prior to tie-in as to the exact time the Contractor plans to make tie-in so that the Company's Inspector will have sufficient time to locate valves and make necessary preliminary arrangements for shut down.

33. PLANNED INTERRUPTION OF WATER SERVICE (PIPELINE ONLY)

No valve or other control on an existing Company water system shall be operated for any purpose by the Contractor without approval of the Company's Inspector. All of the Company's water customers whose service is interrupted by a planned interruption, other than in cases of emergency, shall be notified by the Contractor at least twenty-four (24) hours before the planned interruption and advised of the probable time when the service will be restored.

34. EXISTING UTILITY FACILITIES (PIPELINE ONLY)

The Contractor shall notify all known utilities in the area of the work to be performed under the Contract and shall make arrangements to have their facilities marked in

accordance with A.R.S. 40-360.022 ("Blue Stake Law"). The Contractor shall be responsible for locating and preserving all marked facilities. Any damages to these marked facilities shall be repaired at the expense of the Contractor.

The Company will pay the cost to relocate its or other structures when such structures are found occupying the physical space of the proposed installation. It is understood that the Contractor will be reimbursed for such work only when written authorization from the Company has been obtained in advance of such work.

35. CLEANING UP

The Contractor shall remove from the Company's property and from all public and private property, at its own expense, all temporary structures, rubbish and waste materials resulting from its operations. In the event Contractor fails to do so, the Company may remove same at the expense of the Contractor.

36. WORKING HOURS (PIPELINE ONLY)

Unless stated to the contrary in the Invitation to Bid and/or so stated on the Construction Drawings, or agreed to by the Company during a Pre-Construction Conference, the Contractor shall not be permitted to perform work on Saturdays, Sundays, or Company holidays, or commence work such as tie-ins that cannot be completed during normal working hours.

37. INDEMNITY

A. The Contractor shall indemnify the Company against, and save and hold it harmless from, any and all liability, claims, demands, loss, actions, causes of action, expense, penalties, fines, assessments, damages and costs of every kind and nature for injury to or death of any and all persons, including, without limitation, employees or representatives of the Company or of the Contractor or of any subcontractor, or any other person or persons, and for damage, destruction or loss, consequential or otherwise, to or of any and all property, real or personal, including, without limitation, property of the Company or of the Contractor or of any subcontractor, or of any other person or persons, and the violation of any law, ordinance, rule, regulation, standard, or order resulting from or in any manner arising out of or in connection with the performance of the work under the Contract, howsoever same may be caused, including, without limitation, the Company's active or passive negligence. The Contractor shall also, upon request by the Company, and at no expense to the Company, defend the Company in any and all suits, concerning such injury to or death of any and all persons, and concerning such damage, destruction or loss, consequential or otherwise, to or of any and all property, real or personal, including, without limitation, suits by employees or representatives of the Company or of the Contractor or of any subcontractor, or any other person or persons, or concerning any court or administrative proceeding concerning the violation of any law, ordinance, rule, regulation, standard, or order. Excluded from this paragraph are only those injuries to or deaths of persons and damage, destruction or loss, to or of property arising from the sole negligence or willful misconduct of the Company.

B. Contractor shall indemnify the Company against, and save and hold it harmless from, any and all liability, claims, demands, damages, costs, expenses and attorney's fees, suffered or incurred on account of any breach of any obligation, covenant or other

provision of this contract, including without limitation, breach of the indemnity provisions of subsection A of this Section 37.

C. Contractor further agrees to defend, indemnify and hold harmless the Company, its directors, officers, employees, and agents, from and against any and all costs, damages, claims, expenses, violations, notices of violations, penalties, liens, assessments, and liabilities of every kind and nature, foreseeable or unforeseeable, directly or indirectly, arising from any release, removal, generation, use, storage or disposal on, under, around, or from the well site of any material, substance, or waste, hazardous or non-hazardous, including, without limitation, drilling fluids, mud, cuttings and development and test water howsoever same may be caused, including, without limitation, the Company's active or passive negligence.

38. LIENS

If at any time there shall be evidence of any lien or claim for which the Company might become liable and which is chargeable to the Contractor, the Company shall have the right to retain out of any payment then due or thereafter to become due, an amount sufficient to completely indemnify the Company against such lien or claim. If the Company determines that such lien or claim is valid, the Company may pay and discharge the same, and deduct the amount so paid from any monies which may be or become due and payable to the Contractor.

39. PAYMENT

Upon completion of the installation or construction, the Company will, within thirty (30) days after receipt of proper invoice and labor and material releases, pay the amount due the Contractor. If the Company believes that additional work, such as clean up, is required, it may deduct the total cost of such additional work from the amount to be paid to Contractor.

40. COMPANY'S RIGHT TO TERMINATE CONTRACT: DAMAGES DUE TO DELAY

If the Company finds the Contractor to be in material violation of any section of these General Conditions of Contract, Construction Specifications or Standard Specification Drawings or if the Contractor refuses or fails to prosecute the work, or any separable part thereof, with such diligence as will insure its completion within the time specified or any extension thereof, or fails to complete said work within such time, or when any other cause exists to justify such action, the Company may, without prejudice to any other right or remedy, by written notice to the Contractor, terminate its right to proceed with the work or such part of the work as to which there has been such violation, delay or other cause.

In the event the Contractor's right to proceed is terminated, the Company may take over the work and take possession of, and utilize in completing the work, such materials as may be on the site of the work and necessary therefore and prosecute said work to completion by whatever method it may deem expedient. The Contractor and its sureties shall be liable to the Company for any excess cost caused thereby.

In the event the Contractor's right to proceed with the work is terminated, the Contractor shall not be entitled to receive any further payment until the work is completed or the job is canceled. If the unpaid balance of the Contract price exceeds the expense of finishing

the work, including compensation for additional managerial and administrative services, such excess shall be paid to the Contractor. If such expenses exceed such unpaid balance, the Contractor shall pay the difference to the Company.

41. GUARANTEE

The Contractor shall guarantee all labor and workmanship and any materials it installs for a period of one year following the date of completion and acceptance by the Company. If any portion of the work or any of the materials become defective within the guarantee period, the Company will notify the Contractor of such defect. The Contractor must repair any defect within fifteen (15) days of such notification. If repairs are not completed within this time period, the Company may repair the defect, or cause such defect to be repaired, and the cost of such repairs shall be paid by the Contractor. The Company reserves the right to determine which defects are the result of poor labor and workmanship and which are caused by defective materials.

42. LIQUIDATED DAMAGES FOR NON PERFORMANCE: REQUEST FOR EXTENSION(S) OF TIME

Time is of the essence in the Contract. The time period required for completion of the work will be specified in the Contract. The Contractor agrees that the Company will suffer substantial damages in the event the Contractor fails to complete the work within the agreed upon time period. The Contractor and the Company agree that since it would be impracticable or extremely difficult to precisely fix such damages, a reasonable approximation of such actual damages suffered by the Company shall be a sum equal to 0.5% of the Contract price for each working day beyond the time period for completion of the work specified in the Contract.

Request by the Contractor for extensions of the time period shall be in writing and shall not become effective until approved in writing by the Company's Authorized Representative.

43. PAYMENT FOR REQUIRED TESTING

Whenever testing is required by any governmental agency or by the Company to assure conformance of the Contractor's work with the appropriate standard, it will be paid for as follows:

a. For testing required under permits obtained by the Company or testing specifically requested by the Company, the cost of the first test will be paid for by the Company. In the event of failure of the first test, the cost of all further testing associated with the failure will be paid by the Contractor.

b. For testing required under permits obtained by the Contractor, all costs will be paid by the Contractor. Testing of the pipeline for pressure and leakage will be included in the Contract price.

44. CONTRACT DEADLINES AND BONDS REQUIREMENTS

The time limits to be allowed for the completion of any work covered in the Contract shall be established as follows: In the proposal submitted to the Company, in response to the Invitation to Bid, the Contractor shall state the number of calendar days required for completion of the work. The time required will become a part of the Contract. When the Company is ready to proceed with the work, a Commencement Notice will be issued by the Company to the Contractor by mail. The Commencement Notice will allow the time required in the Contract plus ten (10) calendar days and will indicate the final day of the time allowed. The work cannot begin until the Company has received a performance bond and materials payment bond for the Contract price unless the bonds have been waived under the special conditions section of the Contract. The additional ten (10) days is the allowance for time to deliver the Commencement Notice to the Contractor and for the Contractor to return the performance bond and materials payment bond to the Company. Time extensions will be granted if warranted, and only at the time of the delay, thus extending the final day of the time allowed.

If the Company elects not to require a performance bond and a material payment bond for the work, the cost of the bonds will be deducted from the proposed total cost and the Contract will reflect this reduced cost and the bonds requirements will be waived under special conditions of the Contract.

ARIZONA WATER COMPANY

CONSTRUCTION SPECIFICATIONS: E-8-1

ERRATA 2010

ARIZONA WATER COMPANY

E-8-1

CONSTRUCTION SPECIFICATIONS FOR THE INSTALLATION OF WATER DISTRIBUTION SYSTEMS DUCTILE IRON

DEFINITIONS

A. Company. The words "Company" or "Arizona Water Company" mean Arizona Water Company, and where applicable, any division of Arizona Water Company, whose principal place of business is located at 3805 North Black Canyon Highway, Phoenix, Arizona 85015-5351 (Post Office Box 29006, Phoenix, Arizona 85038-9006).

B. Company's Authorized Representative. The words "Company's Authorized Representative" mean any officer of the Company, and any of the Company's Engineers, any Division Manager or Superintendent of the Company and/or such other person(s) designated in writing as the "Company's Authorized Representative" by the President or any Vice President of the Company.

C. Contractor. The word "Contractor" means either an individual or other entity employed to do the work as shown on the Construction Drawings and as specified herein.

D. Construction Drawings. The words "Construction Drawings" mean plans prepared by or on behalf of Arizona Water Company.

E. Contract. The word "Contract" means the written document titled "Proposal/Contract" when such document has been signed by an officer or other authorized representative of both the Contractor and the Company.

CONSTRUCTION SPECIFICATIONS
FOR THE INSTALLATION OF WATER DISTRIBUTION SYSTEMS
DUCTILE IRON

1. GENERAL

All work is to be completed in a safe, workmanlike manner and in accordance with these Construction Specifications; any deviation therefrom must be approved in writing by the Company.

Installations must conform with the requirements of all governmental regulating agencies and the cost of conforming to such regulations must be included in the unit bid prices. Examples of such regulations, without attempting to be inclusive, are:

a. Special compaction and paving for street crossing.
b. Shoring when required because of the trench depth.
c. Closing a trench in those areas where no open trench is allowed overnight.
d. Barricading and traffic control as required.

2. LOCATION MARKING

Alignment stakes as required in the opinion of the Company shall be furnished by the Company to the Contractor and shall be set by the Company at agreed upon intervals and offsets. Under normal circumstances these will reference the pipeline location five feet (5') into the right-of-way measured from property pins. Grade stakes will be provided only when the Construction Drawings show a pipeline depth other than covered in these Specifications. It is the responsibility of the Contractor to preserve all survey work.

3. TRENCH EXCAVATION

The trench location is to be determined by the Construction Drawings.

FOR 8-INCH OR SMALLER PIPE: The depth of the trench prior to pipe laying shall be such that the finished pipeline shall have between thirty-six inches (36") and forty-two inches (42") of cover unless otherwise specified on the Construction Drawings.

FOR 12-INCH AND LARGER PIPE: The depth of the trench prior to pipe laying shall be such that the finished pipeline shall have between forty-eight inches (48") and sixty inches (60") of cover unless otherwise specified on the Construction Drawings.

The width of the trench at and below the level at the top of the pipe shall be a minimum of twelve inches (12") plus the outside diameter of the pipe barrel and a maximum of twenty-four inches (24") plus the outside diameter of the pipe barrel.

The bottom of the trench shall be accurately graded to provide a uniform bearing for each length of pipe for the full length of the pipe. If the native material on the trench bottom can be reasonably dug by hand, bell holes shall be dug for the joints so that the joints in no way support the pipe. When native materials such as rock are encountered during trenching that will not provide a uniform support for the pipe, the trench will be over-excavated an additional six inches (6") and suitable bedding material will be placed in the trench.

Bedding material will be placed by hand in four-inch (4") lifts and compacted to ensure uniform compaction and to eliminate any voids under the pipe. When the space between the pipe and trench bottom varies, this must be backfilled and compacted in four-inch (4") lifts to the mid-section of the pipe.

Whenever the trench is over-excavated for whatever reason, the trench bottom will be brought up to the correct depth at the Contractor's expense using either method (a) or (b) as follows:

a. A.B.C. material shall be used and compacted to a uniform density of not less than 80% of the maximum density as determined by AASHTO T-99 method A and T-191.

b. Native material 100% of which will pass through a one and one-half inch (1½") screen and at least 20% of which will pass through a number-8 screen shall be used and compacted to a uniform density of not less than 85% of the maximum density as determined by AASHTO T-99 method A and T-191.

4. MATERIALS TO BE PROVIDED BY CONTRACTOR

Unless otherwise specified on the Construction Drawings or in the Contract, the Contractor will supply all of the necessary materials which will become a permanent and integral part of the water distribution system, including concrete blocking, anchors, backfill material, paving material and supplies used during the prosecution of the work. All materials provided by the Contractor to construct the water distribution system must be NSF Standard 61 approved. All potable water pipes and fittings shall have NSF-PW seal. Construction materials used in the water system shall be lead free as defined at AAC R28-4-504 and R18-1-101. The Contractor will provide the following m aterials:

a. FIRE HYDRANTS: Mueller Super Centurion 250 Fire Hydrant, meets ANSI/AWWA C502 Standard, Model No. A-423, 5¼" main valve opening, three way, 6" Mechanical Joint Shoe, 1½" pentagon operating nut, color - yellow, drain open, open direction - left, 4' or 4'6" bury depending on application. For pumper and hose nozzle inform ation see below.

(1) 1 - 4" Pumper Nozzle, NST and 2 – 2½" Hose Nozzles, NST. (These locations only: Ajo, Casa Grande, Coolidge and San M anuel.)

(2) 1 – 4½" Pumper Nozzle, NST and 2 – 2½ " Hose Nozzles, NST. (These locations only: Apache Junction, Arizona City, Lakeside, Oracle, Overgaard, Pinewood, Rimrock, Sedona, Sierra Vista, White Tank and Winkelman.)

(3) 1 – 4½" Pumper Nozzle, NST and 2 – 2½" Hose Nozzles, NPT (Bisbee only.)

(4) 1 - 3" Pumper Nozzle GA 6-350 (6 threads per inch, 3.50 pitch diameter) and 2 – 2½" Hose Nozzles, NPT (Miami only.)

(5) 1 – 3½" Pumper Nozzle GA 6-411 (6 threads per inch, 4.11 pitch diameter) and 2 – 2½" Hose Nozzle, NST (Superior only.)

b. FITTINGS: Manufactured by Tyler or Union. Crosses, Elbows, Tees, Cap, Reducer, Adapter, Plug, Blind Flange and Tapped Flange; Ductile Iron, Class 350, SSB, Cast Iron Cement Lined.

(1) Foster Adaptors for MJ, made by Infact Corporation: Available in size 4" to 16". Part No. 4" = 4FA-BC, 6" = 6FA-BC, 8" = 8FA-BC, 10" = 10FA-BC, 12" = 12FA-BC, 16" = 16FA-BC.

c. DETECTOR CHECK VALVE: Mueller/ Hersey EDC III, iron body, including 5/8" x ¾" Trim Kit. Trim Kit Part No.: 4" = 282080, 6" = 282082, 8" = 282085, 10" = 282496.

d. GATE VALVES: Mueller Resilient Wedge Gate Valves, meets AWWA C509 specification, 250 psig, Non-rising stem, Part No. A-2360 sizes 4" through 12" ; Part No. A-2361 sizes 14" through 36", low zinc stems, epoxy coated inside and outside to meet the NSF 61 rating. The bonnet and stuffing box shall have 304 stainless steel bolts/nuts.

e. TRACER WIRE and WARNING TAPE:

1. TRACER WIRE: Shall be direct bury AWG #14 solid copper wire, Color: Blue.

2. WARNING TAPE: Reef Industries, Standard Terra Tape in 3" widths. Color: Blue and imprinted 'Arizona Water Company'.

f. AIR RELEASE VALVE: Crispin Model AR10 with 1" NPT inlet and ½" NPT outlet, cast iron body and top flange; with a 5/64" orifice with stainless steel valve sealing faces and BUNA-N rubber.

g. PRESSURE RELIEF VALVE: Watts 174A, Model M, 2" inlet, 2" outlet, Bronze Body, 30lb. to 150lb. pressure range.

h. MEGA LUG: Mechanical Joint restraint made of ductile iron conforming to ASTM 536-80, 250 psi made by EBAA Iron, Inc., series 1100 or equal.

i. METER BOXES:

(1) Concrete Box with a steel regular lid, Number 1: Tucson specification.

(2) Concrete Box with a steel regular lid, Number 2, 3, and 4: Phoenix specification.

j. PIPE, COPPER: Type K soft copper in 60 or 100-foot coils, per ASTM B88.

k. PIPE, DUCTILE IRON: Ductile Iron Pipe, Cement Lined, Push-on, conform to current ANSI/AWWA Specification A21.51/C151, Pressure Class 350 (sizes 4" through 12"), Pressure Class 250 (sizes 14" through 20"), or Pressure Class 200 for 24" through 36" pipe. Vendors:

(1) Pacific States Cast Iron Pipe Company
(2) Griffin Pipe
(3) United States Pipe and Foundry Company
(4) American Ductile Iron Pipe
(5) Clow Pipe (McWane, Inc.)

l. PIPE, PLASTIC: Plastic pipe, C-900 PVC per ANSI/AWWA C900, Class 150, sizes 6" through 12". NSF61 approved. Furnished in laying lengths of 20'. The barrel shall conform to the outside dimensions of steel pipe (IPS) or cast iron (CI) pipe equivalent and the wall thickness of dimension-ratio (DR) 18.

m. POLYETHYLENE ENCASEMENT (Polywrap): For all pipeline and related fittings installed, EXCEPT for the Coolidge Division. Minimum 8 Mil. and installed per AWWA C105/A21.5-93 and ASTM A-674-89. Manufactured by the Pacific States Cast Iron Pipe Company. The wrapping tape shall be minimum 10 mil. vinyl tape. No duct tape shall be used.

n. COUPLING: Mueller, straight three part union, tested to meet ANSI/AWWA C800, H15403, conductive com pression.

Mueller, H15428, straight coupling, conductive compression by male iron pipe, tested to meet ANSI/AWWA C800 specification. Size: 2".

Mueller, H15451, straight coupling, conductive compression by female iron pipe, tested to meet ANSI/AWWA C800 specification. Size: 2".

Viking Johnson brand, sold by Mueller: MaxiFit Straight (2"-24"), MaxiFitXtra Straight (4"-8") or MaxiStep Transition, tested to meet AWWA/ANSI C.219-91 specifications – certified to ISO 9001:1994 / Smith – Blair Quantum.

o. STOP, ANGLE METER, BALL: Mueller, valve, B24258, conductive compression by meter swivel nut, tested to meet ANSI/AWWA C800, size 5/8 " x ¾" x ¾" for a ¾" service or size 1" for a 1" service.

Mueller, valve, B24265, female pipe thread by meter swivel nut, tested to meet ANSI/AWWA C800, size 5/8" x ¾" x ¾" for a ¾" service or size 1" for a 1" service.

p. STOP, CORP: Mueller, ball valve, B25008, taper thread by conductive compression, tested to meet ANSI/AWWA C800 specification, sizes: ¾", 1" and 2".

Mueller, ball valve, B25028, iron pipe thread by conductive compression, tested to meet ANSI/AWWA C800 specification. Sizes ¾", 1", and 2".

Mueller, 300 Ball Curb Valve, B-25122, taper thread by conductive compression, tested to meet ANSI/AWWA C800 specifications, size: 2". (2" service)

q. STOP, CURB: Oriseal valve, H10291, iron pipe thread by iron pipe thread, quarter turn check, brass, tested to 300 psi working pressure, tested to meet ANSI/AWWA C800 specification, size: 2".

Mueller, B20283, Mueller 300 ball curb valve, female iron pipe by female iron pipe, quarter turn check, tested to meet ANSI/AWWA C800 specification. Size: 2". (Blow-off E-9-8-1).

r. TAPPING SADDLE: Smith Blair, Cast Bronze ASTM-B584 85-5-5-5, double strap, iron pipe threads, Models 321 and 323. Washers are silicon bronze, ASTM-B36. Gaskets are grade 60 Buna N, or Mueller bronze double strap service saddle, BR 2 B series, cast bronze, ASTM-B585, 85-5-5-5, or H16084, 200 psig, meets ANSI/AWWA C800.

s. TAPPING SLEEVE: Mueller H304 Stainless Steel Tapping Sleeve, JCM 432 18-8 Type 304 Stainless Steel Tapping Sleeve, Romac "SST" Type 304 Stainless Steel Tapping Sleeve or CASCADE-style CST-EX stainless steel pressure-rated tapping sleeve.

t. TAPPING VALVE: Mueller Resilient Wedge tapping valve, Catalog Number T-2360-16, Class 125, sizes 4" through 12"; T-2361-16, Class 125, sizes 14" to 36" all with Type 304 stainless steel fasteners; bypass valves are required on 18" – 36" valves flange by mechanical joint per ANSI/AWWA C111, iron wedge, non-rising stem. Epoxy coated interior/exterior per ANSI/AWWA C550 for NSF 61 compliance. 250 PSI range for valves 4" to 12". 150 PSI range for valves 14" to 36".

u. U-BRANCH: Mueller, H15364, 1" male iron pipe by ¾" male iron pipe, tested to meet ANSI/AWWA C800 specification. Size: 1" x ¾" x 13½", straight line.

v. VALVE BOXES: Valve Box with Cover, adjustable, Tyler 562-A or equal, made of cast iron.

w. VAULTS: Utility Vault Company, Chandler, AZ.

(1) 4484-WA concrete vault with a 3660 aluminum double torsion door with a recessed padlock hasp, two - 18" x 24" center knockouts.

(2) 575-WA concrete vault with a 4874 aluminum double torsion door with a recessed padlock hasp, two - 18" x 24" center knock outs and adjustable frame.

(3) 612-5X-WA concrete vault with a 4874 aluminum double torsion door with a recessed padlock hasp, two - 18" x 24" center knockouts.

x. VALVE, METER: Mueller, B24265-1, Mueller 300 ball angle meter valve, female iron pipe by meter nut, quarter turn check, lock wing, tested to meet ANSI/AWWA C800 specification. Size: 1".

Mueller, B25170, Mueller 300 ball straight valve, conductive compression by female iron pipe, quarter turn check, lock wing, tested to meet ANSI/AWWA C800 specification. Size: 1".

y. YOKES, METER: Relocator type copper meter yoke with horizontal inlet and outlet and meter thread ends, B24118, with lock wing Mueller 300 angle ball valve, full port, sizes: 1" x 12", 5/8" x ¾" x 7", 5/8 x ¾" x 9".

Mueller, 2" copper meter yoke with horizontal inlet and outlet and female iron pipe threads, B2423-99000, with lock wing Mueller 300 ball angle meter valves on inlet and outlet risers. Raised 1" by-pass with lock wing Mueller 300 ball valve.

The Contractor also will be required to provide the following materials, the cost of which will be included in its unit bid price:

All material and concrete for thrust blocks, other anchors, reinforcing steel; all gravel, crushed stone, A.B.C., earth, sand, or screened material which may be required; all material for bracing and shoring trenches and for construction of forms; all barricades and traffic control equipment; all material for paving replacement and any water used for compaction of backfill.

5. INSTALLATION OF MATERIALS

All materials are to be installed in accordance with manufacturer's recommendations unless otherwise directed by these S pecifications.

All pipe, fittings and valves shall be laid true to the lines, grades and locations established by the Specifications and the Construction Drawings.

The ends and inside of the pipe shall be thoroughly cleaned and inspected for damage. No damaged materials shall be installed in the water distribution system .

Whenever the work ceases for any reason, all open pipeline ends shall be tightly plugged by the Contractor. Plugs shall be watertight and approved by the company.

Concrete thrust blocks of the sizes required by the plans and specifications are to be provided at all valves, changes in direction or size, or at any other point where an unbalanced thrust due to water pressure would exist. Thrust blocks are to be formed to prevent any concrete from spilling over or into a joint.

Trench curves as shown on the Construction Drawings may be made without fittings when using push on joint pipe up to twelve inches (12") in diameter, if the deflection of the pipe does not exceed five degrees (5°) or nineteen inches (19") per eighteen-foot (18') length of pipe. The minimum radius of such curves will be two hundred five feet (205').

Prior to construction, the appropriate agency(ies) will be notified as required by the permit(s).

It shall be the Contractor's responsibility to uncover all existing water lines being connected to, and to verify the location, depth and size of pipe befor e any construction begins.

Any construction performed without the knowledge of the duly authorized representative is liable for removal and replacem ent at the Contractor's expense.

All fire hydrants, frames, covers and valve boxes, etc. shall be adjusted to finished grade prior to the placing of the asphalt concrete surface course by the Contractor (where applicable).

Air release valves shall be installed at water system high points per Standard Detail E-9-8-2.

All water services shall be set a minimum of two feet (2') on the customer's property, preferably within the P.U.E. and not within right-of-way.

Unless otherwise specified on the construction drawings, all water mains shall be installed five feet (5') from the property line inside the right-of-way or easement.

Water valves shall be spaced not more than five hundred feet (500') in commercial districts and not more than eight hundred feet (800') in other districts. Variations may be required for transmission mains or special applications.

Installation of water line casing shall be per Standard Speci fication E-9-24-1.

Tracer Wire and Warning Tape are to be installed on all mains, tees, crosses, ells and fire hydrant laterals. They will not be installed on service lines. The tracer wire will be installed on the water main 45 degrees from the vertical centerline of the pipe and shall be taped to the fittings directly and on the main every 10 feet using a minimum 10 mil vinyl tape. The tracer wire shall be placed between the valve riser and box with a minimum of 12" of wire inside. The warning tape shall be installed a minimum of two feet below the surface, being measured from final grade, directly over the center of the pipe. Any splices in the tracer wire shall be joined using waterproof connectors. Any splices in the warning tape shall be joined using minimum 10 mil vinyl tape. The tracer wire shall be tested for continuity after backfill and compaction, but before paving. Any detected damages to the wire shall be repaired before paving will be allowed.

6. BACKFILL OF WATER MAIN TRENCHES

Backfill of any excavation shall conform to the requirements of any of the governmental agencies having jurisdiction over the location. If no governmental agency having such jurisdiction specifies backfill or compaction requirements, and no special requirements are shown on the Construction Drawings, the procedure set forth in this section will apply for water line trenches.

The bedding material above the pipe and backfill material shall be compacted to a minimum of 70% compaction within a utility easement and 80% compaction within a right-of-way as determined by AASHTO T-99 method A and T-191. If water settling is used for compaction, it is the responsibility of the Contractor to prevent the pipe from floating.

The bedding material shall be either native material, 100% of which will pass through a one and one-half inch (1½") screen and at least 20% of which will pass through a number-8 screen, or imported material which conforms to M.A.G. specifications for A.B.C. or type-B

select materials. Bedding material shall be used below and around the pipe and a minimum of twelve inches (12") above the pipe. Shade and bedding material to be mechanically compacted prior to remainder of trench back-fill.

The remainder of the trench shall be backfilled with native or imported material which shall be of sound earthen material free from broken concrete, wood, broken pavement, or other unsuitable substances. Except as otherwise specified, backfill may be material containing no pieces larger than six inches (6") in greatest dimension.

Where settlement occurs, additional backfill material shall be placed and compacted and the trench shall be brought to final grade.

7. HYDROSTATIC TESTING OF COMPLETED PIPELINES

Hydrostatic testing of water pipelines will be completed before the new system is connected into the existing water system so that all testing can be done against all new materials.

The completed section of water pipeline to be tested shall be slowly filled with water with care being taken to expel all air from the pipe. If necessary, the pipe will be tapped at high points to vent air.

The Contractor shall provide all equipment and labor necessary to accomplish this testing and the price shall be included in the unit prices. The Contractor shall notify the Company in advance of the testing so that the Company can schedule a duly authorized representative to be at the site during testing. The Contractor, at its own expense, shall make any necessary repairs to the system being tested in order to cause the section being tested to meet the test limits set below. The Contractor may request authorization of the Company to connect the new pipelines to the existing system prior to completion of pressure testing when, in the Company's sole opinion and judgment, conditions warrant such connection.

The Contractor shall assume all responsibility to complete pressure testing to Company's specifications after such connection, including, but not limited to, isolation of the new pipelines from the existing system, if necessary.

Connections prior to completion of pressure testing shall not be made unless prior Company authorization has been obtained, and any extra expenses resulting from such connections shall be the sole responsibility of the Contractor.

Leakage tests will be for a period of two hours at 200± 5 psi at the point of lowest elevation; leakage may not exceed 0.1 gallons per hour per one thousand feet (1,000') of pipe per inch of diameter. If dry utilities are not installed, a second pressure test is required.

8. STERILIZATION AND FLUSHING OF COMPLETED WATER PIPELINES

Sterilization and flushing will conform to recommendations of Arizona State Department of Health Services Engineering Bulletin Number 8, latest edition, or any future Arizona Department of Environmental Quality bulletins. Contractor to follow all conditions of any discharge permit.

9. NO OTHER UTILITIES ALLOWED IN OR NEAR WATER PIPELINE TRENCHES

No other utility installations will be permitted in the water pipeline trench or within five feet (5') of the Company's water pipeline when running parallel to the water pipelines.

10. PROTECTION OF WATER MAINS NEAR SEWERS

In order to protect water mains from contamination by sewers, the installation of the water mains must conform to the following requirements:

a. Horizontal - When water lines and sewers are laid parallel with each other, the horizontal distance between them shall not be less than six feet (6'). Each line shall be laid on undisturbed or bedded material in a separate trench. Where conditions prevent the minimum horizontal separation set forth above, extra protection will be required. Extra protection shall consist of constructing the sewer main with mechanical joint ductile iron pipe or with slip-joint ductile iron pipe if joint restraint is provided, or encasing both the water main and sewer main in concrete. See Detail E-9-30-1 and E-9-30-2

The Construction Drawings shall indicate the installation requirements. The drawings showing these exceptions shall have been approved by the appropriate state and/or county health department. Refer to the diagram below for clarification.

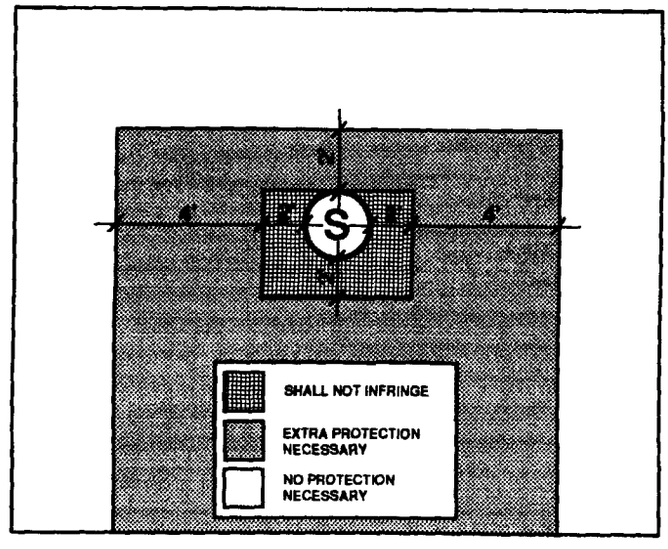

Under no circumstances will the horizontal separation between sewer mains and water mains be less than two feet (2'). All distances are to be measured from the outside of the sewer main to the outside of the water main.

b. Vertical - When a water main is parallel with or crosses a sewer main within two feet (2') above the sewer or greater than two feet (2') below the sewer, extra protection will be required. Extra protection shall consist of constructing the sewer main with mechanical joint ductile iron pipe or with slip-joint ductile iron pipe if joint restraint is provided, or encasing both the water main and sewer main in concrete. See Detail E-9-30-1 and E-9-30-2.

The Construction Drawings shall indicate the installation requirements. The drawings showing these exceptions shall have been approved by the appropriate state and/or county health department.

Under no circumstances will the vertical separation of a sewer main installed above a water main be less than two feet (2'). All distances are to be measured from the outside of the sewer main to the outside of the water main. Refer to the diagram above for clarification.

c. When unusual conditions such as, but not limited to, highway or bridge crossings prevent the water and sewer main separations required from being met, the appropriate state and/or county health department will review and may approve requests for authorization to use alternate construction techniques, materials and joints on a case-by-case basis.

d. No water pipe shall pass through or come into contact with any part of a sewer manhole. The minimum horizontal separation between water mains and manholes shall be six feet (6'), measured from the center of the manhole.

e. The minimum separation between force mains or pressure sewers and water mains shall be two feet (2') vertically and six feet (6') horizontally under all conditions. Where a sewer force main crosses above, or less than six feet (6') below, a water line, the sewer main shall be encased in at least six inches (6") of concrete for ten feet (10') on either side of the water main. Refer to the diagram below for clarification.

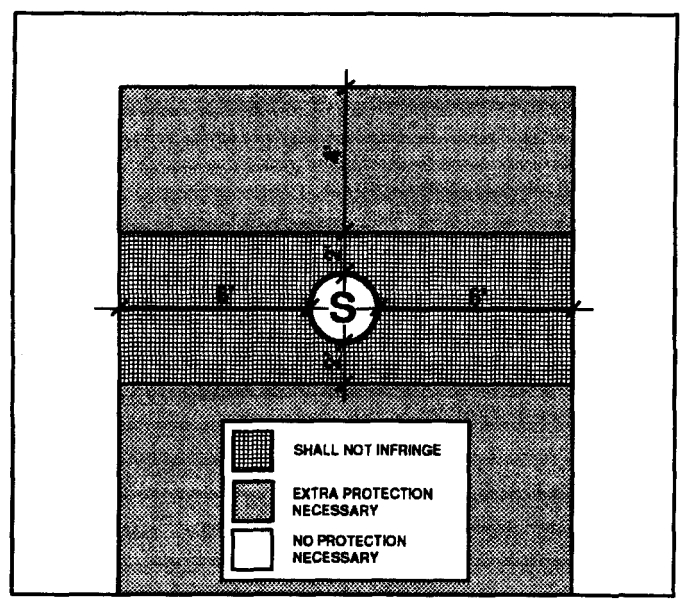

f. Sewer mains (gravity, pressure, force) shall be kept a minimum of fifty feet (50') from drinking water wells, unless the following conditions are met:

   1. Water main pipe, pressure tested in place to 50 psi without excessive leakage, may be used for gravity sewers at distances greater than twenty feet (20') from drinking water wells.

   2. Water main pipe, pressure tested in place to 150 psi without excessive leakage, may be used for pressure sewers and force mains at distances greater than twenty feet (20') from drinking water wells.

g. No septic tank/disposal field system shall be constructed within one hundred feet (100') of a drinking water well.

h. All distances are measured perpendicularly from the outside of the sewer main to the outside of the water main. These separation requirements do not apply to building, plumbing or individual house service connections.

i. Use Mechanical Joint ductile iron pipe with Megalug thrust restraints a minimum of ten (10') feet on each side of a sewer or storm drain crossing.

11. COMPACTION

When crossing existing water mains a minimum of 95% compaction is required to the bottom of existing mains.

Arizona Water Company requires that no slurry be permitted to contact existing cement/asbestos or ductile iron pipes, unless authorized by the company. Slurry may be poured in the bottom of the sewer trench stopping three inches (3") below the existing water main. The backfill used around the main should be AB in sufficient depth to prevent slurry from contacting existing main.

12. WATER MAIN MATERIAL SPECIFICATIONS

Ductile iron pipe (Push-on type) minimum class 350, cement lined and conform to AWWA C151.

All main line valves shall conform to AWWA C500 with a minimum working pressure of 200 psi.

All cast iron fittings to be cement lined in accordance with AWWA C104 and shall conform to AWWA C110 with a minimum working pressure of 250 psi. Except for the Coolidge System – See Note 4L.

Maximum joint deflection for 6" mechanical joint ductile iron pipe is seven degrees, seven minutes (7°, 7') or twenty-seven inches (27") per eighteen-foot (18') length pipe, for a maximum curve of one hundred forty-five feet (145').
Maximum joint deflection for 8" and 12" mechanical joint ductile iron pipe is five degrees, twenty-one minutes (5° 21') or twenty inches (20") per eighteen-foot (18') length pipe, for a maximum curve of one hundred ninety-five feet (195').

Maximum joint deflection for 6", 8" and 12" push-on joint ductile iron pipe is five degrees (5°) or nineteen inches (19") per eighteen-foot (18') length pipe for a maximum curve of two hundred five feet (205').

ARIZONA WATER COMPANY

3805 N. BLACK CANYON HIGHWAY, PHOENIX, ARIZONA 85015-5351 • P.O. BOX 29006, PHOENIX, ARIZONA 85038-9006
PHONE: (602) 240-6860 • FAX: (602) 240-6878 • WWW.AZWATER.COM

November 24, 2010

Mr. Tony Geiger
US Pipe – Waterworks Marketing Consultants
34522 N. Scottsdale Road
Scottsdale, Arizona 85226

Re: US Pipe Sentinel Fire Hydrants and Resilient Wedge Gate Valves

Dear Mr. Geiger:

Thank you for your interest in working with Arizona Water Company (the "Company") to add US Pipe Sentinel Fire Hydrants and Resilient Wedge Gate Valves to the Company's material and equipment specifications. Based on the US Pipe product information you provided and your field presentations to our operations and engineering staff, the Company is pleased to inform you that the following items are approved for use in the Company's water systems in Arizona.

Sentinel Fire Hydrant:

- Model Sentinel 250
  - 5¼" MVO
  - 4½" pumper
  - 2½" hose
  - Meets AWWA C-502 standard and approval by ULFM

Resilient Wedge Gate Valves:

- Model US Pipe A-USP0
  - Meets AWWA C-509 Full Body Cast Iron <u>includes</u> 304 SS Nuts, Bolts & Low Zinc Bronze Stem
  - Size range 2" thru 12"
- Model US Pipe A-USP1
  - Meets AWWA C-515 Reduced Wall Ductile Iron <u>includes</u> 304 SS Nuts, Bolts & Low Zinc Bronze Stem
  - Size range 14" thru 48"

We look forward to developing a long-term relationship with you and the US Pipe products. If I can be of any assistance, please call me.

Very truly yours,

Fredrick K. Schneider
Vice President – Engineering

afh

VIA EMAIL: TGEIGER4@COX.NET

ARIZONA WATER COMPANY

3805 N. BLACK CANYON HIGHWAY, PHOENIX, ARIZONA 85015-5351 • P.O. BOX 29006, PHOENIX, ARIZONA 85038-9006
PHONE: (602) 240-6860 • FAX: (602) 240-6878 • WWW.AZWATER.COM

October 19, 2010

Mr. Jim Ryan
Clow Valve Company
8121 N. 10th Avenue
Phoenix, Arizona 85021

Re: Clow Medallion Fire Hydrants and Resilient Wedge Gate Valves

Dear Mr. Ryan:

Thank you for your interest in working with Arizona Water Company (the "Company") to add Clow Medallion Fire Hydrants and Resilient Wedge Gate Valves to the Company's material and equipment specifications. Based on the Clow product information you provided and your field presentations to our operations and engineering staff, the Company is pleased to inform you that the following items are approved for use in the Company's water systems in Arizona.

Medallion Fire Hydrant:

- Model F-2545
  - 5¼" MVO
  - 4½" pumper
  - 2½" hose
  - Meets AWWA C-502 standard and approval by ULFM

Resilient Wedge Gate Valves:

- Model 2639 & 2640
  - Meets AWWA C-509 Full Body Cast Iron includes 304 SS Nuts, Bolts & Low Zinc Bronze Stem
  - Size range 2½" thru 12"
- Model 2638
  - Meets AWWA C-515 Reduced Wall Ductile Iron includes 304 SS Nuts, Bolts & Low Zinc Bronze Stem
  - Size range 14" thru 48"

We look forward to developing a long-term relationship with you and the Clow products. If I can be of any assistance, please call me.

Very truly yours,

Fredrick K. Schneider
Vice President – Engineering

lar

VIA EMAIL: JIM.RYAN@CLOWVALVE.COM

February 21, 2012

Contractor

Re: Fitting Specifications

Dear Contractor:

Effective March 1, 2012, Arizona Water Company (the "Company") has changed its fitting specifications for Ductile Iron Fittings and Ductile Iron Flanged Fittings ("Fittings"). All Fittings purchased by the Company, on the Company's behalf or installed with the intent of being conveyed to the Company, must comply with the requirements noted below.

Previous Fitting Specifications:

Fittings

Manufactured by Tyler or Union, Crosses, Elbows, Tees, Cap Reducer, Adapter, Plug, Blind Flange and Tapped Flange: Ductile Iron, Class 350, SSB, and Cast Iron Cement Lined.

New Fitting Specification:

Ductile Iron Fittings (Push-On and Mechanical Joint)

Ductile Iron Push-On and Mechanical Joint ("MJ") fittings for water lines shall be made of ductile iron per ASTM A536 and be cast in the United States of America. Fittings shall have USA cast on the fitting to designate they are made in the United States. All fittings will be manufactured and tested in accordance with ANSI/AWWA C153/A21.53 for compact design and ANSI/AWWA C110/A21.10 for full body design. In accordance with ANSI/AWWA C104/A21.4 fittings 2" – 3" will be single thickness cement mortar lined and 4" – 64" will be cement mortar lined. Fittings will be Asphaltic seal coated on the exterior in accordance with ANSI/AWWA C104/A21.4. MJ fittings with flanged end(s) will match ANSI/AWWA C115/A21.15 and ANSI B16.1 class 125 flanges. All fittings shall be NSF-61 listed for use with potable water.

Ductile Iron Flanged Fittings

Ductile Iron flanged fittings for water lines shall be made of ductile iron per ASTM A536 and be cast in the United States of America. Fittings shall have USA cast on the fitting to designate they are made in the United States. All fittings will be manufactured and tested in accordance with ANSI/AWWA C110/A21.10 design. Flange ends will match ANSI/AWWA C115/A21.15 and ANSI B16.1 class 125 flanges. In accordance with ANSI/AWWA C104/A21.4 fittings 2" – 3" will be single thickness lined and 4" – 64" will be cement mortar lined. Fittings will be Asphaltic seal coated on the exterior in accordance with ANSI/AWWA C104/A21.4. All fittings shall be NSF-61 listed for use with potable water.

If you have any questions or require further information, please contact me at 602-240-6860.

Very truly yours,

Fredrick K. Schneider, PE
Vice President - Engineering
engineering@azwater.com

afh
Enclosure

ARIZONA WATER COMPANY

STANDARD SPECIFICATION DRAWINGS: E-9-1

ERRATA 2010

ARIZONA WATER COMPANY

STANDARD SPECIFICATION DRAWINGS - DUCTILE IRON

INDEX (E-9)

E-9-1	TYPICAL GATE VALVE LOCATIONS
E-9-2	INSTALLATION OF TYPICAL VERTICAL AND HORIZONTAL GATE VALVES
E-9-3	INSTALLATION OF TYPICAL TAPPING SLEEVE AND VALVE
E-9-4	INSTALLATION OF TYPICAL VALVE SUBJECT TO NON-VEHICULAR AND VEHICULAR TRAFFIC
E-9-5	INSTALLATION OF TYPICAL THRUST BLOCKING SCHEDULE THRUST BLOCK FOR VERTICAL BENDS, AND MEGALUG THRUST RESTRAINTS
E-9-6	INSTALLATION OF TYPICAL PERPENDICULAR FIRE HYDRANT
E-9-7	INSTALLATION OF TYPICAL PARALLEL FIRE HYDRANT
E-9-8	INSTALLATION OF TYPICAL 2" BLOWOFF DEVICE, AND AIR RELEASE VALVE
E-9-9	INSTALLATION OF TYPICAL SINGLE SERVICE CONNECTION FOR A $^3/_4$" OR 1" METER
E-9-10	INSTALLATION OF TYPICAL DOUBLE SERVICE CONNECTION FOR A $^3/_4$" AND 1" METER
E-9-11	INSTALLATION OF TYPICAL 2" SERVICE CONNECTION
E-9-12	INSTALLATION OF 3" COMPOUND METER, 4" COMPOUND METER, 6" COMPOUND METER, 6" COMPOUND SERVICE, CONCRETE VAULT, AND NON-POTABLE PROPELLER METER
E-9-13	INSTALLATION OF TYPICAL 4" THRU 8" DETECTOR CHECK VALVES AND 3" THRU 10" REDUCED PRESSURE PRINCIPLE DETECTOR WITH BYPASS METER ASSEMBLY (RPDA) FOR FIRE LINE SERVICES
E-9-14	INSTALLATION OF TYPICAL PRESSURE RELIEF VALVE ASSEMBLY
E-9-15	INSTALLATION OF TYPICAL PRESSURE REDUCING STATION
E-9-16	PAINT COLOR SELECTION
E-9-17	STEEL WATER STORAGE TANK
E-9-18	HYDROPNEUMATIC TANK
E-9-19	INSTALLATION OF WELL SHELTER

E-9-20	INSTALLATION OF TYPICAL WELL WITH LINE SHAFT TURBINE PUMP
E-9-21	INSTALLATION OF TYPICAL WELL WITH SUBMERSIBLE TURBINE PUMP
E-9-22	INSTALLATION OF COLUMN PIPE, OIL TUBE AND LINE SHAFT
E-9-23	HOT TAP AND JUMPER METER CONNECTION
E-9-24	INSTALLATION OF TYPICAL WATER LINE ENCASEMENT
E-9-25	INSTALLATION OF CALCIUM HYPOCHLORITE TABLET CHLORINATOR
E-9-26	INSTALLATION OF CHAIN LINK FENCE
E-9-27	INSTALLATION OF SIDE HUNG WATER LINE SUSPENSION
E-9-28	PIPE WARNING TAPE, LOCATOR WIRE, AND LOCATOR WIRE TERMINATION
E-9-29	INSTALLATION OF A TYPICAL SAMPLING STATION
E-9-30-1	WATER AND SANITARY SEWER SEPARATION/PROTECTION PERPENDICULAR
E-9-30-2	WATER AND SANITARY SEWER SEPARATION/PROTECTION – PARALLEL

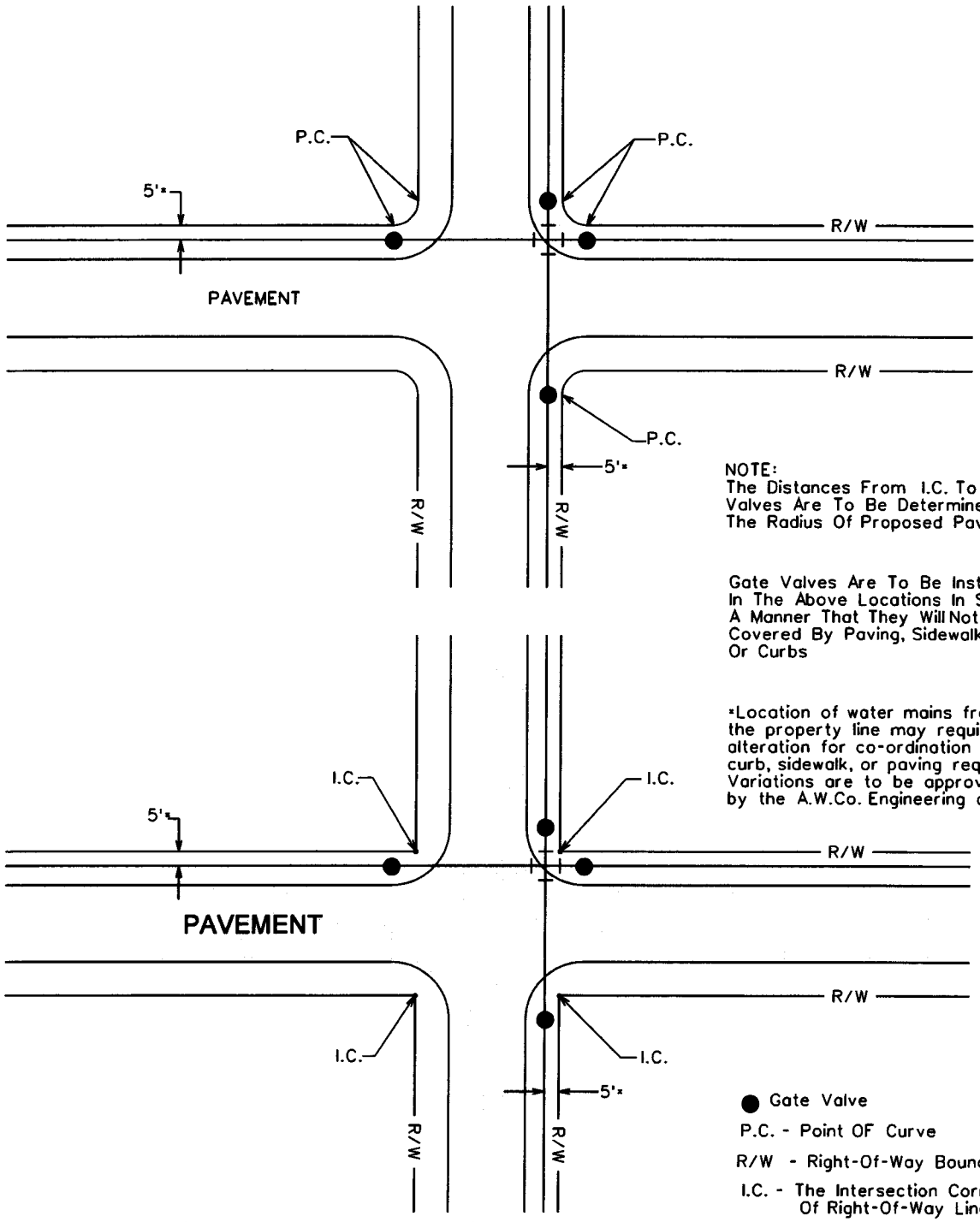

NOTE:
The Distances From I.C. To Gate Valves Are To Be Determined By The Radius Of Proposed Pavement.

Gate Valves Are To Be Installed In The Above Locations In Such A Manner That They Will Not Be Covered By Paving, Sidewalks, Or Curbs

*Location of water mains from the property line may require alteration for co-ordination with curb, sidewalk, or paving requirements. Variations are to be approved by the A.W.Co. Engineering dept.

ARIZONA WATER COMPANY

STANDARD SPECIFICATION
FOR THE INSTALLATION OF

TYPICAL GATE VALVE LOCATIONS

DRAWN BY:	APPROVED BY:	DATE:	△	
CCO	M.W.	3/20/86	1/31/2001	E-9-1-1

FOR 6" THROUGH 12" GATE VALVES

Mueller Resiliant Wedge Gate Valves
Catalog Number A-2360-__
ANSI/AWWA C509 Compliant

FOR 14" THROUGH 16" GATE VALVES

Mueller Resiliant Wedge Gate Valves
Catalog Number A-2361-__
ANSI/AWWA C509 Compliant

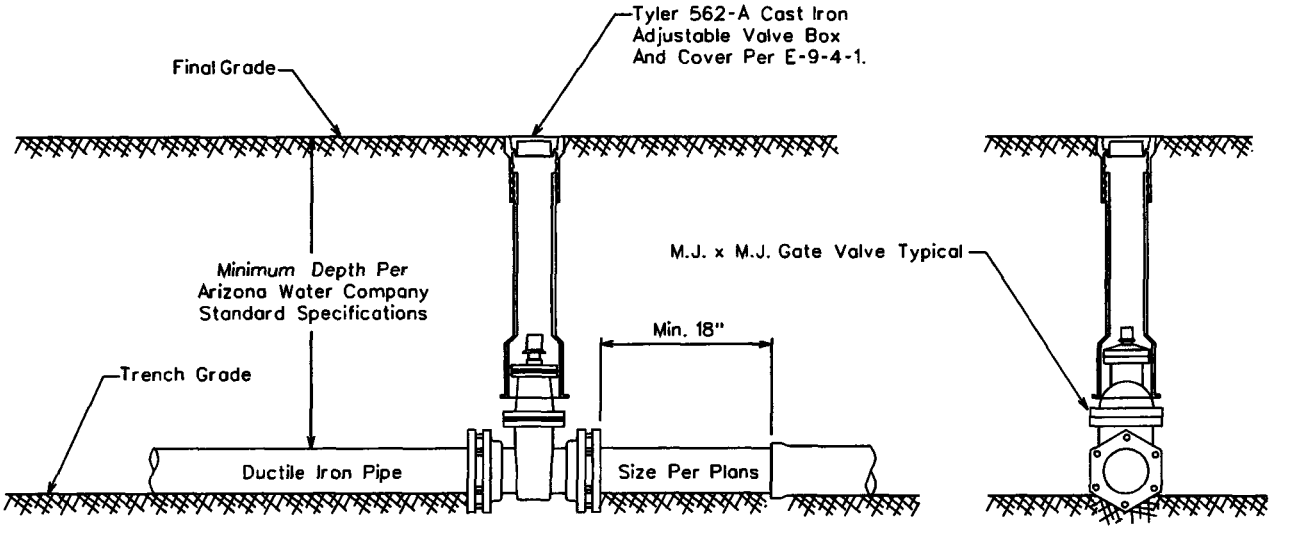

All Valves Installed On Pipe Five Feet (5') Deep And Greater Are To Be Installed With A Valve Operator Extension, Mueller Catalog No. A-26441.

ARIZONA WATER COMPANY

STANDARD SPECIFICATION
FOR THE INSTALLATION OF

TYPICAL VERTICAL GATE VALVES

DRAWN BY:	APPROVED BY:	DATE:	△	
CB	MW	03.20.1986	08.23.2006	E-9-2-1

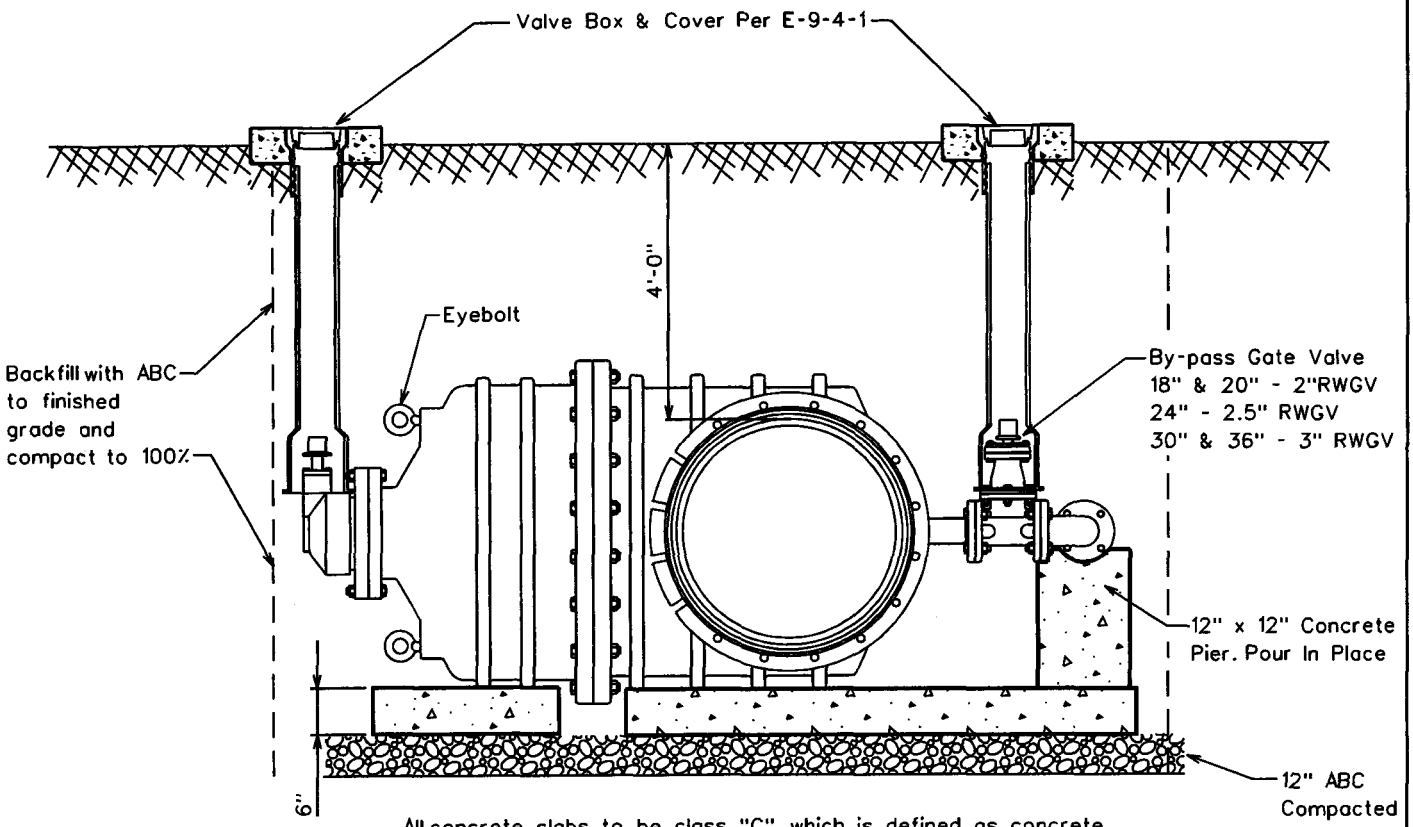

All concrete slabs to be class "C", which is defined as concrete whose minimum compressive strength at 14 days reaches 1600psi and at 28 days reaches 2000psi. per MAG Section 725, Table 725-1. Slabs to be formed and poured prior to valve installation.

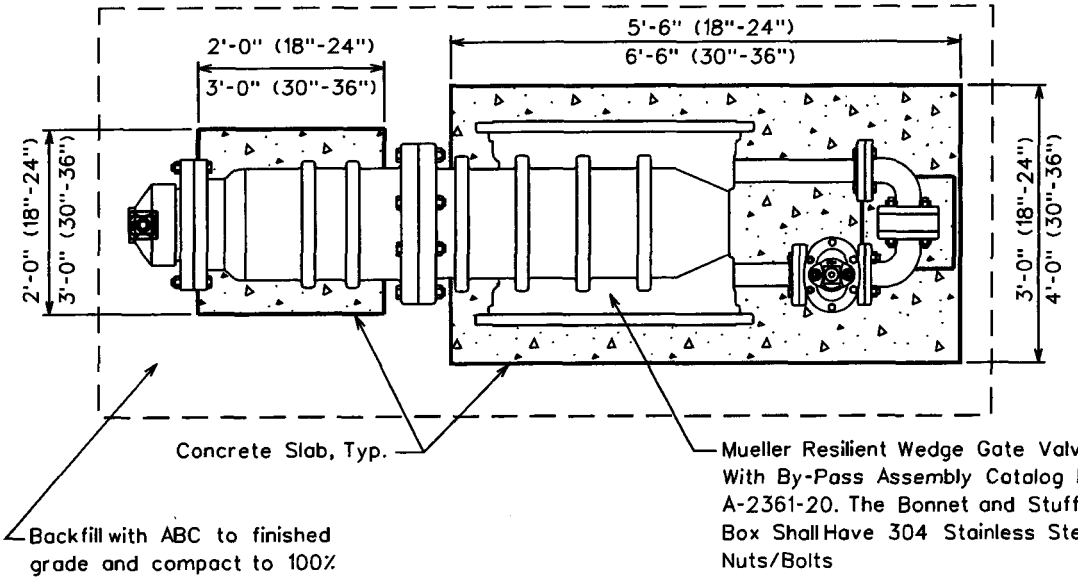

All valves installed on pipe five feet and greater are to be installed with a valve operator extension Mueller catalog No.A-26441 The distance is measured from the top of the operating nut to final grade.

ARIZONA WATER COMPANY

STANDARD SPECIFICATION

FOR THE INSTALLATION OF

INSTALLATION OF BEVEL GEARED HORIZONTAL GATE VALVES WITH BY-PASS FOR 18" AND LARGER VALVES

DRAWN BY:	APPROVED BY:	DATE:	△	
CB		12.07.2004		E-9-2-2

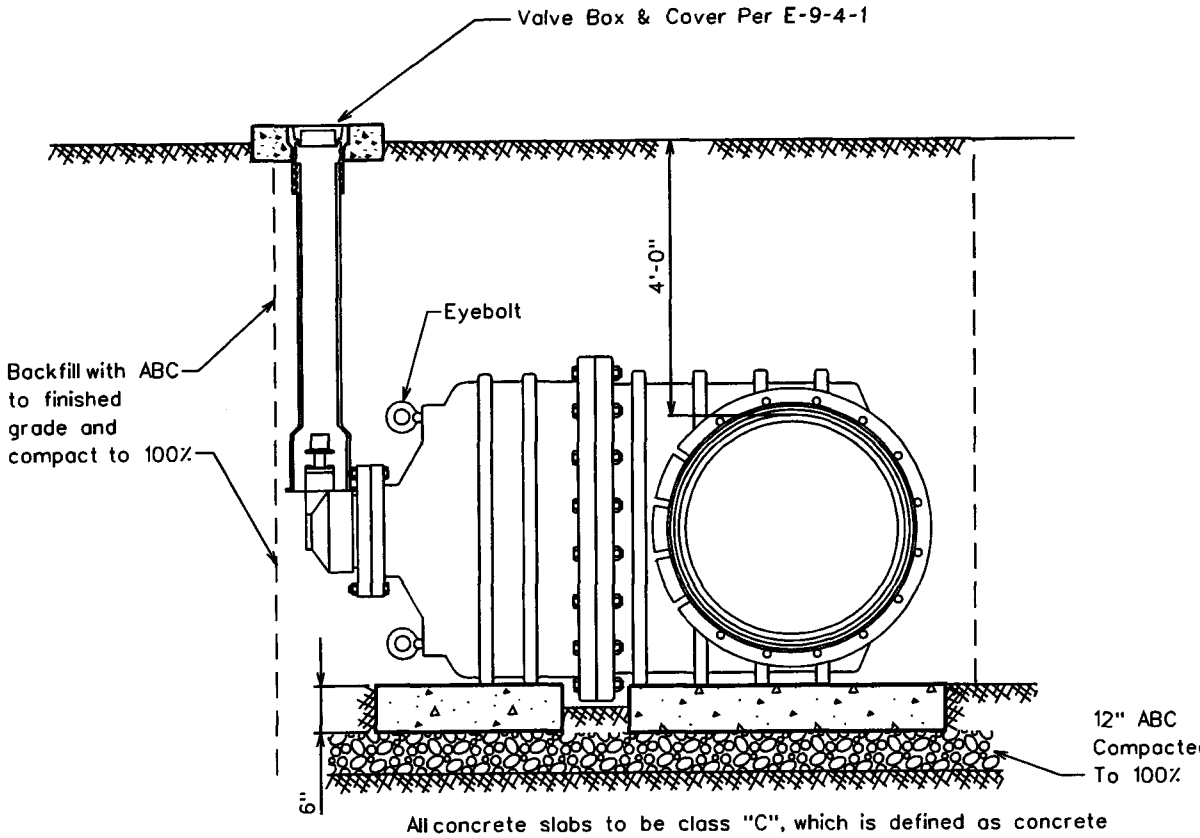

All concrete slabs to be class "C", which is defined as concrete whose minimum compressive strength at 14 days reaches 1600psi and at 28 days reaches 2000psi. per MAG Section 725, Table 725-1. Slabs to be formed and poured prior to valve installation.

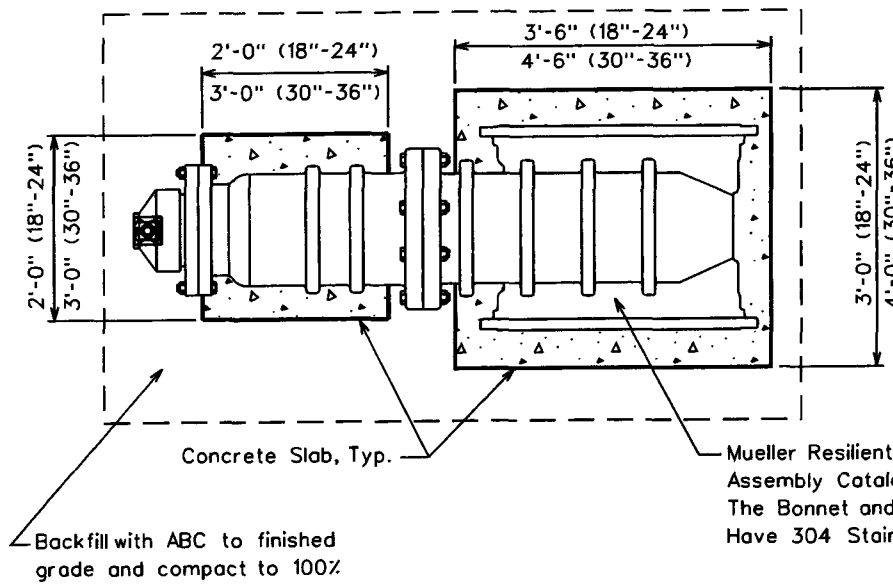

All valves installed on pipe five feet and greater are to be installed with a valve operator extension Mueller catalog No.A-26441 The distance is measured from the top of the operating nut to final grade.

ARIZONA WATER COMPANY

STANDARD SPECIFICATION

FOR THE INSTALLATION OF

INSTALLATION OF BEVEL GEARED HORIZONTAL GATE VALVES WITHOUT A BY-PASS FOR 18" AND LARGER VALVES

DRAWN BY:	APPROVED BY:	DATE:	△	
CB		12.07.2004	5.13.2005	E-9-2-3

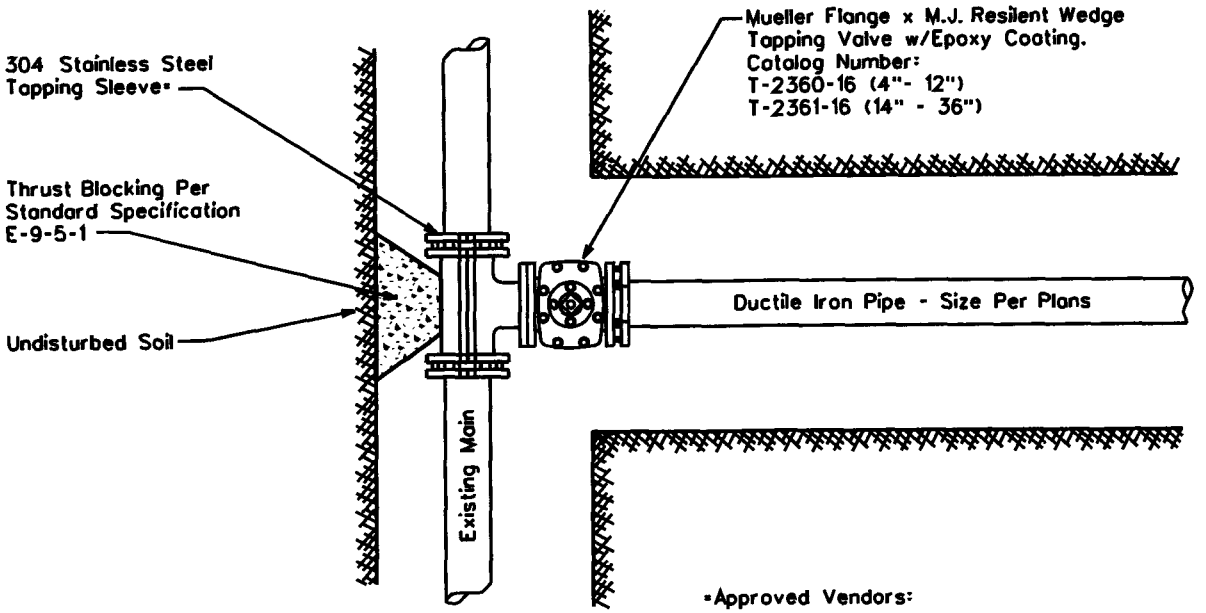

*Approved Vendors:

Mueller, Catalog No. H304, 304 Stainless Steel

JCM, Model 432, 304 Stainless Steel

Romac, 'SST', 304 Stainless Steel

Cascade, 'CST-EX', 304 Stainless Steel

NOTE:

1. All flanges, bolts, and nuts shall be kept free of concrete.
2. Air pressure test the tapping sleeve before the live tap is made.
3. Polywrap all new fittings

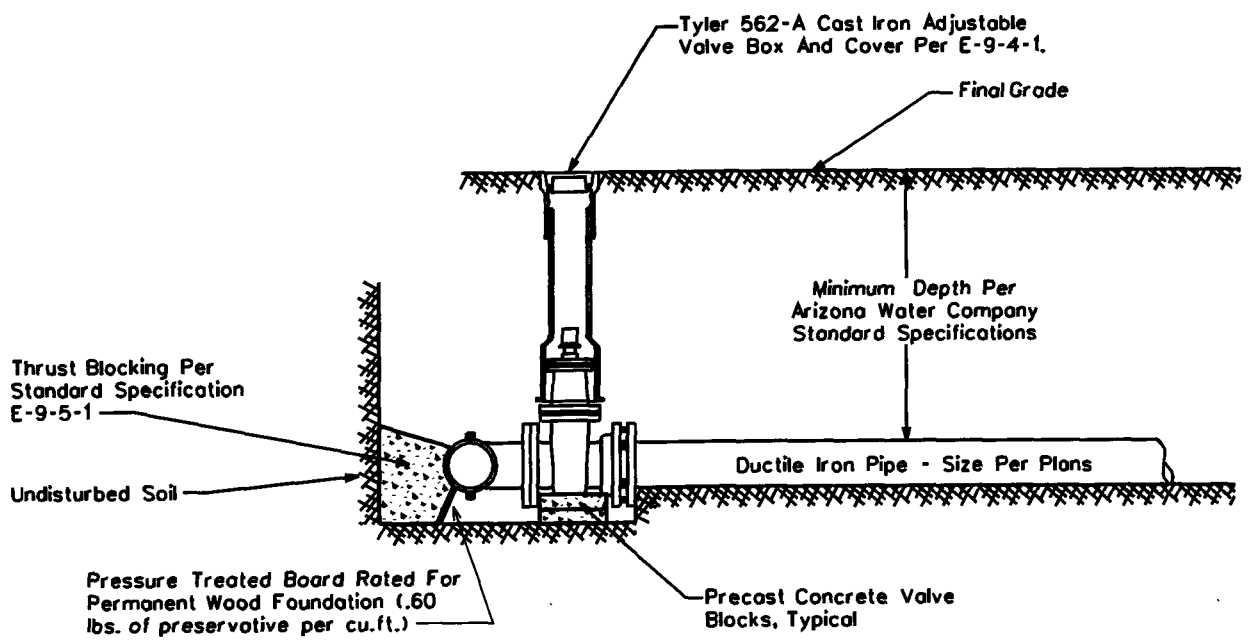

ARIZONA WATER COMPANY

STANDARD SPECIFICATION

FOR THE INSTALLATION OF

TYPICAL TAPPING SLEEVE AND VALVE

DRAWN BY:	APPROVED BY:	DATE:		
CB	MW	03.20.1986	△ 08.23.2006	E-9-3-1

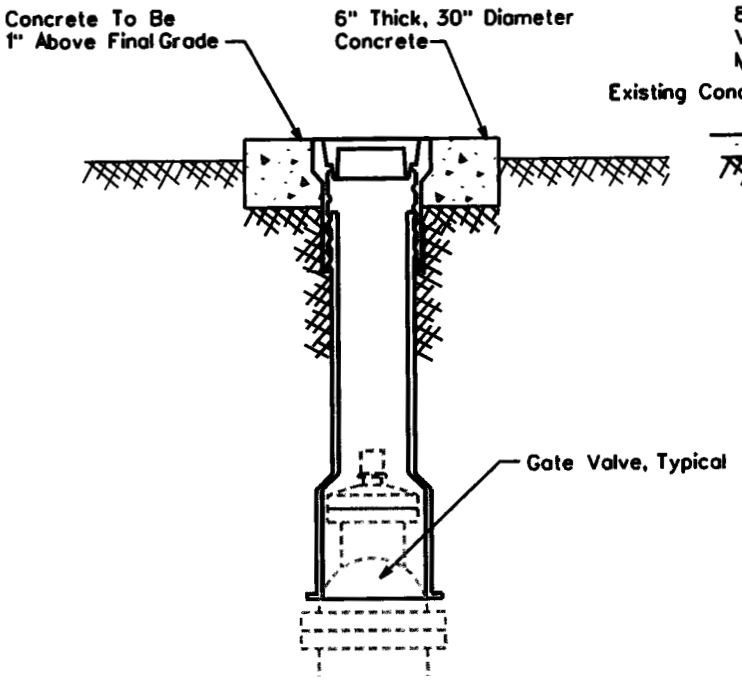

NON-VEHICULAR VALVE BOX

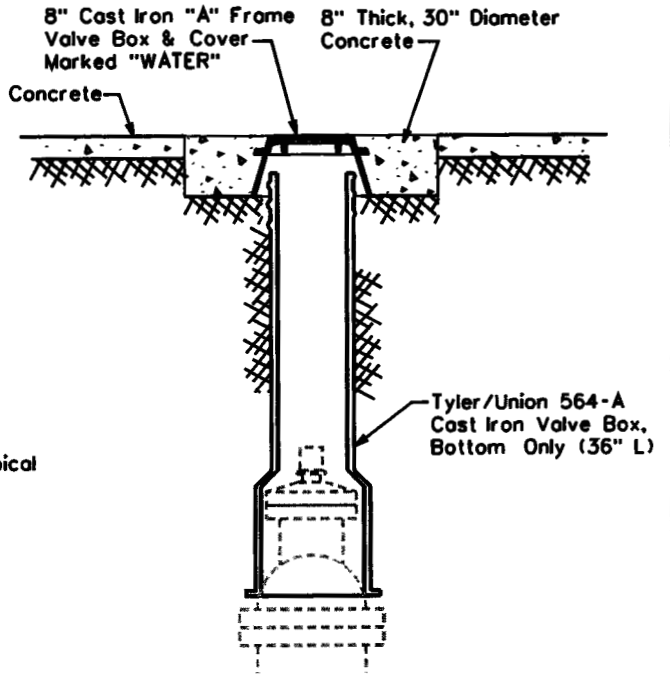

CONCRETE VALVE BOX

For Areas Subject To Vehicular Traffic

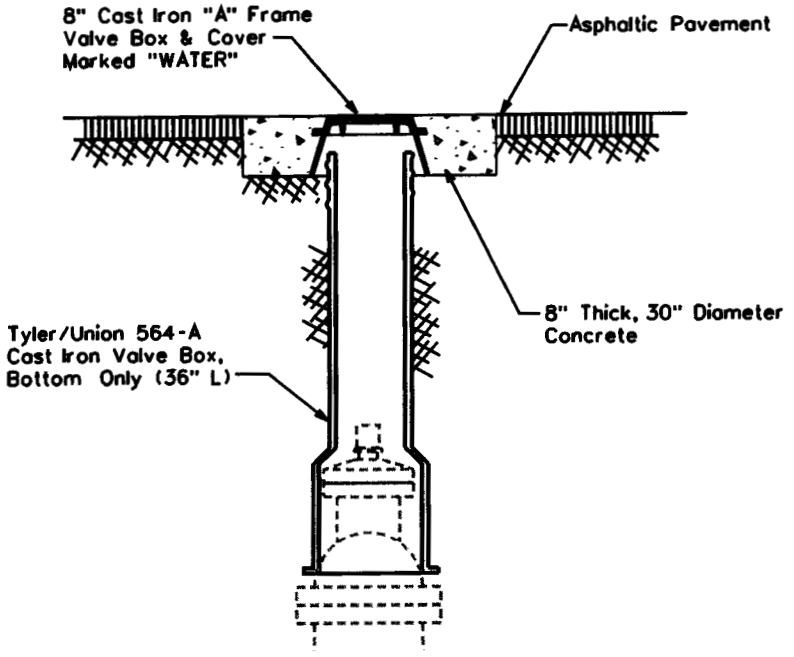

ASPHALT VALVE BOX

For Areas Subject To Vehicular Traffic

NOTE:

1. The Valve Box Shall Be Adjusted To Finished Grade Prior To Placing Of Asphalt And/Or Concrete.
2. For Non-Traffic Areas Use Tyler/Union 562-A, Two-Piece, 6855 Series Or Equivalent Adjustable Cast Iron Valve Box And Cover. Valves 4" To 12"

   For Traffic Areas, Use Tyler/Union 564-A Bottom Section Only With An 8" Cast Iron "A" Frame With Cover. Valves 4" To 12"
3. All Valves Installed Five Feet (5') Deep And Greater Are To Be Installed With A Valve Operator Extension, Mueller Catalog No. A-26441 And Shall Have A Debris Cap
4. Use Minimum Class 'C' Concrete which is defined as concrete whose minimum compressive strength at 14 days reaches 1600psi and at 28 days reaches 2000psi. per MAG Section 725, Table 725-1.

ARIZONA WATER COMPANY

STANDARD SPECIFICATION

FOR THE INSTALLATION OF

TYPICAL VALVE SUBJECT TO NON-VEHICULAR AND VEHICULAR TRAFFIC

DRAWN BY:	APPROVED BY:	DATE:	△ 8.24.2006	
CB	MW	03.20.1986		E-9-4-1

CROSSES

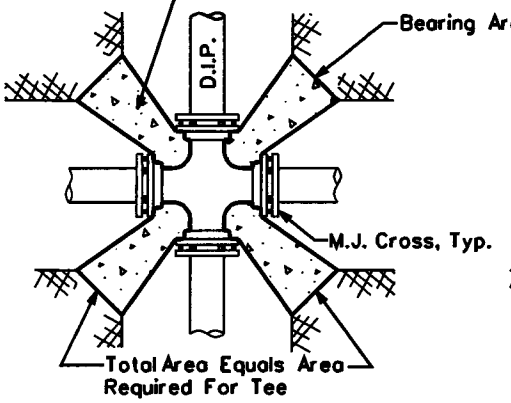

TEES

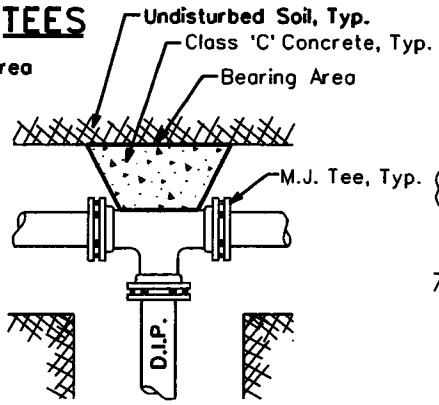

ELLS

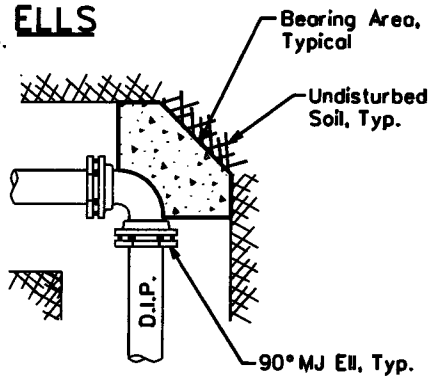

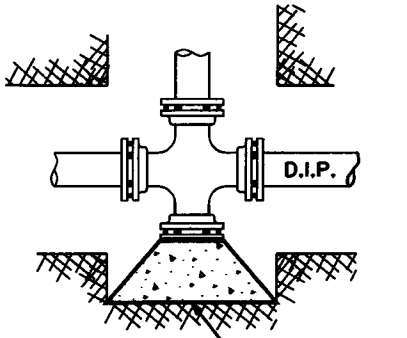

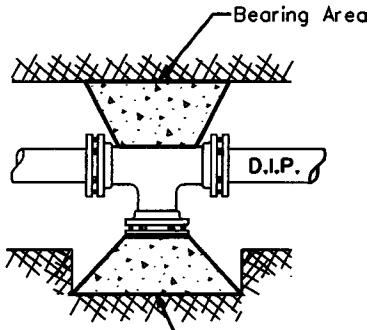

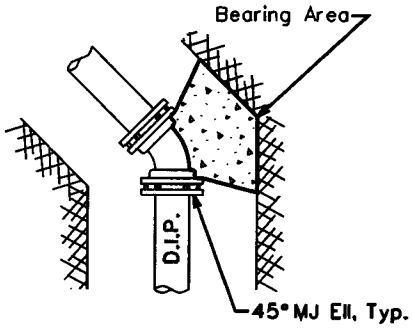

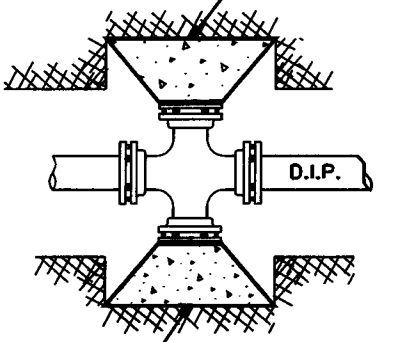

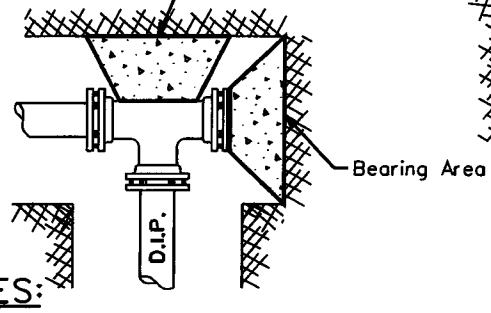

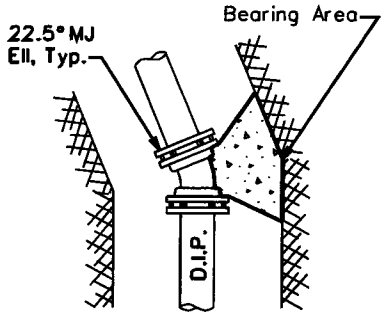

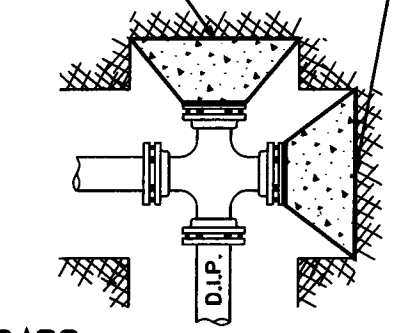

CROSS SECTION

TYPICAL

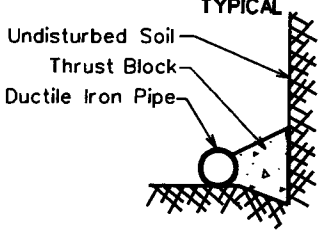

NOTES:

1. Use minimum Class 'C' concrete, which is defined as concrete whose minimum compressive strength at 14 days reaches 1600psi and at 28 days reaches 2000psi. per MAG Section 725, Table 725-1.
2. Thrust blocks are to bear on undisturbed earth with minimum bearing area as shown. If not undisturbed, areas will be increased as required.
3. Place the pressure treated form board in front of all plugs before pouring thrust blocks.
4. Form all non-bearing areas to prevent any concrete from entering any joint.
5. All flanges, bolts and nuts shall be kept free of concrete.
6. Center the bearing area on the pipe centerline and force line.
7. All pipe fittings to be wrapped with polyethylene pipe wrap prior to thrust block installation. (where applicable)

THRUST BLOCK SCHEDULE

PIPE SIZE	TEE, 45°, AND 22.5° ELLS, & PLUGS	90° ELLS
6" And Under	4 Sq.Ft.	6 Sq.Ft.
8"	6 Sq.Ft.	9 Sq.Ft.
12"	13 Sq.Ft.	20 Sq.Ft.
16"	23 Sq.Ft.	32 Sq.Ft.
18" And Larger	Calculated Per Project	

CAPS

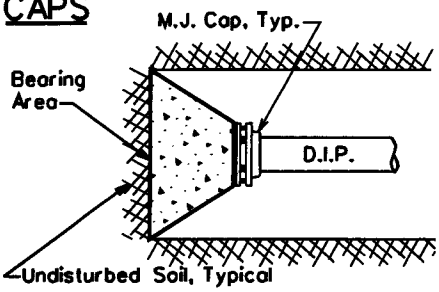

STANDARD SPECIFICATION

FOR THE INSTALLATION OF

TYPICAL THRUST BLOCKING SCHEDULE

DRAWN BY:	APPROVED BY:	DATE:	△	
CB	MW	03.20.1986	05.27.2005	E-9-5-1

NOTES

1. Bars In Conc. Thrust Block To Be Coated w/ 2 Coats Coal Tar Epoxy or by Other Approved Method.

2. Bars To Have 90° Hook @ Their Ends, As Per Table Below.

Pipe Size	Min. Bar Size	"A" Dimension (Hook)	* Min. Block Dimension (WxHxL)
6"	#6	6"	3'x3'x3'
8"	#6	9"	4'x3'x4'
12"	#8	9"	5'x4'x5'
16"	#9	12"	7'x6'x7'

* For 125 P.S.I. Working Pressure

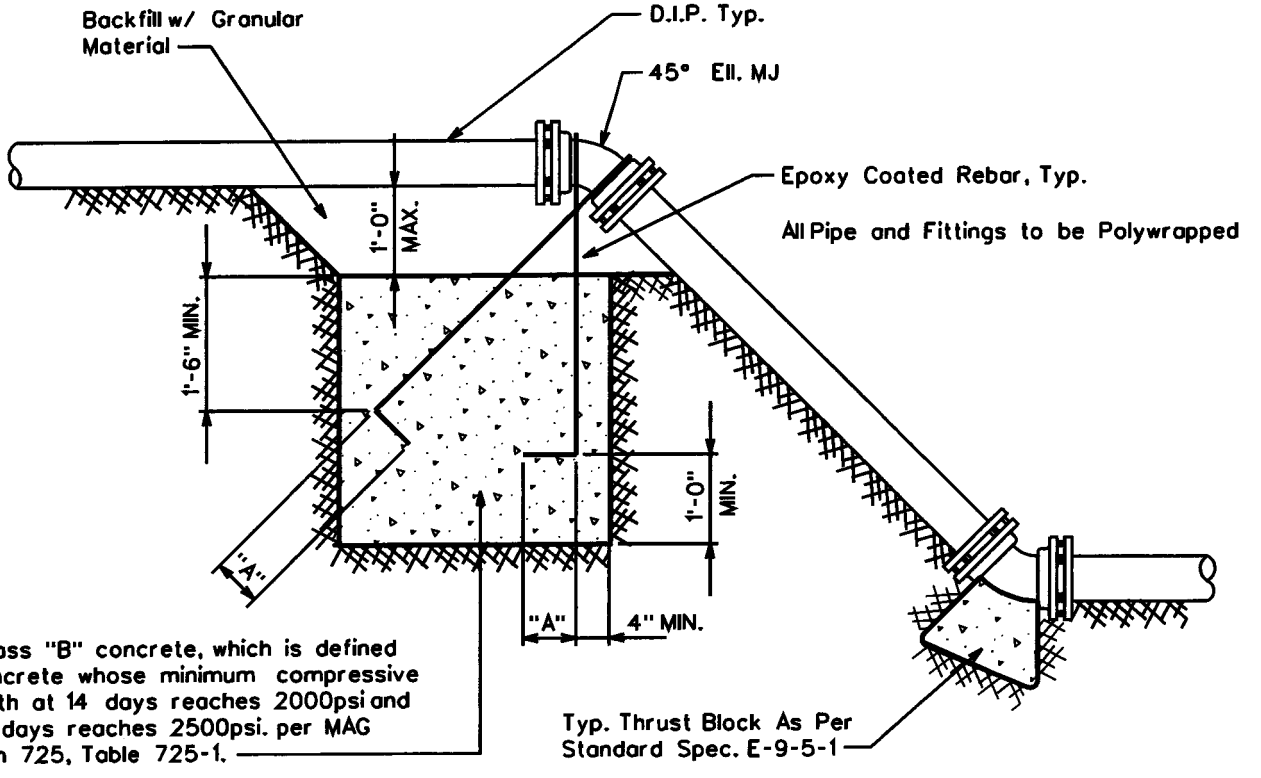

ARIZONA WATER COMPANY

STANDARD SPECIFICATION
FOR THE INSTALLATION OF

THRUST BLOCK FOR VERTICAL BENDS

DRAWN BY:	APPROVED BY:	DATE:		
JPK	MJW	7-5-96	△ 01.16.2007	E-9-5-2

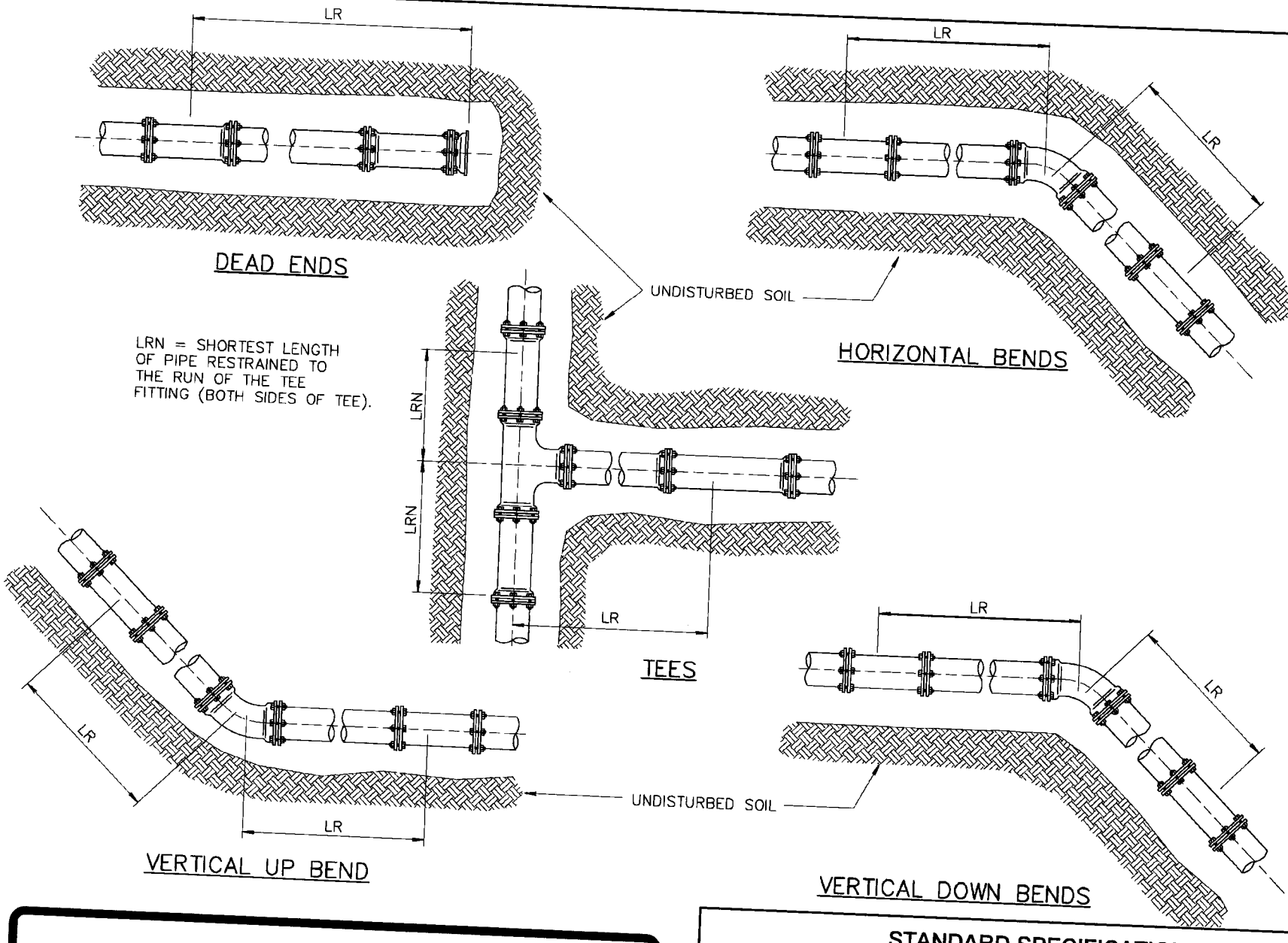

ARIZONA WATER COMPANY

STANDARD SPECIFICATION
FOR THE INSTALLATION OF

JOINT RESTRAINT FOR NEW DUCTILE IRON AND C-900 PVC MAINS

DRAWN BY:	APPROVED BY:	DATE:		
CB	MW	01.16.2007	△	E-9-5-3-1

RESTRAINED LENGTHS, LR, FOR DUCTILE IRON PIPE

NOMINAL PIPE SIZE INCHES	HORIZONTAL BENDS			TEES		VERTICAL OFFSETS						DEAD ENDS
						90° BEND FITTINGS		45° BEND FITTINGS		22-1/2° BEND FITTINGS		
	90°	45°	22-1/2°	LRN=0'	LRN=10'	DOWN BEND	UP BEND	DOWN BEND	UP BEND	DOWN BEND	UP BEND	
4	18	7	4	30	8	31	18	13	7	6	3	31
6	25	10	5	43	20	44	25	18	10	9	5	44
8	32	13	6	56	34	58	32	24	13	11	6	58
10	38	16	8	68	45	69	38	29	16	14	8	69
12	45	19	9	80	57	81	45	34	19	16	9	81
14	51	21	10	91	68	92	51	38	21	18	10	92
16	57	24	11	103	79	104	57	43	24	21	11	104
18	62	26	12	113	90	115	62	48	26	23	12	115
20	68	28	14	125	100	126	68	52	28	25	14	126
24	79	33	16	145	121	147	79	61	33	29	16	147

RESTRAINED LENGTHS, LR, FOR DUCTILE IRON PIPE WITH POLYETHYLENE WRAP

NOMINAL PIPE SIZE INCHES	HORIZONTAL BENDS			TEES		VERTICAL OFFSETS						DEAD ENDS
						90° BEND FITTINGS		45° BEND FITTINGS		22-1/2° BEND FITTINGS		
	90°	45°	22-1/2°	LRN=0'	LRN=10'	DOWN BEND	UP BEND	DOWN BEND	UP BEND	DOWN BEND	UP BEND	
4	26	11	5	69	18	72	26	30	11	14	5	72
6	36	15	7	99	47	102	36	42	15	20	7	102
8	47	19	9	130	78	133	47	55	19	26	9	133
10	56	23	11	157	103	159	56	66	23	32	11	159
12	65	27	13	185	131	187	65	77	27	37	13	187
14	74	31	15	211	156	214	74	89	31	42	15	214
16	82	34	16	238	183	241	82	100	34	48	16	241
18	90	37	18	263	207	266	90	110	38	53	18	266
20	98	41	20	289	233	292	98	121	41	58	20	292
24	113	47	22	337	280	340	113	141	47	68	22	340

NOTES:

1. ALL JOINTS WITHIN THE SPECIFIED LENGTH LR MUST BE RESTRAINED. ALL LENGTHS ARE GIVEN IN FEET.
2. THE MAXIMUM TEST PRESSURE SHALL NOT EXCEED 200 PSI
3. THE MINIMUM DEPTH OF BURY SHALL BE 3' TO TOP OF PIPE.
4. RESTRAINED LENGTHS MAY BE REDUCED WHEN SUPPORTED BY ENGINEERING CALCULATIONS.

ARIZONA WATER COMPANY

STANDARD SPECIFICATION
FOR THE INSTALLATION OF

JOINT RESTRAINT FOR NEW DUCTILE IRON AND C-900 PVC MAINS

DRAWN BY:	APPROVED BY:	DATE:		
CB	MW	01.16.2007	△	E-9-5-3-2

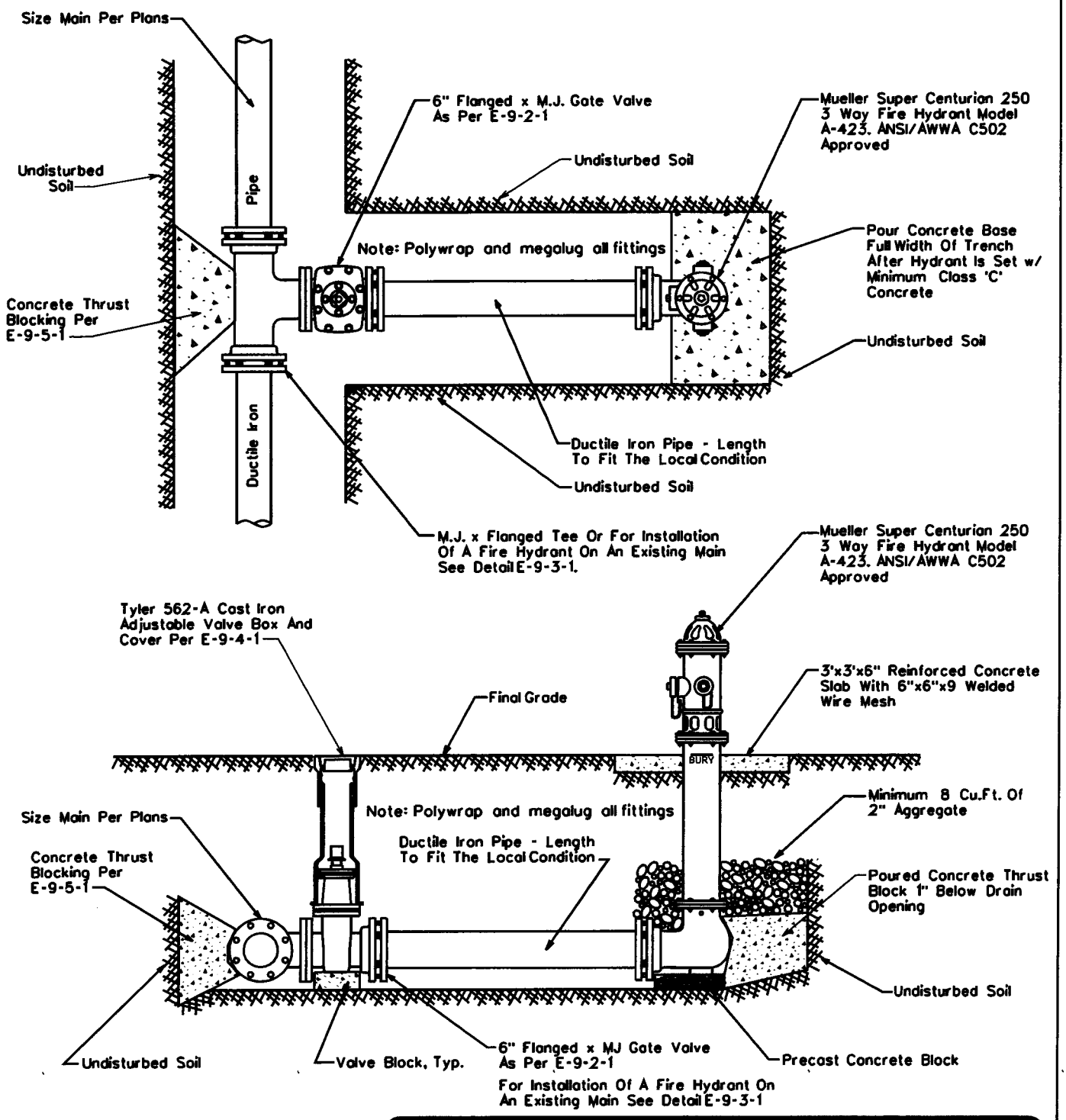

NOTE: All Flanges, Bolts, Nuts and Drain Holes Shall Be Kept Free Of Concrete

ARIZONA WATER COMPANY

STANDARD SPECIFICATION

FOR THE INSTALLATION OF

TYPICAL PERPENDICULAR FIRE HYDRANT

DRAWN BY:	APPROVED BY:	DATE:	△ 08.24.2006	
CB	MW	1-28-91		E-9-6-1

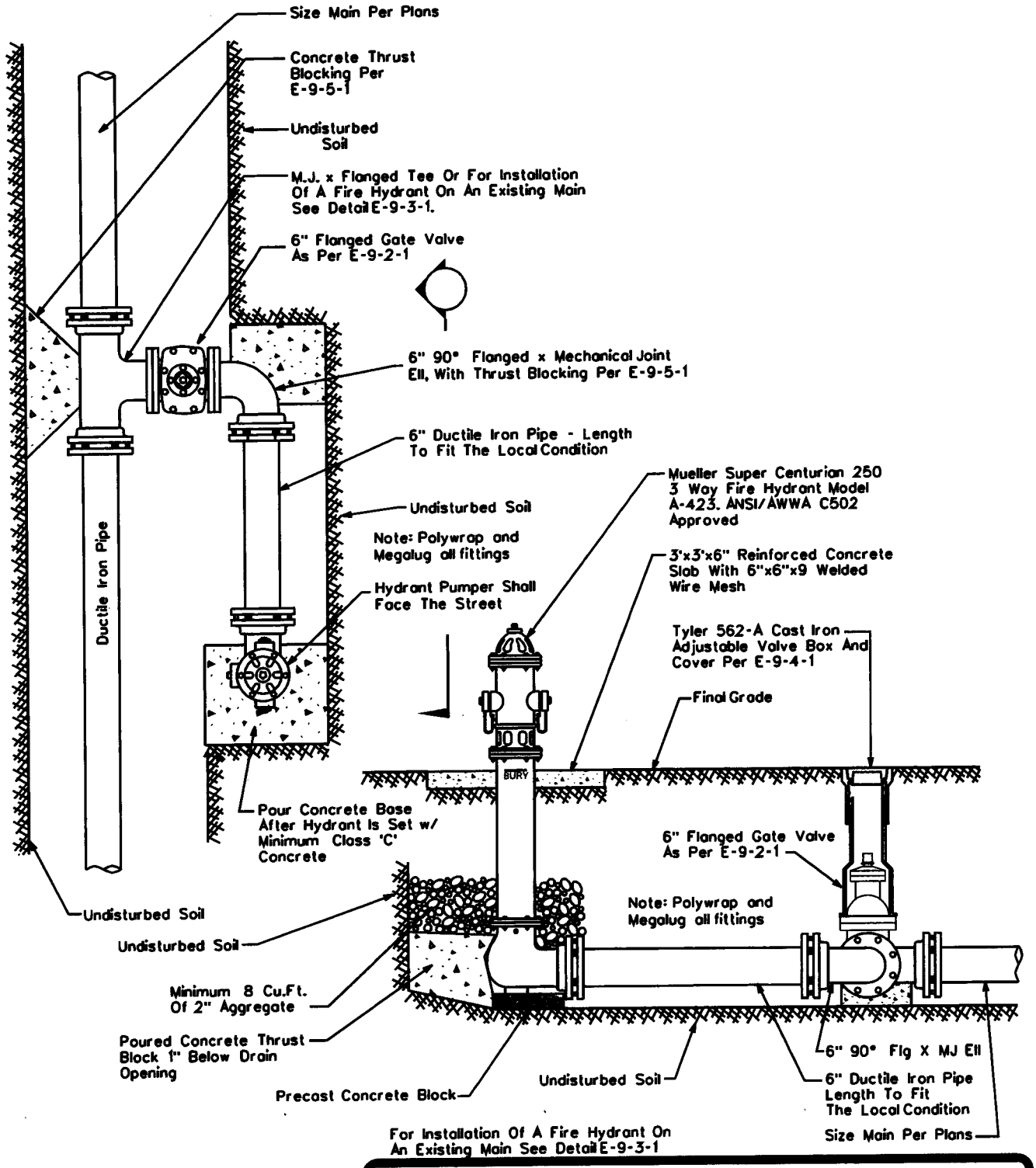

NOTE: All Flanges, Bolts, Nuts And Drain Holes Shall Be Kept Free Of Concrete.

ARIZONA WATER COMPANY

STANDARD SPECIFICATION

FOR THE INSTALLATION OF

TYPICAL PARALLEL FIRE HYDRANT

DRAWN BY:	APPROVED BY:	DATE:	△	
JW	MW	03.20.1986	08.24.2006	E-9-7-1

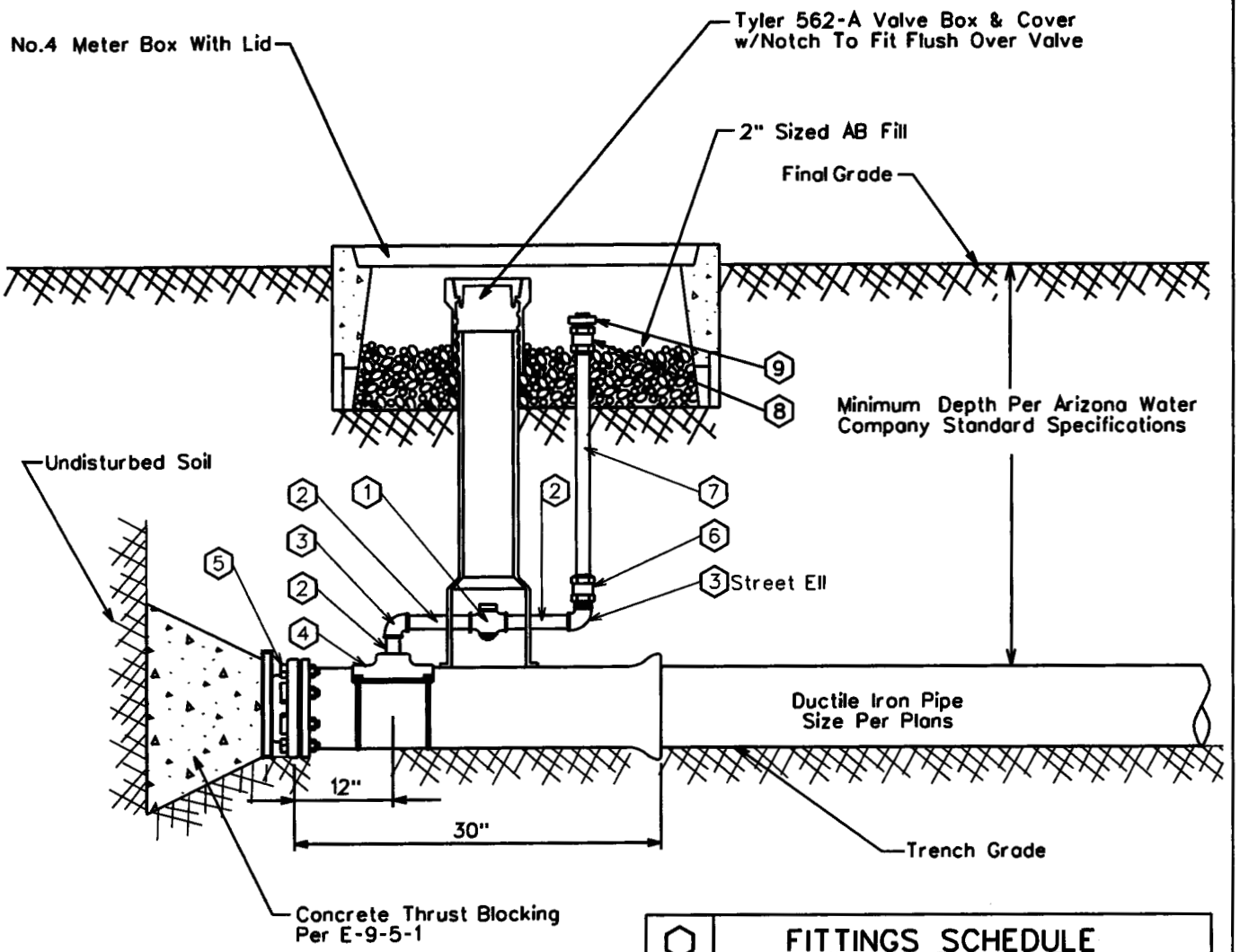

⬡	FITTINGS SCHEDULE
1.	2" Mueller 300 Ball Curb Valve B-20283 FIP x FIP W/ 2" Mueller Brass Square Wrench Nut Adapter B-20299
2.	2" Brass Nipple - Length To Fit Field Conditions
3.	2" Brass 90° Elbow, IPST
4.	Mueller Double Strap Bronze Service Saddle - BR2B
5.	M.J. Plug - Megalug Restraints May Be Required
6.	2" Straight Coupling CC x FIP H-15451
7.	2" Copper Pipe
8.	2" Straight Coupling CC x MIP H-15428
9.	2" Square Head Plug, MIP

ARIZONA WATER COMPANY

STANDARD SPECIFICATION
FOR THE INSTALLATION OF

2" BLOWOFF ASSEMBLY

DRAWN BY:	APPROVED BY:	DATE:	△	
CB	MW	03.20.1986	03.21.2006	E-9-8-1

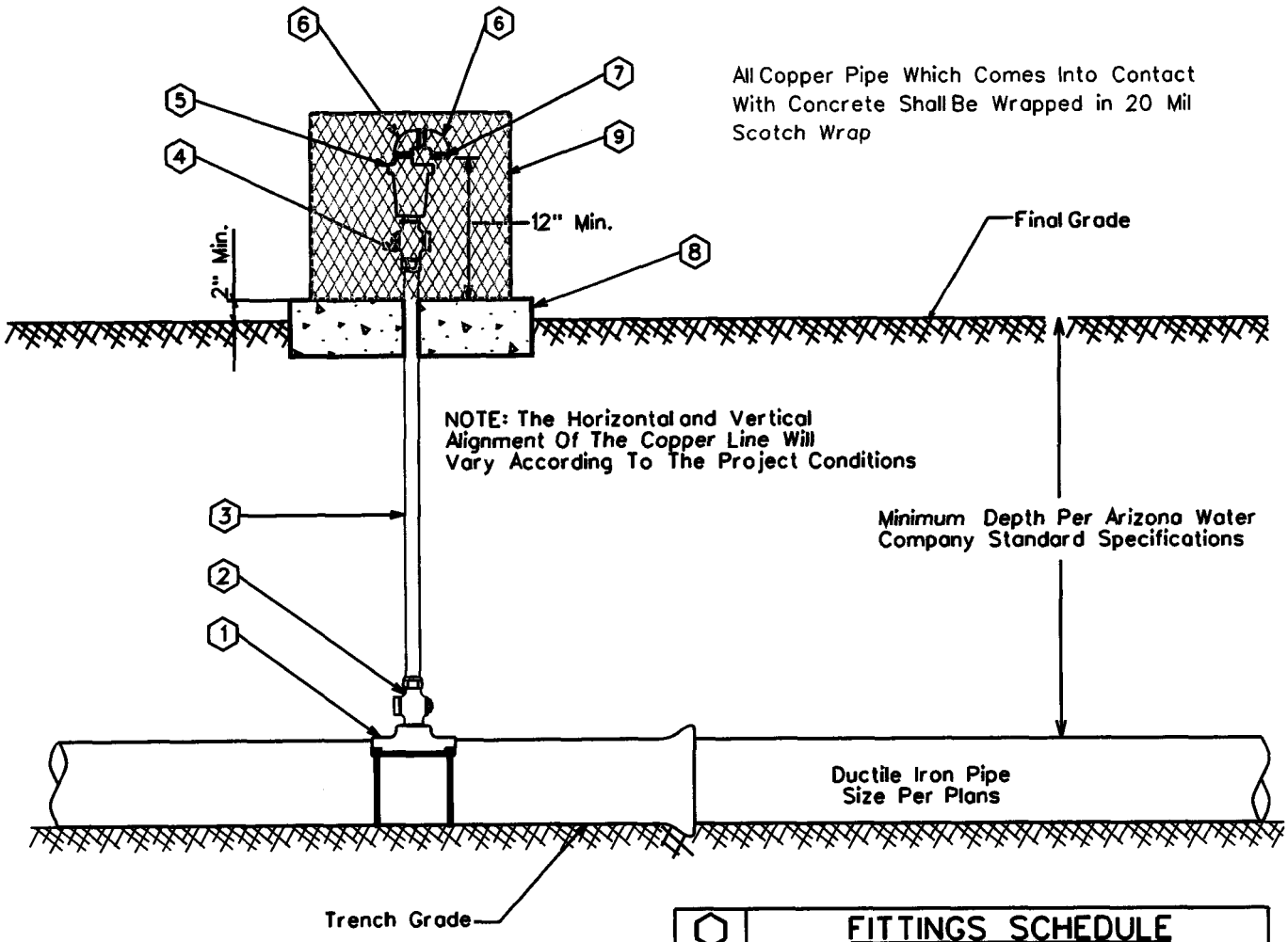

GENERAL NOTES:

1. The valve shall be installed at high points and on long runs to vent the accumulation of air with the line under pressure- see the construction plans for specific locations.
2. The valve shall have a 5/64" orifice with valve sealing faces of stainless steel and BUNA-N rubber.
3. The valve shall be Crispin model AR10 for 6" and larger water mains.
4. Crispin model AR10 valve construction consists of a 1" IPST inlet & 1/2" IPST outlet, cast iron body and top flange with stainless steel float and trim.
5. The air release assembly shall be located out of the path of traffic but within right-of-way or easement.

⬡	FITTINGS SCHEDULE
1.	Mueller BR2B Bronze Service Saddle - Double Strap
2.	1" Mueller B-25008 Taper x Comp. Ball Corp Stop
3.	1" Type 'K' Copper w/NO Splices - Field Fit
4.	1" Mueller B-25028 IP x Comp. Ball Corp Stop
5.	Crispin 1" Air Release Valve, Model AR10
6.	1/2" Brass Street Elbow
7.	No.16 Wire Mesh Screen (Non-Corrodible)
8.	4" Thick Concrete Pad - Class 'C' Concrete
9.	Guardshack, Model GS-1, Available From BPDI, Inc. Available In Leaf Green Or Desert Tan

ARIZONA WATER COMPANY

STANDARD SPECIFICATION
FOR THE INSTALLATION OF

TYPICAL AIR RELEASE VALVE

DRAWN BY:	APPROVED BY:	DATE:	△	
CB	MW	03.20.1997	△08.24.2006	E-9-8-2

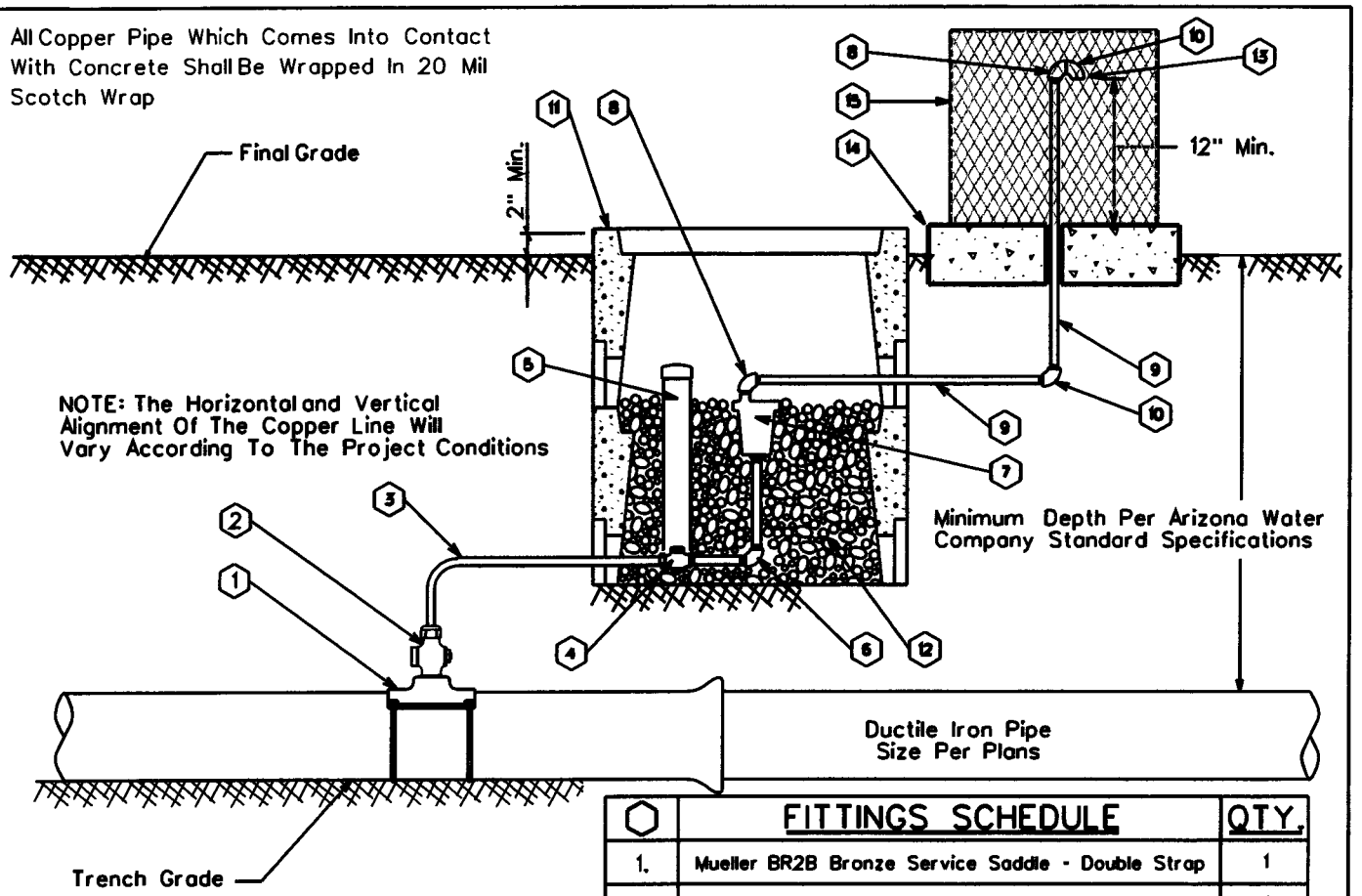

⬡	FITTINGS SCHEDULE	QTY.
1.	Mueller BR2B Bronze Service Saddle - Double Strap	1
2.	1" Mueller B-25008 Taper x Comp. Ball Corp Stop	1
3.	1" Type 'K' Copper w/NO Splices - Field Fit	As Req'd
4.	1" Mueller B-25028 IP x Comp. Ball Corp Stop	1
5.	3" PVC Pipe w/ Cap (Loose Fit)	1
6.	1" x 4" Brass Nipple w/90° Elbow	1
7.	Crispin 1" Air Release Valve, Model AR10	1
8.	½" Brass Street Elbow	2
9.	½" Galvanized Pipe - Length as req'd	2
10.	½" Galvanized 90° Ell	2
11.	Number 1 Meter Box	2
12.	2" Sized AB (Fill Meter Box To The Top Of The Air Release Valve)	As Req'd
13.	No.16 Wire Mesh Screen (Non-Corrodible)	1
14.	4" Thick Concrete Pad - Class 'C' Concrete	1
15.	Guardshack, Model GS-1, Available From BPDI, Inc. Available In Leaf Green Or Desert Tan	1

GENERAL NOTES:

1. The valve shall be installed at high points and on long runs to vent the accumulation of air with the line under pressure- see the construction plans for specific locations.
2. The valve shall have a 5/64" orifice with valve sealing faces of stainless steel and BUNA-N rubber.
3. The valve shall be Crispin model AR10 for 6" and larger water mains.
4. Crispin model AR10 valve construction consists of a 1" IPST inlet & ½" IPST outlet, cast iron body and top flange with stainless steel float and trim.
5. The air release assembly shall be located out of the path of traffic but within the right-of-way or easement.

ARIZONA WATER COMPANY

STANDARD SPECIFICATION
FOR THE INSTALLATION OF

AIR RELEASE VALVE FOR THE NORTHERN REGION

DRAWN BY:	APPROVED BY:	DATE:	△08.24.2006	E-9-8-3
CB	MW	03.20.1997		

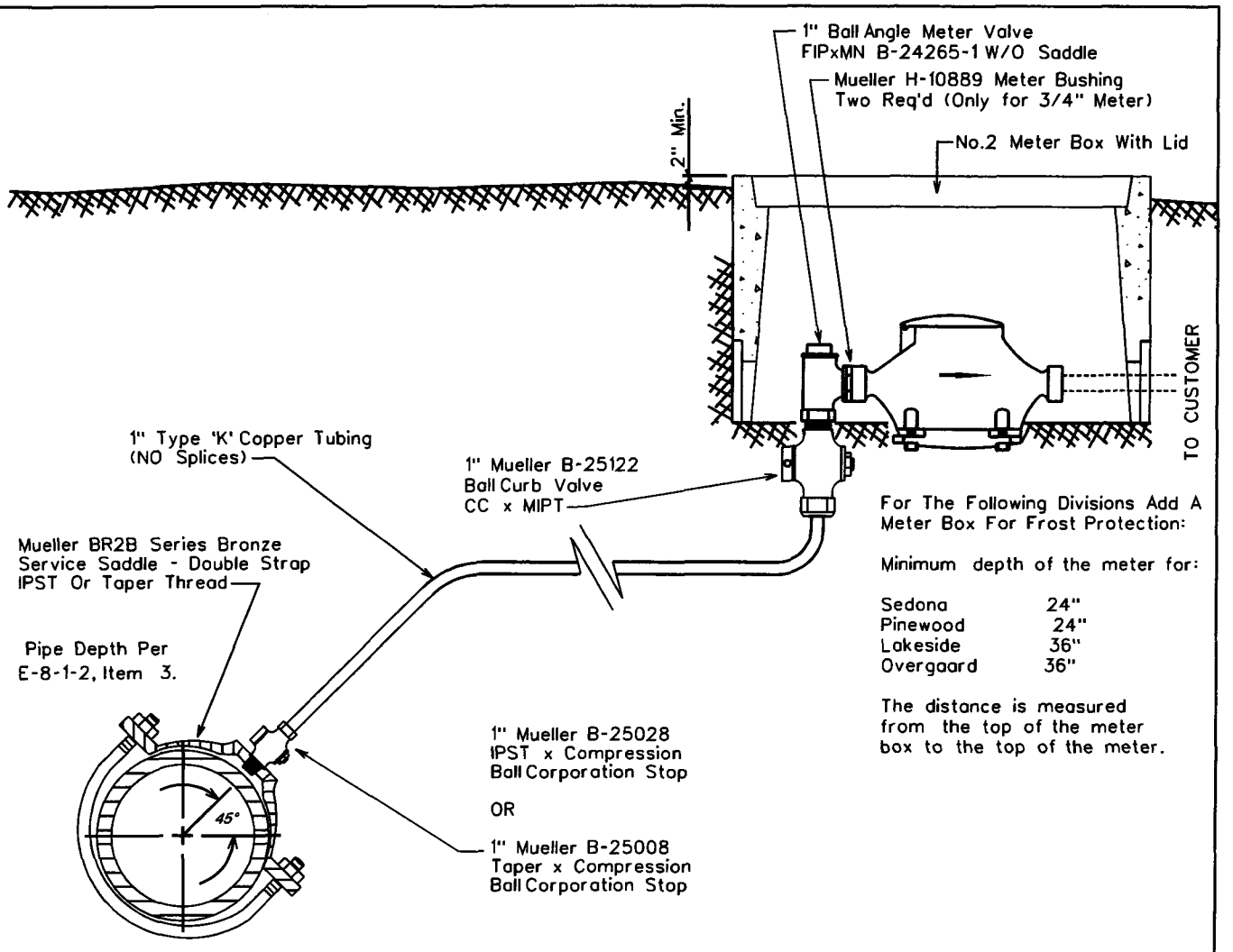

For The Following Divisions Add A Meter Box For Frost Protection:

Minimum depth of the meter for:

Sedona	24"
Pinewood	24"
Lakeside	36"
Overgaard	36"

The distance is measured from the top of the meter box to the top of the meter.

SADDLE TAP TO CA, PVC, OR DI PIPE

NOTE: The minimum distance between taps on mains other than ductile iron is 12"

NOTE:
Only the meter is supplied by Arizona Water Company

ARIZONA WATER COMPANY

STANDARD SPECIFICATION
FOR THE INSTALLATION OF

SINGLE SERVICE CONNECTION FOR A 3/4" OR 1" METER

DRAWN BY:	APPROVED BY:	DATE:		
CCO	M.W.	3/20/86	△ 03.17.2006	E-9-9-1

For The Following Divisions Add A Meter Box For Frost Protection:

Minimum depth of the meter for:

Sedona	24"
Pinewood	24"
Lakeside	36"
Overgaard	36"

The distance is measured from the top of the meter box to the top of the meter.

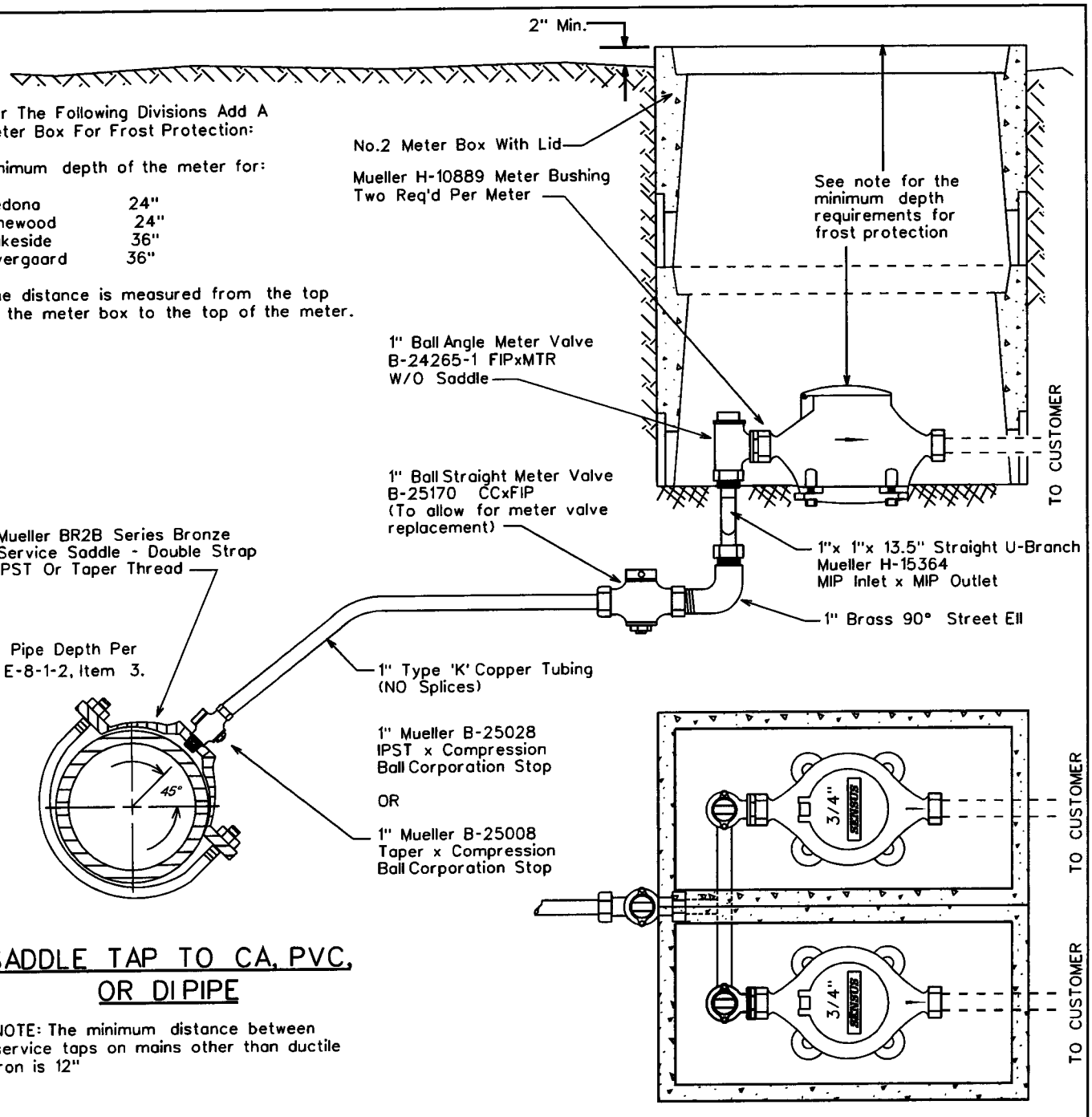

SADDLE TAP TO CA, PVC, OR DI PIPE

NOTE: The minimum distance between service taps on mains other than ductile iron is 12"

NOTE:
Only the meter is supplied by Arizona Water Company

ARIZONA WATER COMPANY

STANDARD SPECIFICATION
FOR THE INSTALLATION OF

DOUBLE SERVICE CONNECTION FOR 3/4" METERS

DRAWN BY:	APPROVED BY:	DATE:	△ 08.25.2006	E-9-10-1
CCO	M.W.	3-20-86		

For The Following Divisions Add A Meter Box For Frost Protection:

Minimum depth of the meter for:

Sedona	24"
Pinewood	24"
Lakeside	36"
Overgaard	36"

The distance is measured from the top of the meter box to the top of the meter.

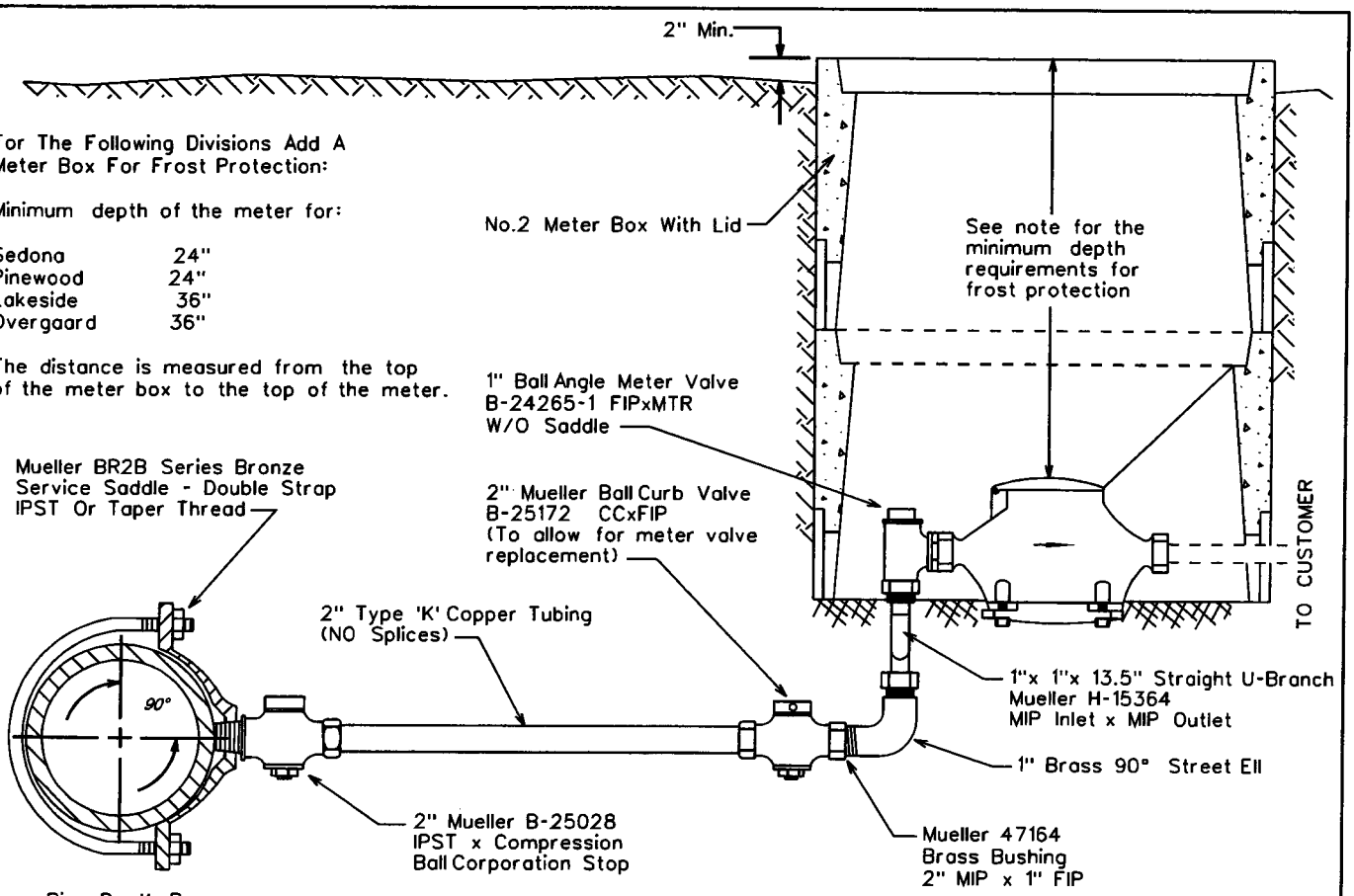

Pipe Depth Per
E-8-1-2, Item 3.

OR

2" Mueller B-25008
Taper x Compression
Ball Corporation Stop

SADDLE TAP TO CA, PVC, OR DI PIPE

NOTE: The minimum distance between service taps on mains other than ductile iron is 12"

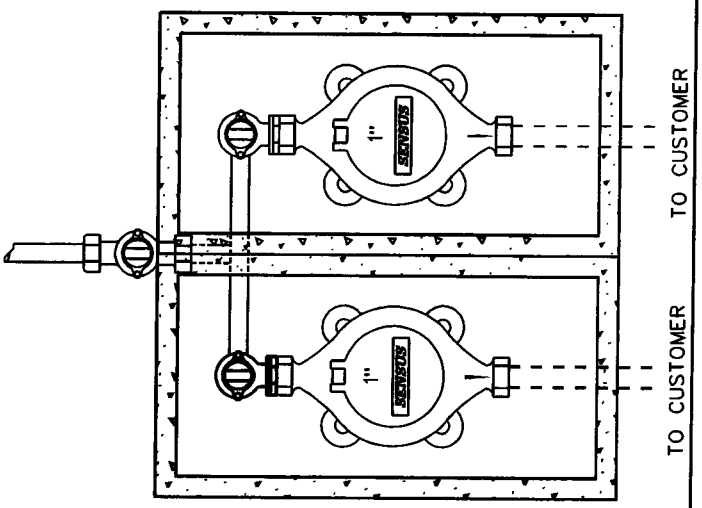

NOTE: THE LENGTH OF SERVICE IS LIMITED TO COMMERICIALLY AVAILABLE ROLLS, TYPICALLY 60 FEET

NOTE:
Only the meter is supplied by Arizona Water Company

ARIZONA WATER COMPANY

STANDARD SPECIFICATION
FOR THE INSTALLATION OF

DOUBLE SERVICE CONNECTION FOR 1" METERS

DRAWN BY:	APPROVED BY:	DATE:	△	
CB	M.W.	03.17.2006	08.29.2006	E-9-10-2

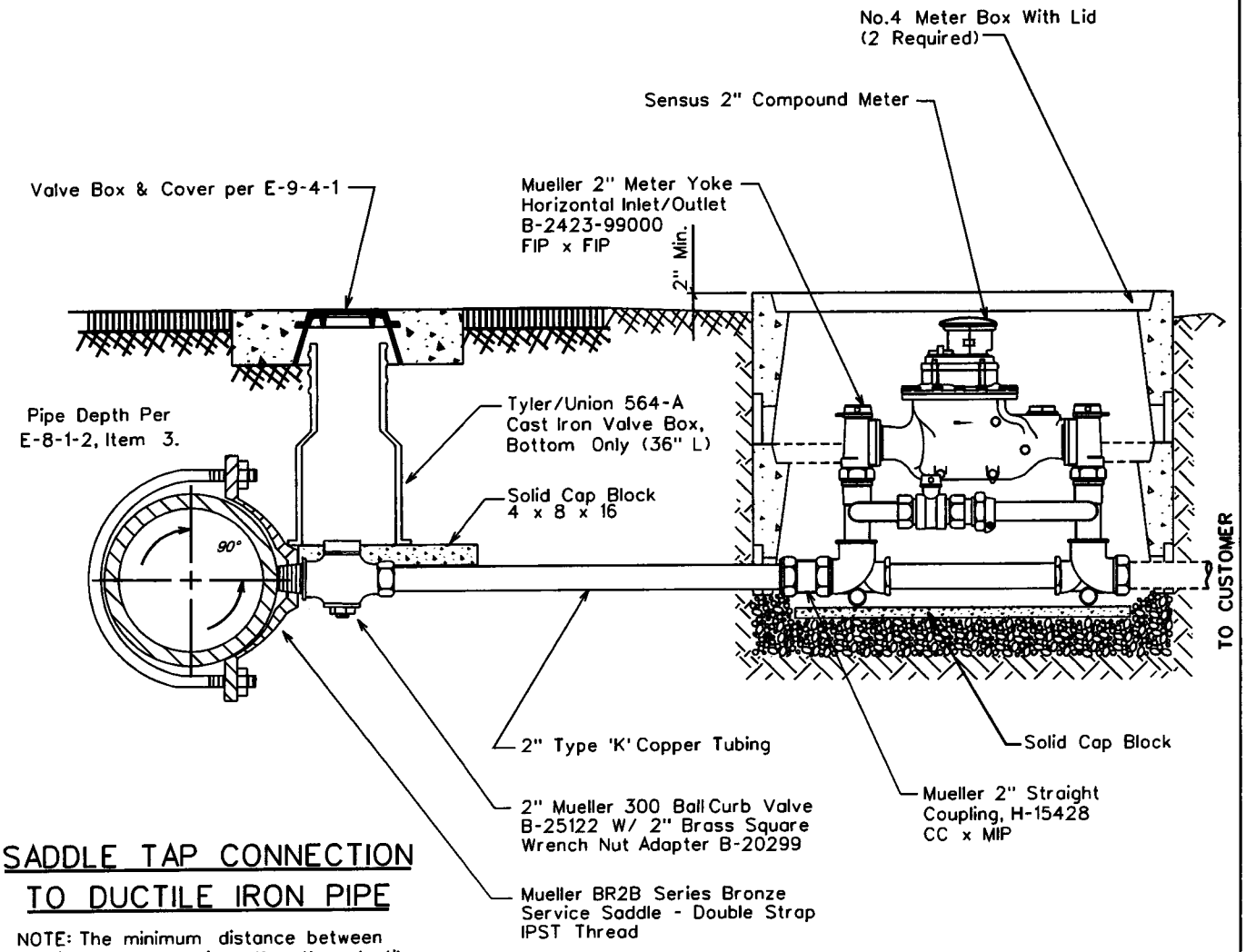

SADDLE TAP CONNECTION TO DUCTILE IRON PIPE

NOTE: The minimum distance between service taps on mains other than ductile iron is 12"

NOTE: THE LENGTH OF SERVICE IS LIMITED TO COMMERICIALLY AVAILABLE ROLLS, TYPICALLY 60 FEET

NOTE:

Only the meter is supplied by Arizona Water Company

ARIZONA WATER COMPANY

STANDARD SPECIFICATION
FOR THE INSTALLATION OF

TYPICAL 2" SERVICE CONNECTIONS

DRAWN BY:	APPROVED BY:	DATE:	△ 08.29.2006	E-9-11-1
JW	M.W.	3/20/86		

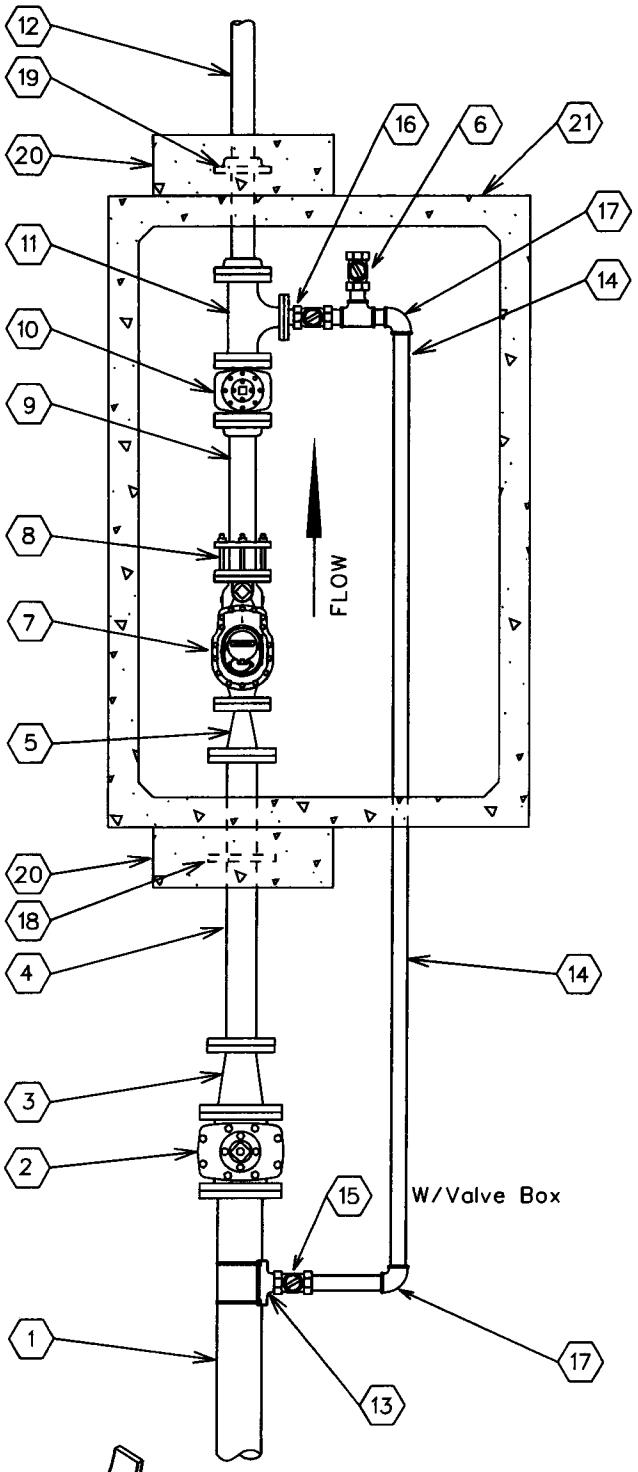

No.	FITTINGS SCHEDULE
1.	6" D.I.P.
2.	6" G.V.B.&C. mj x flng
3.	6"x4" Reducer flng x mj
4.	4"x3'-0" D.I.P. Spool flng x pe
5.	4" x 3" Reducer flng
6.	2" Test Port
7.	3" Compound Meter
8.	3" F.C.A.
9.	3"x2'-0" D.I. Spool flng x pe
10.	3" Gate Valve flng
11.	3"x2" Flg Tee w/ 2" Companion Flange
12.	3"x4'-0" D.I. Spool flng x pe
13.	6"x2" Tapping Saddle
14.	2" Copper Pipe
15.	2" Mueller B25122 Ball Valve w/B20299 Nut
16.	2" Locking Ball Valve (normally closed)
17.	2" Mueller H-15526 90° Ell CC x CC
18.	4" Megalug
19.	3" Slip-On Welding Flange
20.	24"x24"x8" Conc. Thrust Block P.I.P.
21.	575-LA Conc. Vault

NOTE:

1. Use Rowley pipe supports or equivalent as needed (See detail below).
2. Pipe support locations to be determined by field personnel.
3. All copper pipe that comes in contact with concrete to be wrapped w/10-20 Mil. Scotchwrap corrosion protection tape.
4. All mechanical joint fittings are to be megalugged.
5. Use deflection fittings (45° Ells.) to achieve necessary depths & cover as shown on the standard specification for the installation of a concrete vault (E-9-12-5).

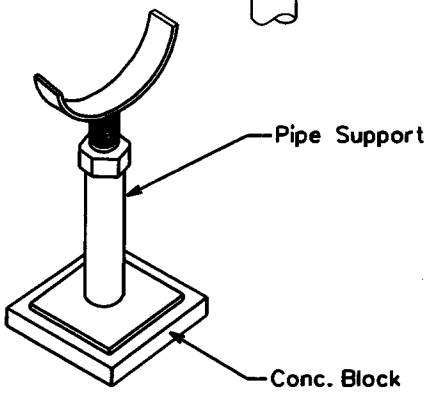

ARIZONA WATER COMPANY

STANDARD SPECIFICATION
FOR THE INSTALLATION OF

3" COMPOUND METER

DRAWN BY:	APPROVED BY:	DATE:		
CCO	MW	10/5/1993	△08.29.2006	E-9-12-1

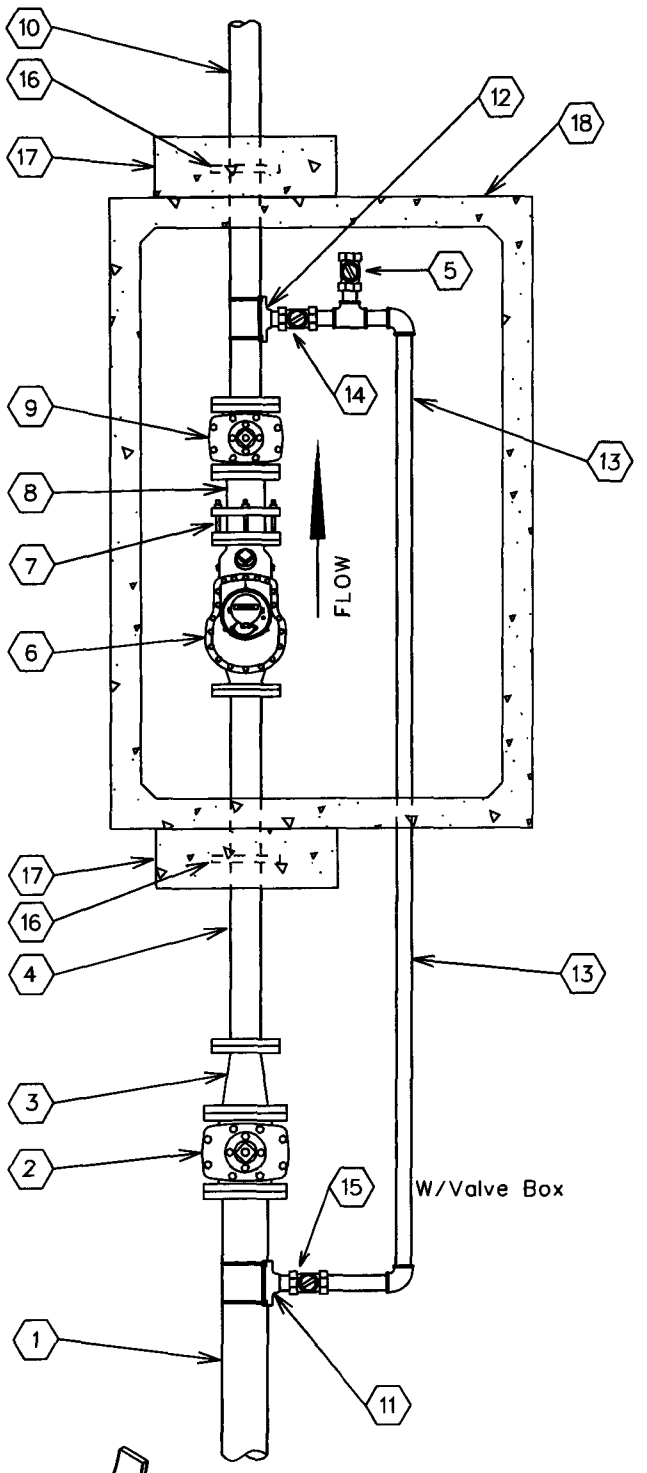

No.	FITTINGS SCHEDULE
1.	6" D.I.P.
2.	6" G.V.B.&C. mj x flng
3.	6"x4" Reducer flng x mj
4.	4"x3'-0" D.I.P. Spool flng x pe
5.	2" Test Port
6.	4" Compound Meter
7.	4" F.C.A.
8.	4"x1'-0" D.I.P. Spool flng x pe
9.	4" Gate Valve flng
10.	4"x4'-0" D.I.P. Spool flng x pe
11.	6"x2" Tapping Saddle
12.	4"x2" Tapping Saddle
13.	2" Copper Pipe
14.	2" Ball Valve / Locking (Normally Closed)
15.	2" Mueller B25122 Ball Valve w/B20299 Nut
16.	4" Megalug
17.	24"x24"x8" Conc. Thrust Block P.I.P.
18.	575-LA Conc. Vault

NOTE:

1. Use Rowley pipe supports or equivalent as needed (See detail below).
2. Pipe support locations to be determined by field personnel.
3. All copper pipe that comes in contact with concrete to be wrapped w/10-20 Mil. Scotchwrap corrosion protection tape.
4. All mechanical joint fittings are to be megalugged.
5. Use deflection fittings (45° Ells.) to achieve necessary depths & cover as shown on the standard specification for the installation of a concrete vault (E-9-12-5).

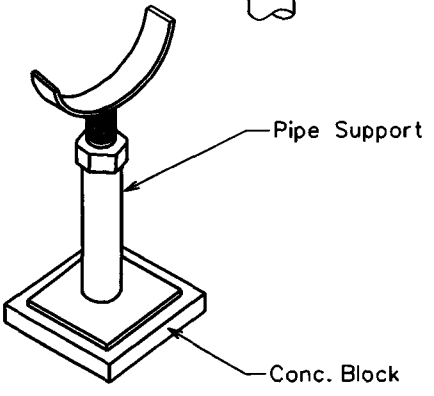

ARIZONA WATER COMPANY

STANDARD SPECIFICATION
FOR THE INSTALLATION OF

4" COMPOUND METER

DRAWN BY:	APPROVED BY:	DATE:		
CCO	MW	10/5/1993	△08.29.2006	E-9-12-2

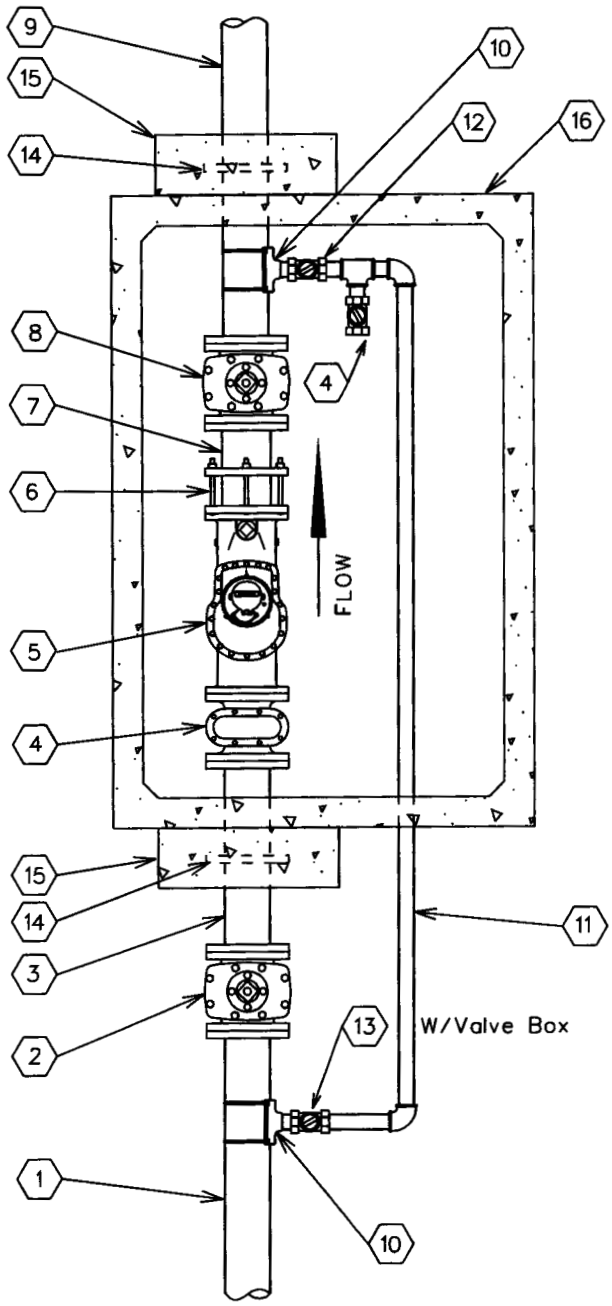

No.	FITTINGS SCHEDULE
1.	6" D.I.P.
2.	6" G.V.B.&C. mj
3.	6"x 3'-0" D.I.P. Spool flng x pe
4.	2" Test Port
5.	6" Compound Meter
6.	6" F.C.A.
7.	6"x 1'-0" D.I.P. Spool flng x pe
8.	6" Gate Valve flng
9.	6"x 4'-0" D.I.P. Spool flng x pe
10.	6"x2" Tapping Saddle
11.	2" Copper Pipe
12.	2" Ball Valve / Locking (Normally Closed)
13.	2" Mueller B25122 Ball Valve w/B20299 Nut
14.	6" Megalug
15.	24"x24"x8" Conc. Thrust Block P.I.P.
16.	575-LA Conc. Vault

NOTE:

1. Use Rowley pipe supports or equivalent as needed (See detail below).
2. Pipe support locations to be determined by field personnel.
3. All copper pipe that comes in contact with concrete to be wrapped w/10-20 Mil. Scotchwrap corrosion protection tape.
4. All mechanical joint fittings are to be megalugged.
5. Use deflection fittings (45° Ells.) to achieve necessary depths & cover as shown on the standard specification for the installation of a concrete vault (E-9-12-5).

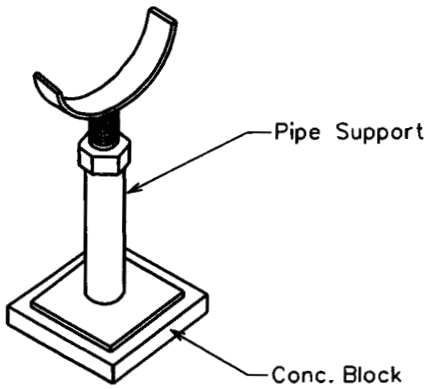

ARIZONA WATER COMPANY

STANDARD SPECIFICATION
FOR THE INSTALLATION OF

6" COMPOUND METER

DRAWN BY:	APPROVED BY:	DATE:		
CCO	MW	10/5/1993	△08.29.2006	E-9-12-3

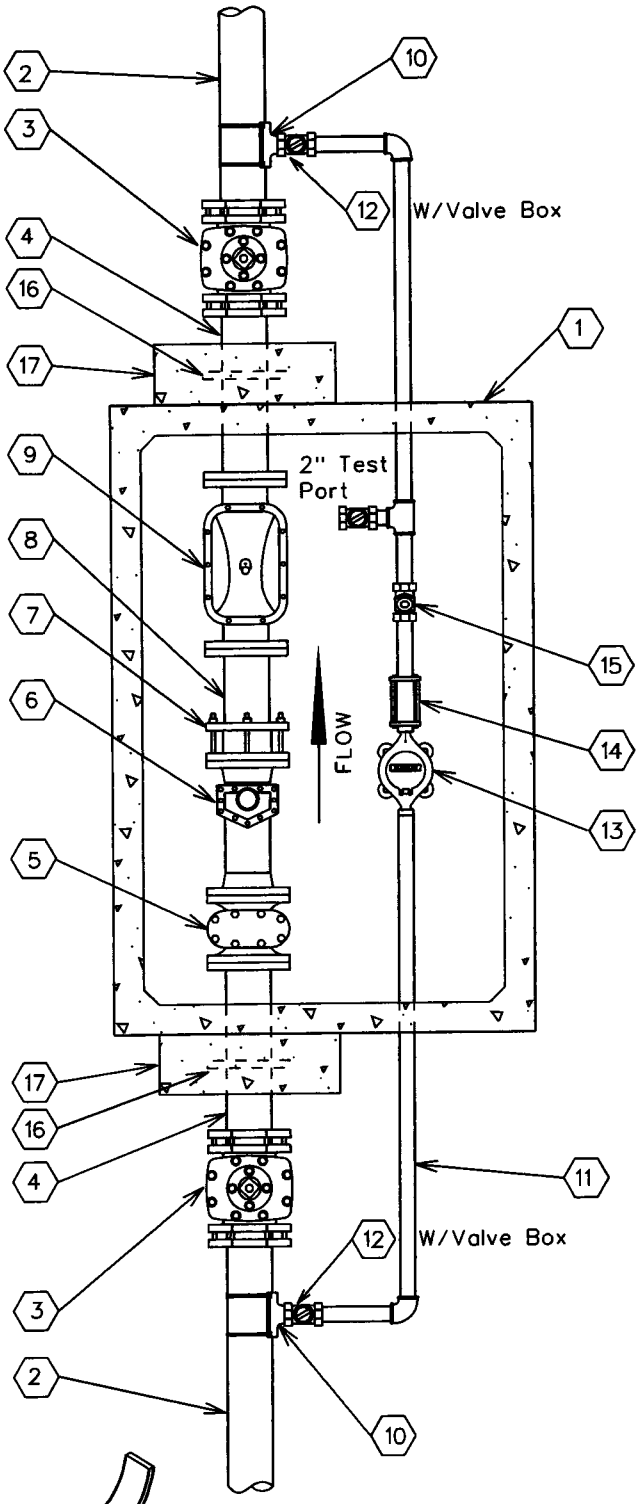

No.	FITTINGS SCHEDULE
1.	575-LA Conc. Vault
2.	6" D.I.P.
3.	6" G.V.B.&C. m.j.
4.	6" x 3'-0" D.I.P. SPool Piece flng x pe
5.	6" Strainer
6.	6" Turbo Meter
7.	6" F.C.A.
8.	6" x 2'-0" D.I.P. Spool Piece flng x pe (TRIM SPOOL PIECE TO 3x THE PIPE DIA.)
9.	6" Detector Check
10.	6"x*N" Tapping Saddle
11.	*N" Copper Pipe
12.	*N" Ball Valve (Locking)
13.	*N" Meter
14.	*N" Coup. Adapt.
15.	*N" Flapper Check Valve
16.	6" Megalug
17.	24"x24"x8" Conc. Thrust Block P.I.P.

*N - Size To Be determined By A.W.Co.

NOTE:

1. Use Rowley pipe supports or equivalent as needed (See detail below).
2. Pipe support locations to be determined by field personnel.
3. All copper pipe that comes in contact with concrete to be wrapped w/10-20 Mil. Scotchwrap corrosion protection tape.
4. All mechanical joint fittings are to be megalugged.
5. Use deflection fittings (45° Ells.) to achieve necessary depths & cover as shown on the standard specification for the installation of a concrete vault (E-9-12-5).
6. To change from a 6" service to a 4" service, change all listed 6" materials to 4" materials.

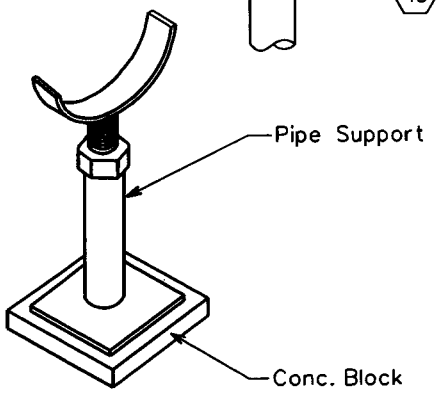

ARIZONA WATER COMPANY

STANDARD SPECIFICATION
FOR THE INSTALLATION OF

6" COMPOUND SERVICE

DRAWN BY:	APPROVED BY:	DATE:		
CCO	MW	10/05/1993	△08.29.2006	E-9-12-4

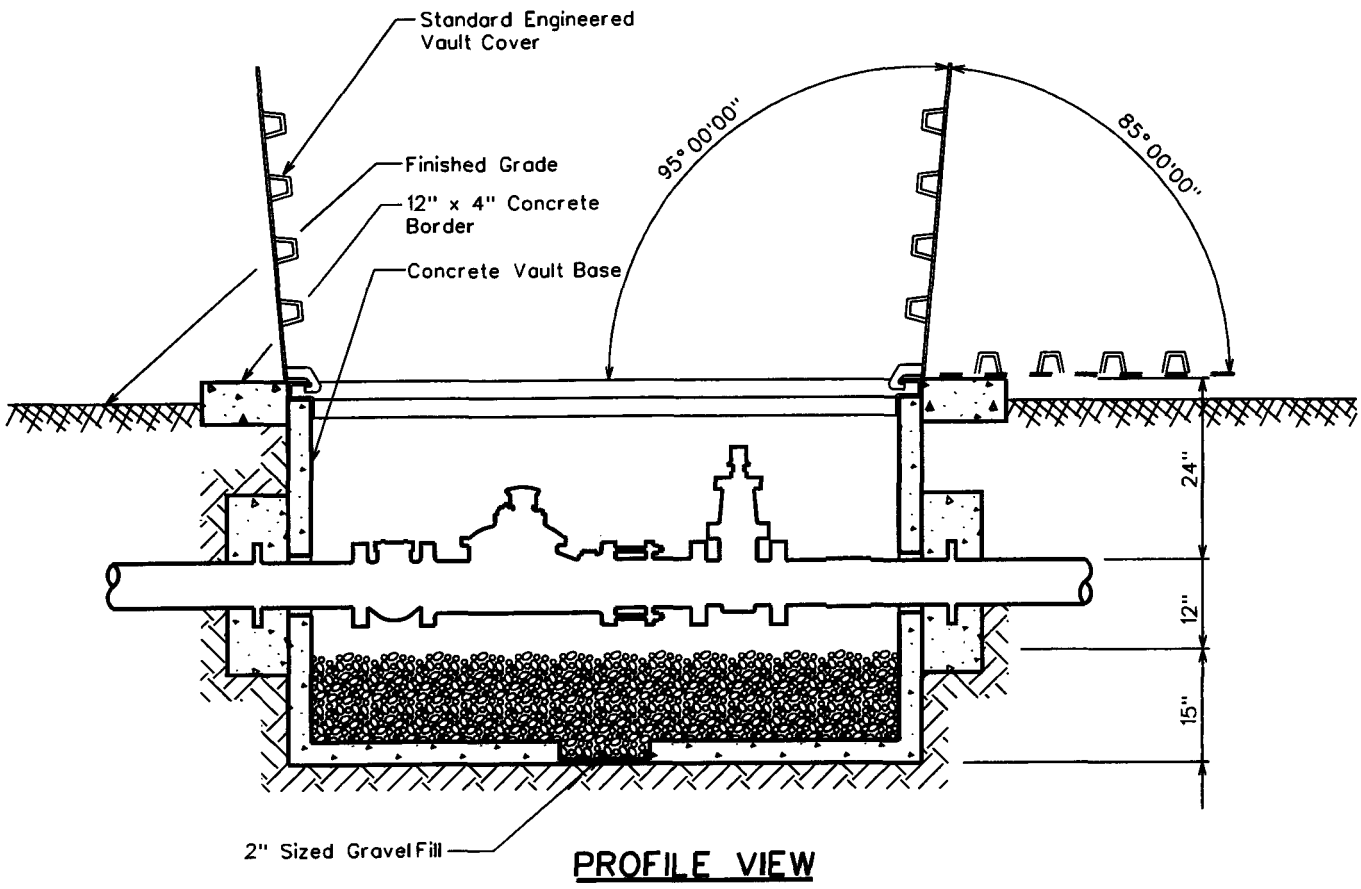

PROFILE VIEW

CONCRETE VAULT & COVER SPECIFICATIONS

Vault - Base No. 575-BL
Cover - Standard Engineered Vault Cover
. 4874 Aluminum Diamond Plate Cover For Non-Traffic Loading Areas
Or
. 4874 Galvanized Steel Diamond Plate Cover W/ H-20 Traffic Loading
. Double Torsion Spring Assisted Doors W/ Recessed Hasp & Safety Latches

NOTES

1. Total Depth Of Concrete Vault To Be A Maximum Of 3'-0" From Top Of Vault Cover To Top Of Gravel Fill.
2. Service Connections Larger Than 6" In Diameter Will Conform To The Same Vault & Cover Specifications. Size Of Vault & Cover To Be Determined By A.W.Co. Engineers.

ARIZONA WATER COMPANY

STANDARD SPECIFICATION
FOR THE INSTALLATION OF

CONCRETE VAULT

DRAWN BY:	APPROVED BY:	DATE:		
CCO	MW	10/5/1993	△ 05.17.2001	E-9-12-5

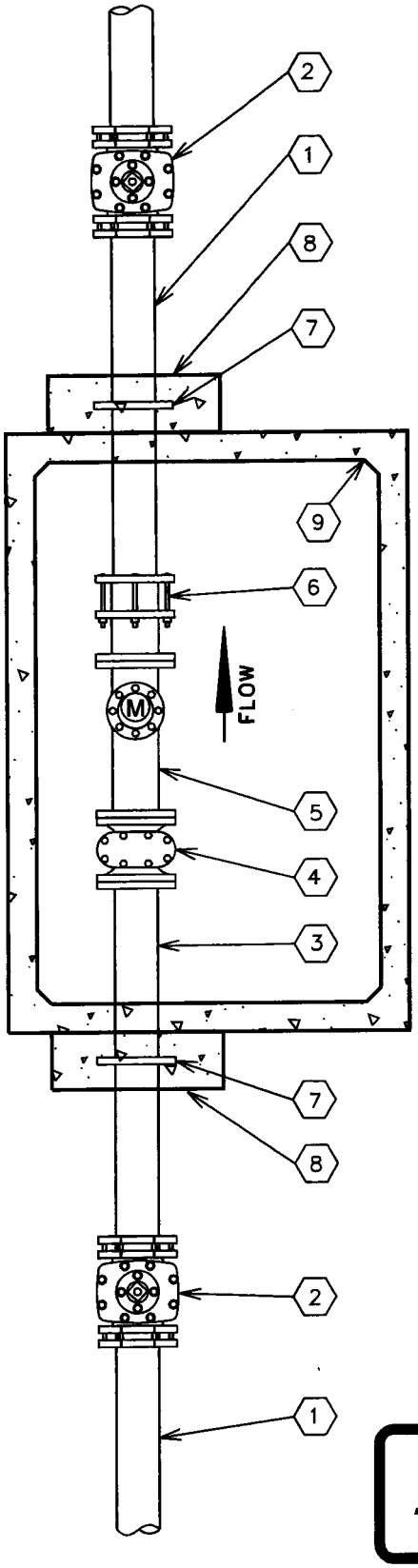

No.	FITTINGS SCHEDULE
1.	Ductile Iron Pipe
2.	Gate Valve M.J.
3.	D.I.P. Spool Piece Flg x Pe (10xDia.)
4.	Meter Strainer
5.	Propeller Meter
6.	Flanged Coupling Adapter
7.	Megalug Gland (Thrust Anchor)
8.	Concrete Thrust Block P.I.P.
9.	Concrete Vault

NOTE:

1. Use Rowley pipe supports or equivalent as needed (See E-9-12-4).
2. Pipe support locations to be determined by field personnel.
3. All Sched. 40 Stl. pipe outside of vault to be wrapped w/10-20 Mil. Scotchwrap corrosion protection tape.
4. All mechanical joint fittings to are to be megalugged.
5. Use deflection fittings (45° Ells.) to achieve necessary depths & cover as shown on the standard specification for the installation of a concrete vault (E-9-12-5).

ARIZONA WATER COMPANY

STANDARD SPECIFICATION

FOR THE INSTALLATION OF

NON-POTABLE PROPELLER METER

DRAWN BY:	APPROVED BY:	DATE:		
JPK	MW	7-20-95	△	E-9-12-6

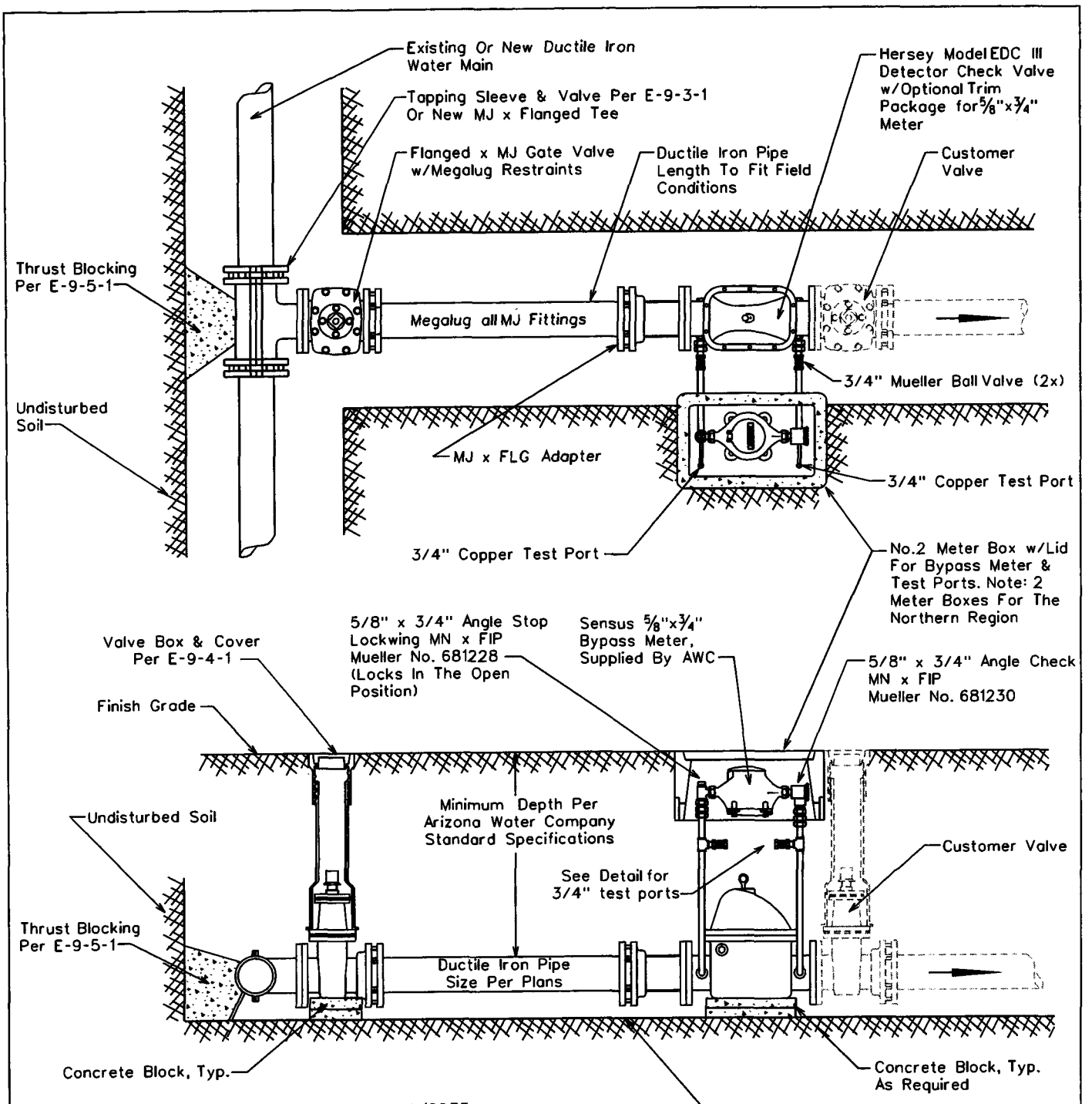

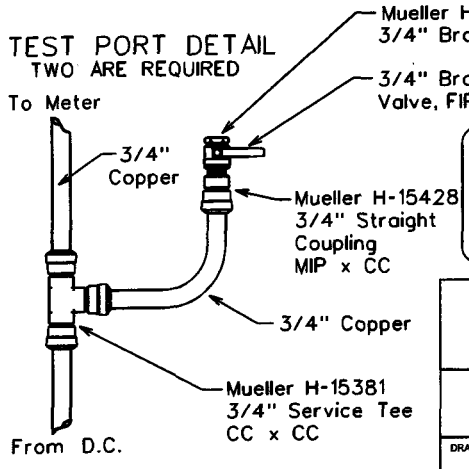

ARIZONA WATER COMPANY

STANDARD SPECIFICATION
FOR THE INSTALLATION OF

TYPICAL 4" THRU 8" DETECTOR CHECK VALVES

DRAWN BY:	APPROVED BY:	DATE:		
CB	MW	10.16.1990	△03.09.2007	E-9-13-1

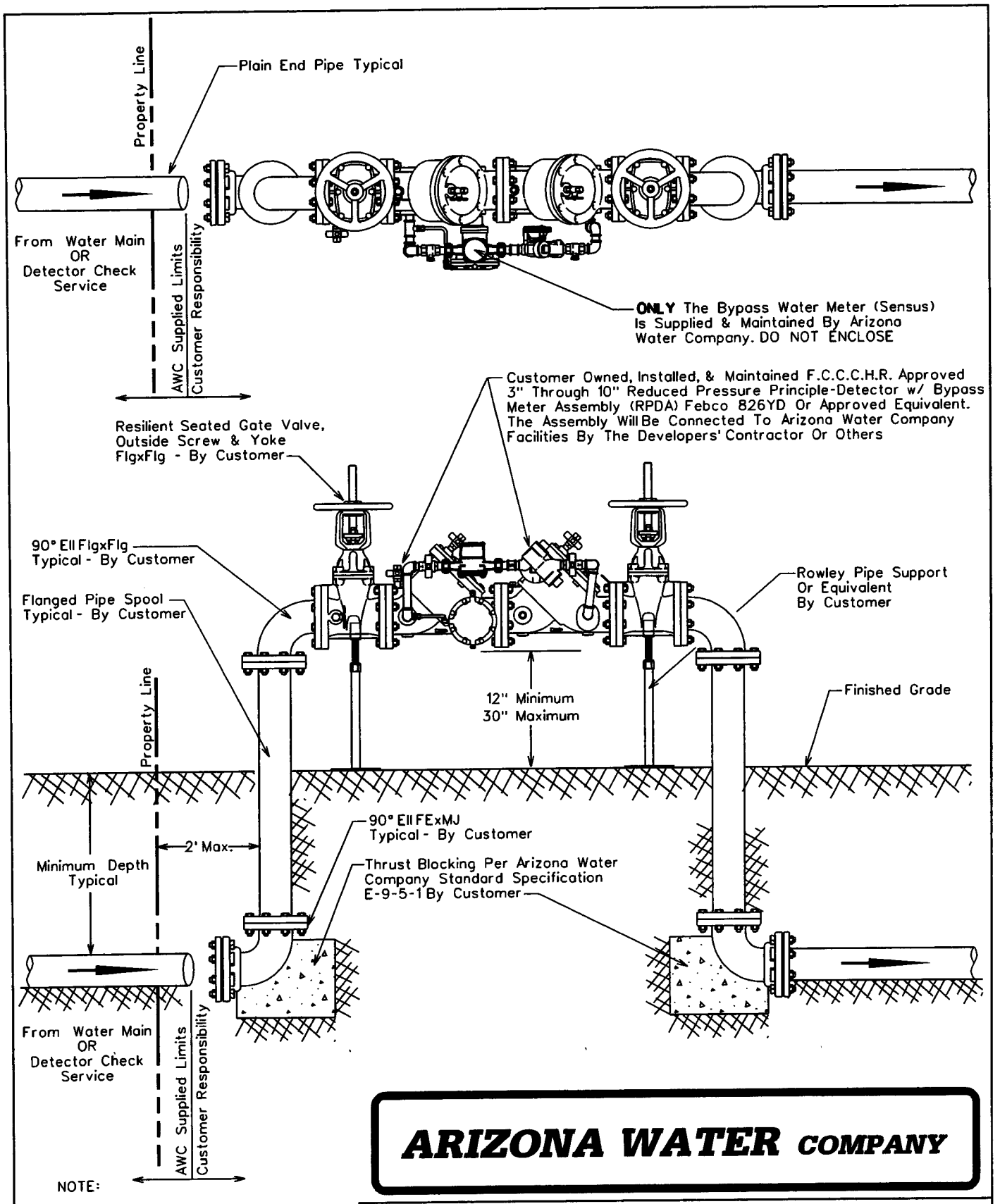

ARIZONA WATER COMPANY

NOTE:

Minimum Depth Of Cover Over
6" & 8" Mains is 36 Inches,
12" & Greater is 48 Inches
Unless Otherwise Specified

STANDARD SPECIFICATION

FOR THE INSTALLATION OF

3" THRU 10" REDUCED PRESSURE PRINCIPLE-DETECTOR
WITH BYPASS METER ASSEMBLY (RPDA) FOR FIRELINE SERVICES

DRAWN BY:	APPROVED BY:	DATE:	△	
CB	MW	10-13-98	△1-19-2000	E-9-13-2

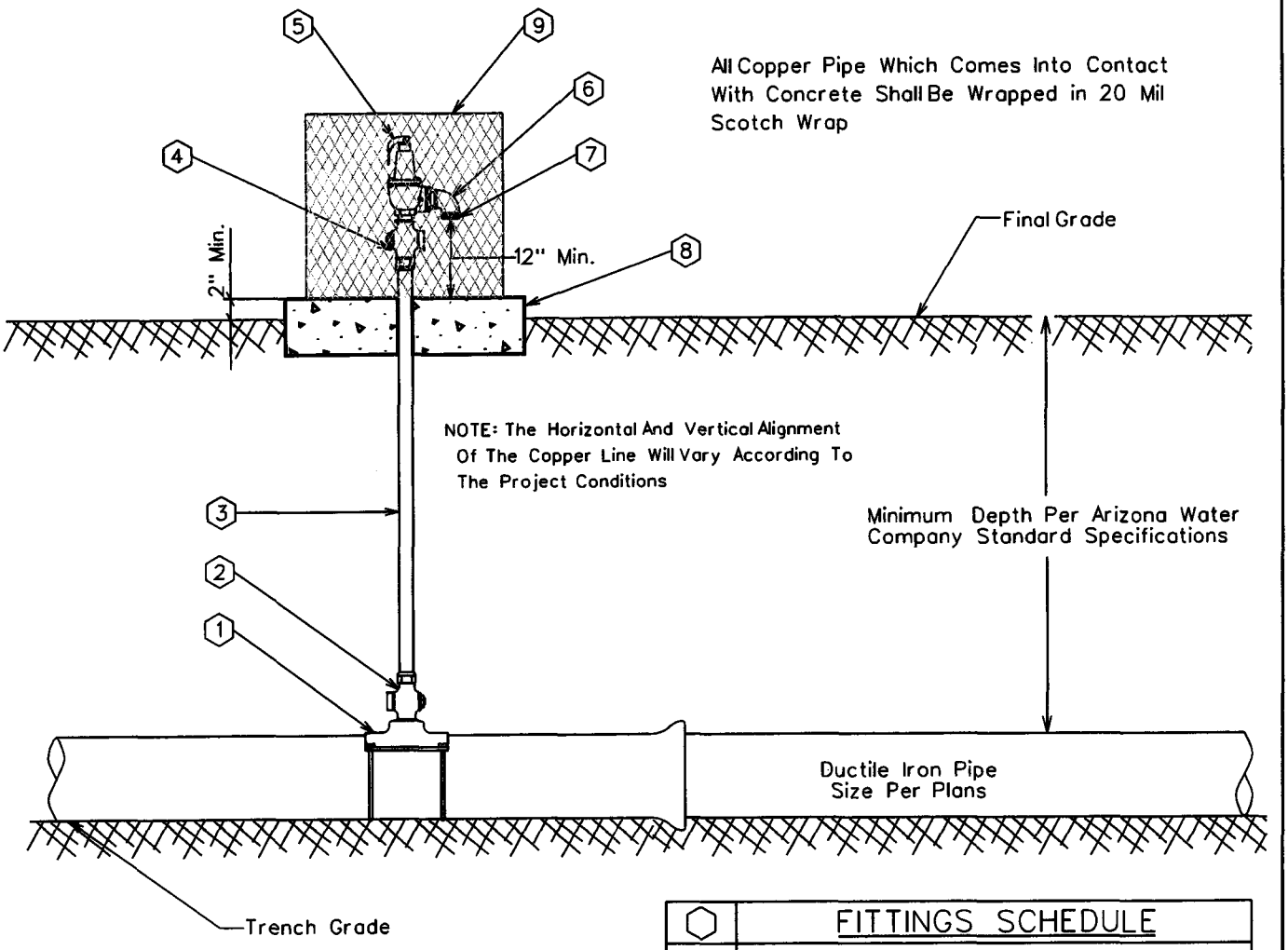

⬡	FITTINGS SCHEDULE
1.	Mueller BR2B Bronze Service Saddle - Double Strap
2.	2" Mueller B-25008 Taper x Comp. Ball Corp Stop
3.	2" Type 'K' Copper w/NO Splices - Field Fit
4.	2" Mueller B-25028 IP x Comp. Ball Corp Stop
5.	2" Pressure Relief Valve Watts 174A With A 2" Inlet / 2" Outlet 30-150 psi W/ Bronze Body
6.	2" Brass Street Elbow
7.	No.16 Wire Mesh Screen (Non-Corrodible)
8.	4" Thick Concrete Pad - Class 'C' Concrete
9.	Vandal enclosure to be centered on the concrete pad

NOTE:

1. Pressure relief valves are typically located just down stream of a pressure reducing station or where system conditions might be subject to greater than allowable pressures.
2. The relief valve assembly and vandal enclosure shall be located out of the roadway, but within the right-of-way or easement.

ARIZONA WATER COMPANY

STANDARD SPECIFICATION
FOR THE INSTALLATION OF

TYPICAL PRESSURE RELIEF VALVE ASSEMBLY

DRAWN BY:	APPROVED BY:	DATE:	△	
CCO	MW	3/20/1986	08.29.2006	E-9-14-1

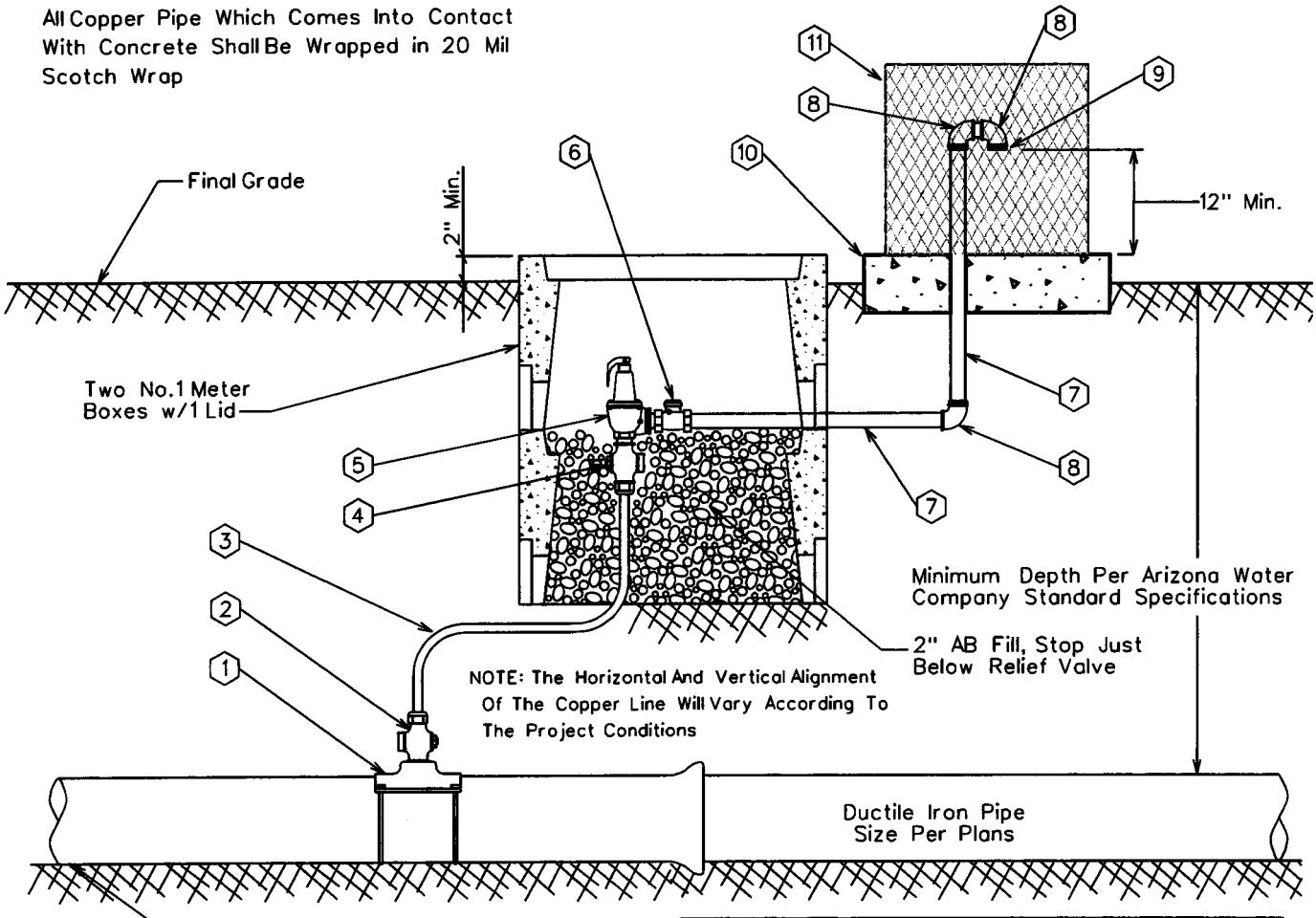

NOTE:

1. Pressure relief valves are typically located just down stream of a pressure reducing station or where system conditions might be subject to greater than allowable pressures.
2. The relief valve assembly and vandal enclosure shall be located out of the roadway, but within the right-of-way or easement.

⬡	FITTINGS SCHEDULE
1.	Mueller BR2B Bronze Service Saddle - Double Strap
2.	2" Mueller B-25008 Taper x Comp. Ball Corp Stop
3.	2" Type 'M' Rigid Copper w/NO Splices - Field Fit
4.	2" Mueller B-25028 IP x Comp. Ball Corp Stop
5.	2" Pressure Relief Valve Watts 174A With A 2" Inlet / 2" Outlet 30-150 psi W/ Bronze Body
6.	2" Bronze Check Valve Watts Series CV
7.	2" Schedule 40 Cut Pipe - Field Fit
8.	2" Brass Street Elbow
9.	No.16 Wire Mesh Screen (Non-Corrodible)
10.	4" Thick Concrete Pad - Class 'C' Concrete
11.	Guardshack, Model GS-1, Available From BPDI, Inc. Available In Leaf Green Or Desert Tan

ARIZONA WATER COMPANY

STANDARD SPECIFICATION
FOR THE INSTALLATION OF

PRESSURE RELIEF VALVE - NORTHERN REGION

DRAWN BY:	APPROVED BY:	DATE:		
CCO	MW	3/20/1986	△08.29.2006	E-9-14-2

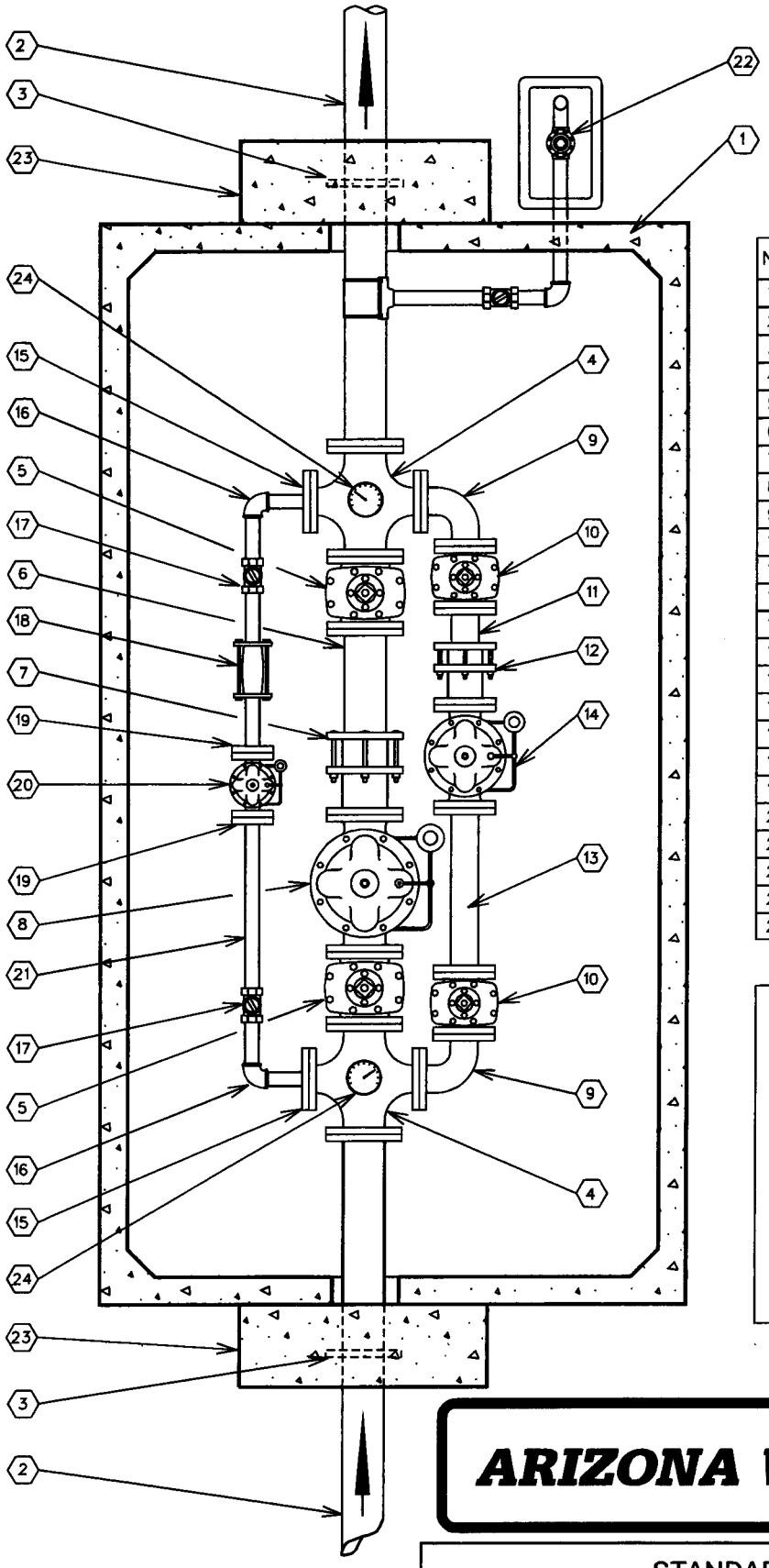

No.	FITTINGS SCHEDULE
1.	612 LA Conc. Vault (See Note 3)
2.	6"x6'-0" D.I.P. Spool Flg.xP.E.
3.	6" Megalug (Thrust Anchor)
4.	6"x4" Cross Flg.
5.	6" Gate Valve Flg.
6.	6"x2'-0" D.I.P. Spool Flg.xP.E.
7.	6" Flg. Coup. Adapt. (Rockwell 913)
8.	6" High Flow Pressure Reducing Valve Flg.
9.	4" 90° Ell. Flg.
10.	4" Gate Valve Flg.
11.	4"x1'-0" D.I.P. Spool Flg.xP.E.
12.	4" FLg. Coup. Adapt. (Rockwell 913)
13.	4"x2'-0" D.I.P. Spool Flg.
14.	4" Medium Flow Pressure Reducing Valve Flg.
15.	2"x9" O.D. Reducing Flg. (I.P.T.)
16.	2" 90° Ell. F.I.P.
17.	2" Ball Valve F.I.P.
18.	2" Comp. Coup. (Rockwell 411)
19.	2" Companion Flg. (I.P.T.)
20.	2" Low Flow Pressure Reducing Valve Flg.
21.	2" Sched. 40 Stl. Pipe
22.	2" Pressure Relief Valve (See E-9-14-1)
23.	12"x36"x36" Conc. Thrust Block P.I.P.
24.	Pressure Gauge w/shut off valve

NOTE:

1. Use Rowley pipe supports or equivalent as needed. (See E-9-12-4)
2. Pipe support locations to be determined by field personnel.
3. Vault-612 LA top section w/12" Dia. sump hole. Cover-concrete slab top w/(4) 4'-0" x2'-6" aluminum spring loaded hinged style covers for non-traffic loading areas. For areas w/low density traffic, cover is to be designed for H-20 traffic loading.
4. All Sched. 40 Stl. pipe outside of vault to be wrapped w/10-20 Mil. Scotchwrap corrosion protection tape.
5. Use deflection fittings (45° Ells.) to achieve necessary depths & cover as shown on the standard specification for the installation of a concrete vault (E-9-12-5).

ARIZONA WATER COMPANY

STANDARD SPECIFICATION

FOR THE INSTALLATION OF

PRESSURE REDUCING STATION

DRAWN BY:	APPROVED BY:	DATE:	△	
JPK	MW	11-16-88	9-27-95	E-9-15-1

1. Specific Items To Be Painted Deer-O Pure White Enamel:

A. All Booster Pumps.
B. All Electrical Motors And Gas Engines.
C. Well Pump Discharge Heads.
D. Electrical Panel.

2. Specific Items To Be Painted Frost Cap White Or Deer-O Pure White Enamel:

A. Well Shelter.

3. Specific Items To Be Painted OSHA Orange:

A. Electrical Conduit.

4. All Other Items To Be Painted With Either:
(At Manager's Discretion)

A. Cholla Green
B. Forest Green
C. Sonora Beige
D. Red Rock
E. Rock Brown
F. Deer-O Pure White
G. Elkhorn Cactus

ARIZONA WATER COMPANY

STANDARD SPECIFICATION
FOR THE INSTALLATION OF

PAINT COLOR SELECTION

DRAWN BY:	APPROVED BY:	DATE:	△	
CCO		3/20/1986	2/13/2001	E-9-16-1

1. Tank shall conform to AWWA Specification D100-84 with exceptions noted below.

*2. 1/4" minimum shell plate.

3. Minimum of 12" diameter roof vent, screened with No. 16 non-corrodible wire mesh, to be located on a 24" diameter round hinged manhole opening at the center of the tank to provide access to the dollar plate.

4. Overflow pipe shall be the same diameter as the inlet pipe and shall terminate 12 to 24 inches above splash pad or a minimum of 2 overflow pipe diameters above weir box high water level.

5. Storage tank shall be placed upon adequately compacted base material.

6. 6" minimum floor mounted tank drain outlet to be located close to the outer shell.

7. Tank and related fittings shall be enclosed with a 6 foot chain link fence with lockable gates and anti-personnel wire on top of fence.

8. Liquid level shall be indicated by a target and target board on the outside surface of the tank.

9. 24 inch diameter manholes shall be provided on the roof and on the shell near the bottom of the tank. The roof manhole cover shall overlap the manhole by at least 2 inches to provide a rain tight closure. Roof manhole shall be hinged and equipped with a lock. Shell manhole cover to be hinged and bolted in place. *Tanks larger than a 60 foot diameter require 2 shell manholes.

10. Inside and outside ladders shall be located at the roof manhole. Outside ladder shall be caged with locking trap door. Bottom 8 feet of cage shall be enclosed to within 1/2" of shell with 10 gauge sheet steel.

11. Finished tank shall be disinfected in accordance with Arizona Department of Health Services Engineering Bulletin No. 8 before being placed into service.

12. The following information will be included with application for approval to construct:

    1. Tank location_____
    2. Tank height_____
    3. Tank diameter_____
    4. Tank capacity_____
    5. Method of water level control_____

13. The storage tank will not be constructed within the 100 year flood plain and the tank site will be graded to slope away from the tank.

14. The welded steel storage tank will be coated as per AWWA Specification D102, and N.S.F. Standard 61.

*Exceptions to AWWA Specification D100-84

FOUNDATION NOTES

1. FINISH CONCRETE SURFACE MUST SLOPE UPWARDS FROM THE STEEL BAND APPROX. 1" IN 10'-0".

2. TOP OF STEEL BAND MUST BE MAINTAINED LEVEL TO WITHIN 1/8".

3. INSTALL 8-2" DIA.x10'-0" P.V.C. WEEP LINES, EQUALLY SPACED (EVERY 45°). PERFORATE 8'-0" OF LINE WITH 1/2" DIA. HOLES @ 6" O.C. PLUG INTERIOR END OF LINE w/2" CAP.

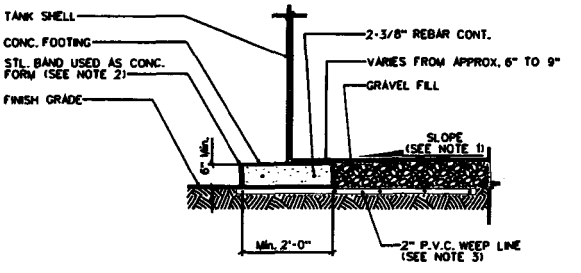

FOUNDATION DETAIL

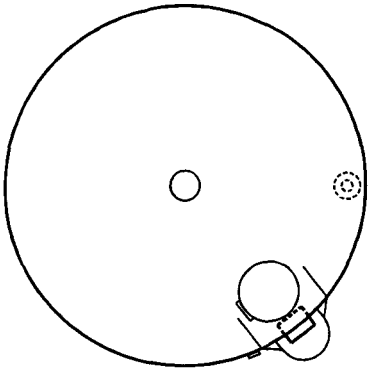

PLAN VIEW

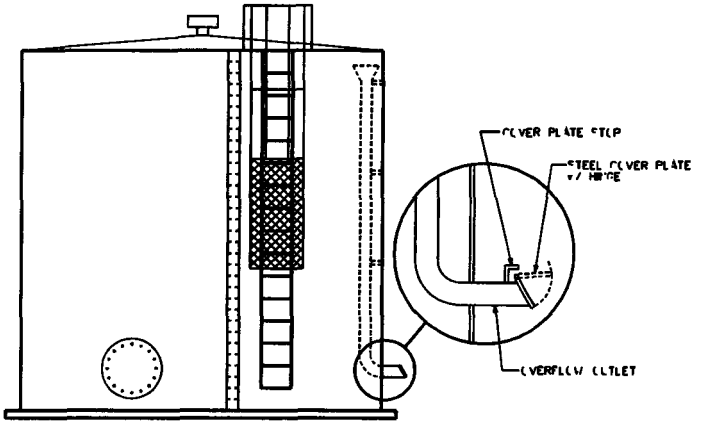

PROFILE VIEW

ARIZONA WATER COMPANY

STANDARD SPECIFICATION

FOR THE INSTALLATION OF

STEEL WATER STORAGE TANK

DRAWN BY:	APPROVED BY:	DATE:	△	
JPK	MJW	10-17-88	2-12-96	E-9-17-1

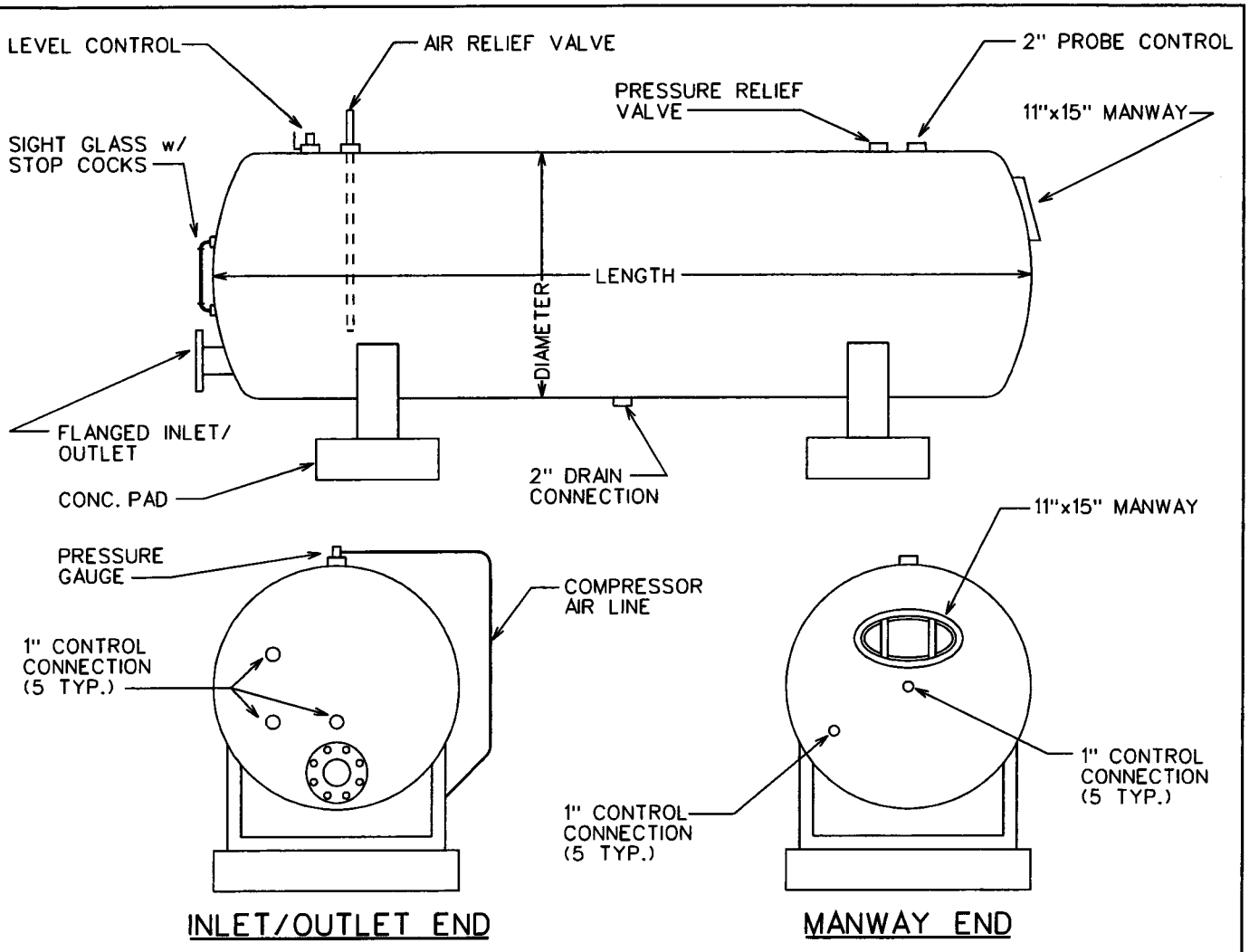

1. ALL HYDROPNEUMATIC TANKS SHALL BE DESIGNED & CONSTRUCTED IN ACCORDANCE WITH THE CURRENT REQUIREMENTS OF THE ASME CODE FOR UNFIRED PRESSURE VESSELS, SECTION VIII, DIVISION 1.
2. FINISHED TANK SHALL BE DISINFECTED IN ACCORDANCE WITH ADEQ BULLETIN No. 8 BEFORE BEING PLACED INTO SERVICE.
3. THE WELDED STEEL HYDROPNEUMATIC TANK WILL BE COATED AS PER AWWA SPECIFICATION D102 & NSF STANDARD 61.
4. THE FOLLOWING INFORMATION WILL BE INCLUDED WITH THE APPLICATION FOR APPROVAL TO CONSTRUCT.
   1. Tank Location _____
   2. Tank Length _____
   3. Tank Diameter _____
   4. Tank Capacity _____
   5. Maximum Working Pressure _____

ARIZONA WATER COMPANY

STANDARD SPECIFICATION
FOR THE INSTALLATION OF

HYDROPNEUMATIC TANK

DRAWN BY:	APPROVED BY:	DATE:	△ 01.16.2007	E-9-18-1
JPK	MW	3-20-1986		

NOT
CONVERTED
TO
CAD

ARIZONA WATER COMPANY

STANDARD SPECIFICATION
FOR THE INSTALLATION OF

WELL SHELTER

DRAWN BY:	APPROVED BY:	DATE:		
CB		03.20.1986	△04.03.2001	E-9-19-1

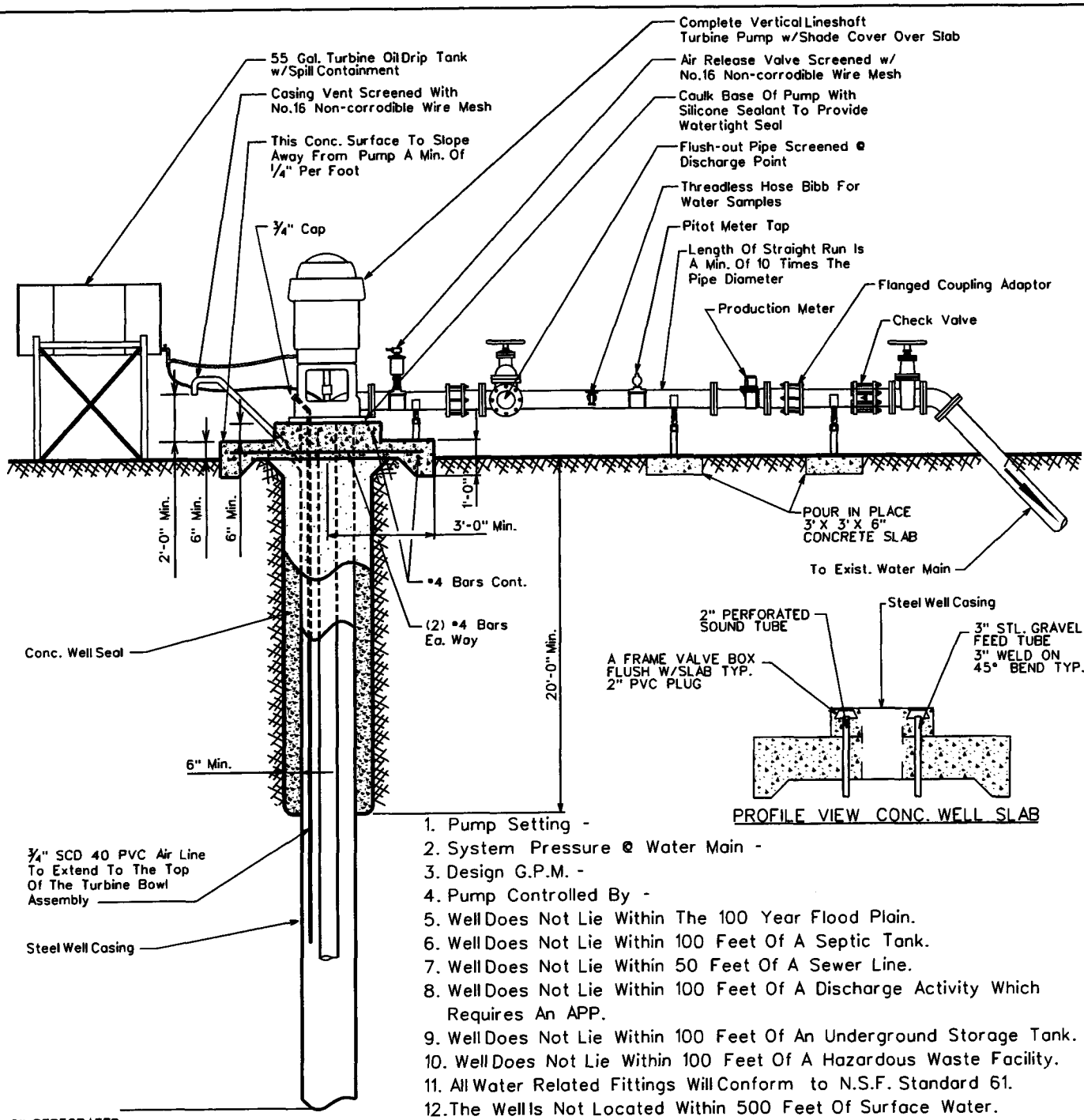

1. Pump Setting -
2. System Pressure @ Water Main -
3. Design G.P.M. -
4. Pump Controlled By -
5. Well Does Not Lie Within The 100 Year Flood Plain.
6. Well Does Not Lie Within 100 Feet Of A Septic Tank.
7. Well Does Not Lie Within 50 Feet Of A Sewer Line.
8. Well Does Not Lie Within 100 Feet Of A Discharge Activity Which Requires An APP.
9. Well Does Not Lie Within 100 Feet Of An Underground Storage Tank.
10. Well Does Not Lie Within 100 Feet Of A Hazardous Waste Facility.
11. All Water Related Fittings Will Conform to N.S.F. Standard 61.
12. The Well Is Not Located Within 500 Feet Of Surface Water.
13. The Site Will Be Graded To Provide Adequate Drainage Away From The Well.
14. 6.88 lbs. of Davis #8084 Grey Dye, Per Yard, For 2500 PSI Concrete

ARIZONA WATER COMPANY

STANDARD SPECIFICATION
FOR THE INSTALLATION OF

TYPICAL WELL W/ LINESHAFT TURBINE PUMP

DRAWN BY:	APPROVED BY:	DATE:	△	
JW	M.W.	3-20-86	9/15/04	E-9-20-1

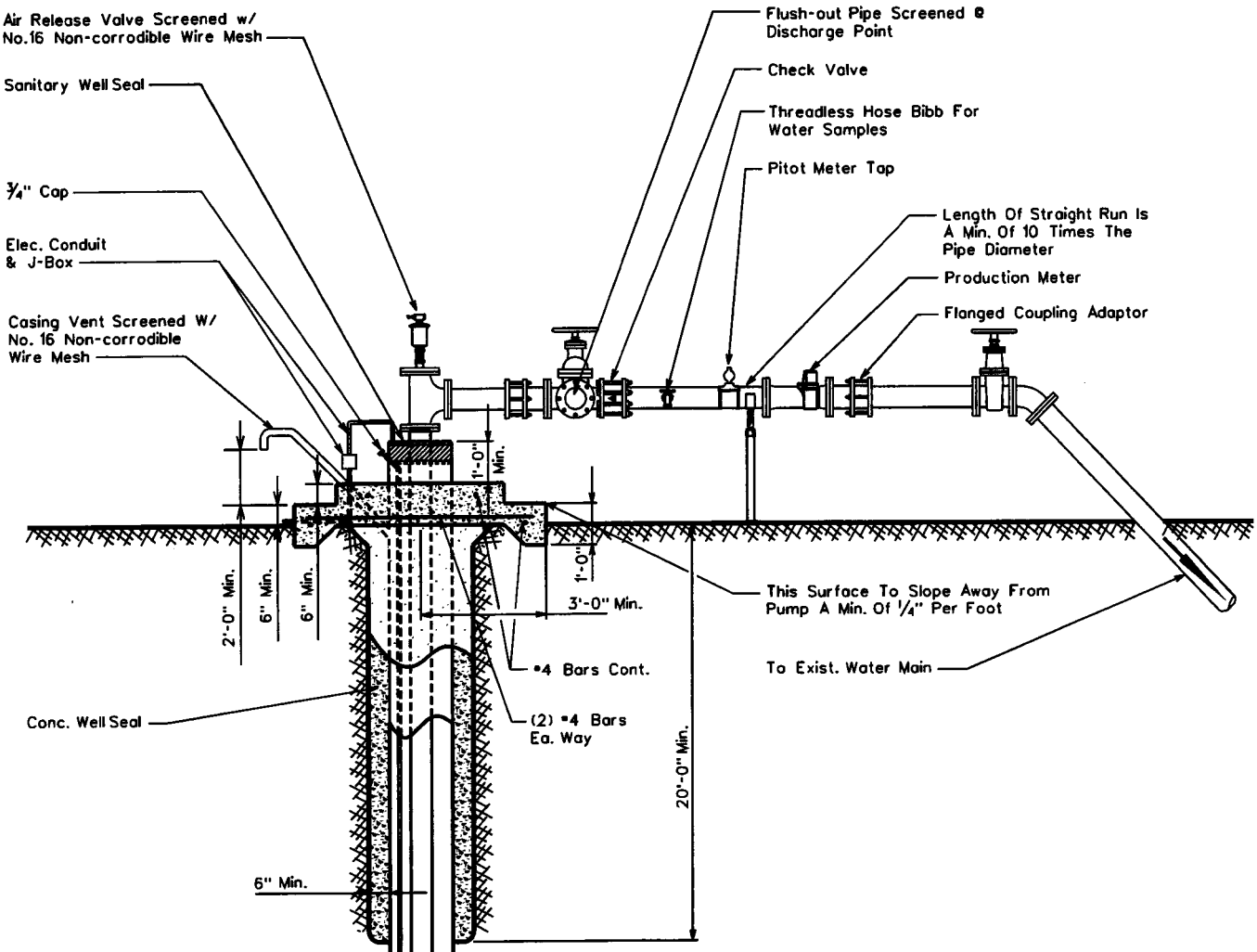

1. Pump Setting -
2. System Pressure @ Water Main -
3. Design G.P.M. -
4. Pump Controlled By -
5. Well Does Not Lie Within The 100 Year Flood Plain.
6. Well Does Not Lie Within 100 Feet Of A Septic Tank.
7. Well Does Not Lie Within 50 Feet Of A Sewer Line.
8. Well Does Not Lie Within 100 Feet Of A Discharge Activity Which Requires An APP.
9. Well Does Not Lie Within 100 Feet Of An Underground Storage Tank.
10. Well Does Not Lie Within 100 Feet Of A Hazardous Waste Facility.
11. All Water Related Fittings Will Conform to N.S.F. Standard 61.
12. The Well Is Not Located Within 500 Feet Of Surface Water.
13. The Site Will Be Graded To Provide Adequate Drainage Away From The Well.

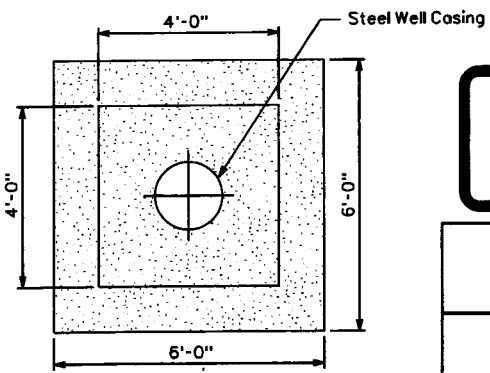

PLAN VIEW CONC. WELL SLAB

ARIZONA WATER COMPANY

STANDARD SPECIFICATION

FOR THE INSTALLATION OF

TYPICAL WELL W/ SUBMERSIBLE TURBINE PUMP

DRAWN BY:	APPROVED BY:	DATE:	△	
jpk	M.W.	3-20-86	2-16-01	E-9-21-1

All New Purchases To Conform To The Following:

Column Pipe

4" I.D. - 8	Threads	Per	Inch	Tapered	¾"	Per	Foot	Right	Hand
6" I.D. - 8	"	"	"	"	"	"	"	"	"
8" I.D. - 8	"	"	"	"	"	"	"	"	"
10" I.D.- 8	"	"	"	"	"	"	"	"	"
12" I.D.- 8	"	"	"	"	"	"	"	"	"
14" I.D.- 8	"	"	"	"	"	"	"	"	"

Oil Tube - Peerless Type

1½" O.D. - 14	Threads	Per	Inch	Right	Hand
2" O.D. - 12	"	"	"	"	"
2½" O.D. - 10	"	"	"	"	"
3" O.D. - 10	"	"	"	"	"
3½" O.D. - 10	"	"	"	"	"
4" O.D. - 10	"	"	"	"	"

Line Shaft

¾" O.D. - 10	Threads	Per	Inch	Left	Hand
1" O.D. - 14	"	"	"	"	"
1-3/16" O.D. - 10	"	"	"	"	"
1-1/2" O.D. - 10	"	"	"	"	"
1-11/16" O.D. - 10	"	"	"	"	"
1-15/16" O.D. - 10	"	"	"	"	"
2-3/16" O.D. - 10	"	"	"	"	"
2-7/16" O.D. - 8	"	"	"	"	"

ARIZONA WATER COMPANY

STANDARD SPECIFICATION
FOR THE INSTALLATION OF

COLUMN PIPE, OIL TUBE AND LINE SHAFT

DRAWN BY:	APPROVED BY:	DATE:	△	
CCO		3/20/1996	2/13/2001	E-9-22-1

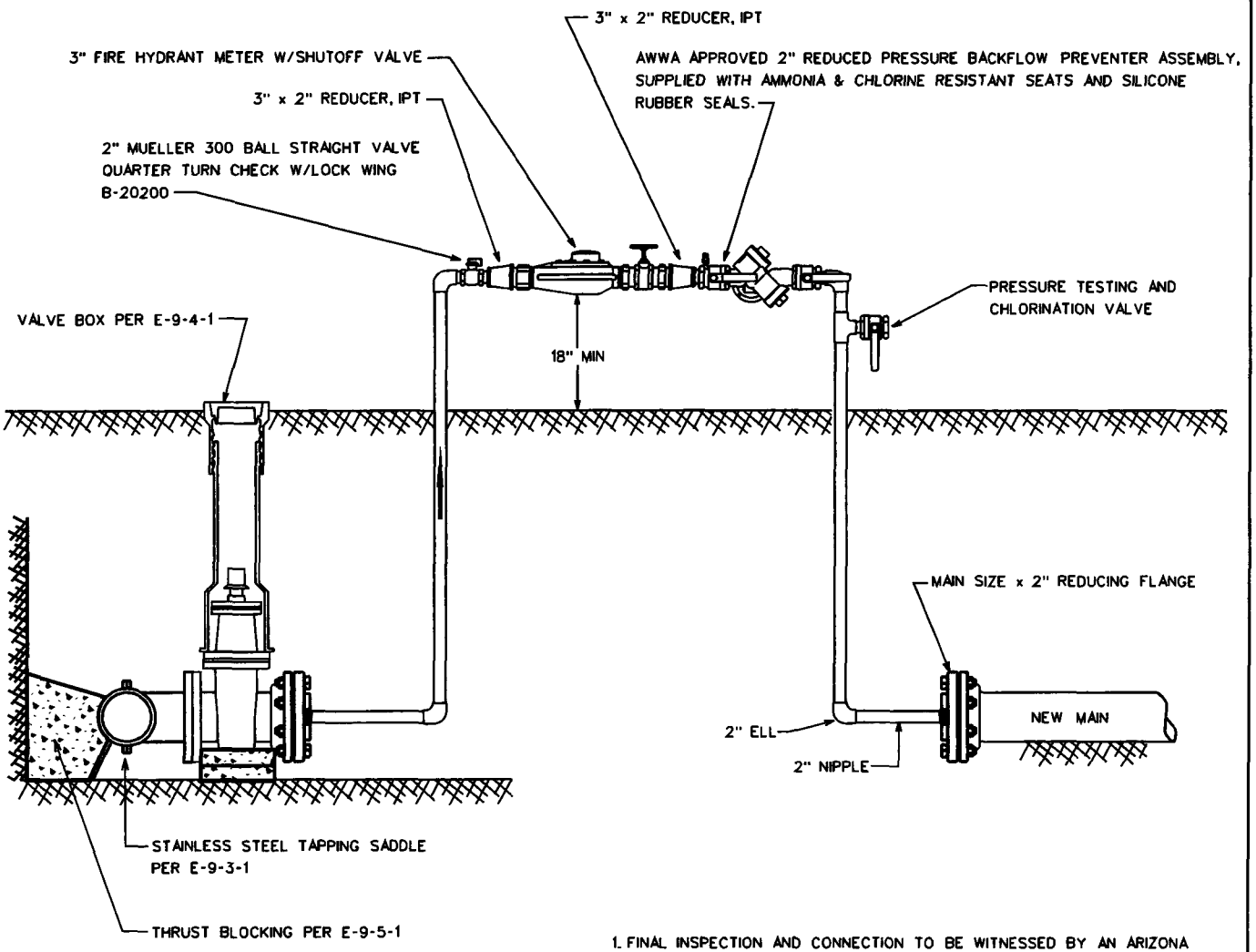

1. FINAL INSPECTION AND CONNECTION TO BE WITNESSED BY AN ARIZONA WATER COMPANY REPRESENTATIVE.
2. REDUCING FLANGES TO BE PROPERLY RESTRAINED.
3. INSTALL JUMPER TAP FOR TEMPORARY METER DOWNSTREAM OF THE REDUCING FLANGE FOR PRESSURE AND BACTEE TESTING.
4. JUMPER ASSEMBLY MUST BE A MINIMUM OF 18" ABOVE FINISHED GRADE.
5. BACKFLOW ASSEMBLY REQUIRES CERTIFICATION.
6. ASSEMBLY NOT TO BE REMOVED AND SPOOL PIECE INSTALLED FOR FINAL CONNECTION UNTIL ALL TESTING, BACTERIAL CLEARANCE AND FINAL INSPECTIONS HAVE BEEN OBTAINED.
7. ALL NEW PIPING SHALL BE PROPERLY RESTRAINED.

ARIZONA WATER COMPANY

STANDARD SPECIFICATION
FOR THE INSTALLATION OF

HOT TAP & JUMPER METER CONNECTION

DRAWN BY:	APPROVED BY:	DATE:	△	
CB	MJW	05.14.2004		E-9-23-1

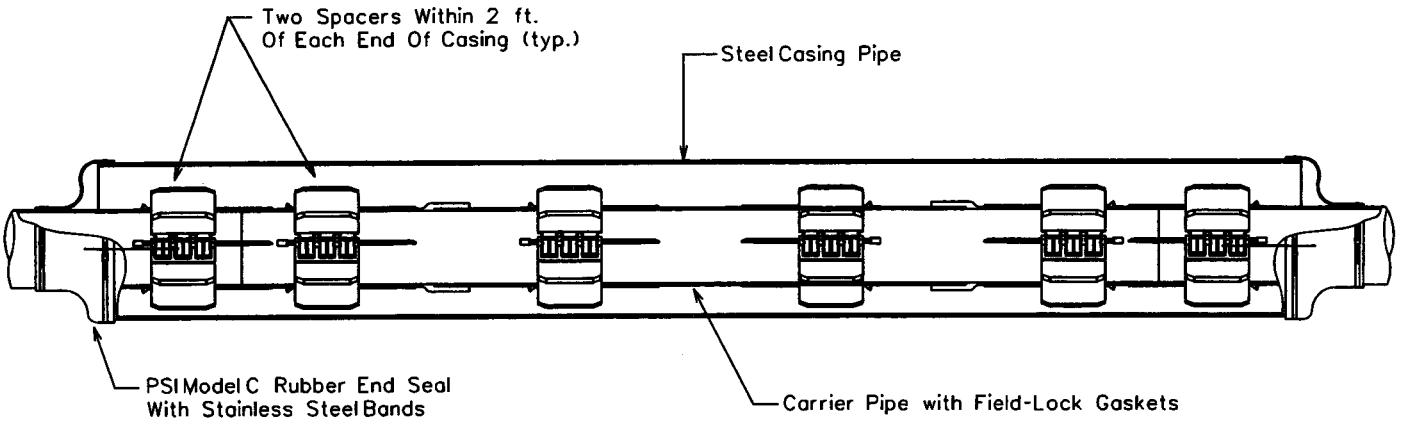

CROSS SECTION

The casing spacers shall be the PSI Ranger II Casing Spacers as manufactured by Pipeline Seal and Insulator, Inc., Houston, Texas.

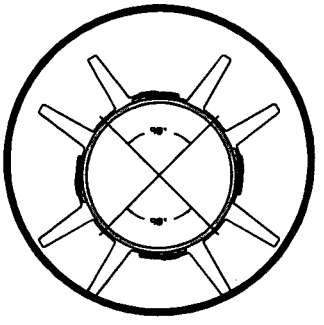

SECTION CUT

End Seals
After insertion of the carrier pipe into the casing, the ends of the casing shall be closed by installing 1/8" thick synthetic rubber end seals equal to the PSI Model "C" end seal as manufactured by Pipeline Seal and Insulator, Inc., Houston, Texas.

NOTE: The Carrier Pipe Shall Be Polywrapped Prior To The Skid Installation & Insertion Into The Carrier Casing For Divisions Requiring Polywrapped Pipe.

OD Push On Joint Bell	OD M.J. BELL
6" - 8.66"	6" - 11.12"
8" - 10.82"	8" - 13.37"
12" - 15.05"	12" - 17.94"
16" - 19.74"	16" - 22.56"
20" - 23.98"	20" - 27.08"
24" - 28.16"	24" - 31.58"
30" - 35.40"	30" - 39.12"
36" - 41.84"	36" - 46.00"
48" - 55.94"	48" - 60.00"

*Thickness Of Skid To Extend A Minimum of 1/2" Above The O.D. Of The Pipe Bell or Gland.

PIPE SIZE	CASING SIZE	CASING SIZE ID	CASING SCHEDULE	WALL THICKNESS	SKID SIZE
6"	16"	15.25"	STD.	.375	*x4x12
8"	18"	18.25"	STD.	.375	*x4x12
12"	22"	21.25"	STD.	.375	*x4x12
16"	28"	27.25"	STD.	.375	*x4x12
20"	32"	31.25"	STD.	.375	*x4x12
24"	36"	35.25"	STD.	.375	*x4x12
30"	48"	47.25"	STD.	.375	*x4x12
36"	54"	53.25"	STD.	.375	*x4x12
48"	66"	65.25"	STD.	.375	*x4x12

ARIZONA WATER COMPANY

STANDARD SPECIFICATION
FOR THE INSTALLATION OF

TYPICAL WATER LINE ENCASEMENT

DRAWN BY:	APPROVED BY:	DATE:	△ 09.27.2006	E-9-24-1
CB		3/20/1996		

CALCIUM HYPOCHLORITE TABLET CHLORINATOR FEEDER SPECIFICATIONS

SCOPE - This specification describes a ARCH Chemicals Calcium Hypochlorite Tablet Chlorination System as manufactured by ARCH Chemicals, 501 Merritt Seven, P.O. Box 5204, Norwalk, CT, 06856-5204.

DESCRIPTION - The chlorination system shall be completely assembled, ready to install. The chlorination system shall be a ARCH Chemicals Calcium Hypochlorite Tablet Feeder, or its equivalent, and shall be supplied with all its components factory mounted.

COMPONENTS - The Chlorination system shall have the following components:
- A. 1-¼" ARCH Chemical solid calcium hypochlorite tablet feeder
- B. Polyethylene system enclosure
- C. Integrated, level controlled solution tank
- D. Adjustable flow control valve
- E. Manual on/off valve (at Inlet)
- F. Chemical metering pump
- G. On/off pump control switch
- H. Waterproof electrical junction box
- I. Corrosion resistant schedule 40 piping
- J. Reverse flow check valves
- K. Total solution output control valve

ELECTRICAL FIXTURES - The following electrical fixtures shall be provided:
A. Safety switch, 2 pole, fused for 30 Amps, for 120 Volts, 60 cycle, single phase power.

CHLORINATOR DESIGN - The chlorination facility shall be designed and constructed in accordance with Arizona State Department of Health Engineering Bulletin Number 8 - "Disinfection of Water Systems". Latest Revision.

CHLORINATION EQUIPMENT - The chlorination equipment shall be a ARCH Chemicals Calcium Hypochlorite tablet chlorinator, approved by NSF Standard 61.

CHLORINATOR OPERATION - The chlorination facility shall be operated in accordance with Arizona State Department of Health Engineering Bulletin Number 8, "Disinfection of Water Systems", Table 1. latest revision.

CHLORINATOR SYSTEM DESCRIPTION - ARCH Chemicals tablet chlorinator systems incorporate a patented chlorinator which is designed to utilize ARCH Chemicals 1-¼" solid calcium hypochlorite tablets (Approved NSF Standard 60). Meets AWWA Standard B-300, EPA Registration # 1258-1179.The chlorinator is mounted on a polyethylene system enclosure. The inlet water is sprayed on the calcium hypochlorite tablet and collected in a solution tank. This chlorinated solution is then pumped out of the tank through a chemical metering pump. This metering pump is then adjusted to obtain the desired CL residual.

ARCH Chemicals Calcium Hypochlorite Tablet Chlorinator

NTS

HYPOCHLORINATOR COMPONENTS:

1. Chemical Metering Pump
2. Pump Suction Connection
3. Pump Discharge Connection
4. Inlet Water Assembly
5. Inlet Water Solenoid Valve
6. Inlet Shut-Off Valve
7. Inlet Pressure Regulator
8. Inlet Water Pressure Gauge
9. Spray Nozzle Water Pressure Gauge
10. Inlet Strainer
11. Inlet Tubing Connection
12. Dry Chemical Hopper
13. Suction Line
14. Electrical Control Box With Power On/Off
15. Electric Mixer
16. Solution Discharge Connection
17. Tank Drain Valve
18. Observation Port
19. Mixed Chemical Holding Tank
20. Pressure Relief Valve
21. Pump Speed Control
22. High Level Shut-Off Float Switch
23. Water Spray Nozzles

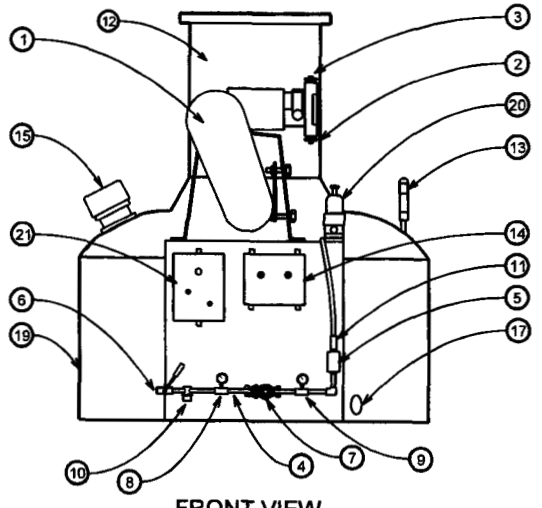

FRONT VIEW

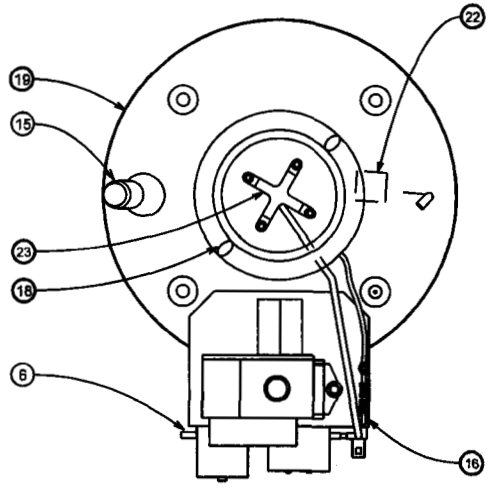

TOP VIEW

HOPPER REMOVED FOR CLARITY

Chlorinator Fluid Schematic

NTS

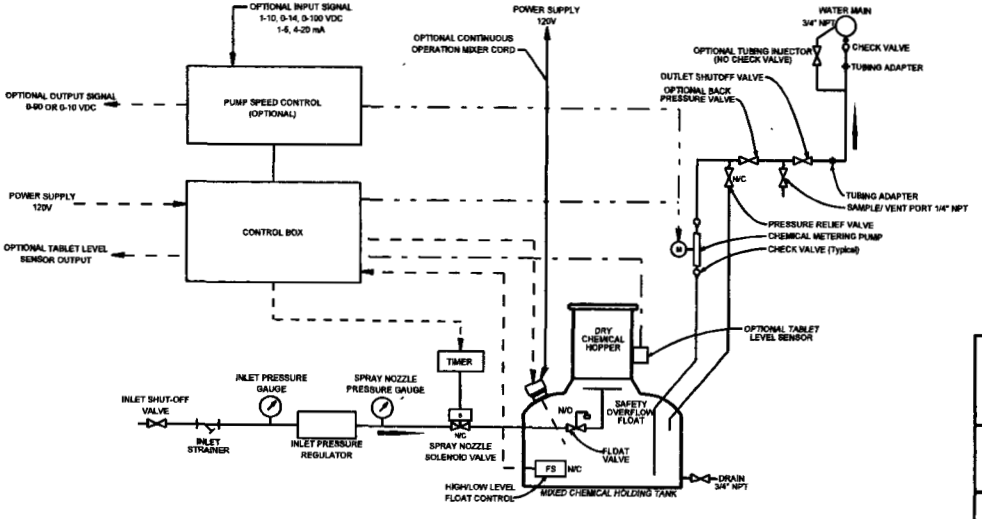

ARIZONA WATER COMPANY

STANDARD SPECIFICATION

FOR THE INSTALLATION OF

CALCIUM HYPOCHLORITE TABLET CHLORINATOR

DRAWN BY:	APPROVED BY:	DATE:	△	
CB	MW	02-09-2000		E-9-25-1

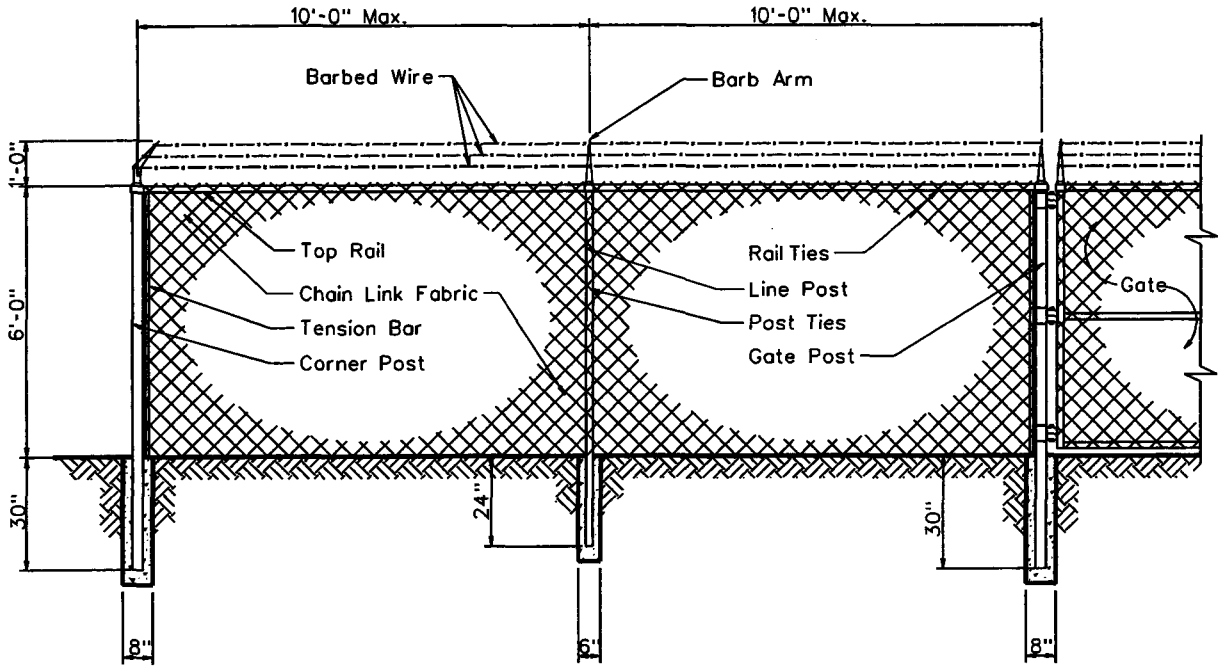

Line Post:	1-7/8" O.D.	1.74 lbs. P/L.F.	ASTM A-256
End Post:	2-7/8" O.D.	4.64 lbs. P/L.F.	ASTM A-256
Corner Post:	2-7/8" O.D.	4.64 lbs. P/L.F.	ASTM A-256
Gate Post:	2-7/8" O.D.	4.64 lbs. P/L.F.	ASTM A-256
Top Rail:	1-5/8" O.D.	4.64 lbs. P/L.F.	ASTM A-256
Chain Link Fabric:	9 Ga. 2" Mesh Galv. Before Weave		
Selvage:	Barb/Knuckle		
Fittings:	Pressed Steel		
Barb Wire:	2-1/2 Ga./2 Point		
Barb Arm:	1 Piece/45° Arm		
Tension Wire:	9 Ga./Galv.		
Line Post Set:	6"x24" In Concrete		
Terminal Post Set:	8"x30" In Concrete		

ARIZONA WATER COMPANY

STANDARD SPECIFICATION
FOR THE INSTALLATION OF

CHAIN LINK FENCE

DRAWN BY:	APPROVED BY:	DATE:	△	
CCO	MW	7/7/1992	2/9/2001	E-9-26-1

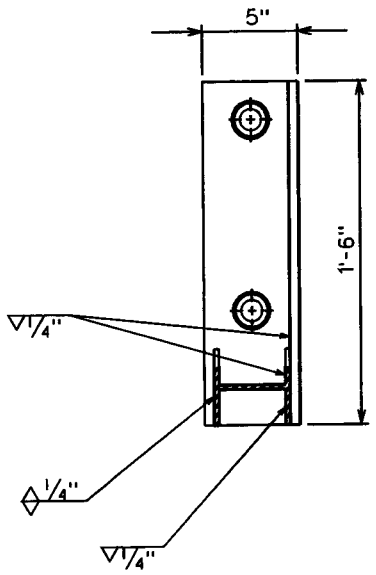

SECTION X-X

NOTES

1. Minimum 2 Supports Per Joint Of Pipe.
2. All Bolts Shall Have A Lock Washer Under The Nut.
3. All Nuts Shall Be Stainless Steel Series 304.

PIPE SIZE	A	B
8"	8"	15"
10"	9"	17"
12"	10"	19"

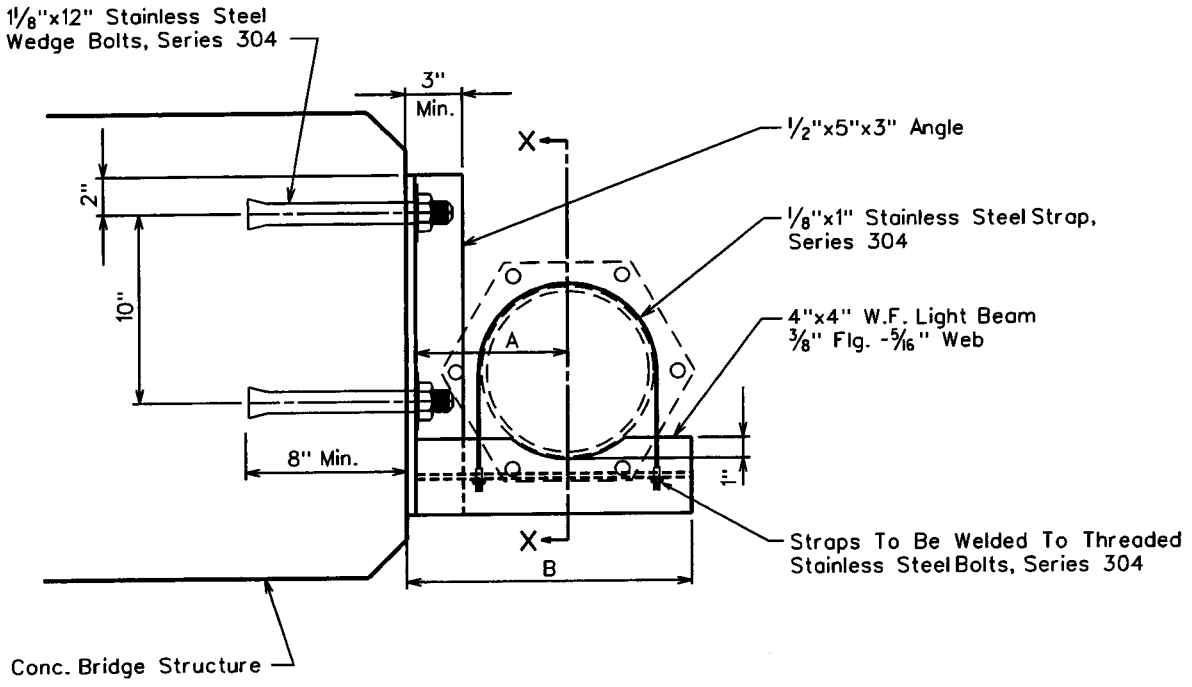

SUSPENSION DETAIL

ARIZONA WATER COMPANY

STANDARD SPECIFICATION
FOR THE INSTALLATION OF

SIDE HUNG WATER LINE SUSPENSION

DRAWN BY:	APPROVED BY:	DATE:		
JPK	MJW	7-12-96	△	E-9-27-1

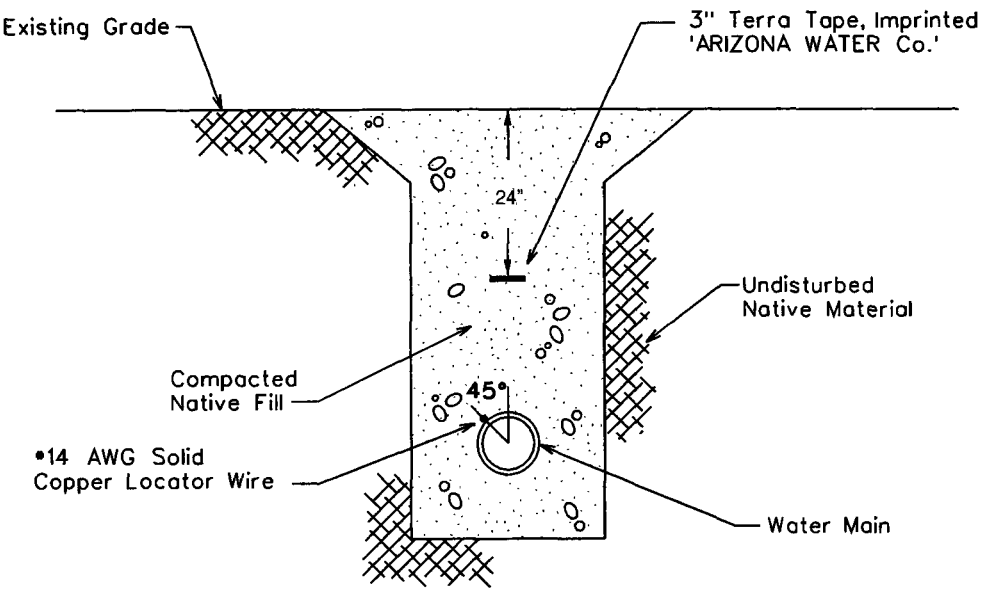

TYPICAL WATER TRENCH DETAIL

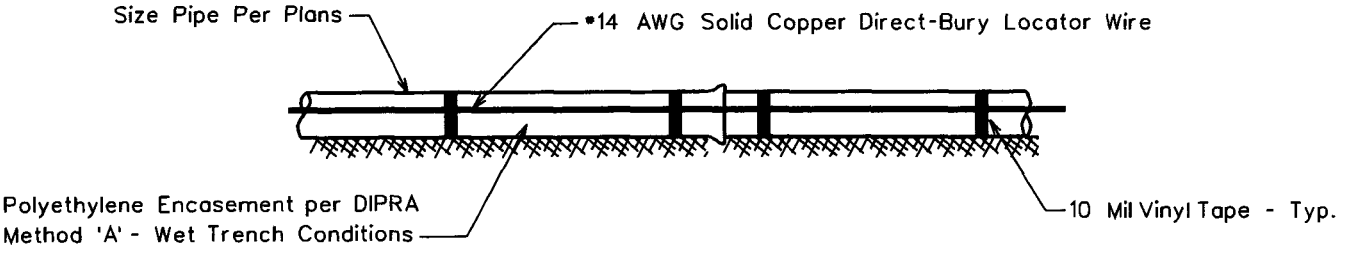

TYPICAL PROFILE VIEW

WIRE GENERAL NOTES:

1. All pipe shall have •14 AWG Solid Copper Direct-Bury Locator Wire Installed Directly To The Polywrap At 45° From The Vertical Center Of The Pipe and Shall Be Attached Using 10 Mil Vinyl Tape.
2. The Locating Wire Shall Terminate At the Top Of Each Valve Box and Be Capable of Extending 12" Above the Top Of The Box In Such A Manner So As Not To Interfere With Valve Operation.

TAPE GENERAL NOTES:

1. Use Terra Tape 3" Marking Tape As Manufactured By Reef Industries Inc. Of Houston, Texas (1-800-231-2417)
2. The Tape Is Blue & Imprinted 'ARIZONA WATER Co.'
3. INSTALLATION: The Pipe Warning Tape Shall Be Installed Over All Water Mains And Shall Be Buried 24 Inches Below The Surface Over The Center Of The Pipe.
   A) The Backfill Shall Be Sufficiently Leveled So That The Tape Is Installed On A Flat Surface.
   B) The Tape Shall Be Centered In The Trench With The Printed Side Up.
   C) Care Shall Be Exercised To Avoid Movement Of The Tape While The Remaining Backfill Is Moved Into The Trench.

ARIZONA WATER COMPANY

STANDARD SPECIFICATION
FOR THE INSTALLATION OF

PIPE WARNING TAPE AND LOCATOR WIRE

DRAWN BY:	APPROVED BY:	DATE:		
CB		03.24.1997	△09.27.2006	E-9-28-1

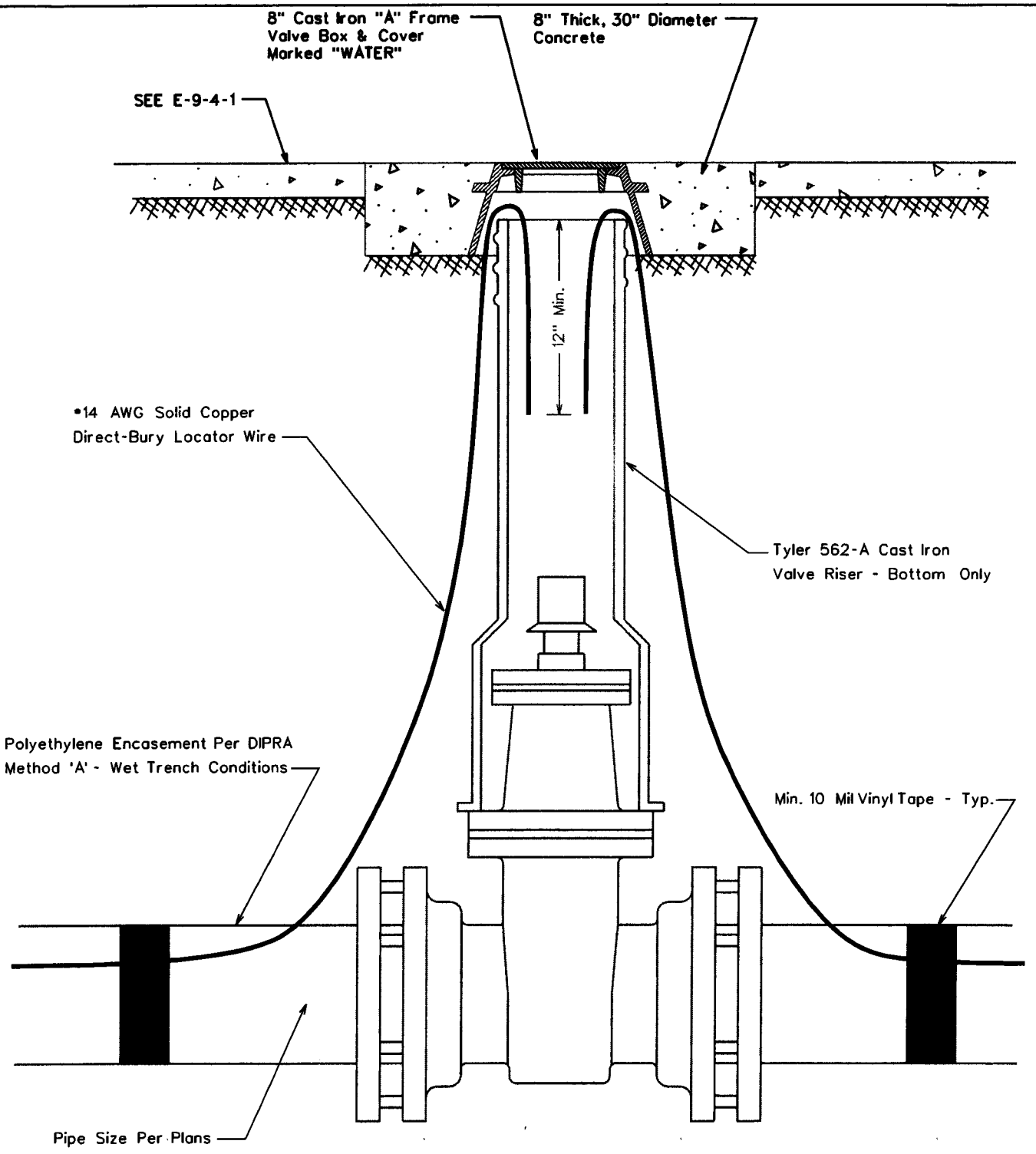

ARIZONA WATER COMPANY

STANDARD SPECIFICATION
FOR THE INSTALLATION OF

LOCATOR WIRE TERMINATION

DRAWN BY:	APPROVED BY:	DATE:	△	
CB		09.27.2006		E-9-28-2

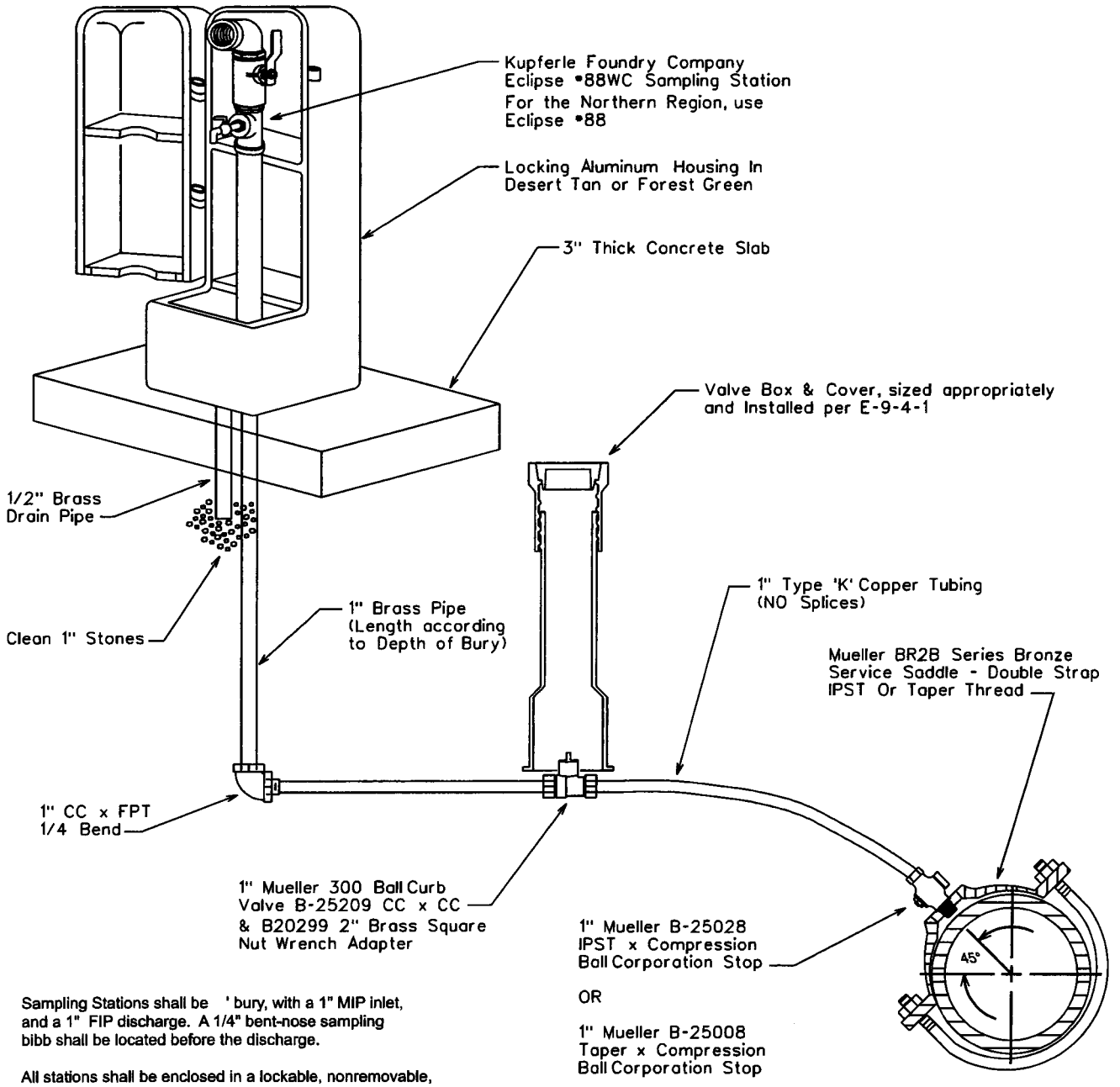

Sampling Stations shall be ' bury, with a 1" MIP inlet, and a 1" FIP discharge. A 1/4" bent-nose sampling bibb shall be located before the discharge.

All stations shall be enclosed in a lockable, nonremovable, aluminum-cast housing.

When opened, the station shall require no key for operation, and the water will flow in an all brass waterway.

All working parts will be of brass and serviceable from above ground with no digging. (OPTIONAL: if desired, a 1/2" brass drain tube will be provided within the locking cover).

A 1" ball valve will control the water flow, and be located before (or after) the sampling bibb, as manufactured by Kupferle Foundry, St. Louis, MO 63102.

SADDLE TAP TO CA, PVC, OR DI PIPE

NOTE: The minimum distance between taps on mains other than ductile iron is 12"

Pipe Depth Per
E-8-1-2, Item 3.

ARIZONA WATER COMPANY

STANDARD SPECIFICATION
FOR THE INSTALLATION OF

SAMPLING STATION

DRAWN BY:	APPROVED BY:	DATE:		
CB	MW	01.24.2007	△	E-9-29-1

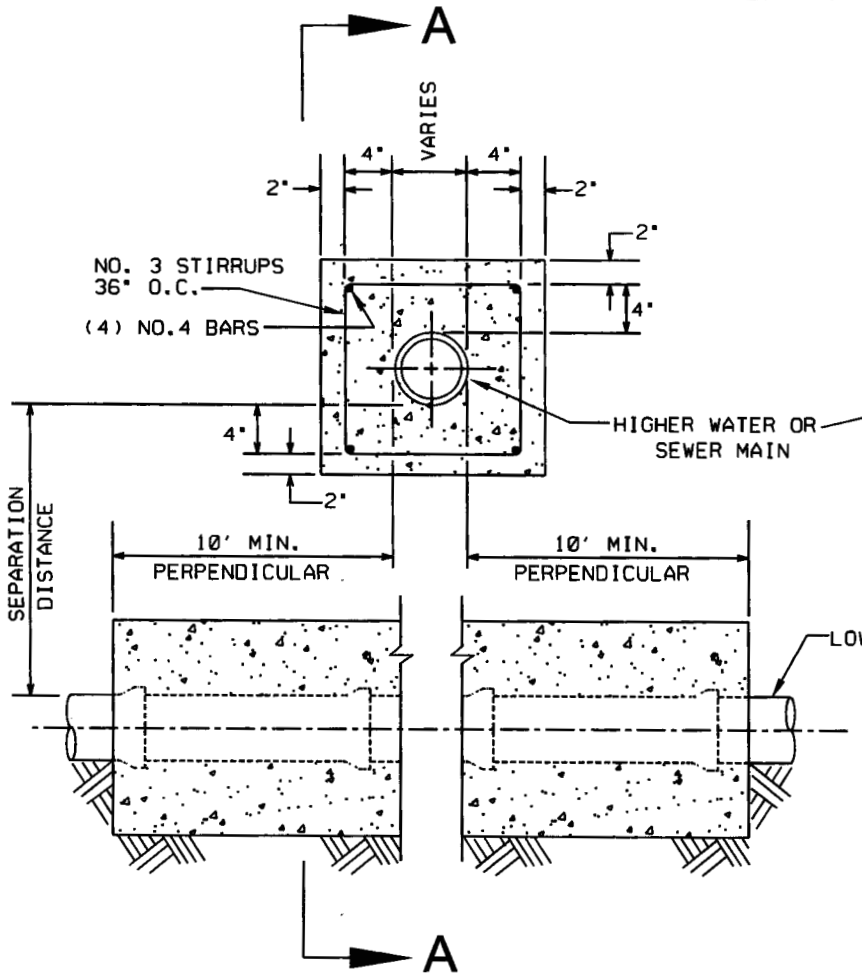

ENCASEMENT FOR PIPE CROSSING

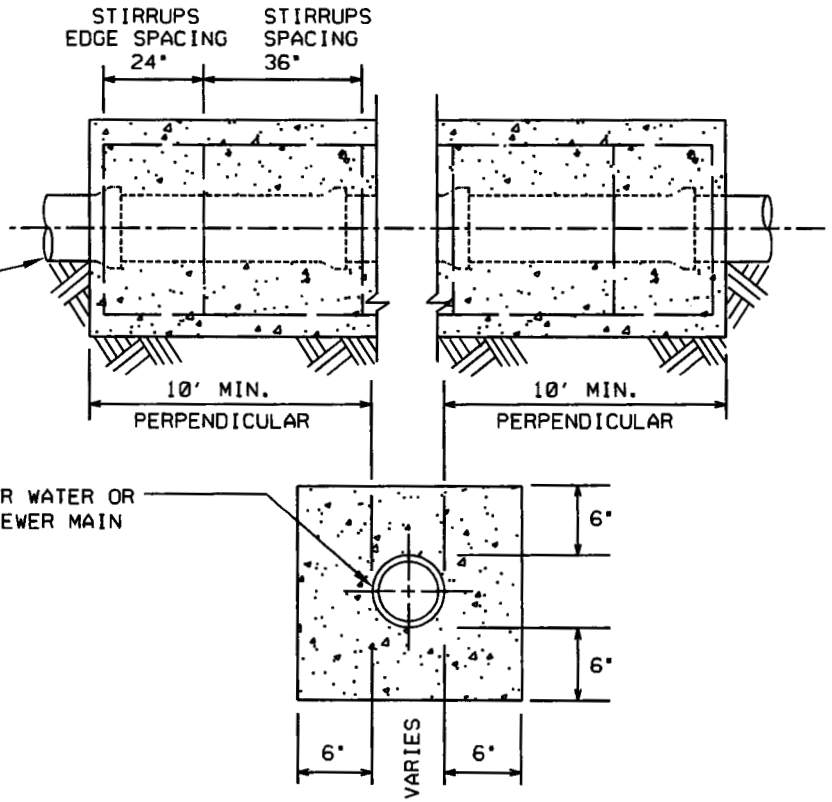

SECTION A-A

NOTES:

1. 2,000 PSI CONCRETE
2. SEPARATION DISTANCES AND/OR OTHER EXTRA PROTECTION SHALL BE REQUIRED TO PROTECT WATER MAINS FROM CONTAMINATION BY SANITARY SEWER MAINS. SEE AWC STANDARD SPECIFICATION PAGES E-8-1-9 AND E-8-1-10.
3. SEE CROSS SECTION DETAIL FOR LIMITS OF SEPARATION/EXTRA PROTECTION. ALL DISTANCES ARE MEASURED PERPENDICULARLY FROM THE OUTSIDE OF THE PIPES.
4. RECLAIMED WATER SHALL BE CONSIDERED A SANITARY SEWER WHEN PLACED NEXT TO A POTABLE WATER MAIN.

ARIZONA WATER COMPANY

STANDARD SPECIFICATION
FOR THE INSTALLATION OF
WATER AND SANITARY SEWER
SEPARATION/PROTECTION

DRAWN BY:	APPROVED BY:	DATE:		
CB	JW	04.07.2008	△	E-9-30-1

NOTES:

1. 2,000 PSI CONCRETE

2. SEPARATION DISTANCES AND/OR OTHER EXTRA PROTECTION SHALL BE REQUIRED TO PROTECT WATER MAINS FROM CONTAMINATION BY SANITARY SEWER MAINS. SEE AWC STANDARD SPECIFICATION PAGES E-8-1-9 AND E-8-1-10.

3. SEE CROSS SECTION DETAIL FOR LIMITS OF SEPARATION/EXTRA PROTECTION. ALL DISTANCES ARE MEASURED PERPENDICULARLY FROM THE OUTSIDE OF THE PIPES.

4. RECLAIMED WATER SHALL BE CONSIDERED A SANITARY SEWER WHEN PLACED NEXT TO A POTABLE WATER MAIN.

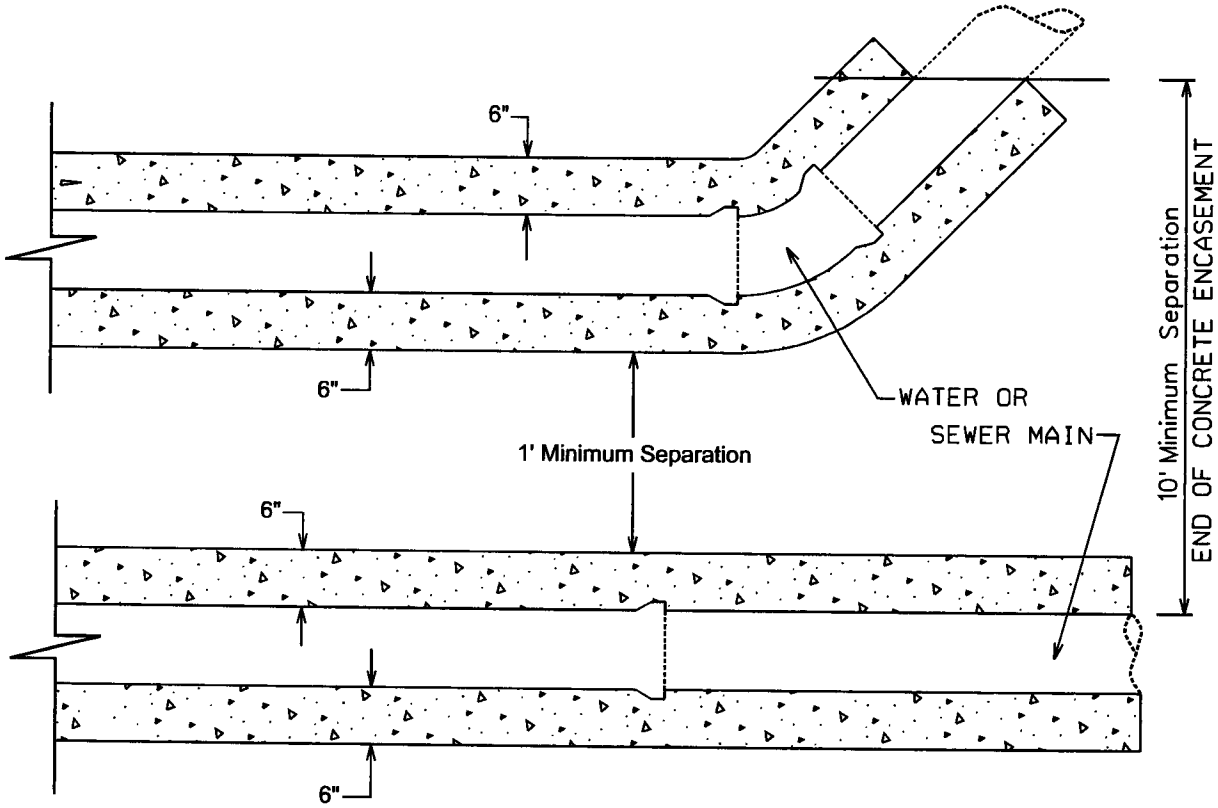

PLAN VIEW

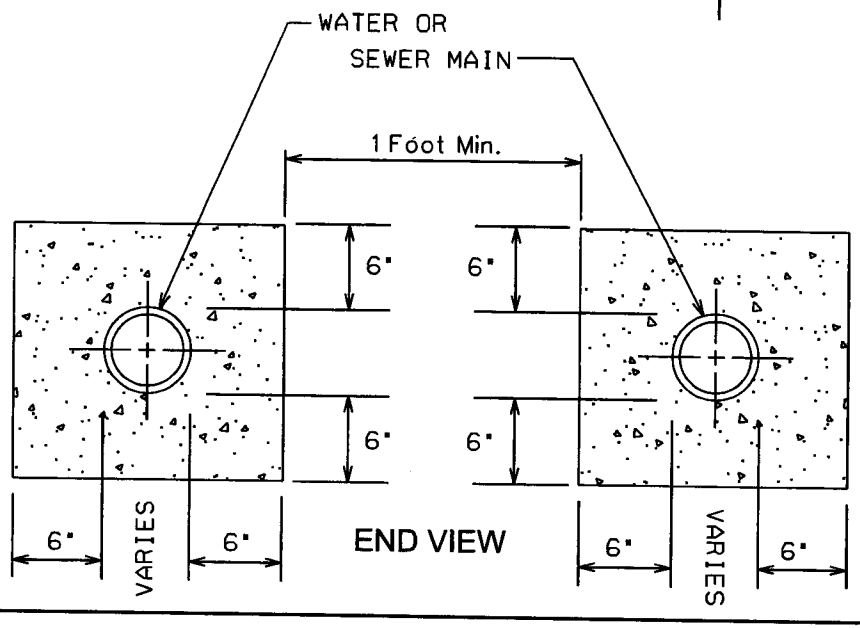

END VIEW

ENCASEMENT FOR PARALLEL PIPES

ARIZONA WATER COMPANY

STANDARD SPECIFICATION
FOR THE INSTALLATION OF
WATER AND SANITARY SEWER SEPARATION/PROTECTION

DRAWN BY:	APPROVED BY:	DATE:	△	
CB	JW	04.07.2008		E-9-30-2

ENGINEERING SERVICES

Configuration, RTU Application Software (Globe Miami): $9,600
The System Engineer will configure the RTU application according to the system requirements.

Integration, On-site at Customer Location (Globe Miami): $8,850
· Test communications between RTUs
· Test and Debug as needed
· Obtain signoff and acceptance

Configuration, RTU Application Software (Lakeside): $4,800
The System Engineer will configure the RTU application according to the system requirements.

Integration, On-site at Customer Location (Lakeside): $4,065
· Test communications between RTUs
· Test and Debug as needed
· Obtain signoff and acceptance

Configuration, RTU Application Software (Heber): $4,800
The System Engineer will configure the RTU application according to the system requirements.

Integration, On-site at Customer Location (Heber): $4,665
· Test communications between RTUs
· Test and Debug as needed
· Obtain signoff and acceptance

Configuration, RTU Application Software (Superior): $4,800
The System Engineer will configure the RTU application according to the system requirements.

Integration, On-site at Customer Location (Superior): $2,900
· Test communications between RTUs
· Test and Debug as needed
· Obtain signoff and acceptance

Configuration, RTU Application Software (Sedona): $9,600
The System Engineer will configure the RTU application according to the system requirements.

Integration, On-site at Customer Location (Sedona): $6,275
· Test communications between RTUs
· Test and Debug as needed
· Obtain signoff and acceptance

Configuration, RTU Application Software (Bisbee): $9,600
The System Engineer will configure the RTU application according to the system requirements.

Integration, On-site at Customer Location (Bisbee): $4,665
· Test communications between RTUs
· Test and Debug as needed
· Obtain signoff and acceptance

Configuration, RTU Application Software (Casa Grande): $9,600
The System Engineer will configure the RTU application according to the system requirements.

0001	V118	ADD: 4 AO MODULE	$ 495.00	$ 495.00
0001	V261	ADD: AC PS 85-264 V WITH BATTERY CHARGER	$ 310.00	$ 310.00
0001	V114	ADD: 6.5 AH BACKUP BATTERY	$ 140.00	$ 140.00
0001	GD3572-16DI/FET	16 DI/DO FET I/O Interface Kit (16DI)	$ 255.00	$ 255.00
0001	GD3572-16DO	16 DO I/O Interface Kit	$ 650.00	$ 650.00
0001	GD3572-4AO	4 AO I/O Interface Kit	$ 255.00	$ 255.00

Sedona: $ 22,890.00

Note: Rancho Rojo Well, Sedona Golf Course Resort Tank, Sedona Golf Course Resort Well were previously quoted under a different project

QTY	Part No	Description	Unit Price	Extended
0010	GD5188	Lo Power Replacement Radio Kits (Southwest Center Well #8, Rainbow Well #6, Williams Well #7, Harmony High Park Tank, Valley Vista #13, Rimrock Well #2, Montezuma Haven Well #3, Montezuma Hills Tank, Rim Well #1, Harmony Well)	$ 450.00	$ 4,500.00
0010	FRN5907	DPSK BOARD (Southwest Center Well #8, Rainbow Well #6, Williams Well #7, Harmony High Park Tank, Valley Vista #13, Rimrock Well #2, Montezuma Haven Well #3, Montezuma Hills Tank, Rim Well #1, Harmony Well)	$ 180.00	$ 1,800.00
0001	GD2421	Electrical Install	$ 5,655.00	$ 5,655.00

0001	F7563	ACE3600 WITH CDM750 136-174 MHZ (Office)	$ 1,850.00	$ 1,850.00
0001	V103	ADD: 3 I/O SLOTS FRAME	$ 70.00	$ 70.00
0001	V228	ADD: 50X50 CM PAINTED METAL HOUSING	$ 300.00	$ 300.00
0001	V224	ADD: HOUSING TAMPER SWITCH	$ 40.00	$ 40.00
0001	V480	ADD: 16 DO / DI FET	$ 250.00	$ 250.00
0001	V118	ADD: 4 AO MODULE	$ 495.00	$ 495.00
0001	V261	ADD: AC PS 85-264 V WITH BATTERY CHARGER	$ 310.00	$ 310.00
0001	V114	ADD: 6.5 AH BACKUP BATTERY	$ 140.00	$ 140.00
0001	GD3572-16DI/FET	16 DI/DO FET I/O Interface Kit (16DI)	$ 255.00	$ 255.00
0001	GD3572-4AO	4 AO I/O Interface Kit	$ 255.00	$ 255.00

0002	F7563	ACE3600 WITH CDM750 136-174 MHZ (Wickiup Mesa Tank, Pinewood Tank)	$ 1,850.00	$ 3,700.00
0002	V103	ADD: 3 I/O SLOTS FRAME	$ 70.00	$ 140.00
0002	V228	ADD: 50X50 CM PAINTED METAL HOUSING	$ 300.00	$ 600.00
0002	V245	ADD: 16DI 4DO EE 4AI +/-20MA	$ 430.00	$ 860.00

0002	V261	ADD: AC PS 85-264 V WITH BATTERY CHARGER	$ 310.00	$ 620.00
0002	V114	ADD: 6.5 AH BACKUP BATTERY	$ 140.00	$ 280.00
0002	GD3572-Mixed	Mixed I/O Interface Kit	$ 385.00	$ 770.00

Bisbee: $ 15,341.00

QTY	Part No	Description	Unit Price	Extended
0009	GD4378	Hi Power Replacement Radio Kits (Tintown, Greaves Well, Stuart Pump Station, Fuller, Village Meadows, Sulger, Tombstone Canyon Tank, Spring Canyon Tank, Bisbee Office)	$ 733.00	$ 6,597.00
0003	GD6266	Radio Reprogramming (Tintown Booster, Naco, Tintown Tank)	$ 95.00	$ 285.00
0012	FRN5708	DPSK BOARD (Tintown, Greeves Well, Stuart Pump Station, Fuller, Village Meadows, Sulger, Tombstone Canyon Tank, Tintown Booster, Naco Tintown Tank, Spring Canyon Tank, Bisbee Office FIU)	$ 207.00	$ 2,484.00
0001	GD2421	Electrical Install	$ 2,625.00	$ 2,625.00

0001	F7563	ACE3600 WITH CDM750 136-174 MHZ (Naco MDLC (Formerly Intrac))	$ 1,850.00	$ 1,850.00
0001	V103	ADD: 3 I/O SLOTS FRAME	$ 70.00	$ 70.00
0001	V228	ADD: 50X50 CM PAINTED METAL HOUSING	$ 300.00	$ 300.00
0001	V508	ADD: 8 DO EE RELAY 2A	$ 260.00	$ 260.00
0001	V261	ADD: AC PS 85-264 V WITH BATTERY CHARGER	$ 310.00	$ 310.00
0001	V114	ADD: 6.5 AH BACKUP BATTERY	$ 140.00	$ 140.00
0001	GD3572-8DO	8 DO I/O Interface Kit	$ 420.00	$ 420.00

Casa Grande: $ 24,705.00

QTY	Part No	Description	Unit Price	Extended
0005	GD5188	Lo Power Replacement Radio Kits (Casa Grande Tank, North Park Tank, Pinal Booster Pump Site, Well 27, Well 29)	$ 450.00	$ 2,250.00
0003	GD6266	Radio Reprogramming (Stanfield Tank, Table Top, Tierra Grande Tank (spare))	$ 95.00	$ 285.00
0007	FRN5907	DPSK BOARD (Casa Grande Tank, North Park Tank, Pinal Booster Pump Site, Stanfield Tank, Table Top, Well 27, Well 29)	$ 180.00	$ 1,260.00
0001	GD2421	Electrical Install	$ 6,650.00	$ 6,650.00

0001	F7563	ACE3600 WITH CDM750 136-174 MHZ (Scott Drive Booster Station)	$ 1,850.00	$ 1,850.00
0001	V103	ADD: 3 I/O SLOTS FRAME	$ 70.00	$ 70.00
0001	V228	ADD: 50X50 CM PAINTED METAL HOUSING	$ 300.00	$ 300.00
0001	V245	ADD: 16DI 4DO EE 4AI +/-20MA	$ 430.00	$ 430.00

TERMS

1. Validity of quotation: This quotation is valid for 30 days, and is based on the information provided to us at the time of quotation. We are not responsible for incorrect or missing information. New information provided to us after the quotation is generated may result in a revised quotation containing additional products or services required.
2. Delivery date: Delivery dates are not guaranteed. Orders are generally delivered in the most expeditious manner possible. A planned delivery schedule will be provided upon order placement. Change orders placed subsequent to the original PO may delay delivery.
3. Order placement: We reserve the right to reject orders that do not contain all quoted products and services except those items indicated in the optional products and services section. For radio programming, please provide radio frequencies at the time of order placement.
4. Invoicing: Orders are invoiced only when they are ready for delivery. The only exception to this policy is when the customer requests early billing.
5. Payment: 100% payment is due within 30 days of the invoice date. Invoices not paid within 30 days are subject to interest at the rate of 1.5% monthly, and your placement on COD basis for future orders. Early pay discount is not available.
6. Payment method: We accept payment by bank transfer (ACH), Check, and Cards (Visa and MasterCard only). Card payments must be processed on the same date that the invoice is generated. Payments made after the invoice date can be made only via ACH or Check.
7. New Customers: Credit application and references required for all new customers. Alternatively, you may pay by one of the payment methods above on the date of order delivery.
8. Shipment FOB: Global Data Specialists, 1815 W 1st Ave, Suite 110, Mesa, AZ. For Dataradio drop-shipped orders shipment FOB is CalAmp, Waseca, MN.
9. Shipping charges: If the quotation includes shipping, handling or delivery fees, it is only an estimate. Actual shipping charges will be determined only at the time of order shipment.
10. Taxes: Applicable sales taxes will be added to all orders unless a valid tax exemption certificate is presented at the time of order placement.
11. Warranty is specific to the policies of each respective OEM (Original Equipment Manufacturer). No additional warranties are expressed or implied. Please contact us for all warranty and non-warranty repairs with the exception of Dataradio. For Dataradio warranty and non-warranty repairs, call 800-992-7774 x6707. Warranty service includes standard depot repair only, and does not include shipping charges or service calls to remove, repair or reinstall equipment. Emergency repair and swap service costs extra and is subject to parts availability. Warranty labor includes direct in-house labor costs only. If warranty service requires our personnel to travel out of our office, additional time and materials charges will be invoiced separately.
12. Order cancellation: The following order cancellation charges shall apply:

..... Prior to 30 days of planned delivery date: 25% of the quoted amount shall be invoiced.
..... Less than 30 days of planned delivery date: 50% of the quoted amount shall be invoiced.
..... After order is ready for delivery: 100% of the quoted amount shall be invoiced.

13. Contractors: At our discretion, we will file a pre-lien when required. Please provide full project name and number, project location, and General Contractor and owner information at the time of order placement.
14. Delinquent pick up: You will be notified when the order is ready for pick up. Orders not picked up within 7 days of notification date are subject to storage fees of $25 per unit per day.

GLOBAL
DATA SPECIALISTS

1815 W. First Ave., Suite 110, Mesa, AZ 85202
Phone: 480-461-3401 FAX: 480-461-3411

QUOTE: **MDM04063C** **September 27, 2011**

by Duane Moody
480-461-3401, Ext. 223, duane@gbl-data.com
Expires 26-Dec-11

Quoted To: **Mike Loggins, James Wilson, Andy Haas**

Arizona Water
3805 N. Black Canyon Hwy.
Phoenix, AZ 85015
Phone: 602-240-6860
FAX: 602-240-6878

End User: **Arizona Water System, Narrow Band Upgrade**

Description

Global Data Specialists is pleased to provide you with the following Budgetary quotation for the Narrow Banding Upgrade for your Motorola SCADA system.

The quote includes any installation/electrical charges associated with installing any new ACE3600 RTU's and the removal of old equipment.

Engineering services are also included for the reprogramming of the RTU's as needed.

Electrical Installation Scope of Work

A. Furnish control technician to de-terminate all associated field wiring to existing Motorola RTU.
B. Vacuum and wipe down cabinet (where applicable) for new RTU.
C. Install new Motorola RTU, provided by Global Data Specialists.
D. Reconnect existing wiring to new RTU and label.
E. Test signals back to new RTU and verify functionality.
F. Scope is typical for multiple locations.

1. Permitting, Construction, and Demolition
a. All work performed will conform to NEC requirements and requirements of the Authorities having Jurisdiction to assure a code compliant facility.
b. Demolish and dispose of existing equipment and materials in accordance with approved drawings.
c. Furnish trash containers and sanitary facilities so as to provide a clean and sanitary work site.
d. Provide grounding, lighting, power distribution, and instrumentation construction services in accordance with approved plans and specifications.

2. Exclusions and Clarifications
a. Proposal is based on re-using existing wiring and devices.
b. Delays or additional work that are found as a result of existing field conditions, may require a change order.
c. Only work, equipment, and materials explicitly stated in this document are part of this proposal. Electrician accepts the responsibility for the coordination and furnishing of small and incidental equipment and services normally associated with this type of work and for coordination with other disciplines. Any additional significant equipment, materials, or services will be furnished only upon execution of a change order.
d. All other equipment and services not specifically mentioned in this scope of work nor defined above shall be the responsibility of others.
e. This proposal is based upon electrician executing their work in reasonable coordination with other disciplines and entities. Additional electrician costs due to significant or extraordinary delays by others will be grounds for change orders.

3. Taxes and Freight
a. Taxes are not included in this proposal. Upon request, electrician will furnish an estimate of taxes for this work. Owner to furnish electrician with tax exempt information.
b. Unless noted differently, this proposal includes freight cost for delivery of electrician manufactured products to the project site.
c. Unless noted differently, freight cost for equipment shipped FOB manufacturer's facility or FOB port-of-entry is not included in this proposal.

4. Warranty:
a. The warranty period for electrician manufactured electrical and control equipment is 18 months from ship date or 12 months from startup date. During this period, electrician will repair or replace at no cost to owner any failed component or system.
b. Unless noted differently, electrician will honor a manufacturer's warranty for all purchased equipment and will coordinate with the manufacturer to repair or replace the equipment in accordance with the manufacturer's warranty.
c. The electrician warranty covers only electrician furnished equipment and explicitly excludes all costs of lost production, loss of facility availability, and any and all other incidental costs.
d. Electrician will make every effort to honor the warranty in a timely manner. Delays in getting parts or equipment from manufacturers may affect the time to implement repairs or replacement.

If you have any questions or need additional information please let me know.

Also please note that tax and shipping has not been included in this proposal.

Best Regards,

Duane Moody
Sales Manager

ENGINEERING SERVICES

Configuration, FIU and RTU Applications

'ıe System Engineer will configure the FIU and RTU applications according to the system requirements.

Integration, On-site at Customer Location

· Test communications and operation between OIT and RTU
· Test and Debug as needed
· Conduct operator training on OIT
· Obtain signoff and acceptance

Engineering Services Sub-Total $ 6,525.00

MATERIALS

Office FIU: $ 6,489.00

QTY	Part No	Description	Unit Price	Extended
0001	F7500	ACE3600 SYSTEM TOOL SUITE	$ 500.00	$ 500.00

ACE3600 software tools environment for system building and maintenance. Includes installation CD and RS-232 PC to RTU cable.

0001	GD5677-ACE	ACE3600 RTU/FIU Application Program	$ 2,600.00	$ 2,600.00
)01	F7509	ACE3600 BASIC MODEL NO RADIO	$ 1,150.00	$ 1,150.00
0001	V102	ADD: 2 I/O SLOTS FRAME	$ 50.00	$ 50.00
0001	V228	ADD: 50X50 CM PAINTED METAL HOUSING	$ 300.00	$ 300.00
0001	V118	ADD: 4 AO MODULE	$ 495.00	$ 495.00
0001	V261	ADD: AC PS 85-264 V WITH BATTERY CHARGER	$ 310.00	$ 310.00
0001	V328	ADD: 10 AH BACKUP BATTERY	$ 207.00	$ 207.00
0001	FRN5769	SHARED RADIO INTERFACE	$ 622.00	$ 622.00
0001	GD3572-4AO	4 AO I/O Interface Kit	$ 255.00	$ 255.00

Valley Vista System RTU's: $ 14,428.00

QTY	Part No	Description	Unit Price	Extended
0004	F7563	ACE3600 WITH CDM750 136-174 MHZ	$ 1,850.00	$ 7,400.00

The model default includes CDM750 136-174 MHz radio, radio installation kit, PS 12V DC, CPU3640 ,basic frame (no I/O slots) and plug-in radio port for CPU. Must be ordered with Metal chassis or housing option. CDM750 is only shipped to North America at this time

^004	V102	ADD: 2 I/O SLOTS FRAME	$ 50.00	$ 200.00
0004	V228	ADD: 50X50 CM PAINTED METAL HOUSING	$ 300.00	$ 1,200.00
0004	V245	ADD: 16DI 4DO EE 4AI +/-20MA		

			$ 430.00	$ 1,720.00
0004	V261	ADD: AC PS 85-264 V WITH BATTERY CHARGER		
			$ 310.00	$ 1,240.00
0004	V328	ADD: 10 AH BACKUP BATTERY		
			$ 207.00	$ 828.00
0004	FPN1653	ASSEMBLY,POWER SUPPLY,24V PS PLUG IN KIT		
			$ 75.00	$ 300.00
0004	GD3572-Mixed	Mixed I/O Interface Kit		
			$ 385.00	$ 1,540.00

OIT Option: $ 1,550.00

QTY	Part No	Description	Unit Price	Extended
0001	GD5370	Operator Interface Terminal: 5.6 inch Graphic HMI with High-Resolution Analog Touchscreen Color TFT Display. Includes 120VAC to 24 VDC power supply (159mmLx 97mmW x 38mmH), Software, 5ft OIT to PLC communications cable, and 5 pack of protective touch screens. Includes mounting hardware.	$ 1,550.00	$ 1,550.00

NOTE: Does not include installation of OIT or power supply, AC power cable/wiring, or power supply to OIT cable/wiring.

Shipping: $ 325.00

QTY	Part No	Description	Unit Price	Extended
0001	GD7336	Federal Express Ground	$ 325.00	$ 325.00

Materials Sub-Total $ 22,792.00

OTALS

Engineering Services	$ 6,525.00
Materials	$ 22,792.00
TOTAL	**$ 29,317.00**

OPTIONAL SERVICES (Not Included in Quote Totals)

Programming and On-Site Integration of OIT $ 5,760.00

The System Engineer will create the OIT Application Program for the levels and pump set point adjustment of the tank site.

On-Site Integration Includes
- Test communications and operation between OIT and RTU
- Test and Debug as needed
- Conduct operator training on OIT
- Obtain signoff and acceptance

Radio Path Survey $ 4,365.00

To conduct a radio path survey at all of the RTU sites in the Sedona system to evaluate and determine radio power requirements and optimal path considerations.

OPTIONAL MATERIALS (Not Included in Quote Totals)

QTY	Part No	Description	Unit Price	Extended
0001	Y1503	Antenna, Gold Anodized Directional Yagi 3 Element 7.1 dB Gain VHF	$ 183.00	$ 183.00

.50-174 MHz)

0001	RG213	RG213 (Cost Per Foot)	$ 1.15	$ 1.15
0001	FSJ4-50B	1/2" Superflex (Cost Per Foot)	$ 3.58	$ 3.58
0001	GD1555-1	N-Male Connectors (ea) (1/2" Superflex)	$ 25.00	$ 25.00
0001	GD1555-2	N-Male Connectors (ea) (RG213)	$ 6.00	$ 6.00
0001	GDISB50LN-C2	Polyphaser (N-Male to N-Male) with 2ft Pigtail	$ 145.00	$ 145.00
0001	FG1683	Antenna, Fiberglass Omnidirectional 3 dB Gain VHF	$ 185.00	$ 185.00
0001	FM2	Mounting Bracket, Heavy Duty for Omni Fiberglass Base Antenna	$ 30.00	$ 30.00

Optional Wall Mount Housing for OIT and RTU (Includes mounting of OIT and RTU within enclsoure.: $ 4,642.00

QTY	Part No	Description	Unit Price	Extended
0001	GD3612	Lamax SST Housing (36x24x12), NEMA 4 Wall Mount (Painted Steel) with cutout for OIT. Includes installation and cabling of ACE3600 and OITas well as installation of the I/O interface kit. AC wiring to the OIT power supply is not included.	$ 4,242.00	$ 4,242.00

If this option is purchase, (1) V228 50x50cm housing can be deducted from the ACE3600 configuration. A V056 option \DD: 48 X 48 CM METAL CHASSIS, $100) will need to be substituted for the V228 option.

0001	GD7336	Shipping	$ 400.00	$ 400.00

TERMS

NOTE 1: Quote does not include shipping.
NOTE 2: Quote does not include taxes.

Payment:..... 100% Upon Receipt of Invoice, Net 30 Days. 1% discount if payment is received Net 15. We also accept Visa, Master Card, and American Express.
Delivery:..... TBD Upon Order Placement
Validity: ..... Quotation is valid for 90 days. The above quotation is based upon the information provided at the time of quotation. Global Data Specialists is not responsible for any information that is missing or incorrect. Any new information that is received after the quotation has been submitted may result in a revised quotation being issued to cover the costs of additional equipment or services as identified.
Shipment:..... Global Data Specialists, Mesa, AZ.
Warranty: ..... The Motorola equipment is warranted for 1 year upon shipment for parts and labor. Non-Motorola equipment warranties are vendor specific and will apply. No additional warranties are expressed or implied. Warranty labor does not include the cost associated with any out of the office related travel or hourly time expenses and will be billed separately.
Cancellation:.... 10% Penalty prior to 30 days of shipment, 25% Penalty less than 30 days prior to shipment.
Note: ..... Please reference quotation number on all correspondence.

GLOBAL
DATA SPECIALISTS

1815 W. First Ave., Suite 110, Mesa, AZ 85202
Phone: 480-461-3401 FAX: 480-461-3411

QUOTE: **MDM03931C** **June 09, 2011**
by Duane Moody
480-461-3401, Ext. 223, duane@gbl-data.com
Expires 07-Sep-11

Quoted To: **Andy Haas**
Email: ahaas@azwater.com

Arizona Water
3805 N. Black Canyon Hwy.
Phoenix, AZ 85015
Phone: 602-240-6860
FAX: 602-240-6878

End User: **Valley Vista System**

Description

Global Data Specialists is pleased to provide you with the following BUDGETARY quotation for the Sedona system as per your request. The quote includes as follows:

Replacing the RTUs communicating Intrac protocol at the Sedona Golf Course Resort Tank and 3 associated wells (Rancho Rojo, Sedona Golf Resort Well, and Valley Vista Well) with the Motorola ACE3600. This would also include another FIU at the office with analog output module for interface to a strip chart recorder (currently interfaced to Intrac FIU). The ACE3600 FIU would share the same radio as the current Intrac FIU.

An option for an Operator Interface Terminal (OIT) would be interfaced to the Tank as an option and would include the following:
a. OIT with software
b. 120VAC to 24VDC power supply needed for the OIT (159mmLx97mmWx38mmH)
c. A 5ft comm. cable from the OIT to the PLC
d. A 5 pack of protective screen covers for the touchscreen
e. The Engineering Services for programming of the OIT and RTU
NOTE: This Option can also be included with Option 3 below.

This will not include installation of the OIT in the housing/cabinet or AC to power supply or power supply to OIT wiring/cables. A separate housing for the OIT will need to be provided or a larger housing at the Tank may be needed to house the ACE3600 and OIT. A separate housing for installation of the OIT and RTU (wall mount) is included in the Optional Materials.

NOTE 1: The Optional Materials section of the quote lists a VHF Yagi antenna individual price for those sites that may need to be replaced as needed for optimal system operation. Also, please note that any sites requiring new coax cable will be included on the invoice. Coax cable types, with cost per foot, has been included in the Optional Materials section of the proposal. Optional connectors and other items are also included in this section.

NOTE 2: The Optional Services also includes the budgetary estimate for a radio path survey for the RTU sites at Wikiup, Pinewood, Harmony High Point, Sedona Golf Course Resort, and Montezuma Hills Tanks and associated wells/pump sites.. This will also include the central computer FIU. This will also determine the optimal location of the repeater as well as antenna height. The radio path survey is needed to evaluate and determine the radio communications path between the various sites to determine if a 5 watt VHF radio is sufficient or if a higher power radio configuration is required. If a higher power radio is needed, this will also determine if any hardware changes need to be made at the site(s) for larger power supply and larger radio.

NOTE 3: Quotation does not include RTU equipment installation.

To provide cost effective installation of the ACE3600 RTU, Global Data Specialists has created I/O interface kits that can be used for faster and easier installation of the equipment. The kit consists of DIN rail mounted terminal blocks and relay blocks, along with a direct interface connector to the front of the I/O module, and a 3 ft cable. Additional lengths are optional.

These kits have been designed for the Mixed I/O module, 8/16 AI module, 8/16 DO module, 16/32 DI module, 4 AO module, 4AO/8AI module, 16DI FET, 8 DI/8DO FET, 16DO FET, and the 16 DI 120-230V module. Additional modules can be designed upon request.

The kits can be mounted within a wall mount enclosure along with the ACE3600 RTU, or within a separate housing or for outside the enclosure mounting depending upon the site requirements.

In addition, these kits were created for the following issues.
a. The maximum wire size for the terminals on the ACE3600 I/O modules is 18 ga.
b. The relays in the DO and Mixed I/O modules do not have a high capacity compared to the MOSCAD RTU's or be able to drive external devices. As a result, interpose relays may need to be required. The interface kit includes relays that provide higher capacity relays than those included with the ACE I/O modules.
c. The terminals provided with the interface kit allow for easier installation and up to 12ga wiring. The terminals, "linkles" on the I/O modules can be hard to access within the module housing and can be cramped for the wiring to the module. The interface kit terminals can be installed for more readily available access and easier wire routing.

NOTE: The add-on power supply for the DI and AI modules will be needed to provide wetting voltage for the DI's and the AI loop power.

If you have any questions or need additional information please let me know.

Best Regards,

Duane Moody
Sales Manager

WA 1-4873

ARIZONA WATER COMPANY
WORK AUTHORIZATION

W.A. NUMBER: 1-4873
P.E. NUMBER:
BUDGET ITEM NO.: B-1
SHEET NO.: 1 of 2

SYSTEM: VALLEY VISTA	WORK TO START BY: UPON AUTHORIZATION
DIVISION: VERDE VALLEY	WORK TO BE FINISHED BY: WITHIN 180 DAYS
TAX CODE: 0971	

DESCRIPTION OF WORK:

Design, permit, construct, and make operational an Arsenic Removal Facility at Sedona Golf Resort Well (Phase 2 of 2). The best available treatment technology of adsorptive technology was selected. Construct in accordance with attached drawings and/or Arizona Water Company specifications.

FACTORS JUSTIFYING WORK:

2012 APPROVED BUDGET ITEM (PHASE 2 OF 2) $440,000
2011 (PHASE 1 OF 2) BUDGET = $64,975 ; SPENT APPROXIMATELY $65,000

COST ESTIMATE		AUTHORIZATION	DATE
COST OF WORK:		PREPARED BY: Andrew J. Haas Andy Haas AJH 1-10-12	1-5-12
MATERIAL	0		
LABOR	15,000	REVIEWED FOR ESMT/ROW VERIFICATION: Charles Briggs CB 01-10-2012	01-05-2012
CONTRACT PORTION	345,220		
OVERHEAD	39,624	REVIEWED BY: Mike Loggins ML 1-11-12	1-5-12
TOTAL AUTHORIZED EXPENDITURES CHARGEABLE TO THIS W.A.	$ 399,844		
FUNDS RECEIVED:		APPROVED BY ENGINEERING: Fredrick Schneider FS 1-10-12	1-5-12
CONTRIBUTIONS RECEIVED	0		
REFUNDABLE ADVANCES RECEIVED	0	APPROVED BY FINANCE: Joseph Harris	1/5/12
TOTAL CONTRIBUTIONS/ADVANCES	0		
NET CASH REQUIRED	$ 399,844	AUTHORIZED BY PRESIDENT: William M Garfield William Garfield	1-10-2012

COMMENTS:

The $40,000 underage is being transferred to WA 1-4875 (Broken Arrow Well No. 10 ARF) to cover the projected shortfall on that project.

CONSTRUCTION RELEASE:

RELEASED TO CONSTRUCTION
Authorized by FRED SCHNEIDER
Date 1/10/2012

2012 Re-release

AFH

ARIZONA WATER COMPANY

WORK AUTHORIZATION - DETAIL SHEET

W.A. NUMBER: 1-4873
P.E. NUMBER:
BUDGET ITEM NO.: B-1
SHEET NO.: 2 of 2

RETIREMENT PROPERTY UNITS	PLANT PROPERTY ACCOUNT	UNIT DESCRIPTION	QUANTITY	YEAR INSTALLED AND W.A. NUMBER

PROJECT DESCRIPTION:

Design, permit, construct, and make operational an Arsenic Removal Facility at Sedona Golf Resort Well (Phase 2 of 2). The best available treatment technology of adsorptive technology was selected.

	DESCRIPTION	PLANT PROP ACCT	QUANTITY	UNIT COST	TOTAL
CONTRACT WORK	Provide and Install On-Site Piping	332	1	$ 9,912.00	$ 9,912
	Provide and Install Arsenic Removal Facility	332	1	191,372.79	191,373
	Provide and Install Backwash Recovery System	332	1	46,471.00	46,471
	Provide and Install On-Site Electrical	332	1	30,856.00	30,856
	Testing, Commissioning, and On-Site Operator Training	332	1	12,706.00	12,706
	Contracting Tax	332	1	4,902.06	4,902
	Special Inspections	332	2	2,500.00	5,000
	Construction Contingency	332	t	44,000.00	44,000
	SERVICE CONNECTIONS COMPLETE: DOUBLE-LONG	345			
	SERVICE CONNECTIONS COMPLETE: DOUBLE-SHORT	345			
	SERVICE CONNECTIONS COMPLETE: SINGLE-LONG	345			
	SERVICE CONNECTIONS COMPLETE: SINGLE-SHORT	345			
TOTAL CONTRACT WORK					$ 345,220
MATERIALS					
	SERVICE CONNECTIONS: DOUBLE-LONG	345			
	SERVICE CONNECTIONS: DOUBLE-SHORT	345			
	SERVICE CONNECTIONS: SINGLE-LONG	345			
	SERVICE CONNECTIONS: SINGLE-SHORT	345			
	METERS	346			
TOTAL MATERIALS					$ -
LABOR	Submittal Reviews	332	80	$ 50.00	$ 4,000
	Project Management	332	60	50.00	3,000
	TESTING FEE				
	PERMIT FEE				
	SURVEY FEE				
	FIELD INSPECTION	332	160	50.00	8,000
	INSTALL SERVICE CONNECTIONS: DOUBLE-LONG	345			
	INSTALL SERVICE CONNECTIONS: DOUBLE-SHORT	345			
	INSTALL SERVICE CONNECTIONS: SINGLE-LONG	345			
	INSTALL SERVICE CONNECTIONS: SINGLE-SHORT	345			
TOTAL LABOR					$ 15,000
SUBTOTAL - CONTRACT WORK, MATERIALS, AND LABOR					$ 360,220
OVERHEAD					39,624
TOTAL	REFUNDABLE PORTION ☐	NON-REFUNDABLE PORTION ☐		COST ESTIMATE	$ 399,844

AFH

ARIZONA WATER COMPANY

INTER-OFFICE CORRESPONDENCE

To: Fred Schneider *Date:* January 4, 2012

From: Andy Haas AJH

Subject: Funding for WA 1-4873 Sedona Golf Resort ARF, WA 1-4874 Montezuma Haven ARF, WA 1-4875 Broken Arrow Well No. 10 ARF, WA 1-4930 Cliffside Trail A-Q, and WA 1-4931 Antigua Way

Summarized below are proposed changes to the construction budgets for the above referenced projects. These changes result in a net-zero change to the Company's 2012 Construction Budget. These budget adjustments are the result of a change in the overhead rate from 15% to 11% and, receiving final bids for construction.

WA	Budgeted Amount	Released Amount	WA Surplus/(Shortfall)
1-4873	$440,000	$399,844	$40,156
1-4874	$740,000	$689,978	$50,022
1-4875	$430,000	$470,017	($40,017)
1-4930	$75,000	$110,190	($35,190)
1-4931	$50,000	$64,971	($14,971)
Total	$1,735,000	$1,735,000	$0

Following approval of these budget adjustments, the Company intends to execute contracts immediately. There will be no change to the amount of total dollars authorized by the Company's Board of Directors as a result of these changes.

afh

ARIZONA WATER COMPANY
WORK AUTHORIZATION

W.A. NUMBER: 1-4873
P.E. NUMBER:
BUDGET ITEM NO.: Special #14
SHEET NO.: 1 of 2

SYSTEM: VERDE VALLEY
DIVISION: SEDONA
TAX CODE: 0971

WORK TO START BY: UPON AUTHORIZATION
WORK TO BE FINISHED BY: WITHIN 180 DAYS

DESCRIPTION OF WORK:

Design, permit, construct, and make operational an Arsenic Removal Facility at Sedona Golf Resort Well. Construct in accordance with attached drawings and/or Arizona Water Company specifications.

FACTORS JUSTIFYING WORK:

The lease on the existing Envirogen arsenic removal facility at Sedona Golf Resort Well expires February 18, 2012. Company engineers have determined that the most cost effective way to continue providing safe and reliable water which complies with the safe drinking water requirements is to construct a new arsenic removal facility at this well in advance of the lease expiration. The arsenic removal facility will use the best available technology at the lowest contracted price in a design-build format. The arsenic removal facility was bid to a pre-selected group of qualified contractors, vendors, and engineers based on their prior experience. Through the evaluation, it was determined that the new arsenic removal facility will utilize adsorptive media based on an evaluation of water quality, site sizing constraints, construction, and projected operating costs.

COST ESTIMATE	
COST OF WORK:	
MATERIAL	0
LABOR	6,500
CONTRACT PORTION	50,000
OVERHEAD	8,475
TOTAL AUTHORIZED EXPENDITURES CHARGEABLE TO THIS W.A.	$ 64,975
FUNDS RECEIVED:	
CONTRIBUTIONS RECEIVED	0
REFUNDABLE ADVANCES RECEIVED	0
TOTAL CONTRIBUTIONS/ADVANCES	0
NET CASH REQUIRED	$ 64,975

COMMENTS:

AUTHORIZATION	DATE
PREPARED BY: Andrew F. Haas Andy Haas AJH 10-13-11	10-6-11
REVIEWED FOR ESMT/ROW VERIFICATION: Charles Briggs 10-13-2011	10-06-2011
REVIEWED BY: James Wilson JW 10/13/11	10/6/11
APPROVED BY ENGINEERING: Fredrick Schneider 10-13-11	10-6-11
APPROVED BY FINANCE: Joseph Harris	10/31/11
SPECIAL ITEM EXCEEDING $10,000; AUTHORIZED BY PRESIDENT: William Garfield	10-11-2011
SPECIAL ITEM EXCEEDING $10,000; AUTHORIZED BY CHAIRMAN: M.L. Whitehead	10-12-11

CONSTRUCTION RELEASE:

RELEASED TO CONSTRUCTION
Authorized by FRED SCHNEIDER
Date 10/13/2011

AFH

ARIZONA WATER COMPANY

WORK AUTHORIZATION - DETAIL SHEET

W.A. NUMBER: 1-4873
P.E. NUMBER:
BUDGET ITEM NO.: Special #14
SHEET NO.: 2 of 2

RETIREMENT PROPERTY UNITS	PLANT PROPERTY ACCOUNT	UNIT DESCRIPTION	QUANTITY	YEAR INSTALLED AND W.A. NUMBER

PROJECT DESCRIPTION:

DESIGN, PERMIT, CONSTRUCT, AND MAKE OPERATIONAL AN ARSENIC REMOVAL FACILITY AT SEDONA GOLF RESORT WELL.

	DESCRIPTION	PLANT PROP ACCT	QUANTITY	UNIT COST	TOTAL
CONTRACT WORK	Engineering Design and Permitting	332	1	$ 21,176.00	$ 21,176
	Mobilization	332	1	6,706.00	6,706
	Provide and Install Arsenic Removal Facility	332	1	22,118.00	22,118
	SERVICE CONNECTIONS COMPLETE: DOUBLE-LONG	345			
	SERVICE CONNECTIONS COMPLETE: DOUBLE-SHORT	345			
	SERVICE CONNECTIONS COMPLETE: SINGLE-LONG	345			
	SERVICE CONNECTIONS COMPLETE: SINGLE-SHORT	345			
TOTAL CONTRACT WORK					$ 50,000
MATERIALS					
	SERVICE CONNECTIONS: DOUBLE-LONG	345			
	SERVICE CONNECTIONS: DOUBLE-SHORT	345			
	SERVICE CONNECTIONS: SINGLE-LONG	345			
	SERVICE CONNECTIONS: SINGLE-SHORT	345			
	METERS	346			
TOTAL MATERIALS					$ -
LABOR	Engineering Design Review	332	60	$ 50.00	$ 3,000
	Submittal Reviews	332	40	50.00	2,000
	Project Management	332	30	50.00	1,500
	TESTING FEE				
	PERMIT FEE				
	SURVEY FEE				
	FIELD INSPECTION				
	INSTALL SERVICE CONNECTIONS: DOUBLE-LONG	345			
	INSTALL SERVICE CONNECTIONS: DOUBLE-SHORT	345			
	INSTALL SERVICE CONNECTIONS: SINGLE-LONG	345			
	INSTALL SERVICE CONNECTIONS: SINGLE-SHORT	345			
TOTAL LABOR					$ 6,500
SUBTOTAL - CONTRACT WORK, MATERIALS, AND LABOR					$ 56,500
OVERHEAD					8,475
TOTAL	REFUNDABLE PORTION ☐	NON-REFUNDABLE PORTION ☐		COST ESTIMATE	$ 64,975

AFH

ARIZONA WATER COMPANY

INTER-OFFICE CORRESPONDENCE

To: M. L. Whitehead
W. M. Garfield

Date: October 12, 2011

From: F. K. Schneider

Subject: Verde Valley Arsenic Removal Facilities Special WAs: 1-4872, 1-4873, 1-4874, and 1-4875

The leases on the existing Envirogen arsenic removal facilities in the Verde Valley Division are expiring.

Well Site	Lease Expiration Date
Broken Arrow Well No. 10	October 31, 2011
Rimrock Well No. 2	February 4, 2012
Sedona Golf Resort Well	February 18, 2012
Montezuma Haven Well No. 3	April 10, 2012

Company engineers have determined that the most cost effective way to continue providing safe and reliable water which complies with the safe drinking water requirements is to construct a new arsenic removal facility at each of these wells. To meet water system demands, construction of these new arsenic removal facilities must begin on or before each water services agreement term expiration. Each arsenic removal facility will use the best available technology at the lowest contracted price in a design-build format. Each arsenic removal facility was bid to a pre-selected group of qualified contractors, vendors, and engineers based on their prior experience. Through the evaluation, it was determined that all new arsenic removal facilities will utilize adsorptive media based on an evaluation of water quality, site sizing constraints, construction, and projected operating costs.

Bids received for the design and construction of these four arsenic removal facilities were somewhat higher than originally estimated. This will impact the proposed 2012 budget, but no additional funds, beyond those requested in my September 9, 2011 memorandum, will be requested for the 2011 construction budget.

hac

EXHIBIT 'A'

CROWN RIDGE ROAD

25' R/W

R=2475.00'
Δ=01°06'41"
L=48.00'

22.00'
S89°54'44"W

8' P.U.E.

WELL

39.53'
S0°5'16"E

40.00'
N0°5'16"W

EXIST. APS SWITCH BOX

ELEC. PANEL

EXIST. APS XFMR.

70.00'
N89°54'44"E

20' WATERLINE EASEMENT

10' WATERLINE EASEMENT

10' APS EASEMENT

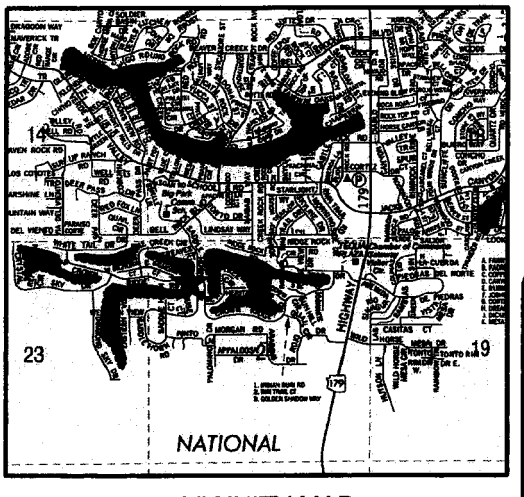

VICINITY MAP
N.T.S.

ARIZONA WATER COMPANY

PROPERTY LOCATION DRAWING

Property Location:	Northwest quarter Section 24, T.16N.,R5E.
Street Address:	990 Crown Ridge Road Sedona, AZ 86351
Project:	Sedona Golf Resort Well No.1

Date: 06.13.2002	Scale: 1"=10'-0"	Drawn By: CB

ARIZONA WATER COMPANY

3805 N. BLACK CANYON HIGHWAY, PHOENIX, ARIZONA 85015-5351 • P.O. BOX 29006, PHOENIX, AZ 85038-9006
PHONE: (602) 240-6860 • FAX: (602) 240-6874 • TOLL FREE: (800) 533-6023 • www.azwater.com

August 26, 2011

Mr. Douglas Craver
Adedge Technologies
6501 E. Greenway Parkway, #103-167
Scottsdale, AZ 85254

Re: Arsenic Removal Facilities at Broken Arrow Well No. 10, Sedona Golf Resort Well, Rimrock Well No. 2, and Montezuma Haven Wells No. 2 and 3.

Dear Mr. Craver:

Enclosed with this letter is a Request for Proposal ("RFP") for the above-referenced project. Arizona Water Company (the "Company") requests your submission of a detailed fee proposal for the following tasks, according to the enclosed RFP dated August 26, 2011:

Mandatory site visits will begin at 4115 E. Goldmine Drive, Lake Montezuma, Arizona 86335 at 8:00 a.m. on September 7, 2011.

A mandatory pre-submittal conference will be held at 3805 N. Black Canyon Highway, Phoenix, Arizona 85015 at 9:00 a.m. on September 12, 2011.

Proposals must be submitted no later than 4:00 p.m. on September 19, 2011. The original proposals, plus three (3) copies, shall be sent to the attention of Andy Haas, located at 3805 N. Black Canyon Highway, Phoenix, AZ 85015. Incomplete submittals will not be considered in the evaluation. Late submittals will not be accepted.

Proposal evaluation criteria are described in the enclosed RFP.

List of Documents enclosed with this letter:

a. Request for Proposal
b. Broken Arrow Well No. 10 Arsenic Removal Facility Proposal/Contract
c. Sedona Golf Resort Well Arsenic Removal Facility Proposal/Contract
d. Rimrock Well No. 2 Arsenic Removal Facility Proposal/Contract
e. Montezuma Haven Wells No. 2 & 3 Arsenic Removal Facility Proposal/Contract
f. Arsenic Removal Facility Technical Specifications
g. EI & C Design Guidelines and Technical Specifications

h. Arizona Water Company's General Conditions of Contract and Standard Specifications

The Company intends to select the successful Contractor directly from the submitted proposals. However, the Company reserves the right to have a formal interview process following review of the submitted proposals. It is anticipated that a notice of award for design services will be issued on or around September 23, 2011, following an evaluation of the submitted qualifications and pricing.

All questions and/or correspondence regarding this request must be submitted in writing, to Andy Haas by letter at the address noted above, by email at ahaas@azwater.com, or by fax at 602-294-2169.

Very truly yours,

Fredrick K. Schneider
Vice President - Engineering

afh
Enclosure(s)

ARIZONA WATER COMPANY

3805 N. BLACK CANYON HIGHWAY, PHOENIX, ARIZONA 85015-5351 • P.O. BOX 29006, PHOENIX, AZ 85038-9006
PHONE: (602) 240-6860 • FAX: (602) 240-6874 • TOLL FREE: (800) 533-6023 • www.azwater.com

August 26, 2011

Mr. Greg Gilles
Adedge Technologies
5152 Belle Wood Court, Suite A
Buford, GA 30518

Re: Arsenic Removal Facilities at Broken Arrow Well No. 10, Sedona Golf Resort Well, Rimrock Well No. 2, and Montezuma Haven Wells No. 2 and 3.

Dear Mr. Gilles:

Enclosed with this letter is a Request for Proposal ("RFP") for the above-referenced project. Arizona Water Company (the "Company") requests your submission of a detailed fee proposal for the following tasks, according to the enclosed RFP dated August 26, 2011:

Mandatory site visits will begin at 4115 E. Goldmine Drive, Lake Montezuma, Arizona 86335 at 8:00 a.m. on September 7, 2011.

A mandatory pre-submittal conference will be held at 3805 N. Black Canyon Highway, Phoenix, Arizona 85015 at 9:00 a.m. on September 12, 2011.

Proposals must be submitted no later than 4:00 p.m. on September 19, 2011. The original proposals, plus three (3) copies, shall be sent to the attention of Andy Haas, located at 3805 N. Black Canyon Highway, Phoenix, AZ 85015. Incomplete submittals will not be considered in the evaluation. Late submittals will not be accepted.

Proposal evaluation criteria are described in the enclosed RFP.

List of Documents enclosed with this letter:

a. Request for Proposal
b. Broken Arrow Well No. 10 Arsenic Removal Facility Proposal/Contract
c. Sedona Golf Resort Well Arsenic Removal Facility Proposal/Contract
d. Rimrock Well No. 2 Arsenic Removal Facility Proposal/Contract
e. Montezuma Haven Wells No. 2 & 3 Arsenic Removal Facility Proposal/Contract
f. Arsenic Removal Facility Technical Specifications
g. EI & C Design Guidelines and Technical Specifications

h. Arizona Water Company's General Conditions of Contract and Standard Specifications

The Company intends to select the successful Contractor directly from the submitted proposals. However, the Company reserves the right to have a formal interview process following review of the submitted proposals. It is anticipated that a notice of award for design services will be issued on or around September 23, 2011, following an evaluation of the submitted qualifications and pricing.

All questions and/or correspondence regarding this request must be submitted in writing, to Andy Haas by letter at the address noted above, by email at ahaas@azwater.com, or by fax at 602-294-2169.

Very truly yours,

Fredrick K. Schneider
Vice President - Engineering

afh
Enclosure(s)

ARIZONA WATER COMPANY

3805 N. BLACK CANYON HIGHWAY, PHOENIX, ARIZONA 85015-5351 • P.O. BOX 29006, PHOENIX, AZ 85038-9006
PHONE: (602) 240-6860 • FAX: (602) 240-6874 • TOLL FREE: (800) 533-6023 • www.azwater.com

August 26, 2011

Mr. Scott Colbath
Achen-Gardner Engineering, LLC
550 S. 79th Street
Chandler, AZ 85226

Re: Arsenic Removal Facilities at Broken Arrow Well No. 10, Sedona Golf Resort Well, Rimrock Well No. 2, and Montezuma Haven Wells No. 2 and 3.

Dear Mr. Colbath:

Enclosed with this letter is a Request for Proposal ("RFP") for the above-referenced project. Arizona Water Company (the "Company") requests your submission of a detailed fee proposal for the following tasks, according to the enclosed RFP dated August 26, 2011:

Mandatory site visits will begin at 4115 E. Goldmine Drive, Lake Montezuma, Arizona 86335 at 8:00 a.m. on September 7, 2011.

A mandatory pre-submittal conference will be held at 3805 N. Black Canyon Highway, Phoenix, Arizona 85015 at 9:00 a.m. on September 12, 2011.

Proposals must be submitted no later than 4:00 p.m. on September 19, 2011. The original proposals, plus three (3) copies, shall be sent to the attention of Andy Haas, located at 3805 N. Black Canyon Highway, Phoenix, AZ 85015. Incomplete submittals will not be considered in the evaluation. Late submittals will not be accepted.

Proposal evaluation criteria are described in the enclosed RFP.

List of Documents enclosed with this letter:

a. Request for Proposal
b. Broken Arrow Well No. 10 Arsenic Removal Facility Proposal/Contract
c. Sedona Golf Resort Well Arsenic Removal Facility Proposal/Contract
d. Rimrock Well No. 2 Arsenic Removal Facility Proposal/Contract
e. Montezuma Haven Wells No. 2 & 3 Arsenic Removal Facility Proposal/Contract
f. Arsenic Removal Facility Technical Specifications
g. EI & C Design Guidelines and Technical Specifications

h. Arizona Water Company's General Conditions of Contract and Standard Specifications

The Company intends to select the successful Contractor directly from the submitted proposals. However, the Company reserves the right to have a formal interview process following review of the submitted proposals. It is anticipated that a notice of award for design services will be issued on or around September 23, 2011, following an evaluation of the submitted qualifications and pricing.

All questions and/or correspondence regarding this request must be submitted in writing, to Andy Haas by letter at the address noted above, by email at ahaas@azwater.com, or by fax at 602-294-2169.

Very truly yours,

Fredrick K. Schneider
Vice President - Engineering

afh
Enclosure(s)

ARIZONA WATER COMPANY

3805 N. BLACK CANYON HIGHWAY, PHOENIX, ARIZONA 85015-5351 • P.O. BOX 29006, PHOENIX, AZ 85038-9006
PHONE: (602) 240-6860 • FAX: (602) 240-6874 • TOLL FREE: (800) 533-6023 • www.azwater.com

August 26, 2011

Mr. Fred Tregaskes
Weber Group
16825 S. Weber Drive
Chandler, AZ 85226-4112

Re: Arsenic Removal Facilities at Broken Arrow Well No. 10, Sedona Golf Resort Well, Rimrock Well No. 2, and Montezuma Haven Wells No. 2 and 3.

Dear Mr. Tregaskes:

Enclosed with this letter is a Request for Proposal ("RFP") for the above-referenced project. Arizona Water Company (the "Company") requests your submission of a detailed fee proposal for the following tasks, according to the enclosed RFP dated August 26, 2011:

Mandatory site visits will begin at 4115 E. Goldmine Drive, Lake Montezuma, Arizona 86335 at 8:00 a.m. on September 7, 2011.

A mandatory pre-submittal conference will be held at 3805 N. Black Canyon Highway, Phoenix, Arizona 85015 at 9:00 a.m. on September 12, 2011.

Proposals must be submitted no later than 4:00 p.m. on September 19, 2011. The original proposals, plus three (3) copies, shall be sent to the attention of Andy Haas, located at 3805 N. Black Canyon Highway, Phoenix, AZ 85015. Incomplete submittals will not be considered in the evaluation. Late submittals will not be accepted.

Proposal evaluation criteria are described in the enclosed RFP.

List of Documents enclosed with this letter:

a. Request for Proposal
b. Broken Arrow Well No. 10 Arsenic Removal Facility Proposal/Contract
c. Sedona Golf Resort Well Arsenic Removal Facility Proposal/Contract
d. Rimrock Well No. 2 Arsenic Removal Facility Proposal/Contract
e. Montezuma Haven Wells No. 2 & 3 Arsenic Removal Facility Proposal/Contract
f. Arsenic Removal Facility Technical Specifications
g. EI & C Design Guidelines and Technical Specifications

h. Arizona Water Company's General Conditions of Contract and Standard Specifications

The Company intends to select the successful Contractor directly from the submitted proposals. However, the Company reserves the right to have a formal interview process following review of the submitted proposals. It is anticipated that a notice of award for design services will be issued on or around September 23, 2011, following an evaluation of the submitted qualifications and pricing.

All questions and/or correspondence regarding this request must be submitted in writing, to Andy Haas by letter at the address noted above, by email at ahaas@azwater.com, or by fax at 602-294-2169.

Very truly yours,

Fredrick K. Schneider
Vice President - Engineering

afh
Enclosure(s)

ARIZONA WATER COMPANY

3805 N. BLACK CANYON HIGHWAY, PHOENIX, ARIZONA 85015-5351 • P.O. BOX 29006, PHOENIX, AZ 85038-9006
PHONE: (602) 240-6860 • FAX: (602) 240-6874 • TOLL FREE: (800) 533-6023 • www.azwater.com

August 26, 2011

Mr. Herb Tiffany
Tiffany Construction Company
75 Kallof Place, Suite 101
Sedona, AZ 86336

Re: Arsenic Removal Facilities at Broken Arrow Well No. 10, Sedona Golf Resort Well, Rimrock Well No. 2, and Montezuma Haven Wells No. 2 and 3.

Dear Mr. Tiffany:

Enclosed with this letter is a Request for Proposal ("RFP") for the above-referenced project. Arizona Water Company (the "Company") requests your submission of a detailed fee proposal for the following tasks, according to the enclosed RFP dated August 26, 2011:

Mandatory site visits will begin at 4115 E. Goldmine Drive, Lake Montezuma, Arizona 86335 at 8:00 a.m. on September 7, 2011.

A mandatory pre-submittal conference will be held at 3805 N. Black Canyon Highway, Phoenix, Arizona 85015 at 9:00 a.m. on September 12, 2011.

Proposals must be submitted no later than 4:00 p.m. on September 19, 2011. The original proposals, plus three (3) copies, shall be sent to the attention of Andy Haas, located at 3805 N. Black Canyon Highway, Phoenix, AZ 85015. Incomplete submittals will not be considered in the evaluation. Late submittals will not be accepted.

Proposal evaluation criteria are described in the enclosed RFP.

List of Documents enclosed with this letter:

a. Request for Proposal
b. Broken Arrow Well No. 10 Arsenic Removal Facility Proposal/Contract
c. Sedona Golf Resort Well Arsenic Removal Facility Proposal/Contract
d. Rimrock Well No. 2 Arsenic Removal Facility Proposal/Contract
e. Montezuma Haven Wells No. 2 & 3 Arsenic Removal Facility Proposal/Contract
f. Arsenic Removal Facility Technical Specifications
g. EI & C Design Guidelines and Technical Specifications

h. Arizona Water Company's General Conditions of Contract and Standard Specifications

The Company intends to select the successful Contractor directly from the submitted proposals. However, the Company reserves the right to have a formal interview process following review of the submitted proposals. It is anticipated that a notice of award for design services will be issued on or around September 23, 2011, following an evaluation of the submitted qualifications and pricing.

All questions and/or correspondence regarding this request must be submitted in writing, to Andy Haas by letter at the address noted above, by email at ahaas@azwater.com, or by fax at 602-294-2169.

Very truly yours,

Fredrick K. Schneider
Vice President - Engineering

afh
Enclosure(s)

ARIZONA WATER COMPANY

3805 N. BLACK CANYON HIGHWAY, PHOENIX, ARIZONA 85015-5351 • P.O. BOX 29006, PHOENIX, AZ 85038-9006
PHONE: (602) 240-6860 • FAX: (602) 240-6874 • TOLL FREE: (800) 533-6023 • www.azwater.com

August 26, 2011

Mr. Jeremy McVey
PCL Construction
1711 W. Greentree Drive, Suite 201
Tempe, AZ 85284

Re: Arsenic Removal Facilities at Broken Arrow Well No. 10, Sedona Golf Resort Well, Rimrock Well No. 2, and Montezuma Haven Wells No. 2 and 3.

Dear Mr. McVey:

Enclosed with this letter is a Request for Proposal ("RFP") for the above-referenced project. Arizona Water Company (the "Company") requests your submission of a detailed fee proposal for the following tasks, according to the enclosed RFP dated August 26, 2011:

Mandatory site visits will begin at 4115 E. Goldmine Drive, Lake Montezuma, Arizona 86335 at 8:00 a.m. on September 7, 2011.

A mandatory pre-submittal conference will be held at 3805 N. Black Canyon Highway, Phoenix, Arizona 85015 at 9:00 a.m. on September 12, 2011.

Proposals must be submitted no later than 4:00 p.m. on September 19, 2011. The original proposals, plus three (3) copies, shall be sent to the attention of Andy Haas, located at 3805 N. Black Canyon Highway, Phoenix, AZ 85015. Incomplete submittals will not be considered in the evaluation. Late submittals will not be accepted.

Proposal evaluation criteria are described in the enclosed RFP.

List of Documents enclosed with this letter:

a. Request for Proposal
b. Broken Arrow Well No. 10 Arsenic Removal Facility Proposal/Contract
c. Sedona Golf Resort Well Arsenic Removal Facility Proposal/Contract
d. Rimrock Well No. 2 Arsenic Removal Facility Proposal/Contract
e. Montezuma Haven Wells No. 2 & 3 Arsenic Removal Facility Proposal/Contract
f. Arsenic Removal Facility Technical Specifications
g. EI & C Design Guidelines and Technical Specifications

h. Arizona Water Company's General Conditions of Contract and Standard Specifications

The Company intends to select the successful Contractor directly from the submitted proposals. However, the Company reserves the right to have a formal interview process following review of the submitted proposals. It is anticipated that a notice of award for design services will be issued on or around September 23, 2011, following an evaluation of the submitted qualifications and pricing.

All questions and/or correspondence regarding this request must be submitted in writing, to Andy Haas by letter at the address noted above, by email at ahaas@azwater.com, or by fax at 602-294-2169.

Very truly yours,

Fredrick K. Schneider
Vice President - Engineering

afh
Enclosure(s)

ARIZONA WATER COMPANY

3805 N. BLACK CANYON HIGHWAY, PHOENIX, ARIZONA 85015-5351 • P.O. BOX 29006, PHOENIX, AZ 85038-9006
PHONE: (602) 240-6860 • FAX: (602) 240-6874 • TOLL FREE: (800) 533-6023 • www.azwater.com

August 26, 2011

Mr. Randy Gates
MGC Contractors, Inc.
4110 E. Elwood Street
Phoenix, AZ 85040

Re: Arsenic Removal Facilities at Broken Arrow Well No. 10, Sedona Golf Resort Well, Rimrock Well No. 2, and Montezuma Haven Wells No. 2 and 3.

Dear Mr. Gates:

Enclosed with this letter is a Request for Proposal ("RFP") for the above-referenced project. Arizona Water Company (the "Company") requests your submission of a detailed fee proposal for the following tasks, according to the enclosed RFP dated August 26, 2011:

Mandatory site visits will begin at 4115 E. Goldmine Drive, Lake Montezuma, Arizona 86335 at 8:00 a.m. on September 7, 2011.

A mandatory pre-submittal conference will be held at 3805 N. Black Canyon Highway, Phoenix, Arizona 85015 at 9:00 a.m. on September 12, 2011.

Proposals must be submitted no later than 4:00 p.m. on September 19, 2011. The original proposals, plus three (3) copies, shall be sent to the attention of Andy Haas, located at 3805 N. Black Canyon Highway, Phoenix, AZ 85015. Incomplete submittals will not be considered in the evaluation. Late submittals will not be accepted.

Proposal evaluation criteria are described in the enclosed RFP.

List of Documents enclosed with this letter:

a. Request for Proposal
b. Broken Arrow Well No. 10 Arsenic Removal Facility Proposal/Contract
c. Sedona Golf Resort Well Arsenic Removal Facility Proposal/Contract
d. Rimrock Well No. 2 Arsenic Removal Facility Proposal/Contract
e. Montezuma Haven Wells No. 2 & 3 Arsenic Removal Facility Proposal/Contract
f. Arsenic Removal Facility Technical Specifications
g. EI & C Design Guidelines and Technical Specifications

h. Arizona Water Company's General Conditions of Contract and Standard Specifications

The Company intends to select the successful Contractor directly from the submitted proposals. However, the Company reserves the right to have a formal interview process following review of the submitted proposals. It is anticipated that a notice of award for design services will be issued on or around September 23, 2011, following an evaluation of the submitted qualifications and pricing.

All questions and/or correspondence regarding this request must be submitted in writing, to Andy Haas by letter at the address noted above, by email at ahaas@azwater.com, or by fax at 602-294-2169.

Very truly yours,

Fredrick K. Schneider
Vice President - Engineering

afh
Enclosure(s)

ARIZONA WATER COMPANY

3805 N. BLACK CANYON HIGHWAY, PHOENIX, ARIZONA 85015-5351 • P.O. BOX 29006, PHOENIX, AZ 85038-9006
PHONE: (602) 240-6860 • FAX: (602) 240-6874 • TOLL FREE: (800) 533-6023 • www.azwater.com

August 26, 2011

Mr. Robert Calbert
McCarthy Construction
80 E. Rio Salado Parkway, Suite 310
Tempe, AZ 85281

Re: Arsenic Removal Facilities at Broken Arrow Well No. 10, Sedona Golf Resort Well, Rimrock Well No. 2, and Montezuma Haven Wells No. 2 and 3.

Dear Mr. Calbert:

Enclosed with this letter is a Request for Proposal ("RFP") for the above-referenced project. Arizona Water Company (the "Company") requests your submission of a detailed fee proposal for the following tasks, according to the enclosed RFP dated August 26, 2011:

Mandatory site visits will begin at 4115 E. Goldmine Drive, Lake Montezuma, Arizona 86335 at 8:00 a.m. on September 7, 2011.

A mandatory pre-submittal conference will be held at 3805 N. Black Canyon Highway, Phoenix, Arizona 85015 at 9:00 a.m. on September 12, 2011.

Proposals must be submitted no later than 4:00 p.m. on September 19, 2011. The original proposals, plus three (3) copies, shall be sent to the attention of Andy Haas, located at 3805 N. Black Canyon Highway, Phoenix, AZ 85015. Incomplete submittals will not be considered in the evaluation. Late submittals will not be accepted.

Proposal evaluation criteria are described in the enclosed RFP.

List of Documents enclosed with this letter:

a. Request for Proposal
b. Broken Arrow Well No. 10 Arsenic Removal Facility Proposal/Contract
c. Sedona Golf Resort Well Arsenic Removal Facility Proposal/Contract
d. Rimrock Well No. 2 Arsenic Removal Facility Proposal/Contract
e. Montezuma Haven Wells No. 2 & 3 Arsenic Removal Facility Proposal/Contract
f. Arsenic Removal Facility Technical Specifications
g. EI & C Design Guidelines and Technical Specifications

h. Arizona Water Company's General Conditions of Contract and Standard Specifications

The Company intends to select the successful Contractor directly from the submitted proposals. However, the Company reserves the right to have a formal interview process following review of the submitted proposals. It is anticipated that a notice of award for design services will be issued on or around September 23, 2011, following an evaluation of the submitted qualifications and pricing.

All questions and/or correspondence regarding this request must be submitted in writing, to Andy Haas by letter at the address noted above, by email at ahaas@azwater.com, or by fax at 602-294-2169.

Very truly yours,

Fredrick K. Schneider
Vice President - Engineering

afh
Enclosure(s)

ARIZONA WATER COMPANY

3805 N. BLACK CANYON HIGHWAY, PHOENIX, ARIZONA 85015-5351 • P.O. BOX 29006, PHOENIX, AZ 85038-9006
PHONE: (602) 240-6860 • FAX: (602) 240-6874 • TOLL FREE: (800) 533-6023 • www.azwater.com

August 26, 2011

Kiewit Infrastructure West Company
3888 E. Broadway Road
Phoenix, AZ 85040

Re: Arsenic Removal Facilities at Broken Arrow Well No. 10, Sedona Golf Resort Well, Rimrock Well No. 2, and Montezuma Haven Wells No. 2 and 3.

Dear Sirs:

Enclosed with this letter is a Request for Proposal ("RFP") for the above-referenced project. Arizona Water Company (the "Company") requests your submission of a detailed fee proposal for the following tasks, according to the enclosed RFP dated August 26, 2011:

Mandatory site visits will begin at 4115 E. Goldmine Drive, Lake Montezuma, Arizona 86335 at 8:00 a.m. on September 7, 2011.

A mandatory pre-submittal conference will be held at 3805 N. Black Canyon Highway, Phoenix, Arizona 85015 at 9:00 a.m. on September 12, 2011.

Proposals must be submitted no later than 4:00 p.m. on September 19, 2011. The original proposals, plus three (3) copies, shall be sent to the attention of Andy Haas, located at 3805 N. Black Canyon Highway, Phoenix, AZ 85015. Incomplete submittals will not be considered in the evaluation. Late submittals will not be accepted.

Proposal evaluation criteria are described in the enclosed RFP.

List of Documents enclosed with this letter:

a. Request for Proposal
b. Broken Arrow Well No. 10 Arsenic Removal Facility Proposal/Contract
c. Sedona Golf Resort Well Arsenic Removal Facility Proposal/Contract
d. Rimrock Well No. 2 Arsenic Removal Facility Proposal/Contract
e. Montezuma Haven Wells No. 2 & 3 Arsenic Removal Facility Proposal/Contract
f. Arsenic Removal Facility Technical Specifications
g. EI & C Design Guidelines and Technical Specifications

h. Arizona Water Company's General Conditions of Contract and Standard Specifications

The Company intends to select the successful Contractor directly from the submitted proposals. However, the Company reserves the right to have a formal interview process following review of the submitted proposals. It is anticipated that a notice of award for design services will be issued on or around September 23, 2011, following an evaluation of the submitted qualifications and pricing.

All questions and/or correspondence regarding this request must be submitted in writing, to Andy Haas by letter at the address noted above, by email at ahaas@azwater.com, or by fax at 602-294-2169.

Very truly yours,

Fredrick K. Schneider
Vice President - Engineering

afh
Enclosure(s)

ARIZONA WATER COMPANY

3805 N. BLACK CANYON HIGHWAY, PHOENIX, ARIZONA 85015-5351 • P.O. BOX 29006, PHOENIX, AZ 85038-9006
PHONE: (602) 240-6860 • FAX: (602) 240-6874 • TOLL FREE: (800) 533-6023 • www.azwater.com

August 26, 2011

Mr. Barry Wiesenberger
J Wise Corporation
5851 S. Wilson Drive
Chandler, AZ 85249

Re: Arsenic Removal Facilities at Broken Arrow Well No. 10, Sedona Golf Resort Well, Rimrock Well No. 2, and Montezuma Haven Wells No. 2 and 3.

Dear Mr. Wiesenberger:

Enclosed with this letter is a Request for Proposal ("RFP") for the above-referenced project. Arizona Water Company (the "Company") requests your submission of a detailed fee proposal for the following tasks, according to the enclosed RFP dated August 26, 2011:

Mandatory site visits will begin at 4115 E. Goldmine Drive, Lake Montezuma, Arizona 86335 at 8:00 a.m. on September 7, 2011.

A mandatory pre-submittal conference will be held at 3805 N. Black Canyon Highway, Phoenix, Arizona 85015 at 9:00 a.m. on September 12, 2011.

Proposals must be submitted no later than 4:00 p.m. on September 19, 2011. The original proposals, plus three (3) copies, shall be sent to the attention of Andy Haas, located at 3805 N. Black Canyon Highway, Phoenix, AZ 85015. Incomplete submittals will not be considered in the evaluation. Late submittals will not be accepted.

Proposal evaluation criteria are described in the enclosed RFP.

List of Documents enclosed with this letter:

a. Request for Proposal
b. Broken Arrow Well No. 10 Arsenic Removal Facility Proposal/Contract
c. Sedona Golf Resort Well Arsenic Removal Facility Proposal/Contract
d. Rimrock Well No. 2 Arsenic Removal Facility Proposal/Contract
e. Montezuma Haven Wells No. 2 & 3 Arsenic Removal Facility Proposal/Contract
f. Arsenic Removal Facility Technical Specifications
g. EI & C Design Guidelines and Technical Specifications

h. Arizona Water Company's General Conditions of Contract and Standard Specifications

The Company intends to select the successful Contractor directly from the submitted proposals. However, the Company reserves the right to have a formal interview process following review of the submitted proposals. It is anticipated that a notice of award for design services will be issued on or around September 23, 2011, following an evaluation of the submitted qualifications and pricing.

All questions and/or correspondence regarding this request must be submitted in writing, to Andy Haas by letter at the address noted above, by email at ahaas@azwater.com, or by fax at 602-294-2169.

Very truly yours,

Fredrick K. Schneider
Vice President - Engineering

afh
Enclosure(s)

ARIZONA WATER COMPANY

3805 N. BLACK CANYON HIGHWAY, PHOENIX, ARIZONA 85015-5351 • P.O. BOX 29006, PHOENIX, AZ 85038-9006
PHONE: (602) 240-6860 • FAX: (602) 240-6874 • TOLL FREE: (800) 533-6023 • www.azwater.com

August 26, 2011

Mr. Andy Mortensen
Hunter Contracting Company
701 N. Cooper Road
Gilbert, AZ 85233

Re: Arsenic Removal Facilities at Broken Arrow Well No. 10, Sedona Golf Resort Well, Rimrock Well No. 2, and Montezuma Haven Wells No. 2 and 3.

Dear Mr. Mortensen:

Enclosed with this letter is a Request for Proposal ("RFP") for the above-referenced project. Arizona Water Company (the "Company") requests your submission of a detailed fee proposal for the following tasks, according to the enclosed RFP dated August 26, 2011:

Mandatory site visits will begin at 4115 E. Goldmine Drive, Lake Montezuma, Arizona 86335 at 8:00 a.m. on September 7, 2011.

A mandatory pre-submittal conference will be held at 3805 N. Black Canyon Highway, Phoenix, Arizona 85015 at 9:00 a.m. on September 12, 2011.

Proposals must be submitted no later than 4:00 p.m. on September 19, 2011. The original proposals, plus three (3) copies, shall be sent to the attention of Andy Haas, located at 3805 N. Black Canyon Highway, Phoenix, AZ 85015. Incomplete submittals will not be considered in the evaluation. Late submittals will not be accepted.

Proposal evaluation criteria are described in the enclosed RFP.

List of Documents enclosed with this letter:

a. Request for Proposal
b. Broken Arrow Well No. 10 Arsenic Removal Facility Proposal/Contract
c. Sedona Golf Resort Well Arsenic Removal Facility Proposal/Contract
d. Rimrock Well No. 2 Arsenic Removal Facility Proposal/Contract
e. Montezuma Haven Wells No. 2 & 3 Arsenic Removal Facility Proposal/Contract
f. Arsenic Removal Facility Technical Specifications
g. EI & C Design Guidelines and Technical Specifications

h. Arizona Water Company's General Conditions of Contract and Standard Specifications

The Company intends to select the successful Contractor directly from the submitted proposals. However, the Company reserves the right to have a formal interview process following review of the submitted proposals. It is anticipated that a notice of award for design services will be issued on or around September 23, 2011, following an evaluation of the submitted qualifications and pricing.

All questions and/or correspondence regarding this request must be submitted in writing, to Andy Haas by letter at the address noted above, by email at ahaas@azwater.com, or by fax at 602-294-2169.

Very truly yours,

Fredrick K. Schneider
Vice President - Engineering

afh
Enclosure(s)

ARIZONA WATER COMPANY

3805 N. BLACK CANYON HIGHWAY, PHOENIX, ARIZONA 85015-5351 • P.O. BOX 29006, PHOENIX, AZ 85038-9006
PHONE: (602) 240-6860 • FAX: (602) 240-6874 • TOLL FREE: (800) 533-6023 • www.azwater.com

August 26, 2011

Mr. Wayne O'Brien
Garney Construction
1850 N. 95th Avenue, Suite 192
Phoenix, AZ 85037

Re: Arsenic Removal Facilities at Broken Arrow Well No. 10, Sedona Golf Resort Well, Rimrock Well No. 2, and Montezuma Haven Wells No. 2 and 3.

Dear Mr. O'Brien:

Enclosed with this letter is a Request for Proposal ("RFP") for the above-referenced project. Arizona Water Company (the "Company") requests your submission of a detailed fee proposal for the following tasks, according to the enclosed RFP dated August 26, 2011:

Mandatory site visits will begin at 4115 E. Goldmine Drive, Lake Montezuma, Arizona 86335 at 8:00 a.m. on September 7, 2011.

A mandatory pre-submittal conference will be held at 3805 N. Black Canyon Highway, Phoenix, Arizona 85015 at 9:00 a.m. on September 12, 2011.

Proposals must be submitted no later than 4:00 p.m. on September 19, 2011. The original proposals, plus three (3) copies, shall be sent to the attention of Andy Haas, located at 3805 N. Black Canyon Highway, Phoenix, AZ 85015. Incomplete submittals will not be considered in the evaluation. Late submittals will not be accepted.

Proposal evaluation criteria are described in the enclosed RFP.

List of Documents enclosed with this letter:

a. Request for Proposal
b. Broken Arrow Well No. 10 Arsenic Removal Facility Proposal/Contract
c. Sedona Golf Resort Well Arsenic Removal Facility Proposal/Contract
d. Rimrock Well No. 2 Arsenic Removal Facility Proposal/Contract
e. Montezuma Haven Wells No. 2 & 3 Arsenic Removal Facility Proposal/Contract
f. Arsenic Removal Facility Technical Specifications
g. EI & C Design Guidelines and Technical Specifications

h. Arizona Water Company's General Conditions of Contract and Standard Specifications

The Company intends to select the successful Contractor directly from the submitted proposals. However, the Company reserves the right to have a formal interview process following review of the submitted proposals. It is anticipated that a notice of award for design services will be issued on or around September 23, 2011, following an evaluation of the submitted qualifications and pricing.

All questions and/or correspondence regarding this request must be submitted in writing, to Andy Haas by letter at the address noted above, by email at ahaas@azwater.com, or by fax at 602-294-2169.

Very truly yours,

Fredrick K. Schneider
Vice President - Engineering

afh
Enclosure(s)

ARIZONA WATER COMPANY

3805 N. BLACK CANYON HIGHWAY, PHOENIX, ARIZONA 85015-5351 • P.O. BOX 29006, PHOENIX, AZ 85038-9006
PHONE: (602) 240-6860 • FAX: (602) 240-6874 • TOLL FREE: (800) 533-6023 • www.azwater.com

August 26, 2011

Mr. Pat Hennesy
Hennesy Mechanical Sales
201 S. 26th Street
Phoenix, AZ 85034

Re: Arsenic Removal Facilities at Broken Arrow Well No. 10, Sedona Golf Resort Well, Rimrock Well No. 2, and Montezuma Haven Wells No. 2 and 3.

Dear Mr. Hennesy:

Enclosed with this letter is a Request for Proposal ("RFP") for the above-referenced project. Arizona Water Company (the "Company") requests your submission of a detailed fee proposal for the following tasks, according to the enclosed RFP dated August 26, 2011:

Mandatory site visits will begin at 4115 E. Goldmine Drive, Lake Montezuma, Arizona 86335 at 8:00 a.m. on September 7, 2011.

A mandatory pre-submittal conference will be held at 3805 N. Black Canyon Highway, Phoenix, Arizona 85015 at 9:00 a.m. on September 12, 2011.

Proposals must be submitted no later than 4:00 p.m. on September 19, 2011. The original proposals, plus three (3) copies, shall be sent to the attention of Andy Haas, located at 3805 N. Black Canyon Highway, Phoenix, AZ 85015. Incomplete submittals will not be considered in the evaluation. Late submittals will not be accepted.

Proposal evaluation criteria are described in the enclosed RFP.

List of Documents enclosed with this letter:

a. Request for Proposal
b. Broken Arrow Well No. 10 Arsenic Removal Facility Proposal/Contract
c. Sedona Golf Resort Well Arsenic Removal Facility Proposal/Contract
d. Rimrock Well No. 2 Arsenic Removal Facility Proposal/Contract
e. Montezuma Haven Wells No. 2 & 3 Arsenic Removal Facility Proposal/Contract
f. Arsenic Removal Facility Technical Specifications
g. EI & C Design Guidelines and Technical Specifications

h. Arizona Water Company's General Conditions of Contract and Standard Specifications

The Company intends to select the successful Contractor directly from the submitted proposals. However, the Company reserves the right to have a formal interview process following review of the submitted proposals. It is anticipated that a notice of award for design services will be issued on or around September 23, 2011, following an evaluation of the submitted qualifications and pricing.

All questions and/or correspondence regarding this request must be submitted in writing, to Andy Haas by letter at the address noted above, by email at ahaas@azwater.com, or by fax at 602-294-2169.

Very truly yours,

Fredrick K. Schneider
Vice President - Engineering

afh
Enclosure(s)

ARIZONA WATER COMPANY

3805 N. BLACK CANYON HIGHWAY, PHOENIX, ARIZONA 85015-5351 • P.O. BOX 29006, PHOENIX, AZ 85038-9006
PHONE: (602) 240-6860 • FAX: (602) 240-6874 • TOLL FREE: (800) 533-6023 • www.azwater.com

August 26, 2011

Mr. Joel Felix
Felix Construction Company
309 E. 10th Place
Mesa, AZ 85210

Re: Arsenic Removal Facilities at Broken Arrow Well No. 10, Sedona Golf Resort Well, Rimrock Well No. 2, and Montezuma Haven Wells No. 2 and 3.

Dear Mr. Felix:

Enclosed with this letter is a Request for Proposal ("RFP") for the above-referenced project. Arizona Water Company (the "Company") requests your submission of a detailed fee proposal for the following tasks, according to the enclosed RFP dated August 26, 2011:

Mandatory site visits will begin at 4115 E. Goldmine Drive, Lake Montezuma, Arizona 86335 at 8:00 a.m. on September 7, 2011.

A mandatory pre-submittal conference will be held at 3805 N. Black Canyon Highway, Phoenix, Arizona 85015 at 9:00 a.m. on September 12, 2011.

Proposals must be submitted no later than 4:00 p.m. on September 19, 2011. The original proposals, plus three (3) copies, shall be sent to the attention of Andy Haas, located at 3805 N. Black Canyon Highway, Phoenix, AZ 85015. Incomplete submittals will not be considered in the evaluation. Late submittals will not be accepted.

Proposal evaluation criteria are described in the enclosed RFP.

List of Documents enclosed with this letter:

a. Request for Proposal
b. Broken Arrow Well No. 10 Arsenic Removal Facility Proposal/Contract
c. Sedona Golf Resort Well Arsenic Removal Facility Proposal/Contract
d. Rimrock Well No. 2 Arsenic Removal Facility Proposal/Contract
e. Montezuma Haven Wells No. 2 & 3 Arsenic Removal Facility Proposal/Contract
f. Arsenic Removal Facility Technical Specifications
g. EI & C Design Guidelines and Technical Specifications

h. Arizona Water Company's General Conditions of Contract and Standard Specifications

The Company intends to select the successful Contractor directly from the submitted proposals. However, the Company reserves the right to have a formal interview process following review of the submitted proposals. It is anticipated that a notice of award for design services will be issued on or around September 23, 2011, following an evaluation of the submitted qualifications and pricing.

All questions and/or correspondence regarding this request must be submitted in writing, to Andy Haas by letter at the address noted above, by email at ahaas@azwater.com, or by fax at 602-294-2169.

Very truly yours,

Fredrick K. Schneider
Vice President - Engineering

afh
Enclosure(s)

ARIZONA WATER COMPANY

3805 N. BLACK CANYON HIGHWAY, PHOENIX, ARIZONA 85015-5351 • P.O. BOX 29006, PHOENIX, AZ 85038-9006
PHONE: (602) 240-6860 • FAX: (602) 240-6874 • TOLL FREE: (800) 533-6023 • www.azwater.com

August 26, 2011

Mr. Mike Young
Fann Environmental, LLC
6708 Corsair Avenue, Suite A
Prescott, AZ 86301

Re: Arsenic Removal Facilities at Broken Arrow Well No. 10, Sedona Golf Resort Well, Rimrock Well No. 2, and Montezuma Haven Wells No. 2 and 3.

Dear Mr. Young:

Enclosed with this letter is a Request for Proposal ("RFP") for the above-referenced project. Arizona Water Company (the "Company") requests your submission of a detailed fee proposal for the following tasks, according to the enclosed RFP dated August 26, 2011:

Mandatory site visits will begin at 4115 E. Goldmine Drive, Lake Montezuma, Arizona 86335 at 8:00 a.m. on September 7, 2011.

A mandatory pre-submittal conference will be held at 3805 N. Black Canyon Highway, Phoenix, Arizona 85015 at 9:00 a.m. on September 12, 2011.

Proposals must be submitted no later than 4:00 p.m. on September 19, 2011. The original proposals, plus three (3) copies, shall be sent to the attention of Andy Haas, located at 3805 N. Black Canyon Highway, Phoenix, AZ 85015. Incomplete submittals will not be considered in the evaluation. Late submittals will not be accepted.

Proposal evaluation criteria are described in the enclosed RFP.

List of Documents enclosed with this letter:

a. Request for Proposal
b. Broken Arrow Well No. 10 Arsenic Removal Facility Proposal/Contract
c. Sedona Golf Resort Well Arsenic Removal Facility Proposal/Contract
d. Rimrock Well No. 2 Arsenic Removal Facility Proposal/Contract
e. Montezuma Haven Wells No. 2 & 3 Arsenic Removal Facility Proposal/Contract
f. Arsenic Removal Facility Technical Specifications
g. EI & C Design Guidelines and Technical Specifications

h. Arizona Water Company's General Conditions of Contract and Standard Specifications

The Company intends to select the successful Contractor directly from the submitted proposals. However, the Company reserves the right to have a formal interview process following review of the submitted proposals. It is anticipated that a notice of award for design services will be issued on or around September 23, 2011, following an evaluation of the submitted qualifications and pricing.

All questions and/or correspondence regarding this request must be submitted in writing, to Andy Haas by letter at the address noted above, by email at ahaas@azwater.com, or by fax at 602-294-2169.

Very truly yours,

Fredrick K. Schneider
Vice President - Engineering

afh
Enclosure(s)

ARIZONA WATER COMPANY

3805 N. BLACK CANYON HIGHWAY, PHOENIX, ARIZONA 85015-5351 • P.O. BOX 29006, PHOENIX, AZ 85038-9006
PHONE: (602) 240-6860 • FAX: (602) 240-6874 • TOLL FREE: (800) 533-6023 • www.azwater.com

August 26, 2011

Mr. Michael Rivera
Currier Construction
36 N. 56th Street
Phoenix, AZ 85034

Re: Arsenic Removal Facilities at Broken Arrow Well No. 10, Sedona Golf Resort Well, Rimrock Well No. 2, and Montezuma Haven Wells No. 2 and 3.

Dear Mr. Rivera:

Enclosed with this letter is a Request for Proposal ("RFP") for the above-referenced project. Arizona Water Company (the "Company") requests your submission of a detailed fee proposal for the following tasks, according to the enclosed RFP dated August 26, 2011:

Mandatory site visits will begin at 4115 E. Goldmine Drive, Lake Montezuma, Arizona 86335 at 8:00 a.m. on September 7, 2011.

A mandatory pre-submittal conference will be held at 3805 N. Black Canyon Highway, Phoenix, Arizona 85015 at 9:00 a.m. on September 12, 2011.

Proposals must be submitted no later than 4:00 p.m. on September 19, 2011. The original proposals, plus three (3) copies, shall be sent to the attention of Andy Haas, located at 3805 N. Black Canyon Highway, Phoenix, AZ 85015. Incomplete submittals will not be considered in the evaluation. Late submittals will not be accepted.

Proposal evaluation criteria are described in the enclosed RFP.

List of Documents enclosed with this letter:

a. Request for Proposal
b. Broken Arrow Well No. 10 Arsenic Removal Facility Proposal/Contract
c. Sedona Golf Resort Well Arsenic Removal Facility Proposal/Contract
d. Rimrock Well No. 2 Arsenic Removal Facility Proposal/Contract
e. Montezuma Haven Wells No. 2 & 3 Arsenic Removal Facility Proposal/Contract
f. Arsenic Removal Facility Technical Specifications
g. EI & C Design Guidelines and Technical Specifications

h. Arizona Water Company's General Conditions of Contract and Standard Specifications

The Company intends to select the successful Contractor directly from the submitted proposals. However, the Company reserves the right to have a formal interview process following review of the submitted proposals. It is anticipated that a notice of award for design services will be issued on or around September 23, 2011, following an evaluation of the submitted qualifications and pricing.

All questions and/or correspondence regarding this request must be submitted in writing, to Andy Haas by letter at the address noted above, by email at ahaas@azwater.com, or by fax at 602-294-2169.

Very truly yours,

Fredrick K. Schneider
Vice President - Engineering

afh
Enclosure(s)

ARIZONA WATER COMPANY

3805 N. BLACK CANYON HIGHWAY, PHOENIX, ARIZONA 85015-5351 • P.O. BOX 29006, PHOENIX, AZ 85038-9006
PHONE: (602) 240-6860 • FAX: (602) 240-6874 • TOLL FREE: (800) 533-6023 • www.azwater.com

August 26, 2011

Arizona Northern Equipment
618 S. Airpark Road
Cottonwood, AZ 86326

Re: Arsenic Removal Facilities at Broken Arrow Well No. 10, Sedona Golf Resort Well, Rimrock Well No. 2, and Montezuma Haven Wells No. 2 and 3.

Dear Sirs:

Enclosed with this letter is a Request for Proposal ("RFP") for the above-referenced project. Arizona Water Company (the "Company") requests your submission of a detailed fee proposal for the following tasks, according to the enclosed RFP dated August 26, 2011:

Mandatory site visits will begin at 4115 E. Goldmine Drive, Lake Montezuma, Arizona 86335 at 8:00 a.m. on September 7, 2011.

A mandatory pre-submittal conference will be held at 3805 N. Black Canyon Highway, Phoenix, Arizona 85015 at 9:00 a.m. on September 12, 2011.

Proposals must be submitted no later than 4:00 p.m. on September 19, 2011. The original proposals, plus three (3) copies, shall be sent to the attention of Andy Haas, located at 3805 N. Black Canyon Highway, Phoenix, AZ 85015. Incomplete submittals will not be considered in the evaluation. Late submittals will not be accepted.

Proposal evaluation criteria are described in the enclosed RFP.

List of Documents enclosed with this letter:

a. Request for Proposal
b. Broken Arrow Well No. 10 Arsenic Removal Facility Proposal/Contract
c. Sedona Golf Resort Well Arsenic Removal Facility Proposal/Contract
d. Rimrock Well No. 2 Arsenic Removal Facility Proposal/Contract
e. Montezuma Haven Wells No. 2 & 3 Arsenic Removal Facility Proposal/Contract
f. Arsenic Removal Facility Technical Specifications
g. EI & C Design Guidelines and Technical Specifications

h. Arizona Water Company's General Conditions of Contract and Standard Specifications

The Company intends to select the successful Contractor directly from the submitted proposals. However, the Company reserves the right to have a formal interview process following review of the submitted proposals. It is anticipated that a notice of award for design services will be issued on or around September 23, 2011, following an evaluation of the submitted qualifications and pricing.

All questions and/or correspondence regarding this request must be submitted in writing, to Andy Haas by letter at the address noted above, by email at ahaas@azwater.com, or by fax at 602-294-2169.

Very truly yours,

Fredrick K. Schneider
Vice President - Engineering

afh
Enclosure(s)

ARIZONA WATER COMPANY

Arsenic Removal Facilities – Request for Proposal

1. PROJECT DESCRIPTION

Through the issuance of this request for proposal ("RFP"), Arizona Water Company (the "Company") is soliciting competitive, sealed bids from Contractors to design, construct, and obtain all permits and governmental approvals for facilities to remove arsenic ("Removal Facilities") from the Company's Broken Arrow Well No. 10, Sedona Golf Resort Well, Rimrock Well No. 2, and Montezuma Haven Wells No. 2 and 3 (all five wells collectively referred to as "Wells") in Sedona and Rimrock, Arizona.

The Contractor, its engineer and subcontractors (collectively referred to as "Contractor") are responsible for the overall design/build project, including construction and all design disciplines necessary to deliver the Removal Facilities on "turn key" to the Company. The Contractor will be responsible for the design, construction, permitting, programming, commissioning, record drawings, and O&M manual for the four Removal Facilities included in this RFP. Design submittals must include 30 percent (drawings and engineering design report), 90 percent, and 100 percent submittals.

This RFP presumes an adsorption treatment process using a ferric-based media to remove arsenic from the raw water produced by the Company's Wells. Approved adsorptive medias can be found in Attachment "A" of the Arsenic Removal Facilities Technical Specifications.

2. GENERAL TERMS

A. Proposals must be delivered to the Company's Phoenix office (address provided below) before 4:00 p.m., Mountain Standard Time, on September 16, 2011. Late proposals will not be accepted.

Arizona Water Company
Attention: Andy Haas
3805 N. Black Canyon Hwy.
Phoenix, Arizona 85015

Site visits are scheduled for Wednesday, September 7, 2011, beginning promptly at 8:00 a.m., Mountain Standard Time, at the Montezuma Haven site located at:

4115 East Goldmine Drive
Lake Montezuma, Arizona 86335

The remaining three sites will be visited following this site. Limited parking space is available at all sites due to location in residential neighborhoods. Contractor is encouraged to carpool and minimize the number of vehicles present for site visits to

minimize any negative impact on the neighboring communities. **Site visits are mandatory.**

There will be a pre-submittal conference on Monday, September 12, 2011, at 9:00 a.m., Mountain Standard Time, at the Company's Phoenix Office (address above), at which time Company staff will be available to answer questions. **The pre-submittal conference is mandatory.**

The following schedule has been prepared for these projects. Contractors interested in bidding on this project must be available on the interview meeting dates. Completion dates below are defined as the date the Company accepts the Removal Facility in accordance with Section 2.E.

Site Visits:	September 7, 2011
Pre-Submittal Conference:	September 12, 2011
Proposals Due:	September 19, 2011
Contracts Awarded:	September 23, 2011
Rimrock Well No. 2 Completion:	December 30, 2011
Sedona Golf Resort Well Completion:	March 2, 2012
Broken Arrow Well No. 10 Completion:	March 16, 2012
Montezuma Haven Wells No. 2 and 3 Completion:	March 30, 2012

The Contractor must complete, to the Company's satisfaction, the Company's Proposal/Contract for the Removal Facility for each of the Wells included in their proposal for their bid to be considered.

With this proposal:

a) The successful bidder may be awarded one or more of the four Removal Facilities.

b) The Contractor shall submit with its proposal, pricing deducts for each of the following scenarios: the Contractor is the successful bidder for two, three, or four of the Removal Facilities.

c) The Contractor shall submit with its proposal a Bid Bond for each Removal Facility proposal.

Questions regarding this RFP must be submitted in writing by mail, fax, or email to Andy Haas at the Company.

Arizona Water Company
Attention: Andy Haas
3805 N. Black Canyon Hwy.
Phoenix, Arizona 85015
Fax: (602) 294-2169

E-mail: ahaas@azwater.com

Company requires a minimum of 48 hours to respond to questions in writing. Only written questions will be answered. Within 48 hours following the site visits, answers to all written questions received will be faxed or emailed to each contractor who is provided a RFP package. Oral statements or instructions made by the Company shall not constitute an amendment or addendum to this RFP. All amendments or addendums will be provided by the Company to each Contractor in writing.

B. Selection Criteria

Selection of the successful bidder will be based upon a combination of the following criteria weighted as determined by the Company:

1. Relevant Experience and Qualification of the Contractor.

a) The Contractor shall provide with its proposal submittal the following information to the Company, along with other pertinent information the Contractor may deem necessary, to demonstrate its qualifications in the design, permitting, and construction of the Removal Facilities as described in this RFP:

i. Name and address of Contractor.

ii. Number of years Contractor has been in business.

iii. Number of Removal Facilities Contractor has designed, permitted, constructed, and made operational for the removal of arsenic.

iv. Information concerning the Contractor's financial capacity and stability to assure the full and timely performance of the Contractor's proposal for the Removal Facilities.

v. Name and address of Engineer.

vi. Number of years Engineer's key personnel have been registered engineers.

vii. Number and description of Removal Facilities the Engineer has designed.

viii. List a minimum of three (3) similar projects that have been successfully completed by the Contractor. This list must include at a minimum:

1. The dates of work.

2. The type of work performed, including the capacity of water treated and the arsenic level of the influent and effluent.

3. The name and telephone number of a contact person or owner of the Removal Facility.

2. Provide a copy of the Contractor's Health and Safety Program

a) Organizational chart including key personnel from the Contractor and Engineer.

b) List of Arizona professional and contractor licenses held by the Contractor, Engineer, and key personnel who will be assigned to this project.

3. Key Personnel Qualifications.

a) Position descriptions and resumes of key personnel who will be assigned to this project.

b) Type and amount of work to be self-performed.

c) Proposed subcontractors.

4. Performance Record/Reputation.

a) The past relationship of the Contractor with the Company.

b) Willingness to abide by Company forms and agreements with no objections or changes.

c) Litigation and claims history relating to performance, completion, and progress for all similar projects.

5. Contractor's Understanding of, and Approach to project.

a) Contractor's understanding of the project.

b) Approach to dealing with potential problems.

6. Contractor's ability to Manage Project.

a) Quality control, dispute resolution, and safety management.

b) Subcontractor selection plan.

c) Planning, scheduling, estimating, and construction management tools.

7. Current/Recent Workload.

List of all current projects in the State of Arizona awarded to the Contractor and Engineer. For each project provide the project description, Contractor's role in the project, Engineer's role in the project, award date (note if pending), construction cost, status of completion, and estimated completion date.

8. Contractor's Ability to Meet Project Schedule Deadlines.

9. Overall Project Cost and the Contractor's Ability to Complete the Project on Budget.)

Note: The Company at its sole discretion reserves the right to reject or accept any bid proposal.

C. General Conditions of Contract

The Company's General Conditions of Contract: E-4-1, Construction Specifications: E-8-1, and Standard Specification Drawings: E-9-1 shall control over all other documents in the event of a conflict in requirements.

The successful Contractor must secure a 100 percent Performance Bond and a Material Payment Bond equal in value to the contract price.

D. Payment Schedule

1. In no event shall any invoice exceed the value of work completed or performed minus 10% retention. All invoices shall be submitted to the Company using AIA forms G702 and G703.

2. Rimrock Well No. 2: All design, permitting, and construction of the Rimrock Well No. 2 Removal Facility must be completed in 2011. The Contractor may submit invoices monthly beginning in October 2011 for the value of work completed or performed to date minus 10 percent retention. The Contractor shall submit an invoice for final retention payment in January 2012 after the Company accepts the Removal Facility in accordance with Section 2.E.

3. Sedona Golf Resort Well, Broken Arrow Well No. 10, and Montezuma Haven Wells No. 2 and 3.

The Contractor shall submit one (1) invoice in December 2011, which may include fees for design, permitting, and construction materials delivered to the project site. Invoice amount shall not exceed $50,000 and be coordinated with the Company prior to submittal.

The Contractor may submit invoices monthly beginning in January 2012 for the value of work completed or performed to date minus 10% retention.

The Contractor shall submit an invoice for final retention payment after the Company accepts each Removal Facility in accordance with Section 2.E.

E. Acceptance of Removal Facility

1. The Company shall accept each Removal Facility after the latest of the following:

a) Receipt of Approval of Construction from the Arizona Department of Environmental Quality.

b) Receipt of Certificate of Occupancy from Yavapai County and/or the City of Sedona.

c) The Company's written confirmation that the Removal Facility meets the Treatment Performance Requirements of Section 3.Bof the Arsenic Removal Facilities Technical Specifications, attached hereto, and incorporated herein.

ARIZONA WATER COMPANY

VERDE VALLEY
65 Coffee Pot Drive, Suite 7
Sedona, Az 86336 PH: 928-282-7092

PROPOSAL/CONTRACT

CONTRACTOR:	SYSTEM: VERDE VALLEY
ADDRESS:	W.A. No(s):
CITY ST ZIP:	BID DUE DATE: September 19, 2011

CONTRACTOR SUBMITS this PROPOSAL/CONTRACT to ARIZONA WATER COMPANY, an Arizona corporation (the "Company"), to perform the work and complete the project described on Page 2 (the "Project"), as an independent prime contractor.

1. Contractor certifies that it has a complete copy of, and has read, understands and accepts, the Company's General Conditions of Contract, and the Company's Construction Specifications and Standard Specification Drawings, (the "Specifications"), all of which are attached hereto. Contractor has examined the specific plans and related construction drawings for the Project (the "Drawings"), copies of which are also attached hereto. The General Conditions of Contract, Specifications and Drawings are incorporated into this Proposal/Contract. Contractor affirms that all work and materials to be furnished or purchased for the Project will be in strict conformance with the General Conditions of Contract, Specifications and Drawings.
2. Contractor represents and warrants that it has satisfied and complied with the provisions of Section 6, Contractor Understands Work and Working Conditions, of the General Conditions of Contract prior to submitting this Proposal/Contract.
3. Contractor represents that this Proposal/Contract is fair and honest in all respects, is submitted in good faith and is not submitted in collusion with any other company, entity or person.
4. Contractor acknowledges that one hundred percent (100%) Performance and Payment Bonds are required and must be provided to the Company prior to the commencement of work.
5. Prior to the commencement of work, Contractor will submit to the Company a list of all materials to be used in the Project. The materials list will include the manufacturer, part number, price and quantity included in this Proposal/Contract.
6. Contractor will furnish all labor, tools, equipment and materials required to complete the Project according to the General Conditions of Contract, Specifications and Drawings. No materials purchased by Contractor to be incorporated into the Project are subject to tax at the time of purchase and Contractor will not charge the Company for any such tax. Contractor will pay the applicable transaction privilege tax (the "Contracting Tax") on the Project after Contractor receives payment of the final Project invoice from the Company. The cost of materials incorporated into the Project which are exempt by Arizona Revised State Statues ("A.R.S.") from the Contracting Tax, for example, pipes or valves having a diameter of four (4) inches or larger, including equipment, fittings and any other related part that is used in operating the pipes or valves (A.R.S. §42-5061 B.6.), will not be included in the total cost of the labor and materials upon which the Contracting Tax is computed. Contractor retains full liability and obligation to pay the Contracting Tax and will defend and indemnify the Company against any demand or obligation to pay the Contracting Tax.
7. Contractor will maintain detailed accounting records of all materials purchased and incorporated into the Project. Such records will include all supporting original vendor invoices for all materials purchased. Following completion of the Project, Contractor will submit an itemized accounting to the Company which will include all supporting original vendor invoices and satisfactory evidence of payment thereof. The Company will not pay Contractor for materials not actually incorporated into the Project, and the disposition of such materials will remain Contractor's responsibility.
8. The Estimated Total Cost of the Project, shown on Page 2, is based on estimated labor and material quantities to be furnished. It includes an estimate of the Contracting Tax and the cost of the required Performance and Payment Bonds. Contractor will not cancel, modify or withdraw this Proposal/Contract during a ninety-day (90) period commencing on the Bid Due Date. The Company may accept this Proposal/Contract by signing and mailing, or otherwise delivering, a copy hereof to Contractor during such ninety-day (90) period. If the Company does not accept this Proposal/Contract during such ninety-day (90) period, Contractor may cancel this Proposal/Contract by giving written notice of cancellation to the Company.
9. Prior to the commencement of work, Contractor will provide the Company with a detailed construction schedule, in either Gantt or CPM form, identifying all tasks to be performed from the date of the written Commencement Notice through completion of the Project, including testing, training of Company Personnel and final Project invoicing. Contractor will provide the Company with a copy of such construction schedule documenting the progress of work on the Project at least monthly.
10. Contractor will not commence work on the Project until the Company gives Contractor a written Commencement Notice. Contractor will complete the Project within _____ calendar days after the Commencement Notice is issued.
11. Following the Company's written notice of satisfactory completion of the Project, and upon receipt of the final Project invoice from Contractor, the Company shall pay Contractor the actual total cost of the Project, which will be calculated as shown on Page 2, except that actual labor and material quantities installed/constructed will be substituted for the estimated labor and materials quantities and the Contracting Tax will be recalculated based on such actual labor and materials quantities.
12. The amount of applicable liquidated damages for Contractor's failure to deliver or perform within the time limit shown in Paragraph 10 may be deducted from the Company's payment of the final Project invoice. This provision shall not limit the Company's ability to terminate this Proposal/Contract for Contractor's unsatisfactory performance or failure to perform as provided in the General Conditions of Contract, Specifications or Drawings, or in this Proposal/Contract.

SPECIAL CONDITIONS:

CONSTRUCT ARSENIC REMOVAL FACILITY IN ACCORDANCE WITH SCOPE OF WORK AND REQUIREMENTS AS DEFINED IN REQUEST FOR PROPOSAL DATED, AUGUST 26, 2011 AND ARSENIC REMOVAL FACILITY TECHNICAL SPECIFICATIONS DATED, AUGUST 26, 2011

CONTRACTOR	PROPOSAL/CONTRACT ACCEPTED: *ARIZONA WATER COMPANY*
By:	By:
Print Name:	Print Name: Fredrick K. Schneider, PE
Title:	Title: Vice President - Engineering
Date:	Date:

ARIZONA WATER COMPANY

VERDE VALLEY
65 Coffee Pot Drive, Suite 7
Sedona, Az 86336 PH: 928-282-7002

PROPOSAL/CONTRACT

CONTRACTOR:	SYSTEM: VERDE VALLEY
AZ CONTRACTOR LICENSE NO: CLASSIFICATION:	W.A. No(s):
ADDRESS.	BID DUE DATE: September 19, 2011
CITY ST ZIP	BID BOND REQUIRED ☑ Yes ☐ No

DESCRIPTION OF PROJECT: DESIGN, PERMIT, CONSTRUCT AND MAKE OPERATIONAL AN ARSENIC REMOVAL FACILITY AT BROKEN ARROW WELL NO. 10.

1-2. MATERIALS EXEMPT FROM CONTRACTING TAX (per Paragraph 6)	QUANTITY	UNIT PRICE LABOR	UNIT PRICE MATERIALS		TOTAL COST LABOR		TOTAL COST MATERIALS
Engineering Design and Permitting							
Provide and Install On-Site Piping							
Provide and Install Arsenic Removal Facility							
Provide and Install Backwash Recovery System							
Provide and Install On-Site Electrical							
Testing, Commissioning, and On-Site Operator Training				1		2	
3. Total Labor to Install Exempt Materials (add the amounts in column 1)				3			
4. Total Exempt Materials (add the amounts in column 2)						4	

5-6. NON-EXEMPT MATERIALS	QUANTITY	LABOR	MATERIALS		LABOR		MATERIALS
				5		6	
7. Total Labor to Install Non-Exempt Materials (add the amounts in column 5)				7			
8. Total Non-Exempt Materials (add the amounts in column 6)						8	
9. Subtotal A (add lines 3, 7 and 8)						9	
10. Contracting Tax Base (multiply the amount on line 9 by 0.65)				10			
11. Applicable Contracting Tax Rate				11			
12. Contracting Tax (multiply the amount on line 10 by line 11)						12	
13. Subtotal B (add lines 4, 9 and 12)						13	
14. 100% Performance and Payment Bonds Cost						14	
15. Estimated Total Cost (add lines 13 and 14)						15	

NOTE: The Estimated Total Cost includes all labor and materials for backfill, pavement replacement, chip seal, and traffic control necessary for the Project.

ARIZONA WATER COMPANY

Arsenic Removal Facilities – Technical Specifications

1. SCOPE OF WORK

A. Design: The Contractor shall design, or arrange for the design of the arsenic removal facility ("Removal Facility") by a professional engineer registered in the State of Arizona with documented experience in designing Removal Facilities. The Contractor shall be responsible for civil, mechanical, electrical, and all other components of the project. The Contractor will be responsible for all permits and governmental approvals for the Removal Facility including, but not limited to Approval to Construct ("ATC") and Approval of Construction ("AOC") from the Arizona Department of Environmental Quality ("ADEQ"); building permit, special use permit, conditional use permit, and Certificate of Occupancy from Yavapai County and/or the City of Sedona. The Removal Facility shall be designed to provide treatment of water to meet the Treatment Performance Requirements of Section 3.B.

B. Equipment Supply: The Contractor shall supply a complete Removal Facility including, but not limited to, vessels, media, piping, valves, meters, controls, related appurtenances, start-up/commissioning, and O&M Manual. All external components of the Removal Facility must be painted in accordance with regulatory agency requirements and must be approved by the Company in writing.

C. Media: Only the approved adsorptive medias in Attachment "A" shall be used in the design, permitting, construction, and operation of the Removal Facility.

D. Construction: The Contractor will provide all civil, mechanical, electrical and all other contractors necessary to provide a completely installed and operational Removal Facility.

E. Operation: Company Staff will operate the Removal Facility upon completion of construction and after acceptance by the Company. Training for the Company staff and Removal Facility start-up/commissioning will be the responsibility of the Contractor.

F. It is the intent of these Technical Specifications to provide general descriptions and establish minimum requirements for the major components and appurtenances of the Removal Facility. It is the Contractor's responsibility to provide a complete, fully functional, and reliable Removal Facility which will meet the Treatment Performance Requirements set forth herein. A complete Removal Facility, including installation of all necessary components, equipment, and appurtenances shall be provided by the Contractor.

G. All materials in contact with potable water shall conform to National Sanitation Foundation Standards 60 and 61.

2. SUBMITTALS

A. Engineering Design Drawings, design report, and Shop Drawings: The Contractor shall submit for approval complete detailed engineering design, shop drawings, and descriptions of the proposed equipment including:

1. Engineering design report for Removal Facility for submittal to regulatory agencies.

2. Arrangement drawings and specification of all items and equipment showing all dimensions, weights, parts, construction details, and materials required to demonstrate compliance with these specifications.

3. Scaled piped drawings in both plan and section. The drawings shall show size of all piping, valves, and appurtenances.

4. List of chemicals being utilized and the quantity, concentration, and storage requirements for each.

5. Electrical and instrumentation wiring diagrams and loads.

6. Performance specifications of all items of equipment specified.

7. Complete instrumentation and control schematics, wiring diagrams, and terminal strip information. All panels to be provided by the Contractor shall be factory pre-wired.

8. Process flow schematic of the proposed facility. The maximum pressure drop through the Removal Facility throughout the full life-cycle of media shall also be specified.

9. Detailed design criteria including chemical dosages, hydraulic loading rates, empty bed contact times, backwashing rates and frequencies, pressure drops, type of media, adsorptive media performance guarantee, media volumes, backwash volumes, and other related process information. Calculations verifying the design of the Removal Facilities shall be provided to demonstrate that facility will comply with the Treatment Performance Requirements set forth in Section 3.B.

10. Instrumentation and control description detailing the Removal Facility start-up, shutdown, backwash, operation, control, and monitoring.

11. A list of any and all parameters, ratings, or other characteristics where the proposed Removal Facility equipment deviates from the requirements set forth in these Specifications. Any and all such deviations must be approved in writing by the Company.

12. Site plan and piping drawings including ancillary facilities.

13. List of recommended spare parts for an operating period of 3 years. The list shall describe each part, the quantity recommended, and the unit price of the part. Company may purchase all, some, or none of the recommended spare parts at the Company's option.

14. Field Acceptance Test Report: The Contractor shall submit for approval the results of all field tests conducted on the installed Removal Facility within two weeks of completion of each test required by these Specifications.

15. Operation and Maintenance Manual: Operation and maintenance manuals shall be submitted for Company's written approval and acceptance prior to start-up.

3. SERVICE CONDITIONS

A. General

The Contractor shall be responsible for designing, or arranging for the design of the Removal Facility, including any pretreatment facilities, to meet the Treatment Performance Requirements described in Section 3.B.

B. Treatment Performance Requirements

The Removal Facility shall reduce the effluent arsenic level to less than or equal to seven (7) micrograms per liter throughout the full life-cycle of all media. The Removal Facility shall maintain or improve the quality of the treated water as it relates to other chemical constituents. All changes to treated water quality and their respective impact on the water distribution system shall be submitted in writing, by the Contractor, for Company approval during design. Corrosivity impacts on the distribution system, if any, shall be fully mitigated by the design of the Removal Facility.

C. Hydraulic Design Criteria

Design flow capacities, system pressures, and other hydraulic information are provided in Attachment "B"

D. Water Quality Data

Pertinent water quality data for each of the Wells is provided in Attachment "C"

E. Existing Site Plans

Existing site plans are provided in Attachment "D"

F. Special Site Conditions

1. Rimrock Well No. 2

Rimrock Well No. 2 currently utilizes an above ground Lakos sand separator for particulate reduction. Upon startup, the well pumps directly into the water distribution system. Rimrock Well No. 2 is called to run by off-site tank level controls. This feature shall be retained and included in the considerations for design, permitting, and construction of the Removal Facility. Contractor will relocate liquid sodium hypochlorite injection point upstream of the Removal Facility utilizing the existing chemical pump and tank. Existing arsenic treatment plant to be removed by others prior to start of Removal Facility construction.

2. Montezuma Haven Wells No. 2 and 3

The Montezuma Haven Removal Facility will combine flows from Montezuma Haven Well No. 2 and Montezuma Haven Well No. 3; both wells are located on the Montezuma Haven well site. The Removal Facility must be designed for two operating conditions: flow from Montezuma Haven Wells No. 2 and 3, or flow from Montezuma Haven Well No. 3 only. Upon startup, Montezuma Haven Well No. 3 pumps to waste for approximately 3 minutes and is transitioned into the water distribution system by closing an automatic control valve on the pump to waste line. Upon shutdown, Montezuma Haven Well No. 3 transitions out of the water distribution system by opening the automatic control valve on the pump to waste line. Montezuma Haven Well No. 3 is transitioned into and out of the system for surge mitigation. This feature shall be retained and included in the considerations for design, permitting, and construction of the Removal Facility. Montezuma Haven Well No. 2, does not pump to waste on startup or shutdown. The wells are called to run by off-site tank level controls. This feature shall be retained and included in the considerations for design, permitting, and construction of the Removal Facility. Contractor will relocate liquid sodium hypochlorite injection point upstream of the Removal Facility utilizing the existing chemical pump and tank. Existing arsenic treatment plant for Montezuma Haven Well No. 3 to be removed by others prior to start of Removal Facility construction. Existing arsenic treatment plant for Montezuma Haven No. 2, to be removed by others after the construction of the Removal Facility is complete.

3. Sedona Golf Resort Well

Upon startup, the Sedona Golf Resort Well pumps to waste for approximately 3 minutes and is transitioned into the water distribution system by closing an automatic control valve on the pump to waste line. Upon shutdown, the well transitions out of the water distribution system by opening the automatic control valve on the pump to waste line. The well is transitioned into and out of the system for surge mitigation. This feature shall be retained and included in the considerations for design, permitting, and construction of the Removal Facility. The well is called to run by off-site tank level controls. This feature shall be retained and included in the considerations for

design, permitting, and construction of the Removal Facility. Contractor will relocate liquid sodium hypochlorite injection point upstream of the Removal Facility utilizing the existing chemical pump and tank. Existing arsenic treatment plant to be removed by others prior to start of Removal Facility construction.

4. Broken Arrow Well No. 10

The Well is operated manually by an on-off control switch and runs for prolonged periods of time between on-off cycles. An existing on-site online turbidity analyzer monitors the turbidity of the raw water produced by the well. Existing controls are in place to pump the well to waste when the raw water turbidity exceeds a pre-set limit. The well continues to pump to waste until turbidity drops below the pre-set limit. Pre-filtration is required prior to the Removal Facility. The existing arsenic treatment plant utilizes bag filters for pre-filtration. A previous particle size distribution analysis was performed on materials retained in a filter bag prior to the existing arsenic treatment plant and can be found in Attachment E. A copy of this analysis is being provided for illustration purposes to show the general need for pre-filtration and shall not be solely used for final design. Contractor shall be responsible for design, permitting, and construction of the pre-filtration equipment. Contractor will relocate liquid sodium hypochlorite injection point upstream of the Removal Facility utilizing the existing chemical pump and tank. Existing arsenic treatment plant to be removed by others prior to start of Removal Facility construction.

4. GENERAL FACILITY COMPONENT REQUIREMENTS

A. Description

1. The Removal Facility described herein shall be designed to remove arsenic from groundwater, accommodating all water quality parameters provided in Attachment "C". Any analysis of water quality parameters that may affect performance of the removal facility, life-cycle of any media, or waste produced are the responsibility of the Contractor or its Engineer. Effluent from the Removal Facility will flow directly into the water distribution system.

2. The Removal Facility shall consist of treatment vessels containing one of the approved adsorptive medias in Attachment "A" for removal of arsenic to the concentrations specified in the Treatment Performance Requirements. The Contractor shall provide all necessary controls, piping, and all other appurtenances which may be required.

3. Flow through the Removal Facility will range from constant flow over a 24-hour period to an intermittent operation starting and stopping several times per day.

4. The Removal Facility shall be designed so that the media may be backwashed in place without removal. Backwashing shall be a manual operation. All

backwash water shall be captured in an on-site backwash tank. Sufficient time shall be permitted for any fines in the backwash water to adequately settle. A backwash re-injection pump shall transfer water from the backwash tank and blend with the raw well water on the influent side of the Removal Facility for treatment. The backwash water re-injection rate shall not exceed 10 percent flow rate. Level controls in the backwash tank shall control the operation of the backwash re-injection pump. Backwash re-injection pump shall only operate when the well is operating and water is being treated.

5. If included in the design of the Removal Facility treatment process, pH adjustment shall be provided upstream and/or downstream of the Removal Facility only as required to meet the Treatment Performance Requirements and to readjust the effluent water quality to match historical pH levels. In the event the pH adjustment is required, it is assumed that a chemical feed skid (for acid or base feed) will be provided for each type of pH adjustment in separate feed skids. Each such chemical feed skid shall consist of packaged chemical feed pumps located on a separate containment skid. The containment skid shall have a footprint and containment volume sized to accommodate the packaged feed pumps and appurtenances. The type of chemical utilized shall be determined by the Contractor and approved in writing by the Company. All chemicals used must be NSF approved for drinking water.

B. Scope of Services

The Contractor shall provide all items required or recommended for a complete and operational Removal Facility that will meet the Treatment Performance Requirements including, but not limited to, all piping, conduit, tubing, wiring, supports, and all other appurtenances.

5. FILTER SIZING DESIGN

A. Series Flow

The Removal Facilities at Rimrock Well No. 2, Montezuma Haven well site, and Sedona Golf Resort Well shall treat water produced from the Wells in series flow, satisfying the Media Flux Rate and Empty Bed Contact Time requirements described in Sections 5.C and 5.D, respectively.

B. Parallel Flow with Bypass

The Removal Facility at Broken Arrow Well No. 10 shall treat water produced from the well in parallel flow with bypass flow satisfying the Media Flux Rate and Empty Bed Contact Time requirements described in Sections 5.C and 5.D, respectively. The Removal Facility shall be designed to transfer, from partially treated flow to fully treated flow as the adsorptive media becomes exhausted.

C. Media Flux Rate

1. The design flux rate of water across the media beds shall be approximately 6 gpm/per square foot during normal service conditions based on the well design flow rates found in Attachment "B".

2. The size and number of filter vessels and controls shall be designed to conform to the minimum flux rate recommended by the manufacturers of the approved adsorptive medias in Attachment "A" during all operating conditions, but shall not exceed the maximum design flux rate in Section 5.C.1.

3. The size and number of filter vessels and controls shall be designed so as to not exceed the maximum flux rate recommended by the manufacturers of the approved adsorptive medias in Attachment "A" during any operating condition, including during backwash water re-injection as described in Section 4.A.4. The flux rate shall not exceed the design flux rate in Section 5.C.1.

D. Empty Bed Contact Time

1. The design Empty Bed Contact Time ("EBCT") shall be a minimum of 3.5 minutes per vessel or 7 minutes total for the Removal Facilities treating in series flow listed in Section 3.F.1, 3.F.2, and 3.F.3.

2. The design EBCT shall be a minimum of 3.5 minutes per vessel for the Removal Facilities treating in parallel flow with bypass listed in Section 3.F.4.

3. The size and number of filter vessels shall be designed to conform to the minimum design EBCT requirements described in Sections 5.D.1 and 5.D.2 during all operating conditions, including during backwash water reinjection as described in Section 4.A.4, unless the media or equipment manufacturers recommend more stringent requirements.

6. TREATMENT FACILITY COMPONENTS

A. Filter Vessels

1. Carbon steel ASME and National Code stamped pressure vessels.

2. Filter vessels shall be lined with Tnemec or other NSF approved epoxy coating meeting the Company's Coating Specifications: O-12-2 (Attachment "F") and approved in writing by the Company.

3. Capable of, and designed to, operate at the respective design pressures listed in Attachment "B".

4. Manual backwashing features using manual butterfly valves for all cycles/functions of service, backwash, and rinse.

5. Stainless steel hydraulic panel with inlet, outlet gauges, system pressure differential gauge/switch combination.

6. Sample ports for operator monitoring of raw water, treated water from each vessel and blended water sample location.

7. Media sample port for obtaining media sample for testing.

8. Magnetic flow/totalizer meters on each vessel for measuring individual instantaneous gallons per minute and total gallons through the system in service and in backwash cycles.

9. All piping and fittings including laterals internal to the filter vessels shall be Type 304 or higher grade stainless steel.

10. Internal laterals shall be sized appropriately to distribute flow uniformly across the cross sectional area of the filter vessels during treatment and backwashing. Internal laterals must be approved, in writing, by the adsorptive media manufacturer, filter vessel manufacturer, and the Company.

11. Internal laterals shall be sized appropriately for proper operation with all of the approved adsorptive medias in Attachment "A".

12. The adsorptive media manufacturer must state, in writing, if a gravel underbed is required. Gravel underbed design must be approved, in writing, by the adsorptive media manufacturer, filter vessel manufacturer, and the Company.

13. Access manway on the side and inspection hatch on the top.

14. Filter vessels must be permanently attached to an engineered concrete slab or to the floor of a building enclosure, which shall be attached to an engineered concrete slab.

B. External Piping

1. External connections shall consist of flanged pipe connections or flanged coupling adaptors (raw water inlet, finished water outlet, backwash feed inlet, and backwash waste outlet).

a) Manufacturers:

i. Dresser, Inc. Style 128-w.
ii. Romac Industries, Inc. Style FCA501 or Style FC400.
iii. Smith-Blair, Inc. Series 913.

2. All external piping 3 inch and larger shall be ductile iron pipe ("DIP") and must conform to the Company's Construction Specifications: E-8-1 and Standard Specification Drawings: E-9-1.

3. All external piping smaller than 3 inch shall be seamless copper conforming to ASTM B88.

a) Buried potable water lines shall be Type K, soft or hard temper.

b) Exposed potable water lines shall be Type L, hard drawn.

c) All fittings shall be compression type per the Company's Construction Specification: E-8-1 and Standard Specification Drawings: E-9-1..

d) All pipe, fittings, and appurtenances shall conform to the Company's Construction Specifications: E-8-1 and Standard Specification Drawings: E-9-1, unless otherwise specified. Contractor shall inform Company in writing of any conflict in specifications, and Company shall determine the prevailing specification.

4. Stainless Steel Pipe

Above ground pipe on pipe and valve tree adjacent to the filter vessels may be Type 304L stainless steel in accordance with ASTM A 240 or higher grade.

a) Fittings

i. Material shall be in accordance with ASTM A 240 stainless steel, grade to match the pipe,
ii. Fittings shall be manufactured in accordance with ASTM A 774 for piping 3-inches in nominal diameter and greater, and in accordance with ASTM A 403, Class WP for piping less than 3-inches in diameter.
iii. Wall thickness shall be in accordance with ASME B36.19 and ASME B16.11.

b) Joints

i. Joints at valves and pipe appurtenances shall be flanges.
ii. All other joints shall be flanges or welded. Piping less than 4-inches in diameter shall have single butt-welded joints. Piping 4-inches through 12-inches in diameter shall have double butt-welded joints.

5. All external above ground pipe and fittings shall be painted with Tnemec or approved equal. The approved color will be determined by the County, City and/or the Company.

C. Valves and Appurtenances

1. Manual Butterfly Valves

a) Manually actuated butterfly valves with handwheels shall be installed aboveground on the pipe and valve tree for the control of flows for backwash, rinse, and normal treatment operations.

b) Manufacturers:

i. Mueller.
ii. Dezurik.
iii. Or equal approved in writing by the Company.

D. Flow Meters

1. One per filter vessel

2. General

a) Type: Magnetic flowmeter conforming to NSF 61

b) Materials:

i. Main Body: PVC sensor body or stainless steel
ii. Electronics Housing: Powder coated aluminum
iv. Electrodes: Hastelloy electrodes

3. Flow rate display indication in gpm and totalized flow in gallons

4. Accuracy: +/-0.5% of flow rate or better

5. End Connection: Flanged

6. Manufacturer:

a) Endress + Hauser – Promag 53W.
b) Krohne – Optiflux 4000 with IFC 300 transmitter.
c) Or equal approved, in writing, by the Company.

E. Valves, meters, and appurtenances shall be provided, as shown on the drawings, and as required to complete the work. Valves and appurtenances shall be in accordance with the Company's Construction Specifications: E-8-1 and Standard Specification Drawings: E-9-1, unless otherwise specified.

F. High Density Polyethylene (HDPE) Backwash Tank

1. General

a) Tanks shall be rotationally molded, one-piece seamless construction, cylindrical in cross-section and vertical in axis.

b) Tanks shall fully conform to ASTM D 1998-04.

c) All tank fitting attachments shall be provided with flexible couplings or other provisions to allow for movement without rupture or separation of connections. Flexible couplings shall allow minimum 4 percent deflection in all directions.

d) Tanks shall be clearly marked with manufacturer, date of manufacture, and serial number.

e) All opening cut edges shall be trimmed smooth.

f) Uncoated or exposed carbon steel appurtenances, fasteners, or anchorage will not be accepted.

g) Provide anchor bolts sized by the manufacturer. Installed on engineered concrete slab or other anchoring point approved by the Company.

2. Design Loads

a) Resistance of both wind and seismic loads shall be provided for both tank full and tank empty conditions.

b) Contractor shall be fully responsible for design and provision of adequate anchorage system for the service conditions.

c) Design must be approved in writing by the tank manufacturer.

d) Anchorage systems requiring tank penetrations are not acceptable.

e) All anchorage systems shall be galvanized carbon steel unless otherwise specified.

3. Materials

a) Tanks shall be virgin polyethylene resin as compounded and certified by the manufacturer.

b) Resin shall contain a minimum of a UV 8 stabilizer as compounded by the resin manufacturer.

4. Minimum required wall thickness for the cylinder must be sufficient to support its own weight in an upright position without any external support.

5. The top head must be integrally molded with the cylinder straight shell.

6. The bottom head must be integrally molded with the cylinder straight shell.

7. Fittings

a) Threaded bulkhead fittings shall not be allowed for connections greater than 2 inches in diameter.

b) Bolted double 150 lb. flange fittings shall be constructed with two (2) 150 lb. flanges and two (2) 150 lb. flange gaskets, and the correct number and size of all-thread bolts for the flange specified by the flange manufacturer.

8. Flush bottom molded outlets shall provide complete drainage of the tank.

9. Tanks shall have a minimum of three (3) lifting lugs integrally molded in the cylinder straight shell. Lifting lugs shall be Type 316 stainless steel.

10. Provide a minimum of four (4) tie-down lugs integrally molded into the top head. Tie-down lugs shall be designed to allow tank retention in wind and seismic loading without damage to the tank.

11. Manway: 18-inch threaded polyethylene, vented and easily accessible.

12. Concrete tank pad shall be level and smooth to the tolerances recommended by the tank manufacturer.

13. Each tank must be vented for the material, flow, and withdrawal rates expected.

G. Chemical Tubing and Conduit

1. General

a) For liquid chemical service, provide Linear Low Density Polyethylene "LLDPE" tubing. Install tubing in electrical conduit for ease of installation/replacement, as well as non-pressure rated secondary containment. Tubing

manufacturer shall confirm chemical compatibility of tubing with chemical system being served. Tubing shall be UV resistant.

2. Provide tubing adequately sized for the flow and pressure requirements of this application with the minimum following dimensions and pressure rating:

a) Outside diameter: 3/8 inch.
b) Inside diameter: ¼ inch.

c) Pressure Rating at 70° Fahrenheit: 200 psi.

3. Conduit for chemical tubing shall be PVC electrical conduit with sweeps instead of elbows. Conduit size shall be 2 inch for tubing with outside diameter of 3/8 inch through 5/8 inch. Conduit size shall be 3 inch for tubing with outside diameter of ¾ inch through 1 inch.

4. Provide all necessary fittings clamps, and adapters for connection of tubing at the chemical metering pump outlet, chemical feed point, and any other connections. Provide barbed or compression-style fittings, specifically designed for use with the tubing being provided, and compatible with the service (both with the fluid being carried in pipe and pressure rating). Fittings shall be located so that they are accessible at all times. No fittings shall be located in the carrier pipe. All connections shall be constructed per tubing manufacturer's recommendations to provide a connection which is equal to or greater than tubing pressure rating. All parts or fittings in contact with the fluid in the tubing shall be compatible with the chemical being carried.

H. Freeze Protection

1. All components of the Removal Facility and appurtenances must be protected from freezing. This section is meant to provide general descriptions and establish minimum requirements of the freeze protection required as part of the construction of the Removal Facility. Passive and active freeze protection must be used including but not limited to pipe insulation and heat tracing on exposed components and heat lamps and radiant heaters inside a building.

a) Insulation.

i. All outdoor piping, valves, fittings, gauges, tubing, air release valves, and all other appurtenances, shall be insulated based on a design ambient temperature of 10° Fahrenheit.
ii. The insulation shall be protected with aluminum or stainless steel metal jacketing with a minimum thickness of 0.016 inch (0.4 mm) with moisture barrier, secured in accordance with the jacket

manufacturer's recommendations. Joints shall be applied so they will shed water and shall be sealed completely.

iii. Valves and fittings shall be insulated and jacketed with preformed fitting covers matching outer jacketing used on straight pipe sections, with all joints weather sealed.

iv. All piping shall be supported in such a manner that neither the insulation nor the moisture barrier is compromised by the hanger/pipe support or the effects of the hanger/pipe support. In all cases, hanger spacing shall be such that the circumferential joint may be made outside the hanger/pipe support.

v. Install insulation subsequent to heat tracing.

vi. Metal jacket must be painted. The approved color will be determined by the County, City and/or the Company.

2. Building (Optional).

a) The Removal Facility may be enclosed in a building as part of the freeze protection components. The Building structure must meet or exceed the following requirements:

i. The interior temperature of the Metal structure shall be controlled with the use of insulation and heat lamps or forced air heaters. The design ambient temperature shall be 10° Fahrenheit.

ii. Building must have an engineered concrete floor.

iii. Building must be permanently attached to an engineered concrete slab.

iv. Building must meet all applicable building codes.

v. Building shall be designed for a 20-year minimum life span.

vi. Buildings exterior shall be painted. The approved color will be determined by the County, City and/or the Company.

7. ELECTRICAL

All electrical components shall comply with the Company's EI&C Design Guidelines Technical Specification, enclosed with this RFP.

Attachment "A"

Approved Adsorptive Medias

Media Requirements:

Adsorptive media shall be discardable as solid waste in a RCRA subtitle D (non-hazardous) landfill when saturated and pass all TCLP test.

Adsorptive media shall be a durable, attrition resistant media suitable for backwashing and removal of arsenic.

Approved Manufacturers:

1. Severn Trent Bayoxide E-33 or E-33P Granular Ferric Oxide (GFO) adsorption media

2. Siemens Granular Ferric Hydroxide (GFH) adsorption media

Attachment "B"

Hydraulic Design Criteria

Broken Arrow Well #10

Design Capacity: 450gpm

System Pressure, Static: 110psi

System Pressure, Well Running: 150psi

Minimum Design Pressure: 200psi

Sedona Golf Resort Well

Design Capacity: 300gpm

System Pressure, Static: 85psi

System Pressure, Well Running: 110psi

Minimum Design Pressure: 150psi

Rimrock Well #2

Design Capacity: 200gpm

System Pressure, Static: 90psi

System Pressure, Well Running: 105psi

Minimum Design Pressure: 150psi

Montezuma Haven Well #3

Design Capacity: 375gpm

System Pressure, Static: 85psi

System Pressure, Well Running: 100psi

Minimum Design Pressure: 150psi

<u>Montezuma Haven Well #2</u>

Design Capacity: 50gpm

System Pressure, Static: 85psi

System Pressure, Well Running: 100psi

Minimum Design Pressure: 150psi

Attachment "C"

Water Quality Data

(data for each of the Wells is listed on the pages immediately follow this page)

ARIZONA WATER COMPANY
BROKEN ARROW WELL #10

System	Location	Contaminant	Result	Sample Date
SD	BA10	Antimony	< 0.0005	25-Aug-09
SD	BA10	Arsenic	0.0152	05-Jan-09
SD	BA10	Arsenic	0.0139	02-Feb-09
SD	BA10	Arsenic	0.0132	06-Apr-09
SD	BA10	Arsenic	0.0124	04-May-09
SD	BA10	Arsenic	0.0129	08-Jun-09
SD	BA10	Arsenic	0.0115	06-Jul-09
SD	BA10	Arsenic	0.0121	03-Aug-09
SD	BA10	Arsenic	0.0123	08-Sep-09
SD	BA10	Arsenic	0.0131	05-Oct-09
SD	BA10	Arsenic	0.0128	02-Nov-09
SD	BA10	Arsenic	0.0092	05-Apr-10
SD	BA10	Arsenic	0.012	05-Apr-10
SD	BA10	Arsenic	0.014	05-Apr-10
SD	BA10	Arsenic	0.0129	03-May-10
SD	BA10	Arsenic	0.0142	24-May-10
SD	BA10	Arsenic	0.0132	05-Jul-11
SD	BA10	Arsenic	0.0134	01-Aug-11
SD	BA10	Barium	0.20	25-Aug-09
SD	BA10	Beryllium	< 0.002	25-Aug-09
SD	BA10	Cadmium	< 0.0001	25-Aug-09
SD	BA10	Calcium	28	24-May-10
SD	BA10	Calcium Hardness	71	24-May-10
SD	BA10	Chloride	< 5.0	24-May-10
SD	BA10	Chromium	< 0.005	25-Aug-09
SD	BA10	Copper	< 0.01	24-May-10
SD	BA10	Cyanide, Total	< 0.010	25-Aug-09
SD	BA10	Fluoride	< 0.10	25-Aug-09
SD	BA10	Fluoride	< 0.10	24-May-10
SD	BA10	Iron	< 0.05	24-May-10
SD	BA10	Magnesium	14	24-May-10
SD	BA10	Manganese	< 0.02	24-May-10
SD	BA10	Mercury	< 0.0002	25-Aug-09
SD	BA10	Nickel	< 0.02	25-Aug-09
SD	BA10	Nitrate + Nitrite	< 0.20	25-Aug-09
SD	BA10	Nitrate + Nitrite	< 0.20	23-Aug-10
SD	BA10	Nitrate as N	< 0.30	25-Aug-09
SD	BA10	Nitrate as N	< 0.30	23-Aug-10
SD	BA10	Nitrite as N	< 0.10	25-Aug-09
SD	BA10	Nitrite as N	< 0.10	23-Aug-10
SD	BA10	pH	8.1	24-May-10
SD	BA10	Potassium	1	24-May-10
SD	BA10	Selenium	< 0.0020	25-Aug-09
SD	BA10	Selenium	< 0.002	24-May-10

ARIZONA WATER COMPANY
BROKEN ARROW WELL #10

System	Location	Contaminant	Result	Sample Date
SD	BA10	Silica	17.6	24-May-10
SD	BA10	Silicon	8.2	24-May-10
SD	BA10	Sodium	6	25-Aug-09
SD	BA10	Sodium	6	24-May-10
SD	BA10	Sulfate	< 5.0	24-May-10
SD	BA10	Thallium	< 0.0005	25-Aug-09
SD	BA10	Total Alkalinity	134	24-May-10
SD	BA10	Total Dissolved Solids	146	24-May-10
SD	BA10	Zinc	< 0.02	24-May-10

ARIZONA WATER COMPANY
SEDONA GOLF RESORT

System	Location	Contaminant	Result	Sample Date
VV	SGR	Antimony	<0.0012	23-Feb-09
VV	SGR	Arsenic	0.0372	02-Mar-09
VV	SGR	Arsenic	0.0359	06-Apr-09
VV	SGR	Arsenic	0.0374	04-May-09
VV	SGR	Arsenic	0.0355	08-Jun-09
VV	SGR	Arsenic	0.0352	06-Jul-09
VV	SGR	Arsenic	0.0336	03-Aug-09
VV	SGR	Arsenic	0.0342	08-Sep-09
VV	SGR	Arsenic	0.0346	05-Oct-09
VV	SGR	Arsenic	0.0351	02-Nov-09
VV	SGR	Arsenic	0.0339	07-Dec-09
VV	SGR	Arsenic	0.0339	04-Jan-10
VV	SGR	Arsenic	0.0389	01-Feb-10
VV	SGR	Arsenic	0.0370	01-Mar-10
VV	SGR	Arsenic	0.036	05-Apr-10
VV	SGR	Arsenic	0.0355	03-May-10
VV	SGR	Arsenic	0.0374	24-May-10
VV	SGR	Arsenic	0.0383	06-Jun-11
VV	SGR	Arsenic	0.0362	05-Jul-11
VV	SGR	Arsenic	0.0367	01-Aug-11
VV	SGR	Barium	<.4	23-Feb-09
VV	SGR	Beryllium	<.0008	23-Feb-09
VV	SGR	Cadmium	<0.001	23-Feb-09
VV	SGR	Calcium	30	24-May-10
VV	SGR	Calcium Hardness	76	24-May-10
VV	SGR	Chloride	10.1	24-May-10
VV	SGR	Chromium	<0.02	23-Feb-09
VV	SGR	Copper	< 0.01	24-May-10
VV	SGR	Cyanide, Total	<0.04	23-Feb-09
VV	SGR	Fluoride	<.8	23-Feb-09
VV	SGR	Fluoride	< 0.10	24-May-10
VV	SGR	Iron	< 0.05	24-May-10
VV	SGR	Magnesium	15	24-May-10
VV	SGR	Manganese	< 0.02	24-May-10
VV	SGR	Mercury	<0.0004	23-Feb-09
VV	SGR	Nickel	<.002	23-Feb-09
VV	SGR	Nitrate as N	.45	23-Feb-09
VV	SGR	pH	7.9	24-May-10
VV	SGR	pH	8.11	25-Aug-11
VV	SGR	Potassium	1	24-May-10
VV	SGR	Selenium	<.01	23-Feb-09

ARIZONA WATER COMPANY
SEDONA GOLF RESORT

System	Location	Contaminant	Result	Sample Date
VV	SGR	Selenium	< 0.002	24-May-10
VV	SGR	Silica	18.9	24-May-10
VV	SGR	Silicon	8.8	24-May-10
VV	SGR	Sodium	8.5	23-Feb-09
VV	SGR	Sodium	11	24-May-10
VV	SGR	Sulfate	6.6	24-May-10
VV	SGR	Thallium	<0.0004	23-Feb-09
VV	SGR	Total Alkalinity	142	24-May-10
VV	SGR	Total Dissolved Solids	187	24-May-10
VV	SGR	Zinc	< 0.02	24-May-10

ARIZONA WATER COMPANY
RIMROCK WELL #2

System	Location	Contaminant	Result	Sample Date
RR	002	Antimony	< 0.0005	02-Jun-09
RR	002	Arsenic	0.0528	02-Feb-09
RR	002	Arsenic	0.0561	02-Mar-09
RR	002	Arsenic	0.0536	06-Apr-09
RR	002	Arsenic	0.0573	04-May-09
RR	002	Arsenic	0.0548	08-Jun-09
RR	002	Arsenic	0.0542	06-Jul-09
RR	002	Arsenic	0.0513	03-Aug-09
RR	002	Arsenic	0.0507	08-Sep-09
RR	002	Arsenic	0.0517	05-Oct-09
RR	002	Arsenic	0.0544	02-Nov-09
RR	002	Arsenic	0.0520	07-Dec-09
RR	002	Arsenic	0.0520	04-Jan-10
RR	002	Arsenic	0.064	05-Apr-10
RR	002	Arsenic	0.0534	03-May-10
RR	002	Arsenic	0.0575	05-Jul-11
RR	002	Arsenic	0.0568	01-Aug-11
RR	002	Barium	0.29	02-Jun-09
RR	002	Beryllium	< 0.002	02-Jun-09
RR	002	Cadmium	< 0.0001	02-Jun-09
RR	002	Chromium	< 0.005	02-Jun-09
RR	002	Cyanide, Total	< 0.010	02-Jun-09
RR	002	Fluoride	0.40	02-Jun-09
RR	002	Mercury	< 0.0002	02-Jun-09
RR	002	Nickel	< 0.02	02-Jun-09
RR	002	Nitrate as N	0.48	23-Feb-09
RR	002	pH	7.5	25-Aug-11
RR	002	Selenium	0.0020	02-Jun-09
RR	002	Sodium	51	02-Jun-09
RR	002	Thallium	< 0.0005	02-Jun-09

ARIZONA WATER COMPANY
MONTEZUMA HAVEN WELL #2

System	Well	Contaminant	Result	Sample Date
RR	MH2	Antimony	<0.0012	23-Feb-09
RR	MH2	Arsenic	0.0618	06-Jul-09
RR	MH2	Barium	<.4	23-Feb-09
RR	MH2	Beryllium	<.0008	23-Feb-09
RR	MH2	Cadmium	<0.001	23-Feb-09
RR	MH2	Chromium	<0.02	23-Feb-09
RR	MH2	Cyanide, Total	<0.04	23-Feb-09
RR	MH2	Fluoride	<.8	23-Feb-09
RR	MH2	Mercury	<0.0004	23-Feb-09
RR	MH2	Nickel	0.0048	23-Feb-09
RR	MH2	Selenium	<.01	23-Feb-09
RR	MH2	Sodium	38	23-Feb-09
RR	MH2	Thallium	<0.0004	23-Feb-09

ARIZONA WATER COMPANY
MONTEZUMA HAVEN WELL #3

System	Location	Contaminant	Result	Sample Date
RR	005	Antimony	< 0.0005	02-Jun-09
RR	005	Arsenic	0.0319	05-Jan-09
RR	005	Arsenic	0.0331	02-Feb-09
RR	005	Arsenic	0.0343	02-Mar-09
RR	005	Arsenic	0.0321	06-Apr-09
RR	005	Arsenic	0.0325	04-May-09
RR	005	Arsenic	0.0339	11-May-09
RR	005	Arsenic	0.0323	08-Jun-09
RR	005	Arsenic	0.0288	03-Aug-09
RR	005	Arsenic	0.0315	08-Sep-09
RR	005	Arsenic	0.0345	01-Feb-10
RR	005	Arsenic	0.0326	01-Mar-10
RR	005	Arsenic	0.038	05-Apr-10
RR	005	Arsenic	0.0372	05-Jul-11
RR	005	Arsenic	0.0363	01-Aug-11
RR	005	Barium	0.34	02-Jun-09
RR	005	Beryllium	< 0.002	02-Jun-09
RR	005	Cadmium	< 0.0001	02-Jun-09
RR	005	Chromium	< 0.005	02-Jun-09
RR	005	Cyanide, Total	< 0.010	02-Jun-09
RR	005	Fluoride	0.26	02-Jun-09
RR	005	Mercury	< 0.0002	02-Jun-09
RR	005	Nickel	< 0.02	02-Jun-09
RR	005	Nitrate as N	<0.2	23-Feb-09
RR	005	pH	7.44	25-Aug-11
RR	005	Selenium	< 0.0020	02-Jun-09
RR	005	Sodium	49	02-Jun-09
RR	005	Thallium	< 0.0005	02-Jun-09

Attachment "D"

Site Plans Without Leased Equipment

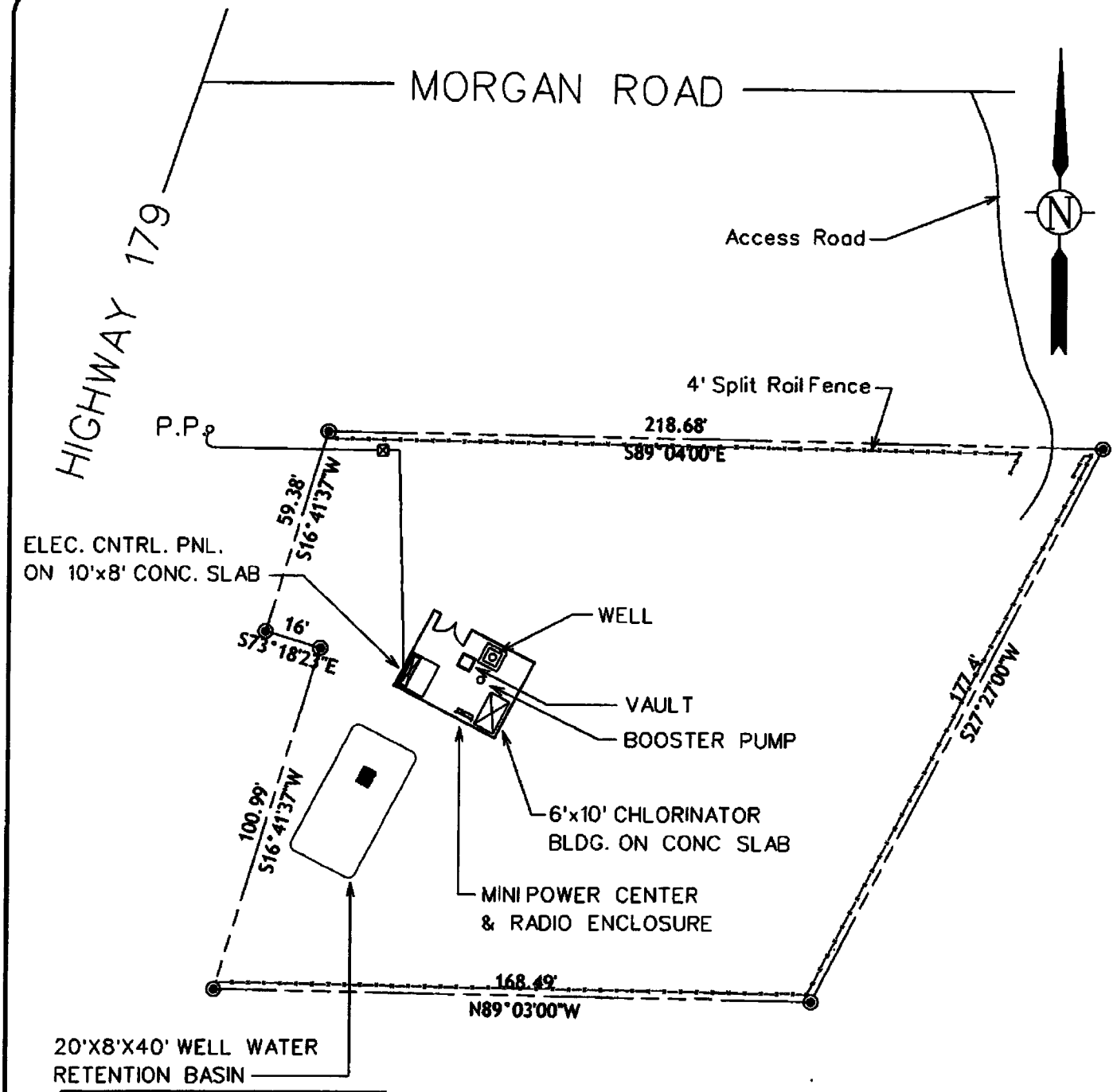

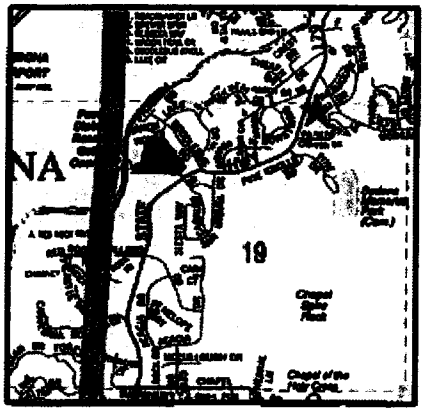

VICINITY MAP
N.T.S.

ARIZONA WATER COMPANY

SYSTEM NAME:	SEDONA
FACILITY NAME:	BROKEN ARROW WELL NO.10
STREET ADDRESS	1480 HIGHWAY 179 SEDONA, AZ 86336
LOCATION:	Northeast quarter Section 19, T.17N.,R.6E.

DATE:	SCALE:	DRAWN BY:
12.16.2003	1"=40'-0"	CB

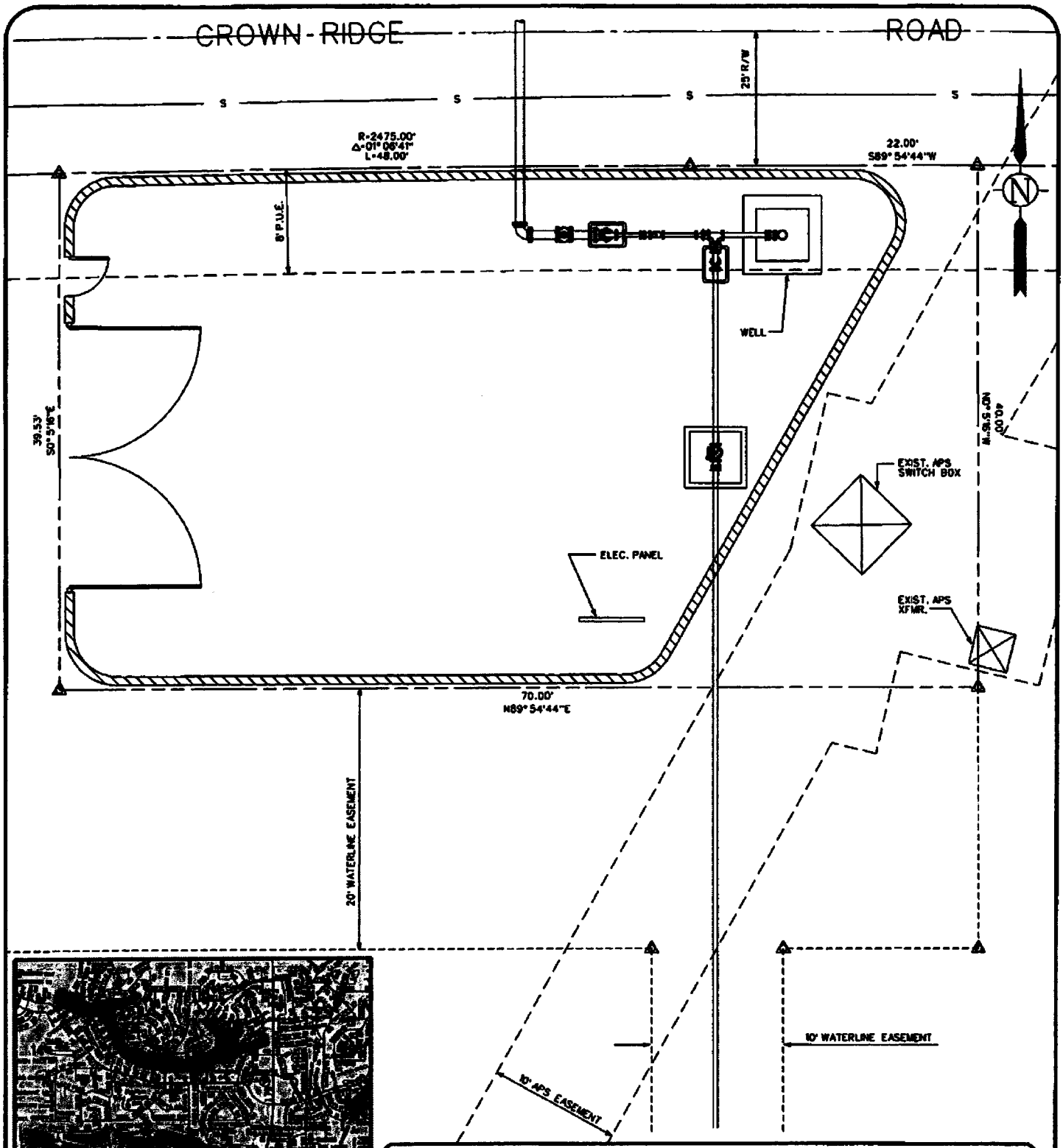

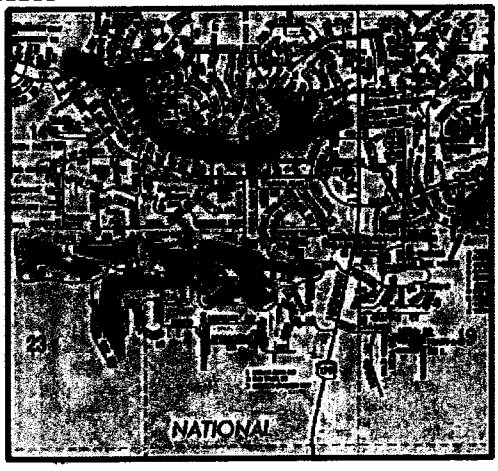

VICINITY MAP
N.T.S.

ARIZONA WATER COMPANY

PROPERTY LOCATION DRAWING

Property Location: Northwest quarter Section 24, T.16N.,R5E.		
Street Address: 990 Crown Ridge Road Sedona, AZ 86351		
Project: Sedona Golf Resort Well		
Date: 06.13.2002	**Scale:** 1"=10'-0"	**Drawn By:** CB

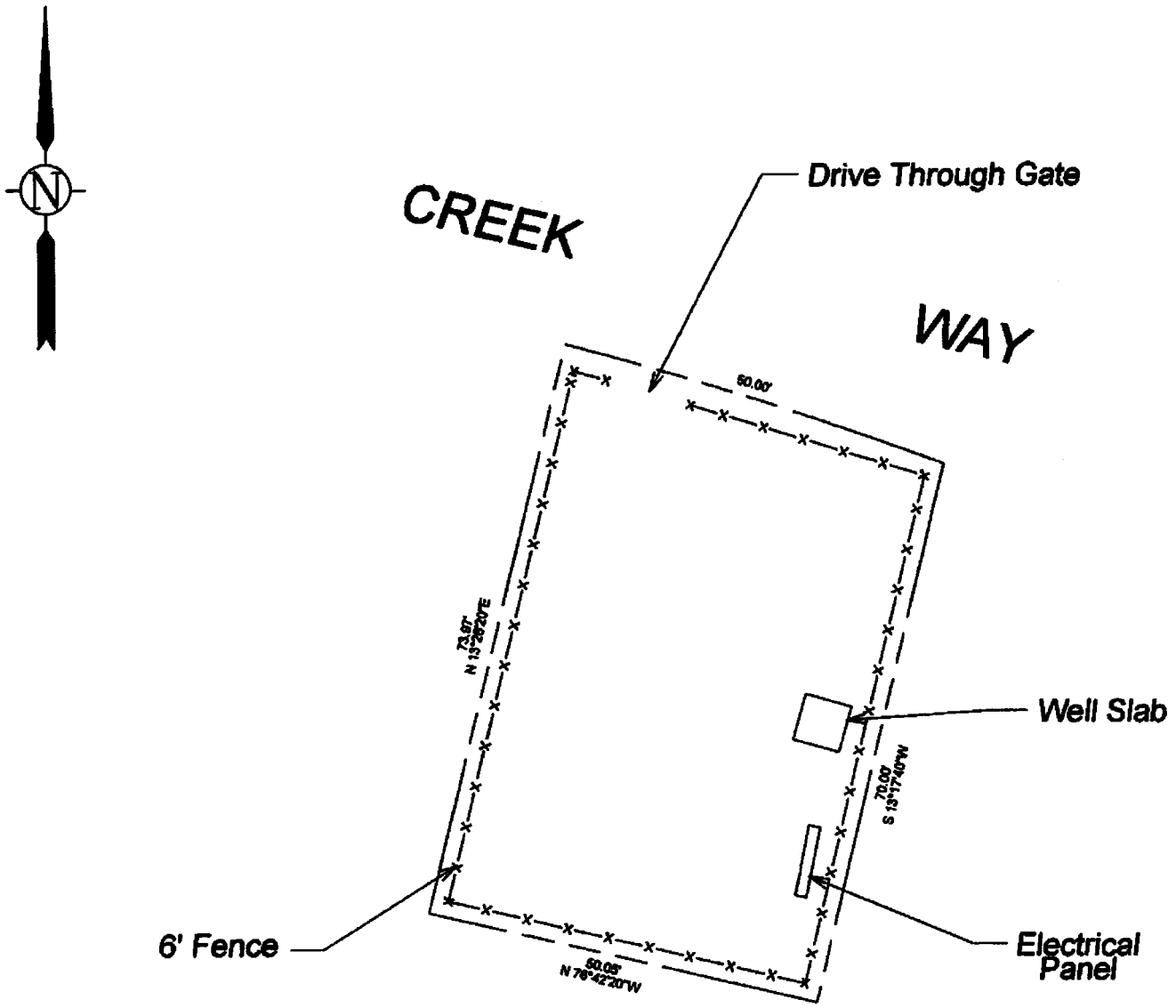

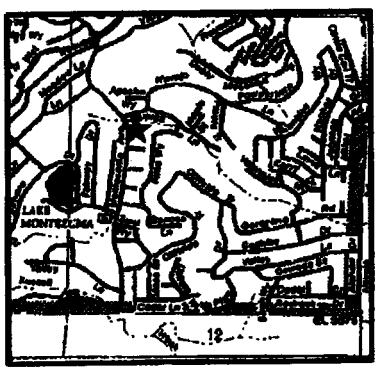

VICINITY MAP
N.T.S.

ARIZONA WATER COMPANY		
SYSTEM NAME: RIMROCK		
FACILITY NAME: Rimrock Well No.2		
STREET ADDRESS: 4241 EAST CREEK WAY LAKE MONTEZUMA, AZ 86335		
LOCATION: Northwest Quarter Section 1 - T.14N.,R.5E.		
DATE: 3/21/96	SCALE: 1"=20'	DRAWN BY: CB

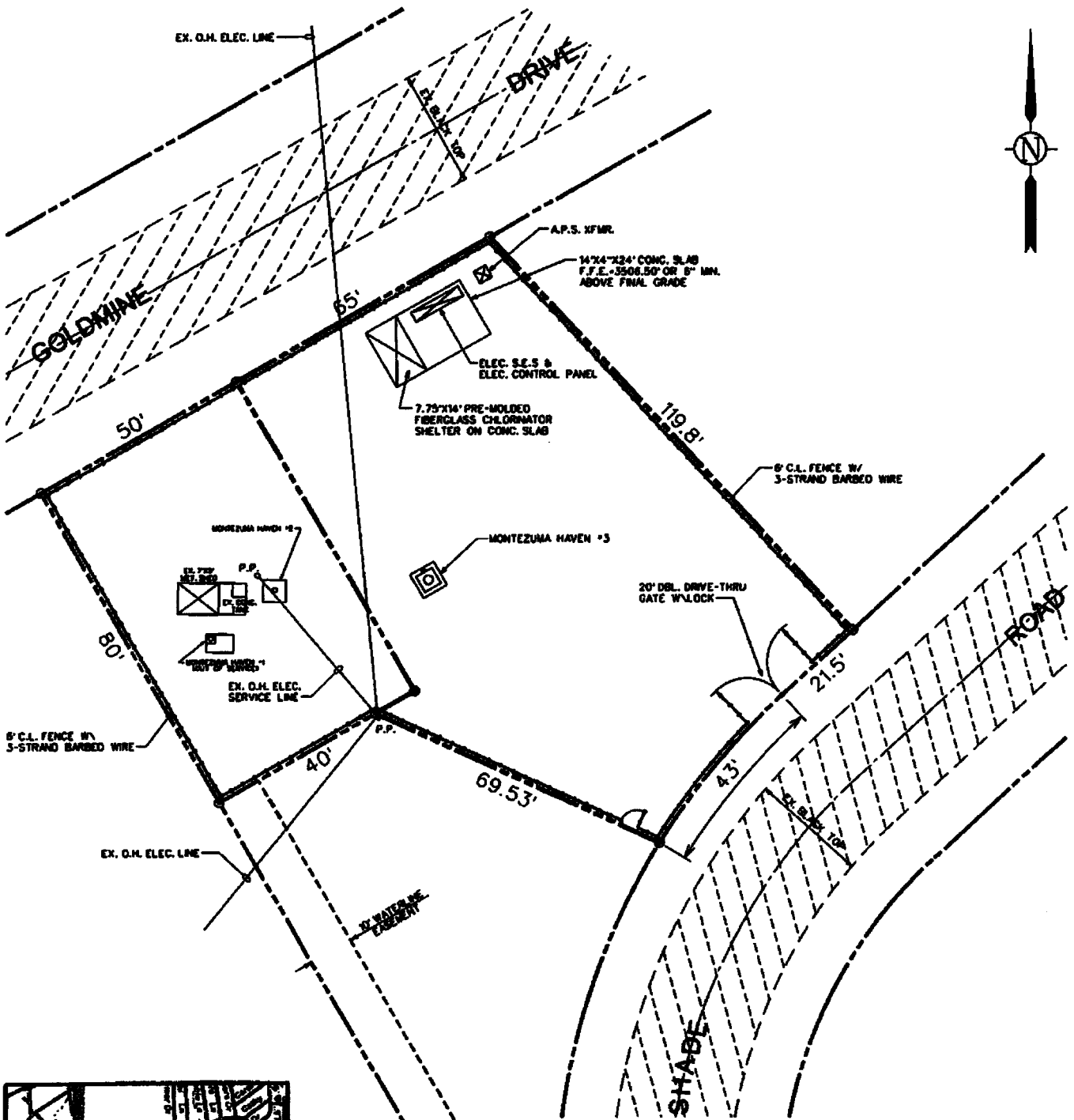

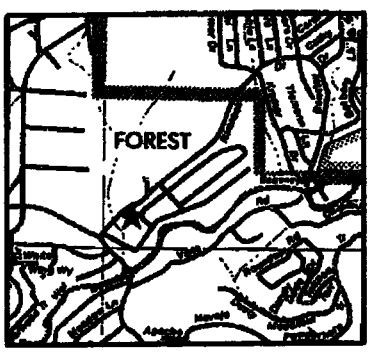

VICINITY MAP
N.T.S.

ARIZONA WATER COMPANY

SYSTEM NAME:	RIMROCK
FACILITY NAME:	Montezuma Hoven Wellsite
STREET ADDRESS	4105 EAST GOLDMINE ROAD LAKE MONTEZUMA, AZ 86335
LOCATION:	Southwest quarter Section 36 - T.15N.,R.5E.

DATE:	SCALE:	DRAWN BY:
12.16.2003	1"=30'-0"	CB

Attachment "E"

Broken Arrow Well #10 Particle Size Distribution Analysis

MALVERN MASTERSIZER

Result: Analysis Report

Sample Details

Sample ID: 3386-001
Sample File: 0514-145
Sample Path: C:\SIZERS\DATA\
Sample Notes: 8/15/08
ARIZONA WATER CO
SEDONA WELL

Run Number: 7
Record Number: 6001

Measured: Fri Aug 15 2008 2:54PM
Analysed: Fri Aug 15 2008 2:54PM
Result Source: Analysed

System Details

Range Lens: 300RF mm
Presentation: 3OHD
Analysis Model: Polydisperse
Modifications: None

Beam Length: 2.40 mm
[Particle R.I. = (1.5295, 0.1000); Dispersant R.I. = 1.3300]

Sampler: MS1

Obscuration: 14.8 %
Residual: 0.860 %

Result Statistics

Distribution Type: Volume
Mean Diameters:
D [4, 3] = 43.39 um

Concentration = 0.0144 %Vol
D (v, 0.1) = 0.86 um
D [3, 2] = 2.20 um

Density = 1.000 g / cub. cm
D (v, 0.5) = 31.80 um
Span = 2.845E+00

Specific S.A. = 2.7238 sq. m / g
D (v, 0.9) = 90.76 um
Uniformity = 9.729E-01

Size Low (um)	In %	Size High (um)	Under%	Size Low (um)	In %	Size High (um)	Under%
0.05	0.02	0.06	0.02	6.63	1.39	7.72	20.26
0.06	0.05	0.07	0.07	7.72	1.56	9.00	21.82
0.07	0.08	0.08	0.16	9.00	1.76	10.48	23.58
0.08	0.12	0.09	0.28	10.48	2.04	12.21	25.62
0.09	0.18	0.11	0.45	12.21	2.40	14.22	28.02
0.11	0.25	0.13	0.70	14.22	2.87	16.57	30.90
0.13	0.34	0.15	1.05	16.57	3.45	19.31	34.34
0.15	0.47	0.17	1.52	19.31	4.10	22.49	38.45
0.17	0.63	0.20	2.14	22.49	4.79	26.20	43.24
0.20	0.82	0.23	2.96	26.20	5.45	30.53	48.69
0.23	0.99	0.27	3.95	30.53	6.02	35.56	54.70
0.27	1.09	0.31	5.05	35.56	6.47	41.43	61.17
0.31	1.07	0.36	6.12	41.43	6.83	48.27	68.00
0.36	0.97	0.42	7.09	48.27	6.55	56.23	74.55
0.42	0.85	0.49	7.94	56.23	5.93	65.51	80.47
0.49	0.73	0.58	8.67	65.51	5.04	76.32	85.52
0.58	0.58	0.67	9.25	76.32	4.02	88.91	89.54
0.67	0.46	0.78	9.72	88.91	2.99	103.58	92.53
0.78	0.43	0.91	10.16	103.58	2.07	120.67	94.60
0.91	0.41	1.06	10.56	120.67	1.35	140.58	95.94
1.06	0.40	1.24	10.96	140.58	0.89	163.77	96.83
1.24	0.40	1.44	11.36	163.77	0.68	190.80	97.51
1.44	0.42	1.68	11.78	190.80	0.64	222.28	98.15
1.68	0.45	1.95	12.23	222.28	0.67	258.95	98.81
1.95	0.49	2.28	12.72	258.95	0.61	301.68	99.42
2.28	0.55	2.65	13.27	301.68	0.40	351.46	99.82
2.65	0.64	3.09	13.91	351.46	0.18	409.45	100.00
3.09	0.74	3.60	14.65	409.45	0.00	477.01	100.00
3.60	0.86	4.19	15.51	477.01	0.00	555.71	100.00
4.19	0.99	4.88	16.50	555.71	0.00	647.41	100.00
4.88	1.12	5.69	17.62	647.41	0.00	754.23	100.00
5.69	1.25	6.63	18.87	754.23	0.00	878.87	100.00

Result: Analysis Table

ID: [illegible]	Run No: 7	Measured: [illegible]
File: [illegible]	Rec. No: [illegible]	Analysed: [illegible]
Path: [illegible]		Source: Analysed

Range: 300RF mm	Beam: 2.40 mm	Sampler: MS1	Obs: 14.6 %
Presentation: 3QHD		Analysis: Polydisperse	Residual: 0.000 %
Modifications: None			

Conc. = [illegible] %Vol	Density = 1.000 g/cm^3	S.S.A. = 2.7238 m^2/g
Distribution: Volume	D[4, 3] = 43.30 um	D[3, 2] = 2.20 um
D(v, 0.1) = 0.86 um	D(v, 0.5) = 31.60 um	D(v, 0.9) = 90.76 um
Span = 2.[illegible]	Uniformity = 9.729E-01	

Size (um)	Volume Under %	Size (um)	Volume Under %	Size (um)	Volume Under %	Size (um)	Volume Under %
0.06	0.00	0.87	8.25	9.09	21.82	120.87	94.89
0.05	0.02	0.79	9.72	10.48	23.68	140.89	95.94
0.07	0.07	0.91	10.16	12.21	25.62	163.77	96.83
0.08	0.16	1.06	10.58	14.22	28.02	190.89	97.51
0.09	0.30	1.24	10.96	16.57	30.90	222.26	98.15
0.11	0.45	1.44	11.30	19.31	34.34	258.95	98.81
0.13	0.70	1.68	11.76	22.49	38.45	301.69	99.42
0.15	1.05	1.95	12.23	26.29	43.24	351.46	99.82
0.17	1.62	2.28	12.72	30.53	48.69	409.46	100.00
0.20	2.14	2.66	13.27	35.66	54.70	477.01	100.00
0.23	2.66	3.09	13.91	41.43	61.17	555.71	100.00
0.27	3.98	3.60	14.66	48.27	68.00	647.41	100.00
0.31	5.05	4.19	15.51	55.23	74.66	754.23	100.00
0.36	6.12	4.88	16.50	65.51	80.47	878.87	100.00
0.42	7.09	5.68	17.62	76.32	85.62		
0.49	7.94	6.63	18.87	88.91	89.54		
0.58	8.67	7.72	20.26	103.58	92.53		

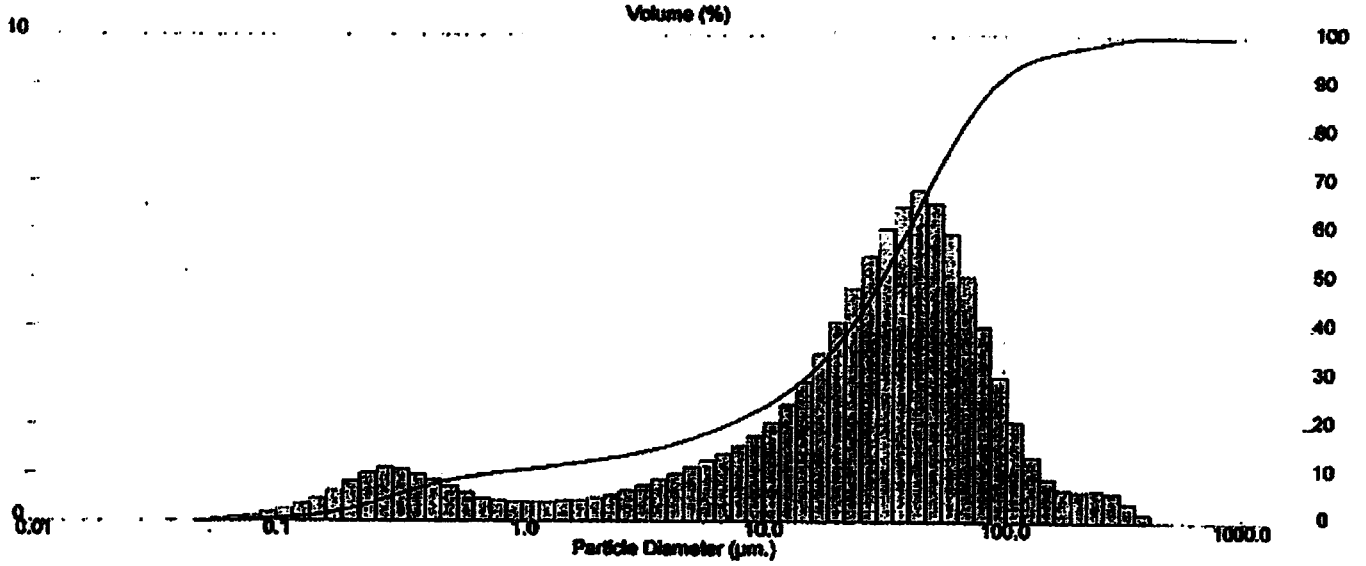

Attachment "F"

Arizona Water Company Tank Coating Specifications: O-12-2

ARIZONA WATER COMPANY

O-12-2

WATER STORAGE TANK COATING SPECIFICATIONS

DEFINITIONS

A. *Company* — The words "Company" or "Arizona Water Company" mean Arizona Water Company and, where applicable, any division of Arizona Water Company, whose principal place of business is located at 3805 North Black Canyon Highway, Phoenix, Arizona 85015-5351 (Post Office Box 29006, Phoenix, Arizona 85038-9006).

B. *Company's Authorized Representative* — The words "Company's Authorized Representative" mean any officer of the Company, any Division Manager and/or such other person(s) designated in writing as the "Company's Authorized Representative" by the President or any Vice President of the Company.

C. *Contractor* — The word "Contractor" means either an individual or other entity contracted with to provide the services detailed in the Contract and as specified herein.

D. *Contract* — The word "Contract" means the written document titled "Contract" when such document has been signed by an officer or other authorized representative of both the Contractor and the Company.

E. *General Conditions of Contract* — The words "General Conditions of Contract" refer to the Company's Operating Order O-12-3 in the Company's Operating Memorandums.

F. *Independent Coating Inspector* — The words "Independent Coating Inspector" mean any Certified NACE III inspector hired by the Company to inspect coatings on water storage tanks.

1. GENERAL

These specifications identify the material and workmanship necessary to produce a quality coating system. All work shall be completed in a safe, workmanlike manner in strict accordance with:

(a) Product manufacturer's instructions

(b) General Conditions of Contract for Tank Coating (0-12-3)

(c) American Water Works Association Standard AWWA C652

(d) Applicable sections of ANSI/AWWA D102-97, "Standard for Coating Steel Water Storage Tanks"

(e) ANSI/AWWA D101-53 (R86), "Standard for Inspecting and Repairing Steel Water Tanks, Standpipes, Reservoirs, and Elevated Tanks, for Water Storage"

(f) ANSI/NSF Std. 61, Section 5, "Protective (Barrier) Materials"

(g) SSPC-SP1 – Solvent Cleaning
SSPC-SP2 – Hand Tool Cleaning
SSPC-SP3 – Power Tool Cleaning
SSPC-SP5 – White Metal Blast Cleaning
SSPC-SP6 – Commercial Blast Cleaning
SSPC-SP7 – Brush-off Blast Cleaning
SSPC-SP10 – Near White Metal Blast Cleaning
SSPC-SP11 – Power Tool Cleaning to Bare Metal
SSPC-SP12 – Hydroblasting

(h) SSPC PA2 – Dry Paint Thickness with Magnetic Gauges

(i) SSPC-Guide 7 – Guide for the Disposal of Lead-Contaminated Surface Debris

2. QUALITY OF PAINT

The protective coatings identified in these specifications are set up as standards of quality. The standard "or equal" clause shall apply.

No substitution shall be considered unless the Company's Authorized Representative has received a written request for approval at least ten (10) days prior to the date for receipt of bids. Each such request must include: (a) the name of the specified material for which a substitution is being requested; (b) the name and number of the proposed substitution material; (c) a complete description of the proposed substitute, including performance and test data; and (d) any other information necessary for an evaluation. The burden of proof of the merit of the proposed substitute is upon the Contractor. Approval or disapproval of the proposed substitution rests solely with the Company's authorized representative and his decision shall be final.

Protective coatings for interior wet applications must be listed by NSF International as approved for potable water contact according to ANSI/NSF Std. 61, Section 5, "Protective (Barrier) Materials."

The Contractor shall be responsible for assuring that all materials are delivered to the job site in the original sealed and labeled containers of the protective coating manufacturer. All material on the job shall be subject to inspection by the Company's Authorized Representative.

The Company's Authorized Representative shall select colors not previously specified.

3. SPECIAL PROVISIONS

The Contractor shall be responsible for completing the removal of all remaining water, sediment, rust, etc. that is required prior to surface preparation. All preliminary preparation work will be at the Contractor's expense.

The Contractor shall:

(a) Protect aluminum gauge boards and nametags during sandblasting and painting procedures.

(b) Protect copper lines, light fixtures, valve threads, and electrical boxes.

(c) Replace all manhole bolts with cadmium-plated bolts if the Contractor opens a manhole.

(d) Replace all gaskets.

The Contractor shall **NOT**:

(a) Paint concrete unless otherwise specified.

(b) Allow the use of silica sand for surface preparation.

The Contractor shall only mix FULL kits of approved coating. No partial kits will be saved or mixed at a later time.

4. MATERIALS TO BE PROVIDED AND PROCEDURES TO BE FOLLOWED BY THE CONTRACTOR

Unless otherwise specified in the contract, the Contractor shall supply all of the necessary materials to complete the work. The Contractor shall provide the following materials and services:

a. TANKS WITH EXISTING COATING SYSTEM: Interior Steel – Conventional Coating System; Surface Preparation: SSPC-SP 10 Near White Metal Blast Cleaning.

All abrasive materials shall be thoroughly removed from the surface of the tank in accordance with SSPC-SP 10 standards prior to coating.

Tnemec Coating

(1) Prime Coat*: Tnemec Series N140-1255 (Beige) Pota Pox Plus**, one (1) coat; spray applied; 5 to 7 mils dry film thickness ("DFT").

(2) Finish Coat: Tnemec Series N140-15BL (Tank White) Pota Pox Plus; one (1) coat; spray applied; 5 to 7 mils DFT.

TOTAL DFT: 10-14 mils DFT.

* Weld Seams: All plate weld seams shall receive an additional brushed coat of Series N140 Pota Pox Plus in color 15BL (Tank White). This application will be made after the full prime coat. Additionally, brush coating shall be applied on all welds, corners, nuts, bolts, edges, or other irregular surfaces.

** Tnemec Series N140 Pota Pox Plus FC (fast cure) may be substituted for Series N140 Pota Pox Plus when conditions warrant. It may be beneficial when curing between 35° F and 56° F is required.

OR

Devoe Coating

(1) Prime Coat*: Devoe Bar-Rust 233H1642 (Buff)**, one (1) coat; spray applied; 5 to 7 mils DFT.

(2) Finish Coat: Devoe Bar-Rust 233 H3501 (White), one (1) coat: spray applied; 5 to 7 mils DFT.

TOTAL DFT: 10 to 14 mils DFT.

* Weld Seam: All plate weld seams shall receive an additional brushed coat of Devoe's Bar-Rust 233H in or 3501 (White) after the full prime coat. Additionally, brush coating shall be applied on all corners, welds, nuts, bolts, edges, or other irregular surfaces.

** Devoe Bar-Rust 233H is a high solids (80%) advanced technology NSF International (National Sanitation Foundation) approved epoxy, which can be applied at steel temperatures down to 0° F (-18° C).

b. TANKS WITH EXISTING COATING SYSTEM: Interior Steel – Alternative Floor Coating System for Badly Pitted Tank Floors. For floors in existing tanks that are highly corroded with severe pitting, the following floor system may be applied after completion of the Series N140 system to the roof and shell, subject to prior approval by the Company's Authorized Representative.

Floor Surface Preparation: SSPC-SP10 Near White Metal Blast Cleaning.

All abrasive materials shall be thoroughly removed from the surface of the tank in accordance with SSPC-SP10 standards prior to coating.

Tnemec Coating

(1) Steel Conditioners: Wet the floor surface and up the wall a few inches with a fine mist of Tnemec Series 260 Tnemec-Bond. Allow to evaporate and apply the topcoat within four (4) hours.

(2) Elastomeric Urethane: After mixing according to the manufacturer's recommendations, pour out and level with trowels or notched squeegees, Tnemec Series 264 Elasto-Shield over the entire floor to DFT of 80 to 100 mils and bring up the wall to where there is a two- to three-inch (2" to 3") overlap on the newly applied epoxy coating system.

TOTAL DFT: 80 to 100 mils DFT.

OR

Devoe Coating

(1) 100% Solids Epoxy Finish Coat: Apply Devoe's Devron 133 100% Solids Epoxy Tank Coating at 80 to 100 mils DFT.

TOTAL DFT: 80 mils minimum DFT.

All welds, corners, nuts, bolts, edges, or other irregular surfaces shall be hand brushed to assure proper coverage.

c. TANKS WITH EXISTING COATING SYSTEM: Exterior Steel; Level 1 Re-coat: For aged epoxy/urethane systems that are in sound shape and where re-coat adhesion is assured, the following overcoat system applies:

Tnemec Coating

(1) Surface preparation: Remove all dust, dirt, grime, and chalk by power washing with a trisodium phosphate/water solution (0.25 lbs. of trisodium phosphate ["TSP"] per gallon of water) with 3,500 PSI pressure at the nozzle. Power rinse with clean water immediately after TSP wash-down to avoid drying of the TSP on the surface.

All rusted, abraded, and exposed steel shall be power tool cleaned to bare metal according to SSPC-SP 11. All loose paint shall be removed with the same power tools. Feather all edges. Existing runs and chips shall be sanded out.

(2) Spot Prime (exposed metal): Tnemec Series 135 Chembuild or Series N140 Pota Pox Plus; one (1) coat; roller, brush, or spray applied, overlapping to the feathered areas; 3 to 5 mils DFT.

(3) Finish Coat: Tnemec Series 73 (spec color) Endura-Shield; one (1) coat; spray applied; 3 to 5 mils DFT.

TOTAL ADDITIONAL DFT: 3 to 5 mils DFT (on top of existing system).

OR

Devoe Coating

(1) Surface preparation: Remove all dust, dirt, grime, and chalk by power washing with Devoe's Devprep 88 with 3500 PSI pressure at the nozzle. Power rinse with clean water immediately after washing to avoid drying of the Devprep 88 on the surface.

All rusted, abraded, and exposed steel shall be power tool cleaned to bare metal according to SSPC-SP 11. All loose paint shall be removed with the same power tools. Feather all edges. Existing runs and chips shall be sanded out.

(2) Spot Prime (exposed metal): Devoe's 233H Bar-Rust one (1) coat; roller, brush, or spray applied, overlapping to the feathered areas; at 3 to 5 mil DFT.

(3) Finish Coat: Devoe's Devthane 378 aliphatic Acrylic Urethane (spec color), one (1) coat; spray applied; 3 to 4 mils DFT.

TOTAL ADDITIONAL DFT: 3 to 5 mils DFT (on top of existing system).

d. TANKS WITH EXISTING COATING SYSTEM: Exterior Steel; Level 2 Re-coat. If complete removal of the existing system is required, the following overcoat system applies:

Surface preparation: SSPC-SP 6 Commercial Abrasive Blast Cleaning.

All abrasive materials shall be thoroughly removed from the surface of the tank in accordance with SSPC-SP 10 standards prior to coating.

Tnemec Coating

(1) Prime Coat: Tnemec Series N140-1255 (Beige) Pota Pox Plus; one (1) coat; spray applied; 4 to 6 mils DFT.

(2) Finish Coat: Tnemec Series 73 (spec color) Endura-Shield III; one (1) coat; spray applied; 3 to 5 mils DFT.

TOTAL DFT: 7 to 11 mils.

OR

Devoe Coating

(1) Prime Coat: Devoe's Bar-Rust 235 Epoxy; one (1) coat; spray applied; 4 to 6 mils DFT.

(2) Finish Coat: Devoe's Devthane 378 aliphatic Acrylic Urethane (spec color); one (1) coat; spray applied; 3 to 5 mils DFT.

TOTAL DFT: 7 to 11 mils DFT.

e. TANKS WITH NEW STEEL: Exterior steel – Surface preparation: SSPC-SP 6 Commercial Abrasive Blast Cleaning.

All abrasive materials shall be thoroughly removed from the surface of the tank in accordance with SSPC-SP 10 standards prior to coating.

Tnemec Coating

(1) Prime Coat: Tnemec Series N140-1255 (Beige) Pota Pox Plus; one (1) coat; spray applied; 4 to 6 mils DFT.

(2) Finish Coat: Tnemec Series 73 (spec color) Endura-Shield III; one (1) coat; spray applied; 3 to 5 mils DFT.

TOTAL DFT: 7 to 11 mils.

OR

Devoe Coating

(1) Prime Coat: Devoe's Bar-Rust 235 Epoxy; one (1) coat; spray applied; 4 to 6 mils DFT.

(2) Finish Coat: Devoe's Devthane 378 aliphatic Acrylic Urethane (spec color); one (1) coat; spray applied; 3 to 5 mils DFT.

TOTAL DFT: 7 to 11 mils DFT.

f. TANKS WITH NEW STEEL: Interior Steel – Conventional Coating System; Surface Preparation: SSPC-SP 10 Near White Metal Blast Cleaning.

All abrasive materials shall be thoroughly removed from the surface of the tank in accordance with SSPC-SP 10 standards prior to coating.

Tnemec Coating

(1) Prime Coat*: Tnemec Series N140-1255 (Beige) Pota Pox Plus**, one (1) coat; spray applied; 5 to 7 mils DFT.

(2) Finish Coat: Tnemec Series 20-WH02 (Tank White) Pota Pox; one (1) coat; spray applied; 5 to 7 mils DFT.

TOTAL DFT: 10 to 14 mils DFT.

* Weld Seams: All plate weld seams shall receive an additional brushed coat of Series N140 Pota Pox Plus in either the color 1255 (Beige) or WH02 (Tank White). This application will be made after the full prime coat. Additionally, brush coating shall be applied on all welds, corners, nuts, bolts, edges, or other irregular surfaces.

** Tnemec series N140 Pota Pox Plus FC (fast cure) may be substituted for Series N140 Pota Pox Plus when conditions warrant. It may be beneficial when curing between 35° F and 56° F is required.

OR

Devoe Coating

(1) Prime Coat*: Devoe Bar-Rust 233H1642 (Buff)**, one (1) coat; spray applied; 5 to 7 mils DFT.

(2) Finish Coat: Devoe Bar-Rust 233 H3501 (White), one (1) coat: spray applied; 5 to 7 mils DFT.

TOTAL DFT: 10 to 14 mils DFT.

• Weld Seam: All plate weld seams shall receive an additional brushed coat of Devoe's Bar-Rust 233H in 3501 (White). The application of the stripe coat will be made after the application of the full prime coat. Additionally, brush coating shall be applied on all corners, welds, nuts, bolts, edges, or other irregular surfaces.

** Devoe Bar-Rust 233H is a high solids (80%) advanced technology NSF International (National Sanitation Foundation) approved epoxy, which can be applied at steel temperatures down to 0° F (-18° C).

5. TANK REPAIRS PRIOR TO TANK COATING/PAINTING

The Contractor is required to notify the Company's Authorized Representative on a timely basis when tank repairs are necessary, and to identify the nature and extent of repairs that are required.

If repairs to the tank are necessary, the Contractor shall be responsible for coordinating all such repairs, and shall request a change order from the Company's Authorized Representative before initiating such repairs as required in the General Conditions of Contract.

All repairs are to be made according to ANSI/AWWA D101-53 (R86), "Standard for Inspection and Repairing Steel Water Tanks, Standpipes, Reservoirs, and Elevated Tanks, for Water Storage."

The Company will not allow the Contractor to alter the structure of the tank.

6. SURFACE PREPARATION – DEBRIS CONTAINMENT AND DISPOSAL

When required by Federal, State, or local regulation, the Contractor shall enclose the entire tank and structure and contain surface preparation debris. Refer to SSPC-Guide 6, "Guide for Containing Debris Generated During Paint Removal Operations."

The Contractor shall dispose of all surface preparation debris according to applicable Federal, State, and local regulations. Refer to SSPC-Guide 7, "Guide for the Disposal of Lead-Contaminated Surface Debris."

Worker protection and environmental protection shall be followed in accordance with the following Federal Regulatory Standards and other applicable Federal, State, or local regulations:

1.	29 CFR 1910 –	OSHA General Industry Standards
2.	29 CFR 1910.134 –	Respiratory Protection
3.	29 CFR 1910.1000 –	Air Contaminants – Permissible Exposure Limits
4.	29 CFR 1910.1020 –	Employee Access to Exposure and Medical Records
5.	29 CFR 1926 –	OSHA Construction Industry Standards
6.	29 CFR 1926.59 –	Hazard Communications
7.	29 CFR 1926.62 –	Lead Exposure in Construction; Interim Final Rule
8.	40 CFR 261 –	Identification and Listing of Hazardous Waste
9.	40 CFR 262 –	Standards Applicable to Generators of Hazardous Waste
10.	40 CFR263 –	Standards Applicable to Transporters of Hazardous Waste
11.	40 CFR 264 –	Standards for Owners and Operators of Hazardous Waste Treatment, Storage, and Disposal Facilities

<u>Cleaning</u>:

Surfaces that have been in contact with chemicals can be assumed to be contaminated. Depending on the type of chemical, it may be necessary to clean the surface before dry blasting and again after blasting in order to remove contaminants that can otherwise cause blistering of the coating system.

Most common methods are:

- Steam Cleaning
- Hot Water/Detergent Washing (Pressure)
- Solvent Washing
- Hydroblasting or Wet Sandblasting
- Prebaking at Very High Temperatures

The first two methods can efficiently remove most soluble and emulsified contaminants. Solvent cleaning is only feasible for small tanks or small areas. Solvent cleaning will not remove water-soluble materials. When detergents are used, a fresh water rinse is necessary to remove traces of the detergent left on the surface.

Hydroblasting will seldom be used for the cleaning of tanks due to the very high pressure involved. Wet sandblasting is possible. It can remove old coatings, water soluble contaminants, and corrosion products simultaneously. It cannot remove oil or grease products.

Before cleaning takes place, the surface must be free from oil, grease, salt deposits, and other foreign material that cannot be removed by abrasive blasting. These contaminants, which differ from mill scale and rust, would otherwise be forced into the profile and interfere with the adhesion and the chemical resistance.

<u>Blasting</u>:

Steel surfaces must be blasted to white metal (SSPC-SP5/SA3) or as near as possible to white metal, but never less than near-white-metal (SSPC-SP10/SA2 ½).

Mill scale, when present on a ferrous surface, is cathodic to the surface, meaning the steel will sacrifice itself to save the mill scale. All mill scale MUST be removed prior to coating application. Although the surface may in fact already have a coating visible, the CONTRACTOR SHALL NOT assume that the previous contractor has removed the mill scale prior to applying the existing coating. All bids will be submitted with the understanding that mill scale MAY be present beneath the existing coating, and that an

SP-10 (near-white) blast will be required prior to any new coating application. NO additional costs, above the bid price, will be submitted to Arizona Water Company for removal of any mill scale that is found on the surface. Arizona Water Company requires that ALL bids reflect this understanding by the CONTRACTOR.

Profile:

The blast anchor profile must average 2 to 3 mils, but preferably 2.5 mils.

Abrasives:

The abrasive media shall be garnet and shall be of sufficient grit size to attain a specified blast anchor profile between 2 to 3 mils DFT.

Pre-Preparation and Operational Testing of Abrasives for Soluble Salts Contamination

Test abrasive media for chloride contamination using test kit as described below, entitled "Test Kit for Measuring Chlorides in Abrasives." The maximum allowable chloride concentration is 7 PPM. Test media immediately prior to use, and in no case more than 24 hours prior to use.

Pre-Preparation Testing of Abrasive Media Shipped in Bulk Containers

For bulk containers 1350kg 3000 pounds or less, test one composite sample from each container. Reject entire container for non-conforming test. For bulk containers over 1350kg 3000 pounds, test one composite sample for each 1350kg 3000 pounds, one sample from each compartment, as appropriate. Reject entire container or compartment for non-conforming test.

Pre-Preparation Testing of Abrasive Media Shipped in Bags (Normal 50-110 lb. Bags)

Maintain palletized grouping as provided from supplier. Test composite sample from one bag of each pallet, but no less than one sample for each 1350kg 3000 pounds of abrasive. Reject entire pallet for non-conforming test. If palletized grouping is not maintained, sample and test one bag for every 450kg 1000 pounds of abrasive. Reject each 450kg 1000 pounds represented by a non-conforming test. If bags are stamped with lot number, test composite samples from each of two bags per lot. Reject entire lot for non-conforming test.

Pre-Application Testing for Soluble Salts Contamination

Test blasted surfaces for chloride contamination using the Test Kit described below, entitled "Test Kit for Measuring Chlorides on Steel Surfaces." Test all surfaces at the rate of three tests for the first 1000 square feet plus one test for each additional 3000 square feet or part thereof. Concentrate testing of bare steel at areas of coating failure to bare steel and areas of corrosion pitting. Perform 30% of tests on bare metal at welds, divided equally between horizontal and vertical welds. One or more readings greater than 5 micrograms per square centimeter of chlorides shall be cause for rejection of surface. Wash all surfaces with Chlor*Rid according to the manufacturer's recommendations, allow to dry and retest until all required test show allowable results. Re-blast tested and cleaned areas to required specifications. Label all test tubes and retain for test verification.

ALLOWABLE SOLUBLE SALTS TEST KITS

Test kit for measuring Chlorides on Steel Surfaces

(Test Kits called Chlor*Test, as manufactured by CHLOR*RID International. Inc. of Chandler, Arizona (www.chlor-rid.com)).

Test kit for measuring Chlorides in Abrasives

(Test Kits called Chlor*Test "A", as manufactured by CHLOR*RID International, Inc. of Chandler, Arizona (www.chlor-rid.com)).

Welds and Edges:

These areas need special attention because they are often the first place where corrosion starts. Weld splatters must be removed by power tool grinding. Welds must be ground to a smooth radius and sharp edges must be rounded to prevent the coating from pulling away.

Dehumidification:

Depending on the ambient conditions, it may be necessary to use dehumidifiers to prevent rustblooming of the blasted steel surface. In all instances the dewpoint must remain at least 5°F or 3°C below the steel temperature.

Although not very often the case with new steel, black spotrusting may occur shortly after blasting. This is a sign that the steel has been infected with sulfates or chlorides, etc., which cannot completely be removed by dry abrasive blasting. In such a case, refer to section B, Old Corroded and/or Previously Coated Steel Surfaces.

Dust Removal:

After the blasted steel surface is approved, abrasive dust must be removed with a vacuum cleaner. The broom is insufficient. Most effective is the combination of blowing and vacuum cleaning in that order. Dust particles left on the surface will interfere with coating adhesion.

7. PREPARATION OF COATING MATERIAL

Storage:

At least 24 hours before coating material will be used, the pail must be placed in an area where the temperature is kept between 50°F and 86°F (10°C - 30°C).

Premixing:

The coating system is a two-component thermosetting material that requires thorough mechanical mixing.

After opening the can of base component, it is necessary to premix the base until no sediment is left on the bottom of the can. A squirrel-cage-type mixer such as the Jiffy mixer is efficient. Care must be taken not to introduce air (foam). After sufficient premixing, the hardener component may be added to the base and mixed immediately.

Mixing Ratio:

Unless otherwise indicated, base and hardener are supplied in the correct ratio: one can of hardener to one can of base. The use of the exact ratio is of prime importance for the chemical resistance of the cured coating film. Therefore, the hardener container must be emptied completely into the base. A very small amount of thinner may be used for cleaning the hardener can. The amount used must be deducted from the overall amount of thinner used for correction of spray viscosity.

Spray Equipment:

Conventional air spray or airless spray may be used to apply coatings. Because airless spray is almost exclusively used, the following information will deal only with this method.

The airless pump must have a pressure ratio of at least 30 to 1, but preferably 45 to 1. A tip size between 0.018" and 0.021" is strongly recommended. A reversible tip is recommended.

All equipment and lines must be absolutely clean to prevent blocking of the tip and to prevent coating contamination.

8. APPLICATION OF PROTECTIVE COATINGS

The Contractor shall apply each coating according to the specifications and the protective coating manufacturer's recommendations.

The Contractor shall apply the coating at the specified thickness. If the specified thickness is not obtained, the Contractor shall apply an additional coating.

The Contractor shall apply all protective coatings in strict accordance with the applicable manufacturer's current printed product data sheet and container label. The Contractor shall not apply protective coatings above or below the minimum/maximum surface temperatures as stated on the product data sheet. The Contractor shall not apply protective coatings to wet or damp surfaces and shall not apply protective coatings in rain, snow, fog, or mist. Surface temperatures must be at least 5° F above the dew point and the Contractor shall delay painting until such condition exists. The Contractor shall complete the painting well in advance of the probable time of day when condensation may occur and/or the surface temperature may be expected to drop below the minimum listed on the applicable product data sheet.

The Contractor shall measure DFT according to current SSPC PA2, "Dry Paint Thickness with Magnetic Gauges."

It is essential that the first coat wet the steel surface perfectly. An addition of up to 10% thinner may be made, but care must be taken to avoid runs or sags. When wet film thickness gauges are used, it must be kept in mind that the steel profile will have an effect on the readings. Thinner ratios can vary from project to project due to application equipment, weather conditions, substrate conditions, etc.

Before starting the actual spray application, it is a good practice to observe the spray pattern on a separate piece of steel or cardboard. Good atomization without fingering, heavy spots, or insufficient flow, etc. must be obtained. If imperfections occur, corrections must be made quickly. Use a somewhat higher pressure or use the next size smaller tip. If this does not correct the problem, add a small amount of thinner.

Dry spray or coarse paint globules at extremes of the spay pattern are unacceptable.

Dry spray or overspray is often caused by spraying at improper angles to the surface. Move the gun parallel with the surface, releasing the trigger of the gun before reversing direction for the next stroke.

Measure the wet film thickness regularly.

The second coat is applied in the same way, and using the same thinning ratio, after sufficient drying time of the previous coat.

Stripe Coating:

As an extra measure for corrosion protection, it is standard practice to apply a stripe coat of the primer with a brush in the welds, edges, and areas that are hard to reach with the spray gun. For that purpose, enough of the mixed primer must be thinned with approximately 25% thinner. The lower viscosity of this mixture will help to penetrate crevices and will prevent an undesirable film build-up. This stripe coating can best be done with a short round-tip bristle brush. Another stripe coat may be applied when the full primer coat has dried sufficiently.

Potlife and Thinning:

No mixed material may be used beyond the potlife. No thinner may be used to increase the potlife. Methyl Ethyl Ketone shall not be used for thinning purposes. Thinners must be that as manufactured by the coating supplier utilized for each specific project.

Drying/Curing Interval:

The ideal temperature of air and steel for the application and drying between coats is between 68°F and 77°F (20°C and 25°C).

Best results are obtained by drying for 16 to 24 hours at 68°F (20°C) between coats. Lower temperatures require longer drying intervals. When hot air blowers are used to bring the steel temperatures higher than 68°F (20°C), it is strongly recommended to let the coating dry for one (1) hour at ambient temperature with sufficient fresh air ventilation before application of heat. It is further recommended that only indirect fire heaters be used for forced air curing in order to prevent intercoat contamination.

Total Dry Film Thickness:

The ideal total DFT is 10 to 12 mils DFT. It is strongly recommended to keep the total milage below 16 mils. Small areas of somewhat higher milage do not have to be a reason for rejection, but must be the exception.

Final Curing:

At 68°F (20°C) the tank lining will cure enough for most services in 7 days minimum. Ventilation is required for the first 24 hours. When not enough time is available to cure at 68°F (20°C), hot air blowers should be used to continuously circulate heated fresh air to maintain a surface temperature of 140°F (60°C).

9. INSPECTION

The inspection during and after the tank lining job can be divided into two different functions:

A. Inspection on a pass/fail basis.

B. The above-mentioned function together with preventive actions during the application.

The following list gives the essential checkpoints for an inspection:

TEST	INSTRUMENTS
Blast Profile	Replica Tape of Comparator
Temperatures	Surface Thermometer
Humidity/Dew Point	Sling Psychrometer or Digital
Thickness of Each Coat	Magnetic Film Thickness Gauge
Pinhole/Sags/Runs/Dryspray/Flow	Holiday Detector and Magnifying Glass
Cure	MEK Rubs (50 rubs)

Preventive Inspection:

Inspection service can be very helpful when attention is paid to all parts of the operation. Although not claimed to be complete, the following list may contribute:

- Type of abrasive and cleanliness of the abrasive
- Cleaning method used before blasting
- Check for salt contamination on the steel surface after blasting
- Dehumidification
- Mixing procedure
- Paint storage and consumption
- Spray pattern
- Wet film thickness
- Ventilation
- Pinhole and holiday detection
- Drying/curing procedures
- Safety procedures

Dry Film Thickness:

One of the most controversial subjects of application and inspection is the measurement and judgment of DFT.

Highly skilled application techniques are required to keep the DFT within specified limits. It must be understood that most tank linings are exposed to severe conditions. In such a case, the idea "the thicker the better" is definitely false.

The coating should be applied in total DFT of 10 to 14 mils in 2 coats of approximately equal thickness.

Five spot measurements must be taken over an area of 100 square feet. Each spot measurement consists of three gauge readings next to one another. The average of three readings is used to calculate the average of the spot readings.

The average of the spot readings has to be in the specified mil thickness range. According to SSPC-PA2, no spot reading lower than 80% of the specified milage is acceptable. Therefore, no spot reading may be lower than 8.0 mils.

In addition, the maximum film thickness also is limited. No spot reading (average of a cluster of three gauge readings) higher than 120% of the specified film thickness is acceptable. 16.8 mils is therefore the maximum allowable film thickness.

Between the three cluster readings which form one spot reading, a higher reading than 16.8 mils is still acceptable as long as this, together with the other two readings, does not average higher than 120% (16.8 mils) of the maximum specified (14) mils.

Where the film thickness is too low, an extra coat must be applied In accordance with procedures established in this guide.

In case of high film thickness, the thick area must be sanded (after sufficient curing) and a very light extra finish coat applied to "renew" the film.

The magnetic film thickness gauges must be calibrated frequently enough to ensure correct readings. The original calibration must take place with shims placed on the blasted surface as described in SSPC-PA2. This method prevents higher thickness readings found than are actually applied, especially with deeper profiles.

10. LITERATURE

Additional literature to be used in conjunction with these guidelines:

A. Steel Structures Painting Manual, Volume 1

In particular, chapters:

2.0 Surface Preparation

2.2 Metallic Abrasives

2.4 Abrasive Air Blast Cleaning

2.6 Hand and Power Tool Cleaning

2.9 Chemical Cleaning

a. Solvent Wipe

b. Steam Cleaning

c. High Pressure – Hot Detergent

5.3 Safety in Paint Application

6.0 Inspection

14.2 The Lining of Tanks

B. Steel Structures Painting Manual, Volume 2

Surface Preparation Standards

Chapter 5, Paint Application Specifications SSPC-PA2

A Guide to Safety in Paint Application SSPC-PA Guide 311

11. CURING, VENTILATION, AND DISINFECTION

The Contractor shall provide adequate ventilation to effectively remove solvent vapors for proper drying of paint on interior surfaces. The Contractor shall be required, upon request from the Company's Authorized Representative or the Independent Coating Inspector, during the pre-construction meeting to provide specific details on its plan to provide adequate curing and ventilation.

A combination of forced and natural ventilation shall be continued after coating application is completed to ensure complete curing and solvent removal. Coating life may be shortened if there is inadequate ventilation during the curing period and residual coating solvent may contribute to taste and odor problems in stored water. Lower temperatures or higher humidity may extend the time that ventilation is necessary. The Contractor shall use forced air ventilation with heating units when applying coatings at low temperatures and higher humidities. The ventilation must be designed in such a way that no solvent vapors remain in corners, etc. The air used must be clean and dry enough to prevent any condensation of moisture on the coated surface. Good ventilation will prevent solvent entrapment in the film.

Following final coat application and final inspection, the Contractor shall not disinfect the tank until the coating system is fully cured and approved by the Independent Coating Inspector. Refer to the applicable product data sheet for dry time/temperature requirements. The Contractor shall disinfect the tank according to the current American Water Works Association Standard AWWA C652, or as instructed by the Company's Authorized Representative. The Contractor, at its expense, shall be responsible for disinfecting the tank immediately before placing the tank in service.

All cathodic protection systems shall be disabled and locked out before initiating tank draining and shall remain disabled until completion of the interior warranty inspection. Once the tank is placed back into service, the lock shall be removed and the cathodic protection system energized.

12. CLEAN UP

The Contractor shall remove from the Company's property and from all public and private property, at its own expense, all temporary structures, rubbish, and waste materials from its operations. In the event the Contractor fails to do so, the Company may remove same at the expense of the Contractor.

13. CONTAINMENT/DISPOSAL COSTS

The Contractor shall be responsible for all costs associated with containment and waste disposal, and for all waste removal as specified in the General Conditions of Contract.

14. GUARANTEE/INSPECTION

The Contractor shall guarantee all labor, workmanship, and materials it applies for the minimum guarantee period, as specified in the General Conditions of Contract.

Approximately eleven (11) months after the Contractor's completion of the work and the Company's acceptance of the completed work, the Company's Authorized Representative shall schedule with an Independent Coating Inspector a date for an inspection for all interior coating work completed, and shall notify the Contractor of such date at least thirty (30) days in advance.

If repairs are necessary, the Contractor shall be responsible for properly disinfecting the water storage tank prior to it being placed back into service. All such repair work will be subject to the conditions of the original Contract.

ARIZONA WATER COMPANY

SPECIFICATIONS

GENERAL CONDITIONS OF CONTRACT: E-4-1

CONSTRUCTION SPECIFICATIONS: E-8-1

STANDARD SPECIFICATION DRAWINGS: E-9-1

2007 EDITION WITH 2010 REVISIONS

Entire Spec Book & EI+C Design went with RFP for ARF Broken Arrow, Sedona Golf, Rimrock & Montezuma Haven

8/26/2011

ARIZONA WATER COMPANY

EI&C DESIGN GUIDELINES

TECHNICAL SPECIFICATIONS

NOVEMBER 2009

Corporate Office
3805 North Black Canyon Hwy • Phoenix, AZ 85015-5351
P.O. Box 29006 • Phoenix, AZ 85038-9006
602.240.6860 (Phone)
602.240.6878 or 602.240.6874 (Fax)

ARIZONA WATER COMPANY

EI&C DESIGN GUIDELINES
STANDARD DETAILS

TABLE OF CONTENTS

Corporate Office
3805 North Black Canyon Hwy • Phoenix, AZ 85015-5351
P.O. Box 29006 • Phoenix, AZ 85038-9006
602.240.6860 (Phone)
602.240.6878 or 602.240.6874 (Fax)

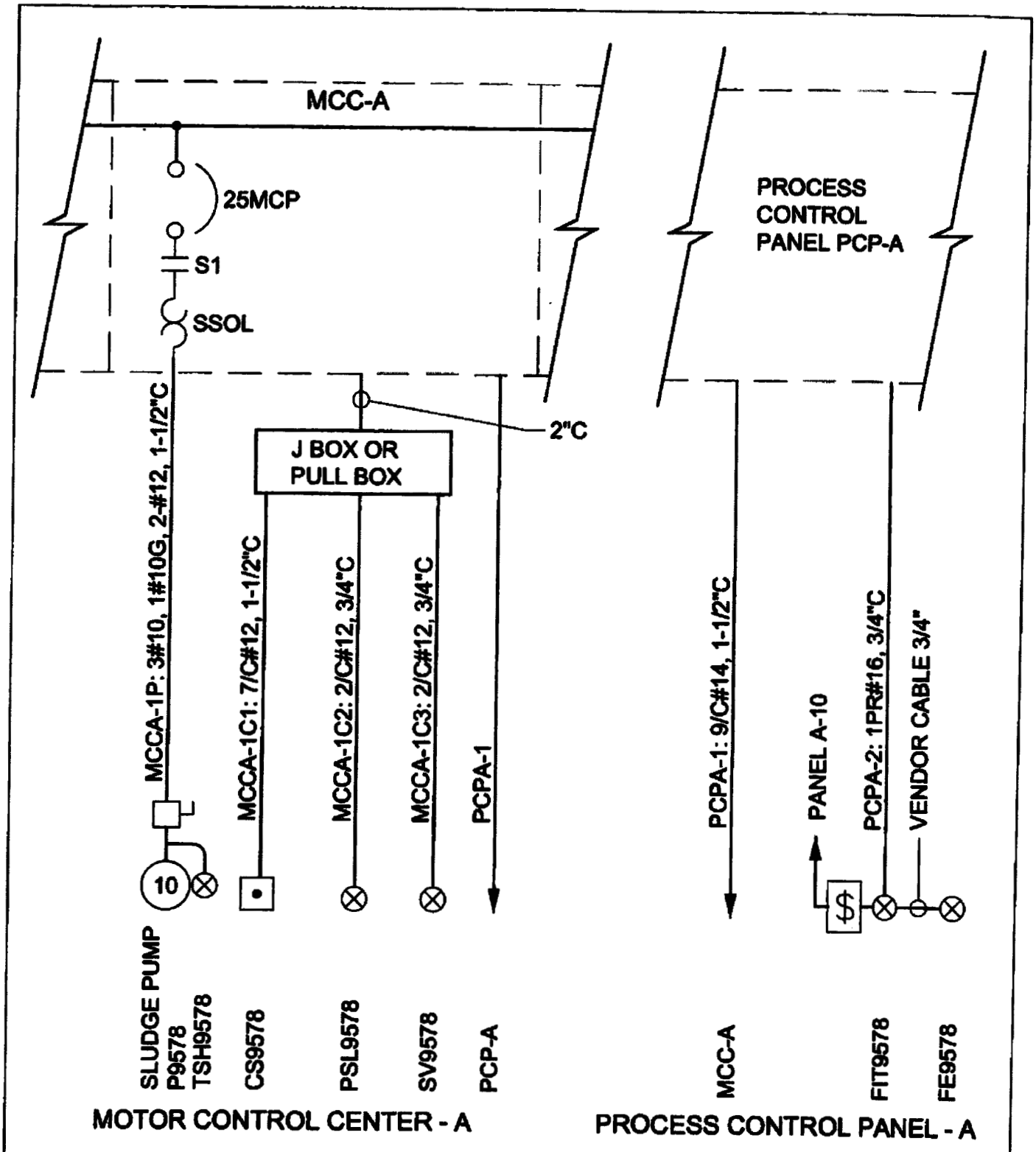

ARIZONA WATER COMPANY

STANDARD DETAILS
FOR THE INSTALLATION OF
SINGLE LINE DIAGRAM
TYPICAL PRESENTATION

DRAWN BY:	APPROVED BY:	DATE: 12-23-08

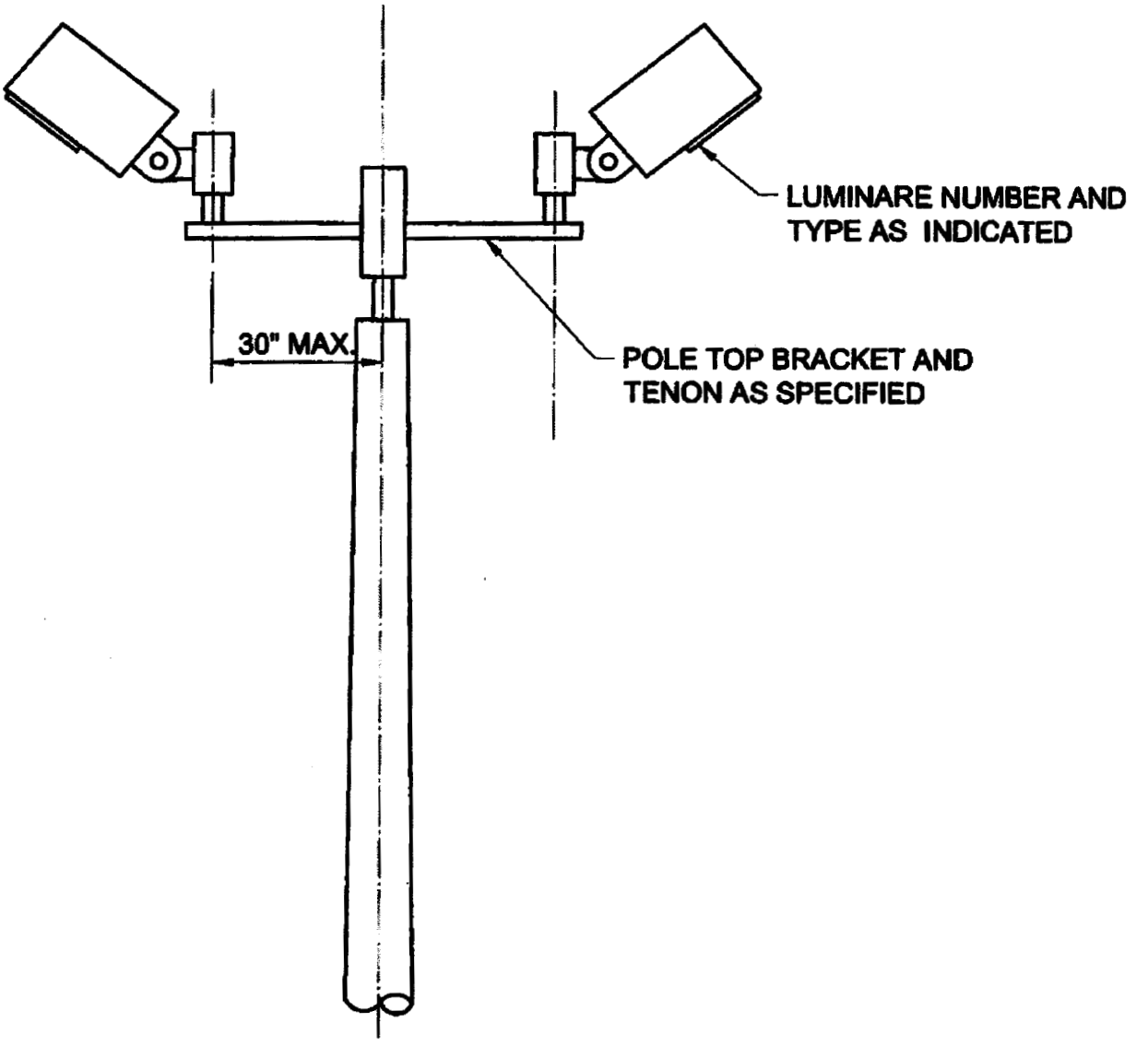

ARIZONA WATER COMPANY

STANDARD DETAILS
FOR THE INSTALLATION OF
MULTIPLE LUMINAIRE POLE
MOUNTING BRAKET

DRAWN BY:	APPROVED BY:	DATE: 12-23-08

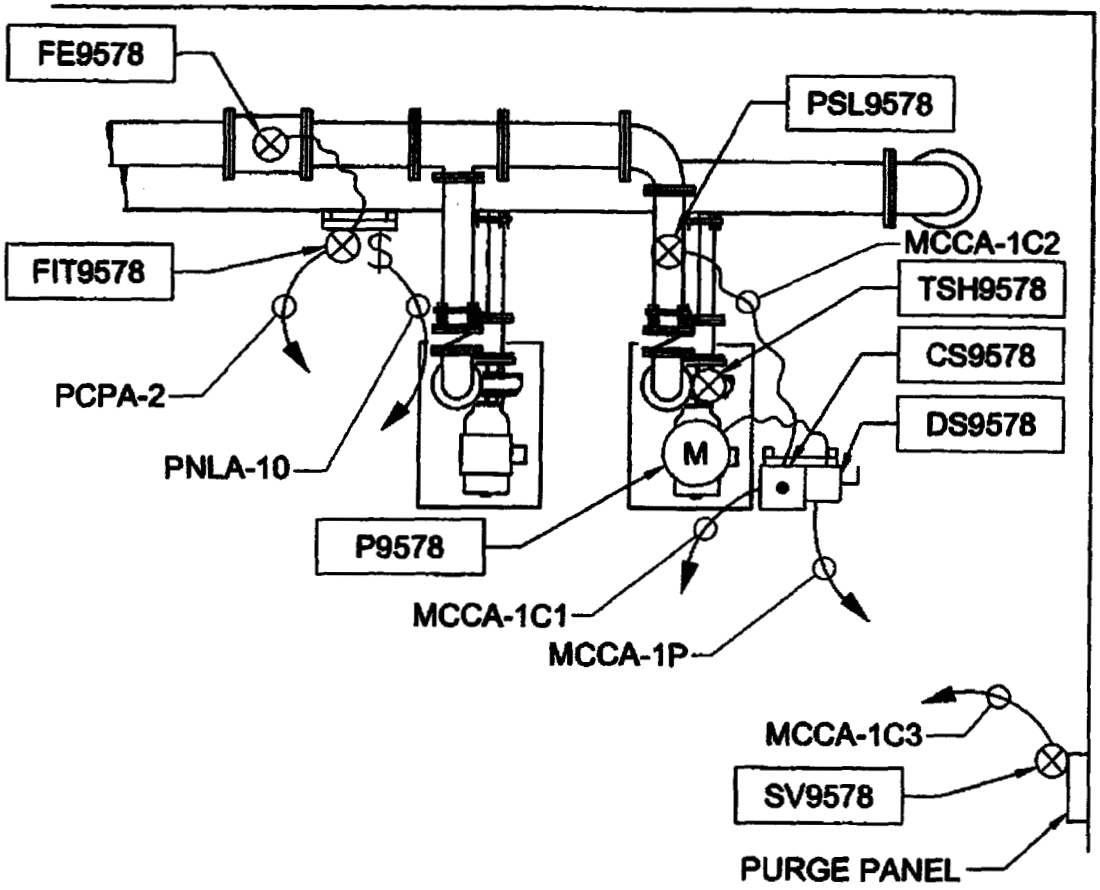

ARIZONA WATER COMPANY

STANDARD DETAILS
FOR THE INSTALLATION OF
POWER AND CONTROL PLAN
TYPICAL PRESENTATION

DRAWN BY:	APPROVED BY:	DATE: 12-23-08

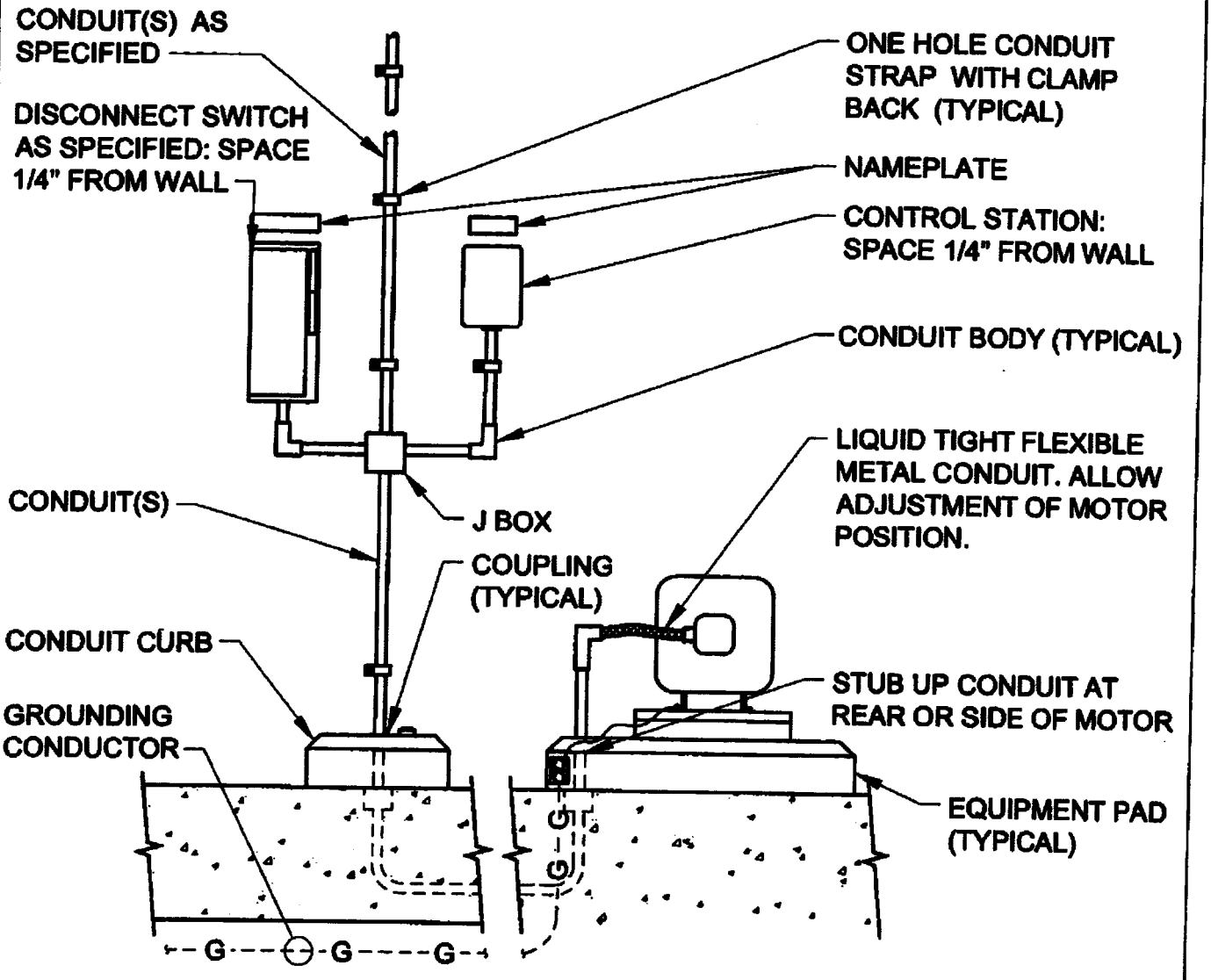

ARIZONA WATER COMPANY

STANDARD DETAILS
FOR THE INSTALLATION OF
MOTOR FEED
FROM ADJACENT WALL

DRAWN BY:	APPROVED BY:	DATE: 12-23-08

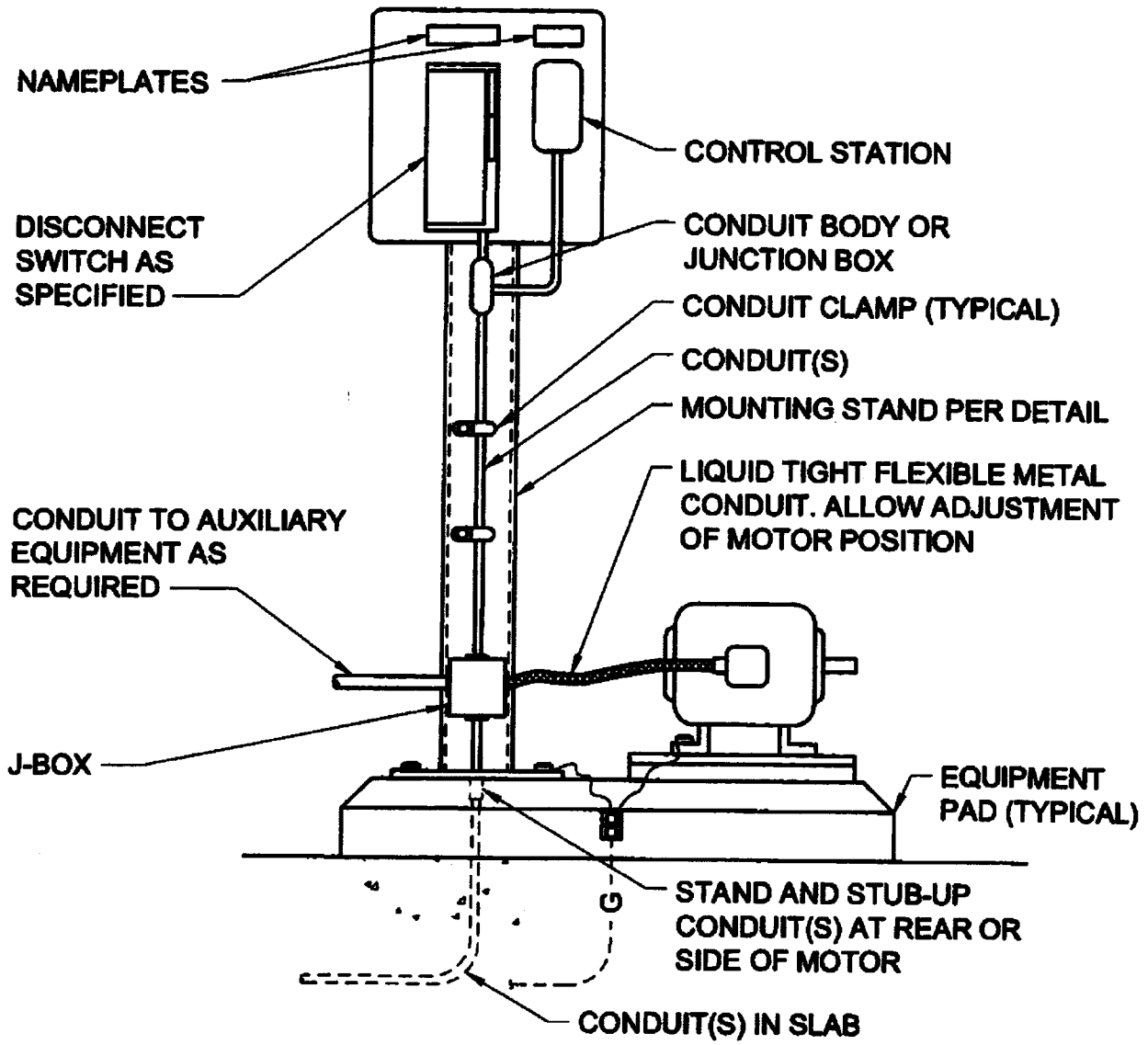

ARIZONA WATER COMPANY

STANDARD DETAILS
FOR THE INSTALLATION OF
MOTOR FEED FROM BELOW

DRAWN BY:	APPROVED BY:	DATE: 12-23-08

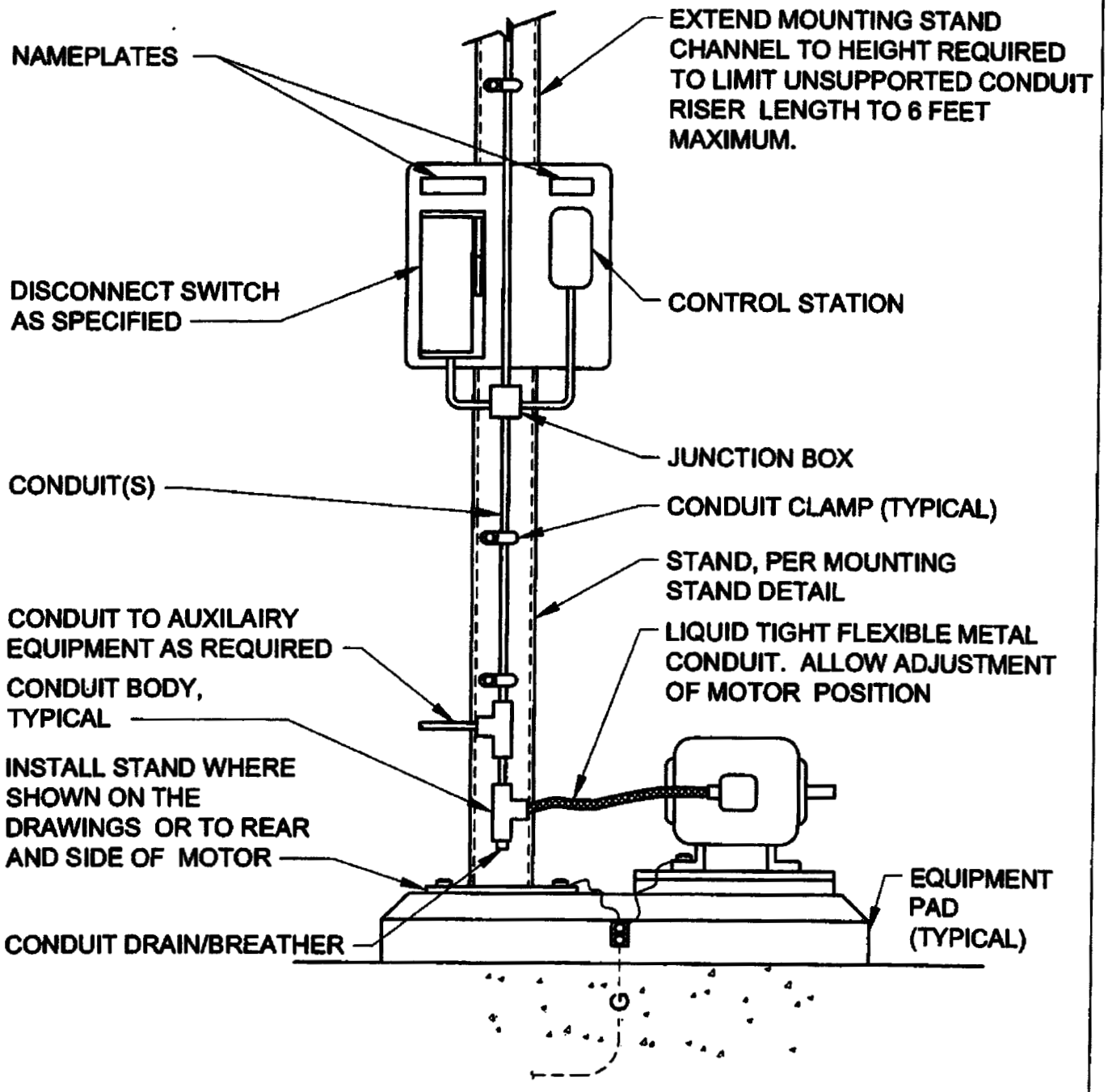

ARIZONA WATER COMPANY

STANDARD DETAILS
FOR THE INSTALLATION OF
MOTOR FEED
FROM OVERHEAD

DRAWN BY:	APPROVED BY:	DATE: 12-23-08

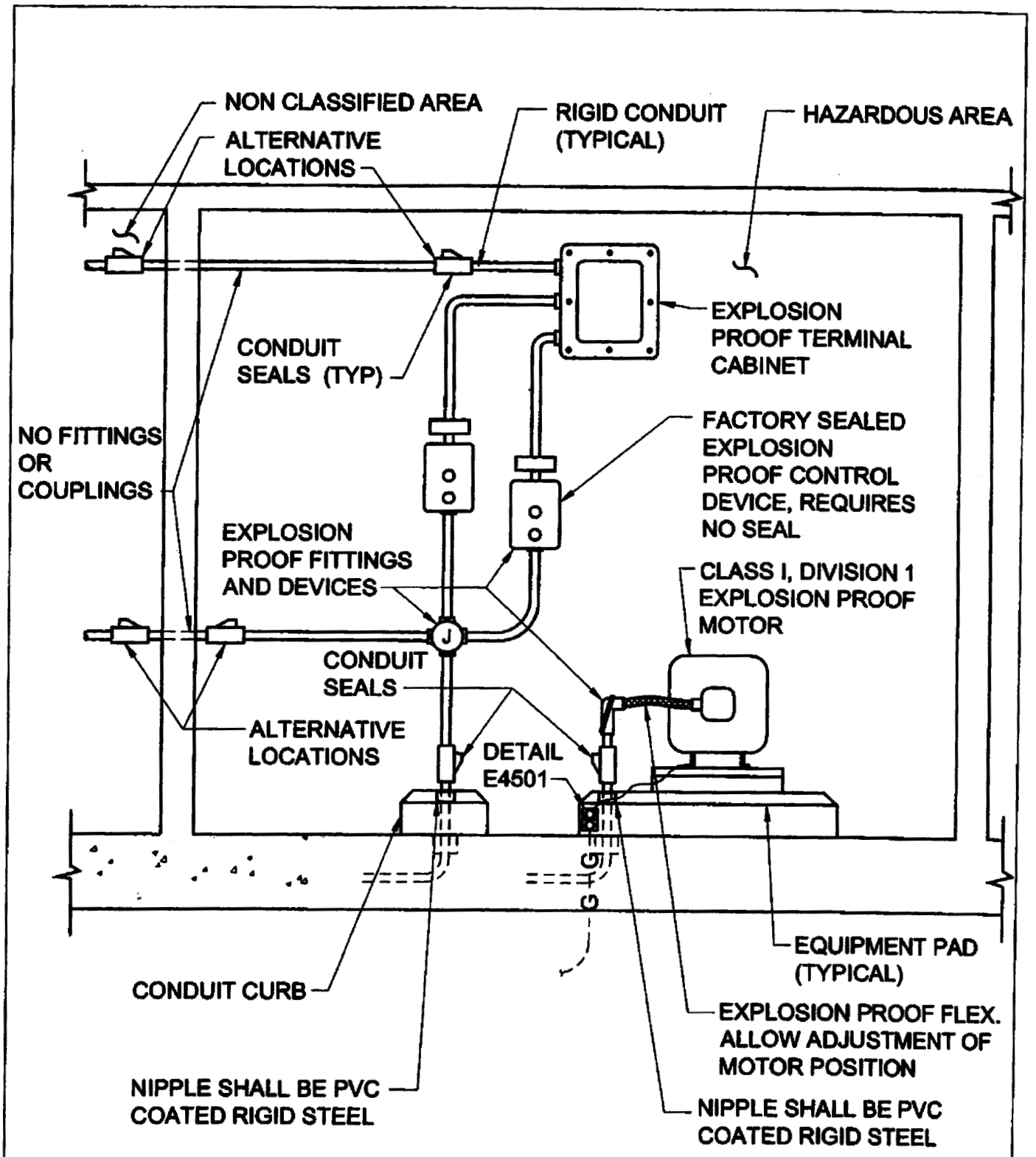

ARIZONA WATER COMPANY

STANDARD DETAILS
FOR THE INSTALLATION OF
HAZARDOUS LOCATION CONDUIT INSTALLATION

DRAWN BY:	APPROVED BY:	DATE: 12-23-08

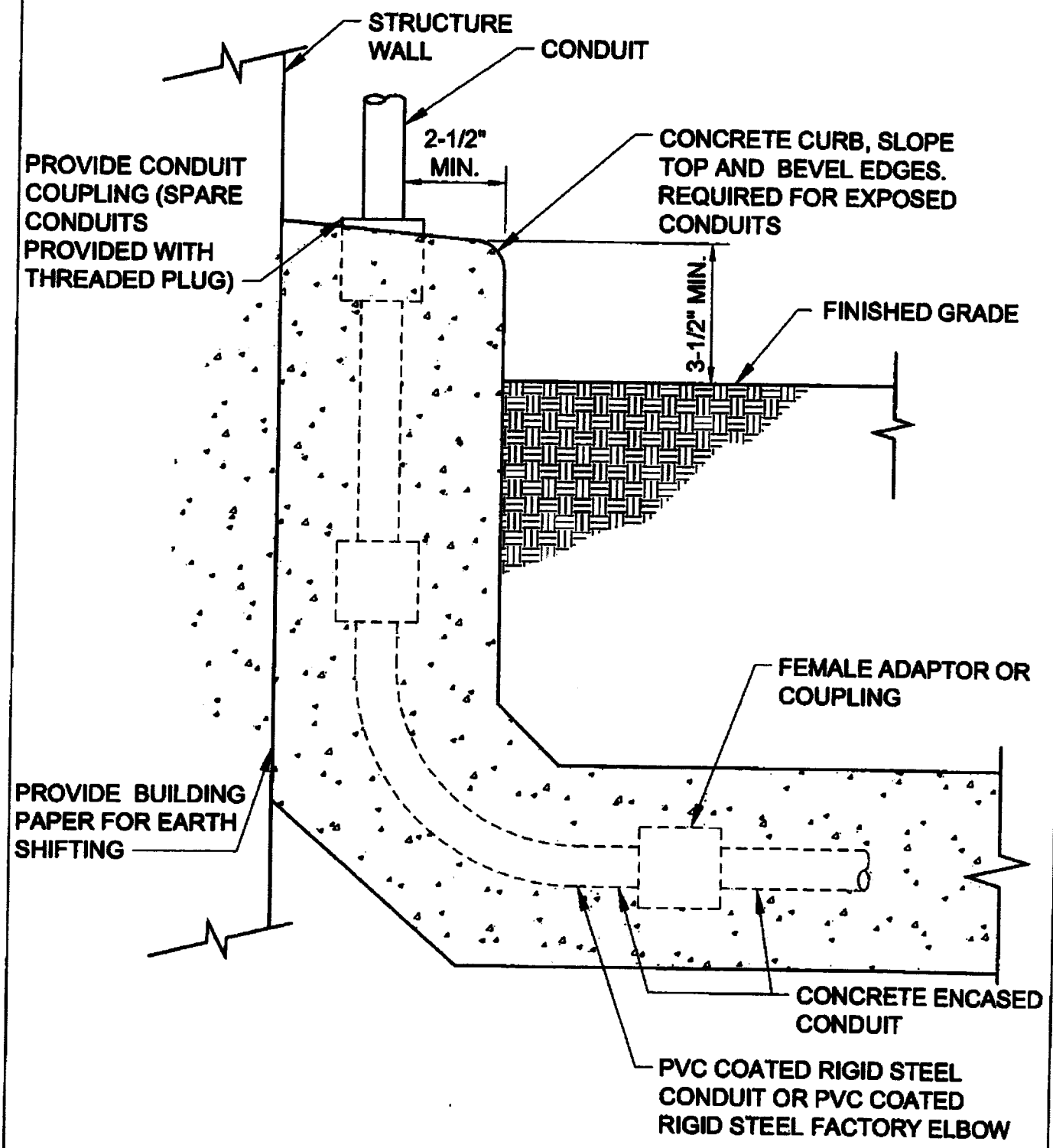

ARIZONA WATER COMPANY

STANDARD DETAILS
FOR THE INSTALLATION OF
CONDUIT CURB AT FINISHED GRADE

DRAWN BY:	APPROVED BY:	DATE: 12-23-08

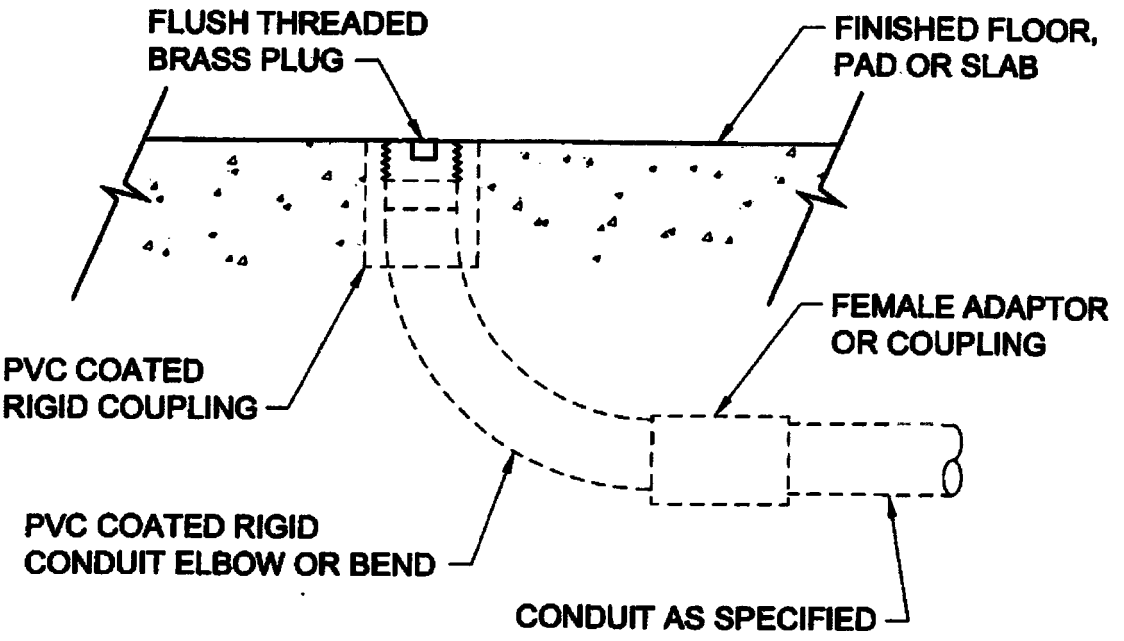

ARIZONA WATER COMPANY

STANDARD DETAILS
FOR THE INSTALLATION OF
CONDUIT FLUSH
TERMINATION IN SLAB

DRAWN BY:	APPROVED BY:	DATE: 12-23-08

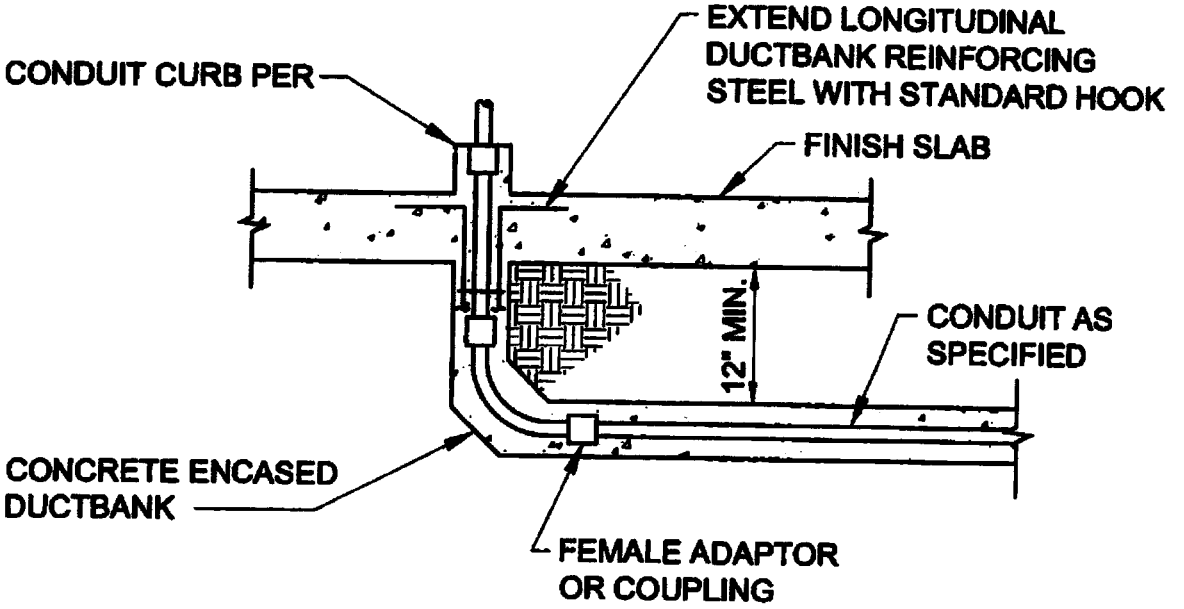

DUCTBANK RISER LESS THAN 18" IN WIDTH OR DEPTH

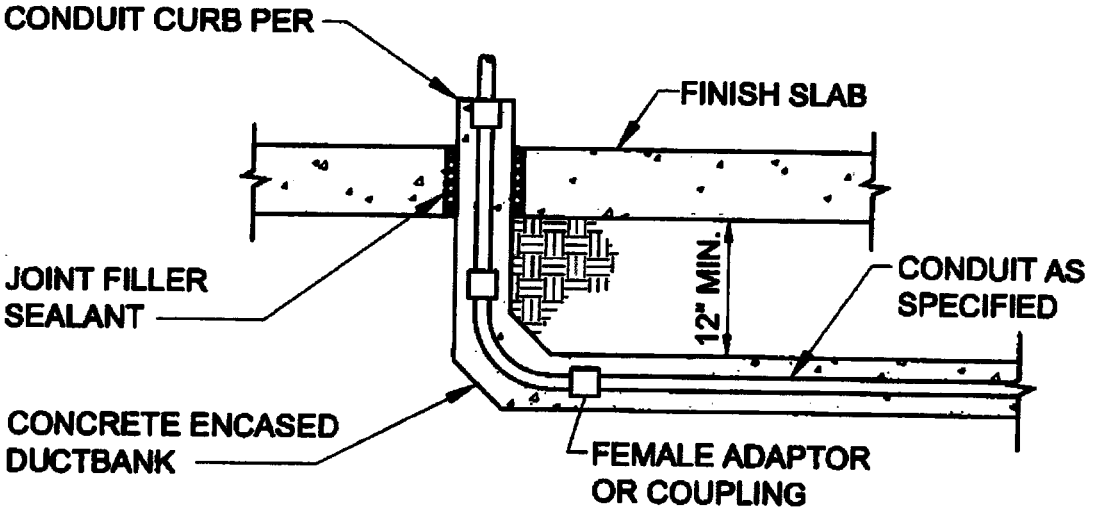

GREATER THAN 18" IN WIDTH OR DEPTH

ARIZONA WATER COMPANY

STANDARD DETAILS
FOR THE INSTALLATION OF
CONDUIT RISERS FROM DUCTBANK

DRAWN BY:	APPROVED BY:	DATE: 12-23-08

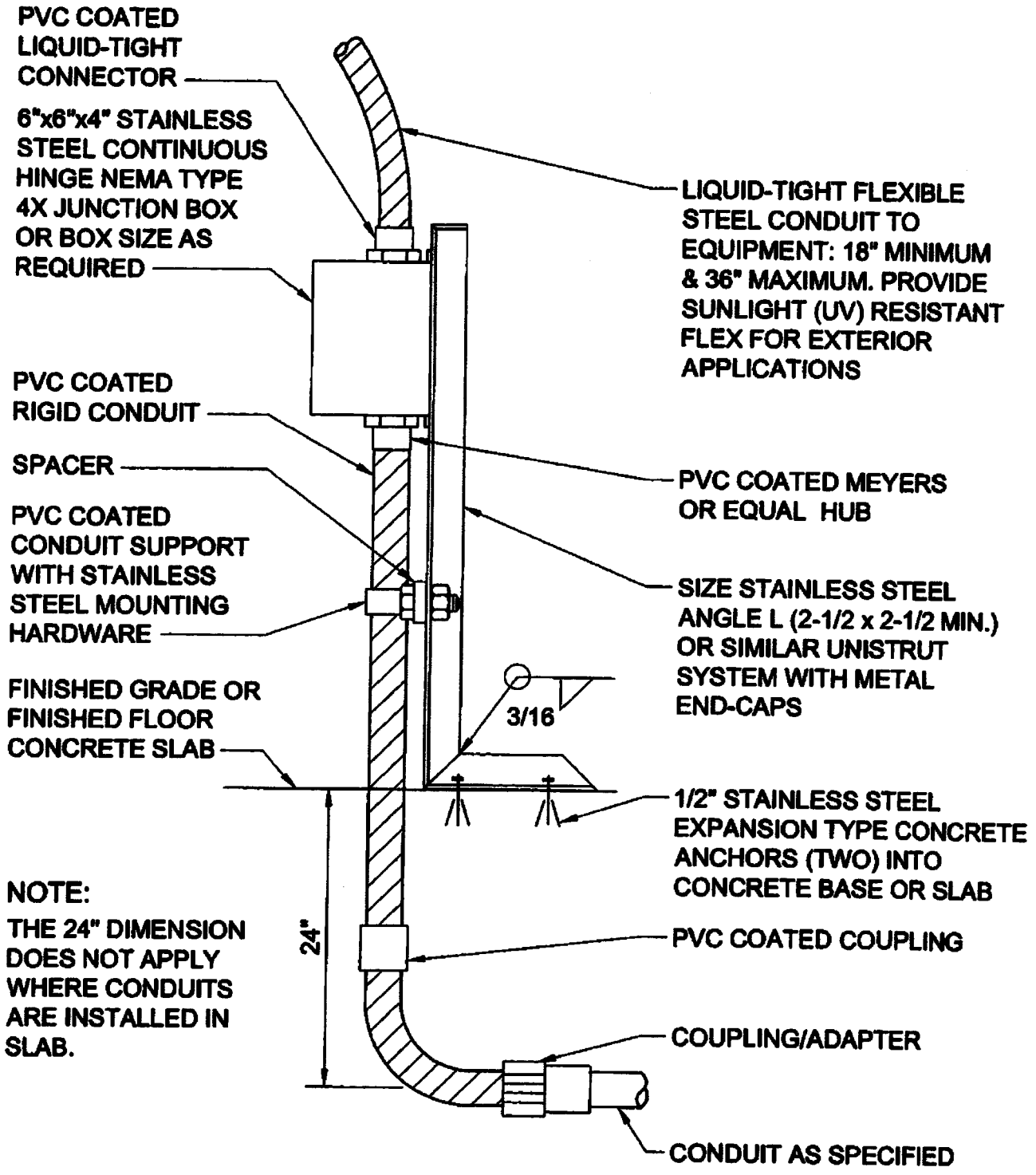

NOTE:

THE 24" DIMENSION DOES NOT APPLY WHERE CONDUITS ARE INSTALLED IN SLAB.

ARIZONA WATER COMPANY

STANDARD DETAILS
FOR THE INSTALLATION OF
CONDUIT STUB-UP AND TRANSITION J-BOX SUPPORT

DRAWN BY:	APPROVED BY:	DATE: 12-23-08

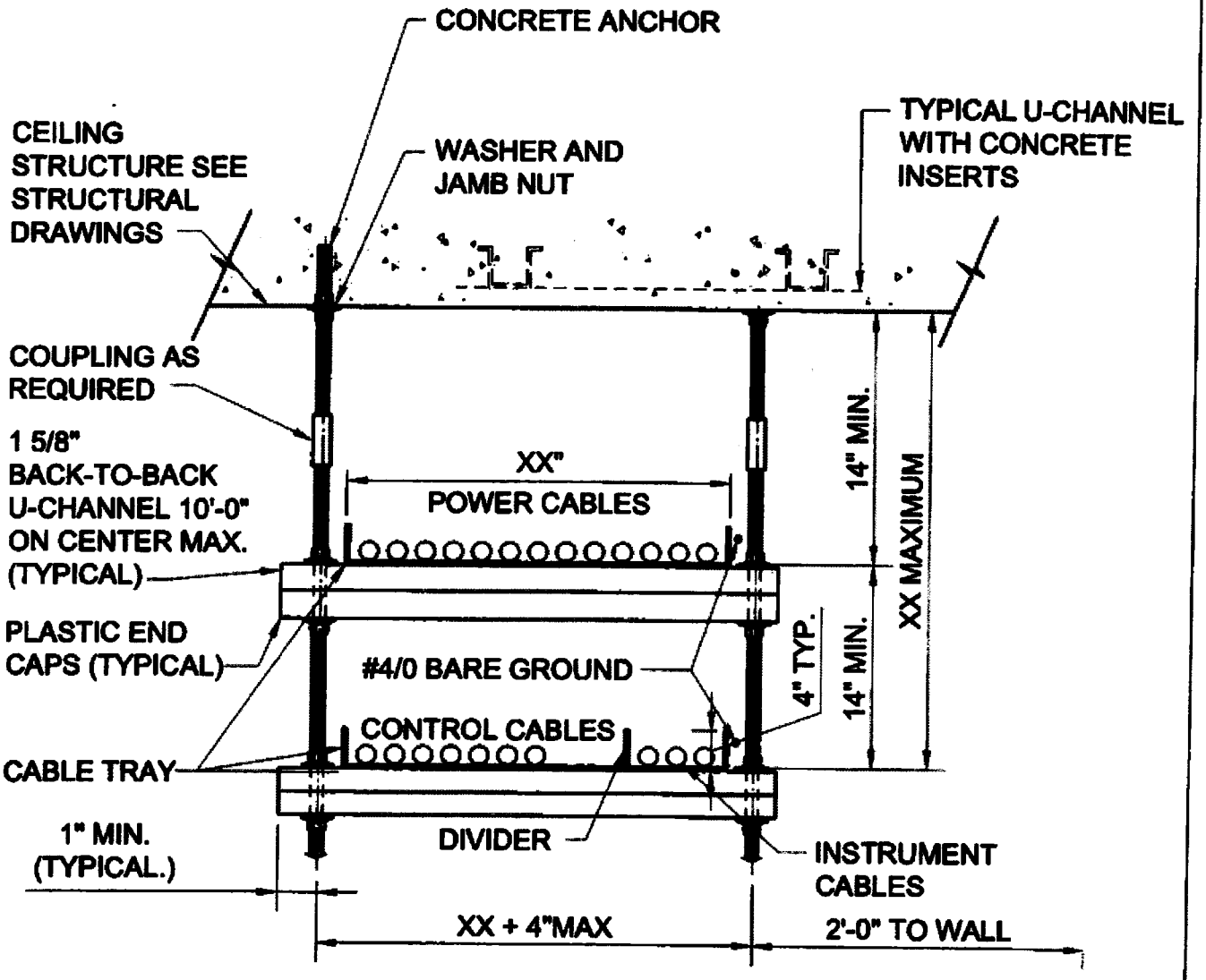

ARIZONA WATER COMPANY

STANDARD DETAILS
FOR THE INSTALLATION OF
SUSPENDED CABLE TRAY RACK

DRAWN BY:	APPROVED BY:	DATE: 12-23-08

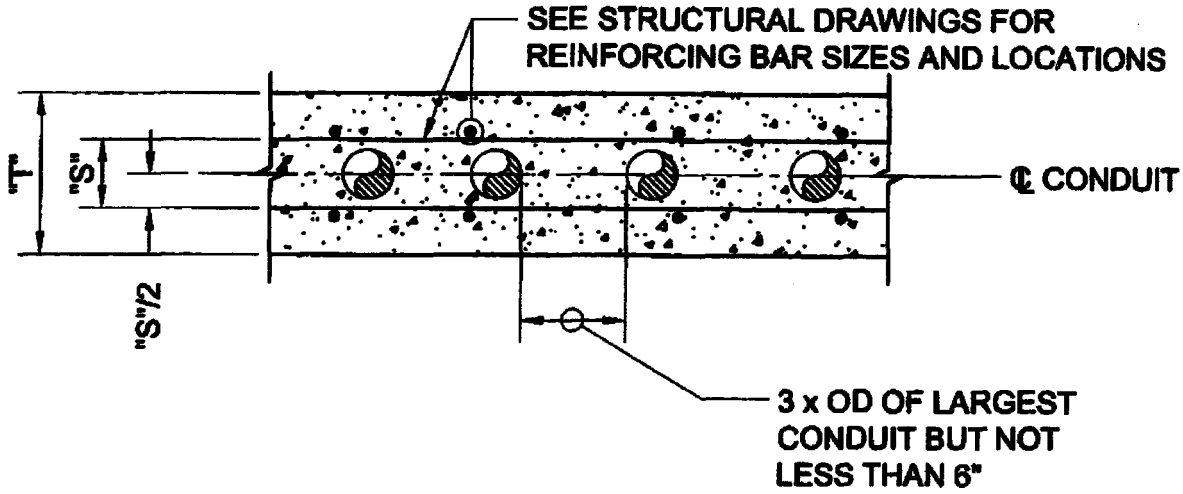

ARIZONA WATER COMPANY

STANDARD DETAILS
FOR THE INSTALLATION OF
RACEWAYS IN ELEVATED
CONCRETE SLAB OR WALL

DRAWN BY:	APPROVED BY:	DATE 12-23-08

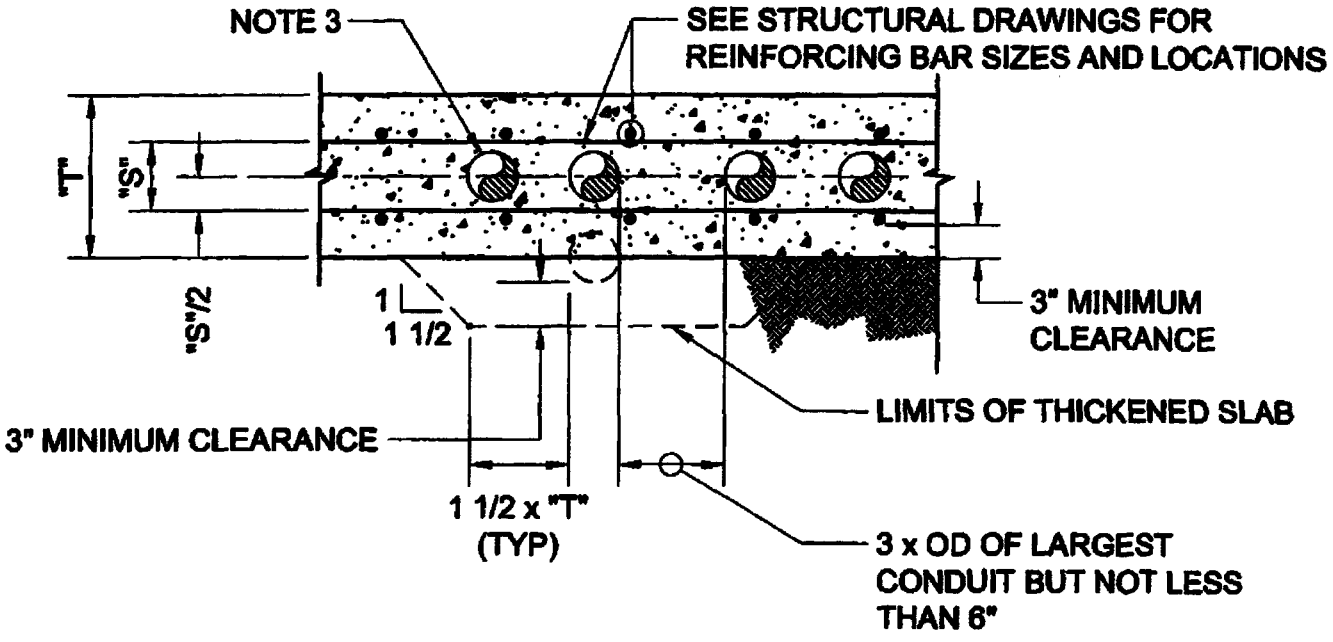

DOUBLE MAT REINFORCEMENT

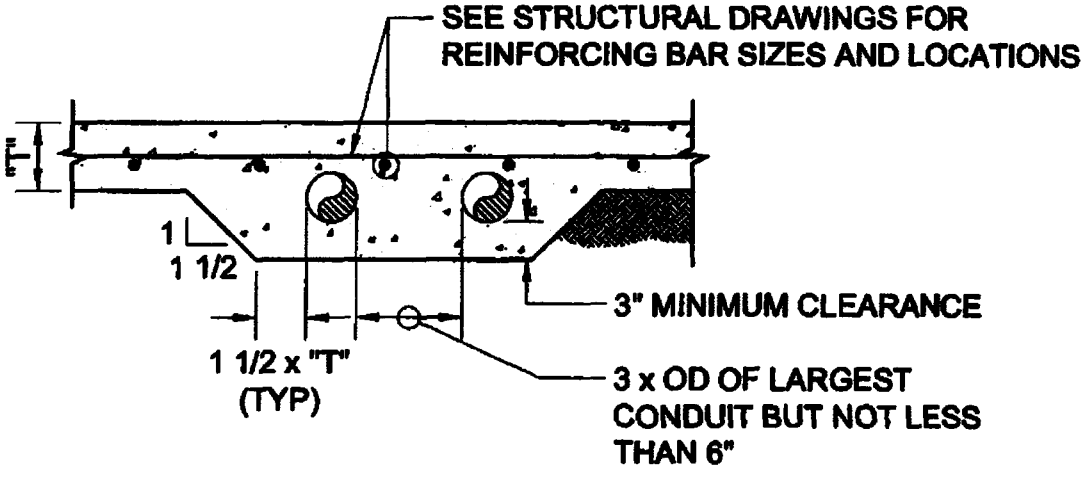

SINGLE MAT REINFORCEMENT

ARIZONA WATER COMPANY

STANDARD DETAILS
FOR THE INSTALLATION OF
RACEWAYS IN CONCRETE SLAB ON GRADE

DRAWN BY:	APPROVED BY:	DATE: 12-23-08

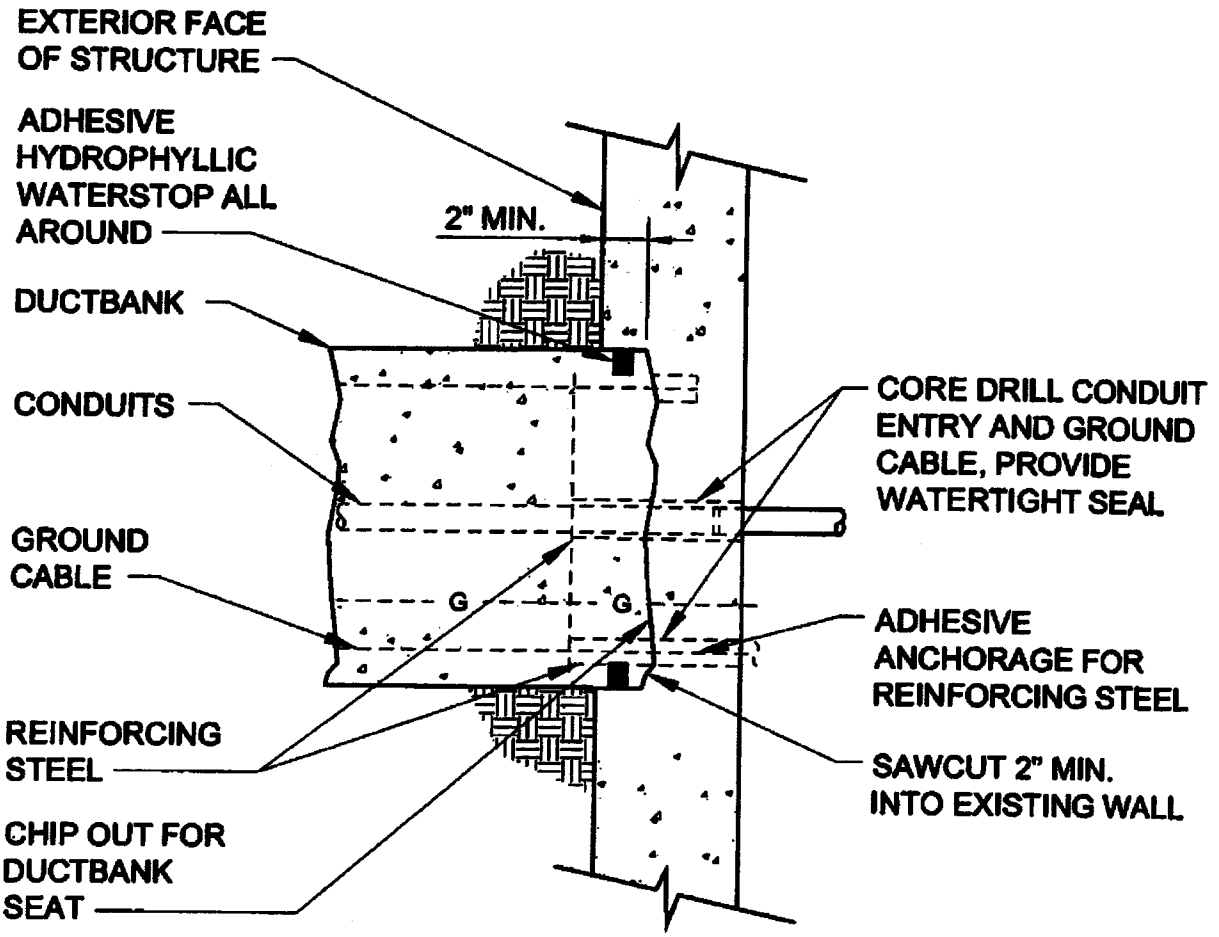

ARIZONA WATER COMPANY

STANDARD DETAILS
FOR THE INSTALLATION OF
DUCTBANK AT EXISTING STRUCTURE

DRAWN BY:	APPROVED BY:	DATE: 12-23-08

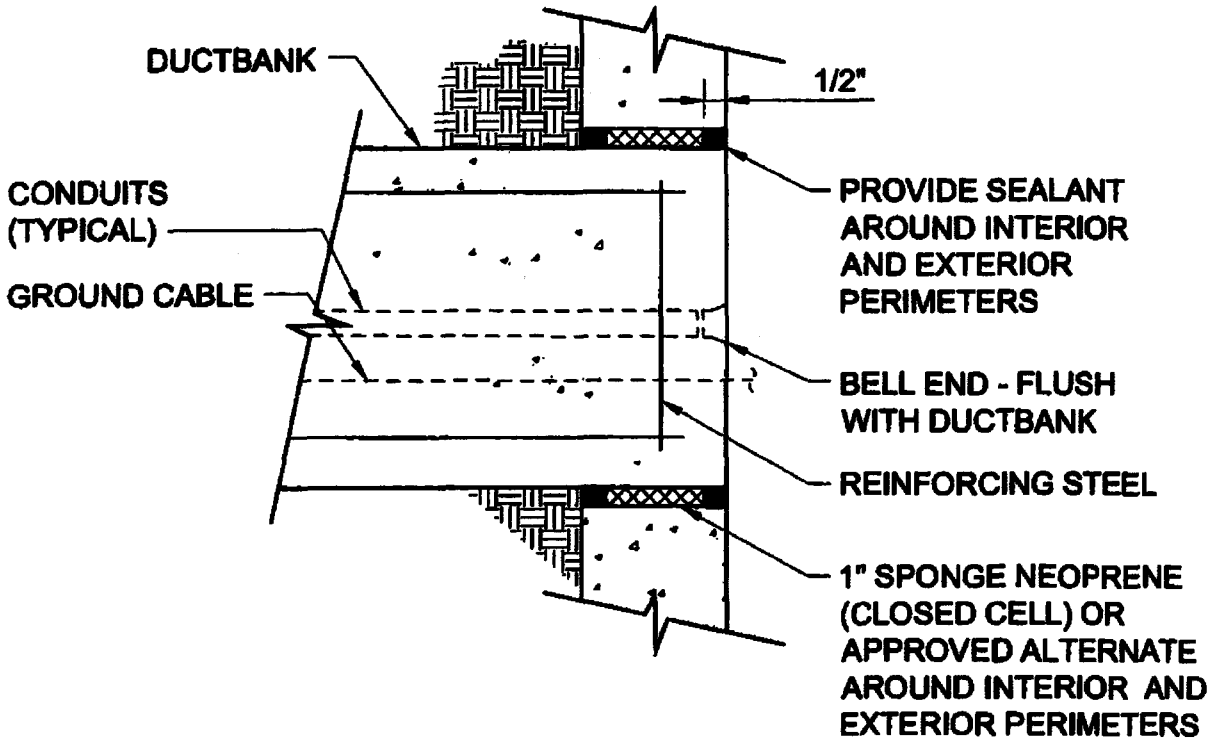

ARIZONA WATER COMPANY

STANDARD DETAILS
FOR THE INSTALLATION OF

DUCTBANK AT STRUCTURE

DRAWN BY:	APPROVED BY:	DATE: 12-23-08

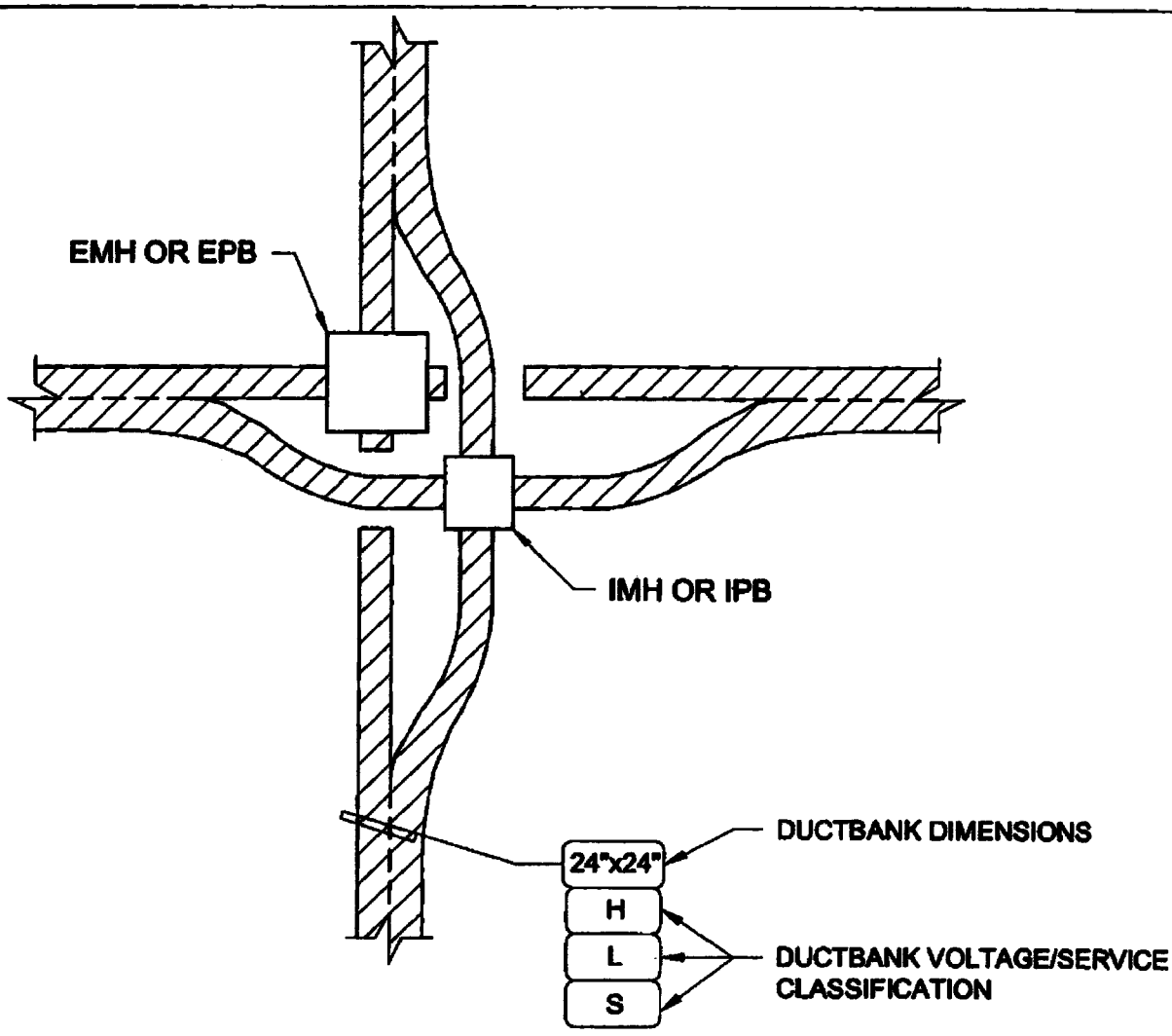

ABBREVIATIONS AND SYMBOLS:

H = HIGH VOLTAGE: 5KV, 15KV, 25KV OR 35KV

L = LOW VOLTAGE: 600V (POWER & CONTROL)

S = SIGNAL: INSTRUMENTATION, DATA COMMUNICATION, TELEPHONE

EMH = ELECTRICAL MANHOLE

EPB = ELECTRICAL PULLBOX

IMH = INSTRUMENT MANHOLE

IPB = INSTRUMENT PULLBOX

ARIZONA WATER COMPANY

STANDARD DETAILS
FOR THE INSTALLATION OF

DUCTBANK WITH EMH/IMH LAYOUT

DRAWN BY:	APPROVED BY:	DATE: 12-23-08

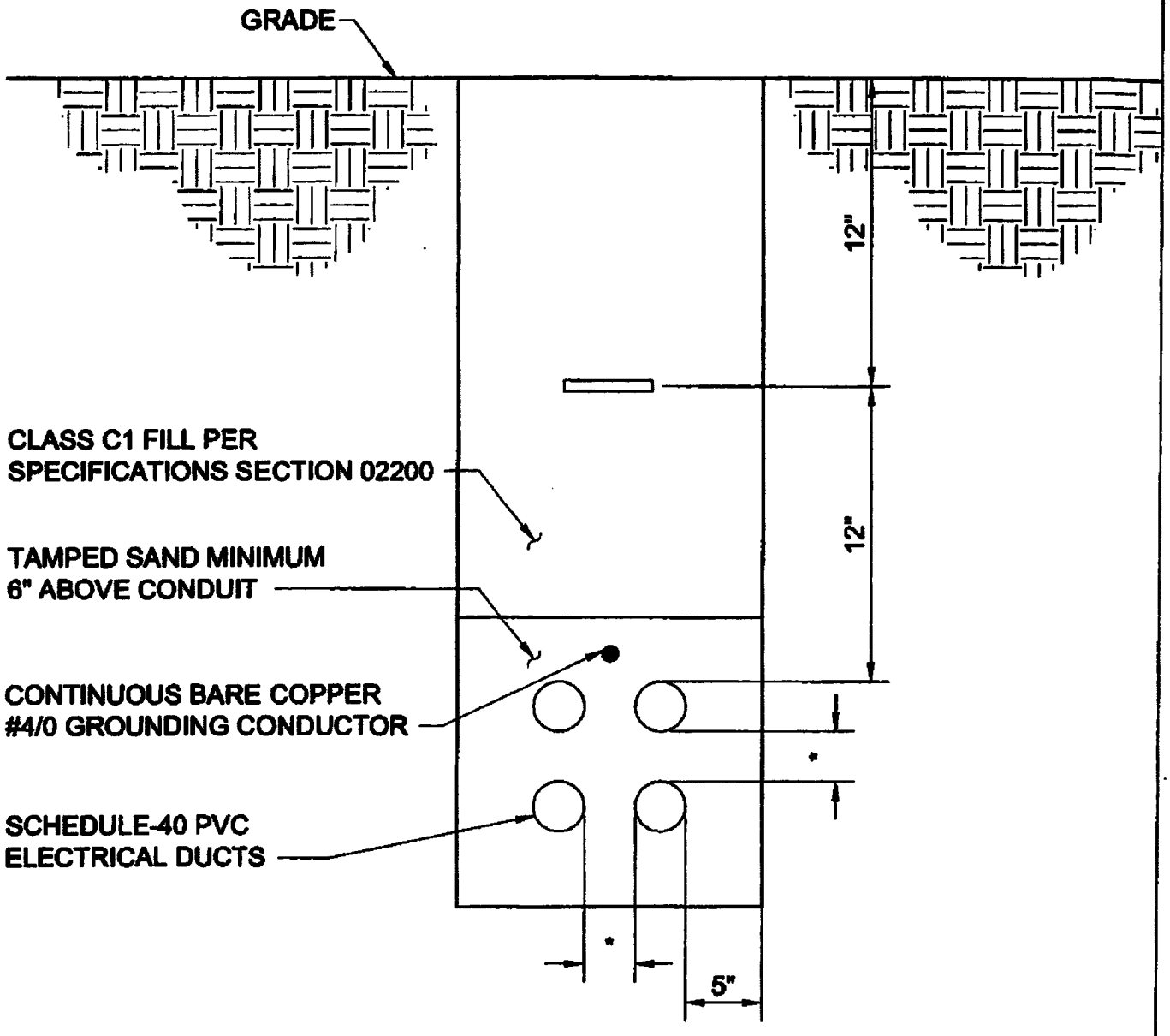

ARIZONA WATER COMPANY

STANDARD DETAILS
FOR THE INSTALLATION OF
RACEWAYS
DIRECT BURIED RACEWAYS

DRAWN BY:	APPROVED BY:	DATE: 12-23-08

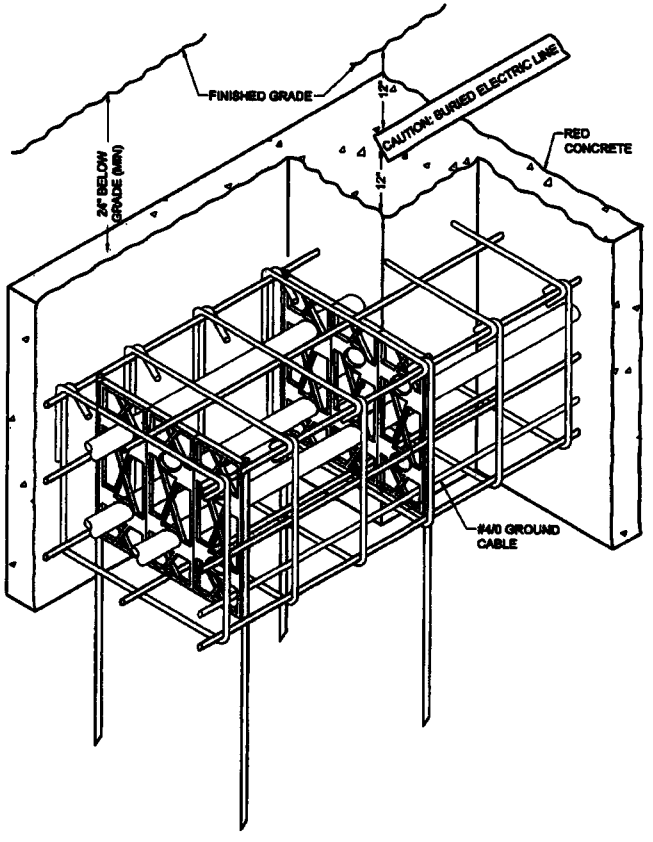

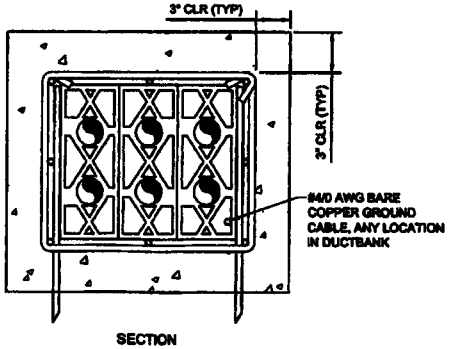

SECTION

ARIZONA WATER COMPANY

3805 N. BLACK CANON HWY. POST OFFICE BOX 29006
PHOENIX, ARIZONA 85038-9006
(602) 240-6860

REINFORCED CONCRETE ENCASED DUCTBANK

W.A.	PE	THE ABOVE INSTALLATION TO BE INSTALLED IN ACCORDANCE WITH THE ARIZONA WATER COMPANY STANDARD SPECIFICATIONS ON FILE WITH ARIZONA DEPARTMENT OF ENVIRONMENTAL QUALITY
SYSTEM		
SEC. -T. R.		
TAX DIST.		
DATE:	SCALE:	DWG. No.
DRAWN BY:	SHEET OF	

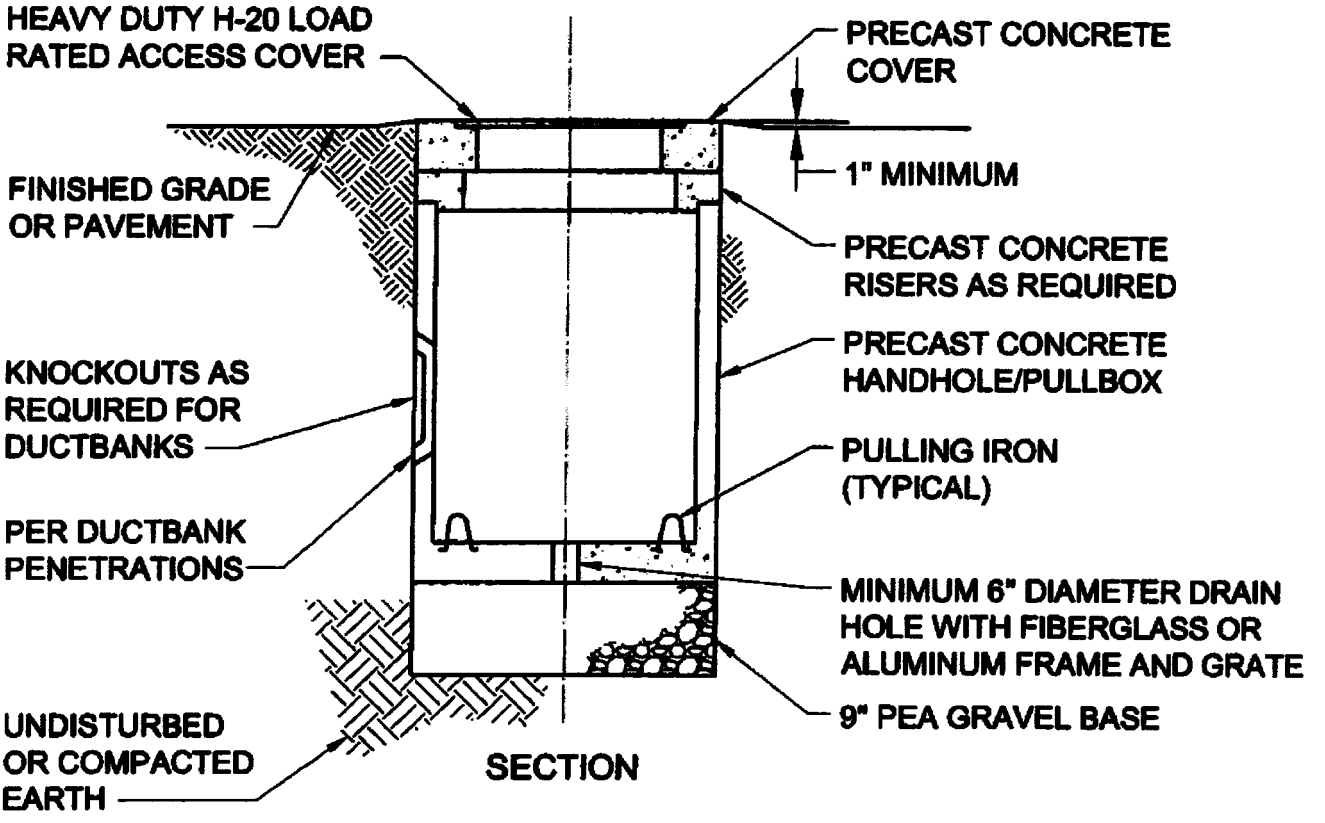

ARIZONA WATER COMPANY

STANDARD DETAILS
FOR THE INSTALLATION OF

ELECTRICAL HANDHOLE/PULLBOX

DRAWN BY:	APPROVED BY:	DATE 12-23-08

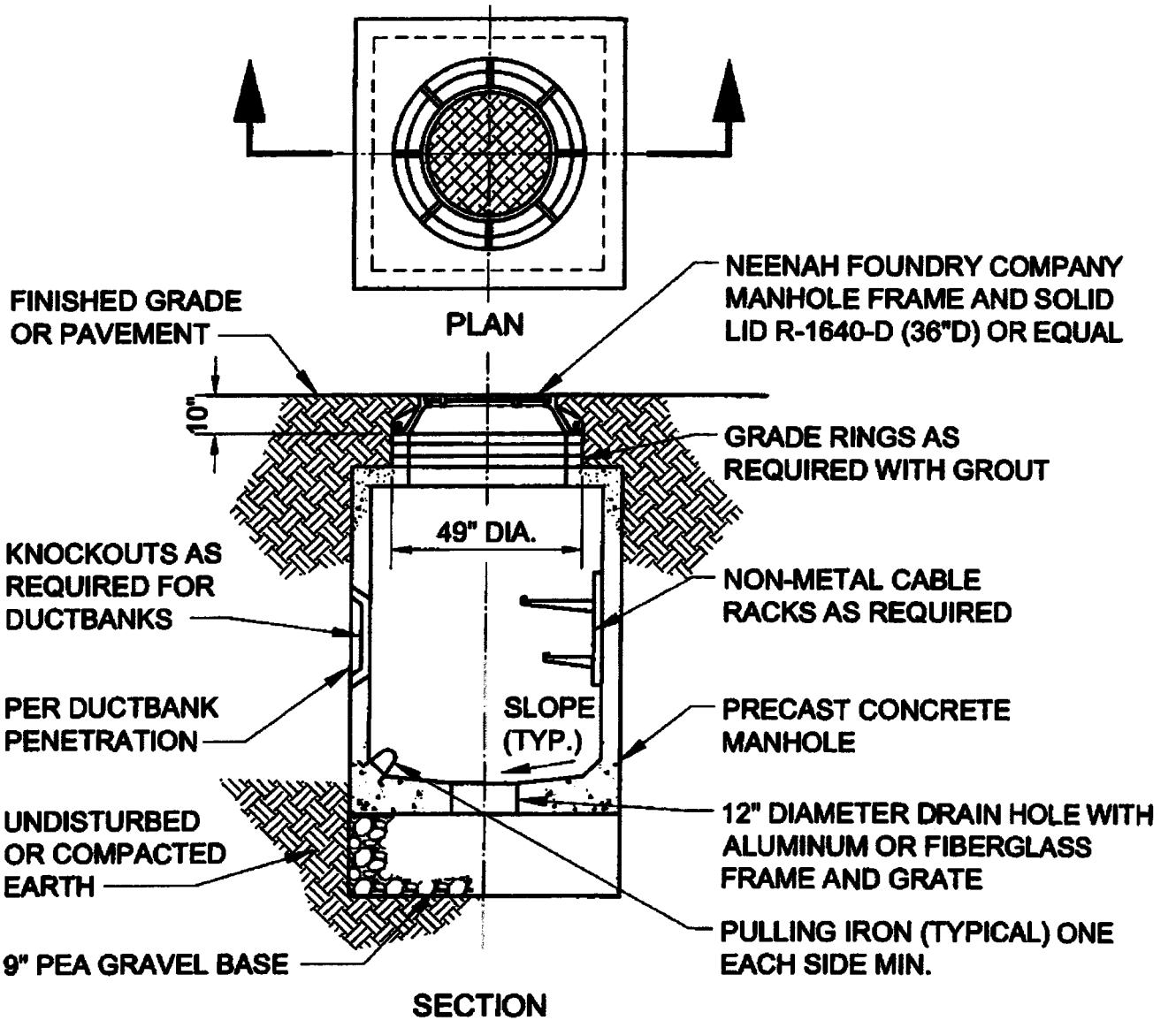

ARIZONA WATER COMPANY

STANDARD DETAILS
FOR THE INSTALLATION OF

PRECAST ELECTRICAL MANHOLE

DRAWN BY:	APPROVED BY:	DATE: 12-23-08

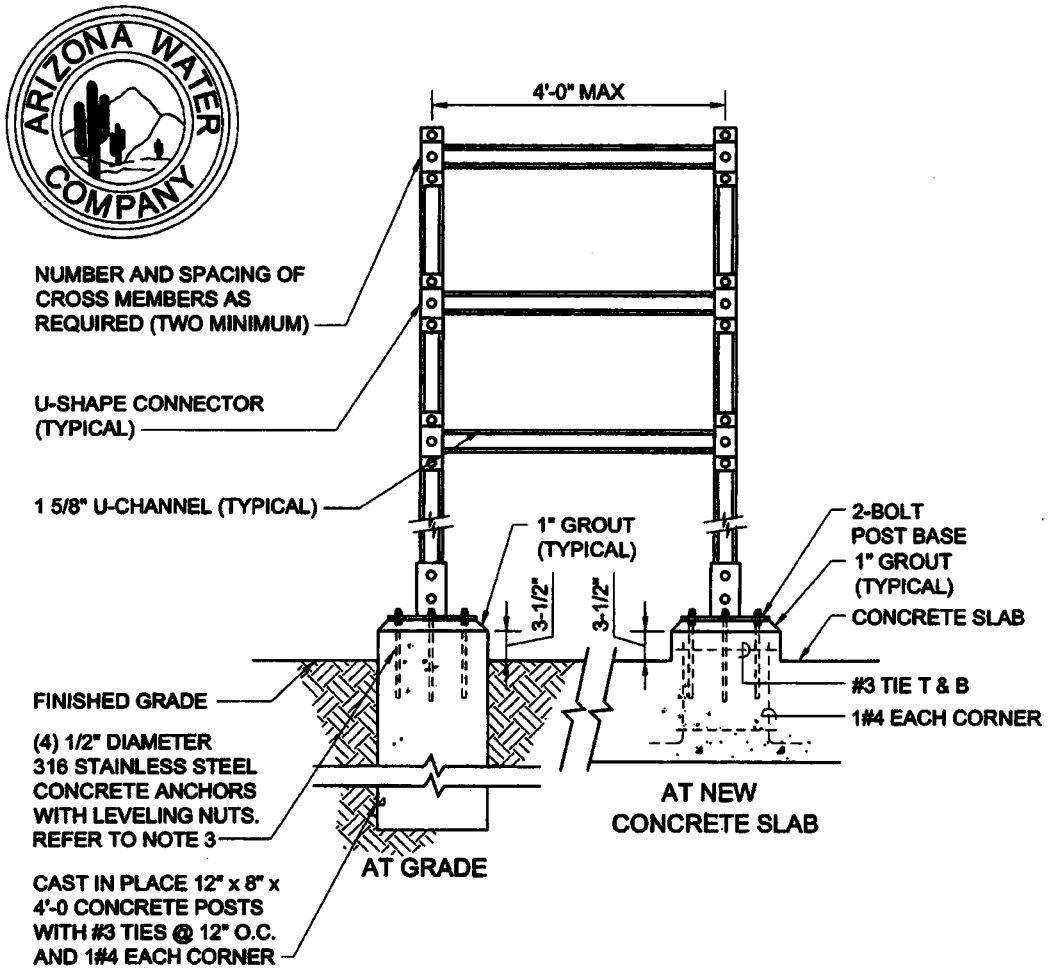

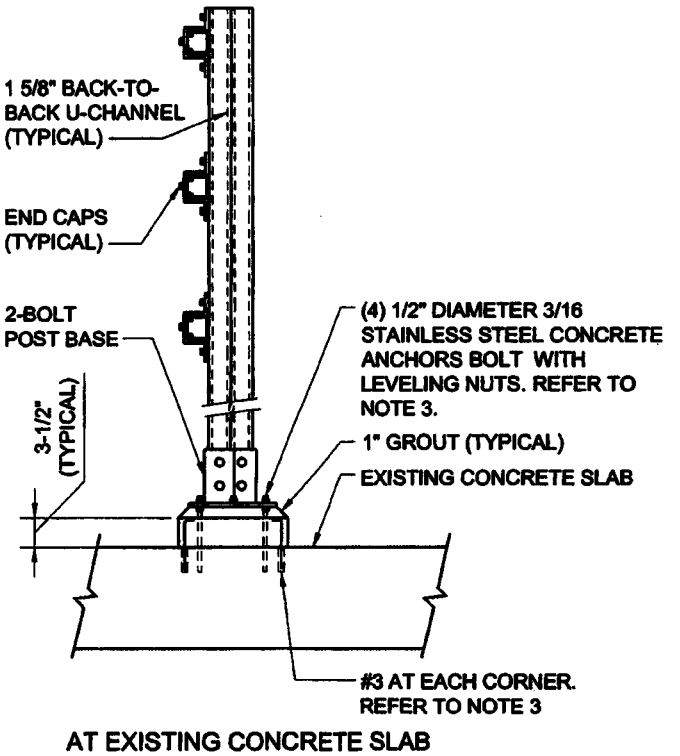

ARIZONA WATER COMPANY

3805 N. BLACK CANON HWY. POST OFFICE BOX 29006
PHOENIX, ARIZONA 85038-9006
(602) 240-6860

EQUIPMENT RACK

W.A.	PE	THE ABOVE INSTALLATION IS TO BE INSTALLED IN ACCORDANCE WITH THE ARIZONA WATER COMPANY STANDARD SPECIFICATIONS ON FILE WITH ARIZONA DEPARTMENT OF ENVIRONMENTAL QUALITY
SYSTEM:		
SEC. -T. R.		
TAX DIST.		
DATE:	SCALE:	DWG. No.
DRAWN BY:	SHEET OF	

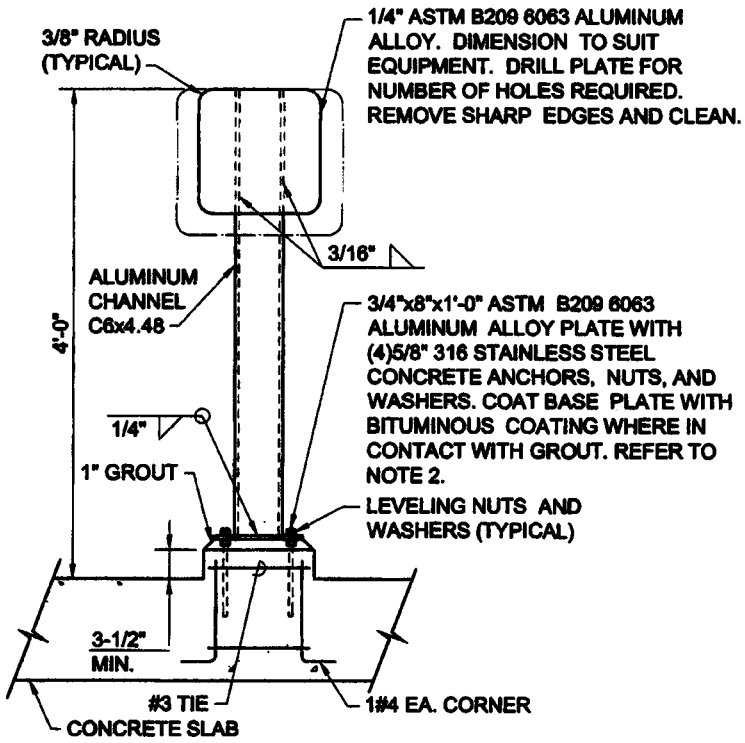

AT NEW CONCRETE SLAB

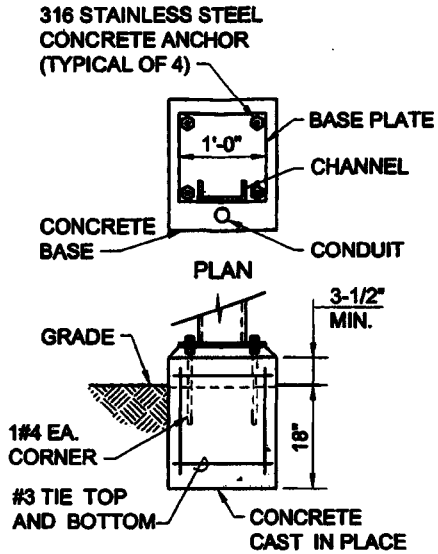

AT GRADE

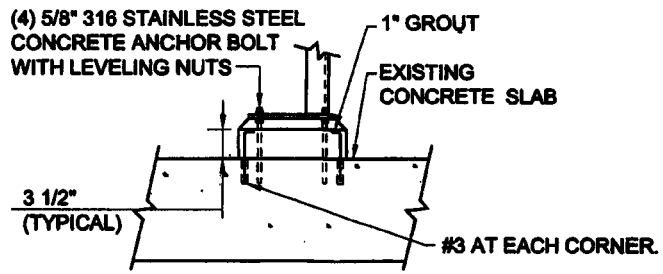

AT EXISTING CONCRETE SLAB

ARIZONA WATER COMPANY

3805 N. BLACK CANYON HWY. POST OFFICE BOX 29006
PHOENIX, ARIZONA 85038-9006
(602) 240-6860

INSTRUMENT/CONTROL STATION MOUNTING STAND

W.A.	PE	THIS ABOVE INSTALLATION IS TO BE INSTALLED IN ACCORDANCE WITH THE ARIZONA WATER COMPANY STANDARD SPECIFICATIONS ON FILE WITH ARIZONA DEPARTMENT OF ENVIRONMENTAL QUALITY
SYSTEM		
SEC. -T. R.		
TAX DIST.		
DATE:	SCALE:	DWG. NO.
DRAWN BY:	SHEET OF	

5. Maximum total harmonic distortion (THD): 10%.

6. Power factor: 95% minimum.

7. Sound rated: A.

8. Ballast case temperature not to exceed 90 degrees Centigrade during normal operation in 30 degrees Centigrade ambient temperature.

9. Certified Ballast Manufacturers' Certification.

Built-in self-resetting thermal actuated device shall remove ballast from line when excessive ballast temperature is reached. UL Class P, CBM certified 100% output.

The conductors between ballasts and lamp holders shall have 1,000 volts insulation includes conductors to and from remote ballasts.

Manufacturers: Advance, MagneTek, Motorola, or equal.

2.05 HIGH-INTENSITY-DISCHARGE LAMP BALLASTS

Comply with NEMA C82.4 and UL 1029. Shall include the following features, unless otherwise indicated.

1. Type: Constant-wattage autotransformer or regulating high-power-factor type.

2. Minimum Starting Temperature: Minus 22 deg F (Minus 30 deg C) for single-lamp ballasts.

3. Normal Ambient Operating Temperature: 104 deg F (40 deg C).

4. Open-circuit operation: Shall not reduce average life.

5. Ballast Fuses: One fuse in each ungrounded power supply conductor, size per manufacturer recommendations.

A. INSTANT-ON QUARTZ SYSTEM:

Automatically switches quartz lamp on when fixture is initially energized and when momentary power outages occur. Automatically turns quartz lamp off when high-intensity-discharge lamp reaches approximately 60 percent light output.

B. LOW-NOISE BALLASTS:

Epoxy-encapsulated models designed to minimize audible fixture noise.

C. HIGH-PRESSURE-SODIUM BALLASTS:

Solid-state igniter/starter with an average life in pulsing mode of 10,000 hours at an igniter/starter-case temperature of 90 deg C.

D. METAL HALIDE BALLASTS:

Pulse start ballasts for lamps of 175 watt or for lamps with larger wattage with constant wattage auto transformer with a crest factor of 1.8 maximum. Provide regulated lag ballast with a crest factor or 1.5 with long life requirements.

2.06 EXIT SIGNS

Comply with UL 924 for sign colors and lettering size.

2.07 EMERGENCY LIGHTING UNITS

A. GENERAL:

Self-contained units complying with UL 924 with the following features:

1. Battery: Sealed, maintenance-free, with minimum 10-year nominal life.

2. Charger: Fully automatic, solid-state type with sealed transfer relay.

3. Wire Guard: Where specified or scheduled, heavy-chrome-plated wire guard.

4. Integral Time-Delay Relay: Holds unit on for fixed interval when power is restored after an outage; permits high-intensity-discharge lamps to restrike.

5. Operation: Turns lamp on when circuit voltage drops to 80 percent of nominal voltage. Lamp disconnects from battery when voltage approaches deep-discharge level. Disconnect lamps from battery, battery recharges, and floats on charger when normal voltage is restored.

2.08 EXTERIOR LIGHTING POLES

A. GENERAL:

Provide lighting poles with pole cap and the necessary fixture mounting hardware. Provide light switch and power outlet as shown on the drawings.

B. FIBERGLASS POLE:

Fiberglass pole finish shall be impregnated in the resin. Submit available colors for selection. Color shall be factory standard brown.

Manufacturer: Cem-Tec, W. J. Whatley, or equal.

C. CONCRETE POLE:

Concrete pole finish shall be natural mold concrete grey.

Manufacturer: Centrecon; Union Metal – Marbelite; or equal.

D. STEEL POLE:

[Tapered, Non-Tapered,] [Round, Square,] [Galvanized, Painted] [Color]

2.09 SITE JUNCTION BOXES

Junction boxes for the distribution of outdoor lighting circuits shall be precast concrete and set flush with the ground. Nominal size shall be approximately 10.5 x 17.25 x 12 inches deep. Lid shall be cast iron with cast inscription: "LIGHTING".

Boxes manufacture: Brooks Products, Christy Concrete Products, Forni Corporation, Utility Vault Company or equal. Example: Brooks catalog No. 3-1/2PB.

2.10 FIXTURE FINISHES

Manufacturer standard unless scheduled or shown.

1. Paint Finish: Applied over corrosion-resistant treatment or primer, free of defects.

2. Metallic Finish: Corrosion resistant.

2.11 PHOTOELECTRIC RELAYS

A. PHOTO-CELLS:

1. Provide UL 773 or UL 773A listed units. Factory mount units to the luminaries.

2. Provide time-delay relays that fail in the on-position, factory set to turn light unit on at 1.5 to 3 foot candles (16 to 32 lux) and off at 4.5 to 10 foot candles (48 to 108 lux) with 15-second minimum time delay. Provide directional lens in front of photocell to prevent fixed light sources to cause turnoff.

3. Provide a cadmium sulfide cell housed in a plug receptacle assembly, three-prong, polarized, locking type. Provide assembly for outdoor mounting and rated for 1800 VA at 120V maximum capacity.

   a. Relay with locking-type receptacle shall comply with NEMA C136.10.

   b. Adjustable window slide for adjusting on-off set points.

2.12 PRODUCT DATA

The following information shall be provided:

1. Operation and maintenance items as specified.

2. Polar plots on 8-1/2 x 11 inch paper providing candlepower vs. angle and foot-lamberts (brightness) vs. angle for longitudinal and transverse axis.

3. Table of utilization factors for calculation of illumination levels by the zonal cavity method.

4. Catalog information describing fixture make, materials, and dimensions.

5. Manufacturers' warranties as specified in paragraph 16500-1.03.

PART 3--EXECUTION

3.01 GENERAL

The location and type of luminaries, associated poles, fixtures, and receptacles are as shown on the drawings.

Labels and marks, except the UL label, shall be removed from exposed parts of the fixtures. Fixtures shall be cleaned when the project is ready for acceptance. Photoelectric cells shall be oriented toward the north.

Raceways, wire, or cable shall be provided in accordance with Division 16. Raceways and wire shall be provided from the fixtures, switches and receptacles to the lighting panel in accordance with the NEC. Underground and outdoor wire splices shall be in accordance with Section 16120.

Fixtures labeled to require conductors with a temperature rating exceeding 75 degrees C shall be spliced to circuit conductors in a separately mounted junction box. Fixture wire shall meet UL and NEC requirements. Fixture shall be connected to junction box using flexible conduit with a temperature rating equal to that of the fixture.

Fixtures shall be aligned and directed to illuminate an area as specified. Fixtures shall be directly and rigidly mounted on their supporting structures. The conduit system shall not be used to support fixtures.

Fixture supports that are welded to steel members shall be treated with rust-resistant primer and finish paint where brackets or supports for lighting fixtures.

Provide manufacturer recommended mounting hardware and brackets.

3.02 WIRE CONNECTIONS

Tighten electrical connectors and terminals according to manufacturer's published torque-tightening values or use torque values specified in UL 486A and UL 486B.

3.03 FIELD QUALITY CONTROL

Inspect each installed fixture for damage then replace damaged fixtures and components. Verify normal operation of each fixture after installation.

Test for Emergency Lighting: Interrupt power supply to demonstrate proper operation. Verify normal transfer to battery power source and retransfer to normal.

Prepare a written report of tests, inspections, observations, and verifications indicating and interpreting results. Retest to demonstrate compliance with specification requirements where adjustments are made. Replace fixtures with damage or corrosion during warranty period.

3.04 LIGHTING FIXTURE SPECIFICATION

Family group:	Exit Sign
Description:	LED, self-diagnostic, dual-voltage emergency sign . Green letters and directional arrows.
Construction:	Housing: Molded black ABS. Stencil faceplate: Opaque 1/8-inch thick high-impact ABS, with stencil-cut letters 6 inches high and 3/4-inch stroke.
Lighting:	Signs shall meet UL visibility requirements. Effective life shall be listed as 10 years minimum. Initial brightness shall average 330 microlamberts (Scotopic). Sign shall be visible at 225 feet, legible at 140 feet. Diffusion panel: 1/8-inch thick acrylic, non-reflective matte surface.
Lamps:	LED.
Directional arrows:	Universal directional arrows--left, right, or both, adjusted as shown.
Electrical:	120/277 Dual voltage
Mounting:	Surface ceiling or wall mounting--see symbols. Provide hardware and canopies as required for back, ceiling, or end wall mounting.
Special:	Mounting height: +80"-+96"AFF. Provide pendant mounts where necessary
Acceptable products:	Lithonia Quantum type, Dual-Lite SLX-60 series or equivalent.

17. Provide PVC threaded adapter with female threads where PVC conduit is joined to steel conduit. Procedure:

    a. Before assembly: Double coat steel conduit with Red-Robroy, Green-Permacote, Blue-Ocal or equal product.

    b. After assembly: Seal with 65-mil thick, 2-inch wide mastic sealing tape to ½-inch beyond threads. Procucts: 3M Scotch 2228; Plymouth 02625; or equal.

    c. Cover with 20-mil corrosion protection tape applied in ½-lap layers to 2-inch beyond threads. Products: 3M Scotchwrap 51; Plymouth Plywrap 12; or equal.

18. Where reinforced concrete duct banks enter the side of a building, manhole, or handhole and the reinforcement cannot be brought into a window and be terminated, then drill the structure and embed the reinforcement in epoxy to minimum of 3-inches depth.

19. Provide PVC conduit with bell ends where duct banks terminated at walls, manholes, or handholes. Install bell ends flush with finished concrete.

20. Provide rigid steel for 90 degree bends up to all equipment, where conduit rise below grade into a floor mounted electrical panel, electrical cabinet, MCC, switchboard, or switchgear.

21. Separate power conduits from signal conduit within the same ductbank by 12" or greater separation, as shown. Refer to the drawings or schedules for signal to be installed in metal conduits instead of PVC ducts.

22. Separate high voltage ductbanks from low voltage ductbanks, as shown.

23. Provide wireways for transition from underslab conduits rising into wall-mounted panels where the number of conduits exceed the NEC allowable panel space in the bottom of the panel. Provide conduit sleeves or fitting for panel transition. Continous thread or all-thread is prohibited.

D. CONDUIT SEAL-OFF FITTINGS:

Conduits passing:

1. Between Class I, Division 1 area and Class I, Division 2 area; provided with sealing fittings located at the boundary in accordance with NEC Article-500.

2. From hazardous or corrosive area into a non-hazardous or non-corrosive area.

Install the seal-off material in the couduit seal-off fittings after inspection.

3.03 MANHOLES AND HANDHOLES

Unless otherwise specified, manhole and handhole installation shall be as follows:

1. Manholes, handholes, and pull boxes shall be set on a minimum of 6 inches of crushed rock on top of undisturbed or compacted earth.

2. Manholes and handholes shall be set plumb so that water shall drain to the sump.

3. Manhole covers shall be 36-inches in diameter and set at 2 inches above finish grade with surrounding pavement sloping away from the manhole cover.

4. Metallic hardware inside manholes and handholes shall be bonded to the ground plate or ground bus using bolted connections, bonding jumpers and grounding bushings.

3.04 RACEWAY NUMBERING

Each new and reused conduit shall be provided with a number tag at each end and in each manhole, handhole, or pull box. Cable trays shall be identified by stencils at intervals not exceeding 50 feet, at intersections, and at each end to identify power cable tray voltage, control cable tray, or instrument cable tray.

3.05 RACEWAYS

A. UNSCHEDULED RACEWAY:

Unscheduled lighting and receptacle raceways shall be sized by the Contractor in accordance with the NEC. Minimum size shall be 3/4 inch for exposed and 1 inch for embedded raceway.

The number and size of communication, paging, fire alarm, and security raceways shall be as required for the particular equipment provided subject to the minimum sizes specified herein.

B. SCHEDULED RACEWAY:

The size and type of raceway shall be as specified on the drawings.

3.07 RACEWAY SPECIFICATIONS

The following raceway types are included in this section:

3.07 RACEWAY SPECIFICATION SHEETS

Raceway Identification:	FLEX
Description:	Flexible Steel Conduit
Application:	Final connection to equipment subject to vibration or adjustment.
Compliance:	UL 1
Construction:	Spirally wound galvanized steel strip with successive convolutions securely interlocked.
Minimum size:	1/2 inch
Fittings:	Compression type
Other:	FLEX shall be provided with an internal ground wire.

3.07 RACEWAY SPECIFICATION

Raceway Identification:	GRS
Description:	Galvanized Rigid Steel Conduit (GRS)
Compliance:	ANSI and UL
Finish:	Hot-dip galvanized after fabrication, inside and outside. Smooth finished surfaces.
Manufacturers:	Allied Tube and Conduit Corp., Wheatland Tube Co., or equal.
Minimum size:	Unless otherwise specified, 3/4 inch for exposed, 1 inch for embedded, encased, or otherwise inaccessible.
Fittings:	
Locknuts, Rings, Hubs:	Hot-dip galvanized insulated throat with bonding locknut or ring,. The hubs shall utilize a neoprene "O" ring and provide a watertight connection. O-Z Gedney, CHM-XXT, or equal
Unions:	Electro-galvanized ferrous alloy type Appleton UNF or UNY, Crouse-Hinds UNF or UNY, or equal. Threadless fittings are not acceptable.
Conduit Bodies:	Oversized conduit bodies: Ferrous alloy type with screw taps for fastening covers to match the conduit system. Gaskets shall be made of neoprene.
Boxes:	
Indoor:	Type FD cast ferrous for all device boxes and for junction boxes less than 6 inches square.
Outdoor:	Type FD cast ferrous for all device boxes and for junction boxes less than 6 inches square.

3.07 RACEWAY SPECIFICATION

Raceway Identification:	GRS (continued)
Corrosive:	NEMA 4X stainless steel or nonmetallic, as specified.
Hazardous:	NEMA Class 7 cast ferrous.
Elbows:	
(3/4" thru 1-1/2")	Factory fabricated or field bent.
(2" thru 6")	Factory fabricated only.
Conduit Bodies (Oversized):	
(3/4" thru 4")	Malleable iron, hot-dip galvanized, unless otherwise noted. Neoprene gaskets for all access plates. Tapered threads for conduit entrances.
(5" and 6")	Electro-galvanized iron or cast iron box.
Expansion Fittings:	Expansion fittings in embedded runs shall be watertight with an internal bonding jumper. The expansion material shall be neoprene allowing for 3/4-inch movement in any direction.
Manufacturers:	Appleton, Crouse-Hinds, Hubbell, O. Z. Gedney, or equal.
Installation:	Rigid steel conduit shall be made up tight and with conductive thread compound. Joints shall be made with standard couplings or threaded unions. Steel conduit shall be supported away from the structures using hot-dip galvanized malleable iron straps with nesting backs or framing channel. Conduit entering boxes shall be terminated with a threaded hub with a grounding bushing. Exposed male threads on rigid steel conduit shall be coated with zinc-rich paint.

3.07 RACEWAY SPECIFICATION

Raceway Identification:	LFS
Description:	Liquidtight Flexible Steel Conduit
Application:	Final connection to equipment subject to vibration or adjustment.
Compliance:	UL 360
Construction:	Spirally wound galvanized steel strip with successive convolutions securely interlocked and jacketed with liquidtight plastic cover.
Minimum size:	3/4 inch
Fittings:	Cadmium-plated malleable iron body and gland nut with cast-in lug, brass grounding ferrule threaded to engage conduit spiral. O-ring seals around the conduit and box connection and insulated throat. Provide forty-five and ninety degree fittings where applicable. Provide PVC coated flexible conduit and fittings where the conduit system is PVC coated.
Installation:	Length of flexible liquidtight conduit shall not exceed 15 times the trade diameter of the conduit and not exceed 36 inches in length. Use conductive thread compound.

3.07 RACEWAY SPECIFICATION

Raceway Identification:	PGRS
Description:	Rigid Steel Conduit, Corrosion-Resistant, Polyvinyl Chloride (PVC) Coated. Provide factory made and coated elbows.
Compliance:	ANSI, ETL and UL. The PVC coated rigid galvanized steel conduit shall be stamped with the ETL Verification Mark "ETL Verified to PVC-001".
Finish:	PGRS shall be hot-dip galvanized rigid steel conduit as specified in 16110-3.03 GRS, with a PVC Coating. The PVC coating shall be gray, minimum 40 mils thick, bonded to the outside and continuous over the entire length of the conduit except at the threads, and be free of blisters, bubbles, or pinholes. Thread protectors shall be used on the exposed threads of the PVC coated conduit. A 2-mil coat of urethane enamel coating shall be bonded to the inside. Coating shall be free of pinholes. Bond strength shall exceed the tensile strength of the PVC coat.
Minimum size:	3/4 inch
Fittings:	Similarly coated to the same thickness as the conduit and provided with Type 316 stainless steel hardware. Conduit and fittings shall be manufactured by the same company Conduit and fittings shall be coated by the same company. Male threads on elbows and nipples, and female threads on fittings or conduit couplings shall be protected by application of urethane coating.
Covers:	PVC coated covers shall have V-groove seal and stainless steel hardware.
Hubs:	Hubs for connection of conduit to junction, device, or terminal boxes shall be threaded cast ferrous alloy. Hubs shall have the same PVC coating as the conduit and insulating grounding bushings. Hubs shall utilize a neoprene "O" ring and shall provide a watertight connection.

3.07 RACEWAY SPECIFICATION

Raceway Identification:	PGRS (continued)
Boxes:	
Nonhazardous:	NEMA Class 4X stainless steel or nonmetallic.
Hazardous:	NEMA Class 7 cast ferrous.
Manufacturers:	PVC coated conduit that bears the ETL Verified PVC-001 label by Robroy Industries, Plasti-Bond, Perma-Cote, KorKap or equal.
Installation:	Plastic coated conduit shall be made up tight, threaded, and installed using tools approved by the PVC-coated conduit manufacturer. Exposed conduit threads shall be covered by a plastic overlap coated and sealed per manufacturer's recommendations. Pipe wrenches and channel locks shall not be used for tightening plastic coated conduits. Damaged areas shall be patched, using manufacturer's recommended material. The area to be patched shall be built up to the full thickness of the coating. Painted fittings are not acceptable. PVC coated conduit shall be supported away from the structure using PVC coated conduit wall hangers or PVC coated conduit mounting hardware. Damaged work shall be replaced
Training:	Installers shall be trained and certified in the proper installation techniques provided by the PVC-coated conduit system manufacture. Proof of certification shall be provided under paragraph 16110-1.03.

3.07 RACEWAY SPECIFICATION

Raceway Identification:	PVC Schedule 40
Description:	Rigid Nonmetallic Conduit.
Application:	Heavy wall thickness for direct bury, concrete encasement or surface mounting where not subject to physical damage.
Compliance:	NEMA TC2, UL 651
Construction:	Schedule 40, high-impact, polyvinylchloride (PVC)
Minimum size:	3/4 inch exposed; 1 inch embedded or encased
Fittings:	PVC solvent weld type
Boxes:	
Indoor:	NEMA Class 4, nonmetallic
Outdoor and corrosive:	NEMA Class 4X, nonmetallic
Installation:	PVC conduit entering fiberglass boxes or cabinets shall be secured by threaded bushings on the interior of the box and shall be terminated with a threaded male terminal adapter having a neoprene O ring. Joints shall be made with standard PVC couplings. PVC conduit shall have bell ends where terminated at walls and boxes.

3.07 RACEWAY SPECIFICATION

Raceway Identification:	WW
Description:	Wireway and Auxiliary Gutter: Match the conduit or raceway system specified and shown on the drawings. Minimum: Flanged, oiltight type with hinged covers
Application:	As shown on the drawings.
Compliance:	JIC EMP-1
Sizes as shown:	4 inch by 4 inch, 6 inch by 6 inch, 8 inch by 8 inch
Finish:	Hot-dip galvanized after fabrication, inside and outside. Smooth finished surfaces.
Indoor non-corrosive area:	NEMA-1, NEMA-12, NEMA-4 or as shown on the drawings.
Outdoor and corrosive area:	NEMA-3R, NEMA-4X or as shown on the drawings.

3.07 RACEWAY SPECIFICATION

Raceway Identification:	XPFS
Description:	Explosion-proof Flexible Steel Conduit
Application:	XPFS Conduit soupling shall be used for final connections to motors and other equipment subject to vibration or adjustment in Class I Division 1 hazardous areas and shall be watertight.
Size:	1/2 inch – 4-inch
Length:	4-inch – 36-inch

END OF SECTION

SECTION 16120

600 VOLT CONDUCTORS, WIRE, AND CABLE

When modifying this specification for use on a project, delete all Notes to Specifier (NTS) after the Specifier reads the NTS. Right click on the "NTS" Style in the listing in the STYLES AND FORMATTING area, click on SELECT ALL _ INSTANCE(S), and depress the DELETE button on the keyboard. Then scroll through the entire document, checking to ensure that all NTS have indeed been deleted.

Edit >Find> bracket "[" for blanks to be filled in, alternative choices, and provisions that may or may not be included depending on the application. Delete unused alternative choices and provisions as appropriate, fill in blanks, and modify font of the text that is included.

Select Cable data sheets herein for the project and delete other sheets not required.

PART 1--GENERAL

1.01 DESCRIPTION

This section specifies stranded copper cables, conductors, and wire rated 600 volts insulation used for power; lighting, analog, digital, or pulse signals and control circuits.

[This section specifies copper cables and coax cable rated 300 volt insulation used for data communication and specifies fiber optic data cable used for data communication.]

1.02 REFERENCES

This section contains references to the following documents. They are a part of this section. In case of conflict between the requirements of this section and those of the listed documents, the requirements of this section shall prevail.

Reference	Title
ASTM B3	Soft or Annealed Copper Wire
ASTM B8	Concentric-Lay-Stranded Copper Conductors, Hard, Medium-Hard, or Soft
ASTM B33	Tinned Soft or Annealed Copper Wire for Electrical Purposes
ICEA S-68-516	Ethylene-Propylene-Rubber-Insulated Wire
NEMA WC7	Cross-Linked-Thermosetting Insulated Wire and Cable for the Transmission and Distribution of Electric Energy

Reference	Title
NFPA 70	National Electric Code (NEC)
UL 44	Rubber-Insulated Wires and Cables
UL 83	Thermoplastic-Insulated Wires and Cables

1.03 SUBMITTALS

The following information shall be provided in accordance with Section 01300.

1. Submittals specified in Section 16000.
   Complete catalog cuts for all conductors, wire, and cable.

PART 2--PRODUCTS

2.01 GENERAL

A. UNSCHEDULED CONDUCTORS AND CABLES:

Where not specified on the Drawings, conductors and cables shall be sized in accordance with the National Electrical Code for the particular equipment served with the minimum size as specified herein.

Unscheduled conductor with insulation shall be provided in accordance with the following:

1. "MEPR/CPE" multi-conductor power and control cable
2. "XHHW" for single power and control conductors
3. "XHHW OR THWN" for indoor lighting and receptacles

B. CABLE SPECIFICATIONS:

General requirements for conductors and cables specified in this Section are listed in paragraph 16120-3.06.

2.02 COLOR CODING

A. CONTROL CONDUCTORS:

Single-conductor control conductors shall have the following colors for the indicated voltage:

Control Conductor	120V
Power (AC)	A-Phase Black, B-Phase Blue
Control (AC)	Red
Neutral	White
Ground	Green
Foreign Voltage	Orange
Power (24VDC)	Blue / Blue-White
Control (24VDC)	

B. POWER CONDUCTORS:

Power conductors shall have the following colors for the indicated voltage:

Power Conductor	480V	208/120V
Phase A	Brown	Black
Phase B	Orange	Red
Phase C	Yellow	Blue
Ground	Green	Green
Neutral	Gray	White

Cables may be black with colored 3/4-inch vinyl plastic tape applied at each cable termination. Tape shall be wrapped with 25 percent overlay to provide 3 inches minimum coverage.

C. SIGNAL CONDUCTORS:

Signal cable conductors shall be color coded black and white for pairs or black, white, and red for triads. Each conductor and each group of conductors shall be numbered.

2.03 POWER AND CONTROL CONDUCTORS AND CABLE, 600 VOLT

A. SINGLE CONDUCTOR:

Provide stranded conductors for all cable or wires. Provide minimum conductor size of 12 AWG for power and lighting circuits and minimum conductor size of 14 AWG for control circuits.

B. MULTICONDUCTOR CABLE:

Provide multiconductor power cable and multiconductor control cable where identified on the drawings. Provide stranded conductors for all cable or wires.

2.04 SIGNAL CABLES

A. GENERAL:

Factory cable between manufactured instrument system components shall be provided in compliance with the instrument manufacturer's recommendations.

Signal cable shall be provided for instrument signal transmission. Single instrument cable and multiple-circuit instrument cable shall be provided in accordance with the following examples:

Cable designation: 1PR#16S shielded twisted pair
Cable designation: 1TR#16S shielded twisted triad

Cable designation example: 4PR#16S with individual shields for each of the four pair and an overall shield and jacket for the multiconductor instrument cable.

B. COMMUNICATION, PAGING, AND SECURITY SYSTEM CABLES:

Voice communication, paging, and security system cables shall be specified in their respective specification sections.

2.05 PORTABLE CORD

Portable cord shall be provided an equipment grounding conductor.

2.06 SPLICING AND TERMINATING MATERIALS

Connectors shall be tool applied compression type of correct size and UL listed for the specific application. Connectors shall be tin-plated high conductivity copper. Wire nuts for a splice is prohibited.

Signal and control conductors shall be connected to terminal blocks and field devices and instruments shall be terminated with conductor terminals as specified in paragraph 16000-2.02.

Connectors for wire sizes No. 8 AWG and larger shall be compression tool installed one-hole lugs up to size No. 3/0 AWG, and two-hole or four-hole lugs for size No. 4/0 and larger. Mechanical clamp, dimple, screw-type connectors are not acceptable. In-line splices and taps shall be used only by written consent of the Construction Manager, Arizona Water Company.

Power conductor splices shall be compression type, made with a compression tool die approved for the purpose, as made by Thomas and Betts Corp., or equal. Splices shall be covered with electrical products designed for the application, insulated, and covered with a heat-shrinkable sleeve or boot, as specified elsewhere.

Motor connection kits shall consist of heat-shrinkable, polymeric insulating material over the connection area and high dielectric strength mastic to seal the ends against ingress of moisture and contamination. Motor connections may use the Tyco Electronics removable boot product line.

Motor connection kits shall accommodate a range of cable sizes for both in-line and stub-type configurations. Connection kits shall be independent of cable manufacturer's tolerances.

2.07 CORD GRIPS

Cord grips shall be provided where indicated on the Drawings to attach flexible cord to equipment enclosures. Cord grips shall consist of a threaded aluminum body and compression nut with a neoprene bushing and stainless steel wire mesh for strain relief. Cord grip shall provide a watertight seal at enclosure interface and sized to accommodate the flexible cord.

PART 3--EXECUTION

3.01 GENERAL

Conductors shall be identified at each connection terminal and at splice points. The identification marking system shall comply with Section 16000.

Pulling wire and cable into conduit or trays shall be completed without damaging or putting undue stress on the insulation or jacket. Manufacture recommended and UL Listed pulling compounds are acceptable lubricants for pulling wire and cable. Grease is not acceptable.

Raceway construction shall be complete, cleaned, and protected from the weather before cable is installed. Where wire or cable exits a raceway, a wire or cable support shall be provided.

Provide tin-plated bus bar. Scratch-brush the contact areas and tin plate the connection where flat bus bar connections are made with un-plated bar. Bolts shall be torqued to the bus manufacturer's recommendations.

3.02 600 VOLT CONDUCTOR AND CABLE

Conductors in panels and electrical equipment shall be bundled and laced at intervals not greater than 6 inches, spread into trees and connected to their respective terminals. Lacing shall be made up with plastic cable ties. Cable ties shall be tensioned and cut off by using a tool specifically designed for the purpose such as a Panduit GS2B. Other methods of cutting cable ties are unacceptable.

Conductors crossing hinges shall be bundled into groups not exceeding 10 to 15 conductors and protected using nylon spiral flexible covers to protect conductors. Provide oversized plastic panel wiring duct within panels and panelboards.

Slack shall be provided in junction and pull boxes, handholes and manholes. Slack shall be sufficient to allow cables or conductors to be routed along the walls. Amount of slack shall be equal to largest dimension of the enclosure. Provide dedicated electrical wireways and insulated cable holders mounted on unistrut in manholes and handholes.

Raceway fill limitations shall be as defined by NEC and the following:

1. Lighting and receptacle circuits may be in the same conduit in accordance with de-rating requirements of the NEC. Lighting and receptacle circuits shall not be in conduits with power or control conductors. Signal conductors shall be in separate conduits from power conductors. Motor feeder circuits shall be in separate conduits including small fan circuit unless combination fan-light fixture.

2. Power conductors derived from uninterruptible power supply systems shall not be installed in raceways with conductors of other systems. Install in separate raceways.

3. Slices and terminations are subject to inspection prior to and after insulating.

4. Motor terminations at 460-volt motors shall be made by bolt-connecting the lugged connectors.

5. In-line splices and tees, where approved, shall be made with tubular compression connectors and insulated as specified for motor terminations. Splices and tees in underground handholes or pull boxes shall be insulated using Scotch-cast epoxy resin or Raychem splicing kits.

6. Terminations at solenoid valves, 120 volt motors, and other devices furnished with pigtail leads shall be made using self-insulating tubular compression connectors within the termination box.

7. Terminations at valve and gate motor actuators shall be made directly into the actuator where possible. Power termination shall be made in the actuator power disconnect. Control and signal cable may be routed to a termination box near the actuator on 20-ampere rated terminal strips with label identification for the control and signal conductors. Single wire control conductors and analog cable (SIC or MIC) then installed in flexible conduit to the actuator control and signal termination compartments.

3.03 SIGNAL CABLE

Provide terminal blocks at instrument cable junctions within dedicated terminal boxes provided by the installer. Signal circuits shall be run without splices between instruments, terminal boxes, or panels.

Circuits shall not be made using conductors from different pairs or triads. Triads shall be used wherever 3-wire circuits are required.

Shields are not acceptable as a signal path, except for circuits operating at radio frequencies utilizing coaxial cables. Common ground return conductors for two or more circuits are not acceptable.

Shields shall be bonded to the signal ground bus at the control panel only and isolated from ground at the field instrument or analyzer and at other locations. Shields or drain wires for spare circuits shall not be grounded at either end of the cable run. Terminals shall be provided for running signal leads and shield drain wires through junction boxes.

Spare circuits and the shield drain wire shall be terminated on terminal blocks at both ends of the cable run and be electrically continuous through terminal boxes.

Where instrument cable splicing is required, provide an instrument stand with terminal box rated for the area and environment and mounted approximately 3 feet above grade for instrument cable splices with the circuits and individual conductors provided with label as specified in Section 16000.

Cable for paging, security, voice communication, and telephone systems shall be installed and terminated in compliance with the manufacturers and the Utilities recommendations.

3.04 PORTABLE CORD

Portable power cords feeding permanent equipment, such as pendant cords feeding motors for pumps, cranes, hoists, and portable items shall have a wire mesh cord grip of flexible stainless steel wire to relieve the tension from the cable termination. Connection of portable cords to permanent wiring shall be accomplished with dedicated boxes and terminals blocks.

3.05 TESTING

The Contractor shall test conductors, wire, and cable in accordance with Section 16030.

3.06 CABLE SPECIFICATIONS

The following are included in this section:

3.06 CABLE SPECIFICATION

Cable System Identification:	DC1 (Data Cable-1)
Description:	Premise Cable: IEC Category 5 UTP; NEMA WC-63.1 Category 5e; Fast Ethernet: 100 Base TX; 4 pair, #24 AWG Cable
Voltage:	300 V RMS
Conductor Material:	Solid Bare copper
Insulation Material:	FRPO - Flame Retardant Polyolefin / FEP -Fluorinated Ethylene Propylene; Color Coded conductor insulation
Jacket:	LS PVC - Low Smoke Polyvinyl Chloride with ripcord Trade Name Example: Flamarrest Sequential Footage Marking: every two feet Jacket Color: **[Red] [Yellow] [Black] [Blue]**
Manufacturer(s):	Cooper Industries – Belden 1585A; or equal.
Execution:	
Applications:	Gigabit Ethernet Data Communications LAN, CCTV Fixed. Component or Composite Video, Digital Video, RS-422,
Installation:	Install in accordance with associated equipment manufacturer's instruction.
Testing:	Test in accordance with paragraph 16120-3.05.

3.06 CABLE SPECIFICATION

Cable System Identification:	DC2 (Data Cable-2)
Description:	Shielded Data Communication Cable; Remote I/O Cable: RS-485 #22 or #24 AWG Copper.
Voltage:	30 V RMS
Conductor Material:	Tinned copper
Insulation:	Polyethylene; Trade Name Example: Datalene
Jacket:	PVC or CPE Color: Chrome
Manufacturer(s):	Cooper Industries-Belden YM-29560 or equal
Execution:	
Application:	DCU or PLC to Remote I/O - Data Communications Cable.
Installation:	Install in accordance with associated equipment manufacturers instruction.
Testing:	Test in accordance with paragraph 16120-3.05.

3.06 CABLE SPECIFICATION

Cable System Identification:	DC3 (Data Cable-3)
Description:	Fiber Optic Data Cable; 6-Conductor: Color Examples: 1-Blue, 2-Orange, 3-Green, 4-Brown, 5-Slate, 6-White; Indoor/Outdoor; Heavy Duty-MFPT; Cable Tray Rated
Material:	62.5/125/250 micron
Jacket:	Chlorinated Polyethylene (CPE) Color: **[Orange] [Red]**
Type:	NEC (UL): OFNR with industrial cable tray rating IEEE flame test rated: 802.3Z
Manufacturer(s):	Cooper Industries-Belden I100666; or Engineer accepted equal
Execution:	
Application:	Data Communications. (Not Plenum Rated)
Installation:	Install in accordance with paragraph 16120-3.03 and associated equipment manufacturers instruction.
Testing:	Test in accordance with paragraph 16120-3.05.

3.06 CABLE SPECIFICATION

Cable System Identification:	Multiple Twisted Shielded Pair Cable
Description:	16 AWG, with overall shield instrumentation cable; Number of pairs as shown; UL listed, Cable Tray rated.
Voltage:	600 volts
Conductor Material:	Bare annealed copper; Class-B stranded per ASTM B-8
Insulation:	15 mil, Polyvinyl Chloride (PVC) with 4 mil nylon, 90 degree C temperature rated Color Code per ICEA Method-1: Pairs- Black and White with one conductor in each pair printed alpha-numerically for identification
Lay:	Twisted on a 2-inch lay
Shield:	100 percent, 1.35 mil aluminum/polyester or mylar tape with 7-strand tinned copper drain wire
Overall Shield:	2.35 mil aluminum-Mylar tape with 7-strand tinned copper drain wire
Jacket:	Flame-retardant, moisture and sunlight resistant 45 mil Polyvinyl Chloride (PVC)
Flame Resistance:	UL 1277 and UL 1581 vertical tray flame test
Manufacturer(s):	Okonite, Okoseal-N type SP-OS (Shielded Pairs with Overall Shield); or Cooper Industries-Belden equal; or General Cable equal
Execution:	
Installation:	Install in accordance with paragraph 16120-3.03.
Testing:	Test in accordance with paragraph 16120-3.05.

3.06 CABLE SPECIFICATION

Cable System Identification:	Single Twisted, Shielded Cable
Description:	Pair or Triad, 16 AWG, instrumentation and signal cable; UL listed; Cable Tray rated
Voltage:	600 volts
Conductor Material:	Bare annealed copper; stranded per ASTM B8
Insulation:	15 mil, Polyvinyl Chloride (PVC) with 4 mil nylon, 90 degree C temperature rated Color Code per ICEA Method-1: Pairs- Black and White with one conductor in each pair printed alpha-numerically for identification
Lay:	Twisted on a 2-inch lay
Shield:	100 percent, 1.35 mil aluminum-Mylar tape with a 7-strand tinned copper drain wire
Jacket:	45 mil Polyvinyl Chloride (PVC)
Flame Resistance:	UL 1277
Manufacturer(s):	Okonite, Okoseal-N Type P-OS (Pair(s) Overall Shield) and Type TOS (Triad(s) Overall Shield); or Cooper Industries-Belden equal; or General Cable equal

Execution:

Use:	Analog signal cable and RTD device Triad extension cable.
Installation:	Install in accordance with paragraph 16120-3.03.
Testing:	Test in accordance with paragraph 16120-3.05.

3.06 CABLE SPECIFICATION

Cable System Identification:	THWN
Description:	Single conductor lighting and receptacle type; Indoor branch circuit conductor.
Voltage:	600 volts
Conductor Material:	Bare annealed copper; stranded per ASTM B8
Insulation:	THWN/THHN, 90 degree C dry, 75 degree C wet, Polyvinyl Chloride (PVC) per UL 83.
Jacket:	Nylon
Flame Resistance:	UL 83
Manufacturer(s):	Okonite, Okoseal-N, series 116-67-XXXX; or equal.
Uses Permitted:	Lighting, receptacle and appliance circuits
Execution:	
Installation:	Install in accordance with paragraph 16120-3.02.
Testing:	Test in accordance with paragraph 16000-3.02 and Section 16030.

3.06 CABLE SPECIFICATION

Cable System Identification:	XHHW
Description:	Industrial grade single conductor Sizes: 14 AWG through 750 kcmil as shown
Voltage:	600 volts
Conductor Material:	Bare annealed copper; stranded per ASTM B8
Insulation:	NEC Type XHHW-2; 90 degree C dry and C wet; Cross-Linked Polyethylene (XLP) per ICEA S-66-524 and UL-44; Color in sizes 14, 12 and 10 AWG: Black, Green, Yellow, White, Orange, Brown, Red, Blue
Jacket:	None
Flame Resistance:	UL 83
Manufacturer(s):	Okonite, X-Olene; Cablec, Durasheath XLP; or equal.
Uses Permitted:	Power, control, lighting and outlet circuits.
Execution:	
Installation:	Install in accordance with paragraph 16120-3.02.
Testing:	Test in accordance with paragraph 16000-3.02 and Section 16030.

3.06 CABLE SPECIFICATION

Cable System Identification:	MXLP / XLP
Description:	Multiconductor Power Cable and Multiconductor Control Cable: 14 AWG stranded conductors; Cable tray rated.
Power Cable:	Insulated green grounding conductor sized per the NEC.
Ground Conductor Size:	Multiple sets of multiconductor power cable: Oversize the grounding conductor per NEC 250.
Control Cable Type:	ICEA Method 1, E-2, without white neutral conductor or green ground conductor
Control Cable Identification:	Conductors color coded per ICEA and conductors numbered
Voltage:	600 volts
Conductor Material:	Bare annealed copper; stranded per ASTM B8, coated per ASTM B33
Insulation:	RHW/RHH, 90 degree C dry, 75 degree C wet, ethylene propylene rubber (EPR) per ICEA 2-68-516 and UL 44.
Jacket:	Cross-linked Polyethylene (XLP)
Flame Resistance:	IEEE 383
Manufacturer(s):	Okonite, Okonite-Okolon-Okoseal series 202-11-3XXX; Cablec, Durasheath EP; or equal.

Execution:

Installation:	Install in accordance with paragraph 16120-3.02.
Testing:	Test in accordance with paragraph 16000-3.02 and Section 16030.

3.06 CABLE SPECIFICATION

Cable System Identification:	MXLPE / S / PVC
Description:	1000 Volt Rated - Flexible Motor Supply Shielded Cable
Power Cable:	Multi-conductor shielded motor feeder cable with PVC jacket: 3/C cable with conductors sizes from #16-AWG to #2-AWG with grounding conductor.
Ground Conductor Size:	Sized per NEC 250
Application:	Feeder cable between VFD motor controller and motor.
Conductor Material:	Flexible copper with high strand count
Insulation:	Thermoset Crosslinked Polyethylene (XLPE): 90 degree C dry, 75 degree C wet, per UL 44.
Jacket:	PVC over assembly; jacket thickness per UL 1277 Cable Tray rated UL 1277 Type TC
Shield:	Tinned copper braid and foil
Flame Resistance:	IEEE 383 Fire Test (70,000 BTU) IEEE 1202: Limited Smoke rated and labeled on cable jacket UL 1685: Vertical Tray Flame Exposure Test
Manufacturer(s):	Anixter B2095XX series Belden 295XX series LAPPUSA OLFLEX VFD Symmetrical: 1AWG - 500kcmil LAPPUSA OLFLEX Servo 2YSLCY-JB flexible cable

Execution:

Installation:	Install in accordance with paragraph 16120-3.02. Install in conduit or cable tray. Not to be used for open wiring installation. Ground shields at both ends. Shield terminating gland may be used at the motor to ensure grounding the shield.
Testing:	Test in accordance with paragraph 16120-3.05 and Section 16030.

3.06 CABLE SPECIFICATION

Cable System Identification:	CORD
Description:	Industrial Grade Flexible Portable Cord: Synthetic Rubber Insulation with Oil-Resistant Thermoset Jacket construction: Type SOOW for 600 Volt circuits; Type SJOOW for 300 Volt circuits
Voltage:	600 V RMS where shown or where unspecified: Type SOOW
Conductor Material:	Flexible rope stranded annealed copper per ASTM B189 and B33.
Insulation:	Insulation: Ethylene propylene (EPR) per ICEA S-68-516 and rated for continuous operation at 90 degrees C. Green used for ground only Color: 2/C Black and White; 3/C Black, White, and Green; 4/C Black, White, Red and Green; 5/C Black, White, Red, Green, and Orange
Jacket:	Heavy-duty Neoprene per ICEA S-68-516. Color: **[Black] [Yellow]**
Manufacturer(s):	Okonite: Okocord; American Insulated Wire Cord equal; or Engineer accepted equal.
Execution:	
Installation:	Install in accordance with paragraph 16120-3.02.
Testing:	Test in accordance with paragraph 16120-3.05.

3.06 CABLE SPECIFICATION

Cable System Identification:	COAX
Description:	Premise Cable: Indoor Riser and Plenum with FRPE Jacket Outdoor / Watertight: Ductbanks Systems with PE Jacket Low Loss Flexible Communication Coaxial Cable
Voltage:	300 V; Voltage Withstand: 3000 Volts DC;
Conductor Material:	Solid 18 AWG; Nominal Impedance: 50-ohm; Nominal Capacitance: 20 Pico-Farad per foot; Bend Radius: 2 inches
Insulation Material:	Foam Polyethylene (PE) or Tetrafluoroethylene (TFE) UL Flame Test: NFPA-262 NEC Type Specification: CMP
Jacket:	Polyethylene (PE), Fire Retardant Polyethylene (FRPE) or Fluorinated Ethylene Propylene (FEP)
Manufacturer(s):	Times Microwave System: LMR-500; Belden Number 83242: 50-ohm Coax -- RG Type 142 B/U; or Engineer accepted equal.
Execution:	
Applications:	Giga-Hertz Data Communications, CCTV Fixed. Component or Composite Video, Digital Video
Installation:	Install in accordance with associated equipment manufacturer's instruction. Provide male, female, TNC Male, UHF Male, straight, bulkhead, right-angle etc connectors, fittings, with crimp tools, dies, strip tools, deburr tools and cutting tools as required for the installation.
Testing:	Test in accordance with paragraph 16120-3.05.

3.06 CABLE SPECIFICATION

Cable System Identification:	Submersible Pump Cable
Description:	Extra Heavy Duty Flat Submersible Pump Cable
Voltage:	600 Vac
Conductor Material:	Soft annealed copper per ASTM B-33 and ASTMB-172 configured as flexible rope-lay-stranded.
Insulation Material:	EP: ethylene propylene rubber: Class 2.5A 90-degree C UL62
Jacket:	CPE: Chlorinated Polyethylene Rubber per ICEA S-75-381 and S-68-516 rated as moisture resistant and flame retardant, 90-degree C Dry and Wet.
Color Code:	Phase Conductors: black, yellow, red Ground Conductor: green with yellow stripe
Sizes:	AWG #4 through 500 kcmil
Manufacturer(s):	Paige Pumpwire or Engineer accepted equal.
Execution:	
Applications:	Deep water well submersible pump cable installed within well casings
Installation:	Install in accordance with associated equipment manufacturer's instruction.
Testing:	Test in accordance with paragraph 16120-3.05.

END OF SECTION

SECTION 16140

WIRING DEVICES

When modifying this specification for use on a project, delete all Notes to Specifier (NTS) after the Specifier reads the NTS. Right click on the "NTS" Style in the listing in the STYLES AND FORMATTING area, click on SELECT ALL _ INSTANCE(S), and depress the DELETE button on the keyboard. Then scroll through the entire document, checking to ensure that all NTS have indeed been deleted.

Edit >Find> bracket"[" for blanks to be filled in, alternative choices, and provisions that may or may not be included depending on the application. Delete unused alternative choices and provisions as appropriate, fill in blanks, and modify font of the text that is included.

PART 1--GENERAL

1.01 DESCRIPTION

This Section specifies wiring devices consisting of receptacles, plugs, switches and appurtenances.

1.02 REFERENCES

This Section contains references to the following documents. They are a part of this Section as specified and modified. In the event of conflict between the requirements of this Section and those of the listed documents, the requirements of this Section shall prevail.

Reference	Title
NEMA 250	Enclosures for Electrical Equipment (1000 volts maximum)
NEMA WD-1	General Requirements for Wiring Devices
NFPA 70	National Electrical Code (NEC)

PART 2--PRODUCTS

2.01 GENERAL

Wiring devices shall be UL approved for the current and voltage specified and shall comply with NEMA WD-1. Devices shall contain provisions for back wiring and side wiring with captive binding screws.

Provide devices colored to conform to manufacturer's or industry standard for special use such as orange for isolated ground receptacles, blue for surge suppression receptacles, and red for

emergency power receptacles. Normal use devices shall be brown and devices located in finished areas shall be ivory.

2.02 RECEPTACLES AND PLUGS

A. GENERAL:

Receptacles shall be grounding type.

B. 120V RECEPTACLES:

1. INDOOR, CLEAN AREAS: Unless shown otherwise on the Drawings or Schedules, receptacles shall be duplex 20 amp, NEMA 5-20R, and shall accept NEMA 5-15P and 5-20P plugs. Where the manufacturer of cord connected equipment requires and isolated ground, a receptacle with isolated ground shall be provided.

Isolated ground receptacle manufactures: **[Hubbell IG-5362, Arrow-Hart IG5362]**, or equal.

Manufactures: **[Hubbell 5362, 5362-AI]** or equal.

2. OUTDOOR, PROCESS OR CORROSIVE AREAS: Receptacle shall be duplex, 20 ampere, NEMA 5-20R, and shall accept NEMA 5-15P and 5-20P plugs. Receptacle and plug shall be corrosion resistant, marine duty with yellow polycarbonate weatherproof lift covers.

Manufacturers: **[Hubbell 53CM62/53CM21, 15W33W/O BOX]**, or equal.

C. 250V RECEPTACLES:

Receptacles shall be duplex 15 ampere, NEMA 6-15R, and shall accept NEMA 6-15P plug caps.

Manufacturers: **[Hubbell 5662, Arrow Hart 5662, or equal. Plug caps shall be Hubbell 5666-C, Arrow-Hart 6866]**, or equal.

D. PLUG CAPS:

Male plug caps for 120 volt and 250 volt receptacles shall be of the cord grip armored type with heavy phenolic housing, of the same manufacture as the receptacle. Plug caps shall be rated 15 amps. One plug cap shall be provided for every four receptacles furnished, with a minimum of two plug caps being provided. Plug caps shall be delivered to Arizona Water Company.

E. THREE PHASE RECEPTACLES AND PLUGS:

Receptacles shall be suitable for 480 volt, 3-phase, 4-wire service, with ampere ratings as specified. Receptacles and plugs shall be designed so that the grounding pole is permanently

connected to the housing. The grounding pole shall make contact before the line poles are engaged when the plug is connected to the receptacle housing.

The plug sleeve shall also make contact with the receptacle housing before the line and load poles make contact. Receptacles shall be provided complete with cast back box, angle adapter, gaskets, and a gasketed screw-type, weathertight cap with chain fastener. Each receptacle shall be provided with one plug.

Manufactures: **[Crouse-Hinds "Arktite," Appleton "Powertite,"]** or equal.

F. RECEPTACLES FOR HAZARDOUS AREAS:

Receptacles for use in hazardous areas shall be rated in accordance with NEC for the area in which they are to be located and shall be factory sealed. Receptacles shall be designed so the plug must be inserted and turned before load is energized. Receptacles shall be provided with mounting box, sealing chamber, and compatible plug. Voltage and current ratings shall be as 120 Vac, 20-ampere.

Manufactures: **[Appleton "U-Line," Crouse-Hinds "Ark-Gard 2,"]** or equal.

2.03 SWITCHES

A. GENERAL PURPOSE (INDOOR, CLEAN AREAS):

General purpose switches shall be quiet AC type, specification grade, back and side wired, and shall be provided in accordance with rated capacities as required or as indicated on Drawings or Schedules. Switches shall match receptacles in color.

Manufactures: General Electric, Hubbell, or accepted substitute, as follows:

	15A, 120-277V		20A, 120-277V	
	G.E. Co.	Hubbell	G.E. Co.	Hubbell
Single:	PS 15AC1	HBL1201	PS 20AC1	HBL1221
Three-way:	PS 15AC3	HBL1203	PS 20AC3	HBL1223
Four-way:	PS 15AC4	HBL1204	PS 20AC4	HBL1224
SPST momentary:	# 7842	--	--	--
Three position center off momentary:	# 1250	HBL1556	--	HBL1557

B. SWITCHES FOR HAZARDOUS AREAS:

Switches for control of lighting and small single-phase power loads in hazardous areas shall consist of a factory assembled and sealed combination general purpose type switch in an explosion-proof housing.

Switches shall be rated in accordance with NEC for the area in which it is to be installed. The external operating mechanism shall consist of a wing-type handle having the "ON" and "OFF" positions visible from the front.

Manufactures: **[Crouse-Hinds EDSC Type, Appleton EDSC Type]**, or equal.

C. SWITCHES FOR OUTDOOR AND CORROSIVE AREAS:

Switches shall be 20-ampere with weatherproof/ corrosion resistant neoprene plate. Switches shall be mounted in "FS" type copper-free aluminum or PVC mounting boxes.

Manufactures: Hubbell or Arrow-Hart as follows:

	Hubbell with 17CM50 plate	Arrow-Hart with 2881 plate
Single pole	1281	2991
Double pole	1282	2992
3-way	1283	2993
4-way	1284	2994

2.04 DEVICE PLATES

Device plates shall be provided with switches. In non-corrosive indoor areas, receptacle device plates shall be made of sheet steel, zinc electroplated with chrome finish as manufactured by Crouse-Hinds, Appleton, or equal.

Device plates in corrosive or outdoor areas shall be corrosion-resistant/marine-duty type. Device plates for explosion-proof equipment shall be factory provided with the equipment.

Device plates shall be provided with engraved laminated phenolic nameplates with 1/8-inch white characters on black background.

Nameplates for switches shall identify panel and circuit number and area served. Nameplates for receptacles shall identify circuit and voltage if other than 120 volts, single phase.

2.05 PLUG STRIPS

Plug strips shall be manufactured of sheet steel with the receptacles mounted on the front cover. The front cover shall be removable.

Plug strips for office and laboratory areas shall have single 3 wire, 20 ampere grounding type receptacles mounted along the strip on a single circuit.

Plug strips for work benches in shop and laboratory areas shall have 3 wire, 20 ampere grounding type duplex receptacles mounted along the strip on the circuits specified. Sufficient

space shall be provided behind the receptacles for ten No. 12 AWG conductors in accordance with the NEC space rules.

Manufacture of plug strips: Plugmold, or equal.

2.06 PRODUCT DATA

The Contractor shall provide catalog cuts for all materials provided under this section.

PART 3--EXECUTION

Boxes shall be independently supported by galvanized brackets, expansion bolts, toggle bolts, or machine or wood screws as appropriate. Wooden plugs inserted in masonry or concrete shall not be used as a base to secure boxes, nor shall welding or brazing be used for attachment.

Receptacles and switches installed in sheet steel boxes shall be flush mounted. Flush mounted receptacles shall be located 18 inches above the floor unless otherwise indicated. Switch boxes shall be mounted 48 inches above the floor. Receptacles installed in cast device boxes shall be located 48 inches above the floor.

Wiring devices shall be tested for correct connections.

END OF SECTION

SECTION 16155

INDIVIDUAL MOTOR STARTERS

When modifying specification for use on a project, delete all Notes to Specifier (NTS) after the Specifier reads the NTS. Right click on the "NTS" Style in the listing in the STYLES AND FORMATTING area, click on SELECT ALL _ INSTANCE(S), and depress the DELETE button on the keyboard. Then scroll through the entire document, checking to ensure that all NTS have indeed been deleted.

Edit >Find> bracket"[" for blanks to be filled in, alternative choices, and provisions that may or may not be included depending on the application. Delete unused alternative choices and provisions as appropriate, fill in blanks, and modify font of the text that is included.

PART 1--GENERAL

1.01 DESCRIPTION

This section specifies individual motor starters and motor controllers installed in enclosures other than motor control centers. Refer to drawings for product, device, and circuit requirements.

1.02 REFERENCES

This section contains references to the following documents. They are a part of this section as specified and modified. In the event of conflict between the requirements of this section and those of the listed documents, the requirements of this section shall prevail.

Reference	Title
NEMA ICS 1	General Standards For Industrial Control and Systems
NEMA 250	Enclosures for Electrical Equipment (1000-Volt Maximum)

1.03 SUBMITTALS

The following submittals shall be provided:

1. Verification of fault withstand ratings, as applicable, and interrupting ratings

2. The bill-of-material, schematic diagram, and wiring diagrams

PART 2--PRODUCTS

2.01 ENCLOSURE

The door to the motor starter enclosure shall be interlocked with an externally operated disconnect handle. Disconnect handle shall be arranged to indicate disconnect position. The disconnect operator handle shall have provisions to accept up to three 3/8-inch shackle padlocks to lock the disconnect in the open position.

Enclosures shall be:

1. NEMA 12 for indoor areas.
2. NEMA 4X for outdoor and process locations.
3. NEMA 7 cast metal for hazardous areas.

2.02 MOTOR BRANCH CIRCUIT PROTECTION

A. GENERAL:

Motor branch circuit protection shall be provided by fused disconnect switches or molded case motor circuit protectors as specified or as indicated.

B. FUSED DISCONNECT SWITCHES:

Fused disconnect switches shall be provided with visible knife blades, shielded line terminals and quick-make, quick-break switch operator. Fuse clips shall be Class R rejection type and sized for UL Class RK, one-time, time-delay fuses. Fuse assembly shall have a minimum short circuit capacity of 50,000 amps symmetrical.

C. MOLDED CASE MOTOR CIRCUIT PROTECTORS:

The motor circuit protector (MCP) type molded case circuit breaker shall only be used as a part of a combination motor starter.

The MCP shall operate on the magnetic principle with a current sensing coil in each of the three poles to provide an instantaneous trip for short circuit protection. The trip setting shall be adjustable over a range of 700 to 1300 percent of the full load current of the motor served and shall be adjustable from the front of the breaker.

The MCP circuit breaker shall be rated to interrupt 42,000 ampere symmetrical when used in conjunction with an individual motor starter.

2.03 MOTOR STARTERS

The basic full voltage, non-reversing motor starter (FVNR) shall consist of a 3 pole, 600 volt AC contactor, transient surge suppressor, and solid-state overload relay, NEMA Size-1 minimum.

Reversing (FVR) and multispeed (2S2W) starters shall have additional contactors, overload relays and auxiliary relays as required for the specified functions.

The contactors shall comply with NEMA ICS and NEMA rated for the horsepower as specified.

Overload relays shall be adjustable solid-state with protection for each of the poles. An overload condition shall cause the overload relay to latch in the open position.

Reset shall be accomplished with a reset button located on the unit door exterior. Trip setting shall be adjustable from 85 to 115 percent of rating. Provide [1] [2] Form-C 2-ampere auxiliary contact for remote monitoring of the overload alarm condition.

2.04 SOLID STATE STARTERS

The solid state reduced voltage motor starter shall consist of a self-contained unit for the control of 3-pole, 460-volt, 60-Hertz electric motors. The starter shall use solid-state components to limit current during motor starting and stopping. The starter shall include built-in bypass contacts operating closed when the motor is running at speed.

Controls shall permit selection among soft-start with selectable kickstart, current limiting with starting that is programmable 50 to 600 percent of full load current and field set as required. Full voltage start with ramp time less than 0.25 second, dual ramp start, or a start profile designed to reduce fluid surges when starting pumps. Controls shall permit field selection among ramp to stop, coast to stop, or stop profile designed for use with pumps.

Provide an alphanumeric, backlit LCD display. Example: four-line 16-character, for controller set-up, diagnostics, status and monitoring. Provide a keypad for parameter adjustment.

Provide motor overload protection with selectable trip classes of 10, 15, 20 and 30 utilizing three-phase current sensing, initially field set at 20 and field adjusted as required for the application by the Factory Engineer.

Provide a minimum of four 2-ampere, 240 Vac rated auxiliary contacts for customer use. Configure output contacts for: "Auto-Mode" status, "Ready" status, "Full-speed-Bypass" status, and "Fault" alarm. Provide for remote start command. Provide for remote stop command.

Provide the following monitoring functions indicated through the LCD display:

1. Three-phase current
2. Three-phase voltage
3. Power in kW
4. Power usage in kWh
5. Power factor
6. Elapsed time.

Provided as standard:

1. Pre-start line fault alarm
2. Running line fault advising power loss
3. Shorted or missing load connection
4. Pre-start power loss with phase indication
5. Over-temperature
6. Fault alarm with phase problem indication.

Provide the following defeatable protection as standard:

1. Under-load
2. Under-voltage
3. Over-load
4. Over-voltage
5. Voltage Unbalance
6. Excessive Starts Per Hour
7. Phase Reversal
8. Stall
9. Jam.

When fault conditions are detected, the controller shall inhibit starting or shut down. Fault diagnostics shall be indicated in descriptive text on the LCD display. The exclusive use of fault codes is unacceptable. Provide an auxiliary contact that is programmable for fault indication.

Manufacture and model:

1. Eaton - Cutler Hammer
2. Allen Bradley
3. Benshaul

2.05 TERMINAL BLOCKS

Terminal blocks shall be heavy duty, rated at 20 amperes, 600 volts, and shall contain integral marking strips.

Terminal blocks shall be provided for external control connections. Spare terminals shall be provided as specified. Terminals shall be permanently identified with the numbers specified.

2.06 CONTROL DEVICES

Combination starters shall be provided with door-mounted control devices as shown on the diagrams. Control devices shall be as specified in Section 16175.

2.07 TRANSIENT SURGE SUPPRESSORS

Transient surge suppressors shall be provided in each starter. Suppressors shall be encapsulated, three component, solid-state circuit, in a module suitable for mounting directly to the starter coil. Additional space for suppressors shall not be required. Suppressors shall be rated 120 volts AC/DC.

2.08 CONTROL CIRCUIT TRANSFORMERS

Each combination motor control unit shall be provided with a control circuit transformer rated for 480 x 240-120V, single phase, 60 Hertz. Unless otherwise specified, transformers shall have a minimum volt-ampere rating as follows:

Starter	CPT Minimum Volt-Ampere Rating
Size 1	100
Size 2	150
Size 3	200
Size 4	300

The transformer size shall be increased if the devices applied will cause a control transformer overload or secondary terminal voltage to drop to or below 95 percent of rated secondary control voltage when rated primary voltage is applied. Each control transformer shall be mounted within the enclosure along with its associated circuit breaker and starter.

2.09 CONTROL CIRCUIT FUSING

Two primary fuses, rated to interrupt 200,000 amperes at 600 volts, shall be provided on all motor starters.

Each control circuit transformer shall be provided with one control circuit secondary fuse. The secondary fuse shall have an interrupting rating of 10,000 amperes at 250 volts. The secondary fuse shall be sized at 125 percent of full load current. Fuses shall have time delay characteristics as required to prevent false tripping due to coil in-rush currents.

Fuse holders shall be lamp indicating type for blown fuse indication and shall contain neon lamp, clear transparent knob, and solder terminals.

2.10 WIRING

Conductors shall be 90-degree C switchboard type. Conductors shall be identified with tag numbers as specified in 16000.

2.11 MANUAL STARTERS

Manual starters shall comprise a horsepower rated quick-make, quick-break, toggle mechanism together with overloads in all phase conductors.

2.12 NAMEPLATES

Nameplates shall be provided in accordance with the requirements of 16000.

2.13 PRODUCT DATA

The following product data shall be provided:

1. Operating and maintenance as specified.
2. Manufacturer's catalog data for all material provided under this section. The catalog data shall be assembled in a folder with each page clearly marked with the item and reference number to the specification.
3. MCP and solid-state overload rating selection data.
4. Product calibration and setup information.
5. A copy of the electrical diagrams in a plastic folder in the units.

PART 3--EXECUTION

3.01 DEVICE CALIBRATION AND TESTING

The Contractor shall size the overload relay heater elements or adjust the solid-state overload device to the actual nameplate full load amperes of the motor connected to the starter.

The Contractor shall adjust motor circuit protector to the lowest setting not causing false tripping.

The Contractor shall record the settings on each motor controller and record the settings as part of the Record As-Built drawing submittal.

3.02 MOUNTING HEIGHT

The Contractor shall mount the center of the local motor starters at 48 inches above the floor or grade.

3.03 TESTING

Local motor starters and circuits shall be tested in accordance with Section 16030-Testing.

END OF SECTION

SECTION 16175

MISCELLANEOUS ELECTRICAL DEVICES

When modifying this specification for use on a project, delete all Notes to Specifier (NTS) after the Specifier reads them. Right click on the "NTS" Style in the listing in the STYLES AND FORMATTING area, click on SELECT ALL _ INSTANCE(S), and depress the DELETE button on the keyboard. Then scroll through the entire document, checking to ensure that all NTS have indeed been deleted.

Edit >Find> bracket"[" for blanks to be filled in, alternative choices, and provisions that may or may not be included depending on the application. Delete unused alternative choices and provisions as appropriate, fill in blanks, and modify font of the text that is included.

PART 1--GENERAL

1.01 DESCRIPTION

The vendor, manufacturer, and custom control panels shall provide enclosures, selector switches, pushbuttons, indicators, terminal strips, surge devices, nameplates, testing procedures, wiring method, wiring color coding, wire labeling, separation between power, controls, and instruments, hardwired logic relays or PLC logic products as specified herein **[and in Section 16176 or 17310]**.

A. This section specifies electrical control and monitoring devices:

1. Control Devices:

a. Pushbuttons
b. Selector Switches
c. Indicating Lights
d. Control Station Enclosures

2. Control Relays:

a. Load-Switching
b. Logic Level Switching
c. Timers and Time Switch
d. Alternators

B. This section specifies power devices:

1. Magnetic Contactors:

a. Lighting Contactors
b. Motor Contactors

2. Safety Disconnect Switches

3. Manual starters per Section 16155 – Individual Motor Starters

4. Field Instrument and Field Analyzer: Key-Switch in control station with surge devices

5. Overcurrent Protection: Circuit breakers

6. Elapsed Time Indicators

7. Current transformers and transducers

8. Time Switch

9. Motor Driven Timers – On Delay and Off Delay

10. Intrusion Switches and Override Key Switches

11. Thermostats

12. Static Ground Indicator and Interlock System

C. Request clarification where conflicts occur with this section and other sections in Divisions 11, 15, 16 and 17.

1.02 REFERENCES

This section contains references to the following documents. They are a part of this section as specified and modified. Where a referenced document contains references to other standards, those documents are included as references under this section as if referenced directly. In the event of conflict between the requirements of this section and those of the listed documents, the requirements of this section shall prevail.

Unless otherwise specified, references to documents shall mean the documents in effect at the time of Advertisement for Bids or Invitation to Bid or on the effective date of the Agreement if there were no Bids.

If referenced documents have been discontinued by the issuing organization, references to those documents shall mean the replacement documents issued or otherwise identified by that organization or, if there are no replacement documents, the last version of the document before it was discontinued.

Where document dates are given in the following listing, references to those documents shall mean the specific document version associated with that date, regardless of whether the document has been superseded by a version with a later date, discontinued or replaced.

Reference	Title
NEMA 250	Enclosures for Electrical Equipment (1000 volts maximum)
NEMA ICS-1	General Standards For Industrial Controls and Systems
NEMA ICS-2	Industrial Control Devices, Controllers, and Assemblies
NEMA KS 1	Enclosed Switches

1.03 SUBMITTALS

The following submittals shall be provided in accordance with Section 16176:

1. A copy of this specification section, with addendum updates included, and all referenced and applicable sections, with addendum updates included, with each paragraph check-marked to indicate specification compliance or marked to indicate requested deviations from specification requirements.

   Check marks shall denote full compliance with a paragraph as a whole. If deviations from the specifications are indicated, and therefore requested by the Contractor, each deviation shall be underlined and denoted by a number in the margin to the right of the identified paragraph, referenced to a detailed written explanation of the reasons for requesting the deviation.

   The Construction Manager, Arizona Water Company, shall be the final authority for determining acceptability of requested deviations. The remaining portions of the paragraph not underlined will signify compliance on the part of the Contractor with the specifications.

   Failure to include a copy of the marked-up specification sections, along with justification(s) for any requested deviations to the specification requirements, with the submittal shall be sufficient cause for rejection of the entire submittal with no further consideration.

2. Arrangement drawings of the panel enclosure indicating the front door and panel equipment arrangement and dimensions, and enclosure type.

3. Nameplate legend with engraving and sizes.

4. Internal layout drawings showing all components.

5. List of materials and components with the layout drawings.

6. Elementary / schematic diagrams

7. Internal wiring connection diagrams.

8. External wiring interconnection diagrams including interlocks.

9. Power and control single line diagrams, where motor controllers are included.

10. Manufacturer's catalog data for all material provided under this section shall be assembled in a folder with each page clearly marked with the item model number and reference number to the specification.

PART 2--PRODUCTS

2.01 CONTROL DEVICES

A. PUSHBUTTONS:

Pushbuttons shall be flush head, heavy-duty, with NEMA rating to match enclosure type. Operators shall be green for start function, red for stop functions, and black for all other functions. The escutcheon legend shall be as specified on the drawings.

1. UL Listed.

2. Dielectric Strength: 1300 Volts for one minute for Logic Reed contacts, 2200 Volts for one minute for other contacts.

3. 30.5mm mounting hole.

4. Temperature operating range –10 degree C. to +55 degree C.

5. Momentary contact type

6. When switching circuits are monitored by programmable controllers or other solid state circuits, furnish hermetically-sealed, logic-reed type contacts rated not less than 0.15 amperes at 150 Vac and 0.06 amperes at 30 Vdc.

7. When switching circuits are not monitored by programmable controllers or other solid state circuits, furnish contacts with NEMA Utilization Category rating A600 rated not less than 10 amperes continuous and 6 amperes break at 120 Vac.

Manufacturer: Allen-Bradley 800T/800H series or equal.

Lock-Out-Stop pilot device is not a power disconnect and should never be used as a power disconnect. BC considers LOS as a safety problem and should not be used. Some Electrical Inspectors and Owners are prohibiting the Lock-Out-Stop feature and insisting on a power disconnect at the equipment for safety consideration and to meet more stringent NEC requirements for a local disconnect.

For example, LOS feature allows the Operator to lock out the standby pump to save it for emergency operation.

The E-Stop device replaces the Lock-Out-Stop device. The emergency-stop pushbutton is a maintained-contact red-mushroom-head that stops the equipment. The Operator must pull out pushbutton, as one of the permissives to re-start the equipment.

If lock-out-stop pushbuttons required by AWC to match existing equipment and they are shown on the electrical diagrams, then add the following statement to this paragraph. "Pushbuttons designated "Lock-Out-Stop" (LOS) shall be provided with a padlock attachment to maintain the device in a depressed (stop) position."

B. SELECTOR SWITCHES:

Selector switches shall be heavy-duty with NEMA rating to match enclosure type. Selector switches shall have maintained position contacts. Switches shall be provided with contact blocks and number of positions as required performing the specified or indicated operations.

The escutcheon legend shall be as specified on the drawings. Provide:

1. UL Listed.

2. Dielectric Strength: 1300 Volts for one minute for Logic Reed contacts, 2200 Volts for one minute for other contacts.

3. 30.5mm mounting hole.

4. Temperature operating range –10 degree C. to +55 degree C.

5. Standard knob operator (not lever type nor wing lever type)

6. Number of positions and contact configuration as shown on Drawings.

7. When switching circuits are monitored by programmable controllers or other solid state circuits, furnish hermetically-sealed, logic-reed type contacts rated not less than 0.15 amperes at 150 Vac and 0.06 amperes at 30 Vdc.

8. When switching circuits are not monitored by programmable controllers or other solid state circuits, furnish contacts with NEMA Utilization Category rating A600 rated not less than 10 amperes continuous and 6 amperes break at 120 Vac.

Manufacturer: Cutler Hammer or Square D..

Field instruments and field analyzers shall have a lock-out style selector switch for locking on or locking off the 120Vac power source. The selector switch shall use a control station in NEMA-12, 4, 4X, or 7 as required by the area classification.

Provide O-Z/Gedney Class 441 with two position key-operated maintained contact switch. Provide surge protection device that matches the enclosure type of the power disconnect type control station, field instrument, or field analyzer: Telematic TP48 transmitter surge protection device or equal.

C. INDICATING LIGHTS:

Indicating lights shall be heavy-duty full voltage 120Vac or 24Vdc push-to-test LED type with NEMA rating to match enclosure type for installation in a 30.5mm hole. Furnish with 28 chip high visibility LED. Manufacturer: Cutler Hammer or Square D.

Indicating Light Lens Color:

Lens Color	Typical Function	Example
Green	Danger, running	Equipment operating, motor running, valve open, power voltage applied, cycle in automatic
Amber	Fault condition, attention	Equipment failure, status abnormal
Red	Ready condition	End of cycle; unit or head returned; motors stopped; motion stopped; contactors open, valve closed
White or Clear	Normal condition	Normal pressure of air, water, lubrication, control power on, status okay
Blue	Advisory	Control mode not in automatic

D. CONTROL STATION ENCLOSURES:

1. Enclosures locations and ratings:

   a. Indoors: NEMA 12

   b. Outdoors and Corrosive areas: NEMA 4X stainless steel, **[or non-metallic in chlorine storage areas]**

   c. NEC 500 Hazardous Areas: NEMA-7.

E. CONTROL POWER TRANSFORMERS:

1. Sized for the panel devices and products.
2. Dual primary and single secondary fusing.

2.02 CONTROL RELAYS

A. LOAD-SWITCHING CONTROL RELAYS:

Control relays used for switching loads such as solenoids, actuators, contactors, motor starter coils, remote interlocking, etc. shall be heavy-duty machine tool type.

Contacts shall be 4-pole and be field interchangeable to either normally-open or normally-closed. Relay shall be capable of accepting a 4-pole adder.

AC relays shall have NEMA A600 contact ratings and electrical clearances for 600 volts. DC relays shall have NEMA P300 contact ratings and electrical clearances for 250 volts.

Manufacturer: Allen Bradley Bulletin-700, Square D Class 8501, or equal.

B. LOGIC LEVEL SWITCHING CONTROL RELAYS:

Control relays for signal circuits shall have a minimum of three SPDT, gold-flashed, fine silver contacts rated 3-ampere resistive at 120V AC or 28Vdc.

Control relays shall be plug-in type with heavy-duty, barrier-protected screw terminal sockets and clear polycarbonate dust cover with clip fastener.

AC models shall have neon lamp indicator wired in parallel with coil. DC models shall have LED lamp indicator wired in parallel with coil.

Manufacturer: Potter Blumfield series KUP; Schrack Series RA; or equal

C. TIMERS:

1. Multi-function, micro-controller based, socket mounted timing relay.

2. Single functions:

    a. Delay on Make
    b. Delay on Break
    c. Recycle (on time first, equal recycle delays)
    d. Single shot
    e. Interval
    f. Trailing edge single shot
    g. Inverted single shot
    h. Inverted delay on break
    i. Accumulative delay on make
    j. Re-triggerable single shot

3. Dual functions:

   a. Delay on make/delay on break
   b. Delay on make/recycle (on time first, equal recycle delays.)
   c. Delay on make/interval
   d. Delay on make/single shot
   e. Interval/recycle (on time first, equal recycle delays)
   f. Delay on break/recycle (on time first, equal recycle delays)
   g. Single shot/recycle (on time first, equal recycle delays)
   h. Recycle – both times adjustable (on time first)
   i. Recycle – both times adjustable (off time first)
   j. Interval/delay on make
   k. Accumulative delay on make/interval

4. Time delay range, switch selectable:

   a. Single function 0.1 second to 1,705 hours in 8 ranges.

   b. Dual function 0.1 second to 3,100 minutes in 8 ranges.

   c. Setting accuracy +/- 1 percent or 50 milliseconds, whichever is greater.

   d. Repeat accuracy +/- 0.1 percent or 16 milliseconds, whichever is greater.

5. Output:

   a. Two Form-C electromechanical isolated contacts rated 10-amperes resistive at 240Vac

   b. Rated 1/3-horsepower at 120 or 240Vac

   c. Double-pole double-throw: DPDT.

   d. Mechanical life: 10,000,000 operations

   e. Electrical life: 1,000,000 operations at full load.

6. Mounting: Magnal Plug 11-pin socket

7. Environment: -20 to +65 degree C.

8. Manufacture:

a. ABB / SSAC's multifunction type TRDU time delay relay with dip-switch function setting with 12Vdc, 24Vac, 120Vac, 240Vac inputs as required or indicated or equal.

D. TIME SWITCH:

Provide an electronic time switch with full-year control in a NEMA 3R enclosure. The switch shall incorporate a non-volatile memory that maintains programmed switching times for the life of the time switch and provide a factory installed field replaceable lithium or alkaline battery for time keeping and calendar information for a minimum of 8 years. Furnish with one single-pole, double-throw output switch rated 20-ampere at 240Vac. Furnish with manual override control.

Manufacturer:

a. Intermatic Model ET70115CR or equal.
b. Paragon Electric Company, Inc. EC71ST or equal.

E. ALTERNATING RELAY:

1. Alternate assignment between "Duty" and "Stand-by" at the end of each run cycle.

2. Double-pole, double-throw output relay rated for 7-amps inductive at 120-volts AC. Isolation not less than 1,500-volt RMS input to output. Life of 1,000,000 operations at full electrical load.

3. Switch to select alteration or continuous operation of either load.

4. Mount in Magnal 11-pin socket.

5. Operating temperature range of –20 to +60-degree C.

6. Manufacturer: ABB-SSAC type ARP series or Engineer accepted substitute.

F. MOTOR DRIVEN TIMERS- ON DELAY AND OFF-DELAY:

1. Time Delay Relay - Upon Energization (TDE) or Upon De-Energization (TDDE): TDE driven by a 120 Vac synchronous motor that starts timing when initiated by an external signal via closing a dry contact. Turn a knob on the front of the dial for time settings. TDE device will reset upon power failure. TDDE device will not reset upon power failure. Special configuration where specified: will not reset upon power failure.

2. Provide a pilot light visible from the front of the timer to indicate when the timer motor is energized. Provide visual indication by a cycle progress

pointer that advances to zero from the setting then back to zero as time progresses.

3. Provide two of "instantaneous" NEMA Form-C output contacts that actuate when the timing is initiated. Provide two "delayed" NEMA Form-C contacts that actuate when the unit has timed out or de-energized. The timer automatically resets, when the timing cycle is completed. Contact ratings: 10-ampere at 120 Vac and 5-ampere at 240 Vac.

4. Permanently mount and setup the timer with the initial settings shown or specified. Timer range with 16 configurations from 5-seconds to 60-hours. Range and timer setpoints shown on drawings.

5. Timer Manufacturer: Eagle Cycl-Flex Automatic or Manual Reset Timer: HP5 series or HP5E series; Automatic Timing Controls, Series 305D Motor Driven Analog Reset; or equal.

2.03 MAGNETIC CONTACTORS

A. LIGHTING CONTACTOR:

Lighting contactors shall be 100 percent rated for ballast and tungsten lighting, resistance and other non-motor loads.

Contactor shall be rated 600Vac, 60-Hertz with the ampere rating and number of poles as indicated on the drawings. Provide a minimum of two poles per NEMA ICS 2-211B for industrial-duty applications.

The following options shall be available and shall be provided as indicated on the drawings:

1. Auxiliary contacts rated 5-amperes at 600Vac.
2. Timer or time clock attachment.
3. Transient suppression module for 120Vac control circuits.
4. Electrically or mechanically held as specified.

Contactors shall be provided with disconnecting means and overcurrent protection mounted in the same enclosure.

Manufacturers:

1. ASCO 918 Remote Control with control module
2. Cutler Hammer equal
3. Square D Class 8903

B. MOTOR CONTACTORS:

Motor contactors shall be designed for continuous operation of induction motors at 600Vac or less at 60-Hertz and shall comply with NEMA ICS 2-210.

The minimum contactor size shall be NEMA Size-1.

Motor contactors shall be supplied with a normally open auxiliary contact for use as a hold-in-contact and status contacts with a minimum of two additional Form-C contacts. Provide 120Vac coil voltage and 60-Hertz frequency with the number of poles and auxiliary contacts as indicated.

Manufacturer: Square D or Eaton-Cutler Hammer.

2.04 SAFETY DISCONNECT SWITCHES

Safety disconnect switches shall be heavy-duty, 30-400-ampere ratings as indicated, **[circuit breaker operating or fused]** or non-fused as indicated, stainless steel operator, safety type rated 600 volts AC.

Provide fusible disconnect switches with ratings as indicated with built-in fuse pullers. Provide LPS, LPN, or LPJ 200KAIC current limiting fuses as appropriate for the circuit type and the circuit voltage.

Enclosure locations and ratings:

1. Indoor enclosures: NEMA 12

2. Outdoor or corrosive areas: NEMA 4X **[nonmetallic for chlorine storage areas, or stainless steel]**

3. Hazardous areas: NEMA 7

4. Classified areas: Suitable for the specified classification.

The operating handle shall be capable of being padlocked in the "off" position. The operator shall be a positive, quick-make, quick-break mechanism. Provide bolt-on hubs. Provide door lock. Provide nameplates with the equipment tag number, equipment description, and power source as indicated on the drawings. Submit nameplate list.

Switches shall be horsepower rated for motors and shall comply with NEMA KS-1. Switches shall be provided with defeatable door interlocks that prevent the door from opening when the operating handle is in the "on" position. Switches shall have line terminal shields.

Manufacturer: Cutler-Hammer or Square-D.

2.05 OVERCURRENT PROTECTION

A. CIRCUIT BREAKERS:

Circuit breakers shall be thermal magnetic, molded case type with the ampere rating as specified. Unless otherwise specified or indicated, circuit breaker interrupting rating shall be 22,000 amperes symmetrical.

2.06 ELAPSED TIME INDICATORS

Elapsed time indicators shall be panel mounted, non-resettable, 5.5-digit, hour indicator, rated 120Vac, 60-Hertz.

2.07 CURRENT TRANSFORMERS AND TRANSDUCERS

Provide monitoring current transformers with 600Vac insulation and primary ampere rating as indicated with 5-ampere output.

Provide AC current transducer for any one of the phase conductors of the power circuit to be installed through onboard toroid. Provide a loop-powered transducer with input rated from 0 to 50-ampere with 4-20madc analog output scaled for the primary current of the current transformer. Provide zero and span adjustments.

Manufacturer: ABB AC current transducer TCSA Series Loop Powered and mounting accessories, or equal.

Provide a DIN rail or back plate mounted AC current transducer that is a loop-powered transducer with input rated from 0 to 5-ampere and with 4-20madc analog output scaled for the primary current of the current transformer.

Manufacturer: ABB AC current transducer DCSA Series Loop Powered and mounting accessories, or equal.

2.08 TERMINAL STRIPS, BLOCKS, AND DEVICES

A. Power Wiring: Provide back plate mounted terminal strips rated at 600 Vac.

B. Control Wiring: Provide a DIN rail with spring powered contact rated at 300 Vac 24 ampere with pluggable terminals.

C. Terminal identification standard to the product provided.

D. Manufacturer:

1. Standard: Cutler Hammer or Square D.

2. Standard: DIN rail: Phoenix Contact or Weidmuller Z-Series.

2.09 INTRUSION DEVICES

The intrusion switch shall be wide-gap industrial grade magnetic door switch with maximum gap 2.5 inches between the sensing elements. The magnet element shall be mounted on the moving part of the door. The sensor switch shall close when the door is closed. The sensor switch shall open when the door is opened. Provide with appropriate mounting bracket for the entrance doors.

Manufacturer: George Risk Industries - Series 4400 (800-445-5218), http://www.grisk.com/security_products.htm or equal.

The intrusion override key switches shall be access control type with mortise cylinder and 24 Vdc single pole double threw (SPDT) maintained contacts.

Manufacturer: Von Duprin SS-900 [_____] series.

2.10 THERMOSTATS

Thermostats shall be line voltage type with motor current rated contact and 70-degree to 140-degree Fahrenheit setpoint range.

Manufacturer: Honeywell T631A-1022 or equal.

2.11 STATIC GROUND INDICATOR

Provide a static ground indicator and interlock system for verification of static ground connection to plant equipment, tanker trucks, drums, containers with flammable liquids or powders that are transferred and requiring effective grounding and bonding .

Provide an explosion proof controller that meets NFPA 77 requirements with an intrinsically safe monitoring circuit that verifies a low resistant ground connection and dissipation path to ground. Product shall include an indicator light and interlock enabling product transfer and shall be rated for 120Vac power circuit.

Manufacturer: Earth-Rite Plus with Hytrel Cable and Ground Clamp or equal.

2.12 NAMEPLATES

Nameplates for all control stations, relays, timers, motor contactors and disconnect switches shall be provided in accordance with the requirements of Section 16000.

2.13 PRODUCT DATA

Operation and maintenance data as specified including approved submittal manufacturer's catalog data, as-built drawings, and instructions for all configurable or programmable components.

PART 3--EXECUTION

Control stations, contactors and safety disconnect switches shall be mounted 48 inches above the floor, ground, or slab to center of device.

Miscellaneous electrical devices shall be tested in accordance with Section 16000 and Section 16030.

END OF SECTION

SECTION 16176

LOCAL CONTROL PANELS

When modifying this specification for use on a project, delete all Notes to Specifier (NTS) after the Specifier reads the NTS. Right click on the "NTS" Style in the listing in the STYLES AND FORMATTING area, click on SELECT ALL _ INSTANCE(S), and depress the DELETE button on the keyboard. Then scroll through the entire document, checking to ensure that all NTS have indeed been deleted.

Edit >Find> bracket "[" for blanks to be filled in, alternative choices, and provisions that may or may not be included depending on the application. Delete unused alternative choices and provisions as appropriate, fill in blanks, and modify font of the text that is included.

PART 1--GENERAL

1.01 DESCRIPTION

A. SCOPE:

This section specifies local control panels used for housing electrical power and control equipment per Panel Schedule herein.

The vendor and manufacture package equipment and custom field panels shall adhere to the requirements in specifications Sections 16175 for motor starters, controllers, and devices.

The vendor, manufacture, and Contractor provided panel wiring shall be arranged for Fail-Safe wiring and electrical operation.

No visible control or indicating light on surface of enclosure.

B. PANEL SCHEDULE:

Item	Panel No.	Spec / P&ID	Features *	Panel Type	Panel Title	Notes
1	LCP-100	11345 / P-100	C, 2, 3, 5	NEMA-4X	Headworks Level Monitoring Panel	Outdoor
2	PNL-900	13111 / P-900	V, 1, 2, 4	NEMA-12	Odor System Control Panel	In Odor Building

V* - Vendor / Manufacture Panel
C* - Contractor Custom Panel
1* - Programmable Logic Controller (PLC) allowed
2* - Panel mounted Operator Interface Station (OIS) allowed
3* - Hardwired control logic required
4* - Separate Power and Control/Instrument compartments
5* - Inner door for displays.

1.02 QUALITY ASSURANCE

A. REFERENCES:

This section contains references and information from the following documents. They are a part of this section as specified and modified. Where a referenced document contains references to other standards, those documents are included as references under this section as if referenced directly. In the event of conflict between the requirements of this section and those of the listed documents, the requirements of this section shall prevail.

Unless otherwise specified, references to documents shall mean the documents in effect at the time of Advertisement for Bids or Invitation to Bid (or on the effective date of the Agreement if there were no Bids).

If referenced documents have been discontinued by the issuing organization, references to those documents shall mean the replacement documents issued or otherwise identified by that organization or, if there are no replacement documents, the last version of the document before it was discontinued.

Reference	Title
NFPA 79	NFPA 79 Electrical Standard for Industrial Machinery
NEMA 250	Enclosures for Electrical Equipment (1000 Volts Maximum)
NEMA ICS 6	Industrial Control and Systems: Enclosures
NFPA 70	National Electrical Code (NEC)
UL 508A	Industrial Control Panels
UL 698A	Industrial Control Panels Relating to Hazardous (Classified) Locations

B. ASSEMBLY:

The assembled panels and individual components shall be UL Listed and labeled.

Equipment and components shall be Underwriters Laboratory (UL) listed for the purpose per Section 16000 or UL recognized.

The control panels shall have factory applied UL 508A labels. Where intrinsic safety barriers are used within a control panel, provide UL 698A factory applied labels as required by UL.

C. FACTORY TESTING:

Prior to shipment, the manufacturer shall test the functional operation of the panel as described in the sequence of operation.

1.03 SUBMITTALS

The following submittals shall be provided:

1. A copy of this specification section, with addendum updates included, and all referenced and applicable sections, with addendum updates included, with each paragraph check-marked to indicate specification compliance or marked to indicate requested deviations from specification requirements.

   A check mark shall denote full compliance with a paragraph as a whole. If deviations from the specifications are indicated, and therefore requested by the Contractor, each deviation shall be underlined and denoted by a number in the margin to the right of the identified paragraph, referenced to a detailed written explanation of the reasons for requesting the deviation.

   The Construction Manager, Arizona Water Company (AWC), shall be the final authority for determining acceptability of requested deviations. The remaining portions of the paragraph not underlined will signify compliance on the part of the Contractor with the specifications.

   Failure to include a copy of the marked-up specification sections, along with justification(s) for any requested deviations to the specification requirements, with the submittal shall be sufficient cause for rejection of the entire submittal with no further consideration.

2. Arrangement drawings of the panel enclosure indicating the front door and panel equipment arrangement and dimensions, and enclosure type.

3. List of materials and components with the layout drawings.

4. Data on all materials and components.

5. Heat calculations.

6. Nameplate schedule with character size and nameplate size.

7. Submittal drawing required:

   a. Elementary/schematic diagrams.

   b. Internal wiring connection diagrams.

   c. External wiring interconnection diagrams including interlocks.

   d. Power and control single line diagrams, where motor controllers are included.

8. A copy of the contract document control diagrams and process and instrumentation diagrams relating to the submitted equipment, with addendum updates that apply to the equipment in this section, marked to show specific changes necessary for the equipment proposed in the submittal. If no changes are required, the drawing or drawings shall be marked "no changes required".

PART 2--PRODUCTS

2.01 GENERAL

Panels shall comprise enclosures, wiring, process, power products, programmable controllers, and instrument devices. Separation shall be provided between the power components and the control and instrument devices using spacing and insulated barriers or equipment located in separate cabinets with separate door handles within the panel enclosure.

Provide external lockable power disconnecting means for circuit breakers for the main panel disconnect. Provide individual power and control disconnects as required. Provide motor controllers as required by the equipment specifications.

Cabinets with displays shall be configured with door-in-door construction with the displays accessible by opening the cabinet outer door. Face-mounted equipment shall be flush or semi-flush with flat-black escutcheons.

Cabinets less than 60 inches high shall be provided with floor stands to raise the top of the panel to 60 inches above the floor or work platform or, if panel weighs less than 100 pounds and wall space is available, wall mounting may be used in lieu of a floor stand.

2.02 ENCLOSURES

A. GENERAL:

Enclosures shall comply with the requirements of NEMA 250.

B. MANUFACTURER:

The enclosures shall be made by:

1. Hoffmann Enclosures, Inc.
2. Rittal.
3. or equal.

C. PANEL CLASSIFICATION:

Enclosures and Devices:

1. NEMA Type-1: Installed indoors shall be a modified NEMA 1 with:

   a. Piano hinge doors
   b. Breather drains
   c. Fans and filters as indicated in the Panel Schedule in 16176-2.11.
   d. Sealing washers for mounting hardware.

2. NEMA Type-3R: Installed outdoors or in corrosive areas shall be modified stainless steel, as indicated on the Drawings with:

   a. Piano hinge doors
   b. Breather drains
   c. Fans and filters as indicated in the Panel Schedule in 16176-2.11.
   d. Sealing washers for mounting hardware.

3. NEMA Type-7: Installed in Hazardous Areas shall be NEMA 7 with devices per NEC Article 500 requirements for the hazardous area classification.

D. SIZE:

The minimum enclosure area, height by width, shall be twice the sum of the area of the individual components mounted on the back panel. The enclosure depth shall depend on the type of components used but shall be no less than 6 inches.

E. COLOR:

Exterior: ANSI 61 gray.
Interior: White

2.03 HEATING AND VENTILATING

Forced air ventilation shall be provided for where indicated. Ventilation for cabinet racks shall be three venturi fans provided on 5-1/2-inch high notched panel.

Fans shall be equipped with UL-approved washable filters and provide at least 240 cubic feet per minute (cfm). Noise level at 3 feet from exterior wall and 30 degrees off axis shall not exceed 60 NC units. Fans for field cabinets and outdoor consoles shall be thermostatically controlled.

Air-conditioners shall be provided where indicated. Supply voltage shall be as shown on the Drawings and on the Panel Schedule in Part-2.

Closed loop systems will be used where ambient air is excessively hot, humid, dusty or contains other contaminants. Refrigerant shall be environmentally safe. Air-conditioner NEMA rating shall match the enclosure rating it is installed in. Air-conditioners shall be equipped with UL-approved washable filters.

Outdoor cabinets shall also be provided with thermostatically controlled space heaters. If space heater surface temperature exceeds 120 degrees F, an expanded metal guard shall be provided.

Thermostat manufacturer and model:

1. Hoffman A-TEMNO
2. Honeywell T631B1013
3. Penn Controls A28AA-4
4. Or equal.

2.04 PANEL WIRING

A. INTERNAL WIRING:

Internal wiring shall be single conductor 90 degree C copper wire and UL listed for panel wiring. Wire size shall be in accordance with NEC. Internal wiring shall be color coded as specified in Section 16000.

B. WIRE MARKERS:

Wire markers shall comply with the requirements specified in Section 16000.

C. WIRING METHODS:

Plastic wireway with covers shall be used to route groups of wires. Wireway fill shall be sized to provide 75% maximum fill. Plastic spiral wrap shall be used for exposed wires. Wires that cross door hinges shall be enclosed in plastic spiral wrap.

D. FAIL-SAFE WIRING

Fail-safe wiring of control relay or other on/off device or instrument provides the condition that will occur upon loss-of-power or internal failure in the device such that the relay is de-energized in the failure or loss-of-power condition such that the control relay contact operation provides for equipment failing in a safe mode.

2.05 ALARM AND TROUBLE DETECTION

The equipment control system shall incorporate a non-energized, open-state, output contact to activate on an alarm or trouble condition or on loss-of-power. Detection of a critical alarm or trouble condition shall cause the control system to initiate the shutdown or the operation of the equipment's controlled components to achieve a "Fail-Safe" condition.

Devices that signal an alarm or a trouble conditions shall latch in the alarm position and require a manual reset at the equipment control panel.

A. Alarm and trouble output shall:

1. Open an output dry-contact.

2. Remain open until manually reset.

3. Not indicate abnormal condition when the equipment shutdown manually or automatically.

4. Indicate the alarm at the equipment control panel.

B. Fail-Safe Design and Operation:

1. Failure of part of a system shall not result in the failure of the rest of the system.

2. Failure of equipment or process shall not propagate beyond the failing device or equipment.

3. Control design and operation shall prevent improper system functioning due to a circuit malfunction or operator error.

4. Control system design shall cause the controlled equipment to operate in a safe mode in the event of loss-of-power or failure of a control system component.

2.06 CONTROL DEVICES

Control devices shall comply with Section 16175.

2.07 INDICATING LIGHTS

Indicating lights shall be equipped with colored lenses as specified in Section 16175.

2.08 SURGE PROTECTION

Surge protectors shall be provided at panel external terminal blocks signal circuits which extend to field devices. Surge protectors shall be Joslyn Model 1663-08, Taylor 1020FA, Transector, or equal.

2.09 TERMINAL BLOCKS

Terminal blocks shall be provided in accordance with Section 16000 and Section 16175. The terminal block assembly shall be mounted on channel standoffs. Provide 15 percent, but no less than 8, spare terminals available for future use.

2.10 LABELING AND NAMEPLATES

A. LABELING:

Panel components shall be labeled to match the description on the elementary diagram. Internal components of the panel on the back side of the door shall be labeled with the same description as provided on the front side.

Labeling shall be permanently marked on or near each component. Plastic embossed labels such as "Dymo" tape will not be accepted.

B. NAMEPLATES:

External door-mounted components and the panel description shall be identified with plastic nameplates provided in accordance with Section 16000.

Machine engraved laminated white phenolic nameplates with black lettering shall be provided for panel mounted equipment.

Nameplate engraving shall be as specified and shall carry the instrument tag number in 3/32-inch minimum size lettering on the bottom line Nameplates shall be attached to the panel with a minimum of two self-tapping 316 stainless steel screws.

The Contractor agrees that nameplate wording may be changed without additional cost or project time extension, if changes are made prior to commencement of engraving.

Machine embossed metallic adhesive labels shall identify tag number of instruments inside panels. Nameplates shall be attached to panel surfaces, not to instruments.

2.11 GROUNDING

Each panel shall be provided with two copper ground bars. One bar shall be bonded to the panel frame or sheet metal and to the station ground system.

The second (signal) ground bar shall be mounted on insulated stand-offs and shall be bonded to the frame ground bar at one point only. Signal circuits, signal cable shields, and low-voltage DC power supply commons shall be bonded to the signal ground bar.

Surge protectors and separately derived AC power supplies shall be bonded to the frame ground bar. In panel line-ups exceeding 30-inches width, ground bars shall be 1/4- by 1-inch copper bars extending the entire length of the panel.

Neutrals of locally derived control circuits shall be grounded to the mounting plate using a copper bus or grounding lug.

Provide a grounding lug for a size No. 2 AWG bare copper conductor to connect the panel to the facility ground grid system.

2.12 PRODUCT DATA

The following information shall be provided: Operations and maintenance information as specified.

PART 3--EXECUTION

3.01 GENERAL

Field verify the following:

1. Panel control circuits grounded with one terminal of each load device connected to the grounded conductor.

2. Panel control contacts installed in the ungrounded side of the circuit.

3. Panel signal and control wiring separated and installed in separate wireways with barriers between the power wiring and the signal and control wiring.

4. Panel connected to the plant grounding system as specified.

5. Panel centers of wall-mounted panels shall be mounted at 48 inches above the floor.

6. Panel inner door contains a copy of the record elementary and wiring diagrams.

7. Panel inner door contains a drawing holder.

8. Panel drawings enclosed in a transparent, protective jacket.

9. Panel functions as specified.

10. Panel mounted with stainless steel unistrut, fittings, and fasteners.

3.02 MOUNTING

Control room cabinets shall be mounted on stainless steel unistrut channel sills. Control panels supported directly by concrete or concrete block walls shall be spaced out not less than 5/8 inch by framing channel between instrument and wall. Sills shall be leveled so panel structures will not be distorted. Panels shall be shimmed to precise alignment so doors operate without binding.

Field panels and cabinets shall be located between 48 inches and 60 inches above the floor or a permanent work platform. Equipment shall not be mounted where shock or vibration will

impair its operation. Support systems shall not be attached to handrails, process piping or mechanical equipment. Control panels supported directly by concrete or concrete block walls shall be spaced out not less than 5/8 inch by framing channel between instrument and wall.

Support of equipment shall be aluminum plate, frames, and posts. Support systems including panels shall be designed to prevent deformation greater than 1/8 inch under the attached equipment load and an external load of 200 pounds in any direction.

Floor-mounted cabinets, except in dry control rooms or electrical equipment rooms, shall be mounted on 3-1/2-inch minimum height concrete pads or grouted bases as specified. Panels shall be shimmed to precise alignment so doors operate without binding. Sealant shall be provided under panels not located in dry control or electrical equipment rooms.

Terminals and terminal blocks shall be sprayed with a silicone resin similar to Dow Corning R-4-3117 conformal coating, after all terminations have been completed.

3.03 FACTORY TESTING

The control panel shall be assembled, interconnected, and functionally tested at the assembly shop prior to shipment.

AWC shall have the option of witnessing the functional shop test.

The Contractor shall notify AWC at least two weeks in advance prior of the scheduled functional shop test.

3.04 FIELD TESTING

Panels shall be tested in accordance with Section 16030.

END OF SECTION

SECTION 16440

INSTRUMENT TRANSFORMERS, METERS, SWITCHES AND ACCESSORIES

When modifying this specification for use on a project, delete all Notes to Specifier (NTS) after the Specifier reads the NTS. Right click on the "NTS" Style in the listing in the STYLES AND FORMATTING area, click on SELECT ALL _ INSTANCE(S), and depress the DELETE button on the keyboard. Then scroll through the entire document, checking to ensure that all NTS have indeed been deleted.

Edit >Find> bracket "[" for blanks to be filled in, alternative choices, and provisions that may or may not be included depending on the application. Delete unused alternative choices and provisions as appropriate, fill in blanks, and modify font of the text that is included.

PART 1--GENERAL

1.01 DESCRIPTION

This section specifies instrument transformers, meters, test switches and accessories for electrical distribution equipment assemblies.

1.02 REFERENCES

This section contains references to the following documents. They are a part of this section as specified and modified. In the event of conflict between the requirements of this section and those of the listed documents, the requirements of this section shall prevail.

Reference	Title
ANSI C37.20	Switchgear Assemblies Including Metal-Enclosed Bus
ANSI C39.1	Requirements for Electrical Analog Indicating Instruments
ANSI C57.13	Requirements for Instrument Transformers

PART 2--PRODUCTS

2.01 INSTRUMENT TRANSFORMERS

A. GENERAL:

Instrument transformers shall be molded dry-type in accordance with ANSI C57.13. Transformer volt-ampere rating shall be suitable for carrying the specified load without overheating or exceeding the permissible accuracy for the transformer.

B. POTENTIAL TRANSFORMERS:

Potential transformers shall have an ANSI accuracy class of 0.3. They shall be equipped with current limiting fuses.

C. CURRENT TRANSFORMERS:

Current transformers shall be furnished with the specified ratios. The accuracies shall conform to ANSI C37.20.

2.02 PANEL METERS AND POWER MONITORS

All indicating meters shall be 4-1/2-inch square, semi-flush mounted switchboard type. The movement shall be taut-band with an accuracy of plus or minus 1 percent of full scale. The case shall be black. The scale shall be white with black markings. The length of the scale shall be greater than 7 inches over a deflection angle of 250 degrees. The meters shall be manufactured in accordance with applicable requirements of ANSI C39.1.

Power Monitors and Analyzers shall be the standard product of the electrical equipment manufacture with the standard electrical parameter selection and display.

Power Monitors are required on all new electrical equipment: switchgear, switchboard, motor control center, automatic transfer switch to provide electrical parameter information about the electrical equipment for any voltage class. Two power monitors are required for double-ended and dual feed electrical equipment.

Power Monitors, where shown on the drawings, shall have the following analog 4-20 mAdc outputs:

1. Phase-Phase Voltage
2. Average Current
3. Power Factor or VARs
4. Kilo-Watt Hours

Power Analyzer Monitor combination units, where shown on the drawings, shall have harmonic analyzer ability that displays the voltage / current harmonic and the Total Harmonic Distortion for the electrical equipment being monitored.

[Where specified or indicated, provide manufacture standard power monitor with 4-analog outputs and RS-485 data communication output with [_____] protocol.]

2.03 INSTRUMENT SWITCHES

Instrument switches shall be provided with contact blocks and positions specified. Switches shall be of the rotary-cam type and contacts shall have positive wiping action of silver-to-silver contact buttons. Switches shall be provided with escutcheon plates and pistol-grip handles. Switches shall be General Electric, SBM; Siemens, ABB equal.

Voltmeter and ammeter switches shall have four positions with the escutcheon legend as follows:

Voltmeter	OFF	1-2	2-3	3-1
Ammeter	OFF	Phase A	Phase B	Phase C

2.04 KEY INTERLOCK

Where specified, the key interlock shall consist of two or more identically keyed brass bolt locks. The bolt on the lock shall prevent the operation of the electrical equipment. One brass key shall be provided for each group of identical locks. The key shall be held captive when the lock is positioned to allow equipment operation.

2.05 INDICATING LIGHTS

Indicating lights shall be resistor type of the voltage specified.

2.06 NAMEPLATES

Nameplates shall be provided in accordance with Section 16000.

2.07 PRODUCT DATA

The following information shall be provided:

1. Operation and maintenance items as specified.
2. Manufacturer's product data with features and dimensions of devices.
3. Burden, accuracy class, and ratio data for instrument transformers.

PART 3--EXECUTION

Accessories and devices shall be installed per the electrical distribution equipment manufacturer's instructions.

END OF SECTION

SECTION 16445

TRANSIENT VOLTAGE SURGE SUPPRESSION

When modifying this specification for use on a project, delete all Notes to Specifier (NTS) after the Specifier reads the NTS. Right click on the "NTS" Style in the listing in the STYLES AND FORMATTING area, click on SELECT ALL _ INSTANCE(S), and depress the DELETE button on the keyboard. Then scroll through the entire document, checking to ensure that all NTS have indeed been deleted.

Edit >Find> bracket"[" for choices, substitutions and blanks to be filled in. Delete unused choices and substitutions, modify font and fill in blanks as appropriate.

Requirements for TVSS units installed integral to electrical equipment.
Option: Externally installed TVSS unit in a separate enclosure.

PART 1--GENERAL

This section specifics internal mounted transient voltage surge suppression (TVSS) for electrical equipment as service entrance equipment, switchgear, switchboards, and motor control centers.

Provide as per the same criteria specified herein for external TVSS where indicated on the drawings and with enclosures specified or indicated.

1.01 DESCRIPTION

A. SCOPE:

Provide TVSSs for service entrance equipment, switchgear, switchboards, and motor control centers specified in the Division 16 electrical distribution equipment specification sections or indicated on the Drawings.

Provide TVSS with the same voltage, phase, 3 or 4 wire system as the equipment that the unit is protecting and with the specified ratings to protect the host electrical equipment.

B. EQUIPMENT LIST:

Two options are available.

1) Indicate the TVSS equipment is to be installed on the one-line diagrams and delete the following Equipment Table and do not show ratings since the typical ratings are specified herein. Refer to this Section in the equipment specification.

2) Where the TVSS equipment are not shown on the Drawings, use this EQUIPMENT LIST paragraph and table.

Item	Equipment No.
Motor Control Center	
Panelboard	
Switchboard	
Switchgear	

C. OPERATING CONDITIONS:

Verify the project conditions for seismic zone, elevation, ambient temperature, corrosive atmosphere, and humidity.

D. PERFORMANCE REQUIREMENTS:

TVSS performance parameters required:

1. National Electrical Code (NEC) Section 285.2 and 285.6:

   a. Limit transient voltage by diverting or limiting surge current.

   b. Prevent continued flow of current following transient event while remaining capable of repeating these functions.

   c. Utilize fuses with repetitive surge capability to survive specified surge rating and meet UL 1449.

   d. Marked with a short circuit current rating and not installed where the available fault current (AIC rating) is in excess of that rating.

2. UL 1449 stipulation for fused TVSS:

   a. Certify that the TVSS system conforms to UL 1449 2nd Edition.

   b. Indicate the type of internal or external fusing.

3. Maximum clamping voltage:

Service voltage	Phase and wire	L-N	L-G	N-G
120 / 240V	1Φ 3W	400	400	400
240 / 120V	3Φ 4W	400/700	400	400/700
208Y / 120 V	3Φ 4W	400	400	400

Service voltage	Phase and wire	L-N	L-G	N-G
240V	3Φ 3W	NA	800	NA
480Y / 277V	3Φ 4W	800	800	800
480V	3Φ 3W	NA	1500	NA

E. DESIGN REQUIREMENTS:

1. TVSS equipment enclosure shall match the host electrical equipment NEMA-Type enclosure.

2. TVSS equipment shall provide the following local monitoring features:

   a. Local status and alarm monitoring.

   b. Digital surge event counter with battery back-up; alkaloid batteries are not acceptable.

3. TVSS equipment shall provide the following local monitoring features where specified or indicated on the drawings:

   a. Status and alarm dry contacts for remote monitoring.

   b. Audible alarm with alarm disable switch.

   c. Field adjustable sensitivity

1.02 QUALITY ASSURANCE

A. REFERENCES:

This section contains references to the following documents. They are a part of this section as specified and modified. In the event of conflict between the requirements of this section and those of the listed documents, the requirements of this section shall prevail.

Reference	Title
Underwriters Laboratories 1449 2nd Edition	Transient Voltage Surge Suppressors
Underwriters Laboratories 1283 3rd Edition	Electromagnetic interference filter for noise attenuation
MIL STD 220A, Rev A, Change Notice #2	Method of Insertion Loss Measurement
National Electrical Code 2002 Article 285 and Article 250.56	TVSS Installation practice and Grounding
NEMA LS-1-1992	National Electrical Manufactures Association: Low Voltage Surge Protective Devices

Reference	Title
CUL	Canadian Underwriters Laboratories
ANSI/IEEE C62.41 1991 and C62.45-1992	American National Standards Institute/Institute of Electrical and Electronic Engineering Inc.
Underwriters Laboratories 67	Listing for internal panelboard TVSS
Underwriters Laboratories 891	Dead Front Switch boards

B. TESTING BY 3RD PARTY:

Certify that TVSS furnished have passed the following tests per NEMA LS-1-1992:

1. The TVSS device is repetitive surge current capacity tested utilizing a 1.2x50ms, 20kV open circuit voltage, 8x20ms, 10kA short circuit Category C3 test waveform at one minute intervals with less than 5% degradation of components.

   a. TVSS at service entrance: 20,000 Category C3 impulses
   b. TVSS at distribution: 5,000 Category C3 impulses

2. The rating shall be based on testing of a complete TVSS unit including fuses and all components that make up the TVSS system are expressed per mode.

3. The fusing system shall be capable of allowing the rated maximum surge current to pass through without fuse operation. Systems utilizing a fusing system that opens below the maximum surge current level are unacceptable. The fusing system shall use thermal fuses and surge rated fuses, which shall be included in the surge current testing.

4. Use of plug-in modules, printed circuit boards in surge current-carrying paths, gas discharge devices or selenium rectifiers is unacceptable.

5. The maximum Continuous Operating Voltage (MCOV) for all voltage configurations shall be 115% of nominal.

6. The use of electronic grade MOV's is not acceptable. Systems using gas tubes, silicon avalanche diodes, selenium rectifiers, or printed circuit board technology in surge current path are not acceptable.

C FACTORY TESTING

TVSS shall be factory tested prior to shipment.

D. SHIPMENT, PROTECTION, AND STORAGE:

Ship the TVSS components with the electrical equipment in accordance with the requirements specified and protect the equipment from damage, dirt, dust, rain, and other elements.

E. WARRANTY:

Provide a product warranty for a period of not less than five years from date of installation. Warranty shall cover replacement of TVSS during the warranty period if operation of TVSS does not meet manufactures guide specification performance criteria and the requirements specified in this Section 16445.

In addition to the warranty submitted, provide a copy of the warranty inside of each TVSS enclosure.

1.03 SUBMITTALS

Submittals should be required for the following conditions:

1. A copy of this specification section, with addendum updates included, and all referenced and applicable sections, with addendum updates included, with each paragraph check-marked to indicate specification compliance or marked to indicate requested deviations from specification requirements. Check marks shall denote full compliance with a paragraph as a whole.

2. If deviations from the specifications are indicated, and therefore requested by the Contractor, each deviation shall be underlined and denoted by a number in the margin to the right of the identified paragraph, referenced to a detailed written explanation of the reasons for requesting the deviation.

3. The Construction Manager, Arizona Water Company, shall be the final authority for determining acceptability of requested deviations. The remaining portions of the paragraph not underlined will signify compliance on the part of the Contractor with the specifications.

4. Failure to include a copy of the marked-up specification sections, along with justification(s) for any requested deviations to the specification requirements, with the submittal shall be sufficient cause for rejection of the entire submittal with no further consideration.

5. A copy of the contract document control diagrams and process and instrumentation diagrams relating to the submitted equipment, with addendum updates that apply to the equipment in this section, marked to show specific changes necessary for the equipment proposed in the submittal. If no changes are required, the drawing or drawings shall be

marked *"no changes required"*. Failure to include copies of the relevant drawings with the submittal shall be cause for rejection of the entire submittal with no further review."

6. Drawings: Electrical and mechanical drawings shall be provided by the manufacturer which show unit dimensions, weights, mounting provisions, connection notes, wire size and wiring diagram.

7. Installation instructions: Clearly state rating of an overcurrent device to maintain the system's UL 1449 listing.

PART 2--PRODUCTS

2.01 GENERAL REQUIREMENTS

A. The TVSS shall be 7 modes (connection paths) of protection using metal oxide varistors (MOV) technology; tested by UL (1449, 2nd Ed) Suppressed Voltage Rating (SVR).

B. Primary transient paths shall utilize copper wire, aluminum bus bar and lugs of equivalent capacity to provide equal impedance interconnection between phases. No plug-in module or components shall be used in surge current carrying paths.

C. Each protection module shall have a visual indicator that signifies that each phase is on line. The unit shall not be taken off-line to verify integrity of system. Redundant status indicators shall be mounted on the front of the door that monitors the system protection circuitry.

D. Replaceable modules are not acceptable. TVSS will be replaced in the event a phase indicating light has extinguished, alarm annunciation with the service alarm light on.

E. The TVSS device EMI-RFI noise rejection or attenuation value shall be measured in accordance with the procedures outlined in NEMA LS-1-1992/MIL STD 220A. Noise Filter Capability (100KHz, 1MHz, 10MHz and 100MHz) shall not be lower than –44db attenuation.

F. TVSS shall provide protection in the following modes.

1.	Line to Neutral	(L-N) (Wye)
2.	Line to Ground	(L-G) (Wye or Delta)
3.	Neutral to Ground	(N-G) (Wye)

G. Rate surge protective device for continuous operation under the following service conditions:

1.	Altitude:	0-12,000 ft.
2.	Humidity:	95% RH, non-condensing atmosphere.
3.	Surface Temperature:	less than 55°C.
4.	Operating Temperature	-40° C to +60°C.
5.	Frequency	50-60 Hertz.
6.	No Audible Noise	

2.02 ELECTRICAL EQUIPMENT TVSS APPLICATIONS

A. Service Entrance Equipment, Switchboards, Switchgear, and Motor Control Centers.

B. TVSS equipment shall be a multi-stage parallel protector rated for voltage, phase, and the wire, plus ground and be internally mounted by electrical equipment manufacturers.

C. The equipment's minimum surge current capacity shall be:

1. 200kA per mode (L-N, L-G, and N-G).

2.03 BRANCH CIRCUIT PANEL PROTECTION

A. TVSS equipment shall be a multi-stage parallel protector rated for voltage, phase, and the wire, plus ground and be bus-to-bus mounted by electrical equipment manufacturer or externally field mounted as indicated on the drawings provided by electrical equipment manufacturer of the branch panel board.

B. The equipment's minimum surge current capacity shall be:

1. 65kA per mode (L-N, L-G, and N-G).

2.04 MANUFACTURERS

Service Entrance System equipment, Switchboards, Switchgear, and MCC:
Acceptable Manufacturers and Models:

1. Cutler Hammer
2. Square D
3. No other Manufacturers will be accepted.

2.05 PRODUCT DATA

The following information shall be provided:

1. Operation and maintenance information as specified.

2. Warranty specified in paragraph 16445-1.02 E.

PART 3--EXECUTION

3.01 GENERAL

Verify TVSS specified and ratings indicated are furnished. Manufacturer's representative shall visit the site, verify installation and testing, and verify that the TVSS equipment and TVSS installation meets intent of the Contract Documents and manufacturer's warranties and that the guarantees are in effect.

3.02 INSTALLATION

A. Install according to manufacturers recommendations.

B. Lead lengths shall not exceed 18"

C. Electrical equipment manufacturer shall provide integral TVSS.

D. Electrical equipment manufacturer shall authorize and perform all bus taps electrical connections, as necessary.

END OF SECTION

SECTION 16450

GROUNDING SYSTEM

When modifying this specification for use on a project, delete all Notes to Specifier (NTS) after the Specifier reads the NTS. Right click on the "NTS" Style in the listing in the STYLES AND FORMATTING area, click on SELECT ALL _ INSTANCE(S), and depress the DELETE button on the keyboard. Then scroll through the entire document, checking to ensure that all NTS have indeed been deleted.

Edit >Find> bracket "[" for choices, substitutions and blanks to be filled in. Delete unused choices and substitutions, modify font and fill in blanks as appropriate.

PART 1--GENERAL

1.01 DESCRIPTION

This section specifies the system for grounding electrical distribution and utilization equipment, including but not limited to cabinets, motor frames, manholes, instrumentation, metal surfaces of process/mechanical equipment that contain energized electrical components, metal structures and buildings, outdoor metal enclosures, fences and gates.

The Equipment Grounding Conductor shall ground or bond equipment, structures, or equipment frames to the Grounding Electrode System as defined in the National Electrical Code Article 250 and addressed herein.

The minimum size of the Equipment Grounding Conductors installed with the circuit conductors shall be per the National Electrical Code Table 250.122. The circuit grounding conductor size routed with a feeder or branch circuit conductors is as shown on the drawings.

1.02 REFERENCES:

This section contains references to the following documents. They are a part of this section as specified and modified. Where a referenced document contains references to other standards, those documents are included as references under this section as if referenced directly. In the event of conflict between the requirements of this section and those of the listed documents, the requirements of this section shall prevail.

Unless otherwise specified, references to documents shall mean the documents in effect at the time of Advertisement for Bids or Invitation to Bid (or on the effective date of the Agreement if there were no Bids). If referenced documents have been discontinued by the issuing organization, references to those documents shall mean the replacement documents issued or otherwise identified by that organization or, if there are no replacement documents, the last version of the document before it was discontinued. Where document dates are given in the following listing, references to those documents shall mean the specific document version

associated with that date, regardless of whether the document has been superseded by a version with a later date, discontinued or replaced.

Reference	Title
IEEE 81	Guide for Measuring Earth Resistivity, Ground Impedance, and Earth Surface Potentials of a Ground System
IEEE Std 81.2-1991	Guide to Measurement of Impedance and Safety Characteristics of Large, Extended or Interconnected Grounding Systems
NETA - ATS	InterNational Electrical Testing Association Inc. - Acceptance Testing Specifications
NFPA 70	National Electric Code (NEC) Article 250

PART 2-- PRODUCTS

2.01 GROUND CONDUCTORS

The System Ground Conductor shall be soft-drawn, bare annealed copper, concentric stranded, as specified. The minimum sizes shall be as follows, where American Wire Gage (AWG) conductor sizes are not shown or specified:

5 and 15 kV switchgear	2/0 or 4/0 AWG
5 kV motor starters	2/0 or 4/0 AWG
15 kV-5 kV transformers	2/0 or 4/0 AWG
5 kV-480V transformers	2/0 or 4/0 AWG
480V switchgear	2/0 or 4/0 AWG
480V switchboards	2/0 or 4/0 AWG
480V MCC and	2/0 or 4/0 AWG
Cable tray	2/0 or 4/0 AWG
Large motors 250 hp & >	2/0 or 4/0 AWG
Lighting & Power panels	2 AWG
Exposed metal cabinets	2 AWG
Electrical equipment	2 AWG
Buildings and enclosure	2 AWG
Fences and gates	2 AWG
Motors 25 hp to 250 hp	2 AWG
Motors 1 hp to 25 hp	6 AWG

2.02 GROUND RODS

Ground rods shall be copper covered steel, 3/4-inch diameter and 10-feet long. Rods shall have threaded type removable caps so that extension rods of same diameter and length may be added where necessary.

2.03 COMPRESSION CONNECTORS

Compression connections shall be irreversible, cast copper as manufactured by Thomas and Betts, or equal.

2.04 BOLTED CONNECTORS

Bolted connectors shall be Burndy, O. Z. Gedney, or equal.

2.05 WELDED CONNECTORS

Exothermic welding products shall be Erico's Cadweld Plus system with a remotely operated battery powered electronic ignition device and moisture resistant weld metal cup for the required mold, or equal.

2.06 TEST WELLS

Provide concrete test well with cover and connect the ground grid extension using a removable connector.

2.07 EQUIPMENT GROUND BARS

Copper equipment ground bars shall be Erico Eritech EGB Series or equal, sized as required for the installation.

2.08 PRODUCT DATA

Ground resistance readings specified in paragraph 16450-3.05 shall be submitted.

PART 3--EXECUTION

3.01 GENERAL

Grounding system shall be provided in compliance with the NFPA 70 National Electrical Code (NEC). Grounding conductor shall not be used as a system neutral.

Embedded and buried ground connections shall be made by compression connectors utilizing diamond or hexagon dies and a hand compression tool for wire sizes 2 AWG and smaller and a hydraulic pump and compression head for wire sizes 2/0 AWG and larger. Alternate method allowed: exothermic welding using a remote igniter device.

Tools and dies shall be approved for this purpose; dimple compressions are not acceptable. Compression connections shall be prepared in accordance with the manufacturer's instructions. Compression-type lugs shall be used in accordance with manufacturer's recommendations. Exposed ground connections to equipment shall be made by bolted clamps unless otherwise specified. No solder material shall be used in any part of the ground circuits.

Embedded ground conductors and fittings shall be securely attached to concrete reinforcing steel with tie wires and prevented from displacement during concrete placement.

Notify the Construction Manager, Arizona Water Company, two hours prior to backfilling, as each part of the grounding system installed below finished grade is complete and ready for inspection. Non-compliance shall effect the payment schedule for this work.

Grounding conductors extended beyond concrete surfaces for equipment connection shall be extended a sufficient length to reach the final connection point without splicing. Provide grounding fittings, pads, or plates as shown in the electrical details. Minimum grounding conductor extension shall be 3-feet.

Grounding conductors which project from a concrete surface shall be located as close as possible to a corner of the equipment pad, protected by rigid conduit bonded to the grounding conductors, or terminated in a flush grounding plate.

Exposed grounding conductors shall be supported by noncorrosive metallic hardware at 4-foot intervals or less. Grounding conductors for future equipment shall be terminated using a two-hole copper flush mounted grounding plate, Erico Cadweld, Burndy YGF Series, or equal.

Ground conductors entering electrical enclosures shall be bonded to a single ground bus or terminal strip in the enclosure and to metallic raceways within or terminating at the enclosure. Direct ground connections to enclosure chassis or back plate are not acceptable. Prior to making ground connections or bonds, the metal surface at the point of connection shall be cleaned.

Lightning arresters shall be directly connected to the ground grid system using lightning industry braided copper conductors, sized as specified.

Metallic sheaths or shields of shielded power cable shall be terminated by a copper ground bus provided with cable connection for connection to the grounding system.

3.02 RACEWAY GROUND

All service, feeder and branch circuit raceways shall contain a green insulated ground conductor sized per applicable NFPA 70 National Electrical Code (NEC) tables:

1. T250.66 - Grounding Electrode Conductor for Alternating-Current Systems or

2. T250.122 - Minimum Size Equipment Grounding Conductors for Grounding Raceways and Equipment.

Metallic conduits terminating at concentric knock-outs or reducing washers shall be bonded using insulated grounding bushings. Grounding bushings shall be connected to the grounding system using conductors sized in compliance with NEC.

Cable trays shall have 2/0 or 4/0 bare copper ground conductor run on the outside of each tray or tray group of tiered cable tray. Conductor shall be connected to each section or fitting using an approved ground-clamp and supported at 5 foot intervals.

3.03 EQUIPMENT AND ENCLOSURE BONDING

Electrical distribution and utilization equipment enclosure ground bus, motor frames, manholes, metal structures and buildings, outdoor metal enclosures, fences and gates shall be bonded to the grounding system with conductor sizes as specified. Connect the conductor to the metal enclosure using a UL listed connector, where the enclosure does not contain an internal ground bus

Non-electrical equipment with metallic enclosures, that are located outdoor and without a cover or a shade, shall be connected to the grounding system.

3.04 ISOLATED GROUNDING

An isolated ground system shall be installed where required by an equipment manufacturer. The isolated ground conductor shall have green insulation with a yellow stripe and shall be run in the same raceway as the power and neutral conductors. The isolated ground bus shall be kept isolated from neutral and grounding buses.

Where specifically directed by the Engineer and required by an equipment manufacturer, the Contractor shall provide an additional isolated ground conductor from the service or separately derived system to an isolated ground bus bar at each associated distribution point.

3.05 SERVICE AND SEPARATELY DERIVED SYSTEM BONDING

A neutral bonding jumper shall be installed in only one location for each service or separately derived system. The bonding jumper shall be located at the service source or the first immediate distribution point downstream from the source. The neutral and ground buses shall be kept isolated from each other accept where the bonding jumper is installed.

3.06 GROUNDING SYSTEM TESTS

The Contractor shall test the facility grounding system and the building grounding system to determine the ground resistance. The grounding test shall be IEEE Standard 81 using the NETA Fall-of-Potential procedure. A plot of ground resistance readings for each isolated ground rod, ground mat, or ground bus shall be submitted on 8-1/2 x 11 inch size graph paper. Point-to-point resistance measurements are not acceptable.

The current reference rod shall be driven at least 100 feet from the ground rod or grid under test or as recommended by IEEE Standard 81. The measurements shall be made at 10-foot intervals beginning 25 feet from the test electrode and ending 75 feet from it, in direct line between the ground rod or center of grid and the current reference electrode.

A grounding system that shows greater than 2 ohm resistance for the flat portion of the plotted data shall be considered inadequately grounded.

The Contractor shall add additional parallel connected ground rods and/or deeper driven rods until the ground resistance measurements meet the 2 ohm requirement. Additional ground rods will be paid for as extra work where the required numbers exceed that specified when authorized and approved.

Use of salts, water, or compounds to attain the specified ground resistance is not acceptable.

END OF SECTION

SECTION 16460

DRY-TYPE TRANSFORMERS
(600 VOLTS AND LESS)

When modifying this specification for use on a project, delete all Notes to Specifier (NTS) after the Specifier reads the NTS. Right click on the "NTS" Style in the listing in the STYLES AND FORMATTING area, click on SELECT ALL _ INSTANCE(S), and depress the DELETE button on the keyboard. Then scroll through the entire document, checking to ensure that all NTS have indeed been deleted.

Edit >Find> bracket"[" for blanks to be filled in, alternative choices, and provisions that may or may not be included depending on the application. Delete unused alternative choices and provisions as appropriate, fill in blanks, and modify font of the text that is included.

PART 1--GENERAL

1.01 DESCRIPTION

This section specifies dry-type transformers with primary winding rated 600 volts and less used for power distribution, lighting and control purposes as specified or shown.

This section specifies mini-power centers that include the primary transformer protection, transformer, secondary protection and a circuit breaker panel in one package.

This section specifies K-Rated transformer with electro-magnetic shielding.

1.02 REFERENCES

This section contains references to the following documents. They are a part of this section as specified and modified. In the event of conflict between the requirements of this section and those of the listed documents, the requirements of this section shall prevail.

Reference	Title
ANSI/IEEE C57.12.01	General Requirements for Dry-Type Distribution and Power Transformers
ANSI/UL 506	Specialty Transformers
NEMA ST20	Dry-Type Transformers for General Application

1.03 RATINGS AND STANDARDS

Transformers rated:

1. 10 kVA and smaller shall be single phase or as indicated.

2. 15 kVA and greater shall be 3 phase or as indicated.
3. Voltage, frequency, number of phases and kVA as indicated.
4. Conform to ANSI/IEEE C57.12.01 and ANSI/ UL 506.

PART 2--PRODUCTS

2.01 MANUFACTURERS

Manufacturers include:

1. ABB
2. Eaton Cutler-Hammer
3. Square D

Premium grade, high efficiency transformers are specified as standard. An economic evaluation has been done and indicates a payback within 3 to 5 years. If lower first costs are required, specify a 150 degree C temperature rise.

Lower temperature rise avoids hot transformer surface that may harm people that touch the transformer. Consider mounting location away from doors or walkways or consider a wire guard around hot transformer to avoid injury.

Caution: According to NEMA ST20-3.19B:

"The temperature rise on the enclosure of a transformer may exceed 65 degrees C (117 degrees F) above ambient: Provide adequate ventilation around transformers. Guard them from contact by personnel by location or by fence."
The high efficiency transformers will have longer life and sustain emergency overload, operate cooler and will decrease air loads.

AMBIENT TEMPERATURE	*+ WINDING TEMPERATURE RISE*	*+ HOT SPOT*	*= TEMPERATURE CLASS*
40-d C	*80-d C*	*30-d C*	*150-d C*
40-d C	*115-d C*	*30-d C*	*185-d C*
40-d C	*150-d C*	*30-d C*	*220-d C*

2.02 INSULATION

Transformers temperature rise based on 40-degree C ambient temperature:

1. 15 kVA and above: Not exceed **[80] [115] [150]** degree C temperature rise.
2. below 15 kVA: Not exceed **[80] [115]** degree C temperature rise.

2.03 COILS

Transformer coils:

1. Copper.
2. 15 kVA and above: impregnated with varnish.
3. 10 kVA and below: encapsulated.

The single phase 240 x 480-120/240 volt transformer has four windings.
The two primary windings are connected in series for a 480 volt connection.
The secondary windings are connected in series and center-tapped for 120/240 volt service.

2.04 WINDING CONFIGURATION

Transformers shall have electrically isolated primary and secondary windings. Primary and secondary winding configurations shall be as specified or shown. Provisions shall be made to permit separate grounding of the neutral conductor and the enclosure. Single-phase transformers shall be the four winding type.

2.05 TRANSFORMER TAPS

Transformers 15 kVA and above shall be provided with two 2-1/2 percent full capacity taps above normal voltage and four 2-1/2 percent full capacity taps below rated voltage on the primary winding.

2.06 TERMINAL COMPARTMENTS

Terminal compartments shall be sized to permit termination of cables specified. Terminal connections shall be made in the bottom third of the enclosure. The terminals shall be copper and sized for the cable specified.

Caution: According to NEMA ST20-3.19B:
"The temperature rise on the enclosure of a transformer may exceed 65 degrees C (117 degrees F) above ambient: Provide adequate ventilation around transformers. Guard them from contact by personnel by location or by fence."

2.07 ENCLOSURES

Transformers enclosures:

1. 15 kVA and smaller: weatherproof, nonventilated enclosures.
2. Indoor over 15 kVA: dripproof, ventilated enclosures.
3. Outdoor: weatherproof enclosures.

Floor mounted type transformers can be mounted on the wall by using appropriate wall mounting brackets per the electrical details.

Confirm wall with adequately support transformer greater than 15 kVA before specifying maximum sized transformer to be wall mounted; otherwise insert 15 kVA for 25 kVA.

2.08 MOUNTING

Transformers 25 kVA and below shall be suitable for wall mounting and include mounting brackets and hardware. Transformers over 25 kVA shall be floor mounting type.

2.09 NAMEPLATES

Nameplates shall be provided in accordance with the requirements of paragraph 16000-2.04.

2.10 SOUND LEVELS

The sound levels shall not exceed the following values:

kVA	dB
0-9	40
10-45	42
50-450	45
225-300	50
500	54

Single Phase MPC with 480Vac primary and 120/240Vac secondary has limited kVA ratings: 3, 5, 7.5, 10, 15, 25 with limited number of breakers and limited current ratings in their panelboards.

Three Phase MPC with 480Vac primary and 208Y/120Vac secondary has limited kVA ratings: 15, 22.5, and 30 with limited number of breakers and limited current ratings in their panelboards.

The primary and secondary circuit breakers sizes vary for manufactures, consult their literature.

2.11 MINI-POWER CENTERS

Mini-power center (MPC) consists of an encapsulated dry-type transformer, primary and secondary main circuit breakers, and secondary panelboard all in one enclosure.

A. TRANSFORMER RATING:

KVA, primary voltage, secondary voltage, frequency and number of phases shall be as shown on the Drawings.

B. BRANCH CIRCUITS:

Molded case circuit breakers, plug-in thermal magnetic type with number of poles and trip ratings as shown on the Drawings.

C. ENCLOSURE:

Weatherproof, NEMA 3R.

D. MANUFACTURER:

1. ABB
2. Acme Electric Corporation
3. Eaton Cutler Hammer
4. Siemens
5. Square D Company.
6. or equal

Designate non-linear load transformers by adding "K-Factor Rated ____" to power one line drawings or panel schedules where transformers feed panels or include herein.

Use K-Rated transformers to supply panels with harmonic loads for lighting and other loads with electronic switching mitigation.

Use Shielded transfomers to supply panels with instruments and analyzers loads to limit the harmonic interference to sensitive circuits.

Supply lighting and other loads with harmonic content to other non-K rated transformer fed lighting and appliance panels.

2.12 NON-LINEAR LOAD K-FACTOR RATED TRANSFORMER

A. TYPE:

100 percent non-linear load rated specifically designed to handle non-linear loads with double size neutral for harmonic load.

B. K FACTOR:

K= **[4, 13, or 20]**.

2.13 SHIELDED ISOLATION TRANSFORMER

Provide self-cooled two winding type transformer with electrical ratings as shown.

Provide copper or aluminum metal shielding between primary and secondary windings.

Provide electro-static winding shield grounded to the transformer case.

2.14 PRODUCT DATA

The following information shall be provided:

1. Manufacturer's verification that the unit has been built and tested in accordance with the specified ANSI standards.

2. Manufacturer's verification of the sound levels, if different from the specified NEMA ST20 standards.

3. Applicable operation and maintenance information as specified.

4. Manufacturer's product literature.

PART 3--EXECUTION

3.01 GENERAL

Bond transformer enclosures and neutrals together and connect to the ground grid.

3.02 INSTALLATION

Install transformers on walls or floors at locations shown on the Drawings. Install floor mounted transformers on raised concrete bases. Provide sufficient access and working space for ready and safe operation and maintenance.

Mount transformers so that vibrations are not transmitted to the structural parts of the building or to other equipment. Make connections to transformers with flexible conduit.

Adjust tap settings to provide proper voltage at panelboards.

Ground transformer in conformance with the National Electrical Code.

3.03 TESTING

Transformers shall be tested in accordance with Section 16030 – Electrical Acceptance Testing.

**END OF SECTION*

SECTION 16470

LIGHTING AND POWER DISTRIBUTION PANELBOARDS

When modifying this specification for use on a project, delete all Notes to Specifier (NTS) after the Specifier reads the NTS. Right click on the "NTS" Style in the listing in the STYLES AND FORMATTING area, click on SELECT ALL _ INSTANCE(S), and depress the DELETE button on the keyboard. Then scroll through the entire document, checking to ensure that all NTS have indeed been deleted.

Edit >Find> bracket "[" for blanks to be filled in, alternative choices, and provisions that may or may not be included depending on the application. Delete unused alternative choices and provisions as appropriate, fill in blanks, and modify font of the text that is included.

PART 1--GENERAL

1.01 DESCRIPTION

Three phase, four wire 208Y/120 or 480Y/277 volt, dead front, circuit breaker type panelboard with current rating of 600-amperes or less.

Single phase, three wire 120/240 volt, dead front, circuit breaker type panelboards with current rating of 400-amperes or less.

[Provide metal oxide varistor (MOV) surge protective device (SPD) integral within each panelboard that indicates the status and condition of the SPD, tested per NEMA LS-1, rated IEEE C3 Combined Wave of 20kV and 10kA with 200kAIC internal fusing and listed / labeled per UL 1449.]

1.02 REFERENCES

This section contains references to the following documents. They are a part of this section as specified and modified. In the event of conflict between the requirements of this section and those of the listed documents, the requirements of this section shall prevail.

Reference	Title
IEEE	Institute of Electrical and Electronic Engineers
NEMA	National Electrical Manufacturing Association
NFPA 70	National Electrical Code (NEC)
UL 50	Cabinets and Boxes
UL 67	Underwriters Laboratories, Electric Panelboards
UL 489	Molded-Case Circuit Breakers and Circuit Breaker Enclosures
UL 1449	Surge Suppression Devices

PART 2--PRODUCTS

2.01 MANUFACTURERS

Arizona Water Company and the Construction Manager believe the following candidate manufacturers are capable of producing equipment and/or products that will satisfy the requirements of this Section. This statement, however, shall not be construed as an endorsement of a particular manufacturer's products, nor shall it be construed that named manufacturers' standard equipment or products will comply with the requirements of this Section. Candidate manufacturers include:

A. Eaton / Cutler-Hammer: PRL1a and PRL3a Clipper Power Visor Surge Protective Device series

B. Square D: NQOD and NF with internal Surge Protective Devices

2.02 ARRANGEMENT AND CONSTRUCTION

The front of the panel shall have concealed trim clamps and hinges. The locks shall be flush with cylinder tumbler-type with spring loaded door pulls. The fronts shall not be removable with doors in the locked position. Panelboard locks shall be keyed alike.

Gutter space shall be provided on all sides of the breaker assembly to neatly connect and arrange incoming wiring.

Panelboard shall be composed of individually mounted circuit breakers designed to be removable without disturbing other breakers.

A directory holder with clear plastic plate and metal frame shall be mounted on the inside of the door.

2.03 BUS

Bus shall be tin-plated copper and shall have current ratings as shown on the panelboard schedules, sized in accordance with UL 67. Ratings shall be determined by temperature rise test.

The minimum bus size shall be 100 amperes. Panel fault withstand rating shall be not less than the interrupting rating of the smallest circuit breaker in the panel. Series rating is prohibited.

Panelboards shall be provided with a separate ground bus and, where specified, with a full capacity neutral bus. The neutral bus shall be mounted on insulated stand-offs.

2.04 CIRCUIT BREAKERS

Circuit breakers shall be molded-case type provided for the current ratings and pole configurations specified on the panelboard schedule. Circuit breakers shall be bolt-on type. Circuit breakers shall be listed in accordance with UL 489 for the service specified. Load terminals of circuit breakers shall be solderless connectors.

Circuit breakers rated 120/208 volt and 120/240 volt alternating current shall have a minimum interrupting current rating of 18,000 amperes symmetrical at 240 volt AC.

Circuit breakers rated 277/480 volt alternating current shall have a minimum interrupting current rating of 25,000 amperes symmetrical at 480 volt or as specified on the panelboard schedule.

Provide circuit breakers with special features such as ground fault interrupting (GFI), heating air conditioning and refrigeration (HACR) rating, or locking capability as shown on the Drawings or Schedules.

2.05 FINISH

Panelboard cabinet shall be fabricated from hot-dip galvanized steel in accordance with UL 50. Panelboard fronts shall have a gray, baked enamel finish.

2.06 NAMEPLATES

Nameplates shall be provided in accordance with the requirements of Section 16000.

2.07 PRODUCT DATA

The following information shall be provided:

1. Manufacturer's certification that bus bracing is capable of withstanding the specified short circuit condition.

2. Operation and maintenance information as specified.

3. Quantity and rating of circuit breakers provided with each panelboard.

PART 3--EXECUTION

3.01 GENERAL

The Contractor shall type in the circuit description on the circuit directory as shown on the final record drawings or panelboard schedule.

Provide "Circuit Directory and Circuit Identification" in accordance with NEC 408.4. Each circuit shall be of sufficient detail to allow each circuit to be distinguished from other circuits. Circuit identification shall include load location and provide equipment or instrument Tag Number and Tag Description, where shown on the drawings.

3.02 TESTING

Panelboards shall be tested for proper operation and function.

END OF SECTION

SECTION 16500

LUMINAIRES

When modifying this specification for use on a project, delete all Notes to Specifier (NTS) after the Specifier reads the NTS. Right click on the "NTS" Style in the listing in the STYLES AND FORMATTING area, click on SELECT ALL _ INSTANCE(S), and depress the DELETE button on the keyboard. Then scroll through the entire document, checking to ensure that all NTS have indeed been deleted.

Edit >Find> bracket"[" for blanks to be filled in, alternative choices, and provisions that may or may not be included depending on the application. Delete unused alternative choices and provisions as appropriate, fill in blanks, and modify font of the text that is included.

Delete fixtures in 3.04 that are not required for the Project.

PART 1--GENERAL

1.01 DESCRIPTION

This section specifies luminaries (lighting fixtures) features and installation.

1.02 REFERENCES

This section contains references to the following documents. They are a part of this section as specified and modified. In the event of conflict between the requirements of this section and those of the listed documents, the requirements of this section shall prevail.

Reference	Title
NFPA 70	National Electrical Code (NEC)

1.03 WARRANTY

A. EMERGENCY LIGHTING UNIT BATTERIES WARRANTY:

Manufacturer's standard form in which manufacturer of battery-powered emergency lighting unit agrees to repair or replace components of rechargeable batteries that fail in materials or workmanship within specified warranty period: **[Two] [Three]** years from date of Substantial Completion. Provide full warranty for first year and prorated warranty for the remaining warranty period.

B. FLUORESCENT BALLASTS WARRANTY:

Manufacturer's standard form in which ballast manufacturer agrees to repair or replace ballasts that fail in materials or workmanship within specified warranty period for Electronic or Electromagnetic Ballasts: **[Two] [Three]** years from date of Substantial Completion.

C. T8 FLUORESCENT LAMPS WARRANTY:

Manufacturer's standard form, made out to Owner, and signed by lamp manufacturer agreeing to replace lamps that fail in materials or workmanship, f.o.b. the nearest shipping point to Project site, within specified warranty period: **[Two] [Three]** years from date of Substantial Completion.

PART 2--PRODUCTS

2.01 LIGHTING MATERIALS

Lighting materials, including luminaries, lamps, accessories, and hardware, shall conform to the detailed requirements specified herein.

2.02 INTERIOR LUMINAIRES AND COMPONENTS

A. Incandescent, Fluorescent and HID Fixtures: Comply with UL 1598.

B. Sheet Metal Components: Steel, unless otherwise indicated. Formed and supported to prevent warping and sagging.

C. Doors, Frames, and Other Internal Access: Smooth operating, free of light leakage under operating conditions, and designed to permit relamping without use of tools. Designed to prevent doors, frames, lenses, diffusers, and other components from falling accidentally during relamping and when secured in operating position.

D. Diffusers, Covers, and Globes:

1. Acrylic Lighting Diffusers and Other Products: Provide 100 percent virgin acrylic plastic with high resistance to yellowing and physical changes due to aging, exposure to heat and UV radiation.

   a. Lens Thickness: At least 0.125 inch minimum.
   b. UV stabilized.

2. Glass Lighting Diffusers and Other Products: Provide annealed crystal glass, unless otherwise indicated.

2.03 EXTERIOR LUMINAIRES

Complying with UL 1598 and listed for installation in wet locations.

A. SHEET METAL COMPONENTS:

Corrosion-resistant aluminum, unless otherwise indicated. Formed and supported to prevent warping and sagging.

B. HOUSINGS:

Housings shall not warp, sag, or deform in use and shall be rigidly formed, weather- and light-tight enclosures. Provide filter/breather for enclosed luminaries.

C. DOORS, FRAMES, AND INTERNAL ACCESS:

Smooth operating, free of light leakage under operating conditions, and designed to permit relamping without use of tools. Designed to prevent doors, frames, lenses, diffusers, and other components from falling accidentally during relamping and when secured in operating position. Removable doors for cleaning or replacing lenses. Designed to disconnect ballast when door opens.

D. EXPOSED HARDWARE MATERIAL:

Stainless steel.

E. PLASTIC PARTS:

High resistance to yellowing and physical changes due to aging, exposure to heat, and UV radiation.

F. LENSES AND REFRACTORS GASKETS:

Provide heat-resistant and aging-resistant resilient gaskets to seal and cushion lenses and refractors in luminary doors.

2.04 FLUORESCENT ELECTRONIC BALLASTS

Ballasts for F32T8 lamps shall be:

1. High frequency solid state electronic.
2. Instant start, parallel operation.
3. Minimum starting temperature: 50 F.
4. Minimum 0.87 ballast factor.

5. Maximum total harmonic distortion (THD): 10%.

6. Power factor: 95% minimum.

7. Sound rated: A.

8. Ballast case temperature not to exceed 90 degrees Centigrade during normal operation in 30 degrees Centigrade ambient temperature.

9. Certified Ballast Manufacturers' Certification.

Built-in self-resetting thermal actuated device shall remove ballast from line when excessive ballast temperature is reached. UL Class P, CBM certified 100% output.

The conductors between ballasts and lamp holders shall have 1,000 volts insulation includes conductors to and from remote ballasts.

Manufacturers: Advance, MagneTek, Motorola, or equal.

2.05 HIGH-INTENSITY-DISCHARGE LAMP BALLASTS

Comply with NEMA C82.4 and UL 1029. Shall include the following features, unless otherwise indicated.

1. Type: Constant-wattage autotransformer or regulating high-power-factor type.

2. Minimum Starting Temperature: Minus 22 deg F (Minus 30 deg C) for single-lamp ballasts.

3. Normal Ambient Operating Temperature: 104 deg F (40 deg C).

4. Open-circuit operation: Shall not reduce average life.

5. Ballast Fuses: One fuse in each ungrounded power supply conductor, size per manufacturer recommendations.

A. INSTANT-ON QUARTZ SYSTEM:

Automatically switches quartz lamp on when fixture is initially energized and when momentary power outages occur. Automatically turns quartz lamp off when high-intensity-discharge lamp reaches approximately 60 percent light output.

B. LOW-NOISE BALLASTS:

Epoxy-encapsulated models designed to minimize audible fixture noise.

C. HIGH-PRESSURE-SODIUM BALLASTS:

Solid-state igniter/starter with an average life in pulsing mode of 10,000 hours at an igniter/starter-case temperature of 90 deg C.

D. METAL HALIDE BALLASTS:

Pulse start ballasts for lamps of 175 watt or for lamps with larger wattage with constant wattage auto transformer with a crest factor of 1.8 maximum. Provide regulated lag ballast with a crest factor or 1.5 with long life requirements.

2.06 EXIT SIGNS

Comply with UL 924 for sign colors and lettering size.

2.07 EMERGENCY LIGHTING UNITS

A. GENERAL:

Self-contained units complying with UL 924 with the following features:

1. Battery: Sealed, maintenance-free, with minimum 10-year nominal life.

2. Charger: Fully automatic, solid-state type with sealed transfer relay.

3. Wire Guard: Where specified or scheduled, heavy-chrome-plated wire guard.

4. Integral Time-Delay Relay: Holds unit on for fixed interval when power is restored after an outage; permits high-intensity-discharge lamps to restrike.

5. Operation: Turns lamp on when circuit voltage drops to 80 percent of nominal voltage. Lamp disconnects from battery when voltage approaches deep-discharge level. Disconnect lamps from battery, battery recharges, and floats on charger when normal voltage is restored.

2.08 EXTERIOR LIGHTING POLES

A. GENERAL:

Provide lighting poles with pole cap and the necessary fixture mounting hardware. Provide light switch and power outlet as shown on the drawings.

B. FIBERGLASS POLE:

Fiberglass pole finish shall be impregnated in the resin. Submit available colors for selection. Color shall be factory standard brown.

Manufacturer: Cem-Tec, W. J. Whatley, or equal.

C. CONCRETE POLE:

Concrete pole finish shall be natural mold concrete grey.

Manufacturer: Centrecon; Union Metal – Marbelite; or equal.

D. STEEL POLE:

[Tapered, Non-Tapered,] [Round, Square,] [Galvanized, Painted] [Color]

2.09 SITE JUNCTION BOXES

Junction boxes for the distribution of outdoor lighting circuits shall be precast concrete and set flush with the ground. Nominal size shall be approximately 10.5 x 17.25 x 12 inches deep. Lid shall be cast iron with cast inscription: "LIGHTING".

Boxes manufacture: Brooks Products, Christy Concrete Products, Forni Corporation, Utility Vault Company or equal. Example: Brooks catalog No. 3-1/2PB.

2.10 FIXTURE FINISHES

Manufacturer standard unless scheduled or shown.

1. Paint Finish: Applied over corrosion-resistant treatment or primer, free of defects.

2. Metallic Finish: Corrosion resistant.

2.11 PHOTOELECTRIC RELAYS

A. PHOTO-CELLS:

1. Provide UL 773 or UL 773A listed units. Factory mount units to the luminaries.

2. Provide time-delay relays that fail in the on-position, factory set to turn light unit on at 1.5 to 3 foot candles (16 to 32 lux) and off at 4.5 to 10 foot candles (48 to 108 lux) with 15-second minimum time delay. Provide directional lens in front of photocell to prevent fixed light sources to cause turnoff.

3. Provide a cadmium sulfide cell housed in a plug receptacle assembly, three-prong, polarized, locking type. Provide assembly for outdoor mounting and rated for 1800 VA at 120V maximum capacity.

   a. Relay with locking-type receptacle shall comply with NEMA C136.10.

   b. Adjustable window slide for adjusting on-off set points.

2.12 PRODUCT DATA

The following information shall be provided:

1. Operation and maintenance items as specified.

2. Polar plots on 8-1/2 x 11 inch paper providing candlepower vs. angle and foot-lamberts (brightness) vs. angle for longitudinal and transverse axis.

3. Table of utilization factors for calculation of illumination levels by the zonal cavity method.

4. Catalog information describing fixture make, materials, and dimensions.

5. Manufacturers' warranties as specified in paragraph 16500-1.03.

PART 3--EXECUTION

3.01 GENERAL

The location and type of luminaries, associated poles, fixtures, and receptacles are as shown on the drawings.

Labels and marks, except the UL label, shall be removed from exposed parts of the fixtures. Fixtures shall be cleaned when the project is ready for acceptance. Photoelectric cells shall be oriented toward the north.

Raceways, wire, or cable shall be provided in accordance with Division 16. Raceways and wire shall be provided from the fixtures, switches and receptacles to the lighting panel in accordance with the NEC. Underground and outdoor wire splices shall be in accordance with Section 16120.

Fixtures labeled to require conductors with a temperature rating exceeding 75 degrees C shall be spliced to circuit conductors in a separately mounted junction box. Fixture wire shall meet UL and NEC requirements. Fixture shall be connected to junction box using flexible conduit with a temperature rating equal to that of the fixture.

Fixtures shall be aligned and directed to illuminate an area as specified. Fixtures shall be directly and rigidly mounted on their supporting structures. The conduit system shall not be used to support fixtures.

Fixture supports that are welded to steel members shall be treated with rust-resistant primer and finish paint where brackets or supports for lighting fixtures.

Provide manufacturer recommended mounting hardware and brackets.

3.02 WIRE CONNECTIONS

Tighten electrical connectors and terminals according to manufacturer's published torque-tightening values or use torque values specified in UL 486A and UL 486B.

3.03 FIELD QUALITY CONTROL

Inspect each installed fixture for damage then replace damaged fixtures and components. Verify normal operation of each fixture after installation.

Test for Emergency Lighting: Interrupt power supply to demonstrate proper operation. Verify normal transfer to battery power source and retransfer to normal.

Prepare a written report of tests, inspections, observations, and verifications indicating and interpreting results. Retest to demonstrate compliance with specification requirements where adjustments are made. Replace fixtures with damage or corrosion during warranty period.

3.04 LIGHTING FIXTURE SPECIFICATION

Family group:	Exit Sign
Description:	LED, self-diagnostic, dual-voltage emergency sign . Green letters and directional arrows.
Construction:	Housing: Molded black ABS. Stencil faceplate: Opaque 1/8-inch thick high-impact ABS, with stencil-cut letters 6 inches high and 3/4-inch stroke.
Lighting:	Signs shall meet UL visibility requirements. Effective life shall be listed as 10 years minimum. Initial brightness shall average 330 microlamberts (Scotopic). Sign shall be visible at 225 feet, legible at 140 feet. Diffusion panel: 1/8-inch thick acrylic, non-reflective matte surface.
Lamps:	LED.
Directional arrows:	Universal directional arrows--left, right, or both, adjusted as shown.
Electrical:	120/277 Dual voltage
Mounting:	Surface ceiling or wall mounting--see symbols. Provide hardware and canopies as required for back, ceiling, or end wall mounting.
Special:	Mounting height: +80"-+96"AFF. Provide pendant mounts where necessary
Acceptable products:	Lithonia Quantum type, Dual-Lite SLX-60 series or equivalent.

3.04 LIGHTING FIXTURE SPECIFICATION

Family group:	Fluorescent, Corrosion-resistant
Group description:	Industrial indoor, enclosed, surface and pendent, waterproof and chemical-resistant. Nominal 1 foot wide by 4 feet long.
Family members:	FCl: Two 32-watt energy-saving T-8 lamps. FC2: Two 32-watt standard T-8 lamps. Pendent mounted from 1/2 inch RSC threaded stems. Outlet boxes for pendants shall be cast metal with threaded conduit entries. Ball aligners shall be provided. FC-EM: Same as FCl, plus integral emergency power supply.
Construction:	Housing: Nonmetallic housing, injection-molded, high-impact thermoplastic. Finish: Any interior metallic parts shall be stainless steel or zinc-phosphated steel painted with powder-coat white epoxy finish. Gasketing: Between housing and diffuser.
Lighting:	Distribution: General downward. Lens: Impact-resistant patterned acrylic diffuser.
Lamps:	3,500K T-8
Electrical:	Input voltage: **[120] [277]** Ballasts: (Per Section 16500).
Mounting:	Surface or pendant stems.
Special:	UL Damp Location label.
Acceptable products:	RAL NMF type, Columbia LUN series, Holophane HES series or equivalent.

3.04 LIGHTING FIXTURE SPECIFICATION

Family group:	Fluorescent, Hazardous location
Group description:	2-lamp wide fluorescent, nominal 1 foot wide by 4 feet long.
Family members:	
FH1:	Class I, Division 1, explosion-proof. Materials: Copper-free aluminum (0.4 percent) hood, housing, and reflector. Lens: Impact- and heat-resistant clear glass lamp protectors. Finish: Gray epoxy hood, housing and reflector exterior. White baked enamel reflector interior. Mounting: Wall. Provided with wall mounting brackets for 45 degree angle mounting. RAL Catalog No. XP265-4-2L-A, or equivalent.
FH2:	Same as Type FH3, except pendant mounting.
FH3:	Class I, Division 2, enclosed and gasketed, vaportight. Materials: 20-gage steel reflector housing, 14 -gage steel door frame, die-cast aluminum suspension hubs, white urea plastic lamp holders. Lens: 3/16-inch clear tempered glass. Finish: White plasticized reflector housing inside and out. Mounting: Pendant. RAL Catalog No. HEF265-4-2L-TM-A or equivalent.
FHE __:	Same as Type FH3, plus integral emergency power supply.
Lamps:	3,500K T8
Electrical:	Input voltage: **[120] [277]** Ballasts: (Per Section 16500).
Acceptable products:	RAL (see above); LDPI 380 series (FH); Guth Codetite series (FH3); or equivalent.

3.04 LIGHTING FIXTURE SPECIFICATION

Family group:	Fluorescent, Industrial
Group description:	Bare lamp industrial with downlight reflector. Indoor use, nominal 1 foot wide by 4 feet long. Surface and pendent mounted.
Family members:	FI1: 2 lamps wide, 4 foot length. FI2: 2 lamps wide, 8 foot length (4 lamps). FIE: Same as Type FI1, plus integral emergency power supply.
Construction:	Housing: Die-formed code gage steel housing. Finish: White, dry polyester powder finish over phosphate pretreatment.
Lighting	Distribution: General downlight. Reflector: Apertured, with 10 percent uplight. Accessories: **[None] [Wireguard] [Chain Kit,]**
Lamps:	3,500K T8
Electrical:	Input voltage: **[120] [277]** Ballasts: (Per Section 16500).
Mounting:	Surface : Ceiling or unistrut with 1/2-inch RSC threaded stems. Suspended: Factory chains or threaded conduit entries with ball aligners.
Acceptable products:	Lithonia-LA series; Holophane HSM Series; Columbia CSR series; or equivalent.

3.04 LIGHTING FIXTURE SPECIFICATION

Family Group:	Fluorescent, Wrap-around
Group Description:	Surface and pendant fluorescent, wraparound lens.
Family members:	FP1: 2-4' lamps, nominal 6" wide by 4 foot size. FP2: 2-4' lamps, nominal 10" wide by 4 foot size. FP3: 2-4' lamps, nominal 16" wide by 4 foot size. FP4: 2-4' lamps, nominal 16" wide by 4 foot size.
Construction:	Housing: Die-formed code gage steel. Finish: White high gloss baked enamel.
Lighting:	Distribution: General downlight Reflector: Baked white enamel Lens: Flat bottom, refractor low brightness, extruded, 100 percent acrylic prismatic, nominal 0.125 inch thick, linear side prisms, pyramidal bottom prisms.
Lamps:	3,500K T8
Electrical:	Input voltage: **[120] [277]** Ballasts: (Per Section 16500).
Mounting:	Surface, tight to ceiling. Ceiling: Gypsum board/plaster with flush J-box
Acceptable products:	Lithonia-SC type, Columbia EWN series, Holophane HW-series or equivalent.

3.04 LIGHTING FIXTURE SPECIFICATION

Family Group:	Fluorescent, Striplight
Group Description:	Surface fluorescent bare lamp striplight.
Family members:	FS1: 1 lamp wide, 4 foot long (1 lamp) FS2: 1 lamp wide, 8 foot long (2 lamps) FS3: 2 lamps wide, 4 foot long (2 lamps) FS4: 1 lamp wide, 8 foot long (4 lamps)
Construction:	Housing: Die-formed code gage steel channel. Finish: White high gloss baked enamel.
Lighting:	Distribution: General Reflector: None--channel only Lens: None Accessories: **[None, Wireguard, Chain Kit,]**
Lamps:	3,500K T8
Electrical:	Input voltage: **[120] [277]** Ballasts: (Per Section 16500).
Mounting:	Surface : Ceiling or uni-strut with 1/2-inch RSC threaded stems. Suspended: Factory chains or threaded conduit entries with ball aligners.
Acceptable products:	Lithonia C type, Holophane HSM series, Columbia CS series or equivalent.

3.04 LIGHTING FIXTURE SPECIFICATION

Family group:	Incandescent, Emergency
Group description:	Battery-powered emergency lighting unit. Resistant. 90-minute minimum light from integral batteries.
Family members:	IE1: Power unit with batteries, power supply and charger and two lighting heads mounted on top. IE2 Single remote head and single head mounting plate. IE3: Double remote head and double head mounting plate.
Lighting:	Distribution: Adjustable light heads.
Lamps:	5.4 watt, 12 volt sealed-beam krypton, one per head.
Electrical:	Input voltage: 120/277. Integral 12 volt transformer and battery charger.
Mounting:	Power unit wall mounted in custom angle iron bracket assumbly with bottom at +7-1/2 feet.
Acceptable products:	Lithonia ELM2 series; Dual-Lite EDC/SRH series; Holophane Navigator series; or equivalent.

3.04 LIGHTING FIXTURE SPECIFICATION

Family group:	Incandescent, Emergency/Exit
Group description:	Battery-powered combination emergency/exit lighting unit. Resistant. 90-minute minimum light from integral batteries.
Lighting:	Distribution: Adjustable light heads.
Lamps:	5.4 watt, 12 volt sealed-beam krypton, one per head.
Electrical:	Input voltage: 120/277. Integral 12 volt transformer and battery charger.
Mounting:	Power unit wall mounted in custom angle iron bracket assembly with bottom at +7-1/2 feet.
Acceptable products:	Lithonia HQM type, Highlite 'P' series, Dual-Lite HLE series or equivalent.

3.04 LIGHTING FIXTURE SPECIFICATION

Family group:	HID, Corrosion-resistant
Group description:	Enclosed and gasketed industrial fixture for highly corrosive and hazardous areas. Pendant and wall bracket installations.
Family members:	HC1: Surface ceiling mount. Cast housing base with threaded conduit entries and lugs for mounting anchors. Corrosion-resistant enclosed and gasketed. HC2: Same as HCl, except wall bracket mounting. HCE: Same as HCl, plus incandescent quartz lamp that will automatically light for emergency standby.
Construction:	Housing: Cast aluminum. Finish: Polyester powder paint suitable for severe corrosive environments.
Lighting:	Distribution: General downward. Reflector: Symmetrical, patterned borosilicate glass. 1/8-inch minimum wall thickness. Shielding: Full-cutoff (Wall mounted only).
Lamps:	High pressure sodium: 1,900K, CRI 22 (minimum), wattage as scheduled, burning position per manufacturer. . Metal Halide: 4,000K, CRI 70 (minimum), wattage as scheduled, burning position per manufacturer.
Electrical:	Input voltage: **[120] [208] [277] [480]** Ballast: See Section 16500.
Mounting:	Surface mount, with threaded conduit entries.
Special:	All screws shall be stainless steel and captive. Special plant fiber gasketing shall be provided mechanically held in place.
Acceptable products:	RAL SAF series; Holophane Petrolux series; Hubbell Kemlux III series; or equivalent.

3.04 LIGHTING FIXTURE SPECIFICATION

Family group:	HID Downlight
Group description:	Exterior HPS cylinder downlights. Nominal 6 inch round, 12-inch high cylinder.
Family members:	HD1: One [xx]-watt lamp. Mounting: Wall bracket. Catalog No.: NRG-221. HD2: One [xx]-watt lamp. Mounting: Surface ceiling. Catalog No.: NRG-231.
Construction:	Housing: Extruded aluminum. Finish: [xxx].
Lighting	Distribution: Downward cone, strict cutoff. Reflector: Polished parabolic.
Lamps:	High pressure sodium: 1,900K, CRI 22 (minimum), wattage as scheduled, burning position per manufacturer. . Metal Halide: 4,000K, CRI 70 (minimum), wattage as scheduled, burning position per manufacturer. .
Electrical:	Input voltage: **[120] [208] [277] [480]** Ballasts: High power factor for 0 degree F starting.
Mounting:	Wall: Surface mounted bracket Ceiling: **[surface, solid pendant, cord with strain relief]**
Acceptable products:	Gotham CC series; Prescolite LFHL series; or equivalent.

3.04 LIGHTING FIXTURE SPECIFICATION

Family group:	HID, Floodlight
Group description:	Exterior pole-mounted adjustable floodlights, two per pole. Extended and gasketed.
Construction:	Housing: Cast aluminum. Finish: Brown baked enamel finish.
Lighting	Distribution: Controlled flood beam. Reflector: One-piece hydro-formed, polished aluminum, parabolic shape. Shielding: Full-cut-off.
Lamps:	High pressure sodium: 1,900K, CRI 22 (minimum), wattage as scheduled, burning position per manufacturer. . Metal Halide: 4,000K, CRI 70 (minimum), wattage as scheduled, burning position per manufacturer.
Electrical:	Input voltage: **[120] [208] [277] [480]** Ballasts: High power factor rated at -40°C operation.
Mounting:	Pole: Tapered, round, pre-cast spun concrete, with hollow raceway core, for direct bury in earth. 16 foot 4 inch mounting height above finished grade. Concrete aggregate and finish shall be Sonora Gold. Provide pole cap, twin fixture mount, and all necessary mounting hardware.
Special:	Integral photocell at each pole. Provide flush, ground junction box at each pole.
Acceptable products:	Lithonia TFA type; Holophane Preditor series; Kim AFL series; or equivalent.

3.04 LIGHTING FIXTURE SPECIFICATION

Family group:	HID Hazardous location
Group description:	Class I, Division 2, explosion-proof industrial fixture for corrosive and hazardous areas.
Family members:	HH1: Ceiling/surface mounted HH2: Pendant mounted from 3/4 inch RSC threaded stems. Outlet boxes for pendants shall be cast metal with threaded conduit entries. Ball aligners shall be provided
Construction:	Housing: Cast aluminum. Finish: Polyester powder paint suitable for severe corrosive environments.
Lighting:	Distribution: General downward. Reflector: Symmetrical, patterned borosilicate glass. 1/8 inch minimum wall thickness. Shielding: Enclosed and gasketed optical assembly.
Lamps:	High pressure sodium: 1,900K, CRI 22 (minimum), wattage as scheduled, burning position per manufacturer. . Metal Halide: 4,000K, CRI 70 (minimum), wattage as scheduled, burning position per manufacturer.
Electrical:	Input voltage: **[120] [208] [277] [480]** Ballast: See Section 16500.
Mounting:	Surface mount, with threaded conduit entries.
Special:	All screws shall be stainless steel and captive. Special plant fiber gasketing shall be provided mechanically held in place.
Acceptable products:	RAL SAF series; Holophane Petrolux series; or equivalent.

3.04 LIGHTING FIXTURE SPECIFICATION

Family group:	HID Pole-mounted
Group description:	Exterior pole-mounted area light.
Family members:	HP1: One 100 watt lamp. HP2: Same as HP1, plus receptacle. HP3: Same as HP1, plus integral photocell.
Construction:	Housing: Cast aluminum housing and hooded top. Finish: Natural anodized finish.
Lighting:	Distribution: Controlled downlight, IES Type V symmetrical. Shielding: Full cut-off.
Lamps:	High pressure sodium: 1,900K, CRI 22 (minimum), wattage as scheduled, burning position per manufacturer. . Metal Halide: 4,000K, CRI 70 (minimum), wattage as scheduled, burning position per manufacturer.
Electrical:	Input voltage: **[120] [208] [277] [480]** Ballasts: -20 degree F operation.
Mounting:	Pole, 12-foot mounting height, straight, 3-inch OD round fiberglass pole. See paragraph 16500-2.04. Finish to match fixture. Provide anchor bolts, template, form, and reinforcing. Install anchor bolts in concrete structure prior to pour.
Special:	120 volt receptacle at base, where shown.
Acceptable products:	Lithonia KAD series; Holophane Crestwood CW Series; Hubbell Cimarron series or equivalent.

3.04 LIGHTING FIXTURE SPECIFICATION

Family group:	HID Wall-pack
Group description:	Exterior wall bracket area light.
Family members:	HW1: One xx-watt lamp. HW2: Same as HW1 plus integral photocell.
Construction:	Housing: Cast aluminum Finish: Bronze
Lighting:	Distribution: Widespread area distribution. Shielding: Full cut-off.
Lamps:	High pressure sodium: 1,900K, CRI 22 (minimum), wattage as scheduled, burning position per manufacturer. . Metal Halide: 4,000K, CRI 70 (minimum), wattage as scheduled, burning position per manufacturer.
Electrical:	Input voltage: **[120] [208] [277] [480]** Ballasts: High power factor premium ballast for -40° C operation.
Mounting:	Surface wall mounting over a cast box in concrete or concrete block wall, with gasketing between box and fixture.
Acceptable products:	Lithonia TWA type; Holophane Wallpack II Series; Hubbell PVL series or equivalent.

END OF SECTION

SECTION 16754

480 VOLT SERVICE ENTRANCE SECTION

When modifying this specification for use on a project, delete all Notes to Specifier (NTS) after the Specifier reads the NTS. Right click on the "NTS" Style in the listing in the STYLES AND FORMATTING area, click on SELECT ALL _ INSTANCE(S), and depress the DELETE button on the keyboard. Then scroll through the entire document, checking to ensure that all NTS have indeed been deleted.

Edit >Find> bracket"[" for blanks to be filled in, alternative choices, and provisions that may or may not be included depending on the application. Delete unused alternative choices and provisions as appropriate, fill in blanks, and modify font of the text that is included.

SESs herein are based on switchboard construction.
SES that need switchgear construction must be modified by the Specifier.

SESs ***utility billing metering requires a 4-wire system*** *that includes the neutral conductor. Many power distribution systems don't use the 4-wire system where 277-Vac is required, thus after the SES metering, the system uses a 3-wire system for 480Vac without the neutral. Include Section 16445 for additional TVSS requirements and adjust specified requirements herein.*

PART 1--GENERAL

1.01 DESCRIPTION

This section specifies outdoor rated, 480Vac, four-wire, Service Entrance Section (SES) with **[(name of utility)]** power utility metering equipment and main disconnecting means as shown on the drawings.

The SES shall consist of the following:

1. Enclosure Section-1: Power utility metering compartment that meets the **[EUSERC] or [_____]** standards in an outdoor NEMA-3R, non-walk-in enclosure.

2. Enclosure Section-2:

Select one of the following two overcurrent protection means.
Refer to Electrical Design Questionnaire to determine Owner preference.

[a. Includes the fixed insulated-case power circuit breaker with solid state trip "Main" circuit breaker]

[a. **Manual operated spring assist power interrupting air switches with fuses]**

National Electrical Code-2005 (NEC 230.95) requires ground fault protection for services of 1000 amperes or more. Exceptions are noted: refer to the NEC. *Recommend ground fault protection for all power services.*

[b. **Ground fault interrupting system initially set to the maximum setting]**

[c. **Transient voltage surge suppresser (TVSS)]**

1.02 QUALITY ASSURANCE

A. REFERENCES:

This section contains references to the following documents. They are a part of this section as specified and modified. In the event of conflict between the requirements of this section and those of the listed documents, the requirements of this section shall prevail.

Reference	Title
ANSI/IEEE	Definitions and Requirements for 600 Volt Air Switches, Insulators, and Bus Supports
ANSI C37.46	Specifications for Power Fuses and Fused Disconnecting
ANSI C37.47	Specifications for Distribution Fuse Disconnecting Switches, Fuse Supports, and Current-Limiting Fuses
NEMA PB 2	Deadfront Distribution Switchboards
UL 489	Underwriters Laboratory – Molded-Case Circuit Breakers, Molded-Case Switches, and Circuit-Breaker Enclosures
UL 891	Underwriters Laboratory - Deadfront Switchboards
UL 943	Underwriters Laboratory – Ground-Fault Circuit-Interrupters
UL 977	Underwriters Laboratory – Fused Power-Circuit Devices
UL 1066	Underwriters Laboratory – Low Voltage AC and DC Breakers used in Enclosures

B. FACTORY TESTS:

Switchboards shall be tested for operation at the specified voltage and current ratings after assembly. The main circuits shall be given a dielectric test of 2200 volts for 1 minute between live parts and ground, and between opposite polarities. The wiring and control circuits shall be given a dielectric test of 1500 volts for 1 minute between live parts and ground.

Instrument transformers shall have ratio and phase angle tests made in conformance with ANSI C57.13.

1.03 SUBMITTALS

A. The following information shall be submitted. The submittal shall contain a cover sheet, indexed by item, and cross-referenced to the appropriate specification paragraph, and be organized in the following order:

1. A copy of this specification section, with addendum updates included, and all referenced and applicable sections, with addendum updates included, with each paragraph check-marked to indicate specification compliance or marked to indicate requested deviations from specification requirements.

   A check mark shall denote full compliance with a paragraph as a whole. If deviations from the specifications are indicated, and therefore requested by the Contractor, each deviation shall be underlined and denoted by a number in the margin to the right of the identified paragraph, referenced to a detailed written explanation of the reasons for requesting the deviation.

   The Construction Manager, Arizona Water Company, shall be the final authority for determining acceptability of requested deviations. The remaining portions of the paragraph not underlined will signify compliance on the part of the Contractor with the specifications.

   Failure to include a copy of the marked-up specification sections, along with justification(s) for any requested deviations to the specification requirements, with the submittal shall be sufficient cause for rejection of the entire submittal with no further consideration.

2. A copy of the contract document single line diagrams, plan drawing showing SES location, and SES elevation relating to the submitted equipment, with addendum updates that apply to the equipment in this section, marked to show specific changes necessary for the equipment proposed in the submittal. If no changes are required, the drawing or drawings shall be marked *"no changes required"*. *Failure to include copies of the relevant drawings with the submittal shall be cause for rejection of the entire submittal with no further review.*

3. A copy of Specification Sections with addendum updates included, with each paragraph check-marked to indicate specification compliance. *Failure to include copies of the marked-up specification sections with the submittal shall be cause for rejection of the entire submittal with no further review.*

4. Electrical single line, schematic diagrams, and conductor connection diagram.

5. Layout drawings indicating arrangement, dimensions, cable entries, and weights.

6. Manufacturer's product and catalog data indicating equipment specifications and features including interrupting, withstand, and continuous current ratings of all relevant equipment and components. Catalog data shall be edited or "arrowhead" to indicate only the models and options to be provided as part of this specification.

7. Manufacturer's procedure for ground-fault performance test.

B. The SES submittal information shall also be submitted to Power Utility Metering Department for their approval.

C. After Power Utility approval, submit one approved copy with Utility comments to the Engineer.

1.04 PROJECT / SITE CONDITIONS

The equipment shall be designed and manufactured to meet the specified requirements of the environmental and seismic conditions for the Project location.

PART 2--PRODUCTS

2.01 MANUFACTURERS

Manufacturers include:

1. Eaton Cutler-Hammer
2. Square D Company

2.02 SERVICE ENTRANCE SECTION

A. GENERAL:

Coordinate with Power Utility for the correct meter socket, test devices, potential transformers, current transformers, and other items installed in the metering section. Refer to Power Utility Electric Service Requirements, latest edition.

Equipment and materials shall be new and free from defects.

Continuous Current Ratings: **[As shown] [600] [800] [1200] [1600] [2000] [2500] [3000] [4000] [amperes]** at 600Vac.

B. POWER DISCONNECT – FUSED SWITCH DEVICE TYPE:

The high-pressure contact-switch shall provide a stored energy operating mechanism, Class-L fuse coordination for 200,000-ampere root mean squared (rms) interruption and isolation, and self-powered ground-fault protection with time and current field adjustments.

The following components shall be provided:

1. Emergency switch-open button that triggers the stored energy operating mechanism with positive "On-Off" indication and with an entrance door - power disconnect switch safety interlock.

[2. Electric trip for remote control or for ground-fault protection].

[3. Blown Fuse-Protection: Provide single-phase protection when only one fuse is blown].

[4. Test Buttons:

[a. No-trip Ground Fault Test Button: Permits ground fault test without tripping the SES switch].
[b. Test Button: Simulates ground-fault occurrence and trips the SES switch].
[c. Provide an external 120Vac control power source for test function].

B. POWER DISCONNECT - CIRCUIT BREAKER TYPE:

The circuit breaker with adjustable solid-state trip with sizes as indicated. The circuit breaker settings shall be confirmed with a protective device coordination study provided by others.

1. GENERAL: Circuit breakers shall be stored energy type mechanism to provide quick-make, quick-break, trip-free operation:

a. Insulated case UL listed 100 percent continuous current capacity.
b. Ground fault protection shall be provided as specified or indicated.

Circuit breakers shall provide manual switching operation by means of a low-torque handle or pushbutton on the front of the unit. Automatic operation during overload and short circuit conditions shall be provided by solid state or thermal magnetic tripping devices located in the circuit breaker frame as specified on the drawings.

Circuit breakers shall be front accessible, stationary, individually mounted, and shall have short circuit capabilities equal to or greater than the system in which they are installed. Unless otherwise noted, circuit breakers shall have a minimum interrupting current of 65,000 amperes symmetrical RMS at 480 Vac.

2. STATIC TRIPPING DEVICES: Solid state static tripping devices shall consist of current sensors, logic assembly, magnetic latch release, and required interconnecting wiring. Tripping devices shall be automatic and self-contained within the breaker frame and shall not require any external relaying or power supplies.
Tripping functions shall be field adjustable and contain the following tripping characteristics:

a. Overload tripping:

1) Adjustable ampere setting
2) Adjustable long-time delay

b. Short circuit tripping:

1) Adjustable short-time pickup
2) Adjustable short-time delay
3) Adjustable instantaneous pickup

c. Ground fault tripping:

1) Adjustable ground fault pickup
2) Adjustable ground fault delay

C. POWER BUS:

The bus shall be insulated tin-plated copper bus bar. Unless otherwise specified, buses shall be braced to withstand short circuit stresses up to 65,000 RMS amperes.

D. ENCLOSURE:

The enclosure shall be designed for outdoor installation. Each of the enclosure sections shall have a full-length flanged front door.

The structure supporting current carrying parts shall be flame retardant non-tracking glass polyester or porcelain.

E. SAFETY INTERLOCKING:

The inner door shall be hinged and interlocked with the main circuit breaker or fused switch so that the power disconnecting device opens before internal access is possible and the door must be closed before the power disconnecting device may be closed.

F. LIGHTNING ARRESTOR AND SURGE CAPACITOR:

Provide a lightning arrestor and surge capacitor for 480Vac service entrance sections cabinets:

1. Silicon Oxide Varistor (SOV)
2. Energy Rating: 3000 joules per pole.

3. Time Rating: 5 nanoseconds.
4. Resistors: Prohibited.
5. Manufacture and Models:

   a. Delta LA-603 for 3-phase, 3-wire or equal.
   b. Delta LA-603 for 3-phase, 4-wire or equal.
   c. Delta CA-603 for 3-phase, 3 or 4-wire rated at 650 Vac, or equal.

G. TVSS SURGE DEVICE:

Refer to Section 16445 for additional TVSS requirements. Provide a transient voltage surge suppressor (TVSS) rated at:

1. 480Y/277 Vac
2. 150,000 ampere per phase with 5-nanosecond response time
3. Five-year manufacturer warrantee with UL Label.
4. Features:

   a. Fault monitoring.
   b. Trouble monitoring.
   c. Strike counter.

Manufacturer: Eaton/Cutler Hammer or Square D.

H GROUNDING:

A common ground bus shall extend the entire length of the assembly with ground lugs furnished at each end where multiple enclosures are attached together. A ground lug, sized for a 4/0 bare copper ground wire, shall be bolted to the interior of the enclosure.

I. NEUTRAL:

A neutral bus shall extend the entire length of the assembly with lugs furnished at each end where multiple cabinet enclosures are attached together.

J. FINISH:

The finish shall comply with in accordance with Section 16000.

K. NAMEPLATES:

In addition to the manufacturer's identification, an external nameplate shall be provided with equipment number and name as shown.

Each section compartment shall be provided with nameplates indicating utility meter, main breaker circuit name with equipment number and description of load, pull sections, TVSS, and any additional designations describing the compartment function or usage.

Provide machine engraved laminated white phenolic nameplates with black lettering for panel-mounted equipment with the instrument tag number/description in 3/32-inch minimum size lettering and attach to the panel or enclosure with a minimum of two self-tapping 316 stainless steel screws. Provide nameplates for power sources indicating the power loads and nameplates for power loads that indicate the power sources, in accordance with these specifications and the NEC.

L. WIRING:

Internal switchboard wiring shall consist of single conductor SIS 90 degree C copper wire and UL listed for panel wiring. The wire shall be sized to suit load requirements. Minimum size shall be No. 14 AWG.

2.03 PRODUCT DATA

The following product data shall be provided:

1. Applicable operation and maintenance information shall be provided in the product submittal, including:

   a. As-built drawings.

   b. Final, complete, reviewed submittal information.

   c. Manufacturer's **[Circuit Breaker] [Fused Switch Ground-Fault Trip and Single Phase Protection equipment]** instructions.

   d. Manufacturer's TVSS instructions.

2. Results of factory tests conducted.

3. Results of field tests conducted.

2005 NEC 230.95 (C) requires ground-fault protection testing. Refer to paragraph 1.01 B above and delete here if not required.

[4. Ground-fault protection performance test].

PART 3--EXECUTION

3.01 INSTALLATION AND INSPECTION

Coordinate the SES conduit installation with the power utility and request their inspection of the work prior to covering up the work.

[3.02 PROTECTIVE DEVICE SETTING COORDINATION

Refer to Section 16431 for Short Circuit and Protective Device Coordination Studies and Section 16030 for device setting implementation requirements and Arc Flash labeling requirements].

3.03 PROTECTIVE DEVICE SETTINGS

The power utility metering instrument transformer ratios shall be confirmed with the power utility metering department.

The protective devices shown on the drawings are preliminary and are subject to confirmation with the coordination study in Section 16431.

The ground fault protective device and the fuses or tripping devices shall be adjusted to the settings specified in the protective device coordination study in Section 16431 prior to energizing the SES.

3.04 FIELD TESTING

The SES equipment shall be tested in accordance with Section 16030 – Acceptance Testing. Verify the ground fault setting and trip functions. Perform ground-fault protection performance test per Manufacturer instructions. Provide written successful test results.

END OF SECTION

SECTION 16920

600 VOLT MOTOR CONTROL CENTERS

When modifying this specification for use on a project, delete all Notes to Specifier (NTS) after the Specifier reads the NTS. Right click on the "NTS" Style in the listing in the STYLES AND FORMATTING area, click on SELECT ALL _ INSTANCE(S), and depress the DELETE button on the keyboard. Then scroll through the entire document, checking to ensure that all NTS have indeed been deleted.

Edit >Find> bracket "[" for blanks to be filled in, alternative choices, and provisions that may or may not be included depending on the application. Delete unused alternative choices and provisions as appropriate, fill in blanks, and modify font of the text that is included.

PART 1--GENERAL

1.01 DESCRIPTION

A. SCOPE:

This section specifies freestanding, factory assembled 600 (480) volt Motor Control Centers (MCC) with digital power monitors to display the voltage and current load parameters.

B. EQUIPMENT LIST:

MCCs specified herein shall be furnished by a single manufacturer.

1.02 QUALITY ASSURANCE

A. REFERENCES:

This section contains references to the following documents. They are a part of this section as specified and modified. In the event of conflict between the requirements of this section and those of the listed documents, the requirements of this section shall prevail.

Reference	Title
ANSI/NEMA ICS 1	Industrial Control Systems: General Requirements
ANSI/NEMA ICS 18	Motor Control Centers
NFPA 79	Electrical Standards for Industrial Machinery
UL 845	Motor Control Centers

B. CODES AND STANDARDS

Motor Control Centers and all components shall be Underwriters Laboratory listed to UL 845 and shall conform to NEMA ICS-1 and ICS-18 standards.

1.03 SUBMITTALS

The following information shall be provided:

1. A copy of this specification section, with addendum updates included, and all referenced and applicable sections, with addendum updates included, with each paragraph check-marked to indicate specification compliance or marked to indicate requested deviations from specification requirements.

   A check mark shall denote full compliance with a paragraph as a whole. If deviations from the specifications are indicated, and therefore requested by the Contractor, each deviation shall be underlined and denoted by a number in the margin to the right of the identified paragraph, referenced to a detailed written explanation of the reasons for requesting the deviation.

   The Construction Manager, Arizona Water Company, shall be the final authority for determining acceptability of requested deviations. The remaining portions of the paragraph not underlined will signify compliance on the part of the Contractor with the specifications.

   Failure to include a copy of the marked-up specification sections, along with justification(s) for any requested deviations to the specification requirements, with the submittal shall be sufficient cause for rejection of the entire submittal with no further consideration.

2. Elementary connection and interconnection diagrams, in accordance with NFPA 79 and/or NEMA ICS 18 Part 1 standards.

If coordination study requires protection curves before Product Data may be submitted, add the following:

3. *Time current curves for all protection devices.*

4. List of starters and feeder tap compartments indicating the size and type of circuit protection.

5. Interrupting, withstand, and continuous current rating of:

   a. Bus bars
   b. Feeder tap units
   c. Starter units
   d. Main incoming units

6. Nameplate schedule
7. Dimensioned drawings showing conduit access locations
8. Front view elevation with starter and component schedule

PART 2--PRODUCTS

2.01 MANUFACTURERS

Motor Control Centers shall be as manufactured by Cutler Hammer or Square D.

Avoid 4-wire systems if possible. If 277Vac is needed for lighting, then provide a dedicated transformer and panel. Main-Tie-Main ground fault detection becomes a problem when neutral are involved and interconnected.

2.02 SERVICE

Motor control centers shall be rated 480 volts, 60 Hertz, 3 phase, 3 wire **[(no neutral bus) or 4 wire (neutral bus)]** as specified or indicated, suitable for operation at the specified voltages and short circuit capacities.

2.03 STRUCTURE AND CONSTRUCTION

Insert depth dimension for each section; the standard is 20 inches.
Insert width dimension for each section; the standard 20 inches
Additional 6 inches of additional vertical space may be required by Owner's maintenance staff for starter units sized NEMA 1 through 3. In which case, add insert as shown.
NEMA size 1 units are the minimum size permitted in an MCC.

A. STRUCTURE:

Motor control centers shall be made of No. 14 gage steel minimum and, unless otherwise shown, each section shall be 90 inches high by 20 inches wide by 20 inches deep. The individual unit compartments shall be a minimum of **[12] [18]** inches high.

Each section shall have 72 inches for stacking starter units into the sections. **[Size NEMA 1 through 3 FVR and FVNR starter units shall be provided with an additional 6 inches of vertical space.]**

The compartments shall have pan-type doors with a minimum of two quarter-turn hold-down latches; and neoprene gaskets.

A full height vertical wireway, 4 inch wide minimum, but not less than 30 square inches in cross section, shall be provided for each vertical motor control center section. The wireway shall contain full height removable doors. Horizontal wireways shall be provided top and bottom, extending the length of motor control centers.

Bottom channel sills shall be mounted front and rear of the vertical sections extending the full length of the motor control center lineup. A removable lifting angle shall be mounted on top and shall extend the width of the motor control center lineup.

B. CONSTRUCTION:

Motor control centers located indoors shall have NEMA 1, gasketed enclosures.

Motor control centers located outdoors shall be NEMA 1 gasketed in a NEMA-3R weatherproof **[walk-in] [non-walk-in]** enclosure.

Starter units, size 4 and smaller, and feeder tap units less than 225 amperes shall be drawout plug-in construction with hardened, tin-plated copper free-floating stabs, steel spring backups. The door shall have interference tabs which prevent door closure if unit is improperly installed.

Units shall be latched in the position to assure proper bus contact. The unit disconnect device shall be interlocked to prevent removal or reinsertion of a unit when the disconnect is in the "ON" or "TRIPPED" positions.

Fusible switch or circuit breaker disconnect operators shall be capable of accommodating three padlocks for locking in the "OPEN" position.

Hardware for mounting future starter and feeder tap units shall be provided at compartments specified as "FUTURE."

2.04 CONTROL SECTION

[A separate vertical section shall be provided where specified and contain relays or a programmable controller and Operator Interface Station.

The door shall be full height and have a keyed handle with a three-point latch. All control sections shall be keyed alike.]

The control section shall be completely barriered and contain an equipment mounting panel made of 10-gage steel which is supported off the back of the enclosure by mounting studs. The usable depth shall be minimum 17 inches. Width shall be **[30] [36]** inches, or as specified.

Slotted plastic wire ways shall be provided as required to contain the wiring in a neat appearance.

The control section shall include a 115 Vac utility power receptacle for maintenance and an internal switched fluorescent light and provide a separate 115 Vac branch circuit for the programmable controller as shown on the Drawings

2.05 FINISH AND COLOR

The finish and color shall be manufacturer's standard.

2.06 BUS

A. GENERAL:

Bus shall be tin-plated copper with bolted connections between vertical and horizontal bus bars. Access for tightening these connections shall be from the front, without the need for tools on the rear of the connection. Insulated horizontal and vertical bus barriers shall be provided. Barriers shall be fabricated from high-strength, glass-filled polyester resin.

The bus shall be braced to withstand a fault current of **[42,000] [65,000]** amperes, RMS, symmetrical.

B. HORIZONTAL BUS:

The main horizontal bus shall be rated a minimum 600 amperes continuous. Refer to the drawings for ratings.

C. VERTICAL BUS:

Insulated vertical bus is provided as standard for some manufactures (AB, Square D, GE, but optional for others such as Eaton-Cutler Hammer). Insulation provides additional protection from arc propagation along the bus due the a fault.

The vertical bus shall be **[insulated and]** rated a minimum 300 amperes continuous.

D. NEUTRAL BUS:

Where show or specified, the neutral bus shall be provided and have the same rating as the main horizontal bus.

E. GROUND BUS:

A 1/4-inch by 2-inch ground bus shall be provided the full length of the motor control center. Ground bus shall be located at the bottom of the motor control center. Provide a lug to terminate a bare 4/0 AWG copper ground conductors at each end of the ground bus.

2.07 WIRING

A. GENERAL:

Motor control centers shall be provided with NEMA ICS 18 Class **[I] [II]**, Type **[A] [B] [C]** wiring. All starter units shall have terminal blocks for control wiring. Terminal blocks shall be provided for power wiring for starters size 2 and smaller.

Motor control centers shall be provided with all necessary interconnecting wiring and interlocking. **[When a MCC control section is specified on the drawings or schedules, wire directly to the relays or programmable controller's input/output modules as part of the interconnecting wiring.]**

Provide elementary and connection diagrams for each starter unit and an interconnection diagram for the entire motor control center.

B. POWER WIRE:

Power wire shall be copper 90 degrees C insulated, sized to suit load; minimum power wire size shall be No. 12 AWG copper stranded.

C. CONTROL WIRE:

Control wire shall be No. 16 AWG stranded copper wire, rated 90 degrees C machine tool wiring (MTW) and UL listed for panel wiring.

D. TERMINATIONS AND CABLE CONNECTIONS:

1. TERMINALS: Control wiring shall be lugged with ring-tongue or locking spade crimp type terminals made from electrolytic copper, tin-plated.

2. CABLE CONNECTORS: Cable connectors for use with stranded copper wire, sizes No. 8 AWG to 1000 kCmil shall be UL listed. Dished conical washers shall be used for each bolted connection. Connectors shall be reusable and shall be rated for use with copper conductors. Incoming line and outgoing feeder compartments shall be provided with crimp type lugs, 3M Company, Burndy Company, or equal.

E. CONDUCTOR MARKERS:

Markers used for identification shall meet the requirements of Section 16000.

2.08 MAIN AND FEEDER CIRCUIT PROTECTION

A. GENERAL:

Main and feeder tap units shall consist of fused disconnect switches or circuit breakers, as specified or shown. Series ratings for overcurrent devices to meet specified short circuit withstand ratings is prohibited.

B. NOT USED

C. CIRCUIT BREAKERS (THERMAL MAGNETIC):

Thermal-magnetic circuit breakers shall be molded case equipped with toggle type handle, quick-make, quick-break over center switching mechanism that is trip-free so that

breaker cannot be held closed against short circuits and abnormal currents. The tripped position shall be clearly indicated by breaker handle maintaining a position between "ON" and "OFF." All poles shall open, close, and trip simultaneously. Minimum short circuit capacity shall be 42,000 or 65,000 amperes symmetrical.

D. CIRCUIT BREAKERS (MAGNETIC ONLY):

Magnetic circuit breakers shall be molded-case equipped with toggle type handle, quick-make, quick-break over center switching mechanism that is trip-free so that breaker cannot be held closed against short circuits and abnormal currents. The tripped position shall be clearly indicated by breaker handle maintaining a position between "ON" and "OFF." All poles shall open, close, and trip simultaneously. Minimum short circuit capacity shall be **[42,000] [65,000]** amperes symmetrical.

2.09 MOTOR STARTER UNITS

A. GENERAL:

Motor starter units shall be combination type with contactor and thermal magnetic circuit breaker, or motor circuit protector, and solid-state overload unit as indicated on the drawings or specified in the MCC schedule. The starter units shall have a minimum combination UL listing of 42,000 or 65,000 amperes RMS symmetrical or as indicated or specified in the schedule.

B.. NOT USED

C. MOTOR CIRCUIT PROTECTORS:

The molded case motor circuit protector (MCP) shall operate on the magnetic principle with a current sensing coil in each of the three poles to provide an instantaneous trip for short circuit protection. The trip setting shall be adjustable from 700 to 1300 percent of the motor full load amperes from the front of the MCP. The motor circuit protector shall be set at its lowest position at the factory.

D. CONTROL TRANSFORMERS:

Each control transformer shall be rated 480/240-120V, single phase, 2-wires, 60 Hertz. The transformer shall be sized for the load it feeds but shall not be less than the minimum ratings as follows:

NEMA starter size	Minimum transformer volt-ampere rating
1	100
2	150
3	200
4	300

Each control transformer shall be provided with time-delay, slow-blow secondary fuse rated to interrupt 10,000 amperes short circuit at 250 volts AC. Two primary fuses rated to interrupt 200,000 amperes at 600 volts shall be provided on all starters.

Fuse holder for secondary fuse shall be drawout indicating type and mounted on the door of the compartment. Fuse holders for primary fuses shall be fuse clips with full barriers between fuses.

E. CONTACTORS:

Unless otherwise specified or shown, contactors shall be full voltage, 3-pole, 600 volt AC, NEMA Size-1 minimum. Contacts shall be double break, silver-cadmium oxide, and weld resistant. Contacts shall be isolated to prevent arcing. Coils and magnets shall be capable of being removed or replaced without special tools. IEC contactors are prohibited.

Reversing, multispeed, and reduced voltage starters shall have additional contactors, overload relays, and auxiliary relays as required, and shall have mechanically interlocked contactor coils to prevent simultaneous engagement.

F. TRANSIENT VOLTAGE SURGE SUPPRESSOR:

[Refer to Section 16445].

[Provide metal oxide varistor (MOV) surge protective device (SPD) integral within each motor control center that indicates the status and condition of the SPD, tested per NEMA LS-1, rated IEEE C3 Combined Wave of 20kV and 10kA with 200kAIC internal fusing and listed / labeled per UL 1449. Minimun surge rating: 160kA per phase.]

Provide a factory selected transient surge suppressor rated for each motor starter and power contactor encapsulated in a small module and mounted directly to the starter or contactor coil.

G. AUXILIARY CONTACTS:

Contactors shall be equipped with auxiliary contacts, rated 10 amperes at 120 volts AC. Refer to drawings for actual quantities required. As a minimum, each contactor shall be equipped with two normally open and two normally closed electrically isolated auxiliary contacts with the used and auxiliary contacts wired out to terminal blocks.

H. OVERLOAD RELAY:

The solid-state overload relay shall protect the power wiring and motor from excessive overcurrents. The relay shall be ambient compensated and have adjustment from 90 to 110 percent of the normal rating.

The sensing element shall be adjustable Class 20 tripping time of 20-seconds at 600-percent of current setting. The faster overload trip Class 10 (10-seconds at 600-percent of current setting) and the longer overload trip Class 30 (30-seconds at 600-percent of current setting) shall be field set by the installer during the driven equipment startup with the overload settings that are required by the type of motor driven load.

I. TERMINAL BLOCKS:

Terminal blocks shall be screw type rated 600 volts; 20 amperes for control wiring and 30 amperes power wiring with starters Size 3 and larger shall terminate the power leads directly to the contactor.

The number of terminal blocks shall be specified on the drawings. Terminal blocks shall be provided with integral marking strips and shall be permanently marked with the conductor number as specified on the drawings. Internal wiring shall be connected on one side of the terminal block; outgoing conductors shall be connected to the other side.

2.10 MISCELLANEOUS

A. GENERAL:

Control devices such as pushbuttons, selector switches, indicating lights and overload reset pushbuttons shall be mounted on the unit compartment door.

The control devices shall comply with the requirements of Section 16175.

B. ELAPSED TIME INDICATOR:

Where shown or specified, the elapsed time indicator shall be as specified in Section 16175. The indicator shall be mounted on the unit compartment door.

C. NAMEPLATES:

Nameplates shall be provided in accordance with the requirements of Section 16000. Nameplates shall be provided for all cubicles and compartments and identify the load per NEC. A Nameplate shall be provided identifying the motor control center. Provide equipment tag numbers and descriptions as shown.

MCC Space Heater:
Provide a remote 120Vac, 20-ampere circuit for the MCC space heater, if the MCC is in storage.

2.11 SPACE HEATERS AND THERMOSTATS

Motor control centers located outdoors or in a corrosion rated area shall be provided with space heaters and thermostats to maintain the interior temperature at more than 45 degrees F. Space heaters and thermostats shall be rated 120 volts AC. Space heater shall be powered from a control power transformer.

[Where indicated, the space heater circuit shall be wired to terminal blocks to facilitate the connection of an external power supply when the MCC is in storage. Provide a disconnect for isolation of the external power supply.]

2.12 DRY-TYPE TRANSFORMERS

Dry-type power transformers shall **[meet the requirements of Section 16460] [MCC standard product with bolt-on circuit breakers]**. The size and voltage shall be as specified.

2.13 PANELBOARDS

Where specified, panelboards mounted in motor control centers shall be flush mounted and shall have the quantity and size of branch circuit breakers specified. The panelboard shall meet the requirements of Section **[16470] [MCC standard product with [15][20]]** ampere breakers.

Use the next two paragraphs for specifying a small VFD or Soft Start for installation in the MCC.

2.14 ADJUSTABLE FREQUENCY DRIVES

[AFDs mounted in motor control centers shall be flush mounted and shall meet the following requirements.

1. **AFD, ASD, VFD, VSD are interchangeable terms.**

2. **Provide variable or constant torque PWM type drives for motors as indicated on the Drawings. MCC mounted AFD's shall not be applied for motors exceeding 40 horsepower. Include circuit breaker disconnecting means, 3-percent line reactors and cooling fans as required to dissipate the heat into the room.**

3. **Provide a motor terminator to trim the reflected-wave voltage spike from reflected waves from the motor where indicated on the Drawings.**

4. **Provide ratings as indicated.**

5 **Provide microprocessor Operator Interface Station (OIS) on the AFD door.**

6. **EMI/RFI shielding as required for products and wiring.**

7. **Provide current limiting fuses for short circuit protection.**

8. **Provide factory technician for setup, startup services, and training.**

9. **Data communication: None.**

10. **Provide four Form-C relays with 5-ampere contacts for interlocks.**

11. **Provide four programmable relay outputs for on-off status, alarm, "Remote" mode.**

12. **Provide isolated 4-20madc analog input for speed control.**

13. **Provide isolated 4-20madc analog output for speed indication.**

14. **Provide a harmonics filter for the MCC bus. Meet IEEE-519 for voltage and current harmonics with Point-of-Common-Coupling at the MCC bus.]**

2.15 REDUCED VOLTAGE SOLID STATE STARTERS (RVSS)

[RVSS mounted in motor control centers shall be flush mounted and shall meet the following requirements.

1. **Provide ratings as indicated and circuit breaker.**

2. **Provide full-voltage operating contactor. Provide cooling fan and filter, as required.**

3. **Provide EMI/RFI shielding as required for products and wiring.**

4. **Provide current limiting fuses for short circuit protection, as required.**

5. **Provide factory technician for setup, startup services, and training.**

6. **Data communication: None.**

7. **Provide [one] [two] [three][four] Form-C relays with 5-ampere contacts for interlocks.**

8. **Provide selectable kick start and adjustable ramp up and ramp down speeds.**

9. **Provide overload protection with selectable classes of 10, 15, 20, and 30 with three-phase current sensing, initially set for 20 and field adjusted as required for the application by the Factory Engineer.**

10. **Provide the following selectable protection:**

    a. **Under-load**
    b. **Under-voltage**

c. **Over-load**
d. **Over-voltage**
e. **Voltage Unbalance**
f. **Excessive Starts Per Hour**
g. **Phase Reversal**
h. **Stall and Jam**

11. **Provide microprocessor Operator Interface Station (OIS) on the SSS door and display as a minimum:**

    a. **Three-phase current**
    b. **Three-phase voltage**
    c. **Power in kW**
    d. **Power usage in kWh**
    e. **Power factor**
    f. **Elapsed time**

12. **Provide programmable relay outputs for:**

    a. **Fault alarm**
    b. **On-Off status**
    c. **Auto mode or Remote mode status**
    d. **Ready status**
    e. **Full-Speed-Bypass status]**

2.16 SPARE PARTS

One set consisting of the following spare parts shall be provided:

1--set each fuse size and type
10--indicating light bulbs

2.17 PRODUCT DATA

The following information shall be provided:

1. Manufacturer's certification that the following items are capable of interrupting and/or withstanding the specified short circuit condition:

    a. Bus bar bracing
    b. Feeder tap units
    c. Starter units

2. Operation and maintenance information.

3. Dimensions and weights.

4. Installation instructions.

5 Manufacturer's product data.

PART 3--EXECUTION

3.01 GENERAL

The motor control centers shall be erected in accordance with the recommendations of the manufacturer and with the details specified herein.

Cables larger than No. 6 AWG which hang from their vertical connections shall be supported within 2 feet of the connection.

The solid-state overload relay settings shall be implementned by the Contractor with the settings selected based on the actual full load amperes of the motor connected to the starter and the requirements of the motor driven equipment. Refer to the manufacturer's literature for setting the overload relays. Refer to the overload relay paragraph 16920-2.09H for the setting options that available in the overload relay.

The motor circuit protectors shall be adjusted by the Contractor to the lowest setting not causing false tripping.

[Install motor control centers level and plumb on 3-1/2-inch concrete housekeeping pads per the manufacturer's installation instruction.]

3.02 FIELD TESTS

Motor control centers shall be tested in accordance with Section 16030.

END OF SECTION

SECTION 16921

600 VOLT REDUCED-VOLTAGE SOLID-STATE MOTOR STARTERS

When modifying this specification for use on a project, delete all Notes to Specifier (NTS) after the Specifier reads the NTS. Right click on the "NTS" Style in the listing in the STYLES AND FORMATTING area, click on SELECT ALL _ INSTANCE(S), and depress the DELETE button on the keyboard. Then scroll through the entire document, checking to ensure that all NTS have indeed been deleted.

Edit >Find> bracket"[" for blanks to be filled in, alternative choices, and provisions that may or may not be included depending on the application. Delete unused alternative choices and provisions as appropriate, fill in blanks, and modify font of the text that is included.

PART 1--GENERAL

1.01 DESCRIPTION

A. SCOPE:

This section specifies wall mount or freestanding, factory assembled 480 volt reduced voltage solid state (RVSS) motor controllers for soft-start and soft-stop motor control each with Operator Interface Station **[and each with a [Cutler Hammer] [Square D] [Motor Saver 777] motor protection and monitoring relay].**

B. EQUIPMENT:

RVSS's shall be configured as factory assembled enclosed starter assemblies with monitoring and protection devices as shown and as specified herein, furnished by a single manufacturer.

1.02 QUALITY ASSURANCE

A. REFERENCES:

This section contains references to the following documents. They are a part of this section as specified and modified. In the event of conflict between the requirements of this section and those of the listed documents, the requirements of this section shall prevail.

Reference	Title
ANSI/NEMA ICS 1 & 18	Industrial Control Systems: General Requirements
NFPA 79	Electrical Standards for Industrial Machinery
NEMA 250	Enclosures for Electrical Equipment (1000-Volt Maximum)
UL 508	Industrial Control Equipment

B. CODES AND STANDARDS:

The full RVSS assembly shall be Underwriters Laboratory listed and labeled and shall conform to the above referenced standards.

1.03 SUBMITTALS

The following information shall be provided:

1. A copy of this specification section, with addendum updates included, and all referenced and applicable sections, with addendum updates included, with each paragraph check-marked to indicate specification compliance or marked to indicate requested deviations from specification requirements.

   A check mark shall denote full compliance with a paragraph as a whole. If deviations from the specifications are indicated, and therefore requested by the Contractor, each deviation shall be underlined and denoted by a number in the margin to the right of the identified paragraph, referenced to a detailed written explanation of the reasons for requesting the deviation.

   The Construction Manager, Arizona Water Company, shall be the final authority for determining acceptability of requested deviations. The remaining portions of the paragraph not underlined will signify compliance on the part of the Contractor with the specifications.

   Failure to include a copy of the marked-up specification sections, along with justification(s) for any requested deviations to the specification requirements, with the submittal shall be sufficient cause for rejection of the entire submittal with no further consideration.

2. A copy of the contract document control diagrams and process and instrumentation diagrams relating to the submitted equipment, with addendum updates that apply to the equipment in this section, marked to show specific changes necessary for the equipment proposed in the submittal.

   If no changes are required, the drawing or drawings shall be marked *"no changes required"*. Failure to include copies of the relevant drawings with the submittal shall be cause for rejection of the entire submittal with no further review.

3. Catalog and technical data including outline dimensions and weights.

4. Elementary connection and interconnection diagrams as required in paragraph 16921-2.05, in accordance with NFPA 79 and NEMA ICS 18 Part 1 standards.

4. Interrupting, withstand, and continuous current ratings.

5. Nameplate schedule.

6. Dimensioned drawings showing conduit access locations.

7. Front view elevation with starter and component schedule.

8. Panel interior physical layout drawing.

PART 2--PRODUCTS

2.01 MANUFACTURERS

The manufacturers include Cutler-Hammer or Square D.

2.02 SERVICE

RVSS shall be rated 460 volts, plus 15% or minus 10%; 60 Hertz, 3 phase, 3 wire as shown, suitable for operation at the specified short circuit capacities.

2.03 ENCLOSURE

A. GENERAL:

Enclosures shall be wall mount or free standing, front access only, as indicated on the Drawings.

[Free standing enclosures shall include a separate control section completely barriered from the power equipment. Control section shall contain a steel equipment mounting that is supported off the back of the enclosure by mounting studs.]

B. DISCONNECT AND INTERLOCK:

The door to the motor starter enclosure shall be interlocked with an externally operated disconnect handle. Disconnect handle shall be arranged to indicate disconnect position. The disconnect operator handle shall have provisions to accept up to three 3/8-inch shackle padlocks to lock the disconnect in the open position. Provide external cabinet breaker locking mean for Lock-Out / Tag-Out for use by maintenance personnel.

C. ENVIRONMENTAL:

The enclosed starter shall be suitable for continuous full load operation in a **[40] [50]** degrees C ambient temperature.

1. Provide NEMA 1 enclosures for indoor areas. Provide cooling fans and ventilation openings as required.

2. Provide NEMA 3R stainless steel for outdoor and process locations. Provide internal circulation fans and/or air conditioner with stainless steel enclosure and Heresite coating for H_2S corrosion resistance, as required.

D. SEISMIC BRACING:

RVSS cabinets shall conform to the seismic anchorage and bracing requirements of the Project locationi.

2.04 FINISH AND COLOR

The finish and color shall be in accordance with Section 16000, typically ANSI grey.

2.05 WIRING

A. GENERAL:

Include the accepted submittal elementary, connection, and interconnection diagrams with the RVSS unit in a plastic folder in the door print pocket.

B. POWER WIRE:

Internal power wire shall be 90 degree C insulated copper, sized to suit load. The minimum internal cabinet power wire size shall be No. 12 AWG copper stranded.

C. CONTROL WIRE:

Internal control wire shall be No. 16 AWG stranded copper wire, rated 90 degrees C machine tool wiring (MTW) and UL listed for panel wiring.

RVSS cabinet shall have terminal blocks for control wiring for the interconnecting wiring and control interlocking, as shown.

D. CONDUCTOR MARKERS:

Markers used for identification shall meet the requirements of Section 16000.

2.06 OVERCURRENT PROTECTION

A. GENERAL:

Provide circuit breakers for the RVSS disconnecting means with locking feature available from outside the cabinet, to lock the breaker open during maintenance. Where circuit breakers

alone do not meet the minimum short circuit duty requirements specified, provide additional fuses or provide fused disconnect switches .

B. CIRCUIT BREAKERS:

Provide thermal-magnetic (TM) or motor circuit protection (MCP) type circuit breakers, as shown. Minimum short circuit capacity shall be **[XX,000] [42,000] [65,000]** amperes symmetrical. Series ratings, for overcurrent devices to meet specified short circuit withstand ratings, is prohibited.

Provide molded case breakers equipped with toggle type handle, quick-make, quick-break over-center switching mechanism that is trip-free so that breaker cannot be held closed against short circuits and abnormal currents.

The tripped position shall be clearly indicated by breaker handle maintaining a position between "ON" and "OFF." The device power contact poles shall open, close, and trip simultaneously.

Cutler Hammer's IT starters use 24Vdc control power supplies and the following paragraph is structured to allow this feature.

This section calls for an additional 120Vac control transformer for that situation.

2.07 CONTROL POWER SUPPLY:

Control power shall be 120 Vac or 24 Vdc derived from the 480 volt line power supply.

The 120Vac control power supply capacities shall be sized for the loads they feed plus a minimum additional capacity of 100 VA. Provide an additional 120 Vac control power transformer for external interface controls where 24 Vdc control power is used for the starter controls. Provide interposing relays for 120 Vac external controls to operate RVSS 24 Vdc inputs.

Provide each control transformer with time-delay, slow-blow secondary fuse rated to interrupt 10,000 amperes short circuit at 250 volts AC. Provide two primary fuses rated to interrupt 200,000 amperes at 600 volts on the line side of all control power supplies. Fuse holders for primary fuses shall be fuse clips with full barriers between fuses. Fuse holder for secondary fuses shall be drawout indicating type.

2.08 CONTACTORS

A. ISOLATION CONTACTORS:

Provide an output isolation contactor for each RVSS that disconnects the solid state starter from from the motor.

B. FULL SPEED BYPASS CONTACTORS:

Provide a bypass contactor for each RVSS that bypasses the starter thyristors once the output of the starter is at full voltage. Bypass contactors shall be NEMA type that is fully rated for the continuous full load running amperes of the motors being controlled.

If not required, delete this paragraph and paragraph 2.14 E – POWER FACTOR CORRECTION CAPACITORS.

C. POWER FACTOR CORRECTION CONTACTORS:

Provide separate contactors as required where power factor correction is specified. Power factor correction contactors shall be controlled to close after the bypass contactor closes on start up and to open before the bypass contactor opens on shutdown.

Time-Current Ratings:

Check the starter thermal capabilities with any specified manufacturers where starting requirements may be severe.

2.09 OPERATIONAL FEATURES

A. The RVSS shall have programmable starting and stopping including soft start voltage ramp up, current limit start, soft start with start boost, and coast stop and soft stop.

B. The RVSS shall be rated for 400% of the rated current of the starter for 20 seconds at maximum ambient temperature.

C. The RVSS solid state controller operation, for both start and stop time duration, shall be rated for 20 seconds 30-seconds.

2.10 MONITORING AND PROTECTION

A. OPERATOR INTERFACE:

Provide a door mounted graphical user interface with keyboard programming capability, monitoring and diagnostics.

The operator interface station shall allow programming of the operating features of the starter, monitor operating functions, and provide diagnostic information for the specified malfunctions plus any internal diagnostics.

B. MONITORED INFORMATION FEATURES:

Provide indication of the following monitored features:

1. Motor current in amperes
2. Motor kilowatts
3. Motor power factor

4. Motor thermal monitoring, as shown\
5. Motor run time.

C. MOTOR OVERLOAD PROTECTION:

Solid state overload relay shall be solid-state overload type that protects the power wiring and motor from excessive overcurrents. The relay shall be ambient compensated and have adjustment from 90 to 110 percent of the normal rating.

The sensing element shall be adjustable Class 20 tripping time of 20-seconds at 600-percent of current setting. The faster overload trip Class 10 and the longer overload trip Class 30 shall be field set by the installer during the driven equipment startup with the overload settings that are required by the type of motor driven load.

Where motor overload protection is inherent in a motor protection relay that meets the UL/NEC requirements for motor overload protection, the protection specified here may be provided by that relay.

The overload protection specified here shall be functional in the motor starting mode and in the full speed run (bypass) mode. The overload protection in the full speed run bypass mode may be provided via the solid state overload, or by a motor protection relay or via a separate bimetallic overload type relay. Provide overload reset pushbutton on front door of enclosure.

Where shown, provide a motor protection relay with thermal tracking of the motor information. Monitor the starting information, motor cool down characteristics to determine the if motor heating is above a programmable threshold, based on the accumulated starting data.

D. SOLID STATE STARTER PROTECTION:

Provide thermal monitoring for the controller for protection from controller overheating.

The following controls are generic and should be tailored to the requirements of each application.

The control interface for the HOAs with the control inherent in the starter keypad have not been fully investigated. For example, the Allen Bradley SMC Flex starter HMI has start and stop functions built into its keypad.

The controls interface should be fully investigated with the manufacturer of each starter type specified.

Critical: Coordinate usage of HOR selector switches and associated terms with P&IDs.

2.11 CONTROLS

A. GENERAL:

Control and monitoring interface shall conform to the control diagrams as shown in the contract drawings. RVSS contacts for external status monitoring shall be isolated and rated not less than NEMA ICS2 A300. RVSS AC coils shall be suppressed to limit inductive switching surges to less than 200 volts peak. DC coils shall be provided with free-wheeling diodes to limit inductive surges to 28 volts peak.

Status indicators shall be powered indicating lamps as specifed in Section 16175 or indication via the front of panel graphic indicator panel specified herein.

Where the graphic read out panel is used for status, the status indication shall be in the always visible mode and not requiring scrolling to ascertain status.

B. RUNNING STATUS:

Include a minimum of four isolated form C contacts which indicate that the motor is running. Include front of starter panel indication of this status via indicator lamps or the via the graphic display.

C. ALARM STATUS:

Include an isolated contact which indicates a common alarm condition. Include front of starter panel indication of this status via **[indicator lamps] [the graphic display]**.

D. RUN COMMAND:

Configure for local start and stop control in addition to remote command to run.

1. Provide HAND-OFF-REMOTE selector control on the front of the starter panel. Provide an isolated contact for remote indication of the REMOTE status.

2. In the HAND control mode, the RVSS shall start and run in the mode programmed in the front of panel keyboard display interface.

3. In the REMOTE control mode, the RVSS shall start and stop in response to a maintained isolated contact closure from the remote controls system provided by others.

E EMERGENCY STOP COMMAND:

Where indicated on the contract drawings, include provision for an emergency stop input that causes immediate shutdown of the starter and motor.

F FAULT RESET:

Provide a fault reset function either as a discrete pushbutton on the panel door or as a function in the graphical operator interface station panel included with the starter.

The following annunciation specification is for some form of diagnostics and indication similar to what would be expected on a VFD.

2.12 ANNUNCIATION

The RVSS shall be provided with a fault annunciation system to indicate the cause of an alarm or shutdown and alarm indications for internal fault and external fault functions.

The annunciator may consist of individual fault indicator lights or a graphic panel display or a combination of both and include alarm functions associated with the protection of the RVSS. The alarms shall be visible as text alarm indications.

Protective trips require manual reset via a local reset pushbutton or operator interface station faceplate key. External alarm functions such as motor high winding temperature, pump high discharge or low suction pressure shall be included in the annunciation system, where shown on the drawings.

Different manufacturer starters offer different communications options:
Square D Altistart offers Modbus and Ethernet.

The communications requirements may determine which manufacturers are allowable so this should be addressed early in the design and specification process.

The level of control interface implemented via the communications specified herein is a significant design choice and should be addressed early on and coordinated with what is available from the manufacturer of the starters.

Coordinate the data communications based controls with the basic controls specified above.

2.13 COMMUNICATIONS

A. GENERAL:

Provide Modbus data communications provision for control and monitoring the RVSS starter remotely.

[B. COMMUNICATION FAILURE:

In the event of network control communication interruption, the RVSS shall automatically stop. Interruption must last for [15] seconds before automatic stop. Submit proof of compliance with the automatic stop requirement and specific RVSS configuration parameter settings required.]

2.14 MISCELLANEOUS

A. GENERAL:

Refer to the drawings for the devices required for the RVSS motor controllers. Control devices such as pushbuttons, selector switches, indicating lights and overload reset pushbuttons shall be mounted on the unit compartment door. The control devices shall comply with the requirements of Section 16175.

B. TRANSIENT VOLTAGE SURGE SUPPRESSOR:

Provide a factory selected transient surge suppressor rated for each power contactor encapsulated in a small module and mounted directly to the starter or contactor coil.

Provide metal oxide varistor (MOV) surge protective device (SPD) that indicates the status and condition of the SPD, tested per NEMA LS-1, rated IEEE C3 Combined Wave of 20kV and 10kA with 200kAIC internal fusing and listed / labeled per UL 1449. Minimum surge rating: 160kA per phase.

C. TERMINAL BLOCKS:

Terminal blocks shall be screw type rated 600 volts and rated at 20-amperes for control wiring and for internal power wiring.

Terminal blocks shall be provided with integral marking strips permanently marked with the conductor number as specified on the drawings.

Internal wiring shall be connected on one side of the terminal block; outgoing conductors shall be connected to the other side.

D. NAMEPLATES:

Nameplates shall be provided in accordance with the requirements of Section 16000. Nameplate shall be provided identifying the power source name and circuit number, RVSS name/number, and the load equipment tag numbers and descriptions as shown.

E. POWER FACTOR CORRECTION CAPACITORS:

Provide power factor correction capacitors. Locate capacitors **[inside the RVSS enclosure] [in NEMA 1 gasketed enclosures in the electrical room where shown]** with clear identification nameplates. Size capacitors for correction to 0.95 power factor. Coordinate capacitor sizes with Pump Manufacturer motors.

Power factor correction capacitor shall be connected after the motor has reached full speed and the motor is supplied power through the "Run" contactor using a power contactor interlocked with the "Run" controller. The power factor correction capacitor shall be disconnected before the RVSS controller ramps the motor down during the stop sequence.

Provide the power factor correction capacitor with a disconnecting means, fuses for overcurrent protection, with a discharge means and conductors both rated 135-percent of the rated current, grounding means, and markings, as required by the NEC Article-460.

2.15 SPARE PARTS

One set consisting of the following spare parts shall be provided:

1. One set each fuse size and type
2. Ten of each type pilot lamp
3. One of each type replaceable printed circuit board

2.16 PRODUCT DATA

The following information shall be provided:

1. Operating and maintenance information as specified including final reviewed submittals, record of RVSS switch, jumper, and configuration settings, and as-built drawings.

2. Manufacturer's certification and calculations confirming that the equipment complies with the seismic anchorage and bracing requirements of the Project location.

PART 3--EXECUTION

3.01 GENERAL

The RVSS shall be installed in accordance with the recommendations of the manufacturer and as specified herein. The equipment shall be installed and tested in accordance with the manufacturer's written recommendations by a qualified, factory trained manufacturer's representative.

The starter and protective relay settings shall be implementned with the settings selected based on the actual full load amperes of the motor connected to the starter and the requirements of the motor driven equipment. The motor circuit protectors shall be adjusted to the lowest setting not causing false tripping.

Install free standing cabinets level and plumb on 3-1/2-inch concrete housekeeping pads per the manufacturer's installation instruction.

3.02 FIELD TESTING

Each RVSS shall be installed and tested by the Contractor with the assistance of factory-trained engineers in accordance with the manufacturer's specifications and Section 16030, and witnessed.

Manufacturer shall provide factory testing for all devices. Upon satisfactory completion of the testing, the manufacturer shall submit two certified copies of the test report to the AWG and Engineer. All RVSS jumper, switch, and parameter settings shall be recorded and provided as Product Data.

Component failure during testing will require repeating any test associated with the failure or modified components to demonstrate proper operation.

The installation shall be certified.

1. Adjust starter and perform "start-up" tests as recommended by manufacturer. Set parameters as required per the driven equipment requirements and optimize the starting performance to minimize the starting stress on the equipment and motor.

2. Establish proper direction of rotation for the motor controlled by the starter.

3. Verify that the starter will operate properly in the "manual control mode" or in the "remote or automatic mode" from a remote start signal input.

4. Check for excessive heating of the starter and motor at the maximum load rating where available. Report any discrepancies to the Engineer.

3.03 TRAINING

[A minimum of [___] hours of training shall be provided.]

END OF SECTION

SECTION 16922

ADJUSTABLE FREQUENCY DRIVES

When modifying this specification for use on a project, delete all Notes to Specifier (NTS) after the Specifier reads the NTS. Right click on the "NTS" Style in the listing in the STYLES AND FORMATTING area, click on SELECT ALL _ INSTANCE(S), and depress the DELETE button on the keyboard. Then scroll through the entire document, checking to ensure that all NTS have indeed been deleted.

Edit >Find> bracket"[" for blanks to be filled in, alternative choices, and provisions that may or may not be included depending on the application. Delete unused alternative choices and provisions as appropriate, fill in blanks, and modify font of the text that is included.

Select 6-Pulse with harmonic filters or 18-Pulse without harmonic filters for 600 (480) Vac AFDs. Select Constant Torque AFDs to match constant torque loads such as positive displacement pumps. Constant Torque AFDs produce more heat over the speed range. Filtered cooling fans and often AC are required. Consider oversized cabinets to help dissipate the heat, but make the overall sizing a unit responsibility requirement.

Six pulse AFDs are generally specified for 40 hp and smaller and typically have simple input line reactors for harmonic mitigation. The decision to mount AFDs in motor control centers or individually depends on many factors. Small AFDs are commodity items and do not lend themselves to maintenance. If something goes wrong, generally the whole drive gets replaced. Advantages to MCC mounting are a cleaner appearance and uniformity of layout.

Advantages to separate mounting are the ability to keep the AFDs closer to the driven equipment if the environment near the driven equipment is conducive and to easily replace the AFD when out-of-service or a newer model is available.

Unit responsibility can be undermined with MCC mounted AFDs since vendors are required to submit on a single vendor drive manufacturer. This section requires drives by one manufacturer. Modify requirement for MCC mounted AFDs with reliance on unit responsibility: The type of drive whether constant torque or variable torque should be discussed with the driven equipment supplier since the type of drive impacts the drive size (MCC size) and overcurrent protection.

Eighteen pulse AFDs are available for 60 hp and larger and are used to eliminate the harmful harmonic voltage and current waveforms. Cabinets are usually wall or floor mounted.

A harmonics analysis should be performed to evaluate the best combination of six pulse drives, eighteen pulse drives and active or passive harmonic filters to meet the needs of a given application.

Submersible pumps with AFD controllers: 2.02A contains an output reactor and option of Motor Terminator connected at the motor for dV/dT mitigation of voltage spikes on the motor winding insulation. Consider mitigation methods where pump suppliers do not state in their literature that the motor is an inverter duty rated submersible pump motors with the higher insulation

values discussed in 11060NTS. See the Notes to Specifier in Electric Motor Section 11060 and the associated separate Notes to Specifier document for dV/dT and reflected wave discussion.

Motors over 100-feet from AFD: Consider "Motor Terminator" to mitigate the reflected voltage wave, see the option in Article 3.01 or discuss with the AFD manufactures the possibility of lowering the drive carrier frequency. May cause a noisier AFD/Motor system but may mitigate the damage to the equipment. See NTS Table in Part-3 herein.

The addition of harmonics mitigation devices as filters, reactors or using dv/dt mitigation measures can add losses to the AFD increasing heat in the cabinets. Thus the cabinet ventilation and sizing should be a performance based specification for any drive enclosure.

Consider specifying conformal coating on circuit boards for AFDs at Wastewater Plant. Consider using the 1000 Vac shielded cable developed for AFDs in the cable Section 16120.

Do not specify power factor correction capacitors on motors connected to buses that feed adjustable frequency drives. Consider using active harmonic filters if power factor correction is an issue for these applications. Tuned power factor correction capacitors can also be applied. Either of these approaches would need to be reviewed from a cost perspective since the return on the investment in pf correction equipment may not be justified.

PART 1--GENERAL

1.01 DESCRIPTION

A. SCOPE:

This section specifies 480 Vac rated adjustable frequency drive motor controller systems using insulated gate bipolar transistors (IGBT) for pulse width modulation technology (PWM).

The AFDs specified in this section shall be the product of a single vendor and mounted in the specified cabinet enclosure.

The terms AFD (adjustable frequency drive), ASD (adjustable speed drive), VFD (variable frequency drive), and VSD (variable speed drive) are interchangeable for the purposes of this specification.

Refer to the drawings for control and monitoring requirements including special interlocking requirements. Refer to the Control Specification for the control description for the AFD system.

B. SYSTEM REQUIREMENTS:

The AFD system shall convert 460 volt, 60-Hertz nominal input to a suitable voltage and frequency to cause a premium efficient, inverter duty, squirrel-cage induction motor to run at a

speed proportional to an external input analog 4 to 20 ma dc or digital input command as specified for the required AFD speed range.

The AFD system shall include rectifier units, inverter units, control circuitry, protective equipment, input line reactors and output load reactors and other filters and accessories as necessary to provide the specified functions to meet voltage and current harmonics at the specified point of common connection and to mitigate the motor reflected voltage wave. Unless otherwise specified, the point of common connection for AFDs shall be the 480 distribution bus (motor control center, distribution panel, etc.) immediately upstream of the AFD.

The AFD system torque requirement shall match the pump torque requirement. Verify the pump type and select variable torque (VT) or constant torque (CT) as specified in the AFD Schedule. Select 6-Pulse units for small pump motors and 18-Pulse units for large pump motors.

C. AFD SCHEDULE:

Equipment Name & Tag Number	Drive Number	Drive Horse Power	Drive Speed Range	Driven Equipment Specification	AFD Type	AFD Enclosure & Mounting	Distance (ft) from AFD to Driven Equipment Motor
[Name Pump-1 P-1000	**AFD-1000**	**100**	**900-1800**	**11XXX**	**[VT][CT] [6P][18P]**	**NEMA-1 Gasketed, Floor Mount**	**100**
Name Pump-22 P-2022	**AFD-2022**	**500**	**300-1200**	**11XXX**	**[VT][CT] [6P][18P]**	**NEMA-3R Gasketed, Wall Mount**	**20]**

1.02 QUALITY ASSURANCE

A. REFERENCES:

This section contains references to the following documents. They are a part of this section as specified and modified. In the event of conflict between the requirements of this section and those of the listed documents, the requirements of this section shall prevail.

Reference	Title
IEEE 519	IEEE Recommended Practices and Requirements for Harmonic Control in Electrical Power System
NEMA 250	Enclosures for Electrical Equipment (1000 Volts Maximum)
NEMA ICS 2	Industrial Control and Systems: Controllers, Contactors, and Overload Relays Rated 600 Volts
NEMA ICS 6	Industrial Control and Systems: Enclosures
NEMA ICS 7	Industrial Control and Systems: Adjustable-Speed Drives

Reference	Title
NEMA ICS 7.1	Safety Standards for Construction and Guide for Selection, Installation, and Operation of Adjustable-Speed Drive Systems
NFPA 70	National Electrical Code (NEC)
UL Standard 508	Industrial Control Equipment

B. INDUSTRY STANDARDS:

The AFD shall be UL 508 listed and shall conform to the requirements specified in NEMA ICS 2, 6, 7 and 7.1.

C. UNIT RESPONSIBILITY:

The Contractor shall submit letters of certification with the shop drawings from the AFD manufacturer, the motor manufacturer, and the driven equipment manufacturer stating that they have reviewed each application and that the combination will satisfy the application duties required, for the actual motor sizes required.

1.03 PRODUCT HANDLING

AFD units shall be shipped in air-cushion vans to ensure against shipping damage and packed in suitable protective containers. The units shall be inspected upon receipt for damage.

1.04 SUBMITTALS

The following information shall be provided:

1. A copy of this specification section, with addendum updates included, and all referenced and applicable sections, with addendum updates included, with each paragraph check-marked to indicate specification compliance or marked to indicate requested deviations from specification requirements.

   Check marks shall denote full compliance with a paragraph as a whole. If deviations from the specifications are indicated, and therefore requested by the Contractor, each deviation shall be underlined and denoted by a number in the margin to the right of the identified paragraph, referenced to a detailed written explanation of the reasons for requesting the deviation.

   The Construction Manager, Arizona Water Company (AWC), shall be the final authority for determining acceptability of requested deviations. The remaining portions of the paragraph not underlined will signify compliance on the part of the Contractor with the specifications.

   Failure to include a copy of the marked-up specification sections, along with justification(s) for any requested deviations to the specification requirements,

with the submittal shall be sufficient cause for rejection of the entire submittal with no further consideration.

2. A copy of the contract document control diagrams and process and instrumentation diagrams relating to the submitted equipment, with addendum updates that apply to the equipment in this section, marked to show specific changes necessary for the equipment proposed in the submittal.

   If no changes are required, the drawing or drawings shall be marked *"no changes required"*. Failure to include copies of the relevant drawings with the submittal shall be cause for rejection of the entire submittal with no further review.

3. Certificate of Unit Responsibility attesting that the Contractor has assigned, and that the manufacturer accepts, unit responsibility in accordance with the requirements of this Section and paragraph 11000-1.02 C. No other submittal material will be reviewed until the certificate has been received and found to be in conformance with these requirements.

4. Catalog and technical data including outline dimensions, shipping section dimensions, weight, and foundation requirements for all assemblies.

5. Schematic diagrams and wiring connection diagram showing functions and identification of terminals.

6. Voltage and current Total Harmonic Distortion (THD) calculations with line reactors or filter design to mitigate harmonics to meet IEEE-519, if applicable.

PART 2--PRODUCTS

2.01 MANUFACTURES

AFDs shall be installed in the custom enclosures as specified and manufacturers include:

1. Toshiba Series:

   a. W7 18-Pulse for centrifugal fan and pump motors
   b. G7 18-Pulse for slow speed and high-torque motors
   c. Or preapproved equal.

2.02 ENCLOSURES

Provide AFD in NEMA enclosures with fan cooling and conformal coating protection on circuit boards for corrosive atmosphere protection.

A. GENERAL:

Provide enclosures with AFDs and custom control as required for the project and as indicated on the drawings. Each drive shall be designed for stand-alone operation and multiple drives shall not utilize shared components. Review the project site location, elevation, temperature, humidity, plant atmosphere, and load current-torque requirements to size the AFD and its associated enclosure with requirements specified herein and the control and monitoring devices and interlocks as indicated.

Enclosures shall be designed for indoor service. Each AFD system shall be mounted in a NEMA 250 internally force ventilated enclosure with UL approved Class 1 filters on ventilation openings. Enclosures shall be fabricated from 12-gage minimum thickness sheet steel with an interior frame or formed to provide a rigid structure.

Provide enclosure size to allow entry of power source and motor load cables as indicated on the drawings. Submit drawing of the source and load power cable location within the enclosure and indicated barriers from control and instrument wiring.

Door width shall not exceed 30 inches and shall be hung on removable-pin hinges, with three-point latch hardware, and handle latch for 3/8-inch-shackle padlock.

B. FINISH AND COATINGS:

AFD systems enclosures shall be finished with corrosion protection coatings inside and outside for hydrogen sulfide atmospheres. The electrical and electronic assemblies shall have conformal coatings.

2.03 AFD ASSEMBLIES

A. GENERAL:

AFDs shall include the following assemblies:

1. Power disconnect using a thermal magnetic circuit breaker or fused disconnect sized for the specific application by the manufacturer.

2. Line input harmonic filter, as required, for harmonic mitigation.

3. A load reactor for dV/dT mitigation or motor terminator units for addressing dv/dt effects at the motor.

4. Rectifier, direct current bus filter, and inverter.

5. Control circuitry interface with Operator Interface Unit.

6. Output protection including phase overload.

B. AFD FEATURES:

Provided with the following features:

1. Fused control circuit transformer and microprocessor for system logic sequencing functions. Provide fuses with blown fuse indicator lamps.

2. Accept **[4 to 20 mAdc] [digital command input]** speed reference signal.

3. A **[4 to 20 mAdc] [digital]** output signal proportional to inverter output frequency for the speed range specified.

4. Adjustable minimum/maximum frequency limits:

   a. Minimum frequency shall be adjustable from 6 to 40 Hertz.
   b. Maximum frequency shall be adjustable from 48 to 90 Hertz.

5. Adjustable and independent timed linear acceleration and deceleration functions, adjustable from 6 to 20 seconds.

6. Current limiting.

7. Automatic restart.

8. Control Wiring:

   a. 600 volt stranded copper
   b. 90 degrees C color-coded insulation
   c. No. 16 AWG

9. Wiring Identification and Termination: Crimp type wire lugs with sleeve type markers at each termination point and numbered terminal blocks for external connections.

10. **[Electrically isolated discrete output contacts] [Digital signal output]** for ready, running, remote mode status and trouble alarm.

11. Conformal coated terminal blocks for control and signal wires entering and leaving the controller.

12. Control Power: Provide a 120 Vac, triple fused, control power transformer for cooling fans and external control circuits when required. Control circuits shall be isolated from power circuits by distance and by insulated barriers.

13. Provide 120 Vac or 24 Vdc as required for Operator Interface Unit.

C. FUNCTIONAL REQUIREMENTS:

1. SUPPLY POWER: Operate continuously with supply power of 480 volts plus or minus 10 percent, 60 Hertz plus or minus 3 percent and remain on line and operate without damage to the AFD or connected load during a supply power under-voltage variation to the drive up to 85% of its nominal value for 30 milliseconds at full load.

2. ENVIRONMENTAL CONDITIONS:

a.	Ambient temperature:	0 to + 40 degrees C / 104 degrees F
c.	Elevation:	3,300 feet
d.	Atmosphere:	Hydrogen Sulfide

3. LOAD: Capable of driving the specified maximum motor load continuously and under the following conditions:

a. Deliver 110 percent of the specified load for up to 60 seconds in variable torque applications.

b. Deliver 150 percent of the specified load for up to 60 seconds in constant torque applications.

4. EFFICIENCY: Not less than 95 percent at 60 Hertz output driving the specified maximum load at rated torque and speed at 40 degrees C ambient based on measured input power versus output power with all specified components in the system.

5. FREQUENCY AND VOLTAGE REGULATION: Output frequency regulated to within 0.6 Hertz of the signal/output frequency relationship. Output voltage regulated to within 1.0 percent to produce minimum motor heating at any operating frequency within the specified range.

6. FREQUENCY RANGE: AFD shall be capable of continuous operation with the specified load at any frequency between 6 and 60 Hertz unless noted otherwise.

7. SPACE AND AFD ACCESS:

a. Enclosure size shall not exceed the size allotments specified on the drawings nor shall any portion of the AFD system exceed a height of 90 inches.

b. Front accessible only and shall not require rear access.

c. Mount against the wall without any clearance for ventilation or other purposes.

d. Submit AFD in the enclosure drawing with the detail of front door and the internal arrangement, including the feeder and motor cables, and the control cables, and the instrument cable location and terminations.

8. AMBIENT NOISE: Free field noise generated shall not exceed 85 dBA at 3 feet out from any point on the AFD enclosure under any normal operating condition.

9. MOTOR COORDINATION: AFDs shall be configured as required to maintain output voltage peaks at the connected motor windings from reaching levels damaging to the motor insulation. Provide protection integral to the AFD or as protective hardware to be installed at the motors.

Where motor terminator units are provided, they shall be rated for the environment in which they are located. Motor terminator units shall be:

a. Cutler Hammer Reflected Wave Trap (RWT) with the maximum carrier frequency of 12 kilohertz.

b. Square D equal product.

D. PROTECTION AND ANNUNCIATION:

1. OVERCURRENT PROTECTION: Electronic current limit at 150 percent of motor nameplate current and provide motor running overcurrent protection in compliance with NFPA 70.

Enter the required interrupting rating.
Specify AFDs to use current limiting fuses where high fault duty is anticipated.

2. SHORT CIRCUIT PROTECTION: Protected against load faults: bolted faults, phase to phase or phase to ground shall not damage the unit. Fault protection based on a power source short circuit capacity of 42,000 amperes RMS symmetrical at the AFD power input terminals with impedance or current limiting device provided.

3. LINE VOLTAGE: Protected against high and low line voltage on one or more phases.

4. INTERNAL FAULTS: Internal fault monitoring system to detect malfunctions to protect from transient and sustained faults and to limit damage that may be caused.

Motor over-temperature protection should be specified in any inverter duty motor driven by an AFD since motor cooling decreases substantially as speed is reduced.

Verify the speed range and torque requirements are specified in the AFD Schedule.

5. MOTOR OVER TEMPERATURE: Interface to motor over temperature device 2-ampere output contact to shut down and alarm if the motor becomes overheated.

6. FAULT ALARM: Indicates the cause of any shutdown visible on the AFD keypad/display without opening the AFD enclosure. As a minimum, the following faults shall be alarmed:

a. Motor over-temperature
b. Motor overcurrent
c. Incoming power line over/under/unbalanced-voltage
d. AFD over-temperature
e. AFD over-voltage
f. AFD control failure

7. SAFETY FEATURES: The AFD shall include:

a. Padlock main disconnect handle in the "OFF" position.

b. Mechanical interlock to prevent opening enclosure door with disconnect in the "ON" position while the unit door is open.

c. Auxiliary contact on main disconnect to isolate 120Vac control power when fed from external source.

d. Barriers and warning signs on terminals that are energized with the power disconnect "OFF".

e. Separation and insulated barriers between the power and control and instrument products.

f. External emergency stop input

8. REVERSE DIRECTION PROTECTION: Provide protection from inadvertent operation in reverse where reverse rotation can damage the driven equipment.

9. CRITICAL SPEED BYPASS: Provide capability to program speed bypass for minimum two critical speed points.

9. TRANSIENT VOLTAGE PROTECTION: Provide solid state transient voltage protection to meet or exceed ANSI C37.90.

2.04 CONTROL AND MONITORING DEVICES

A. Front door mounted on the AFD enclosure between 36 inches and 72 inches above the floor for each unit:

1. Digital Operator keypad/display.
2. Local-Off-Remote door mounted selector switch.
3. Manual speed control: **[Potentiometer] [OIU]** function

The following internal terminal strips would not be necessary for drives that use digital communications interfaces such as DeviceNet.

4. Internal terminal strips for remote monitoring:

   a. Run status
   b. Trouble / Fail alarm
   c. Auto Mode status
   d. Additional devices as indicated on the drawings.

B. OPERATOR INTERFACE UNIT:

1. Digital keypad/display for monitoring and controlling the drive and to input drive parameter settings with a backlit LCD or equally visible display with a minimum of 16 characters per line.

2. Digital keypad for numerical settings in English engineering units and a guide to parameter settings. Setup operations and adjustments stored in non-volatile EEPROM memory transferable to new and spare boards. Settings shall be protected from unauthorized tampering, revision, or adjustment by a personal lockout code.

3. The digital keypad to provide programming of the drive and include:

   a. Up and Down arrow keys: Increase or decrease output frequency or data values.

   b. Monitor key: Selection of control mode.

   c. Run and Stop keys: Starting and stopping in the manual mode.

   d. Fault clear / Enter keys: Reset fault conditions and enter change

   e. Program key: Enter the program mode and adjust parameters.

   f. Remote / Local Location keys: Operation location and local speed control.

   g. Auto / Manual Mode keys: Program mode.

   h. Number keys: 0 through 9 keys to access specific parameters.

   i. Keypad digital illustrations: English and display the last 5 faults.

   j. Frequency / Motor Speed Indication: Calibrated in Hertz and RPM.

k. Run Status Indication.

l. Ready Status Indication.

m. Fault Alarm Indication.

The following options will be customized to meet the specific design parameters

[C. **CONTROL AND MONITORING COMMUNICATION**

None or:

1. **Additional analog I/O as required for the project**
2. **Additional discrete I/O as required for the project**
3. **Thermistor inputs**
4. **RS-485 serial ports**
5. **DH-485 serial ports**
6. **DeviceNet Network Communication Card**
7. **Profibus Communication Card**
8. **Modbus Communication Card**
9. **Modbus RTU Communication Card**
10. **Interbus Communication Card**
11. **LonWorks Communication Card**
12. **EtherNet Communication Card]**

2.05 KEYPAD FUNCTIONS AND OPERATION

A. Adjustment of the following parameters through the OIU digital keypad:

1. Current limit and torque boost.
2. Maximum voltage level.
3. Minimum/Maximum speed, Volts/Hertz, Upper and Lower limit.
4. Adjustable acceleration rate and deceleration rate.
5. Electronic thermal overload setting.
6. Coast, controlled ramp or DC injection selectable modes of stopping.
7. PID setpoint and time-function selection.
8. Critical frequency avoidance: Three set points selectable from 0 to maximum frequency with set points adjustable from 0-30 Hertz.

2.05 SPARE PARTS

The following spare parts shall be supplied with each type or frame size AFD:

1. Three sets of all replaceable fuses.

2.06 PRODUCT DATA

The following information shall be provided:

1. Operation and maintenance information as specified.

PART 3—EXECUTION

Maximum cable lengths for designing AFD installations are given in the following table. These are general guidelines. The distances will vary by the assumed connected motor insulation withstand levels. See the latest vendor literature for the most up to date distance limitations:

Carrier Frequency	*Max Cable Length 230 Vac Motors*	*Max Cable Length 460 Vac Motors*
3-kHertz	*600 feet*	*125 feet*
6-kHertz	*600 feet*	*100 feet*
9-kHertz	*600 feet*	*85 feet*
12-kHertz	*600 feet*	*75 feet*

3.01 FIELD INSTALLATION

Each adjustable speed controller shall be installed and tested by the Contractor with the assistance of factory-trained pump manufacturer engineer/technician and AFD engineer/technician in accordance with the manufacturer's specifications and Section 16922, and witnessed.

Manufacturers' factory representatives shall provide field testing for devices including the setup of the Operator Interface Unit and the setup of the data communication devices, where used. Upon satisfactory completion of the testing, the Contractor shall submit two certified copies of the test report.

Component failure during testing will require repeating any test associated with the failure or modified components to demonstrate proper operation.

1. Adjust drive and perform "start-up" tests as recommended by manufacturer. Set parameters and carrier frequency for existing motors to avoid insulation damage.

2. Establish proper direction of rotation for the motor controlled by the drive. Verify that the AFD is precluded from operating in a direction that can damage the driven equipment. Change motor or AFD power lead connection and not the AFD direction, where rotation is incorrect.

3. Verify that the drive will operate properly both in the "manual speed control mode" and in the "remote or automatic mode" from a remote speed signal input.

4. Set the maximum "locked rotor" current drawn during start-up recommended by the manufacturer and approved.

5. Set the minimum and maximum speeds and the acceleration and deceleration "ramps" recommended by the Construction Manager, AWC.

6. Verify the motor high temperature switch contacts are wired into the AFD 120 Vac control circuit and will trip on high winding temperature. Test or simulated the alarm and trip feature at the motor for high temperature and for high vibration, where used.

7. Operate the drive at 100 percent speed for one hour and monitor output current. The output current shall remain below the full load current listed on the motor nameplate.

8. Check for excessive heating of the drive and motor. Report any discrepancies.

3.02 HARMONIC TESTING

The Testing Firm shall perform a harmonics acceptant test with all AFD motor controllers operating to verify compliance with IEEE-519 of less than 5 percent voltage THD and 12 percent current THD at the defined point of common connection when running from Power Utility power source with a BMI-Dranetz or equal harmonic test set that provides a hard-copy record of the test results.

The test shall also be run with power sourced from the standby generator where such a power source is being used at the project site. THD shall be limited to a maximum level of 8 percent voltage THD on standby generator operation.

Submit the test performance per latest version NETA ATS Acceptance Testing Specifications. Refer to the electrical testing specification Section 16030.

3.03 TRAINING

A. Two hours of onsite AFD operation and maintenance training shall be provided for AWC's Operation and Maintenance Staff.

B. Manufacturers' factory representative shall conduct the training, upon acceptance of a resume submitted by the trainer.

END OF SECTION

SECTION 17000

GENERAL REQUIREMENTS FOR
INSTRUMENTATION AND CONTROL

When modifying this specification for use on a project, delete all Notes to Specifier (NTS) after the Specifier reads the NTS. Right click on the "NTS" Style in the listing in the STYLES AND FORMATTING area, click on SELECT ALL _ INSTANCE(S), and depress the DELETE button on the keyboard. Then scroll through the entire document, checking to ensure that all NTS have indeed been deleted.

Edit >Find> bracket "[" for blanks to be filled in, alternative choices, and provisions that may or may not be included depending on the application. Delete unused alternative choices and provisions as appropriate, fill in blanks, and modify font of the text that is included.

PART 1--GENERAL

1.01 DESCRIPTION

A. SCOPE:

Contractor shall retian the services of a Qualified System Inegrator.

This section specifies general requirements which are applicable to providing a complete, functional **[process control, instrumentation, communication, and signal systems for the _____]**. The requirements of this section are applicable to all work specified in Division 17 of these specifications.

Electrical requirements applicable to this work include those specified in **[Section 16000 for general electrical requirements; Section 16175 for electrical devices; and Section 16176 for control panels.]**

B. DESCRIPTION OF WORK:

1. INSTRUMENTATION AND CONTROL SYSTEM: The work consists of [_____].

2. PROGRAMMING: Programming shall be **[provided per Section _____]**.

C. DEFINITIONS:

1. GENERAL: Definitions of terminology related to Instrumentation and Industrial Electronic Systems used in the specifications shall be as defined in IEEE 100, ISA S51.1, and NEMA ICS 1.

2. TWO-WIRE TRANSMITTER: A transducer which derives operating power supply from the signal transmission circuit and requires no separate power supply connections. A two-wire transmitter produces a 4 to 20 milliampere current regulated signal in a series circuit with a 24 volt direct current driving potential and a maximum circuit resistance of 600 ohms.

3. FOUR-WIRE TRANSMITTER: A transducer which derives operating power from separate power supply connections. A four-wire transmitter produces a 4 to 20 milliampere current regulated signal in a series circuit with a maximum circuit resistance of 600 ohms. Four-wire transmitters typically require 120Vac or 24Vdc input power supply.

4. GALVANIC ISOLATION: Electrical node having no direct current path to another electrical node. Galvanic isolation refers to a device with electrical inputs and/or outputs which are isolated from ground, the device case, the process fluid, and separate power supply terminals. Inputs and/or outputs may be externally grounded without affecting the characteristics of the devices or providing path for circulation of ground currents.

5. PANEL: An instrument support system which may be a flat surface, a partial enclosure, or a complete enclosure for instruments and other devices used in process control systems including consoles, cabinets and racks. Panels provide mechanical protection, electrical isolation, and protection from dust, dirt, moisture, and chemical contaminants which may be present in the atmosphere.

6. DATA SHEETS: Data sheets shall refer to ISA S20 or ISA TR20.00.01.

7. SIGNAL TYPES: Used in systems specified in Division 17:

a. LOW-LEVEL ANALOG: Signal with full output level of 100 millivolts or less including thermocouples and resistance temperature detectors.

b. HIGH-LEVEL ANALOG: Signals with full output level greater than 100 millivolts but less than 30 volts, including 4 20 mA transmission.

c. DIGITAL CODE: Coded information from the output of an analog to digital converter or digital transmission terminal.

d. PULSE FREQUENCY: Counting pulses emitted from speed or flow transmitters.

e. MODULATED SIGNALS: Signals from modems or low level audio signals. Normal signal level: plus 4 dBm to minus 22 dBm. Frequency range is 300 to 10,000 Hertz.

f. DISCRETE CONTROL OR EVENTS: Dry contact closures and signals monitored by solid state equipment, relays, or control circuits.

g. LOW VOLTAGE DISCRETE CONTROL OR EVENTS: Dry contact closures and signals monitored by solid state equipment, relays, or control circuits operating at less than 30 volts and 250 milliamperes.

h. HIGH-LEVEL AUDIO SIGNALS: Audio signals exceeding plus 4 dBm, including loudspeaker circuits.

i. RADIO FREQUENCY SIGNALS: Continuous wave alternating current signals with fundamental frequency greater than 10 kilohertz.

8. SYSTEMS INTEGRATOR: A firm engaged in the business of detailed control system design and engineering, instrumentation component purchase, system and panel assembly, programming, and implementing the specified process control and industrial automation systems.

1.02 QUALITY ASSURANCE

A. REFERENCES:

This section contains references to the following documents. They are a part of this section as specified and modified. In the event of conflict between the requirements of this section and those of the listed documents, the requirements of this section shall prevail.

Reference	Title
IEEE 100	Standard Dictionary of Electrical and Electronics Terms
ISA S5.4	Instrument Loop Diagrams
ISA S20	Specification Forms For Process Measurement and Control Instrumentation, Primary Elements, and Control Valves
ISA S51.1	Process Instrumentation Terminology
ISA TR20.00.01	Specification Forms for Process Measurement and Control Instruments Part 1: General Considerations
NEMA ICS 1	General Standards for Industrial Control and Systems

B. SYSTEMS INTEGRATOR RESPONSIBILITY:

1. GENERAL

a. The specified control system and instrumentation integration including panel building, instrument calibration, testing, start-up, operational testing, and training shall be performed by a Systems Integrator staffed with qualified personnel, possessing necessary equipment and experience in performing similar installations.

b. The control system components shall, as far as practical, be of one manufacturer.

c. The components, modules, devices, and control system equipment shall be recognized industrial quality products. Recognized commercial or office grade products are prohibited.

d. The overall system performance shall be demonstrated to and accepted by AWC.

e. The application software packages shall be latest versions available, or compatible with existing software currently in use, as specified in Division 17.

2. SYSTEMS INTEGRATOR QUALIFICATIONS:

a. The following Systems Integrators are pre-qualified to perform the work specified in Division 17 without the need to provide Evidence of Experience:

1) Keller Equipment Company, Phoenix, AZ
2) DLT&V, AZ
3) Brown and Caldwell, AZ

b. Contractor-proposed Systems Integrator shall be evaluated based on submittal of the following Evidence of Experience:

1) Submit evidence of experience in performing three similar successful projects in the last five years with one project currently in progress or competed within the last two years.

2) Submit project descriptions with contact names, addresses, and telephone numbers from the project AWC, General Contractor, and Principal Design Firm.

3). Submit organization chart and resumes for proposed project personnel.

4) Submit Training and Certification information. Completion of the following training courses or appropriate portions thereof or possession of the following certifications included with the Systems Integrator's personnel experience requirements described above:

a) PROJECT MANAGER: Control System Engineer (CSE) registration, Professional Engineer (PE) registration.

b) SYSTEMS ENGINEER: Control System Engineer (CSE) registration, Professional Engineer (PE) registration, or completion of the relevant core courses in the Engineering Skills Training program.

c) PROGRAMMER: Control System Engineer (CSE) registration, Professional Engineer (PE) registration.

d) FIELD INSTRUMENT TECHNICIAN: Certified Control Systems Technician (CCST) registration or completion of the relevant core courses in the Technical Skills Training program.

e) Certified training programs, as offered by ISA.

5) Submit financial data for Systems Integrator division when subsidiary to a parent corporation. Include two years of financial data.

a) Financial Statement.
b) Balance Sheet.
c) Dun & Bradstreet Report.

3. PRE-SUBMITTAL CONFERENCE:

a. Schedule a pre-submittal conference with AWC and Construction Manager within 30-calendar days after Contract award to discuss the work, equipment, submittal format, and establish the framework for project coordination and communication.

b. Provide materials 10-days prior to the conference:

1) Instrument Index that lists the devices and instruments specified in Division 17 identify each by tag number, description, function, manufacturer, and model number.

2) Product descriptive literature with a statement that the item is as specified.

3) Proposed equal products with comparative listing of the published specifications for the specified item and the proposed item.

4) Project schedule with deliverables and milestones.

5) Project Control System Block Diagram, when specified.

6) Submit a sample portion of documented PLC and Operator Interface program, when specified.

7) A copy of this specification section, with addendum updates included, and all referenced and applicable sections, with addendum updates included, with each paragraph check-marked to indicate specification compliance or marked to indicate requested deviations from specification requirements.

A check mark shall denote full compliance with a paragraph as a whole. If deviations from the specifications are indicated, and therefore requested by the Contractor, each requested deviation shall be underlined and denoted by a number in the margin to the right of the identified paragraph, referenced to a detailed written explanation of the reasons for requesting the deviation.

The Construction Manager, AWC, shall be the final authority for determining acceptability of requested deviations. The remaining portions of the paragraph not underlined will signify compliance on the part of the Contractor with the specifications.

c. The pre-submittal conference will not replace the Product and Shop Drawing Submittal review process.

C. PROCESS EQUIPMENT COORDINATION:

1. Division 17 specified equipment shall be coordinated for proper operation with equipment related process equipment specified in other Divisions.

2. Equipment shall be integrated, furnished, and installed in conformance with the drawings, specifications, and the recommendations of the equipment manufacturer and the related processes equipment manufacturers.

3. Systems Integrator shall obtain manufacturer's technical information for items of equipment not provided with, but directly connected to, the control system. Provide the necessary coordination and components for correct signal interfaces between specified equipment and the control system.

4. Systems Integrator shall coordinate with project subcontractors and equipment suppliers.

5. Systems Integrator shall provide installation supervision for the duration of the project, a minimum of 24 man-weeks on-site.

6. Conflicts between the plans, specifications, manufacturer/vendor drawings and installation instructions, etc., shall be presented for resolution before proceeding.

[D. FACTORY ACCEPTANCE TEST (FAT):

Refer to Section _____.]

1.03 ENVIRONMENTAL CONDITIONS

A. GENERAL:

Specified data communication and process control equipment shall suitable for operation in indoor locations and in outdoor locations.

B. CORROSIVE LOCATIONS:

Corrosive locations shall be as specified in Division 16.

C. HAZARDOUS (CLASSIFIED) AREAS:

Hazardous areas shall be as specified in Division 16.

D. SEISMIC:

Equipment and supports shall be braced for the seismic zone where the Project is located.

1.04 FUNCTIONAL REQUIREMENTS

A. GENERAL:

The instrumentation and control system functions are shown on the drawings and specified in subsequent sections of Division 17. The Systems Integrator drawings and integration practices shall be as defined in IEEE 100, ISA S51.1, and NEMA ICS 1.

B. SUBMITTAL DRAWINGS:

1. GENERAL: The drawings included in the project manual are functional in nature and do not show exact locations of equipment or interconnections between equipment. The Contractor's Systems Integrator shall prepare detailed installation drawings as specified below.

Drawings prepared in the current version of AutoCAD with borders and title blocks identifying the project, system, revisions to the drawing, and type of drawing.

Each revision of a drawing shall include the date and description of the revisions. Drawing prints shall be 11" x 17" with a minimum lettering size of 1/8". **[Drawings shall be generated using AWC furnished drawing borders and title blocks, and in adherence to AWC's drawing standards_____]**

Diagrams shall carry a uniform and coordinated set of wire numbers and terminal block numbers in compliance with panel wiring, Section 16176 and Section 17110, to permit cross-referencing between contract documents and the drawings prepared by the Contractor.

2. CONNECTION DIAGRAMS: Show components of a control panel in an arrangement similar to the actual layout of the panel including internal wiring between devices within the panel. Show terminal blocks used for internal wiring or field wiring, identified as such. Indicate insulation color code, signal polarities, and wire numbers and terminal block numbers.

3. INTERCONNECTION DIAGRAMS: Show panels, panel devices, and field devices with wire numbers, cable numbers, raceway numbers, terminal box numbers, terminal block numbers, panel numbers, and field device tag numbers.

4. ELEMENTARY OR SCHEMATIC DIAGRAM: Shows, by means of graphic symbols, the electrical connections and functions of a specific circuit arrangement. Provide schematics for internal panel power distribution, lighting, and any panel HVAC.

5. ARRANGEMENT, LAYOUT, OR OUTLINE DRAWINGS: Show the dimensioned external and interior control panel views with components and Bill of Material. Provide panel heat load calculations, and indicate cooling or ventilation provisions as required.

6. [NETWORK BLOCK DIAGRAM: A network block diagram is a diagram of the overall SCADA system, with annotated boxes to show the primary network components (controllers, hubs, switches, computers, displays), and annotated interconnecting lines that show the system communication media and communication protocols].

7. [LOOP DIAGRAMS: Provide loop diagrams for analog and discrete loops interconnected into the control system circuits:

a. Prepare per ISA S5.4 – Loop Diagrams using the Example Loop Diagrams where included.

b. Show device element wiring of the system.

c. Show circuits for hardwired device interlocks.

d. Show circuit cable and wire cable numbers, signal polarities, and terminal block numbers.]

1.05 SUBMITTALS

The following information shall be provided:

1. A copy of this specification section, with addendum updates included, and all referenced and applicable sections, with addendum updates included, with each paragraph check-marked to indicate specification compliance or marked to indicate requested deviations from specification requirements. A check mark shall denote full compliance with a paragraph as a whole.

   If deviations from the specifications are indicated, and therefore requested by the Contractor, each requested deviation shall be underlined and denoted by a number in the margin to the right of the identified paragraph, referenced to a detailed written explanation of the reasons for requesting the deviation.

   The Construction Manager, AWC shall be the final authority for determining acceptability of requested deviations. The remaining portions of the paragraph not underlined will signify compliance on the part of the Contractor with the specifications.

   Failure to include a copy of the marked-up specification sections, along with justification for requested deviations from the specification requirements, with the submittal shall be sufficient cause for rejection of the entire submittal with no further consideration.

2. Detailed product literature, showing product specifications and model number breakdown. Mark to denote features and options included. Include only the applicable pages.

3. Manufacturer's installation manual excerpts, as to be used for this project:

   a. Installation details/drawings.
   b. Electrical connection diagrams
   c. Calibration procedures.

4. Drawings and diagrams specified in paragraph 17000-1.04 B.

5. Nameplate list with material, tag number and description as specified herein.

6. Systems Integrator Evidence of Experience per paragraph 17000-1.02 B 3.

7. Data Sheets in accordance with ISA 20 for each instrument. Identical instruments may be submitted with one common ISA Data Sheet and accompanying tag list.

Review the submittal requirements specified in other Division 17 Sections.

PART 2--PRODUCTS

2.01 MATERIALS AND QUALITY

Equipment material shall be new, free from defects, and industrial-grade, as specified. Each type of instrument, instrument accessory, and device used throughout the work shall be manufactured by one firm, where possible.

Electronic equipment shall be of solid-state construction with printed or etched circuit boards of glass epoxy of sufficient thickness to prevent warping.

Printed circuit boards in field mounted equipment shall be coated with 2 mils of conformal coating in compliance with MILSPEC MIL-I-46058C.

2.02 NAMEPLATES

Nameplates shall be provided for all field mounted instrument, analyzer, or equipment specified in Division 17. Nameplate lettering shall include the equipment or instrument loop title and the instrument or equipment tag number, where nameplate engraving is not specified or shown. Nameplates shall be **[machine engraved black phenolic with white] [stamped stainless steel with]** 5/32-inch high lettering, as minimum, unless otherwise specified or shown. Nameplate wording may be changed without additional cost or time, if changes are made prior to commencement of engraving.

Nameplates shall be attached to support hardware with a minimum of two self-tapping type 316 stainless steel screws in a readily visible location so the nameplate will remain to identify the service when the device is removed. Field instrument namplates shall be attached with braided stainless steel straps where not stand mounted.

2.03 PRODUCT DATA

The following Product Data shall be provided.

1. Record drawings specified by paragraph 17000-1.04 B and the schedules included in Division 17 shall be provided in the latest AutoCAD format and PDF format on CD.

Provide record drawing prints of all drawings following project start-up, but prior to acceptance of the work showing the final constructed state of the instrumentation and control systems.

2. Operating and maintenance information shall be provided. Include the following in each Operation and Maintenance manual:

   a. Final reviewed Submittals, including revised as-built record drawings.

   b. Manufacturer's operation and maintenance instructions, edited for this project.

   c. Written record of menu configuration, jumpers, switch settings, and other configurable parameters for each instrument.

PART 3--EXECUTION

3.01 INSTALLATION

A. GENERAL:

Equipment shall be installed in locations that are accessible for operation and maintenance services. Equipment not accessible shall be reinstalled at no cost to AWC.

Installation, calibration, settings, and testing procedures are specified in Section 17000, Section 17200 – Instrument Index Part 3 Execution, and subsequent sections of Division 17

B. FIELD EQUIPMENT:

Equipment shall be provided with ports and adjustable items accessible for in-place testing and calibration. Install equipment between 48 inches and 60 inches above the floor or permanent work platform. Equipment shall be mounted to avoid shock or vibration that may impair operation. Equipment shall be mounted for unobstructed access and walkways. Equipment support systems shall not be attached to handrails, process piping or mechanical equipment.

Instruments and cabinets supported by concrete walls shall be spaced 5/8 inch by framing channel between instrument or cabinet and wall. Block wall shall have additional installation supports, as required, to avoid damage to the wall. Equipment supports shall be hot-dip galvanized after fabrication or shall be 316L stainless steel, as shown or specified.

Support systems including panels shall be designed to prevent deformation greater than 1/8 inch in any direction under the attached equipment load and under an external load of 200 pounds.

In wet or outdoor areas, conduit penetrations into instrument housing shall be made through the bottom (preferred) or side of enclosures to minimize water entry from around or

from inside of conduits. Provide conduit hubs for connections and waterproof mastic for moisture sealant.

Nameplates shall be provided for all field mounted equipment. Nameplates shall be attached to support hardware with a minimum of two self-tapping Type 316 stainless steel screws in a readily visible location, but such that if the field device is changed out, the nameplate will remain to identify the service.

C. ELECTRICAL POWER CONNECTIONS:

Equipment electric power wiring shall comply with Division 16. Power disconnect switches shall be provided within sight of equipment and labeled to indicate the specific equipment served and the power source location. "Within sight of" is defined as having an unobstructed view from the equipment served and within 50 feet of the equipment served.

Equipment power disconnect switches shall be mounted between 36 inches and 72 inches above the floor or permanent work platform. Where equipment location requirements cannot be met by a single disconnect switch, provide two disconnect switches: one at the equipment and one at the work platform.

Provide a surge arrestor on each 120 volt AC disconnect switch serving equipment located outdoors. Surge arrestor shall be Telematic, LP Series or equal.

D. SIGNAL CONNECTIONS:

Equipment electric signal connections shall be made on terminal blocks or by locking plug and receptacle assemblies. Flexible cable, receptacle and plug assemblies shall be used where shown or specified.

Jacketed flexible conduit shall be used between equipment and rigid raceway systems. Flexible cable assemblies may be used where plug and receptacle assemblies are provided and the installation is not subject to mechanical damage in normal use. The length of flexible conduit or cord assemblies shall not exceed 2 feet, except where sufficient length is required to allow withdrawal of instruments for maintenance or calibration without disconnection of conduit or cord assemblies.

3.02 FIELD TESTS AND INSPECTIONS

A. DELIVERY INSPECTION:

The Contractor shall notify the Construction Manger, AWC upon arrival of any material or equipment to be incorporated into the work. The Contractor shall remove protective covers or otherwise provide access in order that AWC's Representative may inspect such items.

B. INSPECTION AND INSTALLED TESTS:

Refer to Section 17030 – Process Instrumentation and Control System Testing.

END OF SECTION

SECTION 17030

PROCESS INSTRUMENTATION
AND CONTROL SYSTEM TESTING

When modifying this specification for use on a project, delete all Notes to Specifier (NTS) after the Specifier reads the NTS. Right click on the "NTS" Style in the listing in the STYLES AND FORMATTING area, click on SELECT ALL _ INSTANCE(S), and depress the DELETE button on the keyboard. Then scroll through the entire document, checking to ensure that all NTS have indeed been deleted.

Edit >Find> bracket "[" for blanks to be filled in, alternative choices, and provisions that may or may not be included depending on the application. Delete unused alternative choices and provisions as appropriate, fill in blanks, and modify font of the text that is included.

PART 1--GENERAL

1.01 DESCRIPTION

This section specifies Contractor and Systems Integrator performance in testing and documentation of process instrumentation and control system materials and equipment (PICS).

The term instrumentation covers field and panel instruments, analyzers, primary sensing elements, transmitters, power supplies, and monitoring devices.

Provide the labor, tools, material, power, and services necessary to provide the process instrumentation and control system inspection and testing specified herein:

A. Factory Acceptance Testing (FAT)

B. Pre-Operational Performance Testing Sequence:

1. Wiring Testing
2. Network and Bus Cable System Inspection and Testing
3. Piping Testing
4. Installation Inspection
5. Instrumentation Calibration
6. Loop Testing

C. Functional Testing Sequence:

1. Process Control Strategy Testing
2. Control System Closed Loop Commissioning
3. Functional Checkout

D. Operational Testing:

1. System Acceptance Testing (SAT)

1.02 QUALITY ASSURANCE

Delete this paragraph for smaller projects.
For medium-to large projects, modify the PICS Testing Manager's experience requirements as may be appropriate based on project specific factors such as size, complexity, and cost.

A. PICS TESTING MANAGER:

The Contractor or Systems Integrator shall appoint a startup engineer or qualified specialist as PICS Testing Manager to manage, coordinate, and supervise the testing work.

The PICS Testing Manager shall have at least 5 years of total experience, or experience on at least five separate projects, in managing the testing and startup of similar electrical and instrumentation control systems. The quality assurance program shall include:

1. Definition of process areas and systems, with testing executed on an area by area basis, based on the P&ID drawings.

2. Testing for each process area executed in sequential tasks.

3. Regularly updated testing status tracking by process area, system, and task.

4. Regularly updated separate testing documentation for each process system.

B. REFERENCES:

This section contains references to the following documents with additional references listed in Section 17000.

All references shall be to the current edition of the document unless specifically stated otherwise. They are a part of this section as specified and modified. In case of conflict between the requirements of this section and those of the listed documents, the requirements of this section shall prevail.

Unless otherwise specified, references to documents shall mean the documents in effect at the time of Advertisement for Bids or Invitation to Bid (or on the effective date of the Agreement if there were no bids). If referenced documents have been discontinued by the issuing organization, reference to those documents shall mean the replacement documents issued or otherwise identified by that organization or, if there are no replacement documents, the last version of the document before it was discontinued.

Where document dates are given in the following listing, reference to those documents shall mean the specific document version associated with that date, whether or not the document has been superseded by a version with a later date, discontinued or replaced.

Reference	Title
ISA RP7.1	
ISA S51.1	Process Instrumentation Terminology

D. PROJECT LABELING

The items specifying project labeling herein shall include the following as a minimum: Owner's name, facility name, project name, and project number.

1.03 SUBMITTALS

Submittal material, to be submitted, shall consist of the following:

A. QUALIFICATION SUBMITTAL:

Provide the following submittal:

1. **[PICS Testing Manager Qualifications and resume per paragraph 17030-1.02A.]**

2. **[Proposed process area and process system breakdowns.]**

3. Example test forms to show Project Labeling per paragraph 17030-1.02 D.

4. Example I/O interface summary per paragraph 17030-2.02 D.

[B. NETWORK TESTING QUALIFICATION SUBMITTAL:

1. **Qualifications of independent industrial network testing firm and staff performing the inspection and testing.]**

C. DEFINITION SUBMITTAL:

Provide the following submittal after review of the Qualification Submittal. **[Separate submittals may be provided for each process area]**:

1. Control descriptions per paragraph 17030-2.02 C.

2. I/O Interface Summaries per paragraph 17030-2.02 D.

3. Testing status spreadsheets per paragraph 17030-2.02 A. 3.

4. Test procedures per paragraph 17030-3.01 D.

5. Proposed test forms per PART 3 of this Section 17030, detailed for each test for this project.

[6. **Certified Factory Calibration Reports.]**

7. Provide a copy of this specification and the referenced and applicable sections with addenda updates included with each paragraph check-marked to indicate specification compliance or marked to indicate requested deviations from specification requirements.

8. Provide a copy of Section 17200 Instrument Index with Addenda updates included, marked to indicate requested deviations from specified requirements.

9. Provide a copy of all referenced and applicable Instrumentation Drawings with addenda updates included, marked to indicate requested deviations from specified requirements.

10. Provide a copy of all referenced and applicable Electrical Drawing's Control Diagrams with addenda updates included, marked to indicate requested deviations from specified requirements.

11. Failure to include a copy of the specifications and drawings with the submittal shall be cause for rejection of the entire submittal with no further consideration.

[**D. FAT:**

1. FAT schedule and location.]

PART 2--PRODUCTS

2.01 GENERAL

The PICS Testing Manager shall provide test forms, documentation, and records as specified in the following paragraphs.

2.02 TESTING DOCUMENTATION

A. DOCUMENTATION RECORDS:

The PICS Testing Manager shall develop a records keeping system to document progress and completion for each task in each process area or system. The following shall be kept current and available for inspection on-site at all times in a location designated by Arizona Water Company (AWC):

1. PICS Testing Manager's qualifications, project startup and testing history, including resume per paragraph 17030-1.02 A.

2. List of names of Contractor's and System Integrator's personnel associated with final construction and testing, and normal and emergency contact telephone numbers

3. Testing Status spreadsheet with breakdown for each process area and process system, with percentage complete on each testing sequence task.

4. Test Report Volumes.

B. TEST REPORT VOLUMES:

The Contractor shall develop and maintain testing documentation for each process area in separate volumes. Each volume shall be kept current and available for inspection on-site at all times in a location designated by the AWC. Each volume shall include the following as a minimum:

1. Three-ring binder with front cover and spine labeled: "Testing Documentation **[For (applicable) Process Area / Process System"]** including Project Labeling per paragraph 17030-1.02 D.

2. Table of Contents with same labeling as the volume cover with tabs for each section:

3. Section 1 – Control Description

4. Section 2 – I/O Interface Summary

5. Section 3 – Instrument Index

6. Section 4 – Test Forms

[7. Section 5 – Certified Factory Calibration Reports]

[8. Section 6 – Final Test Report]

C. CONTROL DESCRIPTION

Provide a control description outlining operation for each process area's system. The Control Description Specification Section 17900 may be used as a basis.

D. I/O INTERFACE SUMMARY

Provide I/O spreadsheets for each process area's system, per Section 17990. Spreadsheets to include the following for each I/O point:

1. Signal number/tag

2. Annotation description that may be logically abbreviated and that is subject to approval.

3. Complete physical I/O channel designation and addressing or communication I/O register designation.

4. True/False status designations for digital I/O.

5. Process range; engineering units and any multipliers; and raw signal range count for analog I/O.

6. Signals: Fixed point and scaled at the Controller with minimum four significant implied digits of scaling. E.g.: 0 to 1400 at Controller for a pH range of 0 to 14 at Operator Interface.

7. Provide Operator Interface scaling to display decimal digits required.

E. INSTRUMENT INDEX

Provide a detailed Instrument Index. The Instrument Index from Section 17200 may be used as a basis. Provide details on calibration ranges, setpoints, and deadbands.

2.03 PRODUCT DATA

Provide the following product data submittal after completion of testing.

The following information shall be provided:

1. Completed test forms per PART 3. **[Separate submittals may be provided for each process area.]**

2. **[List of factory calibrated items and calibration certificates.]**

3. **[Documentation of network data communication nodes for network type instruments, devices, and variable frequency drives.]**

[4. Final Test Report assembled in a three-ring binder and submitted at the completion of the inspection and testing activities for a process area.

The binder cover and spine shall be labeled to identify the project name and process area. Test report shall include the applicable test procedures for the process area and the completed inspection and test report forms associated with the equipment and systems of that area.

Test results shall be organized by equipment item or system with individual, labeled tab dividers to identify each. System deficiencies and non-compliant test results identified in the final test report shall be acknowledged by the responsible testing entity as corrected.]

PART 3—EXECUTION

3.01 GENERAL

A. GENERAL REQUIREMENTS:

Materials, equipment, and construction included under this specification shall be inspected in accordance with this section and subsequent sections of this division. Testing shall be performed by the Contractor in accordance with this and subsequent sections of this division.

No required test shall be applied without prior notice to Between 60 and 70 days before the commencement of any testing activity, the Contractor shall provide a detailed step-by-step test procedure complete with forms for the recording of test results, testing equipment used, and a place for identification of the individual performing or, if applicable, witnessing the test.

B. TECHNICIAN QUALIFICATIONS:

Field instruments and analyzers shall be calibrated and set up by a certified instrument technician qualified to calibrate the instrumentation.

Technicians shall be qualified by completion and certification from training courses offered by The Instrumentation, Systems, and Automation Society (ISA), the instrumentation and analyzer manufacturer's training courses, or technician training courses at a recognized trade school that specializes in instrumentation calibration.

C. TEST EQUIPMENT AND MATERIALS:

Provide test equipment to conduct the specified tests that simulate inputs and read outputs with a rated accuracy at the point of measurement at least three times greater than the component under test.

Test instruments shall have a current calibration sticker showing date of calibration, deviation from standard, name of calibration laboratory and technician, and date recalibration is required. Certified calibration reports traceable to the National Institute of Standards and Technology shall be included with the final test report.

Provide a documenting calibration system to conduct process instrumentation calibration activities that consist of a documenting process calibrator and an instrumentation data management software system that captures the calibration results and electronically document

instrument data, date of calibration, calibration procedures, and as-found and as-left instrument calibration data.

Provide an instrument calibration system such as **[Fluke 743B with Fluke DPC/Track Instrumentation Management software]** or similar system. Calibration files shall be submitted with the final test report in hard copy and electronic formats that does not require specialized equipment or software to read and print the files.

Provide buffer solutions and reference fluids for tests of analytical equipment.

[Provide a communications and software package to record final configuration parameters and settings for variable frequency drives with the parameters acquired by connection to the network that record the configuration settings without manual data entry or transcription of values.

Vendor software tools may document the systems where a licensed copy of the identical software including connectors, cables, keys, interface cards and devices required for operation is submitted with the final documentation files.]

D. FIELD TEST PROCEDURE DOCUMENTATION:

Test procedures submitted for approval within **[60] [90] [180]** days from the date of Notice to Proceed.

Test procedures for each analog and discrete loop in the process control system shall be organized and assembled in separate volumes for each process area. Final test records shall be submitted in electronic form by scanning and converting the records and files to Adobe PDF format, to preserve actual signatures and signoffs.

Test procedure documentation shall include a detailed, step-by-step description of the required test procedure, panel and terminal block numbers for points of measurement, input test values, expected resultant values, test equipment required, process setup requirements, and safety precautions.

Test report forms for each loop, including forms for wiring, piping, and individual component tests, shall be included with the test procedure documentation. The actual test results shall be recorded on these forms and a final test report assembled as specified in paragraph 17030-3.**[05]**.

Test report forms shall be preprinted and completed to the extent possible prior to commencing testing. Test report forms that document the field test procedures shall include the following information:

1. Project name
2. Process area associated with the equipment under test.
3. Instrument loop description.
4. Instrument loop identification number.
5. Instrument nameplate data.
6. Instrument setup and configuration parameters.
7. Time and date of test.
8. Inspection checklist and results.
9. Reference to applicable test procedure.
10. Expected and actual test results for each test point in the loop including programmable controller data table or register values.
11. Test equipment used.
12. Space for remarks regarding test procedure or results, unusual or noteworthy observations, etc.
13. Name, date, and signature of testing personnel.

[14. Test witness' name and signature.]

E. PERFORMANCE DEVIATION TOLERANCES:

Tolerances shall be specified in Division 17. Where tolerances are not specified, refer to the manufacturer's published performance specifications.

Overall accuracy requirements for loops consisting of two or more components shall be the root-summation-square (RSS) of the component accuracy specifications. Tolerances for each required calibration point shall be calculated and recorded on the associated test report form.

F. INSTALLED TESTS:

Provide Equipment and System Performance and Operational Testing of the mechanical, electrical, instrumentation and HVAC systems. The Contractor's Quality Assurance Manager shall coordinate, manage, and supervise the quality assurance program that includes:

1. Testing plan with the sequence for the test work.
2. Calibration program for all instruments and analyzers.
3. Documentation program that records tests results.
4. Performance testing program systems.

G. WITNESSING:

AWC reserves the right to observe factory and field instrumentation testing and calibration procedures. AWC shall be notified prior to testing, as specified herein.

3.02 FACTORY TEST

A. FACTORY ACCEPTANCE TEST (FAT):

1. GENERAL: Control system equipment shall be subject to a Factory Acceptance Test **[with the factory acceptance tests and subsequent retests witnessed by the Construction Manager and AWC]**. Control system panel programmable logic controllers shall be loaded with the PLC software, Operator Interface software and the programming and graphic configuration application software at the control system equipment supplier's factory prior to the FAT.

Equipment, panel instruments, panels, or cabinets shall be inspected with factory testing performed. Provide written notice to AWC thirty working days before the commencement of the FAT activity and include:

a. Schedule for the FAT.

b. Location of the FAT.

c. Testing equipment used.

d. Detailed test procedure with forms for the recording of test results.

e. Sign-off spaces for the individuals performing and witnessing the tests.

2. FACTORY ACCEPTANCE TEST PROCEDURES: Panels provided shall be interlocked or networked as applicable, operated, and checked-out by the equipment supplier prior to the FAT. Submit certification indicating that the panels are ready for the FAT.

The FAT shall include the following:

a. Visual inspection of equipment, instruments, control panels, and graphic displays.

b. Validation of each input loop and output loop by simulated signals for analog inputs and by shorting discrete inputs.

c. Validation shall include:

1) Monitoring state changes on operator interface screens based on the inputs state change.

2) Observation of online PLC programming application software with the associated PLC outputs state change.

3) Outputs triggered by operator interface software devices (pushbuttons, sliders, manually-entered values, etc.)

4) Calibration and operation of instruments on or in the control panels.

d. Repair of loops which do not pass validation.

e. Retest of the FAT at no additional cost.

Panels that pass the FAT may be shipped to the site upon shipping schedule and storage accommodation approval.

3.03 PRE-OPERATIONAL PERFORMANCE TESTING

A. GENERAL REQUIREMENTS:

In general, tests shall be performed in the following order:

B. WIRING TESTS:

Electrical power and signal cable ring-out and resistance testing. Conducted in accordance with Sections 16000 and 16030. Wiring tests shall not be conducted until cables have been properly terminated, tagged and inspected.

1. Power and Control: Per Section 16030.
2. Signal: Contractor supplied Test Form.

[C. NETWORK AND BUS CABLE INSPECTION AND TESTING:

Inspected and tested by independent industrial network testing firms.

Proprietary bus systems may be tested by the manufacturer's qualified field services technician. Manufacturer's sales personnel are not considered to be qualified technicians unless qualifications are documented and certified by the manufacturer.

Standardized networks and buses may be tested by a qualified independent network testing service. The following types of cabling and networks shall be tested and certified by the independent industrial network testing firm:

1. Ethernet system cabling
2. DeviceNet trunk and branch cabling
3. Other networks provided as a part of a packaged monitoring or control system.

Control and instrumentation bus cabling shall be tested and verified using the standards that apply to the specific cable and bus type as follows:

1. Ethernet Category 5E and Category 6: per TIA/EIA-568B standards
2. Modbus RTU.

PRE-ACTIVE TESTING: Prior to energizing, cabling shall be inspected and tested to verify the following:

a. Media type and specifications.

b. Physical routing and project specific cable identification tagging.

c. Correct termination installation and connection of conductors to pins at terminations.

d. Record cable run length and compare to the manufacturer or industry standards to verify lengths are within specifications.

e. Locations and values of network termination resistance.

f. Integrity and grounding of cable shields.

g. Values of transient protection (surge) elements.

h. Firmware revision level of network devices available prior to energization.

i. Settings of dip switches and configuration parameters.

ACTIVE SYSTEM TESTING: After the cable or network system has been activated for testing, provide diagnostic monitoring and signal analysis for the bus

network system to evaluate network and bus integrity and data transfer quality. The following parameters shall be measured, verified, and recorded:

a. Node addressing.

b. Signal attenuation before and after any repeater device and at the farthest point in the network.

c. Total network trunk voltage and current loading as applicable.

d. Baud rate, message traffic rate, percent bandwidth used, error rate, lost packet count.

e. Firmware revision level of the network devices.

f. Pre-active and active testing shall fall within the specified range of values established by the referenced standards.

g. Correct the functionality of networks and devices connected to the network.]

D. PIPING TESTS:

1. Pneumatic Piping Systems: Tested for leaks. Pneumatic piping systems shall be tested for leaks in compliance with ISA RP7.1, except performed at ten times the normal system operating pressure.

2. Liquid Piping Systems: Tested for leaks.

[E. INSTRUMENT AND COMPONENT INSPECTION:

PICS components inspection activities include the following:

1. Compare and validate instrument type and nameplate data with the drawings, specifications, and data sheet.

2. Validate instrument identification tag.

3. Confirm instrument installation conforms to drawings, specifications, and manufacturer's instructions.

4. Verify proper conductor termination and tagging.

5. Visual check for physical damage, dirt accumulation, and corrosion.

6. Verify including isolation amplifiers, surge protection, and safety barriers are properly installed.

7. **Report deficiencies identified within 24 hours of discovery. No instrument or system component shall be tested until all deficiencies are addressed.]**

F. INSTRUMENTATION CALIBRATION:

1. Instruments and final elements shall be field calibrated in accordance with the manufacturer's recommended procedures and tested in accordance with the Contractor's test procedure.

2. Individual Component Calibration and Testing shall not commence until Instruments and Component Inspections are completed and documented to the satisfaction of AWC.

3. Analog instrument calibrated at 0, 10, 50, 90, and 100 percent of the specified full scale range. Each signal sensing trip and process sensing switch shall be adjusted to the required setting. Test data recorded on test forms as specified herein

4. Final element alignment tested and adjusted to verify that each final element operates smoothly over the full range in response to the specified process control signals

5. Test data shall be entered on the applicable test forms at the time of testing: Alarm trips, control trips, and switches shall be set to initial values specified in Section 17200 Instrument Index at this time. Final elements shall be checked for range, dead-band, and speed of response.

6. Any component that fails to meet the required tolerances shall be repaired or replaced by the manufacturer. Repeat the specified tests until the component is within tolerance.

7. Install a calibration sticker on each instrument following successful calibration that indicates the date of calibration, the name of the testing company, and personnel who calibrated the instrument.

8. Contractor provided Test Forms.

9. CERTIFIED TEST REPORTS: Field test and inspection activities include verification of instrument parameter setup, verification of instrument zero, and performance at three operating points within the instrument range. Instrument which fail to demonstrate proper performance shall be returned for re-calibration or replaced as agreed depending on the impact to the project as determined by the AWC.

Where instrument field calibration is not feasible, certified factory calibration reports may be submitted that includes the name and address of the laboratory that conducts the

calibration testing and the Certified Factory Test Reports may be submitted in lieu of field calibration.

F. LOOP TESTING:

1. Loop Testing shall not commence until the Individual Component Calibration and Testing has been completed and documented to the satisfaction of AWC.

2. Each instrument loop shall be tested as an integrated system. Check operation from field instruments to transmitter to receiving components to the vendor panel or the Plant Control System Operator Interface Station. Test signals shall be injected at the process impulse line connection where the measuring technique permits, and otherwise at the most primary signal access point.

3. Testing of loops with an interface to a programmable logic controller shall include verification of the programmable logic controller input/output assignment and verification of operation of the input/output system and processor. Inspect the data table or register in the programmable logic controller memory to verify proper operation.

4. If the output control or monitoring device fails to indicate properly, corrections to the loop circuitry or device shall be made. The test shall be repeated until devices and instruments operate as required.

5. Correct loop circuitry and repeat the test until the instruments operate properly.

3.04 FUNCTIONAL TESTING

A. PROCESS CONTROL STRATEGY/FUNCTIONAL TESTING:

1. Control Strategy Testing shall not commence until the Loop Testing has been completed and documented to the satisfaction of AWC.

2. Control Strategy Testing is performed by the **[Contractor] [Programmer]** and consist of installing and debugging the PLC control logic program, verifying the interface points between the PLCs and field devices and equipment, and exercising the control strategies. Control Strategy Testing will be performed on one PLC at a time.

3. Provide qualified personnel to immediately correct any deficiencies in the Work that may be encountered during Control Strategy Testing. Failure of the Contractor to provide such personnel in a timely manner may prolong the time allotted to complete Control Strategy Testing.

B. CONTROL SYSTEM CLOSED LOOP TESTING:

1. Closed-Loop Commissioning shall not commence until the Control Strategy Testing has been successfully completed and documented to the satisfaction of AWC.

2. Closed-loop commissioning tests, performed as part of the system tests, shall demonstrate stable operation of each loop under operating conditions. Tests shall include adjustment of loop tuning parameters.

3. Tuning parameters: gain (or proportional band), integral time constant, and derivative time constant for each control loop, adjusted to provide 1/4-amplitude damping, unless otherwise specified.

4. The loop response to a step disturbance shall be provided for each loop. Two graphs shall be made for cascaded control loops, one showing the secondary loop response with its set point in manual, and the second showing overall loop response.

5. Control loops with "batch" features shall be adjusted to provide optimum response following start-up from an integral action saturation condition.

6. Graph recording shall be provided showing the response and made at sufficient speed and amplitude to show 1/4 amplitude damping. Label to show loop number and title, and settings of parameters and set point.

7. Where a loop is controlled under the direction of a programmable logic controller, AWC will perform the necessary adjustment of loop tuning parameters and setpoints; Contractor shall record the loop response, adjusting final elements, and assuring total integrated loop performance as specified.

C. FUNCTIONAL CHECKOUT:

Conducted to verify the operation of discrete and hardwired control devices. Exercise the operable devices and energizing the control circuit. Operate control element, alarm device, and interlocks to verify the specified action occurs.

3.05 OPERATIONAL TESTING

System Acceptance Test (SAT) shall be performed after component and subsystem tests have been completed. The test of the completed system shall be performed in full operation and shall demonstrate that all functional requirements of this specification have been met. SAT shall demonstrate the following:

1. Each component of the system operates correctly with all other components of the system.

2. Analog control loops operate in a stable manner.

3. Hard-wired and software equipment interlocks perform correctly.

4. Process control sequences perform correctly.

5. PLC application program performs monitoring and control functions correctly.

6. Operator interface graphics represent the monitoring and control functions correctly.

END OF SECTION

SECTION 17110

INSTRUMENT AND CONTROL PANELS

When modifying this specification for use on a project, delete all Notes to Specifier (NTS) after the Specifier reads the NTS. Right click on the "NTS" Style in the listing in the STYLES AND FORMATTING area, click on SELECT ALL _ INSTANCE(S), and depress the DELETE button on the keyboard. Then scroll through the entire document, checking to ensure that all NTS have indeed been deleted.

Edit >Find> bracket "[" for blanks to be filled in, alternative choices, and provisions that may or may not be included depending on the application. Delete unused alternative choices and provisions as appropriate, fill in blanks, and modify font of the text that is included.

PART 1--GENERAL

1.01 DESCRIPTION

A. SCOPE:

This section specifies requirements for **[panels, cabinets, consoles, termination cabinets, and 19-inch electronic racks] for [instrument, control, and communication]** equipment for the [_____] Project per the Panel Schedule herein.

Provide the instrument, control, and monitoring features indicated on the P&ID and electrical drawings. Panels shall be arranged to separate control and instrument devices from power wiring. Panel shall be arranged for dedicated field wiring terminations rated for 600 Vac or less for power, control, and instrument signal wiring shall be fabricated by a UL-508A recognized facility and shall bear the appropriate UL 508A Industrial Control Panel label. Panels for Hazardous (Classified) Locations shall bear the appropriate UL 698A label.

Transmitters, Analyzers, signal conditioning modules and other equipment or devices as specified in the other Division 17 sections.

Panels that contain programmable logic controllers (PLC) and operator interface stations (OIS) units shall be as indicated in the Panel Schedule. Specific panel devices are specified herein and in Section 16175 – Miscellaneous Electrical Devices.

PLC and OIS shall comply with the specified products in Division 17. Panels that do not comply with the specified products and specified logic method, hardwired or PLC logic, shall not be accepted. Cost to retrofit the panel as specified shall be borne by the panel supplier. Corrections or modifications to UL 508A Industrial Control Panels shall be transported to the panel supplier's facility for corrections, testing, relabeling and inspection.

Field modifications require a UL inspector site inspection for approval of panel corrections and to re-label the panel after the field modifications are completed.

Refer to Local Control Panels - Section 16176 that specifies requirements for manufacturer, vendor, and Contractor provided panels that include motor controllers, combination motor starters, control devices, and logic devices as shown on the electrical drawings.

B. PANEL SCHEDULE:

	Panel No.	Spec / P&ID	Features *	Enclosure Type	Panel Title	E-Dwgs / Notes
1	**[MCP-10**	**17110 / P-10**	**1, 2, 5**	**NEMA-1**	**Plant Control Center Main Control Panel**	**Admin Building**
2	**PNL-100**	**11345 / P-100**	**3, 4**	**NEMA-4X**	**Headworks Remote I/O Panel**	**Outdoor**
3	**PNL-900**	**13111 / P-900**	**1, 2, 4, 5**	**NEMA-12**	**Odor Area Plant Control Panel**	**In Odor Building]**
4	**Remote I/O-4**	**17110 / P 200**	**1, 2, 5**	**19-inch rack cabinet**	**Blower I/O Cabinet**	**Blower Building]**

1* - Programmable Logic Controller (PLC) or Remote I/O devices
2* - Panel mounted Operator Interface Station (OIS)
3* - Hardwired control logic required
4* - Windowed outer door and inner door for displays or devices.
5* - UPS
6* - Fans
7* - Heating
8* - Air Conditioning
9* - Sun/Rain Hood

C. PANEL DESIGN:

1. GENERAL: Panel hardware and software is specified in other Division 17 sections.

2. CONTROL POWER DISTRIBUTION: Panel containing 120-volt powered equipment shall use the din-rail power distribution method with fuses and blown fuse indication. Power is restricted to **[120 Vac] [120 Vac and 24 Vdc]**.

3. POWER SUPPLIES: Panel containing direct current powered instruments or serving as the termination point for transmission loop powered field instruments shall contain direct current power supply system as specified herein.

4. AIR SUPPLIES: Each panel containing pneumatically operated instruments shall be provided with a dual service regulator and distribution manifold, and all other devices necessary to perform the functions specified.

5. ELECTRICAL CONTROL DEVICES: Pushbuttons, indicating lights, relays, and similar equipment located in panels specified in this section shall comply with the requirements of Section 16175.

6. UNINTERRUPTIBLE POWER SUPPLIES: Panel mounted 120 Vac input and 120 Vac output are specified herein.

1.02 QUALITY ASSURANCE

A. REFERENCES

This section contains references to the following documents that are part of this section as specified and modified. In the event of conflict between the requirements of this section and those of the listed documents, the requirements of this section shall prevail.

Reference	Title
EIA RS-310C	Racks, Panels, and Associated Equipment
NEMA 250	Tests for Flammability of Plastic Materials for Parts in Devices and Appliances
UL 94	Tests for Flammability of Plastic Materials for Parts in Devices and Appliances
UL 508A	Industrial Control Panels
UL 698A	Industrial Control Panels Relating to Hazardous (Classified) Locations

This Section references other sections with associated work specified therein:

1. Contractor's Quality Assurance Manager is responsible for startup commissioning of system including mechanical, HVAC, electrical, and instrumentation system.

2. Section 16000 specifies raceways, conductors, and device requirements.

3. **[Section 17030 Instrumentation and Control System Testing**

4. **Section 17310 Programmable Logic Controller, Operator Interface Stations, and software requirements.**

5. **[Control Specifications _____]**

B. LISTED PRODUCTS:

Equipment and components shall be Underwriters Laboratory (UL) listed for the purpose per Section 16000 or UL recognized.

The control panels shall have factory applied UL 508A labels. Where intrinsic safety barriers are used within a control panel, provide UL 698A factory applied label as required by UL.

C. FACTORY TESTING:

Prior to shipment, the manufacturer shall test the functional operation of the control panel as described in the control description Section 17030.

D. SHIPMENT, PROTECTION AND STORAGE:

Equipment shipment, protection and storage shall conform to the requirements [_____]

E. WARRANTY:

In addition to the guarantee specified in the General Conditions, [_____].

1.03 SUBMITTALS

A. GENERAL:

Submittals shall include drawings, information and technical data for equipment and as required in Section 17000. Submittal information shall be included in one complete submittal.

1. A copy of this specification section, with addendum updates included, and all referenced and applicable sections, with addendum updates included, with each paragraph check-marked to indicate specification compliance or marked to indicate requested deviations from specification requirements.

   A check mark shall denote full compliance with a paragraph as a whole. If deviations from the specifications are indicated, and therefore requested by the Contractor, each deviation shall be underlined and denoted by a number in the margin to the right of the identified paragraph, referenced to a detailed written explanation of the reasons for requesting the deviation.

   The Construction Manager, Arizona Water Company (AWC), shall be the final authority for determining acceptability of requested deviations. The remaining portions of the paragraph not underlined will signify compliance on the part of the Contractor with the specifications.

   Failure to include a copy of the marked-up specification sections, along with justification(s) for any requested deviations to the specification requirements, with the submittal shall be sufficient cause for rejection of the entire submittal with no further consideration.

2. A marked copy of specification section 17000.

3. A marked copy of specification section 17030.

4. A marked copy of specification section 16175.

5. A marked copy of specification section 16176.

7. A copy of the contract document Process and Instrumentation diagrams relating to the submitted equipment, with addendum updates that apply to the equipment in this section, marked to show specific changes necessary for the equipment proposed in the submittal. If no changes are required, the drawing or drawings shall be marked "no changes required".

   Failure to include copies of the relevant drawings with the submittal shall be cause for rejection of the entire submittal with no further review.

8. Marked contract document Control Schematic diagrams related to the submitted equipment.

9. Marked contract document Control Single Line diagrams related to the submitted equipment.

10. Marked product literature of all the enclosure electrical devices and components mounted on or within the control panel.

11. List of miscellaneous items, cables, spare and replenishment parts, and chemicals to be provided, including MSDS information.

12. Dimensioned drawings:

    a. Exterior panel and layout
    b. Interior devices and layout
    c. Door-in-door construction devices, where required

13. Panel assembly drawings including sections showing clearances between face and rear mounted equipment.

14. Nameplate engraving schedule:

    a. Indicate engraving by line
    b. Character size
    c. Nameplate size
    d. Panel and equipment tag number and description

15. Heat load calculations for each cabinet based on the highest ambient temperature listed in Section 17000 for the area in which the subject panel will be located.

16. Wiring drawings:

    a. Schematic diagrams

b. Internal wiring diagrams
c. Connection diagrams

1.04 ENVIRONMENTAL CONDITIONS

Refer to Section 17000.

PART 2--PRODUCTS

2.01 FABRICATION

A. GENERAL:

Panels shall be designed for the seismic requirements of Section 17000. Structures, equipment, and devices shall be braced to prevent damage from specified forces. Equipment panels shall be capable of operation following a disturbance.

Nameplates with tag number and equipment description shall identify face-mounted instruments. Instruments shall be mounted for access to components and ease of removal. Cutouts for future equipment shall be blanked off with suitable covers. Instrument tag numbers shall be identified on the panel rear.

Face-mounted equipment shall be flush or semi-flush with flat-black escutcheons. Face-mounted instruments that are more than 6 inches deep, weigh more than 10 pounds, or exert more than a 4 ft-lb moment force on the face of the panel shall be supported underneath at the rear by a 1-inch x 1/8-inch thick steel angle.

Panels less than 60 inches high shall be provided with floor stands to raise the top of the panel to 60 inches above the floor or work platform. Panels that weigh less than 100 pounds may be wall mounted.

Panels with specified requirements including stainless steel or aluminum mounting requirements that are indicated on the project drawings or on the project details take precedence over the panel types or panel features indicated herein.

B. PANEL LAYOUT:

1. Provide 20 percent spare contiguous sub-panel area for future expansion.

2. Provide minimum of 20 percent spare terminal blocks, with a minimum of 10 analog, discrete, power.

3. Provide minimum of 12 inches clear space from the bottom of the panel to the bottom of the subpanel.

2.02 HEATING, VENTILATING AND COOLING

Forced air ventilation shall be provided for panels where indicated in the Panel Schedule and if the cabinet's heat load calculations indicate that the interior temperature of the cabinet will exceed 115 degrees-F, under worst case conditions.

Ventilation for panel racks shall be venturi fans provided on 5-1/2-inch high-notched panel. Ventilation for consoles shall be similar to that for panel racks except EIA RS-310 mounting is not required. Fans shall be equipped with UL-approved washable filters and provide at least 240 cubic feet per minute (CFM). Fans shall be thermostatically controlled. Noise level at 3 feet from exterior wall and 30 degrees off axis shall not exceed 60 NC units.

Outdoor panels shall also be provided with thermostatically controlled space heaters. Space heater surface temperature that exceeds 120 degrees F requires an expanded metal guard. Thermostats shall be Honeywell T631B1013, Penn Controls A28AA-4, or equal.

Panel air conditioning cooling requirements shall be a cooling system that does not exchange cabinet interior air with ambient air. The cooling system shall be either a closed glycol loop heat exchange system or a CFC-free refrigeration system as required for the specified equipment and instrument complement and ambient temperature conditions.

Panel air conditioner shall be NEMA rated based on the installed area environment and the coils shall be Heresite, or equal coated and protected from corrosion.

2.03 PROTECTION COATING AND FINISH

Panels located outdoors or located in corrosive areas shall be bottom coated with waterproof coatings.

2.04 NAMEPLATES

External door-mounted components and the panel description shall be identified with plastic nameplates. Machine embossed metallic adhesive labels shall identify tag number of instruments inside panels. Nameplates shall be attached to panel surfaces, not to instruments.

The machine engraved laminated **[black phenolic nameplates with white lettering] [white phenolic nameplates with black lettering]** shall be provided for panel-mounted equipment. Nameplate engraving shall include the instrument tag number and description in 3/32-inch minimum size lettering.

The machine embossed metallic adhesive labels shall identify tag number of instruments inside panels. Nameplates shall be attached to panel surfaces, not to instruments.

The nameplates shall be attached to the panel with a minimum of two self-tapping 316 stainless steel screws. Provide RTV sealant for nameplates for stainless steel panels.

The nameplate wording may be changed without additional cost or time prior to commencement of engraving. Submit nameplate legend with the panel submittal.

2.05 PANEL FEATURES

A. INTERCONNECTION WIRING:

Panel Interconnecting Wiring:

1. Panel control wiring: Single conductor stranded copper NFPA No. 70 Type MTW No. 16 AWG minimum, with an exception for factory supplied PLC wiring harnesses that are U.L. approved.

2. Panel instrument wiring: Twisted No. 16 AWG shielded pair or tri conductors.

3. Panel power wiring: Conductors specified in Division 16 and meet the NFPA No. 70 NEC requirements for power including phase, grounded, and grounding conductors.

4. Wiring shall be supported independently of terminations by lacing to panel support structure or by slotted flame retardant plastic wiring channels.

5. Wiring channels shall comply with UL 94, Type V.

6. Wiring channel fill shall not exceed 50 percent.

B. CONDUCTOR IDENTIFICATION:

Wiring shall be tagged at terminations with machine printed plastic sleeves with three-part wire numbers for instrument and control panel internal conductors:

1. Part-1: Prefix of the wire number shall be the instrument loop number or equipment tag number.

2. Part-2: Code letter and wire colors per the following tables.

3. Part-3: Number that identifies individual circuit conductor **[Rung Number] [Terminal Number]**.

Code	120 Vac Conductor	Color
L	Power	Black, Blue
C	Control	Black
N	Neutral	White
PG	Ground	Green

Code	V dc Conductor	Color
PS	24 Vdc Power	Blue / Blue-White
PS	12 Vdc Power	
S+	Signal (+)	Black
SG	Signal Ground	White
EG	Equipment Ground	Green
FV	Panel Foreign Voltage	Orange

C. CONDUCTOR INSTALLATION AND PROTECTION:

1. Power and control wiring shall be carried in covered channels separate from low voltage signal circuits. An interior steel barrier shall be provided between AC control devices and the electronic equipment.

2. Terminal blocks shall be strap screw type rated for 600 volts. Each terminal trip shall have a unique identifying alphanumeric code at one end and a vinyl-marking strip running the entire length of the terminal strip with a unique number for each terminal. Numbers shall be machine printed and 1/8 inch high.

3. No more than two connections shall be made to one terminal.

4. Wire connectors shall be locking fork tongue or ring tongue insulated crimp type terminals.

5. Terminal blocks shall be;

   a. Cutler Hammer or Square D 600 V 30-amperes, finger-safe terminal block and 600 V 35-amperes with #8 screw terminal block for ring or spade terminals.
   b. Phoenix Contact or Weidmuller equal products.

D. FIELD WIRING:

Field wiring shall be connected to separate dedicated terminal blocks in a dedicated part of the panel where the field cables enter the panel.

E. FUSE AND FUSE HOLDERS:

1. Fuses for 120 Vac circuits shall have a minimum of 12,000-amperes interrupting capacity and blown fuse indicators.

2. Fuses for 24 Vdc circuits shall be fast acting glass tube type rated 1/8 or 1/10 amp for 4-20 mA loops.

3. Fuses for 24 Vdc circuits shall be 1/2 amp for the power supply to individual instruments.

4. Fuse holders shall be tip-out or draw-out type.

5. Provide Phoenix Contact or equal products.

F. CONTROL POWER:

120 Vac control power source: Single power source for all control and DC power. Dual power sources, one for control power and one for DC power. Dual power sources, one for PLC and DC power and one for PLC output [and input] control power.

1. Provide control power transformers, as required for the load.

2. Provide direct current power supplies, as required for the load.

3. Provide UPS for PLC and derived loop power as defined above, as required for the load.

G. PANEL POWER:

Panel power source:

1. Provide a 120 Vac circuit for the panel light, receptacle, heating, fan, heat exchanger**[, or air conditioner]** cooling load as required.

Air conditioning loads are substantial, especially when units is properly calculated and sized for outdoor installations. A separate 240 Vac circuit is strongly recommended for all but the smallest units.

2. **[Provide a [240 Vac][208 Vac][120 Vac] circuit for air conditioning load as required.]**

H. ACCESSORIES:

1. **[Panels greater than 24" high x 24" wide shall include GFCI convenience receptacles and fluorescent utility lights.**

2. **Receptacles and utility lights shall not be powered by the UPS, where included.**

3. **Print pocket.**

4. **Fold-up shelf of sufficient size, sufficient weight capacity, and the proper angle for supporting a laptop computer.]**

2.06 SURGE PROTECTION

Surge protectors shall be multi-stage, plug-in type selected to protect the equipment. Surge protectors shall be removable without changing the impedance of the circuit. Surge protectors product manufactures shall be:

1. Circuit Components Inc: Din Rail SDD-400 Series for Data or Analog Signals.

2. Circuit Components Inc: SPD-Series at the 120 AC incoming power.

3. Joslyn Model 1663-08

4. Taylor 1020FA

5. Phoenix Contact

6. Telematic

7. Edco

8. Or equal.

2.07 PANEL GROUNDING

A. Each panel shall be provided with two copper ground bars.

1. One bar (NEC required) shall be bonded to the panel or panel frame or back-plate and to the facility grounding system.

2. Second (signal) ground bar shall be mounted on insulated stand-offs and shall be bonded to the panel ground bar only at one point.

B. Signal circuits, signal cable shields, and low-voltage DC power supply commons shall be bonded to the signal ground bar.

C. Field analog wiring shields shall only be grounded at the signal ground bar. Test to verify that single ground point at panel signal ground bar.

D. Surge protectors and separately derived AC power supplies shall be bonded to the frame ground bar.

E. Panels exceeding 36-inches width shall contain ground bars shall be 1/4- by 1-inch copper bars extending the entire length of the panel interior at the bottom of the panel.

2.08 PANEL DRAWING PROTECTION

Provide wiring diagrams in accordance with Section 01300. Provide a panel-wiring diagram and schematic for each panel in a plastic bag or plastic container to avoid water damage and aging.

Consider specifying redundant power supplies to avoid process system interruption.

2.09 DIRECT-CURRENT POWER SUPPLIES

Nominal 24-volt direct-current instrumentation and control power supply:

1. Convection-cooled linear type or switching type.
2. Line regulation: 0.4 percent for line variations from 105 to 132 volts
3. Load regulation: 0.4 percent for load variations from 0 to full load.
4. Ripple and noise: Not exceed 100 mV peak-to-peak.
5. Hold-up time at maximum load: Not less than 16 milliseconds.
6. Continuous duty from 0 to 50 degrees C at rated load.
7. Output electronically current limited.
8. Over-voltage crowbar shutdown.
9. Output voltage:
    a. Rated 28 Vdc
    b. Adjustable plus or minus 5 percent
    c. Set to provide 26.4 volts to the panel direct current bus.
10. Power Supply: Lambda LZS series, or equal.

2.10 UNINTERRUPTIBLE POWER SYSTEM (UPS)

The UPS shall be on-line, computer-grade with electrical isolation including output neutral. UPS shall be packaged for panel enclosure mounting using a back-panel bracket or holder:

1. Nominal input voltage: 120Vac.
2. Nominal output voltage: 120Vac.

The online UPS system shall be provided with integral sealed no maintenance batteries, sized to provide full capacity backup power for **[10] [30]** minute minimum at connected load with integral battery charger.

The panel supplier shall calculate the required kVA rating at 150 percent of connected load. Submit load calculations, schematic diagrams, and wiring connection diagrams. Provide battery cabling and other required cabling for a complete system.

The UPS shall be mounted within the panel on a pedestal or tray with stainless-steel legs to provide space for wire entry and passage.

Uninterruptible power supply systems shall be as manufactured by Best Power Technology, Inc., Necedah, American Power Conversion, Wisconsin, or equal.

2.11 SPARE PARTS

The following spare parts shall be provided:

1. Ten each of each type of light bulb used in the panels.
2. Five each of each type and rating of fuse used in the panels.

2.12 PRODUCT DATA

The following data shall be provided in accordance with Section 01300:

1. Manufacturer's operation and maintenance information as specified in Section 01730. Manual shall include final reviewed submittal and separate record of all final configuration, jumper, and switch settings.

2. Test results as specified in Section 17030-Part 2.

3. **[Manufacturer's certification for the performance of features of the specified equipment that cannot be readily inspected.**

4. **Special requirements for delivery of the information such as time, manner, place, or quantity.**

5. **Installation and training forms specified in Part 3.]**

PART 3--EXECUTION

3.01 GENERAL

Floor mounted cabinets shall be mounted and shimmed to precise alignment so doors operate without binding. Sealant shall be provided for conduit entering the panels.

Floor-mounted panels except in dry control rooms or electrical equipment rooms shall be mounted on 3-1/2-inch minimum height concrete pads or grouted bases as specified. Coating shall be provided for outdoor panels in contact on concrete. Field panels and cabinets shall be mounted in compliance with paragraph 17000-3.01 B.

Coating is required for wastewater and chemical feed processes. H2S, Methane, and corrosive gasses travel through the conduit system and enclosure doors left open.

Terminals and terminal blocks shall be sprayed after all terminations have been completed with a silicone resin similar to Dow Corning R-4-3117 conformal coating.

Provide panels with the Record As-built schematic, connection, and interconnection diagrams mounted behind plexiglass holder on the inside of the door. Place documentation in a water proof clear bag in the panel document holder.

3.02 OUTDOOR PANEL SHADE COVERS

Fabricate the custom aluminum panel shade cover and mount the panels facing away from the prevailing sun or wind.

3.03 PANEL POWER SUPPLY

Power supply and conditioning equipment shall be mounted and connected in compliance with the manufacturer's instructions.

Line side disconnect switches shall be provided for power supply and conditioning equipment. Line and load side overcurrent protection shall be provided for power supply and conditioning equipment in compliance with NFPA 70. Disconnect switches shall comply with Section 16175.

Small power supply and conditioning equipment may be mounted in the panel served. Larger units shall be mounted adjacent to the equipment served. Where unconditioned power is brought into control panels, it shall be enclosed in metallic raceways within the panel.

Power supply and conditioning equipment larger than 5 kVA load capacity supported from surfaces other than concrete shall be provided with sound isolators.

Final raceway connections shall be a flexible conduit in compliance with Division 16.

3.04 FACTORY TESTING

The control panel shall be assembled, interconnected, and functionally tested at the assembly shop prior to shipment.

The AWC shall have the option of witnessing the functional shop test. The Contractor shall notify the AWC at least two weeks in advance prior of the scheduled functional shop test.

3.05 FIELD TESTING

Field verify the following for Instrument and Control Panels:

1. Control circuits grounded with one terminal of each load device connected to the grounded conductor.

2. Control contacts installed in the ungrounded side of the circuit.

3. Signal and control wiring installed in separate wireways.

4. Barriers between the power wiring and the signal and control wiring.

5. Connected to the plant grounding system, as specified.

6. Center-line of wall-mounted panels shall be 48 inches above the floor.

7. Inner door contains a copy of the Record elementary and wiring diagrams.

8. Inner door contains a protected drawing holder.

9. Drawings enclosed in a transparent, protective jacket.

10. Functions as specified.

11. Mounted with stainless steel unistrut, fittings, and fasteners.

12. Tested in accordance with Section 16030 and Section 17030.

END OF SECTION

SECTION 17200

INSTRUMENT INDEX

When modifying this specification for use on a project, delete all Notes to Specifier (NTS) after the Specifier reads the NTS. Right click on the "NTS" Style in the listing in the STYLES AND FORMATTING area, click on SELECT ALL _ INSTANCE(S), and depress the DELETE button on the keyboard. Then scroll through the entire document, checking to ensure that all NTS have indeed been deleted.

Edit >Find> bracket "[" for blanks to be filled in, alternative choices, and provisions that may or may not be included depending on the application. Delete unused alternative choices and provisions as appropriate, fill in blanks, and modify font of the text that is included.

PART 1--GENERAL

1.01 DESCRIPTION

A. SCOPE:

This section specifies the Instrument Index and general requirements applicable to process instrumentation and analyzer systems consisting of process sensors, process indicators, signal conditioning module, control and monitoring devices, transmitters, and accessories.

The Contractor shall provide, calibrate, and test the complete process instrumentation and analyzer systems and place in operation and test the system. Testing includes tuning loops and making final adjustments to instruments and analyzers during facility start-up.

The Contactor shall provide the services of certified instrument technicians for testing and adjustment activities as specified in Section 17000.

The Contractor shall examine the mechanical drawings and specifications to determine actual locations, sizes, materials and ratings of process connections.

1.02 REFERENCES

Refer to Section 17000 – General Requirements for Instrumentation and Control.

Refer to Section 17030 – Process Instrumentation and Control System Testing.

1.03 SUBMITTALS

Refer to Sections 17000 and 17030.

PART 2--PRODUCTS

2.01 INSTRUMENT INDEX

The Instrument Index, paragraph 17200-3.03, lists instruments and analyzers required for the project. Instrument functions specified on this list shall be provided by the Contractor.

Additional instrumentation devices such as process taps, seals, and other items required to complete the instrument loops due to characteristics of the equipment selected by the Contractor and not specified in the instrument index or on the contract drawings shall be provided at no additional cost to provide a complete working system.

2.02 PRODUCT DATA

Test results as specified in paragraph 17200-3.02 B shall be provided. Refer to Section 17000 and 17030 requirements. Specified instrument, analyzer, and device product data shall be provided for products that meet the specified application requirements.

PART 3--EXECUTION

3.01 GENERAL REQUIREMENTS

Materials, equipment, and installation shall be tested and inspected per Sections 17000, 17030, and herein.

Provide buffer solutions and reference fluids for analytical equipment test procedures.

3.02 INSTALLED EQUIPMENT - TESTS AND INSPECTION

A. Refer to Section 17030 – Process Instrumentation and Control System Testing.

3.03 INSTRUMENT INDEX

The following is an index of the instrumentation equipment, analyzers, and devices.

A. DESCRIPTION OF HEADINGS:

1. TAG NUMBER: Tag Number appears as a heading (PREFIX and NUMBER) and consists of a two, three or four letter prefix indicating the instrument function followed by a number identifying the process loop with which the instrument is associated. Tag Number provides an identification of the instrument, analyzer, or device.

2. DESCRIPTION: Provides the functional description of the instrument, analyzer, or device.

3. P&ID NUMBER: Lists the Process and Instrumentation Diagram on which the instrument, analyzer, or device appears.

4. SPECIFICATION: Provides the specification reference and designation for the instrument, analyzer, or device.

5. SIZE: Provides the application data relative to sizing the instrument; flow tube diameter, probe length, associated pipe sizes, etc.

6. RANGE: Provides the calibrated instrument range for each application.

7. SETPOINT: Provides the calibrated switch setpoint.

8. COMMENTS: Provides the features, interlocks, and information applicable to the instrument, analyzer, or device.

INSTRUMENT INDEX [(SORTED BY P&ID)]							
TAG NO.	DESCRIPTION	P&ID	SPEC	SIZE	RANGE	SETPOINT	COMMENTS

END OF SECTION

SECTION 17212

TRANSMITTERS

When modifying this specification for use on a project, delete all Notes to Specifier (NTS) after the Specifier reads the NTS. Right click on the "NTS" Style in the listing in the STYLES AND FORMATTING area, click on SELECT ALL _ INSTANCE(S), and depress the DELETE button on the keyboard. Then scroll through the entire document, checking to ensure that all NTS have indeed been deleted.

Edit >Find> bracket"[" for blanks to be filled in, alternative choices, and provisions that may or may not be included depending on the application. Delete unused alternative choices and provisions as appropriate, fill in blanks, and modify font of the text that is included.

Delete the Transmitter not used on the project.

PART 1--GENERAL

1.01 DESCRIPTION

This section specifies requirements for process parameter transmitters, associated indication devices, and accessories.

The application requirements are specified in the Instrument Index - Section 17200.

1.02 REFERENCES

References shall be as specified in Section 17000.

1.03 SUBMITTALS

Submittals shall be provided: including:

1. A copy of this specification section, with addendum updates included, and all referenced and applicable sections, with addendum updates included, with each paragraph check-marked to indicate specification compliance or marked to indicate requested deviations from specification requirements. Referenced and applicable sections to be marked up and submitted include:

   a. Training
   b. Operation and Maintenance Information

   A check mark shall denote full compliance with a paragraph as a whole. If deviations from the specifications are indicated, and therefore requested by the Contractor, each deviation shall be underlined and denoted by a number in the margin to the right of the identified paragraph, referenced to

a detailed written explanation of the reasons for requesting the deviation.

The Construction Manager, Arizona Water Company shall be the final authority for determining acceptability of requested deviations. The remaining portions of the paragraph not underlined will signify compliance on the part of the Contractor with the specifications.

Failure to include a copy of the marked-up specification sections, along with justification(s) for any requested deviations to the specification requirements, with the submittal shall be sufficient cause for rejection of the entire submittal with no further consideration.

2. A copy of the contract document Control Diagrams and Process and Instrumentation Diagrams relating to the submitted equipment, with addendum updates that apply to the equipment in this section, marked to show specific changes necessary for the equipment proposed in the submittal. If no changes are required, the drawing or drawings shall be marked *"no changes required". Failure to include copies of the relevant drawings with the submittal shall be cause for rejection of the entire submittal with no further review.*

3. Marked Contract Document Mechanical and/or Electrical Plan drawings, sections, and details showing sensor installation locations and details. *Failure to include copies of the relevant drawings with the submittal shall be cause for rejection of the entire submittal with no further review.*

4. Marked product literature of all equipment and features to be provided.

5. Installation drawings for only the transmitters, sensors, and mounting accessories to be provided.

6. Electrical and signal connection drawings for only the transmitters and sensors to be provided.

7. List of miscellaneous items, cables, spare parts, that will be provided in accordance with transmitter requirements.

8. Marked product literature for surge protectors.

PART 2--PRODUCTS

2.01 GENERAL

Measuring elements and transmitters shall comply with the following requirements:

1. Measured parameter output indicators complying with paragraph 17212-2.02 shall be provided with any transmitter that does not include an integral indicator. Indicators, whether integral or separate, shall be calibrated in process units, and engraved on the indicator scale plate.

2. The two-wire type transmitters shall have operating power derived from the signal transmission circuit.

3. Transmitters shall meet specified performance requirements with load variations within the range of 0 to 600 with the power supply at a nominal 24 volts DC with the default range of 0 to 100% corresponding to 4 to 20 madc.

4. Transmitter output shall increase with increasing measurement.

5. Time constant shall be adjustable from 0.5 to 5.0 seconds for transmitters used for flow, level transmitters used for flow measurement, or pressure measurement.

6. Transmitter output shall be galvanically isolated via electro-mechanical or optical technology.

7. Transmitter enclosures shall be rated NEMA 250, Type 4, unless otherwise specified.

8. Transmitters located outdoors shall be provided with surge protectors:

   a. Signal: Emerson/Rosemount Model 470 D, Emerson/EDCO SS64-036-2, CCI SPN-42 FS28 Series, or accepted equal.

   b. AC Power: UL 1449, LED indicator, screw terminal connections, NEMA 4X. EDCO HSP121A or accepted equal.

9. Two-wire transmitter located in a facility area classified as hazardous per the NFPA and the NEC shall be made safe by means of an intrinsic safety barrier as specified in paragraph 17212-2.03.

10. Four-wire transmitters shall be isolated from the process and power or provided with a loop-powered signal current isolator connected in the output signal circuit.

2.02 PROCESS PARAMETER OUTPUT INDICATOR

Provide digital LED or LCD indicators that integral to the instrument housing where available from the manufacturer. Displays shall be scaled in engineering units, over the calibrated range of the instrument. Calibrate the indicator scale in process units.

Analog output indicators shall be 2.5-inch milli-ammeter with 90-degree movement enclosed in a NEMA 7/9 rated meter case. Provide indicators with accuracy within two percent of span. Provide a diode to maintain loop continuity for indicator removal.

2.03 INTRINSIC SAFETY BARRIERS

Intrinsic safety barriers for two-wire transmitters shall be of the active, isolating, loop powered type. Barrier shall be **[Measurement Technology LTD] [Type MT3042] [Stahl Series 9000]**, Accepted equal.

2.04 INSTRUMENTATION SPECIFICATION SHEETS

General requirements for instruments specified in this section are listed on INSTRUSPEC sheets in paragraph 17212-3.03.

Application requirements are specified in the Instrument Index, paragraph 17200-2.03, and/or on the drawings.

2.05 SIGNAL CURRENT ISOLATOR

Isolator shall provide galvanic isolation of milliampere transmission signals from transmitters. Isolator shall be housed in a NEMA 250, Type 4/7 conduit body and derive operating power from the signal input circuit.

Input and output signals shall be 4 to 20 milliamperes, and error shall not exceed 0.1 percent of span. Input resistance shall not exceed 550 ohms with an output load of 250 ohms.

[Isolator shall be Moore Industries SCX 4-20madc to 4-20madc / 5.5VPL / -RF [DIN rail mounted] with maximum 250 ohm output impedance], or equal.

2.06 PRODUCT DATA

The following data provided in accordance with Section 01300:

1. Operating and maintenance information as specified in paragraph 17000-2.03. Include final reviewed submittal and separate record of all final configuration, jumper, and switch settings for each analyzer.

2. Test results as specified.

PART 3--EXECUTION

3.01 INSTALLATION

Installation requirements are specified in paragraph 17000-3.01.

3.02 TESTING

Testing requirements are specified in Section 17030.

3.03 INSTRUMENT SPECIFICATION SHEETS

General requirements for instruments specified in this section are listed on transmitter specification sheets herein. Application requirements are specified in the Instrument Index, paragraph 17200-3.03, and/or on the drawings.

3.03 INSTRUMENT SPECIFICATION

Instrument Function:	Flow Measurement
Instrument Description:	Magnetic Flow Metering System
Signal Input:	Process
Signal Output:	Analog signal as specified in paragraph 17212-2.01 **[and scaled pulse frequency] [HART Protocol]**
Process Connection:	Flange, ANSI B16.5, Class 150, raised face.
Product Requirements:	Magnetic flow meter provided as a system consisting of a flow tube with separate or integral converter / indicating transmitter, as scheduled in the Section 17200 Instrument Index, complete with interconnecting cables Remote mounted indicating transmitter for full-scale flow rates from 1.0 to 30 feet per second. System error shall not exceed the greater of 0.5 percent of flowrate or 0.1 foot per second from 3 to 30 feet per second.
Flow Tube:	Flow tubes manufacturer shall provide grounding rings fabricated from the same metal as for the electrodes below. Flow tube sizes below 2 inches may be wafer-style ductile-iron or full-body flanged construction. Electrodes: 316L stainless steel unless otherwise specified in Section 17200. Liner: Polyurethane unless otherwise specified in Section 17200.
Transmitter:	Contain electronics associated with the magnetic flow meter system. Enclosure rating NEMA-4, cast aluminum or metal compartment for power, field connections and calibration adjustments separate from digital circuitry. Means to calibrate the metering system without use of external calibration units. Transmitter self-diagnostics. Traceability certificate of actual flow lab certification provided with each flowtube.

Integral 4-digit LCD flow indication calibrated in process units. Data retained in non-volatile memory.

Execution:

Installation: Install in accordance with manufacturer's instructions and the specified functional requirements.

Cable: Signal cable between the flow tube and transmitter provided by the system manufacturer with sufficient length of cable for continuous installation between the flow tube and the transmitter.

Manufacturers:

[ABB Magmaster MFE
Endress + Hauser Promag 50W/53W]
Krohne Optiflux 4000
Accepted equal]

3.03 INSTRUMENT SPECIFICATION

Instrument Function:	Flow Measurement
Instrument Description:	Propeller Flowmeter Indicating Transmitter
Power Supply:	Transmitter: 24 volts DC from signal transmission circuit as specified in paragraph 17212-2.01
Signal Input:	Process
Signal Output:	Transmitter only: Analog signal as specified in paragraph 17212-2.01.
Process Connection:	As specified
Product Requirements:	Flowmeter operate continuously at any flow rate within the specified range and capable of intermittent over-range operation up to 150 percent of specified range without damage. Meter error shall not exceed plus or minus 2.0 percent. Flow element flange for connection for removal from the pipeline. Flow element: cast iron or steel; bronze gearbox; stainless steel, delrin or hard rubber wetted working parts; polyethylene propeller. Drive mechanism: right-angle magnetic drive Vertical drive shaft: sealed from the measured liquid. Shaft: stainless steel. Flowmeter: 6-digit straight reading totalizer protected by metal register box, and cover with locking hasp. Two-wire indicating transmitter in accordance with paragraph 17212-2.01.

Meters through 12-inch diameter: Factory fabricated metering tube and straightening vanes.

Tubes: cast iron or carbon steel lined per AWWA C203.

Meters 14 inches and larger: Carbon steel saddle flange adapter for field installation welding on the pipeline.

Execution:

Installation: Install in accordance with manufacturer's instructions and the requirements of Section 17200

ranges shall be [0-0.1, 0-0.2, 0-0.5, 0-1, 0-2, 0-5, 0-10, and 0-20] mg/l.

Instrument Identification: CLR[1] (continued)

Analyzer shall be Siemens/Wallace & Tiernan (W&T) Micro/2000.

The 3-electrode technology presents a significant improvement over 2-electrode amperometric technology.

The latter exhibits significant error, especially at residuals below 0.1 mg/l, due to unavoidable variations in conductivity. pH, temperature, and electrode fouling. Liquid and gas reagents for sample conditioning, temperature compensation, and applied potentials helped minimize these errors, but do not improve on the necessity for frequent recalibration.

Use of a membrane to isolate the electrodes from the sample has also been proven inadequate because of reduced sensitivity and frequent membrane fouling.

Sensor: Amperometric three electrode measuring cell. The measuring cell shall be of the flow-through type with three dissimilar metal electrodes which shall produce a signal proportional to chlorine residual.

The cell shall provide continuous on-line analysis of chlorine residual sensitive to one part per billion (.001 mg/l) and be capable of continuous feedback control of chlorine residual down to ten parts per billion (.01 mg/l). It shall not lose sensitivity due to extended periods of samples containing no chlorine.

Replacement Parts: **[One]** sensor, W&T.
[One] preventive maintenance kit, W&T G2416.

Replenishment Parts: One bottle of electrolyte for each sensor/analyzer, W&T U28039.

Calibration Buffers: **[One]** cartons of four bottles of pH 4 Reagant for each sensor/analyzer, W&T U13765.
Two bottles of Potassium Iodide for each sensor/analyzer for measuring total chlorine, W&T U23661.

Execution: Install and calibrate instrument in accordance with manufacturer's recommendations. **[Provide additional components as shown and required by the manufacturer: PRV, needle valves, rotameter, strainer, etc.]**

Application/Calibration: In accordance with paragraph 17200-3.03. **[AWC will assist with calibration and provide hand-held test kit].**

Manufacturer Services: Two hours per analyzer on-site, minimum one day.

3.04 CLR[2] INSTRUMENT SPECIFICATION

Instrument Identification:	CLR[2]
Instrument Description:	Chlorine Residual Analyzer
Power Supply:	120 volts AC
Signal Output:	4 to 20 mA into 0 to 500 ohms, isolated Two Form-C relay outputs
Process Connection:	3/4-inch NPT (1/2-inch sample line)
Product Requirements:	Analyzer transmitter shall be surface mount, and shall be specific to **[free][total]** chlorine as specified. Analyzer shall consist of a measuring cell and electronic operator controls. The sample-flow system shall have all components and controls accessible from the front of the unit to permit ease of observation of solution level, sample flow, electrode cleaning and adjustment of set points. It shall contain large ports throughout, small sphere bombardment for continuous cleaning of the measuring and counterelectrodes, and continuous metering of reagent chemicals and detergent into the sample by means of a rotary valve or peristaltic type reagent pumps. Sample flow velocity at the measuring electrode shall be kept constant by a motor-driven impeller or built-in gravity flow regulator. The analyzer's electronics shall be housed in a NEMA 4X enclosure. The analyzer shall be easily reprogrammed for different measurement ranges. Calibration accuracy shall be one percent of full scale; operating range shall be 40:1; and residual-measurement ranges shall be 0-0.1, 0-0.2, 0-0.5, 0-1, 0-2, 0-5, 0-10, and 0-20 mg/l. Chlorine residual analyzer shall be Severn-Trent/Capital Controls Model 1870E.
Sensor:	Amperometric two electrode measuring cell. The measuring cell shall be of the flow-through type with gold and copper electrodes which shall produce a signal proportional to chlorine residual.

	The cell shall provide continuous on-line analysis of chlorine residual sensitive to one tenth of one part per million (0.1 mg/l). It shall not lose sensitivity due to extended periods of samples containing no chlorine.
Reagant:	pH Buffer for six months of operation, plus additional Buffer for Contractor calibration.
Execution:	Install and calibrate instrument in accordance with manufacturer's recommendations. **[Provide additional components as shown and required by the manufacturer: PRV, needle valves, rotameter, strainer, etc.]**
Application/Calibration:	In accordance with paragraph 17200-3.03. **[AWC will assist with calibration and provide hand-held test kit.][AWC will witness calibration, provide hand-held residual chlorine test kit.]**

Manufacturer services are specified as the initial configuration and calibration take lots of time.

Manufacturer Services:	Two hours per analyzer on-site, minimum one day.

3.04 CLR[3] INSTRUMENT SPECIFICATION

CLR[3] is for potable water and is commonly used in Infrastructure pump stations and distribution systems. This type of unit does not require monthly reagent replenishment, but does require regular calibration.

Instrument Identification:	CLR[3]
Instrument Description:	Chlorine (Free) Residual Analyzer
Power Supply:	120 volts AC
Signal Output:	4 to 20 mA into 0 to 500 ohms, isolated **[HART Communications protocol]** **[Two Form-C relay outputs]**
Process Connection:	Sample **[1/4" NPT]**
Product Requirements:	
Analyzer:	Analyzer shall consist of an amperometric sensor, measuring cell and electronic operator controls. Analyzer shall be specific to free chlorine and shall be provided in a surface mountable enclosure.

Automatic pH compensation is required where the potable water system gets water from more than one source with different pH values. E.g., Well water during certain seasons, and river water during others. A pH sensor is also required for this option. Coordinate with AWC's operations, fixed pH compensation (without sensor) may be sufficient.

	The analyzer's electronics shall be microprocessor-based with a wall mount touch key pad and alphanumeric display. Electronic components shall be housed in NEMA 4X enclosures. Unit shall have **[fixed][Automatic]** pH compensation. Unit shall be Endress & Hauser CCM253.
Sensor:	The measuring cell shall be of the flow-through type with a sensor which shall produce a signal proportional to chlorine residual. Unit shall be Endress & Hauser CCS141 sensor **[,one CPS11 pH sensor and CPK cable,]** and CCA250 flow cell.
Replacement Parts:	**[One]** sensor of each type.

Junction boxes and Extension Cable are specified for sensors. Distance from sensor to analyzer should be close, or a junction box is required as replacement of a sensor with long cabling in conduit is aggravating for maintenance. Delete if sensor is adjacent to analyzer in ALL of your installations, otherwise leave specified.

Junction Box:	Endress & Hauser VBC**[, one for chlorine and one for pH]**.

Extension Cable:	Endress & Hauser CMK**[for chlorine and CYK for pH]**.
[Calibration Tool:	**Photometer, Endress & Hauser CCM182.]**
Execution:	Install and calibrate instrument in accordance with manufacturer's recommendations. **[Provide additional components as shown and required by the manufacturer: PRV, needle valves, rotameter, strainer, etc.]**
Application/Calibration:	In accordance with paragraph 17200-3.03. **[AWC will assist with calibration and provide hand-held test kit.][AWC will witness calibration.]**

Manufacturer services are specified as the initial configuration and calibration take lots of time.

Manufacturer Services:	Two hours per analyzer on-site, minimum one day.

END OF SECTION

SECTION 17216

PROCESS SWITCHES

When modifying this specification for use on a project, delete all Notes to Specifier (NTS) after the Specifier reads the NTS. Right click on the "NTS" Style in the listing in the STYLES AND FORMATTING area, click on SELECT ALL _ INSTANCE(S), and depress the DELETE button on the keyboard. Then scroll through the entire document, checking to ensure that all NTS have indeed been deleted.

Edit >Find> bracket"[" for blanks to be filled in, alternative choices, and provisions that may or may not be included depending on the application. Delete unused alternative choices and provisions as appropriate, fill in blanks, and modify font of the text that is included.

Delete the Process Switches herein not used on the project.

PART 1--GENERAL

1.01 DESCRIPTION

This section specifies requirements for process activated switches, devices, and accessories.

A. SCOPE:

This section specifies requirements for instrumentation devices, which form a part of the process control systems. Application requirements are as specified in the Instrument Index, paragraph 17200-3.03.

B. OPERATING REQUIREMENTS:

The devices specified in this section quantitatively convert the measured variable energy into a form suitable for process measurement and control.

1.02 QUALITY ASSURANCE

A. MANUFACTURER:

Equipment furnished under this section shall be the products of firms regularly engaged in the design and manufacture of such equipment for a minimum of five years.

B. INSTALLER:

Installation, calibration and testing of equipment furnished under this section shall be performed by qualified, skilled, ISA Certified Technicians, who are regularly engaged in such activities involving systems of similar complexity, and who possess all licenses and certificates required to perform such work.

C. REFERENCES:

References are listed in Section 17000 and are a part of this section as specified and modified.

1.03 ENVIRONMENTAL CONDITIONS

Equipment provided under this section shall be suitable for operation under ambient conditions described in paragraph 17000-1.03.

1.04 SUBMITTALS

Submittals shall be provided, including:

1. A copy of this specification section, referenced and applicable sections, with addendum updates included and with each paragraph check-marked to indicate specification compliance or marked to indicate requested deviations from specification requirements. Referenced and applicable sections to be marked up and submitted include:

   a. Training
   b. Operating and Maintenance Information

   A check mark shall denote full compliance with a paragraph as a whole. If deviations from the specifications are indicated, and therefore requested by the Contractor, then each deviation shall be underlined and denoted by a number in the margin to the right of the identified paragraph, referenced to a detailed written explanation of the reasons for requesting the deviation.

   The Construction Manager, Arizona Water Company, shall be the final authority for determining acceptability of requested deviations. The remaining portions of the paragraph not underlined will signify compliance on the part of the Contractor with the specifications.

   Failure to include a copy of the marked-up specification sections, along with justification(s) for any requested deviations to the specification requirements, with the submittal shall be sufficient cause for rejection of the entire submittal with no further consideration.

2. A copy of the contract document Control Diagrams and Process and Instrumentation Diagrams relating to the submitted equipment, with addendum updates that apply to the equipment in this section, marked to show specific changes necessary for the equipment proposed in the submittal.

If no changes are required, the drawing or drawings shall be marked *"no changes required". Failure to include copies of the relevant drawings with the submittal shall be cause for rejection of the entire submittal with no further review.*

3. Marked Contract Document Mechanical and/or Electrical Plan drawings, sections, and details showing sensor installation locations and details. *Failure to include copies of the relevant drawings with the submittal shall be cause for rejection of the entire submittal with no further review.*

4. Marked product literature of all equipment and features.

5. Installation details for the process switches and mounting accessories.

6. Electrical and signal connection drawings for process switches and devices.

PART 2--PRODUCTS

2.01 GENERAL

Process switches and devices shall comply with the following requirements:

1. Contact outputs used for alarm actuation shall be normally-closed and shall open to initiate the alarm.

2. Contact outputs used to control equipment shall be normally-open and shall close to start the equipment.

3. Contacts monitored by solid state equipment such as programmable controllers or annunciators shall be hermetically sealed and rated for switching currents from 20 to 100 mA at 24 volts DC.

4. Contacts, monitored by electromagnetic devices such as mechanical relays, shall be rated as NEMA ICS 2, designation B300.

5. Double barriers provided between switch elements and process fluids such that failure of one barrier will not permit process fluids into electrical enclosures.

6. Switch electrical enclosures rated as NEMA 250, Type 4 minimum.

7. Switch contacts located in Class I, Division 1 areas and monitored by solid-state circuits shall be made safe by intrinsic safety barriers as specified in paragraph 17120-2.04.

8. Switch range selected so the specified set point is at least 30 percent but not more than 70 percent of the span, between the upper range limit and the lower range limit.

2.02 INSTRUMENTATION SPECIFICATIONS

Application requirements are specified in the Instrument Index, paragraph 17200-3.03, and/or on the drawings.

2.03 PRODUCT DATA

The following data shall be provided:

1. Data specified in paragraph 17000-2.02.
2. Submit Test results per 17200-3.02 B.

PART 3--EXECUTION

3.01 INSTALLATION

Installation requirements are specified in paragraph 17200-3.01.

3.02 TESTING

Testing requirements are specified in Section [_____].

3.03 INSTRUMENT SPECIFICATIONS

3.03 INSTRUMENT SPECIFICATION

Instrument Identification:	FTS
Instrument Function:	Flow Measurement
Instrument Description:	Thermal Flow Switch
Power Supply:	24 volts DC
Signal Input:	Process
Signal Output:	Contact as specified in paragraph 17216-2.01
Process Connection:	As specified
Product Requirements:	Flow switch shall be the thermal convection type. Switch point shall not be affected by process fluid temperature changes in the range of 32 to 140 degrees F and shall have a repeatability of plus or minus 5 percent of range. Control unit shall operate with the specified repeatability in an ambient temperature range of 25 to 120 degrees F.
Approved Manufacturers:	Fluid Components Inc., Flow Technology Inc., or equal.
Execution:	
	Installation: Install in accordance with manufacturer's instructions.

3.03 INSTRUMENT SPECIFICATION

Instrument Identification:	FVS
Instrument Function:	Flow Measurement
Instrument Description:	Vane actuated Flow Switch
Signal Input:	Process
Signal Output:	Contacts, in accordance with paragraph 2.01 of this section.
Process Connection:	Female NPT
Product Data:	Vane actuated flow switch shall consist of a vane and a magnetically actuated switch. The body of the switch divided into upper and lower sections so that the upper section is isolated from the process fluid. A stainless steel vane and a primary magnet located in the lower section. The force of the process fluid impinging on the vane shall produce movement of the primary magnet. The primary magnet shall produce movement of the secondary magnet located in the upper body section, actuating the switch. The switch shall be DPDT and enclosed in an explosion-proof housing. The switch body and vane shall be type 316 stainless steel unless otherwise specified. Minimum pressure rating of 400 psig and minimum temperature rating of 220 degrees F.
Execution:	
Installation:	Install in accordance with the manufacturer's instructions, paragraph 17200-3.01, and the specified functional requirements.
Test:	In accordance with paragraph 17200-3.02.
Application/Calibration:	Application, calibration and set points as specified in paragraph 17200-3.03.
Approved Manufacturers:	W. E. Anderson model V6, or equal.

3.03 INSTRUMENT SPECIFICATION

Instrument Identification:	LCS
Instrument Function:	Level Measurement
Instrument Description:	Conductance Level Switch
Power Supply:	120 volts AC, 60-Hertz nominal
Signal Input:	N/A
Signal Output:	Contacts as specified in paragraph 17216-2.01
Process Connection:	Male NPT, 2-inch or 3-inch size depending on number of electrodes.
Product Requirements:	Switch shall be of the conductance type with PVC sheathed 1/4-inch stainless steel rod electrodes for lengths up through 6 feet. For lengths greater than 6 feet, provide wire suspension type with stainless steel shield electrodes. Electrode fittings shall be an epoxy coated and gasketed cast aluminum housing of suitable configuration for the application. Probes shall be B/W Controller Corporation, Charles F. Warrick Co., or equal. Induction relays shall be two winding type. Primary power supply shall be 120 volts, 60-Hertz. Secondary potential shall not exceed 300 volts AC and short circuit current shall not exceed 25 milliamperes.
Approved Manufacturers:	B/W Type DH, Warrick Series 1G, or equal.
Execution:	Installation: Install in accordance with manufacturer's instructions as specified on the drawings. Calibration: In accordance with paragraph 17200-3.02 B.3.b. Switch set point and reset point adjusted as specified.

3.03 INSTRUMENT SPECIFICATION

Instrument Identification:	LDS
Instrument Function:	Level Measurement
Instrument Description:	Displacer Level Switch
Power Supply:	N/A
Signal Input:	N/A
Signal Output:	Contacts as specified in paragraph 17216-2.01
Process Connection:	2-inch flange, ANSI B16.5, Class 300, raised face, or as specified
Product Requirements:	Switch shall consist of one or more porcelain displacers supported on type 316 stainless steel rod or cable suspended on a spring. Switch actuating mechanism shall be a magnetic shunt carried within a nonmagnetic sealing tube, and switch operated by a magnet on the outside of the sealing tube.
Approved Manufacturers:	Magnetrol N74-2 with carbon steel cage and flanged closure and process connections, or equal.
Execution:	Installation: Install in accordance with manufacturer's instructions as specified on the drawings. Calibration: In accordance with paragraph 17200-3.02 B.3.b. Switch set point and reset point adjusted as specified.

3.03 INSTRUMENT SPECIFICATION

Instrument Identification:	LFS
Instrument Function:	Level Measurement
Instrument Description:	Float Switch, Free-floating
Power Supply:	N/A
Signal Input:	Process
Signal Output:	Contacts, in accordance with paragraph 2.01 of this section.
Process Connection:	N/A
Product Data:	Switch shall be free-floating type, suspended from an oil resistant waterproof cable. The cable designed to support the weight of the float without additional strain relief and permanently sealed where it enters the float body. The conductors shall be a minimum size of 18 AWG. The switch shall be a single pole double throw dry contact type and rated at not less than 10 amperes at 120 Vac. Mercury switches are not acceptable. The float shall have a PVC or ABS corrosion and impact resistant shell.
Execution:	
Installation:	Install in accordance with the manufacturer's instructions, paragraph 17200-3.01, and the specified functional requirements.
Test:	In accordance with paragraph 17200-3.02.
Application/Calibration:	Application, calibration and set points as specified in paragraph 17200-3.03.
Approved Manufacturers:	Magnetrol model T10, Warrick series M, or equal.

3.03 INSTRUMENT SPECIFICATION

Instrument Identification:	LPS
Instrument Function:	Level Measurement
Instrument Description:	Pipeline Capacitance Level Switch
Power Supply:	24 volts DC
Signal Input:	N/A
Signal Output:	Contacts as specified in paragraph 17216-2.01
Process Connection:	Flange, ANSI B16.5, Class 150, wafer, size as specified
Product Requirements:	Switch shall be capacitance type with the capacitance probe fabricated into a wafer suitable for insertion between ANSI 150-pound flanges. Monitor unit provided with a 1 to 6 second adjustable time delay and Form C contacts rated NEMA C150. Monitor integral with the wafer.
Approved Manufacturers:	Endress & Hauser [LS C1145] Princo Model [L2515] or equal.
Execution:	
	Installation: Install in accordance with manufacturer's instructions as specified on the drawings. Calibration: In accordance with paragraph 17200-3.02 B.3.b. Switch set point and reset point adjusted as specified.

3.03 INSTRUMENT SPECIFICATION

Instrument Identification:	LRS
Instrument Function:	Level Measurement
Instrument Description:	Radio Frequency Level Switch
Power Supply:	24 volts DC
Signal Input:	N/A
Signal Output:	Contacts as specified in paragraph 17216-2.01
Process Connection:	3/4-inch male NPT
Product Requirements:	Switch shall be the radio frequency admittance type resistant to buildup of material on the probe surface. Wetted materials shall be type 316 stainless steel and Teflon unless otherwise specified. Set point and reset point fully adjustable. Sensitivity and repeatability shall be 0.1 inch .
Approved Manufacturers:	Drexelbrook [505-1000], Endress & Hauser [LS C1133], or equal.

Execution:

Installation: Install in accordance with manufacturer's instructions as specified on the drawings.

Calibration: In accordance with paragraph 17200-3.02 B.3.b. Switch set point and reset point adjusted as specified.

3.03 INSTRUMENT SPECIFICATION

Instrument Identification:	LUS
Instrument Type:	Level Measurement
Instrument Description:	Ultrasonic Level Switch
Power Supply:	120 Vac, 60-Hertz nominal
Signal Input:	N/A
Signal Output:	Two SPDT contact outputs rated at 5 amperes, 250 Vac.
Process Connection:	N/A
Product Data:	The ultrasonic level switch system shall consist of a piezoelectric transducer and associated electronics in a single enclosure. The switch shall sense the level by measuring the echo-time of an ultrasonic pulse. The housing suitable for operation in Class I Division 2 Hazardous areas and fabricated from polycarbonate. The sensor coated with Tefzel. The range shall be 1-16 feet from the face of the sensor. The switches adjustable over the entire range in a high, low, high-high, high-low, or low-low configuration. The switch shall have a three-digit, 9 mm LCD display and key programmable. Repeatability shall be 0.25% of full range and the resolution 0.1-inch.

Execution:

Installation:	In accordance with manufacturer's instructions, paragraph 17200-3.01, and the specified functional requirements. The switch shall be rigidly mounted approximately 2 feet above maximum level and accurately leveled. The manufacturer shall provide all appropriate mounting hardware.
Test:	In accordance with paragraph 17200-3.02.

3.03 INSTRUMENT SPECIFICATION

Instrument Identification:	LUS (continued)
Application/Calibration:	Application, calibration, and set points as specified in paragraph 17200-3.03.
Approved Manufacturers:	Milltronics Pointek ULS, or equal.

3.03	INSTRUMENT SPECIFICATION
Instrument Identification:	PS
Instrument Function:	Pressure Measurement
Instrument Description:	Pressure Switch
Signal Input:	Process
Signal Output:	As specified in paragraph 17216-2.01
Process Connection:	1/2-inch female NPT
Product Requirements:	Pressure switch shall consist of a pressure transducer and a precision switch. Pressure transducer shall be the diaphragm piston type with wetted materials as recommended by the switch manufacturer. Piston backed by a cylinder disc to permit 10 times over-range pressure without affecting calibration. Range spring and piston shall be isolated from process fluids by the diaphragm. Switch provided with two 3/4-inch conduit connections. Switch assembly housing shall be cast aluminum rated types 3, 4, and 7D per NEMA ICS6. Contractor shall select pressure transducer so that set point falls between 30 and 70 percent of maximum range. Approximate set point and, if applicable, reset point indicated on calibrated scales. Repeatability and sensitivity shall be 1.0 percent of operating range. Unless otherwise specified, switches nonadjustable deadband type.
Approved Manufacturers:	SOR Inc. Static-O-Ring, Mercoid Model DAW or equal.
Execution:	
	Installation: Install in accordance with manufacturer's instructions and to the specified requirements.
Application/Calibration:	Application, calibration, and set points as specified in paragraph 17200-3.03.

3.03 INSTRUMENT SPECIFICATION

Instrument Identification:	PLS
Instrument Function:	Pressure Measurement
Instrument Description:	Pressure Switch, low range
Power Supply:	N/A
Signal Input:	Process
Signal Output:	Contacts, in accordance with paragraph 2.01 of this section.
Process Connection:	1/4-inch female NPT
Product Data:	Pressure switches shall consist of a pressure transducer and a precision switch. Pressure transducer shall be the diaphragm type with wetted materials as recommended by the switch manufacturer, or as specified in paragraph 17200-3.03. The range spring isolated from process fluids by the diaphragm. The pressure connection shall be brass or aluminum unless otherwise specified. The pressure connection sufficiently sturdy to make the switch suitable for unsupported mounting. Switch housing shall be cast aluminum rated NEMA type 4 with 3/4-inch conduit connections unless otherwise specified. Approximate set point and, if applicable, reset point indicated on calibrated scales. Repeatability and sensitivity shall be 1.0 percent of operating range. Switches shall be non-adjustable dead-band, automatic reset type with of 0-2 inches water column.

Execution:

Installation:	Install in accordance with the manufacturer's instructions, paragraph 17200-3.01, and the specified functional requirements.
Test:	In accordance with paragraph 17200-3.02.

3.03 INSTRUMENT SPECIFICATION

Instrument Identification:	PLS (continued)
Application/Calibration:	Application, calibration, and set points as specified in paragraph 17200-3.03.
Approved Manufacturers:	United Electric Series H400, or equal.

3.03 INSTRUMENT SPECIFICATION

Instrument Identification:	PSI
Instrument Function:	Pressure Measurement
Instrument Description:	Indicating differential Pressure Switch
Power Supply:	120 volts AC, 60-Hertz nominal
Signal Input:	N/A
Signal Output:	As specified in paragraph 17216-2.01
Process Connection:	N/A
Product Requirements:	Differential pressure switch shall be a diaphragm element magnetically coupled helix pressure indicator with photocell type switch unit. Set point indicated on the dial and front adjustable. Differential pressure indicator provided with three-valve manifold as specified in paragraph 17211.
Approved Manufacturers:	Dwyer Photohelic, or equal.
Execution: Installation:	Install in accordance with manufacturer's instructions and to the specified requirements. Root valves shall be provided at all process pressure taps. Unless otherwise specified, pressure instruments located as close as practical to the process tap but positioned to permit observation and maintenance. Pressure instruments shall not be supported from process piping and installed in such a manner that blowout discs are not obstructed.
Application/Calibration:	Application, calibration, and set points as specified in paragraph 17200-3.03.

END OF SECTION

SECTION 17310

PROGRAMMABLE LOGIC CONTROLLER

When modifying this Specification for use on a project, delete all Notes to Specifier (NTS) after the Specifier reads the NTS. Right click on the "NTS" Style in the listing in the STYLES AND FORMATTING area, click on SELECT ALL _ INSTANCE(S), and depress the DELETE button on the keyboard. Then scroll through the entire document, checking to ensure that all NTS have indeed been deleted.

Edit >Find> bracket "[" for blanks to be filled in, alternative choices, and provisions that may or may not be included depending on the application. Delete unused alternative choices and provisions as appropriate, fill in blanks, and modify font of the text that is included.

Section 17310 is a proprietary PLC Specification for Square D Modicon. Revise for different Manufacturers and/or models.

PART 1--GENERAL

1.01 DESCRIPTION

A. SCOPE:

This Section specifies requirements for **[small] [and] [large]** programmable logic controllers (PLC) designed to execute discrete and continuous control logic with high reliability in industrial applications. Enclosures and components are specified in Section 17110 – Instrument and Control Panels.

The PLCs provided for this project shall comply with the requirements of this Section. The PLCs are provided by the Systems Integrator per Section 17000.

The PLCs provided with equipment specified in Divisions 11, 13, 14, and 15 are provided by the Equipment Manufacturer **[except for _____]**.

B. PLC SCHEDULE:

Panel No.	PLC Size	Testing	Spares
[MCP-10	**Large**	**Factory Acceptance**	**Required**
LCP-100	**Small**		**Not required**
LCP-900	**Small**		**Not required**
Remote I/O-4	**Large**	**Factory Acceptance**	**Required]**

C. GENERAL REQUIREMENTS:

General requirements shall be as specified in Sections 17000 and 17110. PLC assemblies provided by Equipment Manufacturers may be provided by firms other than the Systems Integrator.

1.02 QUALITY ASSURANCE

A. REFERENCES:

The references are a part of this Section as specified and modified. In the event of conflict between the requirements of this Section and those of the listed documents, the requirements of this Section shall prevail.

Reference	Title
IEC 61131-3	Programmable Controllers – Part 3: Programming Languages
NEMA IA 2.2	Programmable Controllers – Equipment Requirements and Tests
NEMA IA 2.3	Programmable Controllers – Programming Languages

B. SYSTEMS INTEGRATOR:

Responsibilities and qualifications shall be as specified in Section 17000.

__Factory Testing__ should be included for Systems Integrator provided PLCs, especially when Owner requested or BC is programming. Factory PLC testing is normally not specified for Div 11, 13, 14, or 15 equipment, since most such Equipment Manufacturer provided PLCs and programming are standard. Such testing is normally then not necessary except for very large complex mechanical equipment.

Use PLC Schedule 1.01 B above to identify testing required.

Delete factory acceptance testing throughout for smaller projects or those with no appreciable new controller or PLC equipment provided such as expansion and retrofit projects.

[C. FACTORY ACCEPTANCE TESTS:

Factory Acceptance Tests are scheduled in Paragraph 1.01 B.

1. Submit factory test forms for approval prior to tests.

2. Provide all expenses for one Owner staff member and one Engineer staff member to witness factory testing. Travel shall be during business hours on weekdays.

This Paragraph is for cases where AWC will program, and need the PLC complete racks to program and simulate the programs.

The PLC control panel can be shipped and terminated by the Contractor while this is taking place as intermediate terminal blocks are provided for field terminations.

3. **After Factory Acceptance Testing, complete programmable logic controllers including chassis, I/O modules, associated cabling, and miscellaneous hardware shall be turned over to AWC during construction to facilitate [Owner][Engineer] furnished programming and configuration.]**

1.03 SUBMITTALS

The following information shall be provided per Section 17000:

A. SHOP DRAWINGS:

Submit under Section 17110, including:

1. A copy of this Specification Section, with addendum updates included, and all referenced and applicable Sections, with addendum updates included, with each paragraph check-marked to indicate Specification compliance or marked to indicate requested deviations from Specification requirements. A check mark shall denote full compliance with a paragraph as a whole.

   If deviations from the Specifications are indicated, and therefore requested by the Contractor, each deviation shall be underlined and denoted by a number in the margin to the right of the identified paragraph, referenced to a detailed written explanation of the reasons for requesting the deviation.

   The Construction Manager shall be the final authority for determining acceptability of requested deviations. The remaining portions of the paragraph not underlined will signify compliance on the part of the Contractor with the Specifications.

   Failure to include a copy of the marked-up Specification Sections, along with justification(s) for any requested deviations to the Specification requirements, with the submittal shall be sufficient cause for rejection of the entire submittal with no further consideration.

2. PLC Input/Output (I/O) loop diagram drawings.

4. Internal power distribution schematic diagram drawings.

5. PLC power supply loading calculations.

[6. List of spare parts to be provided.]

[B. FACTORY ACCEPTANCE TEST SCHEDULE AND FORMS:

Submit per the requirements of this Section.]

C. OPERATING AND MAINTENANCE INFORMATION:

Operating and maintenance information shall be provided, including the following for the PLC system:

1. Manufacturer, Representative, and Supplier contact information.

2. Manufacturer instruction manuals shall include only the following as applicable to the PLC system:

   a. Safety Precautions.
   b. Environmental Conditions.
   c. Troubleshooting guides and diagnostic techniques.
   d. Component connection diagrams.
   e. Removal and replacement instructions.

3. Warranty information.

4. Final reviewed submittal.

5. As-built drawings with record of switch and jumper settings for all components.

[6. List of spare parts provided.]

PART 2--PRODUCTS

2.01 GENERAL

A. MANUFACTURER:

AWC believes the Manufacturer is capable of producing equipment and/or products that will satisfy the requirements of this Section. This statement shall not be construed to mean that the named Manufacturer's standard product will comply with the requirements of this Section.

Include the following sentence in the above paragraph where only the listed Manufacturers and models of PLCs are permitted by AWC.

[Manufacturers and models shall be as specified for the purpose of compatible and efficient utilization of existing equipment, supplies, and personnel training and experience, no substitutions are permitted.]

B. MATERIALS:

Equipment and/or products shall be new and unused at the time of system assembly.

C. Controller conforming to NEMA IA 2.2, and with required memory and functional capacity to perform specified sequence of operation with scheduled input and output points.

1. RFI/EMI Susceptibility: MIL STD 461B CS02.
2. Showering Arc Test: NEMA Pub No ICS2-230.42.
3. Surge Withstand: ANSI C37.90a.
4. RFI Immunity: IEC 801-3.
5. Ground Continuity: IEC 801-5.
6. Electrostatic Discharge: IEC 801-2.
7. Electromagnetic Field: IEC 61000-4-3.
8. Fast transients: IEC 61000-4-4.

2.02 PROGRAMMABLE LOGIC CONTROLLER - LARGE

New models are introduced by Manufacturers from time-to-time. Avoid sales pressure to specify the latest or smaller model. Manufacturers have smaller models that have very limited I/O capacity and limited communications options.

A. Manufacturer: Square D Modicon Quantum.

B. Controller TUV SIL2 Certified.

C. NEMA IA 2.3 and IEC 61131-3 compliant program editor with program written in **[Ladder Logic][Function Block][Sequential Function][or Equipment Manufacturer's standard]** Language. Program to be written using the same type of software as is specified below.

D. NETWORKING CONNECTIONS:

As shown. Provide all communication interfaces, network cables, taps, terminators, power supplies, and accessories for a complete operating network.

1. **[Ethernet/IP.]**

2. **[Modicon Modbus RS-232 Serial, in addition to processor port.]**

3. **[Modicon Modbus RS-232 Serial, Master.]**

4. **[Modicon Modbus RS-232 Serial, Master.]**

E. PROCESSOR:

Serial port dedicated solely for programming use, and battery-backed solid-state RAM memory for storage of the control program. Provide additional serial communications adapters required for other serial interfacing. RAM memory size shall be provided so that 50% is available after program is tested.

[F. HOT STANDBY PROCESSOR:

The hot standby processor shall provide bumpless transfer within one PLC scan and shall transfer the entire state table each scan. The data transfer rate shall be fast enough to assure bumpless transfer. The hot standby processor shall offset all network communication ports addresses so that the primary controller is always communicating. Provide all redundant processors, switchover processors, I/O interface modules, and cabling for a complete redundant processor system. Equipment Manufacturer PLCs do not require this feature.]

G. INPUT AND OUTPUT MODULES:

AWC prefer 24 Vdc inputs. In large pump station and plant use, beware of induction on long cable runs. Discrete input circuits often will not go off after field contacts open, requiring addition of resistors across each field device to bleed off induced voltage.

1. Discrete Inputs: 120 Vac, 16 channel.

AWC prefers solid state outputs with interposing relays.

Relay outputs or interposing relays work fine for 120 Vac control and allow usage with MOVs and AFDs that have 24 Vdc inputs and telephone dialers that have low voltage DC inputs.

Relay outputs are current limited, however and may be failure prone when starting large NEMA starters or operating large solenoid valves. Solid state outputs with interposing relays are recommended.

Solid state outputs alone often have enough leakage current to be unreliable with field devices with solid state inputs, and MOVs and AFDs must then be specified with 120 Vac solid state inputs.

2. Discrete Outputs: **[Relay output, 16 channel isolated][120 Vac, 16 channel]**.

Analog modules must have isolated channels to prevent ground loops with multiple AFDs. Many AFDs do not have or are not provided with isolated inputs or outputs, so the PLC I/O must be.

3. Analog Inputs: 4-20 mAdc/1-5 Vdc, isolated channel-to-channel, 8 channel.

4. Analog Outputs: 4-20 mAdc, isolated channel-to-channel, 4 channel.

5. Spare Input/Outputs: The greater of a minimum one channel or 15 percent of each type provided per control panel.

6. I/O Chassis spare slots: **[Minimum [1] per chassis][As shown].**

The PLC Manufacturer and several third party Manufacturers provide cables with pre-attached I/O connectors and a DIN rail mounted terminal block assembly. These cables greatly reduce factory acceptance test and field testing troubleshooting of PLC panel wiring errors.

7. **[Manufactured I/O Cables for all modules:**

a. **By PLC Manufacturer or other electrical component Manufacturer.**

b. **Cable pre-attached to connector compatible with I/O module.**

c. **DISCRETE INPUT: [Cable pre-attached to DIN rail mounted terminal block assembly with one fused terminal with LED for each group of 8 inputs, one spare terminal for powering each input, one terminal for each input, and one common terminal for each group of 8 inputs.][Cable with one wire for each I/O module terminal, ready for insertion into separate terminal blocks for field connections.]**

d **DISCRETE OUTPUT: [Cable pre-attached to DIN rail mounted terminal block assembly with one fused terminal with 120 Vac LED for each output, two terminals for each relay output, and one common terminal for each output.] [Cable pre-attached to DIN rail mounted terminal block assembly with one fused terminal with 120 Vac LED for each group of 8 outputs, one spare terminal for powering each output, one terminal for each output, and one common terminal for each group of 8 outputs.] [Cable with one wire for each I/O module terminal, ready for insertion into separate terminal blocks for field connections.]**

e **ANALOG INPUT: [Cable pre-attached to DIN rail mounted terminal block assembly with one fused terminal with LED for each input, two terminals for each input, and one common terminal for each input.][Cable with one wire for each I/O module terminal, ready for insertion into separate terminal blocks for field connections.]**

f. **ANALOG OUTPUT: [Cable pre-attached to DIN rail mounted terminal block assembly with one fused terminal with LED for each input, two terminals for each input, and one common terminal for each input.][Cable with one wire for each I/O module terminal, ready for insertion into separate terminal blocks for field connections.]**

g. **Verify cable length required prior to ordering.]**

H. POWER SUPPLIES:

Single power supplies are the most common. Verify requirement for redundant supplies with AWC. Redundant supplies may occupy an additional chassis slot for the Modicon Quantum.

1. **[Redundant Processor Chassis: [Single][Redundant], 120 Vac input.]**

2. Processor and I/O Chassis: **[Single][Redundant]**, 120 Vac input.

3. I/O only Chassis: **[Single][Redundant]**, 120 Vac input.

I. MISCELLANEOUS:

Provide all cables, taps, terminators, power supplies, and accessories for a complete operating PLC system.

2.03 PROGRAMMABLE LOGIC CONTROLLER - SMALL

A. Manufacturer: **[Square D Modicon Momentum]** [_____]

B. NEMA IA 2.3 and IEC 61131-3 compliant program editor with program written in **[Ladder Logic][Function Block][Sequential Function][or Equipment Manufacturer's standard]** Language. Program to be written using the same type of software as is specified below.

C. NETWORKING CONNECTIONS:

As shown. Provide all communication interfaces, network cables, taps, terminators, power supplies, and accessories for a complete operating network.

1. **[Ethernet/IP.]**
2. **[Modicon Modbus Plus.]**
3. **[Modicon Modbus RS-232 Serial, in addition to processor port.]**

D. PROCESSOR:

With Ethernet port and serial port dedicated solely for programming use, minimum 200k bytes (8 bit) for IEC 1131 control programs, and 24k words (16 bit) for storage of data in battery-backed RAM memory. Provide additional serial communications adapters required for other serial interfacing. Include real-time clock.

E. INPUT AND OUTPUT MODULES:

In small facilities with long cable runs, beware of induction. Discrete input circuits often will not go off after field contacts open, requiring addition of resistors across each field device to bleed off induced voltage

1. Discrete Inputs: **[120 Vac][24 Vdc]**, 16 channel.

Relay outputs or interposing relays work fine for 120 Vac control and allow usage with MOVs and AFDs that have 24 Vdc inputs and telephone dialers that have low voltage DC inputs. Relay outputs are current limited, however and may be failure prone when starting large NEMA starters or operating large solenoid valves. Solid state outputs with interposing relays are recommended.

Solid state outputs alone often have enough leakage current to be unreliable with field devices with solid state inputs, and MOVs and AFDs must then be specified with 120 Vac solid state inputs.

2. Discrete Outputs: **[Relay output, 16 channel isolated][120 Vac, 16 channel].**

3. Analog Inputs: 4-20 mAdc/1-5 Vdc, isolated channel-to-channel, 4 channel.

4. Analog Outputs: 4-20 mAdc, 4 channel.

5. I/O module terminations: By Manufacturer to match module.

6. I/O module interface modules: Provide as necessary including cabling to interface all I/O to processor.

7. Spare Input/Outputs: The greater of a minimum one channel or 15 percent of each type provided per control panel.

F. POWER SUPPLIES:

24 Vdc. Refer to Section 17110 for power supply.

G. MISCELLANEOUS:

Provide all cables, taps, terminators, power supplies, and accessories for a complete operating PLC system.

2.04 PROGRAMMING SOFTWARE

The following software shall be provided by the Systems Integrator for this project.

A. PROGRAMMABLE LOGIC CONTROLLER – LARGE:

1. Manufacturer: **[Square D Modicon [Concept][Unity]**

Delete if AWC has software licenses and does not need additional copies.

2. Licenses: **[Provide 1 License. Request Owner / City licensee information prior to ordering for registration. Provide one PC to**

PLC programming cable for each license][Owner has licensed copy for their use].

B. PROGRAMMABLE LOGIC CONTROLLER – SMALL:

Do not delete, even if AWC has software. The programmer must know what type is to be used and provide their own copy.

1. Manufacturer: **[Square D Modicon Concept].**

Delete if AWC has software licenses and does not need additional copies.

2. Licenses: **[Provide 1 License. Request Owner / City licensee information prior to ordering for registration. Provide one PC to PLC programming cable for each license][Owner has licensed copy for their use].**

2.05 SPARE PARTS

The following spare parts shall be provided**[, refer to Paragraph 1.01 B for schedule].**

A. PROGRAMMABLE LOGIC CONTROLLER – LARGE:

1. One of each unique processor card.
2. One of each unique **[remote I/O]** and communication card.
3. One for each ten, minimum of one for each unique I/O card.
4. One of each unique power supply.
5. One of each unique pre-fabricated cable.

B. PROGRAMMABLE LOGIC CONTROLLER – SMALL:

1. One of each unique processor card.
2. One of each unique **[remote I/O]** and communication card.
3. One for each ten, minimum of one for each unique I/O card.
4. One of each unique power supply.
5. One of each unique pre-fabricated cable.

2.06 CONTROL PANEL FABRICATION

A. Refer to Section 17110.

B. Detail shop drawings showing field connections and any terminal block jumpering required.

C. Terminate all used and spare I/O wiring to terminal blocks.

Refer to Large PLC "Input and Output Modules" above for selection.

D. Create wire markers with "to-from" component name, PLC slot/base, or terminal column number and terminal number information identical at each end. **[For Large PLC I/O Cables, the cable bundle shall also be labeled with "to-from" PLC slot number and terminal column number information identical at each end.]**

E. Provide terminal Blocks for field connections to PLC Discrete Inputs:

1. One fused terminal with LED for each group of 8 inputs, connected to control power.

2. Fused terminal connected to eight terminal blocks to provide power to each field input circuit.

3. One terminal per PLC input.

4. One common terminal for each group of 8 inputs, connected to control power common.

F. Provide terminal Blocks for field connections to PLC Discrete Outputs:

1. One fused terminal with LED for each output, connected to control power.

Refer to "Input and Output Modules" above for selection.

2. **[Two terminals per PLC relay output.][Provide interposing relay for each solid-state PLC output. Connect output and control power common to relay coil. Provide two terminals for relay contact, normally opened unless otherwise noted.]**

3. One common terminal for each output, connected to control power common.

G. Provide terminal Blocks for field connections to PLC Analog Inputs:

1. One fused terminal with LED for each input, connected to +24 Vdc.

2. Two terminals per PLC input.

3. One common terminal for each input, connected to 24 Vdc common.

4. One ground terminal for each input shield, connected to signal ground bus.

5. Two surge protecting terminals for each field mounted instrument or equipment, grounded to the frame ground bus.

H. Provide terminal Blocks for field connections to PLC Analog Outputs:

1. One fused terminal with LED for each output, connected to +24 Vdc.

2. Two terminals per PLC output.

3. One common terminal for each output, connected to 24 Vdc common.

4. One ground terminal for each output shield, connected to signal ground bus.

5. Two surge protecting terminals for field mounted equipment, grounded to the frame ground bus.

2.07 PRODUCT DATA

The following Product Data shall be provided.

[A. FACTORY ACCEPTANCE TEST RESULTS:

Submit under Section 17030 and per the requirements of this Section.]

[B. OPERATING AND MAINTENANCE INFORMATION:

Operating and maintenance information shall be provided, including the following.

1. Manufacturer, Representative, and Supplier contact information.

2. Manufacturer instruction manuals shall include only the following as applicable to the PLC system:

a. Safety Precautions.
b. Environmental Conditions.
c. Troubleshooting guides and diagnostic techniques.
d. Component connection diagrams.
e. Removal and replacement instructions.

3. Warranty information.

4. Final reviewed submittal.

5. As-built drawings with record of switch and jumper settings for all components.

[6. List of spare parts provided.]

For projects with no Equipment Manufacturer provided PLCs, this paragraph may be deleted.

[C. PLC PROGRAM – EQUIPMENT MANUFACTURER:

Provide the as-built programmable controller program on a CD, prepared using the software type specified in Part 2. Provide [2] copies. Label the CD to include:

1. **Owner's name, facility name, project name and project number as shown on the drawings.**

2. **"Application Programs For (equipment and/or PLC name)".**

3. **Programming software name and revision.**

4. **Supplier name and program revision date.]**

PART 3--EXECUTION

3.01 INSTALLATION

Refer to Section 17110.

Connect input and output devices to the PLC via control panel terminal blocks, not directly to the PLC.

3.02 FIELD INSPECTION AND TESTING

A. EQUIPMENT MANUFACTURER AND SYSTEMS INTEGRATOR:

The supplier of each PLC system shall provide a qualified service representative to perform the following:

1. Inspect the PLC installation including I/O and network systems, hardware configuration switch and jumper settings.

2. Monitor all PLC system diagnostic indicators, both hardware and software, and certify that the PLC system performance meets or exceeds the Manufacturer's published specifications.

Specify generous time for Integrator PLC testing, so they can price it into their bid and perform. For water wells, perhaps two man-weeks onsite would be sufficient per I/O rack.

Specify Equipment Manufacturer PLC testing time here, which will be in addition to the time they will spend adjusting their mechanical equipment which is specified in the associated equipment specification.

3. Assist in all testing. The Systems Integrator will provide a minimum of [four] man-weeks on-site for each PLC I/O rack. **[Equipment**

Manufacturers shall provide a minimum of [two] man-days on-site per equipment assembly.]

4. Modify PLC programs as required.

5. Certify in writing to the Construction Manager that the PLC system has been installed and configured in accordance with the Manufacturer's published guidelines. **[Equipment Manufacturer certification requirements are per the associated equipment Specification.]**

B. CONTRACTOR:

Fault or trouble conditions shall be investigated and resolved by the Contractor to the satisfaction of the PLC supplier.

3.03 TRAINING

A. OPERATIONS AND TROUBLESHOOTING:

Verify with AWC if non-Equipment Manufacturer PLC training is required, many are already familiar with the specified PLC system.

[Systems Integrator training is specified in Section 17990.] A minimum of four man-hours on-site including training materials and expenses shall be provided for three maintenance personnel.]

For projects with no Equipment Manufacturer provided PLCs, this paragraph may be deleted.

[Equipment Manufacturer training is per the associated equipment Specification.]

Programming training is rare, verify with AWC. Most are either already trained, but some may ask to have several personnel sent to a factory class located elsewhere.

[B. PLC PROGRAMMING:

Off-site training shall be provided for AWC's personnel on the operation and troubleshooting of the PLC system and fundamental programming techniques. Training shall be conducted by a certified instructor in the direct employ of the PLC Manufacturer.

The training shall be structured as a lecture/lab course with hands-on lab exercises utilizing PLC system hardware similar to the hardware installed as work of this contract. Hardware simulators and programming terminals shall be furnished by the PLC Manufacturer. A minimum of [three] days of formal training shall be presented.

Travel shall occur one day before and one day after training. Include the cost of training and all expenses for [two] personnel.]

A PLC Input/Output summary is only to be provided if included in the Scope of Services. Otherwise, such summaries add work and coordination, are somewhat redundant to the Section

17200 Instrument Index, and any conflicts can result in RFIs. When required, AWC will normally provide an example.

Such a summary would not be provided for Equipment Manufacturer PLCs.

[3.04 PLC INPUT/OUTPUT SUMMARY

The Programmable Logic Controller I/O Summary provides a listing of PLC module requirements, and the assigned input/output points for the specified PLC system. The unassigned PLC I/O points shall be tagged as spare. The Programmable Logic Controller I/O Summary is included in Attachment A at the end of this Specification Section.

A. PROGRAMMABLE LOGIC CONTROLLER I/O SUMMARY:

The Programmable Logic Controller (PLC) I/O Summary provides a listing of the assigned input/output points to the specified PLC system.

The detailed assignment of I/O to specific points is provided for information only and will be revised and modified throughout the project. Final assignments shall be coordinated between the Contractor, the System Integrator, and AWC during Construction.

B. CLARIFICATION OF HEADINGS:

1. SIGNAL: The signal number consists of a two or three letter prefix (indicating the I/O point function) followed by a number identifying the process loop with which the I/O point is associated.

2. DESCRIPTION: Provides an abbreviated description of the function of the I/O point.

3. SOURCE: Identifies field device that I/O point is connected to.

4. DRAWINGS: Identifies the Drawings on which the I/O point is referenced.]

END OF SECTION

SECTION 17330

REMOTE TELEMETRY UNIT

When modifying this specification for use on a project, delete all Notes to Specifier (NTS) after the Specifier reads the NTS. Right click on the "NTS" Style in the listing in the STYLES AND FORMATTING area, click on SELECT ALL _ INSTANCE(S), and depress the DELETE button on the keyboard. Then scroll through the entire document, checking to ensure that all NTS have indeed been deleted.

Edit >Find> bracket"[" for blanks to be filled in, alternative choices, and provisions that may or may not be included depending on the application. Delete unused alternative choices and provisions as appropriate, fill in blanks, and modify font of the text that is included.

RTU for indoor mounting make changes for outdoor enclosure, as required.

PART 1--GENERAL

1.01 SCOPE

The Remote Telemetry Unit (RTU) shall include a Programmable Logic Controller (PLC) specified in Section 17310 that for process control functions, data acquisition, and communicates with the SCADA system Operators at the Central Control Center (CCC).

The project's RTU, radio, modem, antenna, antenna cables, lightning arrestor, and associated components are specified herein. The work includes installation, testing, commissioning, PLC programming, facility graphics, and training.

The Central Control Center programming and graphics shall be [_____].

[The RTU shall communicate both with the CCC host processor and other RTUs via _____].

[The Radio Path Survey to establish the antenna height, direction, and mounting shall be performed and submitted within 20 days of the Notice-To-Proceed with the project.]

1.02 REFERENCES

A. Refer to Section 17000 for the project scope, the System Integrator requirements, the submittal requirements, product data requirements, and the coordination requirements.

PART 2--PRODUCTS

2.01 MATERIALS AND QUALITY

Equipment material shall be new, free from defects, and industrial-grade, as specified.

A. SCOPE:

This section specifies requirements for a remote terminal unit (RTU) cabinet with programmable logic controller (PLC) designed to execute discrete and continuous control logic with high reliability in industrial applications.

Provide notification of the Factory Acceptance Test with ten days notice to the Owner and Engineer.

B. RTU PRODUCTS:

Provide:

1. NEMA-3R enclosure with:

   a. Two filtered air vents
   b. Two vent fans,
   c. Breather-drain device on bottom of the cabinet.
   d. Inner door for the Operator Interface Device mounting.
   e. **[Air conditioning unit sized by the supplier]**

2. UL 508A recognized shop fabrication of the RTU with specified products.

3. PLC and software per Section 17310.

4. RTU containing:

   a. UPS backup system rated **[500]** [ ] VA

   b. 1-hour battery backup

   c. 120Vac input and 120Vac output.

   d. Power distribution with circuit breakers to the instruments and analyzers.

   e. Surge protection for the RTU equipment, as specified.

   f. Surge protection for individual instruments, as specified.

   g. Operator Interface mounted on the inside door of the RTU:

(1) Modicon PanelView digital display with configuration software and communication drivers.

(2) Communication Port.

(3) Programming Port.

(4) PLC Port.

5. Radio system: Johnson Data Radio, Part No. 242-4016-610, Model T-96SR

6. Antenna system with cables and mast support per drawings.

2.02 PHYSICAL REQUIREMENTS

A. TERMINATIONS:

Customer interconnect to the termination connectors shall accept 16 AWG wires into each position. Quick-disconnect terminations shall be provided to allow disconnecting of the wiring to the terminals.

Remote termination connections shall be provided as DIN rail mount type. Provide individual I/O point fusing, ring lug or spade lug field connections, and relay contacts for discrete outputs.

2.03 RADIO

A. OPERATING FREQUENCIES:

1. **[Operate in the 928/952 MHz. frequency band.**
   Specifically: Transmit on 928.18125 MHz.
   Receive on 952.18125 MHz.

2. **FCC type acceptance under FCC rules Part 94 for operation in a 12.5 KHz bandwidth].**

B. ENVIRONMENTAL CONDITIONS:

The RTU shall be able to operate in environments with the following specifications:

1. Temperature range: -30 to +60 deg. C
2. Humidity: 95% at 40 deg. C
3. Shock and Vibration: MIL 810C Spec.

C. TRANSMITTER:

The RTU shall meet the following transmitter requirements:

1.	Output Power (at antenna port):	5 Watts (+37DBm) max.
2.	Transmitter Attack Time:	Less than 1 msec for 90% power within 1 KHz of operation frequency
3.	Output Frequency:	928 to 929 MHz
4.	Stability:	+/-0.00015% from -30 to +60 degrees C (for both 12.5 KHz and 25 KHz channels)
5.	Spurious/Harmonic Emissions:	55DB
6.	Output Impedance:	50 ohms
7.	Modulation Deviation:	+/- 5 KHz FM (25 KHz channels), +/- 3 KHz (12.5 KHz channels)
8.	Duty Cycle:	Continuous
9.	Audio Input Level:	Adjustable, -20 to +1- DBm for 5 KHz dev.
10.	Frequency Response	+1 to -3 DB, 20 to 3KHz
11.	Time Out Timer:	Adjustable (2 to 30 seconds)
12.	AFC Circuit:	Built in

D. RECEIVER:

The RTU shall meet the following receiver requirements:

1.	Sensitivity at the antenna port:	0.3 microvolts (-117 DBm), for 12 DB Sinad
2.	Frequency Stability:	+/-0.00015% from -30 to +60 degrees C. (for both 12.5 and 25 KHz channels)
3.	Frequency Range:	952 to 953 MHz

4.	Selectivity:	-10 DB minimum at adjacent channel
5.	Desensitazation:	-70 DB minimum (EIA)
6.	Spurious/Image Rejection:	-85 DB minimum
7.	Audio Output Levels:	Adjustable, -20 to +6 DBm
8.	Frequency Response:	Flat output: +1, -3 DB, 20 to 6000 Hz Filtered output: +1, -3 DB, 20 to 3000 Hz
9.	AFC Circuit:	Built in
10.	Intermodulation (EIA):	-75 DB, minimum

E. MODEM AND AUXILIARIES DEVICES:

The RTU shall include the following and comply with these general requirements:

1.	Input Power:	12 to 14 VDC Nominal
2.	Transient Protection:	2500 Volt Isolation on VF I/O; power supply, keying, and alarm circuits.
3.	Data Rate:	4800 Baud
4.	Built in Modem:	4800 Baud Async Digital Interface. RS232 direct Interface: RTS/CTS time not to exceed 10 msecs.
5.	Antenna Connection:	Type N, female
6.	Unit Housing:	Die Cast aluminum enclosure

F. INTERFACE:

The Master Station Radio: Existing MDS-2000-HSU "SMART" unit.

The Remote Station Radio: Provide a Microwave Data Systems Model 9710B. Include LED monitoring devices for communication signals: RTS, CTS, TXD, DCD, RXD.

The radio shall operate in the half duplex mode with the transmitter keying provided by the Remote Terminal Unit.

2.04 ANTENNA

The Broadband Yagi Antenna shall be manufactured by SCALA, model TY-900, and shall meet the following specifications:

1.	Frequency Range:	925 to 960 MHz
2.	Gain:	10 DB, minimum
3.	Maximum Input Power:	150 Watts
4.	Lightning Protection:	Direct Grounding to mast
5.	Front to Back Ratio:	20 DB, minimum
6.	Connector:	Type N, Female
7.	Mounting Hardware:	Weatherproof clamp suitable for direct mount to 2 inch SCH, 40 steel pipe
8.	VSWR:	1.5:1 max (1.35:1 typ.)

2.05 LIGHTNING ARRESTOR

A. GENERAL:

The lightning arrestor shall be by Polyphaser, model IS-50NX-C2, and shall meet the following requirements:

1.	Max. Surge:	50KAmps IEEE 8/20 Waveform (based on IEEE Std. 28-1974 and ANSI C62.1)
2.	Turn on VDC:	60 V. Typical
3.	Turn On Time:	7ns after DC Threshold (based on 1 KV/nS waveform
4.	Impedance:	50 Ohms
5.	Frequency Range:	900 to 1000 MHz.
6.	VSWR:	<=1.1 to 1 over operating Bandwidth

7. Insertion loss: <=0.1DB over operating Bandwidth

8. Temperature Range: 60 to -30 degrees C.

B. CONNECTIONS:

The Arrestor shall have male Type N connectors for the input and the output. The Arrestor shall have a flange mounting arrangement to aid connection to ground. The Arrestor shall be in a conductive, metallic enclosure.

C. ANTENNA CABLE:

The antenna cable shall be 1/2" foam dielectric, manufactured by Andrews Heliax, part number LDF5-50A. Two Andrew type L44PLU "N" male connectors

2.06 POWER SUPPLY

A. Single output series power supply

1. Output: 12VDC, 3.4 Amp.
2. Input: 115VAC
3. Newark Catalog #89F1271

B. Single output series power supply

1. Output: 24VDC, 3.6 Amp.
2. Input: 115VAC
3. Newark Catalog #89F1264

C. Two gell cell batteries

1. 12VDC
2. 6 Amp/hr.
3. Operable to 140 Deg. F.
4. Newark Catalog #99F1805

2.07 RECORD DRAWINGS

Submittal drawings shall be provided as record drawings. The drawings shall be updated to indicate the final PLC system configuration including bill of materials, module layout for each chassis, individual module configuration switch settings, jumper positions, and final addressing of all communication network nodes.

PART 3--EXECUTION

3.01 INSTALLATION AND TESTING

Installation, testing, and commissioning of the RTU and auxiliary equipment shall be as specified in Section 17000, as specified herein, and shall be coordinated with Arizona Water Company (AWC).

The Contractor is responsible for the overall functioning of the system and shall ensure that each device is properly installed, without damage, and without the violation of manufacturers' warranties and installation instructions. Installation shall be under the direction of factory trained personnel.

3.02 INSTALLATION SERVICES

On-site inspection, testing, and certification of the completed PLC system installation shall be provided. Fault or trouble conditions shall be investigated and resolved by the Contractor to the satisfaction of the PLC manufacturer.

3.03 PROGRAMMING AND START-UP

[_____] shall provide programming of the RTUs and configuration of the Master SCADA node.

Provide 5 days of on-site start-up service and assistance to AWC for testing and debugging of the control system and RTU interface.

END OF SECTION

ARIZONA WATER COMPANY

EI&C DESIGN GUIDELINES

PROJECT EXAMPLE DRAWINGS

NOVEMBER 2009

Corporate Office
3805 North Black Canyon Hwy • Phoenix, AZ 85015-5351
P.O. Box 29006 • Phoenix, AZ 85038-9006
602.240.6860 (Phone)
602.240.6878 or 602.240.6874 (Fax)

ARIZONA WATER COMPANY

EI&C DESIGN GUIDELINES
PROJECT EXAMPLE DRAWINGS

TABLE OF CONTENTS

CASA GRANDE WELL NO. 32 RVAR

PRELIMINARY SITE EQUIPMENT LAYOUT	E-1
ELECTRICAL ONE-LINE DIAGRAM, LOAD CALCULATIONS AND EQUIPMENT LAYOUT	E-2
120/240V PANEL "A" IN SES PANEL SCHEDULE AND YARD LIGHT DETAIL	E-3
CONDUIT AND CABLE SCHEDULE AND EQUIPMENT PAD DETAIL	E-4

ARIZONA WATER COMPANY UDC

RTU CONTROL PANEL WIRING DIAGRAM	E-R01
PLC DISCRETE INPUT MODULES WIRING DIAGRAM	E-R02
PLC DISCRETE OUTPUT MODULES WIRING DIAGRAM	E-R03
PLC DISCRETE INPUT MODULES WIRING DIAGRAM	E-R04
WIRING DIAGRAM AI MODULE	E-R05
WIRING DIAGRAM FIT MODULE	E-R06
RTU PANEL INSIDE DOOR / BACK PANEL LAYOUT	E-R07
RTU BILL OF MATERIALS	E-R08

Corporate Office
3805 North Black Canyon Hwy • Phoenix, AZ 85015-5351
P.O. Box 29006 • Phoenix, AZ 85038-9006
602.240.6860 (Phone)
602.240.6878 or 602.240.6874 (Fax)

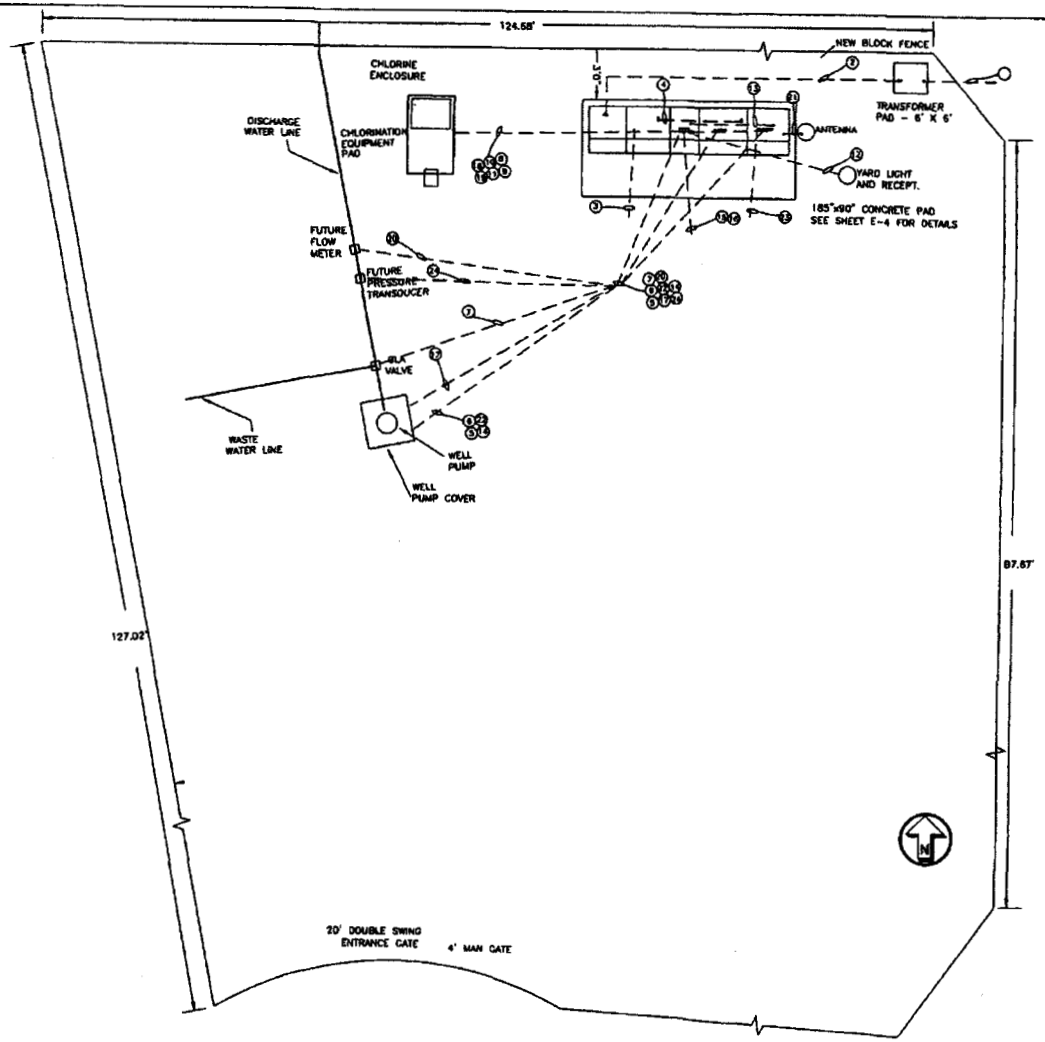

SITE PLAN - N.T.S.

NOTES

1. ALL CONDUITS NOT SHOWN ON THIS DRAWING. SEE CONDUIT AND CABLE SCHEDULE ON DRAWING E4 FOR ALL CONDUITS.
2. INSTALL ONE 150 WATT INCANDESCENT WEATHERPROOF LIGHT FIXTURE IN WELL SHELTER WITH SWITCH BY A COLUMN. INSTALL GFI RECEPTACLE AT FLOOR LEVEL AND CONNECT LIGHT SWITCH WITH FLEXIBLE CORD TO THIS RECEPTACLE.
3. ALL ELECTRICAL IN THE WELL SHELTER IS TO BE INSTALLED SO THAT THE SHELTER CAN BE REMOVED BY UN-PLUGGING FROM FLOOR MOUNTED RECEPTACLES.
4. INSTALL ONE DUPLEX GFI RECEPTACLE IN THE WELL SHELTER AT FLOOR LEVEL SO THAT SHELTER CAN BE REMOVED.
5. THE YARD LIGHT SHALL BE INSTALLED PER DETAIL ON SHEET E3 WITH PHOTOCELL CONTROL.
6. SEE SHEET E4 FOR CONDUIT AND CABLE SCHEDULE.
7. SEE ARIZONA WATER DRAWING FOR SITE SPECIFIC INFORMATION SUCH AS LEGAL DESCRIPTION AND PARCEL NUMBER AS WELL AS PROPERTY LOCATION.
8. THE CHLORINE ENCLOSURE IS A PRE-FABRICATED FIBERGLASS BEVCO ECS-F810 WITH A 30 AMP., 120V. POWER PANEL FEEDING LIGHTS, RECEPTACLES, EXHAUST FAN, & 2 - 1500 WATT HEATERS ALL PRE-WIRED TO A FUSED SAFETY SWITCH.
9. INSTALL RECEPTACLE IN CHLORINE ENCLOSURE FOR CHLORINE PUMP POWERED THROUGH CONTACT IN WELL PUMP STARTER CABINET FROM PANEL "A".

ELECTRICAL DRAWING LIST

GG-991 ARIZONA WATER SITE LAYOUT WITH PROPERTY DESCRIPTION
E-1 WELL SITE EQUIPMENT LAYOUT AND NOTES
E-2 ELECTRICAL ONE LINE DIAGRAM, LOAD CALCULATIONS AND EQUIPMENT LAYOUT
E-3 120/240V. PANEL "A" IN SES PANEL SCHEDULE AND YARD LIGHT DETAIL.
E-4 CONDUIT AND CABLE SCHEDULE AND EQUIPMENT PAD DETAIL

ARIZONA WATER COMPANY
3805 N. BLACK CANYON HWY. POST OFFICE BOX 29006
PHOENIX, ARIZONA 85038-9006
(602) 240-6860

CASA GRANDE WELL #32 SITE PLAN AND NOTES

SEC. -T. R.

The above installation is to be installed in accordance with the Arizona Water Company standard specifications on file with the Arizona Department of Environmental Quality

FOR WATER ONLY

SHEET OF

DWG. NO. E-1

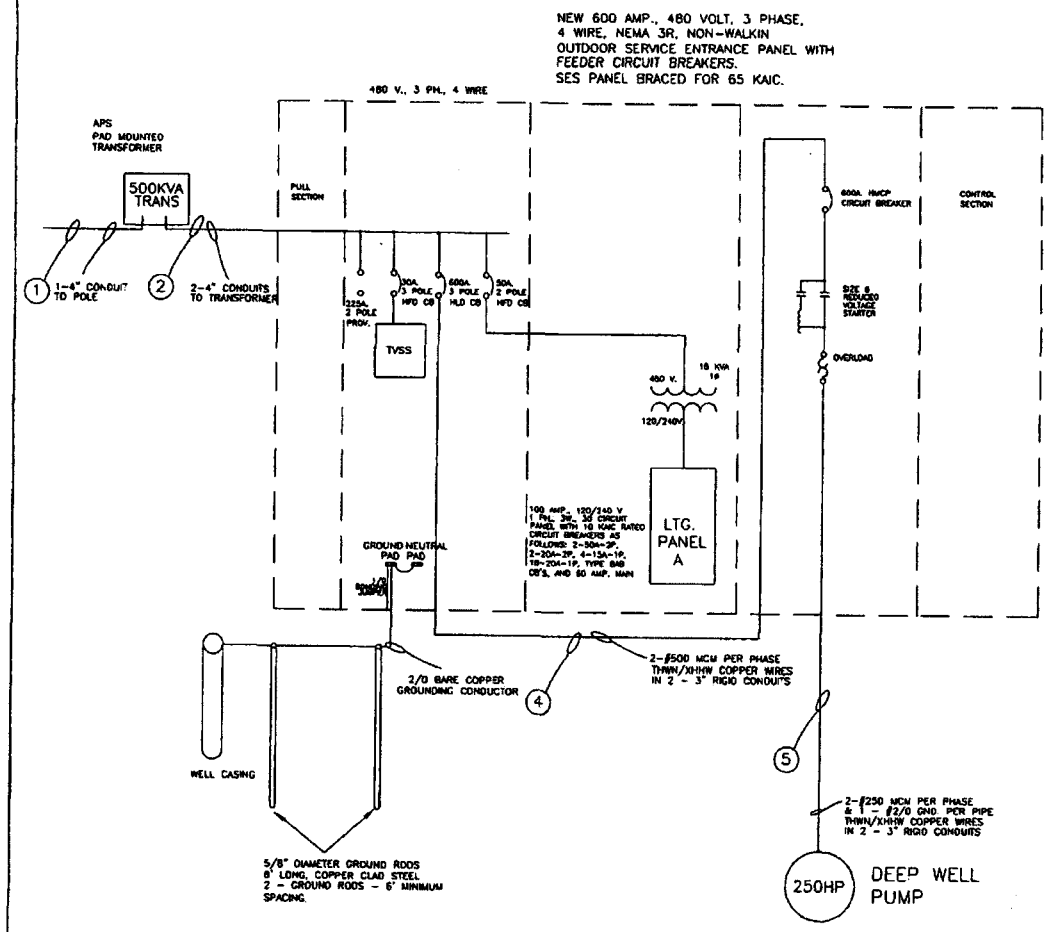

NEW 250 HP PUMP SINGLE LINE DIAGRAM

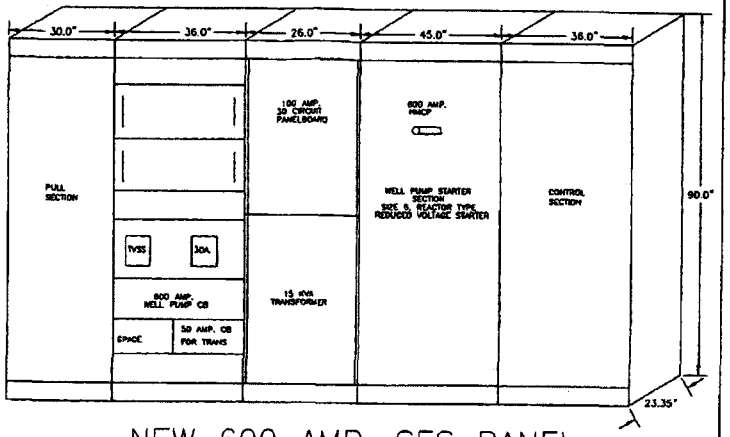

NEW 600 AMP. SES PANEL

LOAD CALCULATIONS	
WELL PUMP - 250 HP - 302 FLA	
25% LARGEST MOTOR (300HP)-	76 AMPS.
15 KVA TRANSFORMER -	32 AMPS.
TOTAL CODE LOAD	410 AMPS.

ARIZONA WATER COMPANY
3805 N. BLACK CANYON HWY. POST OFFICE BOX 29008
PHOENIX, ARIZONA 85038-9008
(602) 240-6860

CASA GRANDE WELL #32 ELECTRICAL ONE-LINE DIAGRAM, LOAD CALCULATIONS AND EQUIPMENT LAYOUT

SEC. -T. R.

The above installation is to be installed in accordance with the Arizona Water Company standard specifications on file with the Arizona Department of Environmental Quality

FOR WATER ONLY

SHEET OF

E-2

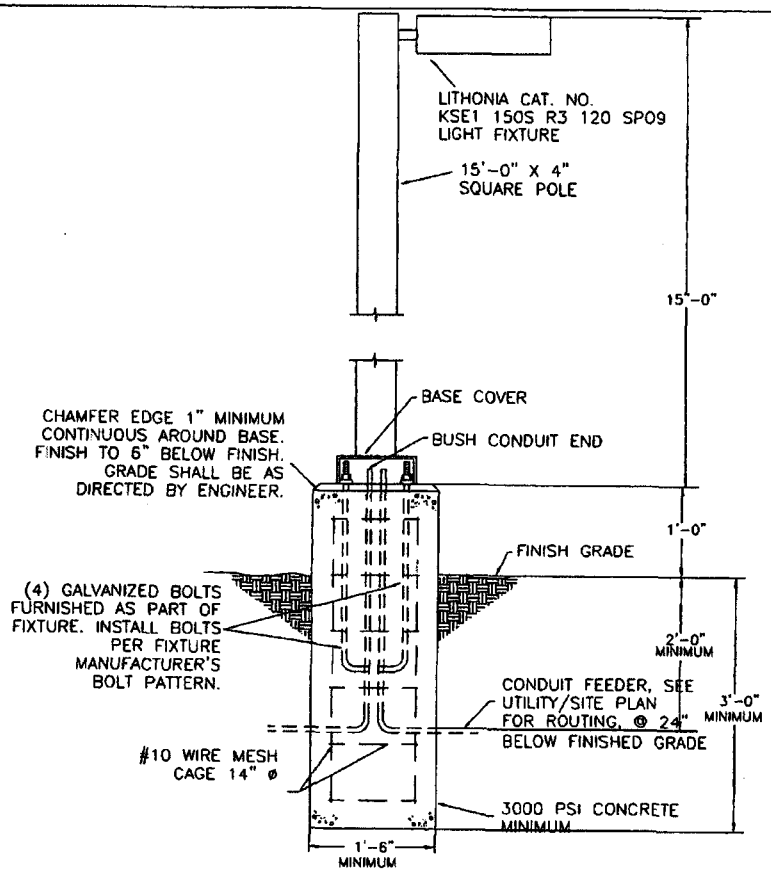

NOTE: POLE FOR YARD LIGHTING SHALL BE LOCATED AS DIRECTED BY THE OWNER IN THE GENERAL AREA SHOWN. LIGHT FIXTURE AND POLE FOUNDATION SHALL BE AS DESIGNED BY POLE SUPPLIER'S STRUCTURAL ENGINEER. THE COMPLETE ASSEMBLY SHALL TAKE INTO ACCOUNT LIGHT FIXTURE TYPE, CONFIGURATION, MOUNTING HEIGHT, MAXIMUM PROJECT AREA AND 100mph BASIC WIND VELOCITY.

YARD FIXTURE DETAIL – N.T.S.

120/240 VOLT PANEL A

LOCATION	LOAD	TRIP	CIRCUITS A	CIRCUITS B		TRIP	LOAD	LOCATION
SPARE		50A	1	A	2	50A		SPARE
SPARE			3	B	4			SPARE
SPARE		20A	5	A	6	20A		SPARE
SPARE			7	B	B			SPARE
SPARE		20A	9	A	10	20A	380	POLE YARD LIGHT W/RECEPTACLE
SPARE		20A	11	B	12	20A	1000	CHLORINATOR PUMP
MCC LIGHTS	300	20A	13	A	14	20A	3000	CHLORINE ENCLOSURE POWER PANEL
MCC RECEPTACLES	360	20A	15	B	16	20A	150	WELL SHELTER LIGHT
SPARE		20A	17	A	18	20A		SPARE
FUTURE CONTROL SECTION	500	20A	19	B	20	20A	180	WELL SHELTER RECEPTACLE
SPARE		20A	21	A	22	20A		SPARE
SPARE		20A	23	B	24	20A	500	FUTURE CONTROL SECTION
SPARE		20A	25	A	26	20A		SPARE
SPARE		15A	27	B	28	15A		SPARE
SPARE		15A	29	A	30	15A		SPARE
TOTAL (CONNECTED)				A			3680	
" " "				B			2690	

15 KVA CUTLER HAMMER TRANSFORMER BUILT INTO DISTRIBUTION BOARD WITH 100 AMP., 120/240 VOLT, SINGLE PHASE 30 CIRCUIT POWER PANEL.

PANEL A LOAD CALCULATIONS

A PHASE MISC. LOADS X 100% = 3660 VA

3660 VA/120V = 31 CODE AMPS AT 120 VOLTS

PANEL "A" PANEL SCHEDULE

ARIZONA WATER COMPANY
3805 N. BLACK CANYON HWY. POST OFFICE BOX 29006
PHOENIX, ARIZONA 85036-9006
(602) 240-6860

CASA GRANDE WELL #32 120/240 PANEL "A" IN 5&6 PANEL SCHEDULE AND YARD LIGHT DETAIL

SEC. -T. R.

The above installation is to be installed in accordance with the Arizona Water Company standard specifications on file with the Arizona Department of Environmental Quality

FOR WATER ONLY

SHEET OF

E-3

CONDUIT	SIZE	WIRE	FROM	TO
1	1-4"C	PULL STRING ONLY	APS TRANSFORMER	APS POLE - HV FEEDER
2	2-4"C	PULL STRING ONLY	APS TRANSFORMER	SES
3	2"C	EMPTY	SES	STUB OUT UNDER PAD
4	2-3"C	2-500MCM PER PHASE	SES WELL PUMP CIRCUIT BREAKER	WELL PUMP STARTER SECTION
5	2-3"C	2-250MCM PER PHASE & 1-#1/0 GND. PER PIPE	WELL PUMP STARTER	WELL PUMP HEAD BASE FOR MOTOR
6	1"C	2-#12 & 1-#12 GND	WELL PUMP STARTER	WELL PUMP OILER SOLENOID
7	1"C	6-#12 & 1-#12 GND	WELL PUMP STARTER	WASTE VALVE (CLA) CONTROL VALVE & LIMIT SW.
8	1"C	2-#12 & 1-#12 GND	WELL PUMP STARTER	CHLORINATOR CABINET PUMP CONTROL
9	1"C	2-#12 & 1-#12 GND	PANEL "A"	CHLORINATOR CABINET PUMP
10	1"C	2-#10 & 1-#10 GND	PANEL "A"	CHLORINE BLDG. (LIGHTING & RECEPTACLE)
11	1"C	EMPTY	PANEL "A"	CHLORINE BLDG.
12	1"C	4-#12 & 2-#12 GND	PANEL "A"	AREA LIGHT & RECEPTACLE
13	1"C	2-#12 & 1-#12 GND	PANEL "A"	RADIO CONTROL SECTION
14	1"C	EMPTY	PANEL "A"	WELL PUMP HEAD (SPARE)
15	2"C	EMPTY	PANEL "A"	STUB OUT UNDER PAD
16	1"C	EMPTY	PANEL "A"	STUB OUT UNDER PAD
17	1"C	4-#12 & 2-#12 GNDS.	PANEL "A"	WELL PUMP RECEP. & LIGHT
18	1"C	4-#12 & 1-#12 GND	RADIO CONTROL SECTION	CHLORINE BLDG. PUMP STATUS
19	1"C	EMPTY	RADIO CONTROL SECTION	CHLORINE BLDG.
20	1"C	EMPTY	RADIO CONTROL SECTION	FUTURE FLOWMETER
21	2"C	EMPTY	RADIO CONTROL SECTION	STUB-OUT FOR FUTURE RADIO ANTENNA
22	1"C	EMPTY	RADIO CONTROL SECTION	WELL PUMP HEAD BASE
23	2"C	EMPTY	RADIO CONTROL SECTION	STUB OUT UNDER PAD
24	1"C	EMPTY	RADIO CONTROL SECTION	FUTURE PRESSURE TRANSDUCER

CONDUIT SCHEDULE

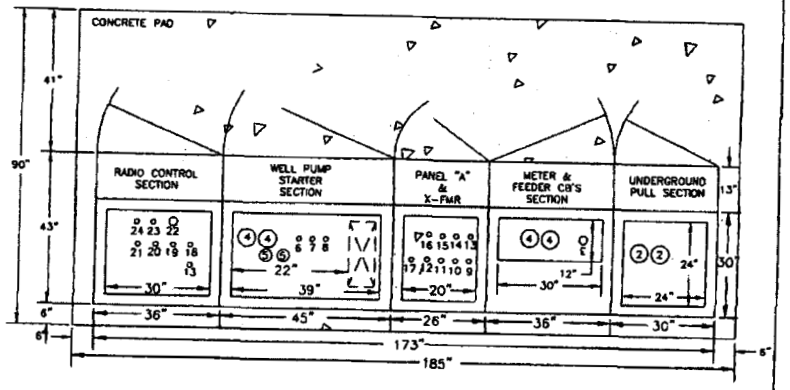

ELECTRICAL EQUIPMENT BOTTOM VIEW - N.T.S.

ARIZONA WATER COMPANY
3805 N. BLACK CANYON HWY. POST OFFICE BOX 29006
PHOENIX, ARIZONA 85038-9006
(602) 240-6880

CASA GRANDE WELL #32 CONDUIT AND CABLE SCHEDULE AND EQUIPMENT PAD DETAIL

SEC. -T. R.

The above installation is to be installed in accordance with the Arizona Water Company standard specifications on file with the Arizona Department of Environmental Quality

FOR WATER ONLY

SHEET OF

E-4

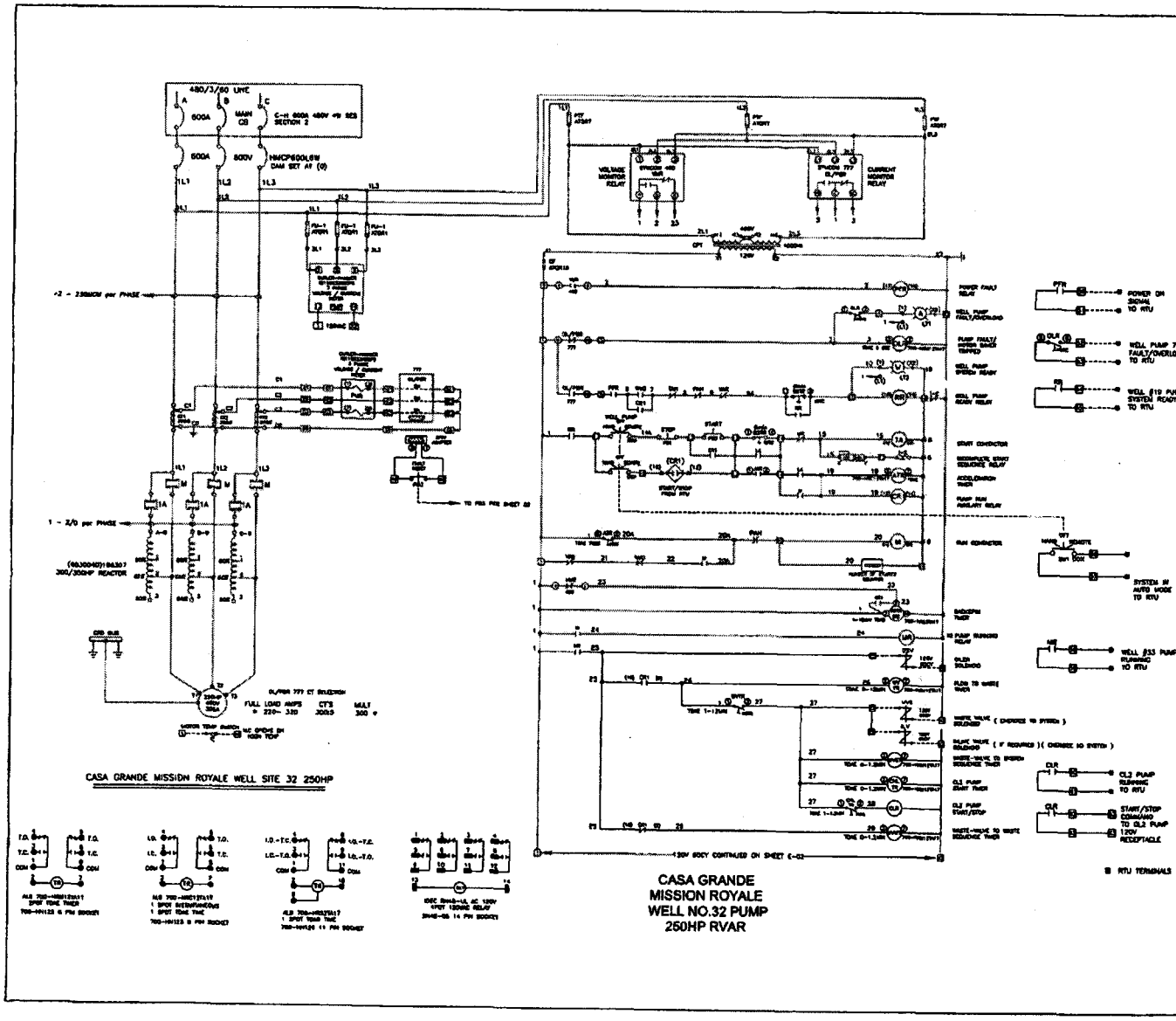

ARIZONA WATER COMPANY

3805 N. BLACK CANYON HWY. POST OFFICE BOX 29009
PHOENIX, ARIZONA 85038-9009
(602) 240-6860

CASA GRANDE MISSION ROYALE WELL 32 250HP 480/3/60 RVAR WELL PUMP CONTROLLER

SEC. -T. R.

The above installation is to be installed in accordance with the Arizona Water Company standard specifications on file with the Arizona Department of Environmental Quality

FOR WATER ONLY

SHEET OF

E-1

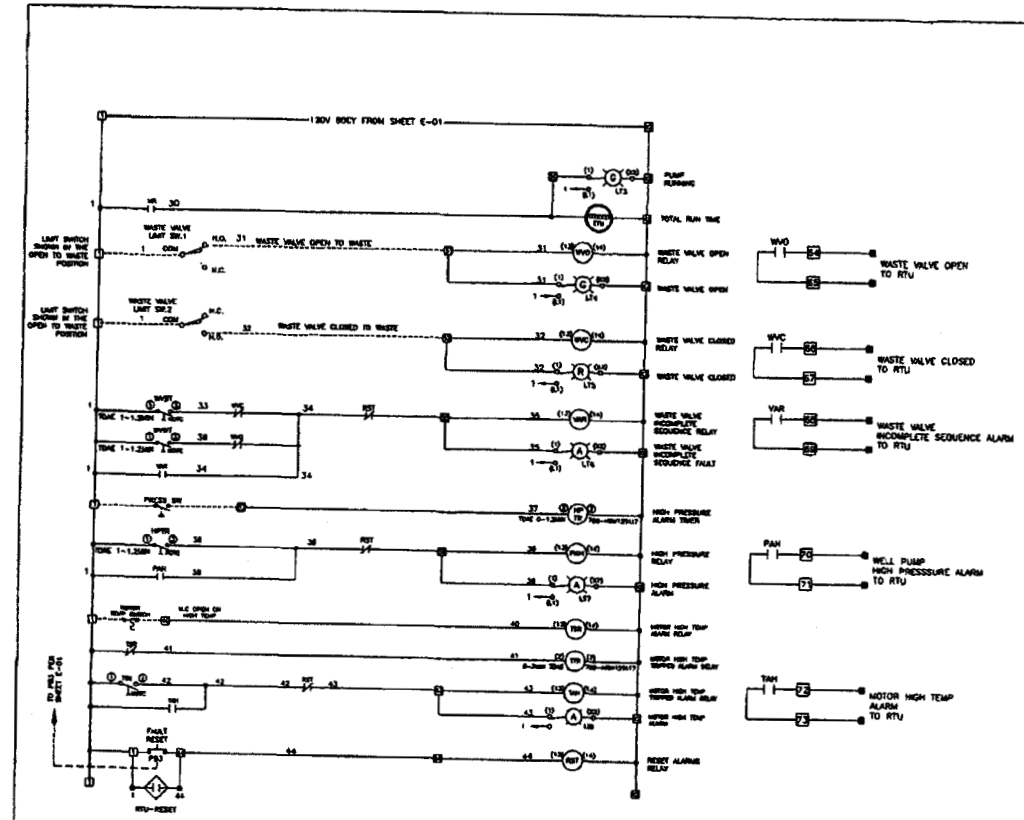

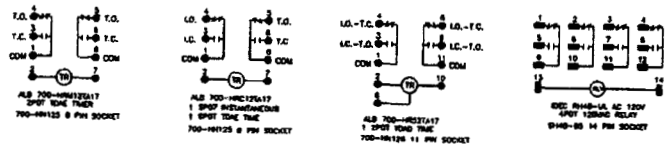

SYMB	QUANT.	CATALOG NO	DESCRIPTION
SESAMCC	1	P3B0341SK02	C-H 6 SECTION 600A 480V 4W UGF
		SPX 6400H	NEMA 3R SESAMCC 50H 175W 430
TVSS	1	CPS 250A TVSS	with SuperVisor Diagnostic Package
CB-1	1	HLD3600	C-H 600A 3P 65KAIC CB
CB-2	1	HFD3200 (225AFR)	C-H 2 POLE 50A TRANSFORMER CB
TXF	1	C-H 15KVA 480-120/240V	LIGHTING TRANSFORMER
PANEL "A"	1	1Pole-1Line 1s	50A - 120/240V 30 Circuit Panelboard
		250HP WELL NO.32 PUMP STARTER SECTION	
HMCP	1	HMCP600L6W	C-H 600A 3P 1000-6000A HMCP
TERMS	3	TA600LD	C-H 600A CB TERM (2) 3/0-350MCM
	3	TA600LDKCW	C-H 600A CB TERM (2) 3/0-350MCM
AFD HWO	1	8MP4	C-H "L" FRAME MOUNTING KIT
MECH	1	HMRMR18	C-H "L" FRAME HANDLE MECH
1A	1	V281KTCJ21	C-H 200A 250HP VAC CONTACTOR
M	1	V281KVCJ21	C-H 540A 450HP VAC CONTACTOR
	4	J11	C-H 1NO -1NC AUXILIARY INTERLOCK
XL	1	6C00040 (1663GF)	HAMMOND 300/350HP 460/380
CT1 -CT3	3	MSPT301	TT 300/5 (250HP) CURRENT TRSF
OL-PBR	1	777	SYMCOM 777 MOTOR SAVER
	1	777 8 PIN RECPT	8 PIN ADAPTER
FTF	1	U60CC8	FERRAZ 30A 3P 600V HOLDER
	3	ATC30V	FERRAZ 7A 600V FUSES
CF	1	U60CC11	FERRAZ 30A 1P 600V HOLDER
	1	ATC15	FERRAZ 15A 600V FUSE
CPT	1	PA1000JX	RPE 240/480-120V 1KVA
FU-1	1	U60CC9	FERRAZ 30A 3P 600V HOLDER
	3	ATC20	FERRAZ 1A 600V FUSES
PMR	1	ID1100L3AS0CP2	C-H VOLTS/AMPS MONITOR METER
VMR	1	480-A	SYMCOM MODEL 480 VOLT MONT
RELAYS	10	RH4B-UL AC120V	IDEC 4PDT 120VAC ILLUMINATED
			PFR - RR - CR1 - WVO - WVC - VAR
			PAH - TSR - TAH - RST
SOCKETS	10	SH4B-05	IDEC 14 PIN SOCKETS
MR, OLR	2	CR6MR48A	C-H 4 POLE120VAC RELAYS
TIMERS	7	700-HN112TA17	ALB 120V 60CY TONE S.S TIMERS
			OLR- WVTR- WVOST- OHLTR
			WVWT- HPTR TTR
ATR	1	700-HRC12TA17	A-B 0-12 SEC TDAE S.S TIMER
8STR	1	700-HR27TA17 (2)	A-B 0-12 SEC TDAD S.E TIMER
SOCKETS	8	700-HN125	A-B 8 PIN SOCKET
	1	700-HN126	A-B 11 PIN SOCKET
X-Y	1	D175K10-R18	OHMITE 100 OHM 100W ADJ RES
LS.	1	507-SOV-08	A-B 40A 1P IND-VAC OL
	1	W16	A-B TYPE W 0.3-44 HEATER
ETM	1	T308P12	EMM CHICAGO 115VAC RTM
COUNTER	1	P2B08A	EMM CHICAGO 115VAC COUNTER
LT1	1	102S07HNA	C-H AMBER FAULT LIGHT
	1	10307L30	C-H "WELL PUMP" "FAULT / OVERLOAD"
LT2	1	102S07HNW	C-H WHITE READY LIGHT
	1	10307L30	C-H "WELL PUMP" "SYSTEM READY"
LT3	1	102S07HNG	C-H GREEN RUN LIGHT
	1	10307L30	C-H "WELL PUMP" "RUNNING"
LT4	1	102S07HNG	C-H GREEN VALVE LIGHT
	1	10307L30	C-H "WASTE VALVE OPEN" "TO WASTE"
LT5	1	102S07HNR	C-H RED VALVE LIGHT
	1	10307L30	C-H "WASTE VALVE OPEN" "TO SYSTEM"
LT6	1	102S07HNA	C-H AMBER ALARM LIGHT
	1	10307L30	C-H "WASTE VALVE" "INCOMPLETE SEQUENCE"
LT7	1	102S07HNA	C-H AMBER ALARM LIGHT
	1	10307L30	C-H "HIGH PRESSURE" "ALARM"
LT8	1	102S07HNA	C-H AMBER ALARM LIGHT
	1	10307L30	C-H "MOTOR HIGH TEMP" "ALARM"
SW1	1	10S0073003	C-H 3 POS. SWITCH OPERATOR
	2	10S0072	C-H 2N.O. CONTACT BLOCKS
PB1	1	10S07L30	C-H " HAND OFF REMOTE"
	1	10S07102	C-H RED P.B OPERATOR
	1	10S0071	C-H 1NO-1NC CONTACT BLOCK
	1	10S07L37	C-H "STOP"
PB2	1	10S07103	C-H GREEN P.B OPERATOR
	1	10S0071	C-H 1NO-1NC CONTACT BLOCK
	1	10S07L36	C-H "PUMP START"
PB3	1	10S07101	C-H BLACK P.B OPERATOR
	1	10S0072	C-H 2N.O. CONTACT BLOCK
	1	10S07L39	"FAULT / RESET"
POWER	1	8R303	FERRAZ PD 300MCM-4 3 POLE
BLOCKS	3	8R00	FERRAZ POWER BLOCK COVERS
TERMS	80	1S0010	WEIDMUELLER TERMINAL BLOCKS
	8	10R120	30A SINGLE TERMINAL BLOCKS
ENDS	8	10R120	END STOPS
	3	10S000	SINGLE ENDS

8 RTU TERMINALS

CASA GRANDE
MISSION ROYALE
WELL No.32 PUMP
250HP 460V RVAR

ARIZONA WATER COMPANY
3805 N. BLACK CANYON HWY. POST OFFICE BOX 29006
PHOENIX, ARIZONA 85038-9006
(602) 240-6860

CASA GRANDE MISSION ROYALE WELL 32 250HP 460V RVAR WELL PUMP CONTROLLER

SEC. -T. R.

The above installation is to be installed in accordance with the Arizona Water Company standard specifications on file with the Arizona Department of Environmental Quality

FOR WATER ONLY

SHEET OF

E-2

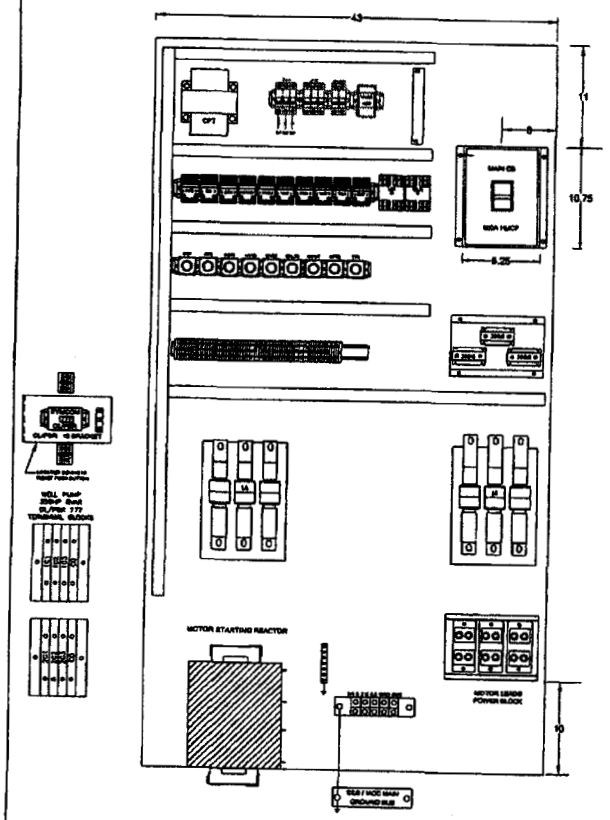

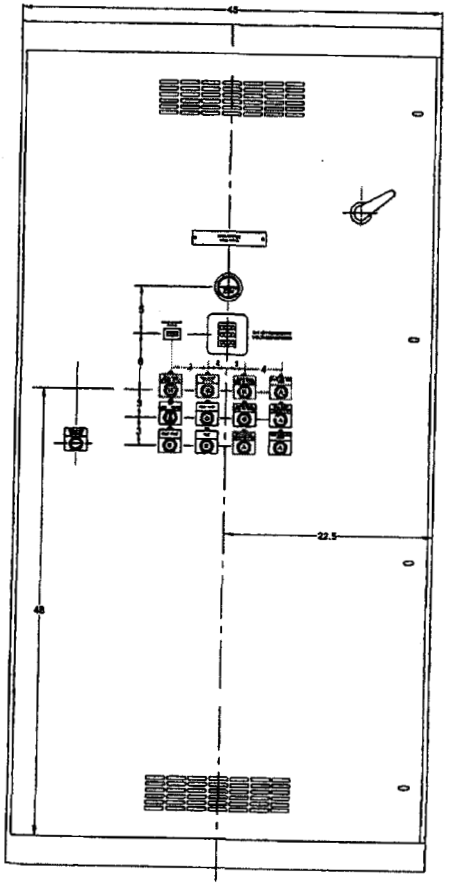

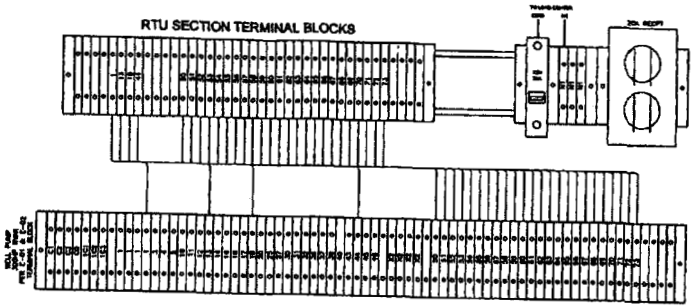

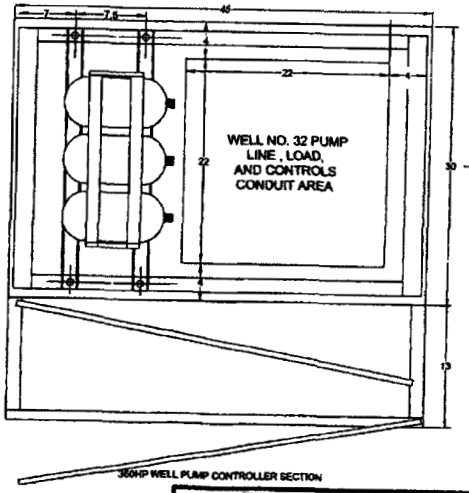

350HP WELL PUMP CONTROLLER SECTION

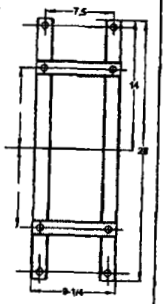

1-5/8X 1-5/8
UNISTRUT
REACTOR
MOUNTING
BRACKET

CASA GRANDE
MISSION ROYALE
WELL No. 32 PUMP
250HP RVAR

ARIZONA WATER COMPANY
3805 N. BLACK CANYON HWY. POST OFFICE BOX 29006
PHOENIX, ARIZONA 85038-9006
(602) 240-6560

CASA GRANDE MISSION ROYALE WELL 32 350HP MISSION ROYAL WELL PUMP CONTROLL SECTION

SEC. -T. R.

The above installation is to be installed in accordance with the Arizona Water Company standard specifications or its with the Arizona Department of Environmental Quality

FOR WATER ONLY

SHEET OF

E-2A

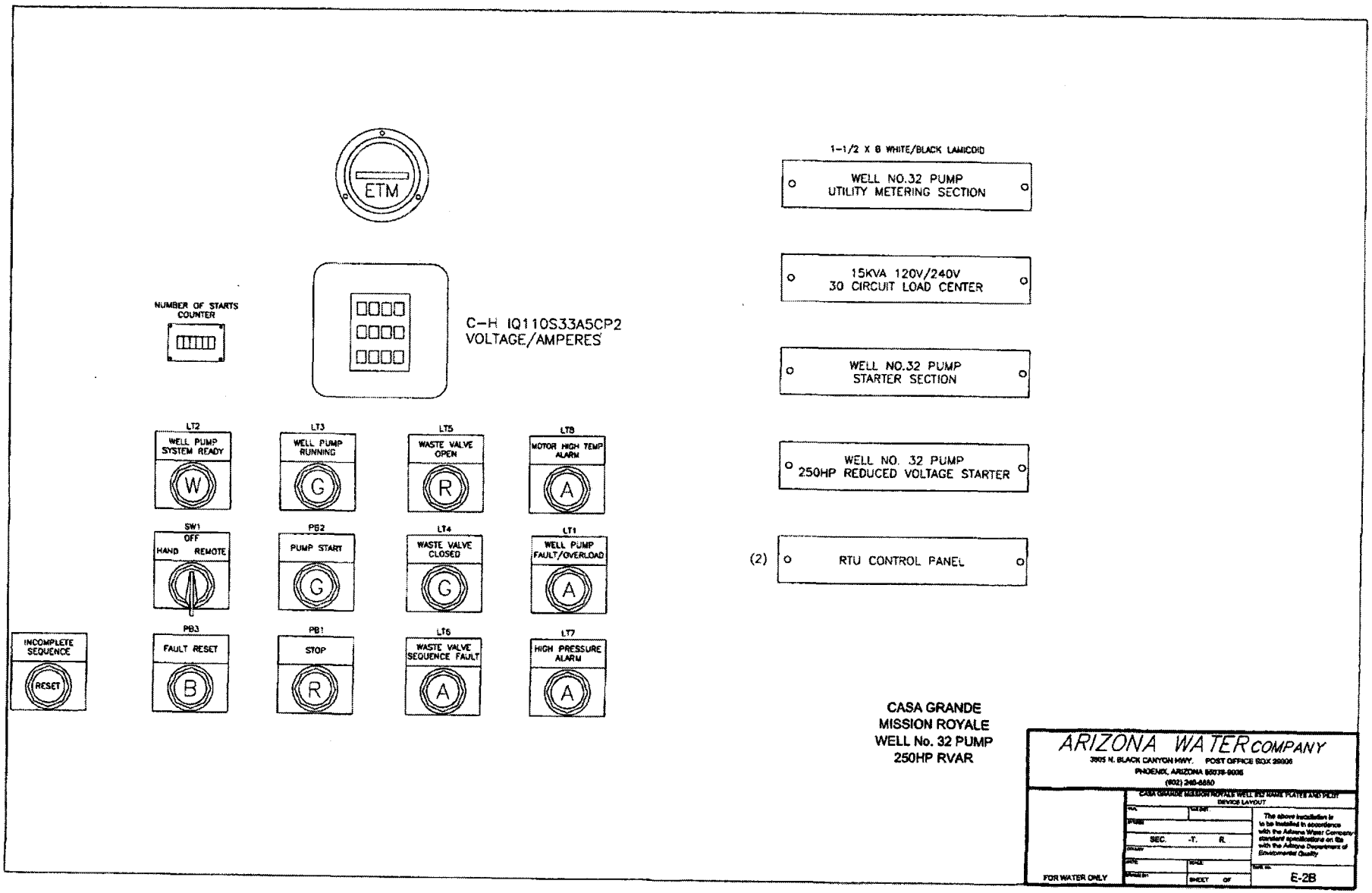
ETM
NUMBER OF STARTS COUNTER
C-H IQ110S33A5CP2
VOLTAGE/AMPERES
LT2
WELL PUMP SYSTEM READY
W
LT3
WELL PUMP RUNNING
G
LT5
WASTE VALVE OPEN
R
LT8
MOTOR HIGH TEMP ALARM
A
SW1
OFF
HAND REMOTE
PB2
PUMP START
G
LT4
WASTE VALVE CLOSED
G
LT1
WELL PUMP FAULT/OVERLOAD
A
INCOMPLETE SEQUENCE
RESET
PB3
FAULT RESET
B
PB1
STOP
R
LT6
WASTE VALVE SEQUENCE FAULT
A
LT7
HIGH PRESSURE ALARM
A
1-1/2 X 6 WHITE/BLACK LAMICOID
WELL NO.32 PUMP
UTILITY METERING SECTION
15KVA 120V/240V
30 CIRCUIT LOAD CENTER
WELL NO.32 PUMP
STARTER SECTION
WELL NO. 32 PUMP
250HP REDUCED VOLTAGE STARTER
(2)
RTU CONTROL PANEL
CASA GRANDE
MISSION ROYALE
WELL No. 32 PUMP
250HP RVAR
ARIZONA WATER COMPANY
3905 N. BLACK CANYON HWY. POST OFFICE BOX 29006
PHOENIX, ARIZONA 85038-9006
(602) 240-6550
CASA GRANDE MISSION ROYALE WELL 32 NAME PLATES AND PILOT DEVICE LAYOUT
SEC. -T. R.
The above installation is to be installed in accordance with the Arizona Water Company standard specifications on file with the Arizona Department of Environmental Quality
FOR WATER ONLY
SHEET OF
E-2B

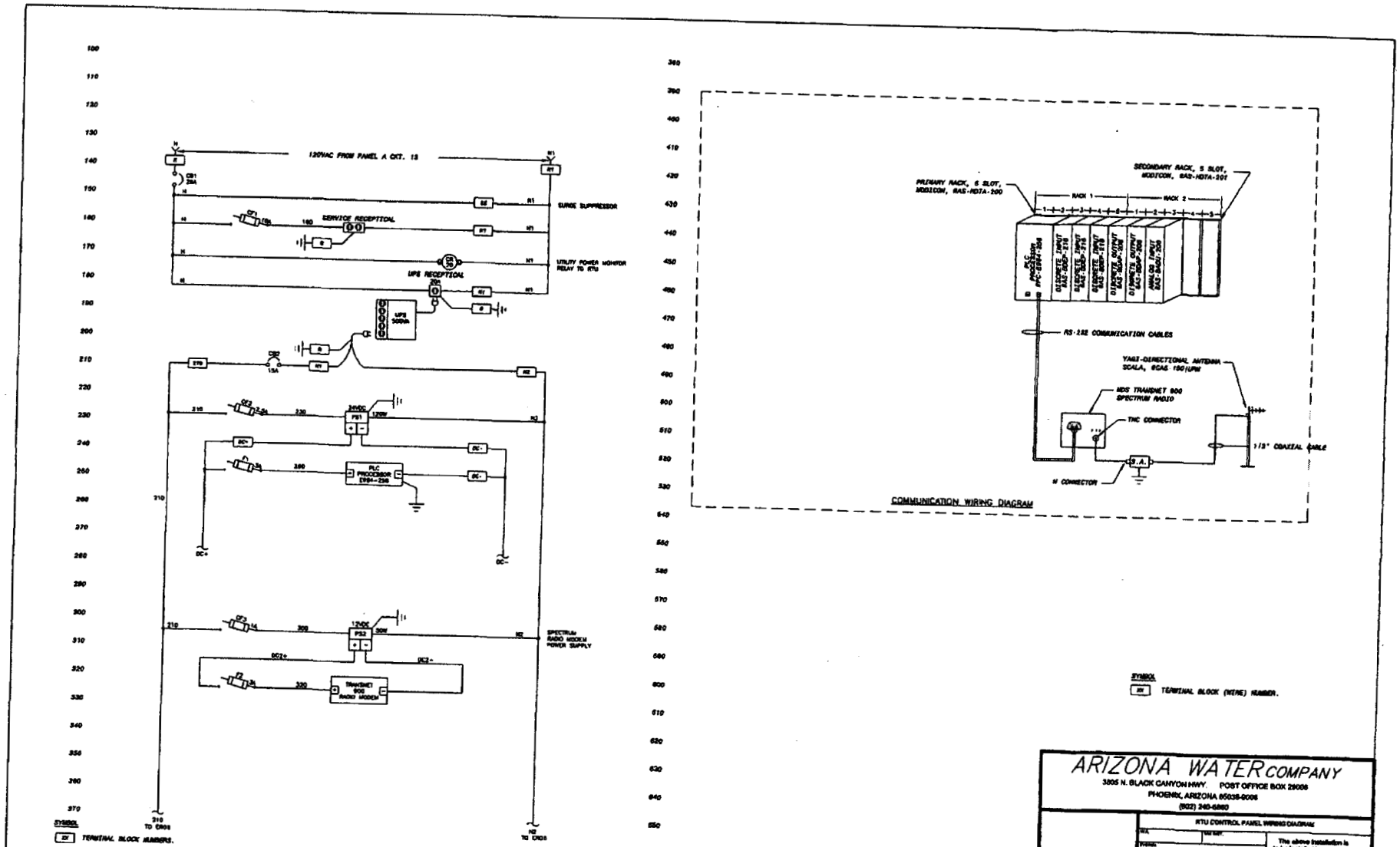

RTU CONTROL PANEL WIRING DIAGRAM

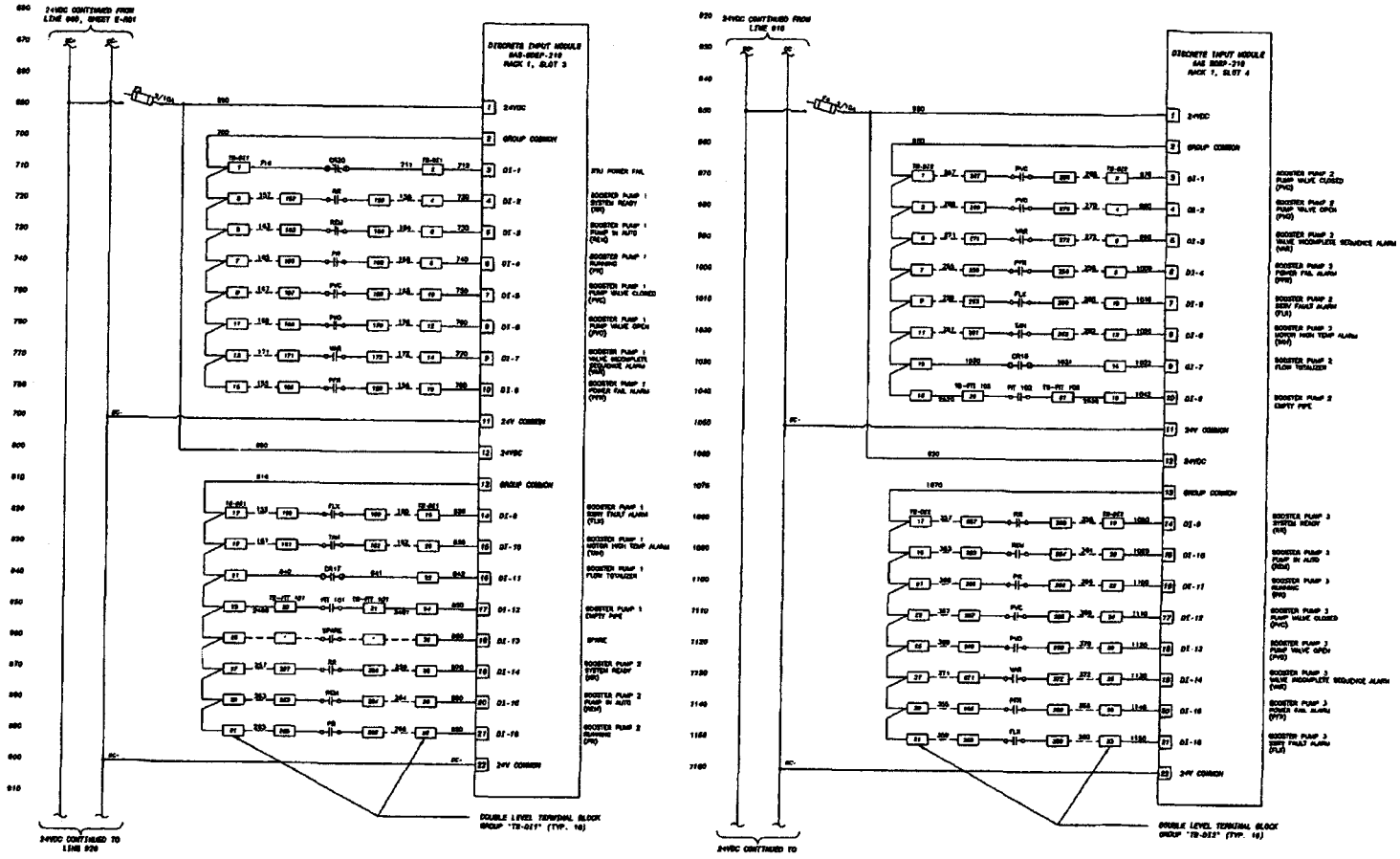

SYMBOL

TERMINAL BLOCK NUMBERS.

STARTER PANELS TERMINAL BLOCK (WIRE) NUMBERS.

PLC DISCRETE INPUT MODULES WIRING DIAGRAM

ARIZONA WATER COMPANY

3805 N. BLACK CANYON HWY. POST OFFICE BOX 29008

PHOENIX, ARIZONA 85038-9008

(602) 240-6880

UDC BOOSTER PUMP STATION RTU

SEC. -T. R.

The above installation is to be installed in accordance with the Arizona Water Company standard specifications on file with the Arizona Department of Environmental Quality

FOR WATER ONLY

SHEET OF

E-R02

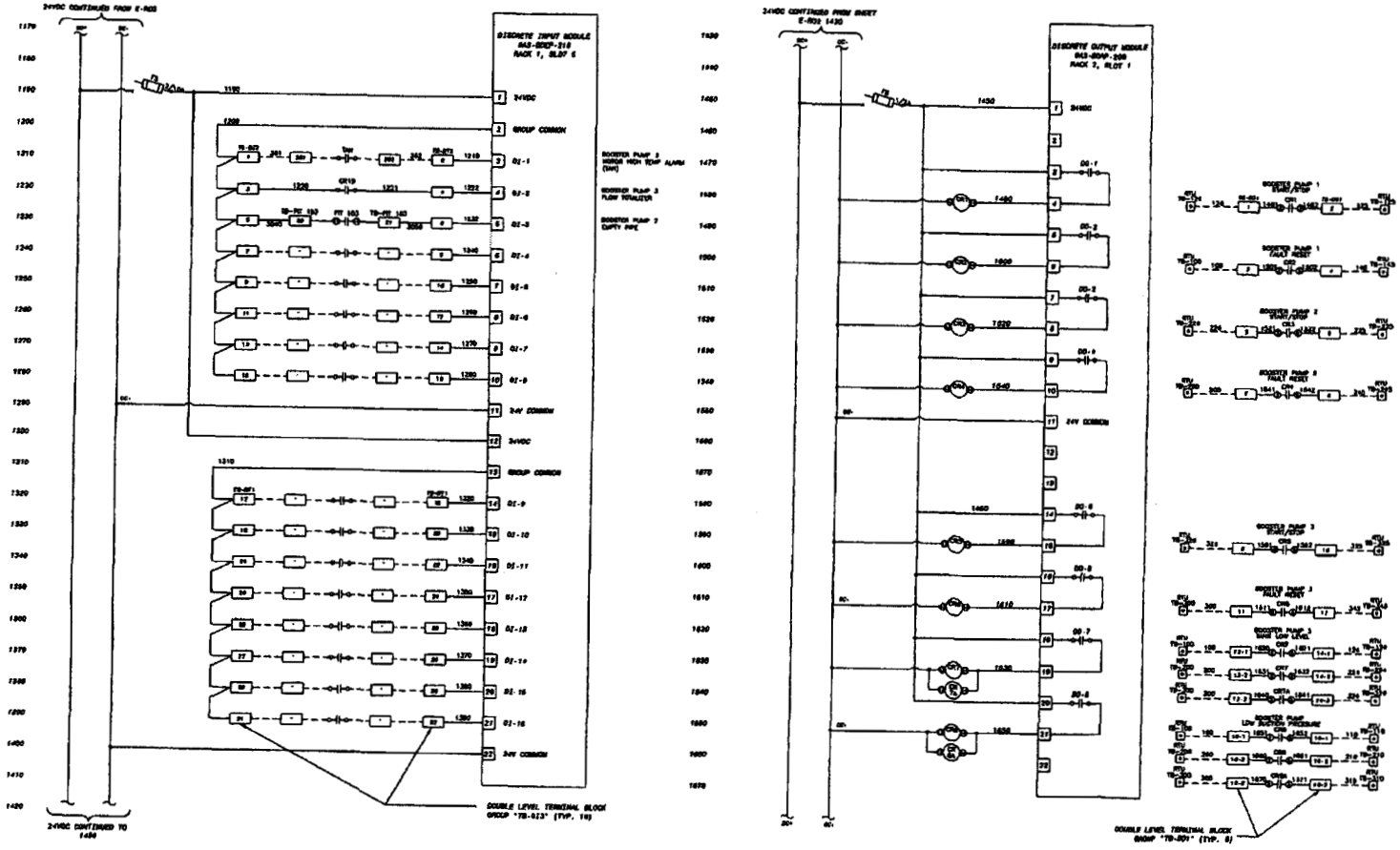

SYMBOL

TERMINAL BLOCK NUMBERS.

STARTER PANELS TERMINAL BLOCK (WIRE) NUMBERS.

PLC DISCRETE OUTPUT MODULES WIRING DIAGRAM

ARIZONA WATER COMPANY

2805 N. BLACK CANYON HWY. POST OFFICE BOX 29006

PHOENIX, ARIZONA 85038-9006

(602) 240-6860

UOC BOOSTER PUMP STATION RTU

SEC. -T. R.

The above installation is to be installed in accordance with the Arizona Water Company standard specifications on file with the Arizona Department of Environmental Quality

FOR WATER ONLY

SHEET OF

E-R03

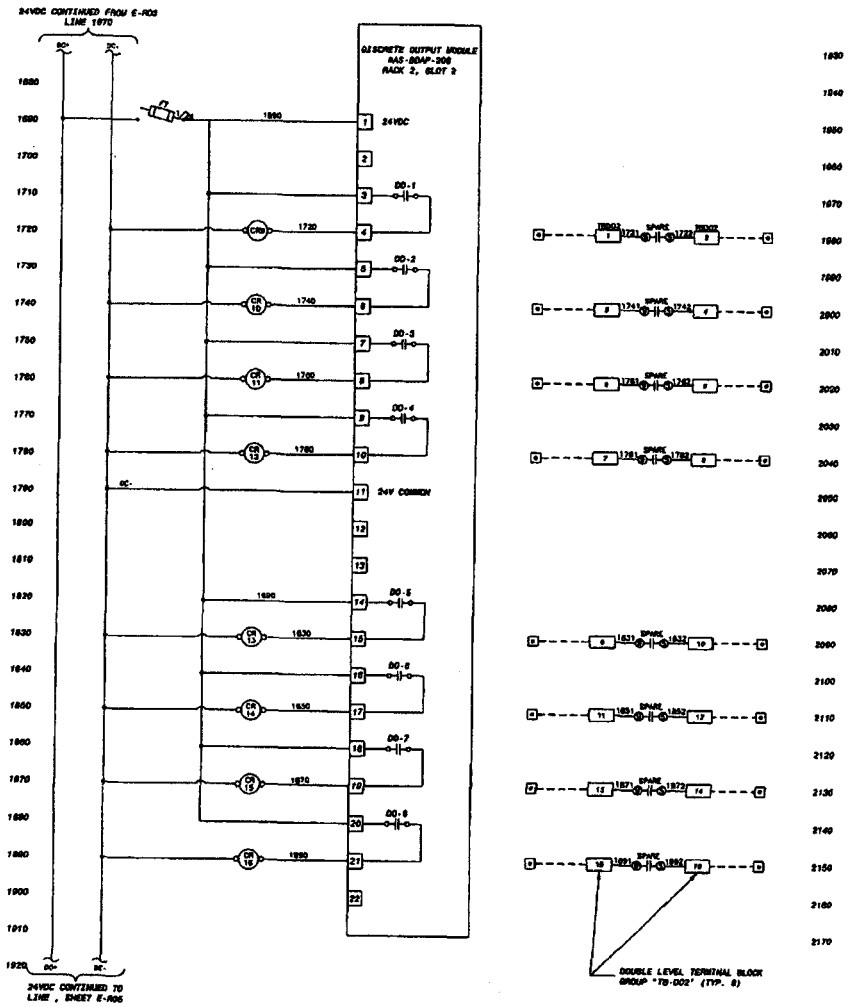

SYMBOL

TERMINAL BLOCK NUMBERS.

STARTER PANEL2 TERMINAL BLOCK (WIRE) NUMBERS.

PLC DISCRETE INPUT MODULES WIRING DIAGRAM

ARIZONA WATER COMPANY
2805 N. BLACK CANYON HWY. POST OFFICE BOX 29006
PHOENIX, ARIZONA 85038-9006
(602) 240-6860

UDC BOOSTER PUMP STATION RTU

SEC. -T. R.

The above installation is to be installed in accordance with the Arizona Water Company standard specifications on file with the Arizona Department of Environmental Quality.

FOR WATER ONLY

SHEET OF

E-R04

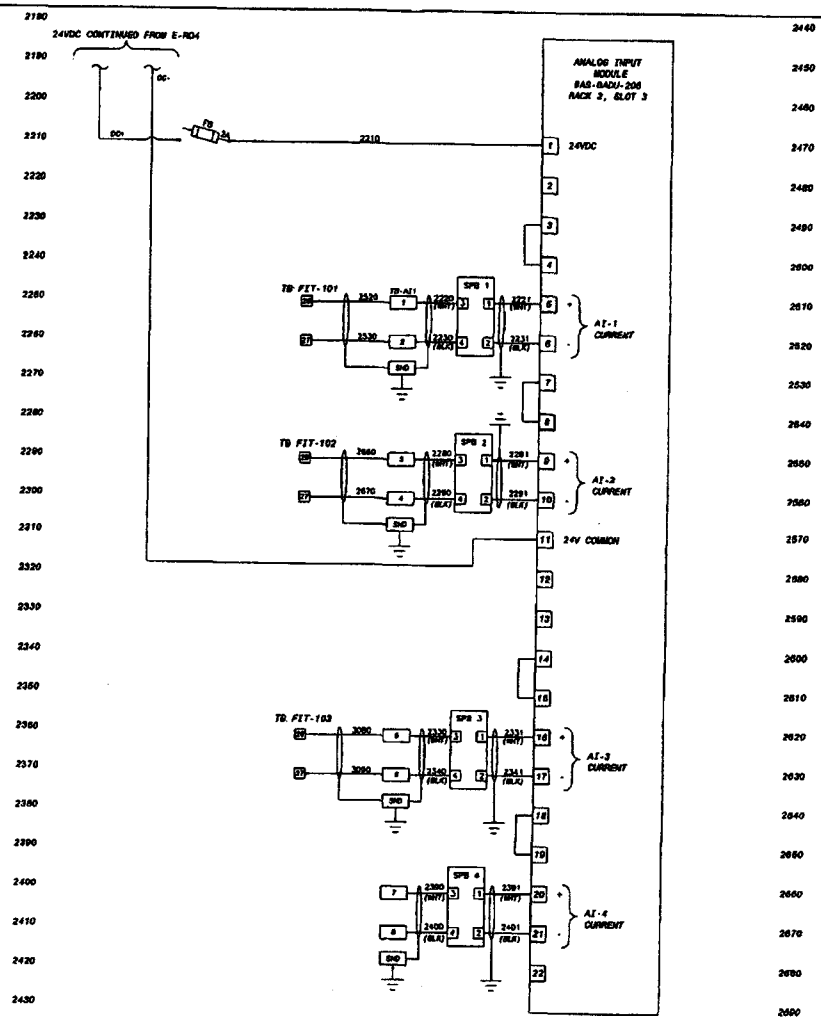

SYMBOL

XX TERMINAL BLOCK NUMBERS.

XX VFD STARTER PANELS TERMINAL BLOCK (WIRE) NUMBERS.

ARIZONA WATER COMPANY
3805 N. BLACK CANYON HWY. POST OFFICE BOX 29006
PHOENIX, ARIZONA 85038-9006
(602) 240-6860

RTU CONTROL PANEL WIRING DIAGRAM

SEC. T. R.

The above installation is to be installed in accordance with the Arizona Water Company standard specifications on file with the Arizona Department of Environmental Quality

FOR WATER ONLY

SHEET OF

E-R05

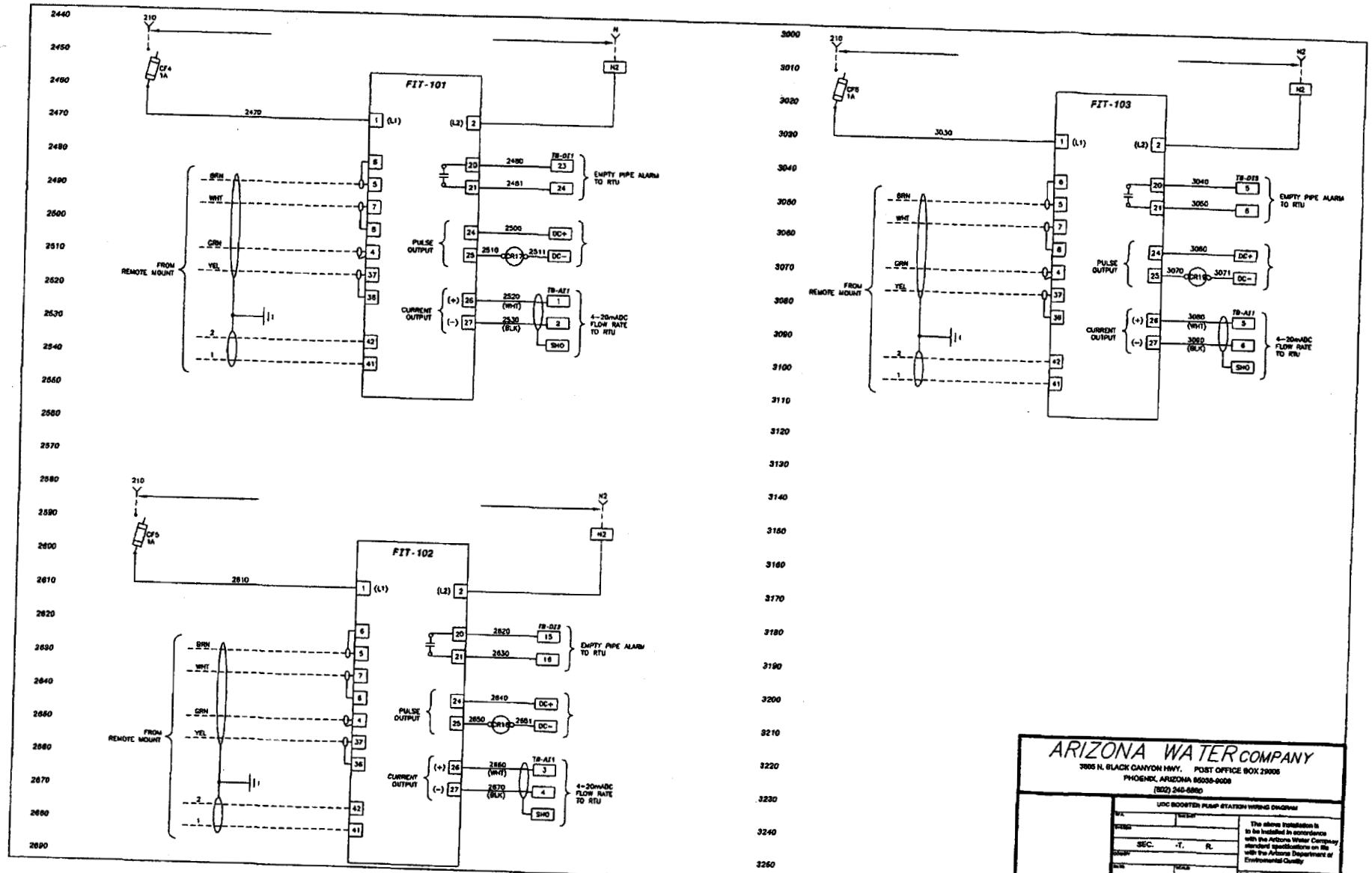
FIT-101
FIT-102
FIT-103
210
N
N2
CF4 1A
CF5 1A
CF6 1A
2470
2610
3030
(L1)
(L2)
FROM REMOTE MOUNT
BRN
WHT
GRN
YEL
PULSE OUTPUT
CURRENT OUTPUT
(+)
(-)
DC+
DC-
CR17
CR18
TB-DI1
TB-DI2
TB-DI3
TB-AI1
EMPTY PIPE ALARM TO RTU
4-20mADC FLOW RATE TO RTU
SHD
ARIZONA WATER COMPANY
3805 N. BLACK CANYON HWY. POST OFFICE BOX 29006
PHOENIX, ARIZONA 85038-9006
(602) 240-5860
UDC BOOSTER PUMP STATION WIRING DIAGRAM
SEC. -T. R.
The above installation is to be installed in accordance with the Arizona Water Company standard specifications on file with the Arizona Department of Environmental Quality
FOR WATER ONLY
SHEET OF
E-R06

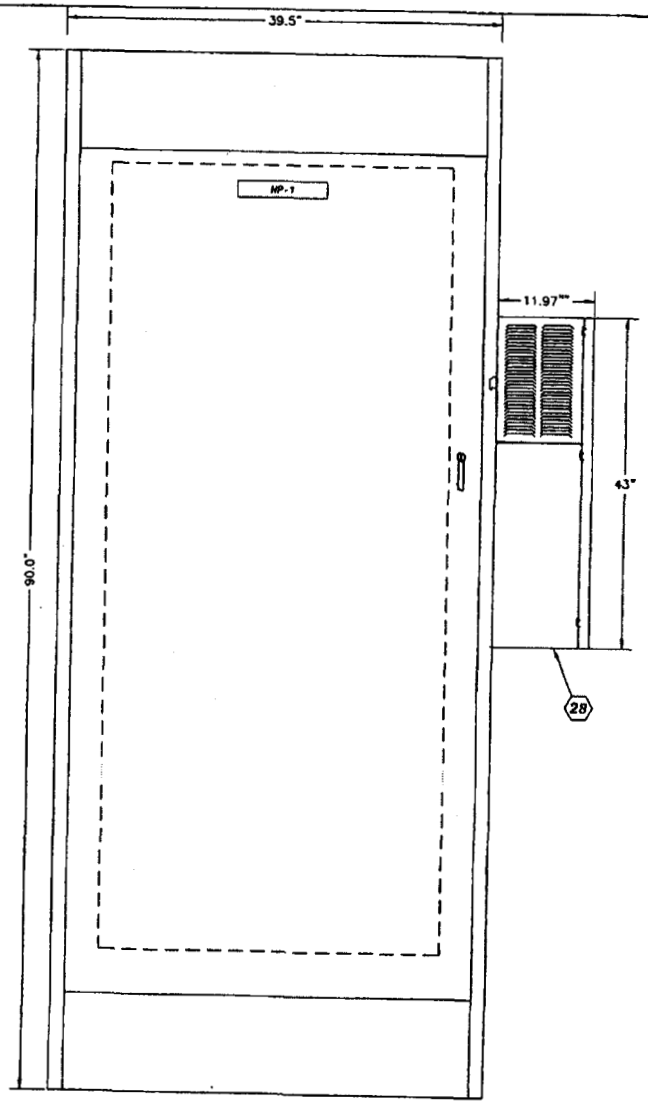

RTU PANEL INSIDE DOOR

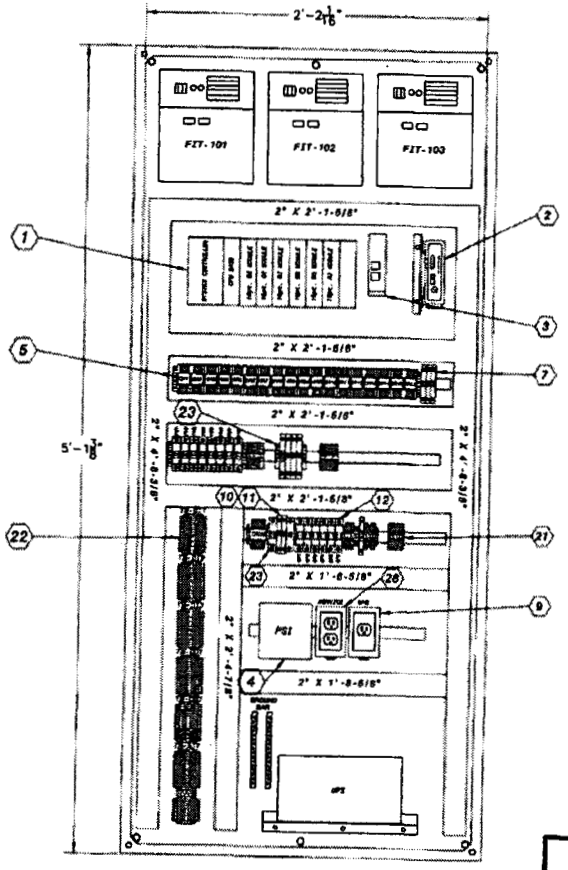

BACK PANEL LAYOUT

ARIZONA WATER COMPANY
3805 N. BLACK CANYON HWY POST OFFICE BOX 29006
PHOENIX, ARIZONA 85038-9006
(602) 240-6860

UBC BOOSTER PUMP STATION RTU PANEL LAYOUT

SEC. T. R.

The above installation is to be installed in accordance with the Arizona Water Company standard specifications on file with the Arizona Department of Environmental Quality

FOR WATER ONLY

SHEET OF

E-R07

BILL OF MATERIALS

	ITEM	QTY	MANUFACTURER	PART NO.	DESCRIPTION
1	PLC	1	MODICON	PC-E984-258	CPU, 16K LOGIC MEMORY, 2 MODBUS PORT, 24VDC
		3	MODICON	AS-B0EP-216	DISCRETE INPUT MODULE, 24VDC, 16 POINT
		2	MODICON	AS-B0AP-208	DISCRETE OUTPUT MODULE, 8 N.O. CONTACT
		1	MODICON	AS-BADU-206	ANALOG INPUT MODULE, 4-20mADC, 4 CHANNEL
		1	MODICON	AS-H0TA-200	PRIMARY RACK, 5 SLOT, CPU & 3 I/O MODULES
		1	MODICON	AS-H0TA-201	SECONDARY RACK, 5 SLOT
2	RADIO	1	MDS	TRANSNET 900	SPREAD SPECTRUM TRANSCEIVER 902-928 MHZ 6-30VDC,1W
		1	SCALA	TY900	YAGI-DIRECTIONAL ANTENNA, 144-174MHz, 9 dBd GAIN, N CONNECTOR
		1	CUSTOM		JUMPER CABLE, SMA MALE & N-MALE CONNECTORS
		1	POLYPHASER	IS-30NX-C2	LIGHTNING ARRESTOR, 125MHz TO 1000MHz FREQUENCY RANGE
		2	ANDREW	L4PNM-RC	COAXIAL CABLE CONNECTOR, N-MALE
		A.R.	ANDREW	LDF4-50A	COAXIAL CABLE, 1/2" FOAM DIELECTRIC, 50 OHM
3	PS2	2	IDEC	PS3L-D12AF	POWER SUPPLY, 120VAC INPUT, 12VDC OUTPUT, 50W
4	PS1	1	IDEC	PS5R-F24	POWER SUPPLY, 120VAC INPUT, 24VDC OUTPUT, 120W
5	CR20	1	IDEC	RH2B-UL-AC120V	CONTROL RELAY, DPDT 10A CONTACT, 120VAC, W/ INDICATOR
		1	IDEC	SH2B-05	SOCKET, BLADE, DIN RAIL MOUNT
6	CR1-15	16	IDEC	RH2B-UL-DC24V	CONTROL RELAY, DPDT 10A CONTACT, 24VDC, W/ INDICATOR
		16	IDEC	SH2B-05	SOCKET, BLADE, DIN RAIL MOUNT
7	CR17,18,19	3	PHOENIX	PLC-BSC-240C/21	DIN RAIL RELAY 24VDC SAMP CONTACT
8	SIMPLEX	1	HUBBELL	HBL5361CRY	SINGLE RECEPTACLE, 20A, 120VAC, 1ø, 3 WIRE
		1	HUBBELL	DRUBKIT	DIN RAIL UTILITY BOX KIT
		1	HUBBELL	KP7	FACE PLATE, SINGLE RECEPTACLE
9	UPS	1	POWERWARE	PW5115-500	UPS, 120VAC INPUT, 120VAC OUTPUT, 500VA
10	CB1	1	CUTLER-HAMMER	QCR1020	CIRCUIT BREAKER, 10KAIC, 20A, 120/240VAC, 1 POLE
11	CB2	1	CUTLER-HAMMER	QCR1015	CIRCUIT BREAKER, 10KAIC, 15A, 120/240VAC, 1 POLE
12	CF1-5	5	FERRAZ-SHAWMUT	USCC11	FUSE HOLDER, CLASS CC, 600VAC, 30A, 1 POLE, W/ BLOWN FUSE INDICATOR
13	CF3-5	4	FERRAZ-SHAWMUT	ATQR1	FUSE, CLASS CC, TIME DELAY, 600VAC, 1A
14	CF2	1	FERRAZ-SHAWMUT	ATQR2-1/2	FUSE, CLASS CC, TIME DELAY, 600VAC, 2-1/2A
15	F1-F8	9	FERRAZ-SHAWMUT	USM11-DC24	FUSE HOLDER, MIDGET, 600VAC, 30A, 1 POLE, W/ 12-24VDC LED BLOWN FUSE INDICATOR
16	F1	1	FERRAZ-SHAWMUT	ATM3	FUSE, MIDGET, FAST ACTING, 500VAC, 3A
17	F2	1	FERRAZ-SHAWMUT	ATM3	FUSE, MIDGET, FAST ACTING, 500VAC, 3A
18	F3,4,5	3	FERRAZ-SHAWMUT	ATM2/10	FUSE, MIDGET, FAST ACTING, 500VAC, 2/10A
19	F6,7	2	FERRAZ-SHAWMUT	ATM1/2	FUSE, MIDGET, FAST ACTING, 500VAC, 1/2A
20	F8	1	FERRAZ-SHAWMUT	ATM2	FUSE, MIDGET, FAST ACTING, 500VAC, 2A
21	TB	25	WEIDMULLER	102010	TERMINAL BLOCK, 600VAC, 35A, ø22-ø10 AWG WIRE, TYPE WDU 4
		11	WEIDMULLER	105000	END PLATE, TYPE WAP (1.5)
		26	WEIDMULLER	105120	END BRACKET, TYPE WEW 35/2
		4	WEIDMULLER	101000	GROUND TERM WPE2.5
22	TB-DI, DO, AI	4	WEIDMULLER	101000	GROUND TERM WPE2.5
		62	WEIDMULLER	102150	DUAL LEVEL TERMINAL BLOCK, 600VAC, 20A, ø22-ø12 AWG WIRE, TYPE WDK 2.5
		4	WEIDMULLER	105910	END PLATE, TYPE WAP (1.5)
23	SPB1-4	4	PHOENIX CONTACT	2838188	SURGE PROTECTOR, TERMITRAB, 24VDC, TYPE TT-W-PE-24DC
		4	PHOENIX CONTACT	2838995	END COVER, TYPE D-DEK 1,5 BK
24	CF1	3	FERRAZ-SHAWMUT	ATQR10	FUSE, CLASS CC, TIME DELAY, 600VAC, 10A
25	SS	1	FERRAZ-SHAWMUT	ST1201PG	SURGE SUPRESSOR 120V 1ph
26	RECEPTICAL	1	HUBBELL	DURB15	DIN RAIL UTILITY BOX 15Z, 125V
27	CR7A	2	IDEC	RH1B-UL DC 24V	CONTROL RELAY SPDT
	CR8A	2	IDEC	SH1B-05	SOCKET, BLADE, DIN RAIL MOUNT
28	A-C UNIT	1	HOFFMAN	T430828G100	7400/8200 BTU/HR 230V 1PH 5.2/5.4A AIR CONDITIONER

RTU BILL OF MATERIALS

ARIZONA WATER COMPANY
3805 N. BLACK CANYON HWY. POST OFFICE BOX 29006
PHOENIX, ARIZONA 85038-9006
(602) 240-6860

RTU CONTROL PANEL WIRING DIAGRAM

SEC. -T. R.

The above installation is to be installed in accordance with the Arizona Water Company standard specifications on file with the Arizona Department of Environmental Quality

FOR WATER ONLY

SHEET OF

E-R08

ARIZONA WATER COMPANY

COMMENCEMENT NOTICE

CONTRACTOR:

Weber Group LC
Jeff Wold
16825 S. Weber Drive
Chandler, Arizona 85226

DATE: October 3, 2011
DIVISION: VERDE VALLEY
SYSTEM: SEDONA
W.A.: 1-4873

THIS IS YOUR NOTICE TO PROCEED WITH THE FOLLOWING PROJECT(S):

DESCRIPTION OF WORK:

DESIGN, PERMIT, CONSTRUCT AND MAKE OPERATIONAL AN ARSENIC REMOVAL FACILITY AT SEDONA GOLF RESORT WELL.

PERFORMANCE AND PAYMENT BONDS REQUIRED: [X] Yes [ ] No

TOTAL DAYS ALLOWED: 161

COMPLETION DATE: March 12, 2012

ARIZONA WATER COMPANY
Company

By
Title Vice President - Engineering

WEBER GROUP LC
Contractor *(type name)*

By
Title

AFH
W:\PROJECTS\2011\W\1-4873 SPECIAL 814 SEDONA GOLF RESORT WELL AR\DOCRESPONDENCE\1-4873 SEDONA GOLF RESORT WELL COMMENCEMENT NOTICE.DOCX 1/15/08 | FX8 afh | E-3-18-2

THE AMERICAN INSTITUTE OF ARCHITECTS

Bond No. AZC 47934

AIA Document A312

Performance Bond

Any singular reference to Contractor, Surety, Owner or other party shall be considered plural where applicable.

CONTRACTOR (Name and Address):

Weber Group, LC
16825 S. Weber Drive
Chandler, AZ 85226

SURETY (Name and Principal Place of Business):

Merchants Bonding Company (Mutual)
2100 Fleur Drive
Des Moines IA 50321-1158

OWNER (Name and Address):

Arizona Water Company
65 Coffee Pot Drive Suite 7
Sedona, Az 86336

CONTSTRUCTION CONTRACT
Date: October 3, 2011
Amount: $346,219.85
Description (Name and Location): Sedona Golf Resort Well ARF

BOND
Date (Not earlier than Construction Contract Date): November 2, 2011
Amount: $346,219.85
Modifications to this Bond: ☒ None ☐ See Page 3

CONTRACTOR AS PRINCIPAL
Company: (Corporate Seal)
Weber Group, LC

Signature:
Name and Title:

SURETY
Company: (Corporate Seal)
Merchants Bonding Company (Mutual)

Signature:
Name and Title: Jessika Gulliver
Attorney-In-Fact

(Any additional signatures appear on page 3)

(FOR INFORMATION ONLY — Name, Address and Telephone)

AGENT or BROKER:

BBVA COMPASS INS AGY INC
2002 E Osborn Rd
Phoenix, AZ 85016
602-956-7800

OWNER'S REPRESENTATIVE (Architect, Engineer or other party):

1 The Contractor and the Surety, jointly and severally, bind themselves, their heirs, executors, administrators, successors and assigns to the Owner for the performance of the Construction Contract, which is incorporated herein by reference.

2 If the Contractor performs the Construction Contract, the Surety and the Contractor shall have no obligation under this Bond, except to participate in conferences as provided in Subparagraph 3.1.

3 If there is no Owner Default, the Surety's obligation under this Bond shall arise after:

3.1 The Owner has notified the Contractor and the Surety at its address described in Paragraph 10 below that the Owner is considering declaring a Contractor Default and has requested and attempted to arrange a conference with the Contractor and the Surety to be held not later than fifteen days after receipt of such notice to discuss methods of performing the Construction Contract. If the Owner, the Contractor and the Surety agree, the Contractor shall be allowed a reasonable time to perform the Construction Contract, but such an agreement shall not waive the Owner's right, if any, subsequently to declare a Contractor Default; and

3.2 The Owner has declared a Contractor Default and formally terminated the Contractor's right to complete the contract. Such Contractor Default shall not be declared earlier than twenty days after the Contractor and the Surety have received notice as provided in Subparagraph 3.1; and

3.3 The Owner has agreed to pay the Balance of the Contract Price to the Surety in accordance with the terms of the Construction Contract or to a contractor selected to perform the Construction Contract in accordance with the terms of the contract with the Owner.

4 When the Owner has satisfied the conditions of Paragraph 3, the Surety shall promptly and at the Surety's expense take one of the following actions:

4.1 Arrange for the Contractor, with consent of the Owner, to perform and complete the Construction Contract; or

4.2 Undertake to perform and complete the Construction Contract itself, through its agents or through independent contractors; or

4.3 Obtain bids or negotiated proposals from qualified contractors acceptable to the Owner for a contract for performance and completion of the Construction Contract, arrange for a contract to be prepared for execution by the Owner and the contractor selected with the Owner's concurrence, to be secured with performance and payment bonds executed by a qualified surety equivalent to the bonds issued on the Construction Contract, and pay to the Owner the amount of damages as described in Paragraph 6 in excess of the Balance of the Contract Price incurred by the Owner resulting from the Contractor's default; or

4.4 Waive its right to perform and complete, arrange for completion, or obtain a new contractor and with reasonable promptness under the circumstances:

.1 After investigation, determine the amount for which it may be liable to the Owner and, as soon as practicable after the amount is determined, tender payment therefore to the Owner; or

.2 Deny liability in whole or in part and notify the Owner citing reasons therefore.

5 If the surety does not proceed as provided in Para- graph 4 with reasonable promptness, the Surety shall be deemed to be in default on this Bond fifteen days after receipt of an additional written notice from the Owner to the Surety demanding that the Surety perform its obligations under this Bond, and the Owner shall be entitled to enforce any remedy available to the Owner. If the Surety proceeds as provided in Subparagraph 4.4, and the Owner refuses the payment tendered or the Surety had denied liability, in whole or in part, without further notice the Owner shall be entitled to enforce any remedy available to the Owner.

6 After the Owner has terminated the Contractor's right to complete the Construction Contract, and if the Surety elects to act under Subparagraph 4.1,4.2, or 4.3 above, then the responsibilities of the Surety to the Owner shall not be greater than those of the Contractor under the Construction Contract, and the responsibilities of the Owner to the Surety shall not be greater than those of the Owner under the Construction Contract. To the limit of the amount of this Bond, but subject to commitment by the Owner of the Balance of the Contract Price to mitigation of costs and damages on the Construction Contract, the Surety is obligated without duplication for:

6.1 The responsibilities of the Contractor for correction of defective work and completion of the Construction Contract;

6.2 Additional legal, design professional and delay costs resulting from the Contractor's Default, and resulting from the actions or failure to act of the Surety under Paragraph 4; and

6.3 Liquidated damages, or if no liquidated damages are specified in the Construction Contract, actual damages caused by delayed performance or non-performance of the Contractor.

7 The Surety shall not be liable to the Owner or others for obligations of the Contractor that are unrelated to the Construction Contract, and the Balance of the Contract Price shall not be reduced or set off on account of any such unrelated obligations. No right of action shall accrue on this Bond to any person or entity other than the Owner or its heirs, executors, administrators or successors.

8 The Surety hereby waives notice of any change, including changes of time, to the Construction Contract or to related subcontracts, purchase orders and other obligations.

9 Any proceeding, legal or equitable, under this Bond may be instituted in any court of competent jurisdiction in the location in which the work or part of the work is located and shall be instituted within two years after Contractor Default or within two years after the Contractor ceased working or within two years after the Surety refuses or fails to perform its obligations under this Bond, whichever occurs first. If the provisions of this Paragraph are void or prohibited by law, the minimum period of limitation avail-

able to sureties as a defense in the jurisdiction of the suit shall be applicable.

10 Notice to the Surety, the Owner or the Contractor shall be mailed or delivered to the address shown on the signature page.

11 When this Bond has been furnished to comply with a statutory or other legal requirement in the location where the construction was to be performed, any provision in this Bond conflicting with said statutory or legal requirement shall be deemed deleted herefrom and provisions conforming to such statutory or other legal requirement shall be deemed incorporated herein. The intent is that this Bond shall be construed as a statutory bond and not as a common law bond.

12 DEFINITIONS

12.1 Balance of the Contract Price: The total amount payable by the Owner to the Contractor under the Construction Contract after all proper adjustments have been made including allowance to the Contractor of any amounts received or to be received by the Owner in settlement of insurance or other claims for damages to which the Contractor is entitled, reduced by all valid and proper payments made to or on be- half of the Contractor under the Construction Contract.

12.2 Construction Contract: The agreement between the Owner and the Contractor identified on the sig– nature page, including all Contract Documents and changes thereto.

12.3 Contractor Default: Failure of the Contractor, which has neither been remedied nor waived, to perform or otherwise to comply with the terms of the Construction Contract.

12.4 Owner Default: Failure of the Owner, which has neither been remedied nor waived, to pay the Con- tractor as required by the Construction Contract or to perform and complete or comply with the other terms thereof.

MODIFICATIONS TO THIS BOND ARE AS FOLLOWS:

(Space is provided below for additional signatures of added parties, other than those appearing on the cover page.)

CONTRACTOR AS PRINCIPAL	SURETY
Company:	Company:
(Corporate Seal)	(Corporate Seal)
Signature: _____	*Signature:* _____
Name and Title:	Name and Title:
Address:	Address:

THE AMERICAN INSTITUTE OF ARCHITECTS

Bond No. AZC 47934

AIA Document A312

Payment Bond

Any singular reference to Contractor, Surety, Owner or other party shall be considered plural where applicable.

CONTRACTOR (Name and Address):

Weber Group, LC
16825 S. Weber Drive
Chandler, AZ 85226

SURETY (Name and Principal Place of Business):

Merchants Bonding Company (Mutual)
2100 Fleur Drive
Des Moines IA 50321-1158

OWNER (Name and Address):

Arizona Water Company
65 Coffee Pot Drive Suite 7
Sedona, Az 86336

CONTSTRUCTION CONTRACT
Date: October 3, 2011
Amount: $346,219.85
Description (Name and Location): Sedona Golf Resort Well ARF

BOND
Date (Not earlier than Construction Contract Date): November 2, 2011
Amount: $346,219.85
Modifications to this Bond: ☐ None ☒ See Page 6

CONTRACTOR AS PRINCIPAL
Company: (Corporate Seal)
Weber Group, LC

Signature:
Name and Title:

SURETY
Company: (Corporate Seal)
Merchants Bonding Company (Mutual)

Signature:
Name and Title: Jessika Gulliver
Attorney-In-Fact

(Any additional signatures appear on page 6)

(FOR INFORMATION ONLY — Name, Address and Telephone)

AGENT or BROKER:

BBVA COMPASS INS AGY INC
2002 E Osborn Rd
Phoenix, AZ 85016
602-956-7800

OWNER'S REPRESENTATIVE (Architect, Engineer or other party):

1 The Contractor and the Surety, jointly and severally, bind themselves, their heirs, executors, administrator, successors and assigns to the Owner to pay for labor, materials and equipment furnished for use in the performance of the Construction Contract, which is incorporated herein by reference.

2 With respect to the Owner, this obligation shall be null and void if the Contractor:

2.1 Promptly makes payment, directly or indirectly, for all sums due Claimants, and

2.2 Defends, indemnities, and holds harmless the Owner from all claims, demands, liens or suits by any person or entity who furnished labor, materials or equipment for use in the performance of the Construction Contract, provided the Owner has promptly notified the Contractor and the Surety (at the address described in Paragraph 12) of any claims, demands, liens or suits and tendered defense of such claims, demands, liens or suits to the Contractor and the Surety, and provided there is no Owner Default.

3 With respect to Claimants, this obligation shall be null and void if the Contractor promptly makes payment, directly or indirectly, for all sums due.

4 The Surety shall have no obligation to Claimants under this Bond until:

4.1 Claimants who are employed by or have a direct contract with the Contractor have given notice to the Surety (at the address described in Paragraph 12) and sent a copy, or notice thereof, to the Owner, stating that a claim is being made under this Bond and, with substantial accuracy, the amount of the claim.

4.2 Claimants who do not have a direct contract with the Contractor:

.1 Have furnished written notice to the Contractor and sent a copy, or notice thereof, to the Owner, within 90 days after having last performed labor or last furnished materials or equipment included in the claim stating, with substantial accuracy, the amount of the claim and the name of the party to whom the materials were furnished or supplied or for whom the labor was done or performed; and

.2 Have either received a rejection in whole or in part from the Contractor, or not received within 30 days of furnishing the above notice any communication from the Contractor by which the Contractor has indicated the claim will be paid directly or indirectly; and

.3 Not having been paid within the above 30 days, have sent a written notice to the Surety (at the address described in Paragraph 12) and sent a copy, or notice thereof, to the Owner, stating that a claim is being made under this Bond and enclosing a copy of the previous written notice furnished to the Contractor.

5 If a notice required by Paragraph 4 is given by the Owner to the Contractor or to the Surety, that is sufficient compliance.

6 When the Claimant has satisfied the conditions of Paragraph 4, the Surety shall promptly and at the Surety's expense take the following actions:

6.1 Send an answer to the Claimant, with a copy to the Owner, within 45 days after receipt of the claim, stating the amounts that are undisputed and the basis for challenging any amounts that are disputed.

6.2 Pay or arrange for payment of any undisputed amounts.

7 The Surety's total obligation shall not exceed the amount of this Bond, and the amount of this Bond shall be credited for any payments made in good faith by the Surety.

8 Amounts owed by the Owner to the Contractor under the Construction Contract shall be used for the performance of the Construction Contract and to satisfy claims, if any, under any Construction Performance Bond. By the Contractor furnishing and the Owner accepting this Bond, they agree that all funds earned by the Contractor in the performance of the Construction Contract are dedicated to satisfy obligations of the Contractor and the Surety under this Bond, subject to the Owner's priority to use the funds for the completion of the work.

9 The Surety shall not be liable to the Owner, Claimants or others for obligations of the Contractor that are unrelated to the Construction Contract. The Owner shall not be liable for payment of any costs or expenses of any Claimant under this Bond, and shall have under this Bond no obligations to make payments to, give notices on behalf of, or otherwise have obligations to Claimants under this Bond.

10 The Surety hereby waives notice of any change, including changes of time, to the Construction Contract or to related subcontracts, purchase orders and other obligations.

11 No suit or action shall be commenced by a Claimant under this Bond other than in a court of competent jurisdiction in the location in which the work or part of the work is located or after the expiration of one year from the date (1) on which the Claimant gave the notice required by Subparagraph 4.1 or Clause 4.2.3, or (2) on which the last labor or service was performed by anyone or the last materials or equipment were furnished by anyone under the Construction Contract, whichever of (1) or (2) first occurs. If the provisions of this Paragraph are void or prohibited by law, the minimum period of limitation available to sureties as a defense in the jurisdiction of the suit shall be applicable.

12 Notice to the Surety, the Owner or the Contractor shall be mailed or delivered to the address shown on the signature page. Actual receipt of notice by Surety, the Owner or the Contractor, however accomplished, shall be sufficient compliance as of the date received at the address shown on the signature page.

13 When this Bond has been furnished to comply with a statutory or other legal requirement in the location where the construction was to be performed, any provision in this Bond conflicting with said statutory or legal requirement shall be deemed deleted herefrom and provisions conforming to such statutory or other legal requirement shall be deemed incorporated herein. The intent is that this Bond shall be construed as a statutory bond and not as a common law bond.

14 Upon request by any person or entity appearing to be a potential beneficiary of this Bond, the Contractor shall promptly furnish a copy of this Bond or shall permit a copy to be made.

15 DEFINITIONS

15.1 Claimant: An individual or entity having a direct contract with the Contractor or with a subcontractor of the Contractor to furnish labor, materials or equipment for use in the performance of the Contract. The intent of this Bond shall be to include without limitation in the terms "labor, materials or equipment" that part of water, gas, power, light, heat, oil, gasoline, telephone service or rental equipment used in the Construction Contract, architectural and engineering services required for performance of the work of the Contractor and the Contractor's subcontractors, and all other items for which a mechanic's lien may be asserted in the jurisdiction where the labor, materials or equipment were furnished.

15.2 Construction Contract: The agreement between the Owner and the Contractor identified on the signature page, including all Contract Documents and changes thereto.

15.3 Owner Default: Failure of the Owner, which has neither been remedied nor waived, to pay the Contractor as required by the Construction Contract or to perform and complete or comply with the other terms thereof.

MODIFICATIONS TO THIS BOND ARE AS FOLLOWS:

Section 6 is modified by adding section 6.3.

6.3 The Surety's failure to discharge its obligations under this Section 6 shall not be deemed to constitute a waiver of defenses the Surety or Contractor may have or acquire as to a claim. However, if the Surety fails to discharge its obligations under this Section 6, the Surety shall indemnify the Claimant for the reasonable attorney's fees the Claimant incurs to recover any sums found to be due and owing to the Claimant.

(Space is provided below for additional signatures of added parties, other than those appearing on the cover page.)

CONTRACTOR AS PRINCIPAL	SURETY
Company:	Company:
(Corporate Seal)	(Corporate Seal)
Signature: _____	Signature: _____
Name and Title:	Name and Title:
Address:	Address:

MERCHANTS
BONDING COMPANY

POWER OF ATTORNEY

Bond #: AZC 47934

Know All Persons By These Presents, that the MERCHANTS BONDING COMPANY (MUTUAL), a corporation duly organized under the laws of the State of Iowa, and having its principal office in the City of Des Moines, County of Polk, State of Iowa, hath made, constituted and appointed, and does by these presents make, constitute and appoint

Jessika Gulliver

of **Phoenix** and State of **AZ** its true and lawful Attorney-in-Fact, with full power and authority hereby conferred in its name, place and stead, to sign, execute, acknowledge and deliver in its behalf as surety any and all bonds, undertakings, recognizances or other written obligations in the nature thereof, subject to the limitation that any such instrument shall not exceed the amount of:

TWENTY MILLION ($20,000,000.00) DOLLARS

and to bind the MERCHANTS BONDING COMPANY (MUTUAL) thereby as fully and to the same extent as if such bond or undertaking was signed by the duly authorized officers of the MERCHANTS BONDING COMPANY (MUTUAL), and all the acts of said Attorney-in-Fact, pursuant to the authority herein given, are hereby ratified and confirmed.

This Power-of-Attorney is made and executed pursuant to and by authority of the following By-Laws adopted by the Board of Directors of the MERCHANTS BONDING COMPANY (MUTUAL) on April 23, 2011.

ARTICLE VI, SECTION 1(c) - The President, Secretary, Treasurer, or any Assistant Treasurer or any Assistant Secretary or any Vice President shall have power and authority to appoint Attorneys-In-Fact, and to authorize them to execute on behalf of the Company, and attach the seal of the Company thereto, bonds and undertakings, recognizances, contracts of indemnity and other writings obligatory in the nature thereof.

ARTICLE VI, SECTION 1(d) - The signature of any authorized officer and the seal of the Company may be affixed by facsimile or electronic transmission to any Power of Attorney or Certification thereof authorizing the execution and delivery of any bond, undertaking, recognizance, or other suretyship obligations of the Company, and such signature and seal when so used shall have the same force and effect as though manually fixed.

In Witness Whereof, MERCHANTS BONDING COMPANY (MUTUAL) has caused these presents to be signed by its President and its corporate seal to be hereto affixed, this 27th day of October, 2010.

MERCHANTS BONDING COMPANY (MUTUAL) INCORPORATED -o- 1933

MERCHANTS BONDING COMPANY (MUTUAL)

By Larry Taylor
President

STATE OF IOWA
COUNTY OF POLK ss.

On this 27th day of October, 2010, before me appeared Larry Taylor, to me personally known, who being by me duly sworn did say that he is President of the MERCHANTS BONDING COMPANY (MUTUAL), the corporation described in the foregoing instrument, and that the seal affixed to the said instrument is the Corporate Seal of the said Corporation and that the said instrument was signed and sealed in behalf of said Corporation by authority of its Board of Directors.

In Testimony Whereof, I have hereunto set my hand and affixed my Official Seal at the City of Des Moines, Iowa, the day and year first above written.

CINDY SMYTH
Commission Number 173504
My Commission Expires
March 16, 2012

Cindy Smyth
Notary Public, Polk County, Iowa

STATE OF IOWA
COUNTY OF POLK ss.

I, William Warner, Jr., Secretary of the MERCHANTS BONDING COMPANY (MUTUAL), do hereby certify that the above and foregoing is a true and correct copy of the POWER-OF-ATTORNEY executed by said MERCHANTS BONDING COMPANY (MUTUAL), which is still in full force and effect and has not been amended or revoked.

In Witness Whereof, I have hereunto set my hand and affixed the seal of the Company on this 2nd day of November, 2011.

MERCHANTS BONDING COMPANY (MUTUAL) INCORPORATED -o- 1933

William Warner Jr.
Secretary

POA 0005 (9/11)

ARIZONA WATER

SEDONA GOLF RESORT WELL

SEPTEMBER 27 2011

Activity Name	Start Date	Finish Date
NOTICE OF AWARD	9/23/11	9/23/11
30% DESIGN DRAWINGS & MEETING	9/23/11	10/14/11
TANK, VALVES, FITTINGS SUBMITTAL	9/26/11	10/14/11
ORDER TANKS	10/20/11	10/21/11
90% DESIGN DRAWINGS	10/14/11	10/21/11
SUBMIT FOR ATC EXPEDITED, SUBMIT YAVAPI COUNTY PERMIT	10/31/11	10/31/11
ATC COMMENTS & RESPONSE	10/31/11	11/11/11
ESTIMATED ATC AND YAVAPAI COUNTY PERMIT	11/11/11	11/30/11
AZ WATER TAKE DOWN SITE	12/5/11	12/30/11
POUR CONCRETE PADS	1/2/12	1/13/12
UNDERGROUND CONDUIT	1/9/12	1/20/12
UNDERGROUND PIPING	1/9/12	1/13/12
TANK, PIPE AND FITTINGS DELIVERY	10/21/11	12/23/11

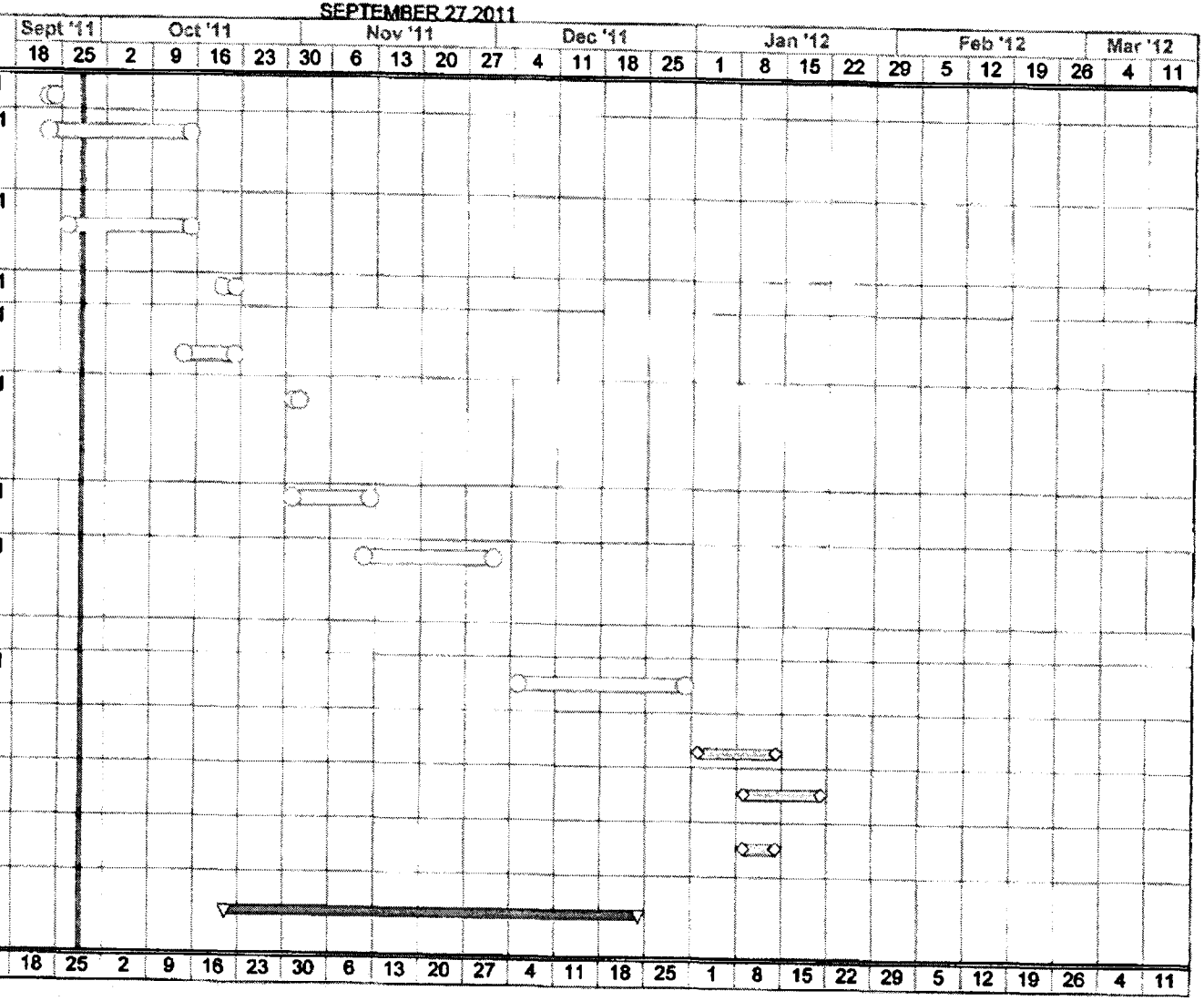

ARIZONA WATER

SEDONA GOLF RESORT WELL

SEPTEMBER 27,2011

Activity Name	Start Date	Finish Date
BUILD PIPING IN SHOP & PAINT TANKS	12/26/11	1/13/12
INSTALL TANKS AND PIPING ONSITE	1/16/12	1/27/12
ELECTRICAL HOOKUPS	1/30/12	2/1/12
INSTALL MEDIA, FLUSH AND TAKE SAMPLES	1/30/12	2/3/12
PAINT PIPING ONSITE	2/6/12	2/10/12
O&M'S , BACTEE TESTS, PRESSURE TESTS TO ADEQ	2/13/12	2/14/12
FINAL ON COUNTY PERMIT	2/15/12	2/17/12
EXPECTED AOC	3/1/12	3/1/12
TRAINING AND PLANT COMMISSIONING	3/1/12	3/2/12

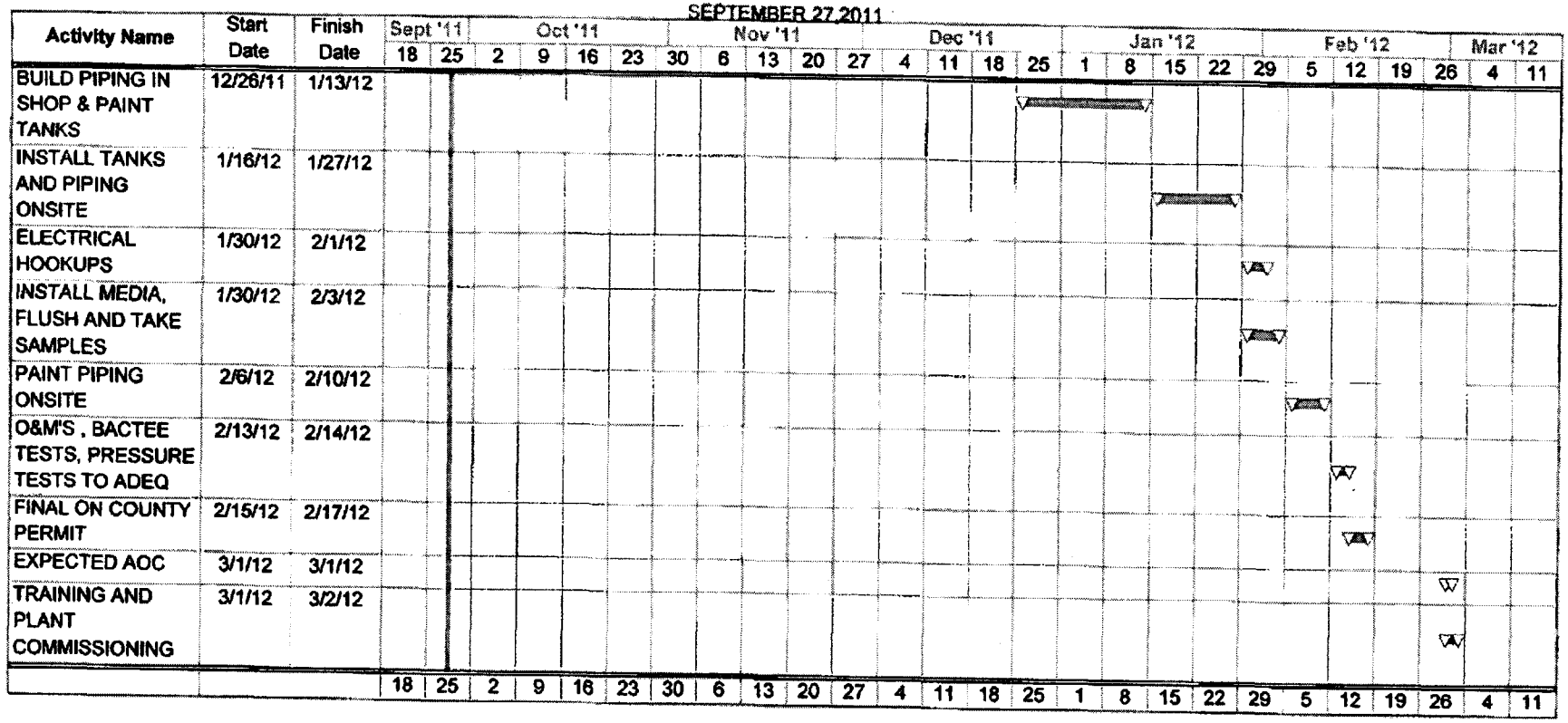

ARIZONA WATER COMPANY

VERDE VALLEY
65 Coffee Pot Drive, Suite 7
Sedona, Az 86336 PH: 928-282-7092

PROPOSAL/CONTRACT

CONTRACTOR: Weber Group, L.L.C.	SYSTEM: VERDE VALLEY
ADDRESS: 16825 S. Weber Drive	W.A. No(s):
CITY ST ZIP: Chandler, Az 85226-4112	BID DUE DATE: September 19, 2011

CONTRACTOR SUBMITS this PROPOSAL/CONTRACT to ARIZONA WATER COMPANY, an Arizona corporation (the "Company"), to perform the work and complete the project described on Page 2 (the "Project"), as an independent prime contractor.

1. Contractor certifies that it has a complete copy of, and has read, understands and accepts, the Company's General Conditions of Contract, and the Company's Construction Specifications and Standard Specification Drawings, (the "Specifications"), all of which are attached hereto. Contractor has examined the specific plans and related construction drawings for the Project (the "Drawings"), copies of which are also attached hereto. The General Conditions of Contract, Specifications and Drawings are incorporated into this Proposal/Contract. Contractor affirms that all work and materials to be furnished or purchased for the Project will be in strict conformance with the General Conditions of Contract, Specifications and Drawings.
2. Contractor represents and warrants that it has satisfied and complied with the provisions of Section 6, Contractor Understands Work and Working Conditions, of the General Conditions of Contract prior to submitting this Proposal/Contract.
3. Contractor represents that this Proposal/Contract is fair and honest in all respects, is submitted in good faith and is not submitted in collusion with any other company, entity or person.
4. Contractor acknowledges that one hundred percent (100%) Performance and Payment Bonds are required and must be provided to the Company prior to the commencement of work.
5. Prior to the commencement of work, Contractor will submit to the Company a list of all materials to be used in the Project. The materials list will include the manufacturer part number, price and quantity included in this Proposal/Contract.
6. Contractor will furnish all labor, tools, equipment and materials required to complete the Project according to the General Conditions of Contract, Specifications and Drawings. No materials purchased by Contractor to be incorporated into the Project are subject to tax at the time of purchase and Contractor will not charge the Company for any such tax. Contractor will pay the applicable transaction privilege tax (the "Contracting Tax") on the Project after Contractor receives payment of the final Project invoice from the Company. The cost of materials incorporated into the Project which are exempt by Arizona Revised State Statues ("A.R.S.") from the Contracting Tax, for example, pipes or valves having a diameter of four (4) inches or larger, including equipment, fittings and any other related part that is used in operating the pipes or valves (A.R.S. §42-5061 B.6), will not be included in the total cost of the labor and materials upon which the Contracting Tax is computed. Contractor retains full liability and obligation to pay the Contracting Tax and will defend and indemnify the Company against any demand or obligation to pay the Contracting Tax.
7. Contractor will maintain detailed accounting records of all materials purchased and incorporated into the Project. Such records will include all supporting original vendor invoices for all materials purchased. Following completion of the Project, Contractor will submit an itemized accounting to the Company which will include all supporting original vendor invoices and satisfactory evidence of payment thereof. The Company will not pay Contractor for materials not actually incorporated into the Project, and the disposition of such materials will remain Contractor's responsibility.
8. The Estimated Total Cost of the Project, shown on Page 2, is based on estimated labor and material quantities to be furnished. It includes an estimate of the Contracting Tax and the cost of the required Performance and Payment Bonds. Contractor will not cancel, modify or withdraw this Proposal/Contract during a ninety-day (90) period commencing on the Bid Due Date. The Company may accept this Proposal/Contract by signing and mailing, or otherwise delivering, a copy hereof to Contractor during such ninety-day (90) period. If the Company does not accept this Proposal/Contract during such ninety-day (90) period, Contractor may cancel this Proposal/Contract by giving written notice of cancellation to the Company.
9. Prior to the commencement of work, Contractor will provide the Company with a detailed construction schedule, in either Gantt or CPM form, identifying all tasks to be performed from the date of the written Commencement Notice through completion of the Project, including testing, training of Company Personnel and final Project invoicing. Contractor will provide the Company with a copy of such construction schedule documenting the progress of work on the Project at least monthly.
10. Contractor will not commence work on the Project until the Company gives Contractor a written Commencement Notice. Contractor will complete the Project within 161 calendar days after the Commencement Notice is issued.
11. Following the Company's written notice of satisfactory completion of the Project, and upon receipt of the final Project invoice from Contractor, the Company shall pay Contractor the actual total cost of the Project, which will be calculated as shown on Page 2, except that actual labor and material quantities installed/constructed will be substituted for the estimated labor and materials quantities and the Contracting Tax will be recalculated based on such actual labor and materials quantities.
12. The amount of applicable liquidated damages for Contractor's failure to deliver or perform within the time limit shown in Paragraph 10 may be deducted from the Company's payment of the final Project invoice. This provision shall not limit the Company's ability to terminate this Proposal/Contract for Contractor's unsatisfactory performance or failure to perform as provided in the General Conditions of Contract, Specifications or Drawings, or in this Proposal/Contract.

SPECIAL CONDITIONS:

CONSTRUCT ARSENIC REMOVAL FACILITY IN ACCORDANCE WITH SCOPE OF WORK AND REQUIREMENTS AS DEFINED IN REQUEST FOR PROPOSAL DATED, AUGUST 26, 2011 AND ARSENIC REMOVAL FACILITY TECHNICAL SPECIFICATIONS DATED, AUGUST 26, 2011

CONTRACTOR	PROPOSAL/CONTRACT ACCEPTED: ARIZONA WATER COMPANY
By:	By:
Print Name: MARTIN WEBER	Print Name: Fredrick K. Schneider, PE
Title: CEO	Title: Vice President - Engineering
Date: 9/19/11	Date: 10-3-11

ARIZONA WATER COMPANY

VERDE VALLEY
55 Coffee Pot Drive, Suite 7
Sedona, Az 86336 PH: 928-282-7092

PROPOSAL/CONTRACT

CONTRACTOR: Weber Group, L.C.	SYSTEM: VERDE VALLEY
AZ CONTRACTOR LICENSE NO: KA 146267 CLASSIFICATION: Dual Engineering	W.A. No(s):
ADDRESS: 16825 S. Weber Drive	BID DUE DATE: September 19, 2011
CITY ST ZIP Chandler, Az 85226-4112	BID BOND REQUIRED ☑ Yes ☐ No

DESCRIPTION OF PROJECT: DESIGN, PERMIT, CONSTRUCT AND MAKE OPERATIONAL AN ARSENIC REMOVAL FACILITY AT SEDONA GOLF RESORT WELL.

1-2. MATERIALS EXEMPT FROM CONTRACTING TAX (per Paragraph 6)	QUANTITY	UNIT PRICE LABOR	UNIT PRICE MATERIALS	TOTAL COST LABOR	TOTAL COST MATERIALS
Engineering Design and Permitting	1	21176		21176	
Provide and Install On-Site Piping	1	4471	5441	4471	5441
Provide and Install Arsenic Removal Facility	1	12765	145811	12765	145811
Provide and Install Backwash Recovery System	1	9765	36706	9765	36706
Provide and Install On-Site Electrical	1	9512	21344	9512	21344
Testing, Commissioning, and On-Site Operator Training	1	1412	4235	1412	4235
3. Total Labor to Install Exempt Materials (add the amounts in column 1)				3 59101	
4. Total Exempt Materials (add the amounts in column 2)					4 263537

5-6. NON-EXEMPT MATERIALS	QUANTITY	LABOR	MATERIALS	LABOR	MATERIALS
Mobilization	1	4353	2353	4353	2353
Commissioning Tank + Piping	1	1529	5530	1529	5530
7. Total Labor to Install Non-Exempt Materials (add the amounts in column 5)				7 5882	
8. Total Non-Exempt Materials (add the amounts in column 6)					8 7883
9. Subtotal A (add lines 3, 7 and 8)					9 72866
10. Contracting Tax Base (multiply the amount on line 9 by 0.65)				10 47,362.49	
11. Applicable Contracting Tax Rate				11 10.25%	
12. Contracting Tax (multiply the amount on line 10 by line 11)					12 4902.06
13. Subtotal B (add lines 4, 9 and 12)					13 341305.06
14. 100% Performance and Payment Bonds Cost					14 4914.79
15. Estimated Total Cost (add lines 13 and 14)					15 346219.85

NOTE The Estimated Total Cost includes all labor and materials for backfill, pavement replacement, chip seal, and traffic control necessary for the Project

SEDONA GOLF RESORT WELL
ARSENIC REMOVAL FACILITY UPGRADES
ARIZONA WATER COMPANY
SEDONA, AZ

OWNER:
ARIZONA WATER COMPANY
3805 N. BLACK CANYON HWY
PHOENIX, AZ 85015
PHONE: (602) 240-6860
FAX: (602) 240-6878

DESIGN ENGINEER:
TRES RIOS CONSULTING ENGINEERS
230 W. BASELINE RD. SUITE 101A
TEMPE, AZ. 85282
PHONE: (480) 755-1042
FAX: (480) 755-1043

STATE REGULATORY AGENCY :
ARIZONA DEPARTMENT OF
ENVIRONMENTAL QUALITY
WATER QUALITY DIVISION
1110 W. WASHINGTON STREET,
PHOENIX, AZ. 85007

GENERAL NOTES

1. ALL HORIZONTAL AND VERTICAL CONTROL INFORMATION PRESENTED IN THESE DRAWINGS ARE APPROXIMATE AND BASED ON REFERENCE DATA. NO SURVEYS WERE PERFORMED TO GENERATE THESE PLANS.
2. LOCATIONS, ELEVATIONS, AND DIMENSIONS OF EXISTING UTILITIES, STRUCTURES, AND OTHER FEATURES ARE SHOWN AS APPROXIMATE BASED ON THE BEST AVAILABLE INFORMATION AT THE TIME OF PREPARATION OF THESE PLANS.
3. INFORMATION IN THESE CONTRACT DOCUMENTS IS SOLELY TO ASSIST THE CONTRACTOR IN ASSESSING THE NATURE AND EXTENT OF CONDITIONS THAT MAY BE ENCOUNTERED DURING CONSTRUCTION. CONTRACTOR IS ADVISED, PRIOR TO BIDDING, TO CONDUCT ALL INVESTIGATIONS THAT THEY DEEM NECESSARY TO ARRIVE AT THEIR OWN CONCLUSIONS REGARDING THE ACTUAL CONDITIONS THAT WILL BE ENCOUNTERED, AND UPON WHICH THEIR BID WILL BE BASED.
4. THE CONTRACTOR WILL IMMEDIATELY NOTIFY THE ENGINEER WHEN CONFLICTS BETWEEN THE DRAWINGS AND ACTUAL CONDITIONS ARE DISCOVERED.
5. ALL WETTED PARTS AND MATERIALS IN THIS PROJECT SUCH AS PIPING AND FITTINGS SHALL BEAR THE SEAL OF THE NATIONAL SANITATION FOUNDATION, AND WILL CONFORM TO NSF STANDARDS 60 AND 61.
6. CONSTRUCTION MATERIALS USED IN THE WATER SYSTEM WILL BE LEAD FREE AS DEFINED BY AAC R18-5-504 AND R18-4-101
7. NEW WATER MAINS AND CONNECTIONS WILL BE PRESSURE AND LEAKAGE TESTED IN ACCORDANCE WITH AWWA C600 STANDARD
8. WATER MAINS AND TREATMENT FACILITIES WILL BE DISINFECTED BY CHLORINATION IN ACCORDANCE WITH AWWA C651-1 STANDARD OR ADEQ BULLETIN NO. 8
9. MINIMUM DEPTH OF COVER FOR BURIED WATER PIPES UP TO 12-INCHES DIAMETER WILL BE 3-FEET, FOR ALL BURIED PIPES 12-INCHES DIAMETER AND LARGER, THE COVER DEPTH WILL BE 4-FEET.
10. WATER AND SEWER MAINS MUST BE SEPARATED IN ACCORDANCE WITH AAC R18-5-502
11. THE CONTRACTOR IS RESPONSIBLE FOR LOCATING ALL UNDERGROUND UTILITIES IN THE FIELD PRIOR TO EXCAVATING.
12. PIPE, FITTINGS, VALVES, FIRE HYDRANTS, AND OTHER APPURTENANCES SHALL CONFORM TO THE CURRENT STANDARDS OF THE AMERICAN WATER WORKS ASSOCIATION, AMERICAN STANDARDS ASSOCIATION OF THE FEDERAL GOVERNMENT
13. EVIDENCE THAT A PRODUCT CONFORMS TO THE REQUIREMENTS OF THIS SECTION SHALL BE THE APPEARANCE ON THE PRODUCT OR PRODUCT PACKAGE OF A SEAL OF A CERTIFYING ENTITY THAT IS ACCREDITED BY THE AMERICAN NATIONAL STANDARDS INSTITUTE TO PROVIDE CERTIFICATION.

PERMIT COMPLIANCE

AGENCY	PERMIT DESCRIPTION	DATE
ADEQ	SYSTEM ID 13-114, POE #5	DONE
ADEQ	APPROVAL TO CONSTRUCT (ATC) PERMIT	
ADEQ	APPROVAL OF CONSTRUCTION (AOC)	
YAVAPAI COUNTY	ELECTRICAL PERMIT	

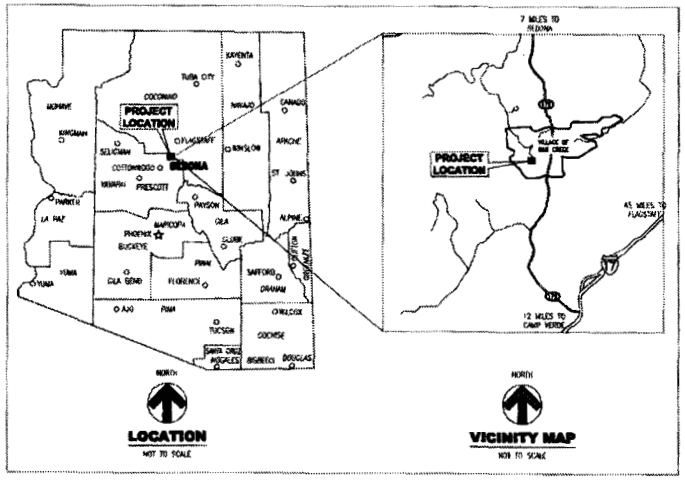

PROJECT LOCATION:
THIS PROJECT SITE IS LOCATED ON TRACT B5 OF THE "SEDONA GOLF RESORT BOOK 30 OF MAPS, PAGE 84. THE SITE IS LOCATED WITHIN THE NORTHWEST 1/4 OF THE NORTHEAST 1/4 OF SECTION 24, TOWNSHIP 16 NORTH, RANGE 5 EAST OF THE GILA & SALT RIVER MERIDIAN, LOCATED IN YAVAPAI COUNTY, ARIZONA.

BENCHMARK:
SUN BENCHMARK IS 1/2-INCH REBAR WITH PLASTIC CAP AT NORTHWEST CORNER OF TRACT B5. ELEVATION IS 4037.21-FT ABOVE SEA LEVEL.

REFERENCE DRAWING NO. 110083, SHEET 3 OF 3 ARIZONA WATER-SEDONA GOLF RESORT WELL SITE TOPOGRAPHICAL SURVEY BY HANSEN ENGINEERING & SURVEYING.

DRAWING INDEX

SHEET No.	TITLE
G-1	COVER SHEET
G-2	SITE MAP, LEGEND AND ABBREVIATIONS
G-3	SCOPE OF WORK AND SPECIFICATIONS
G-4	PROCESS FLOW DIAGRAM
C-1	ARSENIC REMOVAL FACILITY SITE PLAN
C-2	EQUIPMENT PAD DETAILS
C-3	CIVIL DETAILS
M-1	ARSENIC REMOVAL SYSTEM-1
M-2	ARSENIC REMOVAL SYSTEM-2
M-3	PIPE MANIFOLD DETAILS
M-4	PIPING DETAILS 1
M-5	ARSENIC REMOVAL VESSEL
M-6	INTERNAL PIPING DETAILS
M-7	BACKWASH TANK DETAILS

AS-BUILT CERTIFICATION:

I CERTIFY THAT THE "AS-BUILT" INFORMATION SHOWN HEREON WAS OBTAINED UNDER MY DIRECT SUPERVISION AND IS CORRECT AND COMPLETE TO THE BEST OF MY KNOWLEDGE AND BELIEF

NAME: _____

REGISTRATION NO. _____

REV	DESCRIPTION	APPROVED	DATE
A	APPROVAL TO CONSTRUCT PERMIT	JWB	11/21/11

PROJECT TITLE: SEDONA GOLF RESORT ARSENIC REMOVAL FACILITY

SHEET TITLE: COVER SHEET — SHEET NO. G-1

SIGNATURES	DATE	OWNER:
DRAWN C.R.	11/21/11	
CHECKED R.E.A.	11/21/11	
ENGINEER J.W.B.	11/21/11	

SCALE: NOT TO SCALE

PROJ. NO. 109311

ARIZONA WATER COMPANY

STATE OF ARIZONA — JAMES W. BOYLE — 36812 — REGISTERED PROFESSIONAL ENGINEER — EXPIRES 03/31/2013

Tres Rios Consulting Engineers
230 W. Baseline Road, Suite 101A
Tempe, AZ 85282 (480) 755-1042
www.tresrios.com

Call before you dig — 1-800-STAKE-IT (782-5348)

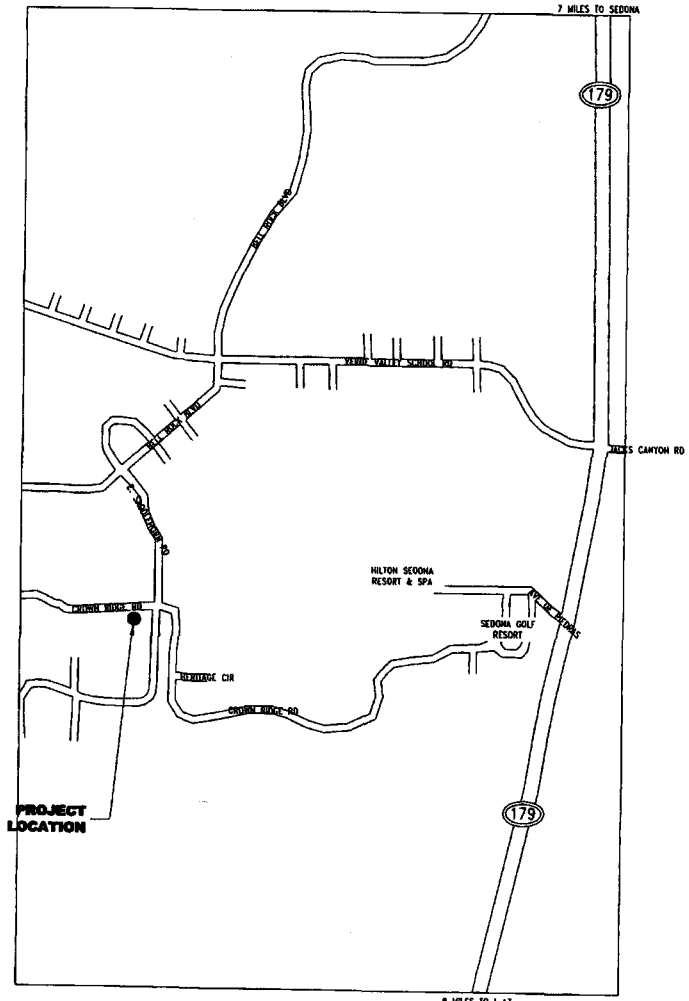

SITE LOCATION
NOT TO SCALE

NORTH

LEGEND:

- UNDERGROUND PIPE
- EXISTING PIPE
- 12" W — WATER PIPE
- 4" IR — IRRIGATION PIPE
- 10" S — SANITARY SEWER
- 2" DRAIN — DRAIN PIPE
- CONCRETE SECTION
- EARTH SECTION
- ASPHALT SECTION
- CMU WALL
- GROUNDWATER WELL
- DRAINAGE DIRECTION
- EXISTING UTILITY POLE
- EXISTING UTILITY BOX
- EXISTING CHAIN LINK FENCE
- CHAIN LINK FENCE
- PROPERTY LINE
- CENTER LINE
- MATCH LINE
- OHE — EXISTING OVERHEAD ELECTRICAL
- GATE VALVE
- SAMPLE PORT
- FLOWMETER
- PUMP CONTROL VALVE
- BALL VALVE
- WYE STRAINER
- CHECK VALVE
- REDUCER
- BUTTERFLY VALVE
- PUMP CONTROL VALVE
- MAGNETIC FLOWMETER
- FLEXIBLE COUPLING
- SURGE RELIEF VALVE
- AIR RELEASE VALVE

SECTION LETTER OR DETAIL NUMBER IDENTIFICATION — A — C-1.1.1

SHEET NUMBER FROM WHICH SECTION OR DETAIL IS TAKEN

SHEET NUMBER ON WHICH SECTION OR DETAIL IS DRAWN

ABBREVIATIONS:

ABC - AGGREGATE BASE COURSE
AGS - ABOVE GRADE SURFACE
AFF - ABOVE FINISHED FLOOR
ACC - ACCESS
AP - ACCESS PANEL
AGG - AGGREGATE
ANSI - AMERICAN NATIONAL STANDARDS INSTITUTE
ASTM - AMERICAN SOCIETY OF TESTING MATERIALS
AWWA - AMERICAN WATER WORKS ASSOCIATION
APX - APPROXIMATE
ADEQ - ARIZONA DEPARTMENT OF ENVIRONMENTAL QUALITY
ASPH - ASPHALT
ASSY - ASSEMBLY
APWA - AMERICAN PUBLIC WORKS ASSOCIATION
BEL - BELOW
B/C - BACK OF CURB
BGS - BELOW GRADE SURFACE
BM - BENCH MARK
BRZ - BRONZE
BLDG-BUILDING
BFV - BUTTERFLY VALVE
BT - BLADDER TANK
CS - CARBON STEEL
CIPC - CAST IN PLACE CONCRETE
CSMT - CASEMENT
CO - CLEAN OUT
CI - CAST IRON
CK - CAULKING
CEM - CEMENT
CV - CHECK VALVE
CPVC - CHLORINATED POLYVINYL CHLORIDE
CLR - CLEARANCE
CONC - CONCRETE
CMU - CONCRETE MASONRY UNIT
CONT - CONTINUOUS
CU - COPPER PIPE
CFT - CUBIC FOOT
CFM - CUBIC FEET PER MINUTE
CYD - CUBIC YARD
℄ - CENTERLINE
DTL - DETAIL
DIA - DIAMETER
DPI - DIFFERENTIAL PRESSURE INDICATOR
DIM - DIMENSION
DIP - DUCTILE IRON PIPE
EA - EACH
EW - EACH WAY
E - EAST
EOP-EDGE OF PAVEMENT
ELEC - ELECTRIC
ELEV - ELEVATION
EMB - EMBEDMENT
EPDM - ETHYLENE PROPYLENE DIENE MONOMER
EXIST - EXISTING
EXT - EXTERIOR
FLX - FLEXIBLE
FG - FINISHED GRADE
FLG - FLANGE
FM - FLOW METER
FND - FOUNDATION
FBO - FURNISHED BY OTHERS
FRP - FIBERGLASS REINFORCED PLASTIC
FUT - FUTURE
G - GUTTER
GALS - GALLONS
GALV - GALVANIZED
GP - GALVANIZED PIPE
GV - GLOBE VALVE
GR - GRADING
GVL - GRAVEL
GT - GROUT
HK - HOOK(S)
HMA - HOT MIX ASPHALT
HOR - HORIZONTAL
HP - HORSE POWER
HS - HOSE BIB
HPT - HYDROPNEUMATIC TANK
ID - INSIDE DIAMETER
INT - INTERIOR
INV - INVERT
IPS - IRON PIPE SIZE
JT - JOINT
JTF - JOINT FILLER
KO - KNOCKOUT
LBL - LABEL
LB - POUNDS
LWC - LIGHT WEIGHT CONCRETE
MAG - MARICOPA ASSOCIATION OF GOVERNMENT
MTL(S) - MATERIALS
MECH - MECHANICAL
MH - MANHOLE
MAX - MAXIMUM
MIN - MINIMUM
MISC - MISCELLANEOUS
NOM - NOMINAL
N - NORTH
NIC - NOT IN CONTRACT
NTS - NOT TO SCALE
NPT - NATIONAL PIPE THREAD
NFPA - NATIONAL FIRE PROTECTION ASSOCIATION
NSF - NATIONAL SANITARIAN FOUNDATION
OSHA - OCCUPATIONAL SAFETY AND HEALTH ADMINISTRATION
OC - ON CENTER
OCEW - ON CENTER EACH WAY
OD - OUTSIDE DIAMETER
OH -OVERHEAD
PV - PAVING
PVMT - PAVEMENT
PRV- PRESSURE REDUCING VALVE
PVC- PUMP CONTROL VALVE
P - PROPERTY LINE
PVC - POLYVINYL CHLORIDE
PSI - POUNDS PER SQUARE INCH
RAD - RADIUS
RP BFP - REDUCE PRESSURE PRINCIPAL BACK FLOW PREVENTOR
REF - REFERENCE
RE - REINFORCE (D), (ING)
RMJ - RESTRAINED MECHANICAL JOINT
RBJ - RESTRAINED BELL JOINT
REV - REVISION (S), REVISED
SP - SAMPLE PORT
SCH - SCHEDULE
SHT - SEALANT
SEC - SECTION
SL - SLEEVE
S - SOUTH
SPEC - SPECIFICATION
SHT - SHEET
SPL - SPECIAL
SS - STAINLESS STEEL
STA - STATION
STD - STANDARD
SV- SURGE RELIEF VALVE
SYS - SYSTEM
THK - THICK
TDH - TOTAL DYNAMIC HEAD
TYP - TYPICAL
TBM - TEMPORARY BENCH MARK
UPC - UNIFORM PLUMBING CODE
UG - UNDERGROUND
VERT - VERTICAL
WM - WATER MAIN
WS - WATER STOP
WWF - WELDED WIRE FABRIC
W - WEST
WO - WITHOUT
WI - WROUGHT IRON
YH- YARD HYDRANT

REV	DESCRIPTION	APPROVED	DATE
A	APPROVAL TO CONSTRUCT PERMIT	J.W.B.	11/21/11

PROJECT TITLE: SEDONA GOLF RESORT ARSENIC REMOVAL FACILITY

SHEET TITLE: SITE MAP, LEGEND AND ABBREVIATIONS

SHEET NO. C-2

SIGNATURES	DATE
DRAWN C.R.	11/21/11
CHECKED B.E.A.	11/21/11
ENGINEER J.W.B.	11/21/11

SCALE NOT TO SCALE

PROJ NO. 109311

OWNER:

ARIZONA WATER COMPANY

EXPIRES 03/31/2013

Tres Rios Consulting Engineers

The safety dial before you dig. Stop, look and call. 263-1100 1-800-STAKE-IT

SCOPE OF WORK:

ALL WORK PRESENTED IN THIS DRAWING SET IS FOR AN ACTIVE WATER SUPPLY SYSTEM SERVING CLEAN DRINKING WATER TO THE COMMUNITY RESIDENTS. THE CONTRACTOR MAY NOT INTERRUPT WATER SUPPLIES AT ANY TIME WITHOUT PRIOR PERMISSION FROM THE OWNER AND ENGINEER. THE CONTRACTOR WILL BE CAUTIOUS WHEN WORKING AROUND EXISTING EQUIPMENT SO AS NOT TO DAMAGE IT OR CAUSE A WATER OUTAGE.

THE CONTRACTOR WILL TAKE MEASURES TO ENSURE CLEAN AND SANITARY WORK CONDITIONS, AND ALL NEW FACILITIES WILL BE PRESSURE TESTED (NO LEAKS) AND DISINFECTED PER AWWA AND ARIZONA STATE CODES

1. GENERAL SCOPE OF WORK

THE CONTRACTOR WILL CONSTRUCT A COMPLETE, FUNCTIONING, AND LEAK-FREE ARSENIC REMOVAL FACILITY THAT WILL BE TIED-IN TO THE EXISTING WELL HEAD DISCHARGE PIPING ON-SITE AT THE SEDONA GOLF RESORT WELL LOCATION.

THE CONTRACTOR WILL BE RESPONSIBLE FOR THE PROCUREMENT AND INSTALLATION OF THE FILTER VESSELS, VALVES, INTERCONNECTING PIPING, BACKWASH TANK WITH RETURN SYSTEM, BURIED PIPING INCLUDING THE CONNECTIONS TO AND FROM THE EXISTING WELL HEAD DISCHARGE PIPING, CIVIL SITE WORK, PRE-CHLORINATION, AND ELECTRICAL SITE WORK AND CONTROLS WITH REGARDS TO THE ARSENIC REMOVAL FACILITY

THE CONTRACTOR WILL BE RESPONSIBLE FOR ANY TESTING AND START-UP OPERATIONS AS REQUIRED BY THE CONTRACT DOCUMENTS, ARIZONA LAW, AND THE SITE'S APPROVAL TO CONSTRUCT PERMIT.

2. BURIED WATER PIPES

BURIED WATER PIPE INCLUDES THE PIPING TO/FROM THE ARSENIC REMOVAL SYSTEM TYING IN-TO THE EXISTING BURIED WELLHEAD DISCHARGE PIPING, UPSTREAM OF THE WELL PRODUCTION FLOWMETER. ALSO THE BACKWASH WATER OUT PIPING FROM THE ARSENIC REMOVAL SYSTEM TO THE RISER AT THE BACKWASH TANK.

ALL BURIED PIPE 3-INCH AND LARGER WILL BE AWWA C151 CLASS 350 DUCTILE IRON WITH RESTRAINED JOINTS AT FITTINGS AND WITHIN THE INFLUENCE LENGTHS OF THE FITTINGS. ALL BURIED BELL AND MECHANICAL JOINTS WILL BE RESTRAINED USING EBAA IRON MEGA-LUGS. ANCHOR BLOCKS ARE NOT REQUIRED.

ALL BURIED PIPE WILL INCLUDE THE INSTALLATION OF TRACER WIRE AND WARNING TAPE PER ARIZONA WATER STANDARDS AND SPECIFICATIONS.

3. SITE WORK

CONTRACTOR WILL PREPARE THE SITE FOR INSTALLATION OF EQUIPMENT PADS, INSTALL ALL ABOVEGROUND PIPING, VALVES, AND FITTINGS. ALL ABOVEGROUND PIPING WILL BE DUCTILE IRON PIPE WITH CEMENT LINED INTERIOR AND EXTERIOR EPOXY COATING PER AWWA STANDARDS AND IN ACCORDANCE WITH THE TECHNICAL SPECIFICATIONS.

CONTRACTOR IS RESPONSIBLE FOR COATING AND PAINTING ALL PIPING AND VALVES AS SPECIFIED. EXTERIOR FINISH COAT WILL BE PAINTED PER THE CITY OF SEDONA'S RECOMMENDATIONS AND ARIZONA WATER COMPANY'S APPROVAL.

SITE GRAVEL WILL BE A 3-INCH THICK COURSE OF 1" MINUS GRAVEL. OWNER TO APPROVE GRAVEL PRIOR TO PLACEMENT

4. ARSENIC REMOVAL FACILITY ELECTRICAL AND CONTROLS

THE WELL CONTROLS WILL REMAIN THE SAME WITH THE EXCEPTION OF A WELL PUMP SHUT-OFF UPON A HIGH PRESSURE SITUATION AS TRIGGERED BY A NEW PRESSURE SWITCH INSTALLED BY THE CONTRACTOR AND SET TO THE SET-POINT IDENTIFIED BY THE ARIZONA WATER COMPANY. THE WELL PUMP WILL REMAIN SHUT-OFF UNTIL AN OPERATOR ARRIVES ON-SITE TO OBSERVE THE REASON FOR THE HIGH PRESSURE SITUATION AND MANUALLY RESETS THE PRESSURE SWITCH AND TURNS THE WELL PUMP BACK ON.

TWO MAGNETIC FLOWMETERS WITH REMOTE REGISTERS WILL BE INSTALLED AT THIS ARSENIC REMOVAL FACILITY. THE REGISTER DISPLAYS WILL BE PROTECTED FROM DIRECT SUNLIGHT WITH A COVER CONSTRUCTED BY THE CONTRACTOR.

A RECLAIM PUMP WILL BE USED TO INTRODUCE THE RECLAIM WATER FROM THE BACKWASH TANK BACK INTO THE ARSENIC REMOVAL SYSTEM. THE RECLAIM PUMP WILL BE CAPABLE OF A 30-GPM FLOWRATE AT 280-TDH.

5. BACKWASH SYSTEM

THE BACKWASH SYSTEM WILL CAPTURE WATER BACKWASHED FROM THE ARSENIC REMOVAL SYSTEM FILTER VESSELS IN AN 10,500-GALLON HDPE TANK ON-SITE. THE BACKWASH WATER WILL BE GIVING TIME TO ALLOW THE SUSUPENDED PARTICLES TO SETTLE. THE BACKWASH WATER WILL THEN BE SLOWLY INTRODUCED TO THE INCLUENT SIDE OF THE ARSENIC REMOVAL SYSTEM AT A RATE OF 10-PERCENT OR LESS OF THE NORMAL OPERATIONAL FLOW

A SET OF PRE-FILTERS WILL BE INSTALLED DOWNSTREAM OF THE RECLAIM PUMP TO REMOVE AND REMAINING PARTICLES SUSPENDED IN THE WATER

6. OPERATIONS AND MAINTENANCE MANUAL

THE CONTRACTOR WILL FURNISH AN OPERATIONS & MAINTENANCE MANUAL FOR ALL EQUIPMENT TO BE PROVIDED FOR THIS PROJECT. THE O&M MANUALS WILL INCLUDE COMPLETE CONTACT INFORMATION TO THE PRODUCT SUPPLIERS.

A LIST OF RECOMMENDED SPARE PARTS FOR AN OPERATING PERIOD OF 3 YEARS WILL BE INCLUDED. THE LIST WILL INCLUDE PRODUCT DESCRIPTION, QUANTITY RECOMMENDED, AND UNIT PRICE

SPECIFICATIONS:

SPECIFICATIONS FOR THIS PROJECT ARE DEPICTED ON THE RELATED DRAWING SHEETS AND/OR LISTED BELOW, UNLESS STATED OTHERWISE. ARIZONA WATER COMPANY CONSTRUCTION SPECIFICATIONS & STANDARDS SHOULD BE ADHERED TO WHERE APPLICALBE FOR THIS PROJECT UNLESS NOTED OTHERWISE ON THESE PLANS.

GENERAL CONSTRUCTION NOTES.

1 FINISHED GRADE TO BE COMPACTED TO 95% STANDARD PROCTOR (ASTM D698) @ +/- OPTIMUM WATER CONTENT, UNLESS OTHERWISE REQUIRED FOR FOUNDATIONS, PADS, ETC.

BURIED PIPE AND VALVES.

1. ALL BURIED PIPE 3-INCH DIAMETER AND LARGER WILL BE AWWA C151 CLASS 350 DUCTILE IRON PIPE. DUCTILE IRON PIPE INTERIOR MUST BE CEMENT LINED AND SEAL COATED PER AWWA C104.
2. ALL BURIED PIPE SMALLER THAN 3-INCH DIAMETER WILL BE TYPE K COPPER.
3. BURIED WELL WATER PIPE WILL BE 6-INCH DIAMETER PIPE.
4. BURIED FINISHED WATER PIPE WILL BE 6-INCH DIAMETER PIPE.
5. BURIED BACKWASH OUT PIPE WILL BE 6-INCH DIAMETER PIPE.
6. BURIED RECLAIM WATER PIPE WILL BE 1-1/2" TYPE K COPPER PIPE.
7. ALL BURIED BELL AND MECHANICAL JOINTS WILL BE RESTRAINED USING EBAA IRON MEGA-LUGS
8. MECHANICAL RESTRAINED JOINTS WILL BE CAST IRON WITH STAINLESS STEEL BOLT HARDWARE.
9. RESTRAINTS FOR PUSH-ON JOINTS WILL BE CAST IRON WITH STAINLESS STEEL BOLT HARDWARE
10. ALL DUCTILE IRON PIPE AND FITTINGS MUST BE POLYWRAPPED. POLYWRAP WILL BE HAVE A MIN. 8 MIL THICKNESS AND WILL BE INSTALLED PER AWWA C105/A21.5-93. WRAPPING TAPE WILL HAVE A MIN 10 MIL THICKNESS AND WILL BE 2-INCHES WIDE.
11. BURIED GATE VALVES WILL BE 6-INCH DUCTILE IRON RESILIENT WEDGE TYPE. VALVE WILL BE FUSION EPOXY COATED WITH STAINLESS STEEL BOLTS AND A NON-RISING STEM. MECHANICAL JOINTS PER AWWA C509 RESTRAINED BRONZE, LOW ZINC STEM. 2-INCH SQUARE OPERATING NUT. LEFT HAND OPEN VALVE WILL BE OF THE A2360-23 SERIES AS MANUFACTURED BY MUELLER COMPANY OR ENGINEER APPROVED EQUAL.
12. BURIED VALVES WILL BE HOUSED IN VALVE BOXES. VALVE BOXES WILL BE 5 ¼-INCH SHAFT, CAST IRON, TWO PIECE SLIP TYPE BOX. VALVE BOX WILL BE OF THE VB462-H SERIES AS MANUFACTURED BY SIGMA.
13. 7 5/16-INCH TOP X 5 15/16-INCH INTERIOR CAST IRON DROP TYPE UD. COVER MARKED "WATER". COVER WILL BE MANUFACTURED BY SIGMA.
14. ALL BELOW GROUND PIPING WILL BE PRESSURE TESTED AT 200 PSIG FOR 2 HOURS. CONTRACTOR WILL NOTIFY THE ENGINEER AT LEAST 48 HOURS PRIOR TO PRESSURE TESTING. ENGINEER WILL OBSERVE ALL BURIED PIPE PRESSURE TESTING.

ABOVE GROUND PIPING AND VALVES:

1. ALL ABOVE GROUND PIPING 3-INCH DIAMETER AND LARGER WILL BE AWWAC151 CLASS 350 DUCTILE IRON PIPE. DUCTILE IRON PIPE INTERIOR MUST BE CEMENT LINED AND SEAL COATED PER AWWA C104.
2. ALL ABOVE GROUND PIPING SMALLER THAN 3-INCH DIAMETER WILL BE TYPE L HARD COPPER PIPE. FITTINGS FOR PIPE SMALLER THAN 3-INCH WILL BE COMPRESSION TYPE FITTINGS IN ACCORDANCE WITH ARIZONA WATER COMPANY'S CONSTRUCTION SPECIFICATIONS.
3. ABOVE GROUND PIPING WILL BE SUPPORTED USING PIPE STANCHIONS. PIPE STANCHIONS WILL BE STEEL PIPE WITH ELECTRO-GALVANIZED FINISH AND WILL BE THREADED PIPE FOR HEIGHT ADJUSTMENT. FLANGE CONNECTION OR PIPE SADDLE WITH U-BOLT CLAMP IS ACCEPTABLE.
4. MORE SPECIFICATIONS FOR ABOVE GROUND PIPING, VALVES, AND FITTING ARE LISTED ON THEIR RELATED DRAWING SHEETS.
5. ABOVE GROUND PIPING WILL BE PRESSURE TESTED AT 150-PSIG FOR 2 HOURS UNLESS STATED OTHERWISE. CONTRACTOR WILL NOTIFY THE ENGINEER OR OWNER'S REPRESENTIVE AT LEAST 48 HOURS PRIOR TO PRESSURE TESTING FOR OBSERVATION.
6. ALL ABOVE GROUND PIPING WILL BE PAINTED PER THE SEDONA GOLF RESORT'S HOA RECOMMENDATIONS WITH AN AWWA APPROVED COATING. PIPING WILL BE LABELED IN ACCORDANCE WITH THE PIPE IDENTIFICATION TABLE ON SHEET M-1.
7. ABOVE GROUND PIPING WILL BE INSULATED TO PROTECT PIPING AND EQUIPMENT FROM FREEZING USING HEAT TRACE WIRE AND INSULATION TO MEET THE REQUIREMENTS SET FORTH IN THE ARIZONA WATER ARSENIC REMOVAL FACILITIES TECHNICAL SPECIFICATIONS.

MECHANICAL EQUIPMENT:

1. MECHANICAL EQUIPMENT SUCH AS RECLAIM PUMP, BAG FILTER VESSELS, AIR RELEASE VALVES, ETC. ARE SPECIFIED ON THEIR RESPECTIVE DRAWING SHEETS IN THIS DRAWING SET
2. STEEL TANKS FOR THE ARSENIC REMOVAL SYSTEM ARE SPECIFIED ON SHEET M-5 OF THIS DRAWING SET.
3. THE RECLAIM TANK IS SPECIFIED ON SHEET M-7 OF THIS DRAWING SET.

MATERIALS AND TESTING

1. ALL IMPORTED BACKFILL MUST BE TESTED FOR CORROSIVITY IN ACCORDANCE WITH DIPRA'S 10-POINT SYSTEM OF "SOIL EVALUATION FOR DUCTILE IRON PIPE," PRIOR TO ORDERING THE MATERIAL. TEST RESULTS MUST BE SENT TO THE ENGINEER FOR APPROVAL BEFORE PROCUREMENT OF SUCH MATERIAL.
2. ALL TRENCHES WILL BE BACKFILLED IN LIFTS NOT TO EXCEED 8-INCHES THICK. EACH LIFT WILL BE COMPACTED TO 90% STANDARD PROCTOR IN ACCORDANCE WITH ASTM D698
3. COMPACTED BASE MATERIAL MUST BE TESTED BY THE CONTRACTOR AND APPROVED BY THE ENGINEER PRIOR TO PLACING CONCRETE.
4. ONLY THE ENGINEER WILL DESIGNATE LOCATIONS OF COMPACTION TESTS AND INTERPRET RESULTS OF THE TESTS. CONTRACTOR MUST COORDINATE WITH THE ENGINEER TO SCHEDULE TESTS
5. JETTING, WATER SETTLING, OR SIMILAR COMPACTION METHODS ARE NOT ALLOWED. COMPACTION WILL ONLY BE ALLOWED BY MECHANICAL MEANS (VIBRATORY OR JUMPING JACK) USING EQUIPMENT SPECIFICALLY DESIGNED FOR COMPACTION. COMPACTION METHOD MUST BE APPROVED BY ENGINEER PRIOR TO CONSTRUCTION.
6. UNLESS OTHERWISE STATED HEREIN, ALL CONCRETE MIXES WILL BE MINIMUM 4,000-PSI COMPRESSIVE STRENGTH AFTER 28 DAYS, AND REINFORCING STEEL WILL BE 60-KSI (GRADE 60) WITH NO EPOXY COATING.
7. ALL CONCRETE DELIVERED TO THE SITE MUST INCLUDE A DETAILED WEIGHMASTER TICKET. OTHERWISE, CORES MUST BE TAKEN AND LABORATORY TESTED FOR 28-DAY COMPRESSIVE STRENGTH AT NO ADDITIONAL COST TO THE OWNER OR ENGINEER.
8. HAND-MIXES WILL NOT BE PERMITTED FOR ANY REASON.

MATERIALS AND QUANTITIES TABLE

DESCRIPTION	QTY	UNITS	DESCRIPTION	QTY	UNITS
ARSENIC REMOVAL SYSTEM			BACKWASH SYSTEM		
STEEL FILTER VESSEL (8'-0" DIA. 2,700-GALLON)	2	EA	HDPE BACKWASH TANK (12-FT, DIA, 10,500-GALLON)	1	EA
GRANULAR FERRIC HYDROXIDE MEDIA (160 CF/VESSEL)	320	CF	5-HP PUMP, 30-GPM, 350-TDH	1	EA
8X12 COLORADO SILICA (60 CF/VESSEL)	120	CF	PRESSURE GAUGE/SAMPLE PORT ASSEMBLY	1	EA
STAINLESS STEEL INTERNAL PIPING DISTRIBUTORS	2	EA			
1" AIR/VACUUM RELEASE VALVE	2	EA	6" BUTTERFLY VALVE	1	EA
2" PRESSURE RELIEF VALVE	2	EA	6" DIP, CLASS 300 WATER PIPE	40	LF
6" BUTTERFLY VALVE	11	EA	6" 90° BEND, DIP	4	EA
6" DIP, CLASS 300 WATER PIPE	100	LF	8" HOT TAP AND SLEEVE (304 STAINLESS STEEL)	1	EA
4" DIP, CLASS 300 WATER PIPE	10	LF	2" STAINLESS STEEL BALL VALVE	3	EA
6" 90° BEND, DIP	20	EA	2" TYPE K COPPER	60	LF
6" TEE, DIP	10	EA	PRESSURE GAUGE	2	EA
6"X4" REDUCER (CONCENTRIC)	4	EA	2" CHECK VALVE	1	EA
PRESSURE GAUGE/SAMPLE PORT ASSEMBLY	4	EA	2" CAM-LOCK	1	EA
4" MAGNETIC FLOWMETER	2	EA	3/4" HOSE BIB	1	EA

HEALTH AND SAFETY NOTES

1. IT IS THE RESPONSIBILITY OF THE CONTRACTOR TO BECOME FAMILIAR WITH THE OSHA EXCAVATION SAFETY STANDARDS AND ABIDE BY THEM AT ALL TIMES DURING CONSTRUCTION.
2. CONTRACTOR IS RESPONSIBLE FOR THE SAFE AND HEALTHFUL PERFORMANCE OF WORK BY EACH OF THEIR EMPLOYEES, SUBCONTRACTORS, OR SUPPORT PERSONNEL WHO MAY ENTER THE SITE
3. CONTRACTOR IS RESPONSIBLE FOR PROVIDING ADEQUATE SECURITY FOR THEIR PERSONNEL, SUBCONTRACTORS, AND ALL RELATED EQUIPMENT AND PROJECT MATERIAL.
4. TEMPORARY SANITARY FACILITIES SHALL BE MAINTAINED ON THE SITE FROM BEGINNING TO COMPLETION OF CONSTRUCTION

SITE PRACTICES AND SCHEDULE

1. ALL SITE WORK WILL BE PERFORMED ON A BUSINESS WEEK (MONDAY THROUGH FRIDAY) BETWEEN 6:00AM UNTIL 7:00PM UNLESS OTHERWISE APPROVED BY THE OWNER.

PIPE LABELING

1. SEE PIPE IDENTIFICATION TABLE ON SHEET M-1 FOR LABEL TEXT AND COLOR.
2. ALL LABELING OF PROCESS PIPING INCLUDING FLOW DIRECTION ARROWS WILL BE IN ACCORDANCE WITH ANSI/ASME A13.1 AND ADEQ BULLETIN No. 10 CHAPETR 4.
3. LABELS ON PIPING 2.5-INCHES TO 6-INCHES IN DIAMETER WILL BE A MINIMUM OF 12-INCHES IN LENGTH AND THE SIZE OF THE LETTERS WILL BE 1.25-INCHES HIGH.
4. LABELS ON PIPING 1.5-INCHES TO 2-INCHES IN DIAMETER WILL BE A MINIMUM OF 8-INCHES IN LENGTH AND THE SIZE OF THE LETTERING WILL BE 3/4-INCH HIGH.
5. LABELING WILL BE PLACED ON ON THE PIPE AFTER PAINTING AND ALSO ON THE INSULATION WRAPPED OVER THE PIPING SO AS TO EASILY IDENTIFY THE PROCESS PIPE.
6. LABELS WILL BE POSITIONED SO THEY CAN BE EASILY READ. THE LABEL WILL BE PLACED ON THE LOWER SIDE OF THE PIPE IF THE EMPLOYEE HAS TO LOOK UP, ON THE UPPER SIDE OF THE PIPE IF THE EMPLOYEE HAS TO LOOK DOWNWARD AT THE PIPE AND DIRECTLY FACING THE EMPLOYEE IF THE EMPLOYEE IS ON THE SAME LEVEL AS THE PIPE
7. LABELS WILL BE LOCATED ON THE PROCESS PIPING TO AND FROM THE ARSENIC REMOVAL SYSTEM MANIFOLD AND ANY OTHER LOCATIONS AS IDENTIFIED BY THE OWNER TO MAKE IT EASIER FOR THE OPERATOR
8. FLOW DIRECTION ARROWS TAPE WILL WRAP 360° AROUND THE PIPE ADJACENT TO THE PIPE LABEL. THE BACKGROUND COLOR WILL MATCH THE PIPE LABEL BACKGROUND COLOR. THE DIRECTION ARROW COLOR WILL MATCH THE LETERING COLOR OF THE PIPE LABEL.

263-1100
1-800-STAKE-IT

REV	DESCRIPTION	APPROVED	DATE
A	APPROVAL TO CONSTRUCT PERMIT	JWB	11/21/11

PROJECT TITLE: SEDONA GOLF RESORT ARSENIC REMOVAL FACILITY

SHEET TITLE: SCOPE OF WORK AND SPECIFICATIONS

SHEET NO. G-3

SIGNATURES		DATE
DRAWN	C.R.	11/21/11
CHECKED	B.E.A.	11/21/11
ENGINEER	J.W.B	11/21/11

SCALE: NOT TO SCALE

PROJ NO: 109311

OWNER: ARIZONA WATER COMPANY

BLAKE E. ABTS, ARIZONA, USA — EXPIRES 03/31/2013

Tres Rios Consulting Engineers

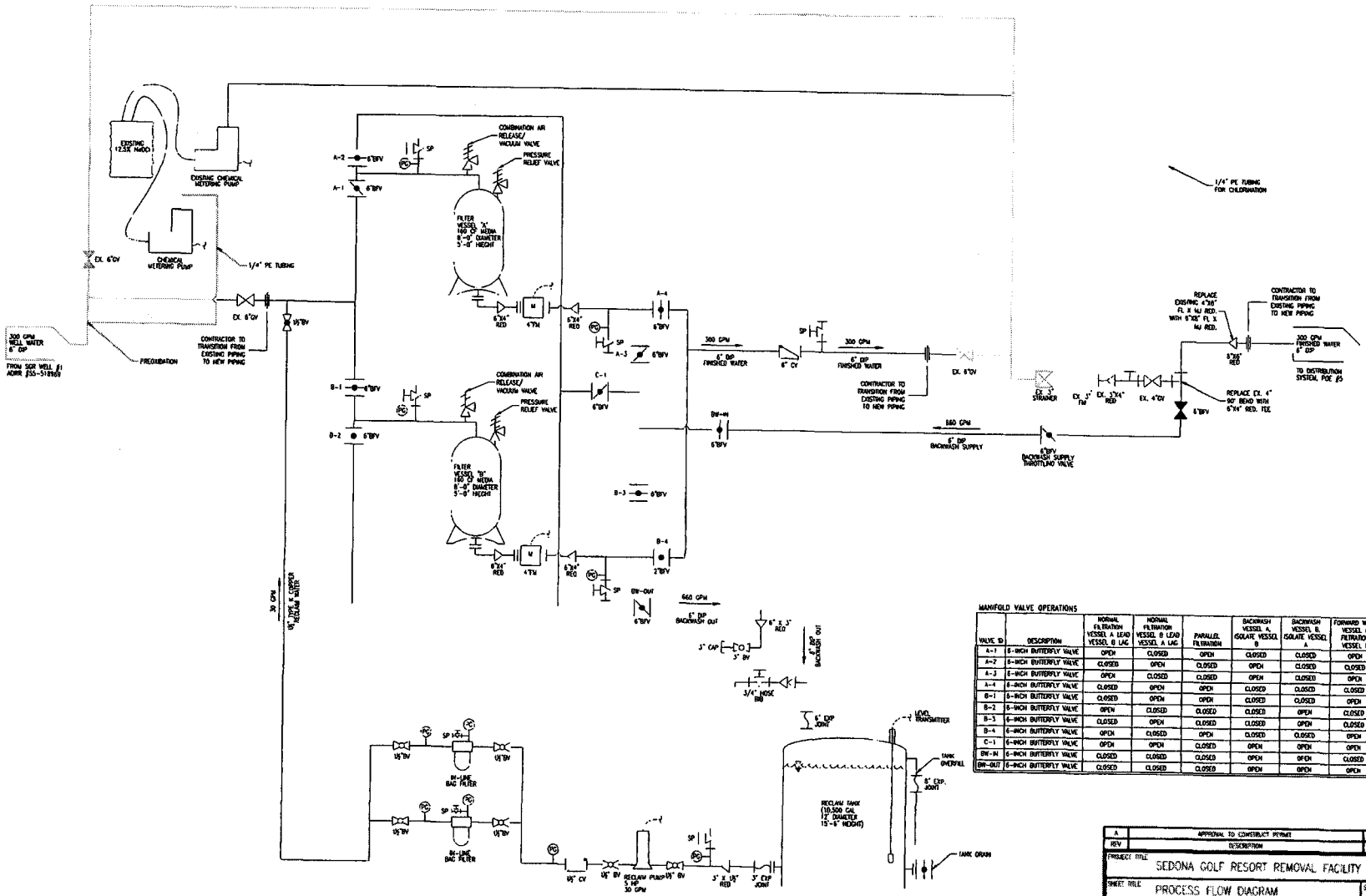

MANIFOLD VALVE OPERATIONS

VALVE ID	DESCRIPTION	NORMAL FILTRATION VESSEL A LEAD VESSEL B LAG	NORMAL FILTRATION VESSEL B LEAD VESSEL A LAG	PARALLEL FILTRATION	BACKWASH VESSEL A, ISOLATE VESSEL B	BACKWASH VESSEL B, ISOLATE VESSEL A	FORWARD WASH VESSEL A FILTRATION VESSEL B	FORWARD WASH VESSEL B FILTRATION VESSEL A
A-1	6-INCH BUTTERFLY VALVE	OPEN	CLOSED	OPEN	CLOSED	CLOSED	OPEN	OPEN
A-2	6-INCH BUTTERFLY VALVE	CLOSED	OPEN	CLOSED	OPEN	CLOSED	CLOSED	CLOSED
A-3	6-INCH BUTTERFLY VALVE	OPEN	CLOSED	CLOSED	OPEN	CLOSED	OPEN	CLOSED
A-4	6-INCH BUTTERFLY VALVE	CLOSED	OPEN	OPEN	CLOSED	CLOSED	CLOSED	OPEN
B-1	6-INCH BUTTERFLY VALVE	CLOSED	OPEN	OPEN	CLOSED	CLOSED	OPEN	OPEN
B-2	6-INCH BUTTERFLY VALVE	OPEN	CLOSED	CLOSED	CLOSED	OPEN	CLOSED	CLOSED
B-3	6-INCH BUTTERFLY VALVE	CLOSED	OPEN	CLOSED	CLOSED	OPEN	CLOSED	OPEN
B-4	6-INCH BUTTERFLY VALVE	OPEN	CLOSED	OPEN	CLOSED	CLOSED	OPEN	CLOSED
C-1	6-INCH BUTTERFLY VALVE	OPEN	OPEN	CLOSED	OPEN	OPEN	OPEN	OPEN
BW-IN	6-INCH BUTTERFLY VALVE	CLOSED	CLOSED	CLOSED	OPEN	OPEN	CLOSED	CLOSED
BW-OUT	6-INCH BUTTERFLY VALVE	CLOSED	CLOSED	CLOSED	OPEN	OPEN	OPEN	OPEN

REV	DESCRIPTION	APPROVED	DATE
A	APPROVAL TO CONSTRUCT PERMIT	J.W.B.	11/22/11

PROJECT TITLE: SEDONA GOLF RESORT REMOVAL FACILITY

SHEET TITLE: PROCESS FLOW DIAGRAM

SHEET NO: G-4

SIGNATURES		DATE
DRAWN	C.R.	11/22/11
CHECKED	B.E.A.	11/22/11
ENGINEER	J.W.B.	11/22/11

SCALE: NOT TO SCALE

PROJ. NO: 109311

OWNER: ARIZONA WATER COMPANY

EXPIRES 03/31/2013

Tres Rios Consulting Engineers

PIPING IDENTIFICATION AND COLOR SCHEME

PIPE IDENTIFICATION	BACKGROUND COLOR	LETTERING COLOR
WELL WATER	OLIVE GREEN	WHITE
BLENDING WATER	OLIVE GREEN	WHITE
TREATED WATER	DARK BLUE	WHITE
FINISHED WATER	DARK BLUE	WHITE
BACKWASH SUPPLY WATER	DARK BLUE	WHITE
BACKWASH WATER OUT	LIGHT BROWN	WHITE
BACKWASH REINJECTION WATER	LIGHT BROWN	WHITE
SODIUM HYPOCHLORITE	YELLOW	BLACK

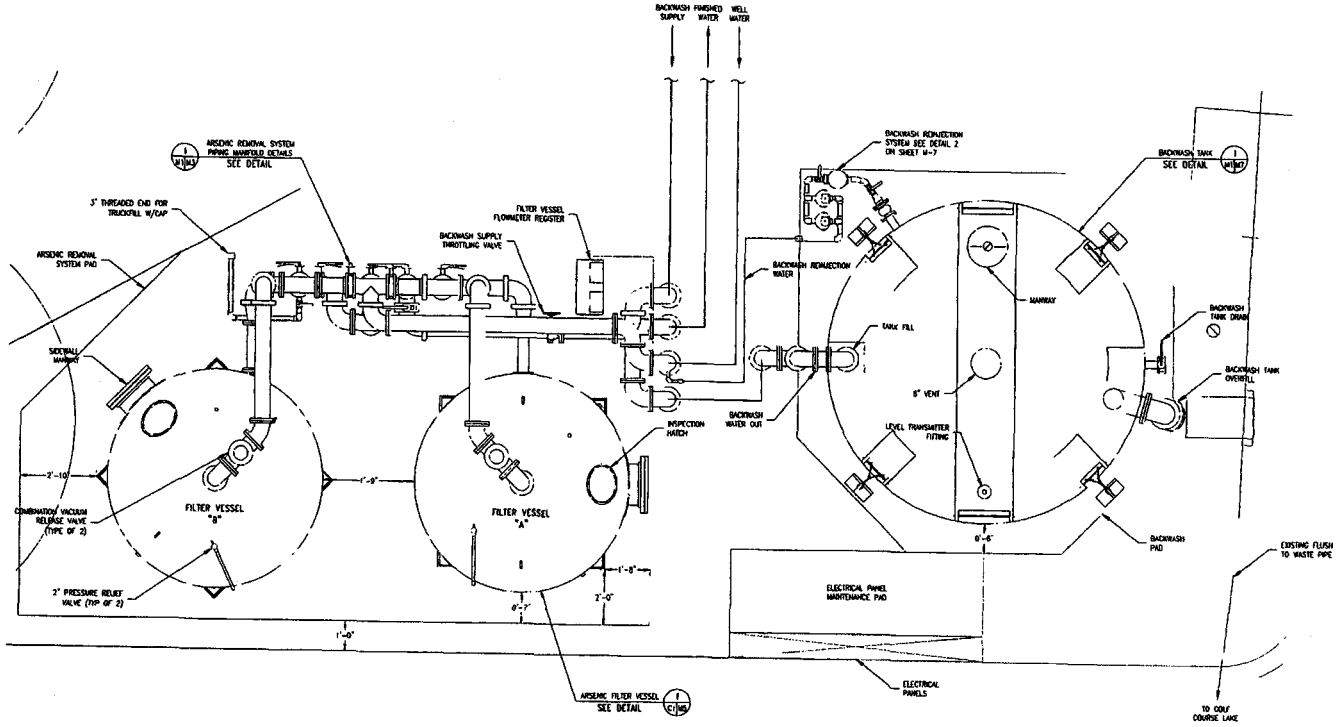

MEASUREMENTS SHOWN ON THIS DRAWING ARE PROVIDED FOR INFORMATION ONLY CONTRACTOR MUST MAKE HIS OR HER OWN MEASUREMENTS PRIOR TO CONSTRUCTION

NORTH

0 1 2
SCALE IN FEET

ARSENIC REMOVAL SYSTEM DETAIL
SCALE: 1:2

REV	DESCRIPTION	APPROVED	DATE
A	APPROVAL TO CONSTRUCT PERMIT	J.W.B.	11/22/11

PROJECT TITLE: SEDONA GOLF RESORT ARSENIC REMOVAL FACILITY

SHEET TITLE: ARSENIC REMOVAL SYSTEM-1

SHEET NO: M-1

SIGNATURES		DATE
DRAWN	C.R.	10/22/11
CHECKED	B.L.A.	10/22/11
ENGINEER	J.W.B.	10/22/11

SCALE: NOT TO SCALE

PROJ. NO: 109311

OWNER

EXPIRES 03/31/2013

Tres Rios Consulting Engineers

Call 2 Days Before You Dig
Arizona Blue Stake, Inc.
1-800-STAKE-IT

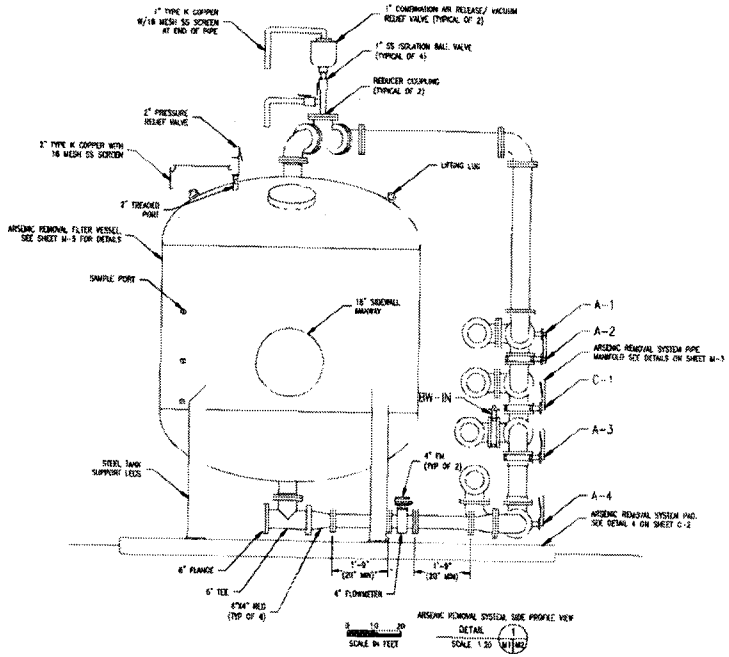

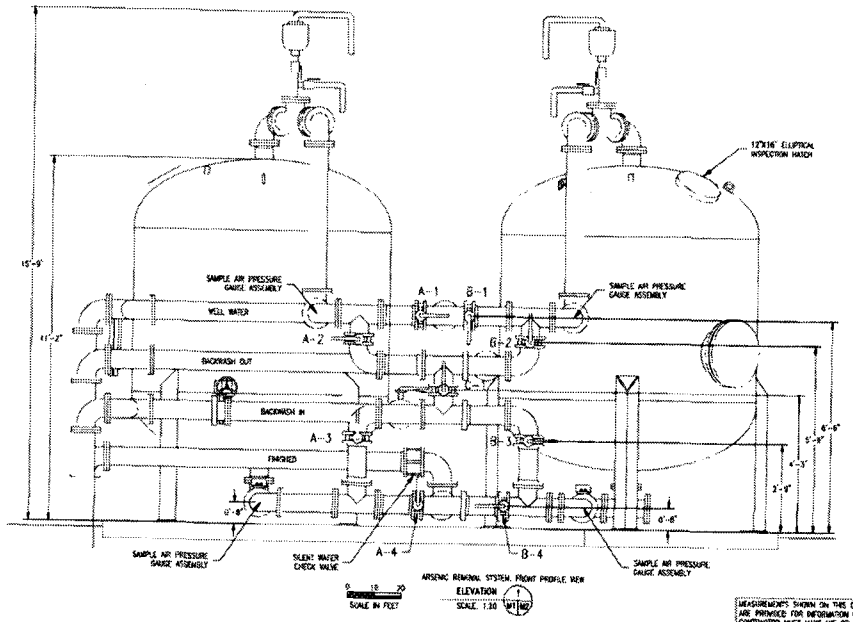

MEASUREMENTS SHOWN ON THIS DRAWING ARE PROVIDED FOR INFORMATION ONLY CONTRACTOR MUST MAKE HIS OR HER OWN MEASUREMENTS PRIOR TO CONSTRUCTION.

REV	DESCRIPTION	APPROVED	DATE
A	APPROVAL TO CONSTRUCT	J.N.B	11/22/11

PROJECT TITLE: SEDONA GOLF RESORT ARSENIC REMOVAL FACILITY

SHEET TITLE: ARSENIC REMOVAL FACILITY-2

SHEET NO: M-2

SIGNATURES		DATE
DRAWN	C.R.	11/22/11
CHECKED	M.E.A.	11/22/11
ENGINEER	J.N.B.	11/22/11

SCALE: NOT TO SCALE

PROJ NO: 109311

OWNER: ARIZONA WATER COMPANY

EXPIRES 03/31/2013

Tres Rios Consulting Engineers

230 W. Baseline Road, Suite 101A
Tempe, AZ 85283 (602) 755-3042
www.tres.net

J 283-1100
1-800-STAKE-IT

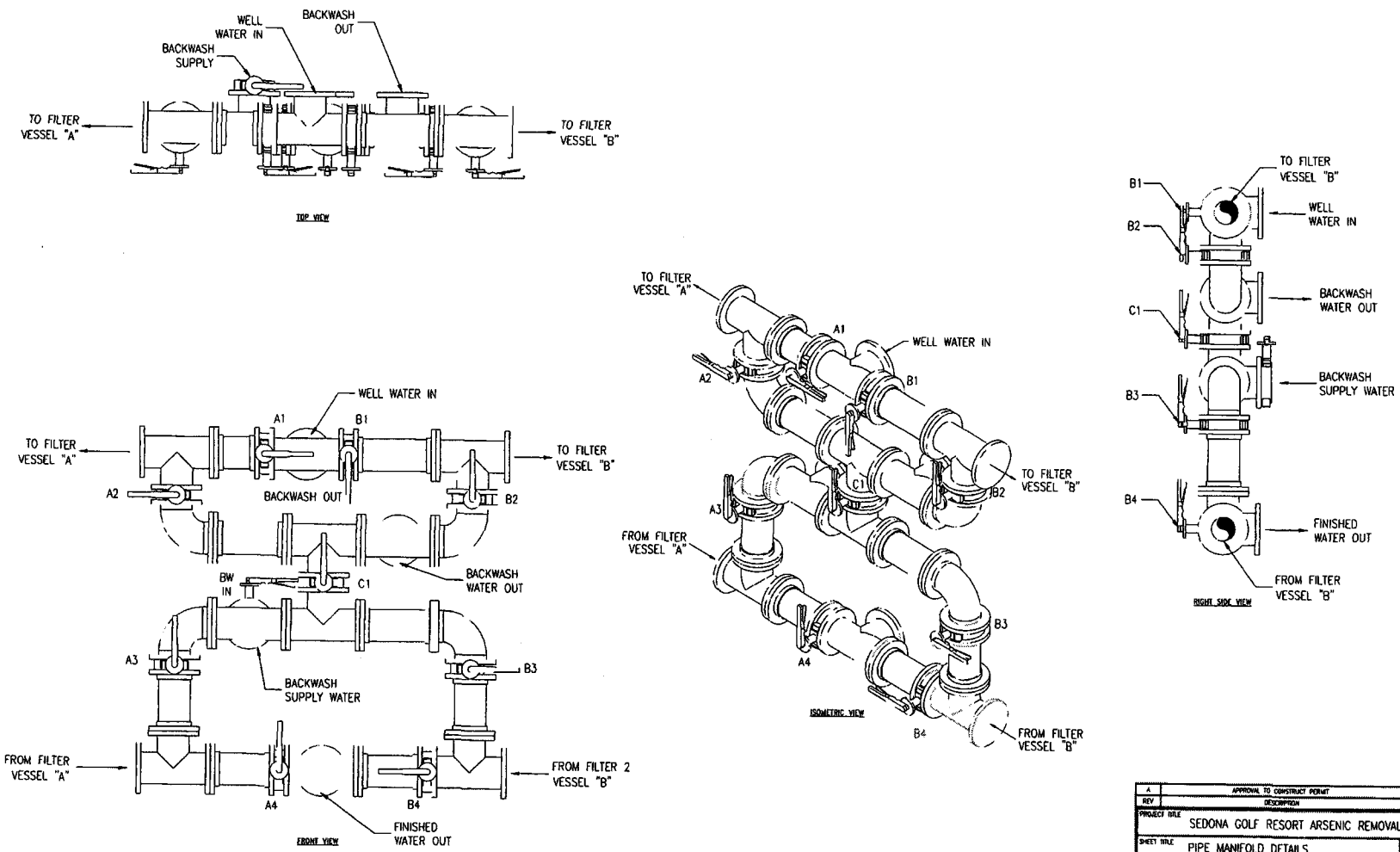

REV	DESCRIPTION	APPROVED	DATE
A	APPROVAL TO CONSTRUCT PERMIT	J.W.B.	11/22/11

PROJECT TITLE: SEDONA GOLF RESORT ARSENIC REMOVAL FACILITY

SHEET TITLE: PIPE MANIFOLD DETAILS

SHEET NO. M-3

SIGNATURES		DATE
DRAWN	C.R.	11/22/11
CHECKED	B.E.A.	11/22/11
ENGINEER	J.W.B.	11/22/11

SCALE: NOT TO SCALE

PROJ. NO. 109311

OWNER: ARIZONA WATER COMPANY

EXPIRES 03/31/2013

Tres Rios Consulting Engineers

253-1100 1-800-STAKE-IT

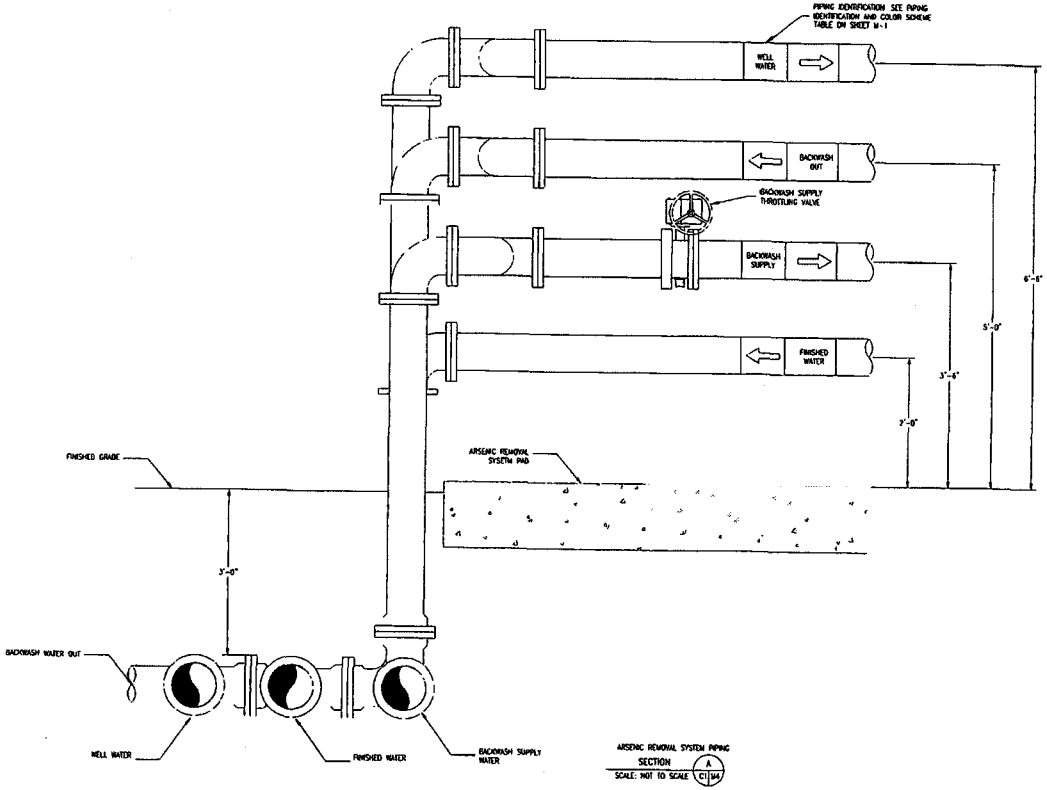

ARSENIC REMOVAL SYSTEM PIPING
SECTION A C1/M4
SCALE: NOT TO SCALE

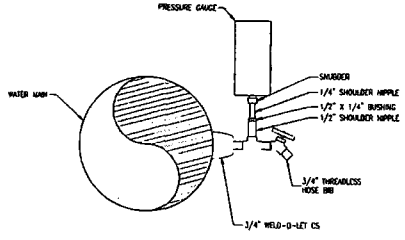

PRESSURE GAUGE AND SAMPLE PORT ASSEMBLY
DETAIL 2 C1/M4
NOT TO SCALE

PRESSURE GAUGE NOTES:

1. PRESSURE GAUGE WILL BE 4 1/2" DIAL SIZE.
2. PRESSURE RANGE WILL BE 0 - 300 PSI
3. 1/2" LOWER MOUNT, 316 SS CONNECTION.
4. DIAL IS WHITE ALUMINUM WITH BLACK LETTERING. STOP PIN AT THE 6 O'CLOCK POSITION.
5. CASE WILL BE BLACK GLASS REINFORCED THERMOPLASTIC (RGPP) WITH A SOLID FRONT AND BLOW-OUT BACK
6. NEMA 4X / IP 65 SILICONE LIQUID FILLED CASE.
7. PRESSURE GAUGE WILL BE OF THE BOURDON TUBE TYPE AS MANUFACTURED BY WIKA OR ENGINEER APPROVED EQUAL.

MEASUREMENTS SHOWN ON THIS DRAWING ARE PROVIDED FOR INFORMATION ONLY CONTRACTOR MUST MAKE HIS OR HER OWN MEASUREMENTS PRIOR TO CONSTRUCTION.

REV	DESCRIPTION	APPROVED	DATE
A	APPROVAL TO CONSTRUCT PERMIT	J.W.B.	11/22/11

PROJECT TITLE: SEDONA GOLF RESORT ARSENIC REMOVAL FACILITY

SHEET TITLE: PIPING DETAILS

SHEET NO: M-4

SIGNATURES		DATE
DRAWN	C.R.	11/22/11
CHECKED	B.E.A.	11/22/11
ENGINEER	J.W.B.	11/22/11

SCALE: NOT TO SCALE

PROJ. NO. 109311

OWNER: ARIZONA WATER COMPANY

BLAKE E. ANDERSON, AZ No. 30002, REGISTERED PROFESSIONAL ENGINEER, EXPIRES 03/31/2013

Tres Ríos Consulting Engineers
230 W. Baseline Road, Suite 101A
Tempe, AZ 85282 (480) 756-1045
www.tres.net

Call Three Working Days before you dig Dig safe and save money
263-1100 1-800-STAKE-IT
ARIZONA BLUE STAKE, INC.

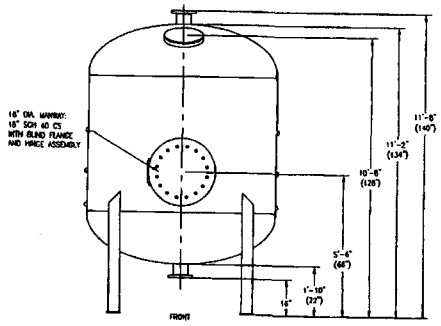

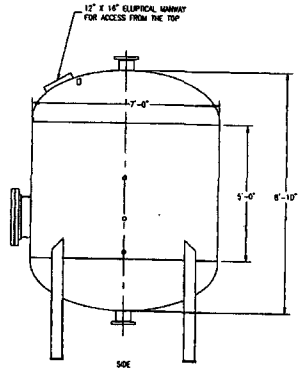

ARSENIC FILTER VESSEL
NTS
DETAIL 1 / C1 / M5

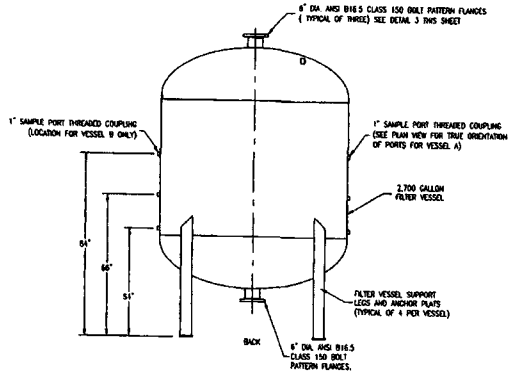

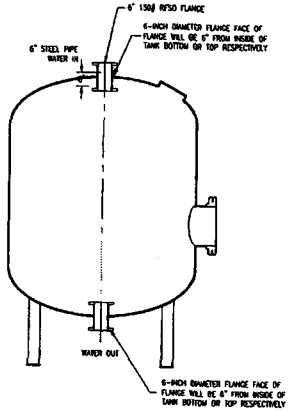

INLET & OUTLET CONNECTIONS
NTS
DETAIL 2 / M5 / M5

ARSENIC FILTER VESSEL NOTES:

1. FILTER VESSEL WILL BE 8'-0" DIAMETER CARBON STEEL CONSTRUCTION WITH MINIMUM 150-PSIG PRESSURE RATING.
2. FILTER VESSEL WILL BE ASME-CERTIFIED.
3. INTERIOR COATING WILL BE PRIMER AND EPOXY PER NSF 61. EXTERIOR COATING WILL BE PRIMED WITH EPOXY FINISH COAT. CONTRACTOR TO TOUCH UP ANY COATING SCRATCHES.
4. THE FILTER VESSEL WILL CONTAIN A DESCRIPTIVE NAMEPLATE INCLUDING INFORMATION ABOUT VESSEL ID "FILTER VESSEL" DIMENSIONS (DIAMETER AND HEIGHT IN FEET AND INCHES), SHIPPING WEIGHT (LBS), MATERIAL INCLUDING RATING OR CODE INFORMATION, VOLUME (CF) AND MANUFACTURER'S INFORMATION INCLUDING PHONE NUMBER.
5. CONTRACTOR WILL PROVIDE AND INSTALL ALL TEMPORARY PIPES AND CONNECTIONS AS REQUIRED FOR INITIAL BACKWASHING AND START-UP TESTING OF THIS SYSTEM.
6. UPON DELIVERY, CONTRACTOR WILL PROVIDE ALL EQUIPMENT AND PERSONNEL REQUIRED TO REMOVE THE SYSTEM FROM THE DELIVERY TRUCK AND PLACE IT UPON THE FOUNDATION AS SHOWN.
7. WHEN ALL EQUIPMENT IS DELIVERED AND UNPACKED, CONTRACTOR WILL NOTIFY ENGINEER AND CONDUCT AN INVENTORY REVIEW AND INSPECTION FOR DAMAGES.

REV	DESCRIPTION	APPROVED	DATE
A	APPROVAL TO CONSTRUCT PERMIT	J.W.B.	11/21/11

PROJECT TITLE: SEDONA GOLF RESORT REMOVAL FACILITY

SHEET TITLE: ARSENIC REMOVAL VESSEL

SHEET NO. M-5

SIGNATURES		DATE
DRAWN	C.R.	11/21/11
CHECKED	B.E.A.	11/21/11
ENGINEER	J.W.B.	11/21/11

SCALE: NOT TO SCALE

PROJ. NO. 109311

OWNER: ARIZONA WATER COMPANY

EXPIRES 03/31/2013

Tres Rios Consulting Engineers

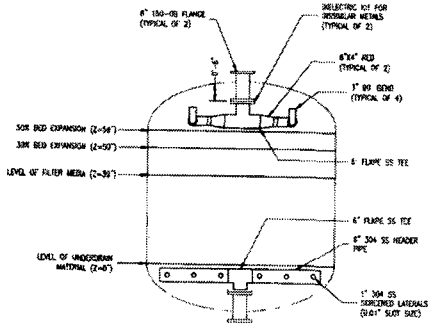

INTERNAL PIPING

DETAIL 1 (MS | MS) NTS

INTERNAL PIPING NOTES:

1. ALL INTERNAL PIPING WILL BE 304 SS.
2. A DIELECTRIC KIT FOR DISSIMILAR METALS WILL BE USED TO TRANSITION FROM CARBON STEEL TO 316 SS
3. INTERNAL PIPING DETAILS ARE EXACTLY THE SAME FOR EACH VESSEL. WHERE STATED TYPICAL IS REPRESENTATIVE OF EACH VESSEL
4. INTERNAL PIPING WILL BE CONSTRUCTED AS DIRECTED BY THE ENGINEER SO THAT THERE WILL BE SUFFICIENT HEADSPACE ABOVE THE FILTER MEDIA FOR BACKWASHING EVENTS

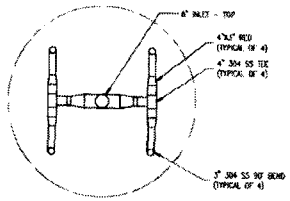

INTERNAL PIPING, TOP MANIFOLD

DETAIL 2 (MS | MS) NTS

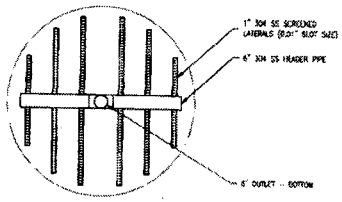

INTERNAL PIPING, BOTTOM MANIFOLD

DETAIL 3 (MS | MS) NTS

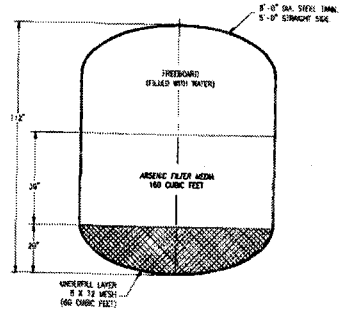

MEDIA LEVELS SCHEMATIC DETAIL

DETAIL 4 (MS | MS) NTS

MEDIA NOTES:

1. ARSENIC FILTER MEDIA WILL BE GRANULAR FERRIC IRON OXIDE ("GFH") PER THE ADEQ APPROVED PERMIT.
2. 160 CUBIC FEET OF MEDIA WILL BE PROVIDED BY CONTRACTOR FOR THE VESSEL.
3. ARSENIC FILTER MEDIA IS NON-REGENERATIVE AND WILL NEED TO BE REPLACED WHEN EXHAUSTED.
4. THE UNDERFILL LAYER BELOW THE MEDIA WILL BE 8 X 12 MESH COLORADO SILICA OR MONTEREY SAND WITH NSF 61 APPROVAL.
5. THE CONTRACTOR WILL PROVIDE 60 CUBIC FEET OF UNDERFILL FOR THE VESSEL.
6. THE UNDER FILL LAYER WILL COMPLETELY COVER THE UNDER DRAIN PIPING LATERALS AND HAVE BY A MINIMUM OF 2-INCHES
7. ALL MATERIALS INSIDE THE VESSEL WILL BE NSF 61 CERTIFIED
8. THE MEDIA WILL BE INSTALLED BY CONTRACTOR IN ACCORDANCE WITH THE MEDIA MANUFACTURER'S INSTRUCTIONS. ANY EQUIPMENT DAMAGED DURING THE INSTALLATION OF THE UNDERFILL OR MEDIA WILL BE REPLACED BY THE CONTRACTOR AT NO COST TO THE OWNER.
9. STORAGE AND HANDLING OF THE MEDIA MATERIALS WILL BE IN ACCORDANCE WITH THE MANUFACTURER'S INSTRUCTIONS. THE MEDIA MAY NOT BE DELIVERED TO THE SITE MORE THAN ONE WEEK PRIOR TO PLACEMENT INSIDE THE VESSELS. THE SYSTEM MUST BE READY FOR BACKWASHING PRIOR TO PLACEMENT OF THE MEDIA INSIDE THE VESSEL.

REV	DESCRIPTION	APPROVED	DATE
A	APPROVAL TO CONSTRUCT PERMIT	JWB	11/21/11

PROJECT TITLE: SEDONA GOLF RESORT ARSENIC REMOVAL FACILITY

SHEET TITLE: INTERNAL PIPING DETAILS — SHEET NO. M-6

SIGNATURES		DATE
DRAWN	C.P.	11/21/11
CHECKED	B.E.A.	11/21/11
ENGINEER	J.W.B.	11/21/11

SCALE: NOT TO SCALE

PROJ. NO. 109311

OWNER

EXPIRES 03/31/2013

Tres Rios Consulting Engineers

200 W. Baseline Road, Suite 104A Tempe, AZ 85283 (480) 756-0043

www.trios.com

Call Two Full Business Days Before You Dig. Call 811 or 1-800-STAKE-IT

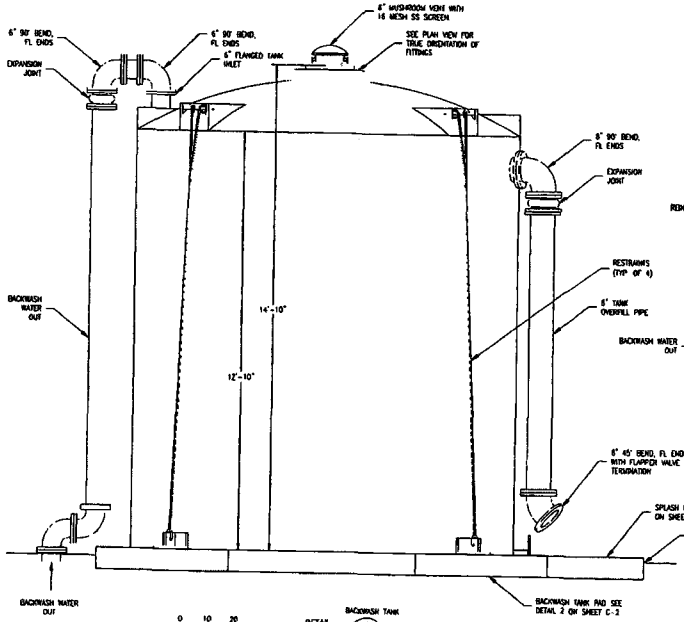

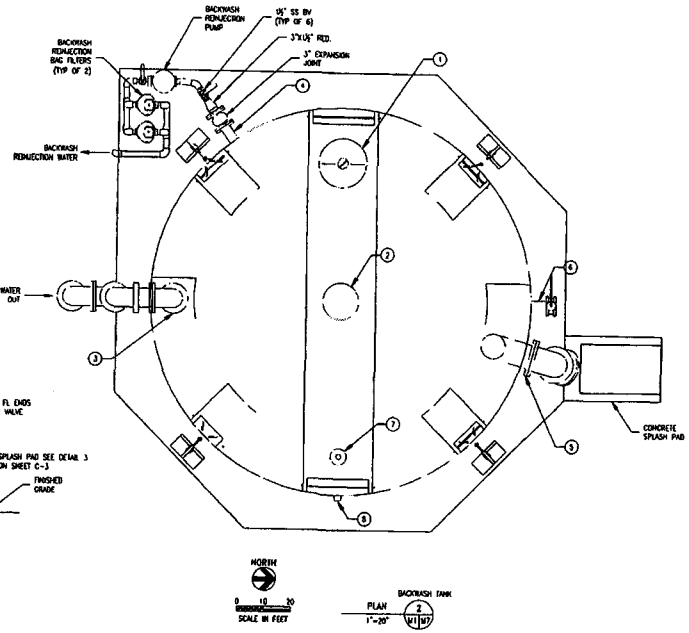

BACKWASH REINJECTION NOTES:

1. ALL ABOVE GROUND PIPING WILL BE 1½" DIA. TYPE L HARD COPPER PIPE.
2. ALL BELOW GROUND PIPING WILL BE 1½" DIA. TYPE K HARD COPPER PIPE.
3. ALL BELOWGROUND PIPING WILL BE POLYWRAPPED AND TAPED TO PROTECT THE PIPE FROM CORROSION. PIPE WILL BE WRAPPED TO A MIN 6" ABOVE GRADE.
4. BACKWASH REINJECTION PUMP WILL BE CAPABLE OF 30 GPM AT 235 TDH PUMP WILL BE 5 HP, 230 V, 60 HZ, 3 PHASE.
   PUMP MODEL = CR 5-11
   PUMP MANUFACTURER = GRUNDFOS
5. BACKWASH REINJECTION WATER WILL BE BROUGHT BACK INTO THE FRONT END OF THE ARSENIC REMOVAL SYSTEM AT A MAXIMUM OF 10% OF THE WELL PRODUCTION FLOWRATE.
6. BACKWASH REINJECTION WATER WILL BE FILTERED PRIOR TO RE-ENTERING THE ARSENIC REMOVAL SYSTEM.
7. TWO (2) 5 MICRO METER BAG FILTERS IN PARALLEL WILL BE USED
8. BAG FILTER VESSELS WILL BE STAINLESS STEEL 150-PSI RATED AND OF THE MODEL FSPH-35 AS MANUFACTURED BY FSI.
9. A PRESSURE GAUGE WILL BE LOCATED ON THE SUCTION SIDE OF THE BACKWASH REINJECTION PUMP AND ON THE OUTLET SIDE OF THE BAG FILTERS

BACKWASH TANK SPECIFICATIONS:

1. BACKWASH TANK DIMENSIONS
   CAPACITY = 10,500 GALLONS
   DIAMETER = 11'-10", HEIGHT = 14'-10"
2. DESIGN SPECIFIC GRAVITY = 1.5
3. DESIGN TEMPERATURE = 100°F.
4. DESIGN PRESSURE = ATMOSPHERIC
5. THE TANK IS CONSTRUCTED OF HIGH DENSITY LINEAR POLYETHYLENE ("HDLPE").
6. FITTING CONNECTIONS WILL BE CONSTRUCTED OF PVC, 304 SS, OR 316 SS AND ALL FITTINGS WILL HAVE EPDM GASKETS AND 316 SS HARDWARE.
7. THE BOTTOM OF THE BACKWASH REINJECTION PUMP SUCTION FITTING WILL BE PLACED AT 9-INCHES ABOVE THE FLOOR OF THE RECLAIM TANK TO ALLOW FOR THE PARTICULATES TO SETTLE BELOW THIS LEVEL AFTER A BACKWASH EVENT. A FLEXIBLE CONNECTION FITTING WILL BE USED TO ALLOW FOR TANK EXPANSION DUE TO TEMPERATURE CHANGES
8. THE VENT WILL BE A MUSHROOM STYLE VENT WITH A SS 16 MESH BUG SCREEN.
9. TANK DRAIN WILL BE OF THE SUMP STYLE ALLOWING FOR THE MAXIMUM LOW LEVEL TO BE DRAINED OR BRAINED OUT OF THE TANK. THE TANK DRAIN WILL BE FLUSH WITH THE TANK FLOOR AND WILL HAVE A FLEXIBLE CONNECTION WITH AN ISOLATION VALVE.
11. THE MANWAY ON TOP OF THE TANK WILL BE LOCKABLE TO PREVENT ENTRANCE BY UNAUTHORIZED PERSONNEL.

CONSTRUCTION NOTES:

1. SEE PLAN VIEW FOR TRUE ORIENTATION OF FITTINGS.
2. TANK FILL AND TANK OVERFILL PIPING WILL BE SUPPORTED TO THE SIDEWALL OF THE RECLAIM TANK AND ON THE RECLAIM TANK PAD.
3. CONNECTION ENDS WILL BE CLASS 150, A105 FLANGE (ANSI B16.5)
4. LEVEL TRANSMITTERS WILL INDICATE THE LEVEL OF LIQUID INSIDE THE RECLAIM TANK WITH RESPECT TO THE BOTTOM OF THE TANK.
5. LEVEL TRANSMITTER DISPLAY WILL BE PROTECTED FROM THE DIRECT SUNLIGHT AND WILL BE DESIGNED AND RATED FOR OUTDOOR USE.

BACKWASH TANK FITTINGS TABLE:

ID	SIZE	DESCRIPTION	LOCATION	HEIGHT
1	18-INCH	MANWAY	0°	CEILING
2	8-INCH	VENT	0° CENTER	CEILING
3	6-INCH	TANK FILL	270°	CEILING
4	3-INCH	PUMP SUCTION	325°	0'-9"
5	8-INCH	TANK OVERFILL	105°	TANK FLOOR
6	3-INCH	TANK DRAIN	90°	FLUSH WITH TANK FLOOR
7	2-INCH	LEVEL TRANSMITTERS	180°	CEILING
8	¾-INCH	LEVEL TRANSMITTERS	180°	1'-0"

BACKWASH TANK PAINT SPECIFICATIONS

1. SURFACE PREPARATION
   A. POWER TOOL WITH ABRASIVE SANDPAPER OR GRINDERS (40-60 GRIT) TO CREATE A MINIMUM 1.0 MIL PROFILE.
   B. SOLVENT WIPE (MEK OR ACETONE) THE ENTIRE SUBSTRATE DOWN JUST PRIOR TO COATING.
2. PRIMER
   A. THEMEC SERIES 135 CHEMBUILD AT 2.5-3.5 MILS DRY FILM THICKNESS.
3. FINISH
   A. TEKSMC SERIES 1075 ENDURA-SHIELD II AT 2.5-3.5 MILS DRY FILM THICKNESS.

TOTAL SYSTEM: 5.0-7.0 MILS

REV	DESCRIPTION	APPROVED	DATE
A	APPROVAL TO CONSTRUCT PERMIT	JWB	11/22/11

PROJECT TITLE: SEDONA GOLF RESORT ARSENIC REMOVAL FACILITY

SHEET TITLE: BACKWASH TANK DETAILS

SHEET NO. M-7

SIGNATURES		DATE
DRAWN	E.R.	11/22/11
CHECKED	D.E.A.	11/22/11
ENGINEER	J.W.B.	11/22/11

SCALE: AS SHOWN

PROJ. NO. 109311

OWNER:

ARIZONA RIVERS COMPANY

Registered Land Surveyor CERTIFICATE NO. 36813 BLAKE E. ASH SEDONA, ARIZONA USA EXPIRES 03/31/2013

Tres Rios Consulting Engineers
320 W. Sunset Road, Suite 101A
Tempe, AZ 85282 (480) 756-5002
www.tresrios.com

Two working days before you dig, call for free field locate. 1-800-STAKE-IT

2S3-1100 1-800-STAKE-IT

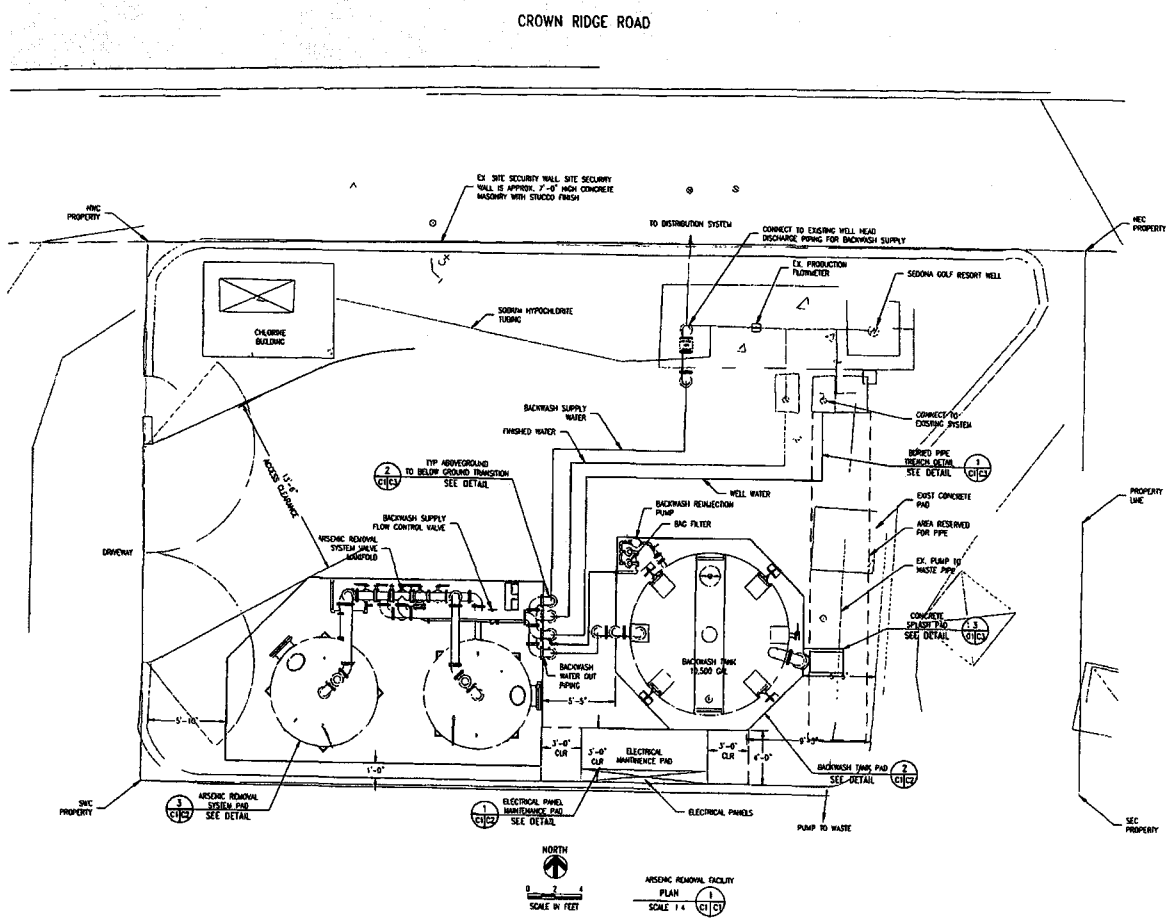

MEASUREMENTS SHOWN ON THIS DRAWING ARE PROVIDED FOR INFORMATION ONLY. CONTRACTOR MUST MAKE HIS OR HER OWN MEASUREMENTS PRIOR TO CONSTRUCTION.

REV	DESCRIPTION	APPROVED	DATE
A	APPROVAL TO CONSTRUCT PERMIT	JWB	11/22/11

PROJECT TITLE: SEDONA GOLF RESORT ARSENIC REMOVAL FACILITY

SHEET TITLE: ARSENIC REMOVAL FACILITY SITE PLAN

SHEET NO: C-1

SIGNATURES		DATE
DRAWN	C.P.	11/22/11
CHECKED	B.E.A.	11/22/11
ENGINEER	J.W.B.	11/22/11

SCALE: NOT TO SCALE

PROJ. NO: 109311

OWNER: SEDONA GOLF RESORT

EXPIRES 03/31/2013

Tres Rios Consulting Engineers

Call 2 working days before you dig. It's the law. It's good sense. 263-1100 1-800-STAKE-IT Arizona Blue Stake, Inc.

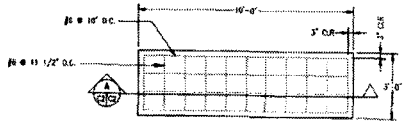

ELECTRICAL PANEL MAINTENANCE PAD
DETAIL 1
1"=30"

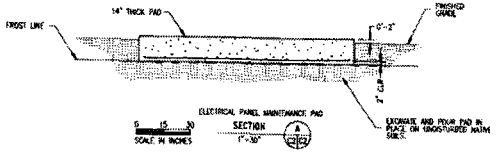

ELECTRICAL PANEL MAINTENANCE PAD
SECTION A
1"=30"

BACKWASH TANK PAD
DETAIL 2
1"=30"

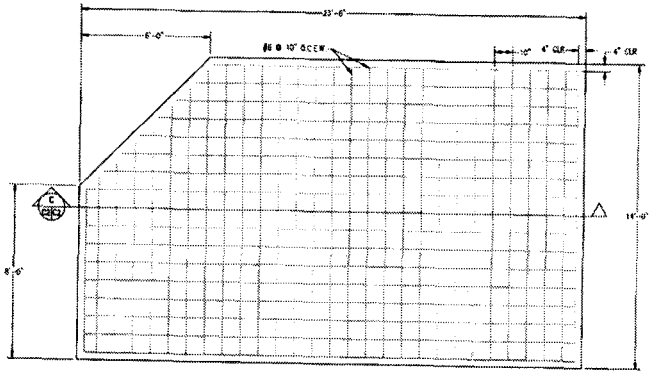

ARSENIC REMOVAL SYSTEM PAD
DETAIL 4
1"=30"

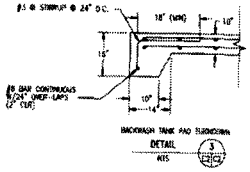

BACKWASH TANK PAD THICKENING
DETAIL 3
NTS

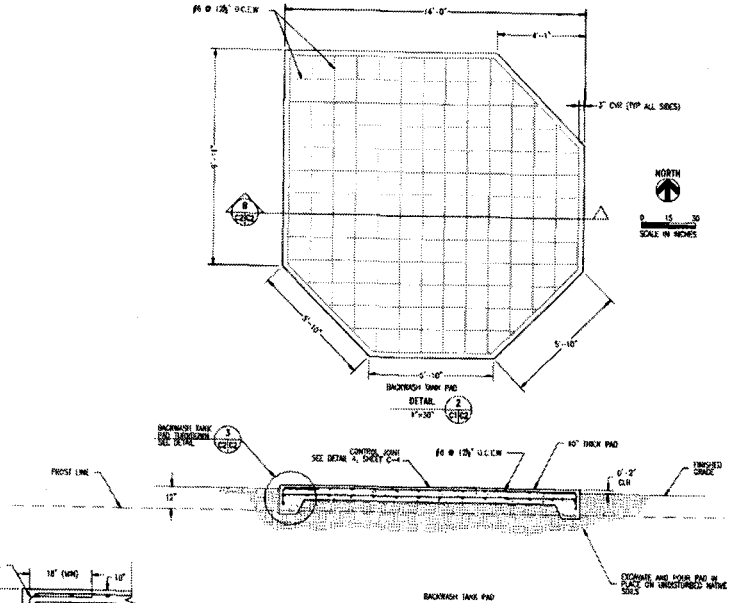

BACKWASH TANK PAD
SECTION B
1"=30"

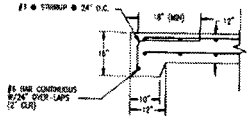

ARSENIC REMOVAL SYSTEM PAD THICKENING
DETAIL 5
NTS

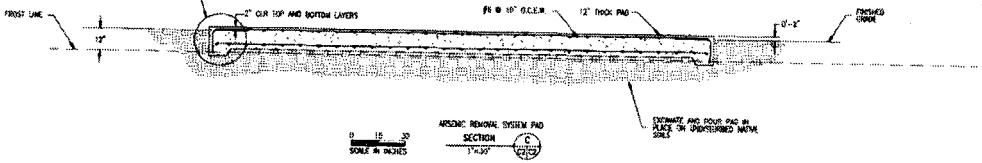

ARSENIC REMOVAL SYSTEM PAD
SECTION C
1"=30"

CONCRETE FOUNDATION NOTES:

1. ALL CONCRETE SHALL BE BE 4,000 psi COMPRESSIVE STRENGTH @ 28 DAY, AND REINFORCING STEEL SHALL BE GRADE 60, FY = 60ksi.
2. ALL EXPOSED EDGES SHALL BE TOOLED WITH A ½" RADIUS.
3. CONCRETE SHALL HAVE A MEDIUM BROOM FINISH
4. SURFACE OF CONCRETE SHALL BE FLAT, VERIFIABLE BY 10 FOOT STRAIGHT EDGE EACH WAY (EVEN ACROSS CONTROL JOINTS) FREE OF RIPPLE MARKS
5. COMPACTION OF AB MATERIAL SHALL BE AT LEAST 95% AND WITHIN ± 2% OF OPTIMUM MOISTURE OF STANDARD PROCTOR IN ACCORDANCE WITH ASTM D-698.

REV	DESCRIPTION	APPROVED	DATE
A	APPROVAL TO CONSTRUCT PERMIT	JWB	11/21/11

PROJECT TITLE: SEDONA GOLF RESORT ARSENIC REMOVAL FACILITY

SHEET TITLE: EQUIPMENT PAD & CIVIL DETAILS

SHEET NO. C-2

SIGNATURES	DATE
DRAWN C.R.	11/21/11
CHECKED B.E.A.	11/21/11
ENGINEER J.W.B.	11/21/11

SCALE: NOT TO SCALE

PROJ. NO. 109311

OWNER

EXPIRES 03/31/2013

Tres Rios Consulting Engineers

2250 W. Shoreline Road, Suite 101A
Tempe, AZ 85282 (480) 759-3400
www.trosaz.com

Call 2 Business Days Before you Dig
1-800-STAKE-IT
(1-800-782-5348)
ALWAYS, ANYWHERE, ANYTIME

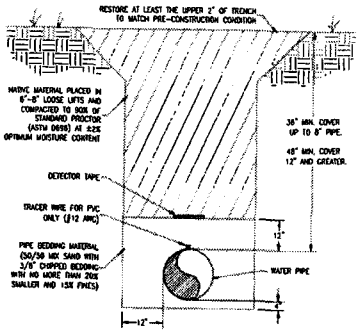

BURIED PIPE TRENCH DETAIL
DETAIL 1 C1/C4
NOT TO SCALE

CONSTRUCTION NOTES:

1. WATER PIPE MUST BE PLACED ON 4" OF BEDDING MATERIAL WITH LESS THAN 2.5° JOINT DEFLECTIONS
2. PIPE SHADING MUST COMPLETELY COVER PIPE HAUNCHES AND 12" OVER PIPE CROWN
3. PLACE DETECTOR TAPE DIRECTLY ABOVE CENTER LINE OF PIPE ON PIPE BEDDING MATERIAL.
4. NATIVE MATERIAL MAY NOT BE POURED GREATER THAN 8" THICK LIFTS WHEN BACKFILLING AND COMPACTING.
5. ALL COMPACTION MUST BE DONE BY MECHANICAL VIBRATORY OR JUMPING JACK METHODS USING EQUIPMENT SPECIFICALLY AND SOLELY DESIGNED FOR EARTH COMPACTION.
6. WRAP BELOW GROUND DIP RISER AND FITTINGS WITH POLY TAPE AND EXTEND TAPE AT LEAST 12-INCHES ABOVEGROUND. (SEE DETAIL 2, THIS SHEET)

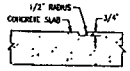

CONTROL JOINT
DETAIL 4 C1/C4
NOT TO SCALE

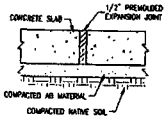

EXPANSION JOINT FOR FLUSH SURFACES
DETAIL 5 C1/C4
NOT TO SCALE

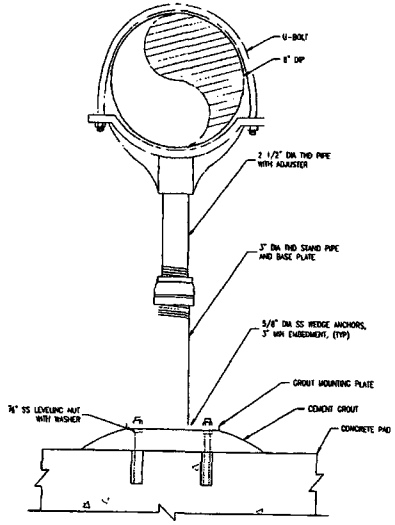

PIPE STANCHION WITH FLANGE
DETAIL 7 C1/C4
NOT TO SCALE

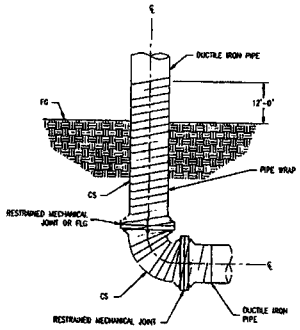

TYP ABOVE GROUND TO UNDERGROUND PIPE TRANSITION
DETAIL 2 C1/C4
NOT TO SCALE

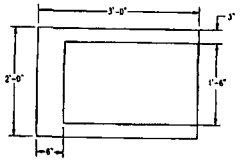

PLAN VIEW

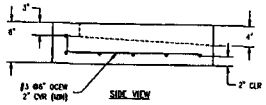

SIDE VIEW

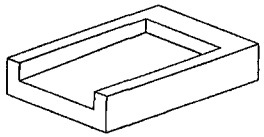

ISOMETRIC

CONCRETE SPLASH PAD
DETAIL 3 C1/C4
NOT TO SCALE

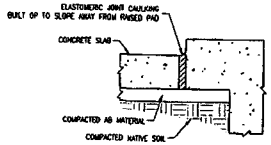

EXPANSION JOINT FOR IRREGULAR SURFACE HEIGHTS
DETAIL 6 C1/C4
NOT TO SCALE

PIPE STANCHION NOTES:

1. USE VALVE SUPPORT WITH SADDLE RADIUS TO MATCH VALVE BODY.
2. STANCHION PIPE WILL BE CARBON STEEL, PRIMED AND PAINTED TO MATCH PIPE.
3. FOR PIPE SUPPORT BLOCK STRUCTURAL FILL TO BE PLACED 1' LATERALLY BEYOND THE PAD AND AT LEAST 2' BELOW PAD. STRUCTURAL FILL TO BE COMPACTED IN 8" LIFTS TO 98% STANDARD PROCTOR (ASTM 698) @ ±2% OPTIMUM MOISTURE.
4. ALL CONCRETE TO BE MINIMUM 4,000 PSI STRENGTH WITH NO REBAR.
5. PIPE STANCHION SUPPORT BLOCK WILL BE OF THE DIMENSIONS 12" X 12" X 18" DEEP.

REV	DESCRIPTION	APPROVED	DATE
A	APPROVAL TO CONSTRUCT PERMIT	J.W.B.	11/21/11

PROJECT TITLE: SEDONA GOLF RESORT ARSENIC REMOVAL FACILITY

SHEET TITLE: CIVIL DETAILS

SHEET NO. C-3

SIGNATURES	DATE
DRAWN C.R.	11/21/11
CHECKED B.E.A.	11/21/11
ENGINEER J.W.B.	11/21/11

SCALE: NOT TO SCALE

PRISM. NO. 109311

OWNER

ARIZONA NATIVE COMPANY

STATE OF ARIZONA BLAKE E. ALLEN 36116 REGISTERED PROFESSIONAL ENGINEER
EXPIRES 03/31/2013

Tres Rios Consulting Engineers
320 W. Sunset Road, Suite 101A
Tempe, AZ 85282 (480) 735-1002
www.trenc.com

Call Before You Dig. Blue Stake, Inc. 2S3-1100 1-800-STAKE-IT

ARIZONA DEPARTMENT OF ENVIRONMENTAL QUALITY
CERTIFICATE OF APPROVAL TO CONSTRUCT
WATER FACILITIES

ADEQ File No: 20110287	**LTF No:** 55384
System Name: Valley Vista	**System Number:** 13-114
Project Owner: Arizona Water Company	
Address: P O Box 29006, Phoenix, AZ 85038	
Project Location: Sedona	**County:** Yavapai
Description: INSTALLATION OF NEW SORPTIVE MEDIA ARSENIC FILTER USING GFH MEDIA TO REPLACE EXISITNG ARSENIC TREATMENT AT THE SEDONA GOLF COURSE WELL. FACILITY WILL TREAT UP TO 300 GPM.	

Approval to construct the above-described facilities as represented in the approved documents on file with the Arizona Department of Environmental Quality is hereby given subject to provisions 1 through 5 continued on page 2 through 2

1. This project must be constructed in accordance with all applicable laws, including Title 49, Chapter 2, Article 9 of the Arizona Revised Statutes and Title 18, Chapter 5, Article 5 of the Arizona Administrative Code.

2. Upon completion of construction, the engineer shall fill out the Engineer's Certificate of Completion and forward it to the Central Regional Office located in Phoenix. If all requirements have been completed, that unit will issue a Certificate of Approval of Construction. R18-5-507(B), Ariz. Admin.Code. At the project owner's request, the Department may conduct the final inspection required pursuant to R18-5-507(B); such a request must be made in writing in accordance with the time requirements of R18-5-507(C), Ariz. Admin. Code.

3. This certificate will be void if construction has not started within one year after the Certificate of Approval to Construct is issued, there is a halt in construction of more than one year, or construction is not completed within three years of the approval date. Upon receipt of a written request for an extension of time, the Department may grant an extension of time; an extension of time must be in writing. R18-5-505(E), Ariz. Admin. Code.

4. Operation of a newly constructed facility shall not begin until a Certificate of Approval of Construction has been issued by the Department. R18-5-507(A), Ariz. Admin. Code.

Reviewed by: AD4

By: Janak K. Desai 1/20/2012
Janak K. Desai, P.E. Unit Manager — Date
Engineering Review Section
Water Quality Division

cc: File No: 20110287
Regional Office: Central
Owner: Arizona Water Company
County Health Department: Yavapai
Engineer: Tres Rios Consulting Eng
Planning and Zoning/Az Corp. Commission
Engineering Review Database - Elr021

5. The Arizona Department of Environmental Quality's review of this application was subject to the requirements of the licensing time frames ("LTF") statute under Arizona Revised Statutes ("A.R.S.") § 41-1072 through § 41-1079 and the LTF rules under Arizona Administrative Code ("A.A.C.") R18-1-501 through R18-1-525. This Notice is being issued within the overall time frame for your application.

   ADEQ hereby approves your application for Approval to Construct Water Facilities under A.R.S. § 49-351. Your copy is enclosed.

   This decision is an appealable agency action under A.R.S. § 41-1092. You have a right to request a hearing and file an appeal under A.R.S. § 41-1092.03(B). You must file a written Request for Hearing or Notice of Appeal within **30 days** of your receipt of this Notice. A Request for Hearing or Notice of Appeal is filed when it is received by ADEQ's Hearing Administrator as follows:

   Office of Administrative Counsel
   Arizona Department of Environmental Quality
   1110 W. Washington Street
   Phoenix, AZ 85007

   The Request for Hearing or Notice of Appeal shall identify the party, the party's address, the agency and the action being appealed and shall contain a concise statement of the reasons for the appeal. Upon proper filing of a Request for Hearing or Notice of Appeal, ADEQ will serve a Notice of Hearing on all parties to the appeal. If you file a timely Request for Hearing or Notice of Appeal you have a right to request an informal settlement conference with ADEQ under A.R.S. § 41-1092.06. This request must be made in writing no later than **20 days** before a scheduled hearing and must be filed with the Hearing Administrator at the above address.

   Please contact Adrian Dumitrescu at 602-771-4201 or ad4@azdeq.gov if you have questions regarding this Notice or the Certificate of Approval to Construct.

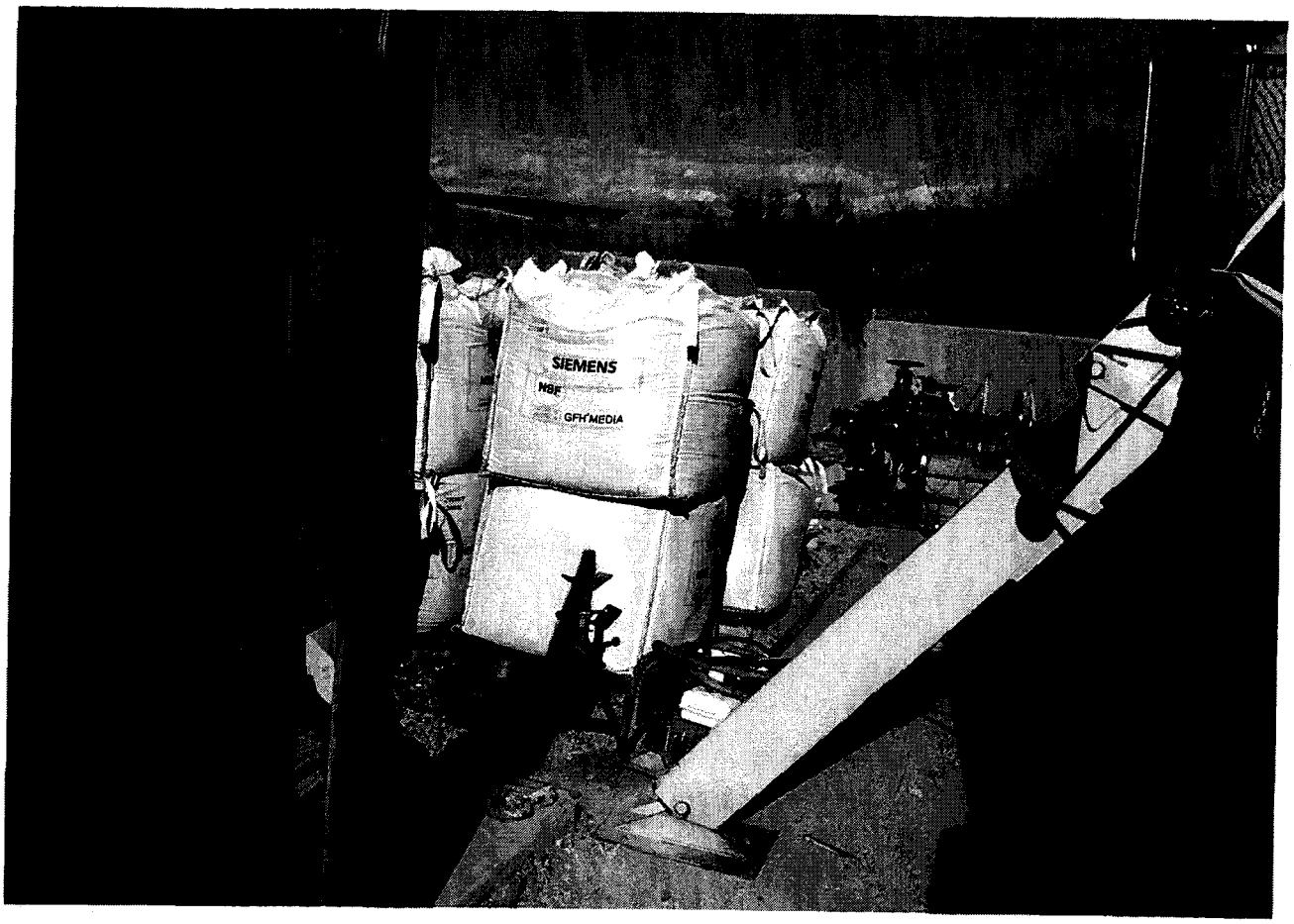
SIEMENS
HBF
GFH MEDIA

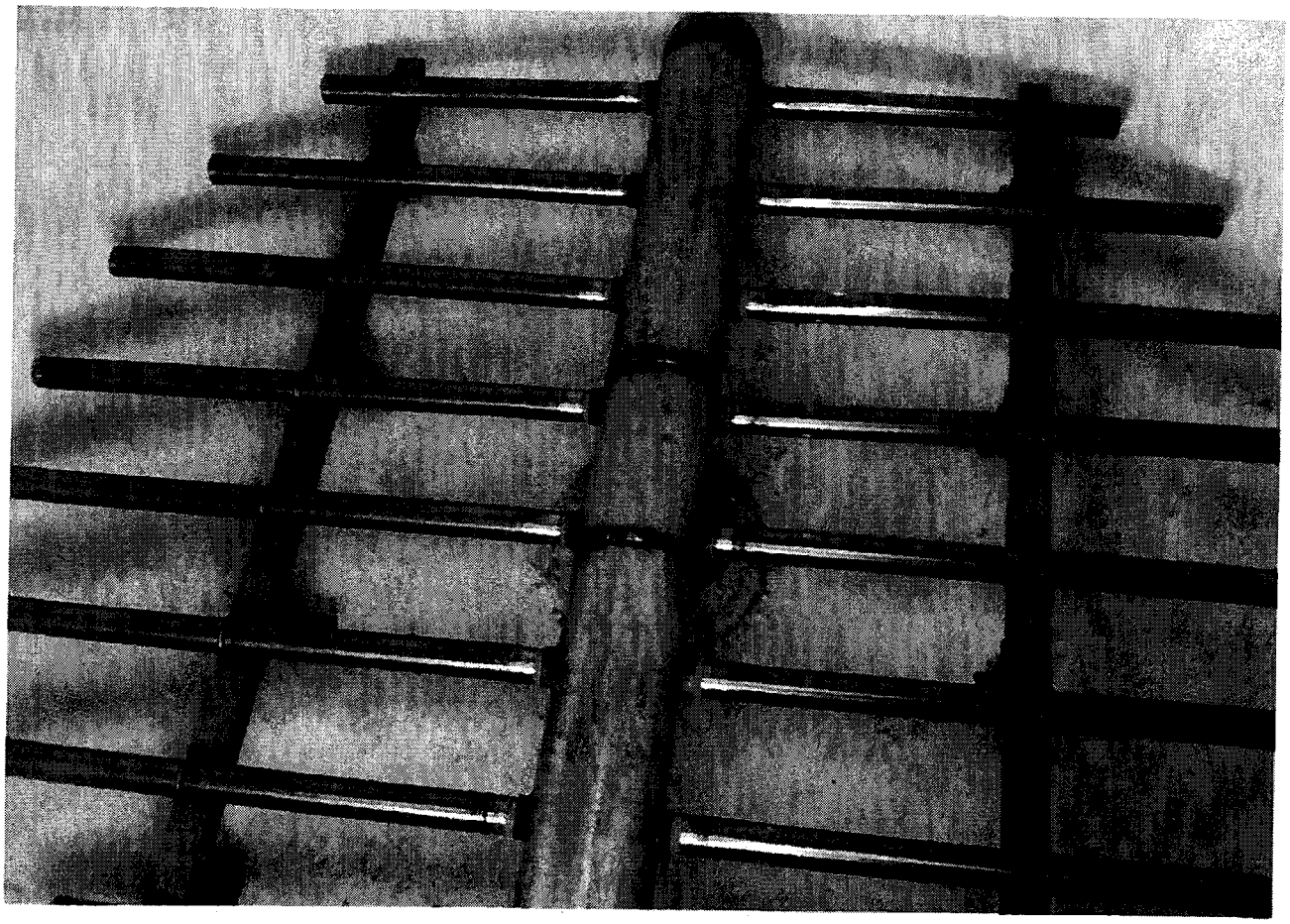

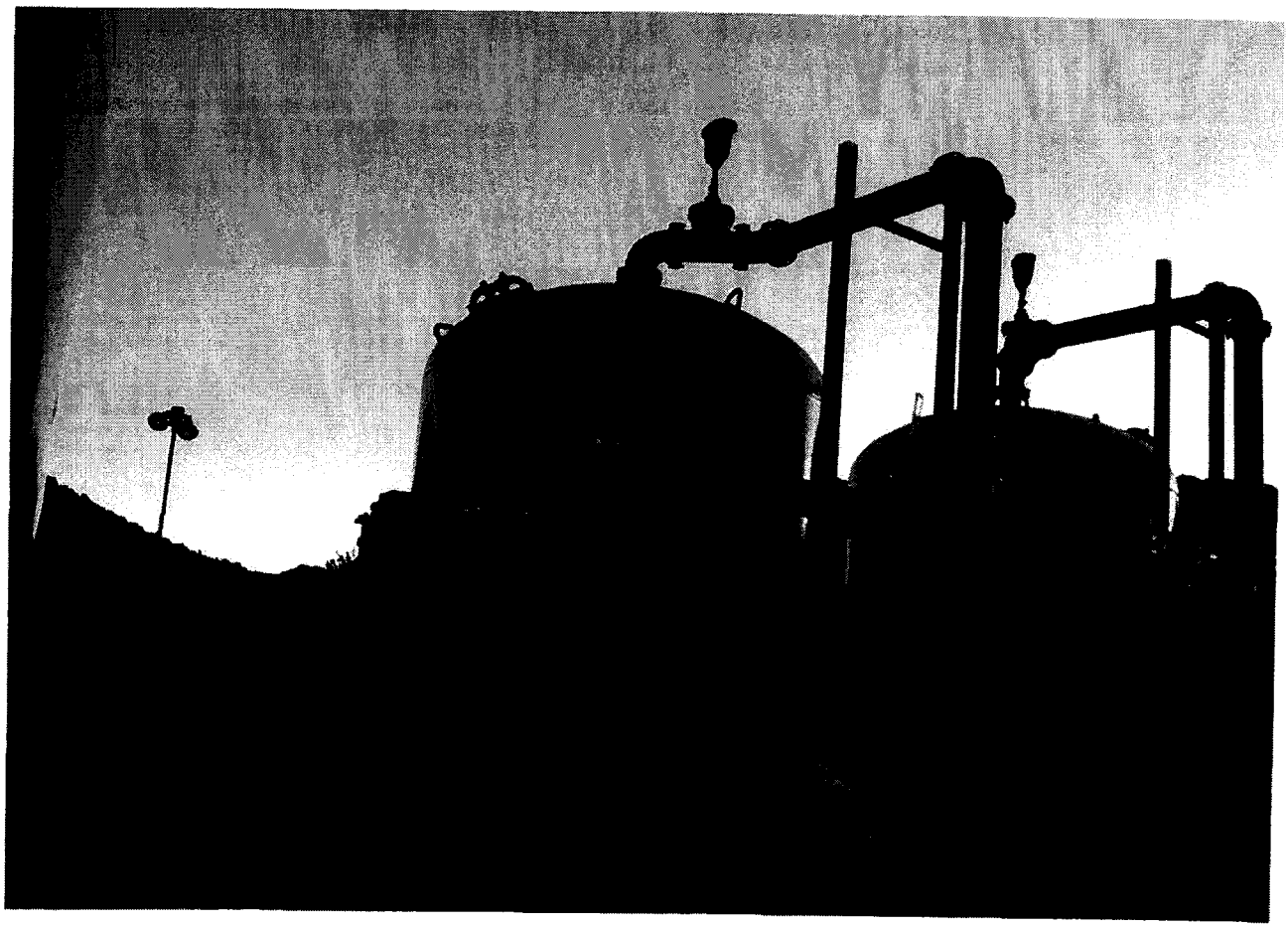

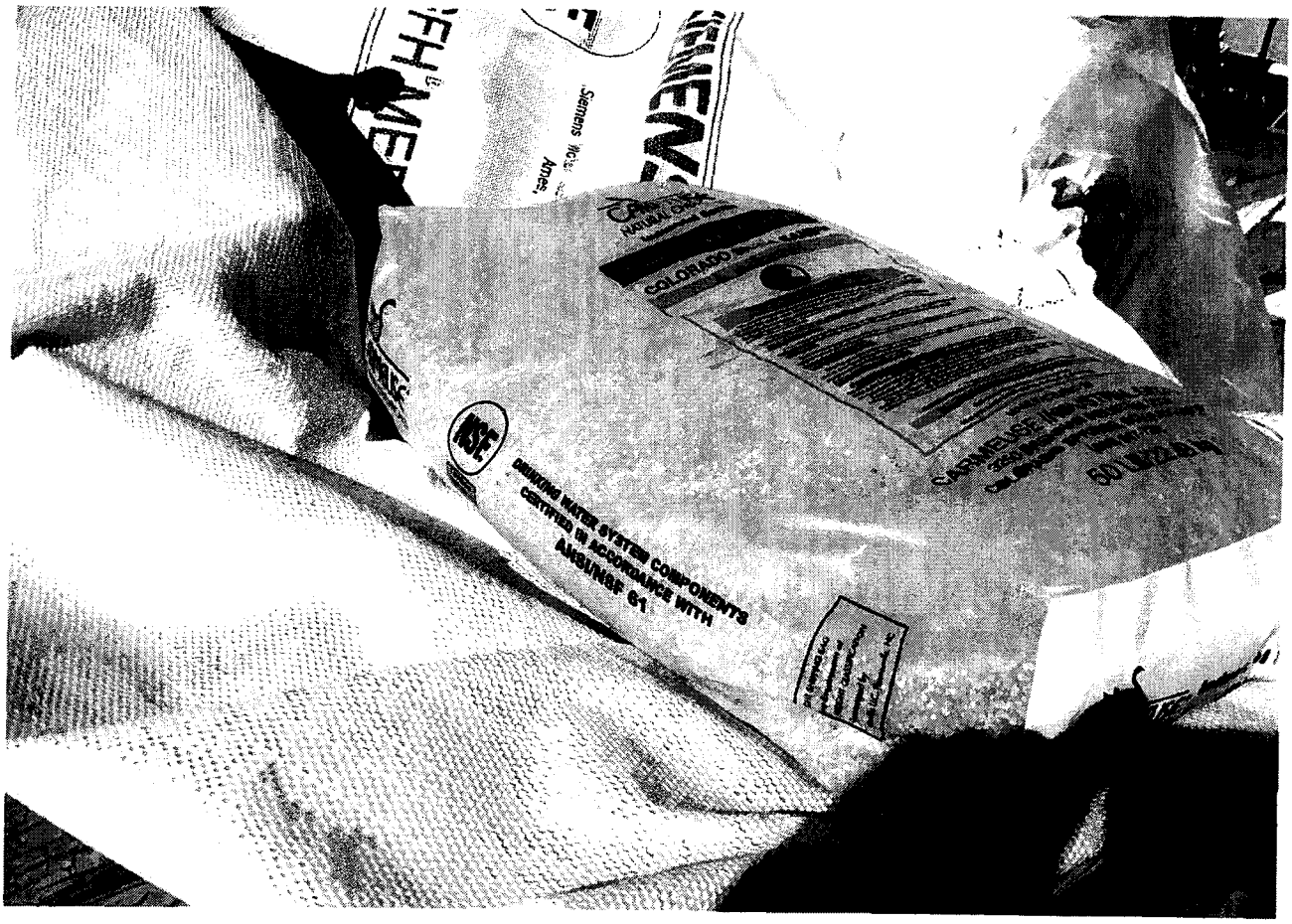
NSF
DRINKING WATER SYSTEM COMPONENTS
CERTIFIED IN ACCORDANCE WITH
ANSI/NSF 61
COLORADO

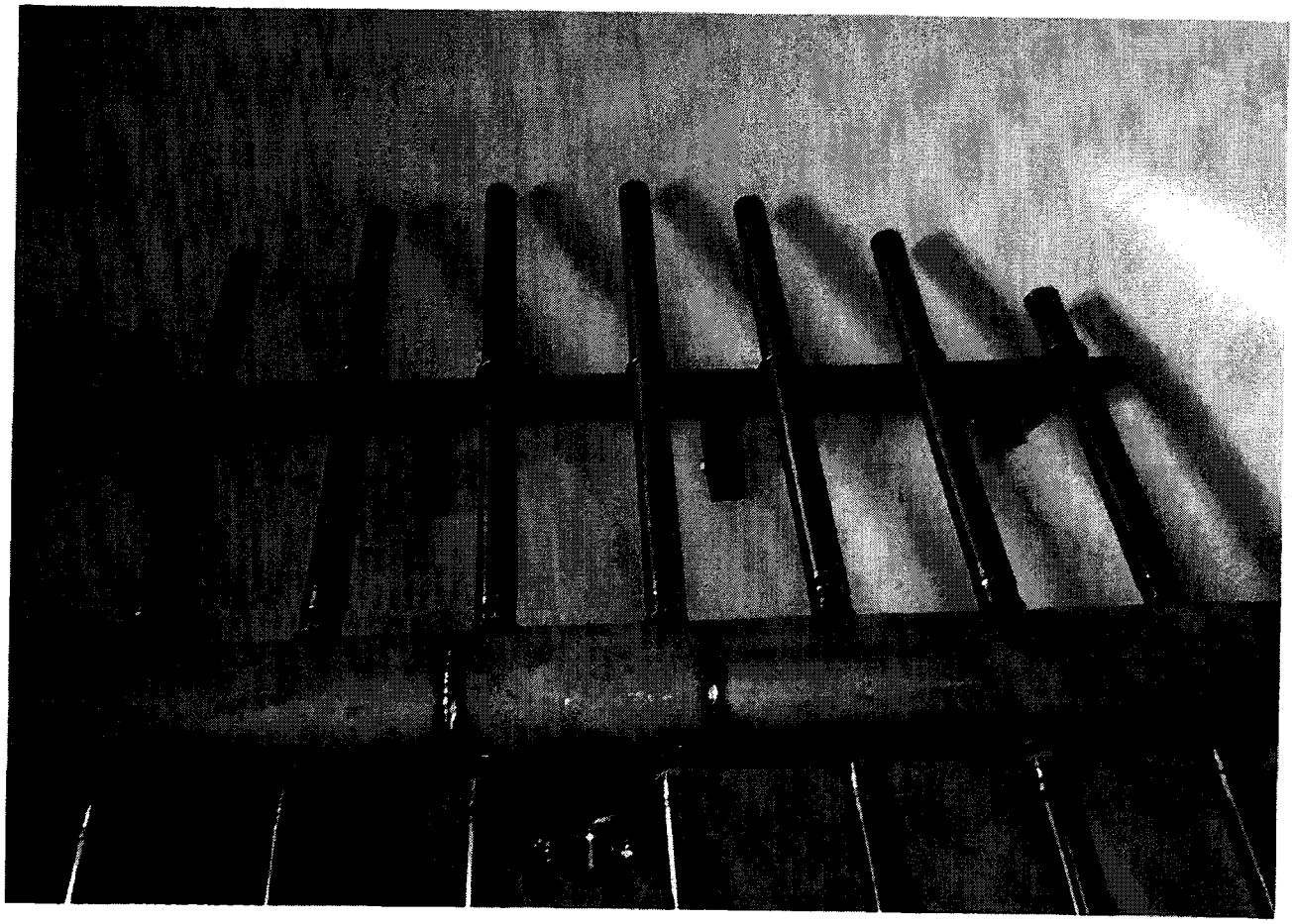

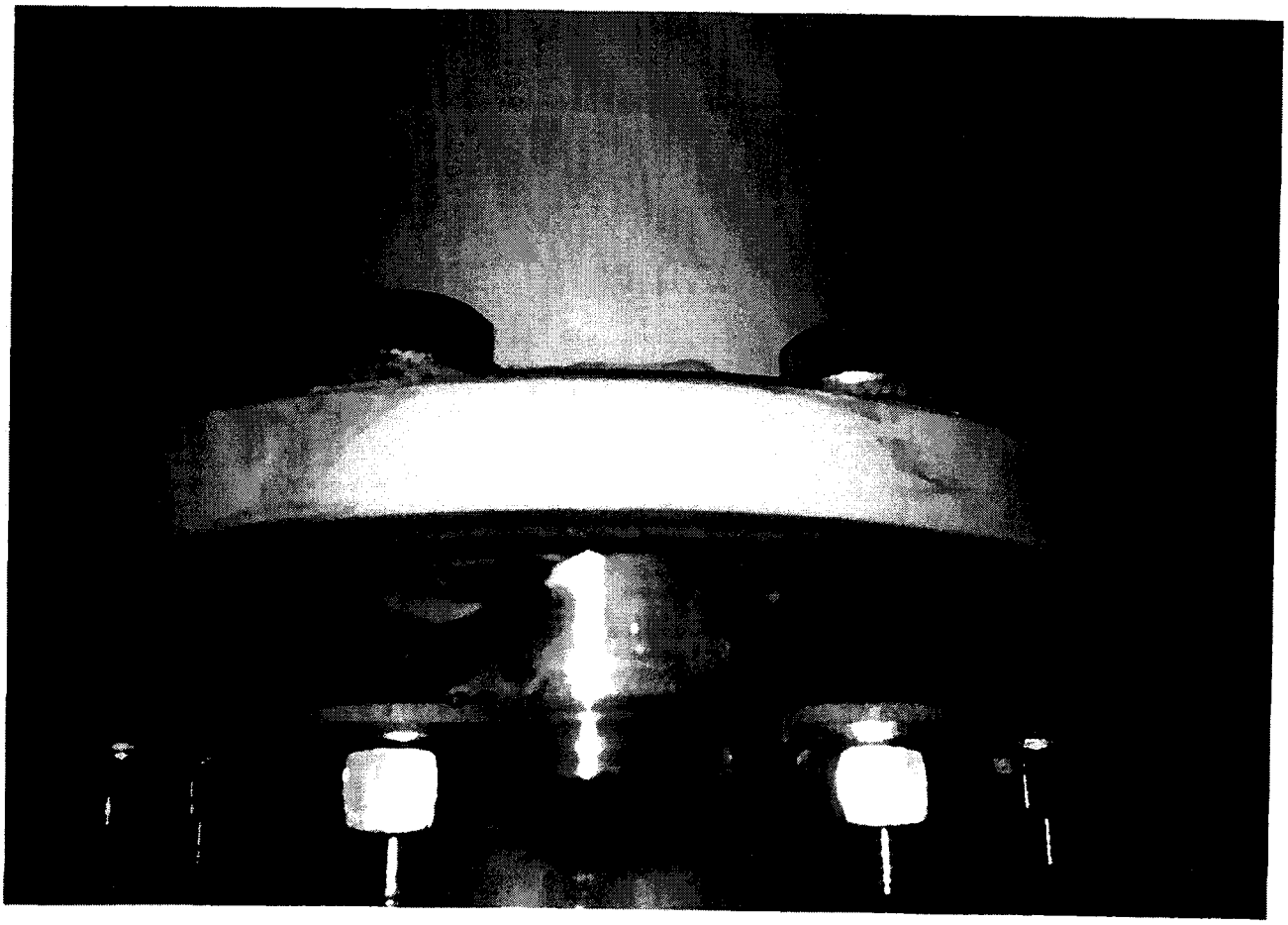

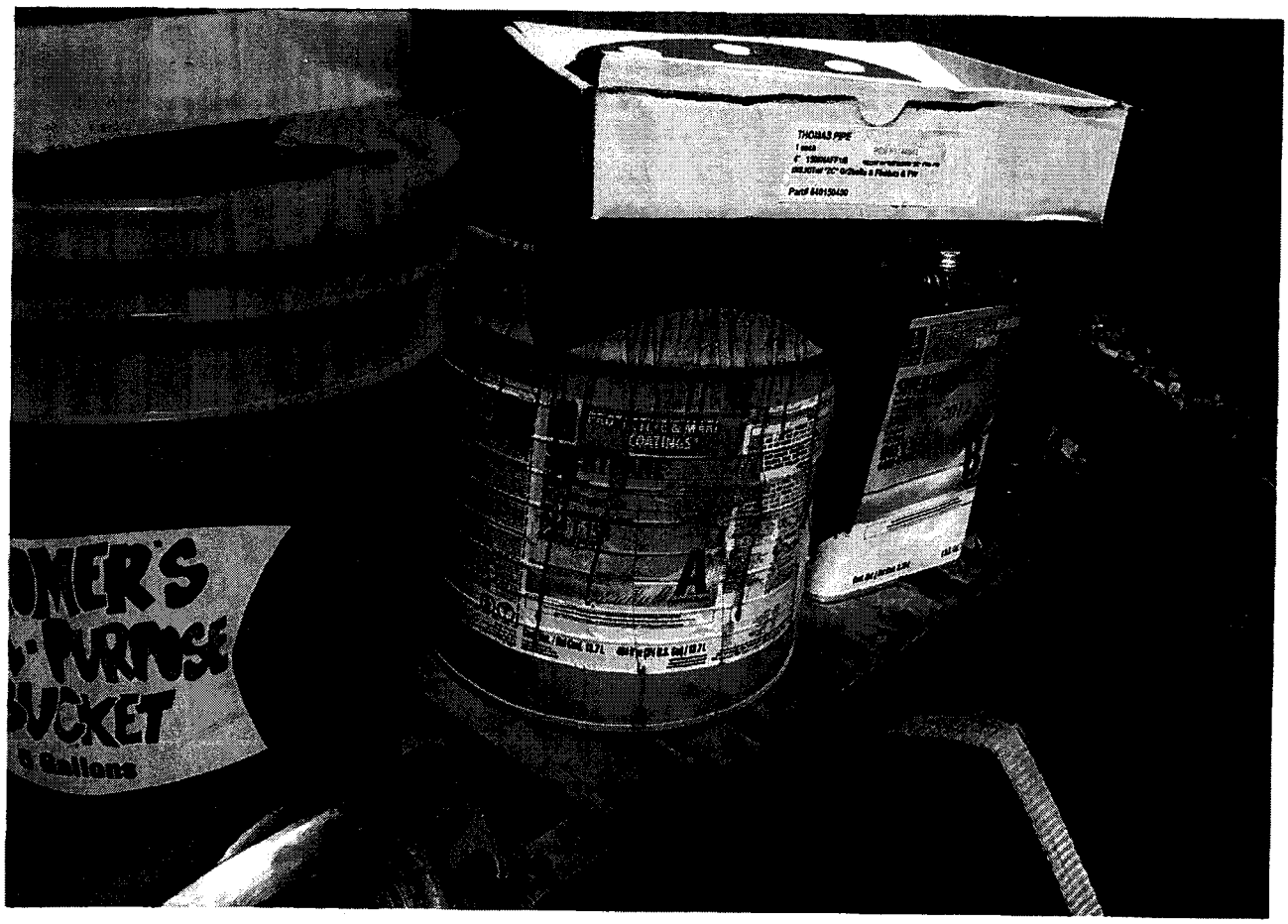
THOMAS PIPE
COATINGS
A
OMER'S
PURPOSE
UCKET
Gallons

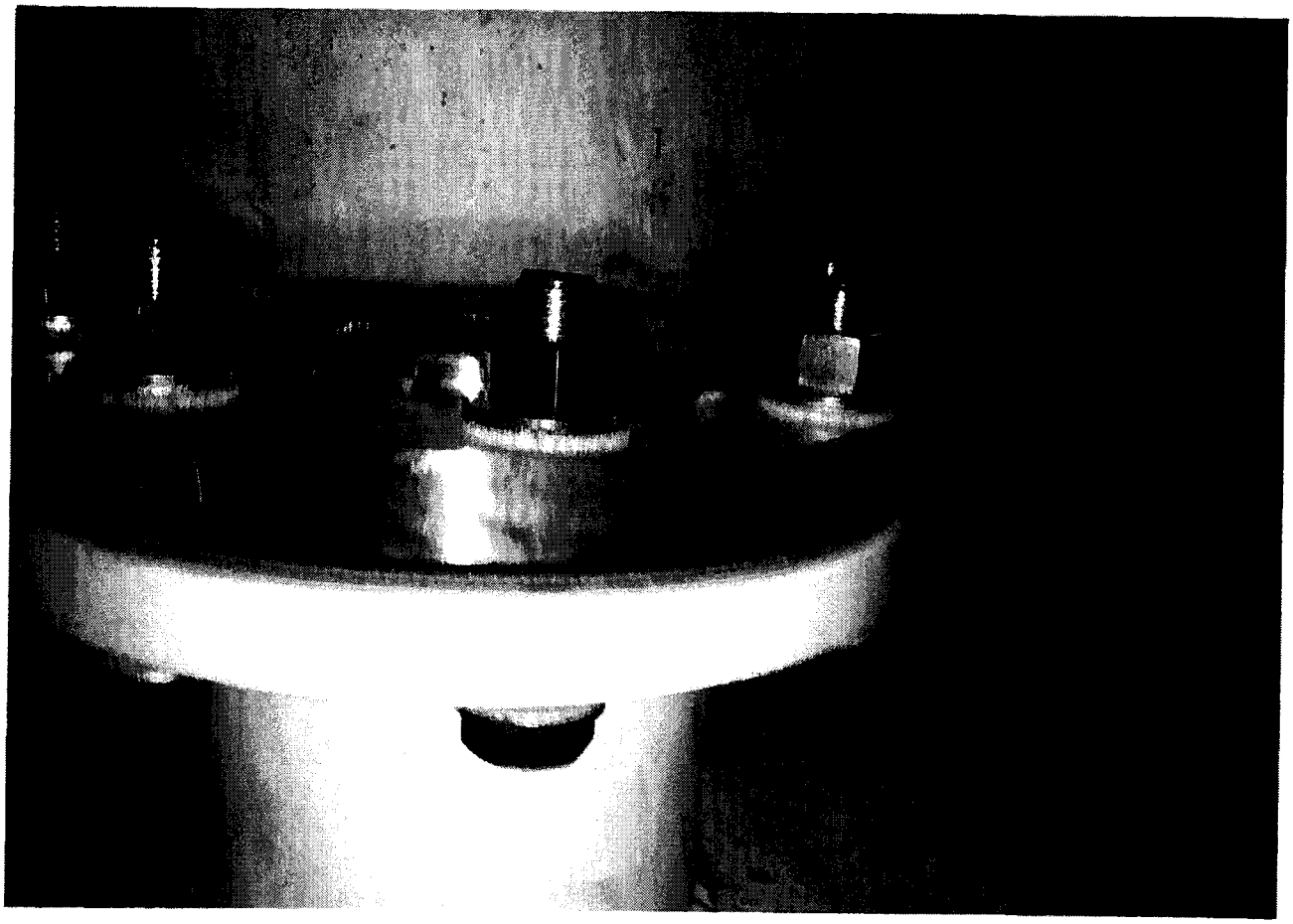

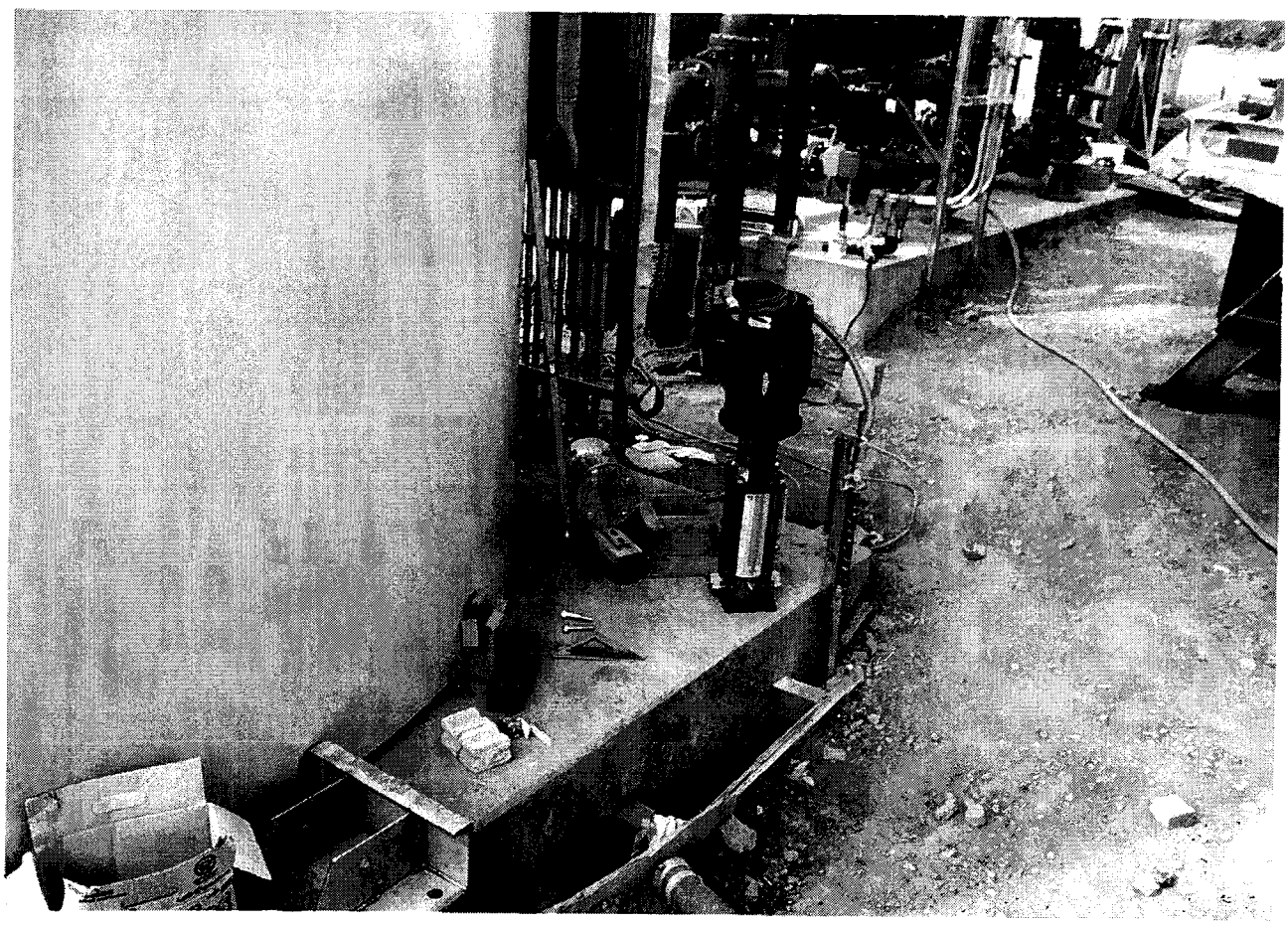

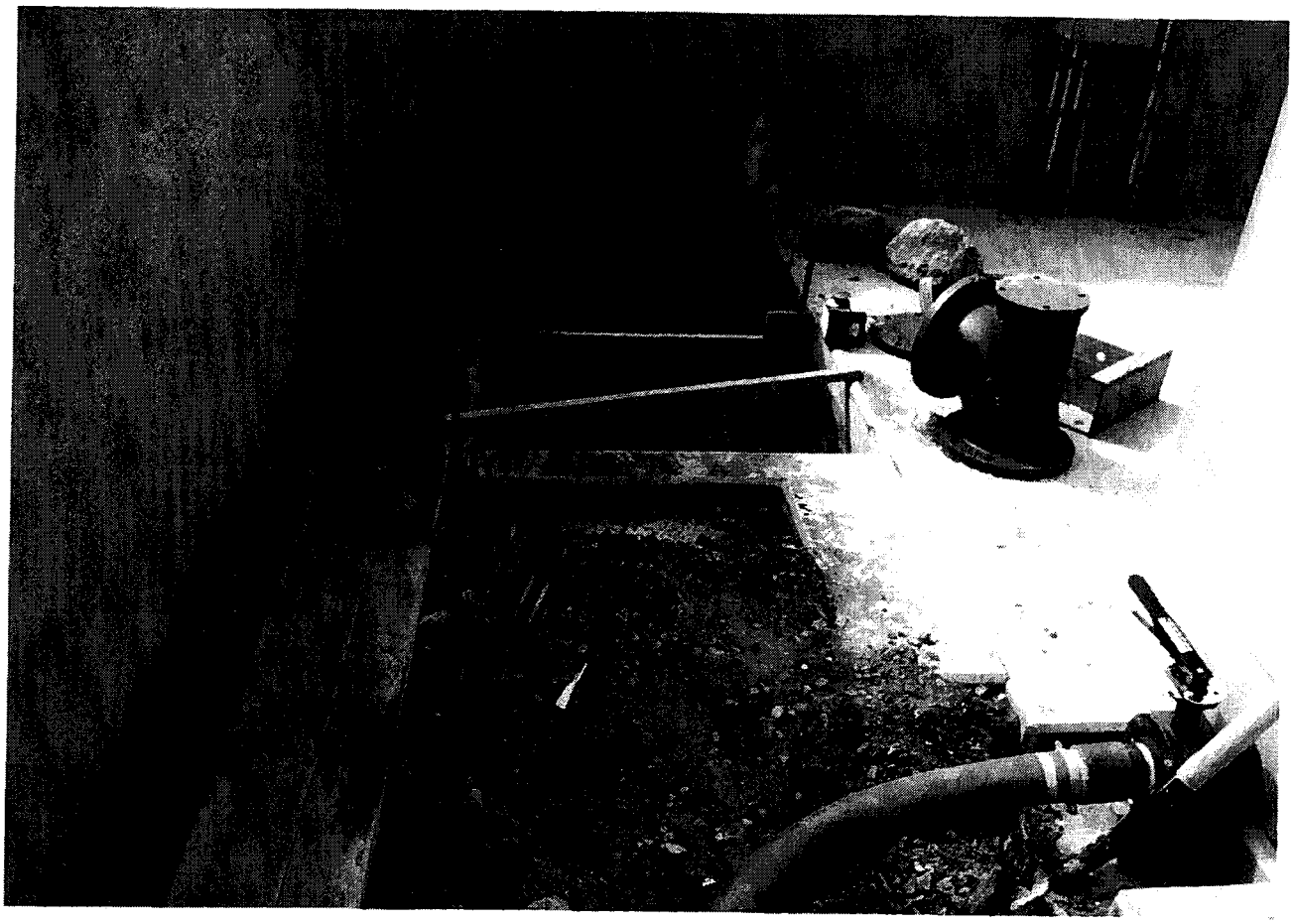

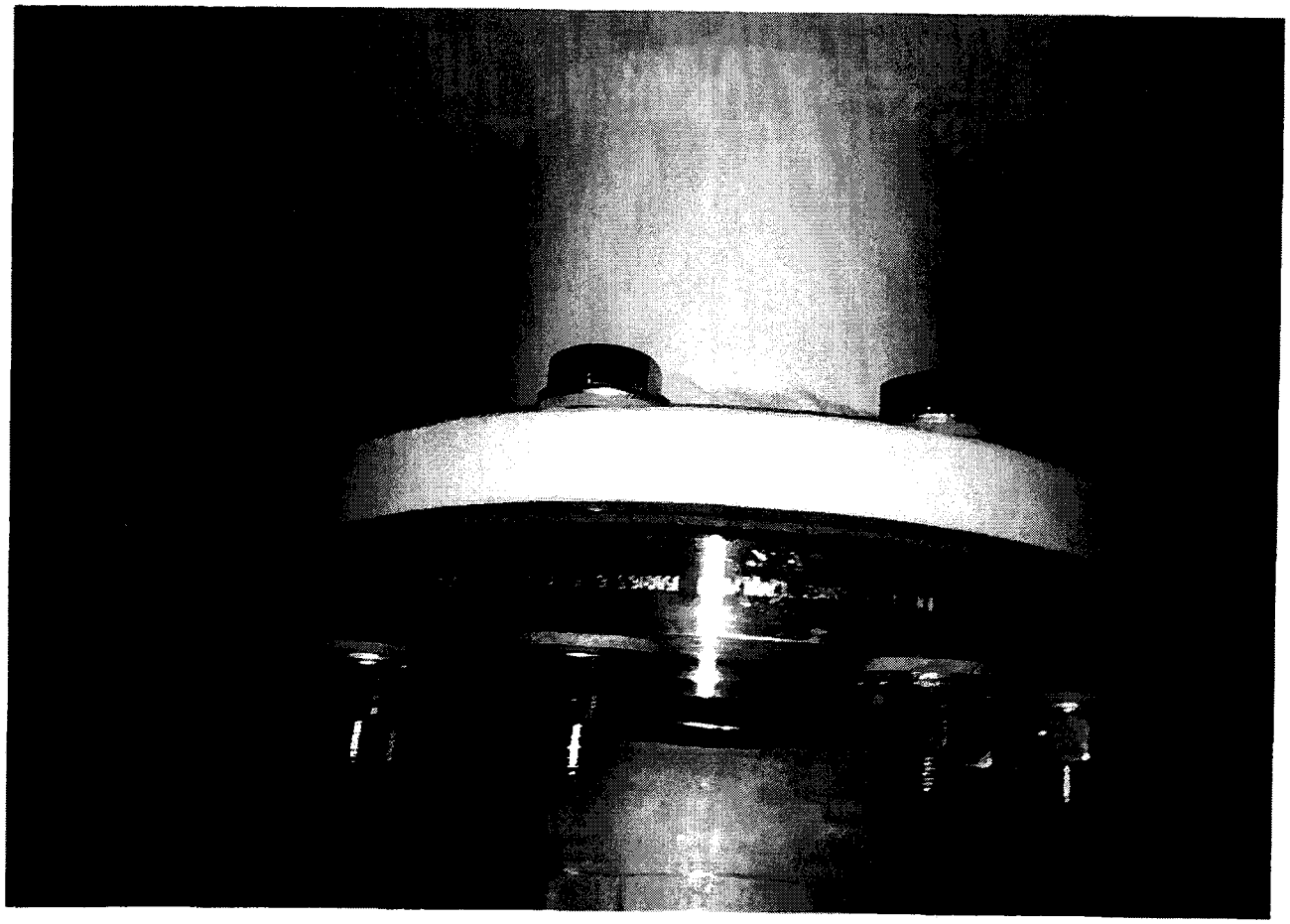

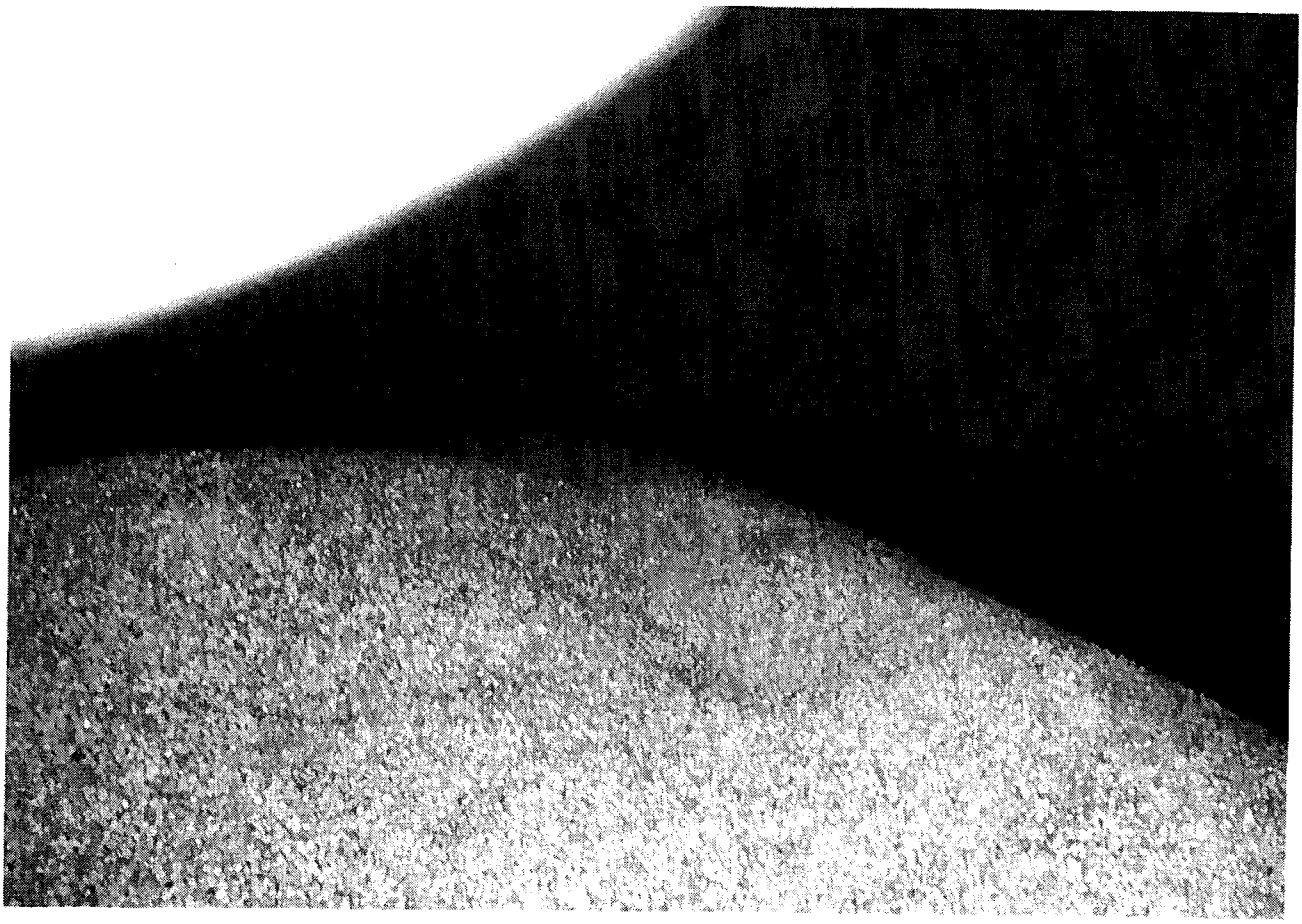

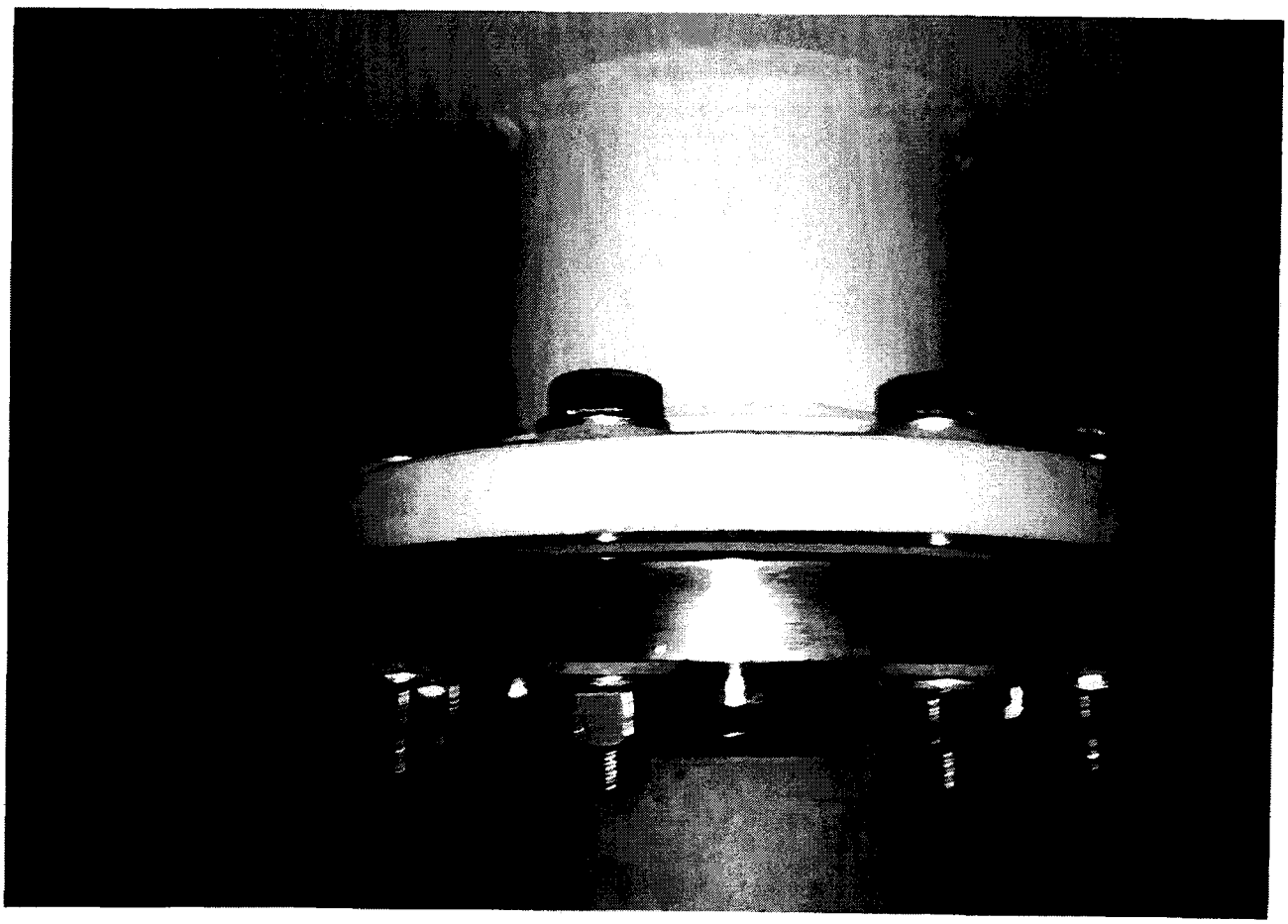

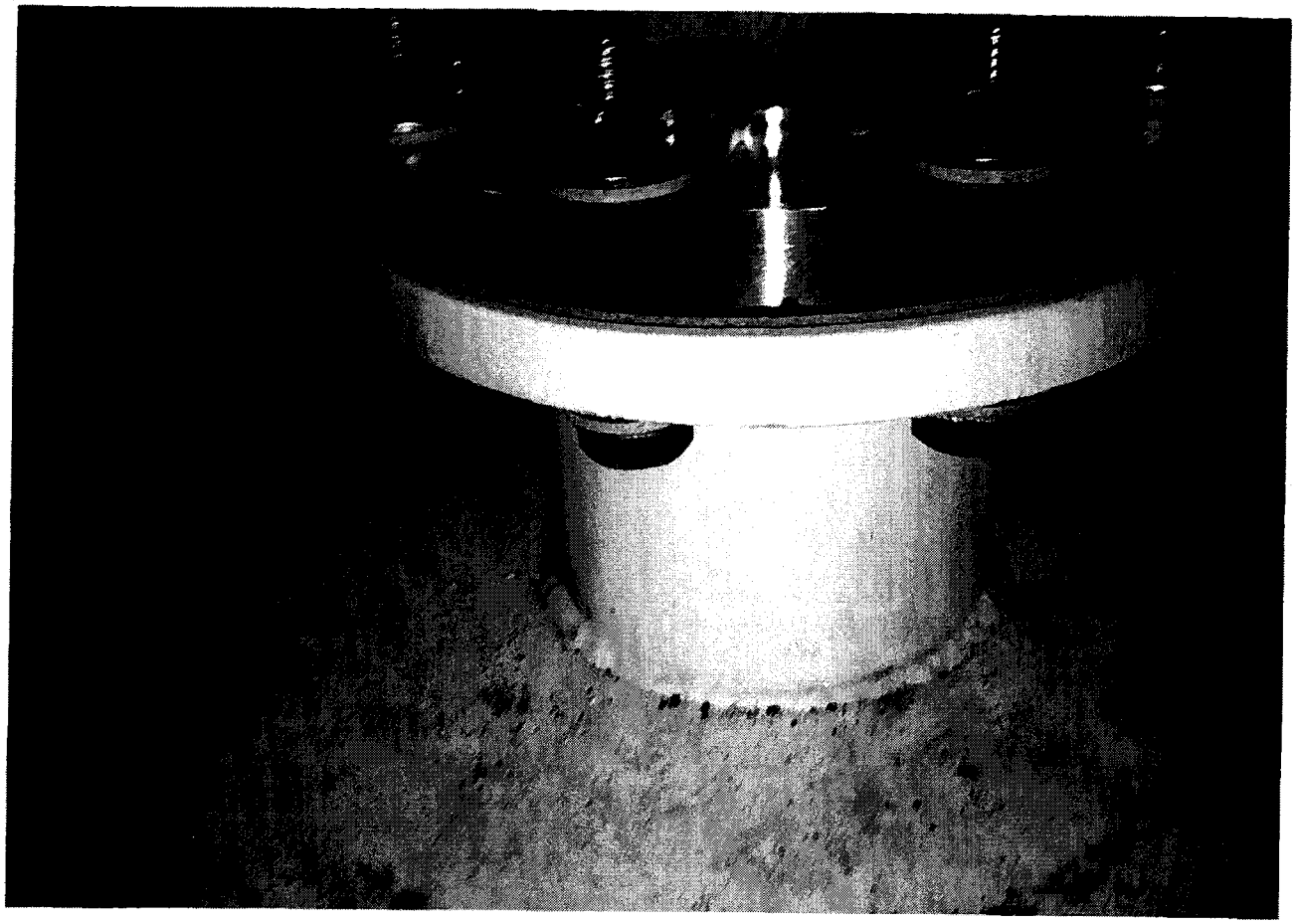

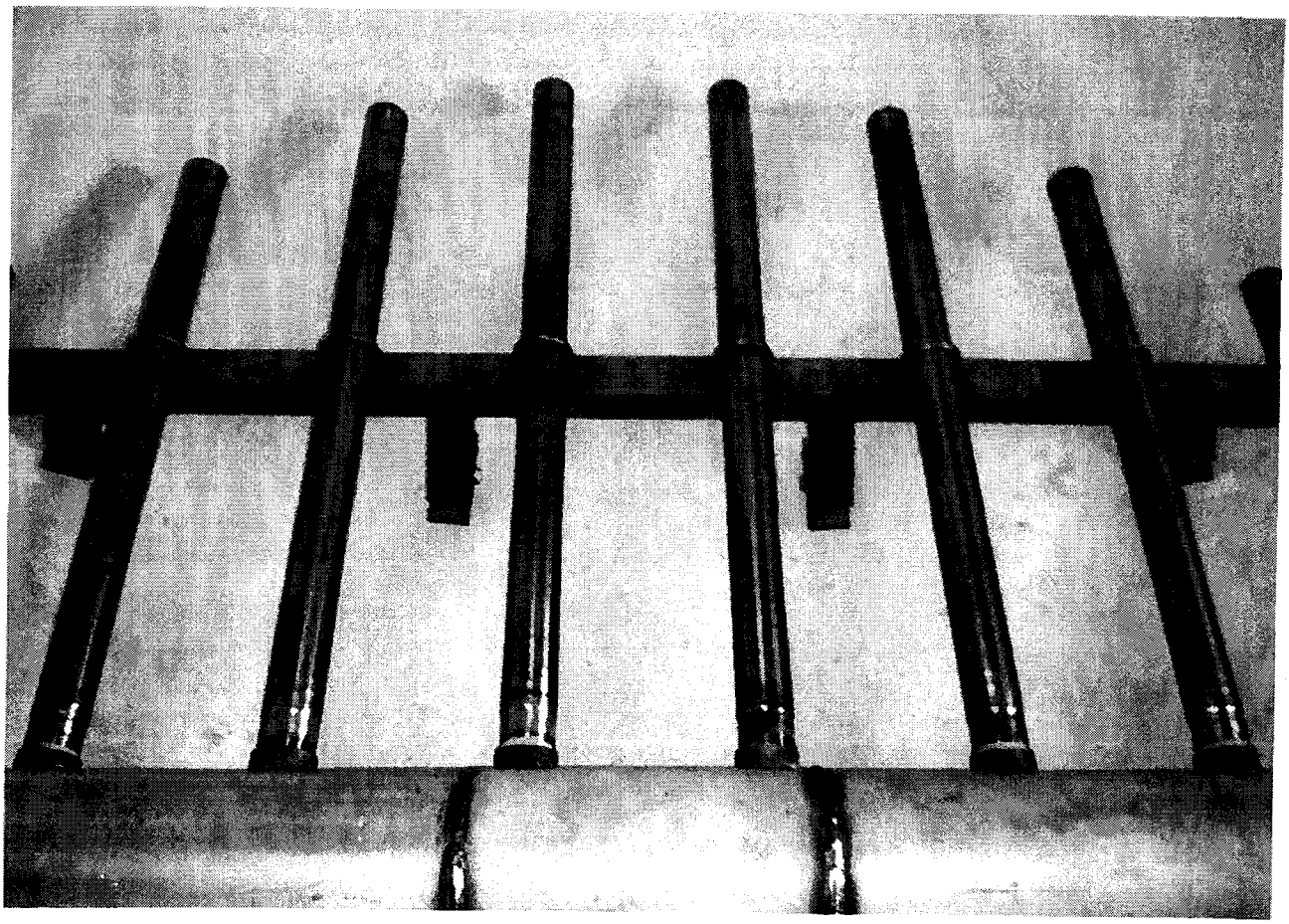

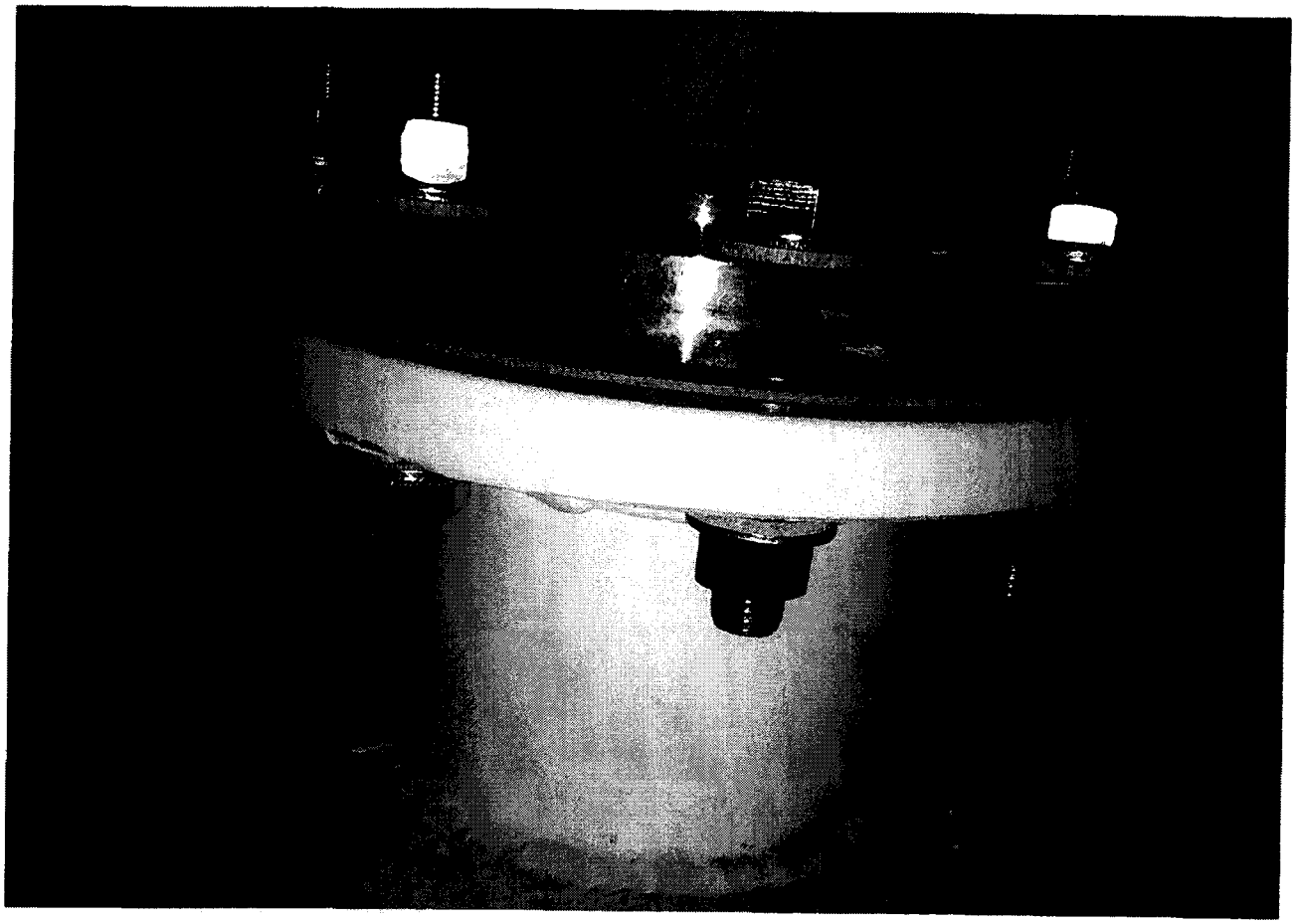

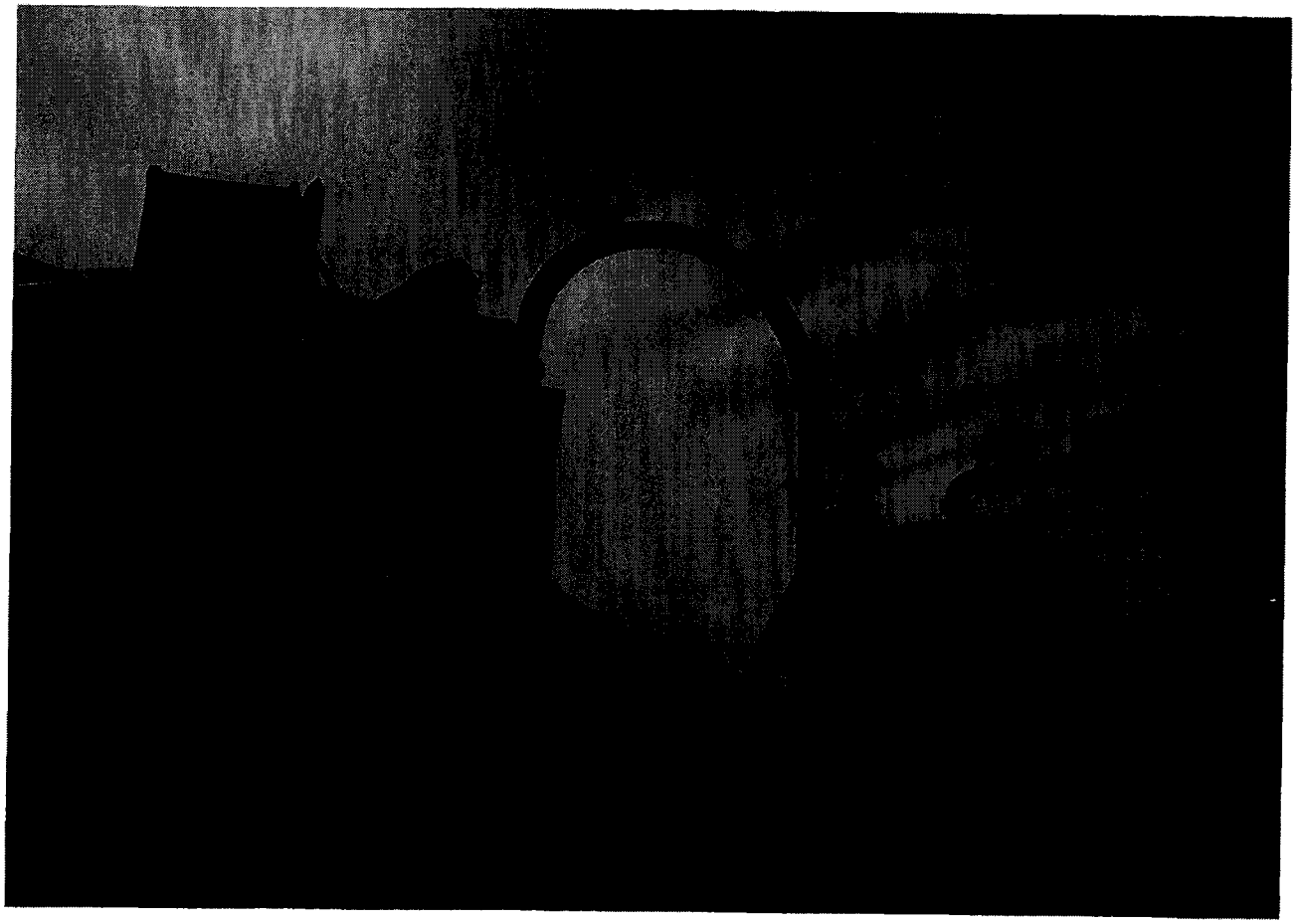

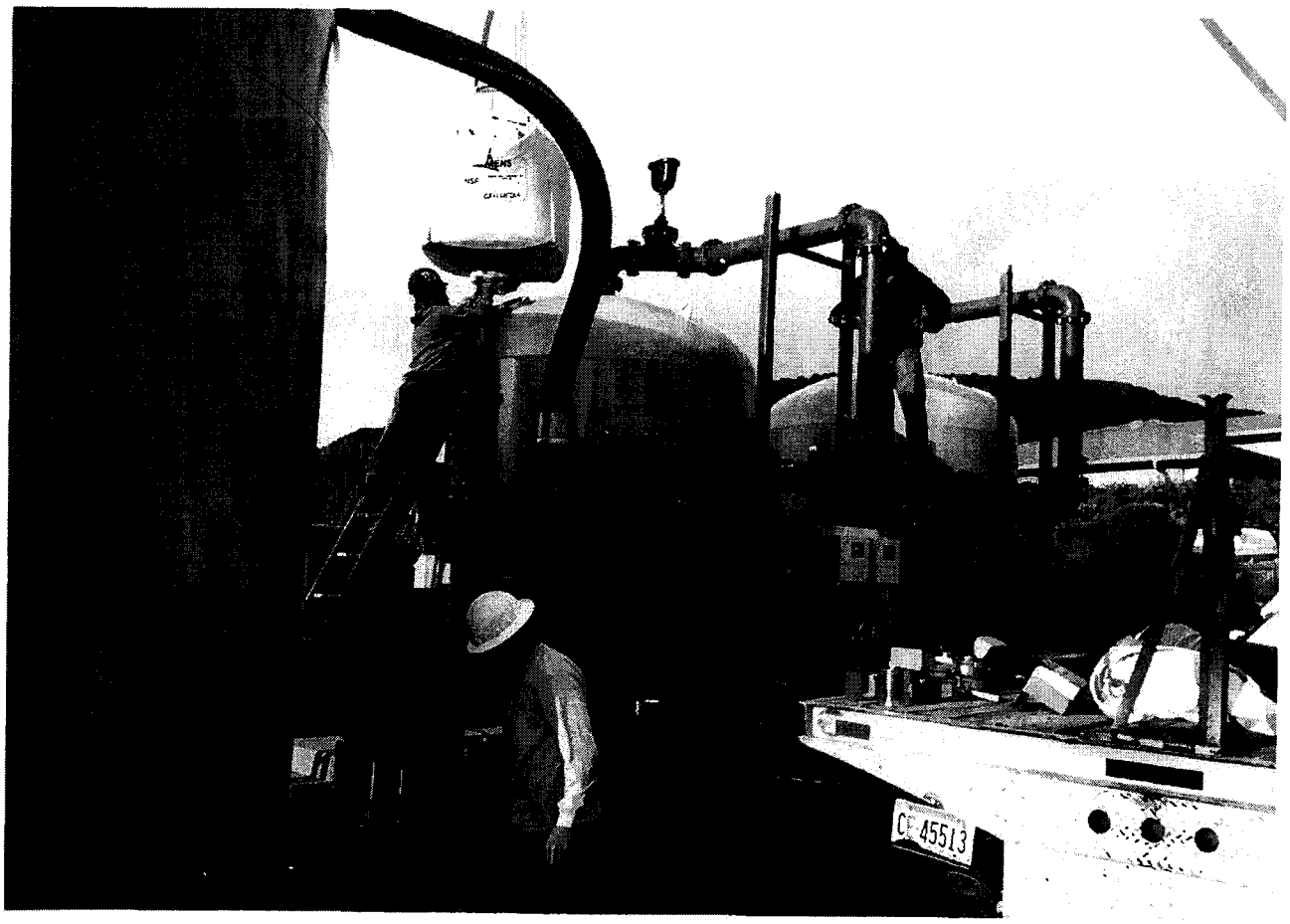
CF 45513

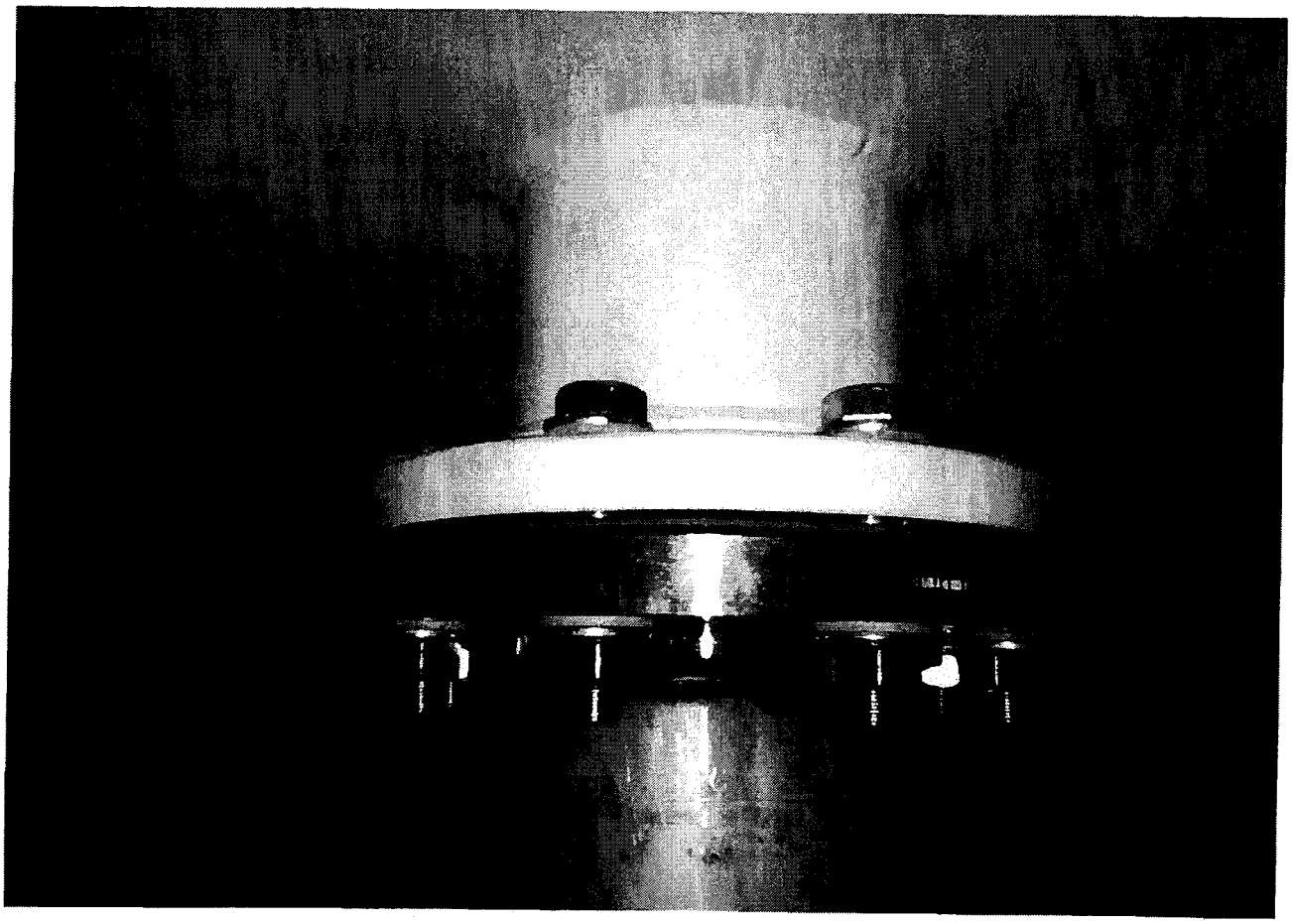

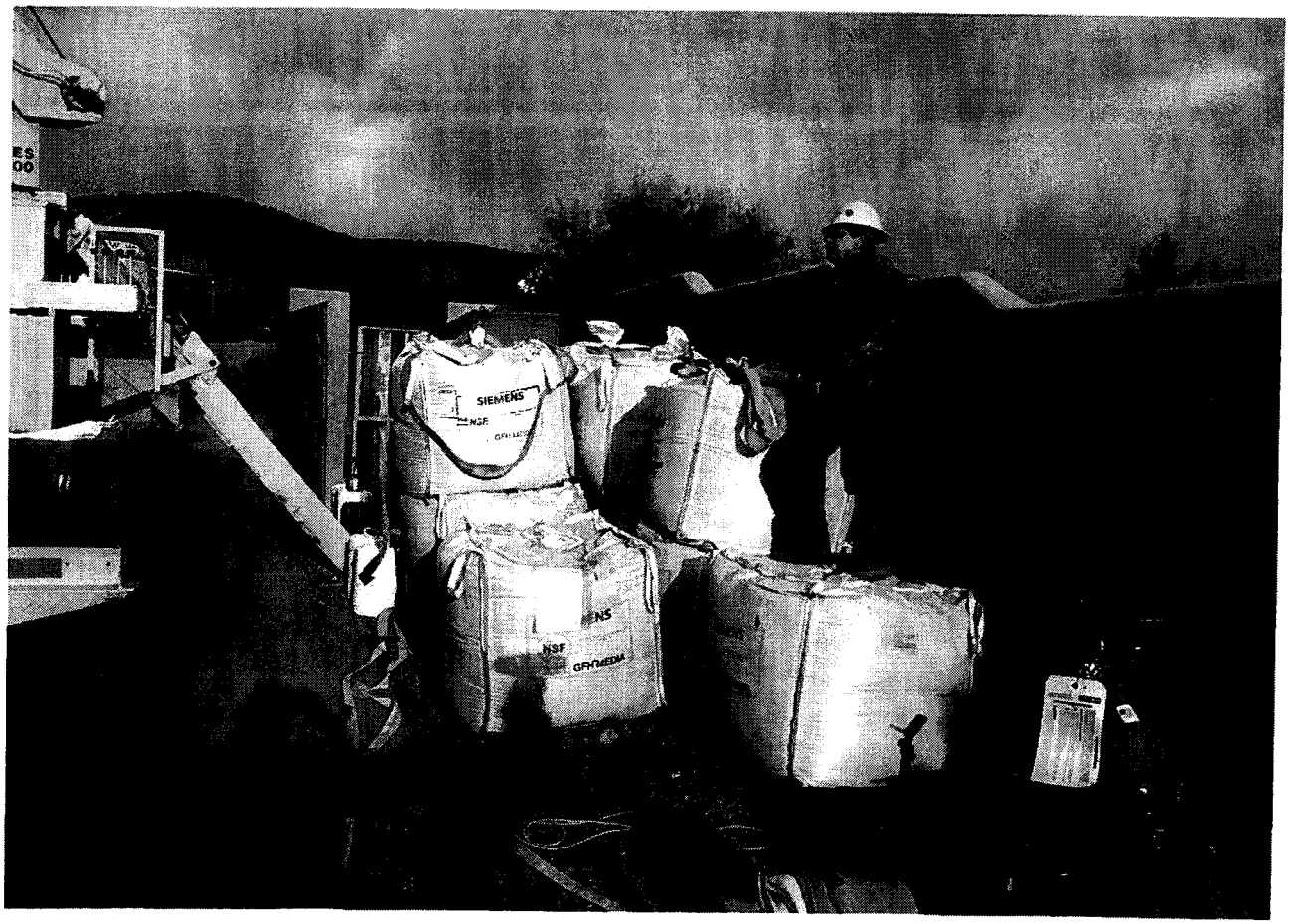
SIEMENS
NSF

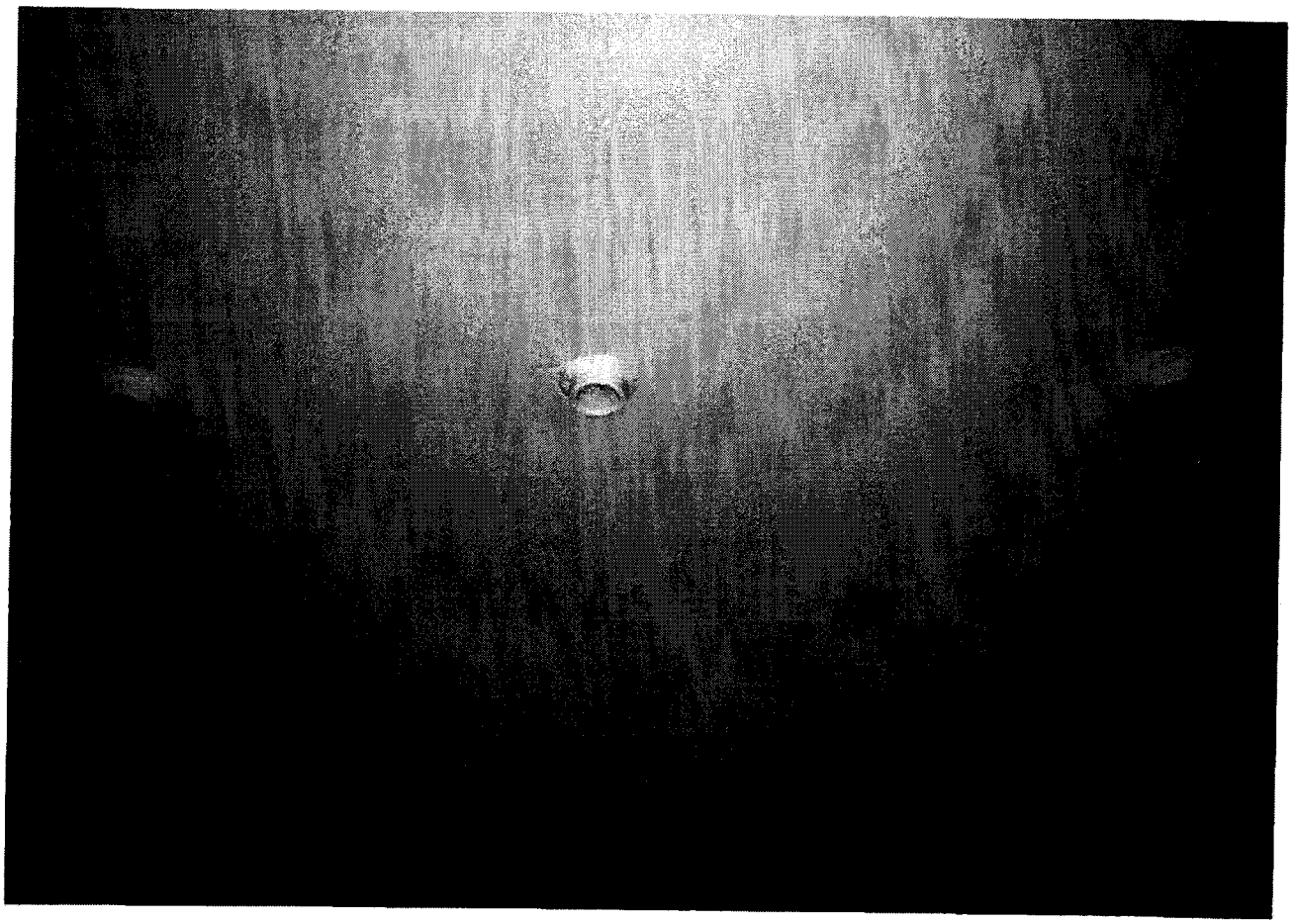

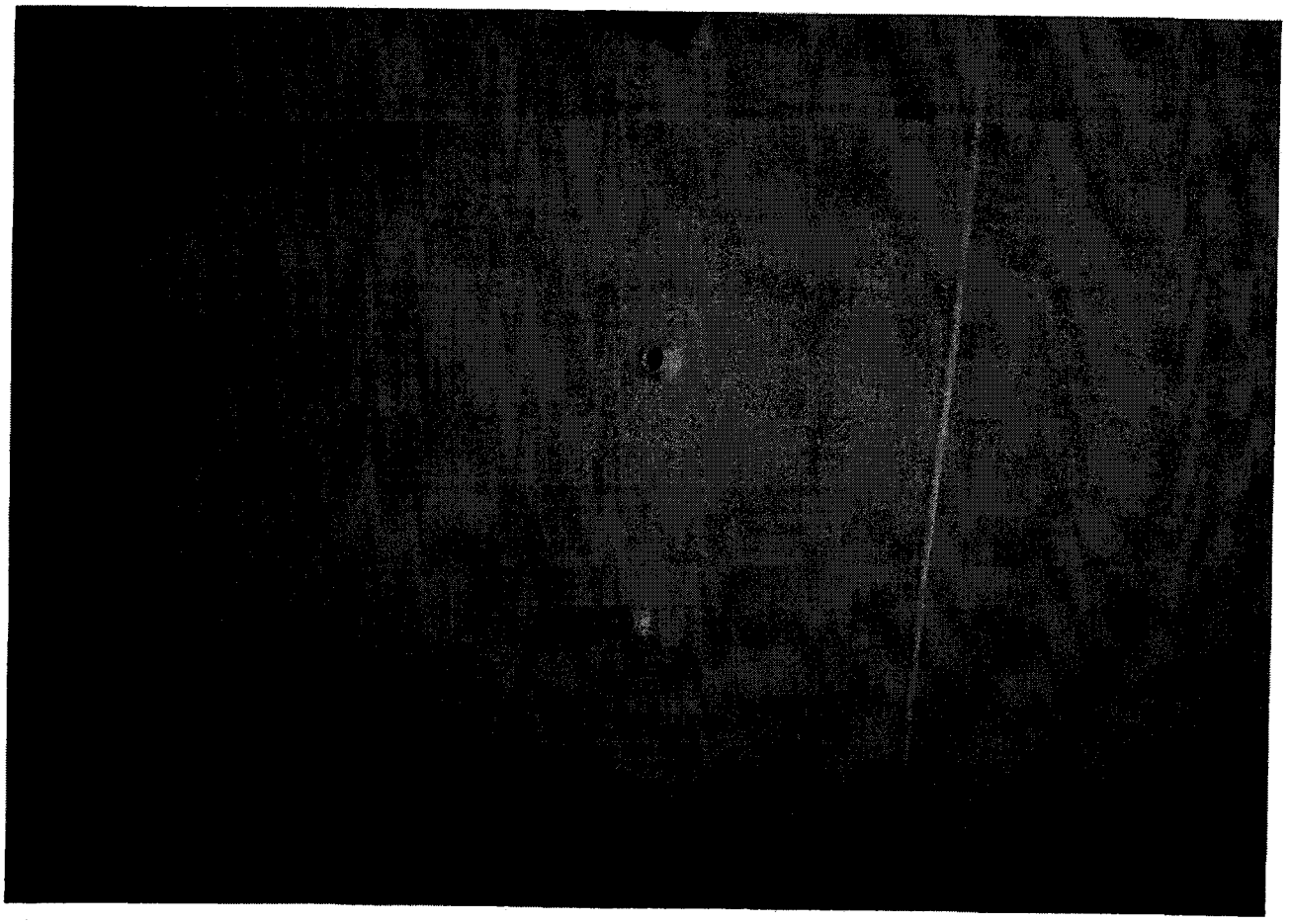

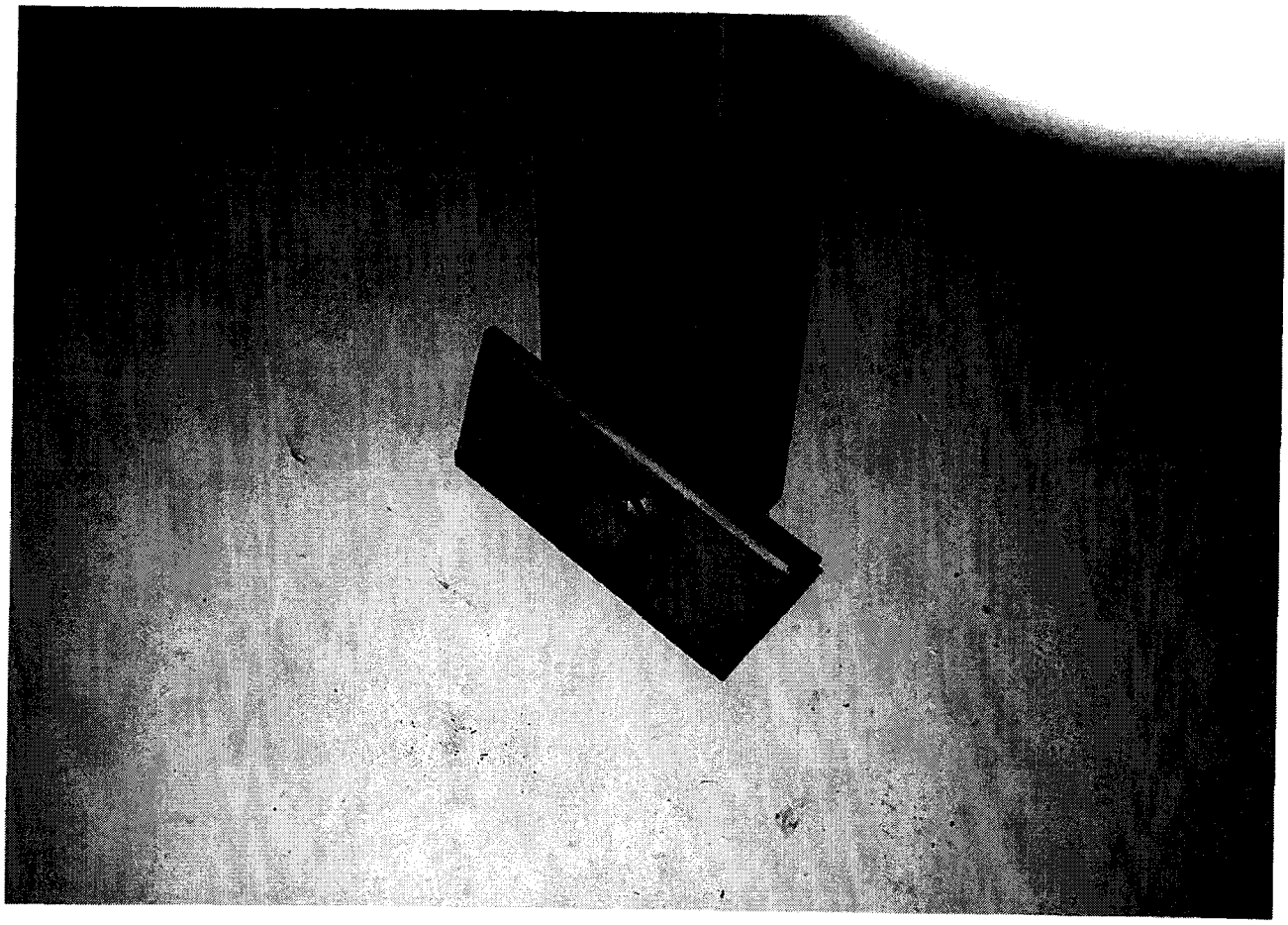

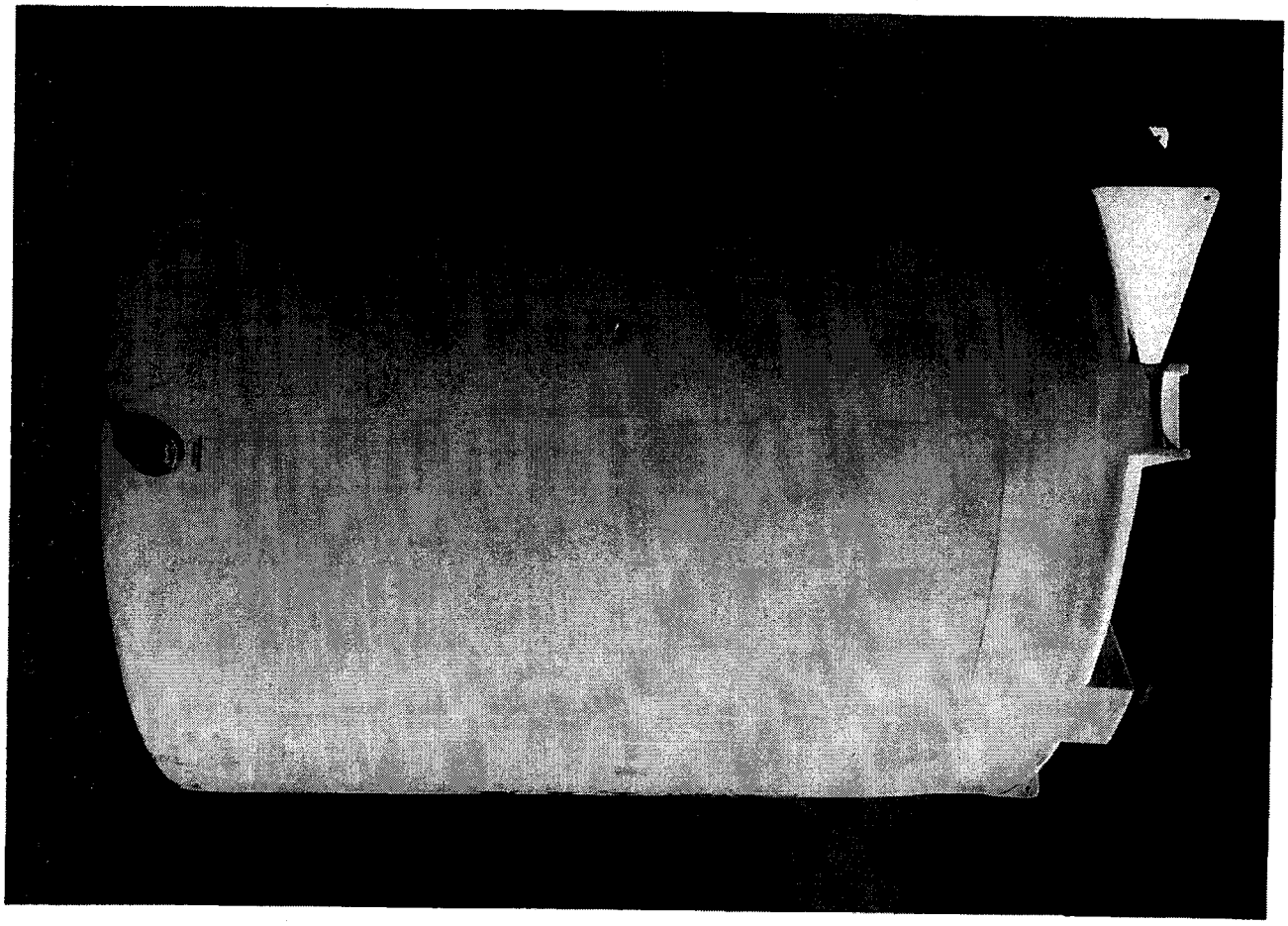

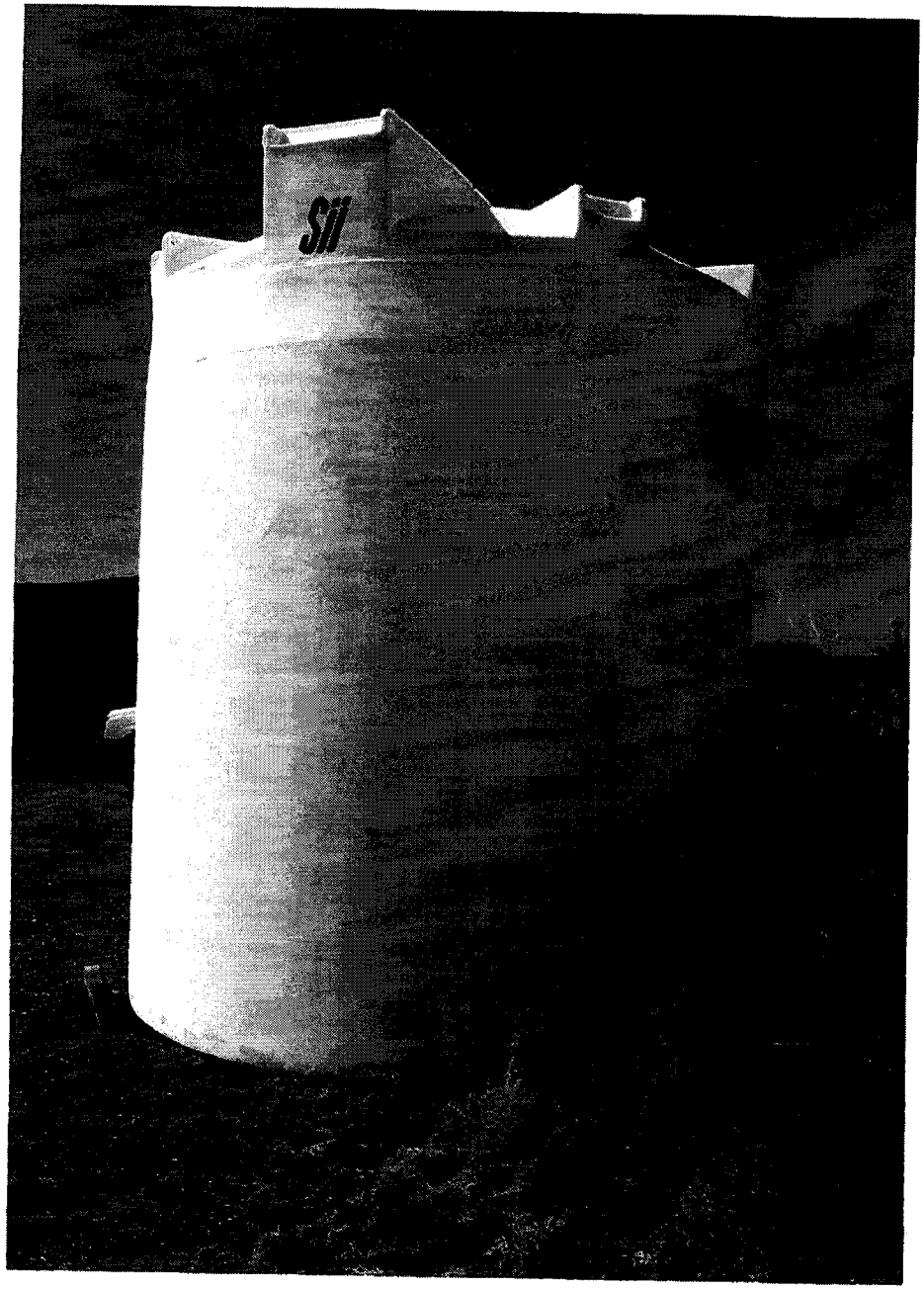
S11

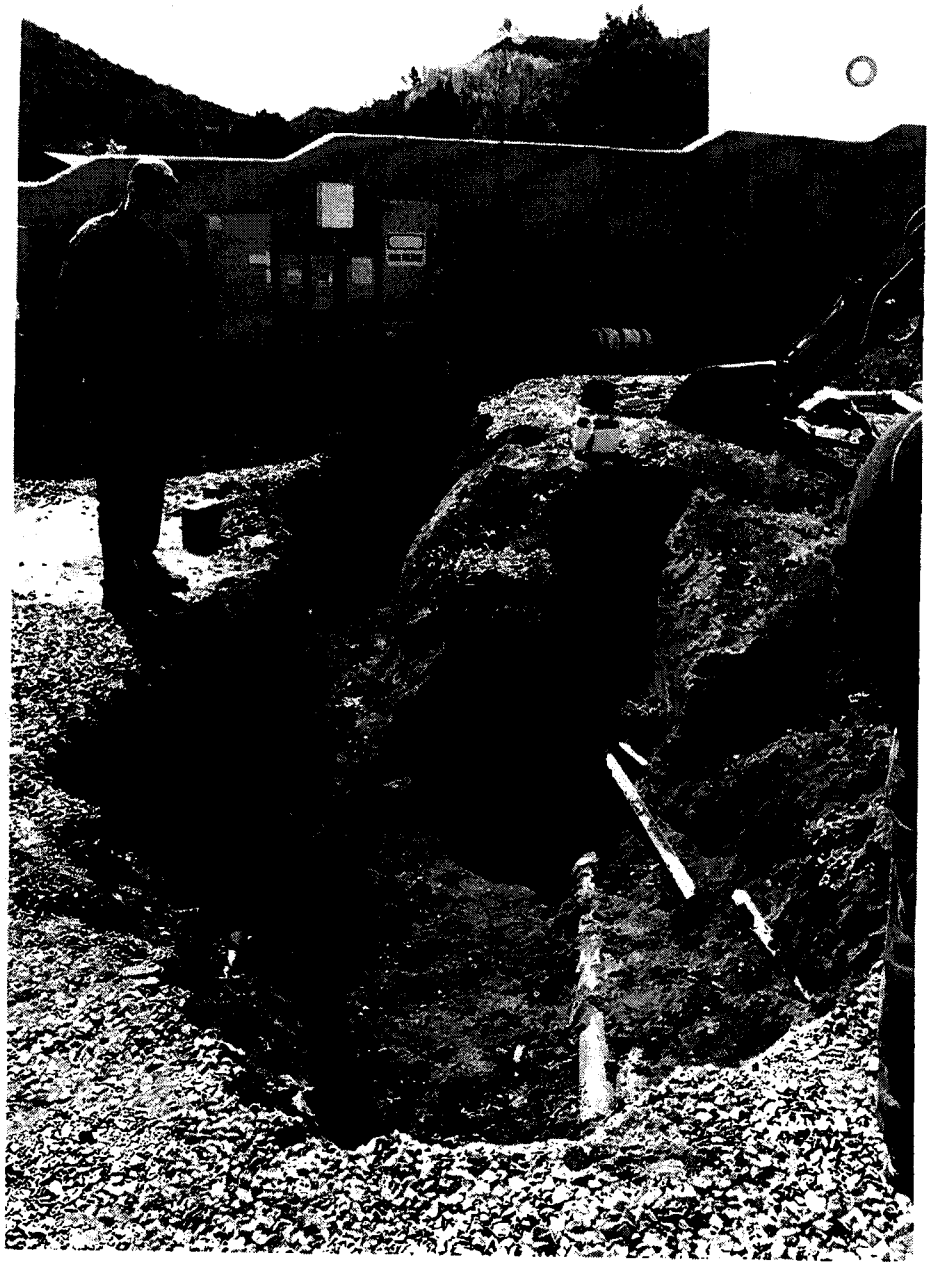

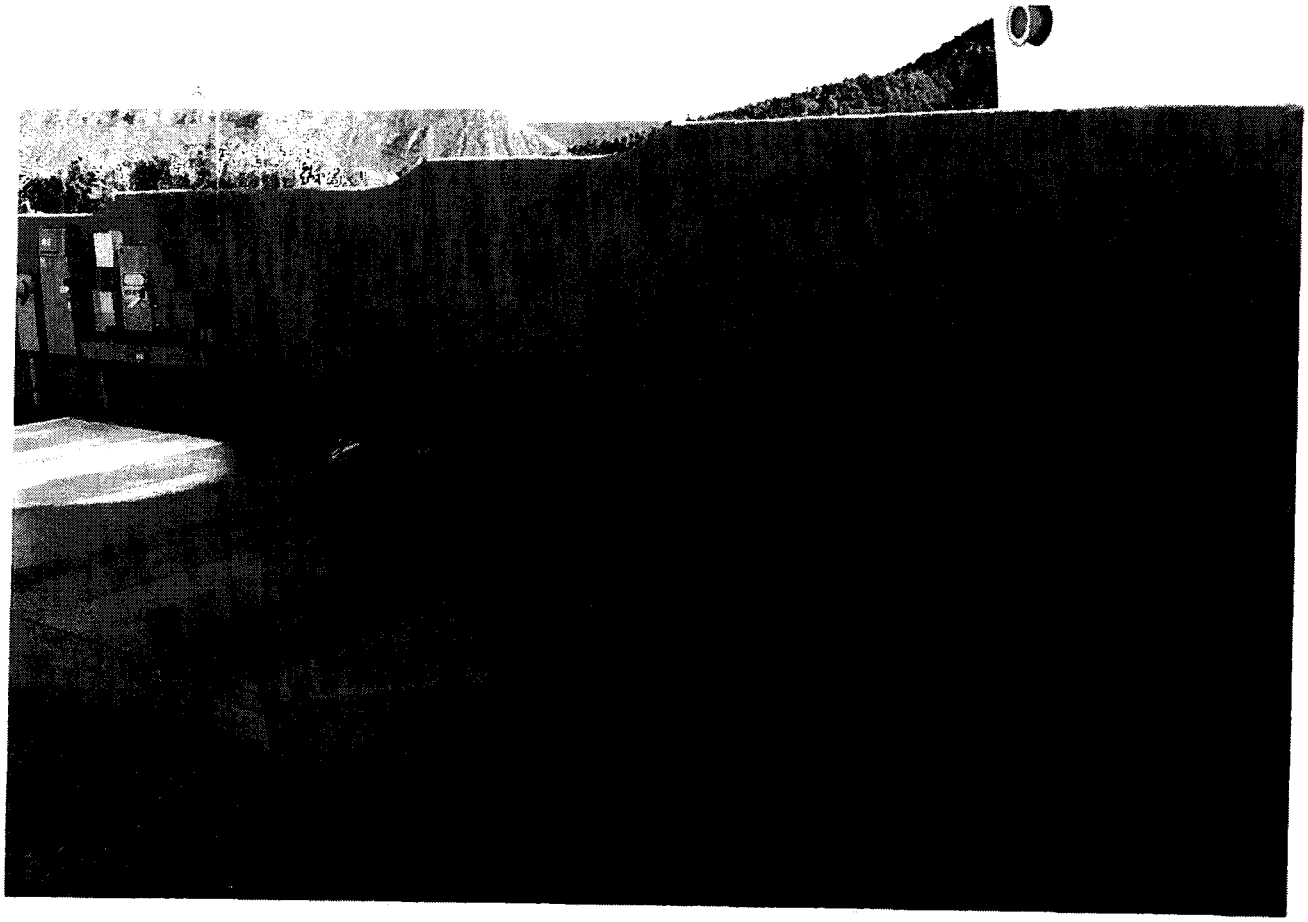

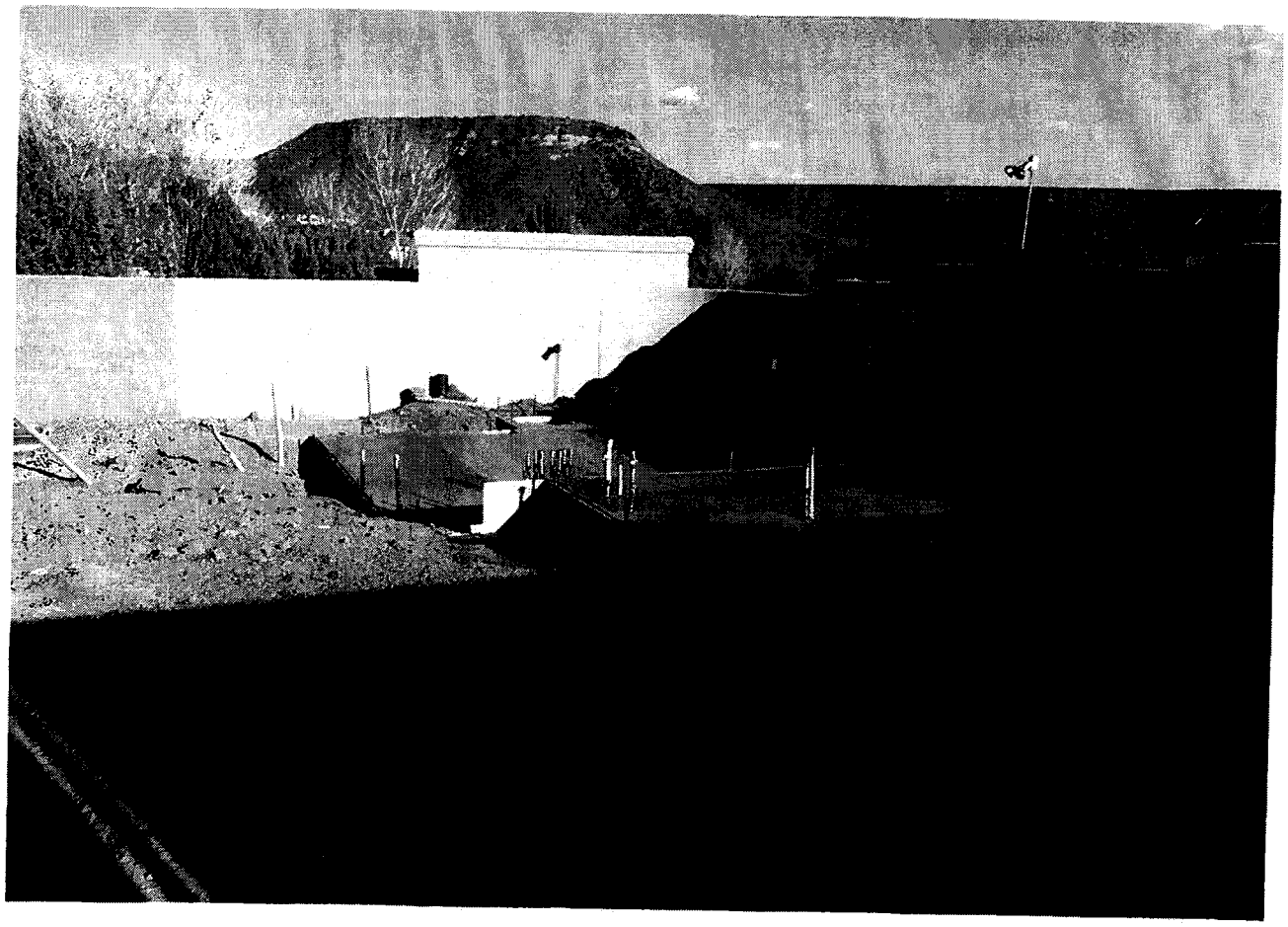

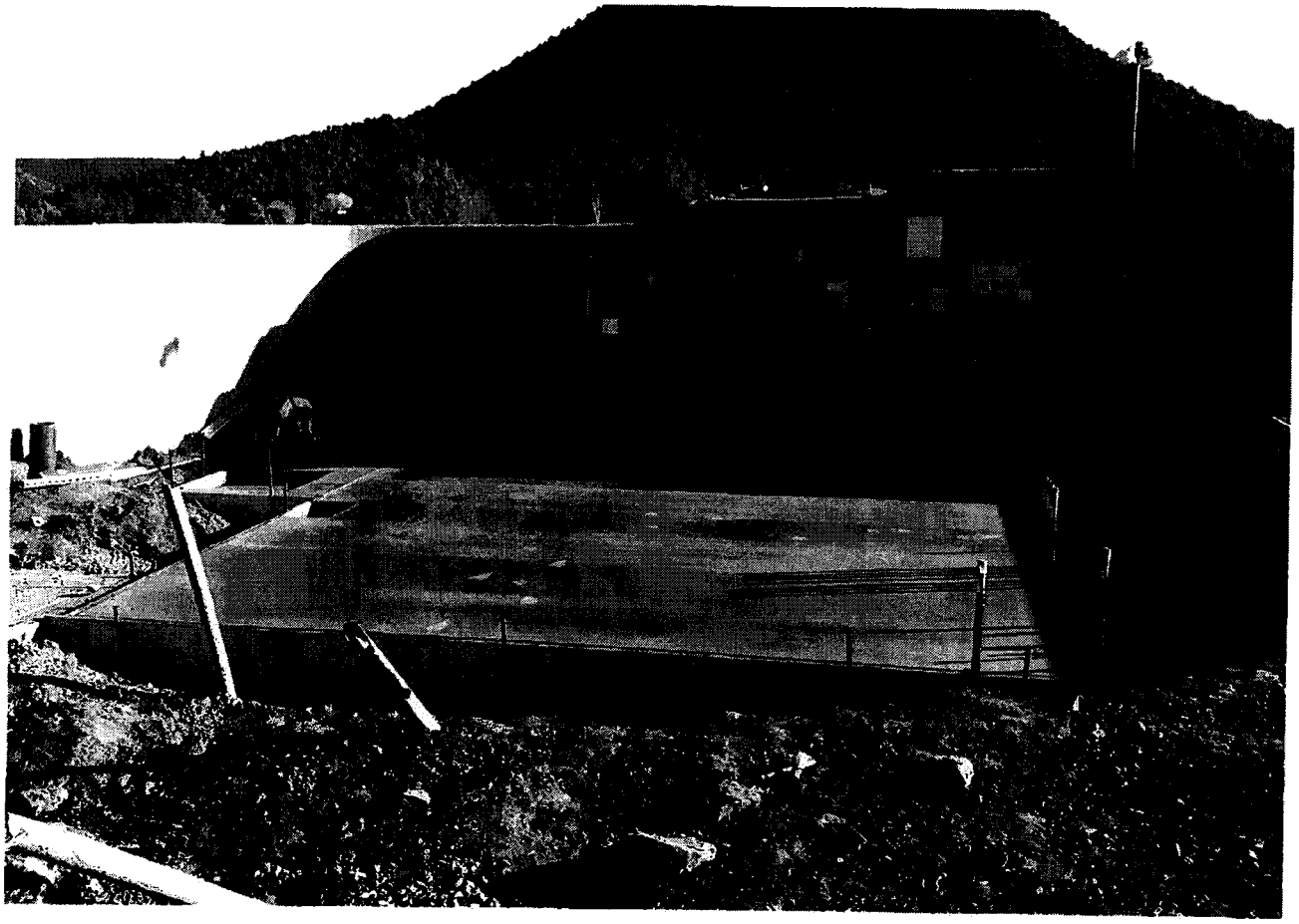

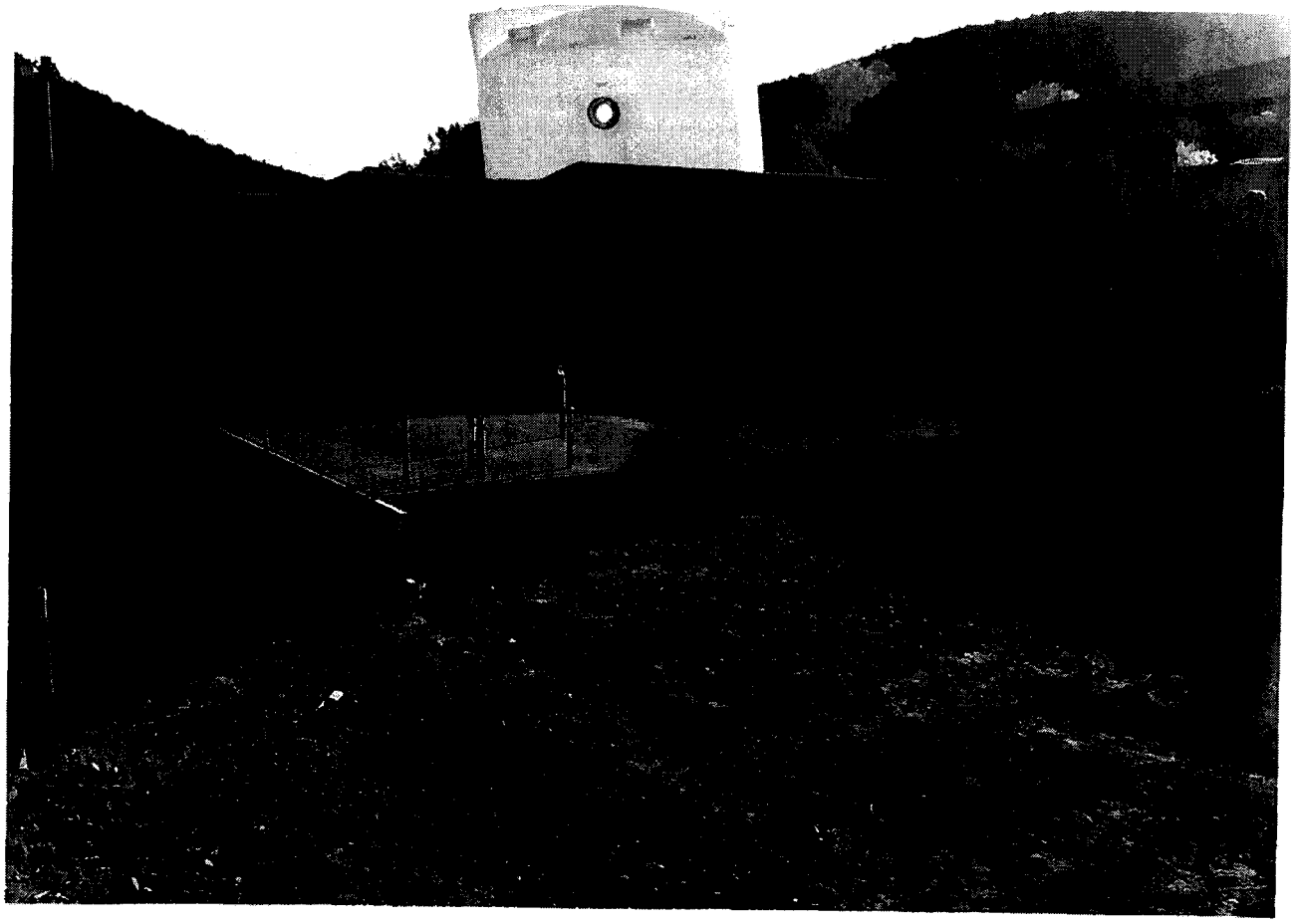

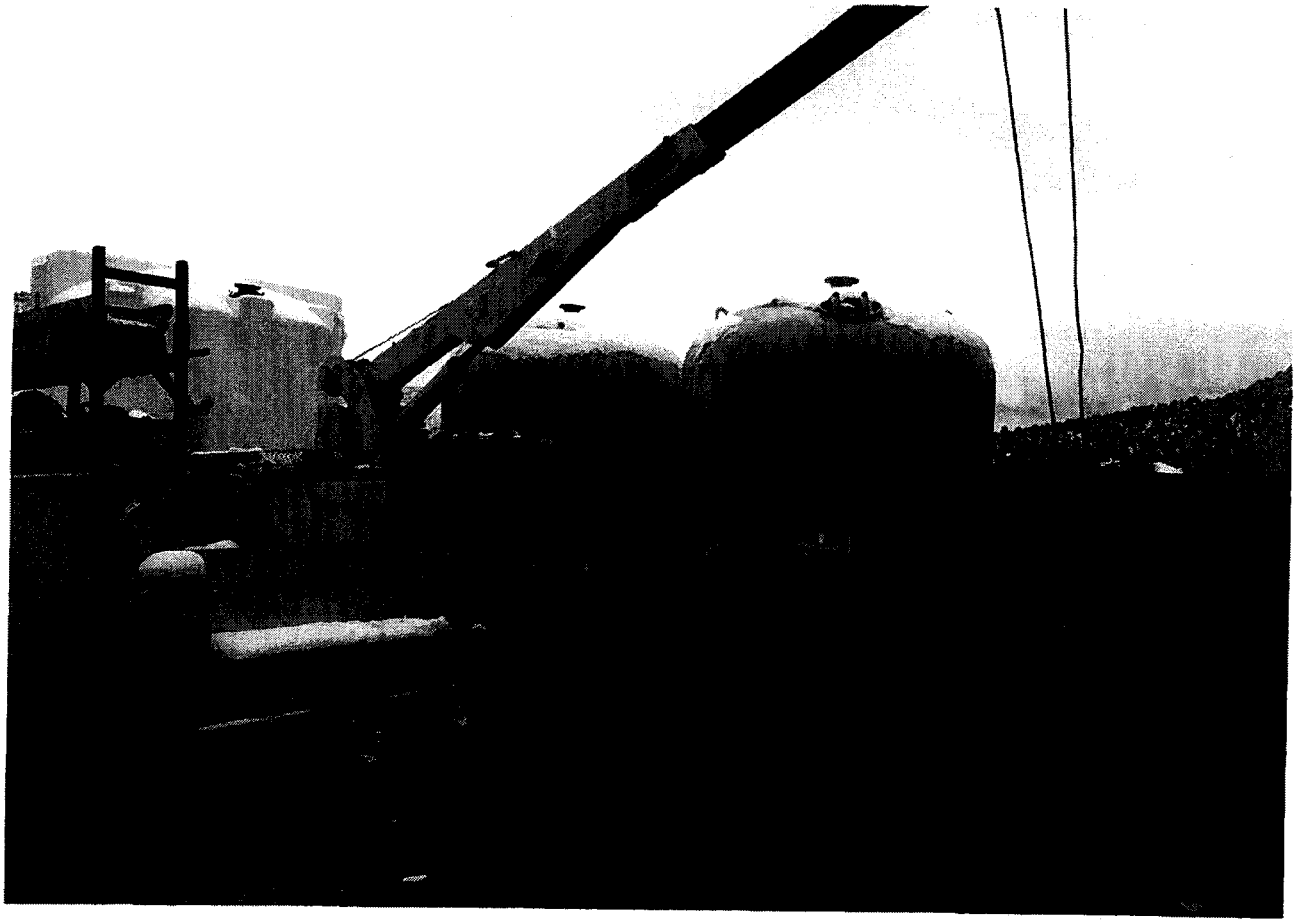

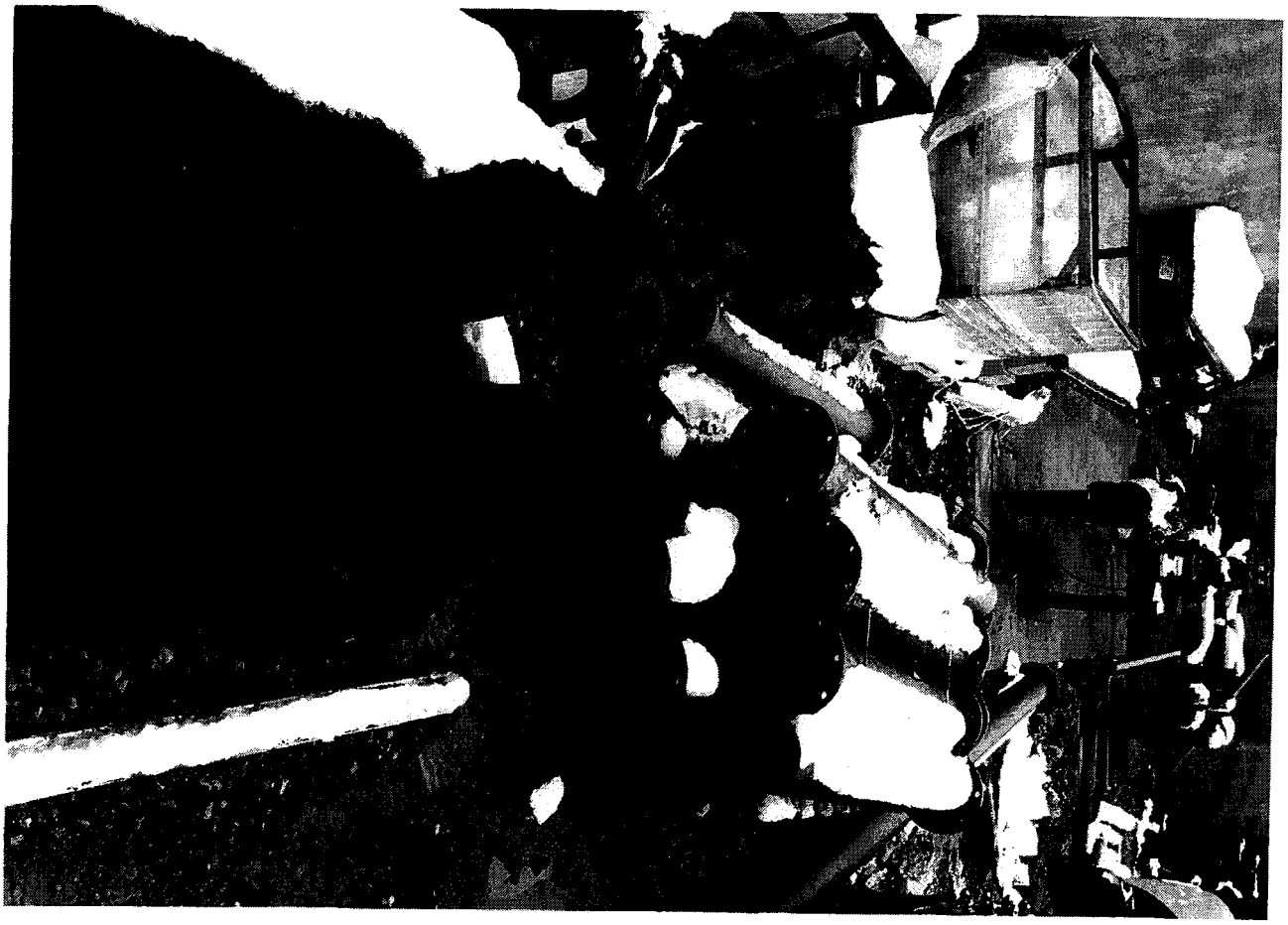

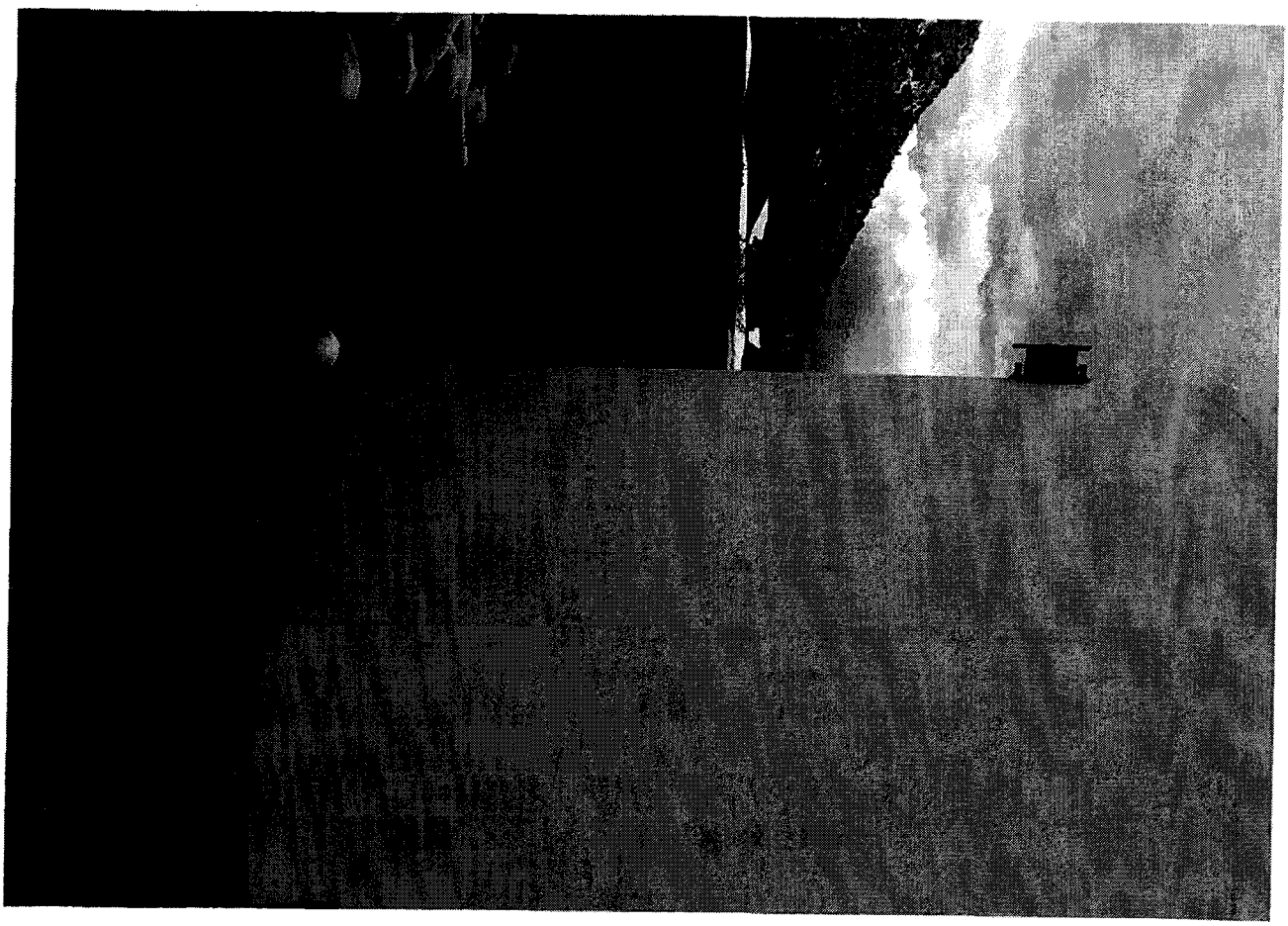

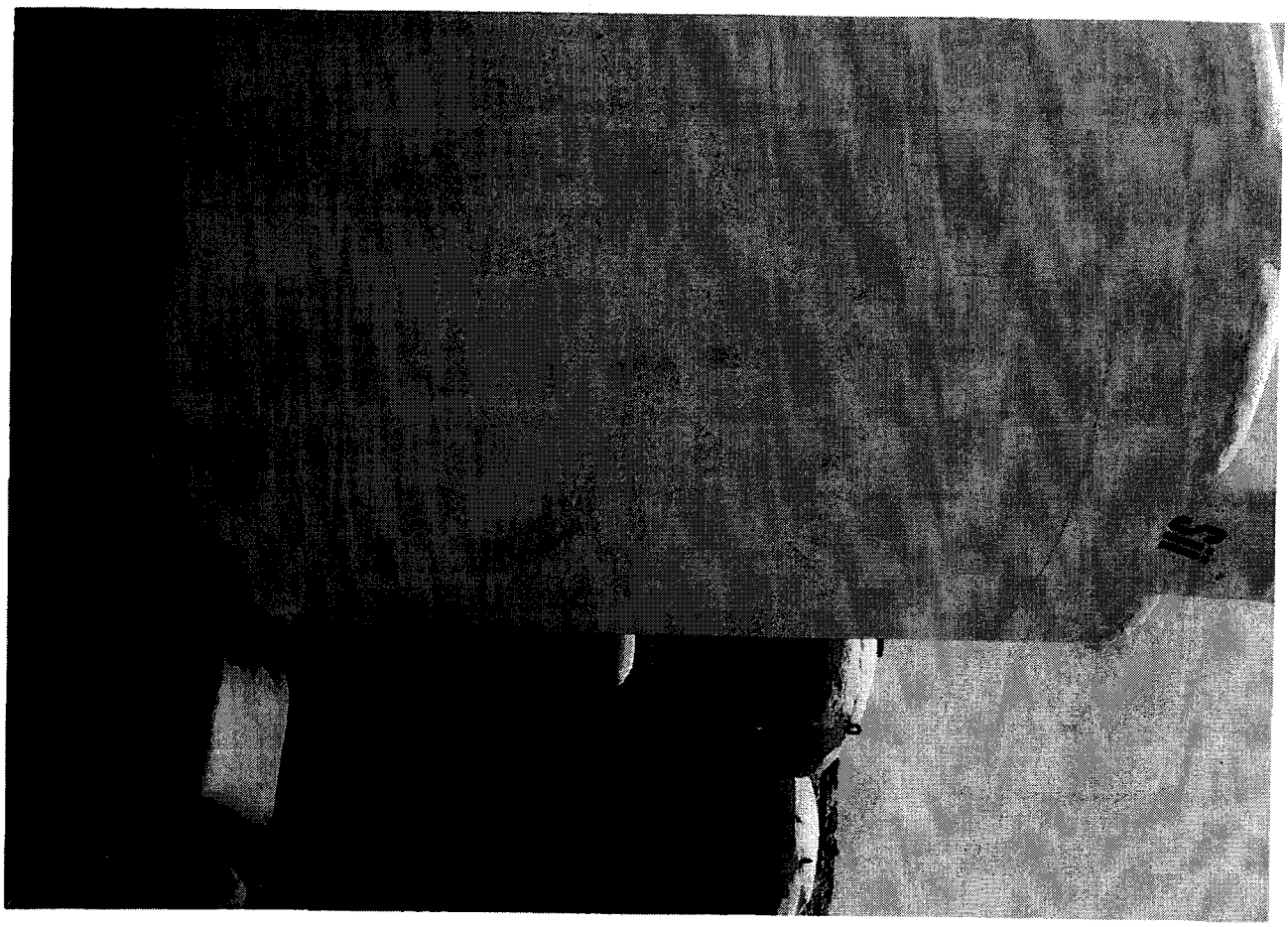

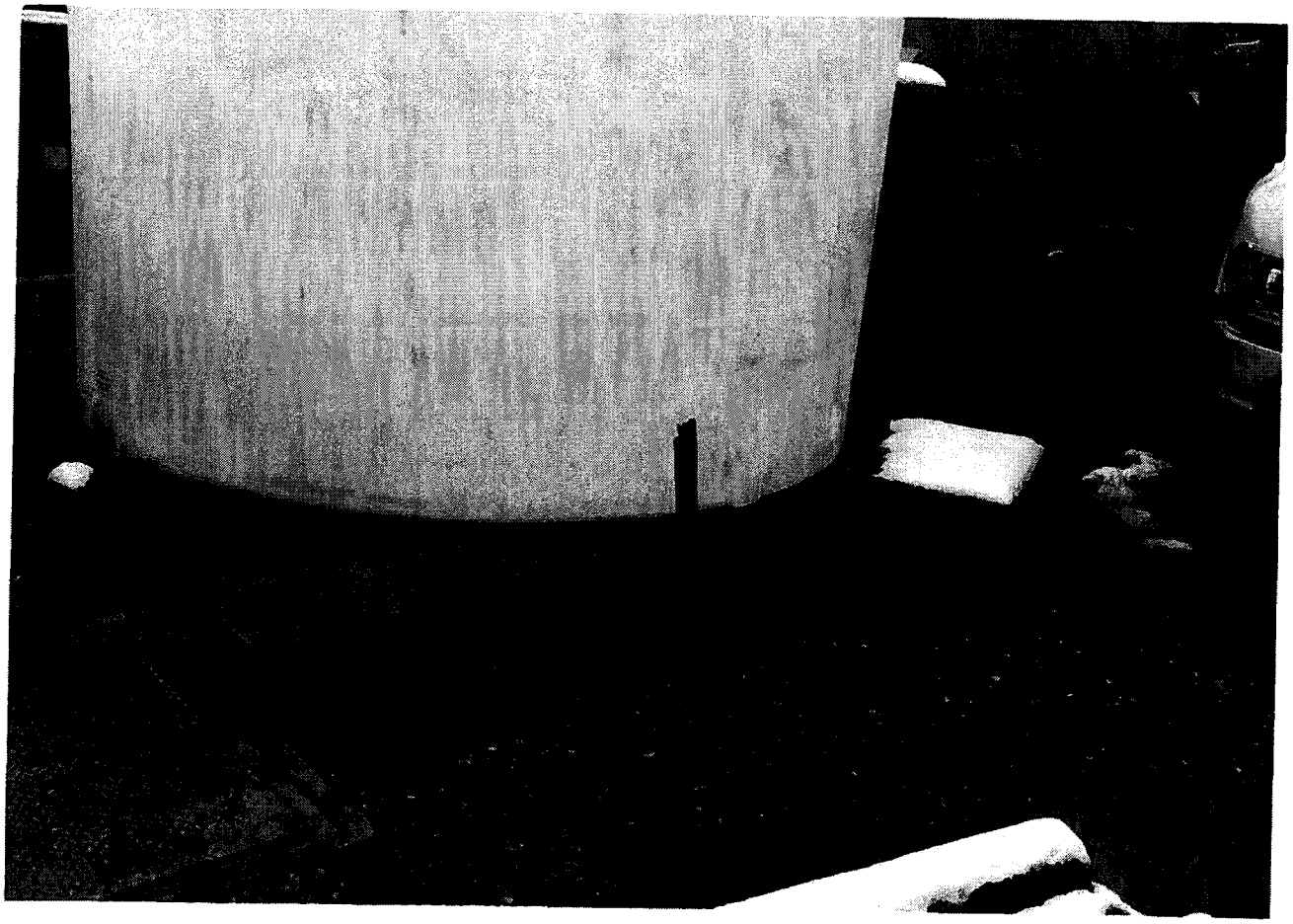

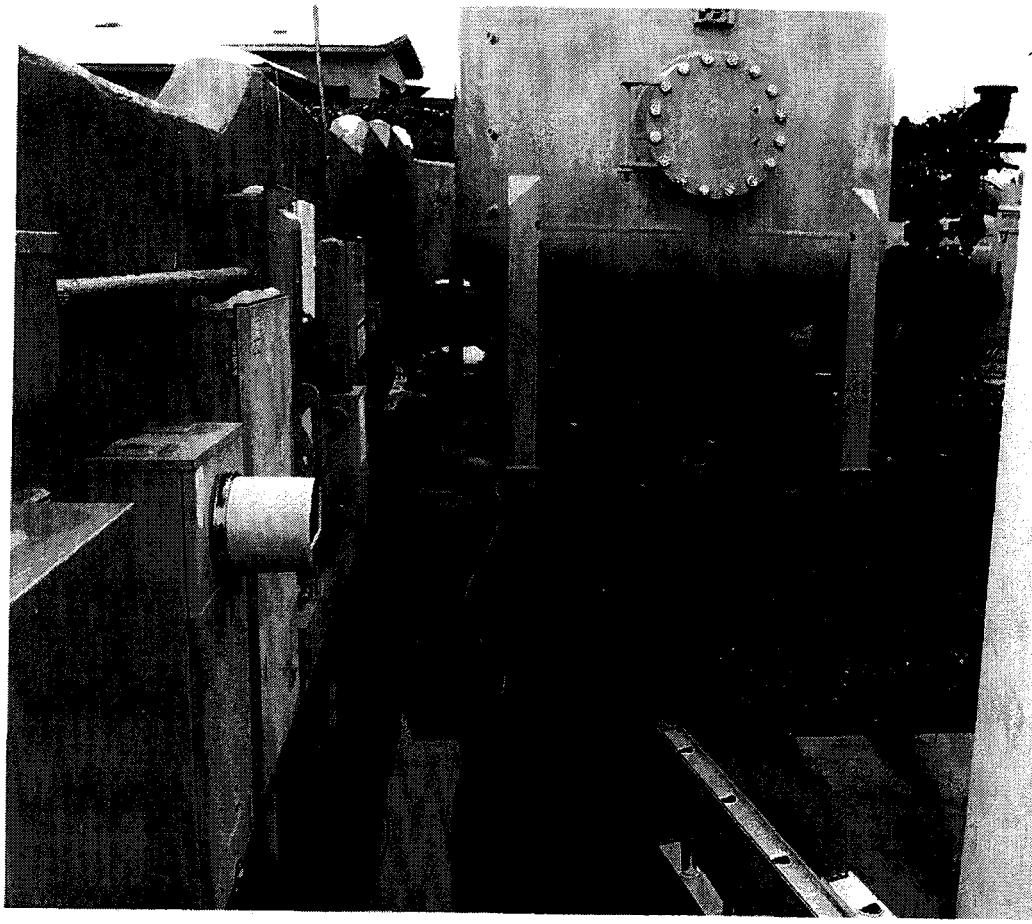

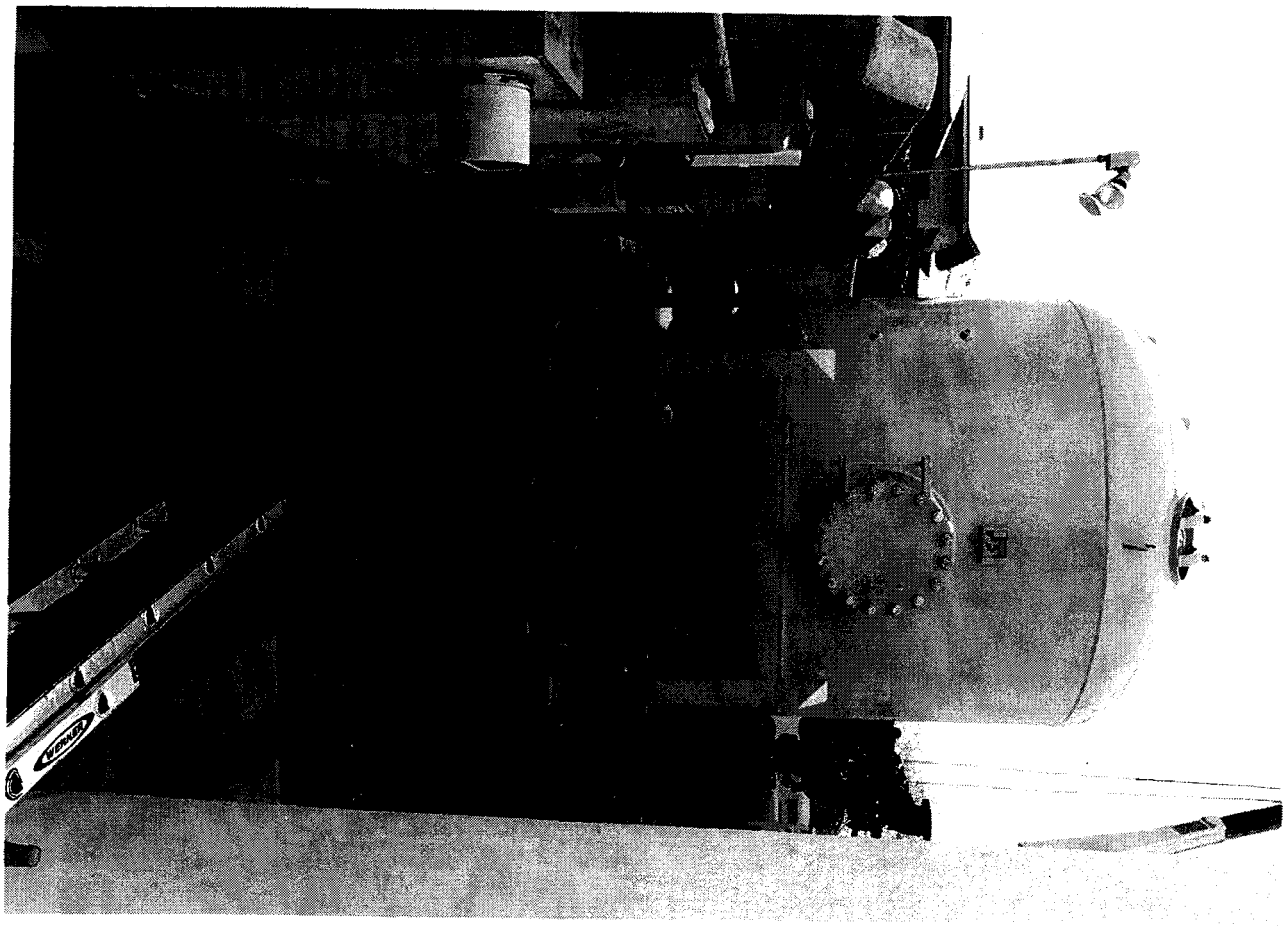

Weber Group LC

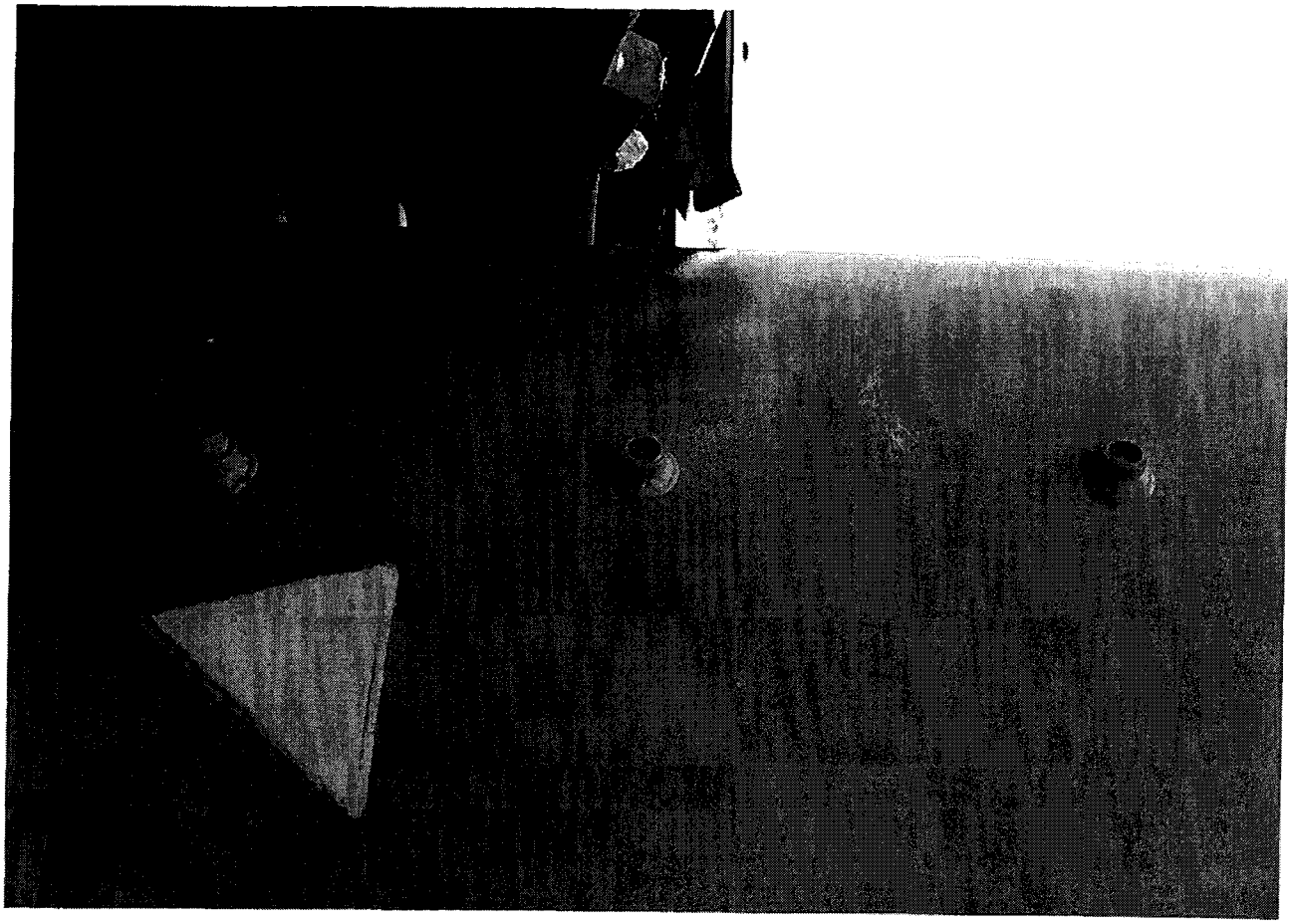

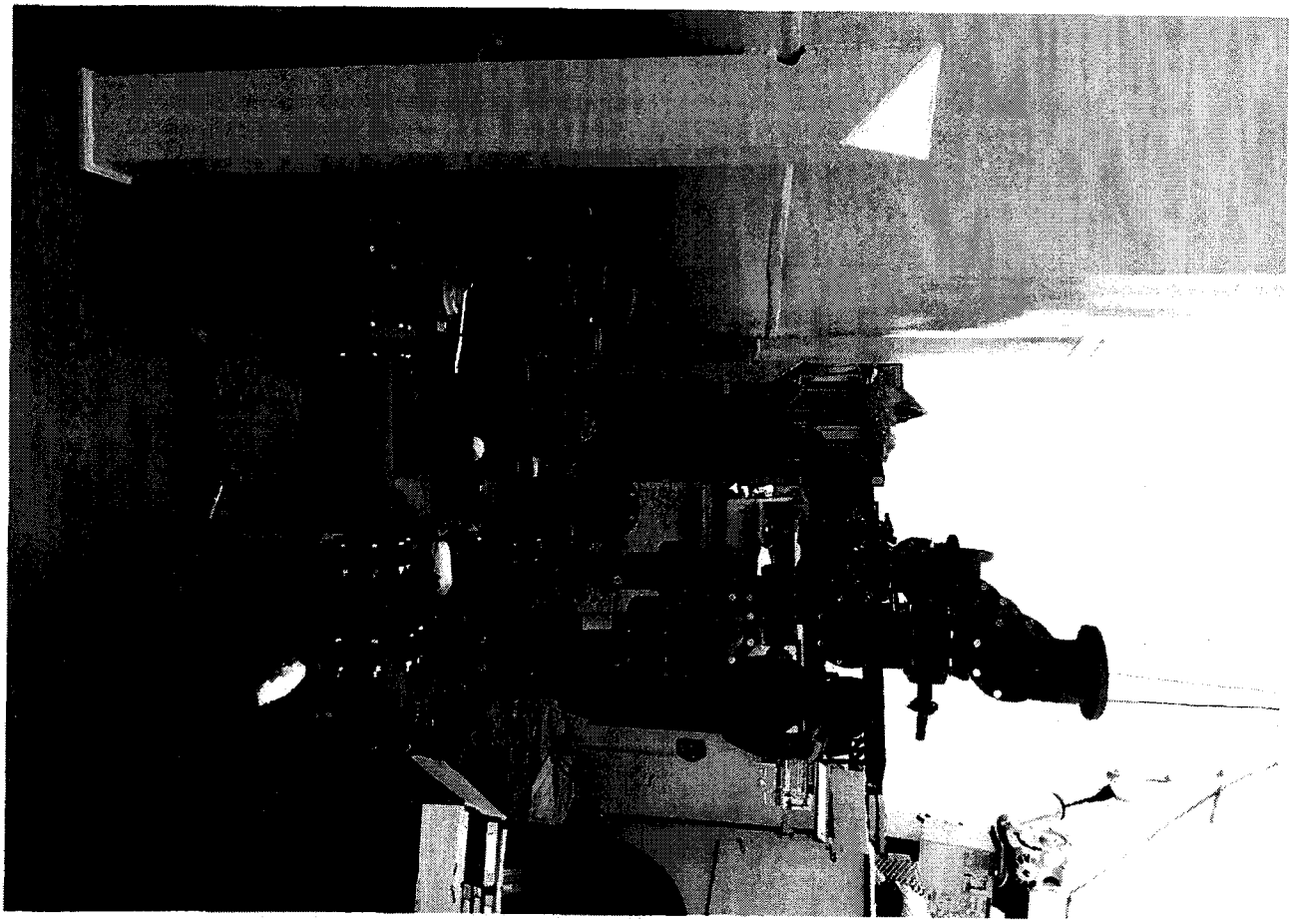

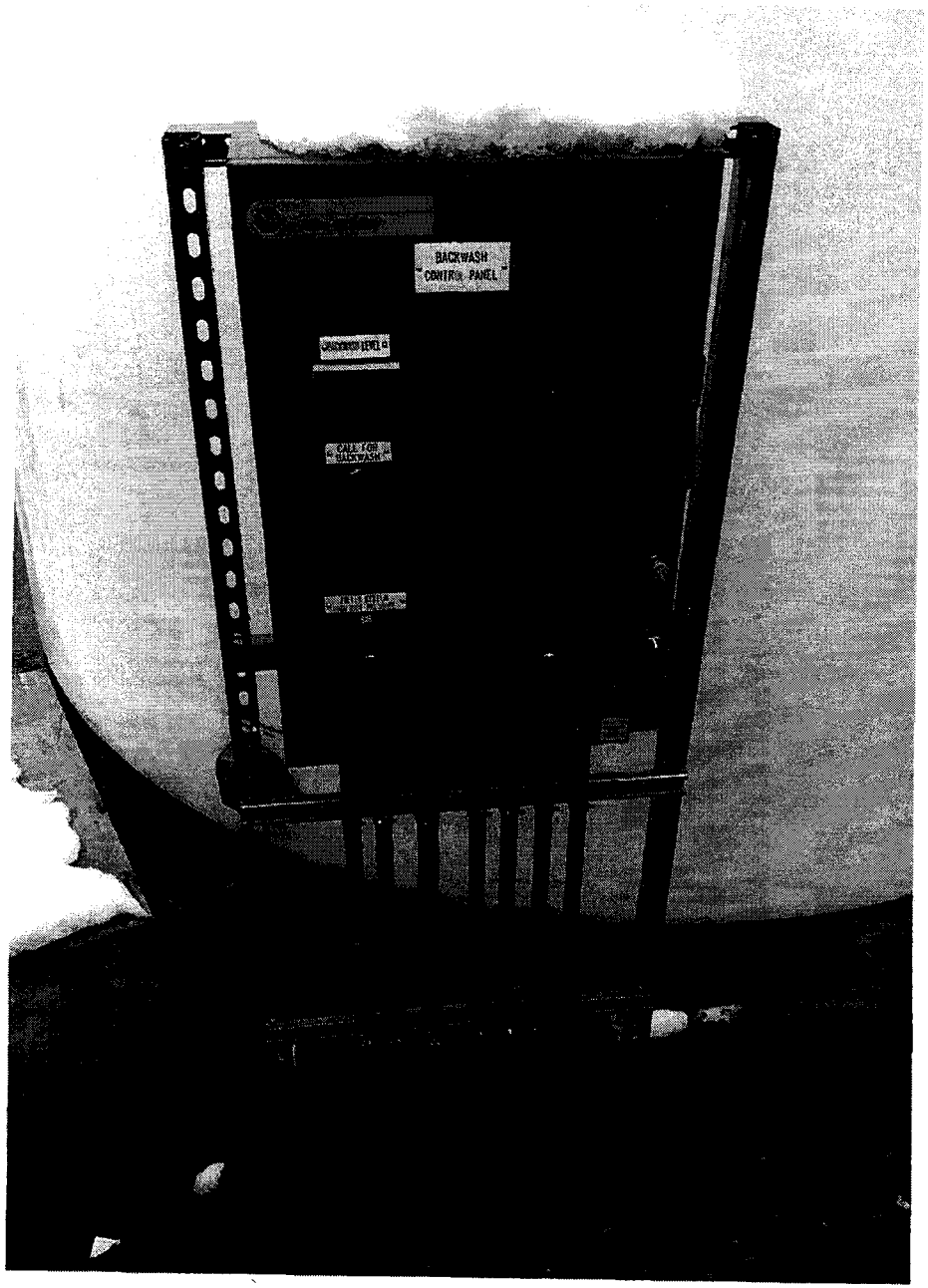
BACKWASH
CONTROL PANEL

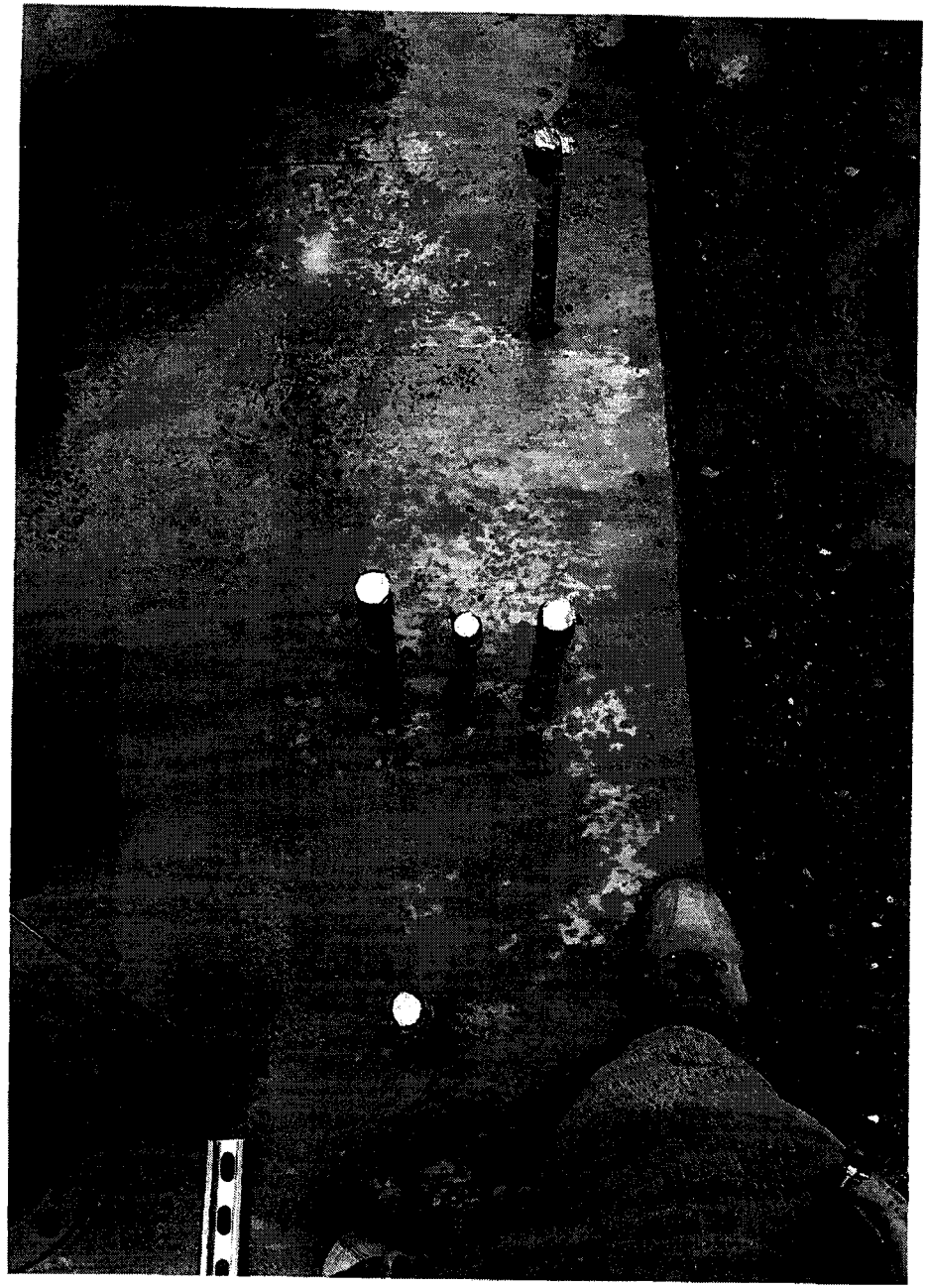

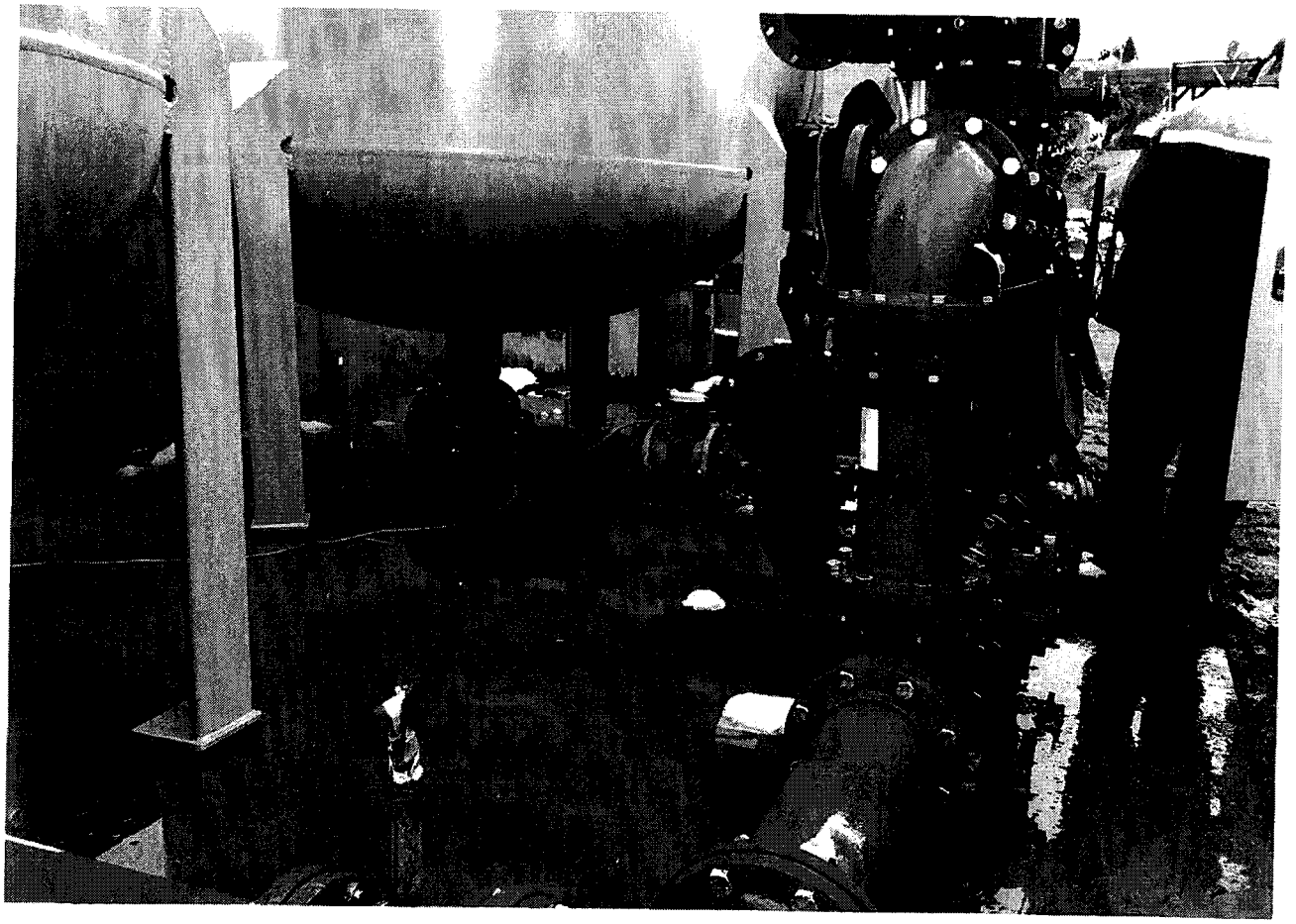

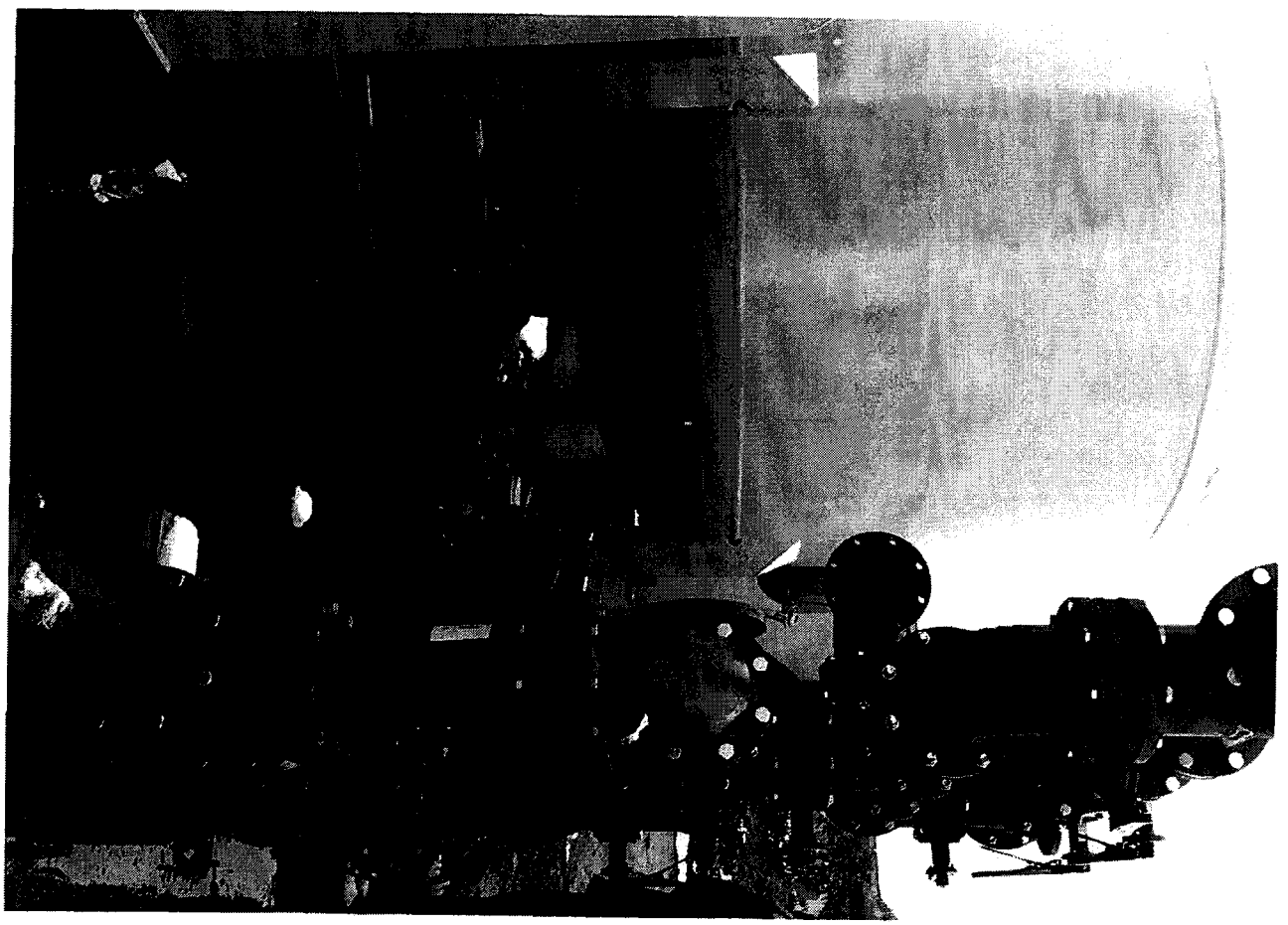

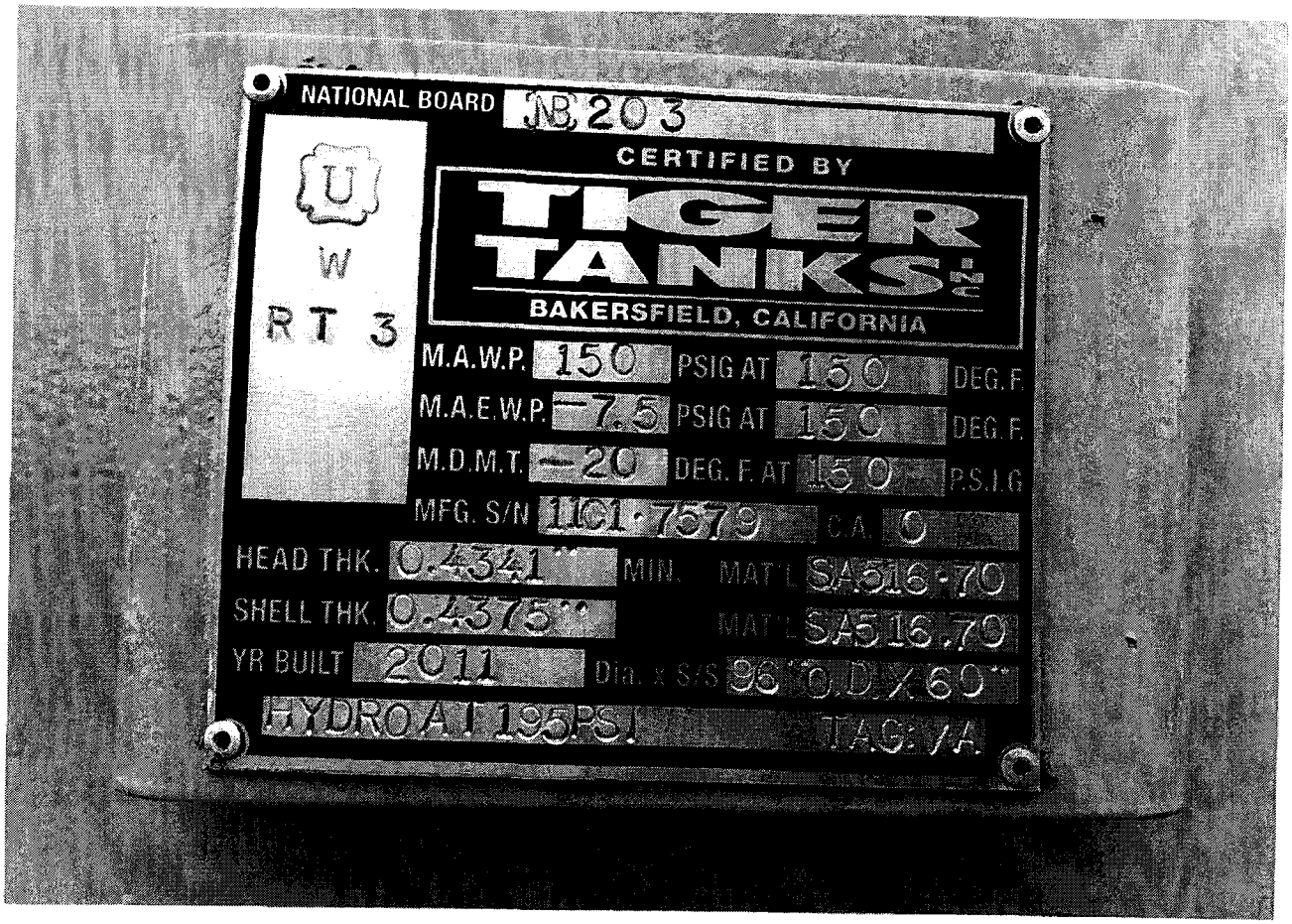
NATIONAL BOARD NB 203
CERTIFIED BY
TIGER TANKS INC.
BAKERSFIELD, CALIFORNIA
U
W
RT 3
M.A.W.P. 150 PSIG AT 150 DEG. F.
M.A.E.W.P. -7.5 PSIG AT 150 DEG. F.
M.D.M.T. -20 DEG. F. AT 150 P.S.I.G
MFG. S/N 1101-7579 C.A. 0
HEAD THK. 0.4341" MIN. MAT'L SA516-70
SHELL THK. 0.4375" MAT'L SA516.70
YR BUILT 2011 Dia. x S/S 96"O.D.X60"
HYDRO AT 195PSI
T.A.G: VA

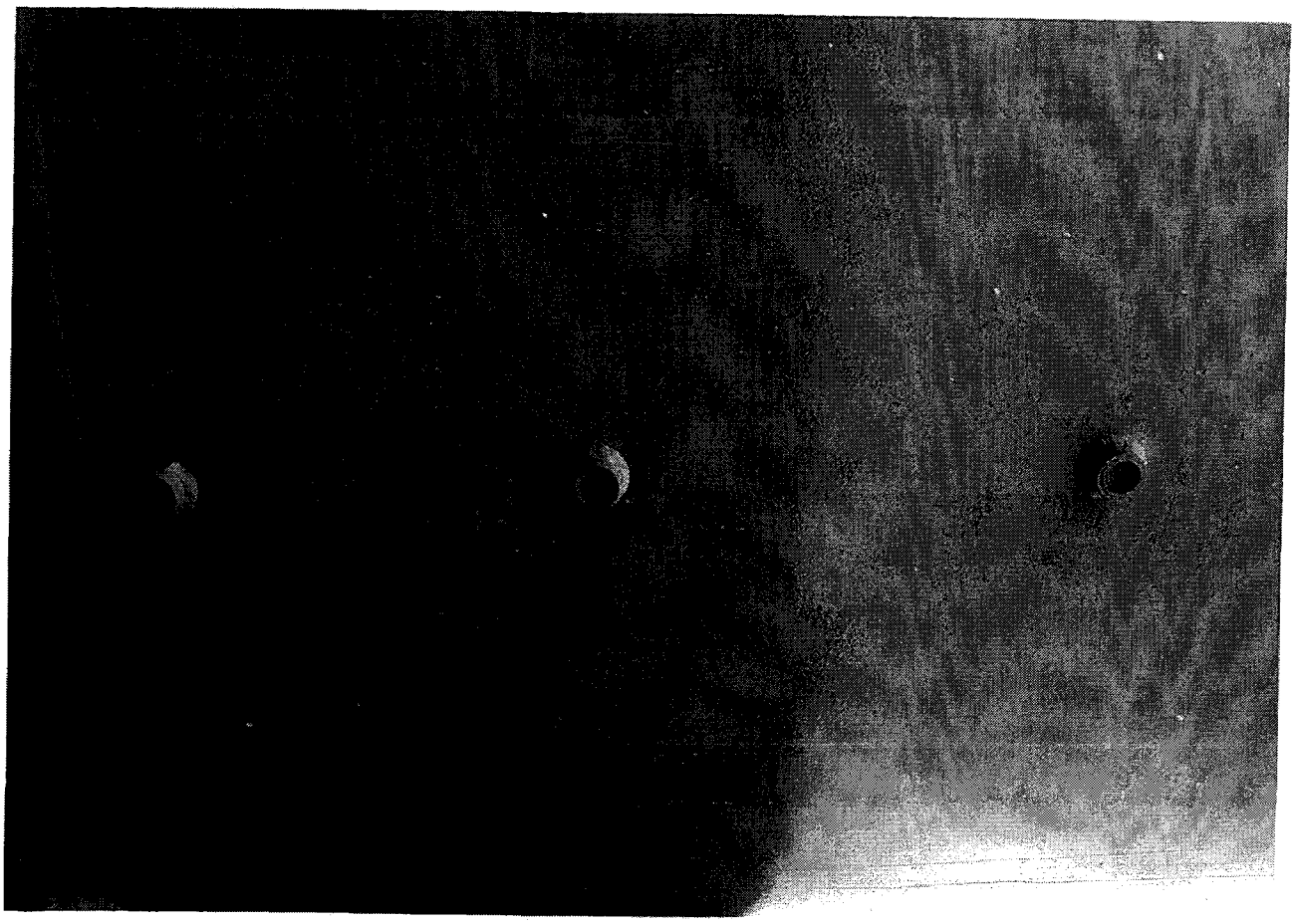

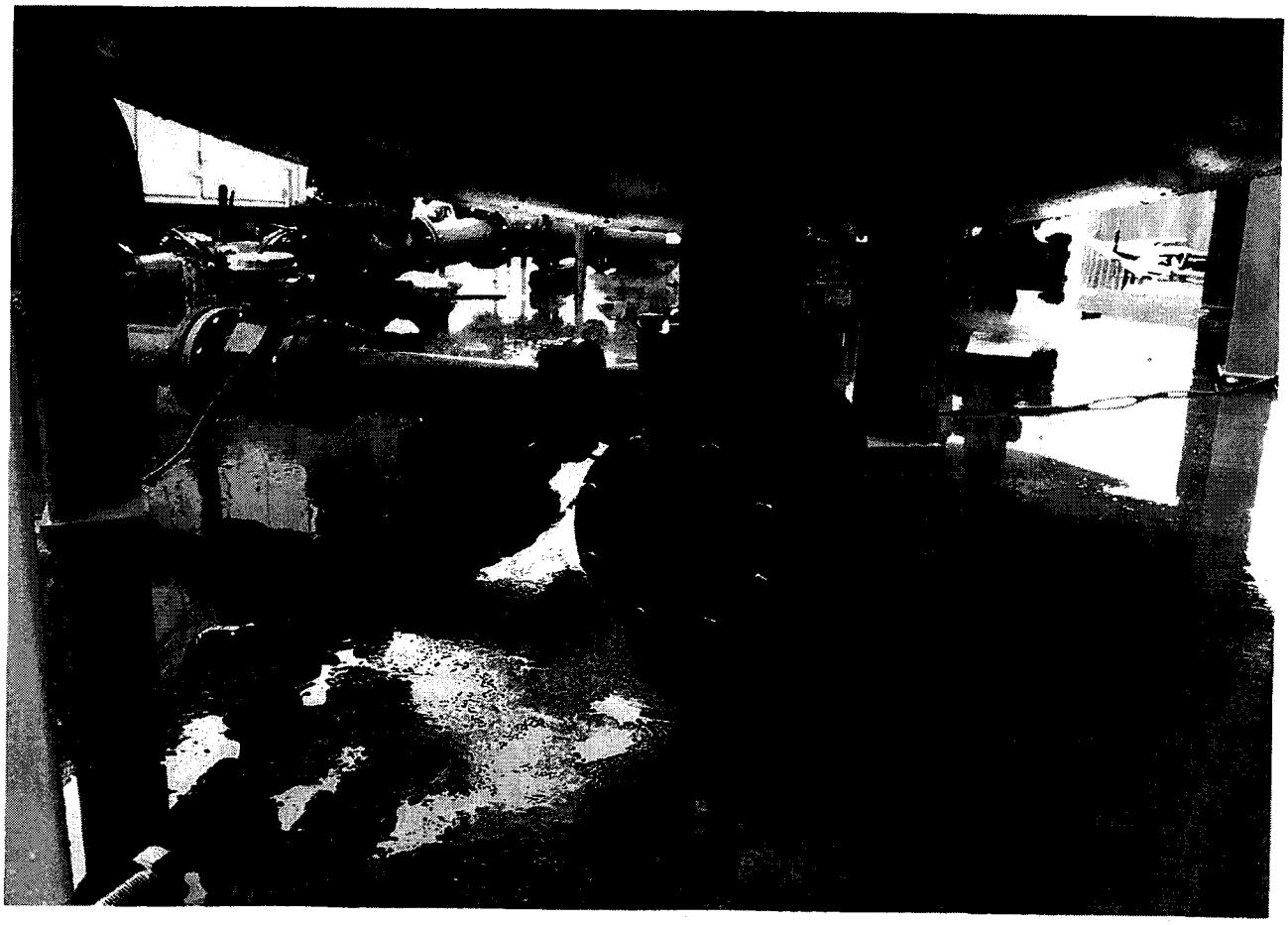

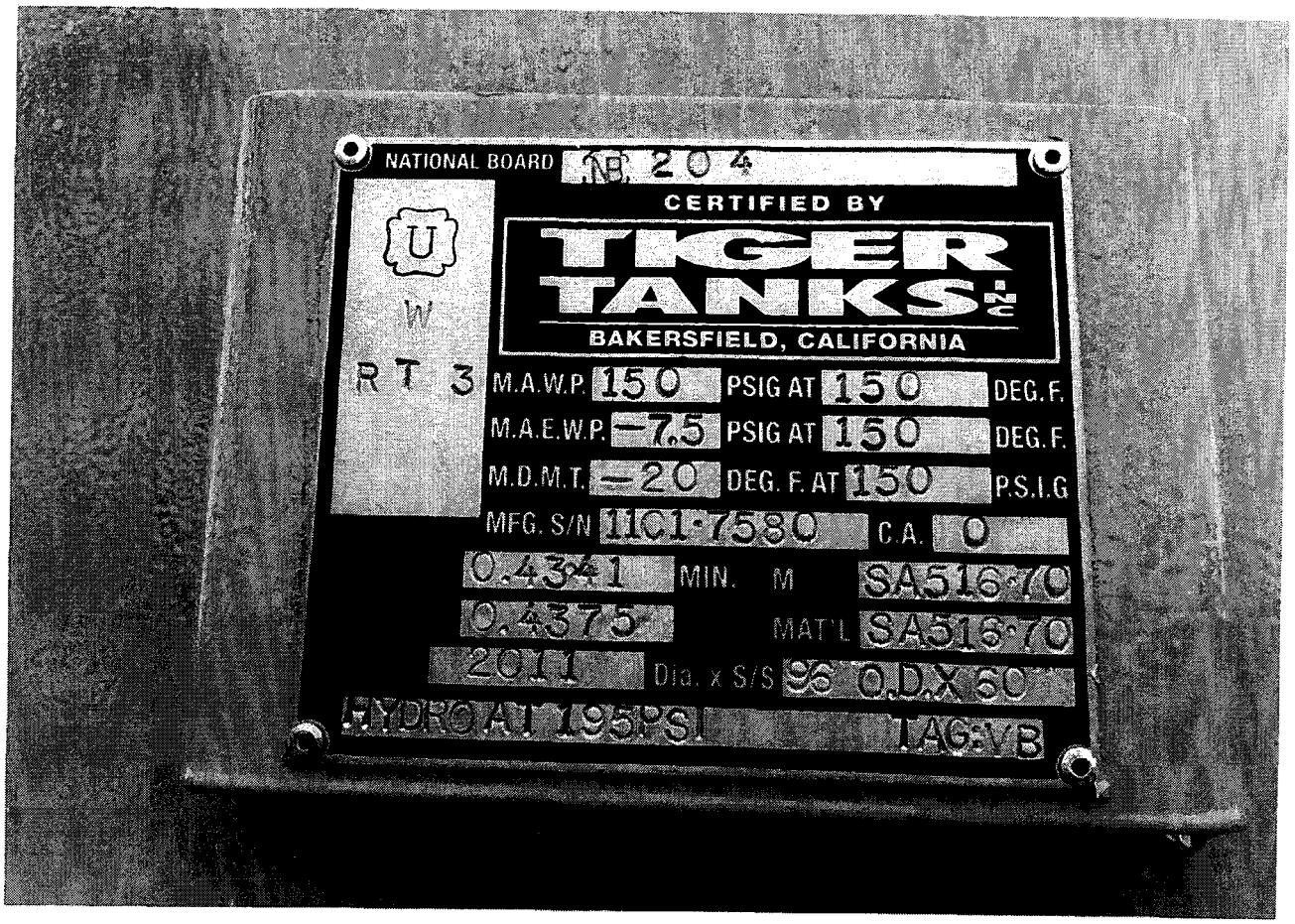
NATIONAL BOARD NB 204
CERTIFIED BY
TIGER TANKS INC
BAKERSFIELD, CALIFORNIA
U
W
RT 3
M.A.W.P. 150 PSIG AT 150 DEG. F.
M.A.E.W.P. -7.5 PSIG AT 150 DEG. F.
M.D.M.T. -20 DEG. F. AT 150 P.S.I.G
MFG. S/N 11C1-7580 C.A. 0
0.4341 MIN. M SA516-70
0.4375 MAT'L SA516-70
2011 Dia. x S/S 96 O.D.X 60
HYDRO AT 195PSI TAG:VB

Sedona Fire District

R11729

2860 Southwest Drive, Sedona, Arizona 86336
Telephone: (928) 282-6800 FAX: (928) 282-6857

Occupancy Inspection Record

Address: 14801 STATE ROUTE 179

Occupancy: AZ WATER (WELL SITE)

Annual____ Tenant Improvement____ Tenant Occupancy____ Other____

Violation Fire Code #	Description of Violation	Correct By: (date)
1 NOTE	FINAL INSPECTION	
	PASSED - NO VIOLATIONS NOTED	

NO VIOLATIONS ✓ CERTIFICATE OF OCCUPANCY APPROVAL ✓

RE-INSPECTION DATE (if applicable):_____

The items noted above are in violation of Sedona Fire District's Fire Code. This is an official notice of code violation requiring correction within the specified time. Failure to comply with these requirements may lead to legal action. This inspection is intended for your safety and the safety of the citizens of Sedona Fire District. Your cooperation is greatly appreciated. For more information concerning this inspection, call (928) 282-6800.

Inspected By: #50 Craig Hasebrock

Inspection Date: 4/10/2012

Received By: David G. Lemon

Form: 10/08/08 Code References on Back File #:

CITY OF SEDONA – *Building Safety Division*

As indicated below, the work is on this building is

- Building ☐
- Plumbing ☑
- Electrical ☑
- Mechanical ☐

APPROVED

For the following Construction Phase:

Arsenic Removal Facility
1480 Hwy 179
Sedona

FINAL INSPECTION

4/11/12 — Date

Barry W — Inspector

BSD/005 7/88

CONSTRUCTION PERMIT RECORD INSPECTION CARD — **READ BACK OF THIS CARD THOROUGHLY**

PROPERTY ADDRESS MUST BE POSTED PRIOR TO FIRST INSPECTION

PERMIT IVR NUMBER 615890 **3 DIGIT PIN NUMBER** 270

PERMIT # [illegible]

NAME AZ WATER COMPANY

PRESCOTT INSPECTION LINE (928) 771-3597

COTTONWOOD INSPECTION LINE (928) 639-5824

APN 405·53·218

WORK ELECTRIC

BUILDING			ELECTRICAL			PLUMBING			MECHANICAL		
INSPECTION TYPE	OK	DATE	INSPECTION TYPE	OK	DATE	INSPECTION TYPE	OK	DATE	INSPECTION TYPE	OK	DATE
CONSTRUCTION SITE & GROUND WORK											
1005 BLDG. SETBACKS			1320 UNDER GROUND CONDUIT	NS		1230 WATER YARDLINE			1510 UNDERSLAB DUCT		
1000 FOOTINGS & STEEL			1310 UNDER SLAB CONDUIT			1240 SEWER YARDLINE			1600 POOL GUNITE		
1056 SOIL CONDITIONS			1305 GROUNDING ELECTRODE	3-6-12		1234 GAS YARDLINE/TEST			1621 POOL PLUMBING		
1002 INTERIOR FOOTINGS						1255 GAS METER RELEASE			1622 POOL ELEC. CONDUIT		
1057 EXTERIOR PIERS/ FTGS						1215 WATER METER REL.			1623 POOL WATER LINE		
1007 SLAB GRADE						1225 BACK FLOW DEVICE			1624 POOL GAS LINE		
1053 SLAB INSULATION						1237 SEWER EJECT. PUMP			1625 POOL BONDING		
1028 FINISH FL. ELEV. CERT.						1260 BURIED PROPANE TANK					
1009 GRADING											
FOUNDATIONS AND RETAINING WALLS											
1016 PRE-SLURRY			1316 TEMPORARY ELECTRIC			1200 UNDERSLAB DWV			1512 INFLOOR HEATING		
1012 GROUT STEM /HOLDDOWN			1386 UPGRADE ELECTRIC			1201 UNDERSLAB WATER			1620 POOL PLASTER		
1013 GROUT LIFT			1387 MOBILE HOME ELECTRIC			1265 H/W CIRCULATING SYS.			1626 POOL ELECTRIC		
1013 GROUT LIFT			1388 SECONDARY ELEC. SERV.						1627 POOL BARRIER		
1019 BASE. WALL INSULATION											
1041 M/F HOME SETUP											
1044 SOIL DRAINS											
1043 MOISTURE PROOFING											
3645 SITE INVESTIGATION											
BUILDING ROUGH AND TOP OUT											
1030 ROOF SHEATHING NAIL			1327 WIRING	NS 4-17-12		1231 WATER PIPING/ TEST			1500 ROUGH DUCT		
1047 EXT. BWP/HOLDOWNS			1345 BONDING			1232 SOIL & DWV TEST			1513 COMBUSTION AIR		
1048 EXT. BUILDING WRAP			1540 SMOKE DETECTORS			1220 BUILDING GAS TEST			1511 FLUE PIPING		
1046 INT. BRACE WALL PANELS						1250 WATER HEATER			1515 INST. OF MECH. EQUIP		
1027 UNDER FLOOR FRAMING						1254 EXPANSION TANK			1525 WOOD STOVE/ F.P.		
1045 FRAME						1265 H/W CIRCULATING SYS.					
1087 TEMPERED GLAZING											
1088 EGRESS WINDOWS											
1095 COMBO ROUGH IN											
1049 INSULATION											
1065 T-BAR CEILING											
1042 ADA ROUGH											
INTERIOR AND EXTERIOR WALL COVERINGS											
1060 DRYWALL NAIL											
1070 EXTERIOR LATH											
FINAL INSPECTIONS (DOES NOT CONSTITUTE AN APPROVAL TO OCCUPY)											
4001 BUILDING FINAL			4004 ELECTRICAL FINAL	NS 4-17-12		4003 PLUMBING FINAL			4002 MECHANICAL FINAL		
4012 SITE DRAINAGE FINAL			4013 SMOKE DET. TEST FINAL						4009 WDSTOVE/ F. P. FINAL		
4010 GRADING FINAL									4008 POOL FINAL		
4011 ADA FINAL									4014 POOL EQUIP. FINAL		
4015 SIGN FINAL											

Water Quality Association
International Headquarters & Laboratory

4151 Naperville Road
Lisle, Illinois 60532-3696 USA
Phone 630 505 0160
Fax 630 505 9637
www.wqa.org

A not-for-profit organization

GOLD SEAL CERTIFICATE

This is to certify that the drinking water system component herein has been independently tested and certified by the Water Quality Association in accordance with "Drinking Water System Components - Health Effects," NSF/ANSI-61. The material safety of the component listed has earned the Gold Seal.

Manufacturer:	ResinTech, Inc.
Address:	160 Cooper Road West Berlin, NJ 08091-9243
Model:	SBG1-HP
Brand:	N/A
Product Type:	Ion Exchange Resin
Size:	16 - 50 mesh
Water Contact Temp:	CLD 23
Water Contact Material:	SYN
Listing Notes:	Anion Resin

Certificate Type:	Final
Issue Date:	Wednesday, May 21, 2008
Expiration Date:	Monday, January 21, 2013
Test Unit Number/ Conformance Method:	6179.0803C.02
Certificate Number:	CRT.052108.61790803C02

Joseph F Harrison

Joseph F. Harrison, P.E., CWS-VI

29 May 2008

Effective Date

YAVAPAI COUNTY DEVELOPMENT SERVICES
Zoning Clearance and Building Permit

500 South Marina Street
Prescott, AZ 86303
(928) 771-3214

10 South 6th Street
Cottonwood, AZ 86326
(928) 639-8151

Permit No. P12012000296 Urban **Issue Date** 2/16/2012

Appl. No A12012000270 2/7/2012 **Parcel Number:** 405-53-218

Permit Type: 329 Structures Other Than Buildings **Est. Value:** $ 18,000.00

Calculated Value: $ 18,000.00

Permit Description: ELECTRICAL ADD TO EXISTING ARSENIC REPLACEMENT SYSTEM **Clerk:** CJL

Place Inspection Record Card and approved plans at building site, protected from weather and damage. Construction must begin within 180 days of the date of this permit. Substantial progress must be demonstrated every 180 days or this permit will EXPIRE and become NULL and VOID. It is the responsibility of the property owner, not Yavapai County, to determine the correct location of all property lines.

IVR Permit Number: IVR Pin Number:

Situs (Street) Address

990 CROWN RIDGE RD

Property Owners Name
ARIZONA WATER COMPANY
Mailing Address
PO BOX 29006
PHOENIX, AZ 85038

I, as owner of the property, or my employees whose wages as their sole compensation, will do the work solely, and the structure is not intended or offered for sale. The Contractor's License Law does not apply to any owner of property who builds or improves thereon and who does such work himself of through his own employees, provided that such improvements are not intended or altered for sale. If, however, the building or improvement is sold within one year of completion, the owner/builder will have the burden of proving that he did not build or improve for the purpose of sale.

Contractor Name
HYDRO CONTROLS AND PUMP SYSTEMS INC
SUITE 7 2602 W TOWNLEY AVE

Sales Tax #: 20165248 4

License No/Class/Expiration Date: 232307 232308-L 29 L 11-4/1/2009

Bond: N/A Insurance: N/A

I hereby affirm that I am licensed under provisions of ARS 32-1169 and my license is in full force and effect.
I hereby affirm that I have a certificate of Worker's Compensation Insurance or a certified copy thereof ARS-23-961

Charges

General Ledger Description	Charge
DS Document	$15.00
BS Building Revenue	$100.00
BS Building Revenue	$70.63
BS Building Revenue	$262.50
	$448.13

Receipts

ENTRY DATE	RECEIPT NO	AMOUNT
2/7/2012	00000553	$100.00
JAMES LUGAR		
2/16/2012	00000726	$348.13
RANDY BUTLER		
		$448.13

APPLICANT

The applicant whose signature appears on the accompanying plot plan, as property owner, or who is acting on authority from the property owner, by submitting this application agrees to build in accordance with all applicable State and County laws, codes, and ordinances, and to request inspections as required, to adhere to plans and specifications as submitted with any corrections, and to obtain a final inspection of this structure prior to occupancy. It is the applicant's responsibility to review their deed restrictions/CC&R's, and check with their home owners association prior to submitting for a building/zoning clearance permit.

HYDRO CONTROLS AND PUMP SYSTEM SUITE 7 2602 W TOWNLEY AVE

Property Location **Section:** 24 **Township:** 16 N **Range:** 05 E

Flood Control

No District Review was performed.

Plan Check

Grading	Woodstove	Bldg	Sign	Plumb	Elect X	Mech	Plan Check Type	NEW

Occup:	#Floors	Type Const	Flr Live ID	Type Roofing	Ext Wall Cover	Length	Width	Height
U		VB						

Area	DWG Area	Gar Area	Acc. Area	Type	# Rooms	#Bdrms	#Baths	Loads:
								20/4050

Occ Load: **Sprinkler Req.** **Approved** ME A42012000192

Special Conditions: Electric Up-Grade
ELECTRICAL ADD TO EXISTING ARSENIC REPLACEMENT SYSTEM

SEPTIC #:

ACCESS #: YJ19417
NCR

Reviewing Agencies requiring Final Approval:

Building Safety Final

Related Permits:

Yavapai County Coordinated Permit Process
Plot Plan Sketch and Affidavit

I certify that I am authorized by the property owner to make this application, that all information provided for this application is correct and that this plot plan, as part of the permit, indicates all structures (including fences, walls, and pads), correct property and building dimensions; setback distances; legal access and easements; road cuts; walls and/or any water course (including washes, drainage ditches etc.) on or within 50' ; 100' and 200' respectively of the property. We agree to conform to all applicable laws of this jurisdiction.

Signature: [signature] Date: 2/1/2012 2/15/2012

Area Map for parcels exceeding 2 acres or with dimensions over 300'

AMENDED COPY

Document #	Sec	Twn	Rng	APN
912012.0270	24	16	5E	405-53-218

Must be drawn to scale per checklist on back of this form.

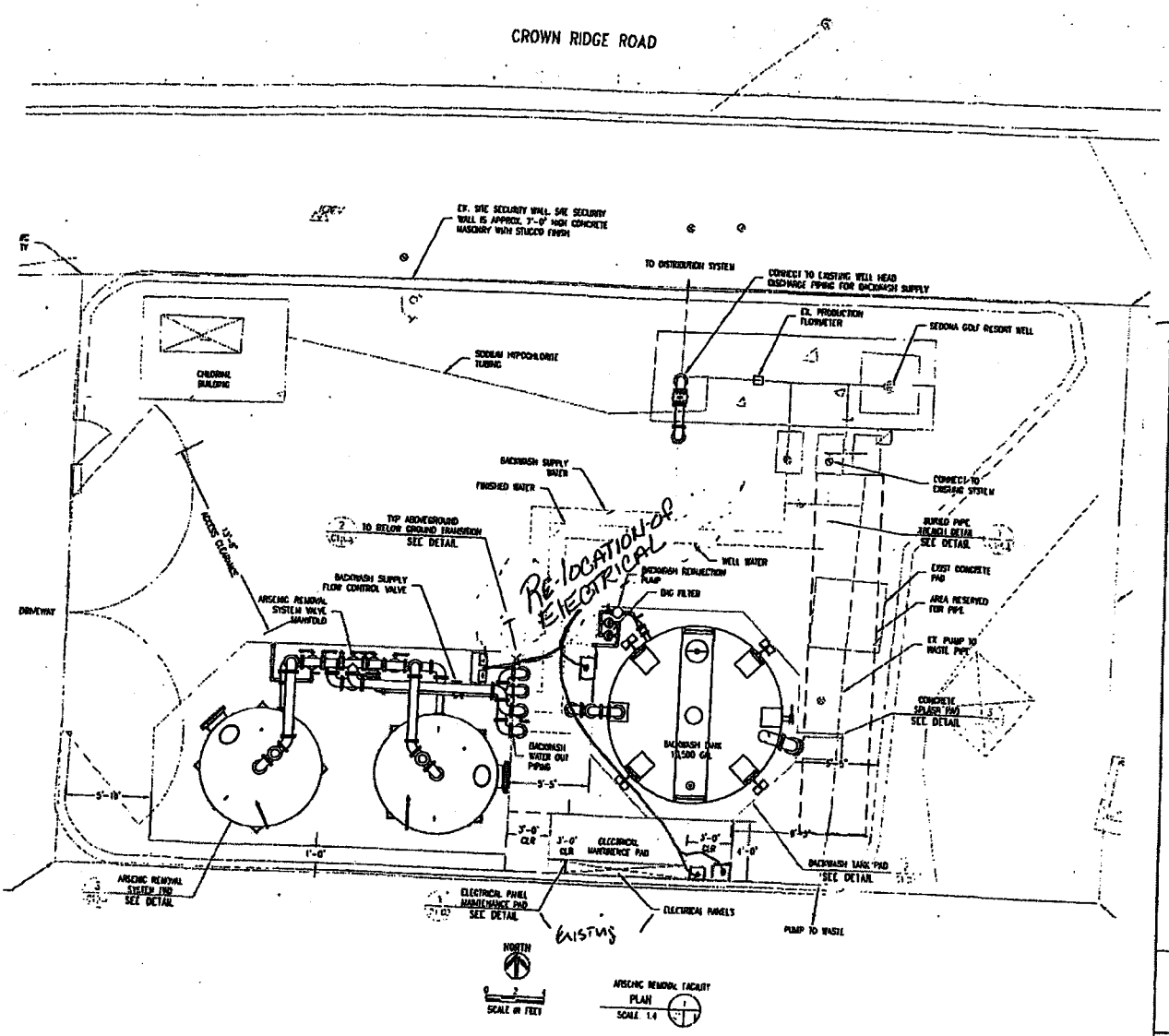

Zoning: PAD RV-35

Stories:

Height:

Slope: %

FY:

RY:

EY:

IY:

LC:

Lot Area

Lot %

Density Used:

Scale: NTS

North Arrow

LAND USE APPROVAL BY:	DATE:	TOTAL SHIELDED LUMENS:

Tres Rios
Consulting Engineers

20 April 2012

Hand Delivery

Mr. Andrew J. Haas, EIT
Engineer
Arizona Water Company
3805 N. Black Canyon Hwy.
Phoenix, AZ 85015

RE: Approval Of Construction Documents: ADEQ File No. 20110287
Arizona Water Company - Arsenic Removal Facility Upgrades
Sedona Golf Resort Well, Yavapai County, AZ

Dear Mr. Haas:

Tres Rios Consulting Engineers is providing the following documents to the Arizona Water Company ("Company") with regards to the approval of construct ("AOC") permit for the Arsenic Removal Facility Upgrades for the Sedona Golf Resort Well site in Yavapai County, Arizona. The documents enclosed with this letter are duplicates of the documents submitted to the Arizona Department of Environmental Quality ("ADEQ").

- One (1) Each: Full-size (24"x36") As-built Drawings.
- One (1) Operations & Maintenance ("O&M") Manual. Includes a CD of the entire O&M Manual.
- Transmittal Letter dated April 11, 2012 to ADEQ for the AOC Submittal.
- Approval To Construct (ATC Permit). (3 pages)
- Engineer's Certificate of Completion and Final Inspection. (1 page).
- Data Required with ECC. (1 page).
- Laboratory Test Results for the following parameters: (8 pages).
  - Bacteria (absent)
  - Arsenic in groundwater (pre-treatment) = 0.0353-mg/L
  - Arsenic after Vessel A (treated) = non-detect
  - Arsenic after Vessel B (treated) = non-detect
- Photos of Arsenic Removal Facility construction and media loading (1 pages).

As always, please feel free to call us at (480) 755-1042 if you have any questions.

Sincerely,

Blake E. Abts

Blake E. Abts, PE
Water & Wastewater Engineer
Tres Rios Consulting Engineers, Inc.

Enclosures
XC: Andrew J. Haas – Engineer, Arizona Water Company

230 W. Baseline Road, Suite 101-A Tempe, Arizona 85282 (480) 755-1042 Fax (480) 755-1043

LEGEND
Technical Services, Inc.
www.legend-group.com

17631 North 25th Avenue • Phoenix, AZ 85023
P (602) 324-6100 • F (602) 324-6101

11 April 2012

Jeff Wold
Weber Group LC
16825 S.Weber Drive
Chandler, AZ 85226

RE: Drinking Water

Laboratory Work Order No.: 2040595

Legend Technical Services of Arizona, Inc. is pleased to provide the enclosed analytical results for the aforementioned project. These results relate only to the items tested. This cover letter and the accompanying pages represent the full report for these analyses and should only be reproduced in full. Samples for this project were received by the laboratory on 04/06/12 16:32.

The samples were processed in accordance with the Chain of Custody document and the results presented relate only to the samples tested. The Chain of Custody is considered part of this report.

All samples will be retained by LEGEND for 30 days from the date of this report and then discarded unless other arrangements are made.

This entire report was reviewed and approved for release by the undersigned. If you have any questions concerning this report, please feel free to contact me.

Sincerely,
LEGEND TECHNICAL SERVICES OF ARIZONA, INC.

Barbara Frank

Barbara Frank
Client Services Representative
(602) 324-6100

This laboratory report is confidential and is intended for the sole use of LEGEND and it's client.

Weber Group LC 16825 S.Weber Drive Chandler, AZ 85226	Project: Drinking Water Project Number: Sedona Golf Resort ARF 13-114 4/5/12 Project Manager: Jeff Wold	Reported: 04/11/12 13:42

ANALYTICAL REPORT FOR SAMPLES

Sample ID	Laboratory ID	Matrix	Type	Date Sampled	Date Received
ARF POE (POE on FW Port)	2040595-01	Drinking Water	Grab	04/05/12 14:18	04/06/12 16:32
Well (Well Water)	2040595-02	Drinking Water	Grab	04/05/12 15:01	04/06/12 16:32
Tank A (Tank A - East)	2040595-03	Drinking Water	Grab	04/05/12 15:05	04/06/12 16:32
Tank B (Tank B - West)	2040595-04	Drinking Water	Grab	04/05/12 15:08	04/06/12 16:32
A-B Lead Lag (A to B Lead/Lag)	2040595-05	Drinking Water	Grab	04/05/12 15:06	04/06/12 16:32

Sample Condition Upon Receipt:

Temperature: 2.30 C

All samples were received in acceptable condition unless noted otherwise in the case narrative.

Case Narrative:

Holding Times: All holding times were met unless otherwise qualified.

QA/QC Criteria: All analyses met method requirements unless otherwise qualified.

Certifications: AZ(PHX)0004, AZ(TUC)OOO4, AIHA#102982, CDC ELITE Member.

Accreditation is applicable only to the test methods specified on each scope of accreditation held by LEGEND.

Comments: There were no problems encountered during the processing of the samples, unless otherwise noted.

All samples were analyzed on a "wet" basis unless designated as "dry weight".

Client notified via micro analyst of the non-detect on 04/07/12 @ 11:15- BF

Jeff Wold with Weber Group LC notified Project Manager, Barb Frank, on 04/11/12 to change PWS number to read 13-114- BF

Revised report on 04/11/12- BF

Weber Group LC 16825 S.Weber Drive Chandler, AZ 85226	Project: Drinking Water Project Number: Sedona Golf Resort ARF 13-114 4/5/12 Project Manager: Jeff Wold	Reported: 04/11/12 13:42

ARF POE (POE on FW Port) (2040595-01) Drinking Water (Grab) Sampled: 04/05/12 14:18 Received: 04/06/12 16:32

Analyte	Result	PQL	Units	Dilution	Batch	Prepared	Analyzed	Method	Notes
			Legend Technical Services of Arizona, Inc.						
Microbiology									
E. coli	Absent		P/A	1	B2D0182	04/06/12 17:05	04/06/12 17:05	SM 9223B	
Total Coliforms	Absent		P/A	1	B2D0182	04/06/12 17:05	04/06/12 17:05	SM 9223B	

Well (Well Water) (2040595-02) Drinking Water (Grab) Sampled: 04/05/12 15:01 Received: 04/06/12 16:32

Analyte	Result	PQL	Units	Dilution	Batch	Prepared	Analyzed	Method	Notes
			Legend Technical Services of Arizona, Inc.						
Total Metals									
Arsenic	0.0353	0.0010	mg/L	1	B2D0222	04/09/12 09:00	04/09/12 10:35	EPA 200.8	

Tank A (Tank A - East) (2040595-03) Drinking Water (Grab) Sampled: 04/05/12 15:05 Received: 04/06/12 16:32

Analyte	Result	PQL	Units	Dilution	Batch	Prepared	Analyzed	Method	Notes
			Legend Technical Services of Arizona, Inc.						
Total Metals									
Arsenic	<0.0010	0.0010	mg/L	1	B2D0222	04/09/12 09:00	04/09/12 10:39	EPA 200.8	

Tank B (Tank B - West) (2040595-04) Drinking Water (Grab) Sampled: 04/05/12 15:08 Received: 04/06/12 16:32

Analyte	Result	PQL	Units	Dilution	Batch	Prepared	Analyzed	Method	Notes
			Legend Technical Services of Arizona, Inc.						
Total Metals									
Arsenic	<0.0010	0.0010	mg/L	1	B2D0222	04/09/12 09:00	04/09/12 10:42	EPA 200.8	

A-B Lead Lag (A to B Lead/Lag) (2040595-05) Drinking Water (Grab) Sampled: 04/05/12 15:06 Received: 04/06/12 16:32

Analyte	Result	PQL	Units	Dilution	Batch	Prepared	Analyzed	Method	Notes
			Legend Technical Services of Arizona, Inc.						
Total Metals									
Arsenic	<0.0010	0.0010	mg/L	1	B2D0230	04/09/12 16:35	04/10/12 13:33	EPA 200.8	

Microbiology - Quality Control

Legend Technical Services of Arizona, Inc.

Analyte	Result	Reporting Limit	Units	Spike Level	Source Result	%REC	%REC Limits	RPD	RPD Limit	Notes
Batch B2D0182 - micro_prep										
Blank (B2D0182-BLK1)				*Prepared & Analyzed: 04/06/12*						
E. coli	Absent		P/A							
Total Coliforms	Absent		P/A							

Weber Group LC 16825 S.Weber Drive Chandler, AZ 85226	Project: Drinking Water Project Number: Sedona Golf Resort ARF 13-114 4/5/12 Project Manager: Jeff Wold	Reported: 04/11/12 13:42

2040595

CHAIN OF CUSTODY RECORD

L S G S N D
Technical Services, Inc.

Page 1 of 1

Weber Water Resources | 16825 S. Weber Dr. | Chandler | AZ | 480-961-1141

Sedona Golf Resort ARF | 13-114 | Jeff Wold

Laboratory Authorization
Required for Rush
Standard 3-5 Day
24 hr Rush

Sample Identification	Date	Time	Sample Location	Matrix	Bottles	Total Metals	Dissolved Metals	Cyanide	Nitrate	Nitrite	Fluoride	Chloride	Sulfate	Alkalinity	Hardness	TDS	Lab ID
ARF POE	4/5/12	1015	POE after ARF Port	W	1				X	X							01
Well	4/5/12	1501	Well office	W	1				X	X							02
Tank A	4/5/12	1505	Tank A - East	W	1				X	X							03
Tank B	4/5/12	1508	Tank B - West	W	1				X	X							04
A-B Land lake	4/5/12	1510	A & B Land/Lag	W	1				X	X							05

RUSH
due 4/9/12
called + email

Comments / Special Instructions: Please call Jeff Wold 480-779-0738 if any questions arise or if need to change analysis.

Relinquished by: Jeff Bennet 4/5/12 1600
Received by: [illegible] 4/5/12 1600

Temperature Upon Receipt: 2.5 °C
Custody Seals Intact? Y
Cooler Intact? Y
Preservation Correct/Checked? N

Form 0204-170 (04/06)

Weber Group LC
16825 S.Weber Drive
Chandler, AZ 85226

Project: Drinking Water
Project Number: Sedona Golf Resort ARF 13-114 4/5/12
Project Manager: Jeff Wold

Reported:
04/11/12 13:42

RUSH NOTICE Due 4/9/12 W.O. #: 2040595

Company: TresRios / Weber Group Phone:

Contact:

Prelim Due Date: Final Due Date:

Analysis: Total Coliform, Arsenic

Number of Samples: 1-TC 4-AS Date Samples Expected: 4/6/12

Matrix: DW Expiration Date:

Supervisor Approval

Inorganics:		Specifics:	
Metals:		Specifics:	OK per Mijana
Micro:		Specifics:	
SOC:		Specifics:	
VOC:		Specifics:	
Sub1:		Specifics:	
Sub2:		Specifics:	

Comments: Total Coliform results on Saturday - please call Arsenic results on end of day Monday

COST: Project Manager: Barb

RUSH Initiator: [illegible]

RM GE M-0R6.1 (10/05)

Notes and Definitions

BLK	Method Blank
LCS/Dup	Laboratory Control Sample/Laboratory Fortified Blank/Duplicate
MS/Dup	Matrix Spike/Duplicate
Dry	Sample results reported on a dry weight basis
RPD	Relative Percent Difference

Weber Group LC 16825 S.Weber Drive Chandler, AZ 85226	Project: Drinking Water Project Number: Sedona Golf Resort ARF 13-114 4/5/12 Project Manager: Jeff Wold	Reported: 04/11/12 13:42

Total Metals - Quality Control

Legend Technical Services of Arizona, Inc.

Analyte	Result	Reporting Limit	Units	Spike Level	Source Result	%REC	%REC Limits	RPD	RPD Limit	Notes
Batch B2D0222 - EPA 200.8										
Blank (B2D0222-BLK1)				*Prepared & Analyzed: 04/09/12*						
Arsenic	<0.0010	0.0010	mg/L							
LCS (B2D0222-BS1)				*Prepared & Analyzed: 04/09/12*						
Arsenic	0.0263	0.0010	mg/L	0.0250		105	85-115			
Matrix Spike (B2D0222-MS1)		Source: 2040595-04		*Prepared & Analyzed: 04/09/12*						
Arsenic	0.0277	0.0010	mg/L	0.0250	0.0006	109	70-130			
Matrix Spike Dup (B2D0222-MSD1)		Source: 2040595-04		*Prepared & Analyzed: 04/09/12*						
Arsenic	0.0283	0.0010	mg/L	0.0250	0.0006	111	70-130	2	20	
Batch B2D0230 - EPA 200.8										
Blank (B2D0230-BLK1)				*Prepared: 04/09/12 Analyzed: 04/10/12*						
Arsenic	<0.0010	0.0010	mg/L							
LCS (B2D0230-BS1)				*Prepared: 04/09/12 Analyzed: 04/10/12*						
Arsenic	0.0237	0.0010	mg/L	0.0250		95	85-115			
Matrix Spike (B2D0230-MS1)		Source: 2040598-01		*Prepared: 04/09/12 Analyzed: 04/10/12*						
Arsenic	0.0731	0.0010	mg/L	0.0250	0.0473	103	70-130			
Matrix Spike Dup (B2D0230-MSD1)		Source: 2040598-01		*Prepared: 04/09/12 Analyzed: 04/10/12*						
Arsenic	0.0718	0.0010	mg/L	0.0250	0.0473	98	70-130	2	20	

Tres Rios
Consulting Engineers

PHOTOGRAPH LOG

Project Name:	Site Location: Sedona Golf Resort Well Site	Project No.
Arsenic Removal Facility Upgrades		109311

Photo No.	Date:
1	4/6/12

Direction Photo Taken:

South

Description:

GFH Filter Media Loading

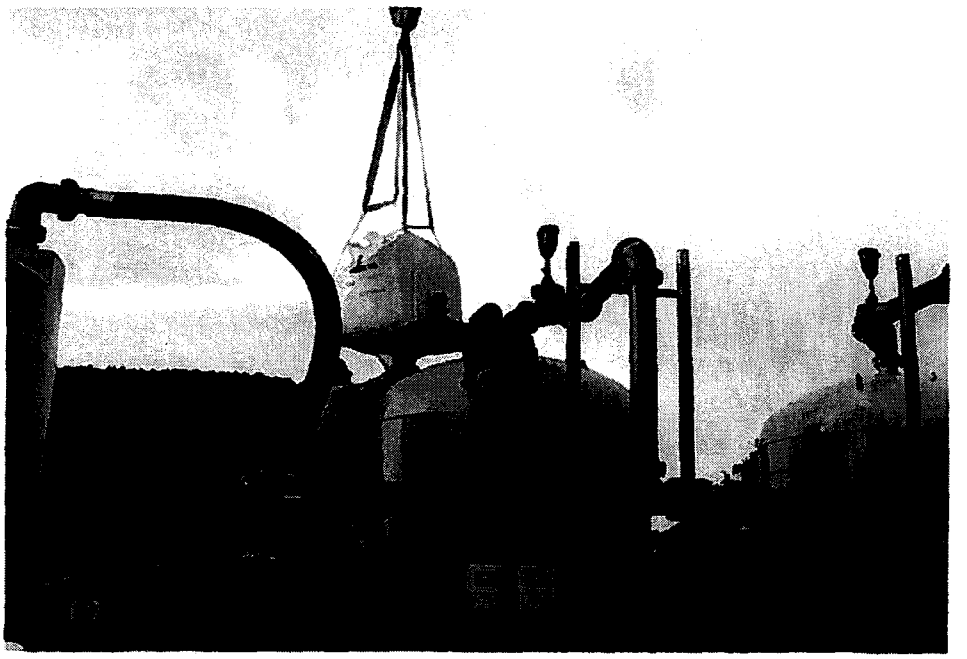

Photo No.	Date:
2	4/5/12

Direction Photo Taken:

West

Description:

Arsenic Removal System Vessels and Valve Manifold.

ARIZONA WATER

SEDONA GOLF RESORT WELL

DECEMBER 6, 2011

Activity Name	Start Date	Finish Date
NOTICE OF AWARD	9/23/11	9/23/11
30% DESIGN DRAWINGS & MEETING	9/23/11	10/14/11
TANK, VALVES, FITTINGS SUBMITTAL	9/26/11	10/14/11
ORDER TANKS	11/7/11	11/8/11
90% DESIGN DRAWINGS	11/10/11	11/10/11
SUBMIT FOR ATC EXPEDITED, SUBMIT YAVAPI COUNTY PERMIT	12/13/11	12/13/11
ATC COMMENTS & RESPONSE	12/13/11	12/28/11
ESTIMATED ATC AND YAVAPAI COUNTY PERMIT	1/3/12	1/13/12
AZ WATER TAKE DOWN SITE	1/6/12	2/3/12
POUR CONCRETE PADS	2/6/12	2/17/12
UNDERGROUND CONDUIT	2/13/12	2/24/12
UNDERGROUND PIPING	2/13/12	2/17/12
TANK, PIPE AND FITTINGS DELIVERY	11/7/11	1/13/12

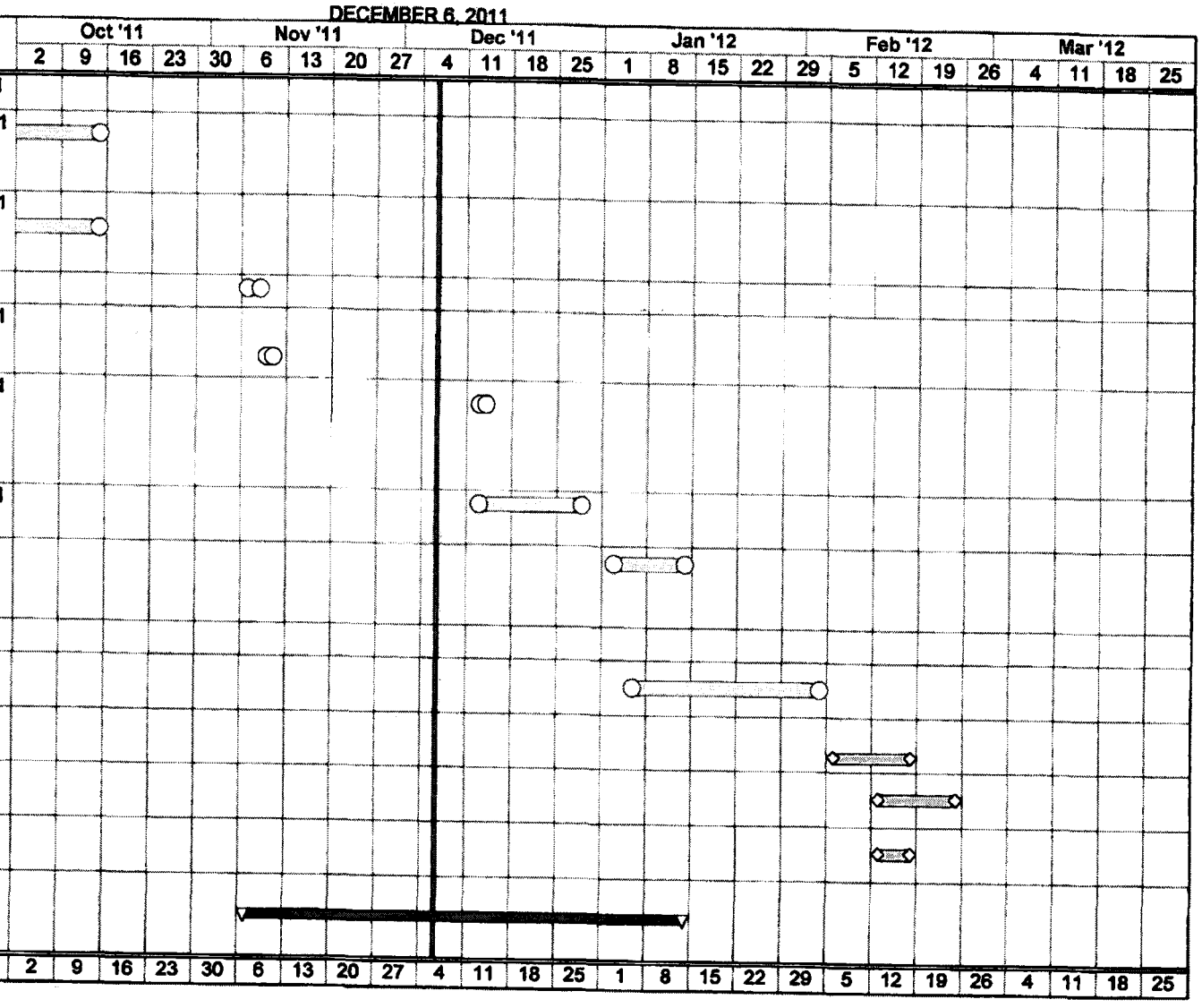

ARIZONA WATER

SEDONA GOLF RESORT WELL

DECEMBER 6, 2011

Activity Name	Start Date	Finish Date
BUILD PIPING IN SHOP & PAINT TANKS	1/16/12	2/3/12
INSTALL TANKS AND PIPING ONSITE	2/27/12	3/9/12
ELECTRICAL HOOKUPS	3/12/12	3/14/12
INSTALL MEDIA, FLUSH AND TAKE SAMPLES	3/12/12	3/16/12
PAINT PIPING ONSITE	3/19/12	3/23/12
O&M'S , BACTEE TESTS, PRESSURE TESTS TO ADEQ	3/26/12	3/27/12
FINAL ON COUNTY PERMIT	3/28/12	3/30/12
EXPECTED AOC	3/30/12	3/30/12
TRAINING AND PLANT COMMISSIONING	4/2/12	4/2/12

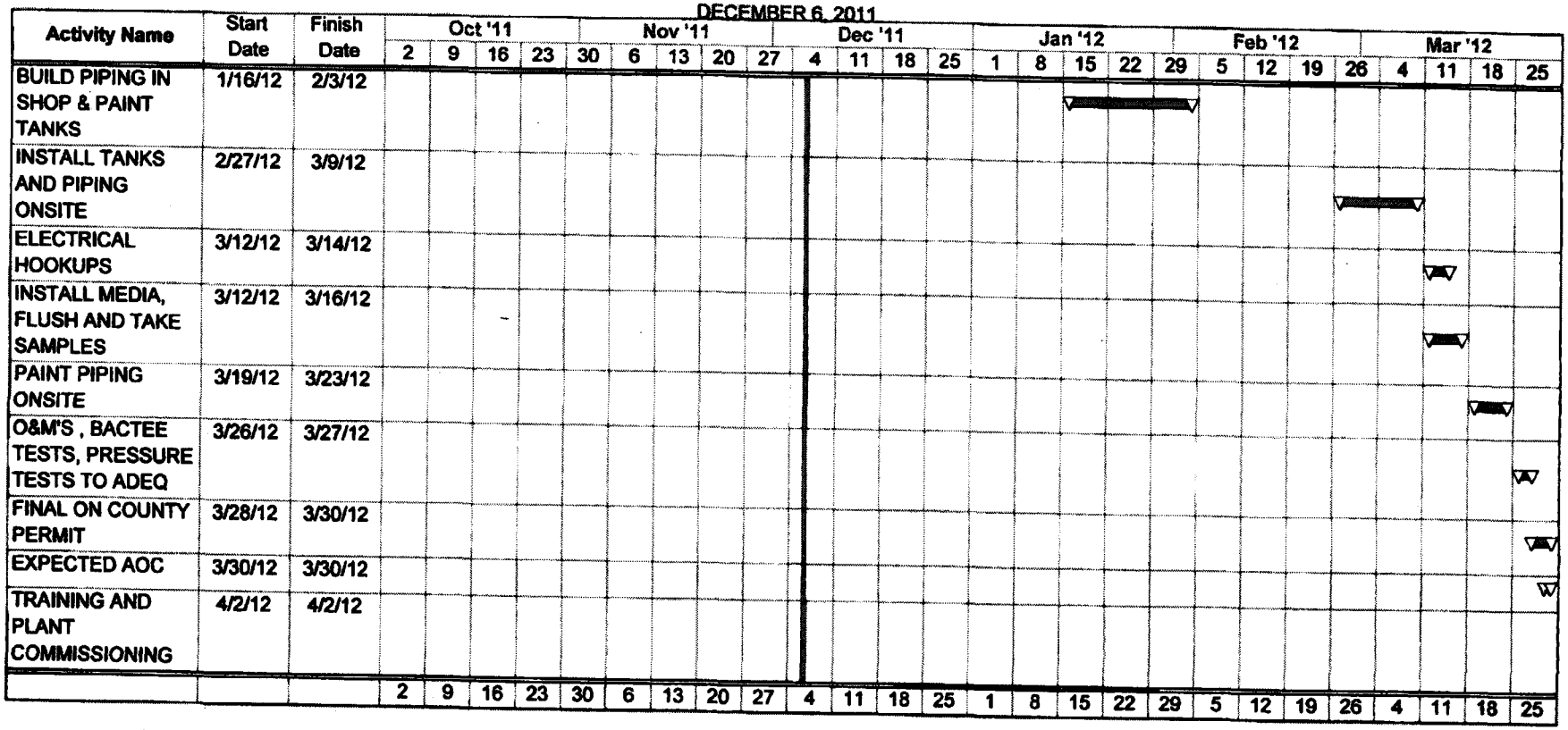

ADEQ
Arizona Department of Environmental Quality

ENGINEERING REVIEW SECTION
DATA REQUIRED WITH ECC

INSTRUCTIONS

Please complete the test data and submit this form with the Engineers Certificate of Completion. An Approval of Construction cannot be issued without the data identified below in accordance with Arizona Administrative Code (A.A.C.) R18-5-508(C). Please attach all supplemental information and calculations to this form.

DATA

1.

PRESSURE TEST DATA				
Indicate Segment Tested	ALL			
Pressure and Leakage Test Results (Pass/Fail)	PASS			
Date Tested	4/4/12			
Time Started	8:10 AM			
Time Finished	10:10			
Pipe Diameter	6"			
Footage Tested	ALL PIPE + TANKS			
Allowable Leakage	NONE			
Leakage Observed	NONE			
Pressure at Test Point	151 psi			
Employee Observing the Test (Please Print Legibly)	EDWARD J. RADWANSKI			
Signature of Employee Observing the Test	EJR			

2.

DISINFECTION SAMPLING					
Initial Sampling	Date	PIPING	4/5/12	TANKS	4/5/12
(Minimum 50 ppm available chlorine)	Time		11:55 A		11:25 A
	ppm Cl_2		>100 ppm		VARIES - Requires time to MIGRATE.
After 24 Hours Detention Time	Date		4/6/12		4/6/12
(Minimum 10 ppm free chlorine)	Time		8:30 A		8:40 A
	ppm Cl_2		>100 ppm		VARIES >0
After Sufficient Flushing	Date	POE	4/6/12		
(Water is clear and system Cl_2 residual is measured)	Time		13:07 pm		
	ppm Cl_2		0.5 ppm		
Bacteriological Sampling(s):	Date	4/6/12			
	Time	14:18 p			
	Attached (Y/N)	YES			
		(Yes/No)	Yes/No	Yes/No	Yes/No

3.

Certification

I, Jeffrey W. Bower, certify that I have inspected the work performed and have found it to be satisfactory and in accordance with Arizona Administrative Code, Arizona Engineering Bulletins, and the approved specifications.

Authorized Persons Signature — 9 April 2012 Date

Professional Seal
As per A.A.C. R18-5-507(B)(1)

Registered Professional Engineer (Civil) CERTIFICATE NO. 37214 JEFFREY W. BOWER Date Signed 4/9/12

EXPIRES 3/31/14

http://www.azdeq.gov/environ/water/dw/download/data.pdf
1110 WEST WASHINGTON, PHOENIX, AZ 85007
HTTP://WWW.AZDEQ.GOV/ENGINEERINGREVIEW/

Janice K. Brewer
Governor

ARIZONA DEPARTMENT OF ENVIRONMENTAL QUALITY

1110 West Washington Street • Phoenix, Arizona 85007
(602) 771-2300 • azdeq.gov

Henry R. Darwin
Director

APPROVAL OF CONSTRUCTION

Project Description: Sedona Golf Resort. AOC Permit for installation of Arsenic removal facility using GFH sorption media to treat up to 300 gpm.

Location: Sedona, Yavapai County, AZ

Project Owner: Arizona Water Company
Address: P.O. Box 29006, Phoenix, AZ 85038

The Arizona Department of Environmental Quality (ADEQ) hereby issues an Approval of Construction for the above-described facility based on the following provisions of Arizona Administrative Code (A.A.C.) R18-5-507 et seq.

On January 20, 2012, ADEQ issued a Certificate of Approval to Construct for the referenced project.

On April 11, 2012, Jeffrey Bower, P.E., certified the following:

- A final construction inspection was conducted on April 6, 2012;
- The referenced project was constructed according to the as-built plans and specifications and ADEQ's Certificate of Approval to Construct;
- Water system pressure and leakage tests were conducted on April 4, 2012, and the results were within the allowable leakage rates;
- The water treatment system was disinfected according to an ADEQ-approved method; and
- The applicant has the right to appeal this AOC Permit. Appeal information is on reverse side of this Permit.

Microbiological samples were collected on April 5, 2012 and analyzed on April 6, 2012 by Legend Technical Services of Arizona, ADHS License No. AZ0004. The sample results were negative for total coliform.

This Approval of Construction authorizes the owner to begin operating the above-described facilities as represented in the approved plan on file with the ADEQ. Be advised that A.A.C. R18-5-124 requires the owner of a public water system to maintain and operate all water production, treatment and distribution facilities in accordance with ADEQ Safe Drinking Water Rules.

AD4

PWS No.: 13-114
LTF No.: 55886

Janak K. Desai, P.E., Manager
Drinking Water Facilities Review Unit
Drinking Water Section

4/20/2012
Date Approved

cc: TEU File No.: 20110287
CRO Approval of Construction File
Yavapai County Health Department
Yavapai County Planning & Zoning Department
AZ Corporation Commission
Engineer

RIGHT TO APPEAL INFORMATION

The Arizona Department of Environmental Quality's review of this application was subject to the requirements of the licensing time frames ("LTF") statute under Arizona Revised Statutes ("A.R.S.") § 41-1072 through § 41-1079 and the LTF rules under Arizona Administrative Code ("A.A.C.") R18-1-501 through R18-1-525. This Notice is being issued within the overall time frame for your application.

ADEQ hereby approves your application for Approval of Construction Drinking Water Facilities under A.R.S. § 49-351. Your copy of the Approval of Construction Permit is on the reverse side of this Right to Appeal Information sheet.

This decision is an appealable agency action under A.R.S. § 41-1092. You have a right to request a hearing and file an appeal under A.R.S. § 41-1092.03(B). You must file a written Request for Hearing or Notice of Appeal within **30 days** of your receipt of this Notice. A Request for Hearing or Notice of Appeal is filed when it is received by ADEQ's Hearing Administrator as follows:

Office of Administrative Counsel
Arizona Department of Environmental Quality
1110 W. Washington Street
Phoenix, AZ 85007

The Request for Hearing or Notice of Appeal shall identify the party, the party's address, the agency and the action being appealed and shall contain a concise statement of the reasons for the appeal. Upon proper filing of a Request for Hearing or Notice of Appeal, ADEQ will serve a Notice of Hearing on all parties to the appeal. If you file a timely Request for Hearing or Notice of Appeal you have a right to request an informal settlement conference with ADEQ under A.R.S. § 41-1092.06. This request must be made in writing no later than **20 days** before a scheduled hearing and must be filed with the Hearing Administrator at the above address.

Please contact Adrian Dumitrescu at (602) 771-4201 or ad4@azdeq.gov if you have questions regarding this Notice or the Certificate of Approved of Construction.

ARIZONA WATER COMPANY

CONSTRUCTION PLACED IN SERVICE NOTICE

WORK AUTHORIZATION NO.: 1-4873

DIVISION: Verde Valley

DATE PLACED IN SERVICE: 5 | 10 | 12

CONTRACT NO:

FOR PURPOSES OF *MODIFIED ACCELERATED COST RECOVERY SYSTEM*, AN ASSET IS "PLACED IN SERVICE" WHEN IT IS IN A CONDITION OR STATE OF READINESS AND AVAILABILITY FOR A SPECIFICALLY ASSIGNED FUNCTION, WHETHER IT BE FOR USE IN A TRADE OR BUSINESS, OR FOR THE PRODUCTION OF INCOME.

I CERTIFY THAT THE ASSET(S) CONSTRUCTED PURSUANT TO THE PROVISIONS OF THE ABOVE-REFERENCED WORK AUTHORIZATION ARE READY FOR SERVICE AS OF THE DATE SHOWN ABOVE.

Division Manager or Operations Superintendent
(signature)

5/10/12
Date

SUBMIT ORIGINAL TO ACCOUNTING DEPARTMENT

A-1-3-1
FKB 11/24/11