APPLICATION
W-01445A-12-0348

PART 5 OF 7
BARCODE # 0000139001

To review Part 1 please see:
BARCODE #0000138998

To review Part 2 please see:
BARCODE # 0000139000

To review Part 3 please see:
BARCODE # 0000139001

To review Part 4 please see:
BARCODE # 0000139002

To review Part 6 please see:
BARCODE #0000139004

To review Part 7 please see:
BARCODE #0000139005

WA 1-4932

Rimrock

Federal Communications Commission
Public Safety and Homeland Security Bureau

VHF/UHF Narrowbanding Information for Public Safety Licensees

December 2010

Outline

- Narrowbanding Basics
- Narrowbanding Deadlines
- How to Prepare for Narrowbanding
- Modifying Licenses to Reflect Narrowbanding
- Additional Information Resources

Narrowbanding Basics

- Who is required to narrowband?
  - All Public Safety and Industrial/Business licensees in the 150-174 MHz (VHF) and 421-512 MHz (UHF) bands
- What is required?
  - By January 1, 2013, licensees must migrate their systems from 25 kHz (wideband) to 12.5 kHz (narrowband) channel bandwidth or a technology that achieves equivalent efficiency

Benefits of Narrowbanding

- Narrowbanding ensures more efficient use of the spectrum and greater spectrum access for public safety and non-public safety users
- Will relieve congestion in and result in increased channel availability for public safety VHF/UHF systems
- Narrowbanding has been consistently supported by the public safety community, including APCO, NPSTC, and other organizations

Outline

- Narrowbanding Basics
- Narrowbanding Deadlines
- How to Prepare for Narrowbanding
- Modifying Licenses to Reflect Narrowbanding
- Additional Information Resources

Narrowbanding Deadlines

- All licensees must complete narrowbanding to 12.5 kHz by January 1, 2013
  - FCC will also no longer allow manufacture or importation of equipment that includes a 25 kHz mode
- Some interim requirements take effect on January 1, 2011:
  - 12.5 kHz operation required for all new VHF/UHF systems or expansion of existing systems
  - FCC will not certify new equipment that includes a 25 KHz mode

Narrowbanding Timeline

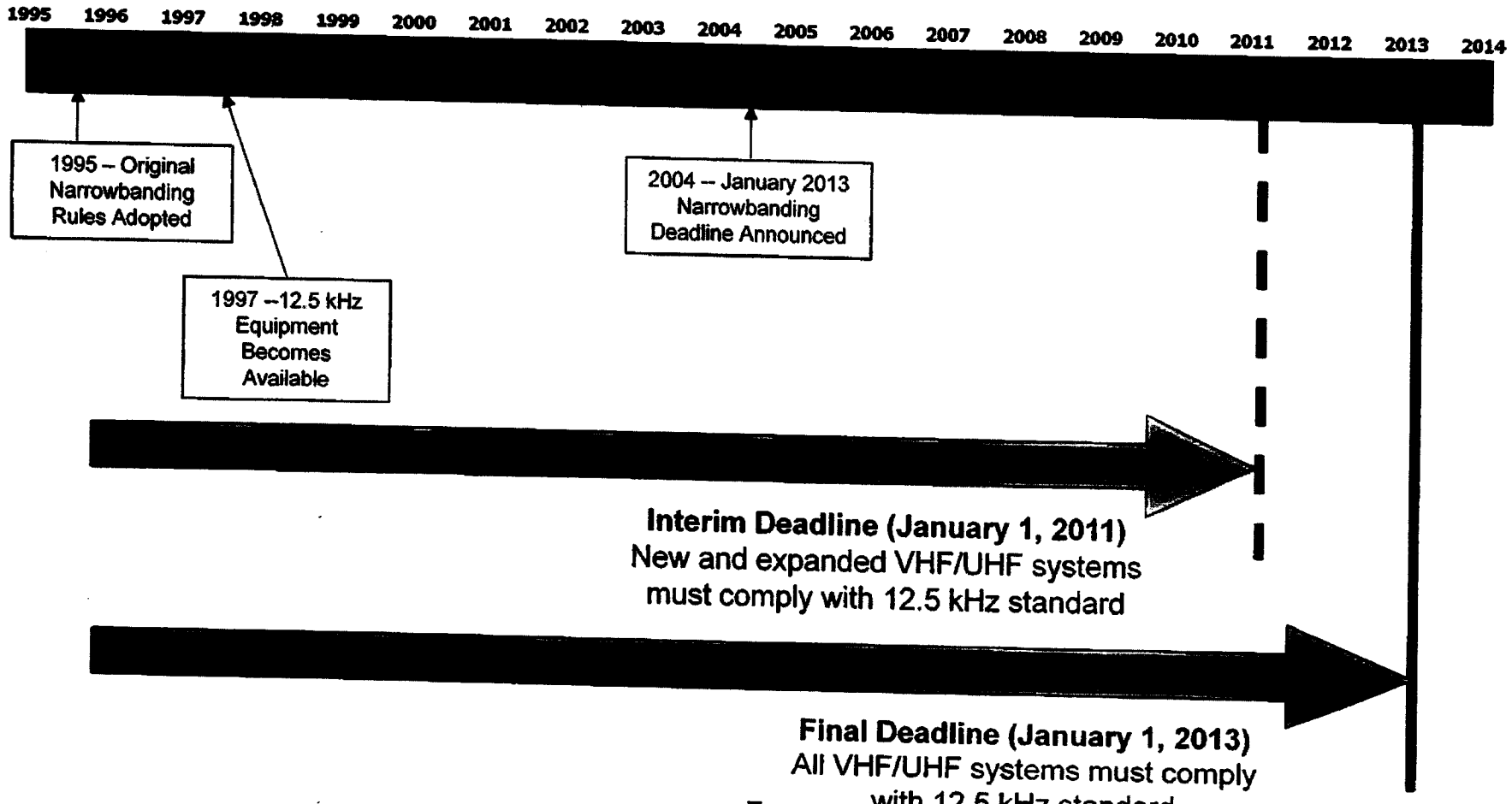

Why Meeting the Deadline Is Important

- After January 1, 2013, FCC interference rules will not protect non-compliant wideband systems from harmful interference
- Systems that fail to narrowband by the deadline could create interference or interoperability problems for systems that have narrowbanded
- Wideband equipment will not be available after January 1, 2013

The Deadline Will Not Be Extended

- The Commission has recently reaffirmed the January 1, 2013 deadline
- Licensees facing unique circumstances may request waivers, but waiver requests must meet a high standard and are not routinely granted
- Licensees concerned about meeting the deadline should focus on planning and preparation
- Informal contact with the Bureau is encouraged prior to any filing

Future Narrowbanding to 6.25 kHz Technology

- Narrowbanding rules provide for eventual migration from 12.5 kHz to 6.25 kHz bandwidth
  - Intended to further increase efficiency and channel availability
- The FCC has not set a deadline for 6.25 kHz implementation
  - No deadline will be established without further notice and comment
- Licensees may narrowband to 6.25 kHz voluntarily
  - All 150-174 MHz and 421-512 MHz equipment certified after January 1, 2013 must include 6.25 kHz capability

Outline

- Narrowbanding Basics
- Narrowbanding Deadlines
- How to Prepare for Narrowbanding
- Modifying Licenses to Reflect Narrowbanding
- Additional Information Resources

Preparing for Narrowbanding

- Prepare NOW – January 1, 2013 is approaching fast!
- Determine how narrowbanding will affect your system
  - Will existing equipment need replacement/retuning?
  - Will additional sites be needed to maintain coverage?
  - Is coordination with neighboring systems required?
- Develop a compliance plan
  - Timeline
  - Funding requirements
- Contact the Public Safety and Homeland Security Bureau with questions/concerns

Availability of Narrowband Equipment

- All VHF/UHF equipment certified since 1997 has 12.5 kHz capability
  - Many systems have equipment with dual 25 kHz/12.5 kHz capability, making the narrowbanding transition easier
- Check with your vendor to determine whether your existing system equipment is narrowband-capable or needs modification/replacement

Funding Considerations

- Cost of narrowbanding will vary depending on the nature of each licensee's existing system
  - Narrowbanding generally does not require a system upgrade, though licensees may combine narrowbanding with other scheduled upgrades or modifications
  - Narrowbanding costs may be more substantial for older systems that require replacement of existing equipment
- Funding to support narrowbanding may be available through federal grant programs (agency contact information provided in "Additional Information Resources" section)

Outline

- Narrowbanding Basics
- Narrowbanding Deadlines
- How to Prepare for Narrowbanding
- Modifying Licenses to Reflect Narrowbanding
- Additional Information Resources

Licensing Modifications

- Licensees should modify their licenses to add a narrowband emission designator prior to commencing narrowband operations
  - Licensees may maintain both narrowband and wideband designators on their licenses while they are transitioning their systems
- Once the narrowband transition is complete, licensees should modify their licenses by removing the wideband emission designator
- These actions can be completed online using ULS

Frequency Coordination

- Frequency coordination is not required for addition of narrowband emissions designator or removal of wideband emissions designator, provided no other changes are being made
  - For licensees north of Line A or west of Line C, reduction in bandwidth does not require Canadian coordination
- Frequency coordination is required when narrowbanding is combined with other modifications that alter a station's footprint
  - E.g., changes in location, antenna height, ERP, as well as when switching from analog to digital emissions

Outline

- Narrowbanding Basics
- Narrowbanding Deadlines
- How to Prepare for Narrowbanding
- Modifying Licenses to Reflect Narrowbanding
- Additional Information Resources

PSHSB Website and Contacts

Roberto Mussenden
202-418-1428
Roberto.Mussenden@fcc.gov
Zenji Nakazawa
202-418-7949
Zenji.Nakazawa@fcc.gov

Narrowbanding Mailbox: narrowbanding@fcc.gov

Bureau Website:

http://www.fcc.gov/pshs/public-safety-spectrum/narrowbanding.html

Other Resources

- http://www.aaacomm.com/fcc_licensing.htm
- http://www.mrfac.com/Mandatory-Narrowbanding.html
- http://www.npstc.org/narrowbanding.jsp
- http://www.IMSAsafety.org

Federal Resources

- DHS
  - Office of Emergency Communications (oec@hq.dhs.gov)
  - SAFECOM
    - http://www.safecomprogram.gov/SAFECOM/grant/default.htm
- FEMA
  - www.fema.gov/grants
  - http://www.fema.gov/government/grant/iecgp/index.shtm
    Interoperable Emergency Communications Grant Program
- DOJ National Institute of Justice
  - http://www.ojp.usdoj.gov/nij/topics/technology/communication/radios/fcc-narrowbanding.htm

ARIZONA WATER COMPANY
WORK AUTHORIZATION

W.A. NUMBER: 1-4932
P.E. NUMBER:
BUDGET ITEM NO.: B-1
SHEET NO.: 1 of 2

SYSTEM: SEDONA/VALLEY VISTA
DIVISION: VERDE VALLEY
TAX CODE: 0976

WORK TO START BY: UPON AUTHORIZATION
WORK TO BE FINISHED BY: WITHIN 180 DAYS

DESCRIPTION OF WORK:

Replace radios at 16 sites to be compliant with FCC narrow band requirement. Sites Include: Sedona Office, Harmony High Park Tank, Rainbow Well No. 6, Williams Well No. 7, Southwest Center Well No. 8, Harmony Hills Well No. 12, Sedona Golf Resort Tank, Rancho Rojo Well, Sedona Golf Resort Well, Valley Vista Well No. 13, Montezuma Hills Tank, Wickiup Mesa Tank, Rimrock Well No. 1, Rimrock Well No. 2, Montezuma Haven Well No. 3, and Pinewood Unit 9 Tanks. Construct in accordance with attached drawings and/or Arizona Water Company specifications.

FACTORS JUSTIFYING WORK:

APPROVED 2012 BUDGET ITEM ($125,000)
The FCC narrow banding mandate requires that all existing radios that operate on channel bandwidths of 25 kHz be converted to 12.5 kHz or less on or before January 1, 2013. These radio replacements and modifications are needed in order for the Company to provide safe, reliable, and adequate water service.

COST ESTIMATE		AUTHORIZATION	DATE
COST OF WORK:		PREPARED BY: Mike Loggins ML 5-4-12	4-26-12
MATERIAL	11,000		
LABOR	8,400	REVIEWED FOR ESM/ROW VERIFICATION: Charles Briggs CB 5-4-2012	05-04-2012
CONTRACT PORTION	93,371		
OVERHEAD	12,405	REVIEWED BY: Andy Haas AJH 5-7-12	4-26-12
TOTAL AUTHORIZED EXPENDITURES CHARGEABLE TO THIS W.A.	$ 125,176		
FUNDS RECEIVED:		APPROVED BY ENGINEERING: Fredrick Schneider FS 5-4-12	5-1-2012
CONTRIBUTIONS RECEIVED	0		
REFUNDABLE ADVANCES RECEIVED	0	APPROVED BY FINANCE: Joseph Harris	5/2/12
TOTAL CONTRIBUTIONS/ADVANCES	0		
NET CASH REQUIRED	$ 125,176	AUTHORIZED BY PRESIDENT: William Garfield WM	5-4-2012

COMMENTS:

There are two separate contracts with Global Data Specialists associated with this WA:
1. Sedona
2. Valley Vista

CONSTRUCTION RELEASE:

RELEASED TO CONSTRUCTION
Authorized by FRED SCHNEIDER
Date 5/4/2012

AFH

ARIZONA WATER COMPANY

WORK AUTHORIZATION - DETAIL SHEET

W.A. NUMBER: 1-4932
P.E. NUMBER:
BUDGET ITEM NO.: B-1
SHEET NO.: 2 of 2

RETIREMENT PROPERTY UNITS	PLANT PROPERTY ACCOUNT	UNIT DESCRIPTION	QUANTITY	YEAR INSTALLED AND W.A. NUMBER

PROJECT DESCRIPTION:

Replace radios at 16 sites to be compliant with FCC narrow band requirement. Sites Include: Sedona Office, Harmony High Park Tank, Rainbow Well No. 6, Williams Well No. 7, Southwest Center Well No. 8, Harmony Hills Well No. 12, Sedona Golf Resort Tank, Rancho Rojo Well, Sedona Golf Resort Well, Valley Vista Well No. 13, Montezuma Hills Tank, Wickiup Mesa Tank, Rimrock Well No. 1, Rimrock Well No. 2, Montezuma Haven Well No. 3, and Pinewood Unit 9 Tanks.

	DESCRIPTION	PLANT PROP ACCT	QUANTITY	UNIT COST	TOTAL
CONTRACT WORK	Configure RTU and onsite integration for Valley Vista	397.2	1	$ 6,525.00	$ 6,525
	Purchase Ace radio for Valley Vista	397.2	4	3,790.00	15,160
	Purchase OIT for Valley Vista	397.2	1	5,792.00	5,792
	Program and onsite integration of OIT for Valley Vista	397.2	1	5,760.00	5,760
	Conduct radio path survey for Sedona	397.2	1	4,420.00	4,420
	Electrical install for Valley Vista	397.2	1	6,500.00	6,500
	Configure RTU and onsite integration for Sedona	397.2	1	7,952.50	7,953
	Purchase Io power radio for Sedona	397.2	5	450.00	2,250
	Purchase DPSK card for Sedona	397.2	5	180.00	900
	Purchase Ace radio for Sedona	397.2	3	3,813.33	11,440
	Electrical install for Sedona	397.2	1	2,827.00	2,827
	Configure RTU and onsite integration for Rimrock	397.2	1	7,952.50	7,953
	Purchase Io power radio for Rimrock	397.2	5	450.00	2,250
	Purchase DPSK card for Rimrock	397.2	5	180.00	900
	Electrical install for Rimrock	397.2	1	2,828.00	2,828
	Shipping, bonds, and tax for Valley Vista	397.2	1	4,598.00	4,598
	Shipping, bonds, and tax for Sedona	397.2	1	2,329.50	2,330
	Shipping, bonds, and tax for Rimrock	397.2	1	2,329.50	2,330
	Replace Base Station Radio	397.1	1	655.00	655
TOTAL CONTRACT WORK					$ 93,371
MATERIALS	Purchase Wonderware software	397.2	1	$ 9,500.00	$ 9,500
	Purchase SCADA computer	397.2	1	1,500.00	1,500
	SERVICE CONNECTIONS: DOUBLE-LONG	345			
	SERVICE CONNECTIONS: DOUBLE-SHORT	345			
	SERVICE CONNECTIONS: SINGLE-LONG	345			
	SERVICE CONNECTIONS: SINGLE-SHORT	345			
	METERS	346			
TOTAL MATERIALS					$ 11,000
LABOR	Engineering Design	397.2	40	$ 50.00	$ 2,000
	Project Management	397.2	40	50.00	2,000
	TESTING FEE				
	PERMIT FEE				
	SURVEY FEE				
	FIELD INSPECTION	397.2	80	55.00	4,400
	INSTALL SERVICE CONNECTIONS: DOUBLE-LONG	345			
	INSTALL SERVICE CONNECTIONS: DOUBLE-SHORT	345			
	INSTALL SERVICE CONNECTIONS: SINGLE-LONG	345			
	INSTALL SERVICE CONNECTIONS: SINGLE-SHORT	345			
TOTAL LABOR					$ 8,400
SUBTOTAL - CONTRACT WORK, MATERIALS, AND LABOR					$ 112,771
OVERHEAD					12,405
TOTAL	REFUNDABLE PORTION ☐	NON-REFUNDABLE PORTION ☐		COST ESTIMATE	$ 125,176

AFH

WA 1-4932 - Replace Eight Wireless Telemetry and Voice Communication Units to Comply with FCC Narrowband Regulations

ID	Task Name	Duration	Start	Finish
1	**Rimrock FCC Narrow Band Schedule**	**235 days**	**2/6/2012**	**12/28/2012**
2	Update Quotes	30 days	2/6/2012	3/16/2012
3	Execute Contract Documents	20 days	3/19/2012	4/13/2012
4	Procure Materials	60 days	4/16/2012	7/6/2012
5	Program Radios	60 days	4/16/2012	7/6/2012
6	Install Radio Controls, Conduit, and Appurtenances	50 days	7/9/2012	9/14/2012
7	Start-Up	30 days	9/17/2012	10/26/2012
8	Field Troubleshooting	30 days	10/29/2012	12/7/2012
9	Project Close Out	15 days	12/10/2012	12/28/2012
10	In Service	0 days	12/28/2012	12/28/2012

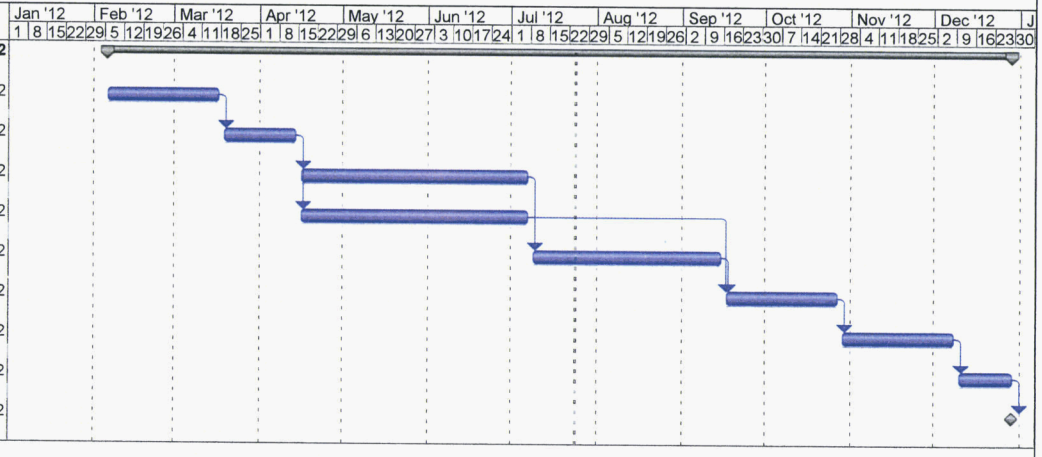

Project: Rimrock FCC Narrow Band Sc
Date: 7/24/2012

Task
Split
Progress
Milestone
Summary
Project Summary
External Tasks
External Milestone
Deadline

ARIZONA WATER COMPANY

Verde Valley Division
65 Coffee Pot Dr. Suite 7
Sedona, AZ 86336 PH: 928-282-7092

PROPOSAL/CONTRACT

CONTRACTOR: Global Data Specialists	SYSTEM: Sedona
ADDRESS: 1815 W. First Avenue, Suite 110	W.A. No(s): 1-4932
CITY, ST, ZIP: Mesa, Arizona 85202	BID DUE DATE: March 31, 2012

CONTRACTOR SUBMITS this PROPOSAL/CONTRACT to ARIZONA WATER COMPANY, an Arizona corporation (the "Company"), to perform the work and complete the project described on Page 2 (the "Project"), as an independent prime contractor.

1. Contractor certifies that it has a complete copy of, and has read, understands and accepts, the Company's General Conditions of Contract, and the Company's Construction Specifications and Standard Specification Drawings: (the "Specifications"), all of which are attached hereto. Contractor has examined the specific plans and related construction drawings for the Project (the "Drawings"), copies of which are also attached hereto. The General Conditions of Contract, Specifications and Drawings are incorporated into this Proposal/Contract. Contractor affirms that all work and materials to be furnished or purchased for the Project will be in strict conformance with the General Conditions of Contract, Specifications and Drawings.

2. Contractor represents and warrants that it has satisfied and complied with the provisions of Section 6, Contractor Understands Work and Working Conditions, of the General Conditions of Contract prior to submitting this Proposal/Contract.

3. Contractor represents that this Proposal/Contract is fair and honest in all respects, is submitted in good faith and is not submitted in collusion with any other company, entity or person.

4. Contractor acknowledges that one hundred percent (100%) Performance and Payment Bonds are required and must be provided to the Company prior to the commencement of work.

5. Prior to the commencement of work, Contractor will submit to the Company a list of all materials to be used in the Project. The materials list will include the manufacturer, part number, price and quantity included in this Proposal/Contract.

6. Contractor will furnish all labor, tools, equipment and materials required to complete the Project according to the General Conditions of Contract, Specifications and Drawings. No materials purchased by Contractor to be incorporated into the Project are subject to tax at the time of purchase and Contractor will not charge the Company for any such tax. Contractor will pay the applicable transaction privilege tax (the "Contracting Tax") on the Project after Contractor receives payment of the final Project invoice from the Company. The cost of materials incorporated into the Project which are exempt by Arizona Revised State Statues ("A.R.S.") from the Contracting Tax, for example, pipes or valves having a diameter of four (4) inches or larger, including equipment, fittings and any other related part that is used in operating the pipes or valves (A.R.S. §42-5061 B.6.), will not be included in the total cost of the labor and materials upon which the Contracting Tax is computed. Contractor retains full liability and obligation to pay the Contracting Tax and will defend and indemnify the Company against any demand or obligation to pay the Contracting Tax.

7. Contractor will maintain detailed accounting records of all materials purchased and incorporated into the Project. Such records will include all supporting original vendor invoices for all materials purchased. Following completion of the Project, Contractor will submit an itemized accounting to the Company which will include all supporting original vendor invoices and satisfactory evidence of payment thereof. The Company will not pay Contractor for materials not actually incorporated into the Project, and the disposition of such materials will remain Contractor's responsibility.

8. The Estimated Total Cost of the Project, shown on Page 2, is based on estimated labor and material quantities to be furnished. It includes an estimate of the Contracting Tax and the cost of the required Performance and Payment Bonds. Contractor will not cancel, modify or withdraw this Proposal/Contract during a ninety-day (90) period commencing on the Bid Due Date. The Company may accept this Proposal/Contract by signing and mailing, or otherwise delivering, a copy hereof to Contractor during such ninety-day (90) period. If the Company does not accept this Proposal/Contract during such ninety-day (90) period, Contractor may cancel this Proposal/Contract by giving written notice of cancellation to the Company.

9. Prior to the commencement of work, Contractor will provide the Company with a detailed construction schedule, in either Gantt or CPM form, identifying all tasks to be performed from the date of the written Commencement Notice through completion of the Project, including testing, training of Company Personnel and final Project invoicing. Contractor will provide the Company with a copy of such construction schedule documenting the progress of work on the Project at least monthly.

10. Contractor will not commence work on the Project until the Company gives Contractor a written Commencement Notice. Contractor will complete the Project within 180 calendar days after the Commencement Notice is issued.

11. Following the Company's written notice of satisfactory completion of the Project, and upon receipt of the final Project invoice from Contractor, the Company shall pay Contractor the actual total cost of the Project, which will be calculated as shown on Page 2, except that actual labor and material quantities installed/constructed will be substituted for the estimated labor and materials quantities and the Contracting Tax will be recalculated based on such actual labor and materials quantities.

12. The amount of applicable liquidated damages (or Contractor's failure to deliver or perform) within the time limit shown in Paragraph 10 may be deducted from the Company's payment of the final Project invoice. This provision shall not limit the Company's ability to terminate this Proposal/Contract for Contractor's unsatisfactory performance or failure to perform as provided in the General Conditions of Contract, Specifications or Drawings, or in this Proposal/Contract.

SPECIAL CONDITIONS:

CONTRACTOR	PROPOSAL/CONTRACT ACCEPTED:
Global Data Specialists	*ARIZONA WATER COMPANY*
By:	By:
Print Name: Duane Mooney	Print Name: Fredrick K. Schneider, PE
Title: SALES MANAGER	Title: Vice President - Engineering
Date: 4/23/12	Date: 5-4-12

AFH

ARIZONA WATER COMPANY
Verde Valley Division
65 Coffee Pot Dr., Suite 7
Sedona, AZ 86336 PH: 928-282-7092

PROPOSAL/CONTRACT

CONTRACTOR: Global Data Specialists	SYSTEM: Sedona
AZ CONTRACTOR LICENSE NO: CLASSIFICATION:	W.A. No(s): 1-4932
ADDRESS: 1815 W. First Avenue, Suite 110	BID DUE DATE: March 31, 2012
CITY ST ZIP: Mesa, Arizona 85202	BID BOND REQUIRED: ☐ Yes ☑ No

DESCRIPTION OF PROJECT: Provide Narrow Banding upgrade for the Sedona Water System Radio Controls.

1-2. MATERIALS EXEMPT FROM CONTRACTING TAX (per Paragraph 6)	QUANTITY	UNIT PRICE LABOR	UNIT PRICE MATERIALS	TOTAL COST LABOR	TOTAL COST MATERIALS
3. Total Labor to Install Exempt Materials (add the amounts in column 1)				3 0	
4. Total Exempt Materials (add the amounts in column 2)					4 0

5-6. NON-EXEMPT MATERIALS	QUANTITY	UNIT PRICE LABOR	UNIT PRICE MATERIALS	TOTAL COST LABOR	TOTAL COST MATERIALS
Configure the RTU application software	1	9630		9630	
On-Site Integration	1	6275		6275	
Lo Power Radio Replacement	10		450		4500
DPSK Card FRN 5907	10		180		1800
Electrical Install	1	5655		5655	
ACE Radio	3		3386.67		10160
Misc equipment	Lot		1280		1280
SHIPPING & HANDLING	1		240		240
7. Total Labor to Install Non-Exempt Materials (add the amounts in column 5)				7 21560.0	
8. Total Non-Exempt Materials (add the amounts in column 6)					8 $ 17980 -
9. Subtotal A (add lines 3, 7 and 8)					9 39540
10. Contracting Tax Base (multiply the amount on line 9 by 0.65)				10 25701	
11. Applicable Contracting Tax Rate				11 9.05	
12. Contracting Tax (multiply the amount on line 10 by line 11)					12 2325.94
13. Subtotal B (add lines 4, 9 and 12)					13 41865.94
14. 100% Performance and Payment Bonds Cost					14 2093.30
15. Estimated Total Cost (add lines 13 and 14)					15 43959.24

NOTE: The Estimated Total Cost includes all labor and materials for backfill, pavement replacement, chip seal, and traffic control necessary for the Project.

ARIZONA WATER COMPANY

COMMENCEMENT NOTICE

CONTRACTOR:

Mr. Duane Moody
Global Data Specialists
1815 W. First Avenue, Suite 110
Mesa, Arizona 85202

DATE: April 25, 2012
DIVISION: VERDE VALLEY
SYSTEM: SEDONA
W.A.: 1-4932

THIS IS YOUR NOTICE TO PROCEED WITH THE FOLLOWING PROJECT(S):

DESCRIPTION OF WORK:

Provide narrow banding upgrade for the Sedona water system radio controls

PERFORMANCE AND PAYMENT BONDS REQUIRED: ☒ Yes ☒ No

TOTAL DAYS ALLOWED: 180

COMPLETION DATE: October 23, 2012

Prior to the start of construction, please call Keith Self, Division Manager at 928-282-7092 to schedule a pre-construction meeting.

RECEIVED
MAY 14 2012
ARIZONA WATER COMPANY
PHOENIX - ENGINEERING

ARIZONA WATER COMPANY	GLOBAL DATA SPECIALISTS
Company	Contractor (type name)
By	By
Title Vice President - Engineering	Title Sales Manager

AFH
W:\PROJECTS\2012\VV\1-4932 SEDONA & VALLEY VIS"A RADIO NARROW BAND\AGREEMENTS\CONTRACTS\E-3-18-2 GLOBAL DATA COMMENCEMENT NOTICE 1-4932 SEDONA RADIO CONTROLS.DOCX 1/15/09 | FKS:afh | E-

ARIZONA WATER COMPANY

SPECIFICATIONS

GENERAL CONDITIONS OF CONTRACT: E-4-1

CONSTRUCTION SPECIFICATIONS: E-8-1

STANDARD SPECIFICATION DRAWINGS: E-9-1

2007 EDITION WITH 2010 REVISIONS

ARIZONA WATER COMPANY

GENERAL CONDITIONS OF CONTRACT: E-4-1

ARIZONA WATER COMPANY

E-4-1

GENERAL CONDITIONS OF CONTRACT

DEFINITIONS

A. Company. The words "Company" or "Arizona Water Company" mean Arizona Water Company, and where applicable, any division of Arizona Water Company, whose principal place of business is located at 3805 North Black Canyon Highway, Phoenix, Arizona 85015-5351 (Post Office Box 29006, Phoenix, Arizona 85038-9006).

B. Company's Authorized Representative. The words "Company's Authorized Representative" mean any officer of the Company, and any of the Company's Engineers, any Division Manager or Superintendent of the Company and/or such other person(s) designated in writing as the "Company's Authorized Representative" by the President or any Vice President of the Company.

C. Contractor. The word "Contractor" means either an individual or other entity employed to do the work as shown on the Construction Drawings and as specified herein.

D. Construction Drawings. The words "Construction Drawings" mean plans prepared by or on behalf of Arizona Water Company.

E. Invitation to Bid. The term "Invitation to Bid" means the current copy of Arizona Water Company's Form E-3-11-4 Request for Proposal/Contract or Form E-3-12-2 Invitation to Bid.

F. Contract. The word "Contract" means the written document titled "Contract" or "Proposal/Contract" when such document has been signed by an officer or other authorized representative of both the Contractor and the Company.

G. Inspector. The word "Inspector" means the Company's Authorized Representative or a person designated in writing by the Company's Authorized Representative.

GENERAL CONDITIONS OF CONTRACT

1. GENERAL

These General Conditions of Contract govern all works of installation and construction unless deviations are provided for on the Construction Drawings or in the Contract.

2. BONDS

The Contractor shall, upon request by the Company, furnish a performance bond and a material payment bond in the amount of 100% of the Contract price, in a form and from a surety acceptable to the Company.

3. LABOR AND/OR MATERIAL RELEASES

The Contractor shall supply labor and/or material releases satisfactory to the Company when requested to do so. Forms will be provided by the Company.

4. LICENSE

The Contractor shall have, as may be required by law, a valid license applicable to the work to be performed.

5. INSURANCE

The Contractor shall maintain in full force and effect insurance at no less than the following minimum amounts:

WORKER'S COMPENSATION	In accordance with requirements of the laws of the State of Arizona.
COMPREHENSIVE GENERAL LIABILITY (Including contractual liability covering death, bodily injury and property damage)	Combined single limit of not less than $1,000,000 for each occurrence.
AUTOMOTIVE LIABILITY (Including owned, non-owned and hired vehicles)	Combined single limit of not less than $1,000,000 for each occurrence.
SUBCONTRACTOR'S PUBLIC LIABILITY AND PROPERTY DAMAGE INSURANCE AND VEHICLE LIABILITY INSURANCE	Contractor shall either require each of its subcontractors to procure and to maintain Subcontractor's Public Liability and Property Damage Insurance and Vehicle Liability Insurance of the type and in the amounts specified in this Section 5 or insure the activities of its subcontractors in Contractor's own policy, in like amounts.

Such insurance shall name the Company, its officers, agents, and employees as additional insured and be primary for all purposes.

The Company will at all times have the right to require that all of such insurance be placed with insurance companies that are satisfactory to it. The Contractor shall file with the Company a certificate evidencing that each policy of insurance for the above coverages in the minimum amounts specified has been purchased and is in good standing.

Such certificate shall provide that notice be given to the Company at least thirty (30) days prior to cancellation or material change in the form of such policies or any of them. Such certificates shall be kept on file by the Company and the Company must have current certificates on file, or a certificate must accompany any bid proposal, before that proposal will be accepted by the Company.

6. CONTRACTOR UNDERSTANDS WORK AND WORKING CONDITIONS

By executing a Contract with the Company, the Contractor warrants that it has, by careful examination, satisfied itself as to the nature and location of the work, including soil conditions, the character, quality and quantity of the materials to be encountered, the character of the equipment and facilities needed preliminary to and during prosecution of the work, the general and local conditions, and all other matters which can in any way be expected to affect its work under the Contract. Verbal agreements or conversations with any officer, agent or employee of the Company, either before or after the execution of the Contract, are not binding upon the Company and shall not affect or modify any of the terms or obligations herein contained.

7. SPECIFICATIONS AND DRAWINGS

The Contractor shall keep on the job a complete copy of all drawings and specifications furnished by the Company which are applicable to the Contract with the Company. Anything mentioned in the specifications and not shown on the drawings or shown on the drawings and not mentioned in the specifications shall be of like effect as if shown or mentioned in both. In case of a discrepancy between the figures, drawings or specifications and physical conditions of the job, the matter shall be immediately submitted to the Company's Authorized Representative for decision as to adjustments, if any, because of the discrepancy; without a decision from the Company's Authorized Representative no discrepancy shall be adjusted by the Contractor, save only at its own risk and expense. Any deviation from the specifications must be approved in writing by the Company's Authorized Representative.

8. PROPERTY PROTECTION

Trees, fences, poles, underground structures and all other property shall be protected unless their removal is authorized on the Construction Drawings. Any property damaged shall be restored by the Contractor, at its expense, to the owner's satisfaction.

9. SPECIAL PERMITS, LICENSES AND INSURANCE

The Company shall obtain all permits for railroad, county, state, city and irrigation district rights-of-way as well as Forest Service, State Land Department and Bureau of Land Management permits. (Pipeline Contractors)

Whenever blasting is required, the Contractor shall obtain all permits, licenses and insurance required at its expense. (All Contractors)

The Contractor will be required to obtain, and shall certify in writing to the Company that it has obtained, all additional permits required to perform the work including, but not limited to, a National Pollution Discharge Elimination System Permit and/or an Aquifer Protection Permit as those permits relate to disposal of drilling, development and test waters and/or any other discharge or similar activity. (Well Drilling Contractors)

10. SURVEYS

The Company shall be responsible, or arrange, for all surveys required for the work covered in the Contract, unless otherwise specified.

11. BENCH MARKS, PROPERTY STAKES AND SURVEY STAKES

Bench marks, property stakes and survey stakes shall be preserved by the Contractor; in case they are destroyed or removed by Contractor or its employees, the Company will replace them at the Contractor's expense, and the Contractor and its sureties shall be liable therefore.

12. TOOLS, EQUIPMENT AND MATERIALS

The Contractor shall furnish all of the necessary tools, equipment, and pipeline materials required for the work. All material furnished by the Contractor shall be of the quality specified by the Company in its Construction Specifications (E-8-1).

13. SUPERINTENDENCE BY CONTRACTOR

The Contractor shall assure adequate superintendence of the work by a competent foreman or superintendent (with full authority to act on behalf of Contractor) satisfactory to the Company, who will be on the job at all times when work is in progress.

14. ORDER AND DISCIPLINE

The Contractor shall at all times enforce strict discipline and good order among its employees.

15. INDEPENDENT CONTRACTOR

The Contractor is an independent contractor and any provisions in the Contract, the specifications, or these General Conditions of Contract and Arizona Water Company's Construction Specifications which may appear to give the Company the right to direct the Contractor as to the details of the doing of any work to be performed by the Contractor, or to exercise a measure of control over said work, shall be deemed to mean and shall

mean, that the Contractor shall follow the desires of the Company in the results of the work only and not in the means whereby said work is to be accomplished, and the Contractor shall use its own discretion and shall have complete and authoritative control over the work and as to the details of the doing of the work.

16. PUBLIC SAFETY AND CONVENIENCE

Contractor shall at all times conduct its work so as to ensure the least possible obstruction to traffic and other inconvenience to the general public and the residents and businesses in the vicinity of the work, and to ensure the protection of persons and property.

To protect persons from injury and to avoid property damage, Contractor shall provide and maintain adequate barricades as required during the progress of the work and until it is safe to use the property for its intended purpose. The rules and regulations of the local governmental agencies and specific permit requirements respecting safety provisions shall be observed at all times.

In the case of blasting, the Contractor shall exercise extreme caution to protect the general public and personal and public property from harm or damage.

17. PROPERTY PROTECTION

Trees, fences, poles, and all other property shall be protected unless their removal is authorized by the Company. Any property damaged shall be restored by Contractor, at his expense, to Company's satisfaction.

18. RESPONSIBILITY OF CONTRACTOR

The work shall be under Contractor's responsible care and charge. Contractor shall bear all loss and damage whatsoever and from whatsoever cause, except that caused solely by the act of Company, which may occur on or to the work during the fulfillment of the Contract. If any loss or damage occurs, Contractor shall immediately make good any such loss or damage, and in the event of Contractor refusing or neglecting to do so, Company may, or by the employment of some other person, make good any such loss or damage, and the cost and expense of so doing shall be charged to Contractor.

The mention of any specific responsibility or liability imposed upon Contractor shall not be construed as a limitation or restriction of any general liability or duty imposed upon Contractor by the Contract. The reference to any specific duty or liability being made herein is merely for the purpose of explanation.

Contractor alone shall at all times be responsible for the safety of Contractor, Contractor's employees, and its subcontractors' employees, and for Contractor and its subcontractors' plant and equipment and the method of performing the work.

19. ERRORS AND OMISSIONS

If Contractor, in the course of the work, becomes aware of any errors or omissions in the Contract Documents or in the instructions, or if Contractor becomes aware of any discrepancy between the Contract Documents and the physical conditions of the site of

the work, Contractor shall immediately inform Company in writing. Any work done by Contractor after such discovery, until authorized by Company, will be done at Contractor's risk.

20. LAWS, REGULATIONS

Contractor shall give all notices required by law and comply with all laws, ordinances, rules and regulations, including, but not limited to, all applicable federal, state, local and other legally required health and safety standards, orders, rules, regulations or other laws, pertaining to the conduct of the work. Contractor shall be liable for, and shall defend and indemnify Company against and hold it harmless from, all violations of any law, ordinance, rule, regulation, standard, or order in connection with work furnished by or on behalf of Contractor. If Contractor observes that the Contract Documents are at variance with any law, ordinance, rule, regulation, standard, or order it shall promptly notify Company in writing and any necessary changes shall be adjusted as provided in the Contract for changes in the work. Contractor shall not perform any work contrary to such laws ordinances, rules, regulations, standards, or orders.

21. PERMITS, FEES AND INSPECTIONS

Permits and licenses necessary for the prosecution of the work, including, but not limited to, any National Pollution Discharge Elimination Systems (NPDES) Permits required by U.S. Environmental Protection Agency or the Arizona Department of Environmental Quality shall be secured, paid for, and complied with by Contractor.

Contractor shall be responsible for its actions and shall abide by all conditions and/or restrictions set forth in the NPDES Permit and any other permit or license required for this project.

Company shall at all times have access to the work whenever it is in preparation or in progress and Contractor shall provide proper facilities for such access and for all inspections. If the Contract Documents, the General Superintendent's instructions, laws, ordinances or any public authority require any work to be inspected or approved, Contractor shall give timely notice of its readiness for inspection.

Inspection of the work shall not relieve Contractor of any of its obligations even if defective work or unsuitable materials may have been previously overlooked by Company and accepted or estimated for payment. If any work is found not in accordance with the Contract Documents, Contractor, at its sole cost and expense, shall promptly make good such defective work.

22. CONSTRUCTION MARKING (PIPELINE ONLY)

Each job shall be marked and/or barricaded by the Contractor in such a manner that the construction is clearly visible at all times.

23. EXTRA WORK AND/OR MATERIALS

Except as otherwise herein provided, no charge for any extra work and/or material will be allowed unless the same has been ordered in writing by the Company's Authorized Representative, and the price stated in such order.

24. CHANGES

The Company shall have the right to make any changes in the work that it may determine to be necessary. If such changes affect the cost of the work, an equitable adjustment shall be negotiated. Changes shall in no way affect or void the obligations of both parties under the original Contract.

25. INSPECTION

All work and material shall be open at all times to inspection and acceptance or rejection by the Company's Inspector. Any work covered up by the Contractor prior to inspection and acceptance by the Company shall be subject to being uncovered at the expense of the Contractor for inspection by the Company. The Contractor shall give the Company reasonable notice of starting new work and shall provide, without extra charge, reasonable and necessary facilities for inspection, even to the extent of taking out portions of finished work. In case any such finished work removed is found satisfactory, however, the actual direct cost of such removal and replacement, plus 15% of such cost, will be paid by the Company; in addition, if completion of the work has been delayed thereby, the Contractor shall be granted a suitable extension of time on account of the additional work involved.

26. DEFECTIVE WORK OR MATERIAL

The Contractor shall remove, at its own expense, any work or material found defective by the Company's Inspector and shall rebuild and replace the same without extra charge; in default thereof, the same may be done by the Company at the Contractor's expense.

27. ASSIGNMENT

Neither party to the Contract may assign the Contract or sublet it in whole or in part without the written consent of the other, nor shall the Contractor assign any monies due or which may become due hereunder without the previous written consent of the Company, nor shall such consent release the Contractor from any of its obligations and liabilities under the Contract.

28. RIGHTS OF VARIOUS INTERESTS

Whenever work that is being done for the Company other than by the Contractor is contiguous to work being done by the Contractor, the respective rights of the various interests involved shall be established by the Company to secure the completion of the various portions of the work in general harmony.

29. SUSPENSION OF WORK

The Company's Authorized Representative may at any time and for any reason suspend all or any portion of the work under the Contract. This right to suspend work shall not be construed as denying the Contractor compensation for actual, reasonable and necessary expenses due to suspension to which it may be entitled.

The Company's Authorized Representative may order the Contractor to suspend any work because of certain conditions, such as inclement weather, or because the

Contractor is in violation of these General Conditions of Contract or the Construction Specifications. It is understood that compensation for expenses will not be allowed for such suspension when ordered by the Company's Authorized Representative on account of such conditions.

30. PROCEDURE OF WORK (PIPELINE ONLY)

All work under the Contract shall be planned and performed so as to cause a minimum of interference with normal vehicular and pedestrian traffic. At no time shall the Contractor completely obstruct the traffic to any business establishment during normal work hours of that business. It shall be the Contractor's responsibility to maintain facilities for ingress and egress to any business establishment. When crossing any street, not more than one-half of the street may be blocked at one time. All federal, state, county and city laws, rules and regulations relating to this subject are to be obeyed.

The Contractor shall complete any portion or portions of the work in such order of time as the Company may require. The Company shall have the right to take possession of and use any completed or partially completed portions of the work. If such prior possession or use increases the cost of or delays the work, the Contractor will be entitled to extra compensation or extension of time or both, as the Company may determine.

31. DISPUTES

All questions or controversies which arise between the Contractor and the Company, under, or in reference to, the Contract, shall be decided by the Company's Authorized Representative and a representative of the Contractor, and their decision shall be final and conclusive upon both parties.

32. CONNECTION TO EXISTING SYSTEM (PIPELINE ONLY)

Unless approved in writing by the Company's Authorized Representative, no tie-in or hot tap on the existing system shall be made unless the Company's Inspector is present. When the tie-in requires the operation of an existing valve or other control equipment, the conditions of Paragraph(s) 30 and 33 shall be complied with. The Contractor shall notify the Company twenty-four (24) hours prior to tie-in as to the exact time the Contractor plans to make tie-in so that the Company's Inspector will have sufficient time to locate valves and make necessary preliminary arrangements for shut down.

33. PLANNED INTERRUPTION OF WATER SERVICE (PIPELINE ONLY)

No valve or other control on an existing Company water system shall be operated for any purpose by the Contractor without approval of the Company's Inspector. All of the Company's water customers whose service is interrupted by a planned interruption, other than in cases of emergency, shall be notified by the Contractor at least twenty-four (24) hours before the planned interruption and advised of the probable time when the service will be restored.

34. EXISTING UTILITY FACILITIES (PIPELINE ONLY)

The Contractor shall notify all known utilities in the area of the work to be performed under the Contract and shall make arrangements to have their facilities marked in

accordance with A.R.S. 40-360.022 ("Blue Stake Law"). The Contractor shall be responsible for locating and preserving all marked facilities. Any damages to these marked facilities shall be repaired at the expense of the Contractor.

The Company will pay the cost to relocate its or other structures when such structures are found occupying the physical space of the proposed installation. It is understood that the Contractor will be reimbursed for such work only when written authorization from the Company has been obtained in advance of such work.

35. CLEANING UP

The Contractor shall remove from the Company's property and from all public and private property, at its own expense, all temporary structures, rubbish and waste materials resulting from its operations. In the event Contractor fails to do so, the Company may remove same at the expense of the Contractor.

36. WORKING HOURS (PIPELINE ONLY)

Unless stated to the contrary in the Invitation to Bid and/or so stated on the Construction Drawings, or agreed to by the Company during a Pre-Construction Conference, the Contractor shall not be permitted to perform work on Saturdays, Sundays, or Company holidays, or commence work such as tie-ins that cannot be completed during normal working hours.

37. INDEMNITY

A. The Contractor shall indemnify the Company against, and save and hold it harmless from, any and all liability, claims, demands, loss, actions, causes of action, expense, penalties, fines, assessments, damages and costs of every kind and nature for injury to or death of any and all persons, including, without limitation, employees or representatives of the Company or of the Contractor or of any subcontractor, or any other person or persons, and for damage, destruction or loss, consequential or otherwise, to or of any and all property, real or personal, including, without limitation, property of the Company or of the Contractor or of any subcontractor, or of any other person or persons, and the violation of any law, ordinance, rule, regulation, standard, or order resulting from or in any manner arising out of or in connection with the performance of the work under the Contract, howsoever same may be caused, including, without limitation, the Company's active or passive negligence. The Contractor shall also, upon request by the Company, and at no expense to the Company, defend the Company in any and all suits, concerning such injury to or death of any and all persons, and concerning such damage, destruction or loss, consequential or otherwise, to or of any and all property, real or personal, including, without limitation, suits by employees or representatives of the Company or of the Contractor or of any subcontractor, or any other person or persons, or concerning any court or administrative proceeding concerning the violation of any law, ordinance, rule, regulation, standard, or order. Excluded from this paragraph are only those injuries to or deaths of persons and damage, destruction or loss, to or of property arising from the sole negligence or willful misconduct of the Company.

B. Contractor shall indemnify the Company against, and save and hold it harmless from, any and all liability, claims, demands, damages, costs, expenses and attorney's fees, suffered or incurred on account of any breach of any obligation, covenant or other

provision of this contract, including without limitation, breach of the indemnity provisions of subsection A of this Section 37.

C. Contractor further agrees to defend, indemnify and hold harmless the Company, its directors, officers, employees, and agents, from and against any and all costs, damages, claims, expenses, violations, notices of violations, penalties, liens, assessments, and liabilities of every kind and nature, foreseeable or unforeseeable, directly or indirectly, arising from any release, removal, generation, use, storage or disposal on, under, around, or from the well site of any material, substance, or waste, hazardous or non-hazardous, including, without limitation, drilling fluids, mud, cuttings and development and test water howsoever same may be caused, including, without limitation, the Company's active or passive negligence.

38. LIENS

If at any time there shall be evidence of any lien or claim for which the Company might become liable and which is chargeable to the Contractor, the Company shall have the right to retain out of any payment then due or thereafter to become due, an amount sufficient to completely indemnify the Company against such lien or claim. If the Company determines that such lien or claim is valid, the Company may pay and discharge the same, and deduct the amount so paid from any monies which may be or become due and payable to the Contractor.

39. PAYMENT

Upon completion of the installation or construction, the Company will, within thirty (30) days after receipt of proper invoice and labor and material releases, pay the amount due the Contractor. If the Company believes that additional work, such as clean up, is required, it may deduct the total cost of such additional work from the amount to be paid to Contractor.

40. COMPANY'S RIGHT TO TERMINATE CONTRACT: DAMAGES DUE TO DELAY

If the Company finds the Contractor to be in material violation of any section of these General Conditions of Contract, Construction Specifications or Standard Specification Drawings or if the Contractor refuses or fails to prosecute the work, or any separable part thereof, with such diligence as will insure its completion within the time specified or any extension thereof, or fails to complete said work within such time, or when any other cause exists to justify such action, the Company may, without prejudice to any other right or remedy, by written notice to the Contractor, terminate its right to proceed with the work or such part of the work as to which there has been such violation, delay or other cause.

In the event the Contractor's right to proceed is terminated, the Company may take over the work and take possession of, and utilize in completing the work, such materials as may be on the site of the work and necessary therefore and prosecute said work to completion by whatever method it may deem expedient. The Contractor and its sureties shall be liable to the Company for any excess cost caused thereby.

In the event the Contractor's right to proceed with the work is terminated, the Contractor shall not be entitled to receive any further payment until the work is completed or the job is canceled. If the unpaid balance of the Contract price exceeds the expense of finishing

the work, including compensation for additional managerial and administrative services, such excess shall be paid to the Contractor. If such expenses exceed such unpaid balance, the Contractor shall pay the difference to the Company.

41. GUARANTEE

The Contractor shall guarantee all labor and workmanship and any materials it installs for a period of one year following the date of completion and acceptance by the Company. If any portion of the work or any of the materials become defective within the guarantee period, the Company will notify the Contractor of such defect. The Contractor must repair any defect within fifteen (15) days of such notification. If repairs are not completed within this time period, the Company may repair the defect, or cause such defect to be repaired, and the cost of such repairs shall be paid by the Contractor. The Company reserves the right to determine which defects are the result of poor labor and workmanship and which are caused by defective materials.

42. LIQUIDATED DAMAGES FOR NON PERFORMANCE: REQUEST FOR EXTENSION(S) OF TIME

Time is of the essence in the Contract. The time period required for completion of the work will be specified in the Contract. The Contractor agrees that the Company will suffer substantial damages in the event the Contractor fails to complete the work within the agreed upon time period. The Contractor and the Company agree that since it would be impracticable or extremely difficult to precisely fix such damages, a reasonable approximation of such actual damages suffered by the Company shall be a sum equal to 0.5% of the Contract price for each working day beyond the time period for completion of the work specified in the Contract.

Request by the Contractor for extensions of the time period shall be in writing and shall not become effective until approved in writing by the Company's Authorized Representative.

43. PAYMENT FOR REQUIRED TESTING

Whenever testing is required by any governmental agency or by the Company to assure conformance of the Contractor's work with the appropriate standard, it will be paid for as follows:

a. For testing required under permits obtained by the Company or testing specifically requested by the Company, the cost of the first test will be paid for by the Company. In the event of failure of the first test, the cost of all further testing associated with the failure will be paid by the Contractor.

b. For testing required under permits obtained by the Contractor, all costs will be paid by the Contractor. Testing of the pipeline for pressure and leakage will be included in the Contract price.

44. CONTRACT DEADLINES AND BONDS REQUIREMENTS

The time limits to be allowed for the completion of any work covered in the Contract shall be established as follows: In the proposal submitted to the Company, in response to the Invitation to Bid, the Contractor shall state the number of calendar days required for completion of the work. The time required will become a part of the Contract. When the Company is ready to proceed with the work, a Commencement Notice will be issued by the Company to the Contractor by mail. The Commencement Notice will allow the time required in the Contract plus ten (10) calendar days and will indicate the final day of the time allowed. The work cannot begin until the Company has received a performance bond and materials payment bond for the Contract price unless the bonds have been waived under the special conditions section of the Contract. The additional ten (10) days is the allowance for time to deliver the Commencement Notice to the Contractor and for the Contractor to return the performance bond and materials payment bond to the Company. Time extensions will be granted if warranted, and only at the time of the delay, thus extending the final day of the time allowed.

If the Company elects not to require a performance bond and a material payment bond for the work, the cost of the bonds will be deducted from the proposed total cost and the Contract will reflect this reduced cost and the bonds requirements will be waived under special conditions of the Contract.

ARIZONA WATER COMPANY

CONSTRUCTION SPECIFICATIONS: E-8-1

ERRATA 2010

CONSTRUCTION SPECIFICATIONS FOR THE INSTALLATION OF WATER DISTRIBUTION SYSTEMS DUCTILE IRON

DEFINITIONS

A. Company. The words "Company" or "Arizona Water Company" mean Arizona Water Company, and where applicable, any division of Arizona Water Company, whose principal place of business is located at 3805 North Black Canyon Highway, Phoenix, Arizona 85015-5351 (Post Office Box 29006, Phoenix, Arizona 85038-9006).

B. Company's Authorized Representative. The words "Company's Authorized Representative" mean any officer of the Company, and any of the Company's Engineers, any Division Manager or Superintendent of the Company and/or such other person(s) designated in writing as the "Company's Authorized Representative" by the President or any Vice President of the Company.

C. Contractor. The word "Contractor" means either an individual or other entity employed to do the work as shown on the Construction Drawings and as specified herein.

D. Construction Drawings. The words "Construction Drawings" mean plans prepared by or on behalf of Arizona Water Company.

E. Contract. The word "Contract" means the written document titled "Proposal/Contract" when such document has been signed by an officer or other authorized representative of both the Contractor and the Company.

CONSTRUCTION SPECIFICATIONS
FOR THE INSTALLATION OF WATER DISTRIBUTION SYSTEMS
DUCTILE IRON

1. GENERAL

All work is to be completed in a safe, workmanlike manner and in accordance with these Construction Specifications; any deviation therefrom must be approved in writing by the Company.

Installations must conform with the requirements of all governmental regulating agencies and the cost of conforming to such regulations must be included in the unit bid prices. Examples of such regulations, without attempting to be inclusive, are:

a. Special compaction and paving for street crossing.
b. Shoring when required because of the trench depth.
c. Closing a trench in those areas where no open trench is allowed overnight.
d. Barricading and traffic control as required.

2. LOCATION MARKING

Alignment stakes as required in the opinion of the Company shall be furnished by the Company to the Contractor and shall be set by the Company at agreed upon intervals and offsets. Under normal circumstances these will reference the pipeline location five feet (5') into the right-of-way measured from property pins. Grade stakes will be provided only when the Construction Drawings show a pipeline depth other than covered in these Specifications. It is the responsibility of the Contractor to preserve all survey work.

3. TRENCH EXCAVATION

The trench location is to be determined by the Construction Drawings.

FOR 8-INCH OR SMALLER PIPE: The depth of the trench prior to pipe laying shall be such that the finished pipeline shall have between thirty-six inches (36") and forty-two inches (42") of cover unless otherwise specified on the Construction Drawings.

FOR 12-INCH AND LARGER PIPE: The depth of the trench prior to pipe laying shall be such that the finished pipeline shall have between forty-eight inches (48") and sixty inches (60") of cover unless otherwise specified on the Construction Drawings.

The width of the trench at and below the level at the top of the pipe shall be a minimum of twelve inches (12") plus the outside diameter of the pipe barrel and a maximum of twenty-four inches (24") plus the outside diameter of the pipe barrel.

The bottom of the trench shall be accurately graded to provide a uniform bearing for each length of pipe for the full length of the pipe. If the native material on the trench bottom can be reasonably dug by hand, bell holes shall be dug for the joints so that the joints in no way support the pipe. When native materials such as rock are encountered during trenching that will not provide a uniform support for the pipe, the trench will be over-excavated an additional six inches (6") and suitable bedding material will be placed in the trench.

Bedding material will be placed by hand in four-inch (4") lifts and compacted to ensure uniform compaction and to eliminate any voids under the pipe. When the space between the pipe and trench bottom varies, this must be backfilled and compacted in four-inch (4") lifts to the mid-section of the pipe.

Whenever the trench is over-excavated for whatever reason, the trench bottom will be brought up to the correct depth at the Contractor's expense using either method (a) or (b) as follows:

a. A.B.C. material shall be used and compacted to a uniform density of not less than 80% of the maximum density as determined by AASHTO T-99 method A and T-191.

b. Native material 100% of which will pass through a one and one-half inch (1½") screen and at least 20% of which will pass through a number-8 screen shall be used and compacted to a uniform density of not less than 85% of the maximum density as determined by AASHTO T-99 method A and T-191.

4. MATERIALS TO BE PROVIDED BY CONTRACTOR

Unless otherwise specified on the Construction Drawings or in the Contract, the Contractor will supply all of the necessary materials which will become a permanent and integral part of the water distribution system, including concrete blocking, anchors, backfill material, paving material and supplies used during the prosecution of the work. All materials provided by the Contractor to construct the water distribution system must be NSF Standard 61 approved. All potable water pipes and fittings shall have NSF-PW seal. Construction materials used in the water system shall be lead free as defined at AAC R28-4-504 and R18-1-101. The Contractor will provide the following m aterials:

a. FIRE HYDRANTS: Mueller Super Centurion 250 Fire Hydrant, meets ANSI/AWWA C502 Standard, Model No. A-423, 5¼" main valve opening, three way, 6" Mechanical Joint Shoe, 1½" pentagon operating nut, color - yellow, drain open, open direction - left, 4' or 4'6" bury depending on application. For pumper and hose nozzle inform ation see below.

(1) 1 - 4" Pumper Nozzle, NST and 2 – 2½" Hose Nozzles, NST. (These locations only: Ajo, Casa Grande, Coolidge and San M anuel.)

(2) 1 – 4½" Pumper Nozzle, NST and 2 – 2½ " Hose Nozzles, NST. (These locations only: Apache Junction, Arizona City, Lakeside, Oracle, Overgaard, Pinewood, Rimrock, Sedona, Sierra Vista, White Tank and Winkelman.)

(3) 1 – 4½" Pumper Nozzle, NST and 2 – 2½" Hose Nozzles, NPT (Bisbee only.)

(4) 1 - 3" Pumper Nozzle GA 6-350 (6 threads per inch, 3.50 pitch diameter) and 2 – 2½" Hose Nozzles, NPT (Miami only.)

(5) 1 – 3½" Pumper Nozzle GA 6-411 (6 threads per inch, 4.11 pitch diameter) and 2 – 2½" Hose Nozzle, NST (Superior only.)

b. FITTINGS: Manufactured by Tyler or Union. Crosses, Elbows, Tees, Cap, Reducer, Adapter, Plug, Blind Flange and Tapped Flange; Ductile Iron, Class 350, SSB, Cast Iron Cement Lined.

(1) Foster Adaptors for MJ, made by Infact Corporation: Available in size 4" to 16". Part No. 4" = 4FA-BC, 6" = 6FA-BC, 8" = 8FA-BC, 10" = 10FA-BC, 12" = 12FA-BC, 16" = 16FA-BC.

c. DETECTOR CHECK VALVE: Mueller/ Hersey EDC III, iron body, including 5/8" x ¾" Trim Kit. Trim Kit Part No.: 4" = 282080, 6" = 282082, 8" = 282085, 10" = 282496.

d. GATE VALVES: Mueller Resilient Wedge Gate Valves, meets AWWA C509 specification, 250 psig, Non-rising stem, Part No. A-2360 sizes 4" through 12" ; Part No. A-2361 sizes 14" through 36", low zinc stems, epoxy coated inside and outside to meet the NSF 61 rating. The bonnet and stuffing box shall have 304 stainless steel bolts/nuts.

e. TRACER WIRE and WARNING TAPE:

1. TRACER WIRE: Shall be direct bury AWG #14 solid copper wire, Color: Blue.

2. WARNING TAPE: Reef Industries, Standard Terra Tape in 3" widths. Color: Blue and imprinted 'Arizona Water Company'.

f. AIR RELEASE VALVE: Crispin Model AR10 with 1" NPT inlet and ½" NPT outlet, cast iron body and top flange; with a 5/64" orifice with stainless steel valve sealing faces and BUNA-N rubber.

g. PRESSURE RELIEF VALVE: Watts 174A, Model M, 2" inlet, 2" outlet, Bronze Body, 30lb. to 150lb. pressure range.

h. MEGA LUG: Mechanical Joint restraint made of ductile iron conforming to ASTM 536-80, 250 psi made by EBAA Iron, Inc., series 1100 or equal.

i. METER BOXES:

(1) Concrete Box with a steel regular lid, Number 1: Tucson specification.

(2) Concrete Box with a steel regular lid, Number 2, 3, and 4: Phoenix specification.

j. PIPE, COPPER: Type K soft copper in 60 or 100-foot coils, per ASTM B88.

k. PIPE, DUCTILE IRON: Ductile Iron Pipe, Cement Lined, Push-on, conform to current ANSI/AWWA Specification A21.51/C151, Pressure Class 350 (sizes 4" through 12"), Pressure Class 250 (sizes 14" through 20"), or Pressure Class 200 for 24" through 36" pipe. Vendors:

(1) Pacific States Cast Iron Pipe Company
(2) Griffin Pipe
(3) United States Pipe and Foundry Company
(4) American Ductile Iron Pipe
(5) Clow Pipe (McWane, Inc.)

l. PIPE, PLASTIC: Plastic pipe, C-900 PVC per ANSI/AWWA C900, Class 150, sizes 6" through 12". NSF61 approved. Furnished in laying lengths of 20'. The barrel shall conform to the outside dimensions of steel pipe (IPS) or cast iron (CI) pipe equivalent and the wall thickness of dimension-ratio (DR) 18.

m. POLYETHYLENE ENCASEMENT (Polywrap): For all pipeline and related fittings installed, EXCEPT for the Coolidge Division. Minimum 8 Mil. and installed per AWWA C105/A21.5-93 and ASTM A-674-89. Manufactured by the Pacific States Cast Iron Pipe Company. The wrapping tape shall be minimum 10 mil. vinyl tape. No duct tape shall be used.

n. COUPLING: Mueller, straight three part union, tested to meet ANSI/AWWA C800, H15403, conductive com pression.

Mueller, H15428, straight coupling, conductive compression by male iron pipe, tested to meet ANSI/AWWA C800 specification. Size: 2".

Mueller, H15451, straight coupling, conductive compression by female iron pipe, tested to meet ANSI/AWWA C800 specification. Size: 2".

Viking Johnson brand, sold by Mueller: MaxiFit Straight (2"-24"), MaxiFitXtra Straight (4"-8") or MaxiStep Transition, tested to meet AWWA/ANSI C.219-91 specifications – certified to ISO 9001:1994 / Smith – Blair Quantum.

o. STOP, ANGLE METER, BALL: Mueller, valve, B24258, conductive compression by meter swivel nut, tested to meet ANSI/AWWA C800, size 5/8 " x ¾" x ¾" for a ¾" service or size 1" for a 1" service.

Mueller, valve, B24265, female pipe thread by meter swivel nut, tested to meet ANSI/AWWA C800, size 5/8" x ¾" x ¾" for a ¾" service or size 1" for a 1" service.

p. STOP, CORP: Mueller, ball valve, B25008, taper thread by conductive compression, tested to meet ANSI/AWWA C800 specification, sizes: ¾", 1" and 2".

Mueller, ball valve, B25028, iron pipe thread by conductive compression, tested to meet ANSI/AWWA C800 specification. Sizes ¾", 1", and 2".

Mueller, 300 Ball Curb Valve, B-25122, taper thread by conductive compression, tested to meet ANSI/AWWA C800 specifications, size: 2". (2" service)

q. STOP, CURB: Oriseal valve, H10291, iron pipe thread by iron pipe thread, quarter turn check, brass, tested to 300 psi working pressure, tested to meet ANSI/AWWA C800 specification, size: 2".

Mueller, B20283, Mueller 300 ball curb valve, female iron pipe by female iron pipe, quarter turn check, tested to meet ANSI/AWWA C800 specification. Size: 2". (Blow-off E-9-8-1).

r. TAPPING SADDLE: Smith Blair, Cast Bronze ASTM-B584 85-5-5-5, double strap, iron pipe threads, Models 321 and 323. Washers are silicon bronze, ASTM-B36. Gaskets are grade 60 Buna N, or Mueller bronze double strap service saddle, BR 2 B series, cast bronze, ASTM-B585, 85-5-5-5, or H16084, 200 psig, meets ANSI/AWWA C800.

s. TAPPING SLEEVE: Mueller H304 Stainless Steel Tapping Sleeve, JCM 432 18-8 Type 304 Stainless Steel Tapping Sleeve, Romac "SST" Type 304 Stainless Steel Tapping Sleeve or CASCADE-style CST-EX stainless steel pressure-rated tapping sleeve.

t. TAPPING VALVE: Mueller Resilient Wedge tapping valve, Catalog Number T-2360-16, Class 125, sizes 4" through 12"; T-2361-16, Class 125, sizes 14" to 36" all with Type 304 stainless steel fasteners; bypass valves are required on 18" – 36" valves flange by mechanical joint per ANSI/AWWA C111, iron wedge, non-rising stem. Epoxy coated interior/exterior per ANSI/AWWA C550 for NSF 61 compliance. 250 PSI range for valves 4" to 12". 150 PSI range for valves 14" to 36".

u. U-BRANCH: Mueller, H15364, 1" male iron pipe by ¾" male iron pipe, tested to meet ANSI/AWWA C800 specification. Size: 1" x ¾" x 13½", straight line.

v. VALVE BOXES: Valve Box with Cover, adjustable, Tyler 562-A or equal, made of cast iron.

w. VAULTS: Utility Vault Company, Chandler, AZ.

(1) 4484-WA concrete vault with a 3660 aluminum double torsion door with a recessed padlock hasp, two - 18" x 24" center knockouts.

(2) 575-WA concrete vault with a 4874 aluminum double torsion door with a recessed padlock hasp, two - 18" x 24" center knock outs and adjustable frame.

(3) 612-5X-WA concrete vault with a 4874 aluminum double torsion door with a recessed padlock hasp, two - 18" x 24" center knockouts.

x. VALVE, METER: Mueller, B24265-1, Mueller 300 ball angle meter valve, female iron pipe by meter nut, quarter turn check, lock wing, tested to meet ANSI/AWWA C800 specification. Size: 1".

Mueller, B25170, Mueller 300 ball straight valve, conductive compression by female iron pipe, quarter turn check, lock wing, tested to meet ANSI/AWWA C800 specification. Size: 1".

y. YOKES, METER: Relocator type copper meter yoke with horizontal inlet and outlet and meter thread ends, B24118, with lock wing Mueller 300 angle ball valve, full port, sizes: 1" x 12", 5/8" x ¾" x 7", 5/8 x ¾" x 9".

Mueller, 2" copper meter yoke with horizontal inlet and outlet and female iron pipe threads, B2423-99000, with lock wing Mueller 300 ball angle meter valves on inlet and outlet risers. Raised 1" by-pass with lock wing Mueller 300 ball valve.

The Contractor also will be required to provide the following materials, the cost of which will be included in its unit bid price:

All material and concrete for thrust blocks, other anchors, reinforcing steel; all gravel, crushed stone, A.B.C., earth, sand, or screened material which may be required; all material for bracing and shoring trenches and for construction of forms; all barricades and traffic control equipment; all material for paving replacement and any water used for compaction of backfill.

5. INSTALLATION OF MATERIALS

All materials are to be installed in accordance with manufacturer's recommendations unless otherwise directed by these S pecifications.

All pipe, fittings and valves shall be laid true to the lines, grades and locations established by the Specifications and the Construction Drawings.

The ends and inside of the pipe shall be thoroughly cleaned and inspected for damage. No damaged materials shall be installed in the water distribution system .

Whenever the work ceases for any reason, all open pipeline ends shall be tightly plugged by the Contractor. Plugs shall be watertight and approved by the company.

Concrete thrust blocks of the sizes required by the plans and specifications are to be provided at all valves, changes in direction or size, or at any other point where an unbalanced thrust due to water pressure would exist. Thrust blocks are to be formed to prevent any concrete from spilling over or into a joint.

Trench curves as shown on the Construction Drawings may be made without fittings when using push on joint pipe up to twelve inches (12") in diameter, if the deflection of the pipe does not exceed five degrees (5°) or nineteen inches (19") per eighteen-foot (18') length of pipe. The minimum radius of such curves will be two hundred five feet (205').

Prior to construction, the appropriate agency(ies) will be notified as required by the permit(s).

It shall be the Contractor's responsibility to uncover all existing water lines being connected to, and to verify the location, depth and size of pipe befor e any construction begins.

Any construction performed without the knowledge of the duly authorized representative is liable for removal and replacem ent at the Contractor's expense.

All fire hydrants, frames, covers and valve boxes, etc. shall be adjusted to finished grade prior to the placing of the asphalt concrete surface course by the Contractor (where applicable).

Air release valves shall be installed at water system high points per Standard Detail E-9-8-2.

All water services shall be set a minimum of two feet (2') on the customer's property, preferably within the P.U.E. and not within right-of-way.

Unless otherwise specified on the construction drawings, all water mains shall be installed five feet (5') from the property line inside the right-of-way or easement.

Water valves shall be spaced not more than five hundred feet (500') in commercial districts and not more than eight hundred feet (800') in other districts. Variations may be required for transmission mains or special applications.

Installation of water line casing shall be per Standard Speci fication E-9-24-1.

Tracer Wire and Warning Tape are to be installed on all mains, tees, crosses, ells and fire hydrant laterals. They will not be installed on service lines. The tracer wire will be installed on the water main 45 degrees from the vertical centerline of the pipe and shall be taped to the fittings directly and on the main every 10 feet using a minimum 10 mil vinyl tape. The tracer wire shall be placed between the valve riser and box with a minimum of 12" of wire inside. The warning tape shall be installed a minimum of two feet below the surface, being measured from final grade, directly over the center of the pipe. Any splices in the tracer wire shall be joined using waterproof connectors. Any splices in the warning tape shall be joined using minimum 10 mil vinyl tape. The tracer wire shall be tested for continuity after backfill and compaction, but before paving. Any detected damages to the wire shall be repaired before paving will be allowed.

6. BACKFILL OF WATER MAIN TRENCHES

Backfill of any excavation shall conform to the requirements of any of the governmental agencies having jurisdiction over the location. If no governmental agency having such jurisdiction specifies backfill or compaction requirements, and no special requirements are shown on the Construction Drawings, the procedure set forth in this section will apply for water line trenches.

The bedding material above the pipe and backfill material shall be compacted to a minimum of 70% compaction within a utility easement and 80% compaction within a right-of-way as determined by AASHTO T-99 method A and T-191. If water settling is used for compaction, it is the responsibility of the Contractor to prevent the pipe from floating.

The bedding material shall be either native material, 100% of which will pass through a one and one-half inch (1½") screen and at least 20% of which will pass through a number-8 screen, or imported material which conforms to M.A.G. specifications for A.B.C. or type-B

select materials. Bedding material shall be used below and around the pipe and a minimum of twelve inches (12") above the pipe. Shade and bedding material to be mechanically compacted prior to remainder of trench back-fill.

The remainder of the trench shall be backfilled with native or imported material which shall be of sound earthen material free from broken concrete, wood, broken pavement, or other unsuitable substances. Except as otherwise specified, backfill may be material containing no pieces larger than six inches (6") in greatest dimension.

Where settlement occurs, additional backfill material shall be placed and compacted and the trench shall be brought to final grade.

7. HYDROSTATIC TESTING OF COMPLETED PIPELINES

Hydrostatic testing of water pipelines will be completed before the new system is connected into the existing water system so that all testing can be done against all new materials.

The completed section of water pipeline to be tested shall be slowly filled with water with care being taken to expel all air from the pipe. If necessary, the pipe will be tapped at high points to vent air.

The Contractor shall provide all equipment and labor necessary to accomplish this testing and the price shall be included in the unit prices. The Contractor shall notify the Company in advance of the testing so that the Company can schedule a duly authorized representative to be at the site during testing. The Contractor, at its own expense, shall make any necessary repairs to the system being tested in order to cause the section being tested to meet the test limits set below. The Contractor may request authorization of the Company to connect the new pipelines to the existing system prior to completion of pressure testing when, in the Company's sole opinion and judgment, conditi ons warrant such connection.

The Contractor shall assume all responsibility to complete pressure testing to Company's specifications after such connection, including, but not limited to, isolation of the new pipelines from the existing system, if necessary.

Connections prior to completion of pressure testing shall not be made unless prior Company authorization has been obtained, and any extra expenses resulting from such connections shall be the sole responsibi lity of the Contractor.

Leakage tests will be for a period of two hours at 200± 5 psi at the point of lowest elevation; leakage may not exceed 0.1 gallons per hour per one thousand feet (1,000') of pipe per inch of diameter. If dry utilities are not installed, a second pressure test is required.

8. STERILIZATION AND FLUSHING OF COMPLETED WATER PIPELINES

Sterilization and flushing will conform to recommendations of Arizona State Department of Health Services Engineering Bulletin Number 8, latest edition, or any future Arizona Department of Environmental Quality bulletins. Contractor to follow all conditions of any discharge permit.

9. NO OTHER UTILITIES ALLOWED IN OR NEAR WATER PIPELINE TRENCHES

No other utility installations will be permitted in the water pipeline trench or within five feet (5') of the Company's water pipeline when running parallel to the water pipelines.

10. PROTECTION OF WATER MAINS NEAR SEWERS

In order to protect water mains from contamination by sewers, the installation of the water mains must conform to the following requirements:

a. Horizontal - When water lines and sewers are laid parallel with each other, the horizontal distance between them shall not be less than six feet (6'). Each line shall be laid on undisturbed or bedded material in a separate trench. Where conditions prevent the minimum horizontal separation set forth above, extra protection will be required. Extra protection shall consist of constructing the sewer main with mechanical joint ductile iron pipe or with slip-joint ductile iron pipe if joint restraint is provided, or encasing both the water main and sewer main in concrete. See Detail E-9-30-1 and E-9-30-2

The Construction Drawings shall indicate the installation requirements. The drawings showing these exceptions shall have been approved by the appropriate state and/or county health department. Refer to the diagram below for clarification.

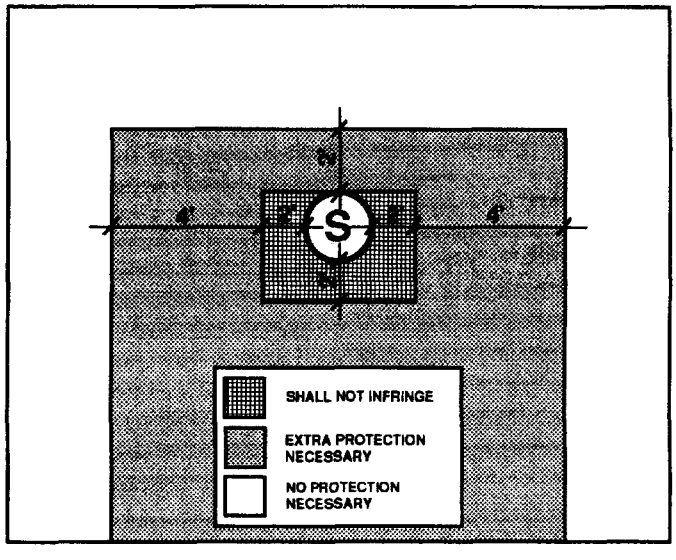

Under no circumstances will the horizontal separation between sewer mains and water mains be less than two feet (2'). All distances are to be measured from the outside of the sewer main to the outside of the water main.

b. Vertical - When a water main is parallel with or crosses a sewer main within two feet (2') above the sewer or greater than two feet (2') below the sewer, extra protection will be required. Extra protection shall consist of constructing the sewer main with mechanical joint ductile iron pipe or with slip-joint ductile iron pipe if joint restraint is provided, or encasing both the water main and sewer main in concrete. See Detail E-9-30-1 and E-9-30-2.

The Construction Drawings shall indicate the installation requirements. The drawings showing these exceptions shall have been approved by the appropriate state and/or county health department.

Under no circumstances will the vertical separation of a sewer main installed above a water main be less than two feet (2'). All distances are to be measured from the outside of the sewer main to the outside of the water main. Refer to the diagram above for clarification.

c. When unusual conditions such as, but not limited to, highway or bridge crossings prevent the water and sewer main separations required from being met, the appropriate state and/or county health department will review and may approve requests for authorization to use alternate construction techniques, materials and joints on a case-by-case basis.

d. No water pipe shall pass through or come into contact with any part of a sewer manhole. The minimum horizontal separation between water mains and manholes shall be six feet (6'), measured from the center of the manhole.

e. The minimum separation between force mains or pressure sewers and water mains shall be two feet (2') vertically and six feet (6') horizontally under all conditions. Where a sewer force main crosses above, or less than six feet (6') below, a water line, the sewer main shall be encased in at least six inches (6") of concrete for ten feet (10') on either side of the water main. Refer to the diagram below for clarification.

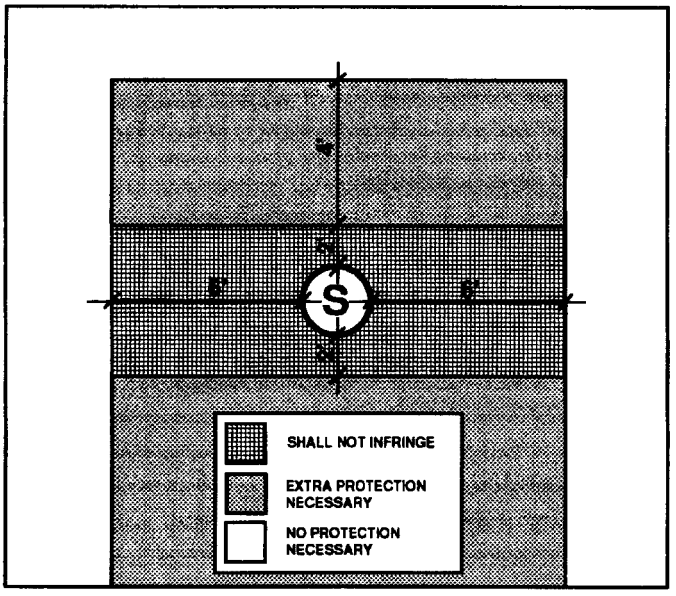

f. Sewer mains (gravity, pressure, force) shall be kept a minimum of fifty feet (50') from drinking water wells, unless the following conditions are met:

1. Water main pipe, pressure tested in place to 50 psi without excessive leakage, may be used for gravity sewers at distances greater than twenty feet (20') from drinking water wells.

2. Water main pipe, pressure tested in place to 150 psi without excessive leakage, may be used for pressure sewers and force mains at distances greater than twenty feet (20') from drinking water wells.

g. No septic tank/disposal field system shall be constructed within one hundred feet (100') of a drinking water well.

h. All distances are measured perpendicularly from the outside of the sewer main to the outside of the water main. These separation requirements do not apply to building, plumbing or individual house service connections.

i. Use Mechanical Joint ductile iron pipe with Megalug thrust restraints a minimum of ten (10') feet on each side of a sewer or storm drain crossing.

11. COMPACTION

When crossing existing water mains a minimum of 95% compaction is required to the bottom of existing mains.

Arizona Water Company requires that no slurry be permitted to contact existing cement/asbestos or ductile iron pipes, unless authorized by the company. Slurry may be poured in the bottom of the sewer trench stopping three inches (3") below the existing water main. The backfill used around the main should be AB in sufficient depth to prevent slurry from contacting existing main.

12. WATER MAIN MATERIAL SPECIFICATIONS

Ductile iron pipe (Push-on type) minimum class 350, cement lined and conform to AWWA C151.

All main line valves shall conform to AWWA C500 with a minimum working pressure of 200 psi.

All cast iron fittings to be cement lined in accordance with AWWA C104 and shall conform to AWWA C110 with a minimum working pressure of 250 psi. Except for the Coolidge System – See Note 4L.

Maximum joint deflection for 6" mechanical joint ductile iron pipe is seven degrees, seven minutes (7°, 7') or twenty-seven inches (27") per eighteen-foot (18') length pipe, for a maximum curve of one hundred forty-five feet (145').
Maximum joint deflection for 8" and 12" mechanical joint ductile iron pipe is five degrees, twenty-one minutes (5° 21') or twenty inches (20") per eighteen-foot (18') length pipe, for a maximum curve of one hundred ninety-five feet (195').

Maximum joint deflection for 6", 8" and 12" push-on joint ductile iron pipe is five degrees (5°) or nineteen inches (19") per eighteen-foot (18') length pipe for a maximum curve of two hundred five feet (205').

ARIZONA WATER COMPANY

3805 N. BLACK CANYON HIGHWAY, PHOENIX, ARIZONA 85015-5351 • P.O. BOX 29006, PHOENIX, ARIZONA 85038-9006
PHONE: (602) 240-6860 • FAX: (602) 240-6878 • WWW.AZWATER.COM

November 24, 2010

Mr. Tony Geiger
US Pipe – Waterworks Marketing Consultants
34522 N. Scottsdale Road
Scottsdale, Arizona 85226

Re: US Pipe Sentinel Fire Hydrants and Resilient Wedge Gate Valves

Dear Mr. Geiger:

Thank you for your interest in working with Arizona Water Company (the "Company") to add US Pipe Sentinel Fire Hydrants and Resilient Wedge Gate Valves to the Company's material and equipment specifications. Based on the US Pipe product information you provided and your field presentations to our operations and engineering staff, the Company is pleased to inform you that the following items are approved for use in the Company's water systems in Arizona.

Sentinel Fire Hydrant:

- Model Sentinel 250
  - 5¼" MVO
  - 4½" pumper
  - 2½" hose
  - Meets AWWA C-502 standard and approval by ULFM

Resilient Wedge Gate Valves:

- Model US Pipe A-USP0
  - Meets AWWA C-509 Full Body Cast Iron includes 304 SS Nuts, Bolts & Low Zinc Bronze Stem
  - Size range 2" thru 12"
- Model US Pipe A-USP1
  - Meets AWWA C-515 Reduced Wall Ductile Iron includes 304 SS Nuts, Bolts & Low Zinc Bronze Stem
  - Size range 14" thru 48"

E-MAIL: mail@azwater.com

We look forward to developing a long-term relationship with you and the US Pipe products. If I can be of any assistance, please call me.

Very truly yours,

Fredrick K. Schneider
Vice President – Engineering

afh

VIA EMAIL: TGEIGER4@COX.NET

ARIZONA WATER COMPANY

3805 N. BLACK CANYON HIGHWAY, PHOENIX, ARIZONA 85015-5351 • P.O. BOX 29006, PHOENIX, ARIZONA 85038-9006
PHONE: (602) 240-6860 • FAX: (602) 240-6878 • WWW.AZWATER.COM

October 19, 2010

Mr. Jim Ryan
Clow Valve Company
8121 N. 10th Avenue
Phoenix, Arizona 85021

Re: Clow Medallion Fire Hydrants and Resilient Wedge Gate Valves

Dear Mr. Ryan:

Thank you for your interest in working with Arizona Water Company (the "Company") to add Clow Medallion Fire Hydrants and Resilient Wedge Gate Valves to the Company's material and equipment specifications. Based on the Clow product information you provided and your field presentations to our operations and engineering staff, the Company is pleased to inform you that the following items are approved for use in the Company's water systems in Arizona.

Medallion Fire Hydrant:

- Model F-2545
  - 5¼" MVO
  - 4½" pumper
  - 2½" hose
  - Meets AWWA C-502 standard and approval by ULFM

Resilient Wedge Gate Valves:

- Model 2639 & 2640
  - Meets AWWA C-509 Full Body Cast Iron includes 304 SS Nuts, Bolts & Low Zinc Bronze Stem
  - Size range 2½" thru 12"
- Model 2638
  - Meets AWWA C-515 Reduced Wall Ductile Iron includes 304 SS Nuts, Bolts & Low Zinc Bronze Stem
  - Size range 14" thru 48"

We look forward to developing a long-term relationship with you and the Clow products. If I can be of any assistance, please call me.

Very truly yours,

Fredrick K. Schneider
Vice President – Engineering

lar

VIA EMAIL: JIM.RYAN@CLOWVALVE.COM

February 21, 2012

Contractor

Re: Fitting Specifications

Dear Contractor:

Effective March 1, 2012, Arizona Water Company (the "Company") has changed its fitting specifications for Ductile Iron Fittings and Ductile Iron Flanged Fittings ("Fittings"). All Fittings purchased by the Company, on the Company's behalf or installed with the intent of being conveyed to the Company, must comply with the requirements noted below.

Previous Fitting Specifications:

Fittings

Manufactured by Tyler or Union, Crosses, Elbows, Tees, Cap Reducer, Adapter, Plug, Blind Flange and Tapped Flange: Ductile Iron, Class 350, SSB, and Cast Iron Cement Lined.

New Fitting Specification:

Ductile Iron Fittings (Push-On and Mechanical Joint)

Ductile Iron Push-On and Mechanical Joint ("MJ") fittings for water lines shall be made of ductile iron per ASTM A536 and be cast in the United States of America. Fittings shall have USA cast on the fitting to designate they are made in the United States. All fittings will be manufactured and tested in accordance with ANSI/AWWA C153/A21.53 for compact design and ANSI/AWWA C110/A21.10 for full body design. In accordance with ANSI/AWWA C104/A21.4 fittings 2" – 3" will be single thickness cement mortar lined and 4" – 64" will be cement mortar lined. Fittings will be Asphaltic seal coated on the exterior in accordance with ANSI/AWWA C104/A21.4. MJ fittings with flanged end(s) will match ANSI/AWWA C115/A21.15 and ANSI B16.1 class 125 flanges. All fittings shall be NSF-61 listed for use with potable water.

Ductile Iron Flanged Fittings

Ductile Iron flanged fittings for water lines shall be made of ductile iron per ASTM A536 and be cast in the United States of America. Fittings shall have USA cast on the fitting to designate they are made in the United States. All fittings will be manufactured and tested in accordance with ANSI/AWWA C110/A21.10 design. Flange ends will match ANSI/AWWA C115/A21.15 and ANSI B16.1 class 125 flanges. In accordance with ANSI/AWWA C104/A21.4 fittings 2" – 3" will be single thickness lined and 4" – 64" will be cement mortar lined. Fittings will be Asphaltic seal coated on the exterior in accordance with ANSI/AWWA C104/A21.4. All fittings shall be NSF-61 listed for use with potable water.

If you have any questions or require further information, please contact me at 602-240-6860.

Very truly yours,

Fredrick K. Schneider, PE
Vice President - Engineering
engineering@azwater.com

afh
Enclosure

ARIZONA WATER COMPANY

STANDARD SPECIFICATION DRAWINGS: E-9-1

ERRATA 2010

ARIZONA WATER COMPANY

STANDARD SPECIFICATION DRAWINGS - DUCTILE IRON

INDEX (E-9)

E-9-1	TYPICAL GATE VALVE LOCATIONS
E-9-2	INSTALLATION OF TYPICAL VERTICAL AND HORIZONTAL GATE VALVES
E-9-3	INSTALLATION OF TYPICAL TAPPING SLEEVE AND VALVE
E-9-4	INSTALLATION OF TYPICAL VALVE SUBJECT TO NON-VEHICULAR AND VEHICULAR TRAFFIC
E-9-5	INSTALLATION OF TYPICAL THRUST BLOCKING SCHEDULE THRUST BLOCK FOR VERTICAL BENDS, AND MEGALUG THRUST RESTRAINTS
E-9-6	INSTALLATION OF TYPICAL PERPENDICULAR FIRE HYDRANT
E-9-7	INSTALLATION OF TYPICAL PARALLEL FIRE HYDRANT
E-9-8	INSTALLATION OF TYPICAL 2" BLOWOFF DEVICE, AND AIR RELEASE VALVE
E-9-9	INSTALLATION OF TYPICAL SINGLE SERVICE CONNECTION FOR A $^{3}/_{4}$" OR 1" METER
E-9-10	INSTALLATION OF TYPICAL DOUBLE SERVICE CONNECTION FOR A $^{3}/_{4}$" AND 1" METER
E-9-11	INSTALLATION OF TYPICAL 2" SERVICE CONNECTION
E-9-12	INSTALLATION OF 3" COMPOUND METER, 4" COMPOUND METER, 6" COMPOUND METER, 6" COMPOUND SERVICE, CONCRETE VAULT, AND NON-POTABLE PROPELLER METER
E-9-13	INSTALLATION OF TYPICAL 4" THRU 8" DETECTOR CHECK VALVES AND 3" THRU 10" REDUCED PRESSURE PRINCIPLE DETECTOR WITH BYPASS METER ASSEMBLY (RPDA) FOR FIRE LINE SERVICES
E-9-14	INSTALLATION OF TYPICAL PRESSURE RELIEF VALVE ASSEMBLY
E-9-15	INSTALLATION OF TYPICAL PRESSURE REDUCING STATION
E-9-16	PAINT COLOR SELECTION
E-9-17	STEEL WATER STORAGE TANK
E-9-18	HYDROPNEUMATIC TANK
E-9-19	INSTALLATION OF WELL SHELTER

E-9-20	INSTALLATION OF TYPICAL WELL WITH LINE SHAFT TURBINE PUMP
E-9-21	INSTALLATION OF TYPICAL WELL WITH SUBMERSIBLE TURBINE PUMP
E-9-22	INSTALLATION OF COLUMN PIPE, OIL TUBE AND LINE SHAFT
E-9-23	HOT TAP AND JUMPER METER CONNECTION
E-9-24	INSTALLATION OF TYPICAL WATER LINE ENCASEMENT
E-9-25	INSTALLATION OF CALCIUM HYPOCHLORITE TABLET CHLORINATOR
E-9-26	INSTALLATION OF CHAIN LINK FENCE
E-9-27	INSTALLATION OF SIDE HUNG WATER LINE SUSPENSION
E-9-28	PIPE WARNING TAPE, LOCATOR WIRE, AND LOCATOR WIRE TERMINATION
E-9-29	INSTALLATION OF A TYPICAL SAMPLING STATION
E-9-30-1	WATER AND SANITARY SEWER SEPARATION/PROTECTION PERPENDICULAR
E-9-30-2	WATER AND SANITARY SEWER SEPARATION/PROTECTION – PARALLEL

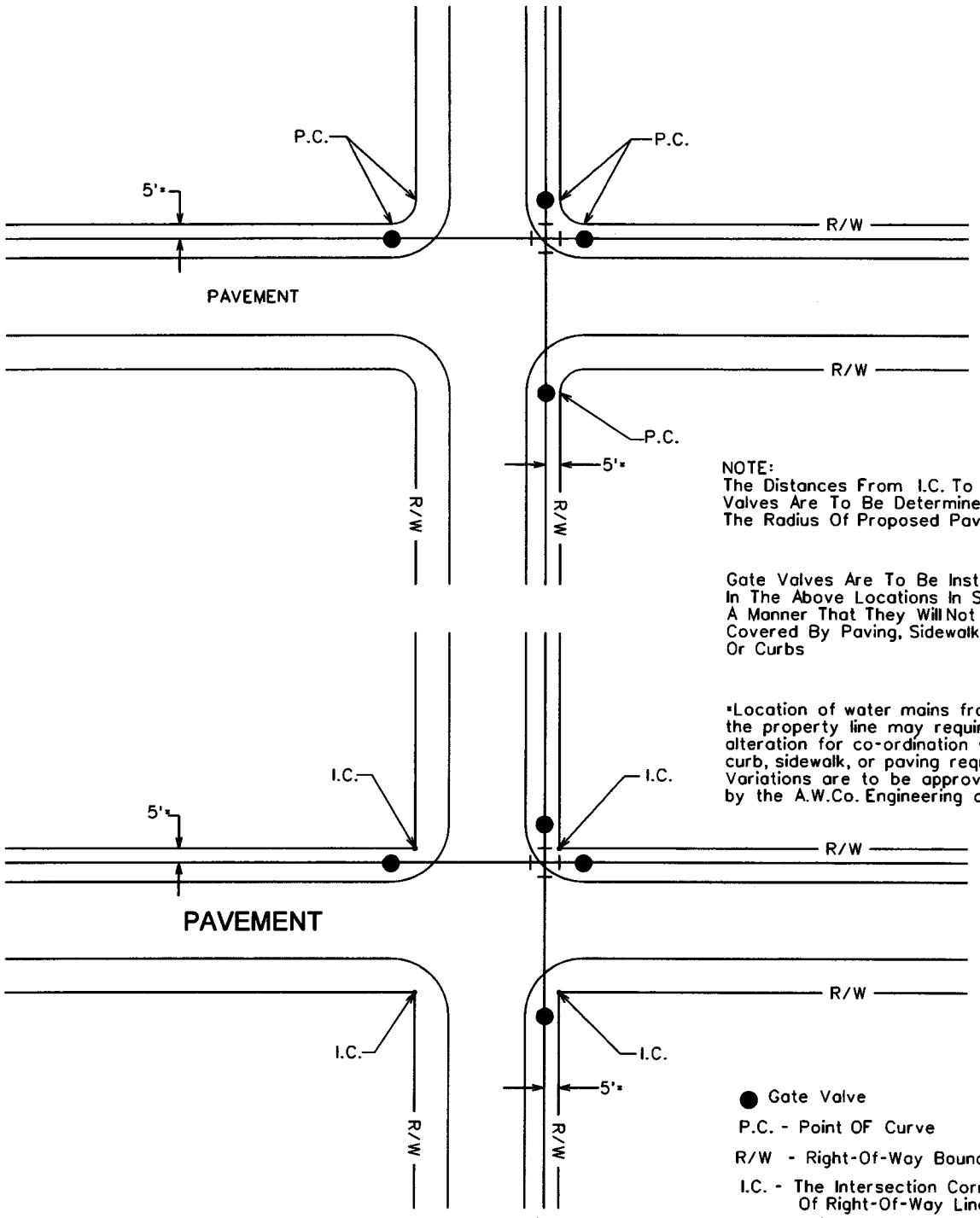

NOTE:
The Distances From I.C. To Gate Valves Are To Be Determined By The Radius Of Proposed Pavement.

Gate Valves Are To Be Installed In The Above Locations In Such A Manner That They Will Not Be Covered By Paving, Sidewalks, Or Curbs

*Location of water mains from the property line may require alteration for co-ordination with curb, sidewalk, or paving requirements. Variations are to be approved by the A.W.Co. Engineering dept.

● Gate Valve

P.C. - Point OF Curve

R/W - Right-Of-Way Boundary

I.C. - The Intersection Corner Of Right-Of-Way Lines

ARIZONA WATER COMPANY

STANDARD SPECIFICATION

FOR THE INSTALLATION OF

TYPICAL GATE VALVE LOCATIONS

DRAWN BY:	APPROVED BY:	DATE:	△ 1/31/2001	E-9-1-1
CCO	M.W.	3/20/86		

FOR 6" THROUGH 12" GATE VALVES

Mueller Resiliant Wedge Gate Valves
Catalog Number A-2360-__
ANSI/AWWA C509 Compliant

FOR 14" THROUGH 16" GATE VALVES

Mueller Resiliant Wedge Gate Valves
Catalog Number A-2361-__
ANSI/AWWA C509 Compliant

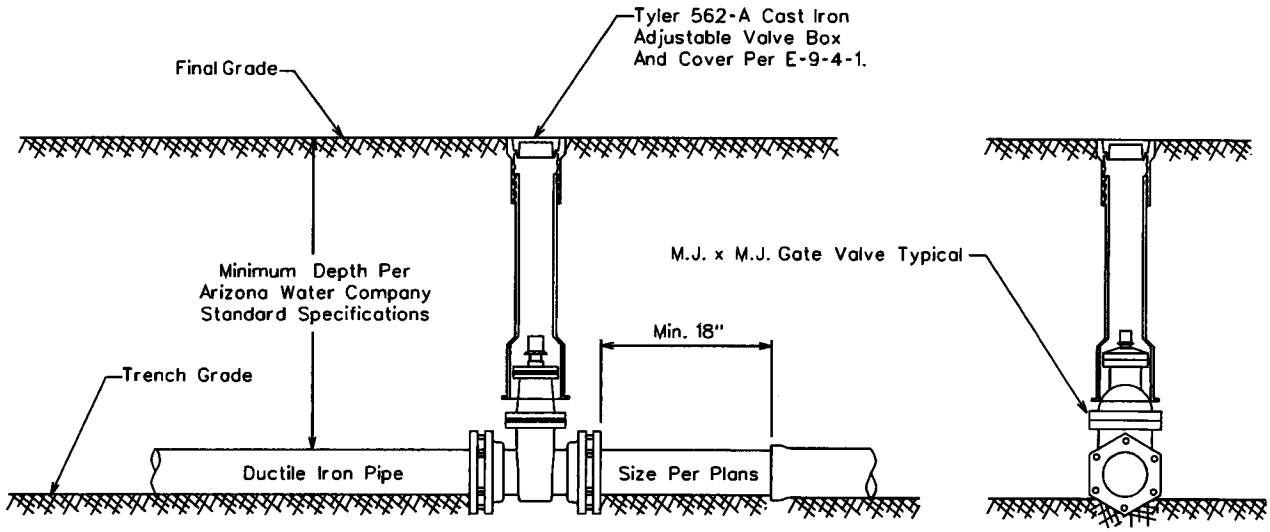

All Valves Installed On Pipe Five Feet (5') Deep And Greater Are To Be Installed With A Valve Operator Extension, Mueller Catalog No. A-26441.

ARIZONA WATER COMPANY

STANDARD SPECIFICATION
FOR THE INSTALLATION OF

TYPICAL VERTICAL GATE VALVES

DRAWN BY:	APPROVED BY:	DATE:	△ 08.23.2006	E-9-2-1
CB	MW	03.20.1986		

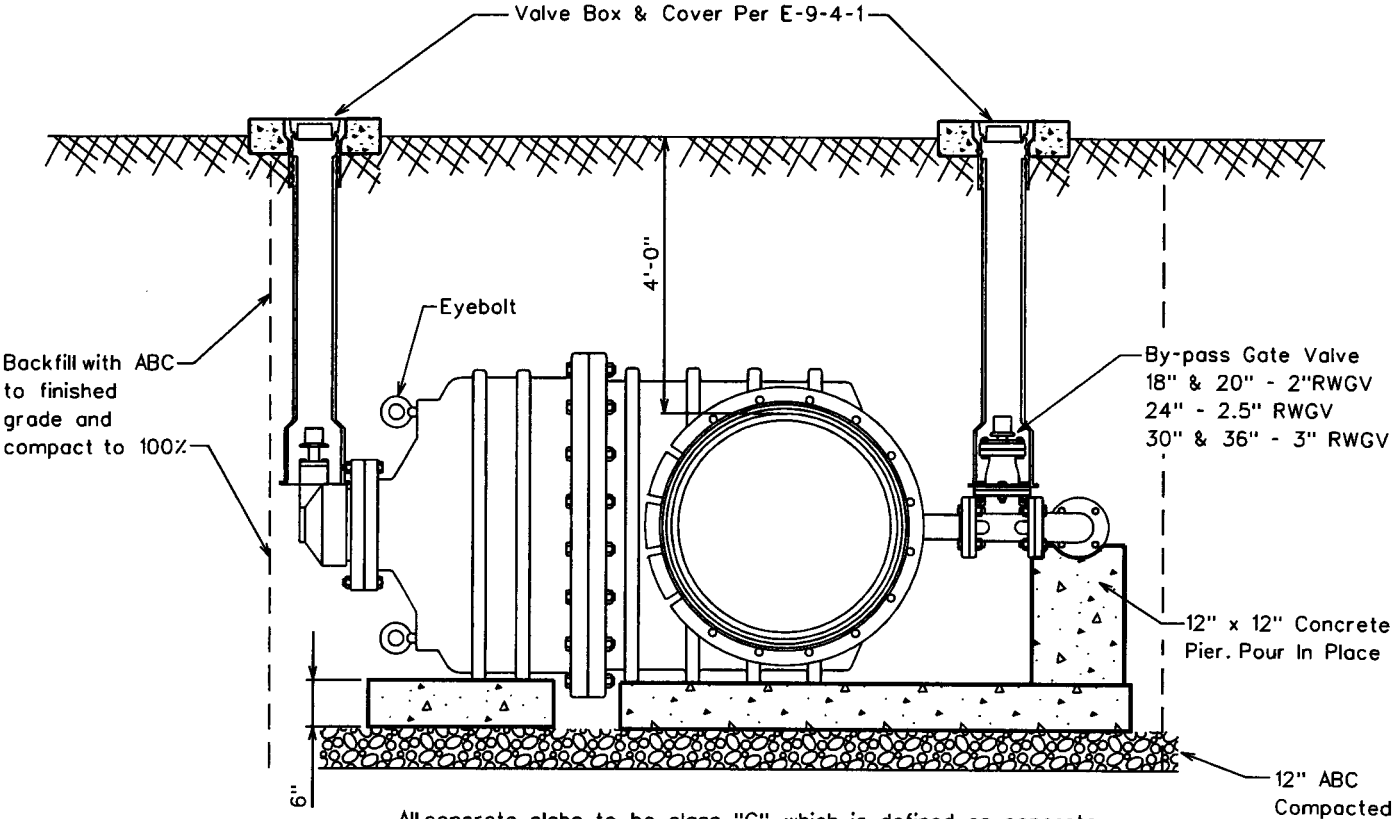

All concrete slabs to be class "C", which is defined as concrete whose minimum compressive strength at 14 days reaches 1600psi and at 28 days reaches 2000psi. per MAG Section 725, Table 725-1. Slabs to be formed and poured prior to valve installation.

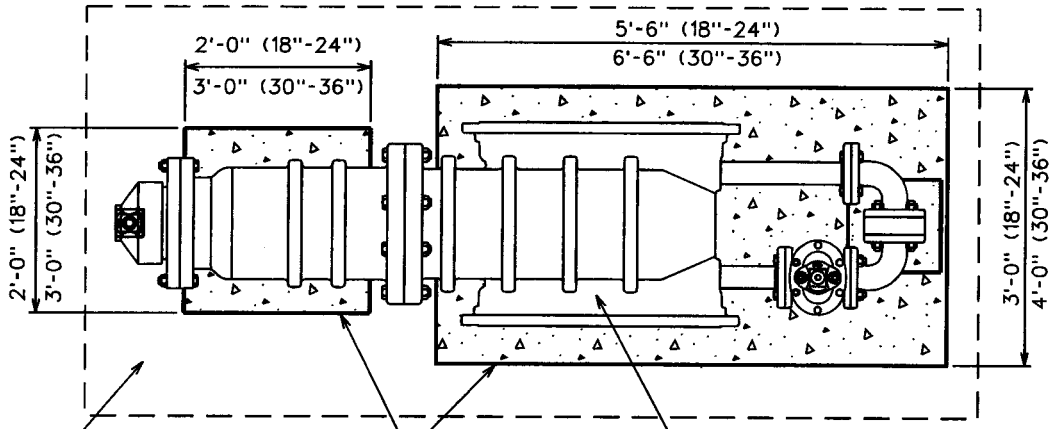

All valves installed on pipe five feet and greater are to be installed with a valve operator extension Mueller catalog No.A-26441 The distance is measured from the top of the operating nut to final grade.

ARIZONA WATER COMPANY

STANDARD SPECIFICATION

FOR THE INSTALLATION OF

INSTALLATION OF BEVEL GEARED HORIZONTAL GATE VALVES WITH BY-PASS FOR 18" AND LARGER VALVES

DRAWN BY:	APPROVED BY:	DATE:	△	
CB		12.07.2004		E-9-2-2

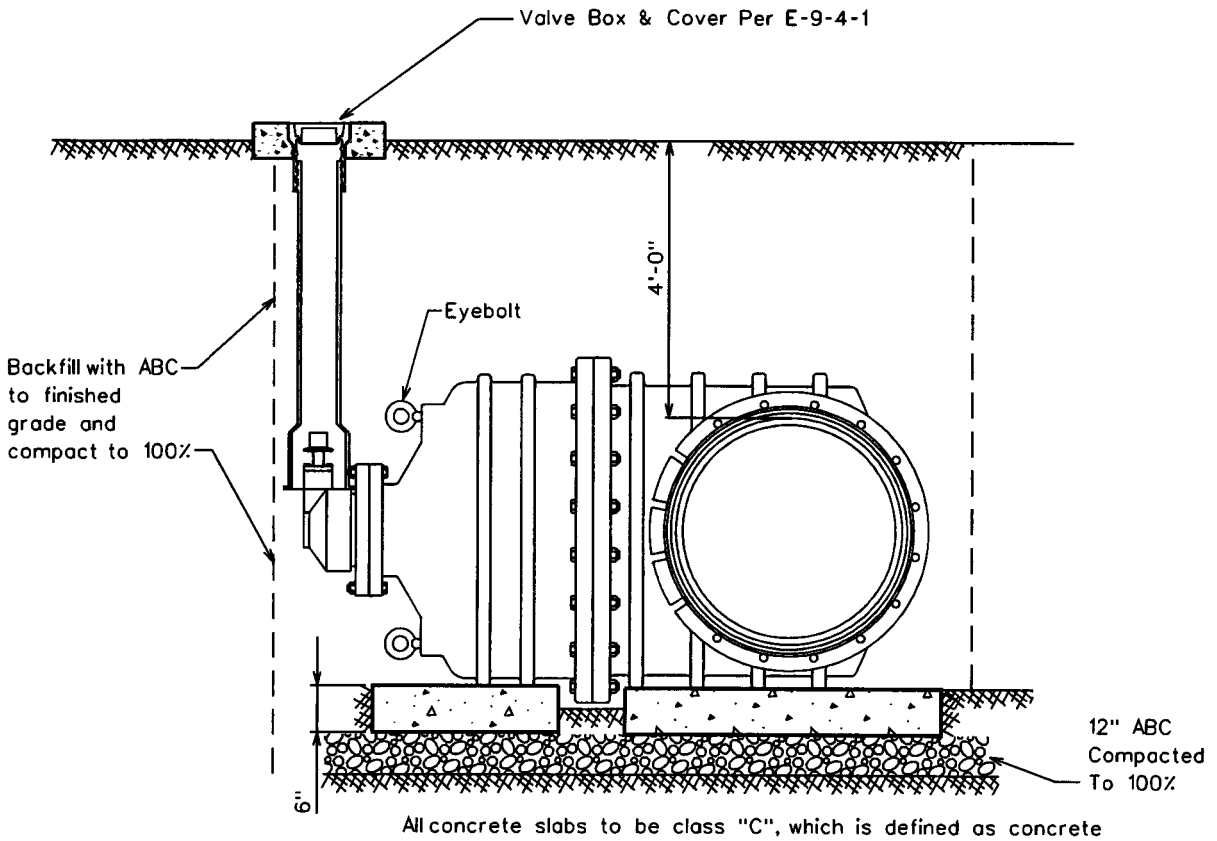

All concrete slabs to be class "C", which is defined as concrete whose minimum compressive strength at 14 days reaches 1600psi and at 28 days reaches 2000psi. per MAG Section 725, Table 725-1. Slabs to be formed and poured prior to valve installation.

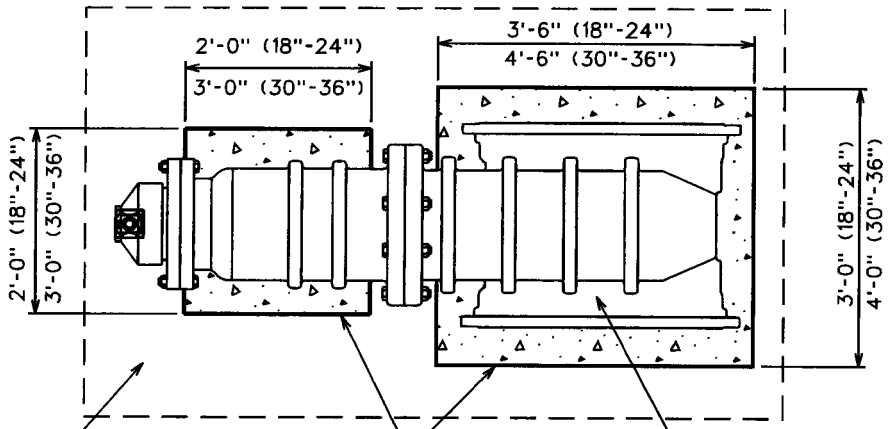

Concrete Slab, Typ.

Mueller Resilient Wedge Gate Valve Assembly Catalog No. A-2361-20. The Bonnet and Stuffing Box Shall Have 304 Stainless Steel Nuts/Bolts

Backfill with ABC to finished grade and compact to 100%

All valves installed on pipe five feet and greater are to be installed with a valve operator extension Mueller catalog No.A-26441 The distance is measured from the top of the operating nut to final grade.

ARIZONA WATER COMPANY

STANDARD SPECIFICATION

FOR THE INSTALLATION OF

INSTALLATION OF BEVEL GEARED HORIZONTAL GATE VALVES WITHOUT A BY-PASS FOR 18" AND LARGER VALVES

DRAWN BY:	APPROVED BY:	DATE:	△ 5.13.2005	E-9-2-3
CB		12.07.2004		

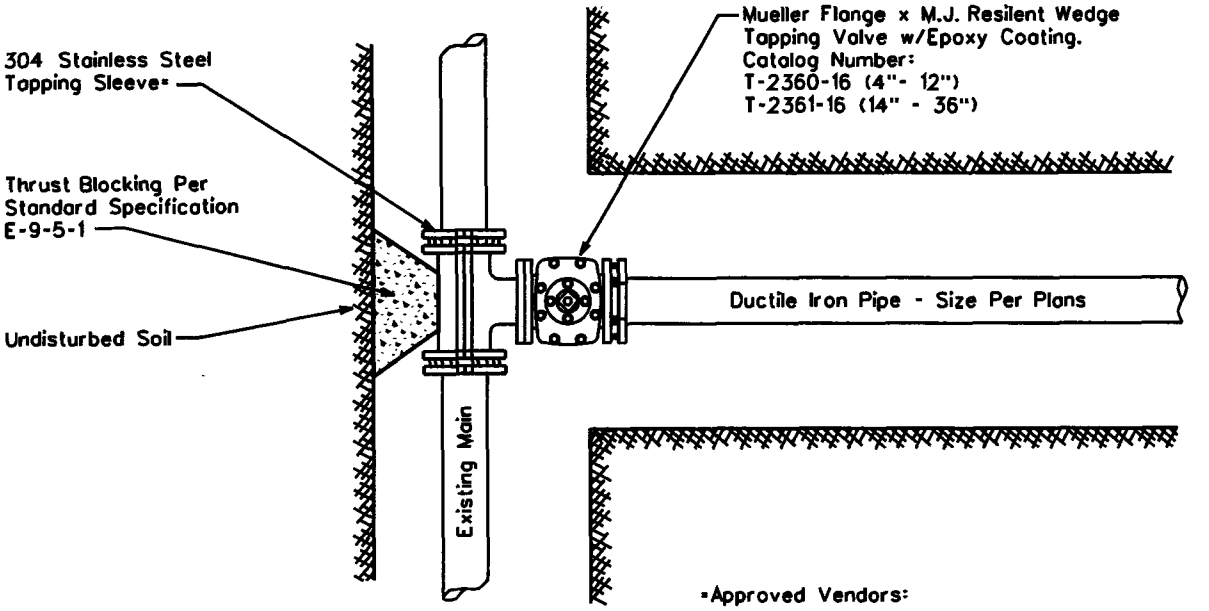

*Approved Vendors:

Mueller, Catalog No. H304, 304 Stainless Steel

JCM, Model 432, 304 Stainless Steel

Romac, 'SST', 304 Stainless Steel

Cascade, 'CST-EX', 304 Stainless Steel

NOTE:

1. All flanges, bolts, and nuts shall be kept free of concrete.
2. Air pressure test the tapping sleeve before the live tap is made.
3. Polywrap all new fittings

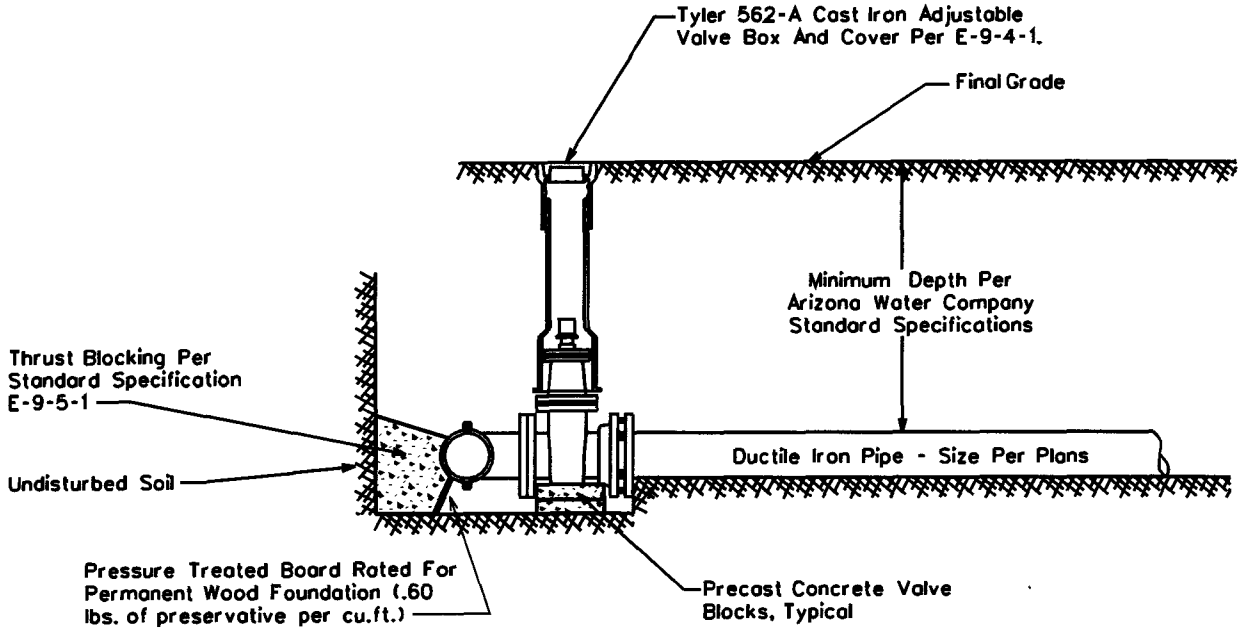

ARIZONA WATER COMPANY

STANDARD SPECIFICATION

FOR THE INSTALLATION OF

TYPICAL TAPPING SLEEVE AND VALVE

DRAWN BY:	APPROVED BY:	DATE:	△ 08.23.2006	E-9-3-1
CB	MW	03.20.1986		

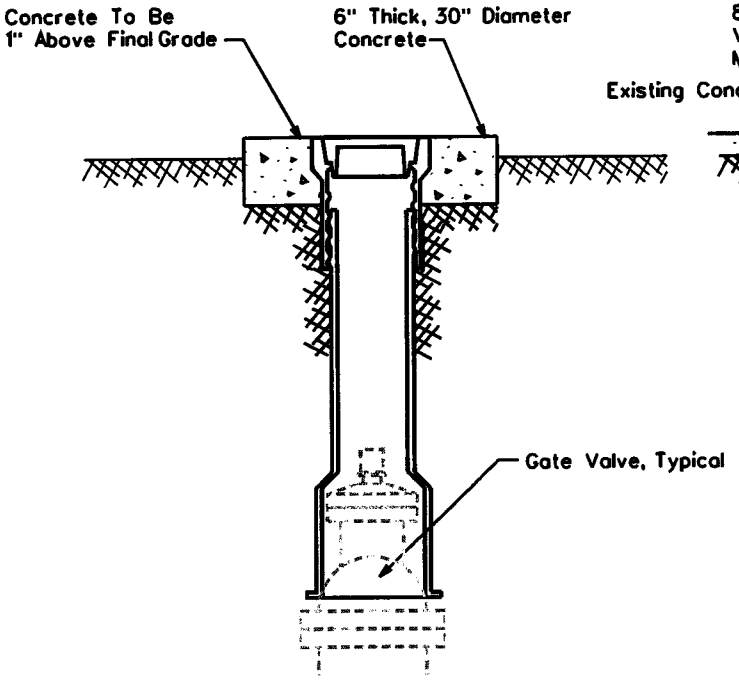

NON-VEHICULAR VALVE BOX

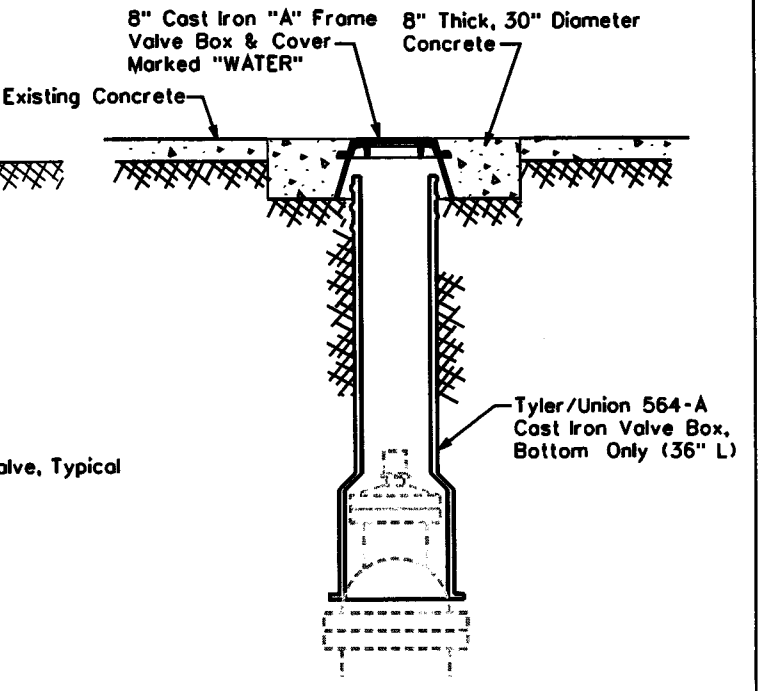

CONCRETE VALVE BOX

For Areas Subject To Vehicular Traffic

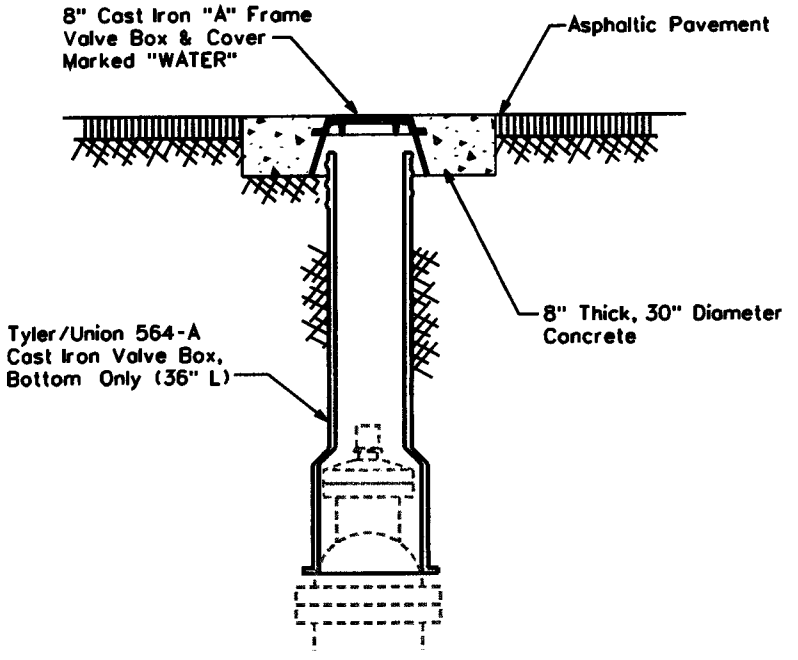

ASPHALT VALVE BOX

For Areas Subject To Vehicular Traffic

NOTE:

1. The Valve Box Shall Be Adjusted To Finished Grade Prior To Placing Of Asphalt And/Or Concrete.
2. For Non-Traffic Areas Use Tyler/Union 562-A, Two-Piece, 6855 Series Or Equivalent Adjustable Cast Iron Valve Box And Cover. Valves 4" To 12"

   For Traffic Areas, Use Tyler/Union 564-A Bottom Section Only With An 8" Cast Iron "A" Frame With Cover. Valves 4" To 12"
3. All Valves Installed Five Feet (5') Deep And Greater Are To Be Installed With A Valve Operator Extension, Mueller Catalog No. A-26441 And Shall Have A Debris Cap
4. Use Minimum Class 'C' Concrete which is defined as concrete whose minimum compressive strength at 14 days reaches 1600psi and at 28 days reaches 2000psi. per MAG Section 725, Table 725-1.

ARIZONA WATER COMPANY

STANDARD SPECIFICATION

FOR THE INSTALLATION OF

TYPICAL VALVE SUBJECT TO NON-VEHICULAR AND VEHICULAR TRAFFIC

DRAWN BY:	APPROVED BY:	DATE:	△ 8.24.2006	E-9-4-1
CB	MW	03.20.1986		

CROSSES

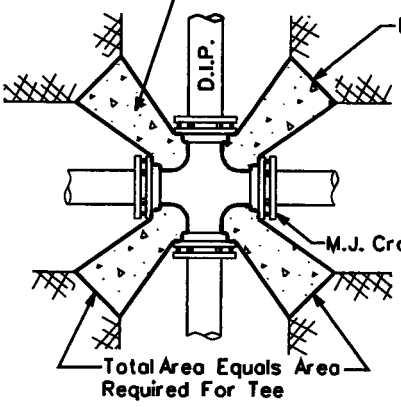

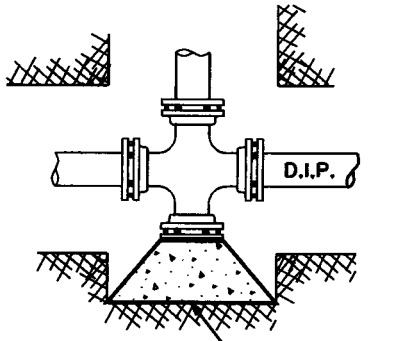

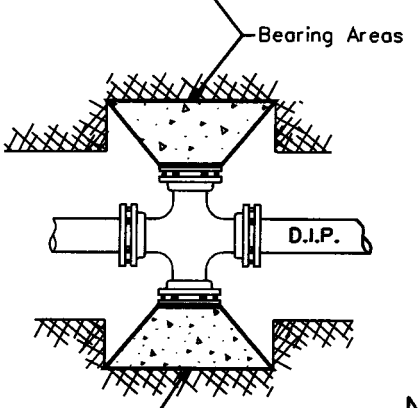

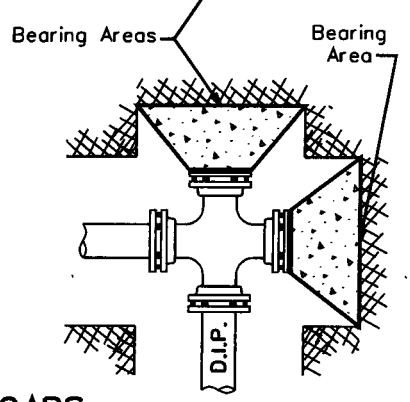

TEES

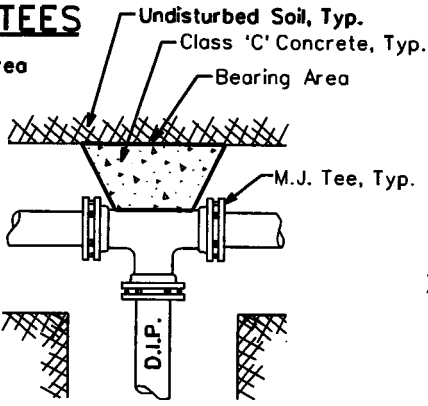

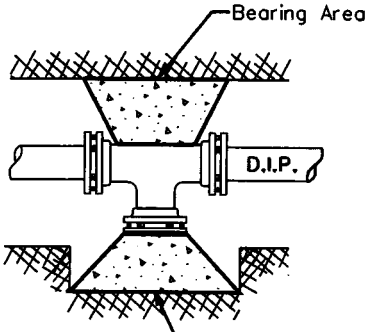

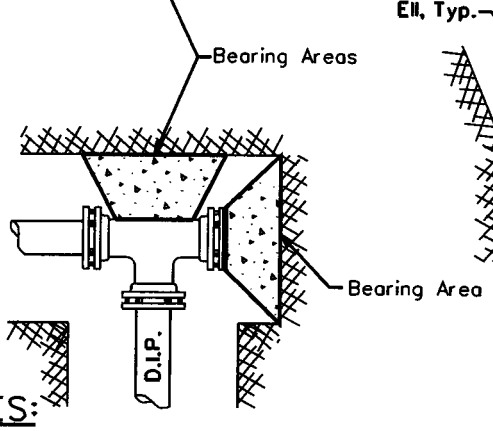

ELLS

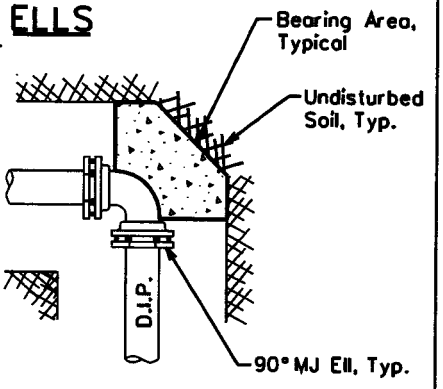

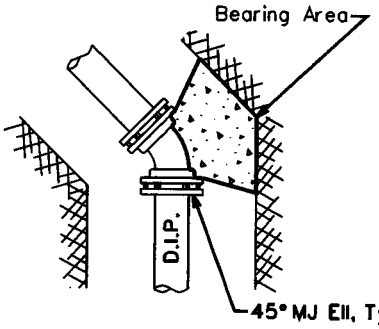

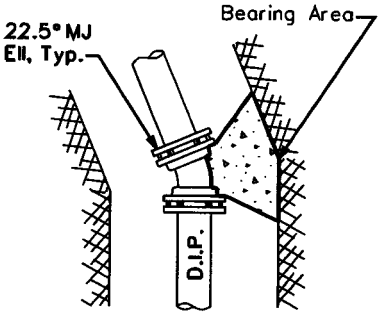

CROSS SECTION

TYPICAL

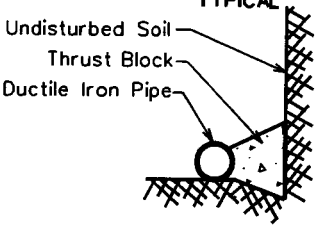

NOTES:

1. Use minimum Class 'C' concrete, which is defined as concrete whose minimum compressive strength at 14 days reaches 1600psi and at 28 days reaches 2000psi. per MAG Section 725, Table 725-1.
2. Thrust blocks are to bear on undisturbed earth with minimum bearing area as shown. If not undisturbed, areas will be increased as required.
3. Place the pressure treated form board in front of all plugs before pouring thrust blocks.
4. Form all non-bearing areas to prevent any concrete from entering any joint.
5. All flanges, bolts and nuts shall be kept free of concrete.
6. Center the bearing area on the pipe centerline and force line.
7. All pipe fittings to be wrapped with polyethylene pipe wrap prior to thrust block installation. (where applicable)

THRUST BLOCK SCHEDULE

PIPE SIZE	TEE, 45°, AND 22.5° ELLS, & PLUGS	90° ELLS
6" And Under	4 Sq.Ft.	6 Sq.Ft.
8"	6 Sq.Ft.	9 Sq.Ft.
12"	13 Sq.Ft.	20 Sq.Ft.
16"	23 Sq.Ft.	32 Sq.Ft.
18" And Larger	Calculated Per Project	

CAPS

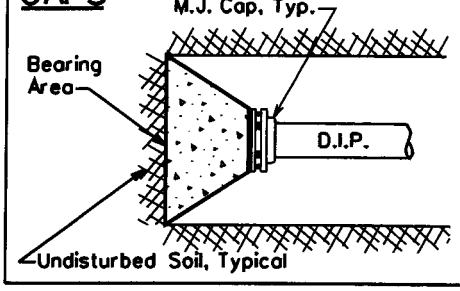

STANDARD SPECIFICATION

FOR THE INSTALLATION OF

TYPICAL THRUST BLOCKING SCHEDULE

DRAWN BY:	APPROVED BY:	DATE:	△ 05.27.2005	E-9-5-1
CB	MW	03.20.1986		

NOTES

1. Bars In Conc. Thrust Block To Be Coated w/ 2 Coats Coal Tar Epoxy or by Other Approved Method.
2. Bars To Have 90° Hook @ Their Ends, As Per Table Below.

Pipe Size	Min. Bar Size	"A" Dimension (Hook)	* Min. Block Dimension (WxHxL)
6"	#6	6"	3'x3'x3'
8"	#6	9"	4'x3'x4'
12"	#8	9"	5'x4'x5'
16"	#9	12"	7'x6'x7'

* For 125 P.S.I. Working Pressure

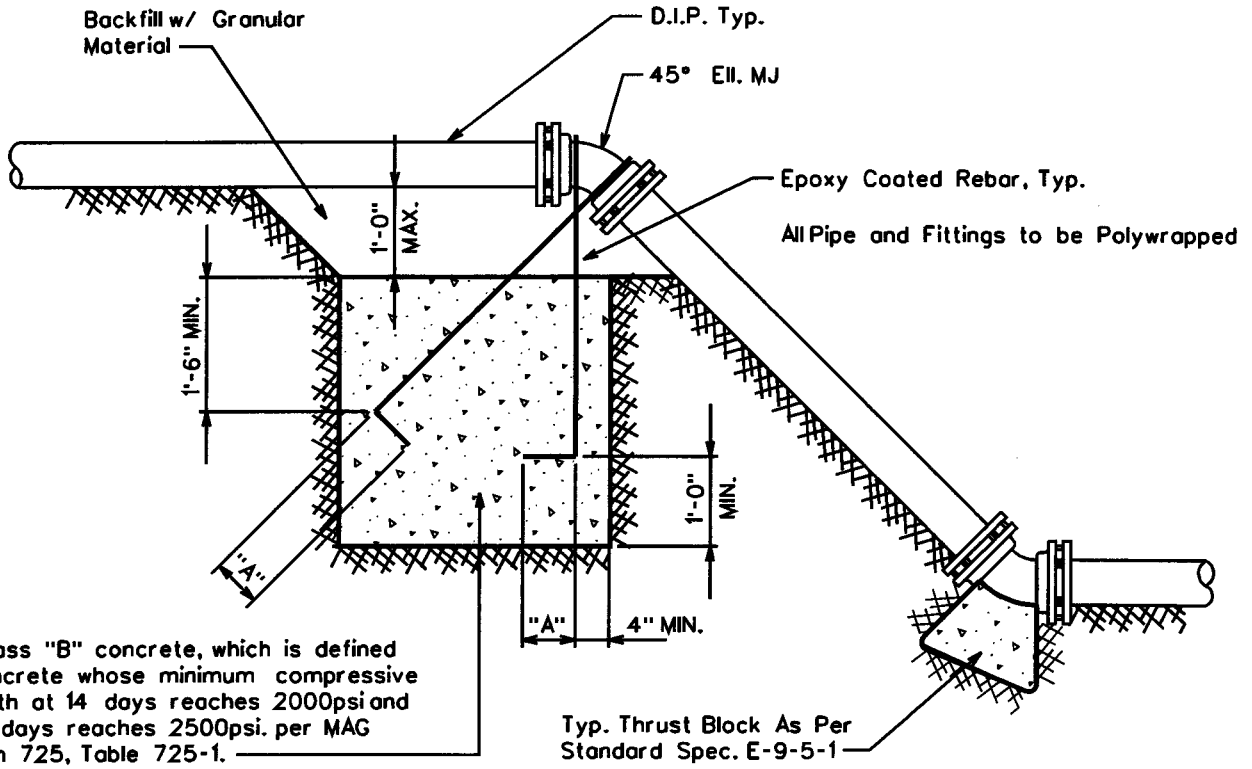

ARIZONA WATER COMPANY

STANDARD SPECIFICATION
FOR THE INSTALLATION OF

THRUST BLOCK FOR VERTICAL BENDS

DRAWN BY:	APPROVED BY:	DATE:	△ 01.16.2007	E-9-5-2
JPK	MJW	7-5-96		

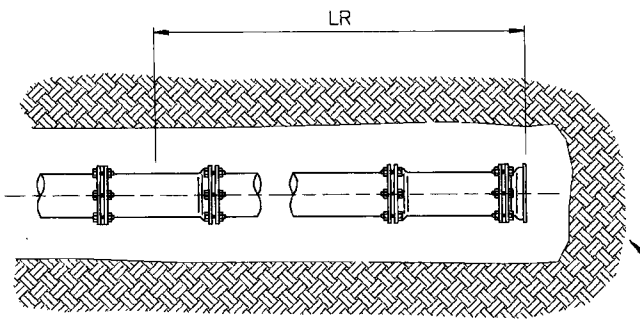

DEAD ENDS

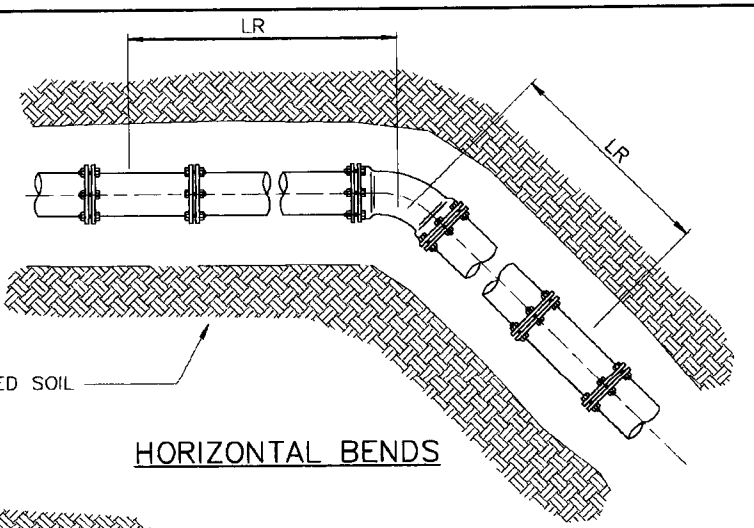

HORIZONTAL BENDS

UNDISTURBED SOIL

LRN = SHORTEST LENGTH OF PIPE RESTRAINED TO THE RUN OF THE TEE FITTING (BOTH SIDES OF TEE).

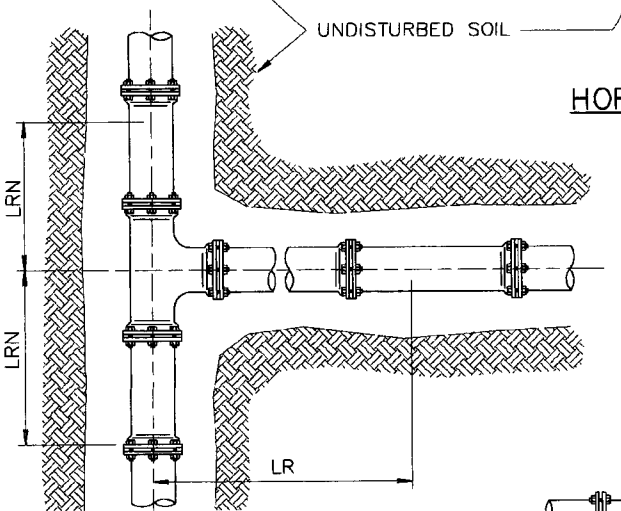

TEES

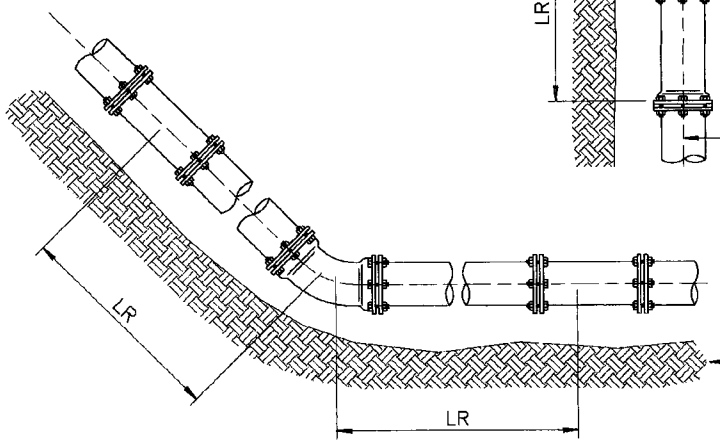

VERTICAL UP BEND

UNDISTURBED SOIL

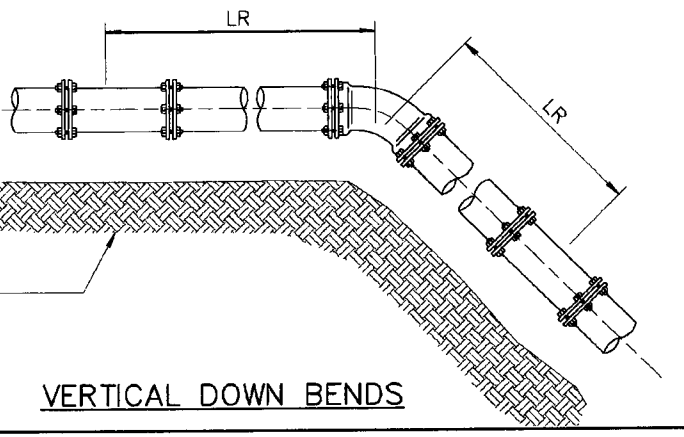

VERTICAL DOWN BENDS

ARIZONA WATER COMPANY

STANDARD SPECIFICATION

FOR THE INSTALLATION OF

JOINT RESTRAINT FOR NEW DUCTILE IRON AND C-900 PVC MAINS

DRAWN BY:	APPROVED BY:	DATE:	△	
CB	MW	01.16.2007		E-9-5-3-1

RESTRAINED LENGTHS, LR, FOR DUCTILE IRON PIPE

NOMINAL PIPE SIZE INCHES	HORIZONTAL BENDS			TEES		VERTICAL OFFSETS						DEAD ENDS
						90° BEND FITTINGS		45° BEND FITTINGS		22-1/2° BEND FITTINGS		
	90°	45°	22-1/2°	LRN=0'	LRN=10'	DOWN BEND	UP BEND	DOWN BEND	UP BEND	DOWN BEND	UP BEND	
4	18	7	4	30	8	31	18	13	7	6	3	31
6	25	10	5	43	20	44	25	18	10	9	5	44
8	32	13	6	56	34	58	32	24	13	11	6	58
10	38	16	8	68	45	69	38	29	16	14	8	69
12	45	19	9	80	57	81	45	34	19	16	9	81
14	51	21	10	91	68	92	51	38	21	18	10	92
16	57	24	11	103	79	104	57	43	24	21	11	104
18	62	26	12	113	90	115	62	48	26	23	12	115
20	68	28	14	125	100	126	68	52	28	25	14	126
24	79	33	16	145	121	147	79	61	33	29	16	147

RESTRAINED LENGTHS, LR, FOR DUCTILE IRON PIPE WITH POLYETHYLENE WRAP

NOMINAL PIPE SIZE INCHES	HORIZONTAL BENDS			TEES		VERTICAL OFFSETS						DEAD ENDS
						90° BEND FITTINGS		45° BEND FITTINGS		22-1/2° BEND FITTINGS		
	90°	45°	22-1/2°	LRN=0'	LRN=10'	DOWN BEND	UP BEND	DOWN BEND	UP BEND	DOWN BEND	UP BEND	
4	26	11	5	69	18	72	26	30	11	14	5	72
6	36	15	7	99	47	102	36	42	15	20	7	102
8	47	19	9	130	78	133	47	55	19	26	9	133
10	56	23	11	157	103	159	56	66	23	32	11	159
12	65	27	13	185	131	187	65	77	27	37	13	187
14	74	31	15	211	156	214	74	89	31	42	15	214
16	82	34	16	238	183	241	82	100	34	48	16	241
18	90	37	18	263	207	266	90	110	38	53	18	266
20	98	41	20	289	233	292	98	121	41	58	20	292
24	113	47	22	337	280	340	113	141	47	68	22	340

NOTES:

1. ALL JOINTS WITHIN THE SPECIFIED LENGTH LR MUST BE RESTRAINED. ALL LENGTHS ARE GIVEN IN FEET.
2. THE MAXIMUM TEST PRESSURE SHALL NOT EXCEED 200 PSI
3. THE MINIMUM DEPTH OF BURY SHALL BE 3' TO TOP OF PIPE.
4. RESTRAINED LENGTHS MAY BE REDUCED WHEN SUPPORTED BY ENGINEERING CALCULATIONS.

ARIZONA WATER COMPANY

STANDARD SPECIFICATION
FOR THE INSTALLATION OF
JOINT RESTRAINT FOR NEW DUCTILE IRON AND C-900 PVC MAINS

DRAWN BY:	APPROVED BY:	DATE:	△	
CB	MW	01.16.2007		E-9-5-3-2

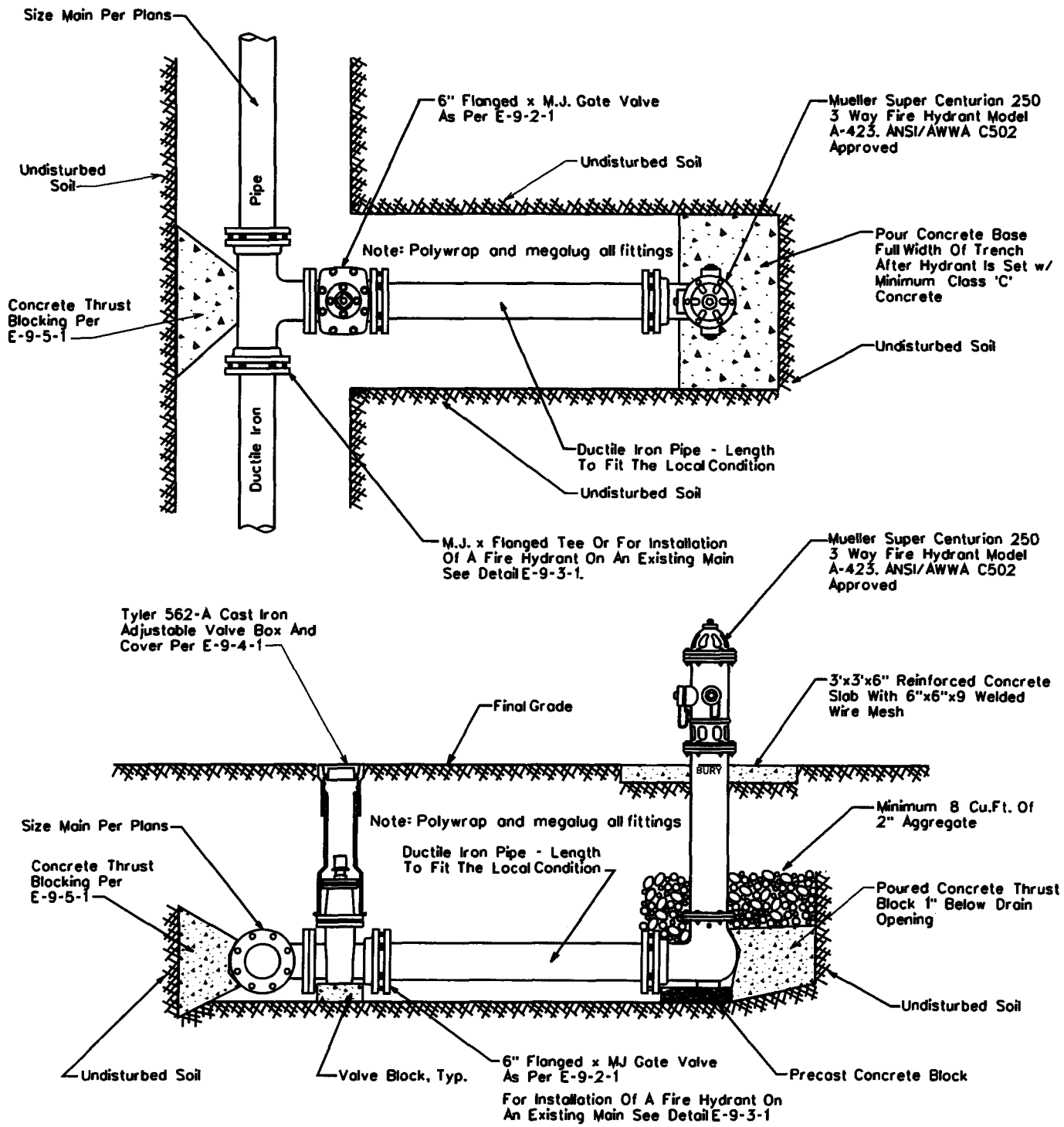

NOTE: All Flanges, Bolts, Nuts and Drain Holes Shall Be Kept Free Of Concrete

ARIZONA WATER COMPANY

STANDARD SPECIFICATION

FOR THE INSTALLATION OF

TYPICAL PERPENDICULAR FIRE HYDRANT

DRAWN BY:	APPROVED BY:	DATE:	△ 08.24.2006	E-9-6-1
CB	MW	1-28-91		

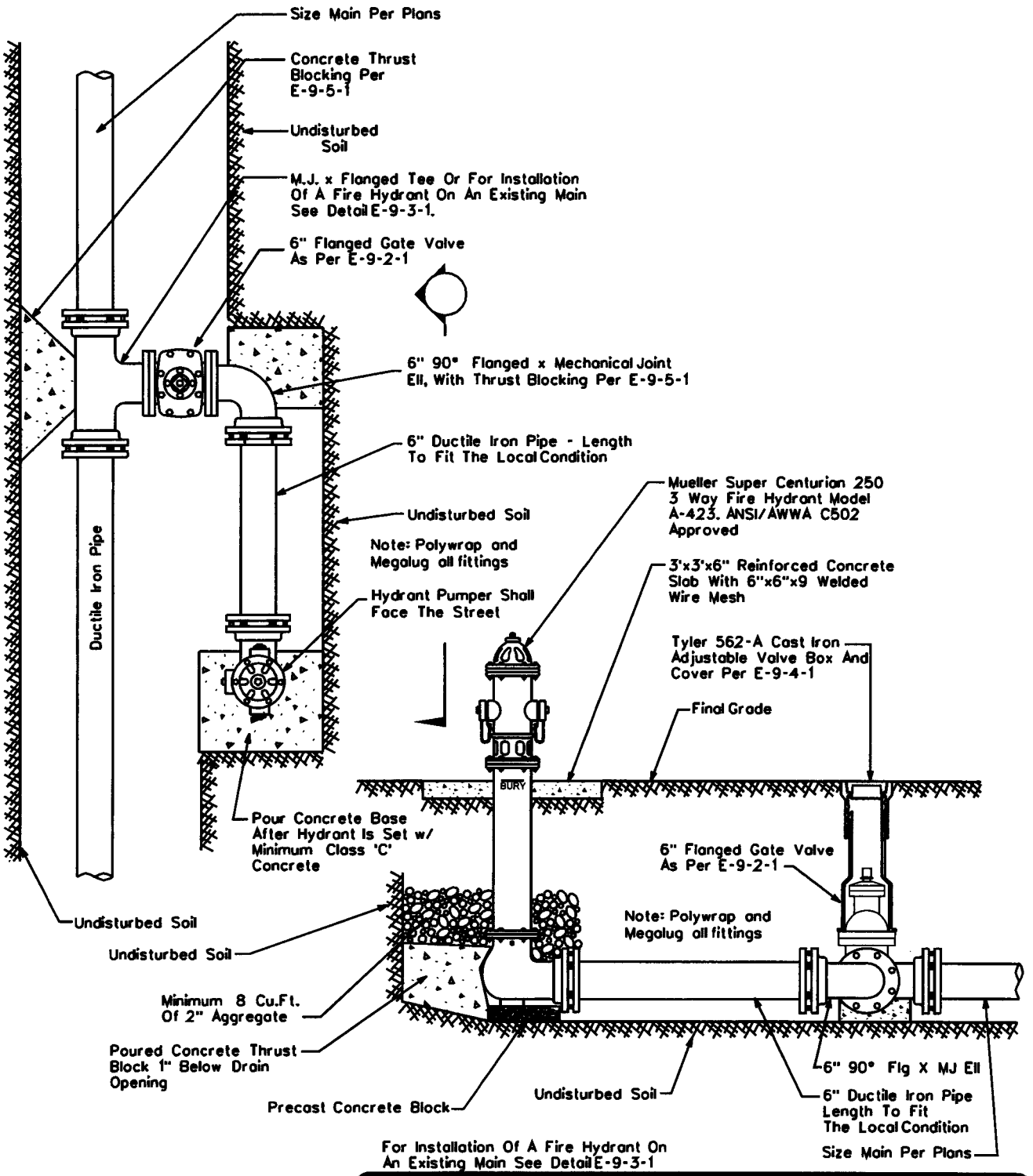

NOTE: All Flanges, Bolts, Nuts And Drain Holes Shall Be Kept Free Of Concrete.

ARIZONA WATER COMPANY

STANDARD SPECIFICATION

FOR THE INSTALLATION OF

TYPICAL PARALLEL FIRE HYDRANT

DRAWN BY:	APPROVED BY:	DATE:	△ 08.24.2006	E-9-7-1
JW	MW	03.20.1986		

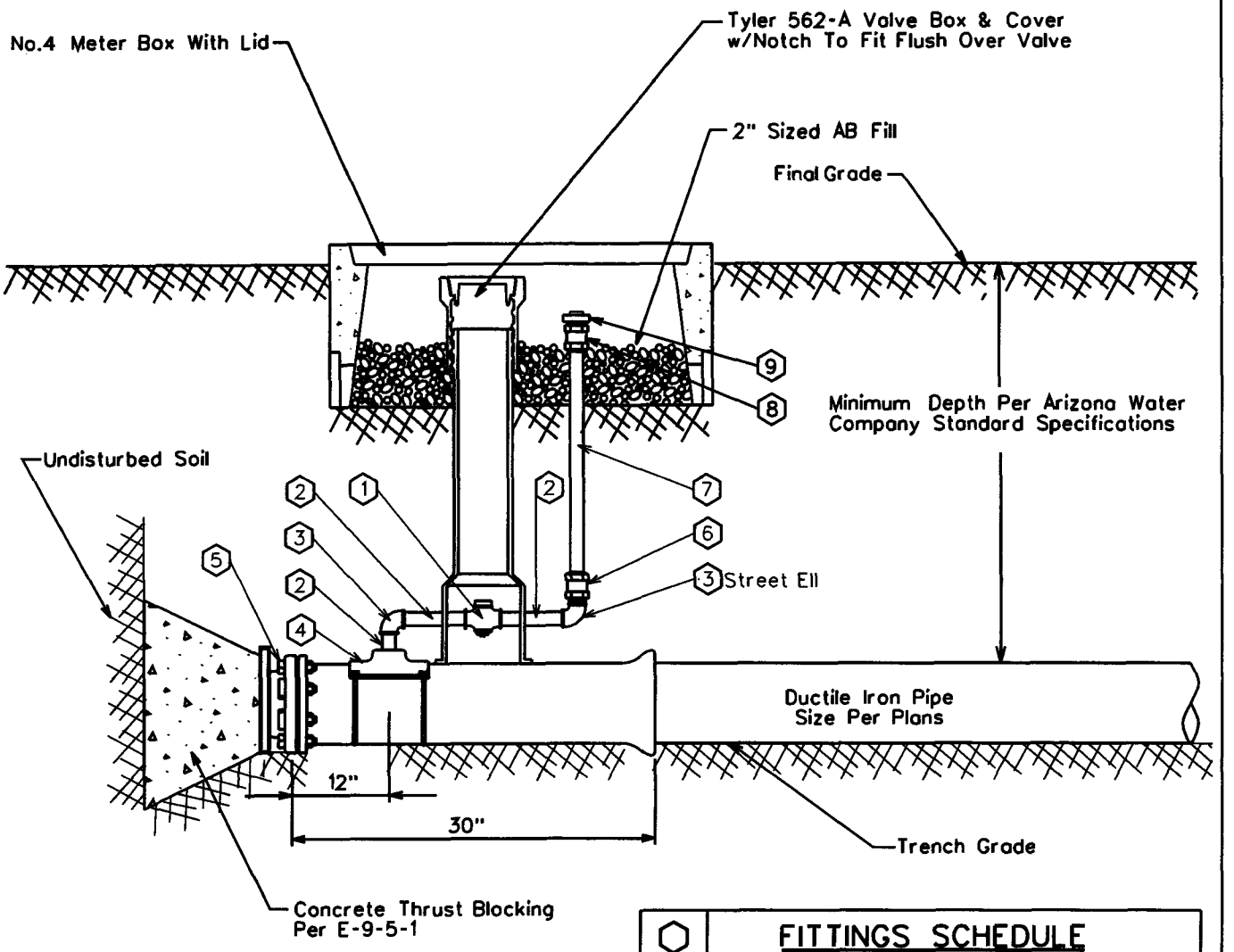

⬡	FITTINGS SCHEDULE
1.	2" Mueller 300 Ball Curb Valve B-20283 FIP x FIP W/ 2" Mueller Brass Square Wrench Nut Adapter B-20299
2.	2" Brass Nipple - Length To Fit Field Conditions
3.	2" Brass 90° Elbow, IPST
4.	Mueller Double Strap Bronze Service Saddle - BR2B
5.	M.J. Plug - Megalug Restraints May Be Required
6.	2" Straight Coupling CC x FIP H-15451
7.	2" Copper Pipe
8.	2" Straight Coupling CC x MIP H-15428
9.	2" Square Head Plug, MIP

ARIZONA WATER COMPANY

STANDARD SPECIFICATION
FOR THE INSTALLATION OF

2" BLOWOFF ASSEMBLY

DRAWN BY:	APPROVED BY:	DATE:	△	
CB	MW	03.20.1986	△ 03.21.2006	E-9-8-1

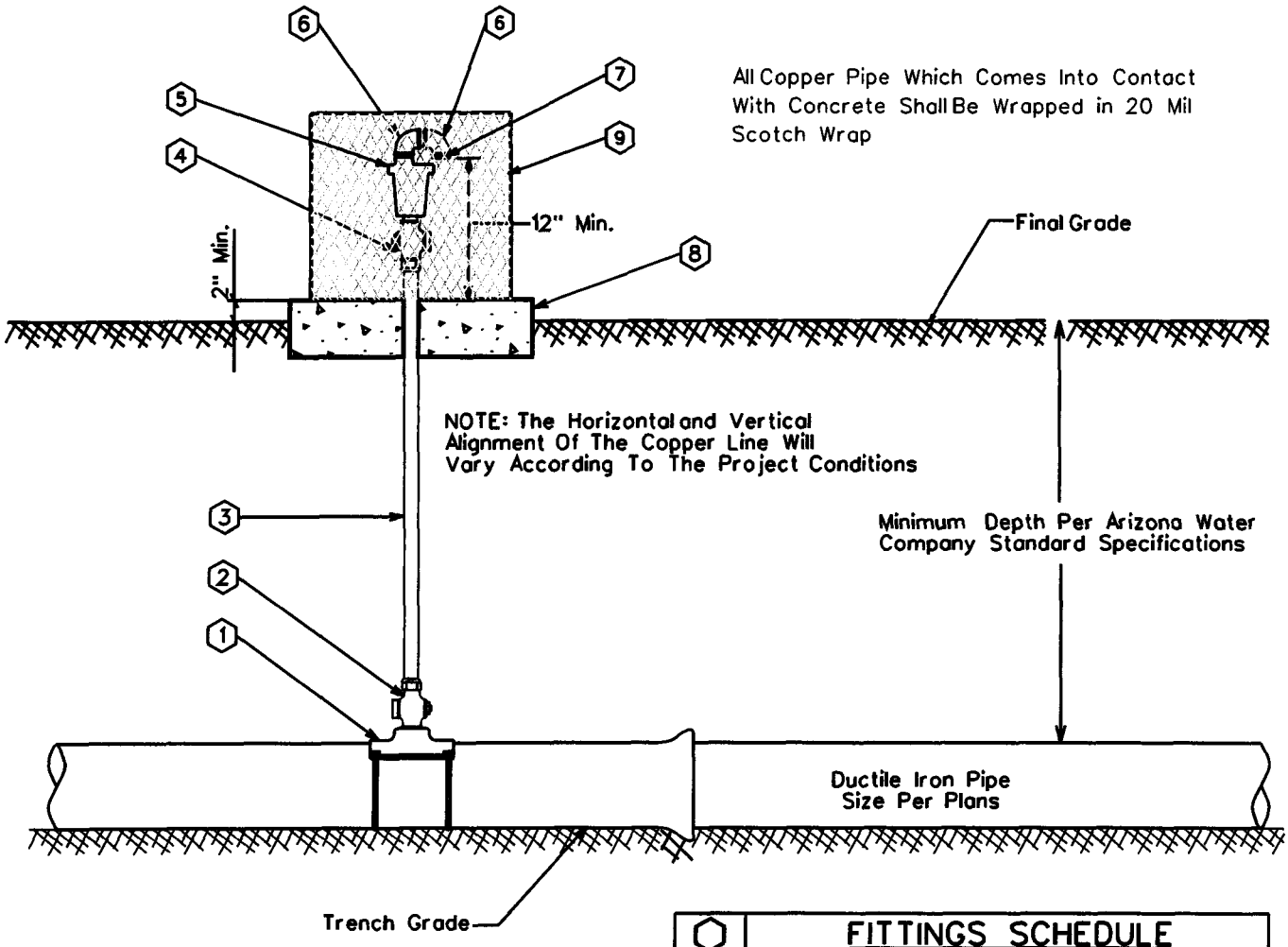

⬡	FITTINGS SCHEDULE
1.	Mueller BR2B Bronze Service Saddle - Double Strap
2.	1" Mueller B-25008 Taper x Comp. Ball Corp Stop
3.	1" Type 'K' Copper w/NO Splices - Field Fit
4.	1" Mueller B-25028 IP x Comp. Ball Corp Stop
5.	Crispin 1" Air Release Valve, Model AR10
6.	½" Brass Street Elbow
7.	No.16 Wire Mesh Screen (Non-Corrodible)
8.	4" Thick Concrete Pad - Class 'C' Concrete
9.	Guardshack, Model GS-1, Available From BPDI, Inc. Available In Leaf Green Or Desert Tan

GENERAL NOTES:

1. The valve shall be installed at high points and on long runs to vent the accumulation of air with the line under pressure- see the construction plans for specific locations.
2. The valve shall have a 5/64" orifice with valve sealing faces of stainless steel and BUNA-N rubber.
3. The valve shall be Crispin model AR10 for 6" and larger water mains.
4. Crispin model AR10 valve construction consists of a 1" IPST inlet & ½" IPST outlet, cast iron body and top flange with stainless steel float and trim.
5. The air release assembly shall be located out of the path of traffic but within right-of-way or easement.

ARIZONA WATER COMPANY

STANDARD SPECIFICATION
FOR THE INSTALLATION OF

TYPICAL AIR RELEASE VALVE

DRAWN BY:	APPROVED BY:	DATE:	△08.24.2006	E-9-8-2
CB	MW	03.20.1997		

All Copper Pipe Which Comes Into Contact With Concrete Shall Be Wrapped In 20 Mil Scotch Wrap

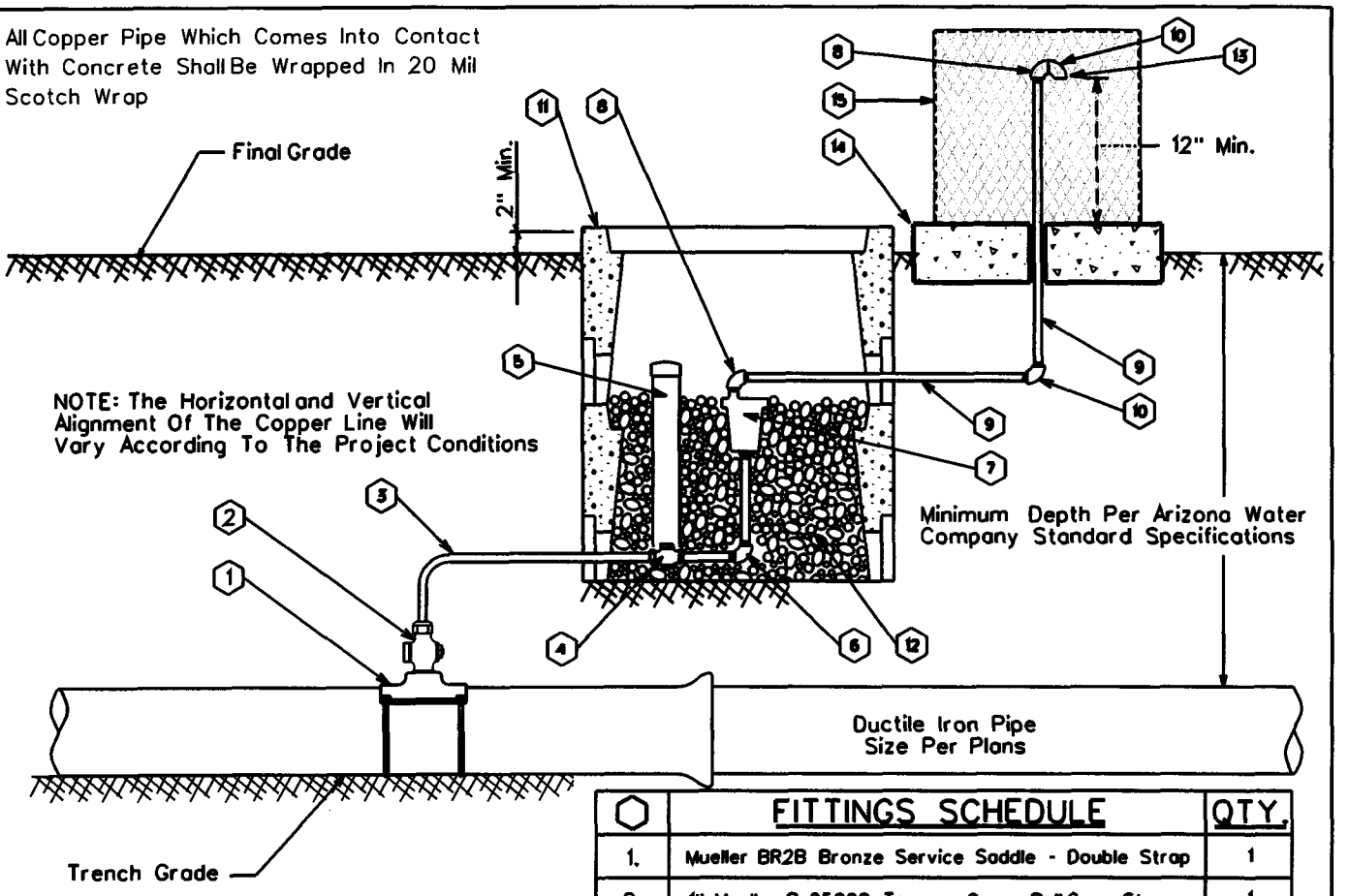

⬡	FITTINGS SCHEDULE	QTY.
1.	Mueller BR2B Bronze Service Saddle - Double Strap	1
2.	1" Mueller B-25008 Taper x Comp. Ball Corp Stop	1
3.	1" Type 'K' Copper w/NO Splices - Field Fit	As Req'd
4.	1" Mueller B-25028 IP x Comp. Ball Corp Stop	1
5.	3" PVC Pipe w/ Cap (Loose Fit)	1
6.	1" x 4" Brass Nipple w/90° Elbow	1
7.	Crispin 1" Air Release Valve, Model AR10	1
8.	½" Brass Street Elbow	2
9.	½" Galvanized Pipe - Length as req'd	2
10.	½" Galvanized 90° Ell	2
11.	Number 1 Meter Box	2
12.	2" Sized AB (Fill Meter Box To The Top Of The Air Release Valve)	As Req'd
13.	No.16 Wire Mesh Screen (Non-Corrodible)	1
14.	4" Thick Concrete Pad - Class 'C' Concrete	1
15.	Guardshack, Model GS-1, Available From BPDI, Inc. Available In Leaf Green Or Desert Tan	1

GENERAL NOTES:

1. The valve shall be installed at high points and on long runs to vent the accumulation of air with the line under pressure- see the construction plans for specific locations.
2. The valve shall have a 5/64 " orifice with valve sealing faces of stainless steel and BUNA-N rubber.
3. The valve shall be Crispin model AR10 for 6" and larger water mains.
4. Crispin model AR10 valve construction consists of a 1" IPST inlet & ½" IPST outlet, cast iron body and top flange with stainless steel float and trim.
5. The air release assembly shall be located out of the path of traffic but within the right-of-way or easement.

ARIZONA WATER COMPANY

STANDARD SPECIFICATION
FOR THE INSTALLATION OF

AIR RELEASE VALVE FOR THE NORTHERN REGION

DRAWN BY:	APPROVED BY:	DATE:		
CB	MW	03.20.1997	△08.24.2006	E-9-8-3

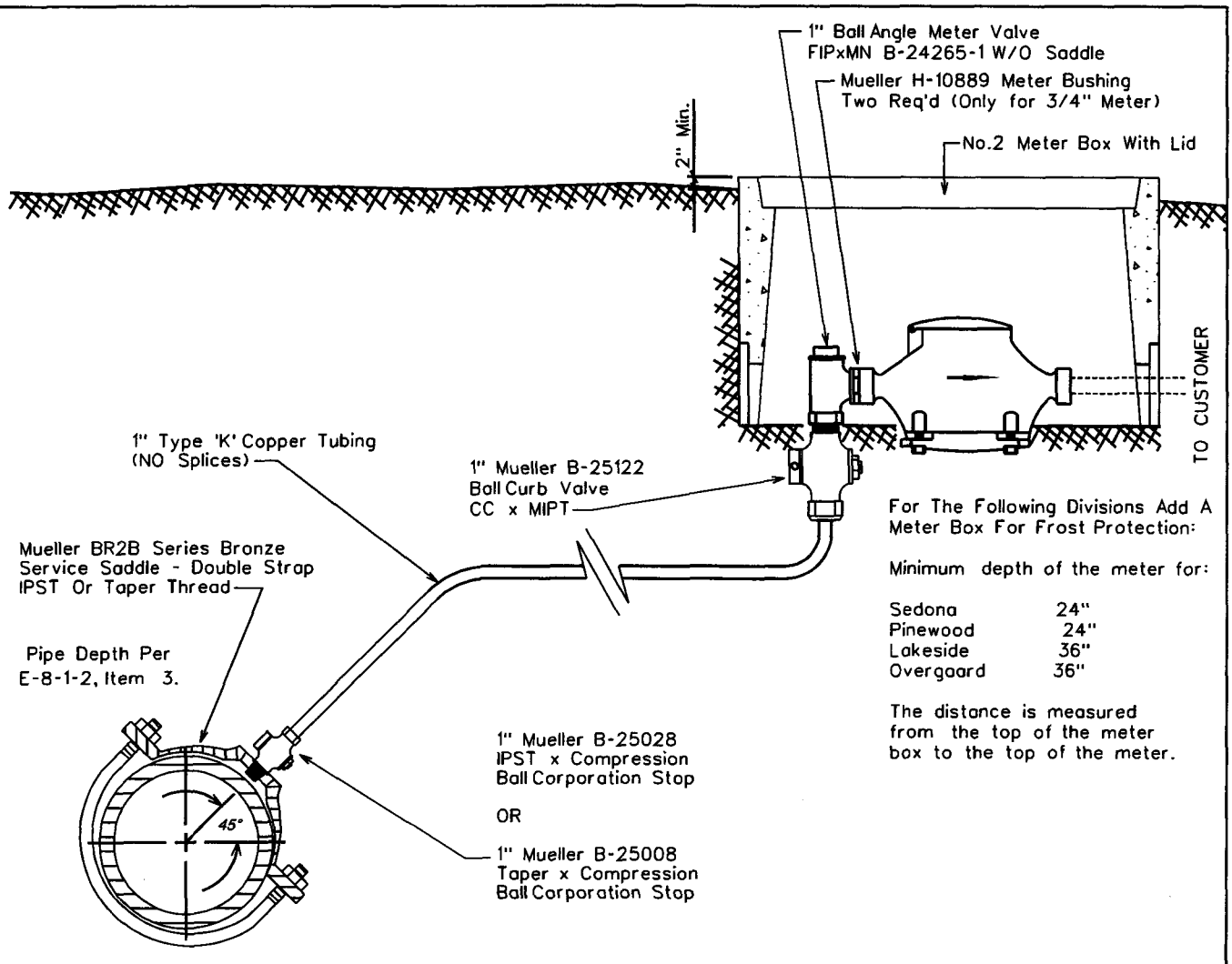

For The Following Divisions Add A Meter Box For Frost Protection:

Minimum depth of the meter for:

Sedona	24"
Pinewood	24"
Lakeside	36"
Overgaard	36"

The distance is measured from the top of the meter box to the top of the meter.

SADDLE TAP TO CA, PVC, OR DI PIPE

NOTE: The minimum distance between taps on mains other than ductile iron is 12"

NOTE:
Only the meter is supplied by Arizona Water Company

ARIZONA WATER COMPANY

STANDARD SPECIFICATION
FOR THE INSTALLATION OF

SINGLE SERVICE CONNECTION FOR A 3/4" OR 1" METER

DRAWN BY:	APPROVED BY:	DATE:	△ 03.17.2006	E-9-9-1
CCO	M.W.	3/20/86		

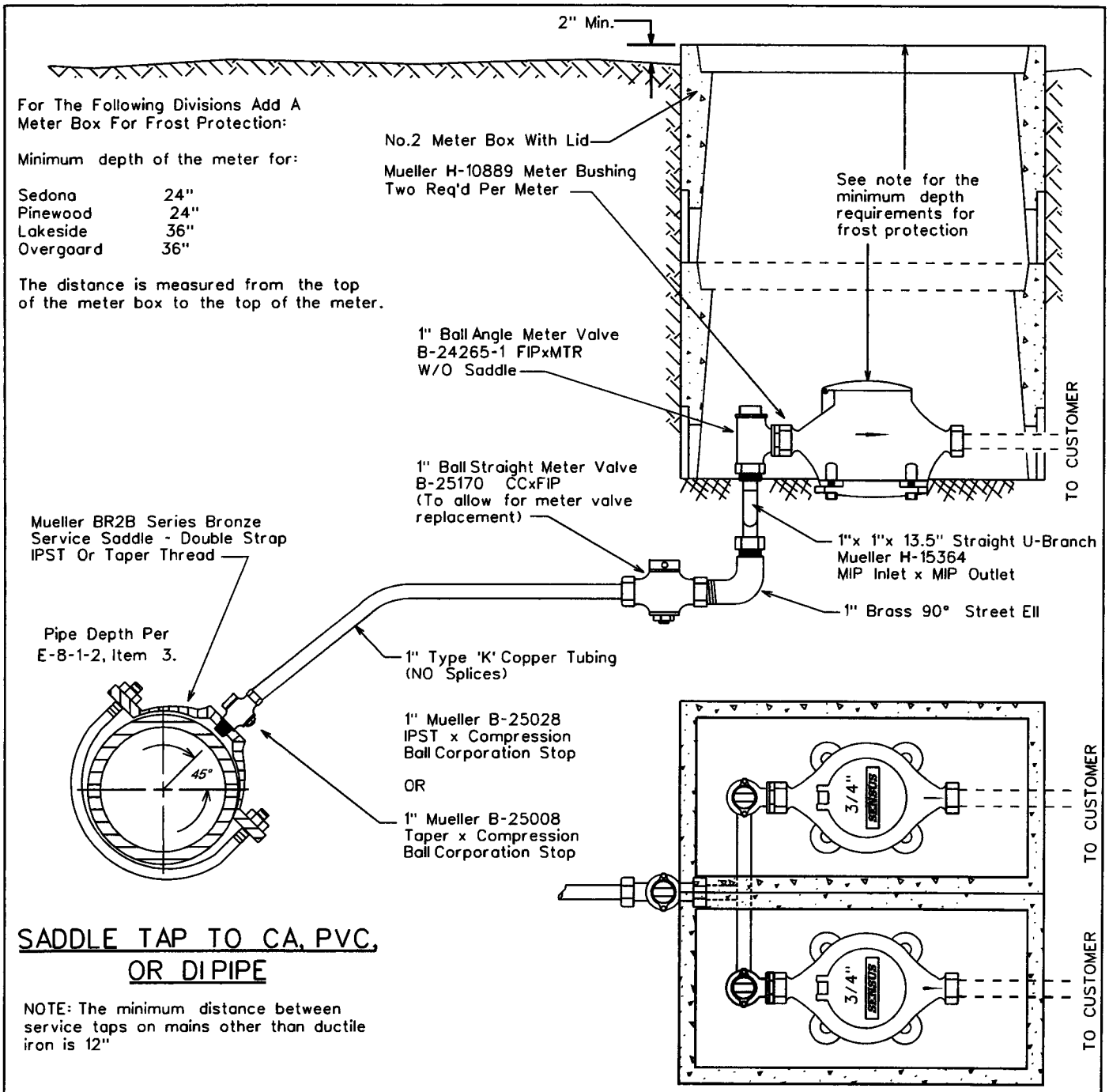

SADDLE TAP TO CA, PVC, OR DI PIPE

NOTE: The minimum distance between service taps on mains other than ductile iron is 12"

NOTE:
Only the meter is supplied by Arizona Water Company

ARIZONA WATER COMPANY

STANDARD SPECIFICATION
FOR THE INSTALLATION OF

DOUBLE SERVICE CONNECTION FOR 3/4" METERS

DRAWN BY:	APPROVED BY:	DATE:	△ 08.25.2006	E-9-10-1
CCO	M.W.	3-20-86		

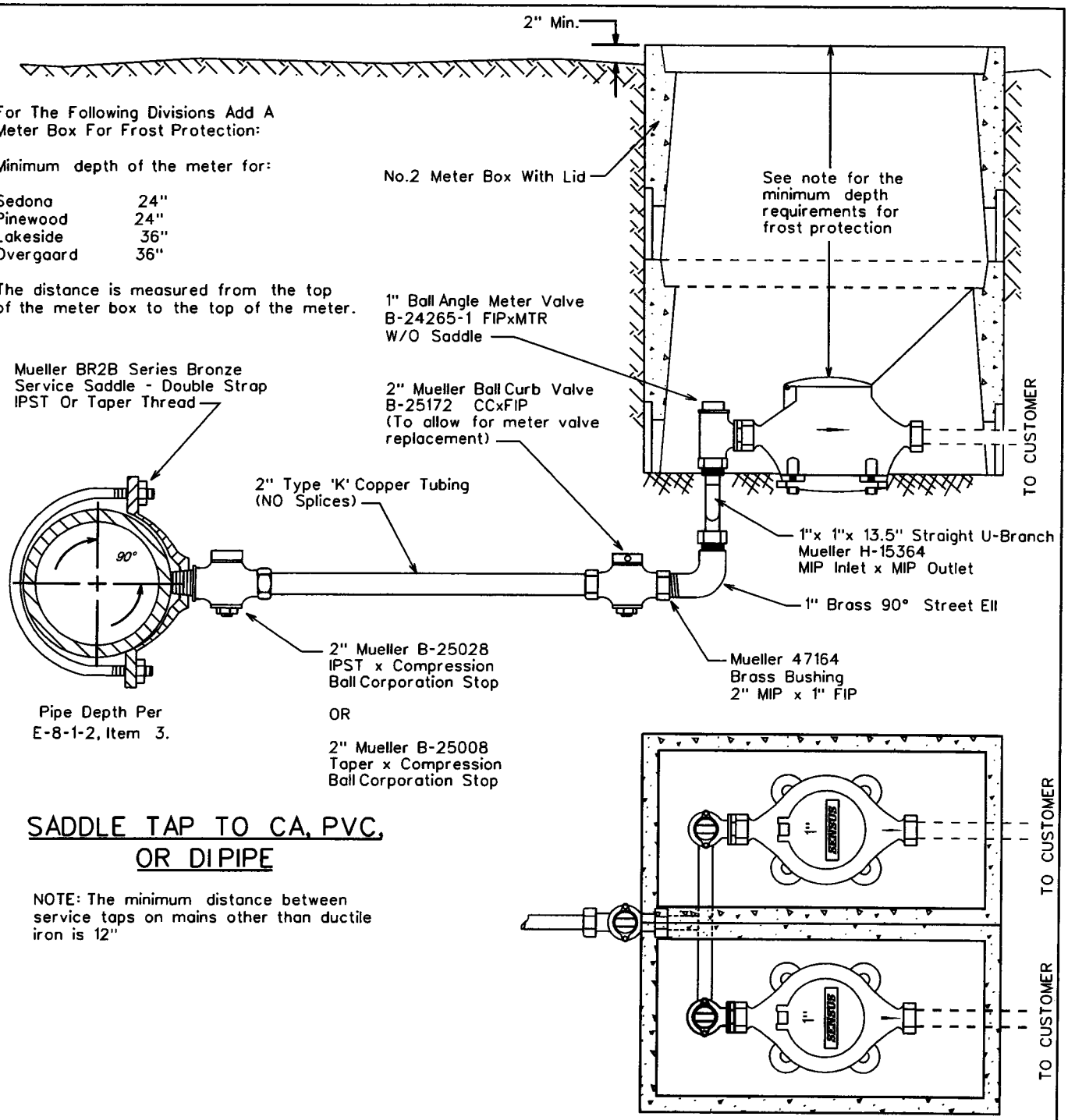

For The Following Divisions Add A Meter Box For Frost Protection:

Minimum depth of the meter for:

Sedona	24"
Pinewood	24"
Lakeside	36"
Overgaard	36"

The distance is measured from the top of the meter box to the top of the meter.

SADDLE TAP TO CA, PVC, OR DI PIPE

NOTE: The minimum distance between service taps on mains other than ductile iron is 12"

NOTE: THE LENGTH OF SERVICE IS LIMITED TO COMMERICIALLY AVAILABLE ROLLS, TYPICALLY 60 FEET

NOTE:
Only the meter is supplied by Arizona Water Company

ARIZONA WATER COMPANY

STANDARD SPECIFICATION
FOR THE INSTALLATION OF

DOUBLE SERVICE CONNECTION FOR 1" METERS

DRAWN BY:	APPROVED BY:	DATE:	△ 08.29.2006	E-9-10-2
CB	M.W.	03.17.2006		

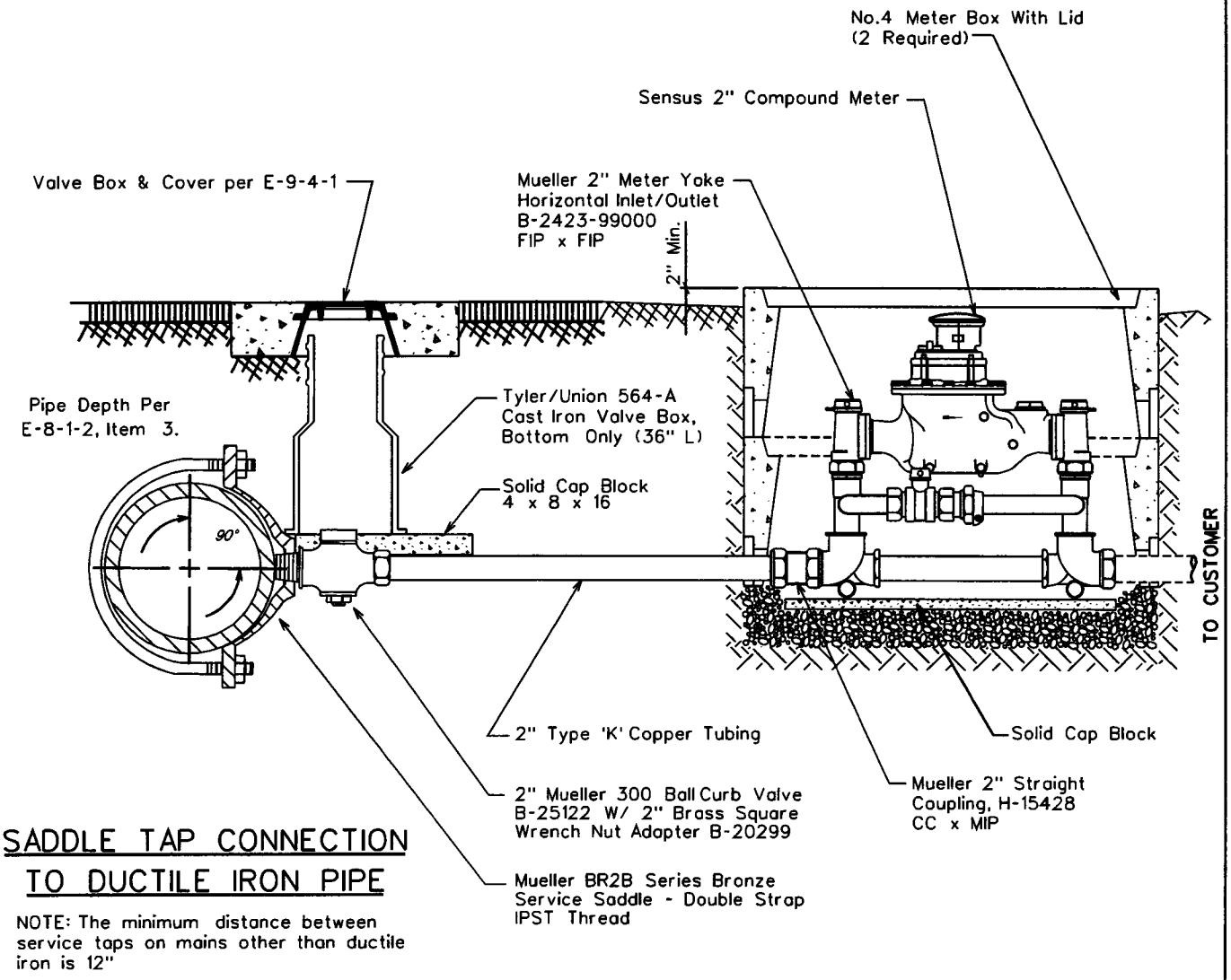

SADDLE TAP CONNECTION TO DUCTILE IRON PIPE

NOTE: The minimum distance between service taps on mains other than ductile iron is 12"

NOTE: THE LENGTH OF SERVICE IS LIMITED TO COMMERICIALLY AVAILABLE ROLLS, TYPICALLY 60 FEET

NOTE:

Only the meter is supplied by Arizona Water Company

ARIZONA WATER COMPANY

STANDARD SPECIFICATION
FOR THE INSTALLATION OF

TYPICAL 2" SERVICE CONNECTIONS

DRAWN BY:	APPROVED BY:	DATE:	△ 08.29.2006	E-9-11-1
JW	M.W.	3/20/86		

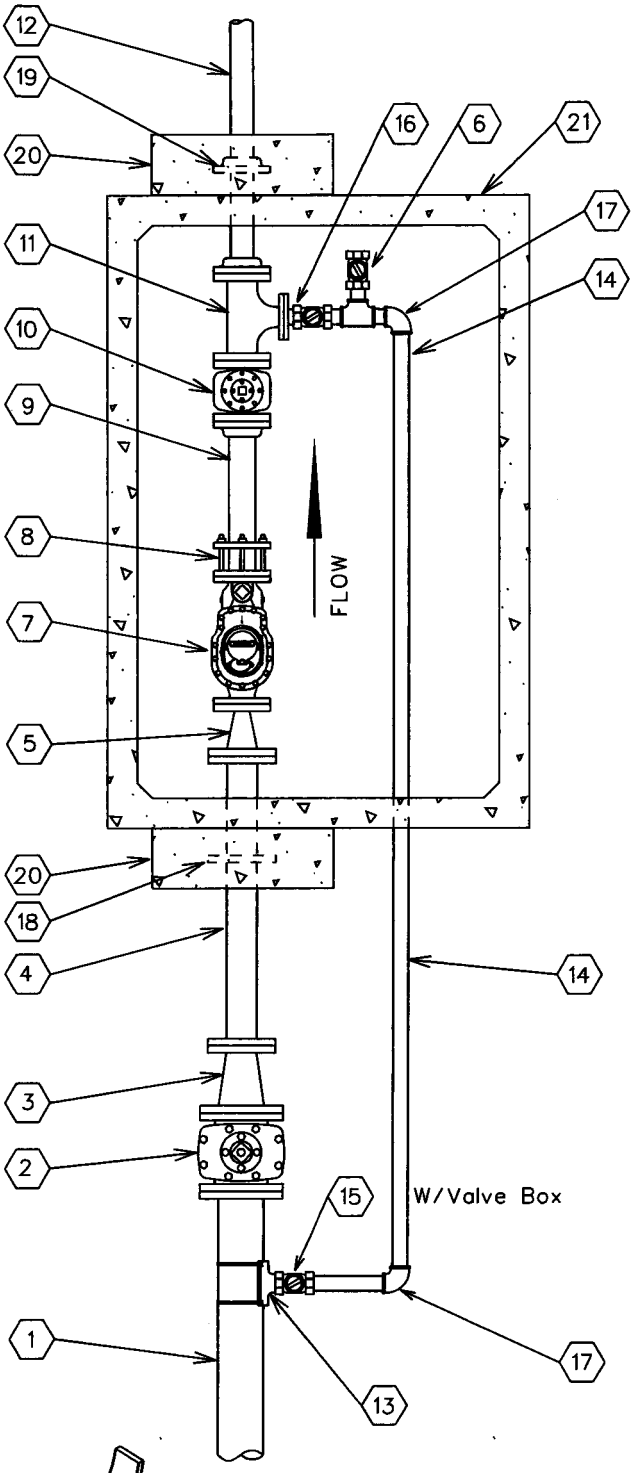

No.	FITTINGS SCHEDULE
1.	6" D.I.P.
2.	6" G.V.B.&C. mj x flng
3.	6"x4" Reducer flng x mj
4.	4"x3'-0" D.I.P. Spool flng x pe
5.	4" x 3" Reducer flng
6.	2" Test Port
7.	3" Compound Meter
8.	3" F.C.A.
9.	3"x2'-0" D.I. Spool flng x pe
10.	3" Gate Valve flng
11.	3"x2" Flg Tee w/ 2" Companion Flange
12.	3"x4'-0" D.I. Spool flng x pe
13.	6"x2" Tapping Saddle
14.	2" Copper Pipe
15.	2" Mueller B25122 Ball Valve w/B20299 Nut
16.	2" Locking Ball Valve (normally closed)
17.	2" Mueller H-15526 90° Ell CC x CC
18.	4" Megalug
19.	3" Slip-On Welding Flange
20.	24"x24"x8" Conc. Thrust Block P.I.P.
21.	575-LA Conc. Vault

NOTE:

1. Use Rowley pipe supports or equivalent as needed (See detail below).
2. Pipe support locations to be determined by field personnel.
3. All copper pipe that comes in contact with concrete to be wrapped w/10-20 Mil. Scotchwrap corrosion protection tape.
4. All mechanical joint fittings are to be megalugged.
5. Use deflection fittings (45° Ells.) to achieve necessary depths & cover as shown on the standard specification for the installation of a concrete vault (E-9-12-5).

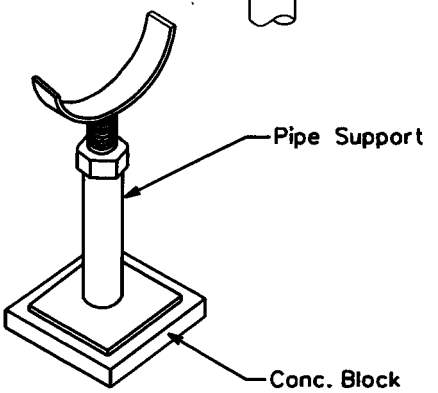

ARIZONA WATER COMPANY

STANDARD SPECIFICATION

FOR THE INSTALLATION OF

3" COMPOUND METER

DRAWN BY:	APPROVED BY:	DATE:	△08.29.2006	E-9-12-1
CCO	MW	10/5/1993		

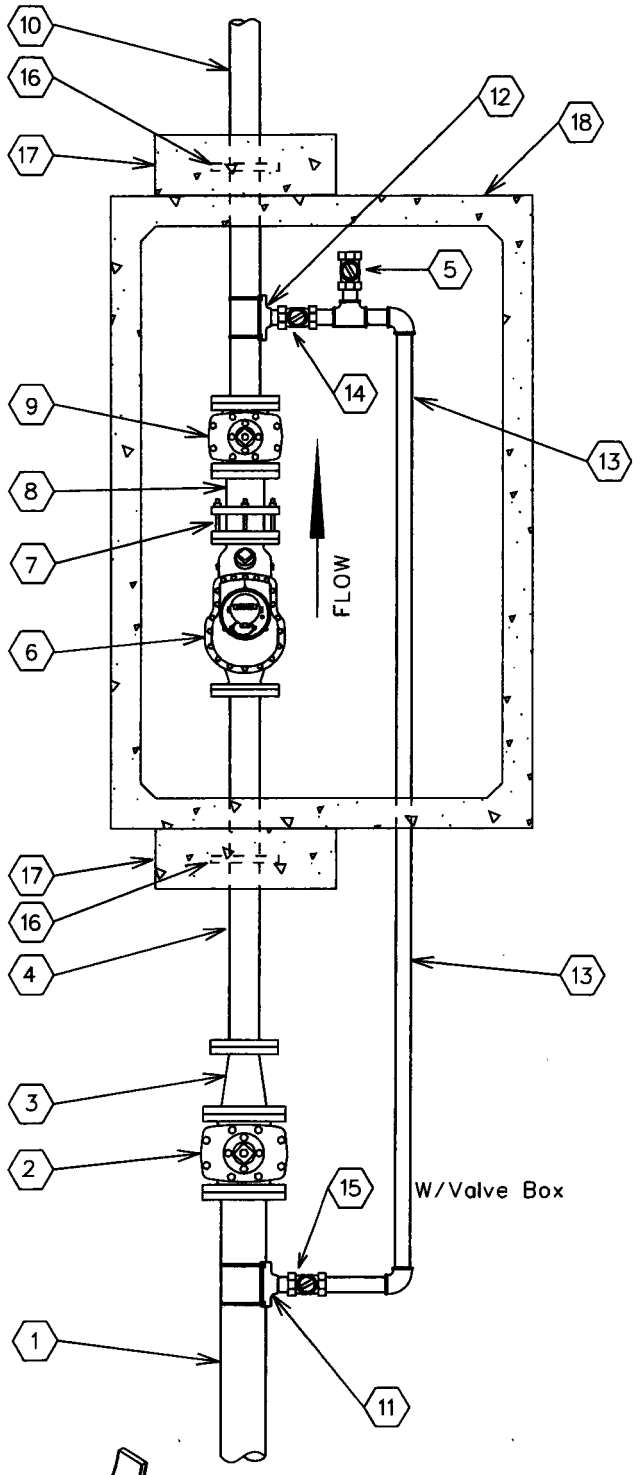

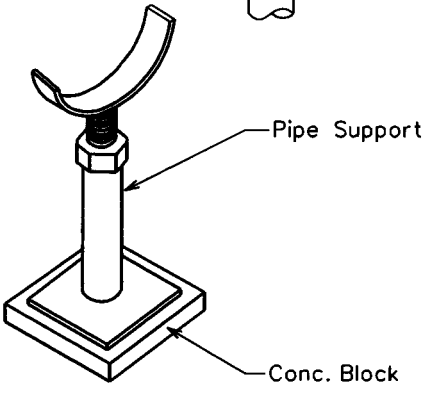

No.	FITTINGS SCHEDULE
1.	6" D.I.P.
2.	6" G.V.B.&C. mj x flng
3.	6"x4" Reducer flng x mj
4.	4"x3'-0" D.I.P. Spool flng x pe
5.	2" Test Port
6.	4" Compound Meter
7.	4" F.C.A.
8.	4"x1'-0" D.I.P. Spool flng x pe
9.	4" Gate Valve flng
10.	4"x4'-0" D.I.P. Spool flng x pe
11.	6"x2" Tapping Saddle
12.	4"x2" Tapping Saddle
13.	2" Copper Pipe
14.	2" Ball Valve / Locking (Normally Closed)
15.	2" Mueller B25122 Ball Valve w/B20299 Nut
16.	4" Megalug
17.	24"x24"x8" Conc. Thrust Block P.I.P.
18.	575-LA Conc. Vault

NOTE:

1. Use Rowley pipe supports or equivalent as needed (See detail below).
2. Pipe support locations to be determined by field personnel.
3. All copper pipe that comes in contact with concrete to be wrapped w/10-20 Mil. Scotchwrap corrosion protection tape.
4. All mechanical joint fittings are to be megalugged.
5. Use deflection fittings (45° Ells.) to achieve necessary depths & cover as shown on the standard specification for the installation of a concrete vault (E-9-12-5).

ARIZONA WATER COMPANY

STANDARD SPECIFICATION
FOR THE INSTALLATION OF

4" COMPOUND METER

DRAWN BY:	APPROVED BY:	DATE:	△08.29.2006	E-9-12-2
CCO	MW	10/5/1993		

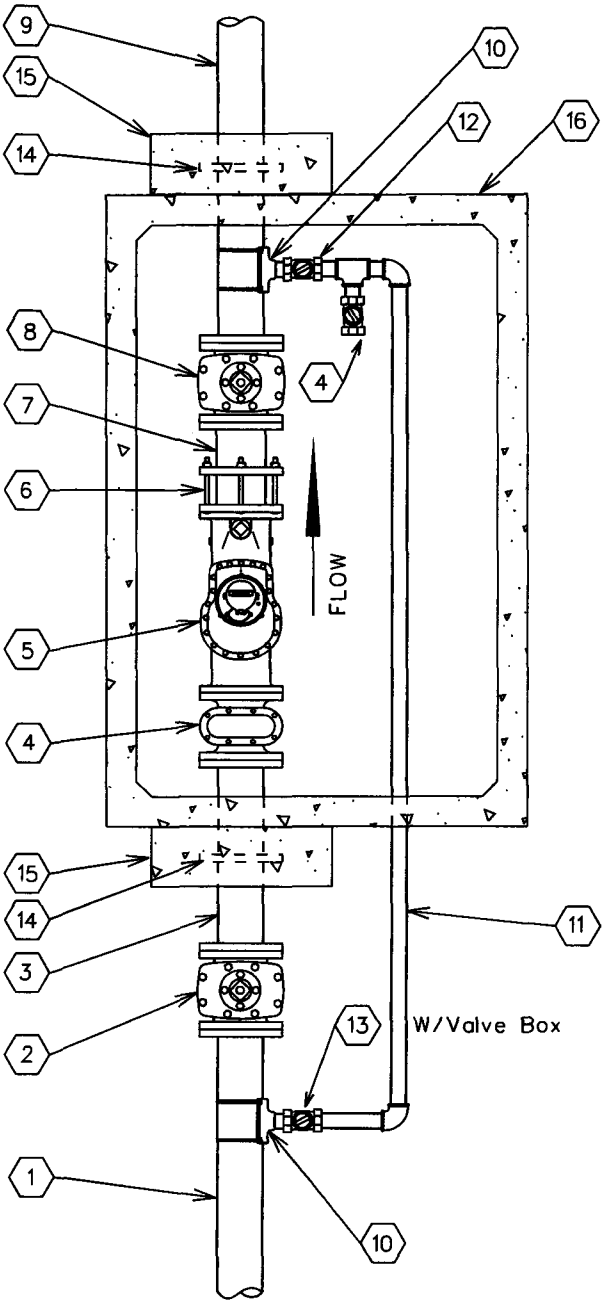

No.	FITTINGS SCHEDULE
1.	6" D.I.P.
2.	6" G.V.B.&C. mj
3.	6"x 3'-0" D.I.P. Spool flng x pe
4.	2" Test Port
5.	6" Compound Meter
6.	6" F.C.A.
7.	6"x 1'-0" D.I.P. Spool flng x pe
8.	6" Gate Valve flng
9.	6"x 4'-0" D.I.P. Spool flng x pe
10.	6"x2" Tapping Saddle
11.	2" Copper Pipe
12.	2" Ball Valve / Locking (Normally Closed)
13.	2" Mueller B25122 Ball Valve w/B20299 Nut
14.	6" Megalug
15.	24"x24"x8" Conc. Thrust Block P.I.P.
16.	575-LA Conc. Vault

NOTE:

1. Use Rowley pipe supports or equivalent as needed (See detail below).
2. Pipe support locations to be determined by field personnel.
3. All copper pipe that comes in contact with concrete to be wrapped w/10-20 Mil. Scotchwrap corrosion protection tape.
4. All mechanical joint fittings are to be megalugged.
5. Use deflection fittings (45° Ells.) to achieve necessary depths & cover as shown on the standard specification for the installation of a concrete vault (E-9-12-5).

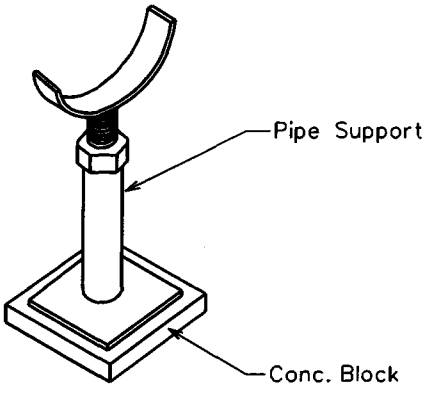

ARIZONA WATER COMPANY

STANDARD SPECIFICATION
FOR THE INSTALLATION OF

6" COMPOUND METER

DRAWN BY:	APPROVED BY:	DATE:	△08.29.2006	E-9-12-3
CCO	MW	10/5/1993		

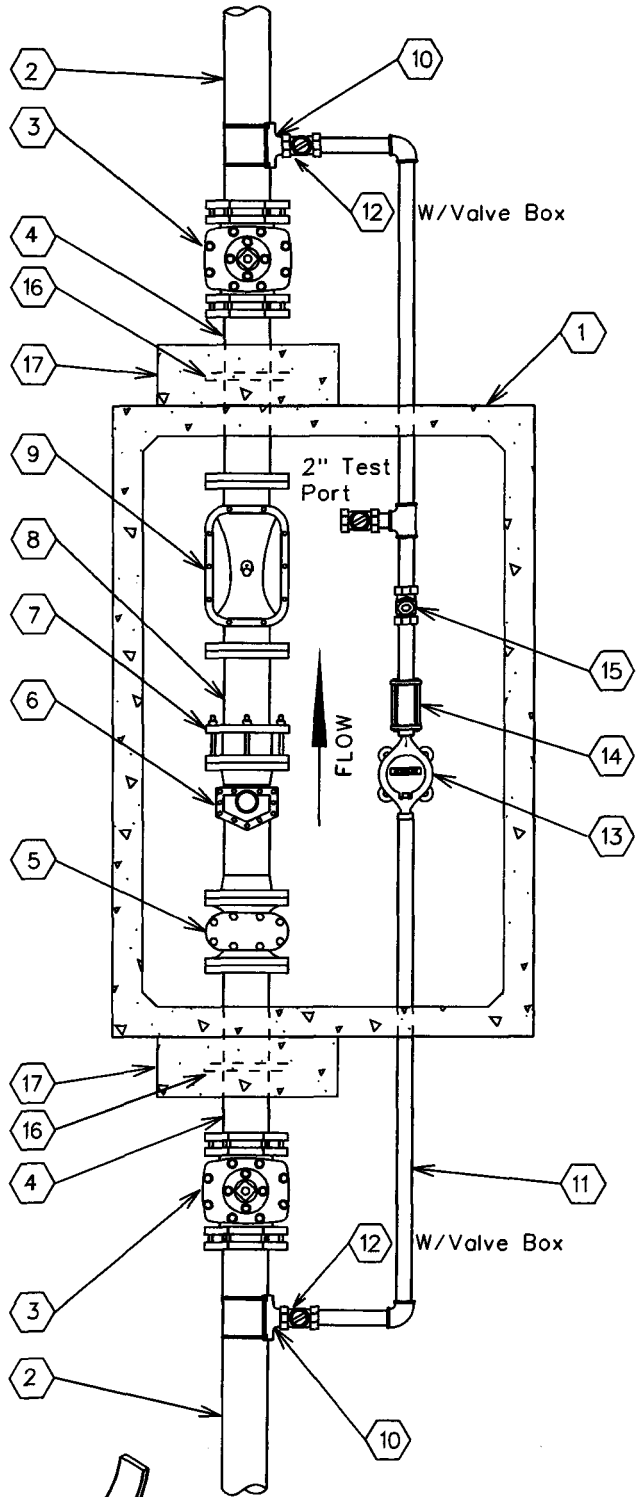

No.	FITTINGS SCHEDULE
1.	575-LA Conc. Vault
2.	6" D.I.P.
3.	6" G.V.B.&C. m.j.
4.	6" x 3'-0" D.I.P. SPool Piece flng x pe
5.	6" Strainer
6.	6" Turbo Meter
7.	6" F.C.A.
8.	6" x 2'-0" D.I.P. Spool Piece flng x pe (TRIM SPOOL PIECE TO 3x THE PIPE DIA.)
9.	6" Detector Check
10.	6"x*N" Tapping Saddle
11.	*N" Copper Pipe
12.	*N" Ball Valve (Locking)
13.	*N" Meter
14.	*N" Coup. Adapt.
15.	*N" Flapper Check Valve
16.	6" Megalug
17.	24"x24"x8" Conc. Thrust Block P.I.P.

*N - Size To Be determined By A.W.Co.

NOTE:

1. Use Rowley pipe supports or equivalent as needed (See detail below).
2. Pipe support locations to be determined by field personnel.
3. All copper pipe that comes in contact with concrete to be wrapped w/10-20 Mil. Scotchwrap corrosion protection tape.
4. All mechanical joint fittings are to be megalugged.
5. Use deflection fittings (45° Ells.) to achieve necessary depths & cover as shown on the standard specification for the installation of a concrete vault (E-9-12-5).
6. To change from a 6" service to a 4" service, change all listed 6" materials to 4" materials.

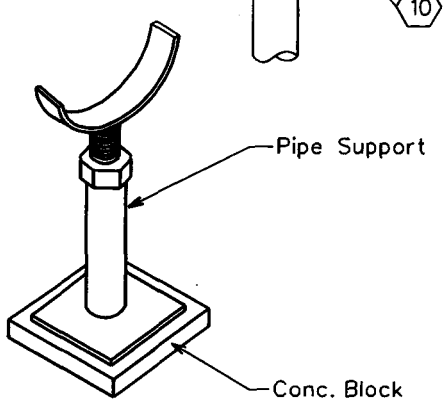

ARIZONA WATER COMPANY

STANDARD SPECIFICATION
FOR THE INSTALLATION OF

6" COMPOUND SERVICE

DRAWN BY:	APPROVED BY:	DATE:	△08.29.2006	E-9-12-4
CCO	MW	10/05/1993		

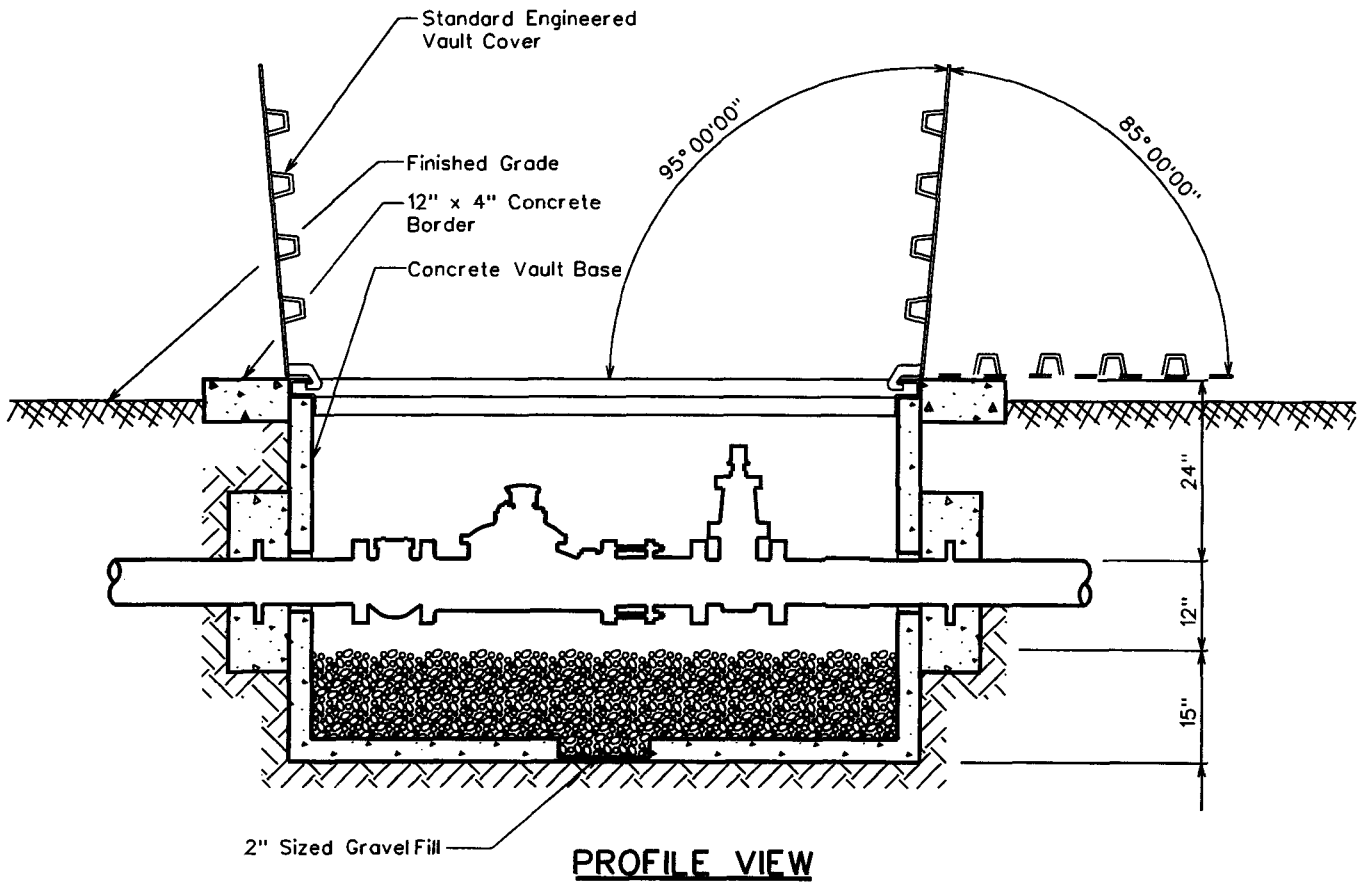

PROFILE VIEW

CONCRETE VAULT & COVER SPECIFICATIONS

Vault - Base No. 575-BL
Cover - Standard Engineered Vault Cover
. 4874 Aluminum Diamond Plate Cover For Non-Traffic Loading Areas
Or
. 4874 Galvanized Steel Diamond Plate Cover W/ H-20 Traffic Loading
. Double Torsion Spring Assisted Doors W/ Recessed Hasp & Safety Latches

NOTES

1. Total Depth Of Concrete Vault To Be A Maximum Of 3'-0" From Top Of Vault Cover To Top Of Gravel Fill.
2. Service Connections Larger Than 6" In Diameter Will Conform To The Same Vault & Cover Specifications. Size Of Vault & Cover To Be Determined By A.W.Co. Engineers.

ARIZONA WATER COMPANY

STANDARD SPECIFICATION
FOR THE INSTALLATION OF

CONCRETE VAULT

DRAWN BY:	APPROVED BY:	DATE:	△ 05.17.2001	E-9-12-5
CCO	MW	10/5/1993		

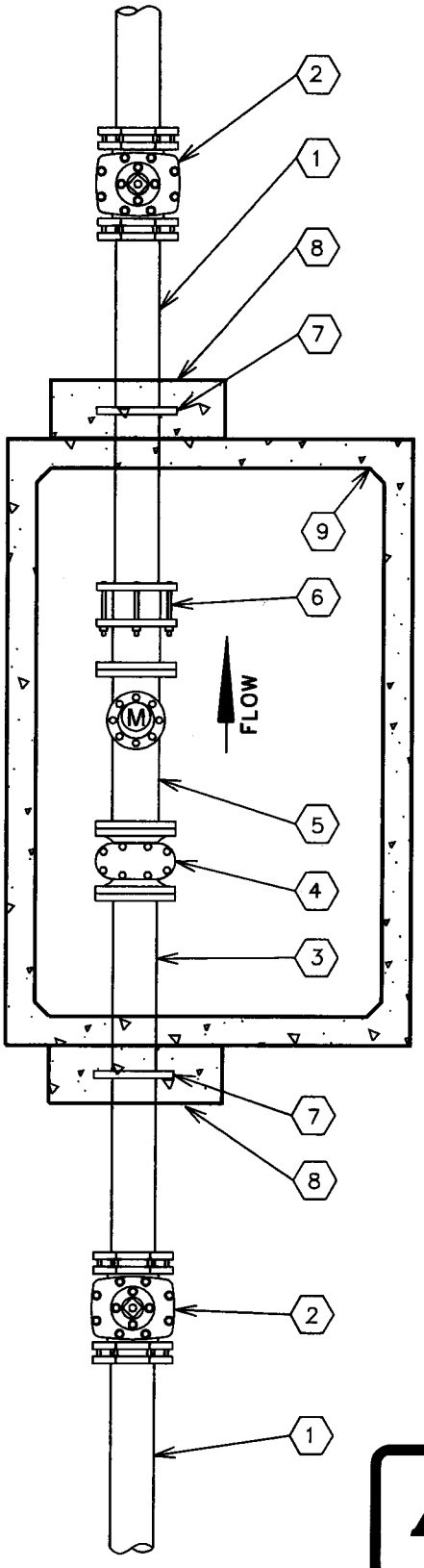

No.	FITTINGS SCHEDULE
1.	Ductile Iron Pipe
2.	Gate Valve M.J.
3.	D.I.P. Spool Piece Flg x Pe (10xDia.)
4.	Meter Strainer
5.	Propeller Meter
6.	Flanged Coupling Adapter
7.	Megalug Gland (Thrust Anchor)
8.	Concrete Thrust Block P.I.P.
9.	Concrete Vault

NOTE:

1. Use Rowley pipe supports or equivalent as needed (See E-9-12-4).
2. Pipe support locations to be determined by field personnel.
3. All Sched. 40 Stl. pipe outside of vault to be wrapped w/10-20 Mil. Scotchwrap corrosion protection tape.
4. All mechanical joint fittings to are to be megalugged.
5. Use deflection fittings (45° Ells.) to achieve necessary depths & cover as shown on the standard specification for the installation of a concrete vault (E-9-12-5).

ARIZONA WATER COMPANY

STANDARD SPECIFICATION

FOR THE INSTALLATION OF

NON-POTABLE PROPELLER METER

DRAWN BY:	APPROVED BY:	DATE:	△	
JPK	MW	7-20-95		E-9-12-6

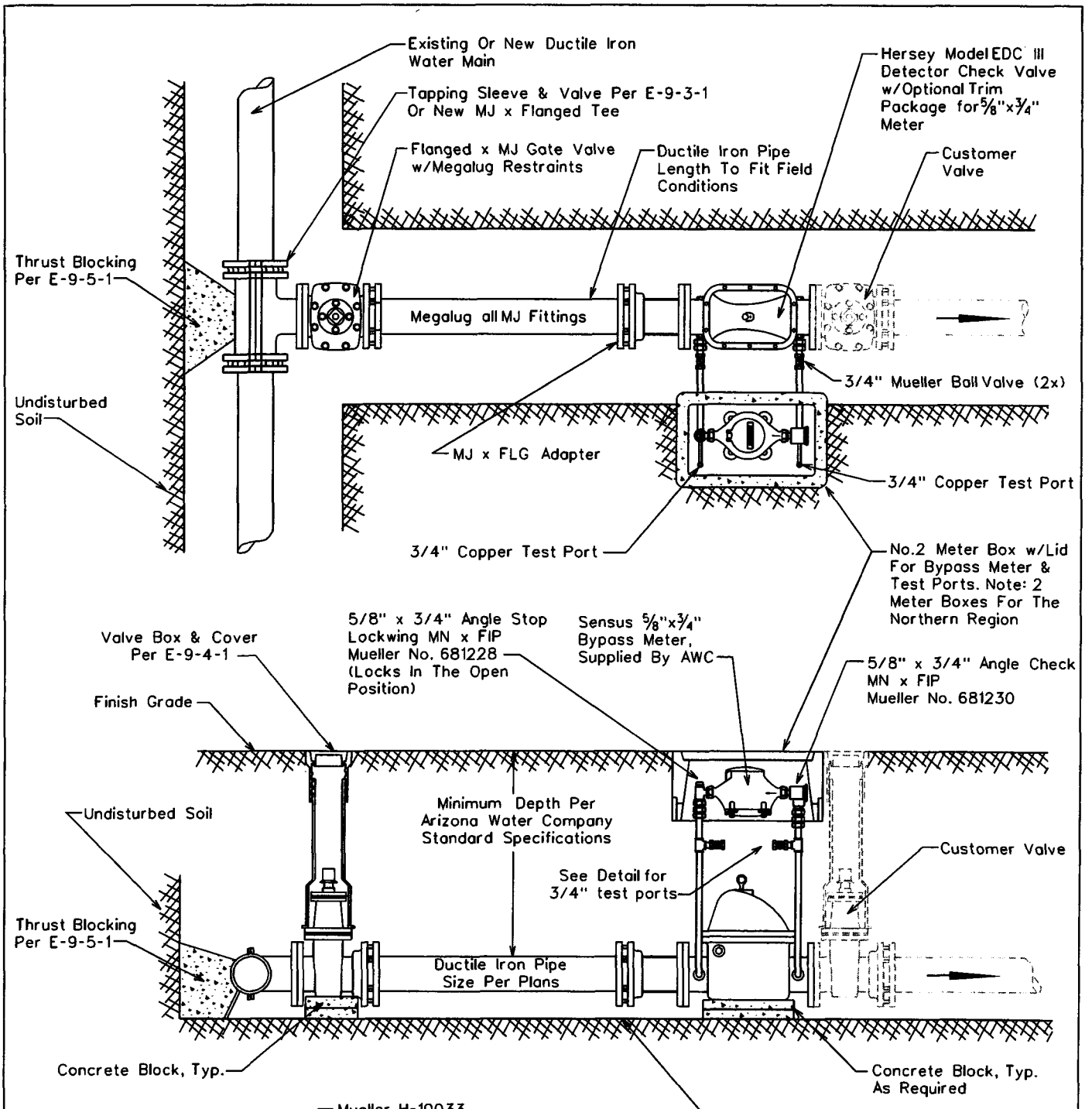

ARIZONA WATER COMPANY

STANDARD SPECIFICATION

FOR THE INSTALLATION OF

TYPICAL 4" THRU 8" DETECTOR CHECK VALVES

DRAWN BY:	APPROVED BY:	DATE:	△03.09.2007	E-9-13-1
CB	MW	10.16.1990		

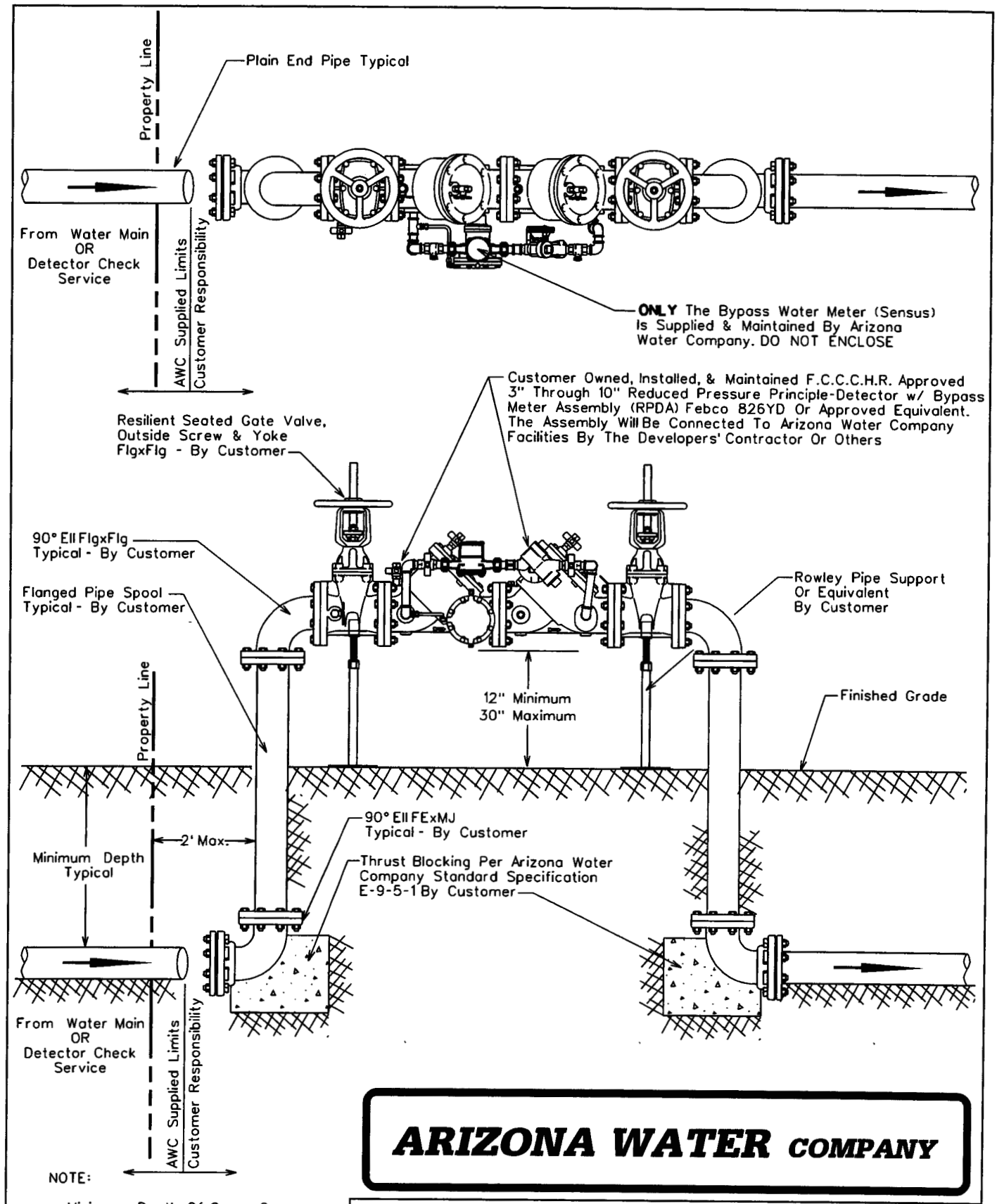

NOTE:

Minimum Depth Of Cover Over 6" & 8" Mains is 36 Inches, 12" & Greater is 48 Inches Unless Otherwise Specified

ARIZONA WATER COMPANY

STANDARD SPECIFICATION

FOR THE INSTALLATION OF

3" THRU 10" REDUCED PRESSURE PRINCIPLE-DETECTOR WITH BYPASS METER ASSEMBLY (RPDA) FOR FIRELINE SERVICES

DRAWN BY:	APPROVED BY:	DATE:	△1-19-2000	E-9-13-2
CB	MW	10-13-98		

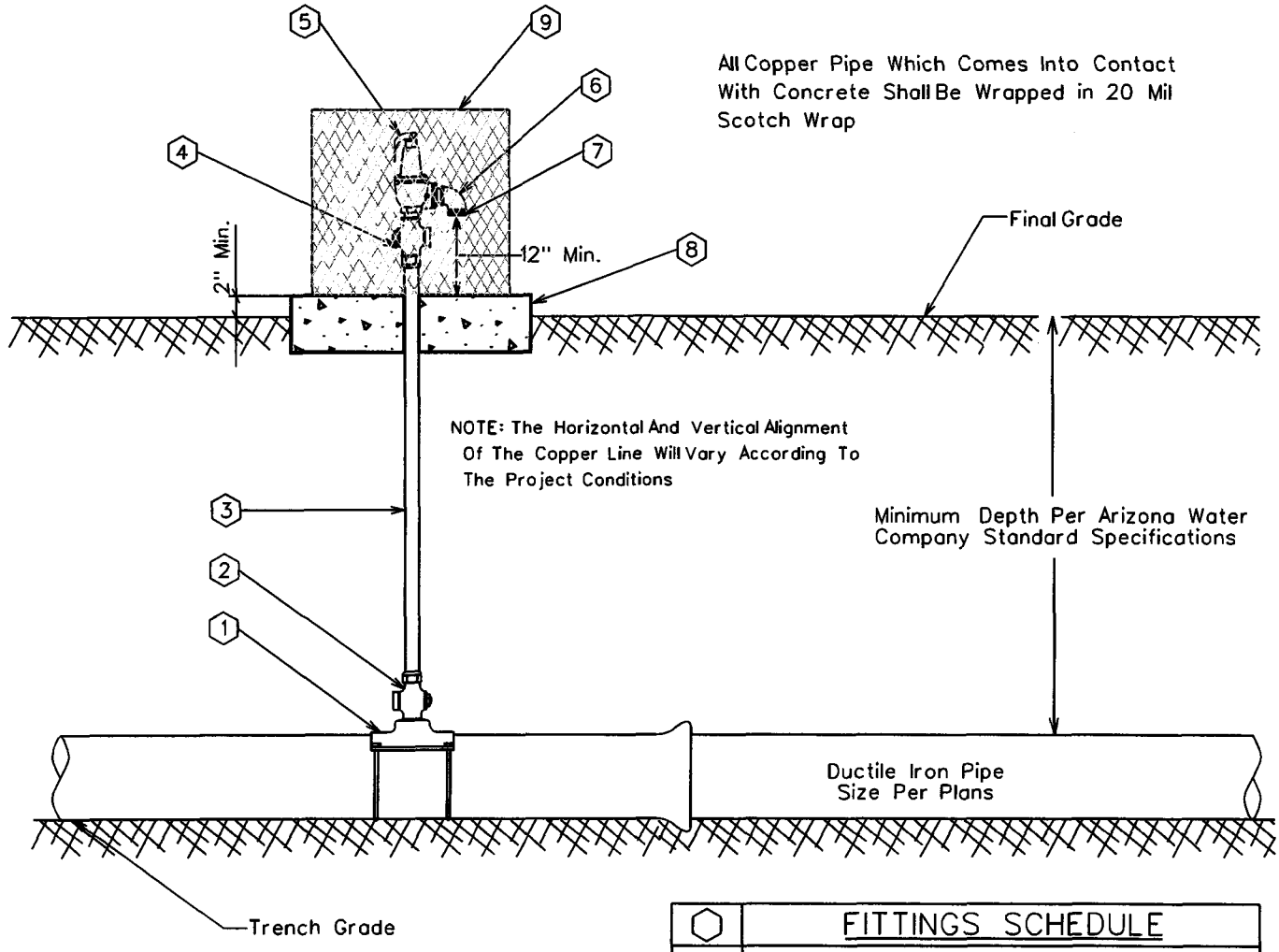

⬡	FITTINGS SCHEDULE
1.	Mueller BR2B Bronze Service Saddle - Double Strap
2.	2" Mueller B-25008 Taper x Comp. Ball Corp Stop
3.	2" Type 'K' Copper w/NO Splices - Field Fit
4.	2" Mueller B-25028 IP x Comp. Ball Corp Stop
5.	2" Pressure Relief Valve Watts 174A With A 2" Inlet / 2" Outlet 30-150 psi W/ Bronze Body
6.	2" Brass Street Elbow
7.	No.16 Wire Mesh Screen (Non-Corrodible)
8.	4" Thick Concrete Pad - Class 'C' Concrete
9.	Vandal enclosure to be centered on the concrete pad

NOTE:

1. Pressure relief valves are typically located just down stream of a pressure reducing station or where system conditions might be subject to greater than allowable pressures.
2. The relief valve assembly and vandal enclosure shall be located out of the roadway, but within the right-of-way or easement.

ARIZONA WATER COMPANY

STANDARD SPECIFICATION
FOR THE INSTALLATION OF

TYPICAL PRESSURE RELIEF VALVE ASSEMBLY

DRAWN BY:	APPROVED BY:	DATE:	△ 08.29.2006	
CCO	MW	3/20/1986		E-9-14-1

All Copper Pipe Which Comes Into Contact With Concrete Shall Be Wrapped in 20 Mil Scotch Wrap

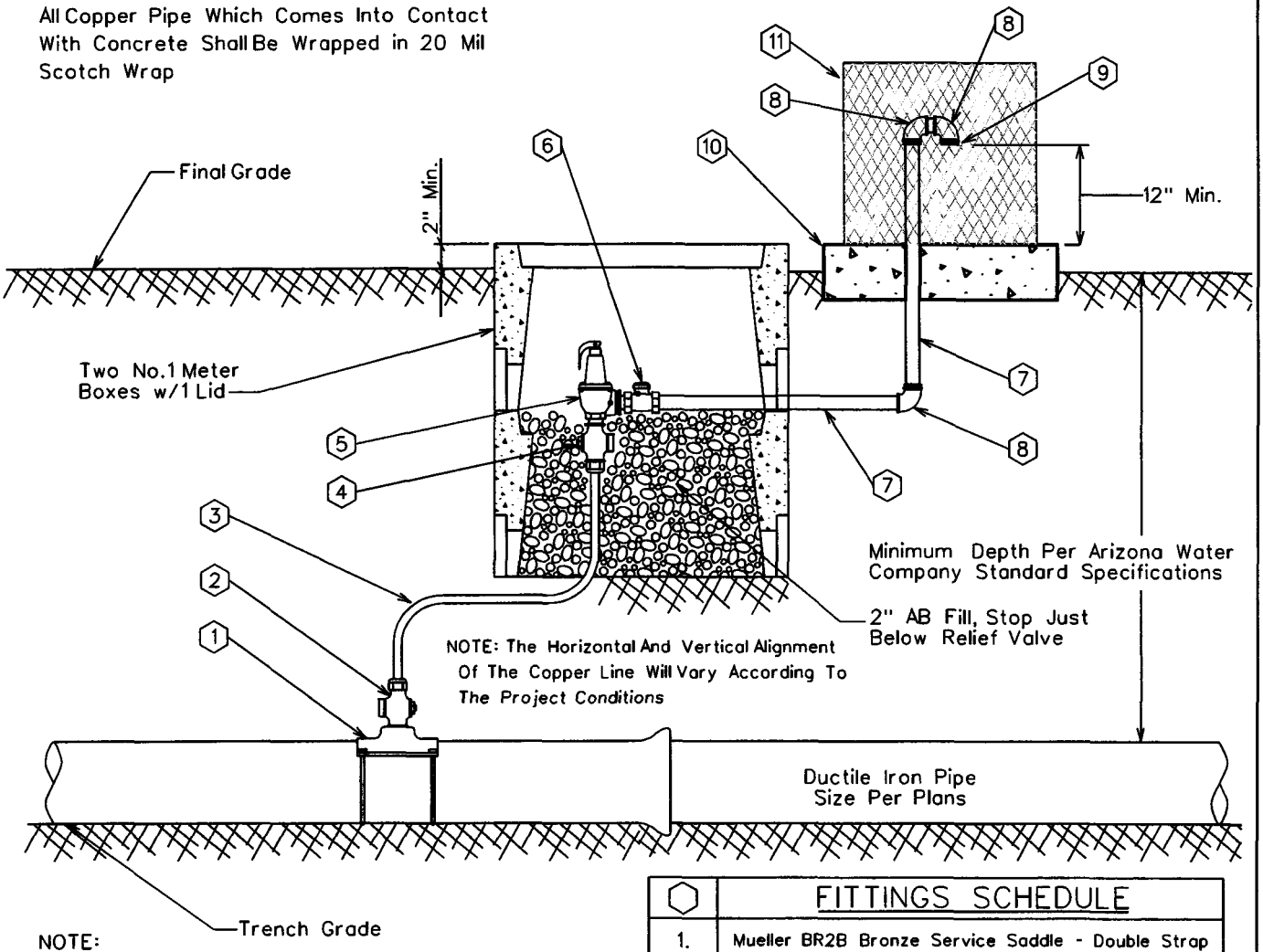

NOTE:

1. Pressure relief valves are typically located just down stream of a pressure reducing station or where system conditions might be subject to greater than allowable pressures.
2. The relief valve assembly and vandal enclosure shall be located out of the roadway, but within the right-of-way or easement.

⬡	FITTINGS SCHEDULE
1.	Mueller BR2B Bronze Service Saddle - Double Strap
2.	2" Mueller B-25008 Taper x Comp. Ball Corp Stop
3.	2" Type 'M' Rigid Copper w/NO Splices - Field Fit
4.	2" Mueller B-25028 IP x Comp. Ball Corp Stop
5.	2" Pressure Relief Valve Watts 174A With A 2" Inlet / 2" Outlet 30-150 psi W/ Bronze Body
6.	2" Bronze Check Valve Watts Series CV
7.	2" Schedule 40 Cut Pipe - Field Fit
8.	2" Brass Street Elbow
9.	No.16 Wire Mesh Screen (Non-Corrodible)
10.	4" Thick Concrete Pad - Class 'C' Concrete
11.	Guardshack, Model GS-1, Available From BPDI, Inc. Available In Leaf Green Or Desert Tan

ARIZONA WATER COMPANY

STANDARD SPECIFICATION

FOR THE INSTALLATION OF

PRESSURE RELIEF VALVE - NORTHERN REGION

DRAWN BY:	APPROVED BY:	DATE:	△08.29.2006	E-9-14-2
CCO	MW	3/20/1986		

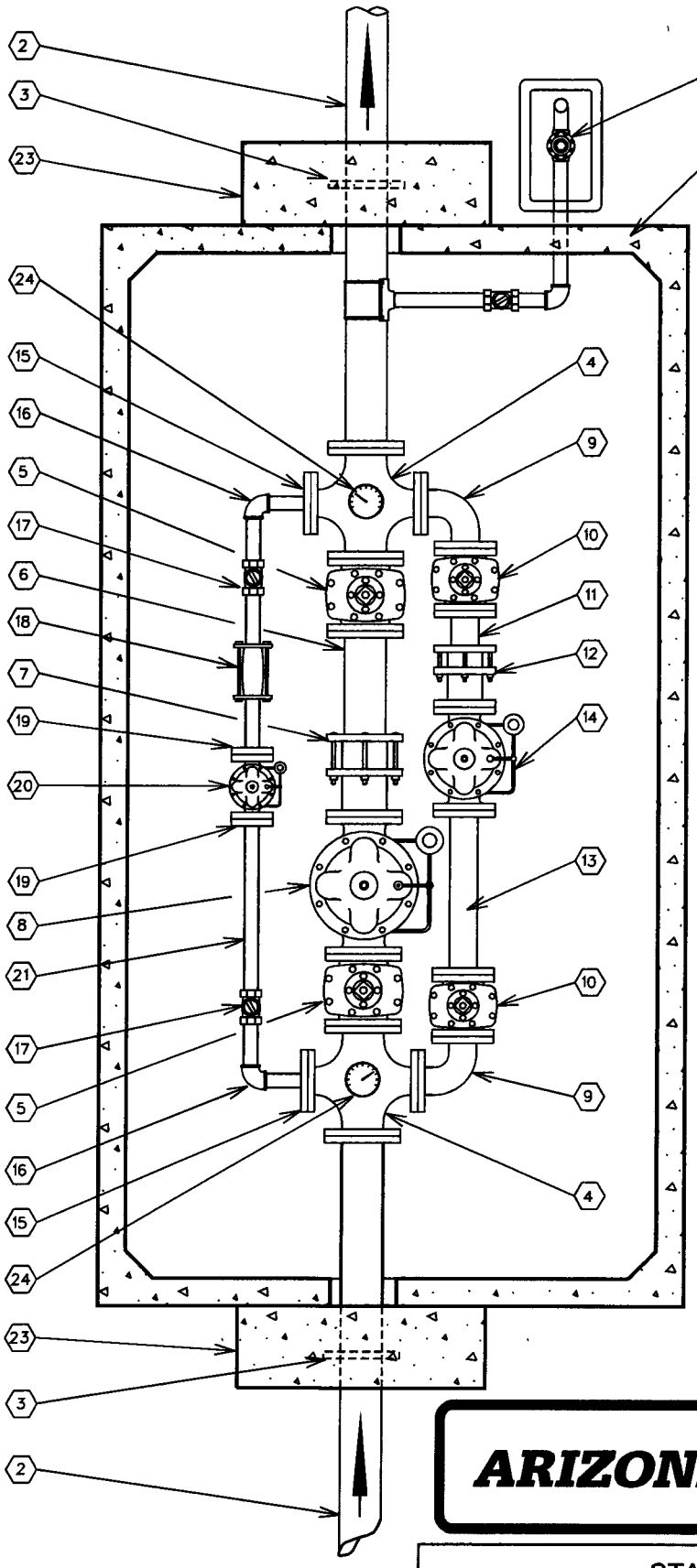

No.	FITTINGS SCHEDULE
1.	612 LA Conc. Vault (See Note 3)
2.	6"x6'-0" D.I.P. Spool Flg.xP.E.
3.	6" Megalug (Thrust Anchor)
4.	6"x4" Cross Flg.
5.	6" Gate Valve Flg.
6.	6"x2'-0" D.I.P. Spool Flg.xP.E.
7.	6" Flg. Coup. Adapt. (Rockwell 913)
8.	6" High Flow Pressure Reducing Valve Flg.
9.	4" 90° Ell. Flg.
10.	4" Gate Valve Flg.
11.	4"x1'-0" D.I.P. Spool Flg.xP.E.
12.	4" FLg. Coup. Adapt. (Rockwell 913)
13.	4"x2'-0" D.I.P. Spool Flg.
14.	4" Medium Flow Pressure Reducing Valve Flg.
15.	2"x9" O.D. Reducing Flg. (I.P.T.)
16.	2" 90° Ell. F.I.P.
17.	2" Ball Valve F.I.P.
18.	2" Comp. Coup. (Rockwell 411)
19.	2" Companion Flg. (I.P.T.)
20.	2" Low Flow Pressure Reducing Valve Flg.
21.	2" Sched. 40 Stl. Pipe
22.	2" Pressure Relief Valve (See E-9-14-1)
23.	12"x36"x36" Conc. Thrust Block P.I.P.
24.	Pressure Gauge w/shut off valve

NOTE:

1. Use Rowley pipe supports or equivalent as needed. (See E-9-12-4)
2. Pipe support locations to be determined by field personnel.
3. Vault-612 LA top section w/12" Dia. sump hole. Cover-concrete slab top w/(4) 4'-0" x2'-6" aluminum spring loaded hinged style covers for non-traffic loading areas. For areas w/low density traffic, cover is to be designed for H-20 traffic loading.
4. All Sched. 40 Stl. pipe outside of vault to be wrapped w/10-20 Mil. Scotchwrap corrosion protection tape.
5. Use deflection fittings (45° Ells.) to achieve necessary depths & cover as shown on the standard specification for the installation of a concrete vault (E-9-12-5).

ARIZONA WATER COMPANY

STANDARD SPECIFICATION

FOR THE INSTALLATION OF

PRESSURE REDUCING STATION

DRAWN BY:	APPROVED BY:	DATE:	△ 9-27-95	E-9-15-1
JPK	MW	11-16-88		

1. Specific Items To Be Painted Deer-O Pure White Enamel:

A. All Booster Pumps.
B. All Electrical Motors And Gas Engines.
C. Well Pump Discharge Heads.
D. Electrical Panel.

2. Specific Items To Be Painted Frost Cap White Or Deer-O Pure White Enamel:

A. Well Shelter.

3. Specific Items To Be Painted OSHA Orange:

A. Electrical Conduit.

4. All Other Items To Be Painted With Either:
(At Manager's Discretion)

A. Cholla Green
B. Forest Green
C. Sonora Beige
D. Red Rock
E. Rock Brown
F. Deer-O Pure White
G. Elkhorn Cactus

ARIZONA WATER COMPANY

STANDARD SPECIFICATION
FOR THE INSTALLATION OF

PAINT COLOR SELECTION

DRAWN BY:	APPROVED BY:	DATE:	△	
CCO		3/20/1986	△ 2/13/2001	E-9-16-1

1. Tank shall conform to AWWA Specification D100-84 with exceptions noted below.

*2. 1/4" minimum shell plate.

3. Minimum of 12" diameter roof vent, screened with No. 16 non-corrodible wire mesh, to be located on a 24" diameter round hinged manhole opening at the center of the tank to provide access to the dollar plate.

4. Overflow pipe shall be the same diameter as the inlet pipe and shall terminate 12 to 24 inches above splash pad or a minimum of 2 overflow pipe diameters above weir box high water level.

5. Storage tank shall be placed upon adequately compacted base material.

6. 6" minimum floor mounted tank drain outlet to be located close to the outer shell.

7. Tank and related fittings shall be enclosed with a 6 foot chain link fence with lockable gates and anti-personnel wire on top of fence.

8. Liquid level shall be indicated by a target and target board on the outside surface of the tank.

9. 24 inch diameter manholes shall be provided on the roof and on the shell near the bottom of the tank. The roof manhole cover shall overlap the manhole by at least 2 inches to provide a rain tight closure. Roof manhole shall be hinged and equipped with a lock. Shell manhole cover to be hinged and bolted in place. *Tanks larger than a 60 foot diameter require 2 shell manholes.

10. Inside and outside ladders shall be located at the roof manhole. Outside ladder shall be caged with locking trap door. Bottom 8 feet of cage shall be enclosed to within 1/2" of shell with 10 gauge sheet steel.

11. Finished tank shall be disinfected in accordance with Arizona Department of Health Services Engineering Bulletin No. 8 before being placed into service.

12. The following information will be included with application for approval to construct:

    1. Tank location_____
    2. Tank height_____
    3. Tank diameter_____
    4. Tank capacity_____
    5. Method of water level control_____

13. The storage tank will not be constructed within the 100 year flood plain and the tank site will be graded to slope away from the tank.

14. The welded steel storage tank will be coated as per AWWA Specification D102, and N.S.F. Standard 61.

*Exceptions to AWWA Specification D100-84

FOUNDATION NOTES

1. FINISH CONCRETE SURFACE MUST SLOPE UPWARDS FROM THE STEEL BAND APPROX. 1" IN 10'-0".

2. TOP OF STEEL BAND MUST BE MAINTAINED LEVEL TO WITHIN 1/8".

3. INSTALL 8-2" DIA.x10'-0" P.V.C. WEEP LINES, EQUALLY SPACED (EVERY 45°). PERFORATE 8'-0" OF LINE WITH 1/2" DIA. HOLES @ 6" O.C. PLUG INTERIOR END OF LINE w/2" CAP.

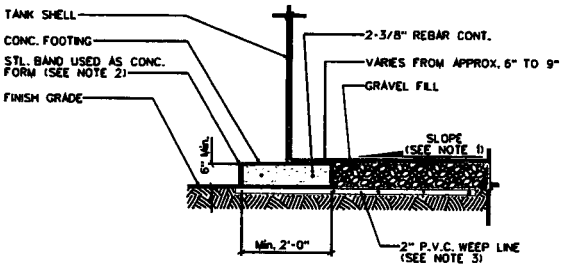

FOUNDATION DETAIL

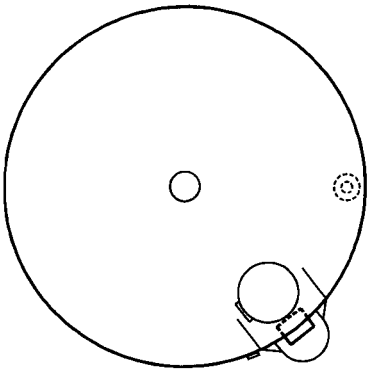

PLAN VIEW

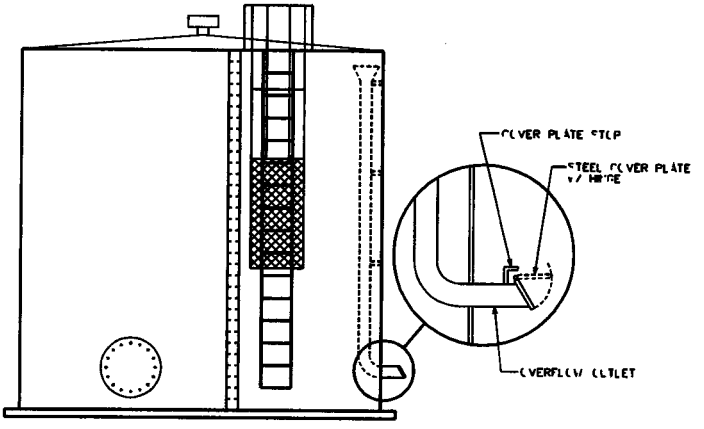

PROFILE VIEW

ARIZONA WATER COMPANY

STANDARD SPECIFICATION
FOR THE INSTALLATION OF

STEEL WATER STORAGE TANK

DRAWN BY:	APPROVED BY:	DATE:	△	
JPK	MJW	10-17-88	2-12-96	E-9-17-1

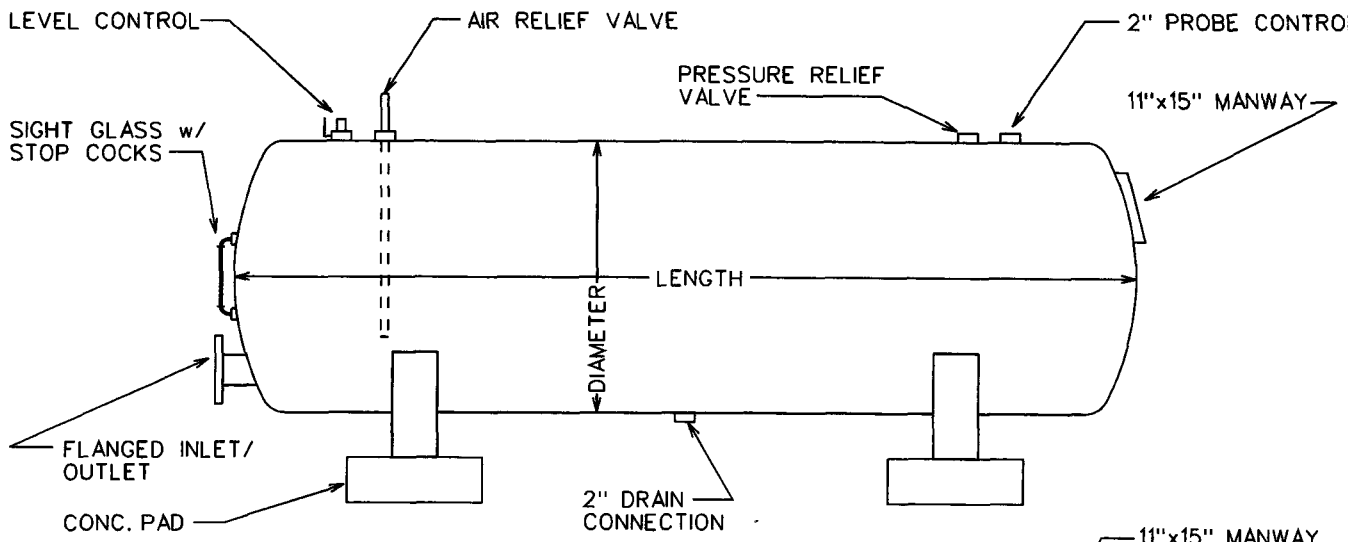

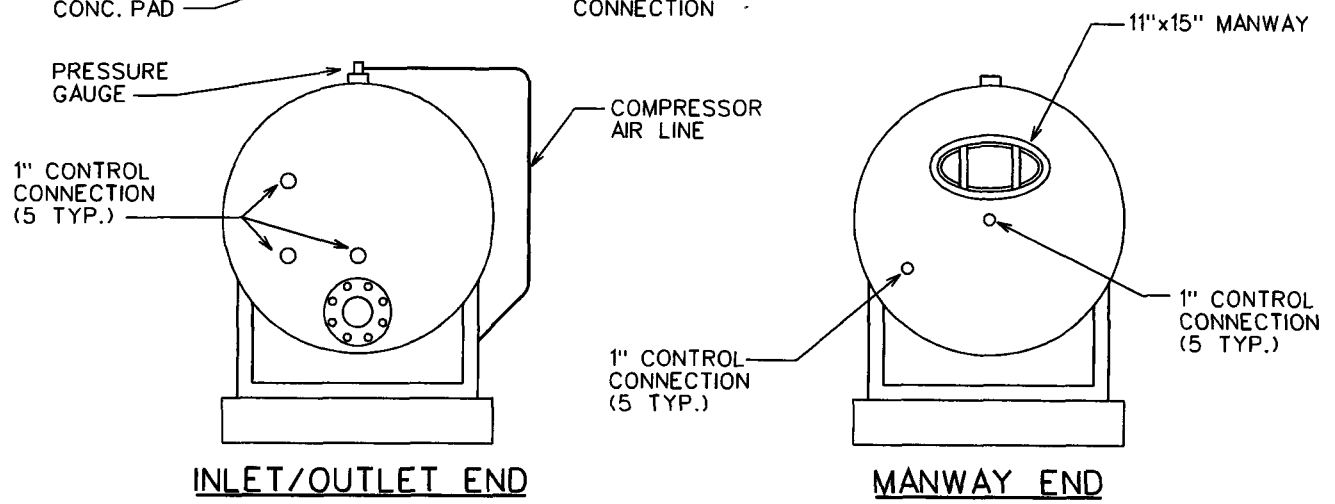

INLET/OUTLET END

MANWAY END

1. ALL HYDROPNEUMATIC TANKS SHALL BE DESIGNED & CONSTRUCTED IN ACCORDANCE WITH THE CURRENT REQUIREMENTS OF THE ASME CODE FOR UNFIRED PRESSURE VESSELS, SECTION VIII, DIVISION 1.
2. FINISHED TANK SHALL BE DISINFECTED IN ACCORDANCE WITH ADEQ BULLETIN No. 8 BEFORE BEING PLACED INTO SERVICE.
3. THE WELDED STEEL HYDROPNEUMATIC TANK WILL BE COATED AS PER AWWA SPECIFICATION D102 & NSF STANDARD 61.
4. THE FOLLOWING INFORMATION WILL BE INCLUDED WITH THE APPLICATION FOR APPROVAL TO CONSTRUCT.
   1. Tank Location _____
   2. Tank Length _____
   3. Tank Diameter _____
   4. Tank Capacity _____
   5. Maximum Working Pressure _____

ARIZONA WATER COMPANY

STANDARD SPECIFICATION
FOR THE INSTALLATION OF
HYDROPNEUMATIC TANK

DRAWN BY:	APPROVED BY:	DATE:	△ 01.16.2007	E-9-18-1
JPK	MW	3-20-1986		

NOT
CONVERTED
TO
CAD

ARIZONA WATER COMPANY

STANDARD SPECIFICATION
FOR THE INSTALLATION OF

WELL SHELTER

DRAWN BY:	APPROVED BY:	DATE:	△04.03.2001	E-9-19-1
CB		03.20.1986		

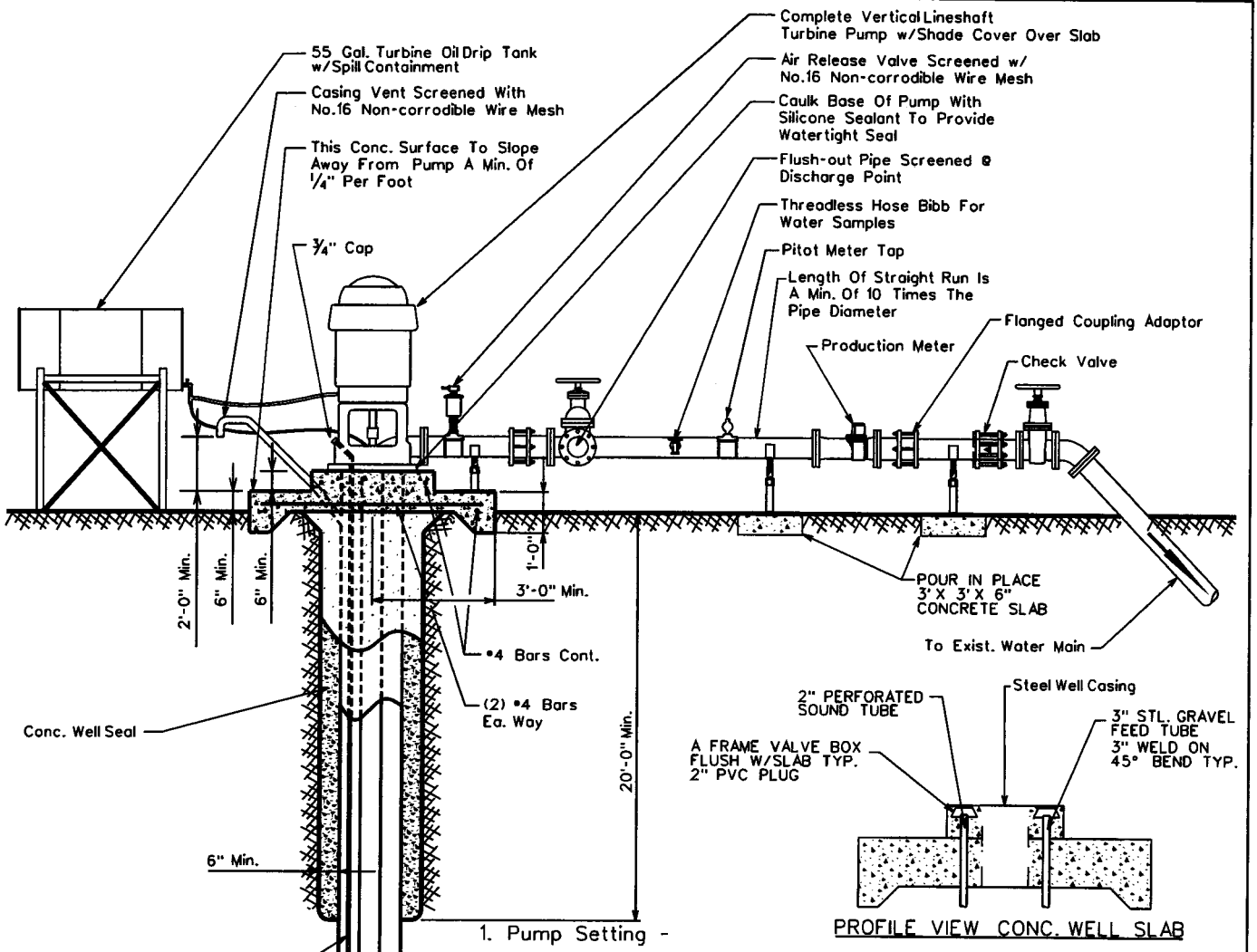

PROFILE VIEW CONC. WELL SLAB

1. Pump Setting -
2. System Pressure @ Water Main -
3. Design G.P.M. -
4. Pump Controlled By -
5. Well Does Not Lie Within The 100 Year Flood Plain.
6. Well Does Not Lie Within 100 Feet Of A Septic Tank.
7. Well Does Not Lie Within 50 Feet Of A Sewer Line.
8. Well Does Not Lie Within 100 Feet Of A Discharge Activity Which Requires An APP.
9. Well Does Not Lie Within 100 Feet Of An Underground Storage Tank.
10. Well Does Not Lie Within 100 Feet Of A Hazardous Waste Facility.
11. All Water Related Fittings Will Conform to N.S.F. Standard 61.
12. The Well Is Not Located Within 500 Feet Of Surface Water.
13. The Site Will Be Graded To Provide Adequate Drainage Away From The Well.
14. 6.88 lbs. of Davis #8084 Grey Dye, Per Yard, For 2500 PSI Concrete

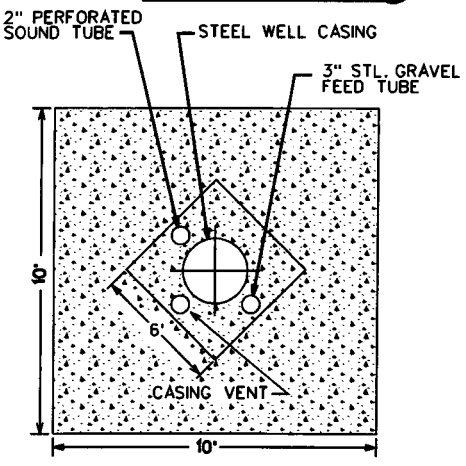

PLAN VIEW CONC. WELL SLAB

ARIZONA WATER COMPANY

STANDARD SPECIFICATION

FOR THE INSTALLATION OF

TYPICAL WELL W/ LINESHAFT TURBINE PUMP

DRAWN BY:	APPROVED BY:	DATE:	△	
JW	M.W.	3-20-86	9/15/04	E-9-20-1

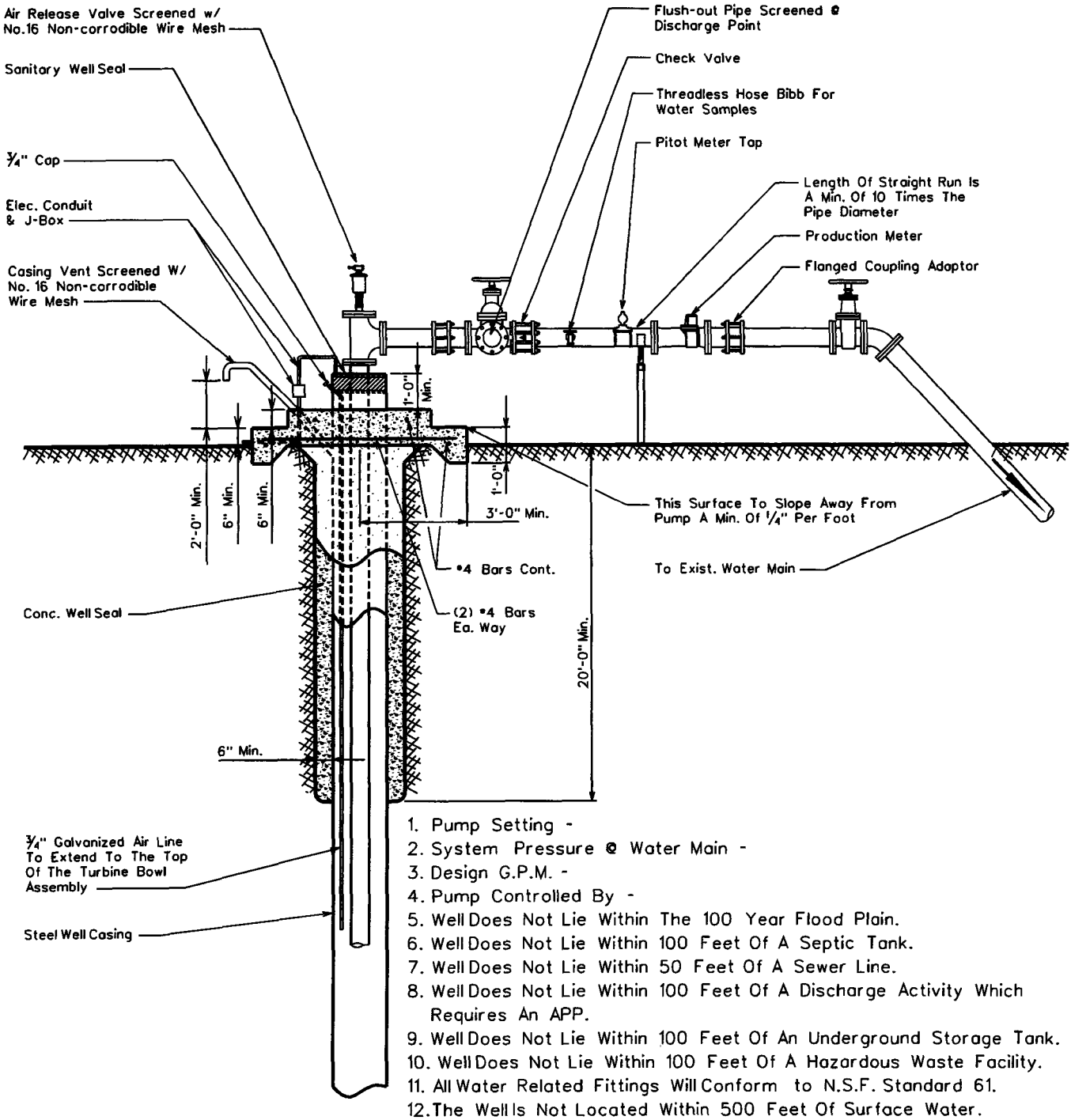

1. Pump Setting -
2. System Pressure @ Water Main -
3. Design G.P.M. -
4. Pump Controlled By -
5. Well Does Not Lie Within The 100 Year Flood Plain.
6. Well Does Not Lie Within 100 Feet Of A Septic Tank.
7. Well Does Not Lie Within 50 Feet Of A Sewer Line.
8. Well Does Not Lie Within 100 Feet Of A Discharge Activity Which Requires An APP.
9. Well Does Not Lie Within 100 Feet Of An Underground Storage Tank.
10. Well Does Not Lie Within 100 Feet Of A Hazardous Waste Facility.
11. All Water Related Fittings Will Conform to N.S.F. Standard 61.
12. The Well Is Not Located Within 500 Feet Of Surface Water.
13. The Site Will Be Graded To Provide Adequate Drainage Away From The Well.

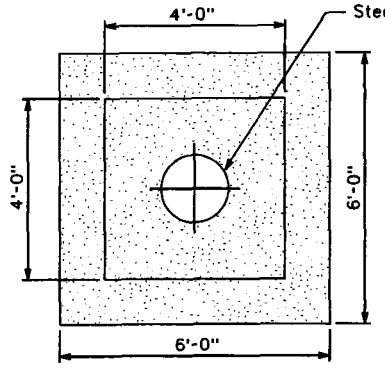

PLAN VIEW CONC. WELL SLAB

ARIZONA WATER COMPANY

STANDARD SPECIFICATION
FOR THE INSTALLATION OF

TYPICAL WELL W/ SUBMERSIBLE TURBINE PUMP

DRAWN BY:	APPROVED BY:	DATE:	△	
jpk	M.W.	3-20-86	2-16-01	E-9-21-1

All New Purchases To Conform To The Following:

Column Pipe

4" I.D. - 8	Threads	Per	Inch	Tapered	3/4"	Per	Foot	Right	Hand
6" I.D. - 8	"	"	"	"	"	"	"	"	"
8" I.D. - 8	"	"	"	"	"	"	"	"	"
10" I.D.- 8	"	"	"	"	"	"	"	"	"
12" I.D.- 8	"	"	"	"	"	"	"	"	"
14" I.D.- 8	"	"	"	"	"	"	"	"	"

Oil Tube - Peerless Type

1 1/2" O.D. - 14	Threads	Per	Inch	Right	Hand
2" O.D. - 12	"	"	"	"	"
2 1/2" O.D. - 10	"	"	"	"	"
3" O.D. - 10	"	"	"	"	"
3 1/2" O.D. - 10	"	"	"	"	"
4" O.D. - 10	"	"	"	"	"

Line Shaft

3/4" O.D. - 10	Threads	Per	Inch	Left	Hand
1" O.D. - 14	"	"	"	"	"
1-3/16" O.D. - 10	"	"	"	"	"
1-1/2" O.D. - 10	"	"	"	"	"
1-11/16" O.D. - 10	"	"	"	"	"
1-15/16" O.D. - 10	"	"	"	"	"
2-3/16" O.D. - 10	"	"	"	"	"
2-7/16" O.D. - 8	"	"	"	"	"

ARIZONA WATER COMPANY

STANDARD SPECIFICATION
FOR THE INSTALLATION OF

COLUMN PIPE, OIL TUBE AND LINE SHAFT

DRAWN BY:	APPROVED BY:	DATE:	△	
CCO		3/20/1996	△ 2/13/2001	E-9-22-1

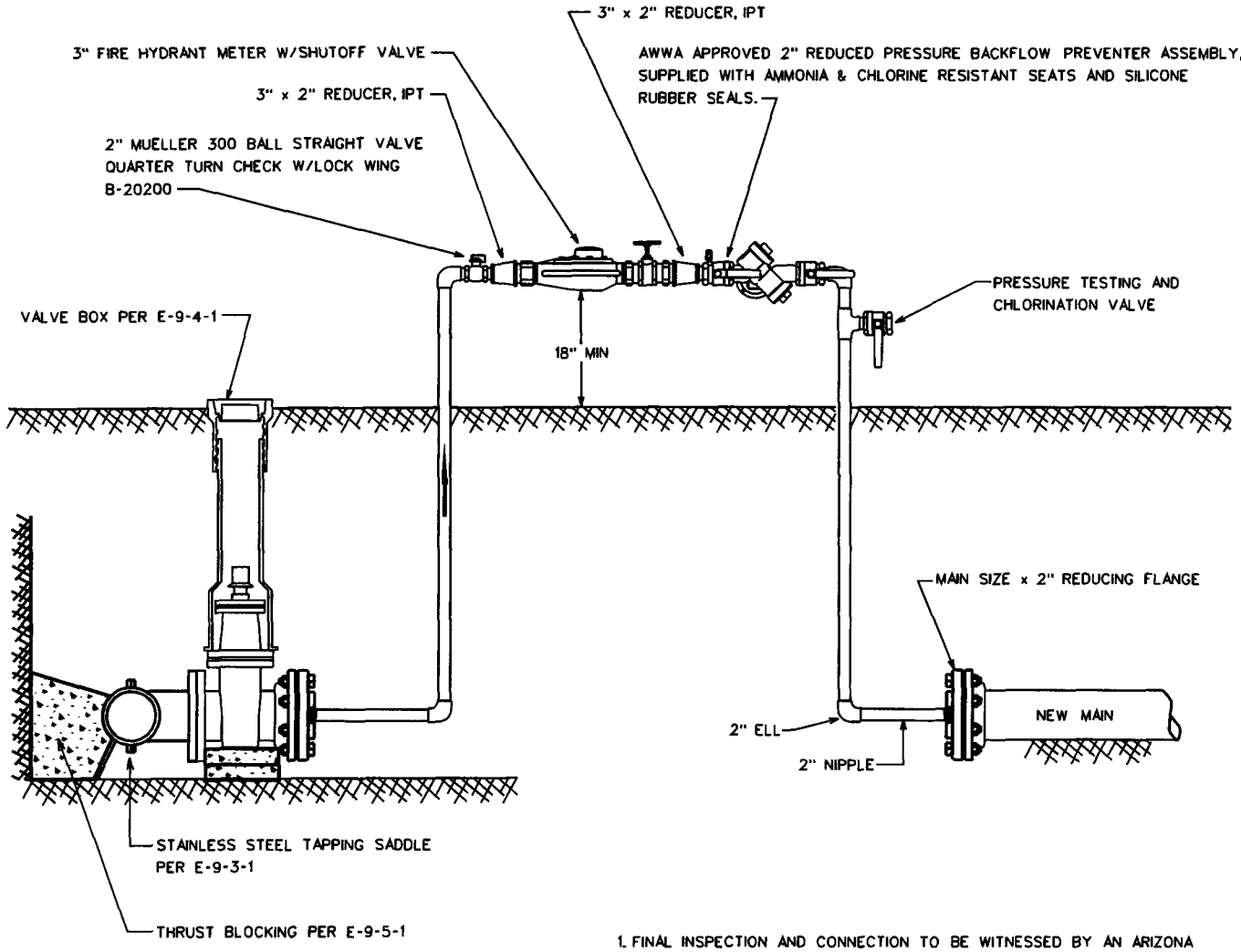

1. FINAL INSPECTION AND CONNECTION TO BE WITNESSED BY AN ARIZONA WATER COMPANY REPRESENTATIVE.
2. REDUCING FLANGES TO BE PROPERLY RESTRAINED.
3. INSTALL JUMPER TAP FOR TEMPORARY METER DOWNSTREAM OF THE REDUCING FLANGE FOR PRESSURE AND BACTEE TESTING.
4. JUMPER ASSEMBLY MUST BE A MINIMUM OF 18" ABOVE FINISHED GRADE.
5. BACKFLOW ASSEMBLY REQUIRES CERTIFICATION.
6. ASSEMBLY NOT TO BE REMOVED AND SPOOL PIECE INSTALLED FOR FINAL CONNECTION UNTIL ALL TESTING, BACTERIAL CLEARANCE AND FINAL INSPECTIONS HAVE BEEN OBTAINED.
7. ALL NEW PIPING SHALL BE PROPERLY RESTRAINED.

ARIZONA WATER COMPANY

STANDARD SPECIFICATION
FOR THE INSTALLATION OF

HOT TAP & JUMPER METER CONNECTION

DRAWN BY:	APPROVED BY:	DATE:	△	
CB	MJW	05.14.2004		E-9-23-1

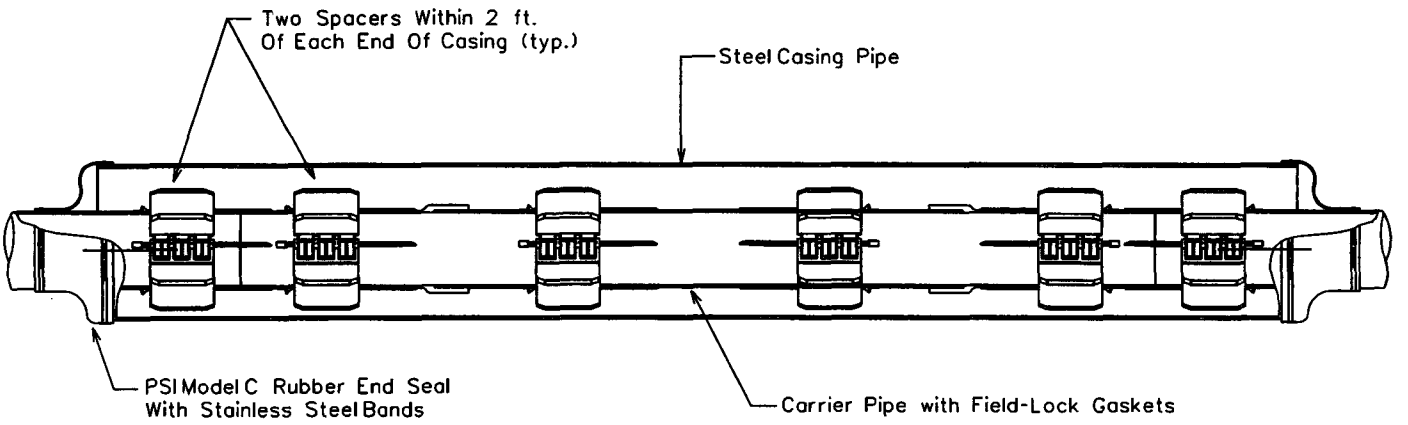

CROSS SECTION

The casing spacers shall be the PSI Ranger II Casing Spacers as manufactured by Pipeline Seal and Insulator, Inc., Houston, Texas.

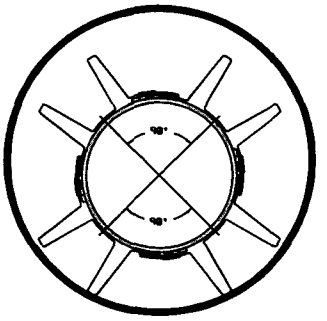

SECTION CUT

End Seals

After insertion of the carrier pipe into the casing, the ends of the casing shall be closed by installing 1/8" thick synthetic rubber end seals equal to the PSI Model "C" end seal as manufactured by Pipeline Seal and Insulator, Inc., Houston, Texas.

NOTE: The Carrier Pipe Shall Be Polywrapped Prior To The Skid Installation & Insertion Into The Carrier Casing For Divisions Requiring Polywrapped Pipe.

OD Push On Joint Bell	OD M.J. BELL
6" - 8.66"	6" - 11.12"
8" - 10.82"	8" - 13.37"
12" - 15.05"	12" - 17.94"
16" - 19.74"	16" - 22.56"
20" - 23.98"	20" - 27.08"
24" - 28.16"	24" - 31.58"
30" - 35.40"	30" - 39.12"
36" - 41.84"	36" - 46.00"
48" - 55.94"	48" - 60.00"

*Thickness Of Skid To Extend A Minimum of 1/2" Above The O.D. Of The Pipe Bell or Gland.

PIPE SIZE	CASING SIZE	CASING SIZE ID	CASING SCHEDULE	WALL THICKNESS	SKID SIZE
6"	16"	15.25"	STD.	.375	*x4x12
8"	18"	18.25"	STD.	.375	*x4x12
12"	22"	21.25"	STD.	.375	*x4x12
16"	28"	27.25"	STD.	.375	*x4x12
20"	32"	31.25"	STD.	.375	*x4x12
24"	36"	35.25"	STD.	.375	*x4x12
30"	48"	47.25"	STD.	.375	*x4x12
36"	54"	53.25"	STD.	.375	*x4x12
48"	66"	65.25"	STD.	.375	*x4x12

ARIZONA WATER COMPANY

STANDARD SPECIFICATION

FOR THE INSTALLATION OF

TYPICAL WATER LINE ENCASEMENT

DRAWN BY:	APPROVED BY:	DATE:	△ 09.27.2006	E-9-24-1
CB		3/20/1996		

CALCIUM HYPOCHLORITE TABLET CHLORINATOR FEEDER SPECIFICATIONS

SCOPE - This specification describes a ARCH Chemicals Calcium Hypochlorite Tablet Chlorination System as manufactured by ARCH Chemicals, 501 Merritt Seven, P.O. Box 5204, Norwalk, CT, 06856-5204.

DESCRIPTION - The chlorination system shall be completely assembled, ready to install. The chlorination system shall be a ARCH Chemicals Calcium Hypochlorite Tablet Feeder, or its equivalent, and shall be supplied with all its components factory mounted.

COMPONENTS - The Chlorination system shall have the following components:
A. 1-¼" ARCH Chemical solid calcium hypochlorite tablet feeder
B. Polyethylene system enclosure
C. Integrated, level controlled solution tank
D. Adjustable flow control valve
E. Manual on/off valve (at inlet)
F. Chemical metering pump
G. On/off pump control switch
H. Waterproof electrical junction box
I. Corrosion resistant schedule 40 piping
J. Reverse flow check valves
K. Total solution output control valve

ELECTRICAL FIXTURES - The following electrical fixtures shall be provided:
A. Safety switch, 2 pole, fused for 30 Amps, for 120 Volts, 60 cycle, single phase power.

CHLORINATOR DESIGN - The chlorination facility shall be designed and constructed in accordance with Arizona State Department of Health Engineering Bulletin Number 8 - "Disinfection of Water Systems". Latest Revision.

CHLORINATION EQUIPMENT - The chlorination equipment shall be a ARCH Chemicals Calcium Hypochlorite tablet chlorinator, approved by NSF Standard 61.

CHLORINATOR OPERATION - The chlorination facility shall be operated in accordance with Arizona State Department of Health Engineering Bulletin Number 8, "Disinfection of Water Systems", Table 1. latest revision.

CHLORINATOR SYSTEM DESCRIPTION - ARCH Chemicals tablet chlorinator systems incorporate a patented chlorinator which is designed to utilize ARCH Chemicals 1-¼" solid calcium hypochlorite tablets (Approved NSF Standard 60). Meets AWWA Standard B-300, EPA Registration # 1258-1179.The chlorinator is mounted on a polyethylene system enclosure. The inlet water is sprayed on the calcium hypochlorite tablet and collected in a solution tank. This chlorinated solution is then pumped out of the tank through a chemical metering pump. This metering pump is then adjusted to obtain the desired CL residual.

ARCH Chemicals Calcium Hypochlorite Tablet Chlorinator

NTS

HYPOCHLORINATOR COMPONENTS:

1. Chemical Metering Pump
2. Pump Suction Connection
3. Pump Discharge Connection
4. Inlet Water Assembly
5. Inlet Water Solenoid Valve
6. Inlet Shut-Off Valve
7. Inlet Pressure Regulator
8. Inlet Water Pressure Gauge
9. Spray Nozzle Water Pressure Gauge
10. Inlet Strainer
11. Inlet Tubing Connection
12. Dry Chemical Hopper
13. Suction Line
14. Electrical Control Box With Power On/Off
15. Electric Mixer
16. Solution Discharge Connection
17. Tank Drain Valve
18. Observation Port
19. Mixed Chemical Holding Tank
20. Pressure Relief Valve
21. Pump Speed Control
22. High Level Shut-Off Float Switch
23. Water Spray Nozzles

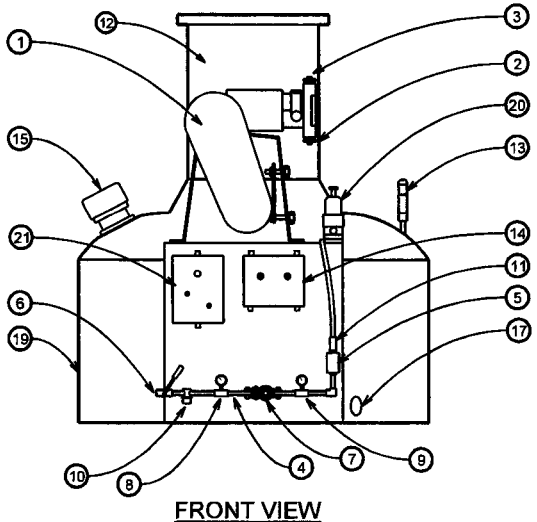

FRONT VIEW

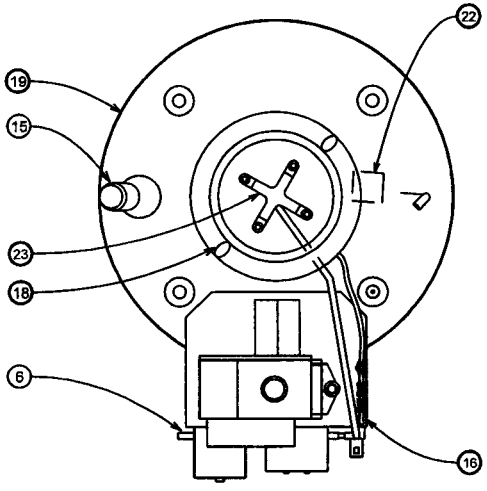

TOP VIEW

HOPPER REMOVED FOR CLARITY

Chlorinator Fluid Schematic

NTS

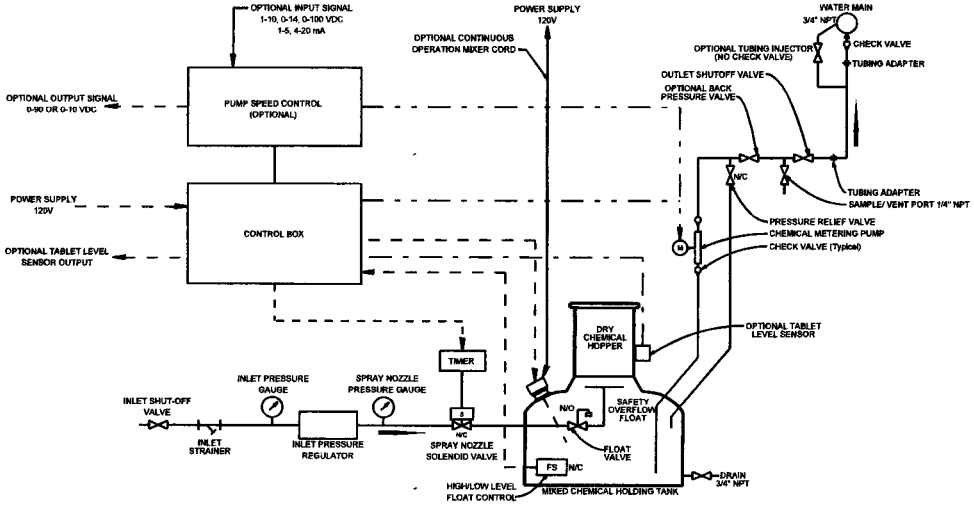

ARIZONA WATER COMPANY

STANDARD SPECIFICATION

FOR THE INSTALLATION OF

CALCIUM HYPOCHLORITE TABLET CHLORINATOR

DRAWN BY:	APPROVED BY:	DATE:	△	
CB	MW	02-09-2000		E-9-25-1

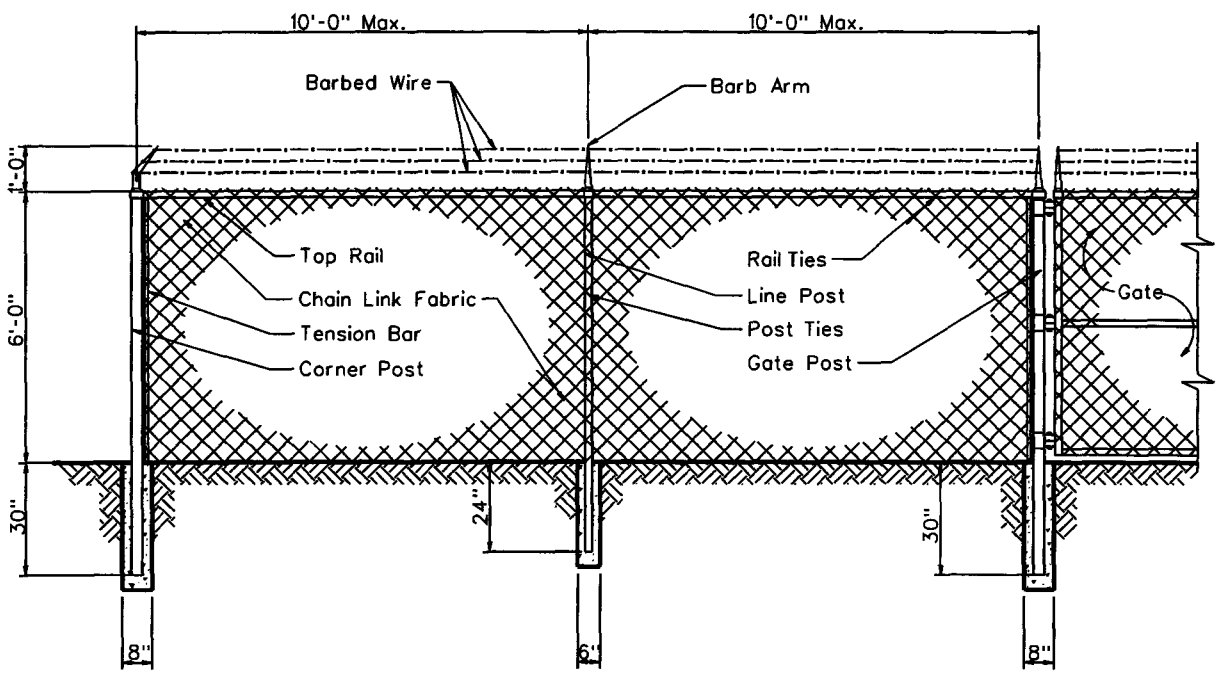

Line Post:	1-7/8" O.D.	1.74 lbs. P/L.F.	ASTM A-256
End Post:	2-7/8" O.D.	4.64 lbs. P/L.F.	ASTM A-256
Corner Post:	2-7/8" O.D.	4.64 lbs. P/L.F.	ASTM A-256
Gate Post:	2-7/8" O.D.	4.64 lbs. P/L.F.	ASTM A-256
Top Rail:	1-5/8" O.D.	4.64 lbs. P/L.F.	ASTM A-256
Chain Link Fabric:	9 Ga. 2" Mesh Galv. Before Weave		
Selvage:	Barb/Knuckle		
Fittings:	Pressed Steel		
Barb Wire:	2-1/2 Ga./2 Point		
Barb Arm:	1 Piece/45° Arm		
Tension Wire:	9 Ga./Galv.		
Line Post Set:	6"x24" In Concrete		
Terminal Post Set:	8"x30" In Concrete		

ARIZONA WATER COMPANY

STANDARD SPECIFICATION
FOR THE INSTALLATION OF

CHAIN LINK FENCE

DRAWN BY:	APPROVED BY:	DATE:	△	
CCO	MW	7/7/1992	2/9/2001	**E-9-26-1**

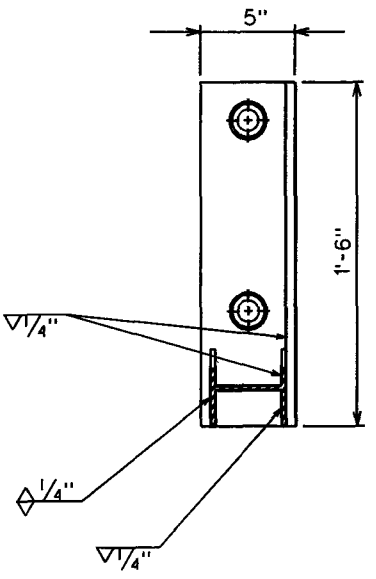

NOTES

1. Minimum 2 Supports Per Joint Of Pipe.
2. All Bolts Shall Have A Lock Washer Under The Nut.
3. All Nuts Shall Be Stainless Steel Series 304.

PIPE SIZE	A	B
8"	8"	15"
10"	9"	17"
12"	10"	19"

SECTION X-X

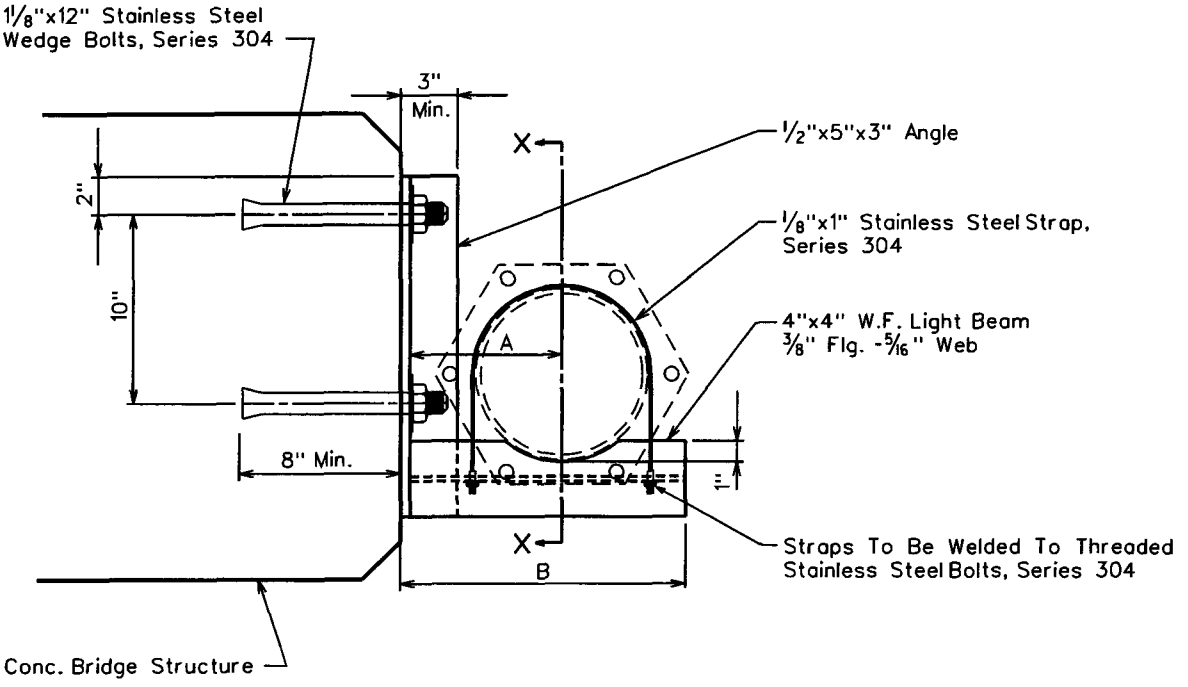

SUSPENSION DETAIL

ARIZONA WATER COMPANY

STANDARD SPECIFICATION
FOR THE INSTALLATION OF

SIDE HUNG WATER LINE SUSPENSION

DRAWN BY:	APPROVED BY:	DATE:	△	
JPK	MJW	7-12-96		E-9-27-1

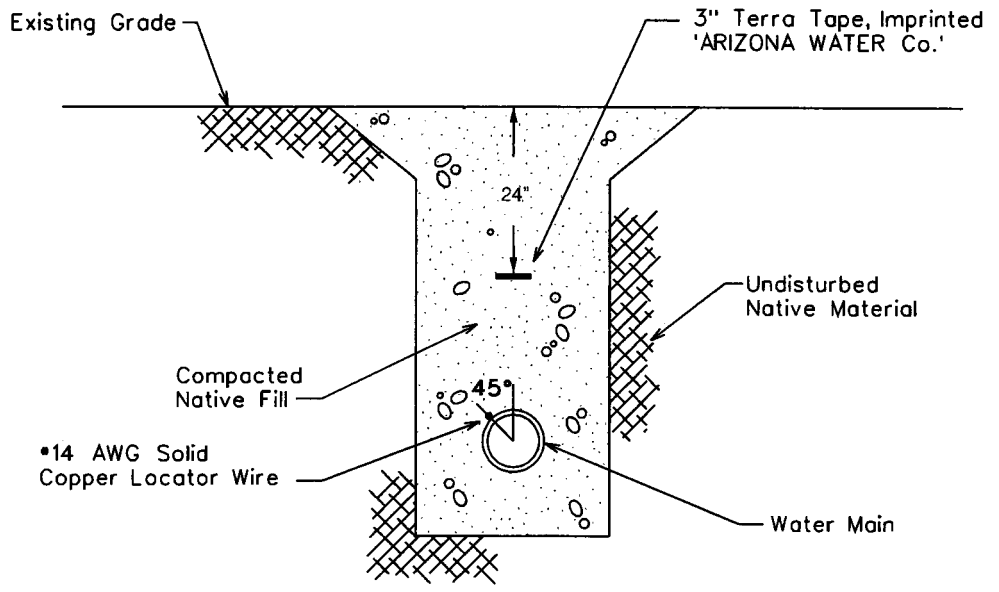

TYPICAL WATER TRENCH DETAIL

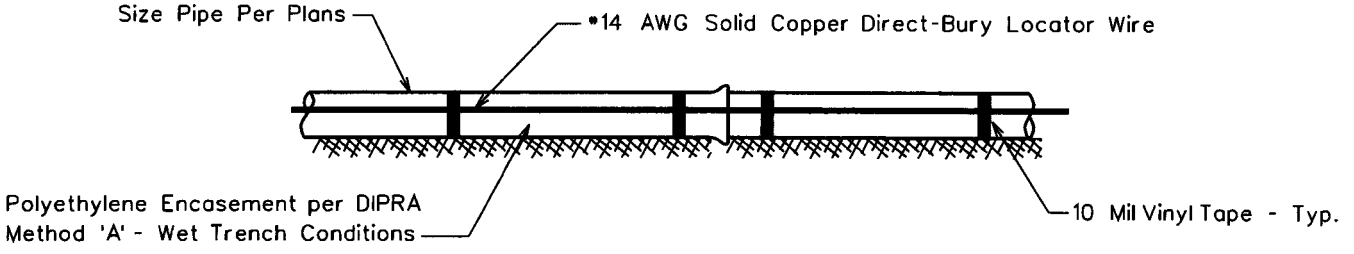

TYPICAL PROFILE VIEW

WIRE GENERAL NOTES:

1. All pipe shall have •14 AWG Solid Copper Direct-Bury Locator Wire Installed Directly To The Polywrap At 45° From The Vertical Center Of The Pipe and Shall Be Attached Using 10 Mil Vinyl Tape.
2. The Locating Wire Shall Terminate At the Top Of Each Valve Box and Be Capable of Extending 12" Above the Top Of The Box In Such A Manner So As Not To Interfere With Valve Operation.

TAPE GENERAL NOTES:

1. Use Terra Tape 3" Marking Tape As Manufactured By Reef Industries Inc. Of Houston, Texas (1-800-231-2417)
2. The Tape Is Blue & Imprinted 'ARIZONA WATER Co.'
3. INSTALLATION: The Pipe Warning Tape Shall Be Installed Over All Water Mains And Shall Be Buried 24 Inches Below The Surface Over The Center Of The Pipe.
   A) The Backfill Shall Be Sufficiently Leveled So That The Tape Is Installed On A Flat Surface.
   B) The Tape Shall Be Centered In The Trench With The Printed Side Up.
   C) Care Shall Be Exercised To Avoid Movement Of The Tape While The Remaining Backfill Is Moved Into The Trench.

ARIZONA WATER COMPANY

STANDARD SPECIFICATION
FOR THE INSTALLATION OF

PIPE WARNING TAPE AND LOCATOR WIRE

DRAWN BY:	APPROVED BY:	DATE:	△09.27.2006	E-9-28-1
CB		03.24.1997		

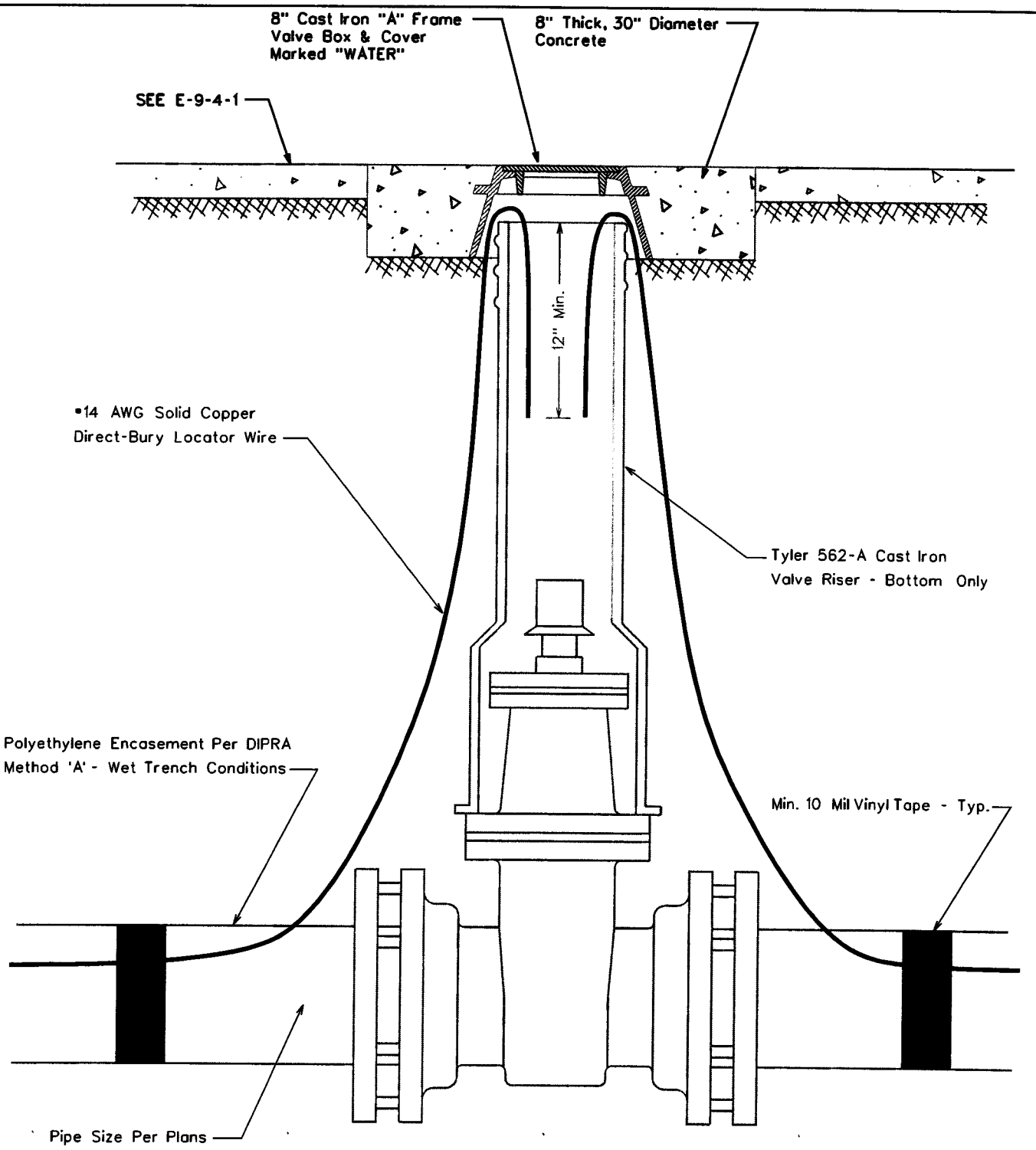

ARIZONA WATER COMPANY

STANDARD SPECIFICATION
FOR THE INSTALLATION OF

LOCATOR WIRE TERMINATION

DRAWN BY:	APPROVED BY:	DATE:	△	
CB		09.27.2006		E-9-28-2

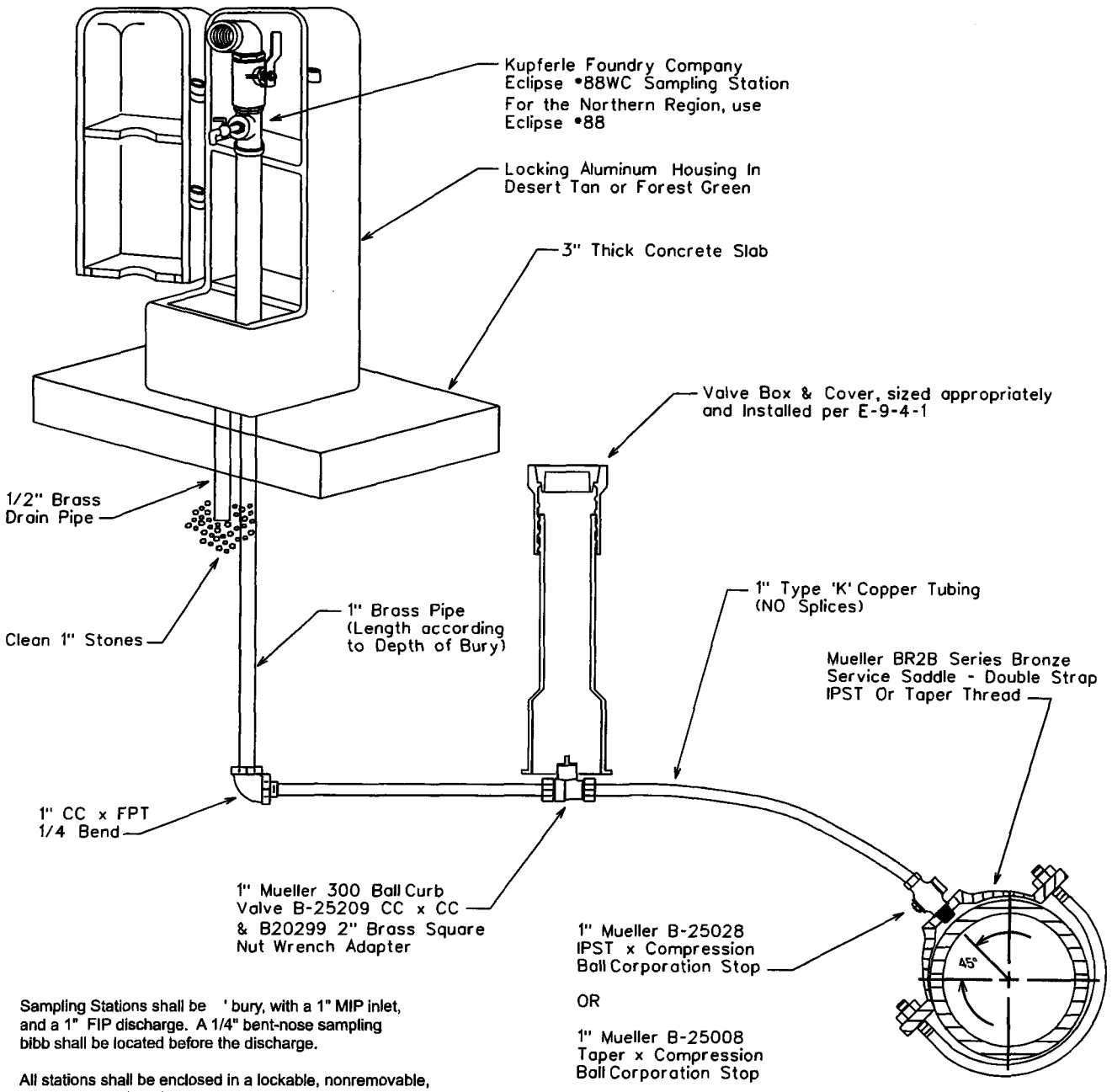

Sampling Stations shall be ' bury, with a 1" MIP inlet, and a 1" FIP discharge. A 1/4" bent-nose sampling bibb shall be located before the discharge.

All stations shall be enclosed in a lockable, nonremovable, aluminum-cast housing.

When opened, the station shall require no key for operation, and the water will flow in an all brass waterway.

All working parts will be of brass and serviceable from above ground with no digging. (OPTIONAL: if desired, a 1/2" brass drain tube will be provided within the locking cover).

A 1" ball valve will control the water flow, and be located before (or after) the sampling bibb, as manufactured by Kupferle Foundry, St. Louis, MO 63102.

SADDLE TAP TO CA, PVC, OR DI PIPE

NOTE: The minimum distance between taps on mains other than ductile iron is 12"

Pipe Depth Per
E-8-1-2, Item 3.

ARIZONA WATER COMPANY

STANDARD SPECIFICATION
FOR THE INSTALLATION OF

SAMPLING STATION

DRAWN BY:	APPROVED BY:	DATE:	△	
CB	MW	01.24.2007		E-9-29-1

ENCASEMENT FOR PIPE CROSSING

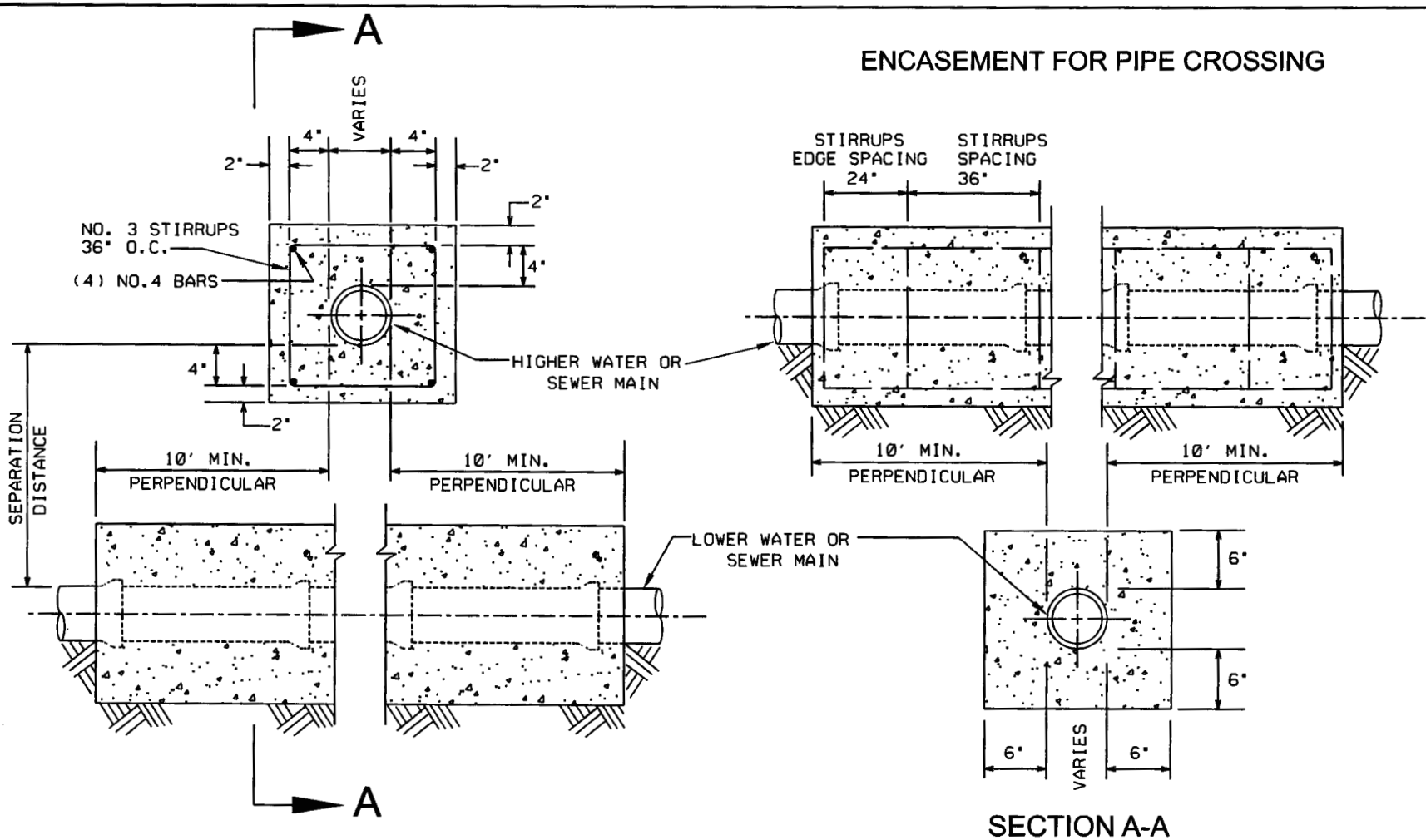

SECTION A-A

NOTES:

1. 2,000 PSI CONCRETE
2. SEPARATION DISTANCES AND/OR OTHER EXTRA PROTECTION SHALL BE REQUIRED TO PROTECT WATER MAINS FROM CONTAMINATION BY SANITARY SEWER MAINS. SEE AWC STANDARD SPECIFICATION PAGES E-8-1-9 AND E-8-1-10.
3. SEE CROSS SECTION DETAIL FOR LIMITS OF SEPARATION/EXTRA PROTECTION. ALL DISTANCES ARE MEASURED PERPENDICULARLY FROM THE OUTSIDE OF THE PIPES.
4. RECLAIMED WATER SHALL BE CONSIDERED A SANITARY SEWER WHEN PLACED NEXT TO A POTABLE WATER MAIN.

ARIZONA WATER COMPANY

STANDARD SPECIFICATION
FOR THE INSTALLATION OF
WATER AND SANITARY SEWER
SEPARATION/PROTECTION

DRAWN BY:	APPROVED BY:	DATE:	△	
CB	JW	04.07.2008		E-9-30-1

NOTES:

1. 2,000 PSI CONCRETE

2. SEPARATION DISTANCES AND/OR OTHER EXTRA PROTECTION SHALL BE REQUIRED TO PROTECT WATER MAINS FROM CONTAMINATION BY SANITARY SEWER MAINS. SEE AWC STANDARD SPECIFICATION PAGES E-8-1-9 AND E-8-1-10.

3. SEE CROSS SECTION DETAIL FOR LIMITS OF SEPARATION/EXTRA PROTECTION. ALL DISTANCES ARE MEASURED PERPENDICULARLY FROM THE OUTSIDE OF THE PIPES.

4. RECLAIMED WATER SHALL BE CONSIDERED A SANITARY SEWER WHEN PLACED NEXT TO A POTABLE WATER MAIN.

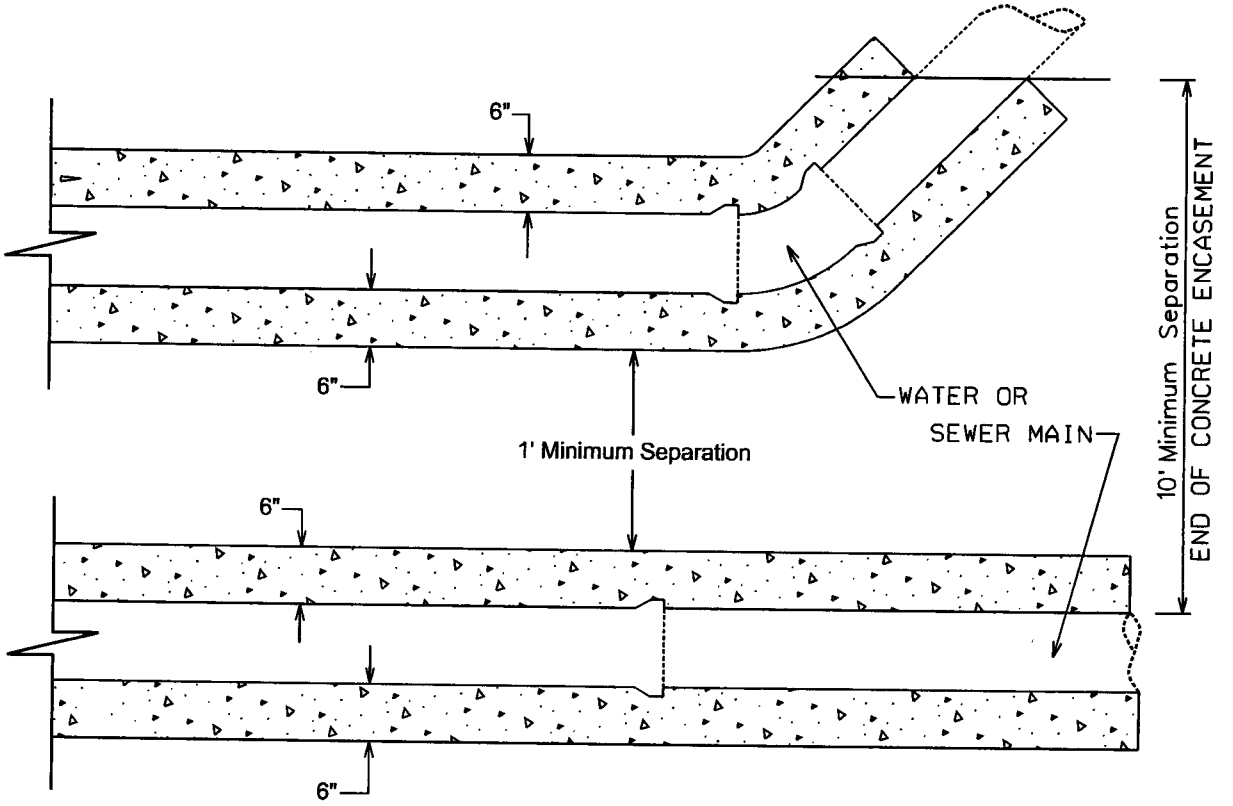

PLAN VIEW

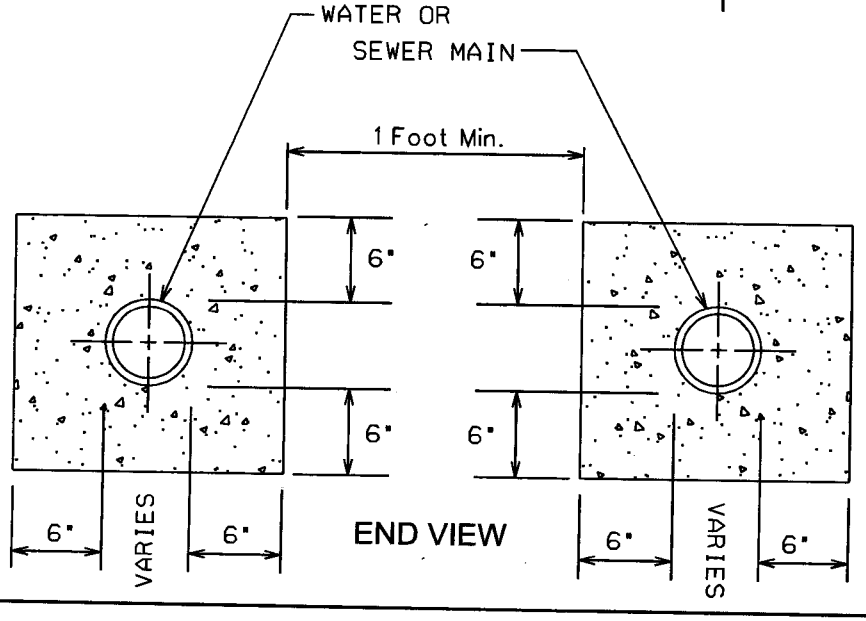

END VIEW

ENCASEMENT FOR PARALLEL PIPES

ARIZONA WATER COMPANY

STANDARD SPECIFICATION
FOR THE INSTALLATION OF
WATER AND SANITARY SEWER
SEPARATION/PROTECTION

DRAWN BY:	APPROVED BY:	DATE:	△	
CB	JW	04.07.2008		E-9-30-2

ENGINEERING SERVICES

Configuration, RTU Application Software (Globe Miami): $9,600
The System Engineer will configure the RTU application according to the system requirements.

Integration, On-site at Customer Location (Globe Miami): $8,850
· Test communications between RTUs
· Test and Debug as needed
· Obtain signoff and acceptance

Configuration, RTU Application Software (Lakeside): $4,800
The System Engineer will configure the RTU application according to the system requirements.

Integration, On-site at Customer Location (Lakeside): $4,065
· Test communications between RTUs
· Test and Debug as needed
· Obtain signoff and acceptance

Configuration, RTU Application Software (Heber): $4,800
The System Engineer will configure the RTU application according to the system requirements.

Integration, On-site at Customer Location (Heber): $4,665
· Test communications between RTUs
· Test and Debug as needed
· Obtain signoff and acceptance

Configuration, RTU Application Software (Superior): $4,800
The System Engineer will configure the RTU application according to the system requirements.

Integration, On-site at Customer Location (Superior): $2,900
· Test communications between RTUs
· Test and Debug as needed
· Obtain signoff and acceptance

Configuration, RTU Application Software (Sedona): $9,600
The System Engineer will configure the RTU application according to the system requirements.

Integration, On-site at Customer Location (Sedona): $6,275
· Test communications between RTUs
· Test and Debug as needed
· Obtain signoff and acceptance

Configuration, RTU Application Software (Bisbee): $9,600
The System Engineer will configure the RTU application according to the system requirements.

Integration, On-site at Customer Location (Bisbee): $4,665
· Test communications between RTUs
· Test and Debug as needed
· Obtain signoff and acceptance

Configuration, RTU Application Software (Casa Grande): $9,600
The System Engineer will configure the RTU application according to the system requirements.

0001	V118	ADD: 4 AO MODULE	$ 495.00	$ 495.00
0001	V261	ADD: AC PS 85-264 V WITH BATTERY CHARGER	$ 310.00	$ 310.00
0001	V114	ADD: 6.5 AH BACKUP BATTERY	$ 140.00	$ 140.00
0001	GD3572-16DI/FET	16 DI/DO FET I/O Interface Kit (16DI)	$ 255.00	$ 255.00
0001	GD3572-16DO	16 DO I/O Interface Kit	$ 650.00	$ 650.00
0001	GD3572-4AO	4 AO I/O Interface Kit	$ 255.00	$ 255.00

Sedona: $ 22,890.00

Note: Rancho Rojo Well, Sedona Golf Course Resort Tank, Sedona Golf Course Resort Well were previously quoted under a different project

QTY	Part No	Description	Unit Price	Extended
0010	GD5188	Lo Power Replacement Radio Kits (Southwest Center Well #8, Rainbow Well #6, Williams Well #7, Harmony High Park Tank, Valley Vista #13, Rimrock Well #2, Montezuma Haven Well #3, Montezuma Hills Tank, Rim Well #1, Harmony Well)	$ 450.00	$ 4,500.00
0010	FRN5907	DPSK BOARD (Southwest Center Well #8, Rainbow Well #6, Williams Well #7, Harmony High Park Tank, Valley Vista #13, Rimrock Well #2, Montezuma Haven Well #3, Montezuma Hills Tank, Rim Well #1, Harmony Well)	$ 180.00	$ 1,800.00
0001	GD2421	Electrical Install	$ 5,655.00	$ 5,655.00
0001	F7563	ACE3600 WITH CDM750 136-174 MHZ (Office)	$ 1,850.00	$ 1,850.00
0001	V103	ADD: 3 I/O SLOTS FRAME	$ 70.00	$ 70.00
0001	V228	ADD: 50X50 CM PAINTED METAL HOUSING	$ 300.00	$ 300.00
0001	V224	ADD: HOUSING TAMPER SWITCH	$ 40.00	$ 40.00
0001	V480	ADD: 16 DO / DI FET	$ 250.00	$ 250.00
0001	V118	ADD: 4 AO MODULE	$ 495.00	$ 495.00
0001	V261	ADD: AC PS 85-264 V WITH BATTERY CHARGER	$ 310.00	$ 310.00
0001	V114	ADD: 6.5 AH BACKUP BATTERY	$ 140.00	$ 140.00
0001	GD3572-16DI/FET	16 DI/DO FET I/O Interface Kit (16DI)	$ 255.00	$ 255.00
0001	GD3572-4AO	4 AO I/O Interface Kit	$ 255.00	$ 255.00
0002	F7563	ACE3600 WITH CDM750 136-174 MHZ (Wickiup Mesa Tank, Pinewood Tank)	$ 1,850.00	$ 3,700.00
0002	V103	ADD: 3 I/O SLOTS FRAME	$ 70.00	$ 140.00
0002	V228	ADD: 50X50 CM PAINTED METAL HOUSING	$ 300.00	$ 600.00
0002	V245	ADD: 16DI 4DO EE 4AI +/-20MA	$ 430.00	$ 860.00

0002	V261	ADD: AC PS 85-264 V WITH BATTERY CHARGER	$ 310.00	$ 620.00
0002	V114	ADD: 6.5 AH BACKUP BATTERY	$ 140.00	$ 280.00
0002	GD3572-Mixed	Mixed I/O Interface Kit	$ 385.00	$ 770.00

Bisbee: $ 15,341.00

QTY	Part No	Description	Unit Price	Extended
0009	GD4378	Hi Power Replacement Radio Kits (Tintown, Greaves Well, Stuart Pump Station, Fuller, Village Meadows, Sulger, Tombstone Canyon Tank, Spring Canyon Tank, Bisbee Office)	$ 733.00	$ 6,597.00
0003	GD6266	Radio Reprogramming (Tintown Booster, Naco, Tintown Tank)	$ 95.00	$ 285.00
0012	FRN5708	DPSK BOARD (Tintown, Greeves Well, Stuart Pump Station, Fuller, Village Meadows, Sulger, Tombstone Canyon Tank, Tintown Booster, Naco Tintown Tank, Spring Canyon Tank, Bisbee Office FIU)	$ 207.00	$ 2,484.00
0001	GD2421	Electrical Install	$ 2,625.00	$ 2,625.00

0001	F7563	ACE3600 WITH CDM750 136-174 MHZ (Naco MDLC (Formerly Intrac))	$ 1,850.00	$ 1,850.00
0001	V103	ADD: 3 I/O SLOTS FRAME	$ 70.00	$ 70.00
0001	V228	ADD: 50X50 CM PAINTED METAL HOUSING	$ 300.00	$ 300.00
0001	V508	ADD: 8 DO EE RELAY 2A	$ 260.00	$ 260.00
0001	V261	ADD: AC PS 85-264 V WITH BATTERY CHARGER	$ 310.00	$ 310.00
0001	V114	ADD: 6.5 AH BACKUP BATTERY	$ 140.00	$ 140.00
0001	GD3572-8DO	8 DO I/O Interface Kit	$ 420.00	$ 420.00

Casa Grande: $ 24,705.00

QTY	Part No	Description	Unit Price	Extended
0005	GD5188	Lo Power Replacement Radio Kits (Casa Grande Tank, North Park Tank, Pinal Booster Pump Site, Well 27, Well 29)	$ 450.00	$ 2,250.00
0003	GD6266	Radio Reprogramming (Stanfield Tank, Table Top, Tierra Grande Tank (spare))	$ 95.00	$ 285.00
0007	FRN5907	DPSK BOARD (Casa Grande Tank, North Park Tank, Pinal Booster Pump Site, Stanfield Tank, Table Top, Well 27, Well 29)	$ 180.00	$ 1,260.00
0001	GD2421	Electrical Install	$ 6,650.00	$ 6,650.00

0001	F7563	ACE3600 WITH CDM750 136-174 MHZ (Scott Drive Booster Station)	$ 1,850.00	$ 1,850.00
0001	V103	ADD: 3 I/O SLOTS FRAME	$ 70.00	$ 70.00
0001	V228	ADD: 50X50 CM PAINTED METAL HOUSING	$ 300.00	$ 300.00
0001	V245	ADD: 16DI 4DO EE 4AI +/-20MA	$ 430.00	$ 430.00

TERMS

1. Validity of quotation: This quotation is valid for 30 days, and is based on the information provided to us at the time of quotation. We are not responsible for incorrect or missing information. New information provided to us after the quotation is generated may result in a revised quotation containing additional products or services required.
2. Delivery date: Delivery dates are not guaranteed. Orders are generally delivered in the most expeditious manner possible. A planned delivery schedule will be provided upon order placement. Change orders placed subsequent to the original PO may delay delivery.
3. Order placement: We reserve the right to reject orders that do not contain all quoted products and services except those items indicated in the optional products and services section. For radio programming, please provide radio frequencies at the time of order placement.
4. Invoicing: Orders are invoiced only when they are ready for delivery. The only exception to this policy is when the customer requests early billing.
5. Payment: 100% payment is due within 30 days of the invoice date. Invoices not paid within 30 days are subject to interest at the rate of 1.5% monthly, and your placement on COD basis for future orders. Early pay discount is not available.
6. Payment method: We accept payment by bank transfer (ACH), Check, and Cards (Visa and MasterCard only). Card payments must be processed on the same date that the invoice is generated. Payments made after the invoice date can be made only via ACH or Check.
7. New Customers: Credit application and references required for all new customers. Alternatively, you may pay by one of the payment methods above on the date of order delivery.
8. Shipment FOB: Global Data Specialists, 1815 W 1st Ave, Suite 110, Mesa, AZ. For Dataradio drop-shipped orders shipment FOB is CalAmp, Waseca, MN.
9. Shipping charges: If the quotation includes shipping, handling or delivery fees, it is only an estimate. Actual shipping charges will be determined only at the time of order shipment.
10. Taxes: Applicable sales taxes will be added to all orders unless a valid tax exemption certificate is presented at the time of order placement.
11. Warranty is specific to the policies of each respective OEM (Original Equipment Manufacturer). No additional warranties are expressed or implied. Please contact us for all warranty and non-warranty repairs with the exception of Dataradio. For Dataradio warranty and non-warranty repairs, call 800-992-7774 x6707. Warranty service includes standard depot repair only, and does not include shipping charges or service calls to remove, repair or reinstall equipment. Emergency repair and swap service costs extra and is subject to parts availability. Warranty labor includes direct in-house labor costs only. If warranty service requires our personnel to travel out of our office, additional time and materials charges will be invoiced separately.
12. Order cancellation: The following order cancellation charges shall apply:

..... Prior to 30 days of planned delivery date: 25% of the quoted amount shall be invoiced.
..... Less than 30 days of planned delivery date: 50% of the quoted amount shall be invoiced.
..... After order is ready for delivery: 100% of the quoted amount shall be invoiced.

13. Contractors: At our discretion, we will file a pre-lien when required. Please provide full project name and number, project location, and General Contractor and owner information at the time of order placement.
14. Delinquent pick up: You will be notified when the order is ready for pick up. Orders not picked up within 7 days of notification date are subject to storage fees of $25 per unit per day.

GLOBAL
DATA SPECIALISTS

1815 W. First Ave., Suite 110, Mesa, AZ 85202
Phone: 480-461-3401 FAX: 480-461-3411

QUOTE: **MDM04063C** **September 27, 2011**

by Duane Moody
480-461-3401, Ext. 223, duane@gbl-data.com
Expires 26-Dec-11

Quoted To: **Mike Loggins, James Wilson, Andy Haas**

Arizona Water
3805 N. Black Canyon Hwy.
Phoenix, AZ 85015
Phone: 602-240-6860
FAX: 602-240-6878

End User: **Arizona Water System, Narrow Band Upgrade**

Description

Global Data Specialists is pleased to provide you with the following Budgetary quotation for the Narrow Banding Upgrade for your Motorola SCADA system.

The quote includes any installation/electrical charges associated with installing any new ACE3600 RTU's and the removal of old equipment.

Engineering services are also included for the reprogramming of the RTU's as needed.

Electrical Installation Scope of Work

A. Furnish control technician to de-terminate all associated field wiring to existing Motorola RTU.
B. Vacuum and wipe down cabinet (where applicable) for new RTU.
C. Install new Motorola RTU, provided by Global Data Specialists.
D. Reconnect existing wiring to new RTU and label.
E. Test signals back to new RTU and verify functionality.
F. Scope is typical for multiple locations.

1. Permitting, Construction, and Demolition
a. All work performed will conform to NEC requirements and requirements of the Authorities having Jurisdiction to assure a code compliant facility.
b. Demolish and dispose of existing equipment and materials in accordance with approved drawings.
c. Furnish trash containers and sanitary facilities so as to provide a clean and sanitary work site.
d. Provide grounding, lighting, power distribution, and instrumentation construction services in accordance with approved plans and specifications.

2. Exclusions and Clarifications
a. Proposal is based on re-using existing wiring and devices.
b. Delays or additional work that are found as a result of existing field conditions, may require a change order.
c. Only work, equipment, and materials explicitly stated in this document are part of this proposal. Electrician accepts the responsibility for the coordination and furnishing of small and incidental equipment and services normally associated with this type of work and for coordination with other disciplines. Any additional significant equipment, materials, or services will be furnished only upon execution of a change order.
d. All other equipment and services not specifically mentioned in this scope of work nor defined above shall be the responsibility of others.
e. This proposal is based upon electrician executing their work in reasonable coordination with other disciplines and entities. Additional electrician costs due to significant or extraordinary delays by others will be grounds for change orders.

3. Taxes and Freight
a. Taxes are not included in this proposal. Upon request, electrician will furnish an estimate of taxes for this work. Owner to furnish electrician with tax exempt information.
b. Unless noted differently, this proposal includes freight cost for delivery of electrician manufactured products to the project site.
c. Unless noted differently, freight cost for equipment shipped FOB manufacturer's facility or FOB port-of-entry is not included in this proposal.

4. Warranty:
a. The warranty period for electrician manufactured electrical and control equipment is 18 months from ship date or 12 months from startup date. During this period, electrician will repair or replace at no cost to owner any failed component or system.
b. Unless noted differently, electrician will honor a manufacturer's warranty for all purchased equipment and will coordinate with the manufacturer to repair or replace the equipment in accordance with the manufacturer's warranty.
c. The electrician warranty covers only electrician furnished equipment and explicitly excludes all costs of lost production, loss of facility availability, and any and all other incidental costs.
d. Electrician will make every effort to honor the warranty in a timely manner. Delays in getting parts or equipment from manufacturers may affect the time to implement repairs or replacement.

If you have any questions or need additional information please let me know.

Also please note that tax and shipping has not been included in this proposal.

Best Regards,

Duane Moody
Sales Manager

ENGINEERING SERVICES

Configuration, FIU and RTU Applications

The System Engineer will configure the FIU and RTU applications according to the system requirements.

Integration, On-site at Customer Location

- Test communications and operation between OIT and RTU
- Test and Debug as needed
- Conduct operator training on OIT
- Obtain signoff and acceptance

Engineering Services Sub-Total $ 6,525.00

MATERIALS

Office FIU: $ 6,489.00

QTY	Part No	Description	Unit Price	Extended
0001	F7500	ACE3600 SYSTEM TOOL SUITE	$ 500.00	$ 500.00

ACE3600 software tools environment for system building and maintenance. Includes installation CD and RS-232 PC to RTU cable.

0001	GD5677-ACE	ACE3600 RTU/FIU Application Program	$ 2,600.00	$ 2,600.00
)01	F7509	ACE3600 BASIC MODEL NO RADIO	$ 1,150.00	$ 1,150.00
0001	V102	ADD: 2 I/O SLOTS FRAME	$ 50.00	$ 50.00
0001	V228	ADD: 50X50 CM PAINTED METAL HOUSING	$ 300.00	$ 300.00
0001	V118	ADD: 4 AO MODULE	$ 495.00	$ 495.00
0001	V261	ADD: AC PS 85-264 V WITH BATTERY CHARGER	$ 310.00	$ 310.00
0001	V328	ADD: 10 AH BACKUP BATTERY	$ 207.00	$ 207.00
0001	FRN5769	SHARED RADIO INTERFACE	$ 622.00	$ 622.00
0001	GD3572-4AO	4 AO I/O Interface Kit	$ 255.00	$ 255.00

Valley Vista System RTU's: $ 14,428.00

QTY	Part No	Description	Unit Price	Extended
0004	F7563	ACE3600 WITH CDM750 136-174 MHZ	$ 1,850.00	$ 7,400.00

The model default includes CDM750 136-174 MHz radio, radio installation kit, PS 12V DC, CPU3640 ,basic frame (no I/O slots) and plug-in radio port for CPU. Must be ordered with Metal chassis or housing option. CDM750 is only shipped to North America at this time

0004	V102	ADD: 2 I/O SLOTS FRAME	$ 50.00	$ 200.00
0004	V228	ADD: 50X50 CM PAINTED METAL HOUSING	$ 300.00	$ 1,200.00
0004	V245	ADD: 16DI 4DO EE 4AI +/-20MA		

			$ 430.00	$ 1,720.00
0004	V261	ADD: AC PS 85-264 V WITH BATTERY CHARGER	$ 310.00	$ 1,240.00
0004	V328	ADD: 10 AH BACKUP BATTERY	$ 207.00	$ 828.00
0004	FPN1653	ASSEMBLY,POWER SUPPLY,24V PS PLUG IN KIT	$ 75.00	$ 300.00
0004	GD3572-Mixed	Mixed I/O Interface Kit	$ 385.00	$ 1,540.00

OIT Option: $ 1,550.00

QTY	Part No	Description	Unit Price	Extended
0001	GD5370	Operator Interface Terminal: 5.6 inch Graphic HMI with High-Resolution Analog Touchscreen Color TFT Display. Includes 120VAC to 24 VDC power supply (159mmLx 97mmW x 38mmH), Software, 5ft OIT to PLC communications cable, and 5 pack of protective touch screens. Includes mounting hardware.	$ 1,550.00	$ 1,550.00

NOTE: Does not include installation of OIT or power supply, AC power cable/wiring, or power supply to OIT cable/wiring.

Shipping: $ 325.00

QTY	Part No	Description	Unit Price	Extended
0001	GD7336	Federal Express Ground	$ 325.00	$ 325.00

Materials Sub-Total $ 22,792.00

OTALS

Engineering Services	$ 6,525.00
Materials	$ 22,792.00
TOTAL	**$ 29,317.00**

OPTIONAL SERVICES (Not Included in Quote Totals)

Programming and On-Site Integration of OIT $ 5,760.00

The System Engineer will create the OIT Application Program for the levels and pump set point adjustment of the tank site.

On-Site Integration Includes
- Test communications and operation between OIT and RTU
- Test and Debug as needed
- Conduct operator training on OIT
- Obtain signoff and acceptance

Radio Path Survey $ 4,365.00

To conduct a radio path survey at all of the RTU sites in the Sedona system to evaluate and determine radio power requirements and optimal path considerations.

OPTIONAL MATERIALS (Not Included in Quote Totals)

QTY	Part No	Description	Unit Price	Extended
0001	Y1503	Antenna, Gold Anodized Directional Yagi 3 Element 7.1 dB Gain VHF (150-174 MHz)	$ 183.00	$ 183.00
0001	RG213	RG213 (Cost Per Foot)	$ 1.15	$ 1.15
0001	FSJ4-50B	1/2" Superflex (Cost Per Foot)	$ 3.58	$ 3.58
0001	GD1555-1	N-Male Connectors (ea) (1/2" Superflex)	$ 25.00	$ 25.00
0001	GD1555-2	N-Male Connectors (ea) (RG213)	$ 6.00	$ 6.00
0001	GDISB50LN-C2	Polyphaser (N-Male to N-Male) with 2ft Pigtail	$ 145.00	$ 145.00
0001	FG1683	Antenna, Fiberglass Omnidirectional 3 dB Gain VHF	$ 185.00	$ 185.00
0001	FM2	Mounting Bracket, Heavy Duty for Omni Fiberglass Base Antenna	$ 30.00	$ 30.00

Optional Wall Mount Housing for OIT and RTU (Includes mounting of OIT and RTU within enclsoure.: $ 4,642.00

QTY	Part No	Description	Unit Price	Extended
0001	GD3612	Lamax SST Housing (36x24x12), NEMA 4 Wall Mount (Painted Steel) with cutout for OIT. Includes installation and cabling of ACE3600 and OITas well as installation of the I/O interface kit. AC wiring to the OIT power supply is not included.	$ 4,242.00	$ 4,242.00

If this option is purchase, (1) V228 50x50cm housing can be deducted from the ACE3600 configuration. A V056 option \DD: 48 X 48 CM METAL CHASSIS, $100) will need to be substituted for the V228 option.

QTY	Part No	Description	Unit Price	Extended
0001	GD7336	Shipping	$ 400.00	$ 400.00

TERMS

NOTE 1: Quote does not include shipping.
NOTE 2: Quote does not include taxes.

Payment:..... 100% Upon Receipt of Invoice, Net 30 Days. 1% discount if payment is received Net 15. We also accept Visa, Master Card, and American Express.
Delivery:..... TBD Upon Order Placement
Validity: ..... Quotation is valid for 90 days. The above quotation is based upon the information provided at the time of quotation. Global Data Specialists is not responsible for any information that is missing or incorrect. Any new information that is received after the quotation has been submitted may result in a revised quotation being issued to cover the costs of additional equipment or services as identified.
Shipment:..... Global Data Specialists, Mesa, AZ.
Warranty: ..... The Motorola equipment is warranted for 1 year upon shipment for parts and labor. Non-Motorola equipment warranties are vendor specific and will apply. No additional warranties are expressed or implied. Warranty labor does not include the cost associated with any out of the office related travel or hourly time expenses and will be billed separately.
Cancellation:.... 10% Penalty prior to 30 days of shipment, 25% Penalty less than 30 days prior to shipment.
Note: ..... Please reference quotation number on all correspondence.

GLOBAL
DATA SPECIALISTS

1815 W. First Ave., Suite 110, Mesa, AZ 85202
Phone: 480-461-3401 FAX: 480-461-3411

QUOTE: **MDM03931C** **June 09, 2011**

by Duane Moody
480-461-3401, Ext. 223, duane@gbl-data.com
Expires 07-Sep-11

Quoted To: **Andy Haas**
Email: ahaas@azwater.com

Arizona Water
3805 N. Black Canyon Hwy.
Phoenix, AZ 85015
Phone: 602-240-6860
FAX: 602-240-6878

End User: **Valley Vista System**

Description

Global Data Specialists is pleased to provide you with the following BUDGETARY quotation for the Sedona system as per your request. The quote includes as follows:

Replacing the RTUs communicating Intrac protocol at the Sedona Golf Course Resort Tank and 3 associated wells (Rancho Rojo, Sedona Golf Resort Well, and Valley Vista Well) with the Motorola ACE3600. This would also include another FIU at the office with analog output module for interface to a strip chart recorder (currently interfaced to Intrac FIU). The ACE3600 FIU would share the same radio as the current Intrac FIU.

An option for an Operator Interface Terminal (OIT) would be interfaced to the Tank as an option and would include the following:
a. OIT with software
b. 120VAC to 24VDC power supply needed for the OIT (159mmLx97mmWx38mmH)
c. A 5ft comm. cable from the OIT to the PLC
d. A 5 pack of protective screen covers for the touchscreen
e. The Engineering Services for programming of the OIT and RTU
NOTE: This Option can also be included with Option 3 below.

This will not include installation of the OIT in the housing/cabinet or AC to power supply or power supply to OIT wiring/cables. A separate housing for the OIT will need to be provided or a larger housing at the Tank may be needed to house the ACE3600 and OIT. A separate housing for installation of the OIT and RTU (wall mount) is included in the Optional Materials.

NOTE 1: The Optional Materials section of the quote lists a VHF Yagi antenna individual price for those sites that may need to be replaced as needed for optimal system operation. Also, please note that any sites requiring new coax cable will be included on the invoice. Coax cable types, with cost per foot, has been included in the Optional Materials section of the proposal. Optional connectors and other items are also included in this section.

NOTE 2: The Optional Services also includes the budgetary estimate for a radio path survey for the RTU sites at Wikiup, Pinewood, Harmony High Point, Sedona Golf Course Resort, and Montezuma Hills Tanks and associated wells/pump sites.. This will also include the central computer FIU. This will also determine the optimal location of the repeater as well as antenna height. The radio path survey is needed to evaluate and determine the radio communications path between the various sites to determine if a 5 watt VHF radio is sufficient or if a higher power radio configuration is required. If a higher power radio is needed, this will also determine if any hardware changes need to be made at the site(s) for larger power supply and larger radio.

NOTE 3: Quotation does not include RTU equipment installation.

To provide cost effective installation of the ACE3600 RTU, Global Data Specialists has created I/O interface kits that can be used for faster and easier installation of the equipment. The kit consists of DIN rail mounted terminal blocks and relay blocks, along with a direct interface connector to the front of the I/O module, and a 3 ft cable. Additional lengths are optional.

These kits have been designed for the Mixed I/O module, 8/16 AI module, 8/16 DO module, 16/32 DI module, 4 AO module, 4AO/8AI module, 16DI FET, 8 DI/8DO FET, 16DO FET, and the 16 DI 120-230V module. Additional modules can be designed upon request.

The kits can be mounted within a wall mount enclosure along with the ACE3600 RTU, or within a separate housing or for outside the enclosure mounting depending upon the site requirements.

In addition, these kits were created for the following issues.
a. The maximum wire size for the terminals on the ACE3600 I/O modules is 18 ga.
b. The relays in the DO and Mixed I/O modules do not have a high capacity compared to the MOSCAD RTU's or be able to drive external devices. As a result, interpose relays may need to be required. The interface kit includes relays that provide higher capacity relays than those included with the ACE I/O modules.
c. The terminals provided with the interface kit allow for easier installation and up to 12ga wiring. The terminals, "linkles" on the I/O modules can be hard to access within the module housing and can be cramped for the wiring to the module. The interface kit terminals can be installed for more readily available access and easier wire routing.

NOTE: The add-on power supply for the DI and AI modules will be needed to provide wetting voltage for the DI's and the AI loop power.

If you have any questions or need additional information please let me know.

Best Regards,

Duane Moody
Sales Manager

WA 1-4814

ARIZONA WATER COMPANY
WORK AUTHORIZATION

W.A. NUMBER: 1-4814
P.E. NUMBER:
BUDGET ITEM NO.: B-1
SHEET NO.: 1 of 2

SYSTEM:	VERDE VALLEY	WORK TO START BY:	UPON AUTHORIZATION
DIVISION:	VERDE VALLEY	WORK TO BE FINISHED BY:	WITHIN 180 DAYS
TAX CODE:	0976		

DESCRIPTION OF WORK:

Design and Construct Arsenic Removal Facility to remove arsenic from Harmony Hills Wells #5 and #12 (Part 1 of 2) to comply with the Safe Drinking Water Act. An evaluation of the best available treatment method has been completed whereby adsorptive technology was selected. Construct in accordance with attached drawings and/or Arizona Water Company specifications.

FACTORS JUSTIFYING WORK:

APPROVED 2011 BUDGET ITEM ($350,000)

COST ESTIMATE	
COST OF WORK:	
MATERIAL	0
LABOR	23,350
CONTRACT PORTION	237,105
OVERHEAD	39,068
TOTAL AUTHORIZED EXPENDITURES CHARGEABLE TO THIS W.A.	$ 299,523
FUNDS RECEIVED:	
CONTRIBUTIONS RECEIVED	0
REFUNDABLE ADVANCES RECEIVED	0
TOTAL CONTRIBUTIONS/ADVANCES	0
NET CASH REQUIRED	$ 299,523

COMMENTS:
Balance of $1,050,000 to be released in 2012. Subject to AWC Board Approval.

AUTHORIZATION	DATE
PREPARED BY: Andrew J. Haas AJH 12-2-11 Andy Haas	12-1-11
REVIEWED FOR EASMT/ROW VERIFICATION: Charles Briggs CB 12-02-2011	12-01-2011
REVIEWED BY: Mike Loggins 12-2-11	12-1-11
APPROVED BY ENGINEERING: Fredrick Schneider	12-2-11
APPROVED BY FINANCE: Joseph Harris	12/2/11
AUTHORIZED BY PRESIDENT: William M Garfield William Garfield	12-2-2011

CONSTRUCTION RELEASE:

RELEASED TO CONSTRUCTION
Authorized by FRED SCHNEIDER
Date 12/2/2011

AFH

ARIZONA WATER COMPANY

WORK AUTHORIZATION - DETAIL SHEET

W.A. NUMBER: 1-4814
P.E. NUMBER:
BUDGET ITEM NO.: B-1
SHEET NO.: 2 of 2

RETIREMENT PROPERTY UNITS	PLANT PROPERTY ACCOUNT	UNIT DESCRIPTION	QUANTITY	YEAR INSTALLED AND W.A. NUMBER

PROJECT DESCRIPTION:

Design and Construct Arsenic Removal Facility to remove arsenic from Harmony Hills Wells #5 and #12 (Part 1 of 2) to comply with the Safe Drinking Water Act. An evaluation of the best available treatment method has been completed whereby adsorptive technology was selected.

	DESCRIPTION	PLANT PROP ACCT	QUANTITY	UNIT COST	TOTAL
CONTRACT WORK	Design Arsenic Removal Facility	332	1	$ 69,946.75	$ 69,947
	Construction Administrative Services	332	1	13,950.00	13,950
	Provide and Install On-Site Piping	332	1	50,000.00	50,000
	Provide and Install Arsenic Removal Facility	332	1	25,000.00	25,000
	Provide and Install Backwash Recovery System	332	1	30,000.00	30,000
	Provide and Install On-Site Electrical	332	1	40,000.00	40,000
	100% Performance and Payment Bonds	332	1	6,708.00	6,708
	Geotech Analysis	332	1	1,500.00	1,500
	SERVICE CONNECTIONS COMPLETE: DOUBLE-LONG	345			
	SERVICE CONNECTIONS COMPLETE: DOUBLE-SHORT	345			
	SERVICE CONNECTIONS COMPLETE: SINGLE-LONG	345			
	SERVICE CONNECTIONS COMPLETE: SINGLE-SHORT	345			
TOTAL CONTRACT WORK					$ 237,105
MATERIALS					
	SERVICE CONNECTIONS: DOUBLE-LONG	345			
	SERVICE CONNECTIONS: DOUBLE-SHORT	345			
	SERVICE CONNECTIONS: SINGLE-LONG	345			
	SERVICE CONNECTIONS: SINGLE-SHORT	345			
	METERS	346			
TOTAL MATERIALS					$ -
LABOR	Engineering Design	332	120	$ 50.00	$ 6,000
	Submittal Reviews	332	120	50.00	6,000
	Project Management	332	20	50.00	1,000
	TESTING FEE				
	PERMIT FEE	332	1	6,100.00	6,100
	SURVEY FEE	332	1	3,250.00	3,250
	FIELD INSPECTION	332	20	50.00	1,000
	INSTALL SERVICE CONNECTIONS: DOUBLE-LONG	345			
	INSTALL SERVICE CONNECTIONS: DOUBLE-SHORT	345			
	INSTALL SERVICE CONNECTIONS: SINGLE-LONG	345			
	INSTALL SERVICE CONNECTIONS: SINGLE-SHORT	345			
TOTAL LABOR					$ 23,350
SUBTOTAL - CONTRACT WORK, MATERIALS, AND LABOR					$ 260,455
OVERHEAD					39,068
TOTAL	REFUNDABLE PORTION ☐	NON-REFUNDABLE PORTION ☐		COST ESTIMATE	$ 299,523

AFH

N

Typical Utility Easement 10' Wide Except Lots 138, 139, 140

DEDICATION

STATE OF ARIZONA } ss
COUNTY OF MARICOPA }

KNOW ALL MEN BY THESE PRESENTS

That Arizona Title Insurance and Trust Company, an Arizona Corporation, as Trustee, has subdivided under the name of HARMONY HILLS, that portion of the SW¼ of Section 11, T17N, R5E of G&SR&M, Yavapai County, Arizona, as shown on this plat, and hereby publishes this plat as and for the plat of said Harmony Hills, and hereby declares that said plat sets forth the location and gives the measurements and dimensions of the Lots and Streets constituting same, and each Lot and each Street shall be known by the Number or name given to each respectively on said plat, and hereby dedicates to the public for use as such, the streets shown on said plat and included in the above described premises.

IN WITNESS WHEREOF, Arizona Title Insurance and Trust Company, as Trustee, has hereunto caused its Corporate Name to be signed and its Corporate Seal to be affixed and the same to be attested by the signatures of its Vice President and its Secretary, thereunto duly authorized, done at Phoenix Arizona this 9TH day of MAY, 1962.

ARIZONA TITLE INSURANCE AND TRUST CO. as Trustee

B. Whitmore
Vice President

Attest: Secretary

ACKNOWLEDGEMENT

STATE OF ARIZONA } ss
COUNTY OF MARICOPA }

On this, the 9TH day of MAY, 1962, before me, the undersigned officer, personally appeared F.E. PETTYGREW and DONALD STANLEY who acknowledged themselves to be Vice President and Secretary, respectively, of Arizona Title Insurance and Trust Company a Corporation, and that they, as such Officers respectively, being duly authorized so to do, executed the foregoing instrument for the purposes therein contained, by signing the name of the Corporation as Trustee, by themselves as such Officers respectively.

In witness whereof I hereunto set my hand and Official Seal

Notary Public

SEAL

My Commission will expire 6-1-62

APPROVALS

This plat was approved by the Board of Supervisors of Yavapai County, Arizona at a meeting held on the 16 day of April, 1962

By John J Pruitt - Chairman

Attest Clerk

Approved by the Yavapai County Engineer this 16th day of April 1962

H L Merritt - County Engineer

Approved by the Yavapai County Health Department this 24 day of April, 1962

Ralph O Archer - Senior Sanitarian
Yavapai County Health Department

This is to certify that the survey and subdivision of the premises described and platted hereon were done under my direction during the months of February and March, 1962

George C. Blount - Reg. Land Surveyor.

Street grades do not exceed 3% except on Windsong Drive which will exceed 8% for 100 feet. Streets will be oiled to County Specifications by the Developers before any lots are sold for construction.

Filed at the request of Arizona Title Insurance & Trust Co.
May 16 1962
at 2:40 P.M.
in Book 9 Maps & Plats
Page -1-
Records of Yavapai County, Arizona
Ward C Palmer

SEAL

DATE MARCH 1962 SCALE 1" = 100' DRAWN H K F.		HARMONY HILLS A SUBDIVISION OF PART OF THE SW 1/4 OF SECTION 11 T17N R5E OF G&SR B&M YAVAPAI COUNTY ARIZONA JAMES H HOWARD & ASSOCIATES ENGINEERS SURVEYORS CLARKDALE ARIZONA
		J.O. 3913 SHEET NO 1 OF 1

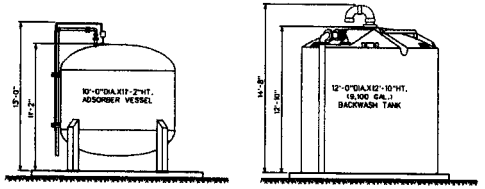

A.T.S. EQUIPMENT PROFILE VIEWS

SCALE: 1"=5'-0"

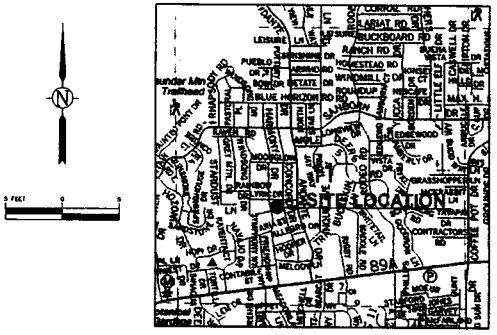

VICINITY MAP

N.T.S.

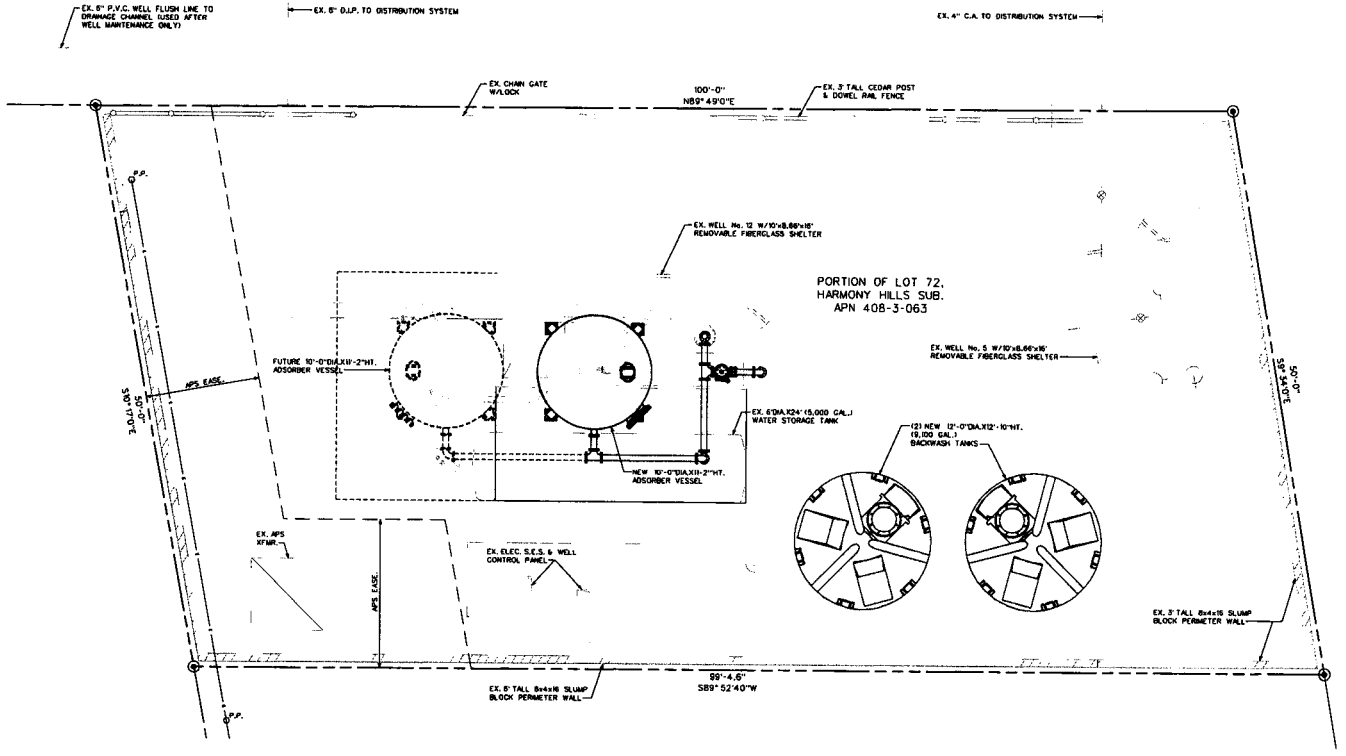

SITE PLAN

SCALE: 1"=5'-0"

ARIZONA WATER COMPANY
3805 N. BLACK CANYON HWY. POST OFFICE BOX 23006
PHOENIX, ARIZONA 85038-9006
(602) 240-6860

PROJECT DESC: ARSENIC TREATMENT SYSTEM FOR HARMONY HILLS WELL #5 & #12

PROJECT SHEET DESC: HARMONY HILLS WELL SITE - PRELIMINARY SITE LAYOUT

W.O. No.: 1-4814
DIV.: SEDONA
CERT. DESC: SW 1/4 SEC. 11 - T. 17 N., R. 5 E.
DATE: 3-31-2011
SCALE: AS SHOWN
DRAWN BY: JPK
RECKED BY: AJH

The installation shown is to be installed in accordance with the Arizona Water Company standard specifications on file with the Arizona Department of Environmental Quality.

Call before you dig 263-1100 1-800-STAKE-IT

DWG. No.:

SHEET 1 OF 1

carollo

Engineers...Working Wonders With Water™

EXPIRES 09-30-2012

ARIZONA WATER COMPANY

SEDONA HARMONY HILLS AND SOUTHWEST CENTER ARSENIC TREATMENT ADSORPTIVE MEDIA

TECHNICAL MEMORANDUM ALTERNATIVES EVALUATION

May 2011

4600 EAST WASHINGTON STREET • SUITE 500 • PHOENIX, ARIZONA 85034 • (602) 263-9500 • FAX (602) 265-1422

ARIZONA WATER COMPANY

SEDONA HARMONY HILLS AND SOUTHWEST CENTER ARSENIC TREATMENT ADSORPTIVE MEDIA ALTERNATIVES EVALUATION

TECHNICAL MEMORANDUM

TABLE OF CONTENTS

Page No.

1.0 INTRODUCTION / BACKGROUND 1

2.0 CURRENT STATE OF SORPTIVE MEDIAS 3

3.0 DETAILED EVALUATION OF FEASIBLE MEDIAS 5
- 3.1 Supplier's Proposed Design Criteria 6
- 3.2 Sorptive Media Supplier's Performance Guarantees 9

4.0 QUALITATIVE ASSESSMENT OF MEDIAS 9

5.0 COST ANALYSIS 11
- 5.1 Costs 13
- 5.2 Vessel Size Optimization 13

6.0 EVALUATION SUMMARY 18

APPENDICES

APPENDIX A	WATER QUALITY
APPENDIX B	CONSTRUCTION COST DETAILS
APPENDIX C	O&M COST DETAILS
APPENDIX D	EXAMPLE CALCULATION FOR OPTIMIZING TREATMENT CAPACITY

LIST OF TABLES

Table 1	Current Status of Arsenic Sorptive Medias	4
Table 2	Preliminary Sorptive Media Design Criteria	6
Table 3	Sorptive Media Supplier System Guarantees	9
Table 4	Qualitative Ranking Comparison between Medias	10
Table 5	Capital and O&M Cost Summary for SM Alternatives at Harmony Hills	12
Table 6	Treatment Size Optimization	17

LIST OF FIGURES

Figure 1	Sorptive Media Process Flow Schematic for Harmony Hills and Southwest Center	2
Figure 2	Equipment Layout at Harmony Hills for SM Treatment System	7
Figure 3	Site Layout at Southwest Center for SM Treatment System	8
Figure 4	Life-Cycle Costs for SM Treatment at Harmony Hills	14
Figure 5	Break-Even Point between SM Systems	15

ADSORPTIVE MEDIA ALTERNATIVES EVALUATION

1.0 INTRODUCTION / BACKGROUND

Arizona Water Company (AWC) owns two groundwater production well sites in Sedona, Arizona: Harmony Hills and Southwest Center, which are part of this analysis. Both sites are located north of Highway 89A in Sedona, in residential areas, and are approximately 3,000 feet apart. Two wells are located at the Harmony Hills site. The first (Harmony Hills #5) well has a production capacity of 155 gpm and the second (Harmony Hills #12) has a capacity of 900 gpm. One 810-gpm well is located at the Southwest Center site (Southwest Center #8). Based on historic total arsenic concentrations from December 2009 to September 2010, the arsenic concentrations at all three wells range from approximately 0.009 to 0.011 mg/L.

In 2010 AWC contracted with Carollo Engineers (Carollo) to conduct an evaluation of the best available arsenic treatment technologies or mitigation strategies for the Harmony Hills and Southwest Center sites. The results of that previous study were as follows:

- Both sites are small and have limited area available for new/additional equipment (i.e., equipment footprint is critical).
- Sorptive media (SM) treatment operated in parallel provides the smallest footprint (see Figure 1).
- SM treatment ranked higher than coagulation filtration (C/F) or ion exchange (IX) in terms of AWC operational and maintenance goals.
- SM treatment at each site cost approximately $1 million. Centralized treatment using SM technology that would treat water from both sites was approximately $3.6 million
- SM with lead-lag only provided a small incremental cost savings in terms of the 20-year life cycle. This was primarily due to the low influent arsenic concentration.
- Both sites are in populated, residential areas. Harmony Hills has limited barrier security due to the City of Sedona permitting requirements.

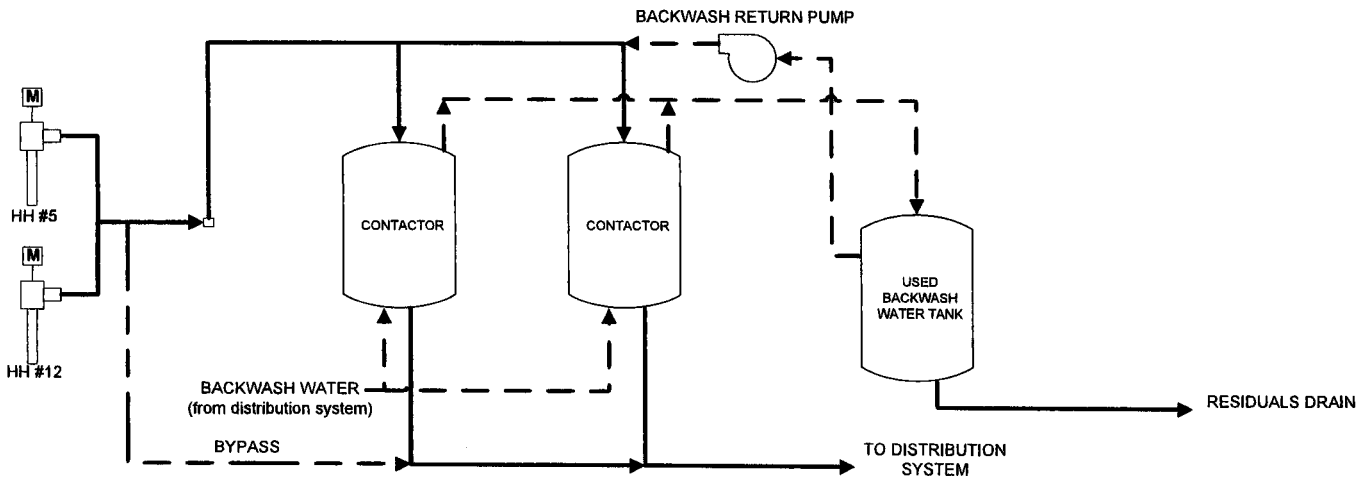

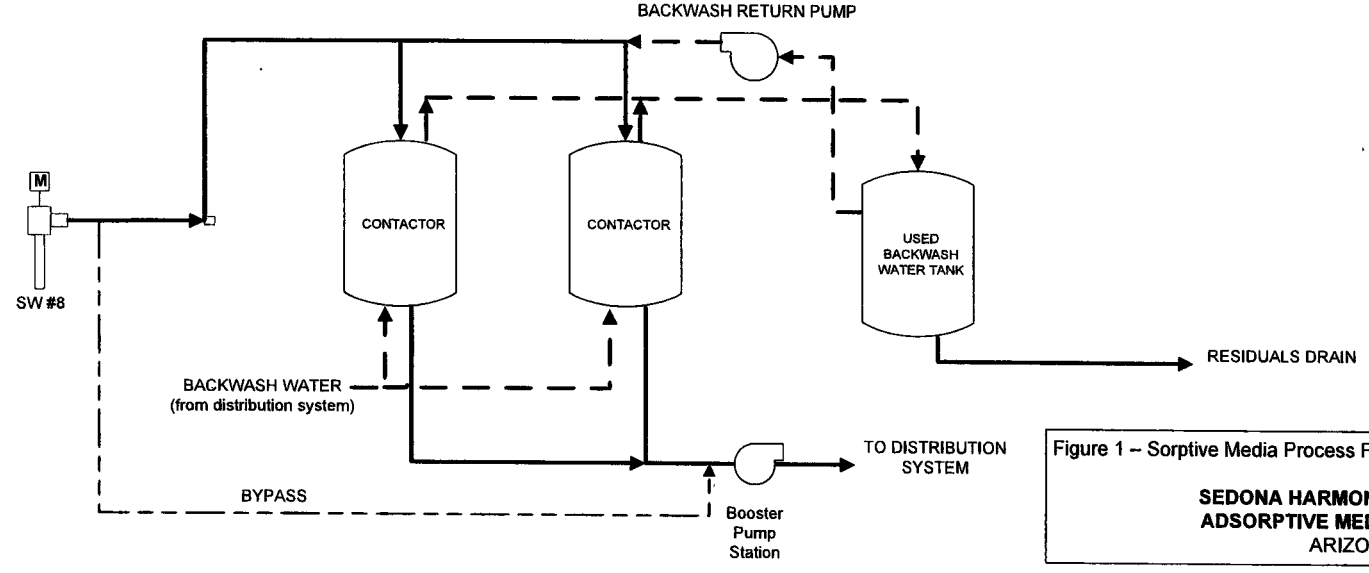

Figure 1 – Sorptive Media Process Flow Schematic for Harmony Hills & Southwest Center

SEDONA HARMONY HILLS & SOUTHWEST CENTER
ADSORPTIVE MEDIA ALTERNATIVES EVALUATION
ARIZONA WATER COMPANY

carollo®

In 2011, AWC contracted with Carollo to provide additional review of SM treatment technologies using parallel vessels and blending at the Harmony Hills and Southwest Center sites, which is summarized in this technical memorandum. The objectives of this additional work were as follows:

- Assess the current state of technology for medias used in SM treatment systems to aid in determining the best available adsorptive media.
- Review those medias that appear to be viable options for full-scale use, and collect additional information. Specific characteristics evaluated for each viable media were as follows:
  - Projected bed life of media until exhaustion.
  - Footprint of treatment system and ability to fit at the Southwest Center site and Harmony Hills sites.
  - Ability of media supplier to provide a performance guarantee related to effluent arsenic levels and media bed life.
  - Ability of supplier to take full responsibility of disposed media and indemnify AWC.
  - Flexibility to allow use of new/advancing/emerging media technology in the future.
  - Proven media performance on groundwater in the Southwest United States, most importantly Arizona.
- Develop construction, operation and maintenance (O&M) and life-cycle costs for each SM system.
- Develop model for determining the optimum size of the treatment system (i.e., vessel diameter) based on SM system design criteria and equipment quotes.

2.0 CURRENT STATE OF SORPTIVE MEDIAS

Since the initial promulgation of the Arsenic Rule by the U.S. EPA in 2001, many sorptive medias have become commercially available. Sorptive media works by passing water through a bed of media. Arsenic in the water sorbs or binds tightly to the media. Once the media is saturated with arsenic and no longer removes arsenic from the water, it is removed and replaced with fresh media. Regenerable media have also been developed for arsenic treatment. These systems can use on-site or off-site processes to regenerate the media.

Development of medias has focused on increasing arsenic storage capacity (i.e., bed life of media until exhaustion) and ability to remove arsenic under a variety of water qualities. For sorptive medias, high values for pH, silica, and phosphate all result in reduced ability to remove arsenic compared to water with lower values of these constituents.

Current literature and publications were reviewed to develop a list of potentially available medias that have been reported to remove arsenic from water. Table 1 provides a summary of these medias and unique features or reason why medias are or are not considered to viable alternatives for consideration at the next level of study. From a review of over 20 medias, four appear to be viable options for use at the Southwest Center and Harmony Hills sites.

Table 1 Current Status of Arsenic Sorptive Medias Sedona Harmony Hills and Southwest Center Adsorptive Media Alternatives Evaluation

Media Name	Manufacturer	Status
AAFS-50	Alcan	• Requires low pH for arsenic removal.
Adsorbsia	Dow	• Similar to Metsorb media. • Supplier does not recommend use if pH > 7.5. • Loprest offers the system package.
AD33	AdEdge Technologies	• Same as E33, but experience is generally for smaller packaged systems.
Alumina Silicate	Turr Corp	• No longer advertising.
Aquabind	Apyron	• Only provide Point-of-Entry / Point-of-Use. No full-scale, municipal installations.
ARM 200	Englehard	• Sandia (pilot) testing only.
ArsenxNPO	Purolite	• Potential patent infringement with LayneRT.
ASM-10-HP	ResinTech	• Resin based media similar to LayneRT, also used by Envirogen. Off-site media regeneration required (which is a concern to AWC).
E33	Severn Trent	• Large supplier with several installations.
G2	ADI	• Limited installations in U.S. • Reduced system performance (2-3 gpm/ft^2).
GFH	Siemens	• Large supplier with several installations.
Isolux	MEI	• Focus on small systems (POU/POE).
LayneRT	Layne Christensen	• Newer media with off-site regeneration. • Limited installations.
Metsorb	Graver Technologies	• Titanium-based media (similar to Dow product). • Ability to treat water less with pH greater than 7.5.
NXT-2	Filtronics	• No current installations in Arizona
NZNPF	ChK Group	• No longer marketing this media

Table 1 Current Status of Arsenic Sorptive Medias Sedona Harmony Hills and Southwest Center Adsorptive Media Alternatives Evaluation		
Media Name	**Manufacturer**	**Status**
Surface Modified Zeolite (SMZ)	New Mexico Institute of Mining & Tech	• Only testing at research level.
SAMMS	HydoPure Technologies	• Primary use is residential (e.g., pools).
SMI-III	SMI-PS/Hoganas	• Focus is on nitrate removal. • Requires low pH and high bed contact times.
Ultrasorb A,F,T	Kinetico	• Focus on small systems (POU/POE).
Z-33	WRT	• Requires low pH
ZS500As	GSA Resources	• No advancement of product since 2000.
Note: Shaded entries indicate those medias that appear viable for use at the Harmony Hills and Southwest Center sites. Additional design criteria and cost information was subsequently collected from these manufacturers/suppliers.		

3.0 DETAILED EVALUATION OF FEASIBLE MEDIAS

Based on site constraints and AWC's evaluation criteria for the Sedona area, four SM suppliers (i.e., Dow / Metsorb, Layne Christensen, Severn Trent, and Siemens) from Table 1 were determined to be the most viable and were examined in greater detail. AdEdge Technologies could potentially also supply an SM system. As noted in Table 1, AdEdge historically has provided only smaller SM systems using E33 media, as per their licensing agreement with Severn Trent. AdEdge's sales representative recently indicated that they now have the ability to provide large-capacity systems (i.e. 1,000 gpm) suitable for the Sedona Harmony Hills and Southwest Center sites. Pricing was not obtained from AdEdge as part of this study. However, they could be included as a potential supplier if their capabilities are confirmed during the detailed design phase. Other SM system suppliers can also supply vessels and Severn Trent E33 media, but Severn Trent generally does not guarantee the media performance if they have not supplied the system.

Dow / Metsorb, Layne Christensen, Severn Trent, and Siemens were contacted directly to provide design criteria for their system packages, qualitative design considerations, and associated equipment and media replacement costs.

3.1 Supplier's Proposed Design Criteria

Table 2 presents preliminary design criteria information proposed by the media suppliers, based on the water quality data included in Appendix A. The Dow / Metsorb and Layne Christensen media operates at a lower bed contact time in part due to the different physical characteristics that enable these medias to withstand higher differential pressures and head losses. While the results are smaller-diameter vessels, the overall footprints for all four systems are similar. One benefit of installing a larger vessel system with conservative loading rates is that it can potentially be operated using a different media. This provides flexibility to AWC when reviewing future media options, or when negotiating new media contracts with suppliers.

Figure 2 and Figure 3 present proposed potential layouts for the SM systems at Harmony Hills and Southwest Center respectively. The largest sized footprint for the SM system (i.e., Severn Trent) and associated yard piping, backwash system and bypass system are shown on these layouts to be conservative. These layouts were used as the basis for developing capital costs.

Table 2 Preliminary Sorptive Media Design Criteria
Sedona Harmony Hills and Southwest Center
Adsorptive Media Alternatives Evaluation

Supplier	Vessels	Treatment Capacity (gpm)	Footprint[1] (ft x ft)	Empty Bed Contact Time (min)
Dow / Metsorb [2]	Two, 5.5-ft diameter vessels	500	20 x 12	3
Layne Christensen	Two, 6-ft diameter vessels[3]	500	23 x 12	3
Severn Trent	Two, 8-ft diameter vessels	500	26 x 14	5
Siemens	Two, 8-ft diameter vessels[4]	500	23 x 14	5

Notes:

(1) Three feet added to supplier's equipment layout on all sides to account for edge distance between vessel pads and outside edge of concrete.

(2) Graver Technologies and/or Loprest would provide the system package.

(3) Original proposal listed two 10-ft diameter vessels in lead-lag. Proposal adjusted to normalize costs based on a parallel design but maintain supplier's head loss and empty bed contact time.

(4) Original proposal listed three 9.5-ft diameter vessels. Proposal adjusted to normalize costs based on a two vessel design but maintaining supplier's loading rate and empty bed contact time.

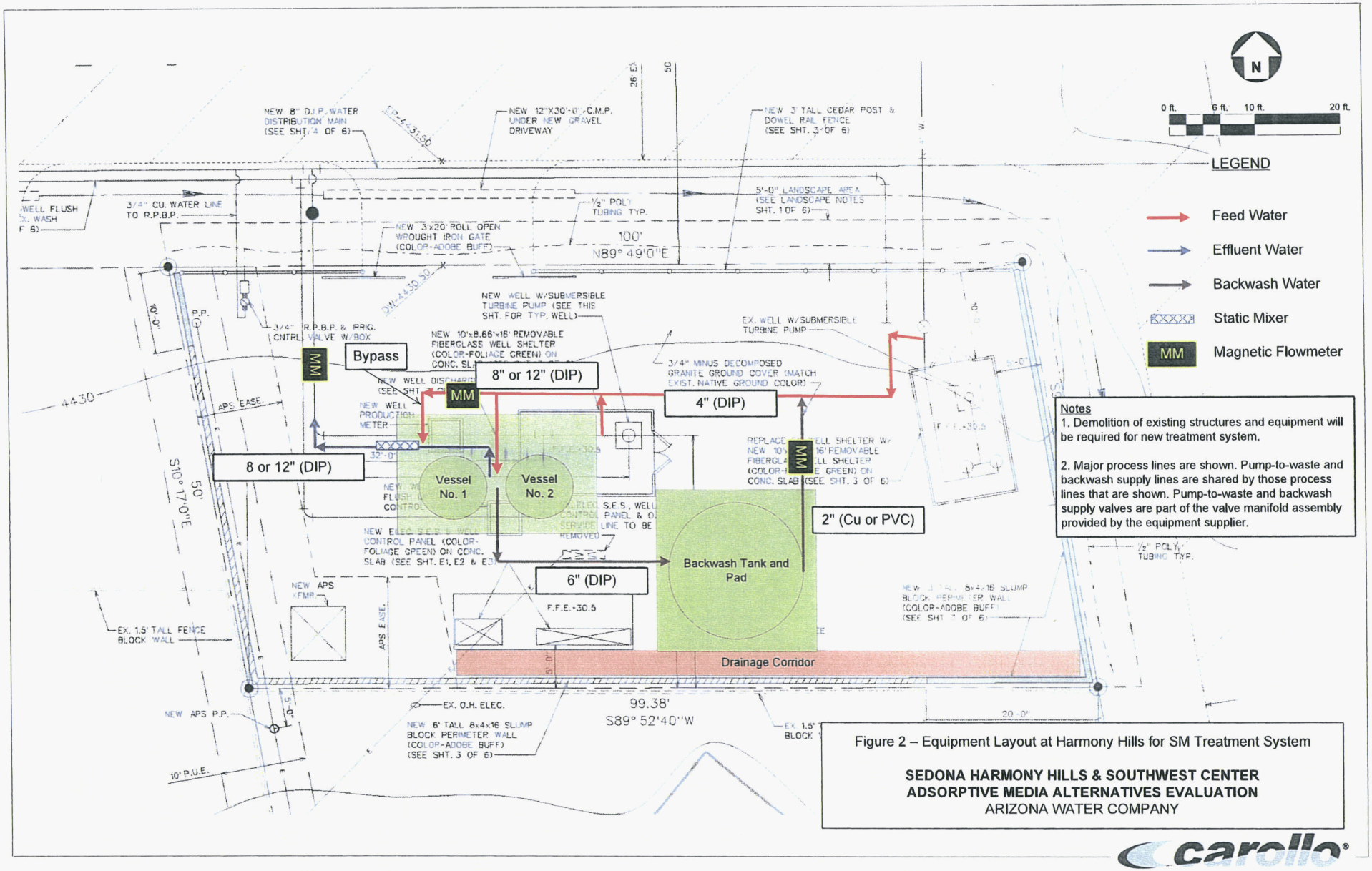

Figure 2 – Equipment Layout at Harmony Hills for SM Treatment System

SEDONA HARMONY HILLS & SOUTHWEST CENTER
ADSORPTIVE MEDIA ALTERNATIVES EVALUATION
ARIZONA WATER COMPANY

carollo

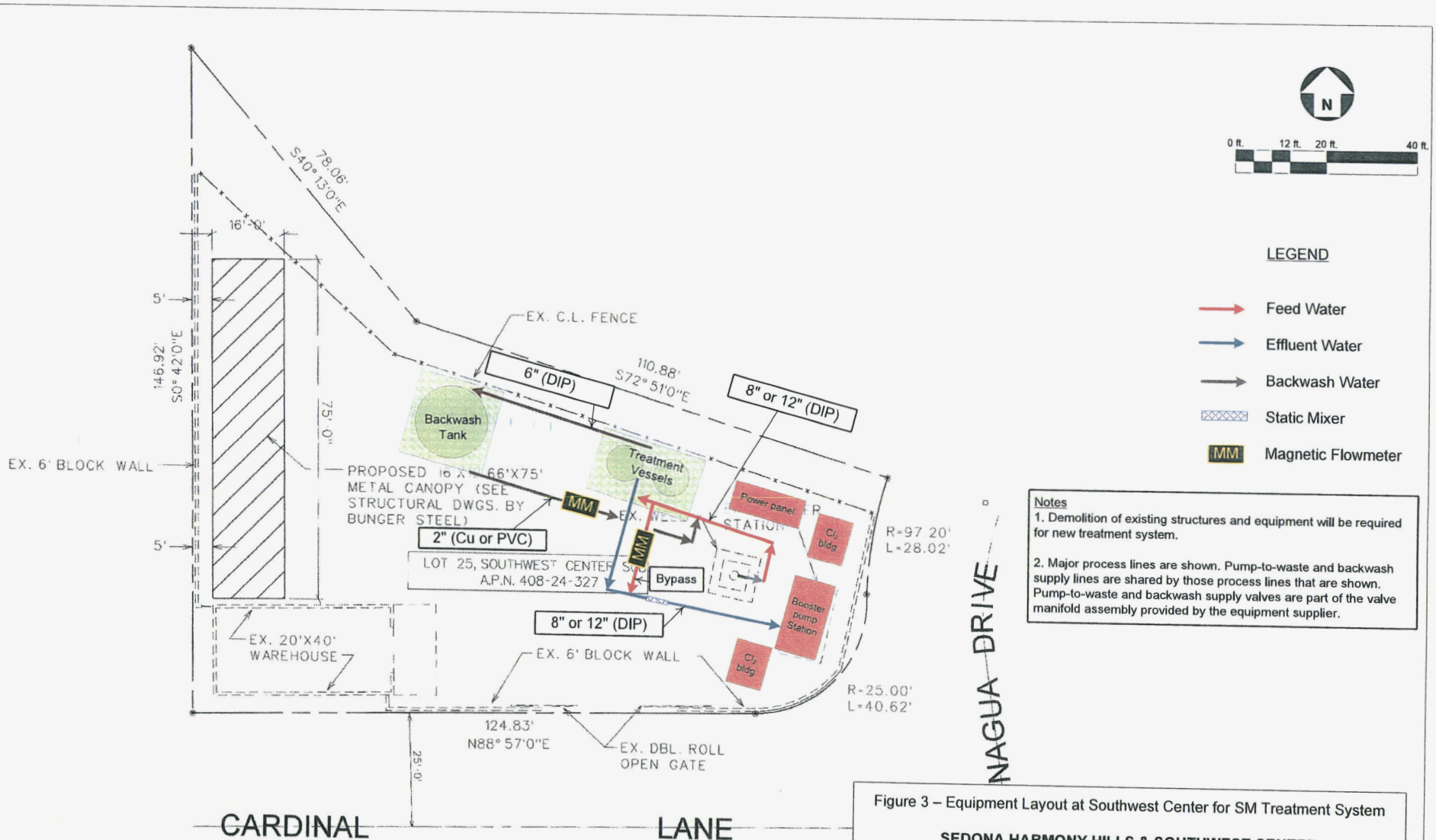

Notes

1. Demolition of existing structures and equipment will be required for new treatment system.

2. Major process lines are shown. Pump-to-waste and backwash supply lines are shared by those process lines that are shown. Pump-to-waste and backwash supply valves are part of the valve manifold assembly provided by the equipment supplier.

Figure 3 – Equipment Layout at Southwest Center for SM Treatment System

SEDONA HARMONY HILLS & SOUTHWEST CENTER
ADSORPTIVE MEDIA ALTERNATIVES EVALUATION
ARIZONA WATER COMPANY

carollo

3.2 Sorptive Media Supplier's Performance Guarantees

The SM system suppliers listed in Table 3 have developed models to estimate performance of their respective arsenic removal medias. Table 3 summarizes parameters of particular importance to AWC, and includes the following:

- Arsenic concentration in effluent is less than a specified level.
- Media lasts for "x" bed volumes until effluent exceeds a specified level (0.008 mg/L).
- Indemnification of AWC for any future costs (e.g., landfill remediation) once media leaves the site.

Table 3 Sorptive Media Supplier System Guarantees Sedona Harmony Hills and Southwest Center Adsorptive Media Alternatives Evaluation

Supplier	Arsenic Effluent Concentration Less than 0.008 mg/L	Bed Volumes Until Media Exhaustion	Indemnification of AWC
Dow / Metsorb (1)	Yes	77,000(2)	No
Layne Christensen	Yes	137,000	Yes
Severn Trent	Yes	167,000	Maybe
Siemens	Yes	225,000	Maybe

Notes:
(1) Dow titanium dioxide product would not guarantee bed volumes due to raw water pH being greater than 7.5.
(2) Metsorb / Graver Technologies will provide a guarantee once pilot testing is complete.

4.0 QUALITATIVE ASSESSMENT OF MEDIAS

A qualitative assessment of the medias listed in Table 4 was conducted to provide a relative ranking of SM suppliers. Characteristics were developed based on operations, maintenance and management considerations specific to AWC. Each SM system supplier was contacted, and they aided in completing the qualitative assessment for their respective systems. Weighting factors were also developed for each qualitative evaluation parameter, on the basis of a 100-percent scale. For each parameter, a score of 1, 2, or 3 was given with the scores defined as follows:

1. Poor characteristics (color coded as red).
2. Neutral or balance point (color coded as yellow).
3. Good characteristics (color coded as green).

Table 4 **Qualitative Ranking Comparison between Medias**
Sedona Southwest Center and Harmony Hills
Adsorptive Media Alternatives Evaluation

PARAMETER	KEY QUESTION	Weighting Factor	SUPPLIER (Media Name)			
			Dow	Layne Christensen	Severn Trent	Siemens
			Adsorbsia	Layne RT	E33	GFH
Operations/Maintenance		%				
Contracts	Can manufacturer provide a media cost that is good for 5 years?	2	1	3	3	3
Maintenance	What are weekly/monthly maintenance requirements?	2	2	1	2	2
Media Lead Time	How long would it take to get 500 cu ft if order today?	2	2	3	3	2
Media Purchase	Is media manufactured in the U.S.?	4	3	3	1	1
Storage	What should be done to place the system in standby mode during periods of extended shutdown?	2	2	1	2	2
Warranty	Is a warranty provided for the media bed life based solely on water quality data?	10	1	2	2	2
	Subtotal (Max 66)		**36**	**48**	**44**	**42**
System Integration						
Capacity Expansion	Is the system package easily expandable in the future?	2	2	2	2	2
U.S. Track Record	Does the supplier have a strong experience with municipal applications in the U.S.?	8	2	2	2	2
AZ Track Record	How many other systems are in production in Arizona?	8	2	1	3	3
Pre-engineered	Is a pre-engineered system available?	2	3	3	2	2
	Subtotal (Max 60)		**42**	**34**	**48**	**48**
Treatment Considerations						
Arsenic Removal	Can arsenite (As-III) be removed without the need for a pretreatment step?	2	3	1	1	1
By-Products	Are there (potentially) harmful by-products (e.g., *nitrosamines*) that are produced by the media?	10	3	1	3	3
Hydraulic Limitations	What is the maximum headloss and loading rate for the media?	2	1	3	2	2
Low-Level Radioactivity	Does media removal radium, thorium or uranium?	2	2	1	3	3
Pretreatment	Does feed water need to be pretreated (e.g., turbidity removal, pH suppression, coagulant)?	4	2	1	2	2
Sensitivity to Water Quality	Is arsenic removal dependent on pH and concentrations of water quality constituents?	2	1	2	2	2
	Subtotal (Max 66)		**52**	**28**	**54**	**54**
Waste Residuals						
Backwashing	How often and how much water is typically required to backwash?	2	2	3	2	2
Disposal	Does manufacturer provide media refill and disposal services?	8	1	2	3	3
Hazardous Waste	What is the likelihood of the waste being classified as hazardous?	4	3	3	3	3
Indemnification	Will manufacturer indemnify AWC?(4)	10	1	3	2	2
NSF61	Is fresh / new media NSF61 certified?	10	3	1	3	3
Recycling	Can backwash water be recycled? If so, how are solids removed (e.g., filters, coagulation,?)?	2	3	3	3	3
	Subtotal (Max 108)		**70**	**80**	**96**	**96**
	Sum of Weighting Factors	**100**				
	GRAND TOTAL (MAX SCORE 300)		**200**	**190**	**242**	**240**

Notes:
(1) Ranking: 1 = poor characteristics, 2=neutral (balance point), 3 = good characteristics
(2) Cells are color coded based on score. Green, yellow and red are associated with scores of 3, 2 and 1 respectively.
(3) Subtotal scores calculated by multiplying Weighting Factor with each score and then summing all those values for a given Area of Concern.
(4) Indemnification may come from equipment / sales representative rather than manufacturer of media.

5.0 COST ANALYSIS

This section presents construction costs, operating and maintenance (O&M) costs, and life-cycle costs for each SM system. Both the Harmony Hills site and Southwest Center site have similar well production rates, yard piping layouts, and ancillary equipment (e.g., backwash storage tank and bypass system). The utilization rate used for this study was 50%, for both sites. AWC predicts that in the future the Southwest Center site utilization will be approximately 75%, and the Harmony Hills utilization will be approximately 50-60%. Costs presented herein are applicable to both sites but have been specifically developed based on quantity take-offs and layouts for the Harmony Hills site. Costs were developed for each of the four SM systems.

Construction costs were developed using a combination of sources including Carollo cost databases, RS Means, and supplier quotations. Table 5 presents the construction, O&M and life-cycle costs broken down for major disciplines of work or equipment. Details of construction and O&M costs may be found in Appendix B and C respectively. Key assumptions used for developing cost estimates include the following:

Construction Costs

- Equipment costs based on SM supplier quotes (vessels, piping, valves, and media).
- Percentage markups of direct cost for materials and installation:
  - E&IC: 20%
  - Civil Site Work: 5%
  - Design Contingency: 15%
- General Conditions, Overhead, Profit, and Risk: 10%.
- Sales Tax: 4% (of half of all costs).

O&M Costs

- Media replacement interval and media costs based on SM supplier quotes.
- Separate waste disposal quote collected from Chemical Transportation, Inc. (CTi) for hauling and disposing of solids (i.e., thickened liquid waste) that settle and collect on bottom of the backwash waste tank. Settled spent backwash water will be returned to the head of the plant.
- Media likely to be classified as non-hazardous waste. Non-hazardous waste disposal costs are used.
- New LayneRT media pricing used for media replacement to reduce the chance for mixing of media from other sources and also retain NSF61 designation.

Table 5 **Capital and O&M Cost Summary for SM Alternatives at Harmony Hills**
Sedona Harmony Hills and Southwest Center
Adsorptive Media Alternatives Evaluation

DESCRIPTION	SORPTIVE MEDIA SUPPLIERS			
	Loprest / Graver (Dow / Metsorb)	Layne Christensen (LayneRT)	Severn Trent (E33)	Siemens (GFH)
Capital Cost				
Civil	$30,000	$20,000	$30,000	$30,000
Yard Piping	$60,000	$50,000	$60,000	$60,000
Treatment Equipment	$310,000	$320,000	$370,000	$410,000
E&IC	$150,000	$120,000	$160,000	$180,000
Building	$120,000	$80,000	$110,000	$130,000
Waste Storage / Treatment	$90,000	$0	$90,000	$90,000
Direct Costs	**$760,000**	**$590,000**	**$820,000**	**$900,000**
Contingency	$110,000	$90,000	$120,000	$140,000
General Conditions	$90,000	$70,000	$90,000	$100,000
Sales Tax	$20,000	$20,000	$20,000	$20,000
Indirect Costs	**$220,000**	**$180,000**	**$230,000**	**$260,000**
TOTAL CONSTRUCTION COSTS	**$980,000**	**$770,000**	**$1,050,000**	**$1,160,000**
Annual O&M Cost				
Labor	$21,200	$21,200	$21,200	$21,200
Electricity	$136,200	$136,200	$133,800	$133,800
Consumables	$900	$2,400	$900	$900
Media / Equipment Replacement	$55,300	$47,300	$30,300	$24,700
Waste Handling/Disposal	$23,000	$4,900	$14,300	$14,300
TOTAL ANNUAL COSTS	**$236,600**	**$212,000**	**$200,500**	**$194,900**
Life-Cycle Cost (2011 USD)				
Capital Cost	$980,000	$770,000	$1,050,000	$1,160,000
O&M Cost	$7,330,000	$6,570,000	$6,210,000	$6,040,000
TOTAL VALUE	**$8,310,000**	**$7,340,000**	**$7,260,000**	**$7,200,000**

Life-Cycle Costs

- Developed by forecasting O&M cost to a specific year based on a 4-percent annual inflation rate.
- Total costs paid at end of year "x" used over 20-year life-cycle to determine break-even point (e.g., Figure 5).

5.1 Costs

Figure 4 presents the capital, O&M and life-cycle costs for each SM alternative. Capital costs for all four SM suppliers were approximately $1 million. The Layne Christensen system has the lowest the capital cost. However, the Layne Christensen system costs slightly more (i.e., $7.34 million) after twenty years of operation compared to Severn Trent's (i.e., $7.26 million) or Siemens' systems (i.e., $7.20 million). The Loprest or Graver system was the most expensive, costing $8.31 million at year 20.

Figure 5 shows several break-even points between the various SM systems. The Severn Trent system is estimated to be slightly lower in capital cost than the Siemens' systems. However after year 14, the total costs paid for the Siemens' system is less than the Severn Trent system. Likewise, Loprest (or Graver) is lower in cost than the Siemens' system but after year 3, the Loprest (or Graver) system represents the highest cost of all four systems evaluated.

5.2 Vessel Size Optimization

SM treatment may be designed with or without blending (or bypass). While the blending option offers the lowest construction cost due to smaller treatment vessel(s), less media and smaller piping, the flow rate in the bypass must be reduced once arsenic breakthrough occurs in the vessels due to blending.

Sizing the treatment system may be undertaken from either of two approaches:

1. Determine minimum flow demands required by the distribution system for each well site.
2. Determine optimum (or lowest) unit cost for finished water based on different treatment capacities (or vessel diameters).

The first option requires a distribution system model to determine daily and seasonally changes in water demand. Additionally, model results would need to be verified with field measurements (e.g., pressure measurements) before selecting the treatment capacity. Any changes in demands of the system (e.g., new homes or businesses) or supplies (e.g., abandonment or bringing a new well online) would require changes to the model, and thus potential changes to the treatment capacity. The second option determines treatment capacity based on optimizing the life-cycle cost for treating water.

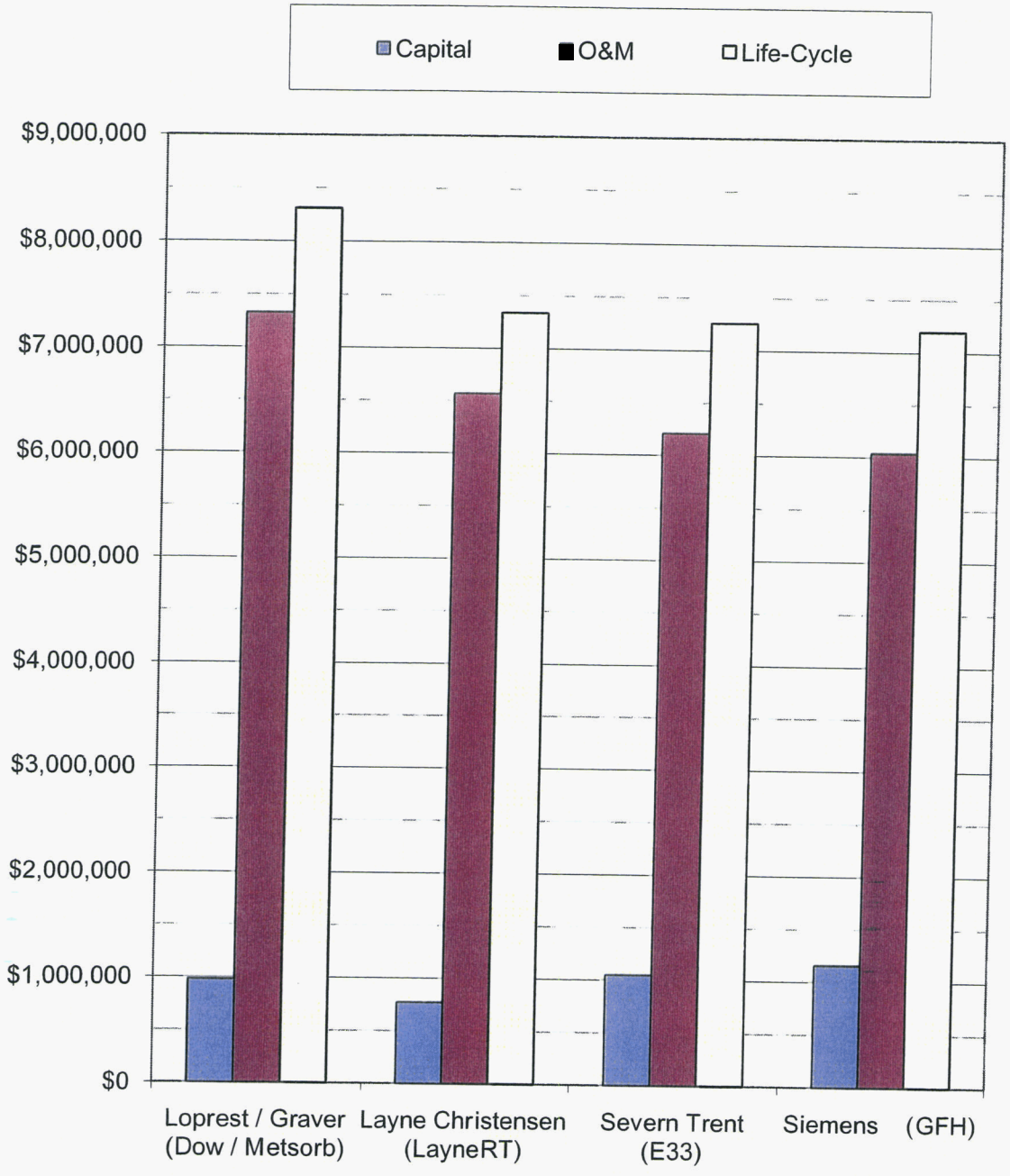

Figure 4
LIFE-CYCLE COSTS FOR SM TREATMENT AT HARMONY HILLS
Sedona Harmony Hills & Southwest Center
Adsorptive Media Alternatives Evaluation

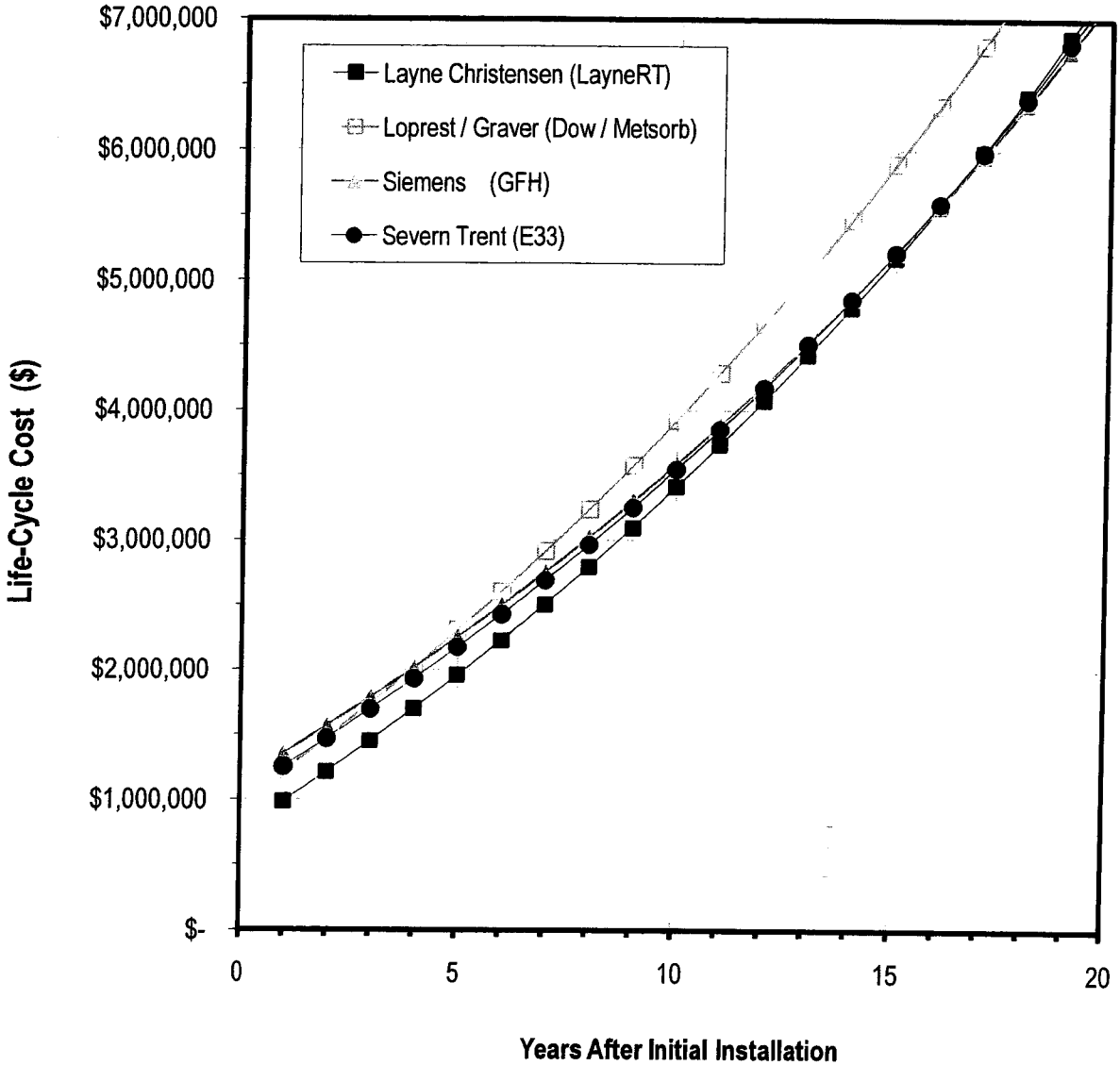

Figure 5
BREAK-EVEN POINT BETWEEN SM SYSTEMS
Sedona Harmony Hills & Southwest Center
Adsorptive Media Alternatives Evaluation

For this study, an example analysis was performed to develop how an 'optimal' vessel size could be selected based on the second option. This analysis included the AWC treatment goals and flows for Harmony Hills, and SM system design requirements for Severn Trent E33 media. Four different design treatment capacities were selected for this exercise, and comparative life-cycle costs on a dollars per acre-ft basis were calculated for each scenario. Treatment system with treated flow design capacities of 1100, 750, 500 and 250 gpm were evaluated, with the remaining flow going to bypass. For example, the 750 gpm treated flow system assumes a bypass flow capability of 350 gpm, for a total production flow rate of 1,100 gpm to match the wells production capacity. Each scenario included vessels sized to maintain the minimum requirements for varied in regards to the size and number of vessels.

5.2.1 Vessel Size Optimization Example

This section describes how the cost comparison model was setup and presents costs for each flow scenario. Inputs and assumptions to the model are summarized below. Detailed calculations for this model are located in Appendix D.

AWC Design Criteria:

- Total water production capacity of the site = 1,100 gpm.
- Well flow cannot be reduced (i.e., 1,100 gpm must be maintained).
- Raw water arsenic = 0.010 mg/L.
- Finished water arsenic goal = 0.008 mg/L.
- Maximum allowable pipe velocity = 5 ft/s.
- SM vessels operated in parallel (if more than one vessel is used).
- Bypass system to allow blending of raw water with SM system effluent.

SM Supplier Design Criteria:

- Loading rates (LR):
  - Average = 5 gpm/ft^2.
  - Minimum = 2 gpm/ft^2.
  - Maximum = 8 gpm/ft^2.
- Empty bed contact times (EBCT):
  - Average = 5 minutes.
  - Minimum = 2 .5 minutes.
- Bed volumes until arsenic breakthrough = 167,000 (as reported by Severn Trent media performance prediction model for E33).
- Vessel, piping, valves, media, and disposal costs: (see Appendix D).

- Average EBCT and LR are used by Severn Trent when sizing the vessels and media depths.

Table 6 Treatment Size Optimization
Sedona Harmony Hills and Southwest Center
Adsorptive Media Alternatives Evaluation

Description	Units	Scenarios			
		1	2	3	4
Design Treatment Flow Rate[1]	(gpm)	1,100	750	500	250
No. of Vessels	(no.)	2	2	1	1
Diameter of Vessel	(ft)	12	10	12	8
Bed Volumes until Exhaustion[2]	---	167,000	167,000	140,000	62,000
Media Replacements per Year	(no.)	0.6	0.6	0.8	1.7
Life-Cycle Unit Cost[3]	($/ac-ft)	70	51	37	35

Notes:
(1) Based on total capacity of wells and arsenic levels, a minimum treatment capacity of 244 gpm is required. All four scenarios meet this minimum requirement.
(2) Values are based on Severn Trent quote for E33 media. Bed volumes for Scenarios 3 and 4 were derated (i.e., design loading rate divided by average loading rate) since the media will need to be replaced before media is fully exhausted.
(3) 20 year life-cycle at 100 percent well utilization. Refer to Appendix D for additional details.

Results from the model output were as follows:

- The least capital and life-cycle cost design alternative has the most bypass flow. In other words, the less well water that is treated, the smaller the vessel size and the less media that is used. However, the incremental comparative costs for life cycle savings is minimal for very small treatment systems (e.g., 5 % for 250 vs. 500 gpm systems). In addition, a safety factor is generally included in system designs to account for system variations, increases in raw water arsenic concentrations, and other operational variables.
- Smaller systems will require more media exchanges. If the unit cost of media increases or new transportation and disposal costs are incurred, smaller systems will not be as cost effective. For example, if the unit cost of media is increased from $250 per cubic foot (used in Table 6) to $475 per cubic foot of media, Scenario 3 would be more cost effective than Scenario 4 (data not shown).
- Bed volumes for Scenario 3 and 4 were derated due to exceeding Severn Trent's recommended hydraulic design criteria. Carollo assumed that smaller systems will incur significant derating (e.g., 63% reduction for Scenario 4). It should be noted that Severn Trent's media usage prediction model is based solely on raw water quality. Media suppliers will typically not commit to specific performance of media outside of their normal operating ranges, unless pilot testing is performed.

- For Harmony Hills site, with only Well #5 on (i.e., 190 gpm) the vessel diameter should be no larger than 11 feet to stay within the system supplier's minimum loading rate of 2 gpm/ft^2. Thus, Scenarios 1, 3 and 4 would not be able meet this requirement.
- Media replacement will occur less than once a year (at 100% utilization) except for small systems (e.g., Scenario 4) where media would be replaced more frequently.

6.0 EVALUATION SUMMARY

Arsenic medias were evaluated for the Harmony Hills site and Southwest Center site. Both sites have similar water qualities and well production rates and thus will be very similar in terms of SM design criteria, layout and costs. Key findings from this evaluations are as follows:

- Over 20 sorptive medias were considered, and four of these medias were deemed viable for AWC's Sedona and Harmony Hills sites.
- The four medias reviewed in detail included two iron-based medias (i.e., Severn Trent and Siemens), one iron-doped ion exchange media (i.e., LayneRT) and one titanium-based media (i.e., Dow or Metsorb).
- A qualitative evaluation indicated shows that the highest ranking systems were the iron-based SM Severn Trent and Siemens and Siemens systems.
- Cost evaluations indicated that capital cost and life-cycle will be around $1 million and $7 million respectively, for an iron-based system.
- A single vessel configuration will provide a cost-effective SM system. A second vessel in parallel would increase the factor of safety and reduce the number of media exchanges. If a single-vessel system is selected, the site layout and piping can be developed to readily facilitate the addition of a second vessel in the future.
- During detailed design, equipment and media costs should be confirmed by system suppliers based on specific system configurations (e.g., number of vessels, bed volumes until exhaustion, vessel diameter, and bed depth) to confirm the most cost-effective treatment vessel size. Bed volumes from suppliers should be calculated for when either hydraulic (e.g., loading rates or contact times) or water quality (e.g., effluent arsenic limits) design criteria are exceeded.

Appendix A
WATER QUALITY

Table A.1 Harmony Hills Well #5 Water Quality			
Description	**Units**	**Value**	
		Max	**Ave**
Arsenic Conc. (100% as As^{5+})	mg/L	0.0103	0.098
pH		---	8.0
Alkalinity	mg/L as $CaCO_3$	323	313
Hardness	mg/L as $CaCO_3$	352	340
Antimony	mg/L	<0.005	<0.005
Cadmium	mg/L	<0.001	<0.001
Chromium	mg/L	<0.005	<0.005
Iron	mg/L	<0.05	<0.05
Manganese	mg/L	<0.02	<0.02
Phosphorus	mg/L	---	<0.01
Selenium	mg/L	<0.005	<0.005
Silica	mg/L	19	17
Turbidity	NTU	<1.00	<1.00
Uranium	ppb	2.3	1.9
Vanadium	mg/L	0.011	0.0079

Table A.2 Harmony Hills Well #12 Water Quality			
Description	**Units**	**Value**	
		Max	**Ave**
Arsenic Conc. (100% as As^{5+})	mg/L	0.0108	0.0097
pH		---	8.0
Alkalinity	mg/L as $CaCO_3$	335	331
Hardness	mg/L as $CaCO_3$	362	354
Antimony	mg/L	<0.005	<0.005
Cadmium	mg/L	<0.001	<0.001
Chromium	mg/L	<0.005	<0.005
Iron	mg/L	<0.05	<0.05
Manganese	mg/L	<0.02	<0.02
Phosphorus	mg/L	---	<0.01
Selenium	mg/L	<0.005	<0.005
Silica	mg/L	17	16
Turbidity	NTU	<1.00	<1.00
Uranium	ppb	1.5	1.5
Vanadium	mg/L	0.010	0.0078

Table A.3 Southwest Center Well #8 Water Quality			
Description	**Units**	**Value**	
		Max	**Ave**
Arsenic Conc. (100% as As^{5+})	mg/L	0.0108	0.0097
pH		---	7.8
Alkalinity	mg/L as $CaCO_3$	326	323
Hardness	mg/L as $CaCO_3$	378	357
Antimony	mg/L	<0.005	<0.005
Cadmium	mg/L	<0.001	<0.001
Chromium	mg/L	<0.005	<0.005
Iron	mg/L	<0.05	<0.05
Manganese	mg/L	<0.02	<0.02
Phosphorus	mg/L	---	<0.01
Selenium	mg/L	<0.005	<0.005
Silica	mg/L	17	16
Turbidity	NTU	<1.00	<1.00
Uranium	ppb	1.5	1.4
Vanadium	mg/L	0.010	0.074

Appendix B

CONSTRUCTION COST DETAILS

				SYSTEM ALTERNATIVE			
				ST	Siemens	LC	Loprest
Unit Cost							
Installation Factor		1.2					
Pressure Vessels & Face Piping							
Equipment	$			234,000	260,491	269,214	195,000
Installation	$			46,800	52,098	53,843	39,000
Vessel Footprint							
Diameter	ft			8	9.5	10	5.5
	$/dia.			29,250	27,420	26,921	35,455
Length	ft			26	23	23	20
Width	ft			14	14	12	12
SM Media	ft^3			338	350	210	350
BUILDING				$110,000	$130,000	$80,000	$120,000
YARD PIPING				$60,000	$60,000	$50,000	$60,000
TREATMENT EQUIPMENT				$370,000	$410,000	$320,000	$310,000
WASTE STORAGE / TREATMENT				$90,000	$90,000	$0	$90,000
CIVIL	%	5		$30,000	$30,000	$20,000	$30,000
E&IC	%	20		$160,000	$180,000	$120,000	$150,000
TOTAL DIRECT COST				$820,000	$900,000	$590,000	$760,000
Contingency	%	15		$120,000	$140,000	$90,000	$110,000
			Subtotal	$940,000	$1,040,000	$680,000	$870,000
General Conditions, Overhead, Profit & Risk	%	10		$90,000	$100,000	$70,000	$90,000
			Subtotal	$1,030,000	$1,140,000	$750,000	$960,000
Sales Tax	%	4		$20,000	$20,000	$20,000	$20,000
			Subtotal	$1,050,000	$1,160,000	$770,000	$980,000

Appendix C

O&M COST DETAILS

Element	Item	Units	Value		
MEDIA / MECHANICAL					
	Misc. Mec. Parts	$/yr	8000	SM	At 100% utilization rate
		$/yr	4514	SM	At actual utilization rate

			ST	Siemens	LC	Loprest	
	EBCT	min	5	5	4	4	
	Treated Bed Volumes before Exhaustion	BVs	**167,000**	**225,000**	**137,000**	**77,000**	
		gal	425,850,000	562,500,000	274,000,000	154,000,000	
	Time before Exhaustion (at 100% utilization rate)	days	591	781	381	214	
	Time before Exhaustion (at utilization rate)	days	1,048	1,384	674	379	
	No. of Exchanges per year	no.	0.35	0.26	0.54	0.96	
		ft^3/yr	119	88	145	257	
	Bed Size	ft^3/bed	341	334	267	267	
	Cost of media	$/ft^3	250	265	300	225	includes disposal (ST and Siemens)
	Cost per bed exchange	$/bed	85,227	88,570	90,214	60,160	
	Subtotal $		34,193	27,864	53,340	62,446	

CONSUMABLES				
	NaOCl	$/lb	**0.12**	
	Operating Dose	mg/L	2	
		$/gpm/yr	0.6	
	Cost	$/yr	622	
	Bag Filters (Recycle Line)	$	150	per six
		months	3	replacement interval @ 100% utilization rate
		months	5	replacement interval @ actual utilization rate
		no.	3	per filter
	Bag Filters (Feed Line)	$	300	per six
		months	1	replacement interval @ 100% utilization rate
		months	2	replacement interval @ actual utilization rate
		no.	6	per filter
		$/yr	339	ST, Siemens, and Loprest
		$/yr	2031	Layne
	Subtotal	$/yr	961	ST, Siemens, and Loprest
	Subtotal	$/yr	2654	Layne

ELECTRICAL				
	Local electrical costs	$/kWh	**0.12**	
ST, Siemens	Treatment Headloss + System Pressure	psi	**120**	
LC, Dow		psi	**127**	
	Well Static Lift	ft	**585**	
	Pump Efficiency	%	**70**	water to wire efficiency
ST, Siemens	Estimated electrical demand (pumping)	kW	242	
	Production time	kWh	1,198,574	
LC, Dow	Estimated electrical demand (pumping)	kW	247	
	Production time	kWh	1,221,156	
	Misc. Power Consumption	%	**5**	metering pump, lights, fans, BW recycle, etc.
		kWh	59929	
ST, Siemens		$/yr	151,020	
LC, Dow		$/yr	153,730	

LABOR

Annual Workload	hr	**2040**	
Overhead and Benefits	%	**50**	
Hourly Rates (no OH&Benefits)			
Operator	$/hr	**22**	
Supervisor	$/hr	**28**	
Hourly Rates (w/ OH&Benefits)			
Operator	$/hr	33	
Supervisor	$/hr	42	
Daily Operation / Sampling			
Operator	hrs	**2.50**	At 100% utilization rate
Supervisor	hrs	**0.50**	At 100% utilization rate
Operator	hrs	1.41	At actual utilization rate
Supervisor	hrs	0.28	At actual utilization rate
Monthly Maintenance/Admin			
Operator	hrs	**10.00**	At 100% utilization rate
Supervisor	hrs	**1.50**	At 100% utilization rate
Operator	hrs	5.64	At actual utilization rate
Supervisor	hrs	0.85	At actual utilization rate
Cost			
Operator	$	19,227	
Supervisor	$	4,752	
	TOTAL $	23,978	

WASTE DISPOSAL

				ST	Siemens	LC	Loprest	
Media Waste								
	Waste Produced	lb/yr		3,680	2,732	7,380	10,299	
		ton/yr		1.8	1.4	3.7	5.1	
		lb/ft^3		31	31	51	40	bulk density
	Cost	$/ton	35					
		$/trip	10,000					bin container and vactor truck
		$/yr				5,541	9,810	media waste disposal
Sludge Waste								
	Waste:Treated Water	gal/gal		0.0003	0.0003		0.0003	
		gal/day		121	121		121	
	Trips every "x" weeks	weeks		4	4		4	
		gal/trip		3,386	3,386		3,386	
	Specific gravity			1.0	1.0		1.0	
		gal/yr		44,014	44,014		44,014	
		ton/yr		187	187		187	
	Cost	$/trip		1,097				CTi quote for 5000-gallon tanker
		$/yr		14,266	14,266		14,266	sludge from bottom of BW tank
	Cost	$/yr		14,266	14,266	5,541	24,076	media + sludge waste

Life Cycle	years	**20**	
Inflation Rate	%	**4**	
Adjustment Factor		31.0	
Well Capacity	mgd	**1.51**	
	gpm	**1050**	
Treatment Capacity	gpm	**500**	difference is bypassed and blended
Utilization Rate	%	**58**	
	gal/yr	311,418,000	

Appendix D

EXAMPLE CALCULATION FOR OPTIMIZING TREATMENT CAPACITY

Flowrates					
Total Flowrate at Site	(gpm)	1100	1100	1100	1100
Treatment Flowrate	(gpm)				
Design / Nominal		1100	750	500	250
Minimum (per blending calc)		244	244	244	244
Minimum (per loading rate)		452	314	226	101
Maximum (per loading rate)		1810	1257	905	402
Bypass Flowrate	(gpm)				
Design / Nominal		0	350	600	850
Minimum		0	0	0	0
Maximum (per blending calc)		856	856	856	856
Arsenic Concentrations					
Raw Water	(mg/L)	0.010	0.010	0.010	0.010
Contactor Effluent	(mg/L)	0.001	0.001	0.001	0.001
Finished Water Goal	(mg/L)	0.008	0.008	0.008	0.008
Vessel Design					
No. of Vessels	(no.)	2	2	1	1
Vessel Diameter	(ft)	12	10	12	8
Surface Area (per vessel)	(ft^2)	113	79	113	50
Surface Area (total)	(ft^2)	226	157	113	50
Loading Rates	(gpm/ft^2)				
Goal (Average per supplier)		5	5	5	5
Actual @ Design Treatment Flowrate		4.9	4.8	4.4	5.0
Actual @ Min. Treatment Flowrate		1.1	1.6	2.2	4.9
Actual @ Max. Treatment Flowrate		4.9	7.0	9.7	21.9
Actual @ Average of Min. and Max.		3.0	4.3	5.9	13.4
Min. Required (per supplier)		2	2	2	2
Max. Allowable (per supplier)		8	8	8	8
Empty Bed Contact Times	(min)				
Goal (Average per supplier)		5	5	5	5
Actual @ Min. Treatment Flowrate		22.5	15.3	10.2	5.1
Actual @ Max. Treatment Flowrate		5.0	3.4	2.3	1.1
Min. Required (per supplier)		2.5	2.5	2.5	2.5
Volume of Media	(ft^3)	735	501	334	167
	(gal)	5,500	3,750	2,500	1,250
Media Depth	(in)	39	38	35	40

BVs of Production					
Total BVs Until Exhaustion (Eff = 0.008 mg/L)	(BVs)	**167,000**	**167,000**	**167,000**	**167,000**
Derating Due to Vessel's Inability to Treat Full Flow	(BVs)	167,000	167,000	140,484	62,437
Total Production	(gal)	918,500,000	626,250,000	351,209,288	78,046,508
	(days)	580	580	488	217
No. of replacements in a year	(no.)	0.63	0.63	0.75	1.68
Bypass Design Criteria					
Velocity	(ft/s)	5	5	5	5
Pipe Diameter (Calc)	(in)	0	5.4	7.0	8.3
Pipe Diameter (Actual)	(in)	0	6	8	8
Capital Costs					
Indirect Cost Markup Factor		1.5	1.5	1.5	1.5
Bypass Piping	(ft)	20	20	20	20
	($/lf-in)	16.9	16.9	16.9	16.9
	($)	0	2025	2700	2700
Bypass Valve	($/in)	420	420	420	420
	($)	0	2520	3360	3360
Bypass Fittings	(no.)	4	4	4	4
	($/in)	150	150	150	150
	($)	0	3600	4800	4800
Vessel Cost	($/dia)	29,762	29,762	29,762	29,762
	($)	714,276	595,230	357,138	238,092
Media Cost (Initial Fill)	($/ft^3)	250	250	250	250
	($)	183,824	125,334	83,556	41,778
Total	($)	898,100	728,710	451,554	290,730
Annual O&M Costs					
Media Cost (Replacement & Disposal)	($)	115,393	78,677	62,351	70,145
Life-cycle	(yr)	20	20	20	20
		4	4	4	4
Present-Worth Multiplier		13.6	13.6	13.6	13.6
Present-Worth	($)	1,568,225	1,069,244	847,376	953,298
Total Present-Worth (Capital + O&M)	($)	2,466,325	1,797,954	1,298,930	1,244,028
Water Production					
Utilization Rate	(%)	100	100	100	100
Annual Production	(gal)	576,576,000	576,576,000	576,576,000	576,576,000
	(ft^3)	77,082,353	77,082,353	77,082,353	77,082,353
	(ac-ft)	1770	1770	1770	1770
Life-Cycle Production	(ac-ft)	35,391	35,391	35,391	35,391
Unit Cost of Water	($/ ac-ft)	70	51	37	35

AGREEMENT FOR CONSULTING SERVICES BETWEEN
ARIZONA WATER COMPANY AND
RICKER, ATKINSON, MCBEE, MORMAN & ASSOCIATES, INC.

THIS AGREEMENT is made and entered into on this 10th day of May, 2011, by and between Arizona Water Company, an Arizona corporation, hereinafter referred to as "Company," and Ricker, Atkinson, McBee, Morman & Associates, an Arizona corporation hereinafter referred to as "Consultant".

RECITALS

WHEREAS, Company is authorized to and desires to retain Consultant to provide engineering design, post design and construction administration services for Geotechnical evaluation at the Southwest Center & Harmony Hills Wells site in Sedona, Arizona.

WHEREAS, Consultant is agreeable to providing personnel and facilities necessary to perform the desired services within Company's required time; and

WHEREAS, Company desires to retain Consultant to perform the services in the manner, at the time, and for the compensation set forth herein;

NOW, THEREFORE, Company and Consultant agree as follows:

1. Description of Project.

Company and Consultant agree that Project is as described in Exhibit A, hereto, incorporated by reference herein and entitled "Scope of Work," dated April 22, 2011. If, during the course of Project, Company and Consultant agree to changes in Project, such changes shall be effective only after being incorporated in this Agreement by written amendment, signed by representative of Company and Consultant.

2. Scope of Consultant Services.

Consultant agrees to perform those services described hereafter. Unless modified in writing by both parties, duties of Consultant shall not be construed to exceed those services specifically set forth herein.

a. Basic Services. Consultant agrees to perform those services described in the Scope of Work (the "Services"). Any tasks not specifically described in the Scope of Work will be Additional Services.

b. Additional Services. Company shall pay Consultant all fees and costs incurred in performing Additional Services provided the services were authorized by Company in writing. Unless otherwise agreed in writing, Additional Services shall be compensated in accordance with Consultant's standard billing rates at the time the Additional Services are performed.

c. Litigation Assistance. Unless specifically stated therein, the Scope of Work does not include assistance to support, prepare, document, bring, defend or assist in litigation undertaken or defended by Company. All such services required or requested of the Consultant by Company or any third party (except claims between Company and Consultant) will be reimbursed at Consultant's applicable rates for such litigation services.

3. Responsibilities of Company.

In addition to payment for the Services performed under this Agreement, Company shall:

a. Assist and cooperate with Consultant in any manner necessary and within its ability to facilitate Consultant's performance under this Agreement.

b. Designate in writing a person to act as Company's representative with respect to this Agreement. Such person shall have complete authority to transmit instructions, receive information, interpret and define Company's policies, make decisions and execute documents on Company's behalf.

c. Furnish Consultant with all technical data in Company's possession including, but not limited to, maps, surveys, drawings, soils or geotechnical reports and any other information required by or useful to Consultant in performance of the Services under this Agreement.

d. Notify Consultant of any known or potential health or safety hazards existing at or near the project site.

e. Provide access to and/or obtain permission for Consultant to enter upon project related property during normal business hours, whether or not owned by Company, as required to perform and complete the Services.

4. Americans with Disabilities Act.

Any other provision of this Agreement to the contrary notwithstanding, unless otherwise specified in the Scope of Services, Company's contractors shall have sole responsibility as between Company and Consultant for compliance with the Americans With Disabilities Act ("ADA") 42 U.S.C. 12101 et. Seq. and the related regulations. Consultant shall provide Company with applicable ADA criteria, which maybe required.

5. Authorization and Completion.

In signing this Agreement Company grants Consultant specific authorization to proceed with work as described in Scope of Work and under the terms of this Agreement.

6. Compensation.

a. Amount. For the Services described in Exhibit A, Company agrees to pay, and Consultant agrees to accept compensation in accordance with Exhibit B, attached hereto and incorporated herein. Where Consultant has provided Company with a breakdown of the total compensation into subtasks, such breakdowns are estimates only. Consultant may reallocate compensation between tasks, provided total compensation is not exceeded without the prior written approval of Company.

b. Payment. As long as Consultant has not defaulted under this Agreement, Company shall pay Consultant within thirty (30) days of the date of Consultant's invoices for services performed and reimbursable expenses incurred under this Agreement. If Company has reason to question or contest any portion of any such invoice, amounts questioned or contested shall be identified and notice given to Consultant within thirty (30) days of the date of the invoice. Any portion of any invoice not contested shall be deemed to be accepted and approved for payment and shall be paid to Consultant within thirty (30) days of the date of the invoice. Company agrees to cooperate with Consultant in a mutual effort to resolve promptly any contested portions of Consultant's invoices.

In the event any uncontested portions of any invoice are not paid within thirty (30) days of the date of Consultant's invoice, interest on the unpaid balance shall accrue beginning with the 31st day at the rate of 1.5% per month, and Consultant shall have the right to suspend work per Article XV, Suspension of Work.

7. Responsibility of Consultant.

a. Standard of Care Professional Services.

Subject to the limitations inherent in the agreed scope of work as to the degree of care, amount of time and expenses to be incurred, and subject to any other limitations contained in this Agreement, Consultant shall perform the Services and any Additional Services in accordance with generally accepted standards and practices customarily utilized by competent engineering firms in effect at the time Services and any Additional Services are rendered. Consultant does not expressly or impliedly warrant or guarantee its Services.

b. Reliance upon Information Provided by Others.

If Consultant's performance of services hereunder requires Consultant to rely on information provided by other parties (excepting Consultant's subcontractors), Consultant shall not independently verify the validity, completeness, or accuracy of such information unless otherwise expressly engaged to do so in writing by Company.

c. Consultant's Opinion of Costs.

Company acknowledges that construction cost estimates, financial analyses and feasibility projections are subject to many influences including, but not limited to, price of labor and materials, unknown or latent conditions of existing equipment or structures, and time or quality of performance by third parties. Company acknowledges that such influences may not be precisely forecasted and are beyond the control of Consultant and that actual costs incurred may vary substantially from the estimates prepared by Consultant. Consultant does not warrant or guarantee the accuracy of construction or development cost estimates, however, Consultant agrees to exercise its best Professional Judgment in rendering its opinions.

d. Construction Phase Services.

1. Consultant's Activities at Construction Site. The presence of Consultant's personnel at a construction site, whether as on-site representative, resident engineer, construction manager, or otherwise, does not make Consultant responsible for those duties that belong to Company and/or construction contractors or others, and does not relieve construction contractors or others of their obligations, duties, and responsibilities, including, but not limited to, construction methods, means, techniques, sequences, and procedures necessary for completing all portions of the construction work in accordance with the contract documents, any health or safety programs and precautions required by such construction work, and any compliance with applicable laws and regulations. Any inspection or observation of the contractor's work is for the purpose of determining that the work is proceeding in conformance with the intent of the project specifications and contract documents. Consultant has no authority to exercise control over any construction contractor in connection with their work or health or safety programs and precautions. Except to protect Consultant's own personnel and except as may be expressly required elsewhere in the Scope of Work, Consultant has no duty to inspect, observe, correct, or report on health or safety deficiencies of the construction contractor.

2. Shop Drawing and Submittal Review. If required by Consultant's Scope of Services, Consultant shall review shop drawings or other contractor submittals for general conformance with the intent of the contract documents. Except for services completed under direct contract to Consultant, Consultant shall not be required to verify dimensions, to engineer contractor's shop drawings or submittals, nor to coordinate shop drawings or other submittals with other shop drawings or submittals provided by contractor.

3. Record Drawings. Record drawings, if required, will be prepared, in part, on the basis of information compiled and furnished by others, and may not always represent the exact location, type of various components, or exact manner in which the Project was finally constructed. Except for services completed under direct contract to Consultant, Consultant is not responsible for any errors or omissions in the information from others that are incorporated into the record drawings.

e. Scope of Work.

1. Before preparing the scope of work, Consultant specifically acknowledges and agrees that it has inspected and familiarized itself with Company's well site The Consultant has received, or had the opportunity to inquire about and/or request all relevant information concerning the Scope of Work from Company or any other source Consultant deems necessary. The Scope of Work has been prepared by the Consultant and to the best of its knowledge includes all applicable work required to successfully complete Geotechnical evaluation at the Southwest Center & Harmony Hills Well site in Sedona, Arizona.

8. Asbestos/Hazardous Material.

Consultant and Consultant's subcontractors shall have no responsibility for the discovery, handling, removal, or disposal of, or exposure of persons to asbestos or hazardous or toxic materials that are present in any form at the Project site. Professional services related to or in any way connected with the investigation, detection, abatement, replacement, use, specification, or removal of products, materials, or processes containing asbestos or hazardous or toxic materials are beyond the scope of this Agreement.

In the event Consultant encounters asbestos or hazardous materials at the jobsite, Consultant may, at its option and without liability for damages, suspend the performance of services on the Project until such time as Company and Consultant mutually agree on an amendment to this Agreement to address the issue, or Company retains another specialist consultant or contractor to identify, classify, abate and/or remove the asbestos and/or hazardous materials.

9. Consultant's Work Product.

a. Scope.

Consultant's work product which is prepared solely for the purposes of this Agreement, including, but not limited to, drawings, test results, recommendations and technical specifications, whether in hard copy or electronic form, shall become the property of Company when Consultant has been fully compensated as set forth herein. Consultant may keep copies of all work product(s) for its records.

Consultant and Company recognize that Consultant's work product submitted in performance of this Agreement is intended only for the project described in this Agreement. Company's alteration of Consultant's work product or its use by Company for any other purpose shall be at Company's sole risk.

b. Electronic Copies.

If requested, solely as an aid and accommodation to Company, Consultant may provide copies of its work product documents in computer-readable media ("electronic copies", "CADD"). These documents will duplicate the documents provided as work product, but will not bear the signature and professional seals of the registered

professionals responsible for the work. Company is cautioned that the accuracy of electronic copies and CADD documents may be compromised by electronic media degradation, errors in format translation, file corruption, printing errors and incompatibilities, operator inexperience and file modification. Consultant will maintain the original copy, which shall serve as the official, archived record of the electronic and CADD documents.

10. Indemnification.

a. The Consultant shall indemnify the Company against, and save and hold it harmless from, any and all liability, claims, demands, loss, actions, causes of action, expense, penalties, fines, assessments, damages and costs of every kind and nature for injury to or death of any and all persons, including, without limitation, employees or representatives of the Company or of the Consultant or of any subcontractor, or any other person or persons, and for damage, destruction or loss, consequential or otherwise, to or of any and all property, real or personal, including, without limitation, property of the Company or of the Consultant or of any subcontractor, or of any other person or persons, and the violation of any law, ordinance, rule, regulation, standard, or order resulting from, or in any manner arising out of, or in connection with, the performance of the work under the Contract, howsoever same may be caused, including, without limitation, the Company's active or passive negligence. The Consultant shall also, upon request by the Company, and at no expense to the Company, defend the Company in any and all suits, concerning such injury to or death of any and all persons, and concerning such damage, destruction or loss, consequential or otherwise, to or of any and all property, real or personal, including, without limitation, suits by employees or representatives of the Company or of the Consultant or of any subcontractor, or any other person or persons, or concerning any court or administrative proceeding concerning the violation of any law, ordinance, rule, regulation, standard, or order. Excluded from this paragraph are only those injuries to or deaths of persons and damage, destruction or loss, to or of property arising from the sole negligence or willful misconduct of the Company.

b. Consultant shall indemnify the Company against, and save and hold it harmless from, any and all liability, claims, demands, damages, costs, expenses and attorney's fees, suffered or incurred on account of any breach of any obligation, covenant or other provision of this contract, including without limitation, breach of the indemnity provisions of subsection A of this Section 10.

c. Consultant further agrees to defend, indemnify and hold harmless the Company, its directors, officers, employees, and agents, from and against any and all costs, damages, claims, expenses, violations, notices of violations, penalties, liens, assessments, and liabilities of every kind and nature, foreseeable or unforeseeable, directly or indirectly, arising from any release, removal, generation, use, storage or disposal on, under, around, or from the well site of any material, substance, or waste, hazardous or nonhazardous, including, without limitation, drilling fluids, mud, cuttings

and development and test water howsoever same may be caused, including, without limitation, the Company's active or passive negligence.

11. Consultant's Insurance.

Consultant shall procure and maintain the following minimum insurance:

a. Commercial general liability insurance, including personal injury liability, blanket contractual liability and broad-form property damage liability coverage. The combined single limit for bodily injury and property damage shall be not less than $1,000,000.

b. Automobile bodily injury and property damage liability insurance covering owned, non-owned, rented, and hired cars. The combined single limit for bodily injury and property damage shall be not less than $1,000,000.

c. Statutory workers' compensation and employer's liability insurance as required by state law.

d. Professional liability insurance. The policy limit shall be not less than $1,000,000.

Consultant shall either require each of its subconsultants to procure and to maintain the insurance specified in this section or insure its subconsultants in the Consultants own policy, in like amounts.

Company shall be named as additional insured on policies a and b above. Upon execution of this Agreement, Consultant will provide a certificate of insurance to Company. Consultant will keep the certificate current at all times while this Agreement is in effect. The Consultant will provide a 30-day written notice in the event the above policies are cancelled.

12. Confidentiality.

Consultant agrees it will maintain the confidentiality of all material it receives from Company and will not disclose, distribute, or publish to any third party such information without the prior permission of Company. Notwithstanding the foregoing, Consultant shall have no confidentiality obligation with respect to information that:

a. becomes generally available to the public other than as a result of disclosure by Consultant or its agents or employees;

b. was available to Consultant prior to its disclosure by Company;

c. becomes available to Consultant from a third party who is not, to the knowledge of Consultant, bound to retain such information in confidence.

In the event Consultant is compelled by subpoena, court order, or administrative order to disclose any confidential information, Consultant shall promptly notify Company and shall cooperate with Company prior to disclosure so that Company may take necessary actions to protect such confidential information from disclosure.

13. Subcontracts.

Consultant shall be entitled, to the extent determined appropriate by Consultant, to subcontract any portion of the services to be performed under this Agreement.

14. Suspension of Work.

Work under this Agreement may be suspended as follows:

a. By Company. By written notice to Consultant, Company may suspend all or a portion of the Work under this Agreement if unforeseen circumstances beyond Company's control make normal progress of the Work impracticable.

b. By Consultant. By written notice to Company, Consultant may suspend the work if Consultant reasonably determines that working conditions at the Site (outside Consultant's control) are unsafe, or in violation of applicable laws, or in the event Company has not made timely payment in accordance with Article VI, compensation.

15. Termination of Work.

a. This Agreement may be terminated by Company as follows: (1) for its convenience on thirty (30) days' notice to Consultant, or (2) for cause, if Consultant materially breaches this Agreement through no fault of Company and Consultant neither cures such material breach nor makes reasonable progress toward cure within fifteen (15) days after Company has given written notice of the alleged breach to Consultant.

b. This Agreement may be terminated by Consultant as follows: (1) for cause, if Company materially breaches this Agreement through no fault of Consultant and Company neither cures such material breach nor makes reasonable progress toward cure within thirty (30) days after Consultant has given written notice of the alleged breach to Company.

c. Payment upon Termination. In the event of termination, Consultant shall perform such additional work as is reasonably necessary for the orderly closing of the work. Consultant shall be compensated for all work performed prior to the effective date of termination, plus work required for the orderly closing of the work, including: (1) authorized work performed up to the termination date plus termination expenses, including all labor and expenses, at Consultant's standard billing rates,

directly attributable to termination; (2) all efforts necessary to document the work completed or in progress; and (3) any termination reports requested by Company.

16. Assignment.

This Agreement is binding on the heirs, successors, and assigns of the parties hereto. Except as otherwise set forth under Article VIII, Assignment of Tasks to Affiliates, this Agreement may not be assigned by Company or Consultant without prior, written consent of the other.

17. No Benefit for Third Parties.

The services to be performed by Consultant are intended solely for the benefit of Company, and no benefit is conferred on, nor contractual relationship established with any person or entity not a party to this Agreement. No such person or entity shall be entitled to rely on Consultant's services, opinions, recommendations, plans, or specifications without the express written consent of Consultant. No right to assert a claim against the Consultant, its officers, employees, agents, or consultants shall accrue to the construction Contractor or to any subcontractor, supplier, manufacturer, lender, insurer, surety, or any other third party as a result of this Agreement or the performance or nonperformance of the Consultant's services hereunder.

18. Force Majeure.

Consultant and Company shall not be responsible for delays caused by circumstances beyond their reasonable control, including, but not limited to: (1) strikes, lockouts, work slowdowns or stoppages, or accidents; (2) acts of God; (3) failure of Company to furnish timely information or to approve or disapprove Consultant's instruments of service promptly; and (4) faulty performance or nonperformance by Consultant or Company, Company's or Consultant independent consultants or contractors, or governmental agencies. Consultant and Company shall not be liable for damages arising out of any such delay, nor shall the Consultant or Company be deemed to be in breach of this Agreement as a result thereof.

19. Integration.

This Agreement represents the entire understanding of Company and Consultant as to those matters contained herein. No prior oral or written understanding shall be of any force or effect with respect to those matters covered herein. This Agreement may not be modified or altered except in writing signed by both parties.

20. Severability.

If any part of this Agreement is found unenforceable under applicable laws, such part shall be inoperative, null, and void insofar as it conflicts with said laws, but the remainder of this Agreement shall be in full force and effect.

21. Choice of Law/Jurisdiction.

This Agreement shall be administered and interpreted under the laws of the State of Arizona Jurisdiction of litigation arising from the Agreement shall be in The State of Arizona.

22. Attorneys' Fees.

In the event any claim, controversy, or legal action arises under this Agreement, the prevailing party shall be entitled to recover from the other party all attorneys' fees, costs, expenses and other fees incurred by the prevailing party.

23. Notice Provisions.

Notices concerning this Agreement shall be in writing and sent by certified mail or by courier (such as Federal Express), or by hand-delivery addressed as follows:

To the Company:

Arizona Water Company
3805 North Black Canyon Highway
Phoenix, Arizona 85015-5351
Attention: President

or

Arizona Water Company
Post Office Box 29006
Phoenix, Arizona 85038-9006
Attention: President

To Consultant:

Ricker, Atkinson, McBee, Morman & Associates, Inc.
2105 South Hardy Drive, Suite 13
Tempe, Arizona 85282-1924
Attention: President

Either party may change its address for purposes of this Section by giving written notice of such change of address to the other party.

24. Authorization.

The persons executing this Agreement on behalf of the parties hereto represent and warrant that the parties have all legal authority and authorization necessary to enter into this Agreement, and that such persons have been duly authorized to execute this Agreement on their behalf.

IN WITNESS WHEREOF, each of the parties hereto has caused this instrument to be executed by their respective duly authorized officers as of the date first written above.

RICKER, ATKINSON, MCBEE, MORMAN & ASSOCIATES.
an Arizona Corporation

By: _____

Its: President

ARIZONA WATER COMPANY,
an Arizona corporation

By: _____

Its: VP- Engineering

THIS ENDORSEMENT CHANGES THE POLICY, PLEASE READ IT CAREFULLY.

OTHER ADDITIONAL INSURED

This endorsement modifies insurance provided under the following:
COMMERCIAL GENERAL LIABILITY COVERAGE PART

SCHEDULE

NAME OF PERSON(S) OR ORGANIZATION(S):

Arizona Water Company

PROJECT/LOCATION OF COVERED OPERATIONS:

Southwest Center & Harmony Hills Well Sites

PROVISIONS

1. WHO IS AN INSURED (SECTION II) is amended to include as an insured any person or organization (called hereafter "additional insured") with whom you have agreed in a written contract, executed prior to loss, to name as an additional insured, but:

    a. Only with respect to liability because of "bodily injury" or "property damage" arising out of "your work" for that additional insured performed by you or for you; and
    b. Subject to any limitations in the written contract regarding the scope of the additional insured status.

This insurance does not apply to "bodily injury" or "property damage" arising out of "your work" included in the "products-completed operations hazard" unless you are required to provide such coverage by written contract and then only for the period of time required by the contract, but in no event beyond the expiration date of the policy.

2. The Limits of Insurance provided to such additional insured shall be:
    a. The limits which you have agreed to provide; or,
    b. The limits shown on the Decelerations, whichever is less.

3. This insurance is excess over any valid and collectible insurance unless you have agreed in a written contract for this insurance to apply on a primary or contributory basis.

4. This insurance does not apply on any basis:
    a. To any person or organization for whom you have purchased an Owners and Contractors Protective policy.
    b. To any person or organization who distributes or sells "your products" in the regular course of its business.
    c. To any person or organization from whom you have acquired any products, or any ingredient, part or container entering into, accompanying or containing such products.
    d. To any manager or lessor of premises with respect to liability arising out of the ownership, maintenance, or use of that part of any premises leased to you.
    e. To any lessor or leased equipment.
    f. To any architect, engineer or surveyor for injury or damage arising out of:
        (1) The preparing, approving or failing to prepare or approve maps, drawings, opinions, reports, surveys, change orders, designs or specifications; and
        (2) Supervisory, inspection or engineering services.

@2007 The Travelers Companies, Inc.

Includes the copyrighted material of Insurance Services Office, Inc., with its permission.

Exhibit A

RICKER, ATKINSON, McBEE, MORMAN & ASSOCIATES, INC.
ATTACHMENT "A" Proposal for Geotechnical Engineering Services
For: Arizona Water Company
RAMM Proposal No. PG12059

PROJECT: Harmony Hills and Southwest Center Well Site Improvements
2645 Lyric Drive and 100 Cardinal Lane
Sedona, Arizona

DESCRIPTION:

The proposed improvements consist of installation of a stainless steel arsenic treatment pressure vessel and two HDPE backwash tanks at two existing well sites.

SCOPE OF SERVICES:

1. RAMM will contact Arizona Blue Stake. Utility clearance and field exploration will be coordinated with Arizona Water Company personnel.

2. Test borings will be performed to determine subsurface conditions and obtain representative samples for laboratory analyses. Two test borings, one per well site, 20 feet in depth or prior auger refusal are proposed in the improvement areas.

3. Laboratory analyses of representative samples will include:

   Moisture Content and Dry Density
   Compression
   Swell
   Minus No. 200 Sieve and Plasticity Index
   pH, Minimum Resistivity, Sulfates, Sulfate Chloride

4. An Engineer's report for each site will be provided presenting the results of the field and laboratory testing, corrosion potential and concrete durability parameters of site soils in contact with buried ferrous material and concrete and recommendations for foundation support (including footing depth, bearing capacity, and estimated settlement), lateral earth pressures, site development, materials suitability requirements and site grading and preparation procedures.

COMPLETION TIME:

Final report approximately 2 to 3 weeks after authorized to proceed.
Contingent upon utility clearance and field exploration coordination.

Exhibit B

RICKER, ATKINSON, McBEE, MORMAN & ASSOCIATES, INC.
ATTACHMENT "A" Proposal for Geotechnical Engineering Services
For: Arizona Water Company
RAMM Proposal No. PG12059

FEE: $ 3,000.00
Our Fee Schedule presenting Geotechnical Engineering Unit Rates is presented below.

FEE SCHEDULE
GEOTECHNICAL ENGINEERING UNIT RATES

FIELD EXPLORATIONS

Field Technician	$50.00/hour
Drill Rig & Crew (typically $135/hour portal-to-portal)	Cost
Vehicle	$0.75/mile
Barricading (typically $400-500/day)	Cost
Private Utility Locator	Cost

LABORATORY TESTING

Minus No. 200 Sieve & Plasticity Index	$110.00/each
Sieve Analysis & Plasticity Index	$150.00/each
Swell Potential	$80.00/each
Moisture Content and Dry Density on Rings	$12.00/each
Standard Proctor	$110.00/each
Compression	$100.00/each
Direct Shear (Three Points)	$160.00/each
R-Value	$350.00/each

ENGINEERING ANALYSIS AND REPORT

Project Engineer	$85.00/hour
Clerical	$45.00/hour
Reproduction	Cost

R·A·M·M

RICKER • ATKINSON • McBEE • MORMAN & ASSOCIATES, INC.

Geotechnical Engineering • Construction Materials Testing

RECEIVED
APR 25 2011
ARIZONA WATER COMPANY
PHOENIX - ENGINEERING

Arizona Water Company
P.O. Box 29006
Phoenix, Arizona 85015-5351

April 22, 2011

Attn: John Knobbe, Senior Eng. Tech/Email: jknobbe@arizonawater.com

Re: Proposal for Geotechnical Engineering Services RAMM Proposal No. PG12059
Harmony Hills and Southwest Center Well Site Improvements
2645 Lyric Drive and 100 Cardinal Lane
Sedona, Arizona

Ricker, Atkinson, McBee, Morman & Associates, Inc. is pleased to submit this proposal to conduct Geotechnical Engineering Services for the above-referenced project.

If this proposal meets with your approval, please sign, date and return one copy of the enclosed Attachment "A", which outlines project description, our scope of services, completion time and fee to perform services.

If there are any questions regarding the proposed scope of work, please call. Thank you for considering our firm for this project.

Respectfully submitted,

RICKER, ATKINSON, MCBEE, MORMAN & ASSOCIATES, INC.

Kip E. Reese, P.E.
Project Engineer

/dcw

2105 South Hardy Drive, Suite 13, Tempe, AZ 85282-1924 • Telephone (480) 921-8100 • Facsimile (480) 921-4081
www.rammeng.com

AGREEMENT FOR CONSULTING SERVICES BETWEEN
ARIZONA WATER COMPANY AND
WATERWORKS ENGINEERS, LLC.

THIS AGREEMENT is made and entered into on this 13th day of ~~May~~ June, 2011, by and between Arizona Water Company, an Arizona corporation, hereinafter referred to as "Company," and Waterworks Engineers, a limited liability company hereinafter referred to as "Consultant".

RECITALS

WHEREAS, Company is authorized to and desires to retain Consultant to provide engineering design, post design and construction administration services for the Harmony Hills Arsenic Treatment Plant.

WHEREAS, Consultant is agreeable to providing personnel and facilities necessary to perform the desired services within Company's required time; and

WHEREAS, Company desires to retain Consultant to perform the services in the manner, at the time, and for the compensation set forth herein;

NOW, THEREFORE, Company and Consultant agree as follows:

1. Description of Project.

Company and Consultant agree that Project is as described in Exhibit A, hereto, incorporated by reference herein and entitled "Scope of Work," dated May 26, 2011. If, during the course of Project, Company and Consultant agree to changes in Project, such changes shall be effective only after being incorporated in this Agreement by written amendment, signed by representative of Company and Consultant.

2. Scope of Consultant Services.

Consultant agrees to perform those services described hereafter. Unless modified in writing by both parties, duties of Consultant shall not be construed to exceed those services specifically set forth herein.

a. Basic Services. Consultant agrees to perform those services described in the Scope of Work (the "Services"). Any tasks not specifically described in the Scope of Work will be Additional Services.

b. Additional Services. Company shall pay Consultant all fees and costs incurred in performing Additional Services provided the services were authorized by Company in writing. Unless otherwise agreed in writing, Additional Services shall be compensated in accordance with Consultant's standard billing rates at the time the Additional Services are performed.

c. Litigation Assistance. Unless specifically stated therein, the Scope of Work does not include assistance to support, prepare, document, bring, defend or assist in litigation undertaken or defended by Company. All such services required or requested of the Consultant by Company or any third party (except claims between Company and Consultant) will be reimbursed at Consultant's applicable rates for such litigation services.

3. Responsibilities of Company.

In addition to payment for the Services performed under this Agreement, Company shall:

a. Assist and cooperate with Consultant in any manner necessary and within its ability to facilitate Consultant's performance under this Agreement.

b. Designate in writing a person to act as Company's representative with respect to this Agreement. Such person shall have complete authority to transmit instructions, receive information, interpret and define Company's policies, make decisions and execute documents on Company's behalf.

c. Furnish Consultant with all technical data in Company's possession including, but not limited to, maps, surveys, drawings, soils or geotechnical reports and any other information required by or useful to Consultant in performance of the Services under this Agreement.

d. Notify Consultant of any known or potential health or safety hazards existing at or near the project site.

e. Provide access to and/or obtain permission for Consultant to enter upon project related property during normal business hours, whether or not owned by Company, as required to perform and complete the Services.

4. Americans with Disabilities Act.

Any other provision of this Agreement to the contrary notwithstanding, unless otherwise specified in the Scope of Services, Company's contractors shall have sole responsibility as between Company and Consultant for compliance with the Americans With Disabilities Act ("ADA") 42 U.S.C. 12101 et. Seq. and the related regulations. Consultant shall provide Company with applicable ADA criteria, which maybe required.

5. Authorization and Completion.

In signing this Agreement Company grants Consultant specific authorization to proceed with work as described in Scope of Work and under the terms of this Agreement.

6. Compensation.

a. Amount. For the Services described in Exhibit A, Company agrees to pay, and Consultant agrees to accept compensation in accordance with Exhibit B, attached hereto and incorporated herein. Where Consultant has provided Company with a breakdown of the total compensation into subtasks, such breakdowns are estimates only. Consultant may reallocate compensation between tasks, provided total compensation is not exceeded without the prior written approval of Company.

b. Payment. As long as Consultant has not defaulted under this Agreement, Company shall pay Consultant within thirty (30) days of the date of Consultant's invoices for services performed and reimbursable expenses incurred under this Agreement. If Company has reason to question or contest any portion of any such invoice, amounts questioned or contested shall be identified and notice given to Consultant within thirty (30) days of the date of the invoice. Any portion of any invoice not contested shall be deemed to be accepted and approved for payment and shall be paid to Consultant within thirty (30) days of the date of the invoice. Company agrees to cooperate with Consultant in a mutual effort to resolve promptly any contested portions of Consultant's invoices.

In the event any uncontested portions of any invoice are not paid within thirty (30) days of the date of Consultant's invoice, interest on the unpaid balance shall accrue beginning with the 31st day at the rate of 1.5% per month, and Consultant shall have the right to suspend work per Article XV, Suspension of Work.

7. Responsibility of Consultant.

a. Standard of Care Professional Services.

Subject to the limitations inherent in the agreed scope of work as to the degree of care, amount of time and expenses to be incurred, and subject to any other limitations contained in this Agreement, Consultant shall perform the Services and any Additional Services in accordance with generally accepted standards and practices customarily utilized by competent engineering firms in effect at the time Services and any Additional Services are rendered. Consultant does not expressly or impliedly warrant or guarantee its Services.

b. Reliance upon Information Provided by Others.

If Consultant's performance of services hereunder requires Consultant to rely on information provided by other parties (excepting Consultant's subcontractors), Consultant shall not independently verify the validity, completeness, or accuracy of such information unless otherwise expressly engaged to do so in writing by Company.

c. Consultant's Opinion of Costs.

Company acknowledges that construction cost estimates, financial analyses and feasibility projections are subject to many influences including, but not limited to, price of labor and materials, unknown or latent conditions of existing equipment or structures, and time or quality of performance by third parties. Company acknowledges that such influences may not be precisely forecasted and are beyond the control of Consultant and that actual costs incurred may vary substantially from the estimates prepared by Consultant. Consultant does not warrant or guarantee the accuracy of construction or development cost estimates, however, Consultant agrees to exercise its best Professional Judgment in rendering its opinions.

d. Construction Phase Services.

1. Consultant's Activities at Construction Site. The presence of Consultant's personnel at a construction site, whether as on-site representative, resident engineer, construction manager, or otherwise, does not make Consultant responsible for those duties that belong to Company and/or construction contractors or others, and does not relieve construction contractors or others of their obligations, duties, and responsibilities, including, but not limited to, construction methods, means, techniques, sequences, and procedures necessary for completing all portions of the construction work in accordance with the contract documents, any health or safety programs and precautions required by such construction work, and any compliance with applicable laws and regulations. Any inspection or observation of the contractor's work is for the purpose of determining that the work is proceeding in conformance with the intent of the project specifications and contract documents. Consultant has no authority to exercise control over any construction contractor in connection with their work or health or safety programs and precautions. Except to protect Consultant's own personnel and except as may be expressly required elsewhere in the Scope of Work, Consultant has no duty to inspect, observe, correct, or report on health or safety deficiencies of the construction contractor.

2. Shop Drawing and Submittal Review. If required by Consultant's Scope of Services, Consultant shall review shop drawings or other contractor submittals for general conformance with the intent of the contract documents. Except for services completed under direct contract to Consultant, Consultant shall not be required to verify dimensions, to engineer contractor's shop drawings or submittals, nor to coordinate shop drawings or other submittals with other shop drawings or submittals provided by contractor.

3. Record Drawings. Record drawings, if required, will be prepared, in part, on the basis of information compiled and furnished by others, and may not always represent the exact location, type of various components, or exact manner in which the Project was finally constructed. Except for services completed under direct contract to Consultant, Consultant is not responsible for any errors or omissions in the information from others that are incorporated into the record drawings.

e. Scope of Work.

1. Before preparing the scope of work, Consultant specifically acknowledges and agrees that it has inspected and familiarized itself with Company's Harmony Hills Well site. The Consultant has received, or had the opportunity to inquire about and/or request all relevant information concerning the Scope of Work from Company or any other source Consultant deems necessary. The Scope of Work has been prepared by the Consultant and to the best of its knowledge includes all applicable work required to successfully design the Harmony Hills Arsenic Treatment Plant.

8. Asbestos/Hazardous Material.

Consultant and Consultant's subcontractors shall have no responsibility for the discovery, handling, removal, or disposal of, or exposure of persons to asbestos or hazardous or toxic materials that are present in any form at the Project site. Professional services related to or in any way connected with the investigation, detection, abatement, replacement, use, specification, or removal of products, materials, or processes containing asbestos or hazardous or toxic materials are beyond the scope of this Agreement.

In the event Consultant encounters asbestos or hazardous materials at the jobsite, Consultant may, at its option and without liability for damages, suspend the performance of services on the Project until such time as Company and Consultant mutually agree on an amendment to this Agreement to address the issue, or Company retains another specialist consultant or contractor to identify, classify, abate and/or remove the asbestos and/or hazardous materials.

9. Consultant's Work Product.

a. Scope.

Consultant's work product which is prepared solely for the purposes of this Agreement, including, but not limited to, drawings, test results, recommendations and technical specifications, whether in hard copy or electronic form, shall become the property of Company when Consultant has been fully compensated as set forth herein. Consultant may keep copies of all work product(s) for its records.

Consultant and Company recognize that Consultant's work product submitted in performance of this Agreement is intended only for the project described in this Agreement. Company's alteration of Consultant's work product or its use by Company for any other purpose shall be at Company's sole risk.

b. Electronic Copies.

If requested, solely as an aid and accommodation to Company, Consultant may provide copies of its work product documents in computer-readable media ("electronic copies", "CADD"). These documents will duplicate the documents provided as work

product, but will not bear the signature and professional seals of the registered professionals responsible for the work. Company is cautioned that the accuracy of electronic copies and CADD documents may be compromised by electronic media degradation, errors in format translation, file corruption, printing errors and incompatibilities, operator inexperience and file modification. Consultant will maintain the original copy, which shall serve as the official, archived record of the electronic and CADD documents.

10. Indemnification.

a. The Consultant shall indemnify the Company against, and save and hold it harmless from, any and all liability, claims, demands, loss, actions, causes of action, expense, penalties, fines, assessments, damages and costs of every kind and nature for injury to or death of any and all persons, including, without limitation, employees or representatives of the Company or of the Consultant or of any subcontractor, or any other person or persons, and for damage, destruction or loss, consequential or otherwise, to or of any and all property, real or personal, including, without limitation, property of the Company or of the Consultant or of any subcontractor, or of any other person or persons, and the violation of any law, ordinance, rule, regulation, standard, or order resulting from, or in any manner arising out of, or in connection with, the performance of the work under the Contract, howsoever same may be caused, including, without limitation, the Company's active or passive negligence. The Consultant shall also, upon request by the Company, and at no expense to the Company, defend the Company in any and all suits, concerning such injury to or death of any and all persons, and concerning such damage, destruction or loss, consequential or otherwise, to or of any and all property, real or personal, including, without limitation, suits by employees or representatives of the Company or of the Consultant or of any subcontractor, or any other person or persons, or concerning any court or administrative proceeding concerning the violation of any law, ordinance, rule, regulation, standard, or order. Excluded from this paragraph are only those injuries to or deaths of persons and damage, destruction or loss, to or of property arising from the sole negligence or willful misconduct of the Company.

b. Consultant shall indemnify the Company against, and save and hold it harmless from, any and all liability, claims, demands, damages, costs, expenses and attorney's fees, suffered or incurred on account of any breach of any obligation, covenant or other provision of this contract, including without limitation, breach of the indemnity provisions of subsection A of this Section 10.

c. Consultant further agrees to defend, indemnify and hold harmless the Company, its directors, officers, employees, and agents, from and against any and all costs, damages, claims, expenses, violations, notices of violations, penalties, liens, assessments, and liabilities of every kind and nature, foreseeable or unforeseeable, directly or indirectly, arising from any release, removal, generation, use, storage or disposal on, under, around, or from the Harmony Hills Arsenic Treatment Plant of any material, substance, or waste, hazardous or nonhazardous, including, without limitation,

drilling fluids, mud, cuttings and development and test water howsoever same may be caused, including, without limitation, the Company's active or passive negligence.

11. Consultant's Insurance.

Consultant shall procure and maintain the following minimum insurance:

a. Commercial general liability insurance, including personal injury liability, blanket contractual liability and broad-form property damage liability coverage. The combined single limit for bodily injury and property damage shall be not less than $1,000,000.

b. Automobile bodily injury and property damage liability insurance covering owned, non-owned, rented, and hired cars. The combined single limit for bodily injury and property damage shall be not less than $1,000,000.

c. Statutory workers' compensation and employer's liability insurance as required by state law.

d. Professional liability insurance. The policy limit shall be not less than $1,000,000.

Consultant shall either require each of its subconsultants to procure and to maintain the insurance specified in this section or insure its subconsultants in the Consultants own policy, in like amounts.

Company shall be named as additional insured on policies a and b above. Upon execution of this Agreement, Consultant will provide a certificate of insurance to Company. Consultant will keep the certificate current at all times while this Agreement is in effect. The Consultant will provide a 30-day written notice in the event the above policies are cancelled.

12. Confidentiality.

Consultant agrees it will maintain the confidentiality of all material it receives from Company and will not disclose, distribute, or publish to any third party such information without the prior permission of Company. Notwithstanding the foregoing, Consultant shall have no confidentiality obligation with respect to information that:

a. becomes generally available to the public other than as a result of disclosure by Consultant or its agents or employees;

b. was available to Consultant prior to its disclosure by Company;

c. becomes available to Consultant from a third party who is not, to the knowledge of Consultant, bound to retain such information in confidence.

In the event Consultant is compelled by subpoena, court order, or administrative order to disclose any confidential information, Consultant shall promptly notify Company and shall cooperate with Company prior to disclosure so that Company may take necessary actions to protect such confidential information from disclosure.

13. Subcontracts.

Consultant shall be entitled, to the extent determined appropriate by Consultant, to subcontract any portion of the services to be performed under this Agreement.

14. Suspension of Work.

Work under this Agreement may be suspended as follows:

a. By Company. By written notice to Consultant, Company may suspend all or a portion of the Work under this Agreement if unforeseen circumstances beyond Company's control make normal progress of the Work impracticable.

b. By Consultant. By written notice to Company, Consultant may suspend the work if Consultant reasonably determines that working conditions at the Site (outside Consultant's control) are unsafe, or in violation of applicable laws, or in the event Company has not made timely payment in accordance with Article VI, compensation.

15. Termination of Work.

a. This Agreement may be terminated by Company as follows: (1) for its convenience on thirty (30) days' notice to Consultant, or (2) for cause, if Consultant materially breaches this Agreement through no fault of Company and Consultant neither cures such material breach nor makes reasonable progress toward cure within fifteen (15) days after Company has given written notice of the alleged breach to Consultant.

b. This Agreement may be terminated by Consultant as follows: (1) for cause, if Company materially breaches this Agreement through no fault of Consultant and Company neither cures such material breach nor makes reasonable progress toward cure within thirty (30) days after Consultant has given written notice of the alleged breach to Company.

c. Payment upon Termination. In the event of termination, Consultant shall perform such additional work as is reasonably necessary for the orderly closing of the work. Consultant shall be compensated for all work performed prior to the effective date of termination, plus work required for the orderly closing of the work, including: (1) authorized work performed up to the termination date plus termination expenses, including all labor and expenses, at Consultant's standard billing rates, directly attributable to termination; (2) all efforts necessary to document the work completed or in progress; and (3) any termination reports requested by Company.

16. Assignment.

This Agreement is binding on the heirs, successors, and assigns of the parties hereto. Except as otherwise set forth under Article VIII, Assignment of Tasks to Affiliates, this Agreement may not be assigned by Company or Consultant without prior, written consent of the other.

17. No Benefit for Third Parties.

The services to be performed by Consultant are intended solely for the benefit of Company, and no benefit is conferred on, nor contractual relationship established with any person or entity not a party to this Agreement. No such person or entity shall be entitled to rely on Consultant's services, opinions, recommendations, plans, or specifications without the express written consent of Consultant. No right to assert a claim against the Consultant, its officers, employees, agents, or consultants shall accrue to the construction Contractor or to any subcontractor, supplier, manufacturer, lender, insurer, surety, or any other third party as a result of this Agreement or the performance or nonperformance of the Consultant's services hereunder.

18. Force Majeure.

Consultant and Company shall not be responsible for delays caused by circumstances beyond their reasonable control, including, but not limited to: (1) strikes, lockouts, work slowdowns or stoppages, or accidents; (2) acts of God; (3) failure of Company to furnish timely information or to approve or disapprove Consultant's instruments of service promptly; and (4) faulty performance or nonperformance by Consultant or Company, Company's or Consultant independent consultants or contractors, or governmental agencies. Consultant and Company shall not be liable for damages arising out of any such delay, nor shall the Consultant or Company be deemed to be in breach of this Agreement as a result thereof.

19. Integration.

This Agreement represents the entire understanding of Company and Consultant as to those matters contained herein. No prior oral or written understanding shall be of any force or effect with respect to those matters covered herein. This Agreement may not be modified or altered except in writing signed by both parties.

20. Severability.

If any part of this Agreement is found unenforceable under applicable laws, such part shall be inoperative, null, and void insofar as it conflicts with said laws, but the remainder of this Agreement shall be in full force and effect.

21. Choice of Law/Jurisdiction.

This Agreement shall be administered and interpreted under the laws of the State of Arizona Jurisdiction of litigation arising from the Agreement shall be in The State of Arizona.

22. Attorneys' Fees.

In the event any claim, controversy, or legal action arises under this Agreement, the prevailing party shall be entitled to recover from the other party all attorneys' fees, costs, expenses and other fees incurred by the prevailing party.

23. Notice Provisions.

Notices concerning this Agreement shall be in writing and sent by certified mail or by courier (such as Federal Express), or by hand-delivery addressed as follows:

To the Company:

Arizona Water Company
3805 North Black Canyon Highway
Phoenix, Arizona 85015-5351
Attention: President

or

Arizona Water Company
Post Office Box 29006
Phoenix, Arizona 85038-9006
Attention: President

To Consultant:

Waterworks Engineers, LLC
8840 E. Chaparral Road, Suite 280
Scottsdale, Arizona 85250
Attention: John Matta

Either party may change its address for purposes of this Section by giving written notice of such change of address to the other party.

24. Authorization.

The persons executing this Agreement on behalf of the parties hereto represent and warrant that the parties have all legal authority and authorization necessary to enter into this Agreement, and that such persons have been duly authorized to execute this Agreement on their behalf.

IN WITNESS WHEREOF, each of the parties hereto has caused this instrument to be executed by their respective duly authorized officers as of the date first written above.

WATERWORKS ENGINEERS,
a limited liability company

By: John Mutto

Its: Principal

ARIZONA WATER COMPANY,
an Arizona corporation

By: Jacqueline K Schmidt

Its: VP - Engineering

EXHIBIT A

Scope of Work

Harmony Hills Wells No. 5 &12
Arsenic Removal Facility
Sedona, Arizona
May 26, 2011
Project No. 1-4814

Arizona Water Company
3805 N. Black Canyon Highway
Phoenix, Arizona 85015
(602) 240-6860

With

Water Works Engineers, LLC
8840 E. Chaparral Rd., Suite 280
Scottsdale, AZ 85250

Table of Contents

I. PROJECT DESCRIPTION 3

II. SCOPE OF SERVICES 3

Task Series 100 - Project Management & Schedule Updates Includes: 3

Task Series 200 - 30% Design Includes: 4

Task Series 300 - Design Development Includes: 4

Task Series 400 - Bidding Phase Services Includes: 6

III. Assumption Relative to Task Series 500-700 6

IV. Fees 7

V. Hourly Rates 8

VII. Schedule 9

I. PROJECT DESCRIPTION

This project consists of services which will be provided by Water Works Engineers ("the Consultant") for a wellhead arsenic treatment facility (ATF) at Arizona Water Company's (the "Company") Harmony Hills well site (the "Site") located at 2645 Lyric Drive, Sedona, Arizona. There are two wells located at the Site that pump directly into the distribution system, Well No. 5 (160 gpm) and Well No. 12 (900 gpm). The current arsenic concentration in both wells is approximately 10 ppb and has been trending upward. The new arsenic removal facility shall be designed to reduce the arsenic concentrations in the groundwater to less than 7 ppb. The influent arsenic design parameter shall be 15 ppb. Currently the operation of the Well No. 12 is controlled by existing offsite water storage tank levels, however, Well No. 5 typically runs 24 hours a day 7 days a week. Well No. 12 runs for approximately 16 hours a day during peak demands. The new arsenic removal facility is anticipated to operate in a similar manner.

An Arsenic Treatment/Mitigation Alternatives Evaluation Technical Memorandum has been recently completed whereby various arsenic removal options were evaluated and adsorptive media was selected as the Best Available Technology for arsenic removal at these wells. The Consultant shall design the arsenic removal facility to accommodate either Severn Trent Services Bayoxide E33® or Siemens GFH® media. The Technical Memorandum will be provided to the Consultant upon the Notice to Proceed, and results from the evaluation will be used as supporting data for the design of the new ATFs.

II. SCOPE OF SERVICES

Task Series 100 - Project Management & Schedule Updates Includes:

Task 110 – Provide a detailed schedule, in Gantt chart form, beginning with the award of design contract and ending with the award of construction contract with an estimated time for construction, start-up and applicable regulatory agency approvals.

Task 120 - Monitor progress and provide design phase progress meeting minutes

Task 130 - Conduct meetings and distribute meeting minutes

Task 140 - Assess data gathering needs and evaluate existing data.

Assumptions: Maximum 12 week design phase duration, one project kick-off meeting, and up to 3 design phase progress meetings.

AWC Inputs: 1) Confirm schedule for project meetings. 2) Review and approve schedule updates. 3) Provide applicable data for Southwest Center well site including pump curve, existing RTU equipment records, existing electric SES/MCC panel as-builts and electronic CAD files of existing facilities including a site plan.

Deliverables: 1) Detailed schedule (Gantt chart form), meeting minutes.

Task Series 200 - 30% Design Includes:

Task 210 - Collect site data and perform site survey

Task 220 - Meet with the City of Sedona to discuss site screening

Task 230 - Thirty Percent (30%) design (site plan, process schematic and P&ID drawings)

Task 240 - Prepare Preliminary Design Report (30% design level)

Task 250 - Prepare Opinion of Probable Cost for Construction

Task 260 - Prepare pre-selection specifications bid package for media, vessel and underdrain system. A determination will be made during 30% design on whether to design a packaged system (e.g. a Severn Trent Services system) or a component system (e.g. vessels specified separately from other equipment).

Assumptions: 1) If sufficient geotechnical information is currently not available for site, additional services shall be provided by the Company at the request of the Consultant. 2) The site survey shall include on-site topographic and existing facility data collection. If a boundary survey or easements/right-of-way delineation level of survey is required, additional scope may be required. 3) The Company will coordinate the meeting with the City of Sedona to discuss a site screening plan and Consultant shall attend meeting to provide input regarding the design. 4) Consultant shall incorporate a freeze protection plan as part of the design for those components of the ATF that are subject to freezing.

AWC inputs: 30% Design Drawings\Report review comments, Pre-selection specifications bid package review.

Deliverables: 30% Design Drawings, Preliminary Design Report, Opinion of Probable Cost for Construction and pre-selection specifications bid package, Copy of site survey

Task Series 300 - Design Development Includes:

Task 310 - Ninety Percent (90%) design (site plan, exterior elevations/facility screening plan, process schematic, P&ID, electrical and structural drawings)

Task 320 - Design Report (90% design level)

Task 330 - Regulatory agency coordination and permit packages development and submittal, including ADEQ ATC and City of Sedona building permit

Task 340 - Construction sequence plan

Task 350 - One Hundred Percent (100%) Submittal

Task 360 - Opinion of Construction Cost (90% & 100%)

Task 370 - Submit pre-selection specifications bid package to Severn Trent Services and Siemens (the "Vendor") or vessel manufacturers

Assumptions: 1) Existing electrical utility service to well-site is sufficient for on-site arsenic removal system and will be able to service new electrical load from the on-site panel, so minimal electrical utility coordination will be required. 2) The Company will pay all permit fees to regulatory agencies. 3) Consultant shall submit a complete building permit package with the required information to the City of Sedona for the purpose of obtaining a building permit. The Consultant shall take the lead in coordinating all permits and if necessary, Consultant shall provide rendering(s) and site plan for a public hearing or outreach meeting. There is uncertainty whether the Town of Sedona will require a Special Use or Conditional Use Permit; therefore, an allowance has been established to provide this service as required. The Company will conduct the public hearing or outreach meeting and Consultant shall provide technical support and send a representative to the public hearing or outreach meeting. 4) For the 90% design drawings, Consultant shall provide hard copies as needed to submit signed/sealed drawings and specifications packages to regulatory agencies for review. For the 100% submittal, Consultant shall provide the Company with one (1) hardcopy set signed/sealed full size (22"x34") documents (drawings and specifications) and unsigned electronic documents (drawings and specifications) on CD for their in-house reproduction needs. 5) Design drawings shall be produced in Microstation V8 or AutoCad in 2-D format. 6) The Company will select a vessel manufacturer or Vendor from the proposals received as a result of the pre-selection bid process. If changes to the selected vessel manufacturer or Vendor proposal are required, the Consultant shall coordinate the changes with the vessel manufacturer or Vendor and obtain a revised proposal. Consultant shall use office engineering budget under Task Series 500 for submittal reviews, Vendor or vessel manufacturer coordination, and review of media performance guarantees. 7) Fire protection will not be required for the arsenic removal system. 8) Landscape drawings are not anticipated, and if required additional scope and associated fees may be needed. Existing landscaping shall be shown on the civil drawings and on the exterior elevation/facility screening plan.

AWC Inputs: 90% Design Drawings\Report review comments, ADEQ ATC package review comments and City of Sedona permit package review comments, Review Vendor proposals, participate in the selection of the Vendor and provide selected Vendor proposal changes

Deliverables: 90% design package, Copy of permit packages submitted to regulatory agencies, 100% design package, Opinion of construction cost, Detailed construction schedule, Vendor proposals or vessel manufacturer proposals.

Task Series 400 - Bidding Phase Services Includes:

Task 410 - Conduct pre-bid meeting and issue pre-bid meeting minutes

Task 420 - Prepare clarifications and addenda, respond to Contractor questions

Task 430 - Issue conformed construction documents and specifications

Task 440 - Assign pre-purchase contract for media, vessel and underdrain to successful bid Contractor

Assumptions: 1) The Consultant shall provide the Company with one (1) hard copy set of signed/sealed full size (22"x34") conformed construction documents and specifications for distribution to bidding Contractors. 2) The Consultant shall conduct the pre-bid meeting with the Company in attendance.

AWC inputs: 1) The Company will make copies of the conformed construction documents and specifications and provide the bid package directly to pre-selected Contractors.

Deliverables: Pre-bid meeting minutes, clarifications & addenda, conformed construction documents and specifications.

III. Assumption Relative to Task Series 500-700

Task Series 500 - Office Engineering and Construction Phase Services, Task Series 600 - Resident Inspection Services and Task Series 700 - Other Additional Services, which were defined in the Company's Request for Proposal, have not been included at the request of the Company. These services are anticipated under a contract amendment upon completion of Task Series 400.

IV. Fees

The lump sum fee estimate for Task Series 100-400 is provided below with allowances, which will, as needed, be authorized by the Company before proceeding with the task.

Assumption: The fees are based on conducting designs for the Harmony Hills and Southwest Center ATFs at the same time.

Task	Water Works Engineers	Jensen Eng - E&IC
Task Series 100 – Project Management and Schedule Updates	$4,032.00	$2,400.00
Task Series 200 – 30% Design	$12,764.25	$2,900.00
Task Series 300 - Design Development	$26,653.50	$7,400.00
Task Series 400 - Bidding Phase Services	$3,433.50	$3,500.00
DESIGN AND BIDDING	$46,883.25	$16,200.00
TOTAL - DESIGN AND BIDDING	**$63,083.25**	
Allowances		
A-1 Electrical Design Allowance for Component System		$5,000.00
A-2 Special or Conditional Use Permit	$10,000.00	
A-3 Public Relations	$5,000.00	
TOTAL - ALLOWANCES		$20,000.00
TOTAL - DESIGN AND BIDDING INCLUDING ALLOWANCES	**$83,083.25**	
SURVEY SERVICES DURING DESIGN		
- Control, Topographic Survey, Location of Existing Facilities	$1,800.00	
- Boundary Verification (Lyon to be provided legal descriptions or title report)	$600.00	
- Drafting of topo, Existing improvements, and boundary information	$850.00	
Surveying Totals	$3,250.00	
TOTAL - PROJECT	**$86,333.25**	

V. Hourly Rates

The fee estimates provided in the previous section are based on the following hourly rates including overhead costs. The rates herein will be utilized for determining appropriate compensation or reimbursement for changes in the scope of work.

Position	Rate ($/hour)
Principal-in-Charge	165
Project Manager/Water Quality Specialist	150
Senior Project Engineer	130
Project Engineer	110
Structural Engineer	125
Electrical Engineer (Jensen Engineering)	150
Survey Crew (Lyon Engineering)	150
Designer 1	95
Designer 2	75
Admin. Support	55
Other Direct Costs; Subconsultants	At cost – no mark-ups

VI. *Architectural tasks will be performed in house by our designers using microstation 3D modeling.

VII. Schedule

The schedule is provided on the next page.

EXHIBIT B

	Harmony Hills		SW Center		REVISED AND ADJUSTED BUDGETS Harmony Hills		SW Center		TOTALS CHECK	
	Water Works + Jensen	Jensen Eng.	Water Works + Jensen	Jensen Eng.	Water Works + Jensen	Jensen Eng.	Water Works + Jensen	Jensen Eng.		
Task Series 100 – Project Management and Schedule Updates	$ 4,480.00	$ 2,400.00	$ 4,480.00	$ 2,400.00	$ 4,032.00	$ 2,400.00	$ 4,032.00	$ 2,400.00		
Task Series 200 – 30% Design	$ 14,182.50	$ 4,900.00	$ 14,182.50	$ 4,900.00	$ 12,764.25	$ 2,900.00	$ 12,764.25	$ 2,900.00		
Task Series 300 - Design Development	$ 29,615.00	$ 19,200.00	$ 29,615.00	$ 19,200.00	$ 26,653.50	$ 7,400.00	$ 26,653.50	$ 7,400.00		
Task Series 400 - Bidding Phase Services	$ 3,815.00	$ 3,500.00	$ 3,815.00	$ 3,500.00	$ 3,433.50	$ 3,500.00	$ 3,433.50	$ 3,500.00		
TOTAL - DESIGN AND BIDDING FOR BOTH SITES	$ 52,092.50	$ 30,000.00	$ 52,092.50	$ 30,000.00	$ 46,883.25	$ 16,200.00	$ 46,883.25	$ 16,200.00	$ 126,166.50	
TOTAL - DESIGN AND BIDDING BY SITE	$	**82,092.50**	$	**82,092.50**	$	**63,083.25**	$	**63,083.25**	$ 126,166.50	
A-1 Electrical Design Allowance for Component System						$ 5,000.00		$ 5,000.00	$ 10,000.00	
A-2 Special or Conditional Use Permit					$ 10,000.00		$ 10,000.00		$ 20,000.00	
A-3 Public Relations					$ 5,000.00		$ 5,000.00		$ 10,000.00	
TOTAL - ALLOWANCES					$	20,000.00	$	20,000.00	$ 40,000.00	
TOTAL - DESIGN AND BIDDING INCLUDING ALLOWANCES	$ 82,092.50		$ 82,092.50		$	**83,083.25**	$	**83,083.25**	$ 166,166.50	$166,166.50
Task Series 500 – Office Engineering and Construction Phase Services	$ 28,210.00	$ 6,600.00	$ 28,210.00	$ 6,600.00	$ 25,389.00	$ 5,940.00	$ 25,389.00	$ 5,940.00	$ 62,658.00	
Task Series 600 - Resident Inspection Services	$ 51,880.00	$ 1,800.00	$ 51,880.00	$ 1,800.00	$ 46,692.00	$ 1,620.00	$ 46,692.00	$ 1,620.00	$ 96,624.00	
Task Series 700 - Other Additional Services	$ 560.00	$ -	$ 560.00	$ -	$ 504.00	$ -	$ 504.00	$ -	$ 1,008.00	
TOTAL - CONSTRUCTION PHASE SUPPORT	$ 80,650.00	$ 8,400.00	$ 80,650.00	$ 8,400.00	$ 72,585.00	$ 7,560.00	$ 72,585.00	$ 7,560.00	$ 160,290.00	
TOTAL - CONSTRUCTION WATERWORKS + JENSEN	$ 89,050.00		$ 89,050.00		$	**80,145.00**	$	**80,145.00**	$ 160,290.00	
SURVEY SERVICES DURING DESIGN										
- Control, Topographic Survey, Location of Existing Facilities	$ 1,800.00		$ 1,800.00		$ 1,800.00		$ 1,800.00			
- Boundary Verification (Lyon to be provided legal descriptions or title re	$ 600.00		$ 600.00		$ 600.00		$ 600.00			
- Drafting of topo, Existing improvements, and boudary information	$ 850.00		$ 850.00		$ 850.00		$ 850.00			
Surveying Totals	$ 3,250.00		$ 3,250.00		$ 3,250.00		$ 3,250.00		$ 6,500.00	
TOTAL - PROJECT	$ 174,392.50		$ 174,392.50		**$ 166,478.25**		**$ 166,478.25**		$ 332,956.50	$332,956.50

$ 86,333.25

JOB - B11605

STRUCTURAL CALCULATION COVER SHEET

WATERWORKS ENGINEERS

Arizona Water Company

Harmony Hills Wells No 5 & 12

City of Sedona

Design Codes — 2006 International Building Code

Contents — Page

Structural Calcs 1-10

RECEIVED
AUG 10 2011
CITY OF SEDONA
COMMUNITY DEVELOPMENT

Expires 12-31-13

Water Works Engineers, LLC – 8840 E Chaparral Rd, Suite 280, Scottsdale AZ 85250 – (480) 661-1742 Phone – (480) 661-1743 Fax

WORKS ENGINEERS

Project No. 11-027 | Computed By JK
Title HARMONY HILLS | Date 8/1/11
Checked By | Date
Sheet No. 1 of

WIND LOAD ON (E) CMU FENCE

NOTE: (E) FENCE CANNOT SUPPORT CURRENT WIND LOAD AS IS DUE TO UNDER-SIZED FOOTING UNDER THE 6' FENCE. THEREFORE, WE CANNOT ADD TO THE (E) FENCE. PROVIDE SEPARATE SUPPORT FOR NEW WROUGHT IRON FENCE

WIND LOAD:

ASCE 7-05, 6.5.14

$F = q_h G C_f A_s$ WHERE $q_h = 0.00256 K_z K_{zt} K_d V^2 I$

$= (0.00256)(0.85)(1.0)(0.85)(90)^2(1.15)$

$= 17.2$

$= (17.2)(0.85)(1.7)(A_s)$

$= 25$ psf

WROUGHT IRON FENCE IS MOSTLY OPEN, ASSUME 40% OF AREA IS CLOSED

WIND LOAD/ft $= (25)(3)(1)(0.40)$

$= 29$ #/ft

MAX POST SPACING = 8'

LOAD TO NEW SUPPORT $= (29\ \#/ft)(8') = 232$ #

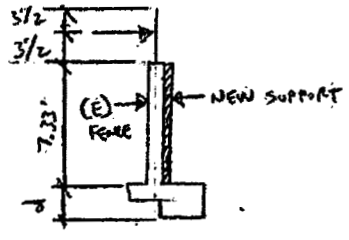

$M_{BASE\ SUPPORT} = (232\#)(1.5' + 7.33') = 2.05$ k-ft

$Z_{MIN} = \frac{(2.05)(12)(1.67)}{46\ ksi} = 0.89\ in^3$

HSS 4x4x3/16 $Z = 3.67\ in^3$ OK

↳ 4" SQ NEEDED FOR ANCHOR BOLTS

TRY FTG w/ d = 2.25'

$M_{OT} = (232\#)(1.5' + 7.33' + 2.25') = 2500$ #-ft

$M_{RES} = (0.6)\left[(150)(2.25)(2.5)^3/2 + (120)(1.33)(2.5)^3/2 + (9.4)(7.33)(1)\right]$

(150: FTG; 120: SOIL OVER FTG; 9.4: HSS4x4)

$= 2372$ #-ft

$\frac{M_{OT}}{M_{RES}} = 1.05$ w/in 5% OK

SIZE BASE PL

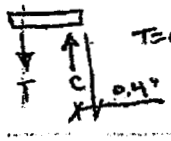

↳ REF HILTI OUTPUT

$T = C = \frac{5463}{1.6} = 3414\#$

↳ LRFD → ASD

$M_R = (3414\#)(0.1") = 341$ #-in

$t_{MIN} = \frac{(341)(1.67)}{36{,}000} = 0.02\ in^3$

w/ 1/2 PL $Z = (1/4)(10)(0.5)^2 = 0.625$ OK

Company:	WWE	Page:	2
Specifier:	JAK	Project:	Harmony Hills
Address:		Sub-Project I Pos. No.:	
Phone I Fax:	- | -	Date:	8/1/2011
E-Mail:			

Specifier's comments:

1. Input data

Anchor type and diameter:	Heavy Hex Head ASTM F 1554 GR. 55, 1/2
Effective embedment depth:	h_{ef} = 10.000 in.
Material:	ASTM F 1554
Proof:	design method ACI 318 / CIP
Stand-off installation:	without clamping (anchor); restraint level (anchor plate): 2.0; e_b = 1.000 in.; t = 0.500 in.
	Hilti Grout: CB-G EG, epoxy, $f_{c,grout}$ = 13924 psi
Anchor plate:	l_x x l_y x t = 5.000 x 10.000 x 0.500 in. (Recommended plate thickness: not calculated)
Profile	Square HSS (AISC); (L x W x T) = 4.000 in. x 4.000 in. x 0.250 in.
Base material:	cracked concrete , 2500, f_c' = 2500 psi; h = 24.000 in.
Reinforcement:	tension: condition B, shear: condition B;
	edge reinforcement: none or < No. 4 bar
Seismic loads (cat. C, D, E, or F):	no

Geometry [in.] & Loading [lb, in.-lb]

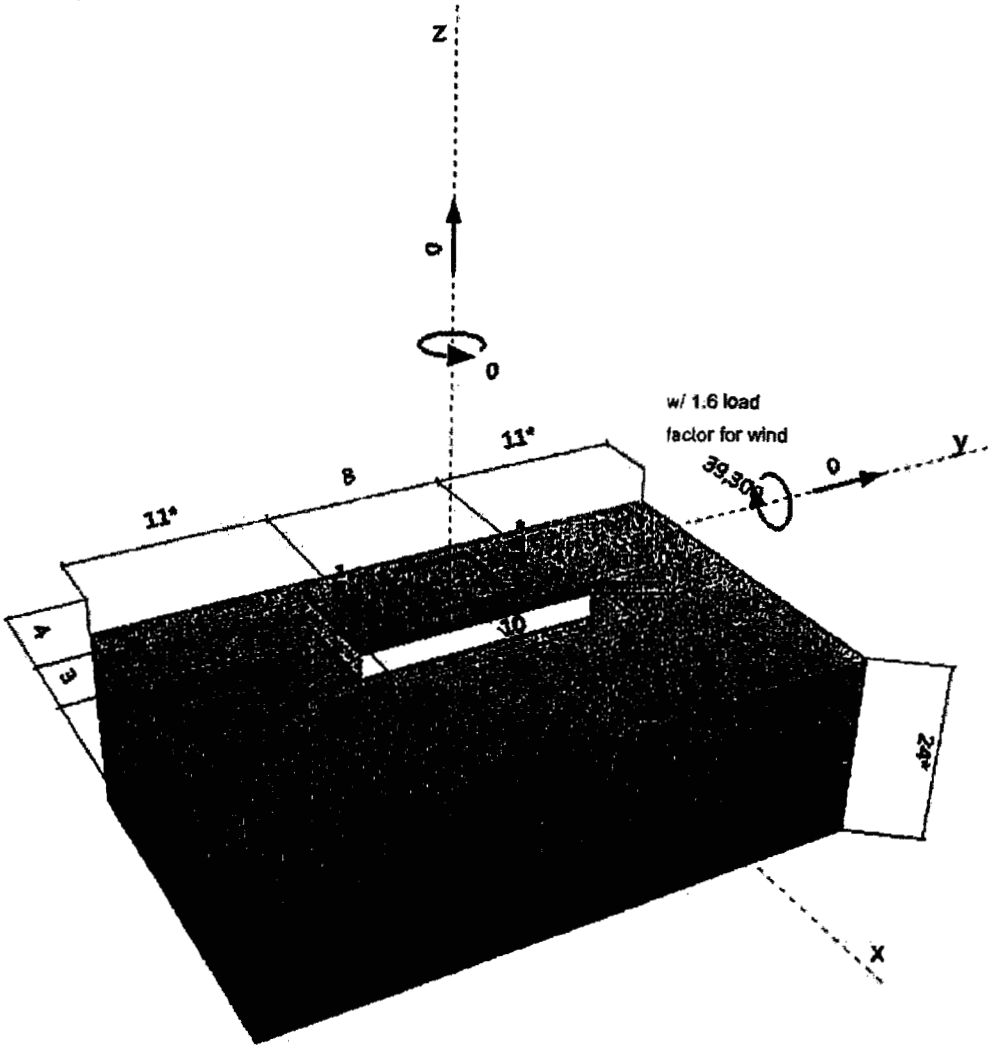

Company: WWE
Specifier: JAK
Address:
Phone I Fax: - | -
E-Mail:

2. Load case/Resulting anchor forces

Load case (governing):

Anchor reactions [lb]
Tension force: (+Tension, -Compression)

Anchor	Tension force	Shear force	Shear force x	Shear force y
1	5463	50	50	0
2	0	50	50	0
3	5463	50	50	0
4	0	50	50	0

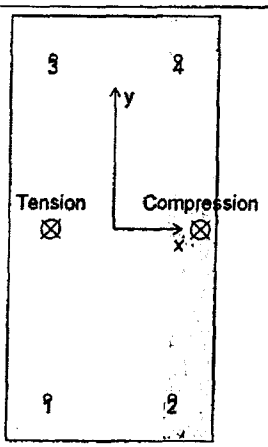

max. concrete compressive strain [‰]: 0.42
max. concrete compressive stress [psi]: 1807
resulting tension force in (x/y)=(-1.496/0.000) [lb]: 10926
resulting compression force in (x/y)=(2.097/0.000) [lb]: t0926

3. Tension load

Proof	Load N_{ua} [lb]	Capacity ϕN_n [lb]	Utilization β_N [%] = $N_{ua}/\phi N_n$	Status
Steel Strength*	5462	7987	68	OK
Pullout Strength*	5462	6538	84	OK
Concrete Breakout Strength**	t0925	12549	87	OK
Concrete Side-Face Blowout, direction x-**	t0925	20410	54	OK

*anchor having the highest loading **anchor group (anchors in tension)

Steel Strength

Equations

$N_{sa} = n\, A_{se,N}\, f_{uta}$ ACI 318-08 Eq. (D-3)
$\phi\, N_{steel} \geq N_{ua}$ ACI 318-08 Eq. (D-t)

Variables

n	$A_{se,N}$ [in.^{2}]	f_{uta} [psi]
1	0.t4	75000

Calculations

N_{sa} [lb]
10650

Results

N_{sa} [lb]	ϕ_{steel}	$\phi\, N_{sa}$ [lb]	N_{ua} [lb]
10650	0.750	7987	5462

Input data and results must be checked for agreement with the existing conditions and for plausibility!
PROFIS Anchor (c) 2003-2009 Hilti AG, FL-9494 Schaan Hilti is a registered Trademark of Hilti AG, Schaan

Company:	WWE	Page:	4
Specifier:	JAK	Project:	Harmony Hills
Address:		Sub-Project I Pos. No.:	
Phone I Fax:	- | -	Date:	8/1/2011
E-Mail:			

Pullout Strength

Equations

$N_{pN} = \psi_{c,p} N_p$ ACI 318-08 Eq. (D-14)

$N_p = 8 A_{brg} f'_c$ ACI 318-08 Eq. (D-15)

$\phi N_{pN} \geq N_{ua}$ ACI 318-08 Eq. (D-1)

Variables

$\psi_{c,p}$	A_{brg} [in.^{2}]	f'_c [psi]
1.000	0.47	2500

Calculations

N_p [lb]
9340

Results

N_{pn} [lb]	$\phi_{concrete}$	ϕN_{pn} [lb]	N_{ua} [lb]
9340	0.700	6538	5462

Concrete Breakout Strength

Equations

$N_{cbg} = \left(\frac{A_{Nc}}{A_{Nc0}}\right) \psi_{ec,N} \psi_{ed,N} \psi_{c,N} \psi_{cp,N} N_b$ ACI 318-08 Eq. (D-5)

$\phi N_{cbg} \geq N_{ua}$ ACI 318-08 Eq. (D-1)

A_{Nc} see ACI 318-08, Part D.5.2.1, Fig. RD.5.2.1(b)

$A_{Nc0} = 9 h_{ef}^2$ ACI 318-08 Eq. (D-6)

$\psi_{ec,N} = \left(\frac{1}{1 + \frac{2 e_N}{3 h_{ef}}}\right) \leq 1.0$ ACI 318-08 Eq. (D-9)

$\psi_{ed,N} = 0.7 + 0.3 \left(\frac{c_{a,min}}{1.5 h_{ef}}\right) \leq 1.0$ ACI 318-08 Eq. (D-11)

$\psi_{cp,N} = MAX\left(\frac{c_{a,min}}{c_{ac}}, \frac{1.5 h_{ef}}{c_{ac}}\right) \leq 1.0$ ACI 318-08 Eq. (D-13)

$N_b = k_c \lambda \sqrt{f'_c} h_{ef}^{1.5}$ ACI 318-08 Eq. (D-7)

Variables

h_{ef} [in.]	$e_{c f,N}$ [in.]	$e_{c2,N}$ [in.]	$c_{a,min}$ [in.]	$\psi_{c,N}$	c_{ac} [in.]	k_c	λ
7.333	0.000	0.000	4.000	1.000	-	24	1

f'_c [psi]
2500

Calculations

A_{Nc} [in.^{2}]	A_{Nc0} [in.^{2}]	$\psi_{ec1,N}$	$\psi_{ec2,N}$	$\psi_{ed,N}$	$\psi_{cp,N}$	N_b [lb]
450.00	484.00	1.000	1.000	0.809	1.000	23830

Results

N_{cbg} [lb]	$\phi_{concrete}$	ϕN_{cbg} [lb]	N_{ua} [lb]
17927	0.700	12549	10925

PROFIS Anchor (c) 2003-2009 Hilti AG, FL-9494 Schaan Hilti is a registered Trademark of Hilti AG, Schaan

Company:	WWE	Page:	5
Specifier:	JAK	Project:	Harmony Hills
Address:		Sub-Project I Pos. No.:	
Phone I Fax:	- | -	Date:	8/1/2011
E-Mail:			

Concrete Side-Face Blowout, direction x-

Equations

$N_{sb} = 160\, c_{a1} \sqrt{A_{brg}}\, \lambda \sqrt{f'_c}$ ACI 318-08 Eq. (D-17)

$N_{sbg} = \alpha_{group}\, N_{sb}$ ACI 318-08 Eq. (D-18)

$\phi N_{sbg} \geq N_{ua}$ ACI 318-08 Eq. (D-1)

$\alpha_{group} = \left(1 + \frac{s}{6\, c_{a1}}\right)$ see ACI 318-08, Part D.5.4.2 Eq. (D-18)

Variables

c_{a1} [in.]	c_{a2} [in.[	A_{brg} [in.^{2}]	λ	f'_c [psi]	s [in.]
4.000	11.000	0.47	1	2500	8.000

Calculations

α_{group}	N_{sb} [lb]
1.333	21868

Results

N_{sbg} [lb]	$\phi_{concrete}$	ϕN_{sbg} [lb]	$N_{ua,edge}$ [lb]
29157	0.700	20410	10925

Input data and results must be checked for agreement with the existing conditions and for plausibility!

PROFIS Anchor (c) 2003-2009 Hilti AG, FL-9494 Schaan Hilti is a registered Trademark of Hilti AG, Schaan

Company:	WWE	Page:	6
Specifier:	JAK	Project:	Harmony Hills
Address:		Sub-Project I Pos. No.:	
Phone I Fax:	- | -	Date:	8/1/2011
E-Mail:			

4. Shear load

Proof	Load V_{ua} [lb]	Capacity ϕV_n [lb]	Utilization β_V [%] = $V_{ua}/\phi V_n$	Status
Steel Strength*	50	3323	2	OK
*Steel failure (with lever arm)**	50	302	17	OK
Pryout Strength**	201	30117	1	OK
Concrete edge failure in direction x+**	201	8797	2	OK

* anchor having the highest loading **anchor group (relevant anchors)

Steel Strength

Equations

$V_{sa} = n\ 0.6\ A_{se,V}\ f_{uta}$ ACI 318-08 Eq. (D-20)

$\phi\ V_{steel} \geq V_{ua}$ ACI 318-08 Eq. (D-1)

Variables

n	$A_{se,V}$ [in.^{2}]	f_{uta} [psi]
1	0.14	75000

Calculations

V_{sa} [lb]
6390

Results

V_{sa} [lb]	ϕ_{steel}	ϕ_{eb}	$\phi\ V_{sa}$ [lb]	V_{ua} [lb]
6390	0.650	0.800	3323	50

Company:	WWE	Page:	7
Specifier:	JAK	Project:	Harmony Hills
Address:		Sub-Project I Pos. No.:	
Phone I Fax:	- | -	Date:	8/1/2011
E-Mail:			

Steel failure (with lever arm), acc. to ETAG Annex C 4.2.2.4

Equations

V_s^M	$= \frac{\alpha_M \cdot M_s}{L_b}$	bending equation for stand-off
M_s	$= M_s^0 \left(1 - \frac{N_{ua}}{\phi N_{sa}}\right)$	resultant flexural resistance of anchor
M_s^0	$= (1.2)\ (S)\ (f_{u,min})$	characteristic flexural resistance of anchor
$\left(1 - \frac{N_{ua}}{\phi N_{sa}}\right)$		reduction for tensile force acting simultaneously with a shear force on the anchor
S	$= \frac{\pi (d)^3}{32}$	elastic section modulus of anchor bolt at concrete surface
L_b	$= z + (n)(d_0)$	internal lever arm adjusted for spalling of the surface concrete
ϕV_s^M	$\geq V_{ua}$	ACI 318-08 Eq. (D-2)

Variables

α_M	$f_{u,min}$ [psi]	N_{ua} [lb]	ϕN_{sa}]lb]	z [in.]	n	d_0]in.]
2.00	75000	5463	7987	1.250	0.500	0.500

Calculations

M_s^0]in.lb]	$\left(1 - \frac{N_{ua}}{\phi N_{sa}}\right)$	M_s [in.lb]	L_b]in.]
1104.466	0.316	349.011	1.500

Results

V_s^M [lb]	ϕ_{steel}	ϕV_s^M [lb]	V_{ua} [lb]
465	0.650	302	50

Input data and results must be checked for agreement with the existing conditions and for plausibility!

PROFIS Anchor (c) 2003-2009 Hilti AG, FL-9494 Schaan Hilti is a registered Trademark of Hilti AG, Schaan

Company:	WWE	Page:	8
Specifier:	JAK	Project:	Harmony Hills
Address:		Sub-Project I Pos. No.:	
Phone I Fax:	- | -	Date:	8/1/2011
E-Mail:			

Pryout Strength (Concrete Breakout Strength controls)

Equations

$V_{cpg} = k_{cp}\left[\left(\frac{A_{Nc}}{A_{Nc0}}\right)\psi_{ec,N}\,\psi_{ed,N}\,\psi_{c,N}\,\psi_{cp,N}\,N_b\right]$ ACI 318-08 Eq. (D-31)

$\phi V_{cpg} \geq V_{ua}$ ACI 318-08 Eq. (D-1)

A_{Nc} see ACI 318-08, Part D.5.2.1, Fig. RD.5.2.1(b)

$A_{Nc0} = 9 h_{ef}^2$ ACI 318-08 Eq. (D-6)

$\psi_{ec,N} = \left(\frac{1}{1+\frac{2 e'_N}{3 h_{ef}}}\right) \leq 1.0$ ACI 318-08 Eq. (D-9)

$\psi_{ed,N} = 0.7 + 0.3\left(\frac{c_{a,min}}{1.5 h_{ef}}\right) \leq 1.0$ ACI 318-08 Eq. (D-11)

$\psi_{cp,N} = MAX\left(\frac{c_{a,min}}{c_{ac}}, \frac{1.5 h_{ef}}{c_{ac}}\right) \leq 1.0$ ACI 318-08 Eq. (D-13)

$N_b = k_c \lambda \sqrt{f'_c}\, h_{ef}^{1.5}$ ACI 318-08 Eq. (D-7)

Variables

k_{cp}	h_{ef} [in.]	$e_{c1,N}$ [in.]	$e_{c2,N}$ [in.]	$c_{a,min}$ [in.]	$\psi_{c,N}$	c_{ac} [in.]	k_c
2	7.333	0.000	0.000	4.000	1.000	-	24

λ	f'_c [psi]
1	2500

Calculations

A_{Nc} [in.^{2}]	A_{Nc0} [in.^{2}]	$\psi_{ec,N}$	$\psi_{ec2,N}$	$\psi_{ed,N}$	$\psi_{cp,N}$	N_b [lb]
540.00	484.00	1.000	1.000	0.809	1.000	23830

Results

V_{cpg} [lb]	$\phi_{concrete}$	ϕV_{cpg} [lb]	V_{ua} [lb]
43024	0.700	30117	201

PROFIS Anchor (c) 2003-2009 Hilti AG, FL-9494 Schaan Hilti is a registered Trademark of Hilti AG, Schaan

Company:	WWE	Page:	9
Specifier:	JAK	Project:	Harmony Hills
Address:		Sub-Project I Pos. No.:	
Phone I Fax:	- | -	Date:	8/1/2011
E-Mail:			

Concrete edge failure in direction x+

Equations

$V_{cbg} = \left(\frac{A_{Vc}}{A_{Vc0}}\right) \psi_{ec,V}\, \psi_{ed,V}\, \psi_{c,V}\, \psi_{h,V}\, \psi_{parallel,V}\, V_b$ ACI 318-08 Eq. (D-22)

$\phi V_{cbg} \geq V_{ua}$ ACI 318-08 Eq. (D-1)

A_{Vc} see ACI 318-08, Part D.6.2.1, Fig. RD.6.2.1(b)

$A_{Vc0} = 4.5\, c_{a1}^2$ ACI 318-08 Eq. (D-23)

$\psi_{ec,V} \left(\frac{1}{1 + \frac{2e'_V}{3c_{a1}}}\right) \leq 1.0$ ACI 318-08 Eq. (D-26)

$\psi_{ed,V} = 0.7 + 0.3\left(\frac{c_{a2}}{1.5c_{a1}}\right) \leq 1.0$ ACI 318-08 Eq. (D-28)

$\psi_{h,V} = \sqrt{\frac{1.5c_{a1}}{h_a}} \geq 1.0$ ACI 318-08 Eq. (D-29)

$V_b = \left(7\left(\frac{l_e}{d_a}\right)^{0.2}\sqrt{d_a}\right)\lambda\sqrt{f'_c}\, c_{a1}^{1.5}$ ACI 318-08 EQ. (D-24)

Variables

c_{a1} [in.]	c_{a2} [in.]	e_{cV} [in.]	$\psi_{c,V}$	h_a [in.]	l_e [in.]	λ	d_a [in.]
16.000	11.000	0.000	1.000	24.000	4.000	1	0.500

f'_c [psi]	$\psi_{parallel,V}$
2500	1.000

Calculations

A_{Vc} [in.^{2}]	A_{Vc0} [in.^{2}]	$\psi_{ec,V}$	$\psi_{ed,V}$	$\psi_{h,V}$	V_b [lb]
720.00	1152.00	1.000	0.837	1.000	24008

Results

V_{cbg} [lb]	$\phi_{concrete}$	ϕV_{cbg} [lb]	V_{ua} [lb]
12566	0.700	8797	201

5. Combined tension and shear loads

$\beta_N = N_u/\phi N_n$	$\beta_V = V_u/\phi V_n$	ζ	Utilization $\beta_{N,V}$ [%]	Status
0.871	0.166	5/3	84	OK

$\beta_{NV} = \beta_N^{\zeta} + \beta_V^{\zeta} <= 1$

6. Warnings

- Condition A applies when supplementary reinforcement is used. The Φ factor is increased for non-steel Design Strengths except Pullout Strength and Pryout strength. Condition B applies when supplementary reinforcement is not used and for Pullout Strength and Pryout Strength. Refer to ACI 318, Part D.4.4(c).
- *ACI 318 does not specifically address anchor bending when a stand-off condition exists. PROFIS Anchor calculates a shear load corresponding to anchor bending when stand-off exists and includes the results as a shear Design Strength!*
- Checking the transfer of loads into the base material and the shear resistance are required in accordance with ACI3 t8 or the relevant standard!
- The anchor plate is assumed to be sufficiently stiff in order to be not deformed when subjected to the actions!

Fastening meets the design criteria!

PROFIS Anchor (c) 2003-2009 Hilti AG, FL-9494 Schaan Hilti is a registered Trademark of Hilti AG, Schaan

FOUNDATION DESIGN W/O MOMENT

FOOTING LOCATION: Adsorption Vessel Slab

ALLOWABLE SOIL PRESSURE:

D	=	1.50 ksf
D + L + S	=	1.50 ksf
D + L + W	=	2.00 ksf
D + L + E	=	2.00 ksf

	DEAD LOAD	LIVE LOAD	SNOW LOAD	*WIND LOAD	*SEISMIC
COLUMN LOAD:	1.75 k	15.00 k	0.00 k	0.00 k	0.00 k

Total Load = 60k, w/ 7k DL

FOOTING SIZE:

	TRANS.		LONG.			
PAD SIZE =	3.50	ft X	3.50	ft =	12.25	ft^2
COL SIZE =	8.00	in X	8.00	in		

P_{ult1} = 1.4D = 2.45 k

P_{ult2} = 1.2D + 1.6L + 0.5 S = 26.10 k

*P_{ult3} = 1.2D + 1.6S + (0.5L or 0.8W) = 9.60 k

*P_{ult4} = 1.2D + 1.6W + 0.5L + 0.5S = 9.60 k

*P_{ult5} = 1.2D + 1.4E + 0.5L + 0.2S = 9.60 k

(USP) ULTIMATE SOIL PRESSURE = 2.13 ksf

LOAD COMBINATION	AREA REQUIRED
D	1.17 ft^2
D + L + S	11.17 ft^2
D + L + W+S/2	8.40 ft^2
D + L + E + (0.2)S	8.40 ft^2

SOIL PRESSURES

D	D+L+S	D+L+W+S/2	D+L+E+(0.2)S
1.00 ksf	1.37 ksf	1.37 ksf	1.37 ksf

*Use 1.0L for garages, areas of public assembly, and areas where LL > 100psf

FOOTING DESIGN:

$M_{ult\ LONG.}$ = (USP)(PAD TRANS.)[(PAD LONG. - COL LONG.)/2]^2/2 = 7.48 k·ft

$M_{ult\ TRANS.}$ = (USP)(PAD LONG.)[(PAD TRANS. - COL TRANS.)/2]^2/2 = 7.48 k·ft

F_y = 60 ksi f_c' = 3.0 ksi

a/2 = $A_s F_y/(1.7\ b\ f_c')$ Max reinf spacing = 16"

$\phi M_n = 0.9 A_s F_y (d - a/2)/12$

BEAM v = (USP)[(PAD LENGTH - COL)/2-d]PAD WIDTH

PUNCH v = (USP)[(PAD AREA - (COL + d)^2)]

BEAM $v_{allow} = 2(0.75)(f_c')^{1/2}$ = 0.082 ksi

PUNCH $v_{allow} = 4(0.75)(f_c')^{1/2}$ = 0.164 ksi

Minimum Steel Requirements:

ACI 10.5.1 $A_{s,min} = 200 bd/f_y$ in^2 = 1.23 if $f_c' < 4500$psi

ACI 10.5.3 OR DESIGN FOR $M_{ult}' = 1.33\ M_{ult}$

ACI 10.5.4 $A_{s,min}/A_g > 0.0018$

			LONG.	TRANS.	
h	in		12.00	12.00	
d	in		8.75	8.25	
Reinf. #5 @ 12"oc		3 -	#5	#5	
A_s	in^2		0.92	0.92	OK
A_s/A_g			0.0016	0.0018	>0.0018 OK
1.33M_{ult}	k·ft		9.95	9.95	
a/2	in		0.26	0.26	
ϕM_n	k·ft		35.17	33.10	OK
BEAM v	ksi		0.014	0.016	OK
PUNCH v	ksi			0.038	OK

BACKWASH TANK SLAB

Bearing pressure under slab = 780 psf OK

Use same slab thickness as adsorption slab for ease of construction and simplicity

Permit

City of Sedona

102 Roadrunner Drive Sedona, Arizona 86336 (928) 282-1154

Building Permit

B11605

Important Dates

Property Information

ARSENIC REMOVAL FACILITY @ HARMONY HILLS WELLS | 700 | 2000 | 408-03-063

2645 LYRIC DRIVE SEDONA AZ 86336

72 | Harmony Hills

ARIZONA WATER COMPANY

3805 N. BLACK CANYON HWY

PHOENIX | AZ | 85015

602-240-6860 | EXT 231

TBD

Public Works

DWP | 08/23/11

Issuance

Zoning Details

RMH-6 | 20 | 20 | 10 | 5

EME | 08/15/11

Building Details

V-B | H-4

1. NOTE REGARDING FLOODPLAIN IMPACT: ALL WALLS ASSOCIATED WITH THIS PROJECT ARE EXISTING.
2. OTHER FEES = $100.00 MINIMUM IN THIS SPECIFIC CASE, PERMIT COVERS FENCE, FOUNDATIONS, ZONING AND PUBLIC WORKS REQUIREMENTS, THE EQUIPMENT ITSELF IS EXEMPT. APPLICATION VALUATION OF 104K SHOWN FOR REFERENCE.

BP | 08/23/11

Fees

$104,000.00

100

$ 0.00

$ 0.00

$ 0.00

$ 100.00

$ 0.00

$ 0.00

1. Establish one location (not within City Rights-of-Way) for rinsing and washing of concrete and masonry related residue that is away from and does not drain to washes, ditches, street, neighboring properties or vegetation. The construction site must be operated in a manner that minimizes pollutants in the discharges to the storm drainage system. The storm drainage system includes gutters, ditches, pipes and channels. 2. Every attempt shall be made to do no work, or store no materials within City Rights-of-Way (i.e. portable toilets, dumpsters, construction materials or equipment, stockpiles, etc.). In the event that this is not possible, a Right-of-Way permit shall be secured prior to working within, or placing anything within, the Right-of-Way. Call Victor Estrada at 204-7600 to obtain permit.
3. Roadway and shoulder areas within the City of Sedona Rights-of-Way that are damaged during construction shall be repaired and restored, in a timely manner, by the permit applicant.
4. Revisions must be approved by the Engineer Of Record in writing prior to Building Safety Review.
5. Applicant is required to provide Contractor information once one has been chosen.

08/23/11

FIELD INSPECTION RECORD

TO BE POSTED ON JOB SITE AT ALL TIMES
FOR INSPECTIONS, CALL 282-3268 PRIOR TO 7 A.M.

B11605

Owner / Tenant: ARIZONA WATER COMPANY
Contractor: TBD
Project Address: 2645 LYRIC DRIVE SEDONA AZ 86336

	DATE	REMARKS		BY:
PRE-CONST./SETBACK				
FOUNDATIONS: REINFORCEMENT UFER/GE | DATE | BY				
MASONRY/CONCRETE WALLS/BOND BMS.				
UNDERSLAB			PRESS TEST	
FRAMING				
ROOF SHEATHING				
WALL SHEATHING				
INSULATION				
VAPOR BARRIER				
EXTERIOR LATH				
PLUMBING TOP-OUT			PRESS TEST	
INTERIOR GAS TEST			PRESS TEST	
ELECTRICAL ROUGH-IN				
MECHANICAL ROUGH-IN				
DRYWALL FASTENERS				
SEWER LINE				PRESS TEST
GAS YARD LINE			PRESS TEST	
TEMP. ELEC. SERVICE				

BUILDING	DATE	BY	ENGINEERING	DATE	BY
ZONING	DATE	BY	FIRE DEPARTMENT	DATE	BY
SWIMMING POOL PREGUNITE/ELEC.	DATE	BY	BARRIERS	DATE	BY

NOTE:

FINAL INSPECTION CANNOT BE RECORDED OR C OF O ISSUED UNTIL ALL APPLICABLE DIVISIONS HAVE SIGNED THE DEPARTMENT INSPECTION RECORD.

REMARKS:

HOW TO SCHEDULE AN INSPECTION

To schedule an inspection, the applicant must have a valid, issued building permit. When scheduling an inspection, be sure the work is ready for inspection. A $50 reinspection fee will be charged if the work is not ready or previously requested corrections are not made.

The instructions are as follows:
For same day inspection, the applicant must call **before** 7:00 am on the desired day. Call **(928) 282-3268** and leave the following information:

1. **Permit Number**: This number will being with a **B** and please include any dashes, alpha characters or decimal numbers. **Examples: B10234**

2. **Type of Inspection**: Please state what specific inspection you are requesting.
Examples: Footing, Grout, Frame/Combo, Tenant Occupancy or Final

3. Please state the **Date** the inspection is desired.

4. State whether you prefer an A.M. or P.M. inspection: **A.M. inspections run from 8:00am to 12:00pm and P.M. inspections run from 12:00pm to 4:00pm.**

**Please note framing inspections usually take place in the afternoon.

You may call (928) 282-1154 to verify your inspection request was received and scheduled.

ARIZONA WATER COMPANY

HARMONY HILLS WELLS NO. 5 & 12
ARSENIC REMOVAL FACILITY
2645 LYRIC DRIVE, SEDONA, AZ 86336

PROJECT NO. 1-4814
OCTOBER 2011

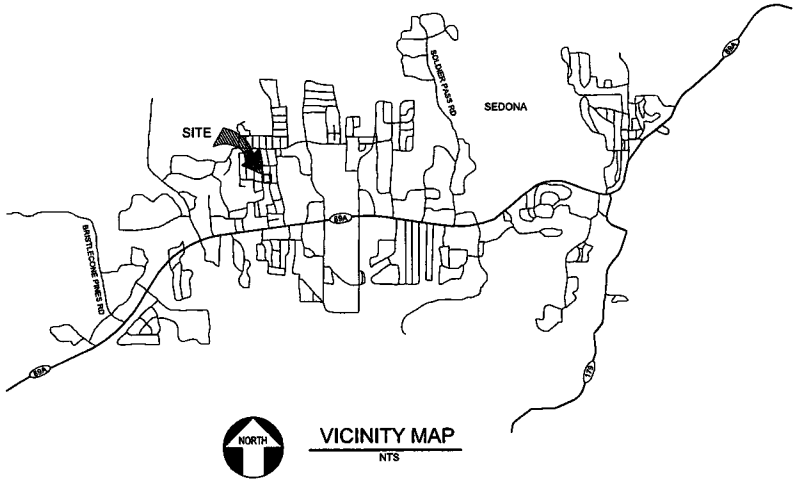

NORTH

VICINITY MAP
NTS

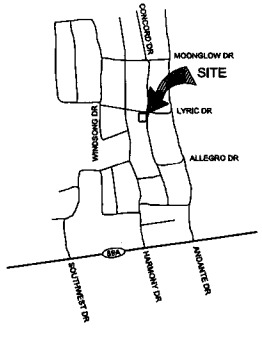

NORTH

PROJECT LOCATION MAP
NTS

ARIZONA WATER COMPANY - APPROVAL	
ENGINEERING	
BY:	DATE:
OPERATIONS	
BY:	DATE:

OWNER
ARIZONA WATER COMPANY
3805 N Black Canyon Hwy
Phoenix, AZ 85015

Phone: 602-240-6860
Fax: 602-294-2189

Contact: Andrew Haas

ENGINEER
WATERWORKS ENGINEERS
8840 E Chaparral Road, Suite 280
Scottsdale, AZ 85250

Phone: (480) 661-1742
Fax: (480) 661-1743

Contact: Ben Lee, P.E.

ARIZONA WATER COMPANY

CALL TWO WORKING DAYS BEFORE YOU DIG
602-263-1100
1-800-STAKE-IT
(OUTSIDE MARICOPA COUNTY)

JOHN H. MATTA 35512 — Expires 3-31-14

BENJAMIN W. LEE 71596 — Expires 3-31-14

VERIFY SCALE
BAR IS ONE INCH ON ORIGINAL DRAWING
IF NOT ONE INCH ON THIS SHEET, ADJUST SCALES ACCORDINGLY

DESIGN JAC
DRAWN RLC
CHECKED DWA
APPROVED JHM

WATERWORKS ENGINEERS
8840 E Chaparral Rd, Suite 280 • Scottsdale, AZ • 480-661-1742

ARIZONA WATER COMPANY
HARMONY HILLS WELLS NO 5 & 12
ARSENIC REMOVAL FACILITY

GENERAL
COVER SHEET

DATE
OCTOBER 2011
PROJECT NUMBER
11-027
DRAWING NUMBER
G-001
SHEET - OF -
SCALE: 1:1

REUSE OF DOCUMENTS: THIS DOCUMENT, AND THE IDEAS AND DESIGNS INCORPORATED HEREIN, AS AN INSTRUMENT OF PROFESSIONAL SERVICE, IS THE PROPERTY OF WATER WORKS ENGINEERS, LLC. AND IS NOT TO BE USED, IN WHOLE OR IN PART, FOR ANY OTHER PROJECT WITHOUT THE WRITTEN AUTHORIZATION OF WATER WORKS ENGINEERS, LLC.

FILENAME: S:\CAD\Projects\11-027 AWC Harmony Hills\Drawings\Deliverables\1027D-G001.dgn
PLOT DATE: 10/12/2011
PLOT TIME: 10:12:40 AM

DRAWING INDEX

SHEET NUMBER	DRAWING NUMBER	TITLE
		GENERAL
1	G-001	COVER SHEET
2	G-002	DRAWING INDEX AND NOTES
3	G-003	ABBREVIATIONS
4	G-004	STANDARD DESIGNATIONS
5	G-005	LEGEND
6	G-006	PROCESS FLOW DIAGRAM 1
7	G-007	PROCESS FLOW DIAGRAM 2
		DEMOLITION
8	D-100	PLAN
		CIVIL
9	C-100	SITE PLAN
10	C-201	ELEVATIONS
		STRUCTURAL
11	S-001	NOTES AND ABBREVIATIONS
12	S-301	DETAILS
		MECHANICAL
13	M-001	ISOMETRIC
14	M-101	SITE PLAN
15	M-201	SECTIONS 1
16	M-202	SECTIONS 2
17	M-301	TYPICAL DETAILS 1
18	M-302	TYPICAL DETAILS 2
		ELECTRICAL
19	E-001	ELECTRICAL SPECIFICATIONS AND LEGEND
20	E-002	SES AND MCC SINGLE LINE DIAGRAM
21	E-003	MCC ELEVATIONS AND PANEL SCHEDULES
22	E-004	ELECTRICAL SITE PLAN
23	E-005	EXISTING WELL PUMP #12 REVISIONS - SCHEMATIC DIAGRAM
24	E-006	EXISTING WELL PUMP #5 REVISIONS - SCHEMATIC DIAGRAM
25	E-007	RECYCLE PUMP SCHEMATIC DIAGRAMS
26	E-008	ELECTRICAL SCHEMATIC AND DETAILS

GENERAL NOTES

1. REFERENCES TO MAG STANDARD DETAILS REFER TO THE "UNIFORM STANDARD DETAILS FOR PUBLIC WORKS CONSTRUCTION" SPONSORED AND DISTRIBUTED BY THE MARICOPA ASSOCIATION OF GOVERNMENTS, LATEST VERSION.
2. ALL WORK UNDER THE PUBLIC WORKS PERMIT SHALL BE DONE IN ACCORDANCE WITH THE MAG SPECIFICATIONS AND DETAILS, UNLESS OTHERWISE STATED ON PLANS. MINIMUM COVER OVER WATER LINES IS 24" FOR PIPE DIAMETERS 2" AND LESS.
3. AWC IS RESPONSIBLE TO OBTAIN AND PAY ALL FEES ASSOCIATED WITH REQUIRED PERMITS.
4. THE ARIZONA WATER COMPANY (AWC) OPERATIONS STAFF SHALL BE NOTIFIED 48 HOURS PRIOR TO STARTING CONSTRUCTION. ACCESS TO SITE IS RESTRICTED. AWC PERSONNEL WILL PROVIDE DAILY ACCESS.
5. ACCEPTANCE OF THE COMPLETED IMPROVEMENTS WILL NOT BE GIVEN UNTIL RED LINE DRAWINGS "AS-BUILTS" HAVE BEEN GIVEN TO AND APPROVED BY THE ENGINEER.
6. CONTRACTOR SHALL MAINTAIN ACCESSIBILITY TO ALL WATER VALVES FOR AWC PERSONNEL AT ALL TIMES.
7. BACKFILL CONSOLIDATION BY FLOODING OR WATER IS PROHIBITED.
8. NO JOB WILL BE CONSIDERED COMPLETE UNTIL ALL CURBS , PAVEMENT AND SIDEWALKS HAVE BEEN SWEPT CLEAN OF ALL DIRT AND DEBRIS AND ALL DISTURBED SURVEY MONUMENTS REPLACED.
9. ALL EXISTING MONUMENTATION SHALL BE PRESERVED.
10. THE CONTRACTOR WILL UNCOVER ALL EXISTING LINES BEING TIED INTO TO VERIFY THEIR LOCATION , MATERIAL TYPE , AND SIZE PRIOR TO ORDERING FITTINGS. THE CONTRACTOR WILL LOCATE OR HAVE LOCATED ALL EXISTING UNDERGROUND PIPELINES , TELEPHONE AND ELECTRIC CONDUITS , AND STRUCTURES IN ADVANCE OF CONSTRUCTION AND WILL OBSERVE ALL POSSIBLE PRECAUTIONS TO AVOID DAMAGE TO THE SAME.
11. BACKFILLING SHALL NOT BE STARTED UNTIL LINES ARE INSPECTED BY THE ENGINEER AND AWC INSPECTOR (48 HOURS PRIOR NOTIFICATION MUST BE GIVEN).
12. APPROVAL BY THE ENGINEER INDICATES REVIEW FOR GENERAL CONFORMANCE WITH STANDARDS. THIS APPROVAL SHALL NOT PREVENT AWC FROM REQUIRING CORRECTION OF ERRORS OR OMISSIONS OR VIOLATIONS OF ANY LAW OR ORDINANCE.
13. EXISTING UTILITIES AND OTHER FACILITIES SHOWN ON PLANS ARE BASED ON INFORMATION OBTAINED FROM FIELD SURVEY, EXISTING MAPS, AS-BUILTS AND OTHER PLANS WITHIN THE AREA OF THIS PROJECT. THE CONTRACTOR SHALL DETERMINE THE EXACT LOCATION AND/OR ELEVATION OF EXISTING UTILITIES WHICH PERTAIN TO AND MAY AFFECT CONSTRUCTION. NO ADDITIONAL PAYMENT FOR THIS ITEM WILL BE ALLOWED.
14. AN APPROVED SET OF PLANS SHALL BE ON THE JOBSITE AT ALL TIMES.
15. THE CONSTRUCTION FOREMAN SHALL BE ON THE JOB SITE AT ALL TIMES WHILE CONSTRUCTION ACTIVITIES ARE IN OPERATION.
16. IT IS THE CONTRACTOR'S RESPONSIBILITY TO NOTIFY THE ENGINEER AND AWC BEFORE THE FITTINGS ARE COVERED SO INDEPENDENT "AS-BUILT" MEASUREMENTS MAY BE TAKEN. ANY CHANGES TO THE APPROVED PLANS MUST BE AUTHORIZED BY THE ENGINEER AND AWC BEFORE THE CHANGE IS MADE IN THE FIELD.
17. CONTRACTOR IS RESPONSIBLE TO FOLLOW ALL APPLICABLE GUIDELINES AND RECOMMENDATIONS SET FORTH BY OSHA.
18. THE CONTRACTOR WILL PROVIDE ADEQUATE MEANS FOR CLEANING TRUCKS AND/OR OTHER EQUIPMENT OF MUD PRIOR TO ENTERING PUBLIC STREETS. CONTRACTOR SHALL MAINTAIN ROADS IMPACTED BY CONSTRUCTION ACTIVITIES IN A CLEAN AND DUST FREE CONDITION AT ALL TIMES.
19. CONTRACTOR TO VERIFY EXISTING UTILITIES WHICH MAY CONFLICT WITH CONTRACTOR'S WORK. ANY EXISTING UTILITY LOCATIONS WHICH MAY BE SHOWN ON THE DRAWINGS ARE APPROXIMATE ONLY AND SHALL BE FIELD VERIFIED. THE CONTRACTOR WILL LOCATE OR HAVE LOCATED ALL EXISTING UNDERGROUND PIPELINES, TELEPHONE AND ELECTRIC CONDUITS, AND STRUCTURES IN ADVANCE OF CONSTRUCTION AND WILL OBSERVE ALL POSSIBLE PRECAUTIONS TO AVOID DAMAGE TO SAME.
20. THE CONTRACTOR IS REQUIRED TO CALL THE "BLUE STAKE" CENTER PRIOR TO ANY WORK AND SHALL BE RESPONSIBLE TO MAINTAIN CURRENT "BLUE STAKE" MARKINGS THROUGHOUT CONSTRUCTION.
21. CONTRACTOR IS RESPONSIBLE FOR ALL TEMPORARY EROSION CONTROL MEASURES AS REQUIRED TO COMPLY WITH NPDES AND ARIZONA DEPARTMENT OF ENVIRONMENTAL QUALITY REQUIREMENTS.
22. CONTRACTOR TO COORDINATE INTERFACE OF EXISTING UTILITIES WITH THE APPROPRIATE UTILITY COMPANIES.
23. PROVIDE SEPARATION BETWEEN UTILITIES PER MAG STANDARD SPECIFICATIONS 610.
24. INSTALL NEW PIPELINES AT UNIFORM SLOPE BETWEEN POINTS FOR WHICH ELEVATIONS ARE GIVEN ON THE DRAWINGS.
25. PIPING ROUTING AND DIMENSIONS , AS SHOWN , DO NOT CONSTITUTE DETAILED LAYOUT DRAWINGS. CONTRACTOR TO DETAIL AND DETERMINE EXACT PIPE LENGTHS, FITTINGS AND JOINTS REQUIRED TO INSTALL PIPELINES IN ACCORDANCE WITH THE ROUTING SHOWN ON THE DRAWINGS.
26. COORDINATE BEGINNING OF PIPELINE AND END OF PIPELINE WITH ADJACENT WORK. IF ADJACENT WORK IS COMPLETE, TIE PIPELINE IN AS REQUIRED.
27. ALL MATERIALS IN CONTACT WITH POTABLE WATER SHALL CONFORM TO NATIONAL SANITATION FOUNDATION STANDARDS 60 AND 61.
28. THE FIELD ENGINEER AND AWC SHALL INSPECT AND APPROVE ALL TRENCHING, BEDDING, PIPE INSTALLATION, BACKFILL AND COMPACTION. FIELD ENGINEER AND AWC SHALL INSPECT AND APPROVE ALL PRESSURE TESTING, DISINFECTIONS AND ALL OPERATIONAL SYSTEMS TESTS. BEFORE ACCEPTANCE BY THE OWNER INTO THE WARRANTY PERIOD, ALL PUNCH LIST ITEMS MUST BE 100 PERCENT (100%) COMPLETED, AS GENERATED BY THE AWC AND ENGINEER.
29. CONTRACTOR SHALL PROVIDE SECURE TEMPORARY FENCING DURING THE CONSTRUCTION PHASE OF THE PROJECT.
30. CONTRACTOR SHALL ARRANGE FOR ALL INSPECTIONS REQUIRED BY REGULATORY AGENCIES.
31. ALL FRAMES, COVERS, VALVE BOXES SHALL BE ADJUSTED TO FINISHED GRADE PRIOR TO THE COMPLETION OF CONSTRUCTION.
32. PRESSURE & LEAKAGE TESTING SHALL CONFORM TO AWWA STANDARD SPEC. 5.2, HYDROSTATIC TESTING.
33. METERS - MINIMUM FITTING FREE PIPE DIA. UPSTREAM (UP) & DOWNSTREAM (DN) OF METER PROPELLER - 5 UP & 3DN / MAG - 5UP & 2DN.
34. IDENTIFY ALL ABOVE GROUND PIPING AS PER ADEQ BULLETIN NO. 10 CHAPTER 4.A.1.B. LABEL ALL ABOVE GROUND PIPING WITH DIRECTION OF FLOW ARROWS.
35. PAINT ALL ABOVE GROUND PIPING TO MATCH VESSELS / BACKWASH TANKS / ENCLOSURES.

VERIFY SCALE
BAR IS ONE INCH ON ORIGINAL DRAWING.
IF NOT ONE INCH ON THIS SHEET ADJUST SCALES ACCORDINGLY

DESIGN: JAC
DRAWN: DMV
CHECKED: JFM
APPROVED: JFM

WATERWORKS ENGINEERS
8445 E Chaparral Rd, Suite 280 • Scottsdale, AZ • 480-661-1762

ARIZONA WATER COMPANY
HARMONY HILLS WELLS NO 5 & 12
ARSENIC REMOVAL FACILITY

GENERAL
DRAWING INDEX AND NOTES

Registered Professional Engineer
71590
BENJAMIN W. LEE
ARIZONA U.S.A.
Expires 9-21-14

DATE: OCTOBER 2011
PROJECT NUMBER: 11-027
DRAWING NUMBER: G-002
SHEET - OF -
SCALE: $SCALE$

REUSE OF DOCUMENTS: THIS DOCUMENT, AND THE IDEAS AND DESIGNS INCORPORATED HEREIN, AS AN INSTRUMENT OF PROFESSIONAL SERVICE, IS THE PROPERTY OF WATER WORKS ENGINEERS, LLC. AND IS NOT TO BE USED, IN WHOLE OR IN PART, FOR ANY OTHER PROJECT WITHOUT THE WRITTEN AUTHORIZATION OF WATER WORKS ENGINEERS, LLC.

FILENAME: $FILE$ PLOT DATE: $DATE$ PLOT TIME: $TIME$

ABBREVIATIONS

Abbreviation	Meaning
@	AT
AB	ANCHOR BOLT, AGGREGATE BASE
AC	ASPHALTIC CONCRETE
ACI	AMERICAN CONCRETE INSTITUTE
ADD	ADDITIONAL
ADH AB	ADHESIVE ANCHOR BOLT
ADJ	ADJACENT, ADJUSTABLE
AFF	ABOVE FINISH FLOOR
AFG	ABOVE FINISH GRADE
AHP	AIR: HIGH PRESSURE
AISC	AMERICAN INSTITUTE OF STEEL CONSTRUCTION
AL, ALUM	ALUMINUM
ALP	AIR LOW PRESSURE
ALTN	ALTERNATE
ANSI	AMERICAN NATIONAL STANDARDS INSTITUTE
APPROX	APPROXIMATE
APVD	APPROVED
ARCH, A	ARCHITECTURAL
ARV	AIR RELEASE VALVE
ASTM	AMERICAN SOCIETY FOR TESTING AND MATERIALS
AUTO	AUTOMATIC
AUX	AUXILIARY
AV	AIR/VACUUM ASSEMBLY
AVE	AVENUE
AWG	AMERICAN WIRE GAGE
AWWA	AMERICAN WATER WORKS ASSOCIATION
B	BORING
BC	BEGIN CURVE
BF	BLIND FLANGE; BOTTOM FACE
BFD	BUTTERFLY VALVE DAMPER
BFV	BUTTERFLY VALVE
BLDG	BUILDING
BLM	BUREAU OF LAND MANAGEMENT
BM	BENCH MARK, BEAM
BO	BLOW OFF
BOO	BOTTOM OF OPENING
BOT	BOTTOM
BRG	BEARING
BV	BALL VALVE
BVC	BEGINNING OF VERTICAL CURVE
BYP	BYPASS
C to C, CC	CENTER TO CENTER
C	CHANNEL (BEAM)
CAA/ARV	COMBINATION AIR ADMISSION/ AIR RELEASE VALVE
CARV	COMBINATION AIR RELEASE VALVE
CATH	CATHODIC PROTECTION
CATV	CABLE TELEVISION
CB	CATCH BASIN
CCP	CONCRETE CYLINDER PIPE
CCS	CENTRAL CONTROL SYSTEM
CFM	CUBIC FEET PER MINUTE
CFS	CUBIC FEET PER SECOND
CHEM	CHEMICAL
CI	CAST IRON
CIGC	CAST IRON GROOVED COUPLING
CIMJ	CAST IRON MECHANICAL JOINT
CIP	CAST IRON PIPE
CIRJ	CAST IRON RESTRAINED JOINT
CISP	CAST IRON SOIL PIPE
CJ	CONSTRUCTION JOINT, CONTRACTION JOINT
CLDIP	CEMENT-LINED DUCTILE IRON PIPE
CLG	CEILING
CLR	CLEAR, CLEARANCE
CLSM	CONTROLLED LOW STRENGTH MATERIAL
CL	CENTERLINE
CML, CSP	CONCRETE MORTAR LINED AND COATED STEEL PIPE
CMLSP	CEMENT MORTAR LINED STEEL PIPE
CMP	CORRUGATED METAL PIPE
CMU	CONCRETE MASONRY UNIT
CO	CLEANOUT
COL	COLUMN
COM	COMMUNICATION
COMB	COMBINED
CONC	CONCRETE
CONN	CONNECTION
CONT	CONTINUOUS, CONTINUATION
COORD	COORDINATE
COP.	COPPER
CPLG	COUPLING
CTD	CENTERED
CTR	CENTER
CU FT	CUBIC FOOT
CU IN	CUBIC INCH
CU YD	CUBIC YARD
CULV	CULVERT
CV	CHECK VALVE
°C	CELSIUS
d	PENNY
DBA	DEFORMED BAR ANCHOR
DR	DRAIN
DBL	DOUBLE
DEC	DECANT
DET	DETAIL
DF	DOUGLAS FIR/LARCH
DI	DROP INLET, DUCTILE IRON
DIA	DIAMETER
DIAG	DIAGONAL
DIL	DILUTE
DIM	DIMENSION
DIMJ	DUCTILE IRON MECHANICAL JOINT
DIP	DUCTILE IRON PIPE
DIPPL	DUCTILE IRON PIPE, POLYETHYLENE LINED
DIR	DIRECTION
DIST	DISTANCE
DN	DOWN
do	DITTO
DWG	DRAWING
E	EAST, ELECTRIC, ELECTRICAL
EA	EACH
EC	END CURVE
ECC	ECCENTRIC
EF	EACH FACE, EXHAUST FAN
EFL	EFFLUENT
EJ	EXPANSION JOINT
EL	ELEVATION
ELB, ELL	ELBOW
ELC	ELECTRICAL LOAD CENTER
ELEC	ELECTRIC, ELECTRICAL
ENGR	ENGINEER
EO	EMERGENCY OVERFLOW
EQL SP	EQUALLY SPACED
EQPT	EQUIPMENT
ERW	EFFLUENT REUSE WATER
ESA	ENVIRONMENTALLY SENSITIVE AREA
EVC	END OF VERTICAL CURVE
EW	EACH WAY
EWEF	EACH WAY, EACH FACE
EXC	EXCAVATE
EXP	EXPOSED, EXPANSION
EXP JT	EXPANSION JOINT
EXST	EXISTING
FB	FLAT BAR
FC	FLEXIBLE COUPLING
FCA	FLANGED COUPLING ADAPTER
FCO	FLOOR CLEAN OUT
FD	FLOOR DRAIN
FDA	FLOOR DRAIN W/INTEGRAL TRAP
FDN	FOUNDATION
FES	FLARED END SECTION
FEXT	FIRE EXTINGUISHER
FF	FINISH FLOOR
FG	FINISH GRADE
FHY	FIRE HYDRANT
FIG	FIGURE
FL	FLOOR, FLOW LINE
FLG	FLANGE
FLH	FLAT HEAD
FLL	FLOW LINE
FLTR	FILTER
FNSH	FINISH
FOC	FACE OF CONCRETE
FRP	FIBERGLASS REINFORCED PLASTIC
FT	FOOT OR FEET
FTG	FOOTING
FWD	FORWARD
°F	DEGREE FAHRENHEIT
G	GAS
GA	GAGE
GAL	GALLON
GALV	GALVANIZED
GB	GRADE BREAK
GC	GROOVED COUPLING
GCO	GRADE CLEAN OUT
GCF	GROOVED COUPLING FITTING
GE	GROOVED END
GL	GLASS
GPD	GALLONS PER DAY
GPH	GALLONS PER HOUR
GPM	GALLONS PER MINUTE
GRTG	GRATING
GSP	GALVANIZED STEEL PIPE
GV	GATE VALVE
GVL	GRAVEL
GW	GROUND WATER
HD	HUB DRAIN
HDPE	HIGH DENSITY POLYETHLENE PIPE
HDR	HEADER
HDW	HARDWARE
HGT	HEIGHT
HM	HOLLOW METAL
HORIZ	HORIZONTAL
HP	HORSEPOWER
HR	HANDRAIL
HSS	HOLLOW STRUCTURE STEEL
HV	HOSE VALVE
I&C	INSTRUMENTATION & CONTROL
ID	INSIDE DIAMETER
IF	INSIDE FACE
IN	INCH
INFL	INFLUENT
INSTM	INSTRUMENTATION
INSUL	INSULATE, INSULATION
INV	INVERT
JT	JOINT
KIP	THOUSAND POUNDS
KW	KILOWATT
L	LEFT, ANGLE, LENGTH
LAB	LABORATORY
LAT'L	LATERAL
LB	POUNDS
LB/CU FT	POUNDS PER CUBIC FOOT
LF	LINEAR FEET
LG	LONG
LONG	LONGITUDINAL
LP	LOW POINT
LR	LONG RADIUS
MAX	MAXIMUM
MCC	MOTOR CONTROL CENTER
MCJ	MASONRY CONTROL JOINT
MECH	MECHANICAL
MFR	MANUFACTURER
MGD	MILLION GALLONS PER DAY
MH	MANHOLE
MIN	MINIMUM, MINUTE
MISC	MISCELLANEOUS
MJ	MECHANICAL JOINT
MPH	MILES PER HOUR
MSNRY	MASONRY
MSP	MILL STEEL PIPE, MANUAL OF STANDARD PRACTICE
MTL	MATERIAL
MWS	MAXIMUM WATER SURFACE
N	NORTH
NC	NORMALLY CLOSED
NIC	NOT IN CONTRACT
NO	NUMBER, NUMBERING
NPT	NATIONAL PIPE THREAD
NTS	NOT TO SCALE
OC	ON CENTER
OD	OUTSIDE DIAMETER, OVERFLOW DRAIN
OF	OUTSIDE FACE, OVERFLOW
OFR	OVERFLOW RETURN
OG	ORIGINAL GROUND
OHE	OVERHEAD ELECTRIC
OMRF	ORDINARY MOMENT RESISTING FRAME
O TO O	OUT TO OUT
OPNG	OPENING
OZ	OUNCE
PC	POINT OF CURVE
PE	PLAIN END, POLYETHYLENE AND PERMANENT EASEMENT
PENT	PENETRATION
PI	POINT OF INTERSECTION
PJF	PREMOLDED JOINT FILLER
PL	PLATE, PROPERTY LINE
PLYWD	PLYWOOD
POB	POINT OF BEGINNING
PP, P&P	PLAN AND PROFILE, POWER POLE
PPM	PARTS PER MILLION
PRC	POINT OF REVERSE CURVE
PRCST	PRECAST
PREFAB	PREFABRICATED
PRESS	PRESSURE
PRC	POINT OF REVERSE CURVE
PRI	PRIMARY
PROP	PROPERTY
PSF	POUNDS PER SQUARE FOOT
PS	PUMP STATION
PSI	POUNDS PER SQUARE INCH
PSIG	POUNDS PER SQUARE INCH, GAUGE
PT	POINT OF TANGENCY
PV	PLUG VALVE
PVC	POLYVINYL CHLORIDE PLASTIC
PVCGS	POLYVINYL CHLORIDE PLASTIC-GRAVITY SEWER TYPE
PVCW	POLYVINYL CHLORIDE PLASTIC-WATER DISTRIBUTION SERVICE TYPE
PVMT	PAVEMENT
PVT	PRIVATE
PW	POTABLE WATER
R, RAD	RADIUS
RC	REINFORCED CONCRETE
RCP	REINFORCED CONCRETE PIPE
RD	ROAD, ROOF DRAIN
RDCR	REDUCER
REF	REFER OR REFERENCE
REINF	REINFORCED, REINFORCING, REINFORCE
REQD	REQUIRED
RJ	RESTRAINED JOINT
RLS	RUBBER LINED STEEL
RM	ROOM
RMJ	RESTRAINED MECHANICAL JOINT
RO	ROUGH OPENING
R/R	REMOVE AND REPLACE
RST	REINFORCING STEEL
RTN	RETURN
RV	ROOF VENT
RW	RAW WATER
R/W	RIGHT-OF-WAY
S	I-BEAM, SOUTH, SLOPE
SA	SAMPLE
SAT	SUSPENDED ACOUSTIC TILE
SC	SCUM
SCFH	STANDARD CUBIC FEET PER HOUR
SCFM	STANDARD CUBIC FEET PER MINUTE
SCH	SCHEDULE
SD	STORM DRAIN
SEC	SECONDARY
SECT	SECTION
SH	SHEET
SIM	SIMILAR
SLD	SLUDGE
SLP	SLOPE
SOLN	SOLUTION
SP	SPACE OR SPACES
SPD	SUMP PUMP DRAIN
SPEC	SPECIFICATIONS
SPLY	SUPPLY
SQ	SQUARE
SQ FT	SQUARE FOOT
SQ IN	SQUARE INCH
SS	SANITARY SEWER
SSH	SAFETY SHOWER
SST	STAINLESS STEEL
STA	STATION
STD	STANDARD
STIF	STIFFENER
STL	STEEL, STEEL PIPE
STLS	STEEL PIPE (SPECIAL)
STR	STRAIGHT
STRL	STRUCTURAL
STRUCT	STRUCTURE
SUBFL	SUBFLOOR
SUSP	SUSPEND
SYMM	SYMMETRICAL
T	TANGENT, TELEPHONE LINE
TBG	TUBING
T&B	TOP AND BOTTOM
TC	TOP OF CURB, TOP OF CONCRETE
TCE	TEMPORARY CONSTRUCTION EASEMENT
TDH	TOTAL DYNAMIC HEAD
TECH	TECHNICAL
TEL	TELEPHONE
TEMP	TEMPORARY, TEMPERATURE
TF	TOP FACE
T&G	TONGUE AND GROOVE
THD	THREAD
THK	THICK
TP	TURNING POINT, TEST PIT
TRANS	TRANSITION
TRANSV	TRANSVERSE
TS	TUBE STEEL
TST	TOP OF STEEL
TT	THRUST TIE
TW	TOP OF WALL
TYP	TYPICAL
t, T	THICKNESS
UBC	UNIFORM BUILDING CODE
UD	UNDERDRAIN
UG	UNDERGROUND
UH	UNIT HEATER
UNK	UNKNOWN
V	VENT, VOLT, VALVE
VAC	VACUUM
VAR	VENT ACID RESISTANT
VC	VERTICAL CURVE
VERT	VERTICAL
VPI	VERTICAL POINT OF INTERSECTION
VPS	VENEER PLASTER SYSTEM
VTR	VENT THRU ROOF
W/	WITH
W	WIDE FLANGE (BEAM), WEST, WATER
WC	WATER CLOSET
WD	WOOD
WH	WATER HEATER
WM	WATER METER
WR	WATER RESISTANT
WS	WATER SURFACE, WATER STOP
W SH ST	WEATHERING SHEET STEEL
WSP	WELDED STEEL PIPE
WT	WATER TIGHT
WTR	WATER
WW	WASHWATER
WWF	WELDED WIRE FABRIC
YD	YARD

NOTES:

1. FOR ELECTRICAL AND INSTRUMENTATION ABBREVIATIONS, SEE ELECTRICAL AND INSTRUMENTATION DRAWINGS.
2. CONTACT THE ENGINEER FOR ABBREVIATIONS NOT LISTED.
3. THIS IS A STANDARD LEGEND SHEET, THEREFORE, SOME SYMBOLS OR ABBREVIATIONS MAY APPEAR ON THIS SHEET AND MAY NOT BE UTILIZED ON THIS PROJECT.

VERIFY SCALE
BAR IS ONE INCH ON ORIGINAL DRAWING.
0 1"
IF NOT ONE INCH ON THIS SHEET, ADJUST SCALES ACCORDINGLY.

DESIGN JAC
DRAWN DNV
CHECKED BWL
APPROVED JHM

WATERWORKS
E N G I N E E R S
8840 E Chaparral Rd, Suite 280 • Scottsdale, AZ • 480-661-1742

ARIZONA WATER COMPANY
HARMONY HILLS WELLS NO 5 & 12
ARSENIC REMOVAL FACILITY

GENERAL
ABBREVIATIONS

DATE OCTOBER 2011
PROJECT NUMBER 11-027
DRAWING NUMBER G-003
SHEET - OF -
SCALE: 1:1

FILENAME: S:\CAD\Projects\11-027 AWC Harmony Hills\Drawings\Deliverables\1027D-G003.dgn
PLOT DATE: 10/12/2011
PLOT TIME: 10:12:46 AM

DISCIPLINE

LETTER	DISCIPLINE
G	GENERAL
D	DEMOLITION
C	CIVIL YARD
A	ARCHITECTURAL
S	STRUCTURAL
M	MECHANICAL
H	HEATING, VENTILATION AND COOLING
P	PLUMBING
E	ELECTRICAL
N	INSTRUMENTATION

DRAWING NUMBERING

AREA NUMBER	AREA DESCRIPTION
00	GENERAL / OVERALL
10	PLANS
20	SECTIONS
30	DETAILS
40	ELEVATIONS
50	SCHEDULES

DRAWING NUMBER

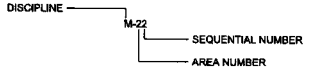

SECTION

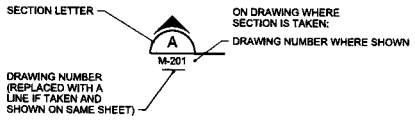

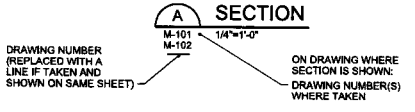

DETAIL

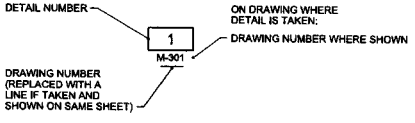

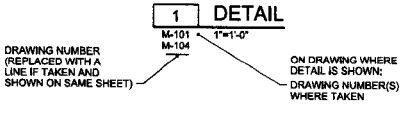

STANDARD DETAIL

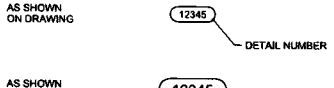

NOTES:

1. STANDARD DETAIL CALLOUTS ARE SHOWN TO INDICATE DETAIL REQUIRED AT SPECIFIC LOCATIONS. DETAILS ARE NOT CALLED OUT AT ALL LOCATIONS. WHERE A STANDARD DETAIL CALLOUT IS NOT SHOWN, THE CONTRACTOR SHALL USE THE STANDARD DETAIL MOST APPLICABLE AND CONSISTENT WITH OTHER WORK UNDER THIS CONTRACT.

STANDARD VALVE AND OPERATOR

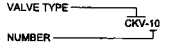

UNIQUE VALVE AND OPERATOR

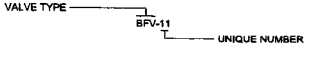

EQUIPMENT DESIGNATION

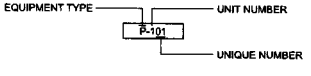

LINE TYPE APPEARANCE

BLACK	NEW 'ON' DISCIPLINE
LIGHT OR MEDIUM GRAY OR SCREENED	EXISTING 'ON' OR 'OFF' DISCIPLINE
DARK GRAY	NEW 'OFF' DISCIPLINE

GENERAL SYMBOLOGY

	STRUCTURE OR EQUIPMENT TO BE REMOVED OR DEMOLISHED
XXXX	LINE OF REMOVAL OR DEMOLITION

PROCESS FLOW STREAM IDENTIFIERS

PIPING SYSTEM ABBREVIATION	PIPING SYSTEM DESCRIPTION
BW	BACKWASH
DR	DRAIN
GW	GROUND WATER
OF	OVERFLOW
SHC OR NaOCl	SODIUM HYPOCHLORITE
REC	RECYCLED WATER
PW	POTABLE WATER
V	VENT

EQUIPMENT TYPE IDENTIFIERS

ABBREVIATION	DESCRIPTION
SMX	STATIC MIXER
LE	LEVEL ELEMENT
BAV	BALL VALVE
CKV	CHECK VALVE
ARV	AIR RELEASE VALVE
FE	FLOW ELEMENT
GAV	GATE VALVE
RP	RECYCLE PUMP
BFV	BUTTERFLY VALVE
IQ	INJECTION QUILL
T	TANK
CV	CONTROL VALVE

VERIFY SCALE
BAR IS ONE INCH ON ORIGINAL DRAWING.
IF NOT ONE INCH ON THIS SHEET, ADJUST SCALES ACCORDINGLY.

DESIGN JAC
DRAWN DNV
CHECKED BWL
APPROVED JHM

WATERWORKS ENGINEERS
8840 E Chaparral Rd, Suite 260 • Scottsdale, AZ • 480-661-1742

ARIZONA WATER COMPANY
HARMONY HILLS WELLS NO.5 & 12
ARSENIC REMOVAL FACILITY

GENERAL
STANDARD DESIGNATIONS

DATE: OCTOBER 2011
PROJECT NUMBER: 11-027
DRAWING NUMBER: G-004
SHEET - OF -
SCALE: 1:1

REUSE OF DOCUMENTS: THIS DOCUMENT, AND THE IDEAS AND DESIGNS INCORPORATED HEREIN, AS AN INSTRUMENT OF PROFESSIONAL SERVICE, IS THE PROPERTY OF WATER WORKS ENGINEERS, LLC. AND IS NOT TO BE USED, IN WHOLE OR IN PART, FOR ANY OTHER PROJECT WITHOUT THE WRITTEN AUTHORIZATION OF WATER WORKS ENGINEERS, LLC.

FILENAME: S:\CAD\Projects\11-027 AWC Harmony Hills\Drawings\Deliverables\1027D-G004.dgn
PLOT DATE: 10/12/2011
PLOT TIME: 10:12:47 AM

PIPE AND FITTING SYMBOLS

DOUBLE LINE	SINGLE LINE	
		EXISTING PIPE (SCREENED)
		NEW PIPE
		EXISTING PIPE TO BE ABANDONED
		EXISTING PIPE TO BE REMOVED
		BALL JOINT
		FLANGE COUPLING ADAPTER
		FLEXIBLE COUPLING
		FLEXIBLE COUPLING WITH THRUST TIES
		DISMANTLING JOINT
		STEEL BELLOWS EXPANSION JOINT
		ELASTOMER BELLOWS EXPANSION JOINT
		ELBOW - 90 DEGREE
		ELBOW UP - 90 DEGREE
		ELBOW DOWN - 90 DEGREE
		ELBOW - 45 DEGREE
		ELBOW UP - 45 DEGREE
		ELBOW DOWN - 45 DEGREE
		TEE
		TEE UP
		TEE DOWN
		CROSS
		LATERAL
		LATERAL UP
		LATERAL DOWN
		REDUCER - CONCENTRIC

PIPE AND FITTING SYMBOLS

DOUBLE LINE	SINGLE LINE	
		REDUCER - ECCENTRIC
		UNION
		BLIND FLANGE
		PLUG
		CAP

VALVE SYMBOLS

DOUBLE LINE	SINGLE LINE	
		GATE
K	K	KNIFE GATE
		BUTTERFLY
		GLOBE
		BALL
V	V	VEE BALL
		PLUG OR COCK
SEAT PORT	SEAT PORT	ECCENTRIC PLUG WITH REQUIRED SEAT LOCATION
FP	FP	FULL PORT PLUG
		NEEDLE
		DIAPHRAGM
		FULL PORT PLUG
		SWING CHECK
		DOUBLE DISK OR SILENT CHECK
		BALL CHECK
	HB	HOSE VALVE
	X	NON FREEZE HOSE VALVE X=NUMBER IN SPECIFICATIONS
	X	NON FREEZE HOSE VALVE WITH HOSE RACK X=NUMBER IN SPECIFICATIONS
	SA	SAMPLE
		MUD
		PRESSURE RELIEF
		AIR AND OR VACUUM RELEASE
	REGULATED SIDE	PRESSURE CONTROL
		MULTI-PORT VALVE ARROWS INDICATE FLOW PATTERN. SEAT PORTS ARE IMPLIED BY INDICATED FLOW PATTERN. BALL VALVE SHOWN. FOR OTHER VALVE TYPES, APPROPRIATE VALVE SYMBOL SHOWN.
		FIRE HYDRANT
		CATHODIC PROTECTION TEST STATION
		CATHODIC PROTECTION ANODE

FLOW METERS

DOUBLE LINE	SINGLE LINE	
		MAGMETER
		PROPELLER METER
		INSERTION METER

PUMPS

	METERING
	DIAPHRAGM
	CENTRIFUGAL
	PERISTALTIC

MIXERS

	STATIC MIXER

ACTUATORS

P	PNUEMATIC
M	MOTORIZED
S	SOLENOID

MISCELLANEOUS PIPING SYMBOLS

	STRAINER
	SIGHT GLASS
	FLEXIBLE (ELASTOMER) PIPE CONNECTION
	GAUGE WITH COCK
	THERMOMETER
	ROTAMETER
A	GALVANIC ANODE
XX	AIR SET XX = SUPPLY PRESSURE - PSIG
PS 26-1-2	TYPICAL INSTRUMENT SYMBOL (SEE I&C LEGEND)
	DRAIN
	DOUBLE CONTAINMENT PIPE
	RUPTURE DISK

INSTRUMENTATION SYMBOLS

SYMBOL	DESCRIPTION
PS	PRESSURE SWITCH
PSH	PRESSURE SWITCH HIGH
PI	PRESSURE INDICATOR
LSL	LOW LEVEL SWITCH
LSLL	LEVEL SWITCH LOW LOW
LSH	LEVEL SWITCH HIGH
LSHH	LEVEL SWITCH HIGH HIGH
DPI	DIFFERENTIAL PRESSURE INDICATOR
FS	FLOW SWITCH
FM	FLOW METER

PIPING DESIGNATION

DOUBLE LINE

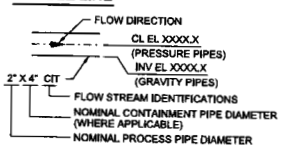

SINGLE LINE

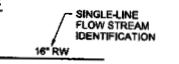

VALVE DESIGNATIONS

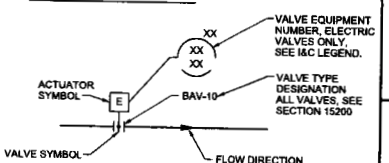

NOTES

1. ELECTRIC VALVE SHOWN, MANUAL VALVE SIMILAR.

NOTES

1. ONLY FLANGED END CONNECTIONS ARE SHOWN HERE FOR DOUBLE LINE FITTINGS. FITTINGS WITH OTHER END PATTERNS ARE SHOWN SIMILARLY ON THE CONSTRUCTION DRAWINGS. ALSO SEE PIPING SPECIFICATIONS AND THE PIPING SCHEDULE.
2. SYMBOLS SHOWN HERE FOR SINGLE LINE FITTINGS ARE GENERIC ONLY. REFER TO PIPING SPECIFICATIONS FOR SPECIFIC END CONNECTIONS FOR SINGLE LINE PIPE AND FITTINGS.

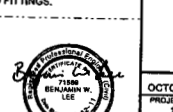

VERIFY SCALE
BAR IS ONE INCH ON ORIGINAL DRAWING.
IF NOT ONE INCH ON THIS SHEET, ADJUST SCALES ACCORDINGLY.

DESIGN	DS
DRAWN	DS
CHECKED	BL
APPROVED	JHM

WATERWORKS ENGINEERS
8040 E Cheyenne Rd, Suite 260 • Scottsdale, AZ • 480-661-1762

ARIZONA WATER COMPANY
HARMONY WELLS NO 5 & 12
ARSENIC REMOVAL FACILITY

GENERAL
LEGEND

DATE	OCTOBER 2011
PROJECT NUMBER	11-027
DRAWING NUMBER	G-005
SHEET	- OF -
SCALE:	1:1

REUSE OF DOCUMENTS: THIS DOCUMENT, AND THE IDEAS AND DESIGNS INCORPORATED HEREIN, AS AN INSTRUMENT OF PROFESSIONAL SERVICE, IS THE PROPERTY OF WATER WORKS ENGINEERS, LLC. AND IS NOT TO BE USED, IN WHOLE OR IN PART, FOR ANY OTHER PROJECT WITHOUT THE WRITTEN AUTHORIZATION OF WATER WORKS ENGINEERS, LLC.

FILENAME: S:\CAD\Projects\11-027 AWC Harmony Hills\Drawings\Deliverables\1027D-G005.dgn
PLOT DATE: 10/12/2011
PLOT TIME: 10:12:47 AM

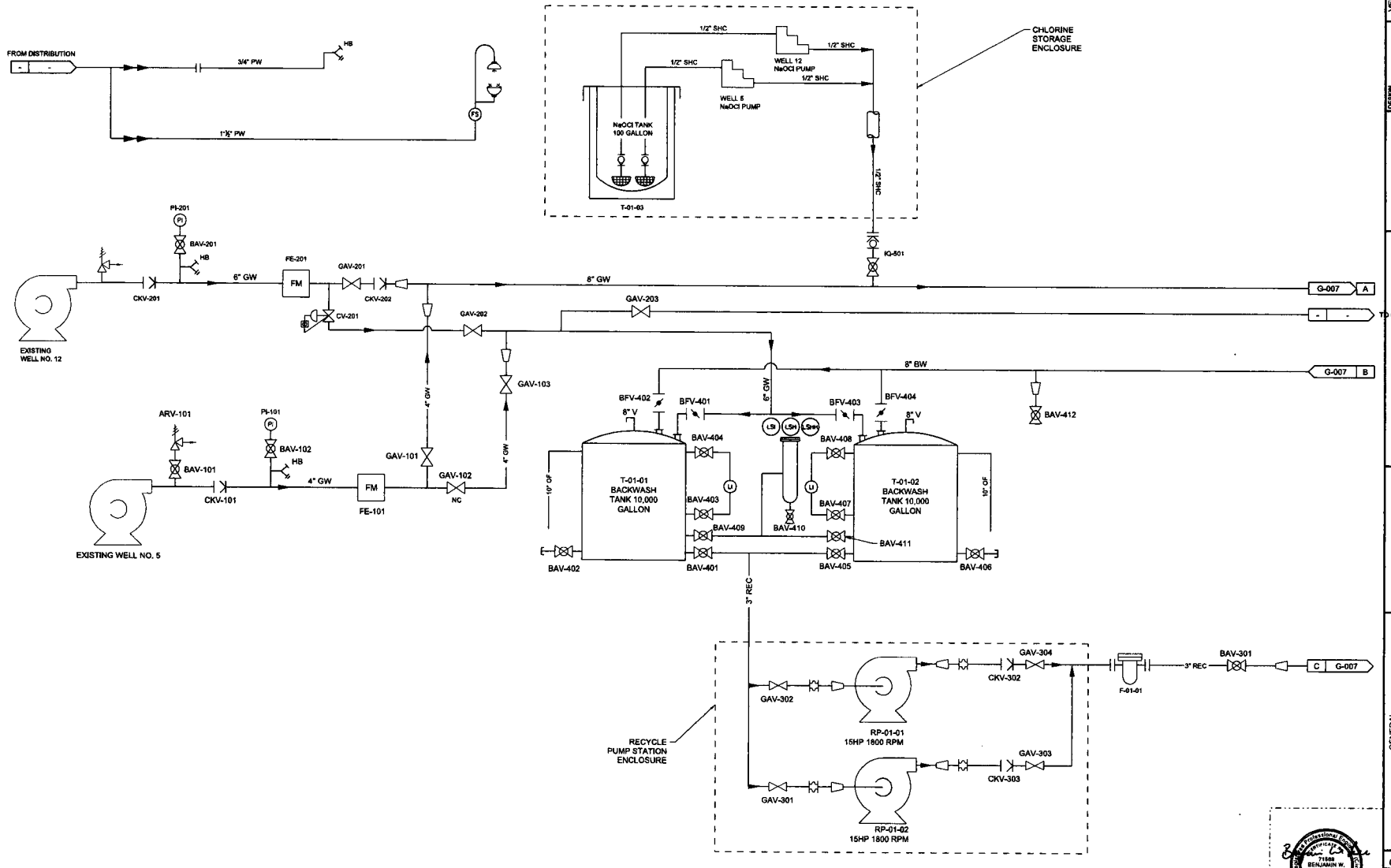

VERIFY SCALE
BAR IS ONE INCH ON ORIGINAL DRAWING.
IF NOT ONE INCH ON THIS SHEET ADJUST SCALES ACCORDINGLY

DESIGN MJC
DRAWN RLC
CHECKED BWL
APPROVED JHM

WATERWORKS ENGINEERS
8040 E Cholla Rd, Suite 190 • Scottsdale, AZ • 480-951-1742

ARIZONA WATER COMPANY
HARMONY HILLS WELLS NO 5 & 12
ARSENIC REMOVAL FACILITY

GENERAL
PROCESS FLOW DIAGRAM 1

DATE
OCTOBER 2011
PROJECT NUMBER
11-027
DRAWING NUMBER
G-006
SHEET - OF -
SCALE: 1:1

71588
BENJAMIN W. LEE
Date Signed 10-12-11
ARIZONA U.S.A.
Expires 3-31-14

REUSE OF DOCUMENTS: THIS DOCUMENT, AND THE IDEAS AND DESIGNS INCORPORATED HEREIN, AS AN INSTRUMENT OF PROFESSIONAL SERVICE, IS THE PROPERTY OF WATER WORKS ENGINEERS, LLC. AND IS NOT TO BE USED, IN WHOLE OR IN PART, FOR ANY OTHER PROJECT WITHOUT THE WRITTEN AUTHORIZATION OF WATER WORKS ENGINEERS, LLC.

FILENAME: S:\CAD\Projects\11-027 AWC Harmony Hills\Drawings\Deliverables\1027D-G006.dgn PLOT DATE: 10/12/2011 PLOT TIME: 10:12:48 AM

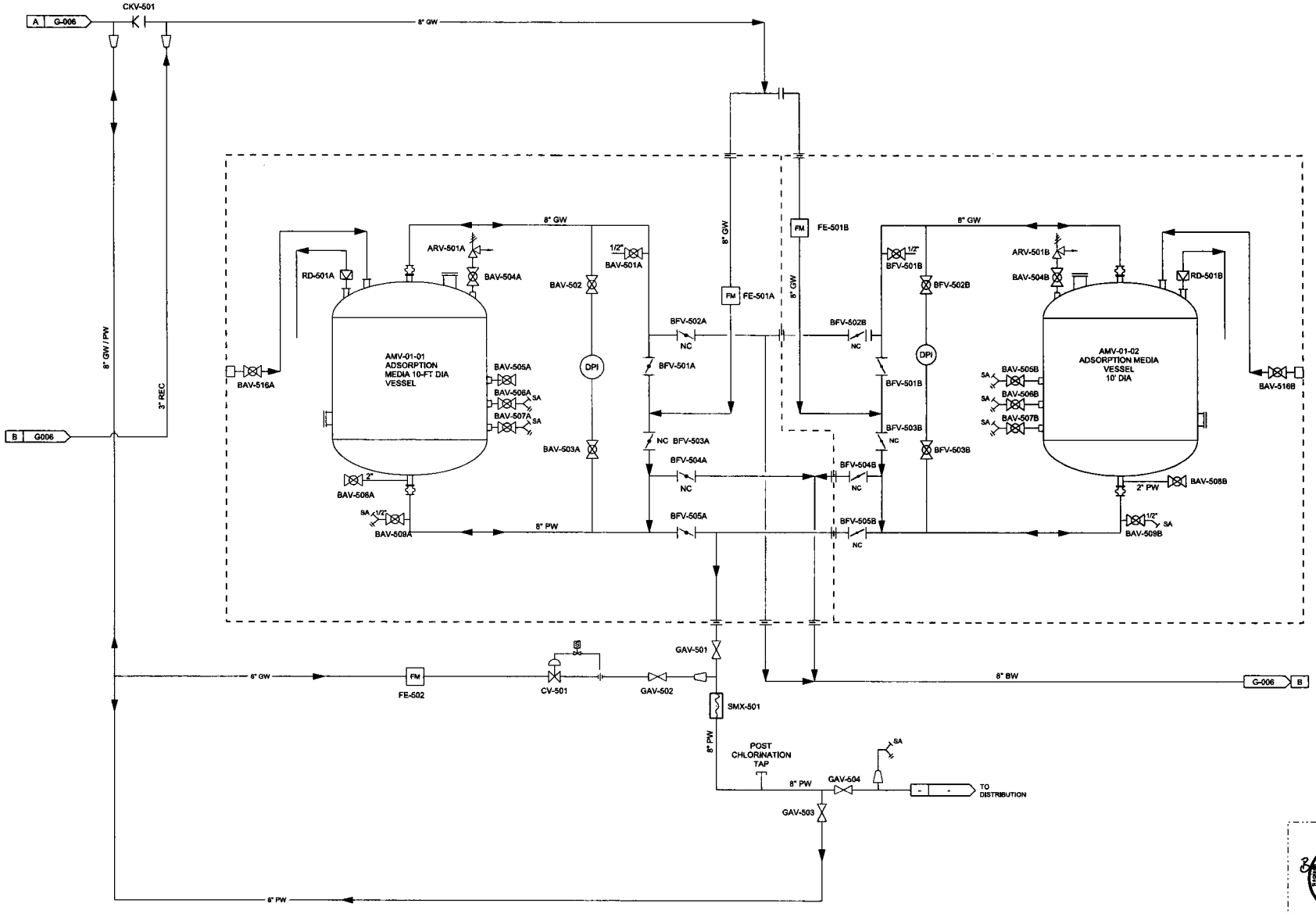

VERIFY SCALE
BAR IS ONE INCH ON ORIGINAL DRAWING. IF NOT ONE INCH ON THIS SHEET, ADJUST SCALES ACCORDINGLY.

DESIGN JAC
DRAWN RLC
CHECKED BWL
APPROVED JHM

WATERWORKS ENGINEERS
8640 E Chaparral Rd, Suite 290 • Scottsdale, AZ • 480-991-1742

ARIZONA WATER COMPANY
HARMONY HILLS WELLS NO 5 & 12
ARSENIC REMOVAL FACILITY

GENERAL
PROCESS FLOW DIAGRAM 2

DATE
OCTOBER 2011
PROJECT NUMBER
11-027
DRAWING NUMBER
G-007
SHEET - OF -

Registered Professional Engineer
71806
BENJAMIN W. LEE
ARIZONA, U.S.A.
Expires 6-31-14

REUSE OF DOCUMENTS: THIS DOCUMENT, AND THE IDEAS AND DESIGNS INCORPORATED HEREIN, AS AN INSTRUMENT OF PROFESSIONAL SERVICE, IS THE PROPERTY OF WATER WORKS ENGINEERS, LLC. AND IS NOT TO BE USED, IN WHOLE OR IN PART, FOR ANY OTHER PROJECT WITHOUT THE WRITTEN AUTHORIZATION OF WATER WORKS ENGINEERS, LLC.

FILENAME: S:\CAD\Projects\11-027 AWC Harmony Hills\Drawings\Deliverables\1027D-G007.dgn PLOT DATE: 10/12/2011 PLOT TIME: 10:12:48 AM SCALE: 1:1

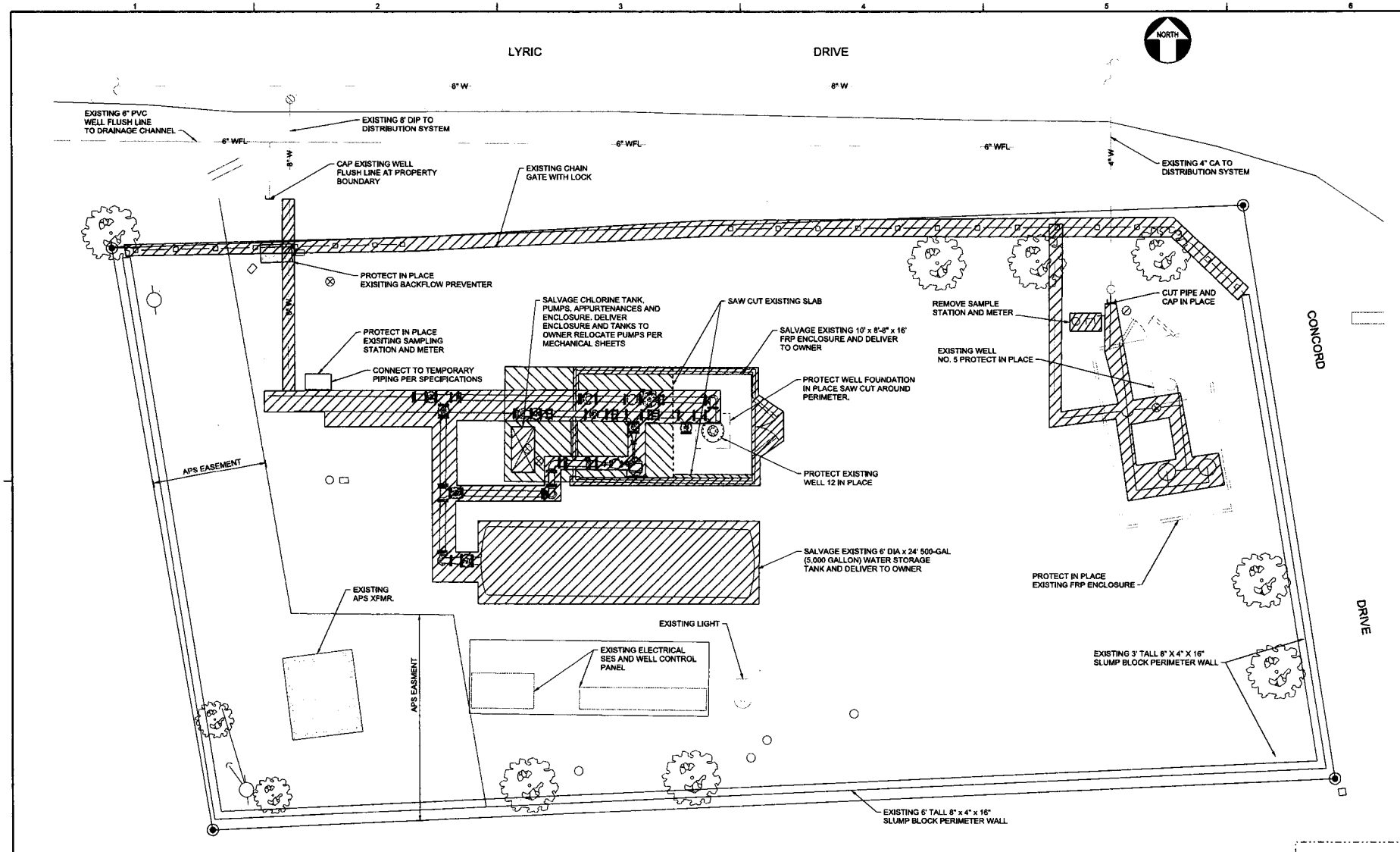

PLAN

1/4"=1'-0"

4 0 4 8 FEET

SCALE 1/4"=1'-0"

VERIFY SCALE
BAR IS ONE INCH ON ORIGINAL DRAWING.
IF NOT ONE INCH ON THIS SHEET ADJUST SCALES ACCORDINGLY.

DESIGN JAC
DRAWN RLC
CHECKED BWL
APPROVED JHM

WATERWORKS ENGINEERS
8840 E Chaparral Rd, Suite 280 • Scottsdale, AZ • 480-951-1742

ARIZONA WATER COMPANY
HARMONY HILLS WELLS NO 5 & 12
ARSENIC REMOVAL FACILITY

DEMOLITION
PLAN

71598 BENJAMIN W. LEE
ARIZONA U.S.A.
Expires 3-31-14

DATE OCTOBER 2011
PROJECT NUMBER 11-027
DRAWING NUMBER D-100
SHEET - OF -
SCALE: 1:48

REUSE OF DOCUMENTS: THIS DOCUMENT, AND THE IDEAS AND DESIGNS INCORPORATED HEREIN, AS AN INSTRUMENT OF PROFESSIONAL SERVICE, IS THE PROPERTY OF WATER WORKS ENGINEERS, LLC. AND IS NOT TO BE USED, IN WHOLE OR IN PART, FOR ANY OTHER PROJECT WITHOUT THE WRITTEN AUTHORIZATION OF WATER WORKS ENGINEERS, LLC.

FILENAME: S:\CAD\Projects\11-027 AWC Harmony Hills\Drawings\Deliverables\1027D-D100.dgn PLOT DATE: 10/12/2011 PLOT TIME: 10:12:48 AM

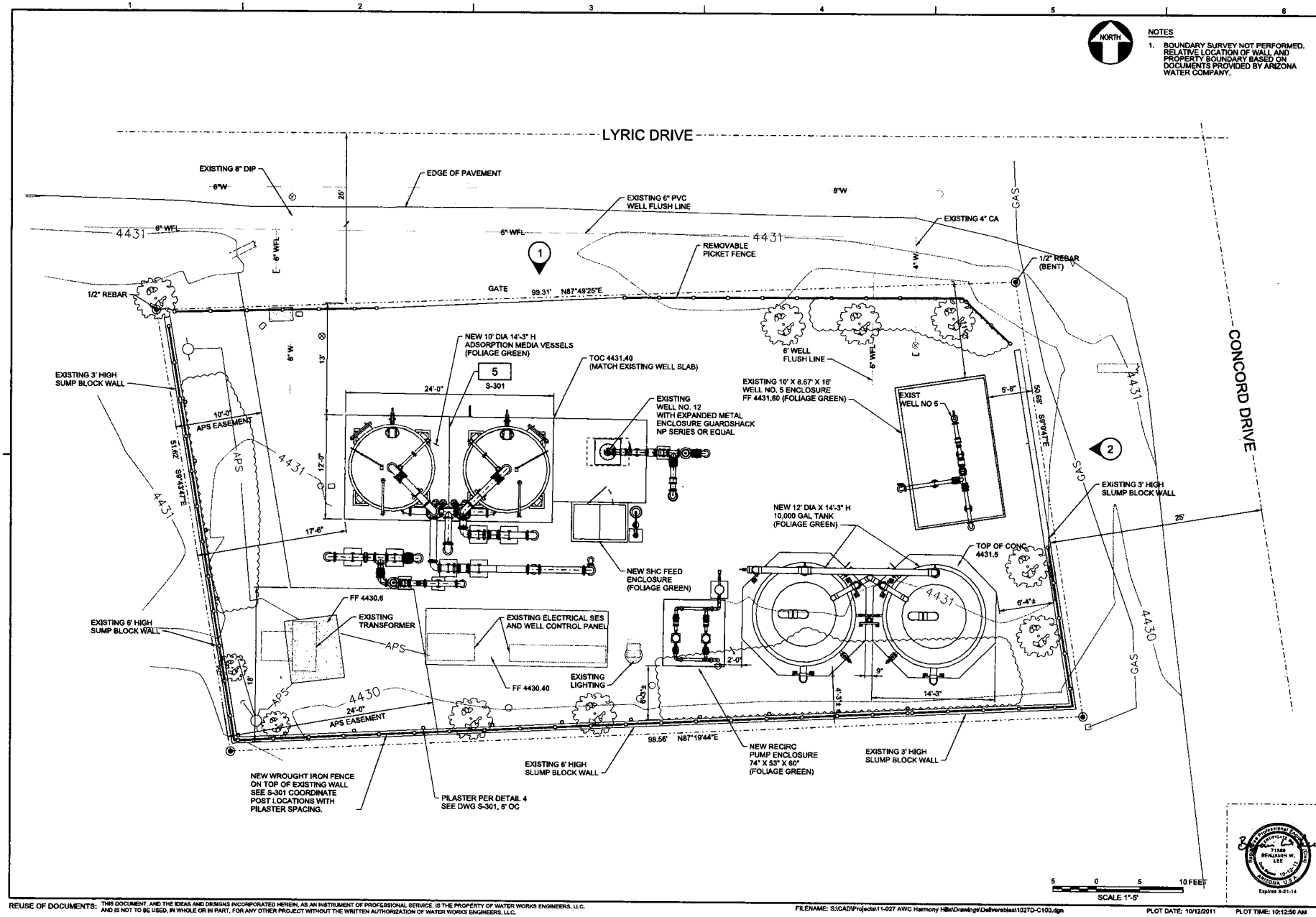

VERIFY SCALE
BAR IS ONE INCH ON ORIGINAL DRAWING. IF NOT ONE INCH ON THIS SHEET, ADJUST SCALES ACCORDINGLY

DESIGN JAK
DRAWN RLCAMP
CHECKED XJM
APPROVED JHM

WATERWORKS ENGINEERS
8640 E Chaparral Rd, Suite 200 • Scottsdale, AZ • 480-991-1142

ARIZONA WATER COMPANY
HARMONY HILLS WELLS NO 5 & 12
ARSENIC REMOVAL FACILITY

CIVIL
SITE PLAN

DATE OCTOBER 2011
PROJECT NUMBER 11-027
DRAWING NUMBER C-100
SHEET - OF -
SCALE: 1:50

REGISTERED PROFESSIONAL ENGINEER 71809 BENJAMIN W. LEE ARIZONA U.S.A. Expires 3-31-14

REUSE OF DOCUMENTS: THIS DOCUMENT, AND THE IDEAS AND DESIGNS INCORPORATED HEREIN, AS AN INSTRUMENT OF PROFESSIONAL SERVICE, IS THE PROPERTY OF WATER WORKS ENGINEERS, LLC. AND IS NOT TO BE USED, IN WHOLE OR IN PART, FOR ANY OTHER PROJECT WITHOUT THE WRITTEN AUTHORIZATION OF WATER WORKS ENGINEERS, LLC.

FILENAME: S:\CAD\Projects\11-027 AWC Harmony Hills\Drawings\Deliverables\1027D-C100.dgn PLOT DATE: 10/12/2011 PLOT TIME: 10:12:50 AM

NOTES

* ELEVATION DIMENSIONS SHOWN REFERENCE APPROXIMATE EXISTING GRADE FROM OUTSIDE THE PERIMETER WALL

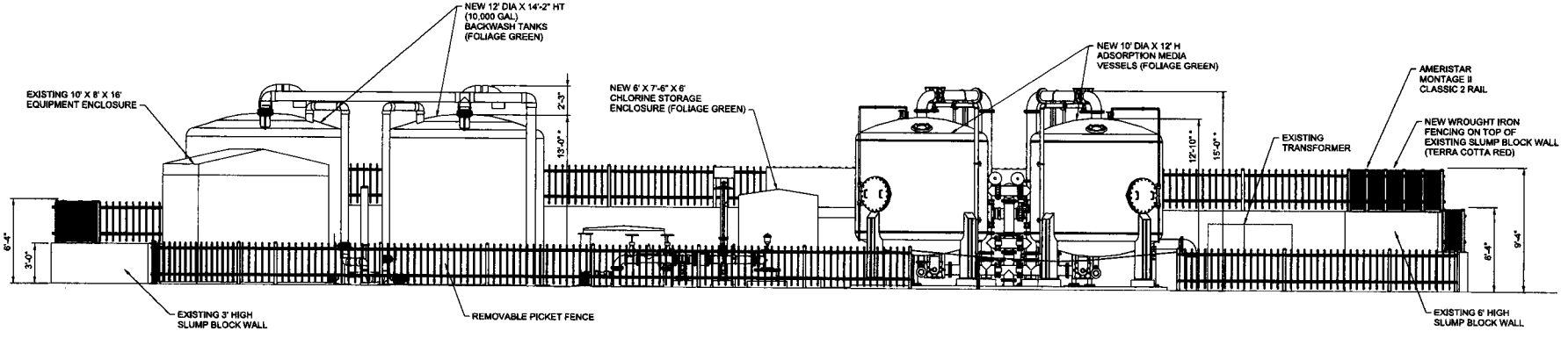

1 NORTH ELEVATION
1/4"= 1'-0"

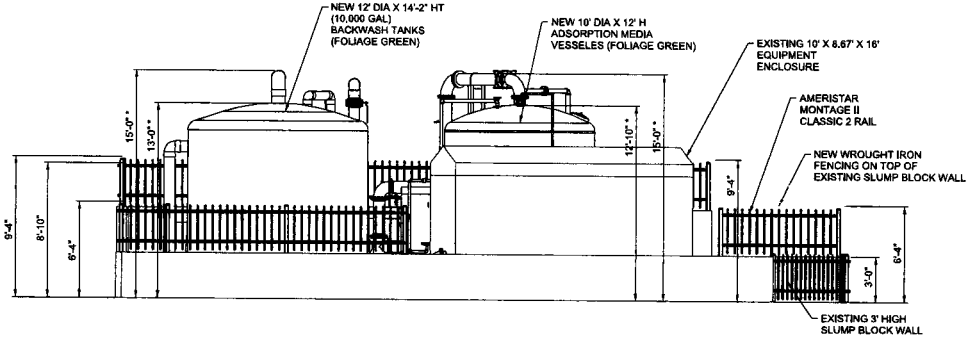

2 EAST ELEVATION
1/4"= 1'-0"

VERIFY SCALE
BAR IS ONE INCH ON ORIGINAL DRAWING.
IF NOT ONE INCH ON THIS SHEET ADJUST SCALES ACCORDINGLY.

DESIGN AJM
DRAWN RLC
CHECKED BWL
APPROVED JRM

WATERWORKS ENGINEERS
8940 E Cholla Rd, Suite 290 • Scottsdale, AZ • 480-991-1742

ARIZONA WATER COMPANY
HARMONY HILLS WELLS NO 5 & 12
ARSENIC REMOVAL FACILITY

CIVIL
ELEVATIONS

DATE
OCTOBER 2011
PROJECT NUMBER
11-027
DRAWING NUMBER
C-201
SHEET - OF -
SCALE: 1:48

Registered Professional Engineer
71586
BENJAMIN W. LEE
Date Signed 10-12-11
ARIZONA U.S.A.
Expires 3-31-14

REUSE OF DOCUMENTS: THIS DOCUMENT, AND THE IDEAS AND DESIGNS INCORPORATED HEREIN, AS AN INSTRUMENT OF PROFESSIONAL SERVICE, IS THE PROPERTY OF WATER WORKS ENGINEERS, LLC. AND IS NOT TO BE USED, IN WHOLE OR IN PART, FOR ANY OTHER PROJECT WITHOUT THE WRITTEN AUTHORIZATION OF WATER WORKS ENGINEERS, LLC.

FILENAME: S:\CAD\Projects\11-027 AWC Harmony Hills\Drawings\Deliverables\1027D-C201.dgn
PLOT DATE: 10/12/2011
PLOT TIME: 10:12:52 AM

DESIGN CRITERIA:

1. APPLICABLE CODE: 2006 INTERNATIONAL BUILDING CODE (IBC).
2. REFER TO THE SPECIFICATIONS FOR ADDITIONAL AND SPECIFIC STRUCTURE LOADINGS AND REQUIREMENTS.

GENERAL INFORMATION:

1. ALL CONSTRUCTION SHALL CONFORM TO THE LATEST EDITION OF THE IBC.
2. FOR ABBREVIATIONS NOT LISTED, SEE ASME Y14.38 "ABBREVIATIONS AND ACRONYMS" PUBLICATION AS DISTRIBUTED BY THE AMERICAN SOCIETY OF MECHANICAL ENGINEERS (ASME).
3. DESIGN DETAILS ARE INTENDED TO BE TYPICAL AND SHALL APPLY TO ALL SIMILAR SITUATIONS OCCURRING THROUGHOUT THE PROJECT, WHETHER OR NOT THEY ARE KEYED IN EACH LOCATION. CONSULT THE ENGINEER FOR REVIEW PRIOR TO CONSTRUCTION.
4. VERIFY ALL OPENING DIMENSIONS IN WALLS, SLABS, AND DECKS WITH THE ARCHITECTURAL, MECHANICAL, HVAC AND ELECTRICAL DRAWINGS.
5. FOR NUMBER, TYPE, SIZE ARRANGEMENT, AND/OR LOCATION OF EQUIPMENT PADS SEE ARCHITECTURAL, MECHANICAL, ELECTRICAL, HVAC AND PLUMBING DRAWINGS. COORDINATE WITH EQUIPMENT SUPPLIER PRIOR TO PLACING SLABS, WALLS AND FOUNDATIONS. COORDINATE ALL MECHANICAL, ELECTRICAL, AND HVAC PIPING OPENINGS WITH MECHANICAL, ELECTRICAL AND HVAC DRAWINGS.
6. NO STRUCTURAL MEMBERS SHALL BE CUT FOR PIPES, DUCTS, ETC UNLESS SPECIFICALLY DETAILED OR APPROVED IN WRITING BY THE ENGINEER.
7. SPECIAL INSPECTION IS REQUIRED IN ACCORDANCE WITH IBC SECTION 108.4 AND CHAPTER 17 ON THE FOLLOWING PORTIONS OF THE WORKS: CONCRETE PLACEMENT, REINFORCING STEEL PLACMENT, EMBEDS AND BOLTS INSTALLED IN CONCRETE, POST INSTALLED ADHESIVE ANCHORS.

FOUNDATIONS

1. IN ACCORDANCE WITH THE CITY OF SEDONA THE FOUNDATIONS HAVE BEEN DESIGNED FOR ALLOWABLE BEARING VALUES OF 1,500 PSF.
2. FOOTINGS SHALL EXTEND 1'-6" INTO FIRM, UNDISTURBED, NATURAL SOIL.
3. NO BACKFILL SHALL BE PLACED BEHIND WALLS UNTIL THE CONCRETE HAS ATTAINED 100%OF ITS SPECIFIED COMPRESSIVE STRENGTH.
4. THE CONTRACTOR SHALL PROVIDE THE ENGINEER AT LEAST 48 HOURS NOTICE FOLLOWING EXCAVATION FOR FOUNDATIONS AND PRIOR TO THE PLACEMENT OF FORMWORK, REINFORCING STEEL AND CONCRETE.

ADHESIVE ANCHORS

1. INSTALL ADHESIVE, EPOXY, ANCHORS PER MANUFACTURER'S INFORMATION AND ICC REPORT. SPECIAL INSPECTION IS REQUIRED PER IBC SECTION 1704 AND THE REQUIREMENTS OF THE ICC REPORTS.
2. CONCRETE ADHESIVE: HILTI HIT-HY 150 OR EQUAL.
3. MASONARY ADHESIVE: HILTI HIT-HY 20 OR EQUAL.
4. THREADED RODS TO BE GALVANIZED A36.

CONCRETE:

1. CONCRETE SHALL HAVE A MINIMUM COMPRESSIVE STRENGTH AT 28 DAYS OF 4,000 psi AS SPECIFIED IN SECTION 03300.
2. THE CONTRACTOR SHALL SUBMIT THE CONCRETE MIX DESIGNS TO THE ENGINEER FOR REVIEW PRIOR TO USE.
3. THE CONTRACTOR SHALL NOTIFY THE ENGINEER 48 HOURS PRIOR TO THE PLACEMENT OF CONCRETE.
4. HORIZONTAL CONSTRUCTION JOINTS SHALL BE PREPARED TO EXPOSE CLEAN, SOLIDLY EMBEDDED AGGREGATE OVER THE ENTIRE JOINT INTERFACE.
5. PLACEMENT OF PIPES, CONDUITS OR OTHER EMBEDDED ITEMS IN THE CONCRETE SHALL BE IN ACCORDANCE WITH THESE DRAWINGS OR SHALL BE APPROVED BY THE ENGINEER.
6. NO ALUMINUM CONDUIT OR PRODUCTS CONTAINING ALUMINUM OR ANY OTHER MATERIAL INJURIOUS TO CONCRETE SHALL BE EMBEDDED IN THE CONCRETE.
7. ALL DIMENSIONS SHOWN FOR LOCATION OF REINFORCING STEEL ARE TO FACE OF BAR AND DENOTE CLEAR COVERAGE. SLABS ON GRADE SHALL HAVE REINFORCING AT MID-DEPTH UNLESS NOTED OTHERWISE.
8. CONCRETE SHALL BE MIXED AND DELIVERED IN ACCORDANCE WITH ASTM C 94.
9. THE REQUIREMENTS FOR CONCRETE MIXES, PLACING, TESTING AND CURING ARE CONTAINED IN IBC SECTIONS 1905 - 1906.
10. PORTLAND CEMENT SHALL CONFORM TO ASTM C150 TYPE II, AGGREGATE SHALL CONFORM TO ASTM C33.
11. CONTINUOUS WATERSTOP AS SPECIFIED SHALL BE INSTALLED IN ALL CONSTRUCTION JOINTS IN WALLS OF WATER HOLING BASINS, CHANNELS, AND BELOW GRADE STRUCTURES, EXCEPT WHERE SPECIFICALLY NOTED OTHERWISE.

CONCRETE REINFORCING

1. PROVIDE LARGER SIZES AND MORE REINFORCING IN ALL SECTIONS OF CONCRETE WHERE REQUIRED BY THE DETAILS ON THE DRAWINGS OR BY THE SPECIFICATIONS.
2. CLEARANCE FOR REINFORCEMENT BARS, UNLESS SHOWN OTHERWISE, SHALL BE:CAST AGAINST EARTH = 3", ALL OTHER CONCRETE SURFACES: #5 BAR OR SMALLER = 1 1/2", #6 BAR OR LARGER = 2".
3. ALL BENDS, UNLESS OTHERWISE SHOWN, SHALL BE 90 DEGREE ACI 318 STANDARD HOOKS.
4. ALL WALL CORNER AND WALL INTERSECTION REINFORCEMENT BARS SHALL BE CONTINUOUS AROUND CORNERS AND THROUGH COLUMNS OR PILASTERS. REINFORCEMENT SHALL BE EXTENDED INTO CONNECTING WALLS AND LAPPED ON THE OPPOSITE FACE OF THE CONNECTING WALLS, AS INDICATED IN DETAIL 3303.
5. PROVIDE A MINIMUM OF TWO VERTICAL DOWELS AT WALL ENDS, CORNERS AND INTERSECTIONS WITH SIZE TO MATCH TYPICAL VERTICAL REINFORCING STEEL SHOWN.
6. ALL REINFORCING BENDS AND LAPS, UNLESS OTHERWISE NOTED, SHALL SATISFY THE FOLLOWING MINIMUM REQUIREMENTS:

CONCRETE DESIGN STRENGTH = 4,000 PSI		GRADE 60 REINF STEEL				
LAP SPLICE LENGTH						
BAR SIZE		#3	#4	#5	#6	#7
SPACING ≥ 6"	TOP BAR *	24"	32"	40"	48"	70"
	OTHER BAR	19"	25"	31"	37"	54"

* TOP BARS SHALL BE DEFINED AS ANY HORIZONTAL BARS PLACED SUCH THAT MORE THAN 12" OF CONCRETE IS CAST IN THE MEMBER BELOW THE BAR IN ANY SINGLE POUR. HORIZONTAL WALL BARS ARE CONSIDERED TOP BARS.

STRUCTURAL STEEL

1. STRUCTURAL STEEL SHALL BE FABRICATED AND ERECTED IN ACCORDANCE WITH AISC SPECIFICATIONS AND CODE OF STANDARD PRACTICE.
2. STRUCTURAL STEEL SHALL CONFORM TO ASTM:
   HOLLOW STRUCTURAL SECTIONS: A500 GRADE B MINIMUM Fy = 46 ksi
   PIPE: A53 GRADE B MINIMUM Fy = 35 ksi
   WIDE FLANGE SECTIONS: A992 MINIMUM Fy = 50 ksi
   PLATES, ANGLES, AND CHANNELS: A36 MINIMUM Fy = 36 ksi
3. ALL WELDING SHALL BE PERFORMED BY AWS CERTIFIED WELDERS AND SHALL CONFORM TO THE REQUIREMENTS OF ANSI/AWS D1.1-06 AND IBC SECTION 2204.
4. WELDING ELECTRODES SHALL BE THE FOLLOWING TYPES: E70XX.
5. ALL BOLTS SHALL BE ASTM A325 UNLESS NOTED OTHERWISE. ANCHOR BOLTS SHALL BE GALVANIZED ASTM F1554, GR. 55,
6. STRUCTURAL STEEL SHALL BE FREE OF EXCESSIVE RUST, MILL SCALE OR GREASE.
7. ALL FILLET WELDS SHALL BE AISC MINIMUM AND BUTT WELDS SHALL BE FULL PENETRATION.
8. OPENINGS SHALL NOT BE PLACED IN STEEL MEMBERS UNLESS SPECIFICALLY DETAILED ON THE STRUCTURAL PLANS.
9. DISTANCE FROM EDGE OF PLATE TO CENTER OF BOLT SHALL BE 1 1/2" UNLESS SHOWN OTHERWISE.
10. THE STRUCTURAL STEEL FABRICATOR/CONTRACTOR SHALL FURNISH SHOP DRAWINGS OF ALL STRUCTURAL STEEL FOR ENGINEER'S REVIEW PRIOR TO FABRICATION.

STRUCTURAL ABBREVIATIONS

AB	ANCHOR BOLT	IN	INCHES
ACI	AMERICAN CONCRETE INSTITUTE	JT	JOINT
ADDL	ADDITIONAL	L	LOW / ANGLE
AFF	ABOVE FINISH FLOOR	LONG	LONGITUDINAL
AISC	AMERICAN INSTITUTE OF STEEL CONSTRUCTION	LLH	LONG LEG HORIZONTAL
AL	ALUMINUM	LLV	LONG LEG VERTICAL
ALT	ALTERNATE	LSH	LONG SLOTTED HOLE
ANC	ANCHOR	MFR	MANUFACTURER
ANSI	AMERICAN NATIONAL STANDARDS INSTITUTE	MAX	MAXIMUM
APVD	APPROVED	MB	MACHINE BOLT
ARCH	ARCHITECT, ARCHITECTURAL	MECH	MECHANICAL
BC	BOTTOM CHORD	MIN	MINIMUM
BLK	BLOCK	MTL	METAL
BOC	BOTTOM OF CONCRETE	NDT	NON-DESTRUCTIVE TESTING
BOS	BOTTOM OF STEEL	NIC	NOT IN CONTRACT
BOT	BOTTOM, BOTTOM OF TRENCH	NS	NEAR SIDE
BM	BEAM	NTS	NOT TO SCALE
BRG	BEARING	OC	ON CENTER
BTWN	BETWEEN	OD	OUTSIDE DIAMETER
C	CAMBER	OF	OUTSIDE FACE
CC	CENTER TO CENTER	OHO	OUT TO OUT
CHKD	CHECKERED	OPNG	OPENING
CIP	CAST IN PLACE	OPP	OPPOSITE
CJ	CONSTRUCTION JOINT	OSH	OVERSIZED HOLE
CL	CENTERLINE	OWJ	OPEN WEB JOIST
CLG	CEILING	PC	PRECAST
CLR	CLEARANCE	PLCS	PLACES
CO	CLEANOUT	PJF	PREMOLDED JOINT FILLER
COL	COLUMN	PL	PLATE
CONC	CONCRETE	PLYWD	PLYWOOD
CONN	CONNECTION	PP	PARTIAL PENETRATION
CONT	CONTINUOUS	PROJ	PROJECTION
CP	COMPLETE PENETRATION	PT	PRESSURE TREATED
CTR	CENTER	PVC	POLYVINYL CHLORIDE
DBA	DEFORMED BAR ANCHOR	REINF	REINFORCE, REINFORCING
DBL	DOUBLE	REQD	REQUIRED
DIA Ø	DIAMETER	RTN	RETURN
DWG	DRAWING	SHT	SHEET
EA	EACH	SIB	STRUCTURAL ISOLATION BREAK
ECS	EPOXY COATED STEEL	SIM	SIMILAR
EE	EACH END	SJ	SAWN JOINT
EF	EACH FACE	SLV	SHORT LEG VERTICAL
EL, ELEV	ELEVATION	SPCG, SPA	SPACING
EMBED	EMBEDMENT	SPCS	SPACES
EN	EDGE NAIL	SPECS	SPECIFICATIONS
EQ, EQL, @P	EQUALLY SPACED	SQ	SQUARE
ES	EASH SIDE	SS	STAINLESS STEEL
EW	EACH WAY	SSH	SHORT SLOTTED HOLE
EXP	EXPANSION	STD	STANDARD
EXST, (E)	EXISTING	STIFF	STIFFENER
FD	FLOOR DRAIN	STL	STEEL
FDN	FOUNDATION	STSMS	SELF-TAPPING SHEET METAL SCREW
FIN	FINISH	SW	STUD WELD
FF	FINISHED FLOOR	SYM	SYMMETRICAL
FLG	FLANGE	T&B	TOP & BOTTOM
FLR	FLOOR	TC	TOP CHORD
FOB	FACE OF BLOCK	TD	TRUSS DIAGONAL
FOC	FACE OF CONCRETE	THK	THICK
FOS	FACE OF STUD / STEEL	TN	TOE NAIL
FP	FULL PENETRATION	TO	TOP OF
FRMG	FRAMING	TOC	TOP OF CONCRETE
FRP	FIBER REINFORCED PLASTIC	TOF	TOP OF FOOTING
FS	FAR SIDE	TOG	TOP OF GRATING
FTG	FOOTING	TOS	TOP OF STEEL
GA	GAUGE, GAGE	TOT	TOTAL
GALV	GALVANIZED	TOW	TOP OF WALL
GLB	GLULAM BEAM	TRANS	TRANSVERSE
GRD	GRADE	TV	TRUSS VERTICAL
GRT	GROUT	TYP	TYPICAL
GRTG	GRATING	UN	UNLESS NOTED
H	HIGH	UT	ULTRASONIC TESTING
H.A.S.	HEADED ANCHOR STUD	VERT	VERTICAL
HCA	HEADED CONCRETE ANCHOR	W	WIDE
HD	HOLDDOWN	W/	WITH
HORIZ	HORIZONTAL	W/O	WITH OUT
HSB	HIGH STRENGTH BOLT	WP	WORK POINT
IF	INSIDE FACE	WS	WATERSTOP
		WWF	WELDED WIRE FABRIC

VERIFY SCALE
BAR IS ONE INCH ON ORIGINAL DRAWING. 0 1"
IF NOT ONE INCH ON THIS SHEET, ADJUST SCALES ACCORDINGLY

DESIGN JAK
DRAWN MP
CHECKED JAK
APPROVED JHM

WATERWORKS ENGINEERS
8640 E Cheyenne Rd, Suite 200 • Scottsdale, AZ • 480-661-1142

ARIZONA WATER COMPANY
HARMONY HILLS WELLS NO 5 & 12
ARSENIC REMOVAL FACILITY

STRUCTURAL

NOTES AND ABBREVIATIONS

DATE: OCTOBER 2011
PROJECT NUMBER: 11-027
DRAWING NUMBER: S-001
SHEET - OF -
SCALE: $SCALE$

REUSE OF DOCUMENTS: THIS DOCUMENT, AND THE IDEAS AND DESIGNS INCORPORATED HEREIN, AS AN INSTRUMENT OF PROFESSIONAL SERVICE, IS THE PROPERTY OF WATER WORKS ENGINEERS, LLC. AND IS NOT TO BE USED, IN WHOLE OR IN PART, FOR ANY OTHER PROJECT WITHOUT THE WRITTEN AUTHORIZATION OF WATER WORKS ENGINEERS, LLC.

FILENAME: $FILEL$ PLOT DATE: $DATE$ PLOT TIME: $TIME$

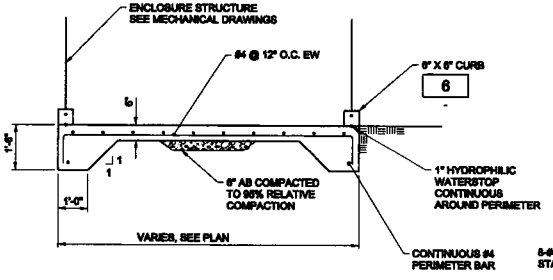

1 CHLORINE ENCLOSURE SLAB
M-101 NTS

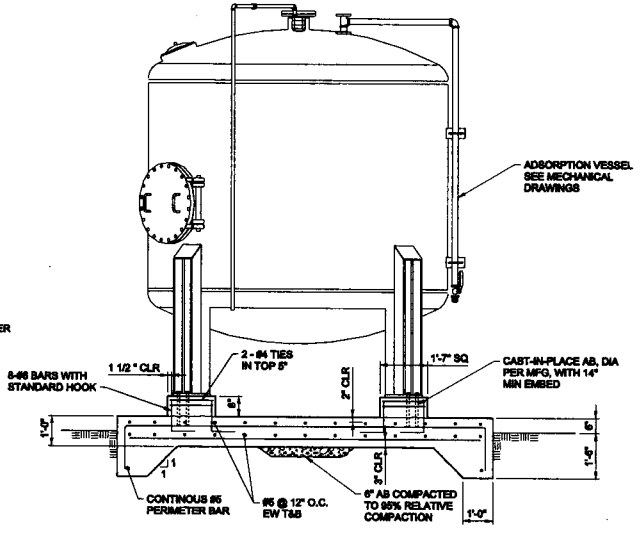

2 ADSORPTION VESSEL SLAB
M-101 NTS

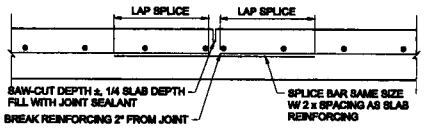

NOTES:

1. SAW-CUT SAME DAY AS POUR AS SOON AS SPALLING WILL NOT OCCUR.
2. CONTRACTOR SHALL USE STRING LINE OR OTHER POSITIVE MEANS TO PLACE REINFORCING AND LOCATE SAWCUT.
3. BREAK REINF AND ADD SPLICE BARS SIMILAR AT DOUBLE MAT.

5 SLAB ON GRADE JOINT-TYPE A
C-100 NTS

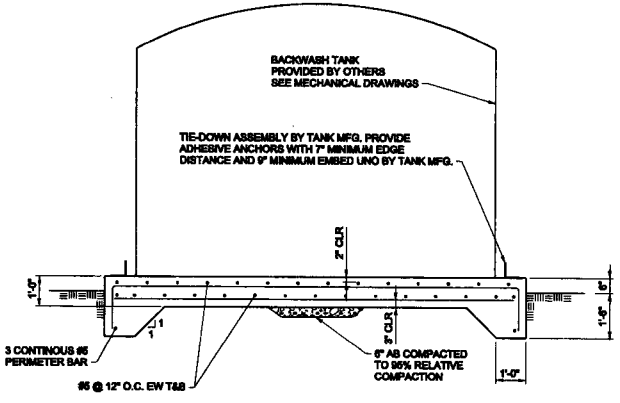

3 BACKWASH TANK SLAB
M-101 NTS

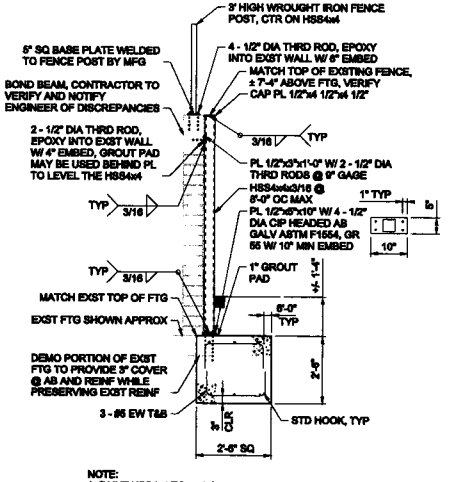

NOTE:
1. PAINT HSS4x4 TO MATCH WROUGHT IRON FENCE.

4 MASONRY PILASTER
C-100 NTS

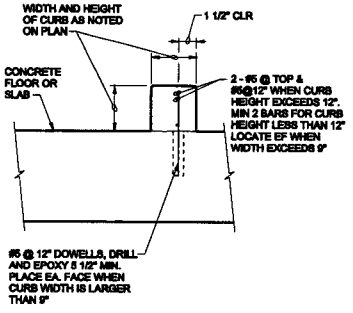

6 CONCRETE CURB
- NTS

VERIFY SCALE
BAR IS ONE INCH ON ORIGINAL DRAWING. IF NOT ONE INCH ON THIS SHEET ADJUST SCALES ACCORDINGLY.

DESIGN	JC
DRAWN	MP
CHECKED	BL
APPROVED	JHM

WATERWORKS ENGINEERS
3643 E Chappell Rd, Suite 200 • Scottsdale, AZ • 480-991-7162

ARIZONA WATER COMPANY
HARMONY HILLS WELLS NO 5 & 12
ARSENIC REMOVAL FACILITY

STRUCTURAL
DETAILS

DATE: OCTOBER 2011
PROJECT NUMBER: 11-027
DRAWING NUMBER: S-301
SHEET - OF -
SCALE: 1:2

REUSE OF DOCUMENTS: THIS DOCUMENT, AND THE IDEAS AND DESIGNS INCORPORATED HEREIN, AS AN INSTRUMENT OF PROFESSIONAL SERVICE, IS THE PROPERTY OF WATER WORKS ENGINEERS, LLC. AND IS NOT TO BE USED, IN WHOLE OR IN PART, FOR ANY OTHER PROJECT WITHOUT THE WRITTEN AUTHORIZATION OF WATER WORKS ENGINEERS, LLC.

FILENAME: S:\CADD\Projects\11-027 AWC Harmony Hills\Drawings\Deliverables\11027D-S301.dgn PLOT DATE: 10/12/2011 PLOT TIME: 11:32:10 AM

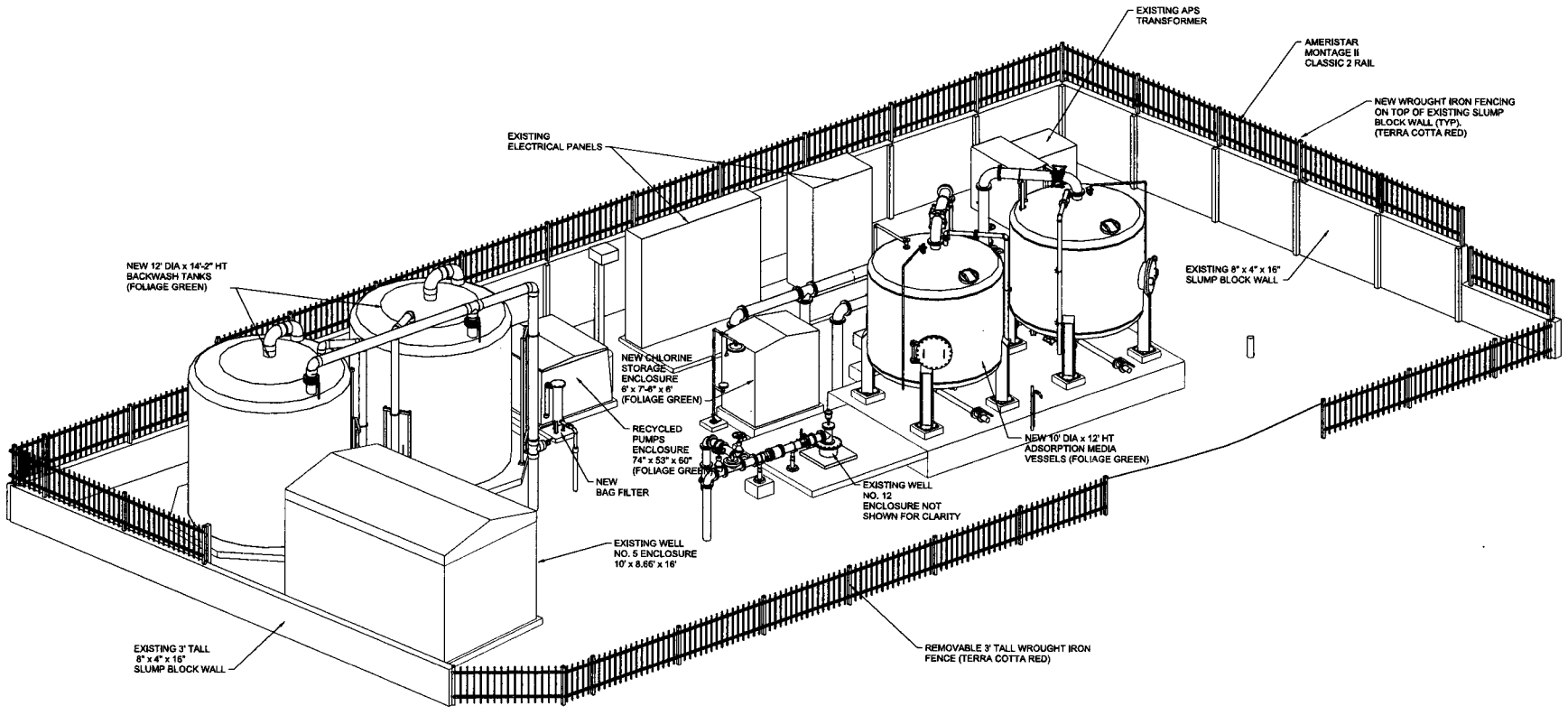

ISOMETRIC

NOT TO SCALE

VERIFY SCALE
BAR IS ONE INCH ON ORIGINAL DRAWING.
IF NOT ONE INCH ON THIS SHEET ADJUST SCALES ACCORDINGLY.

DESIGN: JLJ
DRAWN: RC
CHECKED: BL
APPROVED: JHM

WATERWORKS ENGINEERS
8640 E Chaparral Rd, Suite 280 • Scottsdale, AZ • 480-661-1742

ARIZONA WATER COMPANY
HARMONY HILLS WELLS NO 5 & 12
ARSENIC REMOVAL FACILITY

MECHANICAL

ISOMETRIC

DATE: OCTOBER 2011
PROJECT NUMBER: 11-027
DRAWING NUMBER: M-001
SHEET - OF -
SCALE: $SCALE$

REUSE OF DOCUMENTS: THIS DOCUMENT, AND THE IDEAS AND DESIGNS INCORPORATED HEREIN, AS AN INSTRUMENT OF PROFESSIONAL SERVICE, IS THE PROPERTY OF WATER WORKS ENGINEERS, LLC. AND IS NOT TO BE USED, IN WHOLE OR IN PART, FOR ANY OTHER PROJECT WITHOUT THE WRITTEN AUTHORIZATION OF WATER WORKS ENGINEERS, LLC.

FILENAME: $FILE$

PLOT DATE: $DATE$

PLOT TIME: $TIME$

ARIZONA DEPARTMENT OF ENVIRONMENTAL QUALITY
CERTIFICATE OF APPROVAL TO CONSTRUCT
WATER FACILITIES

ADEQ File No: 20110204	**LTF No:** 54693
System Name: Az Water Co-Sedona	**System Number:** 03-003
Project Owner: Arizona Water Company	
Address: P O Box 29006, Phoenix , AZ 85038	
Project Location: Sedona	**County :** Yavapai
Description: INSTALLATION OF ARSENIC REMOVAL SYSTEM (GRANULAR IRON MEDIA) AT HARMONY HILLS WELLS NO. 5 AND12. FINAL TREATED VALUE 7.0 PPB ARSENIC. MAXIMUM TREATED WATER FLOW 1160 GPM.	

Approval to construct the above-described facilities as represented in the approved documents on file with the Arizona Department of Environmental Quality is hereby given subject to provisions 1 through 7 continued on page 2 through 2

1. This project must be constructed in accordance with all applicable laws, including Title 49, Chapter 2, Article 9 of the Arizona Revised Statutes and Title 18, Chapter 5, Article 5 of the Arizona Administrative Code.
2. Upon completion of construction, the engineer shall fill out the Engineer's Certificate of Completion and forward it to the Central Regional Office located in Phoenix. If all requirements have been completed, that unit will issue a Certificate of Approval of Construction. R18-5-507(B), Ariz. Admin.Code. At the project owner's request, the Department may conduct the final inspection required pursuant to R18-5-507(B); such a request must be made in writing in accordance with the time requirements of R18-5-507(C), Ariz. Admin. Code.
3. This certificate will be void if construction has not started within one year after the Certificate of Approval to Construct is issued, there is a halt in construction of more than one year, or construction is not completed within three years of the approval date. Upon receipt of a written request for an extension of time, the Department may grant an extension of time; an extension of time must be in writing. R18-5-505(E), Ariz. Admin. Code.
4. Operation of a newly constructed facility shall not begin until a Certificate of Approval of Construction has been issued by the Department. R18-5-507(A), Ariz. Admin. Code.

Reviewed by: AD4

By: Janak K. Desai 5/31/2011
Janak K. Desai, P.E. Unit Manager Date
Engineering Review Section
Water Quality Division

cc: File No : 20110204
Regional Office: Central
Owner: Arizona Water Company
County Health Department: Yavapai
Engineer: Water Works Engineers
Planning and Zoning/Az Corp. Commission
Engineering Review Database - Etr021

5. Arsenic treatment equipment shall be disinfected prior to being put into service according to AWWA C653-87.
6. All water lines shall be disinfected prior to being put into service per Engineering Bulletin No. 8.
7. The Arizona Department of Environmental Quality's review of this application was subject to the requirements of the licensing time frames ("LTF") statute under Arizona Revised Statutes ("A.R.S.") § 41-1072 through § 41-1079 and the LTF rules under Arizona Administrative Code ("A.A.C.") R18-1-501 through R18-1-525. This Notice is being issued within the overall time frame for your application.

ADEQ hereby approves your application for Approval to Construct Water Facilities under A.R.S. § 49-351. Your copy is enclosed.

This decision is an appealable agency action under A.R.S. § 41-1092. You have a right to request a hearing and file an appeal under A.R.S. § 41-1092.03(B). You must file a written Request for Hearing or Notice of Appeal within **30 days** of your receipt of this Notice. A Request for Hearing or Notice of Appeal is filed when it is received by ADEQ's Hearing Administrator as follows:

Office of Administrative Counsel
Arizona Department of Environmental Quality
1110 W. Washington Street
Phoenix, AZ 85007

The Request for Hearing or Notice of Appeal shall identify the party, the party's address, the agency and the action being appealed and shall contain a concise statement of the reasons for the appeal. Upon proper filing of a Request for Hearing or Notice of Appeal, ADEQ will serve a Notice of Hearing on all parties to the appeal. If you file a timely Request for Hearing or Notice of Appeal you have a right to request an informal settlement conference with ADEQ under A.R.S. § 41-1092.06. This request must be made in writing no later than **20 days** before a scheduled hearing and must be filed with the Hearing Administrator at the above address.

Please contact Adrian Dumitrescu at 602-771-4201 or ad4@azdeq.gov if you have questions regarding this Notice or the Certificate of Approval to Construct.

ARIZONA WATER COMPANY

Verde Valley - Sedona
65 Coffee Pot Drive, #7
Sedona, AZ 86351 PH: 928-282-7092

PROPOSAL/CONTRACT

CONTRACTOR: MGC Contractors, Inc.	SYSTEM: VERDE VALLEY
ADDRESS: 4110 E, Elwood Street	W.A. No(s): 1-4814
CITY ST ZIP: Phoenix, AZ 85040	BID DUE DATE: November 15, 2011

CONTRACTOR SUBMITS this PROPOSAL/CONTRACT to ARIZONA WATER COMPANY, an Arizona corporation (the "Company"), to perform the work and complete the project described on Page 2 (the "Project"), as an independent prime contractor.

1. Contractor certifies that it has a complete copy of, and has read, understands and accepts, the Company's General Conditions of Contract, and the Company's Construction Specifications and Standard Specification Drawings, (the "Specifications"), all of which are attached hereto. Contractor has examined the specific plans and related construction drawings for the Project (the "Drawings"), copies of which are also attached hereto. The General Conditions of Contract, Specifications and Drawings are incorporated into this Proposal/Contract. Contractor affirms that all work and materials to be furnished or purchased for the Project will be in strict conformance with the General Conditions of Contract, Specifications and Drawings.
2. Contractor represents and warrants that it has satisfied and complied with the provisions of Section 6, Contractor Understands Work and Working Conditions, of the General Conditions of Contract prior to submitting this Proposal/Contract.
3. Contractor represents that this Proposal/Contract is fair and honest in all respects, is submitted in good faith and is not submitted in collusion with any other company, entity or person.
4. Contractor acknowledges that one hundred percent (100%) Performance and Payment Bonds are required and must be provided to the Company prior to the commencement of work.
5. Prior to the commencement of work, Contractor will submit to the Company a list of all materials to be used in the Project. The materials list will include the manufacturer, part number, price and quantity included in this Proposal/Contract.
6. Contractor will furnish all labor, tools, equipment and materials required to complete the Project according to the General Conditions of Contract, Specifications and Drawings. No materials purchased by Contractor to be incorporated into the Project are subject to tax at the time of purchase and Contractor will not charge the Company for any such tax. Contractor will pay the applicable transaction privilege tax (the "Contracting Tax") on the Project after Contractor receives payment of the final Project invoice from the Company. The cost of materials incorporated into the Project which are exempt by Arizona Revised State Statues ("A.R.S.") from the Contracting Tax, for example, pipes or valves having a diameter of four (4) inches or larger, including equipment, fittings and any other related part that is used in operating the pipes or valves (A.R.S. §42-5061 B.6.), will not be included in the total cost of the labor and materials upon which the Contracting Tax is computed. Contractor retains full liability and obligation to pay the Contracting Tax and will defend and indemnify the Company against any demand or obligation to pay the Contracting Tax.
7. Contractor will maintain detailed accounting records of all materials purchased and incorporated into the Project. Such records will include all supporting original vendor invoices for all materials purchased. Following completion of the Project, Contractor will submit an itemized accounting to the Company which will include all supporting original vendor invoices and satisfactory evidence of payment thereof. The Company will not pay Contractor for materials not actually incorporated into the Project, and the disposition of such materials will remain Contractor's responsibility.
8. The Estimated Total Cost of the Project, shown on Page 2, is based on estimated labor and material quantities to be furnished. It includes an estimate of the Contracting Tax and the cost of the required Performance and Payment Bonds. Contractor will not cancel, modify or withdraw this Proposal/Contract during a ninety-day (90) period commencing on the Bid Due Date. The Company may accept this Proposal/Contract by signing and mailing, or otherwise delivering, a copy hereof to Contractor during such ninety-day (90) period. If the Company does not accept this Proposal/Contract during such ninety-day (90) period, Contractor may cancel this Proposal/Contract by giving written notice of cancellation to the Company.
9. Prior to the commencement of work, Contractor will provide the Company with a detailed construction schedule, in either Gantt or CPM form, identifying all tasks to be performed from the date of the written Commencement Notice through completion of the Project, including testing, training of Company Personnel and final Project invoicing. Contractor will provide the Company with a copy of such construction schedule documenting the progress of work on the Project at least monthly.
10. Contractor will not commence work on the Project until the Company gives Contractor a written Commencement Notice. Contractor will complete the Project within 140 CD calendar days after the Commencement Notice is issued.
11. Following the Company's written notice of satisfactory completion of the Project, and upon receipt of the final Project invoice from Contractor, the Company shall pay Contractor the actual total cost of the Project, which will be calculated as shown on Page 2, except that actual labor and material quantities installed/constructed will be substituted for the estimated labor and materials quantities and the Contracting Tax will be recalculated based on such actual labor and materials quantities.
12. The amount of applicable liquidated damages for Contractor's failure to deliver or perform within the time limit shown in Paragraph 10 may be deducted from the Company's payment of the final Project invoice. This provision shall not limit the Company's ability to terminate this Proposal/Contract for Contractor's unsatisfactory performance or failure to perform as provided in the General Conditions of Contract, Specifications or Drawings, or in this Proposal/Contract.

SPECIAL CONDITIONS:

Construct arsenic removal facility in accordance with the attached drawings and specifications dated *October 14, 2011*

CONTRACTOR	PROPOSAL/CONTRACT ACCEPTED:
MGC Contractors, Inc.	*ARIZONA WATER COMPANY*
By:	By:
Print Name: Randy L. Gates	Print Name: Fredrick K. Schneider, PE
Title: President	Title: Vice President - Engineering
Date: 11/15/2011	Date: 12-2-2011

ARIZONA WATER COMPANY

Verde Valley - Sedona
65 Coffee Pot Drive, #7
Sedona, AZ 86351 PH: 928-282-7092

PROPOSAL/CONTRACT

CONTRACTOR: MGC Contractors, Inc.	SYSTEM: VERDE VALLEY
AZ CONTRACTOR LICENSE NO: CLASSIFICATION:	W.A. No(s): 1-4814
ADDRESS: 4110 E. Elwood Street	BID DUE DATE: November 15, 2011
CITY ST ZIP Phoenix, AZ 85040	BID BOND REQUIRED ☑ Yes ☐ No

DESCRIPTION OF PROJECT: Construct and make operational an arsenic removal facility at Harmony Hills Well Nos. 5 and 12.

**MGC acknowledges receipt of Addendum No. 1 dated 11/10/2011

1-2. MATERIALS EXEMPT FROM CONTRACTING TAX (per Paragraph 6)	QUANTITY	UNIT PRICE LABOR	UNIT PRICE MATERIALS	TOTAL COST LABOR	TOTAL COST MATERIALS
Provide and Install On-Site Piping	Lot.			17,641	72,335
Provide and Install Arsenic Removal Facility	Lot.			7,573	415,150
Provide and Install Backwash Recovery System	Lot.			5,820	61,615
Provide and Install On-Site Electrical	Lot.			9,962	28,679
Testing, Commissioning, and On-Site Operator Training	Lot.			1,740	0
3. Total Labor to Install Exempt Materials (add the amounts in column 1)				3 42,736	
4. Total Exempt Materials (add the amounts in column 2)					4 577,779

5-6. NON-EXEMPT MATERIALS	QUANTITY	UNIT PRICE LABOR	UNIT PRICE MATERIALS	TOTAL COST LABOR	TOTAL COST MATERIALS
* Provide and Install On-Site Piping	Lot.			38,732	95,910
Provide and Install Arsenic Removal Facility	Lot.			5,385	18,538
Provide and Install Backwash Recovery System	Lot.			4,399	26,738
Provide and Install On-Site Electrical	Lot.			28,662	22,280
Testing, Commissioning, and On-Site Operator Training	Lot.			1,740	575
* Includes: concrete, site work, fence					
7. Total Labor to Install Non-Exempt Materials (add the amounts in column 5)				7 78,918	
8. Total Non-Exempt Materials (add the amounts in column 6)					8 164,041
9. Subtotal A (add lines 3, 7 and 8)				185,702	9 285,695
10. Contracting Tax Base (multiply the amount on line 9 by 0.65)				10	
11. Applicable Contracting Tax Rate				11 0.10350	
12. Contracting Tax (multiply the amount on line 10 by line 11)					12 19,220
13. Subtotal B (add lines 4, 9 and 12)					13 882,694
14. 100% Performance and Payment Bonds Cost					14 6,708
15. Estimated Total Cost (add lines 13 and 14)					15 889,403

NOTE: The Estimated Total Cost includes all labor and materials for backfill, pavement replacement, chip seal, and traffic control necessary for the Project.

ARIZONA WATER COMPANY

COMMENCEMENT NOTICE

CONTRACTOR:

Mr. Randy Gates
MGC Contractors, Inc.
4110 E. Elwood Street
Phoenix, Arizona 85040

DATE: November 28, 2011
DIVISION: VERDE VALLEY
SYSTEM: VERDE VALLEY
W.A.: 1-4814

THIS IS YOUR NOTICE TO PROCEED WITH THE FOLLOWING PROJECT(S):

DESCRIPTION OF WORK:

Construct and make operational an arsenic removal facility at Harmony Hills Well Nos. 5 and 12.

PERFORMANCE AND PAYMENT BONDS REQUIRED: [x] Yes [ ] No

TOTAL DAYS ALLOWED: 140

COMPLETION DATE: April 16, 2012

ARIZONA WATER COMPANY	***MGC CONTRACTORS, INC.***
Company	Contractor *(type name)*
By [signature]	By _____
Title Vice President - Engineering	Title _____
AFH	

SEVERN TRENT SERVICES

SORB 33® Performance / Capacity Guarantee
Bayoxide® E33 Granular Iron Media
Arizona Water Company (AWC)
Harmony Hills Wells 5 & 12

Proposal No. 35557
Issue Date – November 11, 2011

Severn Trent Services, Inc. (**STS**) guarantees the capacity of Bayoxide E33 iron oxide media in accordance with the water assay conditions (Appendix A). Arsenic (**As**) will be treated to below the new required EPA MCL of 10 µg/L for this contaminant that began in January 2006. In the event that Bayoxide E33 does not meet the guaranteed performance / capacity, STS will provide a prorated savings on the future purchases of Bayoxide E33, for a period of five (5) years. In the event that STS develops a "new" or "improved" Bayoxide E33 Arsenic removal media that would have a performance benefit to the Utility, over the present Bayoxide E33 media, STS does agree to offer such "new" or "improved" media to the Utility at an equally reflective discount.

Design Parameters for Media Capacity Guarantee:

A. AWC's (**Owner**) Harmony Hills Wells Feeding the As Removal System
B. Total Flow = 1,160 gpm; Treatment Flow = 580 gpm
C. Arsenic: Average Analysis – 10.0 µg/L
D. Treatment Objective – <7 ppb
E. Configuration – Parallel.
F. Pretreatment – Chlorination with NaOCl or Cl_2 to Maintain a Minimum Residual of 0.4 mg/L free Cl_2.
G. Two 10'-Ø Adsorbers each with 281 ft^3 E33 Granular Media Volume.
H. Bayoxide® E33 Treatment Capacity – STS will guarantee a working capacity of 125,000 Bed Volumes (**BVs**). This value is equivalent to 526 million gallons through 563 ft^3 of media.

If the effluent As level from the adsorbers exceeds 7 ppb in fewer bed volume stated above, STS will replace the media in that adsorber for a replacement media discount equivalent to the current base price, not to exceed $185.00/cubic foot, as set forth by the following formula:

Discount = Base Price • [(Capacity BV's – Actual BVs) / Capacity BVs]

To enact the capacity guarantee, STS requires the following:

1) AWC and STS agree that the water quality data in Section 11531 of the specifications provided to STS is representative of the water being treated in this facility. This water quality is the basis for the capacity guarantee of the media. Variances greater than 10% above these values (or +0.3 pH units) will result in recalculation of the BV's guarantee.

SEVERN TRENT SERVICES

2) On the Start-up Date, owner shall operate the Facilities and assign appropriately qualified and certified employees, trained by STS, to start-up (condition the media) and operate the Facilities in the manner and only for the purpose for which they were designed, consistent with prudent water utility operating standards, practices, and procedures, and all applicable regulatory requirements.

3) Owner shall use its best efforts to maintain the quality of the influent stream to the System so as not to exceed baseline analyses used in design of capacity guarantee. The occurrence of oil & grease, abnormal suspended solids and biological matter not reported by the owner or not included in the water analysis will void the guarantee.

4) Owner must operate and maintain the STS SORB 33® System in accordance with STS's standard O&M Manual and other applicable manuals, documents and specifications in order to assure the safe and proper operation of the System at all times.

5) Owner must properly operate and maintain the wells, pumps and water pressure equipment connected to the System and ensures a consistent water pressure feed to the System as specified in STS Bayoxide E33 media handling procedures. Any sudden pressure surges or water hammers caused by the negligence or inaction by AWC resulting in crushing of the media will void the guarantee.

6) Owner must, under normal operating conditions, properly shut down or start-up the System in accordance with the STS Bayoxide E33 media handling procedures.

7) Owner shall be responsible for and shall promptly perform system operation and maintenance, including routine and preventive maintenance necessary to maintain the System in accordance with the O&M Manual including, without limitation, the following items:

    i. Backwashing of the System when the pressure drop across the media bed exceeds 10 psi or at least once every 4 months.

    ii. Performing an on-site overall System check on at least a weekly basis;

    iii. Regular inspection and maintenance of valves;

    iv. Regular inspection and calibration (if necessary) of System instrumentation and meters used for the monitoring of pressure and flow control; and

    v. Properly calibrating, maintaining and replacing any water flow measurement meters used in the System as necessary to ensure an accurate measurement of the volumetric flow of influent water to the System. In such event, STS reserves the right, at its own expense, to test the water flow measurement meters at the System.

8) Owner shall analyze the feed and treated water, record the flow totalizer readings and report the specified data in the electronic Excel form shown in Appendix A to STS on a quarterly basis. STS shall update the bottom of this form and reissue it to the Owner within 2 weeks of receiving it.

Relief from the Performance/Capacity Guarantee will be granted in the event that the above conditions were not meet or were materially altered by either party. Compliance with all stated values or limits stated herein shall be based upon reasonable interpretations and generally

SEVERN TRENT SERVICES

accepted industry practices. Relief may also be granted for force majeure or an event beyond the control of STS that affected the system/media performance.

STS makes no warranty, express or implied, including a warranty of merchantability or fitness for a particular purpose, with respect to such products or components. The warranties set forth herein, if any, are made expressly in lieu of other warranties, express or implied, statutory or otherwise, and any implied warranty of merchantability or warranty of fitness for a particular purpose, even if that purpose is known to STS, is hereby expressly excluded. STS's liability and owner's exclusive remedy for any failure by STS to supply products that meet the foregoing warranty is expressly limited to, at STS's option, the repair or replacement of the non-conforming products. In no event shall STS be liable for special, punitive, incidental or consequential damages, including but not limited to, loss of use, income, profit, capital or business opportunity even if STS has been advised of such possible income, profit, capital, or business opportunity.

HHAZ-E33PerformGuar-F09.doc:11-Nov-11

Bayoxide® E33 As Removal Operations Data Sheet										
Utility	Arizona Water Company					Site Name	Harmony Hills Wells 5 & 12			
Date	Flow Totalizer Readings			Arsenic Assays (µg/L)				Feed Water Assays		
(mm/dd/yy)	Adsorber A	Adsorber B	Bypass	Feed	Ads A	Ads B	Final	pH	SiO_2 (mg/L)	
Performance	Volume Treated/Bypassed to Date (gals)			[illegible] Guarantee				125,000	BV	
Updated	Adsorber A	Adsorber B	Bypass	Treatment to date			Adsorber A		BV	
							Adsorber B		BV	

Appendix A

THE AMERICAN INSTITUTE OF ARCHITECTS

AIA Document A310

Bid Bond

KNOW ALL MEN BY THESE PRESENTS, that we **MGC CONTRACTORS, INC.**
P. O. Box 61748 Phoenix, AZ 85082
(Here insert full name ,and address or legal title of Contractor)

as Principal, hereinafter called the Principal, and **Western Surety Company**
P.O. BOX 5077, Sioux Falls, SD 57117-5077
(Here insert full name ,and address or lega title of Surety)

a corporation duly organized under the laws of the State of **SD**

as Surety, hereinafter called the Surety, are held and firmly bound unto
Arizona Water Company
3805 N. Black Canyon Highway Phoenix, AZ 85015-5351
(Here insert full name ,and address or legal title of Owner)

as Obligee, hereinafter called the Obligee, in the sum of
Ten Percent (10%) of the Amount Bid---------- Dollars (**$ 10% of the Amount Bid**),
for the payment of which sum well and truly to be made, the said Principal and the said Surety, bind ourselves, our heirs, executors, administrators, successors and assigns, jointly and severally, firmly by these presents.
WHEREAS, the Principal has submitted a bid for
Harmony Hills Well Numbers 5 and 12
(Here insert full name, address and description of project)

NOW, THEREFORE, if the Obligee shall accept the bid of the Principal and the Principal shall enter into a Contract with the Obligee in accordance with the terms of such bid and give such bond or bonds as may be specified in the bidding or Contract Documents with good and sufficient surety for the faithful performance of such Contract and for the prompt payment of labor and material furnished in the prosecution thereof, or in the event of the failure of the Principal to enter such Contract and give such bond or bonds, if the Principal shall pay to the Obligee the difference not to exceed the penalty hereof between the amount specified in said bid and such larger amount for which the Obligee may in good faith contract with another party to perform the Work covered by said bid then this obligation shall be null and void, otherwise to remain in full force and effect.

Signed and sealed this **15th** day of **November 2011**

MGC CONTRACTORS, INC.
(Principal) (Seal)

(Witness)
Wendy S. Harvey, Asst Secretary

(Title)
Randy L. Gates, President

Western Surety Company
(Surety) (Seal)

Cindy Mullooly (Witness)

(Title)
Ted H. Rarrick, Attorney-in-Fact

Western Surety Company

POWER OF ATTORNEY APPOINTING INDIVIDUAL ATTORNEY-IN-FACT

Know All Men By These Presents, That WESTERN SURETY COMPANY, a South Dakota corporation, is a duly organized and existing corporation having its principal office in the City of Sioux Falls, and State of South Dakota, and that it does by virtue of the signature and seal herein affixed hereby make, constitute and appoint

Ted H Rarrick, Cindy K Mullooly, Individually

of Tempe, AZ, its true and lawful Attorney(s)-in-Fact with full power and authority hereby conferred to sign, seal and execute for and on its behalf bonds, undertakings and other obligatory instruments of similar nature

- In Unlimited Amounts -

and to bind it thereby as fully and to the same extent as if such instruments were signed by a duly authorized officer of the corporation and all the acts of said Attorney, pursuant to the authority hereby given, are hereby ratified and confirmed.

This Power of Attorney is made and executed pursuant to and by authority of the By-Law printed on the reverse hereof, duly adopted, as indicated, by the shareholders of the corporation.

In Witness Whereof, WESTERN SURETY COMPANY has caused these presents to be signed by its Senior Vice President and its corporate seal to be hereto affixed on this 28th day of July, 2011.

WESTERN SURETY COMPANY

Paul T. Bruflat, Senior Vice President

State of South Dakota
County of Minnehaha } ss

On this 28th day of July, 2011, before me personally came Paul T. Bruflat, to me known, who, being by me duly sworn, did depose and say: that he resides in the City of Sioux Falls, State of South Dakota; that he is the Senior Vice President of WESTERN SURETY COMPANY described in and which executed the above instrument; that he knows the seal of said corporation; that the seal affixed to the said instrument is such corporate seal; that it was so affixed pursuant to authority given by the Board of Directors of said corporation and that he signed his name thereto pursuant to like authority, and acknowledges same to be the act and deed of said corporation.

My commission expires
November 30, 2012

D. KRELL
NOTARY PUBLIC
SOUTH DAKOTA

D. Krell, Notary Public

CERTIFICATE

I, L. Nelson, Assistant Secretary of WESTERN SURETY COMPANY do hereby certify that the Power of Attorney hereinabove set forth is still in force, and further certify that the By-Law of the corporation printed on the reverse hereof is still in force. In testimony whereof I have hereunto subscribed my name and affixed the seal of the said corporation this 15th day of November, 2011.

WESTERN SURETY COMPANY

L. Nelson, Assistant Secretary

Form F4280-09-06

STATE OF ARIZONA

DEPARTMENT OF INSURANCE

Phoenix, Arizona

CERTIFICATE OF AUTHORITY

IT IS HEREBY CERTIFIED, That

WESTERN SURETY COMPANY
Sioux Falls, South Dakota

has complied with the requirements of the Arizona Revised Statutes and is hereby authorized, subject to the provisions thereof and the Charter Powers of said Company, to transact the following kinds of insurance, to-wit:

SURETY
CASUALTY (EXCLUDING WORKMEN'S COMPENSATION)

within the State of Arizona until terminated at the request of the insurer or suspended or revoked by the Director of Insurance.

Arizona Revised Statute 20-217 (C) states:

"A Certificate of Authority remains the property of this state. Upon termination at the request of the insurer or revocation by the Director, the insurer shall immediately deliver the Certificate of Authority to the Director.

IN TESTIMONY WHEREOF, I have hereunto set my hand and affixed the official seal of the Director of Insurance at the City of Phoenix, this 21st day of July, 1979

Director of Insurance

E-146 7/79

277581

STATE OF ARIZONA

DEPARTMENT OF INSURANCE

THIS IS TO CERTIFY, THAT THIS INSTRUMENT IS A FULL, TRUE AND CORRECT COPY OF THE ORIGINAL ON FILE WITH THE DEPARTMENT OF INSURANCE OF THE STATE OF ARIZONA AND CONSISTS OF 1 PAGE(S)

HEREUNTO SET MY HAND AND THE OFFICIAL SEAL OF THIS DEPARTMENT

FOR THE DIRECTOR OF INSURANCE THIS 19 JULY 2011.

AUTHORIZED REPRESENTATIVE

CERTIFICATE NO.: 277581

DIRECTOR OF INSURANCE
STATE OF ARIZONA

SEVERN TRENT SERVICES

SORB 33® Performance / Capacity Guarantee
Bayoxide® E33 Granular Iron Media

Arizona Water Company (AWC)
Harmony Hills Wells 5 & 12

Proposal No. 35557
Issue Date – November 11, 2011

Severn Trent Services, Inc. (**STS**) guarantees the capacity of Bayoxide E33 iron oxide media in accordance with the water assay conditions (Appendix **A**). Arsenic (**As**) will be treated to below the new required EPA MCL of 10 µg/L for this contaminant that began in January 2006. In the event that Bayoxide E33 does not meet the guaranteed performance / capacity, STS will provide a prorated savings on the future purchases of Bayoxide E33, for a period of five (5) years. In the event that STS develops a "new" or "improved" Bayoxide E33 Arsenic removal media that would have a performance benefit to the Utility, over the present Bayoxide E33 media, STS does agree to offer such "new" or "improved" media to the Utility at an equally reflective discount.

Design Parameters for Media Capacity Guarantee:

A. AWC's (**Owner**) Harmony Hills Wells Feeding the As Removal System

B. Total Flow = 1,160 gpm; Treatment Flow = 580 gpm

C. Arsenic: Average Analysis – 10.0 µg/L

D. Treatment Objective – <7 ppb

E. Configuration – Parallel.

F. Pretreatment – Chlorination with NaOCl or Cl_2 to Maintain a Minimum Residual of 0.4 mg/L free Cl_2.

G. Two 10'-Ø Adsorbers each with 281 ft^3 E33 Granular Media Volume.

H. Bayoxide® E33 Treatment Capacity – STS will guarantee a working capacity of 125,000 Bed Volumes (**BVs**). This value is equivalent to 526 million gallons through 563 ft^3 of media.

If the effluent As level from the adsorbers exceeds 7 ppb in fewer bed volume stated above, STS will replace the media in that adsorber for a replacement media discount equivalent to the current base price, not to exceed $185.00/cubic foot, as set forth by the following formula:

Discount = Base Price • [(Capacity BV's – Actual BVs) / Capacity BVs]

To enact the capacity guarantee, STS requires the following:

1) AWC and STS agree that the water quality data in Section 11531 of the specifications provided to STS is representative of the water being treated in this facility. This water quality is the basis for the capacity guarantee of the media. Variances greater than 10% above these values (or +0.3 pH units) will result in recalculation of the BV's guarantee.

SEVERN TRENT SERVICES

2) On the Start-up Date, owner shall operate the Facilities and assign appropriately qualified and certified employees, trained by STS, to start-up (condition the media) and operate the Facilities in the manner and only for the purpose for which they were designed, consistent with prudent water utility operating standards, practices, and procedures, and all applicable regulatory requirements.

3) Owner shall use its best efforts to maintain the quality of the influent stream to the System so as not to exceed baseline analyses used in design of capacity guarantee. The occurrence of oil & grease, abnormal suspended solids and biological matter not reported by the owner or not included in the water analysis will void the guarantee.

4) Owner must operate and maintain the STS SORB 33® System in accordance with STS's standard O&M Manual and other applicable manuals, documents and specifications in order to assure the safe and proper operation of the System at all times.

5) Owner must properly operate and maintain the wells, pumps and water pressure equipment connected to the System and ensures a consistent water pressure feed to the System as specified in STS Bayoxide E33 media handling procedures. Any sudden pressure surges or water hammers caused by the negligence or inaction by AWC resulting in crushing of the media will void the guarantee.

6) Owner must, under normal operating conditions, properly shut down or start-up the System in accordance with the STS Bayoxide E33 media handling procedures.

7) Owner shall be responsible for and shall promptly perform system operation and maintenance, including routine and preventive maintenance necessary to maintain the System in accordance with the O&M Manual including, without limitation, the following items:

    i. Backwashing of the System when the pressure drop across the media bed exceeds 10 psi or at least once every 4 months.

    ii. Performing an on-site overall System check on at least a weekly basis;

    iii. Regular inspection and maintenance of valves;

    iv. Regular inspection and calibration (if necessary) of System instrumentation and meters used for the monitoring of pressure and flow control; and

    v. Properly calibrating, maintaining and replacing any water flow measurement meters used in the System as necessary to ensure an accurate measurement of the volumetric flow of influent water to the System. In such event, STS reserves the right, at its own expense, to test the water flow measurement meters at the System.

8) Owner shall analyze the feed and treated water, record the flow totalizer readings and report the specified data in the electronic Excel form shown in Appendix **A** to STS on a quarterly basis. STS shall update the bottom of this form and reissue it to the Owner within 2 weeks of receiving it.

Relief from the Performance/Capacity Guarantee will be granted in the event that the above conditions were not meet or were materially altered by either party. Compliance with all stated values or limits stated herein shall be based upon reasonable interpretations and generally

SEVERN TRENT SERVICES

accepted industry practices. Relief may also be granted for force majeure or an event beyond the control of STS that affected the system/media performance.

STS makes no warranty, express or implied, including a warranty of merchantability or fitness for a particular purpose, with respect to such products or components. The warranties set forth herein, if any, are made expressly in lieu of other warranties, express or implied, statutory or otherwise, and any implied warranty of merchantability or warranty of fitness for a particular purpose, even if that purpose is known to STS, is hereby expressly excluded. STS's liability and owner's exclusive remedy for any failure by STS to supply products that meet the foregoing warranty is expressly limited to, at STS's option, the repair or replacement of the non-conforming products. In no event shall STS be liable for special, punitive, incidental or consequential damages, including but not limited to, loss of use, income, profit, capital or business opportunity even if STS has been advised of such possible income, profit, capital, or business opportunity.

HHAZ-E33PerformGuar-F09.doc:11-Nov-11

Bayoxide® E33 As Removal Operations Data Sheet

Utility:	Arizona Water Company			Site Name:	Harmony Hills Wells 5 & 12				
Date	Flow Totalizer Readings			Arsenic Assays (µg/L)				Feed Water Assays	
(mm/dd/yy)	Adsorber A	Adsorber B	Bypass	Feed	Ads A	Ads B	Final	pH	SiO_2 (mg/L)
Performance	Volume Treated/Bypassed to Date (Gals)			563 ft^3 E33/Adsorber			Guarantee =	125,000	BV's
Updated	Adsorber A	Adsorber B	Bypass	Treatment to Date:			Adsorber A		BV's
							Adsorber B		BV's

Appendix A

THE AMERICAN INSTITUTE OF ARCHITECTS

AIA Document A310

Bid Bond

KNOW ALL MEN BY THESE PRESENTS, that we **MGC CONTRACTORS, INC.**
P. O. Box 61748 Phoenix, AZ 85082
(Here insert full name ,and address or legal title of Contractor)
as Principal, hereinafter called the Principal, and **Western Surety Company**
P.O. BOX 5077, Sioux Falls, SD 57117-5077
(Here insert full name ,and address or legal title of Surety)
a corporation duly organized under the laws of the State of **SD**

as Surety, hereinafter called the Surety, are held and firmly bound unto
Arizona Water Company
3805 N. Black Canyon Highway Phoenix, AZ 85015-5351
(Here insert full name ,and address or legal title of Owner)
as Obligee, hereinafter called the Obligee, in the sum of
Ten Percent (10%) of the Amount Bid---------- Dollars (**$ 10% of the Amount Bid**),
for the payment of which sum well and truly to be made, the said Principal and the said Surety, bind ourselves, our heirs, executors, administrators, successors and assigns, jointly and severally, firmly by these presents.
WHEREAS, the Principal has submitted a bid for
Harmony Hills Well Numbers 5 and 12
(Here insert full name, address and description of project)

NOW, THEREFORE, if the Obligee shall accept the bid of the Principal and the Principal shall enter into a Contract with the Obligee in accordance with the terms of such bid and give such bond or bonds as may be specified in the bidding or Contract Documents with good and sufficient surety for the faithful performance of such Contract and for the prompt payment of labor and material furnished in the prosecution thereof, or in the event of the failure of the Principal to enter such Contract and give such bond or bonds, if the Principal shall pay to the Obligee the difference not to exceed the penalty hereof between the amount specified in said bid and such larger amount for which the Obligee may in good faith contract with another party to perform the Work covered by said bid then this obligation shall be null and void, otherwise to remain in full force and effect.

Signed and sealed this **15th** day of **November 2011**

Wendy S. Harvey
(Witness)
Wendy S. Harvey, Asst Secretary

Cindy Mullooly
Cindy Mullooly (Witness)

MGC CONTRACTORS, INC.
(Principal) (Seal)

(Title)
Randy L. Gates, President

Western Surety Company
(Surety) (Seal)

(Title)
Ted H. Rarrick, Attorney-in-Fact

Western Surety Company

POWER OF ATTORNEY APPOINTING INDIVIDUAL ATTORNEY-IN-FACT

Know All Men By These Presents, That WESTERN SURETY COMPANY, a South Dakota corporation, is a duly organized and existing corporation having its principal office in the City of Sioux Falls, and State of South Dakota, and that it does by virtue of the signature and seal herein affixed hereby make, constitute and appoint

Ted H Rarrick, Cindy K Mullooly, Individually

of Tempe, AZ, its true and lawful Attorney(s)-in-Fact with full power and authority hereby conferred to sign, seal and execute for and on its behalf bonds, undertakings and other obligatory instruments of similar nature

- In Unlimited Amounts -

and to bind it thereby as fully and to the same extent as if such instruments were signed by a duly authorized officer of the corporation and all the acts of said Attorney, pursuant to the authority hereby given, are hereby ratified and confirmed.

This Power of Attorney is made and executed pursuant to and by authority of the By-Law printed on the reverse hereof, duly adopted, as indicated, by the shareholders of the corporation.

In Witness Whereof, WESTERN SURETY COMPANY has caused these presents to be signed by its Senior Vice President and its corporate seal to be hereto affixed on this 28th day of July, 2011.

WESTERN SURETY COMPANY

Paul T. Bruflat, Senior Vice President

State of South Dakota
County of Minnehaha } ss

On this 28th day of July, 2011, before me personally came Paul T. Bruflat, to me known, who, being by me duly sworn, did depose and say: that he resides in the City of Sioux Falls, State of South Dakota; that he is the Senior Vice President of WESTERN SURETY COMPANY described in and which executed the above instrument; that he knows the seal of said corporation; that the seal affixed to the said instrument is such corporate seal; that it was so affixed pursuant to authority given by the Board of Directors of said corporation and that he signed his name thereto pursuant to like authority, and acknowledges same to be the act and deed of said corporation.

My commission expires
November 30, 2012

D. KRELL
NOTARY PUBLIC
SOUTH DAKOTA

D. Krell, Notary Public

CERTIFICATE

I, L. Nelson, Assistant Secretary of WESTERN SURETY COMPANY do hereby certify that the Power of Attorney hereinabove set forth is still in force, and further certify that the By-Law of the corporation printed on the reverse hereof is still in force. In testimony whereof I have hereunto subscribed my name and affixed the seal of the said corporation this 15th day of November, 2011.

WESTERN SURETY COMPANY

L. Nelson, Assistant Secretary

Form F4280-09-06

STATE OF ARIZONA

DEPARTMENT OF INSURANCE

Phoenix, Arizona

CERTIFICATE OF AUTHORITY

IT IS HEREBY CERTIFIED, That

WESTERN SURETY COMPANY
Sioux Falls, South Dakota

has complied with the requirements of the Arizona Revised Statutes and is hereby authorized, subject to the provisions thereof and the Charter Powers of said Company, to transact the following kinds of insurance, to-wit:

SURETY
CASUALTY (EXCLUDING WORKMEN'S COMPENSATION)

within the State of Arizona until terminated at the request of the insurer or suspended or revoked by the Director of Insurance.

Arizona Revised Statute 20-217 (C) states:

"A Certificate of Authority remains the property of this state. Upon termination at the request of the insurer or revocation by the Director, the insurer shall immediately deliver the Certificate of Authority to the Director."

IN TESTIMONY WHEREOF, I have hereunto set my hand and affixed the official seal of the Director of Insurance at the City of Phoenix, this 21st day of July, 1979

Director of Insurance

E-146 7/79

277581

STATE OF ARIZONA

DEPARTMENT OF INSURANCE

THIS IS TO CERTIFY, THAT THIS INSTRUMENT IS A FULL, TRUE AND CORRECT COPY OF THE ORIGINAL ON FILE WITH THE DEPARTMENT OF INSURANCE OF THE STATE OF ARIZONA AND CONSISTS OF 1 PAGE(S)

HEREUNTO SET MY HAND AND THE OFFICIAL SEAL OF THIS DEPARTMENT

FOR THE DIRECTOR OF INSURANCE THIS 19 JULY 2011.

AUTHORIZED REPRESENTATIVE

CERTIFICATE NO.: 277581

DIRECTOR OF INSURANCE ★ STATE OF ARIZONA ★

1-4814

MGC CONTRACTORS, INC.

11/15/11
1:45

November 15, 2011

Andy Haas
Arizona Water Company
3805 North Black Canyon Highway
Phoenix, AZ 85015

RE: Bid Proposals and Clarifications for Harmony Hills Well Nos. 5 and 12 Arsenic Removal Facility and the Southwest Center Well No. 8 Arsenic Removal Facility

MGC Contractors, Inc. is pleased to provide pricing for the above referenced projects.

As stated in the RFP, the pricing shown in the PROPOSAL/CONTRACT forms represents the lump sum price associated with each site utilizing Severn Trent Arsenic Removal Systems and Keller Electrical. Replacement Media Costs for the 5 years as identified in Addendum No. 1 will be as follows and added to the Proposal amounts if required:

Harmony Hills	adder of $131,946.00
Southwest Center	adder of $106,867.00

Thank you for the opportunity to be of service to Arizona Water Company. We look forward to becoming valued partners in helping to construct many successful projects.

Sincerely,

MGC Contractors, Inc.

Randy L. Gates
President

4110 E. Elwood St. Phoenix, Arizona 85040 Telephone (602) 437-5000 Fax (602) 470-4000
License Numbers ROC069949 & ROC071441

CHLORINE

OVERSIZE LOAD

NATIONAL
42

NATIONAL
42

327

Bobcat

DEERE

DEERE
DANGER

WATERWORKS ENGINEERS

Arizona Water Company
Harmony Hills Wells Nos. 5 & 12 Arsenic Removal Facility
ADEQ File No. 20110204

Principals
James J. Geselbracht, P.E.
Sami A. Kader, P.E.
John H. Matta, P.E.

Arizona Department of Environmental Quality
c/o Engineering Review Desk
1110 W Washington Street
Phoenix, AZ 85007

Project:
File: 11-057
5/4/2012

Subject: Drinking Water Facilities Approval of Construct Application

To Whom It May Concern:

We are pleased to submit the following documents for your review and consideration for Approval of Construction:

1) Engineer's Certificate of Completion (ECC)
2) Data Required with ECC
3) Copy of Approval To Construct permit
4) Operations and Maintenance Manual
5) As-built Drawings

The Harmony Hills Wells No. 5 and No. 12 Arsenic Removal Facility was submitted as a "Priority Review" application. We would appreciate your prompt review of the submitted documents. Please call with any questions you may have.

Sincerely,
WATER WORKS ENGINEERS, LLC

Project Engineer
Ben Lee, PE

ENGINEER'S CERTIFICATE OF COMPLETION AND FINAL INSPECTION "ECC"

ARIZONA DEPARTMENT OF ENVIRONMENTAL QUALITY (ADEQ) - WATER QUALITY DIVISION

ADEQ FILE NO.: 20110204 DRINKING WATER DESIGN *(Separate form now used for WASTEWATER DESIGN)* If separate Drinking Water & Wastewater Approvals to Construct were issued, separate ECCs required	COUNTY: Yavapai OWNER: Arizona Water Company

Project Name: Harmony Hills Wells No. 5 and No. 12 Arsenic Removal Facility *(as shown on Approval to Construct)*

Project Description:
Installation of arsenic removal system (granular iron media) at Harmony Hills Wells No. 5 and No. 12. Final treated concentration of arsenic will be 7.0 ppb or less. Maximum treated water flow 1,160 gpm.

(as shown on Approval to Construct, unless completed project differed, in which case describe in detail)

I, Benjamin Lee *(print name)*, a Professional Engineer registered in the State of Arizona, have inspected the construction of the above described project, and certify that (*check all applicable boxes, complete applicable blanks*):

ITEMS 1) THRU 4) MUST BE COMPLETED

☒ 1) The work on this project was completed on 5/3/2012 *(date)*.

☒ 2) On 5/3/2012 (date) a final construction inspection was conducted by ☐ MYSELF or ☒ under MY DIRECT SUPERVISION by Darin Begay *(print name)*.

☒ 3) The materials utilized and the installation and construction of those materials and equipment are in conformance with the approved plans and specifications

☒ 4) All provisions listed in the ADEQ Approval to Construct for this project, a copy of which I have attached to this certificate, have been fully satisfied or exceptions are listed on the reverse side of this certificate.

☒ 5) All construction and preoperational tests (infiltration, exfiltration, pressure, deflection, chlorination, bacti, etc.) *[circle types performed]* were properly conducted, met ADEQ requirements, and are presented in attachments to this Certificate. The total number of pages of test results attached is 5.

EITHER 6A) or 6B) MUST BE CHECKED

☒ 6A) Any deviation from the approved plans and the ADEQ Certificate of Approval to Construct have been noted on the attached "As-Built" plans (as stipulated in the Approval to Construct provisions) prepared and sealed pursuant to A.R.S.§ 32-125 on 5/4/2012 *(date)*. Of the total _____ sheets of "As-Built" plans attached, deviations from the approved plans are shown on sheets numbered _____. All deviations from the approved plans comply with the ADEQ minimum design and construction standards contained in statute, rule, bulletin or referenced codes, and with the key elements of the approved plans.

☐ 6B) The completed project did not deviate from the plans which received the Approval to Construct.

EITHER 7A) or 7B) MUST BE CHECKED

☐ 7A) This project did not require the preparation of an Operation and Maintenance Manual *(the only projects which do NOT require an O&M manual are gravity-only sewage collection systems, single-family residence septic systems, and drinking water distribution projects that include no source, storage, or pressurization facilities). distribution projects that include no source, storage, or pressurization facilities).*

☒ 7B) A FINAL Operation and Maintenance Manual has been prepared for this project and a copy is attached. This manual meets all ADEQ minimum design and construction standards contained in statute, rule, bulletin, referenced codes, the key elements of the approved plans, and, if applicable, with Attachment B of the September 10, 1994 Engineering Advisory for Individual Alternate Systems.

EITHER 8A) or 8B) MUST BE CHECKED

☒ 8A) Review of this project for Approval of Construction issuance does not require a fee because this project involves only drinking water, not wastewater.

☐ 8B) In accordance with A.A.C. R18-14-103 Schedule B, a check in the amount of $_____ is attached as initial fee for review of the submitted and other information for issuance of an Approval of Construction.

ADDITIONAL INFORMATION

☐ 9) Other, see additional Information on reverse side.

Engineer Address 7580 N Dobson Rd, Suite 200

Scottsdale, AZ 85256 Phone 480-661-1742 x112

ENGINEER'S SEAL per AAC R4-30-304.B9

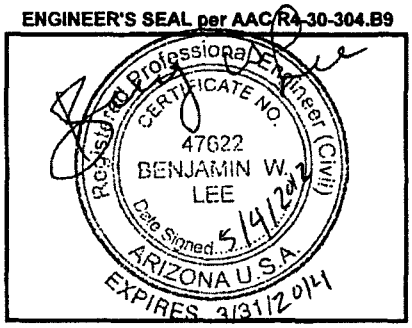

AZ DEPARTMENT OF ENVIRONMENTAL QUALITY ACCEPTANCE

EMPLOYEE SIGNATURE (PRINTED NAME) DATE

ARIZONA DEPARTMENT OF ENVIRONMENTAL QUALITY
CERTIFICATE OF APPROVAL TO CONSTRUCT
WATER FACILITIES

ADEQ File No: 20110204	**LTF No:** 54693
System Name: Az Water Co-Sedona	**System Number:** 03-003
Project Owner: Arizona Water Company	
Address: P O Box 29006, Phoenix , AZ 85038	
Project Location: Sedona	**County :** Yavapai
Description: INSTALLATION OF ARSENIC REMOVAL SYSTEM (GRANULAR IRON MEDIA) AT HARMONY HILLS WELLS NO. 5 AND12. FINAL TREATED VALUE 7.0 PPB ARSENIC. MAXIMUM TREATED WATER FLOW 1160 GPM.	

Approval to construct the above-described facilities as represented in the approved documents on file with the Arizona Department of Environmental Quality is hereby given subject to provisions 1 through 7 continued on page 2 through 2

1. This project must be constructed in accordance with all applicable laws, including Title 49, Chapter 2, Article 9 of the Arizona Revised Statutes and Title 18, Chapter 5, Article 5 of the Arizona Administrative Code.
2. Upon completion of construction, the engineer shall fill out the Engineer's Certificate of Completion and forward it to the Central Regional Office located in Phoenix. If all requirements have been completed, that unit will issue a Certificate of Approval of Construction. R18-5-507(B), Ariz. Admin.Code. At the project owner's request, the Department **may** conduct the final inspection required pursuant to R18-5-507(B); such a request must be made in writing in accordance with the time requirements of R18-5-507(C), Ariz. Admin. Code.
3. This certificate will be void if construction has not started within one year after the Certificate of Approval to Construct is issued, there is a halt in construction of more than one year, or construction is not completed within three years of the approval date. Upon receipt of a written request for an extension of time, the Department may grant an extension of time; an extension of time must be in writing. R18-5-505(E), Ariz. Admin. Code.
4. Operation of a newly constructed facility shall not begin until a Certificate of Approval of Construction has been issued by the Department. R18-5-507(A), Ariz. Admin. Code.

Reviewed by: AD4

By: Janak K. Desai 5/31/2011
Janak K. Desai, P.E. Unit Manager Date
Engineering Review Section
Water Quality Division

cc: File No : 20110204
Regional Office: Central
Owner: Arizona Water Company
County Health Department: Yavapai
Engineer: Water Works Engineers
Planning and Zoning/Az Corp. Commission
Engineering Review Database - Etr021

ADEQ Arizona Department of Environmental Quality

ENGINEERING REVIEW SECTION
DATA REQUIRED WITH ECC

INSTRUCTIONS

Please complete the test data and submit this form with the Engineers Certificate of Completion. An Approval of Construction cannot be issued without the data identified below in accordance with Arizona Administrative Code (A.A.C.) R18-5-508(C). Please attach all supplemental information and calculations to this form.

DATA

1.

PRESSURE TEST DATA				
Indicate Segment Tested	Press Test A	Press Test B	Press Test C	
Pressure and Leakage Test Results (Pass/Fail)	Pass	Pass	Pass	
Date Tested	4/24/12	4/28/12	4/30/12	
Time Started	12:10 pm	2:48 pm	8:25 am	
Time Finished	2:10 pm	4:48 pm	10:25 am	
Pipe Diameter	Vessels, 8"	2", 4", 6", 8"	8"	
Footage Tested	20', 40'	20', 35',10',50'	30'	
Allowable Leakage	0.54 gal	0.13 gal	0.05 gal	
Leakage Observed	0.10 gal	0.00 gal	0.00 gal	
Pressure at Test Point	Valve Tree	8" PW	4" GW	
Employee Observing the Test (Please Print Legibly)	Darin Begay	Darin Begay	Darin Begay	
Signature of Employee Observing the Test	Darin Begay	Darin Begay	Darin Begay	

2.

DISINFECTION SAMPLING					
Initial Sampling (Minimum 50 ppm available chlorine)	Date	4/24/12	4/30/12	4/30/12	
	Time	9:00 am	8:40 am	9:00 am	
	ppm Cl_2	200, 60	100	100	
After 24 Hours Detention Time (Minimum 10 ppm free chlorine)	Date	4/25/12	5/1/12	5/1/12	
	Time	9:15 am	8:45 am	9:35 am	
	ppm Cl_2	100, 12	50	50	
After Sufficient Flushing (Water is clear and system Cl_2 residual is measured)	Date	4/25/12	5/1/12	5/1/12	
	Time	12:18 pm	9:30 am	10:10 am	
	ppm Cl_2	0.83, 0.48	1.34, 1.08	1.18	
Bacteriological Sampling(s):	Date	4/25/12	5/1/12	5/1/12	
	Time	12:21 pm	9:30 am	10:10 am	
	Attached (Y/N)	Y	Y	Y	
		Yes/No	Yes/No	Yes/No	Yes/No

3.

Certification	Professional Seal As per A.A.C. R18-5-507(B)(1)
I, Benjamin Lee, certify that I have inspected the work performed and have found it to be satisfactory and in accordance with Arizona Administrative Code, Arizona Engineering Bulletins, and the approved specifications. Authorized Persons Signature: Benjamin W. Lee Date: 5/4/2012	

Statewide Disinfection Service

And

Statewide Laboratory Service

PHONE 480-981-8859

Attention:	Sent from
Darin Begay	Debbie Wright
COMPANY:	**DATE:**
Water Work Engineers	MAY 2, 2012
FAX:	**SENDER'S FAX:**
480-661-1743	480-984-9616
Results:	**NUMBER OF PAGES:**
On 2645 Lyric Drive in Sedona, Arizona	COVER + 2

STATEWIDE DISINFECTION SERVICE

HIGH AND LOW CHLORINE RESIDUAL LABORATORY REPORT ENVIROMENTAL LABORATORY LICENSE AZ0637

CLIENT: MGC Contractors

PROJECT LOCATION: 2645 Lyric Drive in Sedona, Arizona

High Residual Testing
Date: 04/30/12

SAMPLE LOCATION	RESIDUAL
1. Tie- In @ 8 inch	100 PPM
2. Well connection	100 PPM
3. Back wash Tanks	100 PPM
4. Recycle pumps	100 PPM

Low Residual Testing
Date: 05/01/12

SAMPLE LOCATION	RESIDUAL
1. Tie-in	50 PPM
2. Well connection	50 PPM
3. Back wash tanks	50 PPM
4. Recycle pumps	50 PPM

Reviewed by: _____
James R. Wright / Laboratory Director

Phone # 480-981-8859~ Fax # 480-984-9616

LABORATORY REPORT
STATEWIDE DISINFECTION SERVICE

ENVIRONMENTAL LABORATORY LICENSE AZ0637

CLIENT: MGC Contractors

DATE SUBMITTED: 05/01/12

DATE REPORTED : 05/02/12

MICROBIOLOGICAL TESTING LOCATION: 2645 East Lyric Drive, Sedona, Arizona

ATTN: Jesus 602-768-2053

	LOCATION	SAMPLE ID	PPM	RESULT
1.	Well Connection	05011205	1.18	absent
2.	Back Wash Tanks	05011206	1.34	absent
3.	Recycle pumps	05011207	1.08	absent

PARAMETER	METHOD	START	END	ANALYST
PA	Colisure	05/01/12	05/02/12	JW

Absent: No coliform bacteria detected in 100mL sample. Water meets State / Federal limit for bacteria in drinking water.

Present: Coliform bacteria detected in 100mL sample. Water does not meet State / Federal limit for bacteria in drinking water.

Reviewed by: _____

JAMES R. WRIGHT / LABORATORY DIRECTOR

LABORATORY REPORT
STATEWIDE DISINFECTION SERVICE

ENVIRONMENTAL LABORATORY LICENSE AZ0637

CLIENT: MGC Contractors

DATE SUBMITTED: 04/25/12

DATE REPORTED : 04/26/12

MICROBIOLOGICAL TESTING LOCATION: 2645 East Lyric Drive, Sedona, Arizona

ATTN: Jesus 602-768-2053

	LOCATION	SAMPLE ID	PPM	RESULT
1.	West Tank	04251206	.48	absent
2.	East Tank	04251207	.83	absent

PARAMETER	METHOD	START	END	ANALYST
PA	Colisure	04/25/12	04/26/12	JW

Absent: No coliform bacteria detected in 100mL sample. Water meets State / Federal limit for bacteria in drinking water.

Present: Coliform bacteria detected in 100mL sample. Water does not meet State / Federal limit for bacteria in drinking water.

Reviewed by: James R Wright

JAMES R. WRIGHT / LABORATORY DIRECTOR

Janice K. Brewer
Governor

ARIZONA DEPARTMENT OF ENVIRONMENTAL QUALITY

1110 West Washington Street • Phoenix, Arizona 85007
(602) 771-2300 • azdeq.gov

Henry R. Darwin
Director

APPROVAL OF CONSTRUCTION

Project Description: Harmony Hills Wells No. 5 and No.12. AOC Permit for As treatment system (granular iron media) to treat up to 1,160 gpm to 7 ppb As.

Location: Sedona, Yavapai County, AZ

Project Owner: Arizona Water Company
Address: P.O. Box 29006, Phoenix, AZ 85038

The Arizona Department of Environmental Quality (ADEQ) hereby issues an Approval of Construction for the above-described facility based on the following provisions of Arizona Administrative Code (A.A.C.) R18-5-507 et seq.

On August 31, 2011, ADEQ issued a Certificate of Approval to Construct for the referenced project.

On May 4, 2012 Benjamin W. Lee, P.E., certified the following:

- A final construction inspection was conducted on May 3, 2012;
- The referenced project was constructed according to the as-built plans and specifications and ADEQ's Certificate of Approval to Construct;
- Water system pressure and leakage tests were conducted on April 4, April 28, April 30, 2012, and the results were within the allowable leakage rates;
- The water storage system was disinfected according to an ADEQ-approved method; and
- The applicant has the right to appeal this AOC Permit. Appeal information is on reverse side of this Permit.

Microbiological samples were collected on April 25 and May 1, 2012 and analyzed on April 26 and May 2, 2012 by Statewide Laboratory, ADHS License No. AZ0637. The sample results were negative for total coliform.

This Approval of Construction authorizes the owner to begin operating the above-described facilities as represented in the approved plan on file with the ADEQ. Be advised that A.A.C. R18-5-124 requires the owner of a public water system to maintain and operate all water production, treatment and distribution facilities in accordance with ADEQ Safe Drinking Water Rules.

AD4

PWS No.: 03-003
LTF No.: 55980

Janak K. Desai, P.E., Manager — 5/11/2012 Date Approved
Drinking Water Facilities Review Unit
Drinking Water Section

cc: TEU File No.: 20110204
CRO Approval of Construction File
Yavapai County Health Department
Yavapai County Planning & Zoning Department
AZ Corporation Commission
Engineer

RIGHT TO APPEAL INFORMATION

The Arizona Department of Environmental Quality's review of this application was subject to the requirements of the licensing time frames ("LTF") statute under Arizona Revised Statutes ("A.R.S.") § 41-1072 through § 41-1079 and the LTF rules under Arizona Administrative Code ("A.A.C.") R18-1-501 through R18-1-525. This Notice is being issued within the overall time frame for your application.

ADEQ hereby approves your application for Approval of Construction Drinking Water Facilities under A.R.S. § 49-351. Your copy of the Approval of Construction Permit is on the reverse side of this Right to Appeal Information sheet.

This decision is an appealable agency action under A.R.S. § 41-1092. You have a right to request a hearing and file an appeal under A.R.S. § 41-1092.03(B). You must file a written Request for Hearing or Notice of Appeal within **30 days** of your receipt of this Notice. A Request for Hearing or Notice of Appeal is filed when it is received by ADEQ's Hearing Administrator as follows:

Office of Administrative Counsel
Arizona Department of Environmental Quality
1110 W. Washington Street
Phoenix, AZ 85007

The Request for Hearing or Notice of Appeal shall identify the party, the party's address, the agency and the action being appealed and shall contain a concise statement of the reasons for the appeal. Upon proper filing of a Request for Hearing or Notice of Appeal, ADEQ will serve a Notice of Hearing on all parties to the appeal. If you file a timely Request for Hearing or Notice of Appeal you have a right to request an informal settlement conference with ADEQ under A.R.S. § 41-1092.06. This request must be made in writing no later than **20 days** before a scheduled hearing and must be filed with the Hearing Administrator at the above address.

Please contact Adrian Dumitrescu at (602) 771-4201 or ad4@azdeq.gov if you have questions regarding this Notice or the Certificate of Approved of Construction.

ARIZONA WATER COMPANY

CONSTRUCTION PLACED IN SERVICE NOTICE

WORK AUTHORIZATION NO.: 1-4814

DIVISION: Verde Valley

DATE PLACED IN SERVICE: 6 | 25 | 12

CONTRACT NO:

FOR PURPOSES OF *MODIFIED ACCELERATED COST RECOVERY SYSTEM*, AN ASSET IS "PLACED IN SERVICE" WHEN IT IS IN A CONDITION OR STATE OF READINESS AND AVAILABILITY FOR A SPECIFICALLY ASSIGNED FUNCTION, WHETHER IT BE FOR USE IN A TRADE OR BUSINESS, OR FOR THE PRODUCTION OF INCOME.

I CERTIFY THAT THE ASSET(S) CONSTRUCTED PURSUANT TO THE PROVISIONS OF THE ABOVE-REFERENCED WORK AUTHORIZATION ARE READY FOR SERVICE AS OF THE DATE SHOWN ABOVE.

JM Sikes.

Division Manager or Operations Superintendent
(signature)

6/25/12.

Date

SUBMIT ORIGINAL TO ACCOUNTING DEPARTMENT

A-1-3-1
FKS 11/24/11

WA 1-4875

ARIZONA WATER COMPANY
WORK AUTHORIZATION

W.A. NUMBER: 1-4875
P.E. NUMBER:
BUDGET ITEM NO.: B-1
SHEET NO.: 1 of 2

SYSTEM:	SEDONA	WORK TO START BY:	UPON AUTHORIZATION
DIVISION:	VERDE VALLEY	WORK TO BE FINISHED BY:	WITHIN 180 DAYS
TAX CODE:	0970		

DESCRIPTION OF WORK:

Design, permit, construct, and make operational an Arsenic Removal Facility at Broken Arrow Well No. 10 (Phase 2 of 2). The best available treatment technology of adsorptive technology was selected. Construct in accordance with attached drawings and/or Arizona Water Company specifications.

FACTORS JUSTIFYING WORK:

2012 APPROVED BUDGET ITEM (PHASE 2 OF 2) $430,000
2011 (PHASE 1 OF 2) BUDGET = $70,150 ; SPENT APPROXIMATELY $70,000

COST ESTIMATE		AUTHORIZATION	DATE
COST OF WORK:		PREPARED BY: Andrew J. Haas AJH 1-10-12 Andy Haas	1-5-12
MATERIAL	0		
LABOR	12,000	REVIEWED FOR ESMT/ROW VERIFICATION: Charles Briggs CB 01-10-2012	01-05-2012
CONTRACT PORTION	411,439		
OVERHEAD	46,578	REVIEWED BY: Mike Loggins MC 1-11-12	1-5-12
TOTAL AUTHORIZED EXPENDITURES CHARGEABLE TO THIS W.A.	$ 470,017		
FUNDS RECEIVED:		APPROVED BY ENGINEERING: Fredrick Schneider FS 1-10-12	1-5-12
CONTRIBUTIONS RECEIVED	0		
REFUNDABLE ADVANCES RECEIVED	0	APPROVED BY FINANCE: Joseph Harris	1/5/12
TOTAL CONTRIBUTIONS/ADVANCES	0		
NET CASH REQUIRED	$ 470,017	AUTHORIZED BY PRESIDENT: William M Garfield	1-10-12

COMMENTS:

The $40,000 overage is being transferred from WA 1-4873 (Sedona Golf Resort ARF) since that project has a projected underage of $40,000.

CONSTRUCTION RELEASE:

RELEASED TO CONSTRUCTION
Authorized by FRED SCHNEIDER
Date 1/10/2012

2012 Re-release

AFH

ARIZONA WATER COMPANY

WORK AUTHORIZATION - DETAIL SHEET

W.A. NUMBER: 1-4875
P.E. NUMBER:
BUDGET ITEM NO.: B-1
SHEET NO.: 2 of 2

RETIREMENT PROPERTY UNITS	PLANT PROPERTY ACCOUNT	UNIT DESCRIPTION	QUANTITY	YEAR INSTALLED AND W.A. NUMBER

PROJECT DESCRIPTION:

Design, permit, construct, and make operational an Arsenic Removal Facility at Broken Arrow Well No. 10 (Phase 2 of 2). The best available treatment technology of adsorptive technology was selected.

	DESCRIPTION	PLANT PROP ACCT	QUANTITY	UNIT COST	TOTAL
CONTRACT WORK	Provide and Install On-Site Piping	332	1	$ 9,892.00	$ 9,892
	Provide and Install Arsenic Removal Facility	332	1	221,395.00	221,395
	Provide and Install Backwash Recovery System	332	1	35,823.00	35,823
	Provide and Install On-Site Electrical	332	1	30,856.00	30,856
	Testing, Commissioning, and On-Site Operator Training	332	1	12,706.00	12,706
	Contracting Tax	332	1	5,622.24	5,622
	Provide and Install Bag Filter Assembly	332	1	48,440.95	48,441
	Replace Broken Fence	332	1	5,826.73	5,827
	Special Inspections	332	2	2,500.00	5,000
	Construction Contingency	332	1	35,877.00	35,877
	SERVICE CONNECTIONS COMPLETE: DOUBLE-LONG	345			
	SERVICE CONNECTIONS COMPLETE: DOUBLE-SHORT	345			
	SERVICE CONNECTIONS COMPLETE: SINGLE-LONG	345			
	SERVICE CONNECTIONS COMPLETE: SINGLE-SHORT	345			
TOTAL CONTRACT WORK					$ 411,439
MATERIALS					
	SERVICE CONNECTIONS: DOUBLE-LONG	345			
	SERVICE CONNECTIONS: DOUBLE-SHORT	345			
	SERVICE CONNECTIONS: SINGLE-LONG	345			
	SERVICE CONNECTIONS: SINGLE-SHORT	345			
	METERS	346			
TOTAL MATERIALS					$ -
LABOR	Project Management	332	80	$ 50.00	$ 4,000
	TESTING FEE				
	PERMIT FEE				
	SURVEY FEE				
	FIELD INSPECTION	332	160	50.00	8,000
	INSTALL SERVICE CONNECTIONS: DOUBLE-LONG	345			
	INSTALL SERVICE CONNECTIONS: DOUBLE-SHORT	345			
	INSTALL SERVICE CONNECTIONS: SINGLE-LONG	345			
	INSTALL SERVICE CONNECTIONS: SINGLE-SHORT	345			
TOTAL LABOR					$ 12,000
SUBTOTAL - CONTRACT WORK, MATERIALS, AND LABOR					$ 423,439
OVERHEAD					46,578
TOTAL	REFUNDABLE PORTION ☐	NON-REFUNDABLE PORTION ☐		COST ESTIMATE	$ 470,017

AFH

ARIZONA WATER COMPANY

INTER-OFFICE CORRESPONDENCE

To: M. L. Whitehead
W. M. Garfield
From: F. K. Schneider FS

Date: October 12, 2011

Subject: Verde Valley Arsenic Removal Facilities Special WAs: 1-4872, 1-4873, 1-4874, and 1-4875

The leases on the existing Envirogen arsenic removal facilities in the Verde Valley Division are expiring.

Well Site	Lease Expiration Date
Broken Arrow Well No. 10	October 31, 2011
Rimrock Well No. 2	February 4, 2012
Sedona Golf Resort Well	February 18, 2012
Montezuma Haven Well No. 3	April 10, 2012

Company engineers have determined that the most cost effective way to continue providing safe and reliable water which complies with the safe drinking water requirements is to construct a new arsenic removal facility at each of these wells. To meet water system demands, construction of these new arsenic removal facilities must begin on or before each water services agreement term expiration. Each arsenic removal facility will use the best available technology at the lowest contracted price in a design-build format. Each arsenic removal facility was bid to a pre-selected group of qualified contractors, vendors, and engineers based on their prior experience. Through the evaluation, it was determined that all new arsenic removal facilities will utilize adsorptive media based on an evaluation of water quality, site sizing constraints, construction, and projected operating costs.

Bids received for the design and construction of these four arsenic removal facilities were somewhat higher than originally estimated. This will impact the proposed 2012 budget, but no additional funds, beyond those requested in my September 9, 2011 memorandum, will be requested for the 2011 construction budget.

hac

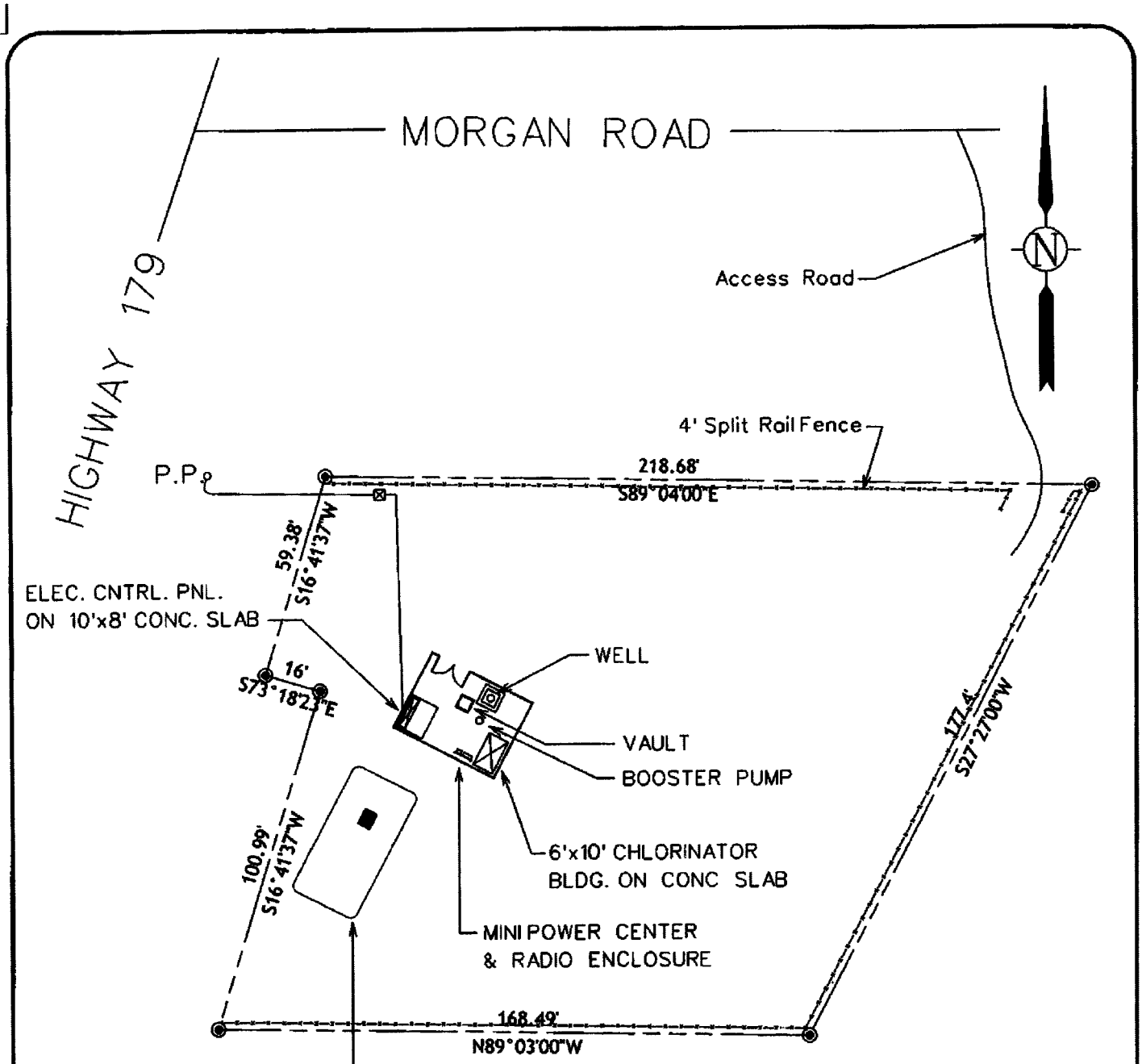

VICINITY MAP
N.T.S.

ARIZONA WATER COMPANY

SYSTEM NAME:	SEDONA
FACILITY NAME:	BROKEN ARROW WELL NO.10
STREET ADDRESS	1480 HIGHWAY 179 SEDONA, AZ 86336
LOCATION:	Northeast quarter Section 19, T.17N.,R.6E.

DATE:	SCALE:	DRAWN BY:
12.16.2003	1"=40'-0"	CB

ARIZONA WATER COMPANY
WORK AUTHORIZATION

W.A. NUMBER: 1-4875
P.E. NUMBER:
BUDGET ITEM NO.: Special #16
SHEET NO.: 1 of 2

SYSTEM: VERDE VALLEY
DIVISION: SEDONA
TAX CODE: 0970 ✓

WORK TO START BY: UPON AUTHORIZATION
WORK TO BE FINISHED BY: WITHIN 180 DAYS

DESCRIPTION OF WORK:

Design, permit, construct, and make operational an Arsenic Removal Facility at Broken Arrow Well No. 10. Construct in accordance with attached drawings and/or Arizona Water Company specifications.

FACTORS JUSTIFYING WORK:

The lease on the existing Envirogen arsenic removal facility at Broken Arrow Well No. 10 expires October 31, 2011. Company engineers have determined that the most cost effective way to continue providing safe and reliable water which complies with the safe drinking water requirements is to construct a new arsenic removal facility at this well. The arsenic removal facility will use the best available technology at the lowest contracted price in a design-build format. The arsenic removal facility was bid to a pre-selected group of qualified contractors, vendors, and engineers based on their prior experience. Through the evaluation, it was determined that the new arsenic removal facility will utilize adsorptive media based on an evaluation of water quality, site sizing constraints, construction, and projected operating costs.

COST ESTIMATE		AUTHORIZATION	DATE
COST OF WORK:		PREPARED BY: Andy Haas A.J.H. 10-13-11	10-6-11
MATERIAL	0		
LABOR	11,000	REVIEWED FOR ESMT/ROW VERIFICATION: Charles Briggs 10-13-2011 CB	10-06-2011
CONTRACT PORTION	50,000		
OVERHEAD	9,150	REVIEWED BY: James Wilson JW 10/13/11	10/6/11
TOTAL AUTHORIZED EXPENDITURES CHARGEABLE TO THIS W.A.	$ 70,150		
FUNDS RECEIVED:		APPROVED BY ENGINEERING: Fredrick Schneider 10-13-11	10-6-11
CONTRIBUTIONS RECEIVED	0		
REFUNDABLE ADVANCES RECEIVED	0	APPROVED BY FINANCE: Joseph Harris	10/31/11
TOTAL CONTRIBUTIONS/ADVANCES	0		
NET CASH REQUIRED	$ 70,150	SPECIAL ITEM EXCEEDING $10,000; AUTHORIZED BY PRESIDENT: William Garfield	10-11-2011
		SPECIAL ITEM EXCEEDING $10,000; AUTHORIZED BY CHAIRMAN: M. L. Whitehead	10-12-11

COMMENTS:

CONSTRUCTION RELEASE:

RELEASED TO CONSTRUCTION
Authorized by FRED SCHNEIDER
Date 10/13/2011

AFH

ARIZONA WATER COMPANY

WORK AUTHORIZATION - DETAIL SHEET

W.A. NUMBER: 1-4875
P.E. NUMBER:
BUDGET ITEM NO.: Special #15
SHEET NO.: 2 of 2

RETIREMENT PROPERTY UNITS	PLANT PROPERTY ACCOUNT	UNIT DESCRIPTION	QUANTITY	YEAR INSTALLED AND W.A. NUMBER

PROJECT DESCRIPTION:

DESIGN, PERMIT, CONSTRUCT, AND MAKE OPERATIONAL AN ARSENIC REMOVAL FACILITY AT BROKEN ARROW WELL NO. 10.

	DESCRIPTION	PLANT PROP ACCT	QUANTITY	UNIT COST	TOTAL
CONTRACT WORK	Engineering Design and Permitting	332	1	$ 25,882.00	$ 25,882
	Mobilization	332	1	6,706.00	6,706
	Provide and Install Arsenic Removal Facility	332	1	12,212.00	12,212
	100% Performance and Payment Bonds	332	1	5,199.76	5,200
	SERVICE CONNECTIONS COMPLETE: DOUBLE-LONG	345			
	SERVICE CONNECTIONS COMPLETE: DOUBLE-SHORT	345			
	SERVICE CONNECTIONS COMPLETE: SINGLE-LONG	345			
	SERVICE CONNECTIONS COMPLETE: SINGLE-SHORT	345			
TOTAL CONTRACT WORK					$ 50,000
MATERIALS					
	SERVICE CONNECTIONS: DOUBLE-LONG	345			
	SERVICE CONNECTIONS: DOUBLE-SHORT	345			
	SERVICE CONNECTIONS: SINGLE-LONG	345			
	SERVICE CONNECTIONS: SINGLE-SHORT	345			
	METERS	346			
TOTAL MATERIALS					$ -
LABOR	Engineering Design Review	332	60	$ 50.00	$ 3,000
	Submittal Reviews	332	80	50.00	4,000
	Project Management	332	40	50.00	2,000
	TESTING FEE				
	PERMIT FEE				
	SURVEY FEE				
	FIELD INSPECTION	332	40	50.00	2,000
	INSTALL SERVICE CONNECTIONS: DOUBLE-LONG	345			
	INSTALL SERVICE CONNECTIONS: DOUBLE-SHORT	345			
	INSTALL SERVICE CONNECTIONS: SINGLE-LONG	345			
	INSTALL SERVICE CONNECTIONS: SINGLE-SHORT	345			
TOTAL LABOR					$ 11,000
SUBTOTAL - CONTRACT WORK, MATERIALS, AND LABOR					$ 61,000
OVERHEAD					9,150
TOTAL	REFUNDABLE PORTION ☐	NON-REFUNDABLE PORTION ☐		COST ESTIMATE	$ 70,150

AFH

ARIZONA WATER COMPANY

3805 N. BLACK CANYON HIGHWAY, PHOENIX, ARIZONA 85015-5351 • P.O. BOX 29006, PHOENIX, AZ 85038-9006
PHONE: (602) 240-6860 • FAX: (602) 240-6874 • TOLL FREE: (800) 533-6023 • www.azwater.com

August 26, 2011

Mr. Fred Tregaskes
Weber Group
16825 S. Weber Drive
Chandler, AZ 85226-4112

Re: Arsenic Removal Facilities at Broken Arrow Well No. 10, Sedona Golf Resort Well, Rimrock Well No. 2, and Montezuma Haven Wells No. 2 and 3.

Dear Mr. Tregaskes:

Enclosed with this letter is a Request for Proposal ("RFP") for the above-referenced project. Arizona Water Company (the "Company") requests your submission of a detailed fee proposal for the following tasks, according to the enclosed RFP dated August 26, 2011:

Mandatory site visits will begin at 4115 E. Goldmine Drive, Lake Montezuma, Arizona 86335 at 8:00 a.m. on September 7, 2011.

A mandatory pre-submittal conference will be held at 3805 N. Black Canyon Highway, Phoenix, Arizona 85015 at 9:00 a.m. on September 12, 2011.

Proposals must be submitted no later than 4:00 p.m. on September 19, 2011. The original proposals, plus three (3) copies, shall be sent to the attention of Andy Haas, located at 3805 N. Black Canyon Highway, Phoenix, AZ 85015. Incomplete submittals will not be considered in the evaluation. Late submittals will not be accepted.

Proposal evaluation criteria are described in the enclosed RFP.

List of Documents enclosed with this letter:

a. Request for Proposal
b. Broken Arrow Well No. 10 Arsenic Removal Facility Proposal/Contract
c. Sedona Golf Resort Well Arsenic Removal Facility Proposal/Contract
d. Rimrock Well No. 2 Arsenic Removal Facility Proposal/Contract
e. Montezuma Haven Wells No. 2 & 3 Arsenic Removal Facility Proposal/Contract
f. Arsenic Removal Facility Technical Specifications
g. EI & C Design Guidelines and Technical Specifications

h. Arizona Water Company's General Conditions of Contract and Standard Specifications

The Company intends to select the successful Contractor directly from the submitted proposals. However, the Company reserves the right to have a formal interview process following review of the submitted proposals. It is anticipated that a notice of award for design services will be issued on or around September 23, 2011, following an evaluation of the submitted qualifications and pricing.

All questions and/or correspondence regarding this request must be submitted in writing, to Andy Haas by letter at the address noted above, by email at ahaas@azwater.com, or by fax at 602-294-2169.

Very truly yours,

Fredrick K. Schneider
Vice President - Engineering

afh
Enclosure(s)

ARIZONA WATER COMPANY

3805 N. BLACK CANYON HIGHWAY, PHOENIX, ARIZONA 85015-5351 • P.O. BOX 29006, PHOENIX, AZ 85038-9006
PHONE: (602) 240-6860 • FAX: (602) 240-6874 • TOLL FREE: (800) 533-6023 • www.azwater.com

August 26, 2011

Mr. Herb Tiffany
Tiffany Construction Company
75 Kallof Place, Suite 101
Sedona, AZ 86336

Re: Arsenic Removal Facilities at Broken Arrow Well No. 10, Sedona Golf Resort Well, Rimrock Well No. 2, and Montezuma Haven Wells No. 2 and 3.

Dear Mr. Tiffany:

Enclosed with this letter is a Request for Proposal ("RFP") for the above-referenced project. Arizona Water Company (the "Company") requests your submission of a detailed fee proposal for the following tasks, according to the enclosed RFP dated August 26, 2011:

Mandatory site visits will begin at 4115 E. Goldmine Drive, Lake Montezuma, Arizona 86335 at 8:00 a.m. on September 7, 2011.

A mandatory pre-submittal conference will be held at 3805 N. Black Canyon Highway, Phoenix, Arizona 85015 at 9:00 a.m. on September 12, 2011.

Proposals must be submitted no later than 4:00 p.m. on September 19, 2011. The original proposals, plus three (3) copies, shall be sent to the attention of Andy Haas, located at 3805 N. Black Canyon Highway, Phoenix, AZ 85015. Incomplete submittals will not be considered in the evaluation. Late submittals will not be accepted.

Proposal evaluation criteria are described in the enclosed RFP.

List of Documents enclosed with this letter:

a. Request for Proposal
b. Broken Arrow Well No. 10 Arsenic Removal Facility Proposal/Contract
c. Sedona Golf Resort Well Arsenic Removal Facility Proposal/Contract
d. Rimrock Well No. 2 Arsenic Removal Facility Proposal/Contract
e. Montezuma Haven Wells No. 2 & 3 Arsenic Removal Facility Proposal/Contract
f. Arsenic Removal Facility Technical Specifications
g. EI & C Design Guidelines and Technical Specifications

h. Arizona Water Company's General Conditions of Contract and Standard Specifications

The Company intends to select the successful Contractor directly from the submitted proposals. However, the Company reserves the right to have a formal interview process following review of the submitted proposals. It is anticipated that a notice of award for design services will be issued on or around September 23, 2011, following an evaluation of the submitted qualifications and pricing.

All questions and/or correspondence regarding this request must be submitted in writing, to Andy Haas by letter at the address noted above, by email at ahaas@azwater.com, or by fax at 602-294-2169.

Very truly yours,

Fredrick K. Schneider
Vice President - Engineering

afh
Enclosure(s)

ARIZONA WATER COMPANY

3805 N. BLACK CANYON HIGHWAY, PHOENIX, ARIZONA 85015-5351 • P.O. BOX 29006, PHOENIX, AZ 85038-9006
PHONE: (602) 240-6860 • FAX: (602) 240-6874 • TOLL FREE: (800) 533-6023 • www.azwater.com

August 26, 2011

Mr. Jeremy McVey
PCL Construction
1711 W. Greentree Drive, Suite 201
Tempe, AZ 85284

Re: Arsenic Removal Facilities at Broken Arrow Well No. 10, Sedona Golf Resort Well, Rimrock Well No. 2, and Montezuma Haven Wells No. 2 and 3.

Dear Mr. McVey:

Enclosed with this letter is a Request for Proposal ("RFP") for the above-referenced project. Arizona Water Company (the "Company") requests your submission of a detailed fee proposal for the following tasks, according to the enclosed RFP dated August 26, 2011:

Mandatory site visits will begin at 4115 E. Goldmine Drive, Lake Montezuma, Arizona 86335 at 8:00 a.m. on September 7, 2011.

A mandatory pre-submittal conference will be held at 3805 N. Black Canyon Highway, Phoenix, Arizona 85015 at 9:00 a.m. on September 12, 2011.

Proposals must be submitted no later than 4:00 p.m. on September 19, 2011. The original proposals, plus three (3) copies, shall be sent to the attention of Andy Haas, located at 3805 N. Black Canyon Highway, Phoenix, AZ 85015. Incomplete submittals will not be considered in the evaluation. Late submittals will not be accepted.

Proposal evaluation criteria are described in the enclosed RFP.

List of Documents enclosed with this letter:

a. Request for Proposal
b. Broken Arrow Well No. 10 Arsenic Removal Facility Proposal/Contract
c. Sedona Golf Resort Well Arsenic Removal Facility Proposal/Contract
d. Rimrock Well No. 2 Arsenic Removal Facility Proposal/Contract
e. Montezuma Haven Wells No. 2 & 3 Arsenic Removal Facility Proposal/Contract
f. Arsenic Removal Facility Technical Specifications
g. EI & C Design Guidelines and Technical Specifications

h. Arizona Water Company's General Conditions of Contract and Standard Specifications

The Company intends to select the successful Contractor directly from the submitted proposals. However, the Company reserves the right to have a formal interview process following review of the submitted proposals. It is anticipated that a notice of award for design services will be issued on or around September 23, 2011, following an evaluation of the submitted qualifications and pricing.

All questions and/or correspondence regarding this request must be submitted in writing, to Andy Haas by letter at the address noted above, by email at ahaas@azwater.com, or by fax at 602-294-2169.

Very truly yours,

Fredrick K. Schneider
Vice President - Engineering

afh
Enclosure(s)

ARIZONA WATER COMPANY

3805 N. BLACK CANYON HIGHWAY, PHOENIX, ARIZONA 85015-5351 • P.O. BOX 29006, PHOENIX, AZ 85038-9006
PHONE: (602) 240-6860 • FAX: (602) 240-6874 • TOLL FREE: (800) 533-6023 • www.azwater.com

August 26, 2011

Mr. Randy Gates
MGC Contractors, Inc.
4110 E. Elwood Street
Phoenix, AZ 85040

Re: Arsenic Removal Facilities at Broken Arrow Well No. 10, Sedona Golf Resort Well, Rimrock Well No. 2, and Montezuma Haven Wells No. 2 and 3.

Dear Mr. Gates:

Enclosed with this letter is a Request for Proposal ("RFP") for the above-referenced project. Arizona Water Company (the "Company") requests your submission of a detailed fee proposal for the following tasks, according to the enclosed RFP dated August 26, 2011:

Mandatory site visits will begin at 4115 E. Goldmine Drive, Lake Montezuma, Arizona 86335 at 8:00 a.m. on September 7, 2011.

A mandatory pre-submittal conference will be held at 3805 N. Black Canyon Highway, Phoenix, Arizona 85015 at 9:00 a.m. on September 12, 2011.

Proposals must be submitted no later than 4:00 p.m. on September 19, 2011. The original proposals, plus three (3) copies, shall be sent to the attention of Andy Haas, located at 3805 N. Black Canyon Highway, Phoenix, AZ 85015. Incomplete submittals will not be considered in the evaluation. Late submittals will not be accepted.

Proposal evaluation criteria are described in the enclosed RFP.

List of Documents enclosed with this letter:

a. Request for Proposal
b. Broken Arrow Well No. 10 Arsenic Removal Facility Proposal/Contract
c. Sedona Golf Resort Well Arsenic Removal Facility Proposal/Contract
d. Rimrock Well No. 2 Arsenic Removal Facility Proposal/Contract
e. Montezuma Haven Wells No. 2 & 3 Arsenic Removal Facility Proposal/Contract
f. Arsenic Removal Facility Technical Specifications
g. EI & C Design Guidelines and Technical Specifications

h. Arizona Water Company's General Conditions of Contract and Standard Specifications

The Company intends to select the successful Contractor directly from the submitted proposals. However, the Company reserves the right to have a formal interview process following review of the submitted proposals. It is anticipated that a notice of award for design services will be issued on or around September 23, 2011, following an evaluation of the submitted qualifications and pricing.

All questions and/or correspondence regarding this request must be submitted in writing, to Andy Haas by letter at the address noted above, by email at ahaas@azwater.com, or by fax at 602-294-2169.

Very truly yours,

Fredrick K. Schneider
Vice President - Engineering

afh
Enclosure(s)

ARIZONA WATER COMPANY

3805 N. BLACK CANYON HIGHWAY, PHOENIX, ARIZONA 85015-5351 • P.O. BOX 29006, PHOENIX, AZ 85038-9006
PHONE: (602) 240-6860 • FAX: (602) 240-6874 • TOLL FREE: (800) 533-6023 • www.azwater.com

August 26, 2011

Mr. Robert Calbert
McCarthy Construction
80 E. Rio Salado Parkway, Suite 310
Tempe, AZ 85281

Re: Arsenic Removal Facilities at Broken Arrow Well No. 10, Sedona Golf Resort Well, Rimrock Well No. 2, and Montezuma Haven Wells No. 2 and 3.

Dear Mr. Calbert:

Enclosed with this letter is a Request for Proposal ("RFP") for the above-referenced project. Arizona Water Company (the "Company") requests your submission of a detailed fee proposal for the following tasks, according to the enclosed RFP dated August 26, 2011:

Mandatory site visits will begin at 4115 E. Goldmine Drive, Lake Montezuma, Arizona 86335 at 8:00 a.m. on September 7, 2011.

A mandatory pre-submittal conference will be held at 3805 N. Black Canyon Highway, Phoenix, Arizona 85015 at 9:00 a.m. on September 12, 2011.

Proposals must be submitted no later than 4:00 p.m. on September 19, 2011. The original proposals, plus three (3) copies, shall be sent to the attention of Andy Haas, located at 3805 N. Black Canyon Highway, Phoenix, AZ 85015. Incomplete submittals will not be considered in the evaluation. Late submittals will not be accepted.

Proposal evaluation criteria are described in the enclosed RFP.

List of Documents enclosed with this letter:

a. Request for Proposal
b. Broken Arrow Well No. 10 Arsenic Removal Facility Proposal/Contract
c. Sedona Golf Resort Well Arsenic Removal Facility Proposal/Contract
d. Rimrock Well No. 2 Arsenic Removal Facility Proposal/Contract
e. Montezuma Haven Wells No. 2 & 3 Arsenic Removal Facility Proposal/Contract
f. Arsenic Removal Facility Technical Specifications
g. EI & C Design Guidelines and Technical Specifications

h. Arizona Water Company's General Conditions of Contract and Standard Specifications

The Company intends to select the successful Contractor directly from the submitted proposals. However, the Company reserves the right to have a formal interview process following review of the submitted proposals. It is anticipated that a notice of award for design services will be issued on or around September 23, 2011, following an evaluation of the submitted qualifications and pricing.

All questions and/or correspondence regarding this request must be submitted in writing, to Andy Haas by letter at the address noted above, by email at ahaas@azwater.com, or by fax at 602-294-2169.

Very truly yours,

Fredrick K. Schneider
Vice President - Engineering

afh
Enclosure(s)

ARIZONA WATER COMPANY

3805 N. BLACK CANYON HIGHWAY, PHOENIX, ARIZONA 85015-5351 • P.O. BOX 29006, PHOENIX, AZ 85038-9006
PHONE: (602) 240-6860 • FAX: (602) 240-6874 • TOLL FREE: (800) 533-6023 • www.azwater.com

August 26, 2011

Kiewit Infrastructure West Company
3888 E. Broadway Road
Phoenix, AZ 85040

Re: Arsenic Removal Facilities at Broken Arrow Well No. 10, Sedona Golf Resort Well, Rimrock Well No. 2, and Montezuma Haven Wells No. 2 and 3.

Dear Sirs:

Enclosed with this letter is a Request for Proposal ("RFP") for the above-referenced project. Arizona Water Company (the "Company") requests your submission of a detailed fee proposal for the following tasks, according to the enclosed RFP dated August 26, 2011:

Mandatory site visits will begin at 4115 E. Goldmine Drive, Lake Montezuma, Arizona 86335 at 8:00 a.m. on September 7, 2011.

A mandatory pre-submittal conference will be held at 3805 N. Black Canyon Highway, Phoenix, Arizona 85015 at 9:00 a.m. on September 12, 2011.

Proposals must be submitted no later than 4:00 p.m. on September 19, 2011. The original proposals, plus three (3) copies, shall be sent to the attention of Andy Haas, located at 3805 N. Black Canyon Highway, Phoenix, AZ 85015. Incomplete submittals will not be considered in the evaluation. Late submittals will not be accepted.

Proposal evaluation criteria are described in the enclosed RFP.

List of Documents enclosed with this letter:

a. Request for Proposal
b. Broken Arrow Well No. 10 Arsenic Removal Facility Proposal/Contract
c. Sedona Golf Resort Well Arsenic Removal Facility Proposal/Contract
d. Rimrock Well No. 2 Arsenic Removal Facility Proposal/Contract
e. Montezuma Haven Wells No. 2 & 3 Arsenic Removal Facility Proposal/Contract
f. Arsenic Removal Facility Technical Specifications
g. EI & C Design Guidelines and Technical Specifications

h. Arizona Water Company's General Conditions of Contract and Standard Specifications

The Company intends to select the successful Contractor directly from the submitted proposals. However, the Company reserves the right to have a formal interview process following review of the submitted proposals. It is anticipated that a notice of award for design services will be issued on or around September 23, 2011, following an evaluation of the submitted qualifications and pricing.

All questions and/or correspondence regarding this request must be submitted in writing, to Andy Haas by letter at the address noted above, by email at ahaas@azwater.com, or by fax at 602-294-2169.

Very truly yours,

Fredrick K. Schneider
Vice President - Engineering

afh
Enclosure(s)

ARIZONA WATER COMPANY

3805 N. BLACK CANYON HIGHWAY, PHOENIX, ARIZONA 85015-5351 • P.O. BOX 29006, PHOENIX, AZ 85038-9006
PHONE: (602) 240-6860 • FAX: (602) 240-6874 • TOLL FREE: (800) 533-6023 • www.azwater.com

August 26, 2011

Mr. Barry Wiesenberger
J Wise Corporation
5851 S. Wilson Drive
Chandler, AZ 85249

Re: Arsenic Removal Facilities at Broken Arrow Well No. 10, Sedona Golf Resort Well, Rimrock Well No. 2, and Montezuma Haven Wells No. 2 and 3.

Dear Mr. Wiesenberger:

Enclosed with this letter is a Request for Proposal ("RFP") for the above-referenced project. Arizona Water Company (the "Company") requests your submission of a detailed fee proposal for the following tasks, according to the enclosed RFP dated August 26, 2011:

Mandatory site visits will begin at 4115 E. Goldmine Drive, Lake Montezuma, Arizona 86335 at 8:00 a.m. on September 7, 2011.

A mandatory pre-submittal conference will be held at 3805 N. Black Canyon Highway, Phoenix, Arizona 85015 at 9:00 a.m. on September 12, 2011.

Proposals must be submitted no later than 4:00 p.m. on September 19, 2011. The original proposals, plus three (3) copies, shall be sent to the attention of Andy Haas, located at 3805 N. Black Canyon Highway, Phoenix, AZ 85015. Incomplete submittals will not be considered in the evaluation. Late submittals will not be accepted.

Proposal evaluation criteria are described in the enclosed RFP.

List of Documents enclosed with this letter:

a. Request for Proposal
b. Broken Arrow Well No. 10 Arsenic Removal Facility Proposal/Contract
c. Sedona Golf Resort Well Arsenic Removal Facility Proposal/Contract
d. Rimrock Well No. 2 Arsenic Removal Facility Proposal/Contract
e. Montezuma Haven Wells No. 2 & 3 Arsenic Removal Facility Proposal/Contract
f. Arsenic Removal Facility Technical Specifications
g. EI & C Design Guidelines and Technical Specifications

h. Arizona Water Company's General Conditions of Contract and Standard Specifications

The Company intends to select the successful Contractor directly from the submitted proposals. However, the Company reserves the right to have a formal interview process following review of the submitted proposals. It is anticipated that a notice of award for design services will be issued on or around September 23, 2011, following an evaluation of the submitted qualifications and pricing.

All questions and/or correspondence regarding this request must be submitted in writing, to Andy Haas by letter at the address noted above, by email at ahaas@azwater.com, or by fax at 602-294-2169.

Very truly yours,

Fredrick K. Schneider
Vice President - Engineering

afh
Enclosure(s)

ARIZONA WATER COMPANY

3805 N. BLACK CANYON HIGHWAY, PHOENIX, ARIZONA 85015-5351 • P.O. BOX 29006, PHOENIX, AZ 85038-9006
PHONE: (602) 240-6860 • FAX: (602) 240-6874 • TOLL FREE: (800) 533-6023 • www.azwater.com

August 26, 2011

Mr. Andy Mortensen
Hunter Contracting Company
701 N. Cooper Road
Gilbert, AZ 85233

Re: Arsenic Removal Facilities at Broken Arrow Well No. 10, Sedona Golf Resort Well, Rimrock Well No. 2, and Montezuma Haven Wells No. 2 and 3.

Dear Mr. Mortensen:

Enclosed with this letter is a Request for Proposal ("RFP") for the above-referenced project. Arizona Water Company (the "Company") requests your submission of a detailed fee proposal for the following tasks, according to the enclosed RFP dated August 26, 2011:

Mandatory site visits will begin at 4115 E. Goldmine Drive, Lake Montezuma, Arizona 86335 at 8:00 a.m. on September 7, 2011.

A mandatory pre-submittal conference will be held at 3805 N. Black Canyon Highway, Phoenix, Arizona 85015 at 9:00 a.m. on September 12, 2011.

Proposals must be submitted no later than 4:00 p.m. on September 19, 2011. The original proposals, plus three (3) copies, shall be sent to the attention of Andy Haas, located at 3805 N. Black Canyon Highway, Phoenix, AZ 85015. Incomplete submittals will not be considered in the evaluation. Late submittals will not be accepted.

Proposal evaluation criteria are described in the enclosed RFP.

List of Documents enclosed with this letter:

a. Request for Proposal
b. Broken Arrow Well No. 10 Arsenic Removal Facility Proposal/Contract
c. Sedona Golf Resort Well Arsenic Removal Facility Proposal/Contract
d. Rimrock Well No. 2 Arsenic Removal Facility Proposal/Contract
e. Montezuma Haven Wells No. 2 & 3 Arsenic Removal Facility Proposal/Contract
f. Arsenic Removal Facility Technical Specifications
g. EI & C Design Guidelines and Technical Specifications

h. Arizona Water Company's General Conditions of Contract and Standard Specifications

The Company intends to select the successful Contractor directly from the submitted proposals. However, the Company reserves the right to have a formal interview process following review of the submitted proposals. It is anticipated that a notice of award for design services will be issued on or around September 23, 2011, following an evaluation of the submitted qualifications and pricing.

All questions and/or correspondence regarding this request must be submitted in writing, to Andy Haas by letter at the address noted above, by email at ahaas@azwater.com, or by fax at 602-294-2169.

Very truly yours,

Fredrick K. Schneider
Vice President - Engineering

afh
Enclosure(s)

ARIZONA WATER COMPANY

3805 N. BLACK CANYON HIGHWAY, PHOENIX, ARIZONA 85015-5351 • P.O. BOX 29006, PHOENIX, AZ 85038-9006
PHONE: (602) 240-6860 • FAX: (602) 240-6874 • TOLL FREE: (800) 533-6023 • www.azwater.com

August 26, 2011

Mr. Wayne O'Brien
Garney Construction
1850 N. 95th Avenue, Suite 192
Phoenix, AZ 85037

Re: Arsenic Removal Facilities at Broken Arrow Well No. 10, Sedona Golf Resort Well, Rimrock Well No. 2, and Montezuma Haven Wells No. 2 and 3.

Dear Mr. O'Brien:

Enclosed with this letter is a Request for Proposal ("RFP") for the above-referenced project. Arizona Water Company (the "Company") requests your submission of a detailed fee proposal for the following tasks, according to the enclosed RFP dated August 26, 2011:

Mandatory site visits will begin at 4115 E. Goldmine Drive, Lake Montezuma, Arizona 86335 at 8:00 a.m. on September 7, 2011.

A mandatory pre-submittal conference will be held at 3805 N. Black Canyon Highway, Phoenix, Arizona 85015 at 9:00 a.m. on September 12, 2011.

Proposals must be submitted no later than 4:00 p.m. on September 19, 2011. The original proposals, plus three (3) copies, shall be sent to the attention of Andy Haas, located at 3805 N. Black Canyon Highway, Phoenix, AZ 85015. Incomplete submittals will not be considered in the evaluation. Late submittals will not be accepted.

Proposal evaluation criteria are described in the enclosed RFP.

List of Documents enclosed with this letter:

a. Request for Proposal
b. Broken Arrow Well No. 10 Arsenic Removal Facility Proposal/Contract
c. Sedona Golf Resort Well Arsenic Removal Facility Proposal/Contract
d. Rimrock Well No. 2 Arsenic Removal Facility Proposal/Contract
e. Montezuma Haven Wells No. 2 & 3 Arsenic Removal Facility Proposal/Contract
f. Arsenic Removal Facility Technical Specifications
g. EI & C Design Guidelines and Technical Specifications

h. Arizona Water Company's General Conditions of Contract and Standard Specifications

The Company intends to select the successful Contractor directly from the submitted proposals. However, the Company reserves the right to have a formal interview process following review of the submitted proposals. It is anticipated that a notice of award for design services will be issued on or around September 23, 2011, following an evaluation of the submitted qualifications and pricing.

All questions and/or correspondence regarding this request must be submitted in writing, to Andy Haas by letter at the address noted above, by email at ahaas@azwater.com, or by fax at 602-294-2169.

Very truly yours,

Fredrick K. Schneider
Vice President - Engineering

afh
Enclosure(s)

ARIZONA WATER COMPANY

3805 N. BLACK CANYON HIGHWAY, PHOENIX, ARIZONA 85015-5351 • P.O. BOX 29006, PHOENIX, AZ 85038-9006
PHONE: (602) 240-6860 • FAX: (602) 240-6874 • TOLL FREE: (800) 533-6023 • www.azwater.com

August 26, 2011

Mr. Pat Hennesy
Hennesy Mechanical Sales
201 S. 26th Street
Phoenix, AZ 85034

Re: Arsenic Removal Facilities at Broken Arrow Well No. 10, Sedona Golf Resort Well, Rimrock Well No. 2, and Montezuma Haven Wells No. 2 and 3.

Dear Mr. Hennesy:

Enclosed with this letter is a Request for Proposal ("RFP") for the above-referenced project. Arizona Water Company (the "Company") requests your submission of a detailed fee proposal for the following tasks, according to the enclosed RFP dated August 26, 2011:

Mandatory site visits will begin at 4115 E. Goldmine Drive, Lake Montezuma, Arizona 86335 at 8:00 a.m. on September 7, 2011.

A mandatory pre-submittal conference will be held at 3805 N. Black Canyon Highway, Phoenix, Arizona 85015 at 9:00 a.m. on September 12, 2011.

Proposals must be submitted no later than 4:00 p.m. on September 19, 2011. The original proposals, plus three (3) copies, shall be sent to the attention of Andy Haas, located at 3805 N. Black Canyon Highway, Phoenix, AZ 85015. Incomplete submittals will not be considered in the evaluation. Late submittals will not be accepted.

Proposal evaluation criteria are described in the enclosed RFP.

List of Documents enclosed with this letter:

a. Request for Proposal
b. Broken Arrow Well No. 10 Arsenic Removal Facility Proposal/Contract
c. Sedona Golf Resort Well Arsenic Removal Facility Proposal/Contract
d. Rimrock Well No. 2 Arsenic Removal Facility Proposal/Contract
e. Montezuma Haven Wells No. 2 & 3 Arsenic Removal Facility Proposal/Contract
f. Arsenic Removal Facility Technical Specifications
g. EI & C Design Guidelines and Technical Specifications

h. Arizona Water Company's General Conditions of Contract and Standard Specifications

The Company intends to select the successful Contractor directly from the submitted proposals. However, the Company reserves the right to have a formal interview process following review of the submitted proposals. It is anticipated that a notice of award for design services will be issued on or around September 23, 2011, following an evaluation of the submitted qualifications and pricing.

All questions and/or correspondence regarding this request must be submitted in writing, to Andy Haas by letter at the address noted above, by email at ahaas@azwater.com, or by fax at 602-294-2169.

Very truly yours,

Fredrick K. Schneider
Vice President - Engineering

afh
Enclosure(s)

ARIZONA WATER COMPANY

3805 N. BLACK CANYON HIGHWAY, PHOENIX, ARIZONA 85015-5351 • P.O. BOX 29006, PHOENIX, AZ 85038-9006
PHONE: (602) 240-6860 • FAX: (602) 240-6874 • TOLL FREE: (800) 533-6023 • www.azwater.com

August 26, 2011

Mr. Joel Felix
Felix Construction Company
309 E. 10th Place
Mesa, AZ 85210

Re: Arsenic Removal Facilities at Broken Arrow Well No. 10, Sedona Golf Resort Well, Rimrock Well No. 2, and Montezuma Haven Wells No. 2 and 3.

Dear Mr. Felix:

Enclosed with this letter is a Request for Proposal ("RFP") for the above-referenced project. Arizona Water Company (the "Company") requests your submission of a detailed fee proposal for the following tasks, according to the enclosed RFP dated August 26, 2011:

Mandatory site visits will begin at 4115 E. Goldmine Drive, Lake Montezuma, Arizona 86335 at 8:00 a.m. on September 7, 2011.

A mandatory pre-submittal conference will be held at 3805 N. Black Canyon Highway, Phoenix, Arizona 85015 at 9:00 a.m. on September 12, 2011.

Proposals must be submitted no later than 4:00 p.m. on September 19, 2011. The original proposals, plus three (3) copies, shall be sent to the attention of Andy Haas, located at 3805 N. Black Canyon Highway, Phoenix, AZ 85015. Incomplete submittals will not be considered in the evaluation. Late submittals will not be accepted.

Proposal evaluation criteria are described in the enclosed RFP.

List of Documents enclosed with this letter:

a. Request for Proposal
b. Broken Arrow Well No. 10 Arsenic Removal Facility Proposal/Contract
c. Sedona Golf Resort Well Arsenic Removal Facility Proposal/Contract
d. Rimrock Well No. 2 Arsenic Removal Facility Proposal/Contract
e. Montezuma Haven Wells No. 2 & 3 Arsenic Removal Facility Proposal/Contract
f. Arsenic Removal Facility Technical Specifications
g. EI & C Design Guidelines and Technical Specifications

h. Arizona Water Company's General Conditions of Contract and Standard Specifications

The Company intends to select the successful Contractor directly from the submitted proposals. However, the Company reserves the right to have a formal interview process following review of the submitted proposals. It is anticipated that a notice of award for design services will be issued on or around September 23, 2011, following an evaluation of the submitted qualifications and pricing.

All questions and/or correspondence regarding this request must be submitted in writing, to Andy Haas by letter at the address noted above, by email at ahaas@azwater.com, or by fax at 602-294-2169.

Very truly yours,

Fredrick K. Schneider
Vice President - Engineering

afh
Enclosure(s)

ARIZONA WATER COMPANY

3805 N. BLACK CANYON HIGHWAY, PHOENIX, ARIZONA 85015-5351 • P.O. BOX 29006, PHOENIX, AZ 85038 9006
PHONE: (602) 240-6860 • FAX: (602) 240-6874 • TOLL FREE: (800) 533-6023 • www.azwater.com

August 26, 2011

Mr. Mike Young
Fann Environmental, LLC
6708 Corsair Avenue, Suite A
Prescott, AZ 86301

Re: Arsenic Removal Facilities at Broken Arrow Well No. 10, Sedona Golf Resort Well, Rimrock Well No. 2, and Montezuma Haven Wells No. 2 and 3.

Dear Mr. Young:

Enclosed with this letter is a Request for Proposal ("RFP") for the above-referenced project. Arizona Water Company (the "Company") requests your submission of a detailed fee proposal for the following tasks, according to the enclosed RFP dated August 26, 2011:

Mandatory site visits will begin at 4115 E. Goldmine Drive, Lake Montezuma, Arizona 86335 at 8:00 a.m. on September 7, 2011.

A mandatory pre-submittal conference will be held at 3805 N. Black Canyon Highway, Phoenix, Arizona 85015 at 9:00 a.m. on September 12, 2011.

Proposals must be submitted no later than 4:00 p.m. on September 19, 2011. The original proposals, plus three (3) copies, shall be sent to the attention of Andy Haas, located at 3805 N. Black Canyon Highway, Phoenix, AZ 85015. Incomplete submittals will not be considered in the evaluation. Late submittals will not be accepted.

Proposal evaluation criteria are described in the enclosed RFP.

List of Documents enclosed with this letter:

a. Request for Proposal
b. Broken Arrow Well No. 10 Arsenic Removal Facility Proposal/Contract
c. Sedona Golf Resort Well Arsenic Removal Facility Proposal/Contract
d. Rimrock Well No. 2 Arsenic Removal Facility Proposal/Contract
e. Montezuma Haven Wells No. 2 & 3 Arsenic Removal Facility Proposal/Contract
f. Arsenic Removal Facility Technical Specifications
g. EI & C Design Guidelines and Technical Specifications

h. Arizona Water Company's General Conditions of Contract and Standard Specifications

The Company intends to select the successful Contractor directly from the submitted proposals. However, the Company reserves the right to have a formal interview process following review of the submitted proposals. It is anticipated that a notice of award for design services will be issued on or around September 23, 2011, following an evaluation of the submitted qualifications and pricing.

All questions and/or correspondence regarding this request must be submitted in writing, to Andy Haas by letter at the address noted above, by email at ahaas@azwater.com, or by fax at 602-294-2169.

Very truly yours,

Fredrick K. Schneider
Vice President - Engineering

afh
Enclosure(s)

ARIZONA WATER COMPANY

3805 N. BLACK CANYON HIGHWAY, PHOENIX, ARIZONA 85015-5351 • P.O. BOX 29006, PHOENIX, AZ 85038-9006
PHONE: (602) 240-6860 • FAX: (602) 240-6874 • TOLL FREE: (800) 533-6023 • www.azwater.com

August 26, 2011

Mr. Michael Rivera
Currier Construction
36 N. 56th Street
Phoenix, AZ 85034

Re: Arsenic Removal Facilities at Broken Arrow Well No. 10, Sedona Golf Resort Well, Rimrock Well No. 2, and Montezuma Haven Wells No. 2 and 3.

Dear Mr. Rivera:

Enclosed with this letter is a Request for Proposal ("RFP") for the above-referenced project. Arizona Water Company (the "Company") requests your submission of a detailed fee proposal for the following tasks, according to the enclosed RFP dated August 26, 2011:

Mandatory site visits will begin at 4115 E. Goldmine Drive, Lake Montezuma, Arizona 86335 at 8:00 a.m. on September 7, 2011.

A mandatory pre-submittal conference will be held at 3805 N. Black Canyon Highway, Phoenix, Arizona 85015 at 9:00 a.m. on September 12, 2011.

Proposals must be submitted no later than 4:00 p.m. on September 19, 2011. The original proposals, plus three (3) copies, shall be sent to the attention of Andy Haas, located at 3805 N. Black Canyon Highway, Phoenix, AZ 85015. Incomplete submittals will not be considered in the evaluation. Late submittals will not be accepted.

Proposal evaluation criteria are described in the enclosed RFP.

List of Documents enclosed with this letter:

a. Request for Proposal
b. Broken Arrow Well No. 10 Arsenic Removal Facility Proposal/Contract
c. Sedona Golf Resort Well Arsenic Removal Facility Proposal/Contract
d. Rimrock Well No. 2 Arsenic Removal Facility Proposal/Contract
e. Montezuma Haven Wells No. 2 & 3 Arsenic Removal Facility Proposal/Contract
f. Arsenic Removal Facility Technical Specifications
g. EI & C Design Guidelines and Technical Specifications

h. Arizona Water Company's General Conditions of Contract and Standard Specifications

The Company intends to select the successful Contractor directly from the submitted proposals. However, the Company reserves the right to have a formal interview process following review of the submitted proposals. It is anticipated that a notice of award for design services will be issued on or around September 23, 2011, following an evaluation of the submitted qualifications and pricing.

All questions and/or correspondence regarding this request must be submitted in writing, to Andy Haas by letter at the address noted above, by email at ahaas@azwater.com, or by fax at 602-294-2169.

Very truly yours,

Fredrick K. Schneider
Vice President - Engineering

afh
Enclosure(s)

ARIZONA WATER COMPANY

3805 N. BLACK CANYON HIGHWAY, PHOENIX, ARIZONA 85015-5351 • P.O. BOX 29006, PHOENIX, AZ 85038-9006
PHONE: (602) 240-6860 • FAX: (602) 240-6874 • TOLL FREE: (800) 533-6023 • www.azwater.com

August 26, 2011

Arizona Northern Equipment
618 S. Airpark Road
Cottonwood, AZ 86326

Re: Arsenic Removal Facilities at Broken Arrow Well No. 10, Sedona Golf Resort Well, Rimrock Well No. 2, and Montezuma Haven Wells No. 2 and 3.

Dear Sirs:

Enclosed with this letter is a Request for Proposal ("RFP") for the above-referenced project. Arizona Water Company (the "Company") requests your submission of a detailed fee proposal for the following tasks, according to the enclosed RFP dated August 26, 2011:

Mandatory site visits will begin at 4115 E. Goldmine Drive, Lake Montezuma, Arizona 86335 at 8:00 a.m. on September 7, 2011.

A mandatory pre-submittal conference will be held at 3805 N. Black Canyon Highway, Phoenix, Arizona 85015 at 9:00 a.m. on September 12, 2011.

Proposals must be submitted no later than 4:00 p.m. on September 19, 2011. The original proposals, plus three (3) copies, shall be sent to the attention of Andy Haas, located at 3805 N. Black Canyon Highway, Phoenix, AZ 85015. Incomplete submittals will not be considered in the evaluation. Late submittals will not be accepted.

Proposal evaluation criteria are described in the enclosed RFP.

List of Documents enclosed with this letter:

a. Request for Proposal
b. Broken Arrow Well No. 10 Arsenic Removal Facility Proposal/Contract
c. Sedona Golf Resort Well Arsenic Removal Facility Proposal/Contract
d. Rimrock Well No. 2 Arsenic Removal Facility Proposal/Contract
e. Montezuma Haven Wells No. 2 & 3 Arsenic Removal Facility Proposal/Contract
f. Arsenic Removal Facility Technical Specifications
g. EI & C Design Guidelines and Technical Specifications

h. Arizona Water Company's General Conditions of Contract and Standard Specifications

The Company intends to select the successful Contractor directly from the submitted proposals. However, the Company reserves the right to have a formal interview process following review of the submitted proposals. It is anticipated that a notice of award for design services will be issued on or around September 23, 2011, following an evaluation of the submitted qualifications and pricing.

All questions and/or correspondence regarding this request must be submitted in writing, to Andy Haas by letter at the address noted above, by email at ahaas@azwater.com, or by fax at 602-294-2169.

Very truly yours,

Fredrick K. Schneider
Vice President - Engineering

afh
Enclosure(s)

ARIZONA WATER COMPANY

3805 N. BLACK CANYON HIGHWAY, PHOENIX, ARIZONA 85015-5351 • P.O. BOX 29006, PHOENIX, AZ 85038-9006
PHONE: (602) 240-6860 • FAX: (602) 240-6874 • TOLL FREE: (800) 533-6023 • www.azwater.com

September 14, 2011

Mr. Randy Gates
MGC Contractors, Inc.
4110 E. Elwood Street
Phoenix, AZ 85040

Re: Addendum No. 2 to Request for Proposal for Broken Arrow Well No. 10, Sedona Golf Resort Well, Rimrock Well No. 2, and Montezuma Haven Wells No. 2 & 3.

Dear Mr. Gates:

This Addendum No. 2 addresses the addition of the Water Services Agreement for media change out at the arsenic removal facilities. Additional water quality results are included with this Addendum No. 2 as Attachment "A". Digital copies of the site surveys are provided on the CDs in Attachment "B". Responses to questions asked at the site visits, pre-submittal conference on September 12th and other submitted questions are included, herewith.

Water Services Agreement

Enclosed in this addendum as Attachment "C" are separate copies of the Water Services Agreement for the Contractor to perform media change outs at each arsenic removal facility. The Contractor must fill in the volume of adsorptive media to be replaced and the total cost to perform such work in Exhibit "B". The Contractor must submit a bond for each Water Services Agreement. The Company will fully execute the Proposal/Contract and Water Services Agreement with the successful bidder for each arsenic removal facility. With the proposal, the Contractor must state that he will execute the Water Services Agreement as is.

Please find listed below responses to your questions from the site visits and your written questions submitted regarding the above referenced arsenic removal facilities.

1. Does the treatment vessel, internal laterals, and ground support bed design need to be approved by the media manufacturer?

Response: Yes. Please refer to Section 6 of the Arsenic Removal Facilities – Technical Specifications.

2. Is it acceptable to operate any of the wells at a lower flow rate during backwash cycles or will a supplemental backwash water source be required?

Response: The backwash water source shall be from the distribution system, not the well.

3. Please confirm the available flow rate that the distribution system is capable of providing for the backwash cycle at each site.

Response: The table below shows the approximate available flow rates at their respective kinetic pressures. This information is based on fire hydrant flow test data near each of the project sites.

Site	Approx. Flow Rate, gpm	Approx. Kinetic Pressure at Flow, psi
Rimrock Well No. 2	1,000	50
Montezuma Haven Wells No. 2 and No. 3	1,000	50
Sedona Golf Resort Well	1,000	50
Broken Arrow Well No. 10	1,000	75

4. Please confirm that all materials are to be made in the United States.

Response: All materials must be in accordance with the Company's Construction Specifications: E-8-1, Standard Specification Drawings: E-9-1, and Arsenic Removal Facilities – Technical Specifications.

5. Will the new arsenic removal facilities be placed in the same locations as the existing plants?

Response: The new arsenic removal facilities will be constructed in approximately the same location as the existing facilities.

6. Can Montezuma Haven Well No. 2 be shut down during construction?

Response: Montezuma Haven Well No. 2 may be shut down during construction of the Montezuma Haven Well No. 2 and No. 3 arsenic removal facility. All shut downs must be coordinated with and approved by the Company.

7. Will the existing arsenic removal facilities be removed?

Response: The existing arsenic removal facility at each site will be removed by a third party prior to construction of the new arsenic removal facility. The Company will coordinate with the third party for removal of the existing arsenic removal facility. The approximate dates when the existing arsenic removal facilities will be removed can be found in the table below.

Arsenic Removal Facility	Estimated Removal Date
Rimrock Well No. 2	November 25, 2011
Montezuma Haven Well No. 3	February 2, 2012
Sedona Golf Resort Well	December 30, 2011
Broken Arrow Well No. 10	November 28, 2011

8. What will be removed from each site?

Response: The existing arsenic removal facility will be removed from each site. Components include: shipping container, components inside shipping container, salt tank, waste tank, brine pump, bag filters, sump, ancillary above ground piping, and above ground conduit. Underground piping will not be removed.

9. Will the Company coordinate removal of the existing plants?

Response: The Company will coordinate with the third party for removal of the existing arsenic removal facility based on the Contractor's schedule.

10. What are the allowed working hours?

Response: The allowed working hours are per the City of Sedona or Yavapai County requirements. The Company's hours are 8am-5pm Monday-Friday and should be the primary working hours.

11. Is temperature an issue? Is freeze protection needed?

Response: Please refer to Section 6.H. of the Arsenic Removal Facilities – Technical Specifications.

12. What are the height restrictions for each site?

Response: The height restrictions are per the City of Sedona and Yavapai County code requirements. Conditional or Special Use Permits may be required.

13. What existing above ground piping needs to be removed?

Response: Above ground piping associated with the existing arsenic removal facilities will be removed by a third party prior to construction of the new arsenic removal facilities.

14. Is pH adjustment needed? Are carbon dioxide and acid acceptable chemicals for pH adjustment?

Response: Please refer to Section 4.A.5. of the Arsenic Removal Facilities – Technical Specifications. Hydrochloric acid and carbon dioxide are acceptable for pH adjustment.

15. Do the new arsenic removal facilities need the ability to communicate with a SCADA System?

Response: No.

16. What size of pressure gauges is preferred?

Response: Pressure gauges in the arsenic removal facilities shall have approximately 4.5-inch diameter dials, unless other approvals are granted by the Company.

17. Are the chemical tanks required to be double-walled?

Response: All chemical tanks must be double-walled for 100% secondary containment and located inside a concrete basin for spill containment.

18. What chlorine residual is required at each site?

Response: All sites must maintain a minimum free chlorine residual of 1.0 milligrams per liter (mg/L or ppm) on the effluent of the arsenic removal facility.

19. Is blending flow allowed for each site?

Response: Please refer to Section 5 of the Arsenic Removal Facilities – Technical Specifications.

20. Does Rimrock Well No. 2 pump to waste upon startup?

Response: Please refer to Section 3.F.1. of the Arsenic Removal Facilities – Technical Specifications. Rimrock Well No. 2 pumps directly into the distribution system upon startup.

21. Is sanitary sewer available at each site?

Response: Sanitary sewer is not available at all sites. The sanitary sewer must not be used during the construction, backwash, media change outs, or any other operation of the arsenic removal facilities.

22. Do the sites need to be returned to original condition in regards to gravel, grade, etc.?

Response: Yes.

23. What are the painting requirements?

Response: As described throughout the Arsenic Removal Facilities – Technical Specifications, all external components of the arsenic removal facilities must be painted.

24. Should all sites be manual in operation?

Response: Please refer to Section 4.A.4. of the Arsenic Removal Facilities – Technical Specifications.

25. Are high pressure cut off switches required at each site?

Response: If not existing, high pressure cut-off switches must be installed between the well discharge heads and the inlet of the arsenic removal facilities.

26. How will each proposal be evaluated?

Response: Please refer to Section 2.B. of the Arsenic Removal Facilities – Request for Proposal for selection criteria.

27. Can the area outside the yards be used for equipment storage or for permanent structures?

Response: It is the Contractor's responsibility to coordinate construction staging locations and acquire the required approvals to use such locations. All arsenic removal facilities components must be located on Company property.

28. Is an analysis of the media required in the proposal?

Response: The Contractor's proposal must include a 20-year life cycle analysis including the construction costs, media replacement costs, chemical costs, and any other operating and maintenance costs. The 20-year life cycle costs will be included in the evaluation criteria for selecting the successful bidder(s).

29. What are the parcel numbers for each site?

Response: The parcel numbers can be found in the table below.

Site	Parcel Number
Rimrock Well No. 2	405-07-032C
Montezuma Haven	405-11-052B
Sedona Golf Resort Well	401-24-007
Broken Arrow Well No. 10	405-53-218

30. What is the design annual production from each well?

Response: The table below shows the average annual production from each well for design.

Well	Design Average Annual Production, gallons
Rimrock Well No. 2	50,000,000
Montezuma Haven Well No. 2	5,000,000

Montezuma Haven Well No. 3	35,000,000
Sedona Golf Resort Well	50,000,000
Broken Arrow Well No. 10	145,000,000

31. Please identify which projects will require building permits from the City of Sedona and/or Yavapai County.

Response: The arsenic removal facility at Broken Arrow Well No. 10 will require a building permit from the City of Sedona. The remaining three arsenic removal facilities will require a building permit from Yavapai County.

32. Are soils and concrete testing services required to document the quality control of construction activities and/or permit requirements?

Response: Yes.

33. Will the electric service sections and load distribution panels currently serving the Basin Water equipment at each of the project sites remain intact for use by this Contract?

Response: Yes.

34. Is the pre-filtration system at the Broken Arrow Well No. 10 site to be sized to treat the total well flow or only the flow directed to the arsenic removal facility? Are spare filter bags to be supplied or only the amount required by the Contractor during startup?

Response: The pre-filtration system at the Broken Arrow Well No. 10 site must be sized to treat all well flow into the distribution system. If bag filters are selected and installed, the Contractor shall provide spare filter bags and contact information for ordering replacement filter bags.

35. Please provide the design parameters for the backwash storage tank. For example, the backwash recovery tank shall be sized to provide a working volume produced by the backwash and rinse cycles of all treatment vessels. Backwash volume shall be based on a flow rate of 12 gpm/sf for a minimum of 10 minutes and a forward rinse at the design treatment rate for at least 3 minutes. Provide an additional 10% capacity to contain flow transitions during the backwash cycle.

Response: These design parameters sound reasonable. However, it is the Contractor's responsibility to design with the Company's approval.

36. Is a flow meter required for the backwash recovery/return pump?

Response: No.

37. Is the backwash tank level required to be displayed at the local control panel? Are floating-type controls mounted inside of the backwash tank acceptable?

Response: An Endress-Hauser level transmitter on the backwash tank shall display the water level in the backwash tank on an LCD screen. It is the intent of this transmitter and display to be installed in a location to aid the operator in the backwash sequence. Floating-type controls mounted inside of the backwash tank are not acceptable. Probe controls are acceptable.

38. *General Facility Components, Paragraph A.5*: Please provide the parameters that dictate the need for pH adjustment for the treatment system.

Response: Please refer to Section 4.A.5. of the Arsenic Removal Facilities – Technical Specifications.

39. *Treatment Facility Components, Paragraph A.5*: "Stainless steel hydraulic panel with inlet, outlet gauges, system pressure differential gauge/switch combination." This arrangement is common for FRP vessels with PVC piping systems. Is the feature necessary for this project?

Response: No.

40. *Treatment Facility Components, Paragraph A.13*: Please define size of manways, for example; provide 14" x 18" elliptical manway at top of tank and 18" diameter davit-style or other type of self-supporting side access hatch. Hatch locations to be coordinated during design to meet individual site requirements.

Response: It is the Contractor's responsibility to size the manway and inspection hatch to provide sufficient access inside the vessels for construction, installation of equipment, repairs and media change-outs.

41. *Treatment Facility Components, Paragraph A.14*: Suggest the following verbiage be added to this section; Filter vessels to be attached to slab with epoxy set 304 stainless steel anchor bolts with leveling nuts and washers. Anchor bolt diameter and embed depth design stamped by a structural engineer registered in the State of Arizona per site building code and seismic requirements.

Response: These changes are acceptable.

42. *Treatment Facility Components, Paragraph B.4*: Is it the intent of the RFP that all small diameter piping and valves for sample and pressure taps off the vessels and pipe tree be stainless steel piping instead of brass?

Response: This section refers to the process flow piping, not sample and pressure taps. However, all sample taps must be constructed of stainless steel with no components containing a copper composition.

43. *Treatment Facility Components, Paragraph C*: Please clarify that all valves for the pipe tree and treatment system be AWWA rated.

Response: Yes, per the Company's Construction Specifications: E-8-1, Standard Specification Drawings: E-9-1, and Arsenic Removal Facilities – Technical Specifications.

44. *Treatment Facility Components, Paragraph C.1.b*: Please confirm that M&H valves will be acceptable for use on this project.

Response: Please refer to the Company's Construction Specifications: E-8-1, Standard Specification Drawings: E-9-1, and Arsenic Removal Facilities – Technical Specifications for approved valves.

45. Is a magnetic flow meter required for bypass flow piping at Broken Arrow Well No. 10?

Response: A magnetic flow meter must be used for the bypass piping at Broken Arrow Well No. 10.

46. *Treatment Facility Components, Paragraph D.6*: Please confirm that Rosemount Model 8705 magnetic flow meters will be acceptable for use on this project.

Response: Please refer to the Company's Arsenic Removal Facilities – Technical Specifications for approved magnetic flow meters.

47. Are the flow meters to be supplied with integrally or remote mounted transmitters?

Response: Flow meters shall be supplied with remote mounted transmitters.

48. *Treatment Facility Components, Paragraph F: High Density Polyethylene (HDPE) Backwash Tank*: Please provide the specific gravity that the tank is to be constructed to meet. For example, 1.5 S.G@73°F is considered an economy grade tank, 1.7 S.G@73°F is a commercial grade tank, and 1.9 S.G.@73° F is an industrial grade tank.

Response: It is the Contractor's responsibility to design the backwash tank with the Company's approval. The Company is concerned about the longevity of the equipment and an industrial grade tank is preferred.

49. Suggest adding statement that all piping connections larger than 2" be supported independently from the tank and no weight will be transferred to the tank flange. Provide a 6" long rubber connector coupling, similar to Proco Series 240.

Response: These changes are acceptable.

50. *Treatment Facility Components, Paragraph F: High Density Polyethylene (HDPE) Backwash Tank, Item 1.g & 2.e*: Suggest that anchor bolts be epoxy set 304 stainless steel.

Response: Yes.

51. *Treatment Facility Components, Paragraph F: High Density Polyethylene (HDPE) Backwash Tank, Item 9*: Consider deleting the requirement that the lifting lugs be 316 stainless steel, as this may be a proprietary feature.

Response: These changes are acceptable.

52. *Treatment Facility Components, Paragraph F: High Density Polyethylene (HDPE) Backwash Tank, Item 11*: Is a ladder required for the backwash tank?

Response: No.

53. *Treatment Facility Components, Paragraph H: Freeze protection*: Does the backwash recovery piping need to be insulated if provisions are made to drain the complete system when not in service?

Response: The ability to easily and completely drain the backwash recovery piping is an acceptable method of freeze protection for this piping.

54. Does work need to be scheduled in winter?

Response: Please refer to Section 2.A. of the Arsenic Removal Facilities – Request for Proposal. The project completion dates are listed in this section.

55. Can the existing chlorine pump be reused?

Response: Existing liquid sodium hypochlorite chlorine pumps may be reused if sized appropriately for use with the new arsenic removal facilities.

56. Is public outreach needed for these projects?

Response: The Contractor must work with the Company to provide adequate notification of construction activities to the public, including but not limited to, the neighbors adjacent to the project sites.

57. Where can wastewater and backwater be disposed?

Response: All backwash water must be captured in the backwash tank during normal facility operations. During media installation and preparation, all wastewater must be captured and disposed of with the proper approvals. No water, backwash water, wastewater, or any other discharge shall be discharged onto the site and/or off site without written approval from the Company and the governing regulatory agencies.

58. How to address water quality changes in guarantee?

Response: The media supplier shall propose the determination of how to address these changes. The Company will review for conformance to its other contracts.

59. Are the four arsenic removal facility contracts being awarded together or individually?

Response: Please refer to Section 2.A. of the Arsenic Removal Facilities – Request for Proposal.

60. Should the Water Services Agreements be submitted with the signed Proposal/Contracts when the Contractor submits his proposal?

Response: Yes.

61. Can the tree inside the fencing of the Broken Arrow Well No. 10 site be removed?

Response: The tree inside the existing fence at Broken Arrow Well No. 10 may be removed for the construction of the new arsenic removal facility.

62. Are the arsenic removal facilities to be constructed to allow pump rig access to all of the wells?

Response: Yes.

63. What controls should be on the backwash tank?

Response: Please refer to Section 4.A.4 of the Company's Arsenic Removal Facilities – Technical Specifications.

64. Does the Approval of Construction for the Rimrock Well No. 2 arsenic removal facility need to be received prior to December 30, 2011?

Response: No. Receipt of an Interim Approval to Commence Operations prior to December 30, 2011 is acceptable.

Very truly yours,

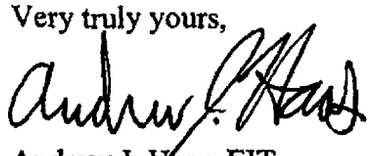

Andrew J. Haas, EIT
Engineer
engineering@azwater.com

afh
Enclosure

Attachment "A": Water Quality Results

LEGEND
Technical Services, Inc.
www.legend-group.com

17631 North 25th Avenue • Phoenix, AZ 85023
P (602) 324-6100 • F (602) 324-6101

Arizona Water Company - Sedona 03-003	Project: Drinking Water Analysis	
65 Coffee Pot Drive	Project Number: RR 13046 8/25/11	Reported:
Sedona, AZ 86336	Project Manager: Keith Self	09/02/11 13:36

ANALYTICAL REPORT FOR SAMPLES

Sample ID	Laboratory ID	Matrix	Type	Date Sampled	Date Received
RR #2 (002)	1082125-01	Drinking Water	Grab	08/25/11 11:55	08/26/11 11:55
MH #3 (005)	1082125-02	Drinking Water	Grab	08/25/11 11:30	08/26/11 11:55

Sample Condition Upon Receipt:

Temperature: 3.30 C
All samples were received in acceptable condition unless noted otherwise in the case narrative.

Case Narrative:

Holding Times: All holding times were met unless otherwise qualified.
QA/QC Criteria: All analyses met method requirements unless otherwise qualified.
Certifications: AZ(PHX)0004, AZ(TUC)OOO4, AIHA#102982, CDC ELITE Member.
Accreditation is applicable only to the test methods specified on each scope of accreditation held by LEGEND.
Comments: All reporting limits utilized in this report are from the approved method with the lowest possible levels of detection. All samples were analyzed on a "wet" basis unless designated as "dry weight".

This report contains data that were produced by a subcontracted laboratory certified for the fields of testing performed.
Underwriter's Laboratories AZ0432
Jim Van Fleit
574.472-5535

No sample containers received for Sulfide. Regina notified on 08/30/11- BF

Arizona Water Company - Sedona 03-003	Project: Drinking Water Analysis	
65 Coffee Pot Drive	Project Number: RR 13046 8/25/11	Reported:
Sedona, AZ 86336	Project Manager: Keith Self	09/02/11 13:36

RR #2 (002) (1082125-01) Drinking Water (Grab) Sampled: 08/25/11 11:55 Received: 08/26/11 11:55

Analyte	Result	MDL	RL	Units	Dilution	Batch	Prepared	Analyzed	Method	Notes
UL#AZ0432										
EPA 200.8										
Arsenic	0.063		% 0.0020	mg/L	1	160057		08/29/11 00:00	EPA 200.8	
Arsenic, Trivalent	<		0.0020	mg/L	1	160057		08/29/11 00:00	EPA 200.8	
Legend Technical Services of Arizona, Inc.										
Total Metals										
Antimony	<		0.0005	mg/L	1	B1H0887	08/26/11 16:00	08/26/11 16:31	EPA 200.8	
Arsenic	0.0587		0.0010	mg/L	1	B1H0887	08/26/11 16:00	08/26/11 16:31	EPA 200.8	
Cadmium	<		0.0001	mg/L	1	B1H0887	08/26/11 16:00	08/26/11 16:31	EPA 200.8	
Calcium	85		1	mg/L	1	B1H0908	08/29/11 09:37	08/29/11 12:47	EPA 200.7	
Chromium	<		0.005	mg/L	1	B1H0908	08/29/11 09:37	08/29/11 12:47	EPA 200.7	
Iron	<		0.05	mg/L	1	B1H0908	08/29/11 09:37	08/29/11 12:47	EPA 200.7	
Lead	<		0.001	mg/L	1	B1H0887	08/26/11 16:00	08/26/11 16:31	EPA 200.8	
Magnesium	35		1	mg/L	1	B1H0908	08/29/11 09:37	08/29/11 12:47	EPA 200.7	
Manganese	<		0.02	mg/L	1	B1H0908	08/29/11 09:37	08/29/11 12:47	EPA 200.7	
Molybdenum	<		0.02	mg/L	1	B1H0908	08/29/11 09:37	08/29/11 12:47	EPA 200.7	
Selenium	0.086		0.002	mg/L	1	B1H0887	08/26/11 16:00	08/26/11 16:31	EPA 200.8	
Silica, Total	30.7		0.2	mg/L	1	[CALC]	08/29/11 09:37	08/29/11 12:47	EPA 200.7	
Silicon	14.3		0.1	mg/L	1	B1H0908	08/29/11 09:37	08/29/11 12:47	EPA 200.7	
Calcium Hardness as CaCO3	211		2	mg/L	1	[CALC]	08/29/11 09:37	08/29/11 12:47	SM 2340B	
Magnesium Hardness as CaCO3	142		4	mg/L	1	[CALC]	08/29/11 09:37	08/29/11 12:47	SM 2340B	
Total Hardness as CaCO3	353		7	mg/L	1	[CALC]	08/29/11 09:37	08/29/11 12:47	SM 2340B	
Uranium	2		1	ug/L	1	B1H0887	08/26/11 16:00	08/26/11 16:31	EPA 200.8	
Vanadium	0.911		0.007	mg/L	1	B1H0908	08/29/11 09:37	08/29/11 12:47	EPA 200.7	
Inorganic Chemistry										
Total Alkalinity as CaCO3	389		10	mg/L	1	B1I0002	08/31/11 16:30	08/31/11 16:30	SM 2320 B	
Phosphate	<		0.15	mg/L	1	[CALC]	08/26/11 13:00	08/26/11 15:00	Calculation	
Total Phosphorous	<	0.02	0.05	mg/L	1	B1H0873	08/26/11 13:00	08/26/11 15:00	EPA 365.3	E6
Sulfate	12.4		5.0	mg/L	1	B1I0023	09/01/11 08:00	09/01/11 08:00	EPA 300.0	
Total Suspended Solids [TSS]	<		1	mg/L	1	B1H0912	08/29/11 07:00	08/29/11 07:00	SM 2540 D	
Turbidity	<		1.00	NTU	1	B1H0880	08/26/11 14:30	08/26/11 14:30	EPA 180.1	

RR #3 (003) (1082125-02) Drinking Water (Grab) Sampled: 08/25/11 11:30 Received: 08/26/11 11:55

Analyte	Result	MDL	RL	Units	Dilution	Batch	Prepared	Analyzed	Method	Notes
UL#AZ0432										
EPA 200.8										
Arsenic	0.033		% 0.0020	mg/L	1	160057		08/29/11 00:00	EPA 200.8	
Arsenic, Trivalent	<		0.0020	mg/L	1	160057		08/29/11 00:00	EPA 200.8	
Legend Technical Services of Arizona, Inc.										
Total Metals										

Legend Technical Services of Arizona, Inc.

The results in this report apply to the samples analyzed in accordance with the chain of custody document. This analytical report must be reproduced in its entirety.

Laboratory Work Order No.: 1082125

Barbara Frank

Barbara Frank
Client Services Representative (602) 324-6100

Arizona Water Company - Sedona 03-003	Project: Drinking Water Analysis	
65 Coffee Pot Drive	Project Number: RR 13046 8/25/11	Reported:
Sedona, AZ 86336	Project Manager: Keith Self	09/02/11 13:38

MH #3 (005) (1082125-02) Drinking Water (Grab) Sampled: 08/25/11 11:30 Received: 08/26/11 11:55

Analyte	Result	MDL	RL	Units	Dilution	Batch	Prepared	Analyzed	Method	Notes
Legend Technical Services of Arizona, Inc.										
Total Metals										
Antimony	<		0.0005	mg/L	1	B1H0887	08/26/11 16:00	08/26/11 16:34	EPA 200.8	
Arsenic	0.0364		0.0010	mg/L	1	B1H0887	08/26/11 16:00	08/26/11 16:34	EPA 200.8	
Cadmium	<		0.0001	mg/L	1	B1H0887	08/26/11 16:00	08/26/11 16:34	EPA 200.8	
Calcium	83		1	mg/L	1	B1H0908	08/29/11 09:37	08/29/11 12:50	EPA 200.7	
Chromium	<		0.005	mg/L	1	B1H0908	08/29/11 09:37	08/29/11 12:50	EPA 200.7	
Iron	<		0.05	mg/L	1	B1H0908	08/29/11 09:37	08/29/11 12:50	EPA 200.7	
Lead	0.005		0.001	mg/L	1	B1H0887	08/26/11 16:00	08/26/11 16:34	EPA 200.8	
Magnesium	34		1	mg/L	1	B1H0908	08/29/11 09:37	08/29/11 12:50	EPA 200.7	
Manganese	<		0.02	mg/L	1	B1H0908	08/29/11 09:37	08/29/11 12:50	EPA 200.7	
Molybdenum	<		0.02	mg/L	1	B1H0908	08/29/11 09:37	08/29/11 12:50	EPA 200.7	
Selenium	0.003		0.002	mg/L	1	B1H0887	08/26/11 16:00	08/26/11 16:34	EPA 200.8	
Silica, Total	27.9		0.2	mg/L	1	[CALC]	08/29/11 09:37	08/29/11 12:50	EPA 200.7	
Silicon	13.0		0.1	mg/L	1	B1H0908	08/29/11 09:37	08/29/11 12:50	EPA 200.7	
Calcium Hardness as CaCO3	208		2	mg/L	1	[CALC]	08/29/11 09:37	08/29/11 12:50	SM 2340B	
Magnesium Hardness as CaCO3	140		4	mg/L	1	[CALC]	08/29/11 09:37	08/29/11 12:50	SM 2340B	
Total Hardness as CaCO3	348		7	mg/L	1	[CALC]	08/29/11 09:37	08/29/11 12:50	SM 2340B	
Uranium	1		1	ug/L	1	B1H0887	08/26/11 16:00	08/26/11 16:34	EPA 200.8	
Vanadium	0.010		0.007	mg/L	1	B1H0908	08/29/11 09:37	08/29/11 12:50	EPA 200.7	
Inorganic Chemistry										
Total Alkalinity as CaCO3	387		10	mg/L	1	B1I0002	08/31/11 16:30	08/31/11 16:30	SM 2320 B	
Phosphate	<		0.15	mg/L	1	[CALC]	08/26/11 13:00	08/26/11 15:00	Calculation	
Total Phosphorous	0.02	0.02	0.05	mg/L	1	B1H0873	08/26/11 13:00	08/26/11 15:00	EPA 365.3	E4
Sulfate	11.9		5.0	mg/L	1	B1I0023	09/01/11 08:00	09/01/11 08:00	EPA 300.0	
Total Suspended Solids [TSS]	<		1	mg/L	1	B1H0812	08/29/11 07:00	08/29/11 07:00	SM 2540 D	
Turbidity	<		1.00	NTU	1	B1H0888	08/26/11 14:30	08/26/11 14:30	EPA 180.1	

Arizona Water Company - Sedona 03-003	Project: Drinking Water Analysis	
65 Coffee Pot Drive	Project Number: RR 13046 8/25/11	Reported:
Sedona, AZ 86336	Project Manager: Keith Self	09/02/11 13:36

Total Metals - Quality Control

Legend Technical Services of Arizona, Inc.

Analyte	Result	Reporting Limit	Units	Spike Level	Source Result	%REC	%REC Limits	RPD	RPD Limit	Notes
Batch B1H0887 - EPA 200.8										
Blank (B1H0887-BLK1)				*Prepared & Analyzed: 08/26/11*						
Selenium	<0.002	0.002	mg/L							
Antimony	<0.0005	0.0005	mg/L							
Uranium	<1.00	1.00	ug/L							
Cadmium	<0.0001	0.0001	mg/L							
Lead	<0.001	0.001	mg/L							
Arsenic	<0.0010	0.0010	mg/L							
LCS (B1H0887-BS1)				*Prepared & Analyzed: 08/26/11*						
Lead	0.024	0.001	mg/L	0.0250		97	85-115			
Cadmium	0.0242	0.0001	mg/L	0.0250		97	85-115			
Selenium	0.025	0.002	mg/L	0.0250		99	85-115			
Arsenic	0.0238	0.0010	mg/L	0.0250		95	85-115			
Uranium	24.0	1.00	ug/L	25.0		96	85-115			
Antimony	0.0241	0.0005	mg/L	0.0250		97	85-115			
Matrix Spike (B1H0887-MS1)	Source: 1082017-02			*Prepared & Analyzed: 08/26/11*						
Cadmium	0.0263	0.0001	mg/L	0.0250	0.00004	105	70-130			
Uranium	25.0	1.00	ug/L	25.0	0.602	97	70-130			
Selenium	0.029	0.002	mg/L	0.0250	0.0008	111	70-130			
Antimony	0.0252	0.0005	mg/L	0.0250	0.00002	101	70-130			
Lead	0.028	0.001	mg/L	0.0250	0.0004	102	70-130			
Arsenic	0.0303	0.0010	mg/L	0.0250	0.0038	106	70-130			
Matrix Spike (B1H0887-MS2)	Source: 1082059-02			*Prepared & Analyzed: 08/26/11*						
Selenium	0.031	0.002	mg/L	0.0250	0.004	107	70-130			
Lead	0.026	0.001	mg/L	0.0250	0.0001	101	70-130			
Uranium	29.0	1.00	ug/L	25.0	3.82	100	70-130			
Cadmium	0.0260	0.0001	mg/L	0.0250	<0.0001	104	70-130			
Arsenic	0.0294	0.0010	mg/L	0.0250	0.0035	104	70-130			
Antimony	0.0254	0.0005	mg/L	0.0250	0.00002	102	70-130			

Arizona Water Company - Sedona 03-003	Project: Drinking Water Analysis	
65 Coffee Pot Drive	Project Number: RR 13046 8/25/11	Reported:
Sedona, AZ 86336	Project Manager: Keith Self	09/02/11 13:36

Total Metals - Quality Control

Legend Technical Services of Arizona, Inc.

Analyte	Result	Reporting Limit	Units	Spike Level	Source Result	%REC	%REC Limits	RPD	RPD Limit	Notes
Batch B1H0887 - EPA 200.8										
Matrix Spike Dup (B1H0887-MSD1)	Source: 1082017-02			*Prepared & Analyzed: 08/26/11*						
Lead	0.027	0.001	mg/L	0.0250	0.0004	105	70-130	2	20	
Uranium	26.0	1.00	ug/L	25.0	0.802	100	70-130	3	20	
Arsenic	0.0305	0.0010	mg/L	0.0250	0.0038	107	70-130	0.7	20	
Antimony	0.0268	0.0005	mg/L	0.0250	0.00002	103	70-130	2	20	
Selenium	0.028	0.002	mg/L	0.0250	0.0006	111	70-130	0.2	20	
Cadmium	0.0263	0.0001	mg/L	0.0250	0.00004	105	70-130	0.3	20	
Matrix Spike Dup (B1H0887-MSD2)	Source: 1082059-02			*Prepared & Analyzed: 08/26/11*						
Selenium	0.032	0.002	mg/L	0.0250	0.004	108	70-130	2	20	
Uranium	30.0	1.00	ug/L	25.0	3.82	105	70-130	4	20	
Lead	0.026	0.001	mg/L	0.0250	0.0001	102	70-130	0.9	20	
Antimony	0.0260	0.0005	mg/L	0.0250	0.00002	104	70-130	2	20	
Arsenic	0.0296	0.0010	mg/L	0.0250	0.0035	105	70-130	0.7	20	
Cadmium	0.0254	0.0001	mg/L	0.0250	<0.0001	102	70-130	2	20	
Batch B1H0908 - EPA 200.7										
Blank (B1H0908-BLK1)				*Prepared & Analyzed: 08/29/11*						
Molybdenum	<0.02	0.02	mg/L							
Vanadium	<0.007	0.007	mg/L							
Magnesium	<1	1	mg/L							
Manganese	<0.02	0.02	mg/L							
Silicon	<0.1	0.1	mg/L							
Calcium	<1	1	mg/L							
Iron	<0.05	0.05	mg/L							
Chromium	<0.005	0.005	mg/L							

Arizona Water Company - Sedona 03-003	Project: Drinking Water Analysis	
65 Coffee Pot Drive	Project Number: RR 13046 8/25/11	Reported:
Sedona, AZ 86336	Project Manager: Keith Self	09/02/11 13:36

Total Metals - Quality Control

Legend Technical Services of Arizona, Inc.

Analyte	Result	Reporting Limit	Units	Spike Level	Source Result	%REC	%REC Limits	RPD	RPD Limit	Notes
Batch B1H0908 - EPA 200.7										
LCS (B1H0908-BS1)				*Prepared & Analyzed: 08/29/11*						
Manganese	0.97	0.02	mg/L	1.00		97	85-115			
Molybdenum	0.20	0.02	mg/L	0.200		99	85-115			
Chromium	0.490	0.005	mg/L	0.500		98	85-115			
Calcium	20	1	mg/L	20.0		101	85-115			
Vanadium	0.687	0.007	mg/L	0.700		98	85-115			
Silicon	4.0	0.1	mg/L	4.00		100	85-115			
Iron	1.00	0.05	mg/L	1.00		100	85-115			
Magnesium	20	1	mg/L	20.0		101	85-115			
Matrix Spike (B1H0908-MS1)		Source: 1082017-01		*Prepared & Analyzed: 08/29/11*						
Calcium	59	1	mg/L	20.0	38	103	70-130			
Molybdenum	0.16	0.02	mg/L	0.200	0.001	78	70-130			
Manganese	0.97	0.02	mg/L	1.00	<0.02	97	70-130			
Silicon	10.5	0.1	mg/L	4.00	7.6	74	70-130			
Chromium	0.494	0.005	mg/L	0.500	0.002	98	70-130			
Magnesium	38	1	mg/L	20.0	19	98	70-130			
Iron	0.92	0.05	mg/L	1.00	<0.05	92	70-130			
Vanadium	0.702	0.007	mg/L	0.700	0.005	99	70-130			
Matrix Spike (B1H0908-MS2)		Source: 1082036-01		*Prepared & Analyzed: 08/29/11*						
Calcium	60	1	mg/L	20.0	40	101	70-130			
Magnesium	37	1	mg/L	20.0	16	95	70-130			
Chromium	0.500	0.005	mg/L	0.500	0.002	100	70-130			
Manganese	0.98	0.02	mg/L	1.00	0.003	98	70-130			
Silicon	19.5	0.1	mg/L	4.00	15.8	93	70-130			
Molybdenum	0.20	0.02	mg/L	0.200	0.001	98	70-130			
Vanadium	0.717	0.007	mg/L	0.700	0.013	100	70-130			
Iron	0.83	0.05	mg/L	1.00	<0.05	93	70-130			

Arizona Water Company - Sedona 03-003	Project: Drinking Water Analysis	
55 Coffee Pot Drive	Project Number: RR 13046 8/25/11	Reported:
Sedona, AZ 86338	Project Manager: Keith Self	09/02/11 13:36

Total Metals - Quality Control

Legend Technical Services of Arizona, Inc.

Analyte	Result	Reporting Limit	Units	Spike Level	Source Result	%REC	%REC Limits	RPD	RPD Limit	Notes
Batch B1H0908 - EPA 200.7										
Matrix Spike Dup (B1H0908-MSD1)	Source: 1082017-01			Prepared & Analyzed: 08/29/11						
Iron	0.95	0.05	mg/L	1.00	<0.05	96	70-130	3	20	
Manganese	0.98	0.02	mg/L	1.00	<0.02	96	70-130	0.7	20	
Molybdenum	0.16	0.02	mg/L	0.200	0.001	78	70-130	0.07	20	
Chromium	0.493	0.005	mg/L	0.500	0.002	98	70-130	0.3	20	
Vanadium	0.701	0.007	mg/L	0.700	0.005	99	70-130	0.1	20	
Magnesium	38	1	mg/L	20.0	19	88	70-130	0.2	20	
Calcium	58	1	mg/L	20.0	38	103	70-130	0.2	20	
Silicon	10.5	0.1	mg/L	4.00	7.8	73	70-130	0.1	20	
Matrix Spike Dup (B1H0908-MSD2)	Source: 1082036-01			Prepared & Analyzed: 08/29/11						
Chromium	0.492	0.005	mg/L	0.500	0.002	98	70-130	2	20	
Iron	0.94	0.05	mg/L	1.00	<0.05	94	70-130	2	20	
Silicon	19.2	0.1	mg/L	4.00	15.6	85	70-130	2	20	
Manganese	0.96	0.02	mg/L	1.00	0.003	96	70-130	2	20	
Calcium	59	1	mg/L	20.0	40	96	70-130	2	20	
Magnesium	36	1	mg/L	20.0	18	92	70-130	2	20	
Vanadium	0.705	0.007	mg/L	0.700	0.013	99	70-130	2	20	
Molybdenum	0.19	0.02	mg/L	0.200	0.001	97	70-130	1	20	

Arizona Water Company - Sedona 03-003	Project: Drinking Water Analysis	
65 Coffee Pot Drive	Project Number: RR 13048 8/25/11	Reported:
Sedona, AZ 86336	Project Manager: Keith Self	09/02/11 13:36

Inorganic Chemistry - Quality Control

Legend Technical Services of Arizona, Inc.

Analyte	Result	Reporting Limit	Units	Spike Level	Source Result	%REC	%REC Limits	RPD	RPD Limit	Notes
Batch B1H0873 - NO PREP										
Blank (B1H0873-BLK1)				*Prepared & Analyzed: 08/26/11*						
Total Phosphorous	<0.05	0.05	mg/L							
LCS (B1H0873-BS1)				*Prepared & Analyzed: 08/26/11*						
Total Phosphorous	0.10	0.05	mg/L	0.100		105	80-120			
LCS Dup (B1H0873-BSD1)				*Prepared & Analyzed: 08/26/11*						
Total Phosphorous	0.10	0.05	mg/L	0.100		100	80-120	5	20	
Matrix Spike (B1H0873-MS1)	Source: 1082015-01			*Prepared & Analyzed: 08/26/11*						
Total Phosphorous	0.10	0.05	mg/L	0.100	<0.05	97	80-120			
Matrix Spike Dup (B1H0873-MSD1)	Source: 1082015-01			*Prepared & Analyzed: 08/26/11*						
Total Phosphorous	0.10	0.05	mg/L	0.100	<0.05	96	80-120	0.2	20	
Batch B1H0880 - NO PREP										
Blank (B1H0880-BLK1)				*Prepared & Analyzed: 08/26/11*						
Turbidity	<1.00	1.00	NTU							
Duplicate (B1H0880-DUP1)	Source: 1082126-01			*Prepared & Analyzed: 08/26/11*						
Turbidity	0.151	1.00	NTU		0.155			3	5	
Batch B1H0912 - NO PREP										
Blank (B1H0912-BLK1)				*Prepared & Analyzed: 08/29/11*						
Total Suspended Solids	<1	1	mg/L							

Arizona Water Company - Sedona 03-003	Project: Drinking Water Analysis	
65 Coffee Pot Drive	Project Number: RR 13046 8/25/11	Reported:
Sedona, AZ 86336	Project Manager: Keith Self	09/02/11 13:36

Inorganic Chemistry - Quality Control

Legend Technical Services of Arizona, Inc.

Analyte	Result	Reporting Limit	Units	Spike Level	Source Result	%REC	%REC Limits	RPD	RPD Limit	Notes
Batch B1H0912 - NO PREP										
Duplicate (B1H0912-DUP1)	Source: 1081980-03			Prepared & Analyzed: 08/29/11						
Total Suspended Solids	1630	1	mg/L		1620			0.7	5	
Duplicate (B1H0912-DUP2)	Source: 1082040-02			Prepared & Analyzed: 08/29/11						
Total Suspended Solids	<1	1	mg/L		0				5	
Duplicate (B1H0912-DUP3)	Source: 1082101-01			Prepared & Analyzed: 08/29/11						
Total Suspended Solids	4	1	mg/L		4			0	5	
Duplicate (B1H0912-DUP4)	Source: 1082125-02			Prepared & Analyzed: 08/29/11						
Total Suspended Solids	<1	1	mg/L		0				5	
Duplicate (B1H0912-DUP5)	Source: 1082177-02			Prepared & Analyzed: 08/29/11						
Total Suspended Solids	<1	1	mg/L		0				5	
Batch B1I0002 - NO PREP										
Blank (B1I0002-BLK1)				Prepared & Analyzed: 08/31/11						
Total Alkalinity as CaCO3	<10	10	mg/L							
Blank (B1I0002-BLK2)				Prepared & Analyzed: 08/31/11						
Total Alkalinity as CaCO3	<10	10	mg/L							
LCS (B1I0002-BS1)				Prepared & Analyzed: 08/31/11						
Total Alkalinity as CaCO3	191	10	mg/L	200		95	80-120			
LCS Dup (B1I0002-BSD1)				Prepared & Analyzed: 08/31/11						
Total Alkalinity as CaCO3	189	10	mg/L	200		94	80-120	0.9	20	

Arizona Water Company - Sedona 03-003	Project: Drinking Water Analysis	
65 Coffee Pot Drive	Project Number: RR 13046 8/25/11	Reported:
Sedona, AZ 86336	Project Manager: Keith Self	09/02/11 13:38

Inorganic Chemistry - Quality Control

Legend Technical Services of Arizona, Inc.

Analyte	Result	Reporting Limit	Units	Spike Level	Source Result	%REC	%REC Limits	RPD	RPD Limit	Notes
Batch B1I0002 - NO PREP										
Matrix Spike (B1I0002-MS1)	Source: 1082106-01			Prepared & Analyzed: 08/31/11						
Total Alkalinity as CaCO3	249	10	mg/L	200	133	58	80-120			M2
Matrix Spike (B1I0002-MS2)	Source: 1082386-01			Prepared & Analyzed: 08/31/11						
Total Alkalinity as CaCO3	223	10	mg/L	200	142	40	80-120			M2
Matrix Spike Dup (B1I0002-MSD1)	Source: 1082106-01			Prepared & Analyzed: 08/31/11						
Total Alkalinity as CaCO3	251	10	mg/L	200	133	59	80-120	0.8	20	M2
Matrix Spike Dup (B1I0002-MSD2)	Source: 1082386-01			Prepared & Analyzed: 08/31/11						
Total Alkalinity as CaCO3	216	10	mg/L	200	142	37	80-120	3	20	M2
Batch B1I0023 - NO PREP										
Blank (B1I0023-BLK1)				Prepared & Analyzed: 09/01/11						
Sulfate	<5.0	5.0	mg/L							
Blank (B1I0023-BLK2)				Prepared & Analyzed: 09/01/11						
Sulfate	<5.0	5.0	mg/L							
LCS (B1I0023-BS1)				Prepared & Analyzed: 09/01/11						
Sulfate	19.5	5.0	mg/L	20.0		98	90-110			
LCS Dup (B1I0023-BSD1)				Prepared & Analyzed: 09/01/11						
Sulfate	19.5	5.0	mg/L	20.0		98	90-110	0	20	
Matrix Spike (B1I0023-MS1)	Source: 1082106-01			Prepared & Analyzed: 09/01/11						
Sulfate	19.8	5.0	mg/L	20.0	<5.0	99	90-110			

Arizona Water Company - Sedona 03-003	Project: Drinking Water Analysis	
65 Coffee Pot Drive	Project Number: RR 13046 8/25/11	Reported:
Sedona, AZ 86336	Project Manager: Keith Self	09/02/11 13:36

Inorganic Chemistry - Quality Control

Legend Technical Services of Arizona, Inc.

Analyte	Result	Reporting Limit	Units	Spike Level	Source Result	%REC	%REC Limits	RPD	RPD Limit	Notes
Batch B1I0023 - NO PREP										
Matrix Spike (B1I0023-MS2)	Source: 1082485-01			Prepared & Analyzed: 09/01/11						
Sulfate	20.1	5.0	mg/L	20.0	<5.0	100	90-110			
Matrix Spike Dup (B1I0023-MSD1)	Source: 1082106-01			Prepared & Analyzed: 09/01/11						
Sulfate	19.8	5.0	mg/L	20.0	<5.0	99	90-110	0	20	
Matrix Spike Dup (B1I0023-MSD2)	Source: 1082485-01			Prepared & Analyzed: 09/01/11						
Sulfate	20.0	5.0	mg/L	20.0	<5.0	100	90-110	0.5	20	

Arizona Water Company - Sedona 03-003	Project: Drinking Water Analysis	
65 Coffee Pot Drive	Project Number: RR 13046 8/25/11	Reported:
Sedona, AZ 86336	Project Manager: Keith Self	09/02/11 13:36

EPA 200.8 - Quality Control

UL#AZ0432

Analyte	Result	Reporting Limit	Units	Spike Level	Source Result	%REC	%REC Limits	RPD	RPD Limit	Notes
Batch 160057 - N/A										
Reference (2506634)				*Prepared: Analyzed: 08/29/11*						
Arsenic	0.049	0.0020	mg/L	0.05		99	90-110			
Blank (2506635)				*Prepared: Analyzed: 08/29/11*						
Arsenic	<0.0020	0.0020	mg/L				-			
LCS (2506636)				*Prepared: Analyzed: 08/29/11*						
Arsenic	<0.0020	0.0020	mg/L	0.001		107	87-138			
LCS (2506637)				*Prepared: Analyzed: 08/29/11*						
Arsenic	0.051	0.0020	mg/L	0.05		102	90-110			
Blank (2506638)				*Prepared: Analyzed: 08/29/11*						
Arsenic	<0.0020	0.0020	mg/L				-			
Blank (2506640)				*Prepared: Analyzed: 08/29/11*						
Arsenic	<0.0020	0.0020	mg/L				-			
LCS (2506642)				*Prepared: Analyzed: 08/29/11*						
Arsenic	0.049	0.0020	mg/L	0.05		97	85-115			
Digested RLC (2506643)				*Prepared: Analyzed: 08/29/11*						
Arsenic	<0.0020	0.0020	mg/L	0.001		101	50-150			
Reference (2506644)				*Prepared: Analyzed: 08/29/11*						
Arsenic	0.049	0.0020	mg/L	0.05		98	85-115			
Blank (2506645)				*Prepared: Analyzed: 08/29/11*						
Arsenic	<0.0020	0.0020	mg/L				-			

Arizona Water Company - Sedona 03-003	Project: Drinking Water Analysis	
65 Coffee Pot Drive	Project Number: RR 13048 8/25/11	Reported:
Sedona, AZ 86336	Project Manager: Keith Self	09/02/11 13:36

EPA 200.8 - Quality Control

UL#AZ0432

Analyte	Result	Reporting Limit	Units	Spike Level	Source Result	%REC	%REC Limits	RPD	RPD Limit	Notes
Batch 160057 - N/A										
Reference (2506648)				*Prepared: Analyzed: 08/29/11*						
Arsenic	0.050	0.0020	mg/L	0.05		99	85-115			
Blank (2506649)				*Prepared: Analyzed: 08/29/11*						
Arsenic	<0.0020	0.0020	mg/L				-			

Arizona Water Company - Sedona 03-003	Project: Drinking Water Analysis	
65 Coffee Pot Drive	Project Number: RR 13046 8/25/11	Reported:
Sedona, AZ 86336	Project Manager: Keith Self	09/02/11 13:36

Notes and Definitions

M2	Matrix spike recovery was low; the associated blank spike recovery was acceptable.
E8	Analyte reported to MDL per project specification. Target analyte was not detected in the sample.
E4	Concentration estimated. Analyte was detected below laboratory minimum reporting level (MRL).
BLK	Method Blank
LCS/Dup	Laboratory Control Sample/Laboratory Fortified Blank/Duplicate
MS/Dup	Matrix Spike/Duplicate
Dry	Sample results reported on a dry weight basis
RPD	Relative Percent Difference

Arizona Water Company - Sedona 03-003 65 Coffee Pot Drive Sedona, AZ 86336	Project: Drinking Water Analysis Project Number: RR 13046 8/25/11 Project Manager: Keith Self	Reported: 09/02/11 13:36

Legend Technical Services of Arizona, Inc.

SUBCONTRACT ORDER PO Number: 1082126

1082125

SENDING LABORATORY:

Legend Technical Services of Arizona, Inc.
17631 North 25th Avenue
Phoenix, AZ 85023
Phone: 602-324-6100
Fax: 602-324-6101
Project Manager: Barbara Frank

RECEIVING LABORATORY:

Underwriter's Laboratories
110 S. Hill Street
South Bend, IN 46617
Phone :(800) 332-4345
Fax: (574) 233-5207

Analysis	Due	Expires	Sample Type	Sample Comments
Sample ID: 1082126-01	**Drinking W.**	**Sampled: 08/25/11 11:55**	Grab Composite N/A	
Arsenic V	09/01/11 15:00	02/21/12 11:55		
Arsenic III	09/01/11 15:00	02/21/13 11:55		
Arsenic - Subcontract	09/01/11 15:00	02/21/12 11:55		
Containers Supplied:				
[blank] (E)				
[blank] (F)				

RUSH 9/1/11

Sample ID: 1082126-02	**Drinking W.**	**Sampled: 08/25/11 11:30**	Grab Composite N/A	
Arsenic V	09/01/11 15:00	02/21/12 11:30		
Arsenic III	09/01/11 15:00	02/21/13 11:30		
Arsenic - Subcontract	09/01/11 15:00	02/21/12 11:30		
Containers Supplied:				
[blank] (E)				
[blank] (F)				

RUSH 9/1/11

Heather Ward x HWard 8/26/11 1630 FEDEX x FEDEX 8/26/11 1630
Released by (Print & Sign) Date Time Received by (Print & Sign) Date Time

FEDEX x
Released by (Print & Sign) Date Time Received by (Print & Sign) Date Time

Page 1 c

Legend Technical Services of Arizona, Inc.

Laboratory Work Order No.: 1082125

Barbara Frank

Barbara Frank
Client Services Representative (602) 324-6100

The results in this report apply to the samples analyzed in accordance with the chain of custody document. This analytical report must be reproduced in its entirety.

Arizona Water Company - Sedona 03-003
65 Coffee Pot Drive
Sedona, AZ 86336

Project: Drinking Water Analysis
Project Number: RR 13046 8/25/11
Project Manager: Keith Self

Reported:
09/02/11 13:36

LEGEND
Technical Services of Arizona, Inc.

17631 N. 25th Ave. Phoenix, Az 85023
(602) 324-6100 Fax (602) 324-6101

4007 East Fifth Street, Suite 163, Tucson, AZ 85711

DRINKING WATER CHAIN OF CUSTODY RECORD

Please Print Clearly

Page 1 of 1

Client Name: ARIZONA WATER CO.	Address: 65 Coffee Pot Drive, Ste. 7	City, State Zip: Sedona, AZ 86336	Phone: [illegible]
System Name: RR	PWS #: 13046	Contact: Keith Self	P.O. No.

IOC'S I: Sb, As, Ba, Be, Cd, Cr, Hg, Ni, Se, Tl, Cn, F

IOC'S II: (New Source) Sb, As, Ba, Be, Cd, Cr, Ca, Pb, Hg, Mg, Ni, Se, Na, Tl, Ca Hardness, Total Hardness, Alk, Asbestos, Cn, F, Langelier, NO2, NO3, pH, SO4, TDS, Temp (in field)

Clients' Sample Identification	Date	Time	POE #	No. of Containers
[illegible]	8-25-11	11:55	[illegible]	6
[illegible]	8-25-11	11:20	006	6

RUSH

[illegible]

Yes, I have followed the instructions provided by the laboratory for decontamination of my samples.

No. of Containers	
Temperature	
Custody Seals	
Seals Intact	
Preserved	

WHITE - LAB YELLOW - LAB PINK - CLIENT

Paul Blanchard 8-26-11 14:00
Paul Blanchard 8-26-11 17:10
H. Ward 8/26/11 9:00

Legend Technical Services of Arizona, Inc.

Laboratory Work Order No.: 1082125

The results in this report apply to the samples analyzed in accordance with the chain of custody document. This analytical report must be reproduced in its entirety.

Barbara Frank
Client Services Representative (602) 324-6100

LEGEND
Technical Services, Inc.
www.legend-group.com

17631 N. 25th Avenue • Phoenix, AZ 85023
P (602) 324-6100 • F (602) 324-6101

Keith Self
Arizona Water Company - Valley Vista 13-114
65 Coffee Pot Drive, Suite #7
Sedona, AZ86336

Project: Drinking Water Analysis
Project Number: 131t4

Reported:
09/02/11 13:24

Analyte

SGR (0651) (1062127-01) Drinking Water (Grab) Sampled: 08/25/11 11:10 Received: 08/26/11 08:00

Analyte	Result	PQL	Units	Dilution	Batch	Prepared	Analyzed	Method	Notes
UL#AZ0432									
EPA 200.8									
Arsenic	0.034	0.0020	mg/L	1	160057		08/29/11 00:00	EPA 200.8	
Arsenic, Trivalent	<0.0020	0.0020	mg/L	1	160057		08/29/11 00:00	EPA 200.8	
Legend Technical Services of Arizona, Inc.									
Total Metals									
Antimony	<0.0005	0.0005	mg/L	1	B1H0887	08/26/11 16:00	08/26/11 16:42	EPA 200.8	
Arsenic	0.0357	0.0010	mg/L	1	B1H0887	08/26/11 16:00	08/26/11 16:42	EPA 200.8	
Cadmium	<0.0001	0.0001	mg/L	1	B1H0887	08/26/11 16:00	08/26/11 16:42	EPA 200.8	
Calcium	31	1	mg/L	1	B1H0908	08/29/11 09:37	08/29/11 12:53	EPA 200.7	
Chromium	<0.005	0.005	mg/L	1	B1H0908	08/29/11 09:37	08/29/11 12:53	EPA 200.7	
Iron	<0.05	0.05	mg/L	1	B1H0908	08/29/11 09:37	08/29/11 12:53	EPA 200.7	
Lead	<0.001	0.001	mg/L	1	B1H0887	08/26/11 16:00	08/26/11 16:42	EPA 200.8	
Magnesium	16	1	mg/L	1	B1H0908	08/29/11 09:37	08/29/11 12:53	EPA 200.7	
Manganese	<0.02	0.02	mg/L	1	B1H0908	08/29/11 09:37	08/29/11 12:53	EPA 200.7	
Molybdenum	<0.02	0.02	mg/L	1	B1H0908	08/29/11 09:37	08/29/11 12:53	EPA 200.7	
Selenium	<0.002	0.002	mg/L	1	B1H0887	08/26/11 16:00	08/26/11 16:42	EPA 200.8	
Silica, Total	20.1	0.2	mg/L	1	[CALC]	08/29/11 09:37	08/29/11 12:53	EPA 200.7	
Silicon	9.4	0.1	mg/L	1	B1H0908	08/29/11 09:37	08/29/11 12:53	EPA 200.7	
Calcium Hardness as CaCO3	77	2	mg/L	1	[CALC]	08/29/11 09:37	08/29/11 12:53	SM 2340B	
Magnesium Hardness as CaCO3	68	4	mg/L	1	[CALC]	08/29/11 09:37	08/29/11 12:53	SM 2340B	
Total Hardness as CaCO3	145	7	mg/L	1	[CALC]	08/29/11 09:37	08/29/11 12:53	SM 2340B	
Uranium	<0.001	0.001	mg/L	1	B1H0887	08/26/11 16:00	08/26/11 16:42	EPA 200.8	
Vanadium	0.018	0.007	mg/L	1	B1H0908	08/29/11 09:37	08/29/11 12:53	EPA 200.7	
Inorganic Chemistry									
Total Alkalinity as CaCO3	142	10	mg/L	1	B1I0002	08/31/11 18:30	08/31/11 18:30	SM 2320 B	
Phosphate	<0.15	0.15	mg/L	1	[CALC]	08/26/11 13:00	08/26/11 15:00	Calculation	
Total Phosphorous	<0.05	0.05	mg/L	1	B1H0873	08/26/11 13:00	08/26/11 15:00	EPA 365.3	
Sulfate	8.6	5.0	mg/L	1	B1I0023	09/01/11 08:00	09/01/11 09:00	EPA 300.0	
Total Suspended Solids	<1	1	mg/L	1	B1H0912	08/29/11 07:00	08/29/11 07:00	SM 2540 D	
Turbidity	<1.00	1.00	NTU	1	B1H0689	08/26/11 14:30	08/26/11 14:30	EPA 180.1	

Legend Technical Services of Arizona, Inc.

Barbara Clark

Client Services Representative

The results in this report apply to the samples analyzed in accordance with the chain of custody document. This analytical report must be reproduced in its entirety.

Phone Number: (602) 324-6100

Keith Self	Project: Drinking Water Analysis	
Arizona Water Company - Valley Vista 13-114	Project Number: 13114	
65 Coffee Pot Drive, Suite #7		Reported:
Sedona, AZ86336		09/02/11 13:24

Sample Condition Upon Receipt:

Temperature: 3.30 C
All samples were received in acceptable condition unless noted otherwise in the case narrative.

Case Narrative:

Holding Times: All holding times were met unless otherwise qualified.
QA/QC Criteria: All analyses met method requirements unless otherwise qualified.
Accreditations: **AZ(PHX)0004, AZ(TUC)OOO4, ASHA#102982, CDC ELITE Member.**
Accreditation is applicable only to the test methods specified on each scope of accreditation held by LEGEND.
Comments: There were no problems encountered during the processing of the samples, unless otherwise noted.
All samples were analyzed on a "wet" basis unless designated as "dry weight".

This report contains data that were produced by a subcontracted laboratory certified for the fields of testing performed.
Underwriter's Laboratories AZ0432
Jim Van Fleit
574.472-5535

No sample container received for Sulfide. Regina notified on 08/30/11- BF

Notes and Definitions

M2 Matrix spike recovery was low; the associated blank spike recovery was acceptable.

The results in this report apply to the samples analyzed in accordance with the chain of custody document. This analytical report must be reproduced in its entirety.

LEGEND
Technical Services of Arizona, Inc.

17631 N. 25th Ave. Phoenix, Az 85023
(602) 324-6100 Fax (602) 324-6101

4627 East Fifth Street, Suite 103, Tucson, AZ 85711
(520) 327-6010 Fax (520) 327-[illegible]

DRINKING WATER CHAIN OF CUSTODY RECORD

Please Print Clearly

Page 1 of 1

Client Name: ARIZONA WATER CO.	Address: 65 Coffee Pot Drive, Ste 7	City, State Zip: Sedona, AZ 86336-	Phone: (928) [illegible]	Fax: (928) [illegible]-6131
System Name: VV	Proj #: 13114	Contact: Keith Self	P.O. No.	Fax results / QC Report

IOC'S I: Sb, As, Ba, Be, Cd, Cr, Hg, Ni, Se, Tl, Cn, F

IOC'S II: (New Source) Sb, As, Ba, Be, Ca, Cd, Cr, Cu, Pb, Hg, Mg, Ni, Se, Na, Tl, Ca Hardness, Total Hardness, Alk, Asbestos, Cn, F, Langelier, NO3, NO2, pH, SO4, TDS, Temp (in field)

Client Sample Identification	Date	Time	POE # / DWR #	Compliance	No. of Containers	Coliform	IOC'S I	IOC'S II	Lead/Copper	HAA5	Nitrate (NO3)	Nitrite (NO2)	TTHMS	Uranium Isotopic	Gross Alpha	Radium 226	Radium 228	VOC's	SOC Method 504	SOC Method [illegible]	SOC Method [illegible]	SOC Method [illegible]	SOC Method [illegible]	SOC Method [illegible]	SOC Method [illegible]	SOC Method [illegible]	SOC - Dioxin 1613	See (Comments)	
SGP	8-25-11	11:40	005		6																							X	01

RUSH

Comments: [illegible] PLEASE RUSH !!

☐ Yes, I have followed the instructions provided by the laboratory for decontamination of all samples.

No. of Containers	
Temperature	
Custody Seals	
Seals Intact	
Preserved	

WHITE - LAB YELLOW - LAB PINK - CLIENT

	Relinquished	Date/Time	Received	Date/Time
1	[illegible]	8-25-11 / 1700	Courier	
2	Courier	[illegible] / 930	H Ward	[illegible] / 930
3				

Legend Technical Services of Arizona, Inc.

PO Number: 1082127

SUBCONTRACT ORDER
1082127

SENDING LABORATORY:
Legend Technical Services of Arizona, Inc.
17831 North 25th Avenue
Phoenix, AZ 85023
Phone: 602-324-8100
Fax: 602-324-8101
Project Manager: Barbara Frank

RECEIVING LABORATORY:
Underwriter's Laboratories
110 S. Hill Street
South Bend, IN 46617
Phone :(800) 332-4345
Fax: (574) 233-9207

Analysis	Due	Expires	Sample Type (Matrix)	Sample Comments
Sample ID: 1082127-01	Drinking W.	Sampled: 08/29/11 11:40	Grab Composite	N/A
Arsenic V	09/01/11 15:00	02/21/12 11:40		
Arsenic III	09/01/11 15:00	02/21/12 11:40		
Arsenic - Subcontract	09/01/11 15:00	02/21/12 11:40		

Containers Supplied:
(blank) (B)
(blank) (P)

RUSH 9/1/11

Heather Ward	x	Relinquished by (Print & Sign)	Date	Time	FEDEX	x Received by (Print & Sign)	8/26/11 Date	1630 Time
FEDEX	x	Relinquished by (Print & Sign)	Date	Time	Received by (Print & Sign)		Date	Time

Page 1 o

LEGEND
Technical Services, Inc.
www.legend-group.com

17631 North 25th Avenue • Phoenix, AZ 85023
P (602) 324-6100 • F (602) 324-6101

Arizona Water Company - Sedona 03-003	Project: Drinking Water Analysis	
65 Coffee Pot Drive	Project Number: 03003	Reported:
Sedona, AZ 86336	Project Manager: Keith Self	09/02/11 13:21

ANALYTICAL REPORT FOR SAMPLES

Sample ID	Laboratory ID	Matrix	Type	Date Sampled	Date Received
BA #10 (008)	1082129-01	Drinking Water	Grab	08/25/11 10:50	08/26/11 09:00

Sample Condition Upon Receipt:

Temperature: 3.30 C
All samples were received in acceptable condition unless noted otherwise in the case narrative.

Case Narrative:

Holding Times: All holding times were met unless otherwise qualified.
QA/QC Criteria: All analyses met method requirements unless otherwise qualified.
Certifications: AZ(PHX)0004, AZ(TUC)0004, AIHA#102882, CDC ELITE Member.
Accreditation is applicable only to the test methods specified on each scope of accreditation held by LEGEND.
Comments: All reporting limits utilized in this report are from the approved method with the lowest possible levels of detection. All samples were analyzed on a "wet" basis unless designated as "dry weight".

This report contains data that were produced by a subcontracted laboratory certified for the fields of testing performed.
Underwriter's Laboratories AZ0432
Jim Van Fleit
574.472-5535

No sample container received for Sulfide. Regina notified on 08/30/11- BF

Arizona Water Company - Sedona 03-003	Project: Drinking Water Analysis	
65 Coffee Pot Drive	Project Number: 03003	Reported:
Sedona, AZ 86336	Project Manager: Keith Self	09/02/11 13:21

BA #18 (008) (1082129-01) Drinking Water (Grab) Sampled: 08/25/11 16:50 Received: 08/25/11 68:00

Analyte	Result	MDL	RL	Units	Dilution	Batch	Prepared	Analyzed	Method	Notes
UL#AZ0432										
EPA 200.8										
Arsenic	0.012		% 0.0020	mg/L	1	160057		08/29/11 00:00	EPA 200.8	
Arsenic, Trivalent	<		0.0020	mg/L	1	160057		08/29/11 00:00	EPA 200.8	
Legend Technical Services of Arizona, Inc.										
Total Metals										
Antimony	<		0.0005	mg/L	1	B1H0887	08/26/11 16:00	08/26/11 18:45	EPA 200.8	
Arsenic	0.0135		0.0010	mg/L	1	B1H0887	08/26/11 16:00	08/26/11 18:45	EPA 200.8	
Cadmium	<		0.0001	mg/L	1	B1H0887	08/26/11 16:00	08/26/11 18:45	EPA 200.8	
Calcium	28		1	mg/L	1	B1H0908	08/29/11 09:37	08/29/11 13:08	EPA 200.7	
Chromium	<		0.005	mg/L	1	B1H0908	08/29/11 09:37	08/29/11 13:08	EPA 200.7	
Iron	<		0.05	mg/L	1	B1H0908	08/29/11 09:37	08/29/11 13:08	EPA 200.7	
Lead	<		0.001	mg/L	1	B1H0887	08/26/11 16:00	08/26/11 18:45	EPA 200.8	
Magnesium	14		1	mg/L	1	B1H0908	08/29/11 09:37	08/29/11 13:08	EPA 200.7	
Manganese	<		0.02	mg/L	1	B1H0908	08/29/11 09:37	08/29/11 13:08	EPA 200.7	
Molybdenum	<		0.02	mg/L	1	B1H0908	08/29/11 09:37	08/29/11 13:08	EPA 200.7	
Selenium	<		0.002	mg/L	1	B1H0887	08/26/11 16:00	08/26/11 18:45	EPA 200.8	
Silica, Total	15.9		0.2	mg/L	1	[CALC]	08/29/11 09:37	08/29/11 13:08	EPA 200.7	
Silicon	6.5		0.1	mg/L	1	B1H0908	08/29/11 09:37	08/29/11 13:08	EPA 200.7	
Calcium Hardness as CaCO3	70		2	mg/L	1	[CALC]	08/29/11 09:37	08/29/11 13:08	SM 2340B	
Magnesium Hardness as CaCO3	59		4	mg/L	1	[CALC]	08/29/11 09:37	08/29/11 13:08	SM 2340B	
Total Hardness as CaCO3	130		7	mg/L	1	[CALC]	08/29/11 09:37	08/29/11 13:08	SM 2340B	
Uranium	<		1	ug/L	1	B1H0887	08/26/11 16:00	08/26/11 18:45	EPA 200.8	
Vanadium	0.011		0.007	mg/L	1	B1H0908	08/29/11 09:37	08/29/11 13:08	EPA 200.7	
Inorganic Chemistry										
Total Alkalinity as CaCO3	133		10	mg/L	1	B1I0002	08/31/11 16:30	08/31/11 16:30	SM 2320 B	
Phosphate	<		0.15	mg/L	1	[CALC]	08/26/11 13:00	08/26/11 15:00	Calculation	
Total Phosphorous	<	0.02	0.05	mg/L	1	B1H0873	08/26/11 13:00	08/26/11 15:00	EPA 365.3	E8
Sulfate	<		5.0	mg/L	1	B1I0023	09/01/11 08:00	09/01/11 08:00	EPA 300.0	
Total Suspended Solids (TSS)	<		1	mg/L	1	B1H0912	08/29/11 07:00	08/29/11 07:00	SM 2540 D	
Turbidity	<		1.00	NTU	1	B1H0880	08/26/11 14:30	08/26/11 14:30	EPA 180.1	

Arizona Water Company - Sedona 03-003	Project: Drinking Water Analysis	
65 Coffee Pot Drive	Project Number: 03003	Reported:
Sedona, AZ 86336	Project Manager: Keith Self	09/02/11 13:21

Total Metals - Quality Control

Legend Technical Services of Arizona, Inc.

Analyte	Result	Reporting Limit	Units	Spike Level	Source Result	%REC	%REC Limits	RPD	RPD Limit	Notes
Batch B1H0887 - EPA 200.8										
Blank (B1H0887-BLK1)				*Prepared & Analyzed: 08/26/11*						
Antimony	<0.0006	0.0005	mg/L							
Uranium	<1.00	1.00	ug/L							
Arsenic	<0.0010	0.0010	mg/L							
Selenium	<0.002	0.002	mg/L							
Lead	<0.001	0.001	mg/L							
Cadmium	<0.0001	0.0001	mg/L							
LCS (B1H0887-BS1)				*Prepared & Analyzed: 08/26/11*						
Selenium	0.025	0.002	mg/L	0.0250		99	85-115			
Antimony	0.0241	0.0005	mg/L	0.0250		97	85-115			
Uranium	24.0	1.00	ug/L	25.0		95	85-115			
Arsenic	0.0238	0.0010	mg/L	0.0250		95	85-115			
Lead	0.024	0.001	mg/L	0.0250		97	85-115			
Cadmium	0.0242	0.0001	mg/L	0.0250		97	85-115			
Matrix Spike (B1H0887-MS1)	Source: 1082017-02			*Prepared & Analyzed: 08/26/11*						
Uranium	25.0	1.00	ug/L	25.0	0.502	97	70-130			
Selenium	0.029	0.002	mg/L	0.0250	0.0006	111	70-130			
Lead	0.028	0.001	mg/L	0.0250	0.0004	102	70-130			
Antimony	0.0252	0.0006	mg/L	0.0250	0.00002	101	70-130			
Cadmium	0.0263	0.0001	mg/L	0.0250	0.00004	105	70-130			
Arsenic	0.0303	0.0010	mg/L	0.0250	0.0035	106	70-130			
Matrix Spike (B1H0887-MS2)	Source: 1082058-02			*Prepared & Analyzed: 08/26/11*						
Lead	0.025	0.001	mg/L	0.0250	0.0001	101	70-130			
Cadmium	0.0260	0.0001	mg/L	0.0250	<0.0001	104	70-130			
Selenium	0.031	0.002	mg/L	0.0250	0.004	107	70-130			
Antimony	0.0254	0.0005	mg/L	0.0250	0.00002	102	70-130			
Arsenic	0.0294	0.0010	mg/L	0.0250	0.0035	104	70-130			
Uranium	29.0	1.00	ug/L	25.0	3.82	100	70-130			

Arizona Water Company - Sedona 03-003	Project: Drinking Water Analysis	
65 Coffee Pot Drive	Project Number: 03003	Reported:
Sedona, AZ 86336	Project Manager: Keith Self	09/02/11 13:21

Total Metals - Quality Control

Legend Technical Services of Arizona, Inc.

Analyte	Result	Reporting Limit	Units	Spike Level	Source Result	%REC	%REC Limits	RPD	RPD Limit	Notes
Batch B1H0887 - EPA 200.8										
Matrix Spike Dup (B1H0887-MSD1)	Source: 1082017-02			Prepared & Analyzed: 08/26/11						
Antimony	0.0258	0.0005	mg/L	0.0250	0.00002	103	70-130	2	20	
Uranium	26.0	1.00	ug/L	25.0	0.802	100	70-130	3	20	
Lead	0.027	0.001	mg/L	0.0250	0.0004	105	70-130	2	20	
Arsenic	0.0305	0.0010	mg/L	0.0250	0.0038	107	70-130	0.7	20	
Selenium	0.028	0.002	mg/L	0.0250	0.0008	111	70-130	0.2	20	
Cadmium	0.0283	0.0001	mg/L	0.0250	0.00004	105	70-130	0.3	20	
Matrix Spike Dup (B1H0887-MSD2)	Source: 1082069-02			Prepared & Analyzed: 08/26/11						
Selenium	0.032	0.002	mg/L	0.0250	0.004	109	70-130	2	20	
Uranium	30.0	1.00	ug/L	25.0	3.82	105	70-130	4	20	
Antimony	0.0260	0.0005	mg/L	0.0250	0.00002	104	70-130	2	20	
Lead	0.026	0.001	mg/L	0.0250	0.0001	102	70-130	0.9	20	
Arsenic	0.0296	0.0010	mg/L	0.0250	0.0035	106	70-130	0.7	20	
Cadmium	0.0254	0.0001	mg/L	0.0250	<0.0001	102	70-130	2	20	
Batch B1H0908 - EPA 200.7										
Blank (B1H0908-BLK1)				Prepared & Analyzed: 08/29/11						
Vanadium	<0.007	0.007	mg/L							
Magnesium	<1	1	mg/L							
Iron	<0.05	0.05	mg/L							
Molybdenum	<0.02	0.02	mg/L							
Silicon	<0.1	0.1	mg/L							
Calcium	<1	1	mg/L							
Chromium	<0.005	0.005	mg/L							
Manganese	<0.02	0.02	mg/L							

Barbara Frank
Client Services Representative (602) 324-6100

Arizona Water Company - Sedona 03-003	Project: Drinking Water Analysis	
65 Coffee Pot Drive	Project Number: 03003	Reported:
Sedona, AZ 86336	Project Manager: Keith Self	09/02/11 13:21

Total Metals - Quality Control

Legend Technical Services of Arizona, Inc.

Analyte	Result	Reporting Limit	Units	Spike Level	Source Result	%REC	%REC Limits	RPD	RPD Limit	Notes
Batch B1H0908 - EPA 200.7										
LCS (B1H0908-BS1)				*Prepared & Analyzed: 08/29/11*						
Molybdenum	0.20	0.02	mg/L	0.200		99	85-115			
Magnesium	20	1	mg/L	20.0		101	85-115			
Vanadium	0.687	0.007	mg/L	0.700		98	85-115			
Calcium	20	1	mg/L	20.0		101	85-115			
Iron	1.00	0.05	mg/L	1.00		100	85-115			
Silicon	4.0	0.1	mg/L	4.00		100	85-115			
Chromium	0.490	0.005	mg/L	0.500		98	85-115			
Manganese	0.97	0.02	mg/L	1.00		97	85-115			
Matrix Spike (B1H0908-MS1)		Source: 1082017-01		*Prepared & Analyzed: 08/29/11*						
Chromium	0.494	0.005	mg/L	0.500	0.002	98	70-130			
Manganese	0.97	0.02	mg/L	1.00	<0.02	97	70-130			
Molybdenum	0.18	0.02	mg/L	0.200	0.001	76	70-130			
Iron	0.92	0.05	mg/L	1.00	<0.05	92	70-130			
Vanadium	0.702	0.007	mg/L	0.700	0.005	99	70-130			
Magnesium	38	1	mg/L	20.0	19	96	70-130			
Silicon	10.5	0.1	mg/L	4.00	7.8	74	70-130			
Calcium	59	1	mg/L	20.0	38	103	70-130			
Matrix Spike (B1H0908-MS2)		Source: 1082038-01		*Prepared & Analyzed: 08/29/11*						
Magnesium	37	1	mg/L	20.0	18	95	70-130			
Vanadium	0.717	0.007	mg/L	0.700	0.013	100	70-130			
Manganese	0.98	0.02	mg/L	1.00	0.003	98	70-130			
Silicon	19.6	0.1	mg/L	4.00	15.8	93	70-130			
Molybdenum	0.20	0.02	mg/L	0.200	0.001	98	70-130			
Chromium	0.500	0.005	mg/L	0.500	0.002	100	70-130			
Iron	0.93	0.05	mg/L	1.00	<0.05	93	70-130			
Calcium	60	1	mg/L	20.0	40	101	70-130			

Arizona Water Company - Sedona 03-003	Project: Drinking Water Analysis	
65 Coffee Pot Drive	Project Number: 03003	Reported:
Sedona, AZ 86336	Project Manager: Keith Self	09/02/11 13:21

Total Metals - Quality Control

Legend Technical Services of Arizona, Inc.

Analyte	Result	Reporting Limit	Units	Spike Level	Source Result	%REC	%REC Limits	RPD	RPD Limit	Notes
Batch B1H0908 - EPA 208.7										
Matrix Spike Dup (B1H0908-MSD1)	Source: 1082017-01			Prepared & Analyzed: 08/29/11						
Chromium	0.493	0.005	mg/L	0.500	0.002	98	70-130	0.3	20	
Silicon	10.5	0.1	mg/L	4.00	7.6	73	70-130	0.1	20	
Iron	0.95	0.05	mg/L	1.00	<0.05	96	70-130	3	20	
Manganese	0.96	0.02	mg/L	1.00	<0.02	96	70-130	0.7	20	
Molybdenum	0.16	0.02	mg/L	0.200	0.001	78	70-130	0.07	20	
Vanadium	0.701	0.007	mg/L	0.700	0.005	99	70-130	0.1	20	
Magnesium	38	1	mg/L	20.0	19	98	70-130	0.2	20	
Calcium	58	1	mg/L	20.0	36	103	70-130	0.2	20	
Matrix Spike Dup (B1H0908-MSD2)	Source: 1082036-01			Prepared & Analyzed: 08/29/11						
Vanadium	0.706	0.007	mg/L	0.700	0.013	99	70-130	2	20	
Molybdenum	0.19	0.02	mg/L	0.200	0.001	97	70-130	1	20	
Magnesium	36	1	mg/L	20.0	18	92	70-130	2	20	
Calcium	59	1	mg/L	20.0	40	98	70-130	2	20	
Chromium	0.492	0.005	mg/L	0.500	0.002	98	70-130	2	20	
Manganese	0.96	0.02	mg/L	1.00	0.003	96	70-130	2	20	
Iron	0.94	0.05	mg/L	1.00	<0.05	94	70-130	2	20	
Silicon	19.2	0.1	mg/L	4.00	15.6	85	70-130	2	20	

Arizona Water Company - Sedona 03-003	Project: Drinking Water Analysis	
65 Coffee Pot Drive	Project Number: 03003	Reported:
Sedona, AZ 86336	Project Manager: Keith Self	09/02/11 13:21

Inorganic Chemistry - Quality Control

Legend Technical Services of Arizona, Inc.

Analyte	Result	Reporting Limit	Units	Spike Level	Source Result	%REC	%REC Limits	RPD	RPD Limit	Notes
Batch B1H0873 - NO PREP										
Blank (B1H0873-BLK1)				*Prepared & Analyzed: 08/26/11*						
Total Phosphorous	<0.05	0.05	mg/L							
LCS (B1H0873-BS1)				*Prepared & Analyzed: 08/26/11*						
Total Phosphorous	0.10	0.05	mg/L	0.100		105	80-120			
LCS Dup (B1H0873-BSD1)				*Prepared & Analyzed: 08/26/11*						
Total Phosphorous	0.10	0.05	mg/L	0.100		100	80-120	5	20	
Matrix Spike (B1H0873-MS1)	Source: 1082015-01			*Prepared & Analyzed: 08/26/11*						
Total Phosphorous	0.10	0.05	mg/L	0.100	<0.05	97	80-120			
Matrix Spike Dup (B1H0873-MSD1)	Source: 1082015-01			*Prepared & Analyzed: 08/26/11*						
Total Phosphorous	0.10	0.05	mg/L	0.100	<0.05	96	80-120	0.2	20	
Batch B1H0880 - NO PREP										
Blank (B1H0880-BLK1)				*Prepared & Analyzed: 08/26/11*						
Turbidity	<1.00	1.00	NTU							
Duplicate (B1H0880-DUP1)	Source: 1082125-01			*Prepared & Analyzed: 08/26/11*						
Turbidity	0.151	1.00	NTU		0.155			3	5	
Batch B1H0912 - NO PREP										
Blank (B1H0912-BLK1)				*Prepared & Analyzed: 08/29/11*						
Total Suspended Solids	<1	1	mg/L							

Arizona Water Company - Sedona 03-003	Project: Drinking Water Analysis	
65 Coffee Pot Drive	Project Number: 03003	Reported:
Sedona, AZ 86336	Project Manager: Keith Self	09/02/11 13:21

Inorganic Chemistry - Quality Control

Legend Technical Services of Arizona, Inc.

Analyte	Result	Reporting Limit	Units	Spike Level	Source Result	%REC	%REC Limits	RPD	RPD Limit	Notes
Batch B1H0912 - NO PREP										
Duplicate (B1H0912-DUP1)	Source: 1081980-03			Prepared & Analyzed: 08/29/11						
Total Suspended Solids	1630	1	mg/L		1620			0.7	5	
Duplicate (B1H0912-DUP2)	Source: 1082040-02			Prepared & Analyzed: 08/29/11						
Total Suspended Solids	<1	1	mg/L		0				5	
Duplicate (B1H0912-DUP3)	Source: 1082101-01			Prepared & Analyzed: 08/29/11						
Total Suspended Solids	4	1	mg/L		4			0	5	
Duplicate (B1H0912-DUP4)	Source: 1082125-02			Prepared & Analyzed: 08/29/11						
Total Suspended Solids	<1	1	mg/L		0				5	
Duplicate (B1H0912-DUP5)	Source: 1082177-02			Prepared & Analyzed: 08/29/11						
Total Suspended Solids	<1	1	mg/L		0				5	
Batch B1I0002 - NO PREP										
Blank (B1I0002-BLK1)				Prepared & Analyzed: 08/31/11						
Total Alkalinity as CaCO3	<10	10	mg/L							
Blank (B1I0002-BLK2)				Prepared & Analyzed: 08/31/11						
Total Alkalinity as CaCO3	<10	10	mg/L							
LCS (B1I0002-BS1)				Prepared & Analyzed: 08/31/11						
Total Alkalinity as CaCO3	191	10	mg/L	200		95	80-120			
LCS Dup (B1I0002-BSD1)				Prepared & Analyzed: 08/31/11						
Total Alkalinity as CaCO3	189	10	mg/L	200		94	80-120	0.9	20	

Arizona Water Company - Sedona 03-003	Project: Drinking Water Analysis	
65 Coffee Pot Drive	Project Number: 03003	Reported:
Sedona, AZ 86336	Project Manager: Keith Self	09/02/11 13:21

Inorganic Chemistry - Quality Control

Legend Technical Services of Arizona, Inc.

Analyte	Result	Reporting Limit	Units	Spike Level	Source Result	%REC	%REC Limits	RPD	RPD Limit	Notes
Batch B1I0002 - NO PREP										
Matrix Spike (B1I0002-MS1)	Source: 1082105-01			Prepared & Analyzed: 08/31/11						
Total Alkalinity as CaCO3	249	10	mg/L	200	133	58	80-120			M2
Matrix Spike (B1I0002-MS2)	Source: 1082386-01			Prepared & Analyzed: 08/31/11						
Total Alkalinity as CaCO3	223	10	mg/L	200	142	40	80-120			M2
Matrix Spike Dup (B1I0002-MSD1)	Source: 1082105-01			Prepared & Analyzed: 08/31/11						
Total Alkalinity as CaCO3	251	10	mg/L	200	133	59	80-120	0.8	20	M2
Matrix Spike Dup (B1I0002-MSD2)	Source: 1082386-01			Prepared & Analyzed: 08/31/11						
Total Alkalinity as CaCO3	216	10	mg/L	200	142	37	80-120	3	20	M2
Batch B1I0023 - NO PREP										
Blank (B1I0023-BLK1)				Prepared & Analyzed: 09/01/11						
Sulfate	<5.0	5.0	mg/L							
Blank (B1I0023-BLK2)				Prepared & Analyzed: 09/01/11						
Sulfate	<5.0	5.0	mg/L							
LCS (B1I0023-BS1)				Prepared & Analyzed: 09/01/11						
Sulfate	19.5	5.0	mg/L	20.0		98	90-110			
LCS Dup (B1I0023-BSD1)				Prepared & Analyzed: 09/01/11						
Sulfate	19.5	5.0	mg/L	20.0		98	90-110	0	20	
Matrix Spike (B1I0023-MS1)	Source: 1082106-01			Prepared & Analyzed: 09/01/11						
Sulfate	19.8	5.0	mg/L	20.0	<5.0	99	90-110			

Arizona Water Company - Sedona 03-003	Project: Drinking Water Analysis	
65 Coffee Pot Drive	Project Number: 03003	Reported:
Sedona, AZ 86336	Project Manager: Keith Self	09/02/11 13:21

Inorganic Chemistry - Quality Control

Legend Technical Services of Arizona, Inc.

Analyte	Result	Reporting Limit	Units	Spike Level	Source Result	%REC	%REC Limits	RPD	RPD Limit	Notes
Batch B1I0023 - NO PREP										
Matrix Spike (B1I0023-MS2)	Source: 1082488-01			Prepared & Analyzed: 09/01/11						
Sulfate	20.1	5.0	mg/L	20.0	<5.0	100	90-110			
Matrix Spike Dup (B1I0023-MSD1)	Source: 1082106-01			Prepared & Analyzed: 09/01/11						
Sulfate	19.8	5.0	mg/L	20.0	<5.0	99	90-110	0	20	
Matrix Spike Dup (B1I0023-MSD2)	Source: 1082488-01			Prepared & Analyzed: 09/01/11						
Sulfate	20.0	5.0	mg/L	20.0	<5.0	100	90-110	0.5	20	

Arizona Water Company - Sedona 03-003	Project: Drinking Water Analysis	
65 Coffee Pot Drive	Project Number: 03003	Reported:
Sedona, AZ 86336	Project Manager: Keith Self	09/02/11 13:21

EPA 200.8 - Quality Control

UL#AZ0432

Analyte	Result	Reporting Limit	Units	Spike Level	Source Result	%REC	%REC Limits	RPD	RPD Limit	Notes
Batch 160057 - N/A										
Reference (2506634)				*Prepared:*	*Analyzed: 08/29/11*					
Arsenic	0.049	0.0020	mg/L	0.05		99	90-110			
Blank (2506635)				*Prepared:*	*Analyzed: 08/29/11*					
Arsenic	<0.0020	0.0020	mg/L				-			
LCS (2506636)				*Prepared:*	*Analyzed: 08/29/11*					
Arsenic	<0.0020	0.0020	mg/L	0.001		107	67-136			
LCS (2506637)				*Prepared:*	*Analyzed: 08/29/11*					
Arsenic	0.051	0.0020	mg/L	0.05		102	90-110			
Blank (2506638)				*Prepared:*	*Analyzed: 08/29/11*					
Arsenic	<0.0020	0.0020	mg/L				-			
Blank (2506640)				*Prepared:*	*Analyzed: 08/29/11*					
Arsenic	<0.0020	0.0020	mg/L				-			
LCS (2506642)				*Prepared:*	*Analyzed: 08/29/11*					
Arsenic	0.049	0.0020	mg/L	0.05		97	85-115			
Digested RLC (2506643)				*Prepared:*	*Analyzed: 08/29/11*					
Arsenic	<0.0020	0.0020	mg/L	0.001		101	50-150			
Reference (2506644)				*Prepared:*	*Analyzed: 08/29/11*					
Arsenic	0.049	0.0020	mg/L	0.05		99	85-115			
Blank (2506645)				*Prepared:*	*Analyzed: 08/29/11*					
Arsenic	<0.0020	0.0020	mg/L				-			

Arizona Water Company - Sedona 03-003	Project: Drinking Water Analysis	
65 Coffee Pot Drive	Project Number: 03003	Reported:
Sedona, AZ 86336	Project Manager: Keith Self	09/02/11 13:21

EPA 200.8 - Quality Control

UL#AZ0432

Analyte	Result	Reporting Limit	Units	Spike Level	Source Result	%REC	%REC Limits	RPD	RPD Limit	Notes
Batch 160057 - N/A										
Reference (2506846)				*Prepared: Analyzed: 08/29/11*						
Arsenic	0.050	0.0020	mg/L	0.05		99	85-115			
Blank (2506849)				*Prepared: Analyzed: 08/29/11*						
Arsenic	<0.0020	0.0020	mg/L							

Legend Technical Services of Arizona, Inc.

The results in this report apply to the samples analyzed in accordance with the chain of custody document. This analytical report must be reproduced in its entirety.

Laboratory Work Order No.: 1082129

Barbara Frank

Barbara Frank
Client Services Representative (602) 324-6100

Notes and Definitions

M2	Matrix spike recovery was low; the associated blank spike recovery was acceptable.
E6	Analyte reported to MDL per project specification. Target analyte was not detected in the sample.
BLK	Method Blank
LCS/Dup	Laboratory Control Sample/Laboratory Fortified Blank/Duplicate
MS/Dup	Matrix Spike/Duplicate
Dry	Sample results reported on a dry weight basis
RPD	Relative Percent Difference

Arizona Water Company - Sedona 03-003	Project: Drinking Water Analysis	
65 Coffee Pot Drive	Project Number: 03003	Reported:
Sedona, AZ 86336	Project Manager: Keith Self	09/02/11 13:21

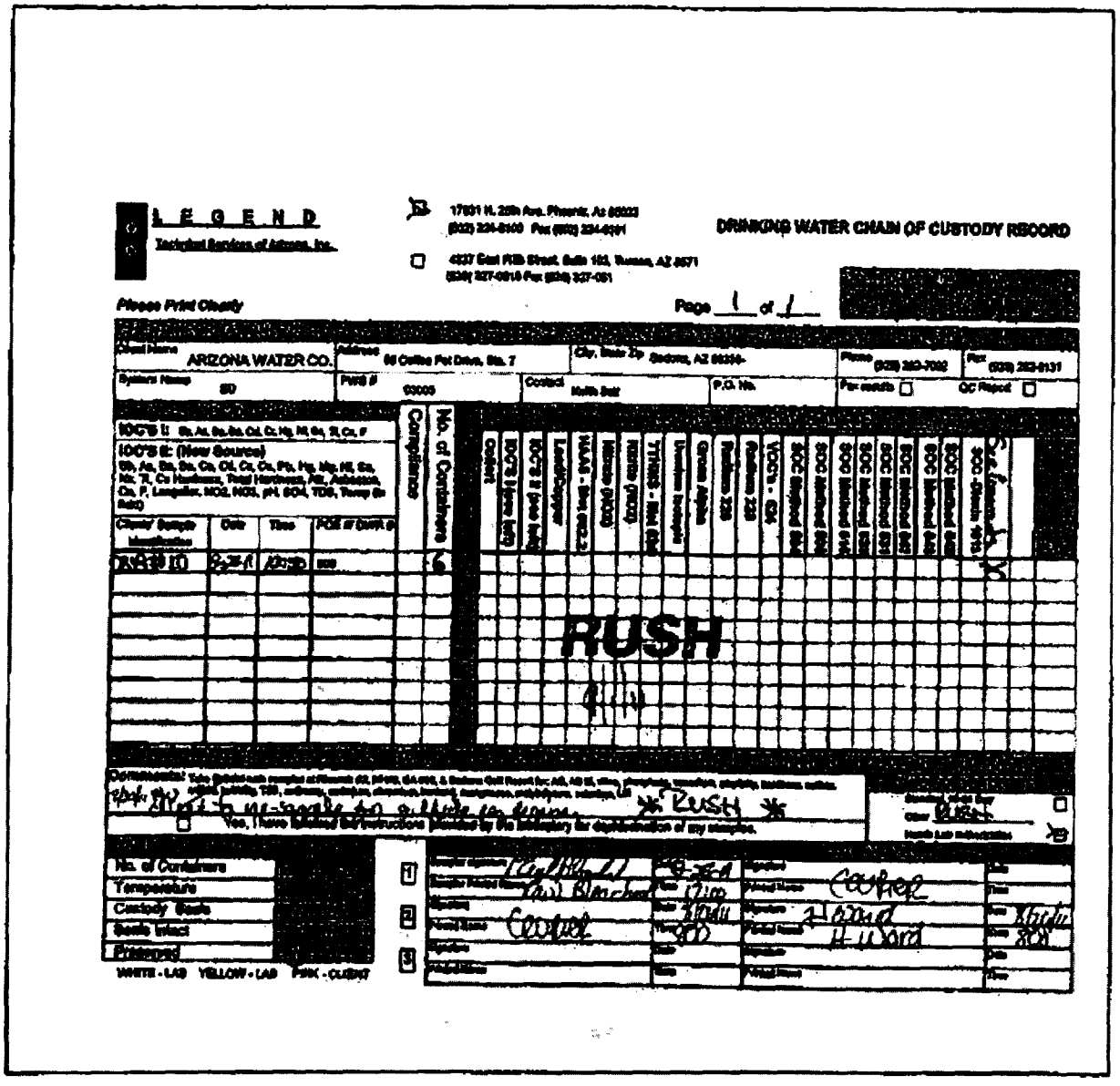

LEGEND

DRINKING WATER CHAIN OF CUSTODY RECORD

Please Print Clearly

Page 1 of 1

ARIZONA WATER CO.

65 Coffee Pot Drive, Ste. 7

Sedona, AZ 86336-

SD

03003

Keith Self

RUSH

Comments: * RUSH *

No. of Containers

Temperature

Custody Seals

Seals Intact

Preserved

WHITE - LAB YELLOW - LAB PINK - CLIENT

Legend Technical Services of Arizona, Inc.

Laboratory Work Order No.: 1082129

Barbara Frank

Barbara Frank
Client Services Representative (602) 324-6100

The results in this report apply to the samples analyzed in accordance with the chain of custody document. This analytical report must be reproduced in its entirety.

Legend Technical Services of Arizona, Inc.

PO Number: 1082129

SUBCONTRACT ORDER

1082129

SENDING LABORATORY:

Legend Technical Services of Arizona, Inc.
17831 North 25th Avenue
Phoenix, AZ 85023
Phone: 602-324-6100
Fax: 602-324-6101
Project Manager: Barbara Frank

RECEIVING LABORATORY:

Underwriter's Laboratories
110 S. Hill Street
South Bend, IN 46617
Phone :(800) 332-4345
Fax: (574) 239-8207

Analysis	Due	Expires	Sample Type (matrix)	Sample Comments
Sample ID: 1082129-01	Drinking W	Sampled:08/26/11 16:50	Grab Composite	N/A
Arsenic V	09/01/11 16:00	02/21/12 10:50		
Arsenic III	09/01/11 16:00	02/21/12 10:50		
Arsenic - Subcontract	09/01/11 16:00	02/21/12 10:50		

Containers Supplied:
[blank] (E)
[blank] (P)

RUSH 9/1/11

Heather Ward	x HWard	8/26/11	1630	FedEx	x Fedex	8/26/11	1630
Relinquished by (Print & Sign)		Date	Time	Received by (Print & Sign)		Date	Time
FEDEX	x						
Relinquished by (Print & Sign)		Date	Time	Received by (Print & Sign)		Date	Time

Page 1 of

Attachment "B": Site Surveys

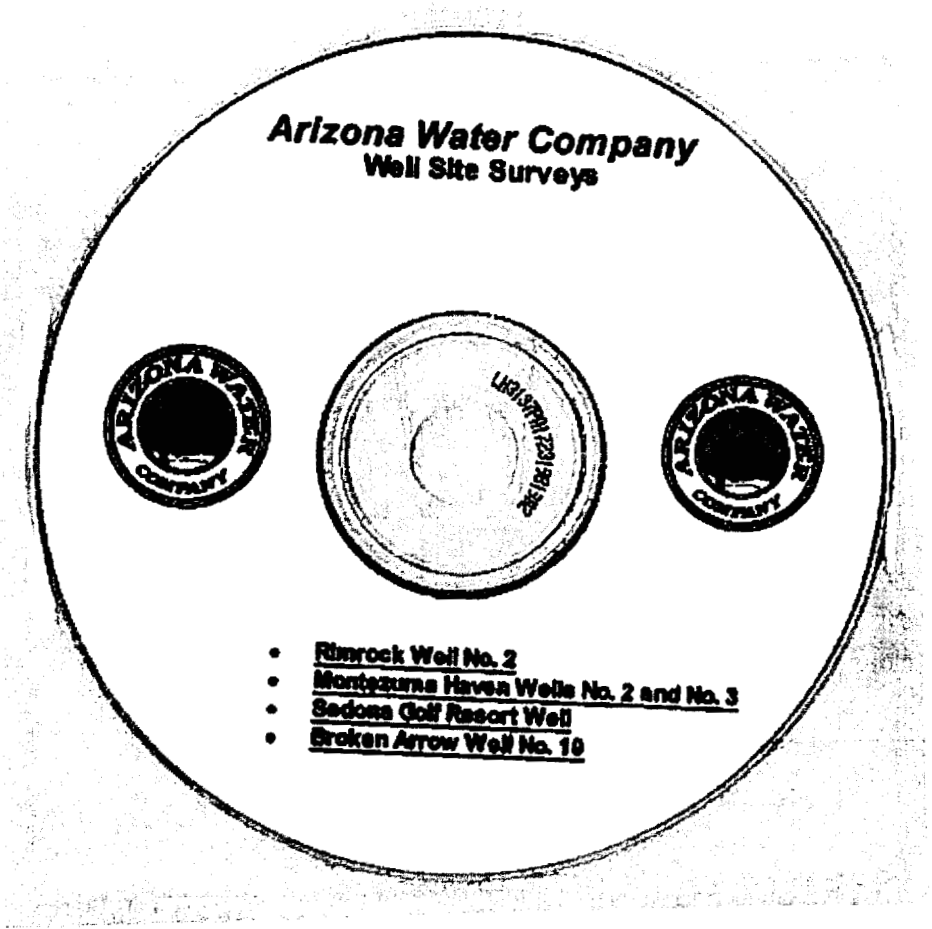

Attachment "C": Water Services Agreement

WATER SERVICES AGREEMENT

THIS WATER SERVICES AGREEMENT ("Agreement"), entered into this _____ day of _____, 2011, is made by and between _____ an Arizona limited liability company ("_____"), and ARIZONA WATER COMPANY, an Arizona corporation ("Company") (_____ and Company are sometimes hereinafter referred to collectively as the "Parties" and individually as "Party").

RECITALS

A. Company's Montezuma Haven Well No. 3 (the "Well") currently produces groundwater containing arsenic ("the Contaminant") in excess of 10 micrograms per liter.

B. A water treatment facility currently removes the Contaminant from the groundwater produced from the Well. (This water treatment facility is sometimes hereinafter referred to as "Facility".)

C. This Agreement sets forth the terms and conditions under which _____ will remove and properly dispose of exhausted media, install new media, and prepare new media in connection with the treatment of water produced from the Well, and properly dispose of all waste derived therefrom ("Media Change Out").

NOW, THEREFORE, in consideration of the mutual covenants contained in this Agreement, and for other good and valuable consideration, the receipt and adequacy of which are hereby acknowledged, the Parties hereto agree as follows:

1. **Term.**

1.1 Duration of Agreement. This Agreement shall commence on the date of this Agreement and shall continue for a period of three (3) years (the "Term").

1.2 Renewal. This Agreement may be renewed upon the end of the Term by the execution of a written supplement to this Agreement by both Parties for a duration to be specified in said supplement.

2. **Water Quality.** After _____ performs a Media Change Out at the Well, the Facility must continue to reduce the level of the Contaminant in the water produced by the Well to a level necessary for the water to satisfy the Water Quality Specifications in Exhibit "A", attached hereto.

3. **Payments.** Company shall pay _____ the fees and charges set forth in Section 4 below.

4. **Media Change Out Fee.** Company will pay _____ the fee per Media Change Out for the Well listed in the fee schedule in Exhibit "B", attached hereto. The Media Change Out fee for the Well shall include all costs to purchase and deliver new media, remove and properly dispose of exhausted media, install and prepare new media and Facility for service,

all other costs related to Media Change Out, and the return of Facility to full operation and performance.

5. **Invoices**. _____ shall invoice Company within ten (10) days after the completion of the Media Change Out. The invoice shall include and list the Fees in accordance with Section 4, above. Within thirty (30) days following Company's receipt of such invoice, Company shall make payment to _____ at the address on the invoice.

6. **Delinquent Payments**. Any undisputed invoice under this Agreement that is not paid within thirty (30) days after Company's receipt thereof shall bear interest at the rate of ten percent (10%) per annum or at the maximum rate permitted by law, whichever is less, from the latter of the date due or the date when the Parties resolve disputed invoice, which the parties agree to resolve as soon as possible, until payment is made by Company.

7. **Waste**. _____ shall be solely responsible at its sole expense, for all Toxicity Characteristic Leaching Procedure ("TCLP") and/or other testing related to and for properly and lawfully disposing of exhausted media and all other waste incidental to the Media Change Out at the Facility, including, but not limited to, the disposal of all hazardous waste (as defined under all applicable federal, state and local statutes and/or regulations) associated with or derived from the Media Change Out at the Facility, such disposal to be in compliance with all applicable Laws. _____ shall defend Company (through counsel approved by Company) in any criminal, civil, or administrative proceeding and indemnify Company against and hold it harmless from all claims, demands, penalties, fines, liabilities, losses and costs (including without limitation attorneys', paralegals', and experts' fees and costs) (collectively, "Claims") arising out of or related to _____'s acts or omissions or the acts or omissions of _____'s agents, contractors and/or employees in the handling, transportation, or disposal of such exhausted media and other waste including, but not limited to, the disposal of all hazardous waste (as defined under all applicable federal, state and local statutes and/or regulations) associated with or derived from the Media Change Out at the Facility. _____ may request assistance from others in such disposal and shall be responsible for the acts or omissions of all such others, including, but not limited to its contractors, agents, and employees.

8. **Security; Insurance**.

8.1 Facilities. _____ agrees that the only security Company shall be obligated to provide for the Facility is the current fencing around the Well.

8.2 Insurance.

8.2.1 Coverage by Company. Company shall maintain at its sole expense, commercial general liability insurance with limits of not less than $2,000,000 per occurrence and in the aggregate.

8.2.2 Coverage by _____. With respect to _____'s activities under this Agreement, _____ shall maintain or cause to be maintained, and shall provide or cause to be provided (with evidence of current coverage thereof to be provided to Company by _____ via a certificate of insurance in a form acceptable to Company, listing all required coverage and showing Company as an additional insured) coverage for the Facility in an

amount equal to or exceeding the replacement cost thereof, commercial general liability insurance, including completed operations and contractual obligations coverage, with limits of not less than $2,000,000 per occurrence, workers' compensation coverage as required by Arizona law, and automobile liability insurance coverage for all owned, non-owned, or hired vehicles with a combined single limit of not less than $2,000,000 per occurrence; such insurance shall name Company as an additional insured and be primary for all purposes.

9. **Permits and Authorizations.** _____ and Company shall cooperate and use good faith efforts to obtain all permits, consents, entitlements, and approvals required under any of the Laws as of the date of this Agreement, including without limitation any and all environmental permits (collectively the "Permits") necessary to enable _____ to perform the Media Change Out. All costs and expenses of the activities required under this Section 9 shall be the responsibility of _____. Any permit, consent, entitlement, or approval necessary shall be issued in Company's name.

10. **Time for Performance.** Subject to Section 14.8 below, _____ and Company shall perform their respective obligations under this Agreement in a diligent, prompt, timely, and professional manner. The Company shall notify _____ when a media change out is required. The Company will provide a media sample to _____ for a certified testing lab to perform a TCLP test on the media sample. A copy of the TCLP media test results shall be provided to the Company within three (3) days of _____'s receipt of such test results.

10.1 Notification. Company shall notify _____, in accordance with Section 14.5 below, in the event a Media Change Out is required. _____ shall respond, in accordance with Section 14.5 below, to the Company within five (5) business days with a schedule to perform a Media Change Out at the Well to be completed within fifteen (15) business days.

11. **License to Enter.** Effective with the Parties' execution of this Agreement, Company gives _____ a license for permission to use Company's property as mutually agreed to be necessary to perform the Media Change Out at the Facility. If _____ so requests, the license shall be formalized by a separate written instrument consistent with the scope of the license set forth above and in Company's customary form. Such license can only be revoked upon termination of this Agreement.

12. **Representations and Warranties.**

12.1 Representations and Warranties of Company. Company makes the following representations, warranties, and covenants to _____:

12.1.1 Power and Authority to Execute and Perform this Agreement. Company has the right, power, and authority to enter into this Agreement and perform its obligations hereunder, and the person executing this Agreement on behalf of Company has the right, power, and authority to do so.

12.1.2 Enforceability. This Agreement constitutes a legal, valid, and binding obligation of Company, enforceable against Company in accordance with its terms.

12.1.3 No Litigation. There is no suit, action, arbitration, or legal, administrative, or other proceeding, formal or informal, pending or threatened, which adversely affects Company's ability to enter into and perform its obligations under this Agreement.

12.1.4 No Conflict. The execution and performance of this Agreement by Company does not breach or constitute a default by Company under any law, regulation, ruling, court order, agreement, indenture, or undertaking or other instrument to which Company is a party or by which Company or any of its property may be bound or affected and does not constitute a breach or default under any law, regulation, ruling, or court order.

12.2 Representations and Warranties of _____. _____ makes the following representations, warranties, and covenants to Company:

12.2.1 Power and Authority to Execute and Perform this Agreement. _____ has the right, power, and authority under this Agreement to perform its obligations hereunder and the person executing this Agreement on behalf of _____ has the right, power, and authority to do so.

12.2.2 Enforceability. This Agreement constitutes a legal, valid, and binding obligation of _____, enforceable against _____ in accordance with its terms.

12.2.3 No Litigation. There is no suit, action, arbitration, or legal, administrative, or other proceeding, formal or informal, pending or threatened, which adversely affects the ability of _____ to enter into and perform its obligations under this Agreement.

12.2.4 No Conflict. The execution, delivery, and performance of this Agreement by _____ will not breach or constitute a default under, or grounds for the acceleration of maturity of, any agreement, indenture, undertaking or other instrument to which _____ is a party or by which _____ or any of its property may be bound or affected and does not constitute a breach or default under any law, regulation, ruling, or court order.

13. **Company's Termination Option**. Company, at its option, may terminate this Agreement at any time prior to the end of the Term, upon thirty (30) days written notice to _____. If Company exercises its termination option, _____ shall prepare and submit to Company a final invoice for _____'s due and payable fees and charges up to the termination date.

14. **Miscellaneous Provisions**.

14.1 Further Assurances. At any time and from time to time after the date hereof, the Parties agree to take such actions and to execute and deliver such documents as the other Party may reasonably request to effectuate the purposes of this Agreement.

14.2 Assignment. Neither Party shall assign any right, interest, or obligation under this Agreement without the prior written consent of the other Party. This Agreement and all provisions hereof shall be binding upon, and inure to the benefit of, the Parties and their respective heirs, successors, legal representatives, and assigns.

14.3 Amendment. Except as otherwise provided in this Agreement, neither this Agreement nor any provision hereof may be waived, modified, amended, discharged, or terminated except by an instrument in writing signed by both Parties, and then only to the extent set forth in such instrument.

14.4 Entire Agreement. This Agreement and the agreements provided for herein constitute the entire understanding between the Parties with respect to the matters set forth herein, and they supercede all prior or contemporaneous understandings or agreements between the Parties with respect to the subject matter hereof, whether oral or written.

14.5 Notices. Any notice, approval, consent, waiver or other communication required or permitted to be given or to be served upon either Party in connection with this Agreement shall be in writing. Such notice shall be personally served, sent by facsimile, telegram, or cable, or sent prepaid by registered or certified mail with return receipt requested, or sent by reputable overnight delivery service, such as Federal Express, and shall be deemed to be given: (a) if personally served, when delivered to the Party to whom such notice is addressed; (b) if given by facsimile, telegram, or cable, when sent; (c) if given by prepaid or certified mail with return receipt requested, on the date of execution of the return receipt; or (d) if sent by reputable overnight delivery service, such as Federal Express, when received. Any notice given by facsimile, telegram, or cable shall be confirmed in writing, and such confirmation shall be sent or delivered by any of the other means of delivery set forth in this Section, within forty-eight (48) hours after notice was sent by facsimile, telegram, or cable. Such notices shall be addressed to the Party to whom such notice is to be given at the Party's address set forth below or as such Party shall otherwise direct in writing to the other Party delivered or sent in accordance with this Section.

_____:	_____ _____ _____ Attn: _____ Fax No.: _____
Company:	Arizona Water Company P.O. Box 29006 Phoenix, AZ 85038-9006 Attn: William M. Garfield, President Fax No.: 602-240-6878

14.6 Governing Law. This Agreement shall be governed by, and construed and interpreted in accordance with, the laws of the State of Arizona, without giving effect to any choice-of-law or conflict-of-law rule or principle that would result in the application of any other laws.

14.7 Headings. Headings, titles, and captions are for convenience only and shall not constitute a portion of this Agreement or be used for the interpretation thereof.

14.8 Cumulative Rights; Waiver. The rights created under this Agreement or by law or equity, shall be cumulative and may be exercised at any time and from time to time. No failure by either Party to exercise, and no delay in exercising any rights, shall be construed or deemed to be a waiver thereof, nor shall any single or partial exercise by any Party preclude any other or future exercise thereof or the exercise of any other right. Any waiver of any provision or of any breach of any provision of this Agreement must be in writing, and any waiver by any Party of any breach of any provision of this Agreement shall not operate as or be construed to be a waiver of any other breach of that provision or of any breach of any other provision of this Agreement. The failure of any Party to insist upon strict adherence to any term of the Agreement on one or more occasions shall not be considered or construed or deemed a waiver of any provision or any breach of any provision of this Agreement or deprive that Party of the right thereafter to insist upon strict adherence to that term or provision or any other term or provision of this Agreement. No delay or omission on the part of any Party in exercising any right under this Agreement shall operate as a waiver of any such right or any other right under this Agreement.

14.9 Liberal Construction. This Agreement constitutes a fully-negotiated agreement among commercially sophisticated Parties, each assisted by legal counsel, and the terms of this Agreement shall not be construed or interpreted for or against any Party because that Party or its legal representative drafted or prepared such provision.

14.10 Severability. If any provision of this Agreement is invalid, illegal, or unenforceable, such provision shall be deemed to be severed or deleted from this Agreement and the balance of this Agreement shall remain in full force and effect notwithstanding such invalidity, illegality, or unenforceability.

14.11 Good Faith and Fair Dealing. The Parties acknowledge and agree that the performances required by the provisions of this Agreement shall be undertaken in good faith, and with each of the Parties dealing fairly with each other.

14.12 No Third-Party Beneficiaries. Subject to Section 14.2 above, this Agreement does not create, and shall not be construed to create, any rights enforceable by any person, partnership, corporation, joint venture, limited liability company or other form of organization or association of any kind that is not a Party, except to the extent that a Party's rights may be enforced by a parent company or a subsidiary of such Party.

14.13 Counterparts; Facsimile Execution. This Agreement may be executed in counterparts, each of which shall be deemed an original, but all of which together shall constitute one and the same instrument. The signature page of any counterpart may be detached therefrom without impairing the legal effect of the signature(s) thereon, provided such signature page is attached to any other counterpart identical thereto except for having an additional signature page executed by any other Party. Each Party agrees that each other Party may rely upon the facsimile signature of any Party on this Agreement as constituting a duly authorized, irrevocable, actual, current delivery of this Agreement as fully as if this Agreement contained the original ink signature of the Party supplying a facsimile signature.

14.14 Time of the Essence. Time is of the essence of each and every provision of this Agreement. Unless business days are expressly provided for, all references to "days"

herein shall refer to consecutive calendar days. If any date or time period provided for in this Agreement is or ends on a Saturday, Sunday or federal, state, or legal holiday, then such date automatically shall be extended to the next day which is not a Saturday, Sunday, or federal, state, or legal holiday.

14.15 Number and Gender. As used herein, and as the circumstances require, the plural term shall include the singular, the singular shall include the plural, the neuter term shall include the masculine and feminine genders, the masculine term shall include the neuter and the feminine genders, and the feminine term shall include the neuter and the masculine genders.

14.16 Disputes.

14.16.1 Arbitration. Any dispute or controversy arising out of, under, or in connection with, or in relation to, this Agreement and/or any amendments thereto, or the breach thereof, which is not resolved informally by prior mutual agreement of the Parties, shall be submitted to arbitration in accordance with the procedures set forth in the Arizona Uniform Arbitration Act (A.R.S. § 12-1501, *et seq.*), unless otherwise waived and/or modified in writing by the Parties. The cost of such arbitration shall be paid by the Parties equally; however, the prevailing Party in the arbitration shall be entitled to reimbursement of its attorneys fees and other costs and expenses incurred in connection therewith from the other party.

14.16.2 Attorneys Fees. If a dispute arises which is not resolved by arbitration pursuant to Section 14.16.1 above, and any Party reasonably retains counsel for the purpose of enforcing any provision of this Agreement, including without limitation the institution of any action or proceeding to enforce any provision of this Agreement, or to recover damages if otherwise available hereunder, or to obtain injunctive or other relief by reason of any alleged breach of any provision of this Agreement, or for a declaration based on a demonstrated necessity of such Party's rights or obligations under this Agreement, or for any other judicial or equitable remedy, then if the matter is settled by judicial or quasi-judicial determination, the prevailing Party shall be entitled, in addition to such other relief as may be granted, to be reimbursed by the losing Party for all costs and expenses incurred including, without limitation, all attorneys' fees and costs for services rendered to the prevailing Party and any attorneys' fees and costs incurred in enforcing any judgment or order entered. The prevailing Party shall be as determined by the court in the initial or any subsequent proceeding.

14.17 Governing Law. The validity, interpretation, and enforcement of this Agreement shall be governed by the laws of the State of Arizona.

14.18 Force Majeure. If any performance (other than the payment of money due hereunder) of this Agreement is prevented, delayed, or made impracticable due to drought, flood, fire, earthquake, or other natural disaster, strike, insufficiency of electrical power or fuel, civil rioting, terrorist attack, or war or military conflict (collectively a "Force Majeure Event"), then such performance (except for the payment of money due hereunder) of this Agreement shall be excused for the period of prevention, delay, or impracticability resulting from the Force Majeure Event.

IN WITNESS WHEREOF, the Parties have executed this Agreement as of the last date below written.

_____	ARIZONA WATER COMPANY
By: _____	By: _____
Its: _____	Its: _____
Dated: _____	Dated: _____

EXHIBIT "A"

Arizona Water Company
Arsenic Removal Facility
Montezuma Haven Well No. 3

Water Quality Specifications

Arizona Water Company Well	Treated Water Arsenic Concentration
Montezuma Haven Well No. 3	Not greater than 7 micrograms per liter

EXHIBIT "B"

Arizona Water Company
Arsenic Removal Facilities
Montezuma Haven Well No. 3

Media Change Out		
Well	**Media Volume, ft^3**	**Total Media Change Out Cost**
Montezuma Haven No. 3		

ARIZONA WATER COMPANY

3805 N. BLACK CANYON HIGHWAY, PHOENIX, ARIZONA 85015-5351 • P.O. BOX 29006, PHOENIX, AZ 85038-9006
PHONE: (602) 240-6860 • FAX: (602) 240-6874 • TOLL FREE: (800) 533-6023 • www.azwater.com

August 26, 2011

Mr. Douglas Craver
Adedge Technologies
6501 E. Greenway Parkway, #103-167
Scottsdale, AZ 85254

Re: Arsenic Removal Facilities at Broken Arrow Well No. 10, Sedona Golf Resort Well, Rimrock Well No. 2, and Montezuma Haven Wells No. 2 and 3.

Dear Mr. Craver:

Enclosed with this letter is a Request for Proposal ("RFP") for the above-referenced project. Arizona Water Company (the "Company") requests your submission of a detailed fee proposal for the following tasks, according to the enclosed RFP dated August 26, 2011:

Mandatory site visits will begin at 4115 E. Goldmine Drive, Lake Montezuma, Arizona 86335 at 8:00 a.m. on September 7, 2011.

A mandatory pre-submittal conference will be held at 3805 N. Black Canyon Highway, Phoenix, Arizona 85015 at 9:00 a.m. on September 12, 2011.

Proposals must be submitted no later than 4:00 p.m. on September 19, 2011. The original proposals, plus three (3) copies, shall be sent to the attention of Andy Haas, located at 3805 N. Black Canyon Highway, Phoenix, AZ 85015. Incomplete submittals will not be considered in the evaluation. Late submittals will not be accepted.

Proposal evaluation criteria are described in the enclosed RFP.

List of Documents enclosed with this letter:

a. Request for Proposal
b. Broken Arrow Well No. 10 Arsenic Removal Facility Proposal/Contract
c. Sedona Golf Resort Well Arsenic Removal Facility Proposal/Contract
d. Rimrock Well No. 2 Arsenic Removal Facility Proposal/Contract
e. Montezuma Haven Wells No. 2 & 3 Arsenic Removal Facility Proposal/Contract
f. Arsenic Removal Facility Technical Specifications
g. EI & C Design Guidelines and Technical Specifications

h. Arizona Water Company's General Conditions of Contract and Standard Specifications

The Company intends to select the successful Contractor directly from the submitted proposals. However, the Company reserves the right to have a formal interview process following review of the submitted proposals. It is anticipated that a notice of award for design services will be issued on or around September 23, 2011, following an evaluation of the submitted qualifications and pricing.

All questions and/or correspondence regarding this request must be submitted in writing, to Andy Haas by letter at the address noted above, by email at ahaas@azwater.com, or by fax at 602-294-2169.

Very truly yours,

Fredrick K. Schneider
Vice President - Engineering

afh
Enclosure(s)

ARIZONA WATER COMPANY

3805 N. BLACK CANYON HIGHWAY, PHOENIX, ARIZONA 85015-5351 • P.O. BOX 29006, PHOENIX, AZ 85038-9006
PHONE: (602) 240-6860 • FAX: (602) 240-6874 • TOLL FREE: (800) 533-6023 • www.azwater.com

August 26, 2011

Mr. Greg Gilles
Adedge Technologies
5152 Belle Wood Court, Suite A
Buford, GA 30518

Re: Arsenic Removal Facilities at Broken Arrow Well No. 10, Sedona Golf Resort Well, Rimrock Well No. 2, and Montezuma Haven Wells No. 2 and 3.

Dear Mr. Gilles:

Enclosed with this letter is a Request for Proposal ("RFP") for the above-referenced project. Arizona Water Company (the "Company") requests your submission of a detailed fee proposal for the following tasks, according to the enclosed RFP dated August 26, 2011:

Mandatory site visits will begin at 4115 E. Goldmine Drive, Lake Montezuma, Arizona 86335 at 8:00 a.m. on September 7, 2011.

A mandatory pre-submittal conference will be held at 3805 N. Black Canyon Highway, Phoenix, Arizona 85015 at 9:00 a.m. on September 12, 2011.

Proposals must be submitted no later than 4:00 p.m. on September 19, 2011. The original proposals, plus three (3) copies, shall be sent to the attention of Andy Haas, located at 3805 N. Black Canyon Highway, Phoenix, AZ 85015. Incomplete submittals will not be considered in the evaluation. Late submittals will not be accepted.

Proposal evaluation criteria are described in the enclosed RFP.

List of Documents enclosed with this letter:

a. Request for Proposal
b. Broken Arrow Well No. 10 Arsenic Removal Facility Proposal/Contract
c. Sedona Golf Resort Well Arsenic Removal Facility Proposal/Contract
d. Rimrock Well No. 2 Arsenic Removal Facility Proposal/Contract
e. Montezuma Haven Wells No. 2 & 3 Arsenic Removal Facility Proposal/Contract
f. Arsenic Removal Facility Technical Specifications
g. EI & C Design Guidelines and Technical Specifications

h. Arizona Water Company's General Conditions of Contract and Standard Specifications

The Company intends to select the successful Contractor directly from the submitted proposals. However, the Company reserves the right to have a formal interview process following review of the submitted proposals. It is anticipated that a notice of award for design services will be issued on or around September 23, 2011, following an evaluation of the submitted qualifications and pricing.

All questions and/or correspondence regarding this request must be submitted in writing, to Andy Haas by letter at the address noted above, by email at ahaas@azwater.com, or by fax at 602-294-2169.

Very truly yours,

Fredrick K. Schneider
Vice President - Engineering

afh
Enclosure(s)

ARIZONA WATER COMPANY

3805 N. BLACK CANYON HIGHWAY, PHOENIX, ARIZONA 85015-5351 • P.O. BOX 29006, PHOENIX, AZ 85038-9006
PHONE: (602) 240-6860 • FAX: (602) 240-6874 • TOLL FREE: (800) 533-6023 • www.azwater.com

August 26, 2011

Mr. Scott Colbath
Achen-Gardner Engineering, LLC
550 S. 79th Street
Chandler, AZ 85226

Re: Arsenic Removal Facilities at Broken Arrow Well No. 10, Sedona Golf Resort Well, Rimrock Well No. 2, and Montezuma Haven Wells No. 2 and 3.

Dear Mr. Colbath:

Enclosed with this letter is a Request for Proposal ("RFP") for the above-referenced project. Arizona Water Company (the "Company") requests your submission of a detailed fee proposal for the following tasks, according to the enclosed RFP dated August 26, 2011:

Mandatory site visits will begin at 4115 E. Goldmine Drive, Lake Montezuma, Arizona 86335 at 8:00 a.m. on September 7, 2011.

A mandatory pre-submittal conference will be held at 3805 N. Black Canyon Highway, Phoenix, Arizona 85015 at 9:00 a.m. on September 12, 2011.

Proposals must be submitted no later than 4:00 p.m. on September 19, 2011. The original proposals, plus three (3) copies, shall be sent to the attention of Andy Haas, located at 3805 N. Black Canyon Highway, Phoenix, AZ 85015. Incomplete submittals will not be considered in the evaluation. Late submittals will not be accepted.

Proposal evaluation criteria are described in the enclosed RFP.

List of Documents enclosed with this letter:

a. Request for Proposal
b. Broken Arrow Well No. 10 Arsenic Removal Facility Proposal/Contract
c. Sedona Golf Resort Well Arsenic Removal Facility Proposal/Contract
d. Rimrock Well No. 2 Arsenic Removal Facility Proposal/Contract
e. Montezuma Haven Wells No. 2 & 3 Arsenic Removal Facility Proposal/Contract
f. Arsenic Removal Facility Technical Specifications
g. EI & C Design Guidelines and Technical Specifications

h. Arizona Water Company's General Conditions of Contract and Standard Specifications

The Company intends to select the successful Contractor directly from the submitted proposals. However, the Company reserves the right to have a formal interview process following review of the submitted proposals. It is anticipated that a notice of award for design services will be issued on or around September 23, 2011, following an evaluation of the submitted qualifications and pricing.

All questions and/or correspondence regarding this request must be submitted in writing, to Andy Haas by letter at the address noted above, by email at ahaas@azwater.com, or by fax at 602-294-2169.

Very truly yours,

Fredrick K. Schneider
Vice President - Engineering

afh
Enclosure(s)

ARIZONA WATER COMPANY

Arsenic Removal Facilities – Request for Proposal

1. PROJECT DESCRIPTION

Through the issuance of this request for proposal ("RFP"), Arizona Water Company (the "Company") is soliciting competitive, sealed bids from Contractors to design, construct, and obtain all permits and governmental approvals for facilities to remove arsenic ("Removal Facilities") from the Company's Broken Arrow Well No. 10, Sedona Golf Resort Well, Rimrock Well No. 2, and Montezuma Haven Wells No. 2 and 3 (all five wells collectively referred to as "Wells") in Sedona and Rimrock, Arizona.

The Contractor, its engineer and subcontractors (collectively referred to as "Contractor") are responsible for the overall design/build project, including construction and all design disciplines necessary to deliver the Removal Facilities on "turn key" to the Company. The Contractor will be responsible for the design, construction, permitting, programming, commissioning, record drawings, and O&M manual for the four Removal Facilities included in this RFP. Design submittals must include 30 percent (drawings and engineering design report), 90 percent, and 100 percent submittals.

This RFP presumes an adsorption treatment process using a ferric-based media to remove arsenic from the raw water produced by the Company's Wells. Approved adsorptive medias can be found in Attachment "A" of the Arsenic Removal Facilities Technical Specifications.

2. GENERAL TERMS

A. Proposals must be delivered to the Company's Phoenix office (address provided below) before 4:00 p.m., Mountain Standard Time, on September 16, 2011. Late proposals will not be accepted.

Arizona Water Company
Attention: Andy Haas
3805 N. Black Canyon Hwy.
Phoenix, Arizona 85015

Site visits are scheduled for Wednesday, September 7, 2011, beginning promptly at 8:00 a.m., Mountain Standard Time, at the Montezuma Haven site located at:

4115 East Goldmine Drive
Lake Montezuma, Arizona 86335

The remaining three sites will be visited following this site. Limited parking space is available at all sites due to location in residential neighborhoods. Contractor is encouraged to carpool and minimize the number of vehicles present for site visits to

minimize any negative impact on the neighboring communities. **Site visits are mandatory.**

There will be a pre-submittal conference on Monday, September 12, 2011, at 9:00 a.m., Mountain Standard Time, at the Company's Phoenix Office (address above), at which time Company staff will be available to answer questions. **The pre-submittal conference is mandatory.**

The following schedule has been prepared for these projects. Contractors interested in bidding on this project must be available on the interview meeting dates. Completion dates below are defined as the date the Company accepts the Removal Facility in accordance with Section 2.E.

Site Visits:	September 7, 2011
Pre-Submittal Conference:	September 12, 2011
Proposals Due:	September 19, 2011
Contracts Awarded:	September 23, 2011
Rimrock Well No. 2 Completion:	December 30, 2011
Sedona Golf Resort Well Completion:	March 2, 2012
Broken Arrow Well No. 10 Completion:	March 16, 2012
Montezuma Haven Wells No. 2 and 3 Completion:	March 30, 2012

The Contractor must complete, to the Company's satisfaction, the Company's Proposal/Contract for the Removal Facility for each of the Wells included in their proposal for their bid to be considered.

With this proposal:

a) The successful bidder may be awarded one or more of the four Removal Facilities.

b) The Contractor shall submit with its proposal, pricing deducts for each of the following scenarios: the Contractor is the successful bidder for two, three, or four of the Removal Facilities.

c) The Contractor shall submit with its proposal a Bid Bond for each Removal Facility proposal.

Questions regarding this RFP must be submitted in writing by mail, fax, or email to Andy Haas at the Company.

Arizona Water Company
Attention: Andy Haas
3805 N. Black Canyon Hwy.
Phoenix, Arizona 85015
Fax: (602) 294-2169

E-mail: ahaas@azwater.com

Company requires a minimum of 48 hours to respond to questions in writing. Only written questions will be answered. Within 48 hours following the site visits, answers to all written questions received will be faxed or emailed to each contractor who is provided a RFP package. Oral statements or instructions made by the Company shall not constitute an amendment or addendum to this RFP. All amendments or addendums will be provided by the Company to each Contractor in writing.

B. Selection Criteria

Selection of the successful bidder will be based upon a combination of the following criteria weighted as determined by the Company:

1. Relevant Experience and Qualification of the Contractor.

a) The Contractor shall provide with its proposal submittal the following information to the Company, along with other pertinent information the Contractor may deem necessary, to demonstrate its qualifications in the design, permitting, and construction of the Removal Facilities as described in this RFP:

i. Name and address of Contractor.

ii. Number of years Contractor has been in business.

iii. Number of Removal Facilities Contractor has designed, permitted, constructed, and made operational for the removal of arsenic.

iv. Information concerning the Contractor's financial capacity and stability to assure the full and timely performance of the Contractor's proposal for the Removal Facilities.

v. Name and address of Engineer.

vi. Number of years Engineer's key personnel have been registered engineers.

vii. Number and description of Removal Facilities the Engineer has designed.

viii. List a minimum of three (3) similar projects that have been successfully completed by the Contractor. This list must include at a minimum:

1. The dates of work.

2. The type of work performed, including the capacity of water treated and the arsenic level of the influent and effluent.

3. The name and telephone number of a contact person or owner of the Removal Facility.

2. Provide a copy of the Contractor's Health and Safety Program

a) Organizational chart including key personnel from the Contractor and Engineer.

b) List of Arizona professional and contractor licenses held by the Contractor, Engineer, and key personnel who will be assigned to this project.

3. Key Personnel Qualifications.

a) Position descriptions and resumes of key personnel who will be assigned to this project.

b) Type and amount of work to be self-performed.

c) Proposed subcontractors.

4. Performance Record/Reputation.

a) The past relationship of the Contractor with the Company.

b) Willingness to abide by Company forms and agreements with no objections or changes.

c) Litigation and claims history relating to performance, completion, and progress for all similar projects.

5. Contractor's Understanding of, and Approach to project.

a) Contractor's understanding of the project.

b) Approach to dealing with potential problems.

6. Contractor's ability to Manage Project.

a) Quality control, dispute resolution, and safety management.

b) Subcontractor selection plan.

c) Planning, scheduling, estimating, and construction management tools.

7. Current/Recent Workload.

List of all current projects in the State of Arizona awarded to the Contractor and Engineer. For each project provide the project description, Contractor's role in the project, Engineer's role in the project, award date (note if pending), construction cost, status of completion, and estimated completion date.

8. Contractor's Ability to Meet Project Schedule Deadlines.

9. Overall Project Cost and the Contractor's Ability to Complete the Project on Budget.)

Note: The Company at its sole discretion reserves the right to reject or accept any bid proposal.

C. General Conditions of Contract

The Company's General Conditions of Contract: E-4-1, Construction Specifications: E-8-1, and Standard Specification Drawings: E-9-1 shall control over all other documents in the event of a conflict in requirements.

The successful Contractor must secure a 100 percent Performance Bond and a Material Payment Bond equal in value to the contract price.

D. Payment Schedule

1. In no event shall any invoice exceed the value of work completed or performed minus 10% retention. All invoices shall be submitted to the Company using AIA forms G702 and G703.

2. Rimrock Well No. 2: All design, permitting, and construction of the Rimrock Well No. 2 Removal Facility must be completed in 2011. The Contractor may submit invoices monthly beginning in October 2011 for the value of work completed or performed to date minus 10 percent retention. The Contractor shall submit an invoice for final retention payment in January 2012 after the Company accepts the Removal Facility in accordance with Section 2.E.

3. Sedona Golf Resort Well, Broken Arrow Well No. 10, and Montezuma Haven Wells No. 2 and 3.

The Contractor shall submit one (1) invoice in December 2011, which may include fees for design, permitting, and construction materials delivered to the project site. Invoice amount shall not exceed $50,000 and be coordinated with the Company prior to submittal.

The Contractor may submit invoices monthly beginning in January 2012 for the value of work completed or performed to date minus 10% retention.

The Contractor shall submit an invoice for final retention payment after the Company accepts each Removal Facility in accordance with Section 2.E.

E. Acceptance of Removal Facility

1. The Company shall accept each Removal Facility after the latest of the following:

a) Receipt of Approval of Construction from the Arizona Department of Environmental Quality.

b) Receipt of Certificate of Occupancy from Yavapai County and/or the City of Sedona.

c) The Company's written confirmation that the Removal Facility meets the Treatment Performance Requirements of Section 3.Bof the Arsenic Removal Facilities Technical Specifications, attached hereto, and incorporated herein.

ARIZONA WATER COMPANY

VERDE VALLEY
65 Coffee Pot Drive, Suite 7
Sedona, Az 86336 PH: 928-282-7092

PROPOSAL/CONTRACT

CONTRACTOR:	SYSTEM: VERDE VALLEY
ADDRESS:	W.A. No(s):
CITY ST ZIP:	BID DUE DATE: September 19, 2011

CONTRACTOR SUBMITS this PROPOSAL/CONTRACT to ARIZONA WATER COMPANY, an Arizona corporation (the "Company"), to perform the work and complete the project described on Page 2 (the "Project"), as an independent prime contractor.

1. Contractor certifies that it has a complete copy of, and has read, understands and accepts, the Company's General Conditions of Contract, and the Company's Construction Specifications and Standard Specification Drawings, (the "Specifications"), all of which are attached hereto. Contractor has examined the specific plans and related construction drawings for the Project (the "Drawings"), copies of which are also attached hereto. The General Conditions of Contract, Specifications and Drawings are incorporated into this Proposal/Contract. Contractor affirms that all work and materials to be furnished or purchased for the Project will be in strict conformance with the General Conditions of Contract, Specifications and Drawings.
2. Contractor represents and warrants that it has satisfied and complied with the provisions of Section 6, Contractor Understands Work and Working Conditions, of the General Conditions of Contract prior to submitting this Proposal/Contract.
3. Contractor represents that this Proposal/Contract is fair and honest in all respects, is submitted in good faith and is not submitted in collusion with any other company, entity or person.
4. Contractor acknowledges that one hundred percent (100%) Performance and Payment Bonds are required and must be provided to the Company prior to the commencement of work.
5. Prior to the commencement of work, Contractor will submit to the Company a list of all materials to be used in the Project. The materials list will include the manufacturer, part number, price and quantity included in this Proposal/Contract.
6. Contractor will furnish all labor, tools, equipment and materials required to complete the Project according to the General Conditions of Contract, Specifications and Drawings. No materials purchased by Contractor to be incorporated into the Project are subject to tax at the time of purchase and Contractor will not charge the Company for any such tax. Contractor will pay the applicable transaction privilege tax (the "Contracting Tax") on the Project after Contractor receives payment of the final Project invoice from the Company. The cost of materials incorporated into the Project which are exempt by Arizona Revised State Statues ("A.R.S.") from the Contracting Tax, for example, pipes or valves having a diameter of four (4) inches or larger, including equipment, fittings and any other related part that is used in operating the pipes or valves (A.R.S. §42-5061 B.6.), will not be included in the total cost of the labor and materials upon which the Contracting Tax is computed. Contractor retains full liability and obligation to pay the Contracting Tax and will defend and indemnify the Company against any demand or obligation to pay the Contracting Tax.
7. Contractor will maintain detailed accounting records of all materials purchased and incorporated into the Project. Such records will include all supporting original vendor invoices for all materials purchased. Following completion of the Project, Contractor will submit an itemized accounting to the Company which will include all supporting original vendor invoices and satisfactory evidence of payment thereof. The Company will not pay Contractor for materials not actually incorporated into the Project, and the disposition of such materials will remain Contractor's responsibility.
8. The Estimated Total Cost of the Project, shown on Page 2, is based on estimated labor and material quantities to be furnished. It includes an estimate of the Contracting Tax and the cost of the required Performance and Payment Bonds. Contractor will not cancel, modify or withdraw this Proposal/Contract during a ninety-day (90) period commencing on the Bid Due Date. The Company may accept this Proposal/Contract by signing and mailing, or otherwise delivering, a copy hereof to Contractor during such ninety-day (90) period. If the Company does not accept this Proposal/Contract during such ninety-day (90) period, Contractor may cancel this Proposal/Contract by giving written notice of cancellation to the Company.
9. Prior to the commencement of work, Contractor will provide the Company with a detailed construction schedule, in either Gantt or CPM form, identifying all tasks to be performed from the date of the written Commencement Notice through completion of the Project, including testing, training of Company Personnel and final Project invoicing. Contractor will provide the Company with a copy of such construction schedule documenting the progress of work on the Project at least monthly.
10. Contractor will not commence work on the Project until the Company gives Contractor a written Commencement Notice. Contractor will complete the Project within _____ calendar days after the Commencement Notice is issued.
11. Following the Company's written notice of satisfactory completion of the Project, and upon receipt of the final Project invoice from Contractor, the Company shall pay Contractor the actual total cost of the Project, which will be calculated as shown on Page 2, except that actual labor and material quantities installed/constructed will be substituted for the estimated labor and materials quantities and the Contracting Tax will be recalculated based on such actual labor and materials quantities.
12. The amount of applicable liquidated damages for Contractor's failure to deliver or perform within the time limit shown in Paragraph 10 may be deducted from the Company's payment of the final Project invoice. This provision shall not limit the Company's ability to terminate this Proposal/Contract for Contractor's unsatisfactory performance or failure to perform as provided in the General Conditions of Contract, Specifications or Drawings, or in this Proposal/Contract.

SPECIAL CONDITIONS:

CONSTRUCT ARSENIC REMOVAL FACILITY IN ACCORDANCE WITH SCOPE OF WORK AND REQUIREMENTS AS DEFINED IN REQUEST FOR PROPOSAL DATED, AUGUST 26, 2011 AND ARSENIC REMOVAL FACILITY TECHNICAL SPECIFICATIONS DATED, AUGUST 26, 2011

CONTRACTOR	PROPOSAL/CONTRACT ACCEPTED: *ARIZONA WATER COMPANY*
By:	By:
Print Name:	Print Name: Fredrick K. Schneider, PE
Title:	Title: Vice President - Engineering
Date:	Date:

ARIZONA WATER COMPANY

VERDE VALLEY
65 Coffee Pot Drive, Suite 7
Sedona, Az 86336 PH: 928-282-7092

PROPOSAL/CONTRACT

CONTRACTOR:	SYSTEM: VERDE VALLEY
AZ CONTRACTOR LICENSE NO: CLASSIFICATION:	W.A. No(s):
ADDRESS.	BID DUE DATE: September 19, 2011
CITY ST ZIP	BID BOND REQUIRED ☑ Yes ☐ No

DESCRIPTION OF PROJECT: DESIGN, PERMIT, CONSTRUCT AND MAKE OPERATIONAL AN ARSENIC REMOVAL FACILITY AT BROKEN ARROW WELL NO. 10.

1-2. MATERIALS EXEMPT FROM CONTRACTING TAX (per Paragraph 6)	QUANTITY	UNIT PRICE LABOR	UNIT PRICE MATERIALS	TOTAL COST LABOR	TOTAL COST MATERIALS
Engineering Design and Permitting					
Provide and Install On-Site Piping					
Provide and Install Arsenic Removal Facility					
Provide and Install Backwash Recovery System					
Provide and Install On-Site Electrical					
Testing, Commissioning, and On-Site Operator Training					
				1	2
3. Total Labor to Install Exempt Materials (add the amounts in column 1)				3	
4. Total Exempt Materials (add the amounts in column 2)					4

5-6. NON-EXEMPT MATERIALS	QUANTITY	LABOR	MATERIALS	LABOR	MATERIALS
				5	6
7. Total Labor to Install Non-Exempt Materials (add the amounts in column 5)				7	
8. Total Non-Exempt Materials (add the amounts in column 6)					8
9. Subtotal A (add lines 3, 7 and 8)					9
10. Contracting Tax Base (multiply the amount on line 9 by 0.65)				10	
11. Applicable Contracting Tax Rate				11	
12. Contracting Tax (multiply the amount on line 10 by line 11)					12
13. Subtotal B (add lines 4, 9 and 12)					13
14. 100% Performance and Payment Bonds Cost					14
15. Estimated Total Cost (add lines 13 and 14)					15

NOTE: The Estimated Total Cost includes all labor and materials for backfill, pavement replacement, chip seal, and traffic control necessary for the Project.

ARIZONA WATER COMPANY

Arsenic Removal Facilities – Technical Specifications

1. SCOPE OF WORK

A. Design: The Contractor shall design, or arrange for the design of the arsenic removal facility ("Removal Facility") by a professional engineer registered in the State of Arizona with documented experience in designing Removal Facilities. The Contractor shall be responsible for civil, mechanical, electrical, and all other components of the project. The Contractor will be responsible for all permits and governmental approvals for the Removal Facility including, but not limited to Approval to Construct ("ATC") and Approval of Construction ("AOC") from the Arizona Department of Environmental Quality ("ADEQ"); building permit, special use permit, conditional use permit, and Certificate of Occupancy from Yavapai County and/or the City of Sedona. The Removal Facility shall be designed to provide treatment of water to meet the Treatment Performance Requirements of Section 3.B.

B. Equipment Supply: The Contractor shall supply a complete Removal Facility including, but not limited to, vessels, media, piping, valves, meters, controls, related appurtenances, start-up/commissioning, and O&M Manual. All external components of the Removal Facility must be painted in accordance with regulatory agency requirements and must be approved by the Company in writing.

C. Media: Only the approved adsorptive medias in Attachment "A" shall be used in the design, permitting, construction, and operation of the Removal Facility.

D. Construction: The Contractor will provide all civil, mechanical, electrical and all other contractors necessary to provide a completely installed and operational Removal Facility.

E. Operation: Company Staff will operate the Removal Facility upon completion of construction and after acceptance by the Company. Training for the Company staff and Removal Facility start-up/commissioning will be the responsibility of the Contractor.

F. It is the intent of these Technical Specifications to provide general descriptions and establish minimum requirements for the major components and appurtenances of the Removal Facility. It is the Contractor's responsibility to provide a complete, fully functional, and reliable Removal Facility which will meet the Treatment Performance Requirements set forth herein. A complete Removal Facility, including installation of all necessary components, equipment, and appurtenances shall be provided by the Contractor.

G. All materials in contact with potable water shall conform to National Sanitation Foundation Standards 60 and 61.

2. SUBMITTALS

A. Engineering Design Drawings, design report, and Shop Drawings: The Contractor shall submit for approval complete detailed engineering design, shop drawings, and descriptions of the proposed equipment including:

1. Engineering design report for Removal Facility for submittal to regulatory agencies.

2. Arrangement drawings and specification of all items and equipment showing all dimensions, weights, parts, construction details, and materials required to demonstrate compliance with these specifications.

3. Scaled piped drawings in both plan and section. The drawings shall show size of all piping, valves, and appurtenances.

4. List of chemicals being utilized and the quantity, concentration, and storage requirements for each.

5. Electrical and instrumentation wiring diagrams and loads.

6. Performance specifications of all items of equipment specified.

7. Complete instrumentation and control schematics, wiring diagrams, and terminal strip information. All panels to be provided by the Contractor shall be factory pre-wired.

8. Process flow schematic of the proposed facility. The maximum pressure drop through the Removal Facility throughout the full life-cycle of media shall also be specified.

9. Detailed design criteria including chemical dosages, hydraulic loading rates, empty bed contact times, backwashing rates and frequencies, pressure drops, type of media, adsorptive media performance guarantee, media volumes, backwash volumes, and other related process information. Calculations verifying the design of the Removal Facilities shall be provided to demonstrate that facility will comply with the Treatment Performance Requirements set forth in Section 3.B.

10. Instrumentation and control description detailing the Removal Facility start-up, shutdown, backwash, operation, control, and monitoring.

11. A list of any and all parameters, ratings, or other characteristics where the proposed Removal Facility equipment deviates from the requirements set forth in these Specifications. Any and all such deviations must be approved in writing by the Company.

12. Site plan and piping drawings including ancillary facilities.

13. List of recommended spare parts for an operating period of 3 years. The list shall describe each part, the quantity recommended, and the unit price of the part. Company may purchase all, some, or none of the recommended spare parts at the Company's option.

14. Field Acceptance Test Report: The Contractor shall submit for approval the results of all field tests conducted on the installed Removal Facility within two weeks of completion of each test required by these Specifications.

15. Operation and Maintenance Manual: Operation and maintenance manuals shall be submitted for Company's written approval and acceptance prior to start-up.

3. SERVICE CONDITIONS

A. General

The Contractor shall be responsible for designing, or arranging for the design of the Removal Facility, including any pretreatment facilities, to meet the Treatment Performance Requirements described in Section 3.B.

B. Treatment Performance Requirements

The Removal Facility shall reduce the effluent arsenic level to less than or equal to seven (7) micrograms per liter throughout the full life-cycle of all media. The Removal Facility shall maintain or improve the quality of the treated water as it relates to other chemical constituents. All changes to treated water quality and their respective impact on the water distribution system shall be submitted in writing, by the Contractor, for Company approval during design. Corrosivity impacts on the distribution system, if any, shall be fully mitigated by the design of the Removal Facility.

C. Hydraulic Design Criteria

Design flow capacities, system pressures, and other hydraulic information are provided in Attachment "B"

D. Water Quality Data

Pertinent water quality data for each of the Wells is provided in Attachment "C"

E. Existing Site Plans

Existing site plans are provided in Attachment "D"

F. Special Site Conditions

1. Rimrock Well No. 2

Rimrock Well No. 2 currently utilizes an above ground Lakos sand separator for particulate reduction. Upon startup, the well pumps directly into the water distribution system. Rimrock Well No. 2 is called to run by off-site tank level controls. This feature shall be retained and included in the considerations for design, permitting, and construction of the Removal Facility. Contractor will relocate liquid sodium hypochlorite injection point upstream of the Removal Facility utilizing the existing chemical pump and tank. Existing arsenic treatment plant to be removed by others prior to start of Removal Facility construction.

2. Montezuma Haven Wells No. 2 and 3

The Montezuma Haven Removal Facility will combine flows from Montezuma Haven Well No. 2 and Montezuma Haven Well No. 3; both wells are located on the Montezuma Haven well site. The Removal Facility must be designed for two operating conditions: flow from Montezuma Haven Wells No. 2 and 3, or flow from Montezuma Haven Well No. 3 only. Upon startup, Montezuma Haven Well No. 3 pumps to waste for approximately 3 minutes and is transitioned into the water distribution system by closing an automatic control valve on the pump to waste line. Upon shutdown, Montezuma Haven Well No. 3 transitions out of the water distribution system by opening the automatic control valve on the pump to waste line. Montezuma Haven Well No. 3 is transitioned into and out of the system for surge mitigation. This feature shall be retained and included in the considerations for design, permitting, and construction of the Removal Facility. Montezuma Haven Well No. 2, does not pump to waste on startup or shutdown. The wells are called to run by off-site tank level controls. This feature shall be retained and included in the considerations for design, permitting, and construction of the Removal Facility. Contractor will relocate liquid sodium hypochlorite injection point upstream of the Removal Facility utilizing the existing chemical pump and tank. Existing arsenic treatment plant for Montezuma Haven Well No. 3 to be removed by others prior to start of Removal Facility construction. Existing arsenic treatment plant for Montezuma Haven No. 2, to be removed by others after the construction of the Removal Facility is complete.

3. Sedona Golf Resort Well

Upon startup, the Sedona Golf Resort Well pumps to waste for approximately 3 minutes and is transitioned into the water distribution system by closing an automatic control valve on the pump to waste line. Upon shutdown, the well transitions out of the water distribution system by opening the automatic control valve on the pump to waste line. The well is transitioned into and out of the system for surge mitigation. This feature shall be retained and included in the considerations for design, permitting, and construction of the Removal Facility. The well is called to run by off-site tank level controls. This feature shall be retained and included in the considerations for

design, permitting, and construction of the Removal Facility. Contractor will relocate liquid sodium hypochlorite injection point upstream of the Removal Facility utilizing the existing chemical pump and tank. Existing arsenic treatment plant to be removed by others prior to start of Removal Facility construction.

4. Broken Arrow Well No. 10

The Well is operated manually by an on-off control switch and runs for prolonged periods of time between on-off cycles. An existing on-site online turbidity analyzer monitors the turbidity of the raw water produced by the well. Existing controls are in place to pump the well to waste when the raw water turbidity exceeds a pre-set limit. The well continues to pump to waste until turbidity drops below the pre-set limit. Pre-filtration is required prior to the Removal Facility. The existing arsenic treatment plant utilizes bag filters for pre-filtration. A previous particle size distribution analysis was performed on materials retained in a filter bag prior to the existing arsenic treatment plant and can be found in Attachment **E**. A copy of this analysis is being provided for illustration purposes to show the general need for pre-filtration and shall not be solely used for final design. Contractor shall be responsible for design, permitting, and construction of the pre-filtration equipment. Contractor will relocate liquid sodium hypochlorite injection point upstream of the Removal Facility utilizing the existing chemical pump and tank. Existing arsenic treatment plant to be removed by others prior to start of Removal Facility construction.

4. GENERAL FACILITY COMPONENT REQUIREMENTS

A. Description

1. The Removal Facility described herein shall be designed to remove arsenic from groundwater, accommodating all water quality parameters provided in Attachment "C". Any analysis of water quality parameters that may affect performance of the removal facility, life-cycle of any media, or waste produced are the responsibility of the Contractor or its Engineer. Effluent from the Removal Facility will flow directly into the water distribution system.

2. The Removal Facility shall consist of treatment vessels containing one of the approved adsorptive medias in Attachment "A" for removal of arsenic to the concentrations specified in the Treatment Performance Requirements. The Contractor shall provide all necessary controls, piping, and all other appurtenances which may be required.

3. Flow through the Removal Facility will range from constant flow over a 24-hour period to an intermittent operation starting and stopping several times per day.

4. The Removal Facility shall be designed so that the media may be backwashed in place without removal. Backwashing shall be a manual operation. All

backwash water shall be captured in an on-site backwash tank. Sufficient time shall be permitted for any fines in the backwash water to adequately settle. A backwash re-injection pump shall transfer water from the backwash tank and blend with the raw well water on the influent side of the Removal Facility for treatment. The backwash water re-injection rate shall not exceed 10 percent flow rate. Level controls in the backwash tank shall control the operation of the backwash re-injection pump. Backwash re-injection pump shall only operate when the well is operating and water is being treated.

5. If included in the design of the Removal Facility treatment process, pH adjustment shall be provided upstream and/or downstream of the Removal Facility only as required to meet the Treatment Performance Requirements and to readjust the effluent water quality to match historical pH levels. In the event the pH adjustment is required, it is assumed that a chemical feed skid (for acid or base feed) will be provided for each type of pH adjustment in separate feed skids. Each such chemical feed skid shall consist of packaged chemical feed pumps located on a separate containment skid. The containment skid shall have a footprint and containment volume sized to accommodate the packaged feed pumps and appurtenances. The type of chemical utilized shall be determined by the Contractor and approved in writing by the Company. All chemicals used must be NSF approved for drinking water.

B. Scope of Services

The Contractor shall provide all items required or recommended for a complete and operational Removal Facility that will meet the Treatment Performance Requirements including, but not limited to, all piping, conduit, tubing, wiring, supports, and all other appurtenances.

5. FILTER SIZING DESIGN

A. Series Flow

The Removal Facilities at Rimrock Well No. 2, Montezuma Haven well site, and Sedona Golf Resort Well shall treat water produced from the Wells in series flow, satisfying the Media Flux Rate and Empty Bed Contact Time requirements described in Sections 5.C and 5.D, respectively.

B. Parallel Flow with Bypass

The Removal Facility at Broken Arrow Well No. 10 shall treat water produced from the well in parallel flow with bypass flow satisfying the Media Flux Rate and Empty Bed Contact Time requirements described in Sections 5.C and 5.D, respectively. The Removal Facility shall be designed to transfer, from partially treated flow to fully treated flow as the adsorptive media becomes exhausted.

C. Media Flux Rate

1. The design flux rate of water across the media beds shall be approximately 6 gpm/per square foot during normal service conditions based on the well design flow rates found in Attachment "B".

2. The size and number of filter vessels and controls shall be designed to conform to the minimum flux rate recommended by the manufacturers of the approved adsorptive medias in Attachment "A" during all operating conditions, but shall not exceed the maximum design flux rate in Section 5.C.1.

3. The size and number of filter vessels and controls shall be designed so as to not exceed the maximum flux rate recommended by the manufacturers of the approved adsorptive medias in Attachment "A" during any operating condition, including during backwash water re-injection as described in Section 4.A.4. The flux rate shall not exceed the design flux rate in Section 5.C.1.

D. Empty Bed Contact Time

1. The design Empty Bed Contact Time ("EBCT") shall be a minimum of 3.5 minutes per vessel or 7 minutes total for the Removal Facilities treating in series flow listed in Section 3.F.1, 3.F.2, and 3.F.3.

2. The design EBCT shall be a minimum of 3.5 minutes per vessel for the Removal Facilities treating in parallel flow with bypass listed in Section 3.F.4.

3. The size and number of filter vessels shall be designed to conform to the minimum design EBCT requirements described in Sections 5.D.1 and 5.D.2 during all operating conditions, including during backwash water reinjection as described in Section 4.A.4, unless the media or equipment manufacturers recommend more stringent requirements.

6. TREATMENT FACILITY COMPONENTS

A. Filter Vessels

1. Carbon steel ASME and National Code stamped pressure vessels.

2. Filter vessels shall be lined with Tnemec or other NSF approved epoxy coating meeting the Company's Coating Specifications: O-12-2 (Attachment "F") and approved in writing by the Company.

3. Capable of, and designed to, operate at the respective design pressures listed in Attachment "B".

4. Manual backwashing features using manual butterfly valves for all cycles/functions of service, backwash, and rinse.

5. Stainless steel hydraulic panel with inlet, outlet gauges, system pressure differential gauge/switch combination.

6. Sample ports for operator monitoring of raw water, treated water from each vessel and blended water sample location.

7. Media sample port for obtaining media sample for testing.

8. Magnetic flow/totalizer meters on each vessel for measuring individual instantaneous gallons per minute and total gallons through the system in service and in backwash cycles.

9. All piping and fittings including laterals internal to the filter vessels shall be Type 304 or higher grade stainless steel.

10. Internal laterals shall be sized appropriately to distribute flow uniformly across the cross sectional area of the filter vessels during treatment and backwashing. Internal laterals must be approved, in writing, by the adsorptive media manufacturer, filter vessel manufacturer, and the Company.

11. Internal laterals shall be sized appropriately for proper operation with all of the approved adsorptive medias in Attachment "A".

12. The adsorptive media manufacturer must state, in writing, if a gravel underbed is required. Gravel underbed design must be approved, in writing, by the adsorptive media manufacturer, filter vessel manufacturer, and the Company.

13. Access manway on the side and inspection hatch on the top.

14. Filter vessels must be permanently attached to an engineered concrete slab or to the floor of a building enclosure, which shall be attached to an engineered concrete slab.

B. External Piping

1. External connections shall consist of flanged pipe connections or flanged coupling adaptors (raw water inlet, finished water outlet, backwash feed inlet, and backwash waste outlet).

a) Manufacturers:

i. Dresser, Inc. Style 128-w.
ii. Romac Industries, Inc. Style FCA501 or Style FC400.
iii. Smith-Blair, Inc. Series 913.

2. All external piping 3 inch and larger shall be ductile iron pipe ("DIP") and must conform to the Company's Construction Specifications: E-8-1 and Standard Specification Drawings: E-9-1.

3. All external piping smaller than 3 inch shall be seamless copper conforming to ASTM B88.

a) Buried potable water lines shall be Type K, soft or hard temper.

b) Exposed potable water lines shall be Type L, hard drawn.

c) All fittings shall be compression type per the Company's Construction Specification: E-8-1 and Standard Specification Drawings: E-9-1..

d) All pipe, fittings, and appurtenances shall conform to the Company's Construction Specifications: E-8-1 and Standard Specification Drawings: E-9-1, unless otherwise specified. Contractor shall inform Company in writing of any conflict in specifications, and Company shall determine the prevailing specification.

4. Stainless Steel Pipe

Above ground pipe on pipe and valve tree adjacent to the filter vessels may be Type 304L stainless steel in accordance with ASTM A 240 or higher grade.

a) Fittings

i. Material shall be in accordance with ASTM A 240 stainless steel, grade to match the pipe,
ii. Fittings shall be manufactured in accordance with ASTM A 774 for piping 3-inches in nominal diameter and greater, and in accordance with ASTM A 403, Class WP for piping less than 3-inches in diameter.
iii. Wall thickness shall be in accordance with ASME B36.19 and ASME B16.11.

b) Joints

i. Joints at valves and pipe appurtenances shall be flanges.
ii. All other joints shall be flanges or welded. Piping less than 4-inches in diameter shall have single butt-welded joints. Piping 4-inches through 12-inches in diameter shall have double butt-welded joints.

5. All external above ground pipe and fittings shall be painted with Tnemec or approved equal. The approved color will be determined by the County, City and/or the Company.

C. Valves and Appurtenances

1. Manual Butterfly Valves

a) Manually actuated butterfly valves with handwheels shall be installed aboveground on the pipe and valve tree for the control of flows for backwash, rinse, and normal treatment operations.

b) Manufacturers:

i. Mueller.
ii. Dezurik.
iii. Or equal approved in writing by the Company.

D. Flow Meters

1. One per filter vessel

2. General

a) Type: Magnetic flowmeter conforming to NSF 61

b) Materials:

i. Main Body: PVC sensor body or stainless steel
ii. Electronics Housing: Powder coated aluminum
iv. Electrodes: Hastelloy electrodes

3. Flow rate display indication in gpm and totalized flow in gallons

4. Accuracy: +/-0.5% of flow rate or better

5. End Connection: Flanged

6. Manufacturer:

a) Endress + Hauser – Promag 53W.
b) Krohne – Optiflux 4000 with IFC 300 transmitter.
c) Or equal approved, in writing, by the Company.

E. Valves, meters, and appurtenances shall be provided, as shown on the drawings, and as required to complete the work. Valves and appurtenances shall be in accordance with the Company's Construction Specifications: E-8-1 and Standard Specification Drawings: E-9-1, unless otherwise specified.

F. High Density Polyethylene (HDPE) Backwash Tank

1. General

a) Tanks shall be rotationally molded, one-piece seamless construction, cylindrical in cross-section and vertical in axis.

b) Tanks shall fully conform to ASTM D 1998-04.

c) All tank fitting attachments shall be provided with flexible couplings or other provisions to allow for movement without rupture or separation of connections. Flexible couplings shall allow minimum 4 percent deflection in all directions.

d) Tanks shall be clearly marked with manufacturer, date of manufacture, and serial number.

e) All opening cut edges shall be trimmed smooth.

f) Uncoated or exposed carbon steel appurtenances, fasteners, or anchorage will not be accepted.

g) Provide anchor bolts sized by the manufacturer. Installed on engineered concrete slab or other anchoring point approved by the Company.

2. Design Loads

a) Resistance of both wind and seismic loads shall be provided for both tank full and tank empty conditions.

b) Contractor shall be fully responsible for design and provision of adequate anchorage system for the service conditions.

c) Design must be approved in writing by the tank manufacturer.

d) Anchorage systems requiring tank penetrations are not acceptable.

e) All anchorage systems shall be galvanized carbon steel unless otherwise specified.

3. Materials

a) Tanks shall be virgin polyethylene resin as compounded and certified by the manufacturer.

b) Resin shall contain a minimum of a UV 8 stabilizer as compounded by the resin manufacturer.

4. Minimum required wall thickness for the cylinder must be sufficient to support its own weight in an upright position without any external support.

5. The top head must be integrally molded with the cylinder straight shell.

6. The bottom head must be integrally molded with the cylinder straight shell.

7. Fittings

a) Threaded bulkhead fittings shall not be allowed for connections greater than 2 inches in diameter.

b) Bolted double 150 lb. flange fittings shall be constructed with two (2) 150 lb. flanges and two (2) 150 lb. flange gaskets, and the correct number and size of all-thread bolts for the flange specified by the flange manufacturer.

8. Flush bottom molded outlets shall provide complete drainage of the tank.

9. Tanks shall have a minimum of three (3) lifting lugs integrally molded in the cylinder straight shell. Lifting lugs shall be Type 316 stainless steel.

10. Provide a minimum of four (4) tie-down lugs integrally molded into the top head. Tie-down lugs shall be designed to allow tank retention in wind and seismic loading without damage to the tank.

11. Manway: 18-inch threaded polyethylene, vented and easily accessible.

12. Concrete tank pad shall be level and smooth to the tolerances recommended by the tank manufacturer.

13. Each tank must be vented for the material, flow, and withdrawal rates expected.

G. Chemical Tubing and Conduit

1. General

a) For liquid chemical service, provide Linear Low Density Polyethylene "LLDPE" tubing. Install tubing in electrical conduit for ease of installation/replacement, as well as non-pressure rated secondary containment. Tubing

manufacturer shall confirm chemical compatibility of tubing with chemical system being served. Tubing shall be UV resistant.

2. Provide tubing adequately sized for the flow and pressure requirements of this application with the minimum following dimensions and pressure rating:

a) Outside diameter: 3/8 inch.
b) Inside diameter: ¼ inch.

c) Pressure Rating at 70° Fahrenheit: 200 psi.

3. Conduit for chemical tubing shall be PVC electrical conduit with sweeps instead of elbows. Conduit size shall be 2 inch for tubing with outside diameter of 3/8 inch through 5/8 inch. Conduit size shall be 3 inch for tubing with outside diameter of ¾ inch through 1 inch.

4. Provide all necessary fittings clamps, and adapters for connection of tubing at the chemical metering pump outlet, chemical feed point, and any other connections. Provide barbed or compression-style fittings, specifically designed for use with the tubing being provided, and compatible with the service (both with the fluid being carried in pipe and pressure rating). Fittings shall be located so that they are accessible at all times. No fittings shall be located in the carrier pipe. All connections shall be constructed per tubing manufacturer's recommendations to provide a connection which is equal to or greater than tubing pressure rating. All parts or fittings in contact with the fluid in the tubing shall be compatible with the chemical being carried.

H. Freeze Protection

1. All components of the Removal Facility and appurtenances must be protected from freezing. This section is meant to provide general descriptions and establish minimum requirements of the freeze protection required as part of the construction of the Removal Facility. Passive and active freeze protection must be used including but not limited to pipe insulation and heat tracing on exposed components and heat lamps and radiant heaters inside a building.

a) Insulation.

i. All outdoor piping, valves, fittings, gauges, tubing, air release valves, and all other appurtenances, shall be insulated based on a design ambient temperature of 10° Fahrenheit.
ii. The insulation shall be protected with aluminum or stainless steel metal jacketing with a minimum thickness of 0.016 inch (0.4 mm) with moisture barrier, secured in accordance with the jacket

manufacturer's recommendations. Joints shall be applied so they will shed water and shall be sealed completely.

iii. Valves and fittings shall be insulated and jacketed with preformed fitting covers matching outer jacketing used on straight pipe sections, with all joints weather sealed.

iv. All piping shall be supported in such a manner that neither the insulation nor the moisture barrier is compromised by the hanger/pipe support or the effects of the hanger/pipe support. In all cases, hanger spacing shall be such that the circumferential joint may be made outside the hanger/pipe support.

v. Install insulation subsequent to heat tracing.

vi. Metal jacket must be painted. The approved color will be determined by the County, City and/or the Company.

2. Building (Optional).

a) The Removal Facility may be enclosed in a building as part of the freeze protection components. The Building structure must meet or exceed the following requirements:

i. The interior temperature of the Metal structure shall be controlled with the use of insulation and heat lamps or forced air heaters. The design ambient temperature shall be 10° Fahrenheit.

ii. Building must have an engineered concrete floor.

iii. Building must be permanently attached to an engineered concrete slab.

iv. Building must meet all applicable building codes.

v. Building shall be designed for a 20-year minimum life span.

vi. Buildings exterior shall be painted. The approved color will be determined by the County, City and/or the Company.

7. ELECTRICAL

All electrical components shall comply with the Company's EI&C Design Guidelines Technical Specification, enclosed with this RFP.

Attachment "A"

Approved Adsorptive Medias

Media Requirements:

Adsorptive media shall be discardable as solid waste in a RCRA subtitle D (non-hazardous) landfill when saturated and pass all TCLP test.

Adsorptive media shall be a durable, attrition resistant media suitable for backwashing and removal of arsenic.

Approved Manufacturers:

1. Severn Trent Bayoxide E-33 or E-33P Granular Ferric Oxide (GFO) adsorption media

2. Siemens Granular Ferric Hydroxide (GFH) adsorption media

Attachment "B"

Hydraulic Design Criteria

Broken Arrow Well #10

Design Capacity: 450gpm

System Pressure, Static: 110psi

System Pressure, Well Running: 150psi

Minimum Design Pressure: 200psi

Sedona Golf Resort Well

Design Capacity: 300gpm

System Pressure, Static: 85psi

System Pressure, Well Running: 110psi

Minimum Design Pressure: 150psi

Rimrock Well #2

Design Capacity: 200gpm

System Pressure, Static: 90psi

System Pressure, Well Running: 105psi

Minimum Design Pressure: 150psi

Montezuma Haven Well #3

Design Capacity: 375gpm

System Pressure, Static: 85psi

System Pressure, Well Running: 100psi

Minimum Design Pressure: 150psi

Montezuma Haven Well #2

Design Capacity: 50gpm

System Pressure, Static: 85psi

System Pressure, Well Running: 100psi

Minimum Design Pressure: 150psi

Attachment "C"

Water Quality Data

(data for each of the Wells is listed on the pages immediately follow this page)

ARIZONA WATER COMPANY
BROKEN ARROW WELL #10

System	Location	Contaminant	Result	Sample Date
SD	BA10	Antimony	< 0.0005	25-Aug-09
SD	BA10	Arsenic	0.0152	05-Jan-09
SD	BA10	Arsenic	0.0139	02-Feb-09
SD	BA10	Arsenic	0.0132	06-Apr-09
SD	BA10	Arsenic	0.0124	04-May-09
SD	BA10	Arsenic	0.0129	08-Jun-09
SD	BA10	Arsenic	0.0115	06-Jul-09
SD	BA10	Arsenic	0.0121	03-Aug-09
SD	BA10	Arsenic	0.0123	08-Sep-09
SD	BA10	Arsenic	0.0131	05-Oct-09
SD	BA10	Arsenic	0.0128	02-Nov-09
SD	BA10	Arsenic	0.0092	05-Apr-10
SD	BA10	Arsenic	0.012	05-Apr-10
SD	BA10	Arsenic	0.014	05-Apr-10
SD	BA10	Arsenic	0.0129	03-May-10
SD	BA10	Arsenic	0.0142	24-May-10
SD	BA10	Arsenic	0.0132	05-Jul-11
SD	BA10	Arsenic	0.0134	01-Aug-11
SD	BA10	Barium	0.20	25-Aug-09
SD	BA10	Beryllium	< 0.002	25-Aug-09
SD	BA10	Cadmium	< 0.0001	25-Aug-09
SD	BA10	Calcium	28	24-May-10
SD	BA10	Calcium Hardness	71	24-May-10
SD	BA10	Chloride	< 5.0	24-May-10
SD	BA10	Chromium	< 0.005	25-Aug-09
SD	BA10	Copper	< 0.01	24-May-10
SD	BA10	Cyanide, Total	< 0.010	25-Aug-09
SD	BA10	Fluoride	< 0.10	25-Aug-09
SD	BA10	Fluoride	< 0.10	24-May-10
SD	BA10	Iron	< 0.05	24-May-10
SD	BA10	Magnesium	14	24-May-10
SD	BA10	Manganese	< 0.02	24-May-10
SD	BA10	Mercury	< 0.0002	25-Aug-09
SD	BA10	Nickel	< 0.02	25-Aug-09
SD	BA10	Nitrate + Nitrite	< 0.20	25-Aug-09
SD	BA10	Nitrate + Nitrite	< 0.20	23-Aug-10
SD	BA10	Nitrate as N	< 0.30	25-Aug-09
SD	BA10	Nitrate as N	< 0.30	23-Aug-10
SD	BA10	Nitrite as N	< 0.10	25-Aug-09
SD	BA10	Nitrite as N	< 0.10	23-Aug-10
SD	BA10	pH	8.1	24-May-10
SD	BA10	Potassium	1	24-May-10
SD	BA10	Selenium	< 0.0020	25-Aug-09
SD	BA10	Selenium	< 0.002	24-May-10

ARIZONA WATER COMPANY
BROKEN ARROW WELL #10

System	Location	Contaminant	Result	Sample Date
SD	BA10	Silica	17.6	24-May-10
SD	BA10	Silicon	8.2	24-May-10
SD	BA10	Sodium	6	25-Aug-09
SD	BA10	Sodium	6	24-May-10
SD	BA10	Sulfate	< 5.0	24-May-10
SD	BA10	Thallium	< 0.0005	25-Aug-09
SD	BA10	Total Alkalinity	134	24-May-10
SD	BA10	Total Dissolved Solids	146	24-May-10
SD	BA10	Zinc	< 0.02	24-May-10

ARIZONA WATER COMPANY
SEDONA GOLF RESORT

System	Location	Contaminant	Result	Sample Date
VV	SGR	Antimony	<0.0012	23-Feb-09
VV	SGR	Arsenic	0.0372	02-Mar-09
VV	SGR	Arsenic	0.0359	06-Apr-09
VV	SGR	Arsenic	0.0374	04-May-09
VV	SGR	Arsenic	0.0355	08-Jun-09
VV	SGR	Arsenic	0.0352	06-Jul-09
VV	SGR	Arsenic	0.0336	03-Aug-09
VV	SGR	Arsenic	0.0342	08-Sep-09
VV	SGR	Arsenic	0.0346	05-Oct-09
VV	SGR	Arsenic	0.0351	02-Nov-09
VV	SGR	Arsenic	0.0339	07-Dec-09
VV	SGR	Arsenic	0.0339	04-Jan-10
VV	SGR	Arsenic	0.0389	01-Feb-10
VV	SGR	Arsenic	0.0370	01-Mar-10
VV	SGR	Arsenic	0.036	05-Apr-10
VV	SGR	Arsenic	0.0355	03-May-10
VV	SGR	Arsenic	0.0374	24-May-10
VV	SGR	Arsenic	0.0383	06-Jun-11
VV	SGR	Arsenic	0.0362	05-Jul-11
VV	SGR	Arsenic	0.0367	01-Aug-11
VV	SGR	Barium	<.4	23-Feb-09
VV	SGR	Beryllium	<.0008	23-Feb-09
VV	SGR	Cadmium	<0.001	23-Feb-09
VV	SGR	Calcium	30	24-May-10
VV	SGR	Calcium Hardness	76	24-May-10
VV	SGR	Chloride	10.1	24-May-10
VV	SGR	Chromium	<0.02	23-Feb-09
VV	SGR	Copper	< 0.01	24-May-10
VV	SGR	Cyanide, Total	<0.04	23-Feb-09
VV	SGR	Fluoride	<.8	23-Feb-09
VV	SGR	Fluoride	< 0.10	24-May-10
VV	SGR	Iron	< 0.05	24-May-10
VV	SGR	Magnesium	15	24-May-10
VV	SGR	Manganese	< 0.02	24-May-10
VV	SGR	Mercury	<0.0004	23-Feb-09
VV	SGR	Nickel	<.002	23-Feb-09
VV	SGR	Nitrate as N	.45	23-Feb-09
VV	SGR	pH	7.9	24-May-10
VV	SGR	pH	8.11	25-Aug-11
VV	SGR	Potassium	1	24-May-10
VV	SGR	Selenium	<.01	23-Feb-09

ARIZONA WATER COMPANY
SEDONA GOLF RESORT

System	Location	Contaminant	Result	Sample Date
VV	SGR	Selenium	< 0.002	24-May-10
VV	SGR	Silica	18.9	24-May-10
VV	SGR	Silicon	8.8	24-May-10
VV	SGR	Sodium	8.5	23-Feb-09
VV	SGR	Sodium	11	24-May-10
VV	SGR	Sulfate	6.6	24-May-10
VV	SGR	Thallium	<0.0004	23-Feb-09
VV	SGR	Total Alkalinity	142	24-May-10
VV	SGR	Total Dissolved Solids	187	24-May-10
VV	SGR	Zinc	< 0.02	24-May-10

ARIZONA WATER COMPANY
RIMROCK WELL #2

System	Location	Contaminant	Result	Sample Date
RR	002	Antimony	< 0.0005	02-Jun-09
RR	002	Arsenic	0.0528	02-Feb-09
RR	002	Arsenic	0.0561	02-Mar-09
RR	002	Arsenic	0.0536	06-Apr-09
RR	002	Arsenic	0.0573	04-May-09
RR	002	Arsenic	0.0548	08-Jun-09
RR	002	Arsenic	0.0542	06-Jul-09
RR	002	Arsenic	0.0513	03-Aug-09
RR	002	Arsenic	0.0507	08-Sep-09
RR	002	Arsenic	0.0517	05-Oct-09
RR	002	Arsenic	0.0544	02-Nov-09
RR	002	Arsenic	0.0520	07-Dec-09
RR	002	Arsenic	0.0520	04-Jan-10
RR	002	Arsenic	0.064	05-Apr-10
RR	002	Arsenic	0.0534	03-May-10
RR	002	Arsenic	0.0575	05-Jul-11
RR	002	Arsenic	0.0568	01-Aug-11
RR	002	Barium	0.29	02-Jun-09
RR	002	Beryllium	< 0.002	02-Jun-09
RR	002	Cadmium	< 0.0001	02-Jun-09
RR	002	Chromium	< 0.005	02-Jun-09
RR	002	Cyanide, Total	< 0.010	02-Jun-09
RR	002	Fluoride	0.40	02-Jun-09
RR	002	Mercury	< 0.0002	02-Jun-09
RR	002	Nickel	< 0.02	02-Jun-09
RR	002	Nitrate as N	0.48	23-Feb-09
RR	002	pH	7.5	25-Aug-11
RR	002	Selenium	0.0020	02-Jun-09
RR	002	Sodium	51	02-Jun-09
RR	002	Thallium	< 0.0005	02-Jun-09

ARIZONA WATER COMPANY
MONTEZUMA HAVEN WELL #2

System	Well	Contaminant	Result	Sample Date
RR	MH2	Antimony	<0.0012	23-Feb-09
RR	MH2	Arsenic	0.0618	06-Jul-09
RR	MH2	Barium	<.4	23-Feb-09
RR	MH2	Beryllium	<.0008	23-Feb-09
RR	MH2	Cadmium	<0.001	23-Feb-09
RR	MH2	Chromium	<0.02	23-Feb-09
RR	MH2	Cyanide, Total	<0.04	23-Feb-09
RR	MH2	Fluoride	<.8	23-Feb-09
RR	MH2	Mercury	<0.0004	23-Feb-09
RR	MH2	Nickel	0.0048	23-Feb-09
RR	MH2	Selenium	<.01	23-Feb-09
RR	MH2	Sodium	38	23-Feb-09
RR	MH2	Thallium	<0.0004	23-Feb-09

ARIZONA WATER COMPANY
MONTEZUMA HAVEN WELL #3

System	Location	Contaminant	Result	Sample Date
RR	005	Antimony	< 0.0005	02-Jun-09
RR	005	Arsenic	0.0319	05-Jan-09
RR	005	Arsenic	0.0331	02-Feb-09
RR	005	Arsenic	0.0343	02-Mar-09
RR	005	Arsenic	0.0321	06-Apr-09
RR	005	Arsenic	0.0325	04-May-09
RR	005	Arsenic	0.0339	11-May-09
RR	005	Arsenic	0.0323	08-Jun-09
RR	005	Arsenic	0.0288	03-Aug-09
RR	005	Arsenic	0.0315	08-Sep-09
RR	005	Arsenic	0.0345	01-Feb-10
RR	005	Arsenic	0.0326	01-Mar-10
RR	005	Arsenic	0.038	05-Apr-10
RR	005	Arsenic	0.0372	05-Jul-11
RR	005	Arsenic	0.0363	01-Aug-11
RR	005	Barium	0.34	02-Jun-09
RR	005	Beryllium	< 0.002	02-Jun-09
RR	005	Cadmium	< 0.0001	02-Jun-09
RR	005	Chromium	< 0.005	02-Jun-09
RR	005	Cyanide, Total	< 0.010	02-Jun-09
RR	005	Fluoride	0.26	02-Jun-09
RR	005	Mercury	< 0.0002	02-Jun-09
RR	005	Nickel	< 0.02	02-Jun-09
RR	005	Nitrate as N	<0.2	23-Feb-09
RR	005	pH	7.44	25-Aug-11
RR	005	Selenium	< 0.0020	02-Jun-09
RR	005	Sodium	49	02-Jun-09
RR	005	Thallium	< 0.0005	02-Jun-09

Attachment "D"

Site Plans Without Leased Equipment

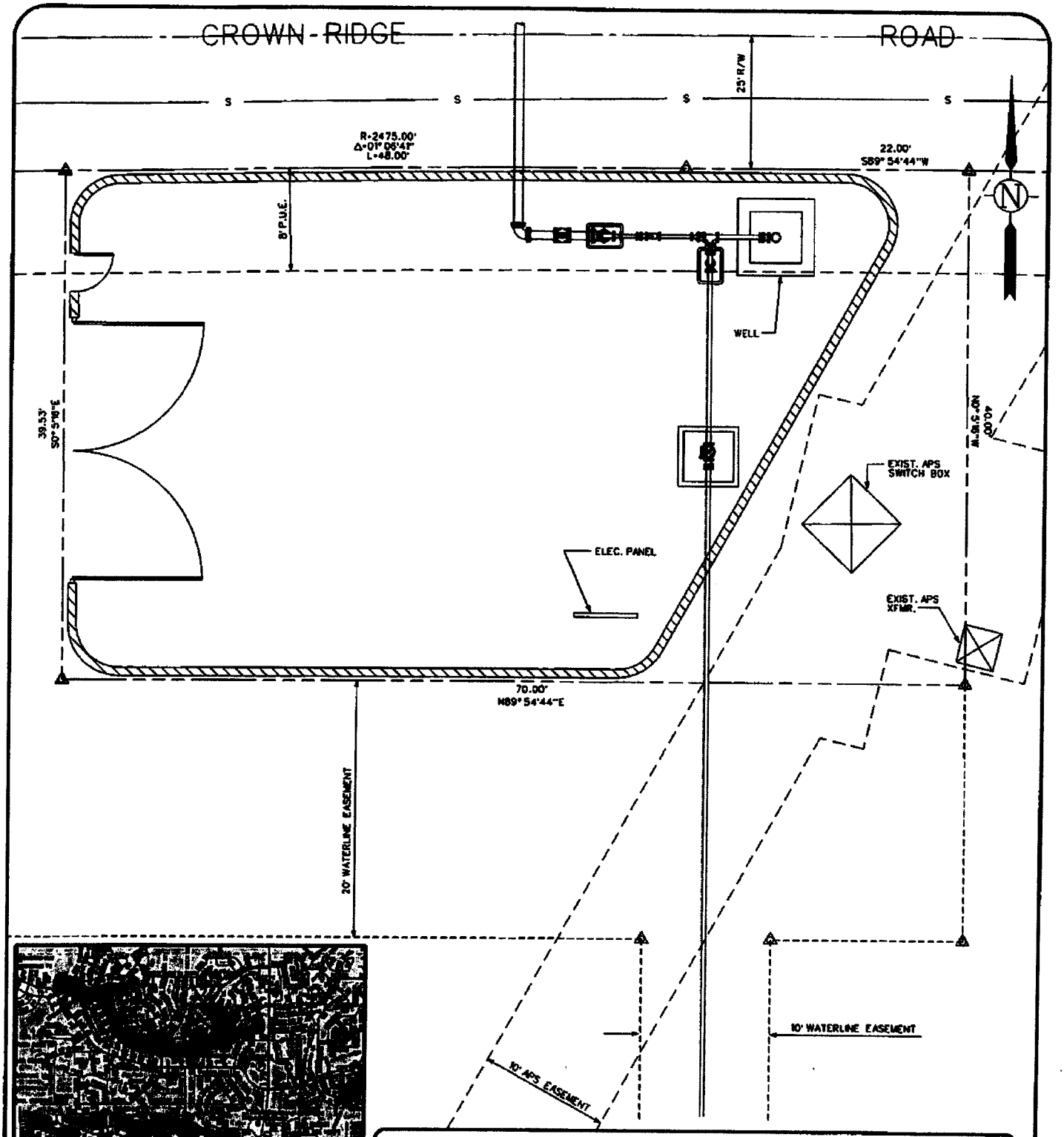

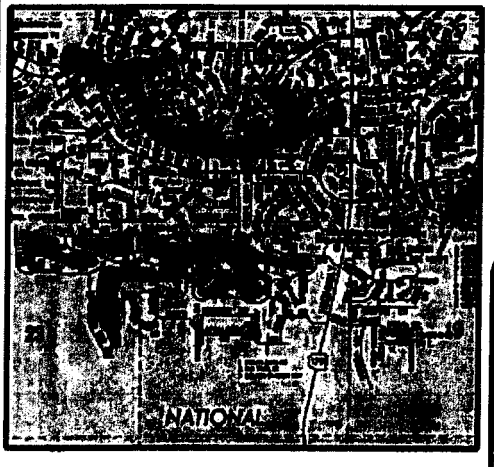

VICINITY MAP
N.T.S.

ARIZONA WATER COMPANY

PROPERTY LOCATION DRAWING

Property Location: Northwest quarter Section 24, T.16N.,R5E.		
Street Address: 990 Crown Ridge Road Sedona, AZ 86351		
Project: Sedona Golf Resort Well		
Date: 06.13.2002	**Scale:** 1"=10'-0"	**Drawn By:** CB

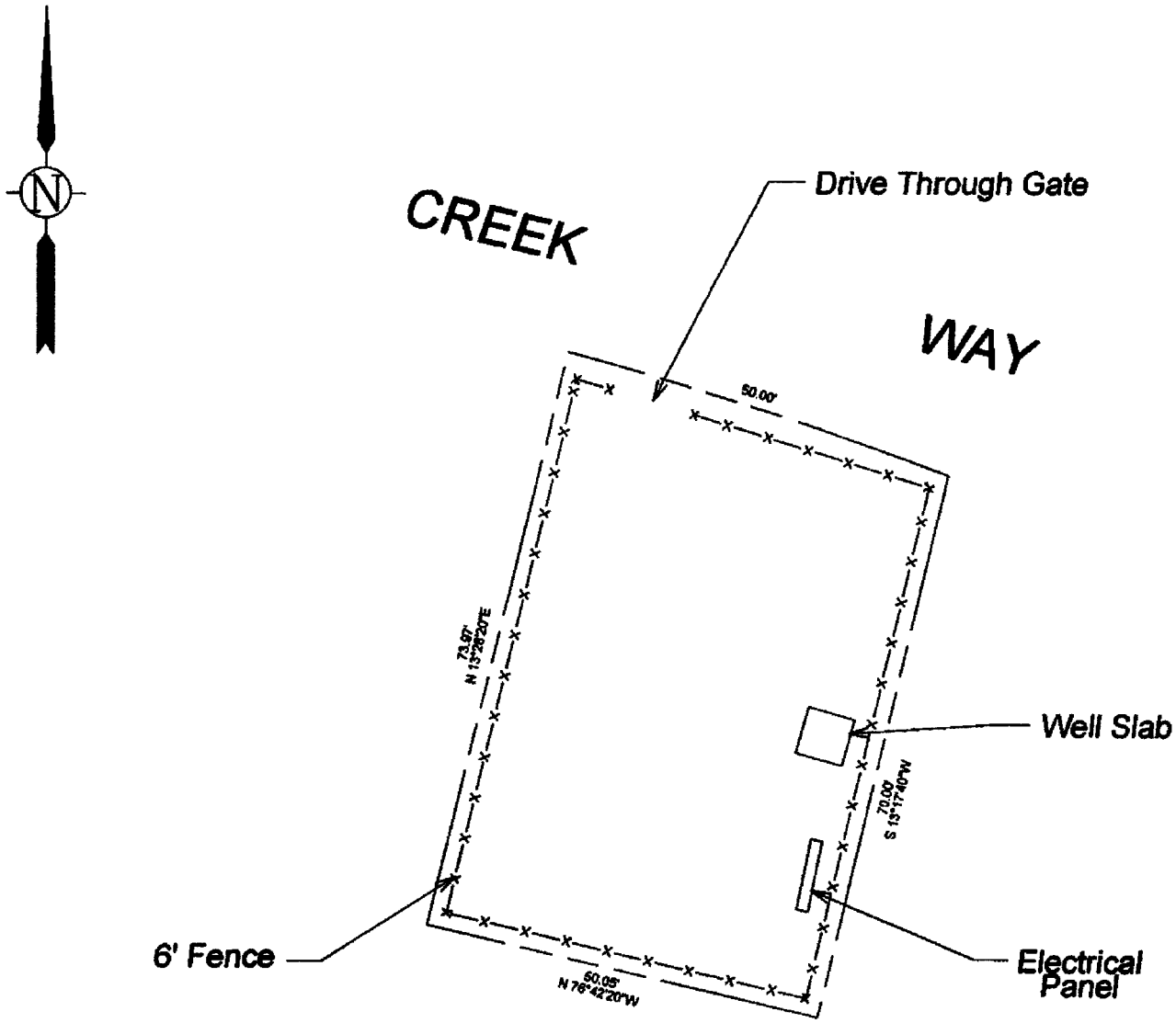

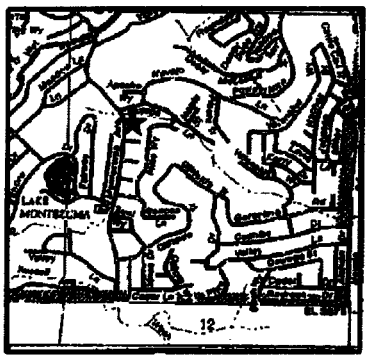

VICINITY MAP
N.T.S.

ARIZONA WATER COMPANY		
SYSTEM NAME:	RIMROCK	
FACILITY NAME:	Rimrock Well No.2	
STREET ADDRESS	4241 EAST CREEK WAY LAKE MONTEZUMA, AZ 86335	
LOCATION:	Northwest Quarter Section 1 - T.14N.,R.5E.	
DATE: 3/21/96	SCALE: 1"=20'	DRAWN BY: CB

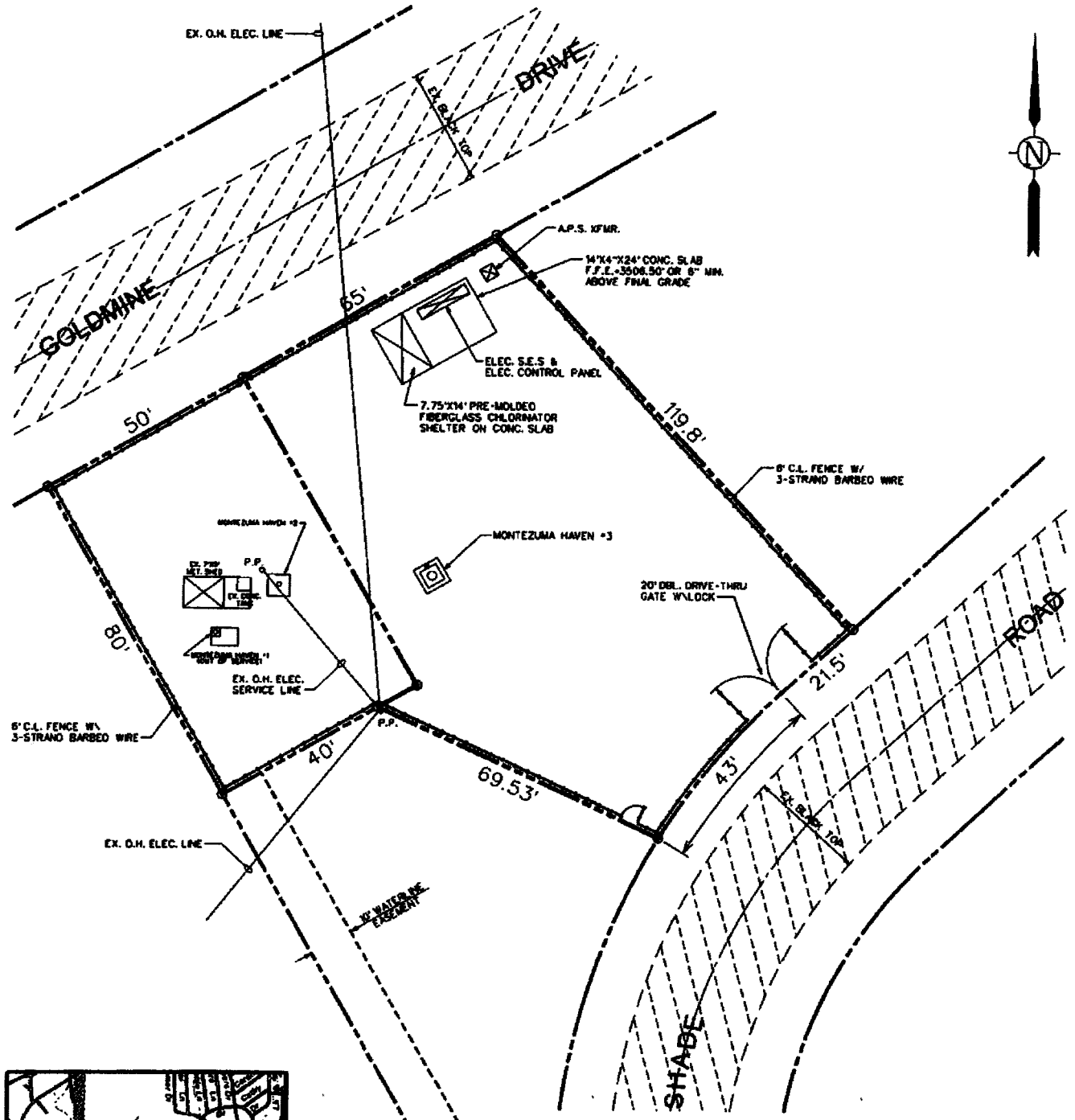

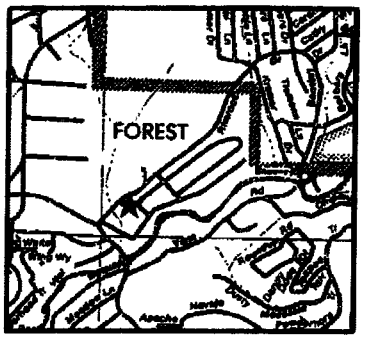

VICINITY MAP
N.T.S.

ARIZONA WATER COMPANY

SYSTEM NAME:	RIMROCK
FACILITY NAME:	Montezuma Hoven Wellsite
STREET ADDRESS	4105 EAST GOLDMINE ROAD LAKE MONTEZUMA, AZ 86335
LOCATION:	Southwest quarter Section 36 - T.15N.,R.5E.
DATE: 12.16.2003	SCALE: 1"=30'-0"
DRAWN BY: CB	

Attachment "E"

Broken Arrow Well #10 Particle Size Distribution Analysis

MALVERN MASTERSIZER

Result: Analysis Report

Sample Details

Sample ID: 3386-001
Sample File: 0514-145
Sample Path: C:\SIZERS\DATA\
Sample Notes: 8/15/08
ARIZONA WATER CO
SEDONA WELL

Run Number: 7
Record Number: 6001

Measured: Fri Aug 15 2008 2:54PM
Analysed: Fri Aug 15 2008 2:54PM
Result Source: Analysed

System Details

Range Lens: 300RF mm
Presentation: 3OHD
Analysis Model: Polydisperse
Modifications: None

Beam Length: 2.40 mm
[Particle R.I. = (1.5295, 0.1000); Dispersant R.I. = 1.3300]

Sampler: MS1

Obscuration: 14.8 %
Residual: 0.880 %

Result Statistics

Distribution Type: Volume
Mean Diameters:
D [4, 3] = 43.39 um

Concentration = 0.0144 %Vol
D (v, 0.1) = 0.66 um
D [3, 2] = 2.20 um

Density = 1.000 g / cub. cm
D (v, 0.5) = 31.60 um
Span = 2.845E+00

Specific S.A. = 2.7238 sq. m / g
D (v, 0.9) = 90.76 um
Uniformity = 9.729E-01

Size Low (um)	In %	Size High (um)	Under%	Size Low (um)	In %	Size High (um)	Under%
0.05	0.02	0.06	0.02	6.63	1.39	7.72	20.26
0.06	0.05	0.07	0.07	7.72	1.56	9.00	21.82
0.07	0.08	0.08	0.16	9.00	1.76	10.48	23.58
0.08	0.12	0.09	0.28	10.48	2.04	12.21	25.62
0.09	0.18	0.11	0.45	12.21	2.40	14.22	28.02
0.11	0.25	0.13	0.70	14.22	2.87	16.57	30.90
0.13	0.34	0.15	1.05	16.57	3.45	19.31	34.34
0.15	0.47	0.17	1.52	19.31	4.10	22.49	38.45
0.17	0.63	0.20	2.14	22.49	4.79	26.20	43.24
0.20	0.82	0.23	2.96	26.20	5.45	30.53	48.69
0.23	0.99	0.27	3.95	30.53	6.02	35.56	54.70
0.27	1.09	0.31	5.05	35.56	6.47	41.43	61.17
0.31	1.07	0.36	6.12	41.43	6.83	48.27	68.00
0.36	0.97	0.42	7.09	48.27	6.55	56.23	74.55
0.42	0.85	0.49	7.94	56.23	5.93	65.51	80.47
0.49	0.73	0.58	8.67	65.51	5.04	76.32	85.52
0.58	0.58	0.67	9.25	76.32	4.02	88.91	89.54
0.67	0.46	0.78	9.72	88.91	2.99	103.58	92.53
0.78	0.43	0.91	10.16	103.58	2.07	120.67	94.60
0.91	0.41	1.06	10.56	120.67	1.35	140.58	95.94
1.06	0.40	1.24	10.96	140.58	0.89	163.77	96.83
1.24	0.40	1.44	11.36	163.77	0.68	190.80	97.51
1.44	0.42	1.68	11.78	190.80	0.64	222.28	98.15
1.68	0.46	1.95	12.23	222.28	0.67	258.96	98.81
1.95	0.49	2.28	12.72	258.96	0.61	301.68	99.42
2.28	0.55	2.65	13.27	301.68	0.40	351.46	99.82
2.65	0.64	3.09	13.91	351.46	0.18	409.45	100.00
3.09	0.74	3.60	14.65	409.45	0.00	477.01	100.00
3.60	0.86	4.19	15.51	477.01	0.00	555.71	100.00
4.19	0.99	4.88	16.50	555.71	0.00	647.41	100.00
4.88	1.12	5.69	17.62	647.41	0.00	754.23	100.00
5.69	1.25	6.63	18.87	754.23	0.00	878.67	100.00

Result: Analysis Table

ID: 3388-091
File: 0514-145
Path: C:\SIZERS\DATA\

Run No: 7
Rec. No: 6501

Measured: 6/15/08 2:54PM
Analysed: 6/15/08 2:54PM
Source: Analysed

Range: 300RF mm
Presentation: 3OHD
Modifications: None

Beam: 2.40 mm
Sampler: MS1
Analysis: Polydisperse

Conc. = 0.0144 %Vol
Distribution: Volume
D(v, 0.1) = 0.88 um
Span = 2.641E+00

Density = 1.000 g/cm^3
D[4, 3] = 43.38 um
D(v, 0.5) = 31.60 um
Uniformity = 9.729E-01

S.S.A. = 2.7238 m^2/g
D[3, 2] = 2.20 um
D(x, 0.9) = 90.76 um

Size (um)	Volume Under%	Size (um)	Volume Under%	Size (um)	Volume Under%	Size (um)	Volume Under%
0.02	0.00	0.67	9.25	8.09	21.82	120.87	94.59
0.05	0.02	0.78	9.72	10.48	23.58	140.59	95.94
0.07	0.07	0.91	10.16	12.21	25.62	163.77	96.93
0.08	0.16	1.06	10.56	14.22	28.02	190.60	97.61
0.09	0.28	1.24	10.95	16.57	30.90	222.26	98.15
0.11	0.45	1.44	11.36	19.31	34.34	258.95	98.61
0.13	0.70	1.68	11.78	22.49	38.45	301.69	98.42
0.15	1.05	1.96	12.23	26.20	43.24	351.49	98.92
0.17	1.52	2.28	12.72	30.53	48.69	409.45	100.00
0.20	2.14	2.66	13.27	35.56	54.70	477.01	100.00
0.23	2.98	3.09	13.91	41.43	61.17	555.71	100.00
0.27	3.95	3.60	14.65	48.27	68.00	647.41	100.00
0.31	5.05	4.19	15.51	56.23	74.88	754.22	100.00
0.36	6.12	4.88	16.50	65.51	80.47	878.67	100.00
0.42	7.09	5.69	17.62	76.32	85.32		
0.49	7.84	6.63	18.87	88.91	89.64		
0.58	8.67	7.72	20.26	103.58	92.80		

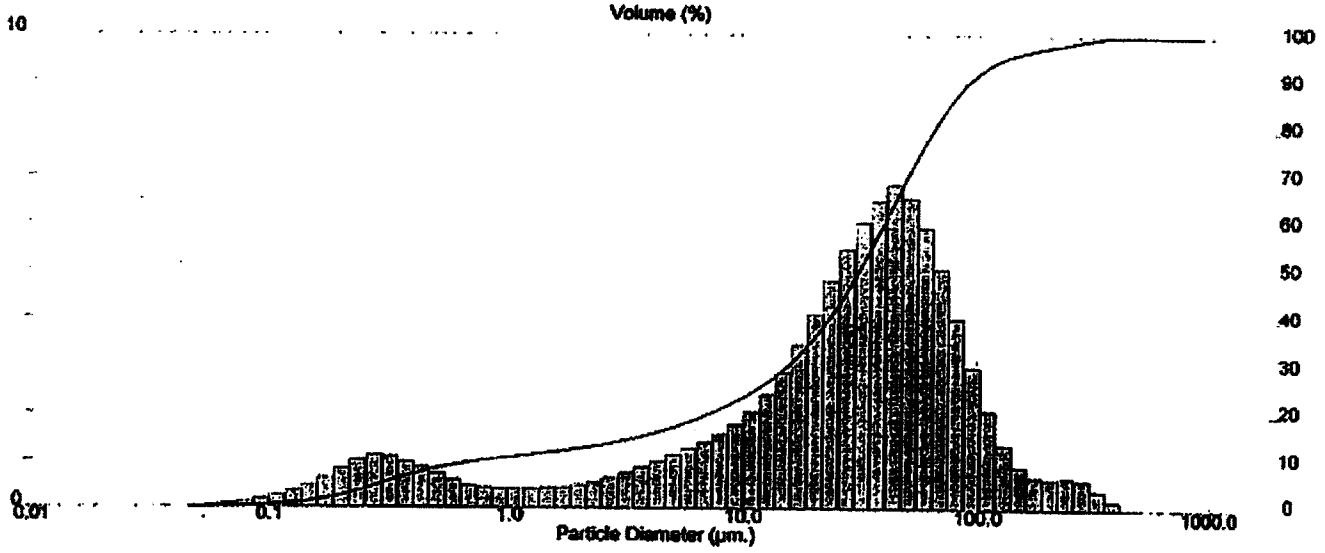

Attachment "F"

Arizona Water Company Tank Coating Specifications: O-12-2

ARIZONA WATER COMPANY

O-12-2

WATER STORAGE TANK COATING SPECIFICATIONS

DEFINITIONS

A. *Company* — The words "Company" or "Arizona Water Company" mean Arizona Water Company and, where applicable, any division of Arizona Water Company, whose principal place of business is located at 3805 North Black Canyon Highway, Phoenix, Arizona 85015-5351 (Post Office Box 29006, Phoenix, Arizona 85038-9006).

B. *Company's Authorized Representative* — The words "Company's Authorized Representative" mean any officer of the Company, any Division Manager and/or such other person(s) designated in writing as the "Company's Authorized Representative" by the President or any Vice President of the Company.

C. *Contractor* — The word "Contractor" means either an individual or other entity contracted with to provide the services detailed in the Contract and as specified herein.

D. *Contract* — The word "Contract" means the written document titled "Contract" when such document has been signed by an officer or other authorized representative of both the Contractor and the Company.

E. *General Conditions of Contract* — The words "General Conditions of Contract" refer to the Company's Operating Order O-12-3 in the Company's Operating Memorandums.

F. *Independent Coating Inspector* — The words "Independent Coating Inspector" mean any Certified NACE III inspector hired by the Company to inspect coatings on water storage tanks.

1. GENERAL

These specifications identify the material and workmanship necessary to produce a quality coating system. All work shall be completed in a safe, workmanlike manner in strict accordance with:

(a) Product manufacturer's instructions

(b) General Conditions of Contract for Tank Coating (0-12-3)

(c) American Water Works Association Standard AWWA C652

(d) Applicable sections of ANSI/AWWA D102-97, "Standard for Coating Steel Water Storage Tanks"

(e) ANSI/AWWA D101-53 (R86), "Standard for Inspecting and Repairing Steel Water Tanks, Standpipes, Reservoirs, and Elevated Tanks, for Water Storage"

(f) ANSI/NSF Std. 61, Section 5, "Protective (Barrier) Materials"

(g) SSPC-SP1 – Solvent Cleaning
SSPC-SP2 – Hand Tool Cleaning
SSPC-SP3 – Power Tool Cleaning
SSPC-SP5 – White Metal Blast Cleaning
SSPC-SP6 – Commercial Blast Cleaning
SSPC-SP7 – Brush-off Blast Cleaning
SSPC-SP10 – Near White Metal Blast Cleaning
SSPC-SP11 – Power Tool Cleaning to Bare Metal
SSPC-SP12 – Hydroblasting

(h) SSPC PA2 – Dry Paint Thickness with Magnetic Gauges

(i) SSPC-Guide 7 – Guide for the Disposal of Lead-Contaminated Surface Debris

2. QUALITY OF PAINT

The protective coatings identified in these specifications are set up as standards of quality. The standard "or equal" clause shall apply.

No substitution shall be considered unless the Company's Authorized Representative has received a written request for approval at least ten (10) days prior to the date for receipt of bids. Each such request must include: (a) the name of the specified material for which a substitution is being requested; (b) the name and number of the proposed substitution material; (c) a complete description of the proposed substitute, including performance and test data; and (d) any other information necessary for an evaluation. The burden of proof of the merit of the proposed substitute is upon the Contractor. Approval or disapproval of the proposed substitution rests solely with the Company's authorized representative and his decision shall be final.

Protective coatings for interior wet applications must be listed by NSF International as approved for potable water contact according to ANSI/NSF Std. 61, Section 5, "Protective (Barrier) Materials."

The Contractor shall be responsible for assuring that all materials are delivered to the job site in the original sealed and labeled containers of the protective coating manufacturer. All material on the job shall be subject to inspection by the Company's Authorized Representative.

The Company's Authorized Representative shall select colors not previously specified.

3. SPECIAL PROVISIONS

The Contractor shall be responsible for completing the removal of all remaining water, sediment, rust, etc. that is required prior to surface preparation. All preliminary preparation work will be at the Contractor's expense.

The Contractor shall:

(a) Protect aluminum gauge boards and nametags during sandblasting and painting procedures.

(b) Protect copper lines, light fixtures, valve threads, and electrical boxes.

(c) Replace all manhole bolts with cadmium-plated bolts if the Contractor opens a manhole.

(d) Replace all gaskets.

The Contractor shall **NOT**:

(a) Paint concrete unless otherwise specified.

(b) Allow the use of silica sand for surface preparation.

The Contractor shall only mix FULL kits of approved coating. No partial kits will be saved or mixed at a later time.

4. MATERIALS TO BE PROVIDED AND PROCEDURES TO BE FOLLOWED BY THE CONTRACTOR

Unless otherwise specified in the contract, the Contractor shall supply all of the necessary materials to complete the work. The Contractor shall provide the following materials and services:

a. TANKS WITH EXISTING COATING SYSTEM: Interior Steel – Conventional Coating System; Surface Preparation: SSPC-SP 10 Near White Metal Blast Cleaning.

All abrasive materials shall be thoroughly removed from the surface of the tank in accordance with SSPC-SP 10 standards prior to coating.

Tnemec Coating

(1) Prime Coat*: Tnemec Series N140-1255 (Beige) Pota Pox Plus**, one (1) coat; spray applied; 5 to 7 mils dry film thickness ("DFT").

(2) Finish Coat: Tnemec Series N140-15BL (Tank White) Pota Pox Plus; one (1) coat; spray applied; 5 to 7 mils DFT.

TOTAL DFT: 10-14 mils DFT.

* Weld Seams: All plate weld seams shall receive an additional brushed coat of Series N140 Pota Pox Plus in color 15BL (Tank White). This application will be made after the full prime coat. Additionally, brush coating shall be applied on all welds, corners, nuts, bolts, edges, or other irregular surfaces.

** Tnemec Series N140 Pota Pox Plus FC (fast cure) may be substituted for Series N140 Pota Pox Plus when conditions warrant. It may be beneficial when curing between 35° F and 56° F is required.

OR

Devoe Coating

(1) Prime Coat*: Devoe Bar-Rust 233H1642 (Buff)**, one (1) coat; spray applied; 5 to 7 mils DFT.

(2) Finish Coat: Devoe Bar-Rust 233 H3501 (White), one (1) coat: spray applied; 5 to 7 mils DFT.

TOTAL DFT: 10 to 14 mils DFT.

* Weld Seam: All plate weld seams shall receive an additional brushed coat of Devoe's Bar-Rust 233H in or 3501 (White) after the full prime coat. Additionally, brush coating shall be applied on all corners, welds, nuts, bolts, edges, or other irregular surfaces.

** Devoe Bar-Rust 233H is a high solids (80%) advanced technology NSF International (National Sanitation Foundation) approved epoxy, which can be applied at steel temperatures down to 0° F (-18° C).

b. TANKS WITH EXISTING COATING SYSTEM: Interior Steel – Alternative Floor Coating System for Badly Pitted Tank Floors. For floors in existing tanks that are highly corroded with severe pitting, the following floor system may be applied after completion of the Series N140 system to the roof and shell, subject to prior approval by the Company's Authorized Representative.

Floor Surface Preparation: SSPC-SP10 Near White Metal Blast Cleaning.

All abrasive materials shall be thoroughly removed from the surface of the tank in accordance with SSPC-SP10 standards prior to coating.

Tnemec Coating

(1) Steel Conditioners: Wet the floor surface and up the wall a few inches with a fine mist of Tnemec Series 260 Tnemec-Bond. Allow to evaporate and apply the topcoat within four (4) hours.

(2) Elastomeric Urethane: After mixing according to the manufacturer's recommendations, pour out and level with trowels or notched squeegees, Tnemec Series 264 Elasto-Shield over the entire floor to DFT of 80 to 100 mils and bring up the wall to where there is a two- to three-inch (2" to 3") overlap on the newly applied epoxy coating system.

TOTAL DFT: 80 to 100 mils DFT.

OR

Devoe Coating

(1) 100% Solids Epoxy Finish Coat: Apply Devoe's Devron 133 100% Solids Epoxy Tank Coating at 80 to 100 mils DFT.

TOTAL DFT: 80 mils minimum DFT.

All welds, corners, nuts, bolts, edges, or other irregular surfaces shall be hand brushed to assure proper coverage.

c. TANKS WITH EXISTING COATING SYSTEM: Exterior Steel; Level 1 Re-coat: For aged epoxy/urethane systems that are in sound shape and where re-coat adhesion is assured, the following overcoat system applies:

Tnemec Coating

(1) Surface preparation: Remove all dust, dirt, grime, and chalk by power washing with a trisodium phosphate/water solution (0.25 lbs. of trisodium phosphate ["TSP"] per gallon of water) with 3,500 PSI pressure at the nozzle. Power rinse with clean water immediately after TSP wash-down to avoid drying of the TSP on the surface.

All rusted, abraded, and exposed steel shall be power tool cleaned to bare metal according to SSPC-SP 11. All loose paint shall be removed with the same power tools. Feather all edges. Existing runs and chips shall be sanded out.

(2) Spot Prime (exposed metal): Tnemec Series 135 Chembuild or Series N140 Pota Pox Plus; one (1) coat; roller, brush, or spray applied, overlapping to the feathered areas; 3 to 5 mils DFT.

(3) Finish Coat: Tnemec Series 73 (spec color) Endura-Shield; one (1) coat; spray applied; 3 to 5 mils DFT.

TOTAL ADDITIONAL DFT: 3 to 5 mils DFT (on top of existing system).

OR

Devoe Coating

(1) Surface preparation: Remove all dust, dirt, grime, and chalk by power washing with Devoe's Devprep 88 with 3500 PSI pressure at the nozzle. Power rinse with clean water immediately after washing to avoid drying of the Devprep 88 on the surface.

All rusted, abraded, and exposed steel shall be power tool cleaned to bare metal according to SSPC-SP 11. All loose paint shall be removed with the same power tools. Feather all edges. Existing runs and chips shall be sanded out.

(2) Spot Prime (exposed metal): Devoe's 233H Bar-Rust one (1) coat; roller, brush, or spray applied, overlapping to the feathered areas; at 3 to 5 mil DFT.

(3) Finish Coat: Devoe's Devthane 378 aliphatic Acrylic Urethane (spec color), one (1) coat; spray applied; 3 to 4 mils DFT.

TOTAL ADDITIONAL DFT: 3 to 5 mils DFT (on top of existing system).

d. TANKS WITH EXISTING COATING SYSTEM: Exterior Steel; Level 2 Re-coat. If complete removal of the existing system is required, the following overcoat system applies:

Surface preparation: SSPC-SP 6 Commercial Abrasive Blast Cleaning.

All abrasive materials shall be thoroughly removed from the surface of the tank in accordance with SSPC-SP 10 standards prior to coating.

Tnemec Coating

(1) Prime Coat: Tnemec Series N140-1255 (Beige) Pota Pox Plus; one (1) coat; spray applied; 4 to 6 mils DFT.

(2) Finish Coat: Tnemec Series 73 (spec color) Endura-Shield III; one (1) coat; spray applied; 3 to 5 mils DFT.

TOTAL DFT: 7 to 11 mils.

OR

Devoe Coating

(1) Prime Coat: Devoe's Bar-Rust 235 Epoxy; one (1) coat; spray applied; 4 to 6 mils DFT.

(2) Finish Coat: Devoe's Devthane 378 aliphatic Acrylic Urethane (spec color); one (1) coat; spray applied; 3 to 5 mils DFT.

TOTAL DFT: 7 to 11 mils DFT.

e. TANKS WITH NEW STEEL: Exterior steel – Surface preparation: SSPC-SP 6 Commercial Abrasive Blast Cleaning.

All abrasive materials shall be thoroughly removed from the surface of the tank in accordance with SSPC-SP 10 standards prior to coating.

Tnemec Coating

(1) Prime Coat: Tnemec Series N140-1255 (Beige) Pota Pox Plus; one (1) coat; spray applied; 4 to 6 mils DFT.

(2) Finish Coat: Tnemec Series 73 (spec color) Endura-Shield III; one (1) coat; spray applied; 3 to 5 mils DFT.

TOTAL DFT: 7 to 11 mils.

OR

Devoe Coating

(1) Prime Coat: Devoe's Bar-Rust 235 Epoxy; one (1) coat; spray applied; 4 to 6 mils DFT.

(2) Finish Coat: Devoe's Devthane 378 aliphatic Acrylic Urethane (spec color); one (1) coat; spray applied; 3 to 5 mils DFT.

TOTAL DFT: 7 to 11 mils DFT.

f. TANKS WITH NEW STEEL: Interior Steel – Conventional Coating System; Surface Preparation: SSPC-SP 10 Near White Metal Blast Cleaning.

All abrasive materials shall be thoroughly removed from the surface of the tank in accordance with SSPC-SP 10 standards prior to coating.

Tnemec Coating

(1) Prime Coat*: Tnemec Series N140-1255 (Beige) Pota Pox Plus**, one (1) coat; spray applied; 5 to 7 mils DFT.

(2) Finish Coat: Tnemec Series 20-WH02 (Tank White) Pota Pox; one (1) coat; spray applied; 5 to 7 mils DFT.

TOTAL DFT: 10 to 14 mils DFT.

* Weld Seams: All plate weld seams shall receive an additional brushed coat of Series N140 Pota Pox Plus in either the color 1255 (Beige) or WH02 (Tank White). This application will be made after the full prime coat. Additionally, brush coating shall be applied on all welds, corners, nuts, bolts, edges, or other irregular surfaces.

** Tnemec series N140 Pota Pox Plus FC (fast cure) may be substituted for Series N140 Pota Pox Plus when conditions warrant. It may be beneficial when curing between 35° F and 56° F is required.

OR

Devoe Coating

(1) Prime Coat*: Devoe Bar-Rust 233H1642 (Buff)**, one (1) coat; spray applied; 5 to 7 mils DFT.

(2) Finish Coat: Devoe Bar-Rust 233 H3501 (White), one (1) coat: spray applied; 5 to 7 mils DFT.

TOTAL DFT: 10 to 14 mils DFT.

* Weld Seam: All plate weld seams shall receive an additional brushed coat of Devoe's Bar-Rust 233H in 3501 (White). The application of the stripe coat will be made after the application of the full prime coat. Additionally, brush coating shall be applied on all corners, welds, nuts, bolts, edges, or other irregular surfaces.

** Devoe Bar-Rust 233H is a high solids (80%) advanced technology NSF International (National Sanitation Foundation) approved epoxy, which can be applied at steel temperatures down to 0° F (-18° C).

5. TANK REPAIRS PRIOR TO TANK COATING/PAINTING

The Contractor is required to notify the Company's Authorized Representative on a timely basis when tank repairs are necessary, and to identify the nature and extent of repairs that are required.

If repairs to the tank are necessary, the Contractor shall be responsible for coordinating all such repairs, and shall request a change order from the Company's Authorized Representative before initiating such repairs as required in the General Conditions of Contract.

All repairs are to be made according to ANSI/AWWA D101-53 (R86), "Standard for Inspection and Repairing Steel Water Tanks, Standpipes, Reservoirs, and Elevated Tanks, for Water Storage."

The Company will not allow the Contractor to alter the structure of the tank.

6. SURFACE PREPARATION – DEBRIS CONTAINMENT AND DISPOSAL

When required by Federal, State, or local regulation, the Contractor shall enclose the entire tank and structure and contain surface preparation debris. Refer to SSPC-Guide 6, "Guide for Containing Debris Generated During Paint Removal Operations."

The Contractor shall dispose of all surface preparation debris according to applicable Federal, State, and local regulations. Refer to SSPC-Guide 7, "Guide for the Disposal of Lead-Contaminated Surface Debris."

Worker protection and environmental protection shall be followed in accordance with the following Federal Regulatory Standards and other applicable Federal, State, or local regulations:

1.	29 CFR 1910 –	OSHA General Industry Standards
2.	29 CFR 1910.134 –	Respiratory Protection
3.	29 CFR 1910.1000 –	Air Contaminants – Permissible Exposure Limits
4.	29 CFR 1910.1020 –	Employee Access to Exposure and Medical Records
5.	29 CFR 1926 –	OSHA Construction Industry Standards
6.	29 CFR 1926.59 –	Hazard Communications
7.	29 CFR 1926.62 –	Lead Exposure in Construction; Interim Final Rule
8.	40 CFR 261 –	Identification and Listing of Hazardous Waste
9.	40 CFR 262 –	Standards Applicable to Generators of Hazardous Waste
10.	40 CFR263 –	Standards Applicable to Transporters of Hazardous Waste
11.	40 CFR 264 –	Standards for Owners and Operators of Hazardous Waste Treatment, Storage, and Disposal Facilities

Cleaning:

Surfaces that have been in contact with chemicals can be assumed to be contaminated. Depending on the type of chemical, it may be necessary to clean the surface before dry blasting and again after blasting in order to remove contaminants that can otherwise cause blistering of the coating system.

Most common methods are:

- Steam Cleaning
- Hot Water/Detergent Washing (Pressure)
- Solvent Washing
- Hydroblasting or Wet Sandblasting
- Prebaking at Very High Temperatures

The first two methods can efficiently remove most soluble and emulsified contaminants. Solvent cleaning is only feasible for small tanks or small areas. Solvent cleaning will not remove water-soluble materials. When detergents are used, a fresh water rinse is necessary to remove traces of the detergent left on the surface.

Hydroblasting will seldom be used for the cleaning of tanks due to the very high pressure involved. Wet sandblasting is possible. It can remove old coatings, water soluble contaminants, and corrosion products simultaneously. It cannot remove oil or grease products.

Before cleaning takes place, the surface must be free from oil, grease, salt deposits, and other foreign material that cannot be removed by abrasive blasting. These contaminants, which differ from mill scale and rust, would otherwise be forced into the profile and interfere with the adhesion and the chemical resistance.

Blasting:

Steel surfaces must be blasted to white metal (SSPC-SP5/SA3) or as near as possible to white metal, but never less than near-white-metal (SSPC-SP10/SA2 ½).

Mill scale, when present on a ferrous surface, is cathodic to the surface, meaning the steel will sacrifice itself to save the mill scale. All mill scale MUST be removed prior to coating application. Although the surface may in fact already have a coating visible, the CONTRACTOR SHALL NOT assume that the previous contractor has removed the mill scale prior to applying the existing coating. All bids will be submitted with the understanding that mill scale MAY be present beneath the existing coating, and that an

SP-10 (near-white) blast will be required prior to any new coating application. NO additional costs, above the bid price, will be submitted to Arizona Water Company for removal of any mill scale that is found on the surface. Arizona Water Company requires that ALL bids reflect this understanding by the CONTRACTOR.

Profile:

The blast anchor profile must average 2 to 3 mils, but preferably 2.5 mils.

Abrasives:

The abrasive media shall be garnet and shall be of sufficient grit size to attain a specified blast anchor profile between 2 to 3 mils DFT.

Pre-Preparation and Operational Testing of Abrasives for Soluble Salts Contamination

Test abrasive media for chloride contamination using test kit as described below, entitled "Test Kit for Measuring Chlorides in Abrasives." The maximum allowable chloride concentration is 7 PPM. Test media immediately prior to use, and in no case more than 24 hours prior to use.

Pre-Preparation Testing of Abrasive Media Shipped in Bulk Containers

For bulk containers 1350kg 3000 pounds or less, test one composite sample from each container. Reject entire container for non-conforming test. For bulk containers over 1350kg 3000 pounds, test one composite sample for each 1350kg 3000 pounds, one sample from each compartment, as appropriate. Reject entire container or compartment for non-conforming test.

Pre-Preparation Testing of Abrasive Media Shipped in Bags (Normal 50-110 lb. Bags)

Maintain palletized grouping as provided from supplier. Test composite sample from one bag of each pallet, but no less than one sample for each 1350kg 3000 pounds of abrasive. Reject entire pallet for non-conforming test. If palletized grouping is not maintained, sample and test one bag for every 450kg 1000 pounds of abrasive. Reject each 450kg 1000 pounds represented by a non-conforming test. If bags are stamped with lot number, test composite samples from each of two bags per lot. Reject entire lot for non-conforming test.

Pre-Application Testing for Soluble Salts Contamination

Test blasted surfaces for chloride contamination using the Test Kit described below, entitled "Test Kit for Measuring Chlorides on Steel Surfaces." Test all surfaces at the rate of three tests for the first 1000 square feet plus one test for each additional 3000 square feet or part thereof. Concentrate testing of bare steel at areas of coating failure to bare steel and areas of corrosion pitting. Perform 30% of tests on bare metal at welds, divided equally between horizontal and vertical welds. One or more readings greater than 5 micrograms per square centimeter of chlorides shall be cause for rejection of surface. Wash all surfaces with Chlor*Rid according to the manufacturer's recommendations, allow to dry and retest until all required test show allowable results. Re-blast tested and cleaned areas to required specifications. Label all test tubes and retain for test verification.

ALLOWABLE SOLUBLE SALTS TEST KITS

Test kit for measuring Chlorides on Steel Surfaces

(Test Kits called Chlor*Test, as manufactured by CHLOR*RID International. Inc. of Chandler, Arizona (www.chlor-rid.com)).

Test kit for measuring Chlorides in Abrasives

(Test Kits called Chlor*Test "A", as manufactured by CHLOR*RID International, Inc. of Chandler, Arizona (www.chlor-rid.com)).

Welds and Edges:

These areas need special attention because they are often the first place where corrosion starts. Weld splatters must be removed by power tool grinding. Welds must be ground to a smooth radius and sharp edges must be rounded to prevent the coating from pulling away.

Dehumidification:

Depending on the ambient conditions, it may be necessary to use dehumidifiers to prevent rustblooming of the blasted steel surface. In all instances the dewpoint must remain at least 5°F or 3°C below the steel temperature.

Although not very often the case with new steel, black spotrusting may occur shortly after blasting. This is a sign that the steel has been infected with sulfates or chlorides, etc., which cannot completely be removed by dry abrasive blasting. In such a case, refer to section B, Old Corroded and/or Previously Coated Steel Surfaces.

Dust Removal:

After the blasted steel surface is approved, abrasive dust must be removed with a vacuum cleaner. The broom is insufficient. Most effective is the combination of blowing and vacuum cleaning in that order. Dust particles left on the surface will interfere with coating adhesion.

7. PREPARATION OF COATING MATERIAL

Storage:

At least 24 hours before coating material will be used, the pail must be placed in an area where the temperature is kept between 50°F and 86°F (10°C - 30°C).

Premixing:

The coating system is a two-component thermosetting material that requires thorough mechanical mixing.

After opening the can of base component, it is necessary to premix the base until no sediment is left on the bottom of the can. A squirrel-cage-type mixer such as the Jiffy mixer is efficient. Care must be taken not to introduce air (foam). After sufficient premixing, the hardener component may be added to the base and mixed immediately.

Mixing Ratio:

Unless otherwise indicated, base and hardener are supplied in the correct ratio: one can of hardener to one can of base. The use of the exact ratio is of prime importance for the chemical resistance of the cured coating film. Therefore, the hardener container must be emptied completely into the base. A very small amount of thinner may be used for cleaning the hardener can. The amount used must be deducted from the overall amount of thinner used for correction of spray viscosity.

Spray Equipment:

Conventional air spray or airless spray may be used to apply coatings. Because airless spray is almost exclusively used, the following information will deal only with this method.

The airless pump must have a pressure ratio of at least 30 to 1, but preferably 45 to 1. A tip size between 0.018" and 0.021" is strongly recommended. A reversible tip is recommended.

All equipment and lines must be absolutely clean to prevent blocking of the tip and to prevent coating contamination.

8. APPLICATION OF PROTECTIVE COATINGS

The Contractor shall apply each coating according to the specifications and the protective coating manufacturer's recommendations.

The Contractor shall apply the coating at the specified thickness. If the specified thickness is not obtained, the Contractor shall apply an additional coating.

The Contractor shall apply all protective coatings in strict accordance with the applicable manufacturer's current printed product data sheet and container label. The Contractor shall not apply protective coatings above or below the minimum/maximum surface temperatures as stated on the product data sheet. The Contractor shall not apply protective coatings to wet or damp surfaces and shall not apply protective coatings in rain, snow, fog, or mist. Surface temperatures must be at least 5° F above the dew point and the Contractor shall delay painting until such condition exists. The Contractor shall complete the painting well in advance of the probable time of day when condensation may occur and/or the surface temperature may be expected to drop below the minimum listed on the applicable product data sheet.

The Contractor shall measure DFT according to current SSPC PA2, "Dry Paint Thickness with Magnetic Gauges."

It is essential that the first coat wet the steel surface perfectly. An addition of up to 10% thinner may be made, but care must be taken to avoid runs or sags. When wet film thickness gauges are used, it must be kept in mind that the steel profile will have an effect on the readings. Thinner ratios can vary from project to project due to application equipment, weather conditions, substrate conditions, etc.

Before starting the actual spray application, it is a good practice to observe the spray pattern on a separate piece of steel or cardboard. Good atomization without fingering, heavy spots, or insufficient flow, etc. must be obtained. If imperfections occur, corrections must be made quickly. Use a somewhat higher pressure or use the next size smaller tip. If this does not correct the problem, add a small amount of thinner.

Dry spray or coarse paint globules at extremes of the spay pattern are unacceptable.

Dry spray or overspray is often caused by spraying at improper angles to the surface. Move the gun parallel with the surface, releasing the trigger of the gun before reversing direction for the next stroke.

Measure the wet film thickness regularly.

The second coat is applied in the same way, and using the same thinning ratio, after sufficient drying time of the previous coat.

Stripe Coating:

As an extra measure for corrosion protection, it is standard practice to apply a stripe coat of the primer with a brush in the welds, edges, and areas that are hard to reach with the spray gun. For that purpose, enough of the mixed primer must be thinned with approximately 25% thinner. The lower viscosity of this mixture will help to penetrate crevices and will prevent an undesirable film build-up. This stripe coating can best be done with a short round-tip bristle brush. Another stripe coat may be applied when the full primer coat has dried sufficiently.

Potlife and Thinning:

No mixed material may be used beyond the potlife. No thinner may be used to increase the potlife. Methyl Ethyl Ketone shall not be used for thinning purposes. Thinners must be that as manufactured by the coating supplier utilized for each specific project.

Drying/Curing Interval:

The ideal temperature of air and steel for the application and drying between coats is between 68°F and 77°F (20°C and 25°C).

Best results are obtained by drying for 16 to 24 hours at 68°F (20°C) between coats. Lower temperatures require longer drying intervals. When hot air blowers are used to bring the steel temperatures higher than 68°F (20°C), it is strongly recommended to let the coating dry for one (1) hour at ambient temperature with sufficient fresh air ventilation before application of heat. It is further recommended that only indirect fire heaters be used for forced air curing in order to prevent intercoat contamination.

Total Dry Film Thickness:

The ideal total DFT is 10 to 12 mils DFT. It is strongly recommended to keep the total milage below 16 mils. Small areas of somewhat higher milage do not have to be a reason for rejection, but must be the exception.

Final Curing:

At 68°F (20°C) the tank lining will cure enough for most services in 7 days minimum. Ventilation is required for the first 24 hours. When not enough time is available to cure at 68°F (20°C), hot air blowers should be used to continuously circulate heated fresh air to maintain a surface temperature of 140°F (60°C).

9. INSPECTION

The inspection during and after the tank lining job can be divided into two different functions:

A. Inspection on a pass/fail basis.
B. The above-mentioned function together with preventive actions during the application.

The following list gives the essential checkpoints for an inspection:

TEST	INSTRUMENTS
Blast Profile	Replica Tape of Comparator
Temperatures	Surface Thermometer
Humidity/Dew Point	Sling Psychrometer or Digital
Thickness of Each Coat	Magnetic Film Thickness Gauge
Pinhole/Sags/Runs/Dryspray/Flow	Holiday Detector and Magnifying Glass
Cure	MEK Rubs (50 rubs)

Preventive Inspection:

Inspection service can be very helpful when attention is paid to all parts of the operation. Although not claimed to be complete, the following list may contribute:

- Type of abrasive and cleanliness of the abrasive
- Cleaning method used before blasting
- Check for salt contamination on the steel surface after blasting
- Dehumidification
- Mixing procedure
- Paint storage and consumption
- Spray pattern
- Wet film thickness
- Ventilation
- Pinhole and holiday detection
- Drying/curing procedures
- Safety procedures

Dry Film Thickness:

One of the most controversial subjects of application and inspection is the measurement and judgment of DFT.

Highly skilled application techniques are required to keep the DFT within specified limits. It must be understood that most tank linings are exposed to severe conditions. In such a case, the idea "the thicker the better" is definitely false.

The coating should be applied in total DFT of 10 to 14 mils in 2 coats of approximately equal thickness.

Five spot measurements must be taken over an area of 100 square feet. Each spot measurement consists of three gauge readings next to one another. The average of three readings is used to calculate the average of the spot readings.

The average of the spot readings has to be in the specified mil thickness range. According to SSPC-PA2, no spot reading lower than 80% of the specified milage is acceptable. Therefore, no spot reading may be lower than 8.0 mils.

In addition, the maximum film thickness also is limited. No spot reading (average of a cluster of three gauge readings) higher than 120% of the specified film thickness is acceptable. 16.8 mils is therefore the maximum allowable film thickness.

Between the three cluster readings which form one spot reading, a higher reading than 16.8 mils is still acceptable as long as this, together with the other two readings, does not average higher than 120% (16.8 mils) of the maximum specified (14) mils.

Where the film thickness is too low, an extra coat must be applied In accordance with procedures established in this guide.

In case of high film thickness, the thick area must be sanded (after sufficient curing) and a very light extra finish coat applied to "renew" the film.

The magnetic film thickness gauges must be calibrated frequently enough to ensure correct readings. The original calibration must take place with shims placed on the blasted surface as described in SSPC-PA2. This method prevents higher thickness readings found than are actually applied, especially with deeper profiles.

10. LITERATURE

Additional literature to be used in conjunction with these guidelines:

A. Steel Structures Painting Manual, Volume 1

In particular, chapters:

- 2.0 Surface Preparation
- 2.2 Metallic Abrasives
- 2.4 Abrasive Air Blast Cleaning
- 2.6 Hand and Power Tool Cleaning
- 2.9 Chemical Cleaning
  - a. Solvent Wipe
  - b. Steam Cleaning
  - c. High Pressure – Hot Detergent
- 5.3 Safety in Paint Application
- 6.0 Inspection
- 14.2 The Lining of Tanks

B. Steel Structures Painting Manual, Volume 2

Surface Preparation Standards

Chapter 5, Paint Application Specifications SSPC-PA2

A Guide to Safety in Paint Application SSPC-PA Guide 311

11. CURING, VENTILATION, AND DISINFECTION

The Contractor shall provide adequate ventilation to effectively remove solvent vapors for proper drying of paint on interior surfaces. The Contractor shall be required, upon request from the Company's Authorized Representative or the Independent Coating Inspector, during the pre-construction meeting to provide specific details on its plan to provide adequate curing and ventilation.

A combination of forced and natural ventilation shall be continued after coating application is completed to ensure complete curing and solvent removal. Coating life may be shortened if there is inadequate ventilation during the curing period and residual coating solvent may contribute to taste and odor problems in stored water. Lower temperatures or higher humidity may extend the time that ventilation is necessary. The Contractor shall use forced air ventilation with heating units when applying coatings at low temperatures and higher humidities. The ventilation must be designed in such a way that no solvent vapors remain in corners, etc. The air used must be clean and dry enough to prevent any condensation of moisture on the coated surface. Good ventilation will prevent solvent entrapment in the film.

Following final coat application and final inspection, the Contractor shall not disinfect the tank until the coating system is fully cured and approved by the Independent Coating Inspector. Refer to the applicable product data sheet for dry time/temperature requirements. The Contractor shall disinfect the tank according to the current American Water Works Association Standard AWWA C652, or as instructed by the Company's Authorized Representative. The Contractor, at its expense, shall be responsible for disinfecting the tank immediately before placing the tank in service.

All cathodic protection systems shall be disabled and locked out before initiating tank draining and shall remain disabled until completion of the interior warranty inspection. Once the tank is placed back into service, the lock shall be removed and the cathodic protection system energized.

12. CLEAN UP

The Contractor shall remove from the Company's property and from all public and private property, at its own expense, all temporary structures, rubbish, and waste materials from its operations. In the event the Contractor fails to do so, the Company may remove same at the expense of the Contractor.

13. CONTAINMENT/DISPOSAL COSTS

The Contractor shall be responsible for all costs associated with containment and waste disposal, and for all waste removal as specified in the General Conditions of Contract.

14. GUARANTEE/INSPECTION

The Contractor shall guarantee all labor, workmanship, and materials it applies for the minimum guarantee period, as specified in the General Conditions of Contract.

Approximately eleven (11) months after the Contractor's completion of the work and the Company's acceptance of the completed work, the Company's Authorized Representative shall schedule with an Independent Coating Inspector a date for an inspection for all interior coating work completed, and shall notify the Contractor of such date at least thirty (30) days in advance.

If repairs are necessary, the Contractor shall be responsible for properly disinfecting the water storage tank prior to it being placed back into service. All such repair work will be subject to the conditions of the original Contract.

ARIZONA WATER COMPANY

SPECIFICATIONS

GENERAL CONDITIONS OF CONTRACT: E-4-1

CONSTRUCTION SPECIFICATIONS: E-8-1

STANDARD SPECIFICATION DRAWINGS: E-9-1

2007 EDITION WITH 2010 REVISIONS

Entire Spec Book + E I + C Design went with RFP for ARF Bisbee Azcon, Sedona Golf, Rimrock & Montezuma Haven

8/26/2011

ARIZONA WATER COMPANY

EI&C DESIGN GUIDELINES

TECHNICAL SPECIFICATIONS

NOVEMBER 2009

Corporate Office
3805 North Black Canyon Hwy • Phoenix, AZ 85015-5351
P.O. Box 29006 • Phoenix, AZ 85038-9006
602.240.6860 (Phone)
602.240.6878 or 602.240.6874 (Fax)

ARIZONA WATER COMPANY

COMMENCEMENT NOTICE

CONTRACTOR:

Weber Group LC
Jeff Wold
16825 S. Weber Drive
Chandler, Arizona 85226

DATE: October 3, 2011
DIVISION: VERDE VALLEY
SYSTEM: SEDONA
W.A.: 1-4675

THIS IS YOUR NOTICE TO PROCEED WITH THE FOLLOWING PROJECT(S):

DESCRIPTION OF WORK:

DESIGN, PERMIT, CONSTRUCT AND MAKE OPERATIONAL AN ARSENIC REMOVAL FACILITY AT BROKEN ARROW WELL NO. 10.

PERFORMANCE AND PAYMENT BONDS REQUIRED: [X] Yes [ ] No

TOTAL DAYS ALLOWED: 175

COMPLETION DATE: March 26, 2012

ARIZONA WATER COMPANY
Company

By _____
Title Vice President - Engineering

WEBER GROUP LC
Contractor *(type name)*

By _____
Title CEO

APH
W:\PROJECTS\2011\W\W-4675 SPECIAL 010 BROKEN ARROW WELL NO. 10 ARF\CORRESPONDENCE\W-4675 BROKEN ARROW WELL NO 10L COMMENCEMENT NOTICE.DOCX 1/15/09 | PKS:slh | E-3-18-2

THE AMERICAN INSTITUTE OF ARCHITECTS

Bond No. AZC 47935

AIA Document A312

Performance Bond

Any singular reference to Contractor, Surety, Owner or other party shall be considered plural where applicable.

CONTRACTOR (Name and Address):

Weber Group, LC
16825 S. Weber Drive
Chandler, AZ 85226

SURETY (Name and Principal Place of Business):

Merchants Bonding Company (Mutual)
2100 Fleur Drive
Des Moines IA 50321-1158

OWNER (Name and Address):

Arizona Water Company
65 Coffee Pot Drive Suite 7
Sedona. Az 86336

CONTSTRUCTION CONTRACT
Date: October 3, 2011
Amount: $366,294.00
Description (Name and Location): Broken Arrow Well No 10 Arsenic Removal Facility

BOND
Date (Not earlier than Construction Contract Date): November 2, 2011
Amount: $366,294.00
Modifications to this Bond: ☒ None ☐ See Page 3

CONTRACTOR AS PRINCIPAL
Company: (Corporate Seal)
Weber Group, LC

Signature:
Name and Title:

SURETY
Company: (Corporate Seal)
Merchants Bonding Company (Mutual)

Signature:
Name and Title: Jessika Gulliver
Attorney-In-Fact

(Any additional signatures appear on page 3)

(FOR INFORMATION ONLY — Name, Address and Telephone)
AGENT or BROKER:

BBVA COMPASS INS AGY INC
2002 E Osborn Rd
Phoenix, AZ 85016
602-956-7800

OWNER'S REPRESENTATIVE (Architect, Engineer or other party):

1 The Contractor and the Surety, jointly and severally, bind themselves, their heirs, executors, administrators, successors and assigns to the Owner for the performance of the Construction Contract, which is incorporated herein by reference.

2 If the Contractor performs the Construction Contract, the Surety and the Contractor shall have no obligation under this Bond, except to participate in conferences as provided in Subparagraph 3.1.

3 If there is no Owner Default, the Surety's obligation under this Bond shall arise after:

3.1 The Owner has notified the Contractor and the Surety at its address described in Paragraph 10 below that the Owner is considering declaring a Contractor Default and has requested and attempted to arrange a conference with the Contractor and the Surety to be held not later than fifteen days after receipt of such notice to discuss methods of performing the Construction Contract. If the Owner, the Contractor and the Surety agree, the Contractor shall be allowed a reasonable time to perform the Construction Contract, but such an agreement shall not waive the Owner's right, if any, subsequently to declare a Contractor Default; and

3.2 The Owner has declared a Contractor Default and formally terminated the Contractor's right to complete the contract. Such Contractor Default shall not be declared earlier than twenty days after the Contractor and the Surety have received notice as provided in Subparagraph 3.1; and

3.3 The Owner has agreed to pay the Balance of the Contract Price to the Surety in accordance with the terms of the Construction Contract or to a contractor selected to perform the Construction Contract in accordance with the terms of the contract with the Owner.

4 When the Owner has satisfied the conditions of Paragraph 3, the Surety shall promptly and at the Surety's expense take one of the following actions:

4.1 Arrange for the Contractor, with consent of the Owner, to perform and complete the Construction Contract; or

4.2 Undertake to perform and complete the Construction Contract itself, through its agents or through independent contractors; or

4.3 Obtain bids or negotiated proposals from qualified contractors acceptable to the Owner for a contract for performance and completion of the Construction Contract, arrange for a contract to be prepared for execution by the Owner and the contractor selected with the Owner's concurrence, to be secured with performance and payment bonds executed by a qualified surety equivalent to the bonds issued on the Construction Contract, and pay to the Owner the amount of damages as described in Paragraph 6 in excess of the Balance of the Contract Price incurred by the Owner resulting from the Contractor's default; or

4.4 Waive its right to perform and complete, arrange for completion, or obtain a new contractor and with reasonable promptness under the circumstances:

.1 After investigation, determine the amount for which it may be liable to the Owner and, as soon as practicable after the amount is determined, tender payment therefore to the Owner; or

.2 Deny liability in whole or in part and notify the Owner citing reasons therefore.

5 If the surety does not proceed as provided in Para- graph 4 with reasonable promptness, the Surety shall be deemed to be in default on this Bond fifteen days after receipt of an additional written notice from the Owner to the Surety demanding that the Surety perform its obligations under this Bond, and the Owner shall be entitled to enforce any remedy available to the Owner. If the Surety proceeds as provided in Subparagraph 4.4, and the Owner refuses the payment tendered or the Surety had denied liability, in whole or in part, without further notice the Owner shall be entitled to enforce any remedy available to the Owner.

6 After the Owner has terminated the Contractor's right to complete the Construction Contract, and if the Surety elects to act under Subparagraph 4.1,4.2, or 4.3 above, then the responsibilities of the Surety to the Owner shall not be greater than those of the Contractor under the Construction Contract, and the responsibilities of the Owner to the Surety shall not be greater than those of the Owner under the Construction Contract. To the limit of the amount of this Bond, but subject to commitment by the Owner of the Balance of the Contract Price to mitigation of costs and damages on the Construction Contract, the Surety is obligated without duplication for:

6.1 The responsibilities of the Contractor for correction of defective work and completion of the Construction Contract;

6.2 Additional legal, design professional and delay costs resulting from the Contractor's Default, and resulting from the actions or failure to act of the Surety under Paragraph 4; and

6.3 Liquidated damages, or if no liquidated damages are specified in the Construction Contract, actual damages caused by delayed performance or nonperformance of the Contractor.

7 The Surety shall not be liable to the Owner or others for obligations of the Contractor that are unrelated to the Construction Contract, and the Balance of the Contract Price shall not be reduced or set off on account of any such unrelated obligations. No right of action shall accrue on this Bond to any person or entity other than the Owner or its heirs, executors, administrators or successors.

8 The Surety hereby waives notice of any change, including changes of time, to the Construction Contract or to related subcontracts, purchase orders and other obligations.

9 Any proceeding, legal or equitable, under this Bond may be instituted in any court of competent jurisdiction in the location in which the work or part of the work is located and shall be instituted within two years after Contractor Default or within two years after the Contractor ceased working or within two years after the Surety refuses or fails to perform its obligations under this Bond, whichever occurs first. If the provisions of this Paragraph are void or prohibited by law, the minimum period of limitation avail-

able to sureties as a defense in the jurisdiction of the suit shall be applicable.

10 Notice to the Surety, the Owner or the Contractor shall be mailed or delivered to the address shown on the signature page.

11 When this Bond has been furnished to comply with a statutory or other legal requirement in the location where the construction was to be performed, any provision in this Bond conflicting with said statutory or legal requirement shall be deemed deleted herefrom and provisions conforming to such statutory or other legal requirement shall be deemed incorporated herein. The intent is that this Bond shall be construed as a statutory bond and not as a common law bond.

12 DEFINITIONS

12.1 Balance of the Contract Price: The total amount payable by the Owner to the Contractor under the Construction Contract after all proper adjustments have been made including allowance to the Contractor of any amounts received or to be received by the Owner in settlement of insurance or other claims for damages to which the Contractor is entitled, reduced by all valid and proper payments made to or on be- half of the Contractor under the Construction Contract.

12.2 Construction Contract: The agreement between the Owner and the Contractor identified on the sig-- nature page, including all Contract Documents and changes thereto.

12.3 Contractor Default: Failure of the Contractor, which has neither been remedied nor waived, to perform or otherwise to comply with the terms of the Construction Contract.

12.4 Owner Default: Failure of the Owner, which has neither been remedied nor waived, to pay the Contractor as required by the Construction Contract or to perform and complete or comply with the other terms thereof.

MODIFICATIONS TO THIS BOND ARE AS FOLLOWS:

(Space is provided below for additional signatures of added parties, other than those appearing on the cover page.)

CONTRACTOR AS PRINCIPAL	SURETY
Company:	Company:
(Corporate Seal)	(Corporate Seal)
Signature: _____	Signature: _____
Name and Title:	Name and Title:
Address:	Address:

THE AMERICAN INSTITUTE OF ARCHITECTS

Bond No. AZC 47935

AIA Document A312

Payment Bond

Any singular reference to Contractor, Surety, Owner or other party shall be considered plural where applicable.

CONTRACTOR (Name and Address):

Weber Group, LC
16825 S. Weber Drive
Chandler, AZ 85226

SURETY (Name and Principal Place of Business):

Merchants Bonding Company (Mutual)
2100 Fleur Drive
Des Moines IA 50321-1158

OWNER (Name and Address):

Arizona Water Company
65 Coffee Pot Drive Suite 7
Sedona, Az 86336

CONTSTRUCTION CONTRACT
Date: October 3, 2011
Amount: $366,294.00
Description (Name and Location): Broken Arrow Well No 10 Arsenic Removal Facility

BOND
Date (Not earlier than Construction Contract Date): November 2, 2011
Amount: $366,294.00
Modifications to this Bond: ☐ None ☒ See Page 6

CONTRACTOR AS PRINCIPAL
Company: (Corporate Seal)
Weber Group, LC

Signature:
Name and Title:

SURETY
Company: (Corporate Seal)
Merchants Bonding Company (Mutual)

Signature:
Name and Title: Jessika Gulliver
Attorney-In-Fact

(Any additional signatures appear on page 6)

(FOR INFORMATION ONLY — Name, Address and Telephone)
AGENT or BROKER:

BBVA COMPASS INS AGY INC
2002 E Osborn Rd
Phoenix, AZ 85016
602-956-7800

OWNER'S REPRESENTATIVE (Architect, Engineer or other party):

1 The Contractor and the Surety, jointly and severally, bind themselves, their heirs, executors, administrator, successors and assigns to the Owner to pay for labor, materials and equipment furnished for use in the performance of the Construction Contract, which is incorporated herein by reference.

2 With respect to the Owner, this obligation shall be null and void if the Contractor:

2.1 Promptly makes payment, directly or indirectly, for all sums due Claimants, and

2.2 Defends, indemnities, and holds harmless the Owner from all claims, demands, liens or suits by any person or entity who furnished labor, materials or equipment for use in the performance of the Construction Contract, provided the Owner has promptly notified the Contractor and the Surety (at the address described in Paragraph 12) of any claims, demands, liens or suits and tendered defense of such claims, demands, liens or suits to the Contractor and the Surety, and provided there is no Owner Default.

3 With respect to Claimants, this obligation shall be null and void if the Contractor promptly makes payment, directly or indirectly, for all sums due.

4 The Surety shall have no obligation to Claimants under this Bond until:

4.1 Claimants who are employed by or have a direct contract with the Contractor have given notice to the Surety (at the address described in Paragraph 12) and sent a copy, or notice thereof, to the Owner, stating that a claim is being made under this Bond and, with substantial accuracy, the amount of the claim.

4.2 Claimants who do not have a direct contract with the Contractor:

.1 Have furnished written notice to the Contractor and sent a copy, or notice thereof, to the Owner, within 90 days after having last performed labor or last furnished materials or equipment included in the claim stating, with substantial accuracy, the amount of the claim and the name of the party to whom the materials were furnished or supplied or for whom the labor was done or performed; and

.2 Have either received a rejection in whole or in part from the Contractor, or not received within 30 days of furnishing the above notice any communication from the Contractor by which the Contractor has indicated the claim will be paid directly or indirectly; and

.3 Not having been paid within the above 30 days, have sent a written notice to the Surety (at the address described in Paragraph 12) and sent a copy, or notice thereof, to the Owner, stating that a claim is being made under this Bond and enclosing a copy of the previous written notice furnished to the Contractor.

5 If a notice required by Paragraph 4 is given by the Owner to the Contractor or to the Surety, that is sufficient compliance.

6 When the Claimant has satisfied the conditions of Paragraph 4, the Surety shall promptly and at the Surety's expense take the following actions:

6.1 Send an answer to the Claimant, with a copy to the Owner, within 45 days after receipt of the claim, stating the amounts that are undisputed and the basis for challenging any amounts that are disputed.

6.2 Pay or arrange for payment of any undisputed amounts.

7 The Surety's total obligation shall not exceed the amount of this Bond, and the amount of this Bond shall be credited for any payments made in good faith by the Surety.

8 Amounts owed by the Owner to the Contractor under the Construction Contract shall be used for the performance of the Construction Contract and to satisfy claims, if any, under any Construction Performance Bond. By the Contractor furnishing and the Owner accepting this Bond, they agree that all funds earned by the Contractor in the performance of the Construction Contract are dedicated to satisfy obligations of the Contractor and the Surety under this Bond, subject to the Owner's priority to use the funds for the completion of the work.

9 The Surety shall not be liable to the Owner, Claimants or others for obligations of the Contractor that are unrelated to the Construction Contract. The Owner shall not be liable for payment of any costs or expenses of any Claimant under this Bond, and shall have under this Bond no obligations to make payments to, give notices on behalf of, or otherwise have obligations to Claimants under this Bond.

10 The Surety hereby waives notice of any change, including changes of time, to the Construction Contract or to related subcontracts, purchase orders and other obligations.

11 No suit or action shall be commenced by a Claimant under this Bond other than in a court of competent jurisdiction in the location in which the work or part of the work is located or after the expiration of one year from the date (1) on which the Claimant gave the notice required by Subparagraph 4.1 or Clause 4.2.3, or (2) on which the last labor or service was performed by anyone or the last materials or equipment were furnished by anyone under the Construction Contract, whichever of (1) or (2) first occurs. If the provisions of this Paragraph are void or prohibited by law, the minimum period of limitation available to sureties as a defense in the jurisdiction of the suit shall be applicable.

12 Notice to the Surety, the Owner or the Contractor shall be mailed or delivered to the address shown on the signature page. Actual receipt of notice by Surety, the Owner or the Contractor, however accomplished, shall be sufficient compliance as of the date received at the address shown on the signature page.

13 When this Bond has been furnished to comply with a statutory or other legal requirement in the location where the construction was to be performed, any provision in this Bond conflicting with said statutory or legal requirement shall be deemed deleted herefrom and provisions conforming to such statutory or other legal requirement shall be deemed incorporated herein. The intent is that this Bond shall be construed as a statutory bond and not as a common law bond.

14 Upon request by any person or entity appearing to be a potential beneficiary of this Bond, the Contractor shall promptly furnish a copy of this Bond or shall permit a copy to be made.

15 DEFINITIONS

15.1 Claimant: An individual or entity having a direct contract with the Contractor or with a subcontractor of the Contractor to furnish labor, materials or equipment for use in the performance of the Contract. The intent of this Bond shall be to include without limitation in the terms "labor, materials or equipment" that part of water, gas, power, light, heat, oil, gasoline, telephone service or rental equipment used in the Construction Contract, architectural and engineering services required for performance of the work of the Contractor and the Contractor's subcontractors, and all other items for which a mechanic's lien may be asserted in the jurisdiction where the labor, materials or equipment were furnished.

15.2 Construction Contract: The agreement between the Owner and the Contractor identified on the signature page, including all Contract Documents and changes thereto.

15.3 Owner Default: Failure of the Owner, which has neither been remedied nor waived, to pay the Contractor as required by the Construction Contract or to perform and complete or comply with the other terms thereof.

MODIFICATIONS TO THIS BOND ARE AS FOLLOWS:

Section 6 is modified by adding section 6.3.

6.3 The Surety's failure to discharge its obligations under this Section 6 shall not be deemed to constitute a waiver of defenses the Surety or Contractor may have or acquire as to a claim. However, if the Surety fails to discharge its obligations under this Section 6, the Surety shall indemnify the Claimant for the reasonable attorney's fees the Claimant incurs to recover any sums found to be due and owing to the Claimant.

(Space is provided below for additional signatures of added parties, other than those appearing on the cover page.)

CONTRACTOR AS PRINCIPAL	SURETY
Company: (Corporate Seal)	Company: (Corporate Seal)
Signature: _____	Signature: _____
Name and Title:	Name and Title:
Address:	Address:

MERCHANTS BONDING COMPANY

POWER OF ATTORNEY

Bond #: AZC 47935

Know All Persons By These Presents, that the MERCHANTS BONDING COMPANY (MUTUAL), a corporation duly organized under the laws of the State of Iowa, and having its principal office in the City of Des Moines, County of Polk, State of Iowa, hath made, constituted and appointed, and does by these presents make, constitute and appoint

Jessika Gulliver

of **Phoenix** and State of **AZ** its true and lawful Attorney-in-Fact, with full power and authority hereby conferred in its name, place and stead, to sign, execute, acknowledge and deliver in its behalf as surety any and all bonds, undertakings, recognizances or other written obligations in the nature thereof, subject to the limitation that any such instrument shall not exceed the amount of:

TWENTY MILLION ($20,000,000.00) DOLLARS

and to bind the MERCHANTS BONDING COMPANY (MUTUAL) thereby as fully and to the same extent as if such bond or undertaking was signed by the duly authorized officers of the MERCHANTS BONDING COMPANY (MUTUAL), and all the acts of said Attorney-in-Fact, pursuant to the authority herein given, are hereby ratified and confirmed.

This Power-of-Attorney is made and executed pursuant to and by authority of the following By-Laws adopted by the Board of Directors of the MERCHANTS BONDING COMPANY (MUTUAL) on April 23, 2011.

ARTICLE VI, SECTION 1(c) - The President, Secretary, Treasurer, or any Assistant Treasurer or any Assistant Secretary or any Vice President shall have power and authority to appoint Attorneys-in-Fact, and to authorize them to execute on behalf of the Company, and attach the seal of the Company thereto, bonds and undertakings, recognizances, contracts of indemnity and other writings obligatory in the nature thereof.

ARTICLE VI, SECTION 1(d) - The signature of any authorized officer and the seal of the Company may be affixed by facsimile or electronic transmission to any Power of Attorney or Certification thereof authorizing the execution and delivery of any bond, undertaking, recognizance, or other suretyship obligations of the Company, and such signature and seal when so used shall have the same force and effect as though manually fixed.

In Witness Whereof, MERCHANTS BONDING COMPANY (MUTUAL) has caused these presents to be signed by its President and its corporate seal to be hereto affixed, this 27th day of October , 2010 .

MERCHANTS BONDING COMPANY (MUTUAL)

By *Larry Taylor*

President

STATE OF IOWA
COUNTY OF POLK ss.

On this 27th day of October , 2010 , before me appeared Larry Taylor, to me personally known, who being by me duly sworn did say that he is President of the MERCHANTS BONDING COMPANY (MUTUAL), the corporation described in the foregoing instrument, and that the seal affixed to the said instrument is the Corporate Seal of the said Corporation and that the said instrument was signed and sealed in behalf of said Corporation by authority of its Board of Directors.

In Testimony Whereof, I have hereunto set my hand and affixed my Official Seal at the City of Des Moines, Iowa, the day and year first above written.

CINDY SMYTH
Commission Number 173604
My Commission Expires
March 16, 2012

Cindy Smyth

Notary Public, Polk County, Iowa

STATE OF IOWA
COUNTY OF POLK ss.

I, William Warner, Jr., Secretary of the MERCHANTS BONDING COMPANY (MUTUAL), do hereby certify that the above and foregoing is a true and correct copy of the POWER-OF-ATTORNEY executed by said MERCHANTS BONDING COMPANY (MUTUAL), which is still in full force and effect and has not been amended or revoked.

In Witness Whereof, I have hereunto set my hand and affixed the seal of the Company on this 2nd day of November , 2011 .

William Warner Jr.

Secretary

POA 0005 (9/11)

ARIZONA WATER COMPANY

VERDE VALLEY
65 Coffee Pot Drive, Suite 7
Sedona, Az 86336 PH: 928-282-7092

PROPOSAL/CONTRACT

CONTRACTOR: Weber Group, L.C..	SYSTEM: VERDE VALLEY
ADDRESS: 14825 S. Weber Drive	W.A. No(s):
CITY ST ZIP: Chandler, Az 85226-4112	BID DUE DATE: September 19, 2011

CONTRACTOR SUBMITS this PROPOSAL/CONTRACT to ARIZONA WATER COMPANY, an Arizona corporation (the "Company"), to perform the work and complete the project described on Page 2 (the "Project"), as an independent prime contractor.

1. Contractor certifies that it has a complete copy of, and has read, understands and accepts, the Company's General Conditions of Contract, and the Company's Construction Specifications and Standard Specification Drawings, (the "Specifications"), all of which are attached hereto. Contractor has examined the specific plans and related construction drawings for the Project (the "Drawings"), copies of which are also attached hereto. The General Conditions of Contract, Specifications and Drawings are incorporated into this Proposal/Contract. Contractor affirms that all work and materials to be furnished or purchased for the Project will be in strict conformance with the General Conditions of Contract, Specifications and Drawings.

2. Contractor represents and warrants that it has satisfied and complied with the provisions of Section 6, Contractor Understands Work and Working Conditions, of the General Conditions of Contract prior to submitting this Proposal/Contract.

3. Contractor represents that this Proposal/Contract is fair and honest in all respects, is submitted in good faith and is not submitted in collusion with any other company, entity or person.

4. Contractor acknowledges that one hundred percent (100%) Performance and Payment Bonds are required and must be provided to the Company prior to the commencement of work.

5. Prior to the commencement of work, Contractor will submit to the Company a list of all materials to be used in the Project. The materials list will include the manufacturer, part number, price and quantity included in this Proposal/Contract.

6. Contractor will furnish all labor, tools, equipment and materials required to complete the Project according to the General Conditions of Contract, Specifications and Drawings. No materials purchased by Contractor to be incorporated into the Project are subject to tax at the time of purchase and Contractor will not charge the Company for any such tax. Contractor will pay the applicable transaction privilege tax (the "Contracting Tax") on the Project after Contractor receives payment of the final Project invoice from the Company. The cost of materials incorporated into the Project which are exempt by Arizona Revised State Statues ("A.R.S.") from the Contracting Tax, for example, pipes or valves having a diameter of four (4) inches or larger, including equipment, fittings and any other related part that is used in operating the pipes or valves (A.R.S. §42-5061 B.6.), will not be included in the total cost of the labor and materials upon which the Contracting Tax is computed. Contractor retains full liability and obligation to pay the Contracting Tax and will defend and indemnify the Company against any demand or obligation to pay the Contracting Tax.

7. Contractor will maintain detailed accounting records of all materials purchased and incorporated into the Project. Such records will include all supporting original vendor invoices for all materials purchased. Following completion of the Project, Contractor will submit an itemized accounting to the Company which will include all supporting original vendor invoices and satisfactory evidence of payment thereof. The Company will not pay Contractor for materials not actually incorporated into the Project, and the disposition of such materials will remain Contractor's responsibility.

8. The Estimated Total Cost of the Project, shown on Page 2, is based on estimated labor and material quantities to be furnished. It includes an estimate of the Contracting Tax and the cost of the required Performance and Payment Bonds. Contractor will not cancel, modify or withdraw this Proposal/Contract during a ninety-day (90) period commencing on the Bid Due Date. The Company may accept this Proposal/Contract by signing and mailing, or otherwise delivering, a copy hereof to Contractor during such ninety-day (90) period. If the Company does not accept this Proposal/Contract during such ninety-day (90) period, Contractor may cancel this Proposal/Contract by giving written notice of cancellation to the Company.

9. Prior to the commencement of work, Contractor will provide the Company with a detailed construction schedule, in either Gantt or CPM form, identifying all tasks to be performed from the date of the written Commencement Notice through completion of the Project, including testing, training of Company Personnel and final Project invoicing. Contractor will provide the Company with a copy of such construction schedule documenting the progress of work on the Project at least monthly.

10. Contractor will not commence work on the Project until the Company gives Contractor a written Commencement Notice. Contractor will complete the Project within 125 calendar days after the Commencement Notice is issued.

11. Following the Company's written notice of satisfactory completion of the Project, and upon receipt of the final Project invoice from Contractor, the Company shall pay Contractor the actual total cost of the Project, which will be calculated as shown on Page 2, except that actual labor and material quantities installed/constructed will be substituted for the estimated labor and materials quantities and the Contracting Tax will be recalculated based on such actual labor and materials quantities.

12. The amount of applicable liquidated damages for Contractor's failure to deliver or perform within the time limit shown in Paragraph 10 may be deducted from the Company's payment of the final Project invoice. This provision shall not limit the Company's ability to terminate this Proposal/Contract for Contractor's unsatisfactory performance or failure to perform as provided in the General Conditions of Contract, Specifications or Drawings, or in this Proposal/Contract.

SPECIAL CONDITIONS:

CONSTRUCT ARSENIC REMOVAL FACILITY IN ACCORDANCE WITH SCOPE OF WORK AND REQUIREMENTS AS DEFINED IN REQUEST FOR PROPOSAL DATED, AUGUST 26, 2011 AND ARSENIC REMOVAL FACILITY TECHNICAL SPECIFICATIONS DATED, AUGUST 26, 2011

CONTRACTOR	PROPOSAL/CONTRACT ACCEPTED:
	ARIZONA WATER COMPANY
By:	By:
Print Name: MARTIN WEBER	Print Name: Fredrick K. Schneider, PE
Title: CEO	Title: Vice President - Engineering
Date: 9/19/11	Date: 10-3-2011

ARIZONA WATER COMPANY

VERDE VALLEY
65 Coffee Pot Drive, Suite 7
Sedona, Az 86336 PH: 928-282-7092

PROPOSAL/CONTRACT

CONTRACTOR: Weber Group, L.C.	SYSTEM: VERDE VALLEY
AZ CONTRACTOR LICENSE NO: KA 146267 CLASSIFICATION: Dual Engineering	W.A. No(s):
ADDRESS: 16825 S. Weber Drive	BID DUE DATE: September 19, 2011
CITY ST ZIP Chandler, Az 85226-4112	BID BOND REQUIRED ☑ Yes ☐ No

DESCRIPTION OF PROJECT: DESIGN, PERMIT, CONSTRUCT AND MAKE OPERATIONAL AN ARSENIC REMOVAL FACILITY AT BROKEN ARROW WELL NO. 10.

1-2. MATERIALS EXEMPT FROM CONTRACTING TAX (per Paragraph 6)	QUANTITY	UNIT PRICE LABOR	UNIT PRICE MATERIALS	TOTAL COST LABOR	TOTAL COST MATERIALS
Engineering Design and Permitting	1	25882		25882	
Provide and Install On-Site Piping	1	4471	5421	4471	5421
Provide and Install Arsenic Removal Facility	1	21882	211725	21882	211725
Provide and Install Backwash Recovery System	1	6647	29176	6647	29176
Provide and Install On-Site Electrical	1	9512	21344	9512	21344
Testing, Commissioning, and On-Site Operator Training	1	1412	4235	1412	4235
3. Total Labor to Install Exempt Materials (add the amounts in column 1)				3 69806	
4. Total Exempt Materials (add the amounts in column 2)					4 271,901

5-6. NON-EXEMPT MATERIALS	QUANTITY	LABOR	MATERIALS	LABOR	MATERIALS
Mobilization	1	4353	2353	4353	2353
Commissioning Tank + Piping	1	1529	5530	1529	5530
				5	6
7. Total Labor to Install Non-Exempt Materials (add the amounts in column 5)				7 5882	
8. Total Non-Exempt Materials (add the amounts in column 6)					8 7883
9. Subtotal A (add lines 3, 7 and 8)					9 283571
10. Contracting Tax Base (multiply the amount on line 9 by 0.65)				10 5434.15	
11. Applicable Contracting Tax Rate				11 10.35	
12. Contracting Tax (multiply the amount on line 10 by line 11)					12 5622.24
13. Subtotal B (add lines 4, 9 and 12)					13 361094.24
14. 100% Performance and Payment Bonds Cost					14 5,199.76
15. Estimated Total Cost (add lines 13 and 14)					15 366,294.00

NOTE: The Estimated Total Cost includes all labor and materials for backfill, pavement replacement, chip seal, and traffic control necessary for the Project.

THE AMERICAN INSTITUTE OF ARCHITECTS

AIA Document A310

Bid Bond

KNOW ALL MEN BY THESE PRESENTS, that we
Weber Group, LC
16825 S. Weber Dr. Chandler, Az 85226
(Here insert full name ,and address or legal title of Contractor)
as Principal, hereinafter called the Principal, and
MERCHANTS BONDING COMPANY (MUTUAL)
2100 FLEUR DRIVE DES MOINES, IA 50321-1158
a corporation duly organized under the laws of the State of **IOWA** as Surety, hereinafter called the Surety, are held and firmly bound unto **ARIZONA WATER COMPANY**
3805 N. BLACK CANYON HIGHWAY PHOENIX, AZ 85038
(Here insert full name ,and address or legal title of Owner)
as Obligee, hereinafter called the Obligee, in the sum of **Ten Percent of Amount Bid**----------Dollars ($ 10%),
for the payment of which sum well and truly to be made, the said Principal and the said Surety, bind ourselves, our heirs, executors, administrators, successors and assigns, jointly and severally, firmly by these presents.

WHEREAS, the Principal has submitted a bid for
Broken Arrow # 10
(Here insert full name, address and description of project)
NOW, THEREFORE, if the Obligee shall accept the bid of the Principal and the Principal shall enter into a Contract with the Obligee in accordance with the terms of such bid and give such bond or bonds as may be specified in the bidding or Contract Documents with good and sufficient surety for the faithful performance of such Contract and for the prompt payment of labor and material furnished in the prosecution thereof, or in the event of the failure of the Principal to enter such Contract and give such bond or bonds, if the Principal shall pay to the Obligee the difference not to exceed the penalty hereof between the amount specified in said bid and such larger amount for which the Obligee may in good faith contract with another party to perform the Work covered by said bid then this obligation shall be null and void, otherwise to remain in full force and effect.

Signed and sealed this 19th day of **September, 2011**

	Weber Group, LC
(Witness)	(Principal) (Seal)
	(Title)
	MERCHANTS BONDING COMPANY (MUTUAL)
(Witness)	(Surety) (Seal)
	Jessika Gulliver(Title) Attorney-In-Fact

WARNING: Unlicensed photocopying violates U.S. copyright laws and is subject to legal prosecution.

MERCHANTS BONDING COMPANY
POWER OF ATTORNEY

Know All Persons By These Presents, that the MERCHANTS BONDING COMPANY (MUTUAL), a corporation duly organized under the laws of the State of Iowa, and having its principal office in the City of Des Moines, County of Polk, State of Iowa, hath made, constituted and appointed, and does by these presents make, constitute and appoint

Jessika Gulliver

of **Phoenix** and State of **ARIZONA** its true and lawful Attorney-in-Fact, with full power and authority hereby conferred in its name, place and stead, to sign, execute, acknowledge and deliver in its behalf as surety any and all bonds, undertakings, recognizances or other written obligations in the nature thereof, subject to the limitation that any such instrument shall not exceed the amount of:

TWENTY MILLION ($20,000,000.00) DOLLARS

and to bind the MERCHANTS BONDING COMPANY (MUTUAL) thereby as fully and to the same extent as if such bond or undertaking was signed by the duly authorized officers of the MERCHANTS BONDING COMPANY (MUTUAL), and all the acts of said Attorney-in-Fact, pursuant to the authority herein given, are hereby ratified and confirmed.

This Power-of-Attorney is made and executed pursuant to and by authority of the following Amended Substituted and Restated By-Laws adopted by the Board of Directors of the MERCHANTS BONDING COMPANY (MUTUAL) on November 16, 2002.

ARTICLE II, SECTION 8 - The Chairman of the Board or President or any Vice President or Secretary shall have power and authority to appoint Attorneys-in-Fact, and to authorize them to execute on behalf of the Company, and attach the Seal of the Company thereto, bonds and undertakings, recognizances, contracts of indemnity and other writings obligatory in the nature thereof.

ARTICLE II, SECTION 9 - The signature of any authorized officer and the Seal of the Company may be affixed by facsimile to any Power of Attorney or Certification thereof authorizing the execution and delivery of any bond, undertaking, recognizance, or other suretyship obligations of the Company, and such signature and seal when so used shall have the same force and effect as though manually fixed.

In Witness Whereof, MERCHANTS BONDING COMPANY (MUTUAL) has caused these presents to be signed by its President and its corporate seal to be hereto affixed, this 26th day of November , 2008 .

MERCHANTS BONDING COMPANY (MUTUAL)

By *Larry Taylor*

President

STATE OF IOWA
COUNTY OF POLK ss.

On this 26th day of November , 2008 before me appeared Larry Taylor, to me personally known, who being by me duly sworn did say that he is President of the MERCHANTS BONDING COMPANY (MUTUAL), the corporation described in the foregoing instrument, and that the Seal affixed to the said instrument is the Corporate Seal of the said Corporation and that the said Instrument was signed and sealed in behalf of said Corporation by authority of its Board of Directors.

In Testimony Whereof, I have hereunto set my hand and affixed my Official Seal at the City of Des Moines, Iowa, the day and year first above written.

CINDY SMYTH
Commission Number 173504
My Commission Expires
March 16, 2012

Cindy Smyth

Notary Public, Polk County, Iowa

STATE OF IOWA
COUNTY OF POLK ss.

I, William Warner, Jr., Secretary of the MERCHANTS BONDING COMPANY (MUTUAL), do hereby certify that the above and foregoing is a true and correct copy of the POWER-OF-ATTORNEY executed by said MERCHANTS BONDING COMPANY (MUTUAL), which is still in full force and effect and has not been amended or revoked.

In Witness Whereof, I have hereunto set my hand and affixed the seal of the Company on this 19th day of September , 2011

William Warner Jr.

Secretary

POA 0005 (1/09)

State of Arizona
County of Maricopa

The foregoing instrument (Bid Bond for Broken Arrow #10 -Arsenic Removal Facility) was acknowledged before me this 19th day of September, 2011 by Marty Weber, on behalf of Weber Group, L.C., a limited liability company.

Susan A. Collins
Notary Public

My commission expires on: Oct 6, 2012

ARIZONA WATER

BROKEN ARROW WELL 10

SEPTEMBER 27, 2011

Activity Name	Start Date	Finish Date
NOTICE OF AWARD	9/23/11	9/23/11
30% DESIGN DRAWINGS & MEETING	9/23/11	10/14/11
TANK, VALVES, FITTINGS SUBMITTAL	9/26/11	10/14/11
ORDER TANKS	10/20/11	10/21/11
90% DESIGN DRAWINGS	10/14/11	10/21/11
SUBMIT FOR ATC EXPEDITED, SUBMIT TO sEDONA FOR BUILDING SAFETY PERMIT	10/31/11	10/31/11
ATC COMMENTS & RESPONSE	10/31/11	11/11/11
ESTIMATED ATC AND BUILDING PERMIT	11/11/11	11/30/11
AZ WATER TAKE DOWN SITE	10/31/11	11/28/11
UNDERGROUND PIPING	12/5/11	12/16/11
UNDERGROUND CONDUIT	12/5/11	12/16/11
POUR PADS	12/19/11	12/30/11
TANK, PIPE AND FITTINGS DELIVERY	10/21/11	12/23/11

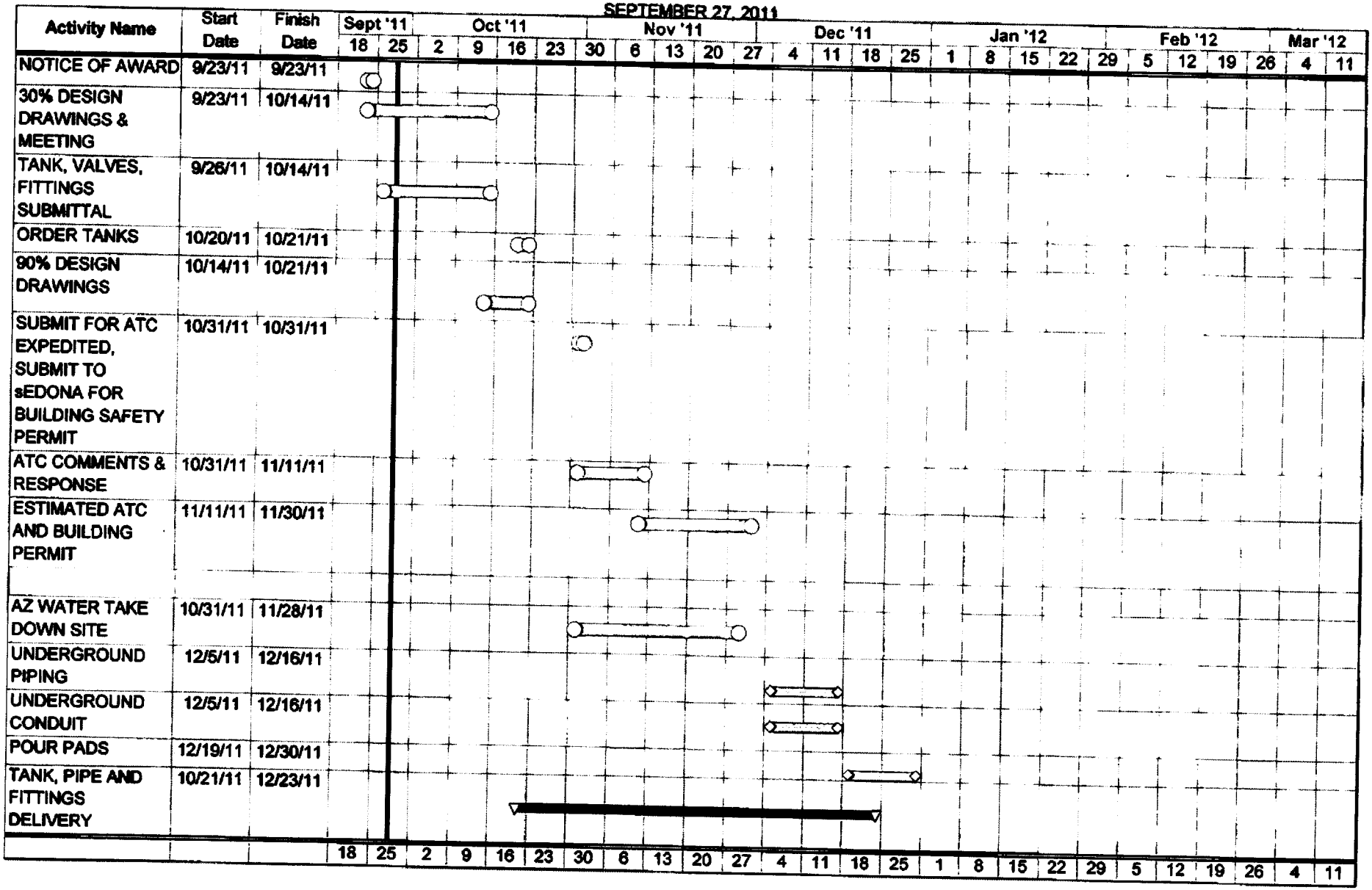

ARIZONA WATER

BROKEN ARROW WELL 10

SEPTEMBER 27, 2011

Activity Name	Start Date	Finish Date
BUILD PIPING IN SHOP & PAINT TANKS	12/26/11	1/27/12
INSTALL TANKS AND PIPING ONSITE	1/30/12	2/10/12
ELECTRICAL HOOKUPS	2/6/12	2/8/12
INSTALL MEDIA, FLUSH AND TAKE SAMPLES	2/13/12	2/17/12
PAINT FACILITIES	2/20/12	2/21/12
CLOSE OUT BUILDING PERMIT	2/22/12	2/24/12
O&M'S , BACTEE TESTS, PRESSURE TESTS TO ADEQ	2/27/12	2/28/12
TRAINING & PLANT COMMISSIONING	3/12/12	3/14/12
EXPECTED AOC	3/14/12	3/14/12

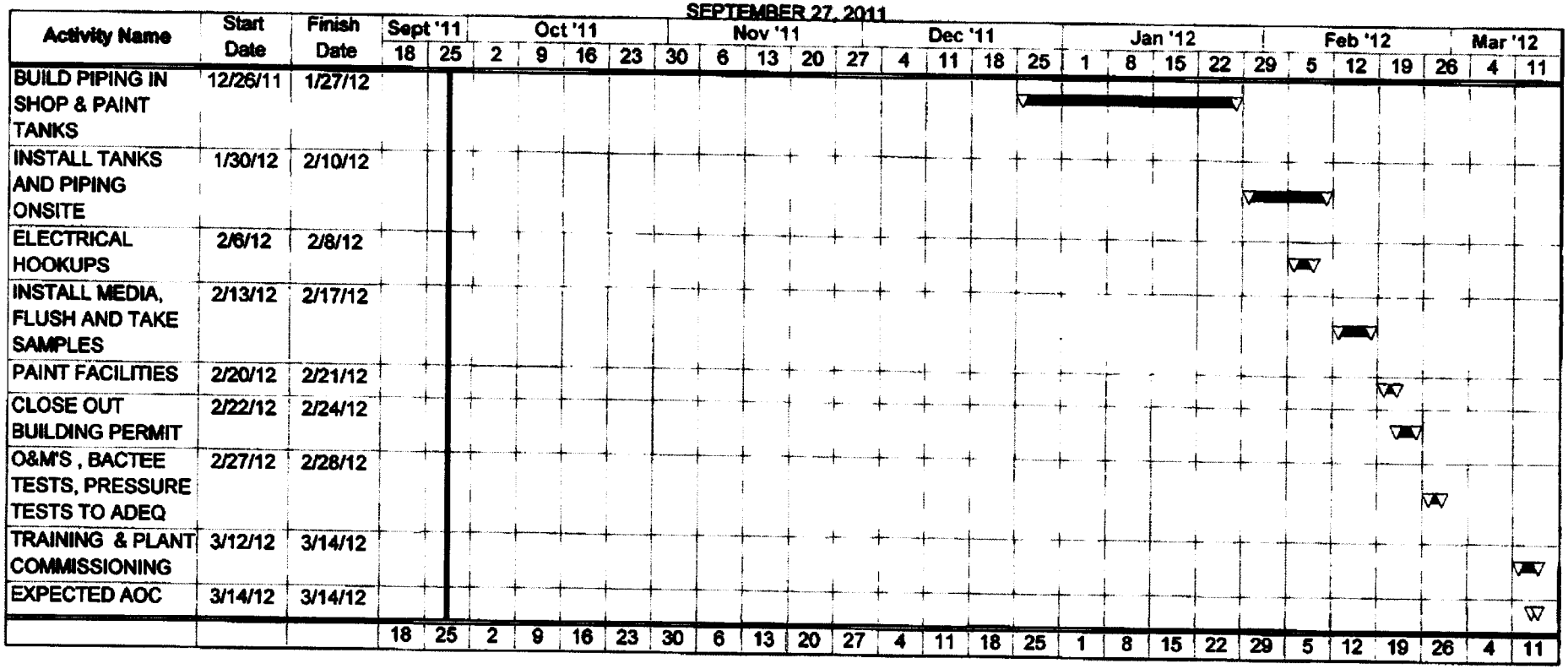

ARIZONA WATER COMPANY

3805 N. BLACK CANYON HIGHWAY, PHOENIX, ARIZONA 85015-5351 • P.O. BOX 29006, PHOENIX, AZ 85038-9006
PHONE: (602) 240-6860 • FAX: (602) 240-6874 • TOLL FREE: (800) 533-6023 • www.azwater.com

October 31, 2011

Mr. Jeff Wold
Weber Group LC
16825 S. Weber Drive
Chandler, Arizona 85226-4112

Re: Broken Arrow Well No. 10 Arsenic Removal Facility

PROJECT: Broken Arrow Well #10 ARF	
SYSTEM: Verde Valley	
CONTRACT NO.:	
P.E. NO.:	W.A. NO.: 1-4875

Dear Mr. Wold:

Enclosed is your copy of the Proposal/Contract for the above-referenced project, which has been accepted by Arizona Water Company (the "Company"). The project shall be constructed in accordance with the Company's *General Conditions of Contract, the Specifications and the Drawings* which were included with the Company's previously provided Proposal/Contract, copies of which are being provided again and attached herewith.

Also enclosed are two copies of the Commencement Notice for the above-referenced project. Please sign one of the copies and return it to my attention retaining the other for your records.

As provided in paragraph 4 of the Company's Proposal/Contract executed by the Company on October 3, 2011, Weber Group, LC acknowledged that one hundred percent (100%) Performance and Payment Bonds are required and must be provided to the Company prior to the commencement of work. In addition, as provided in paragraph 44 of the Company's General Conditions of Contract, the 100% Performance and Payment Bonds must be provided within ten (10) calendar days of the date of the Commencement Notice. Failure to provide an acceptable 100% Performance and Payment Bond does not limit the Company's ability to

terminate the Proposal/Contract or seek restitution for damages that the Company may have or will incur.

Please provide the required Performance and Payment Bonds to the Company promptly so that the contracted work can be completed within the contract's timeline.

If you have any questions, please call me at this office.

Very truly yours,

Andrew J. Haas, EIT
Engineer
ahaas@azwater.com

afh
Enclosure

ARIZONA WATER COMPANY

COMMENCEMENT NOTICE

CONTRACTOR:

Weber Group LC
Jeff Wold
16825 S. Weber Drive
Chandler, Arizona 85226

DATE: October 3, 2011
DIVISION: VERDE VALLEY
SYSTEM: SEDONA
W.A.: 1-4875

THIS IS YOUR NOTICE TO PROCEED WITH THE FOLLOWING PROJECT(S):

DESCRIPTION OF WORK:

DESIGN, PERMIT, CONSTRUCT AND MAKE OPERATIONAL AN ARSENIC REMOVAL FACILITY AT BROKEN ARROW WELL NO. 10.

PERFORMANCE AND PAYMENT BONDS REQUIRED: [X] Yes [ ] No

TOTAL DAYS ALLOWED: 175

COMPLETION DATE: March 26, 2012

ARIZONA WATER COMPANY
Company

By [signature]
Title Vice President - Engineering

WEBER GROUP LC
Contractor *(type name)*

By _____
Title _____

ARIZONA WATER COMPANY

VERDE VALLEY
65 Coffee Pot Drive, Suite 7
Sedona, Az 86336 PH: 928-282-7092

PROPOSAL/CONTRACT

CONTRACTOR: Weber Group, L.C..	SYSTEM: VERDE VALLEY
ADDRESS: 14825 S. Weber Drive	W.A. No(s):
CITY ST ZIP: Chandler, Az 85226-4112	BID DUE DATE: September 19, 2011

CONTRACTOR SUBMITS this PROPOSAL/CONTRACT to ARIZONA WATER COMPANY, an Arizona corporation (the "Company"), to perform the work and complete the project described on Page 2 (the "Project"), as an independent prime contractor

1. Contractor certifies that it has a complete copy of, and has read, understands and accepts, the Company's General Conditions of Contract, and the Company's Construction Specifications and Standard Specification Drawings, (the "Specifications"), all of which are attached hereto. Contractor has examined the specific plans and related construction drawings for the Project (the "Drawings"), copies of which are also attached hereto. The General Conditions of Contract, Specifications and Drawings are incorporated into this Proposal/Contract. Contractor affirms that all work and materials to be furnished or purchased for the Project will be in strict conformance with the General Conditions of Contract, Specifications and Drawings.
2. Contractor represents and warrants that it has satisfied and complied with the provisions of Section 6, Contractor Understands Work and Working Conditions, of the General Conditions of Contract prior to submitting this Proposal/Contract.
3. Contractor represents that this Proposal/Contract is fair and honest in all respects, is submitted in good faith and is not submitted in collusion with any other company, entity or person.
4. Contractor acknowledges that one hundred percent (100%) Performance and Payment Bonds are required and must be provided to the Company prior to the commencement of work.
5. Prior to the commencement of work, Contractor will submit to the Company a list of all materials to be used in the Project. The materials list will include the manufacturer, part number, price and quantity included in this Proposal/Contract.
6. Contractor will furnish all labor, tools, equipment and materials required to complete the Project according to the General Conditions of Contract, Specifications and Drawings. No materials purchased by Contractor to be incorporated into the Project are subject to tax at the time of purchase and Contractor will not charge the Company for any such tax. Contractor will pay the applicable transaction privilege tax (the "Contracting Tax") on the Project after Contractor receives payment of the final Project invoice from the Company. The cost of materials incorporated into the Project which are exempt by Arizona Revised State Statues ("A.R.S.") from the Contracting Tax, for example, pipes or valves having a diameter of four (4) inches or larger, including equipment, fittings and any other related part that is used in operating the pipes or valves (A.R.S. §42-5061 B.6.), will not be included in the total cost of the labor and materials upon which the Contracting Tax is computed. Contractor retains full liability and obligation to pay the Contracting Tax and will defend and indemnify the Company against any demand or obligation to pay the Contracting Tax.
7. Contractor will maintain detailed accounting records of all materials purchased and incorporated into the Project. Such records will include all supporting original vendor invoices for all materials purchased. Following completion of the Project, Contractor will submit an itemized accounting to the Company which will include all supporting original vendor invoices and satisfactory evidence of payment thereof. The Company will not pay Contractor for materials not actually incorporated into the Project, and the disposition of such materials will remain Contractor's responsibility.
8. The Estimated Total Cost of the Project, shown on Page 2, is based on estimated labor and material quantities to be furnished. It includes an estimate of the Contracting Tax and the cost of the required Performance and Payment Bonds. Contractor will not cancel, modify or withdraw this Proposal/Contract during a ninety-day (90) period commencing on the Bid Due Date. The Company may accept this Proposal/Contract by signing and mailing, or otherwise delivering, a copy hereof to Contractor during such ninety-day (90) period. If the Company does not accept this Proposal/Contract during such ninety-day (90) period, Contractor may cancel this Proposal/Contract by giving written notice of cancellation to the Company.
9. Prior to the commencement of work, Contractor will provide the Company with a detailed construction schedule, in either Gantt or CPM form, identifying all tasks to be performed from the date of the written Commencement Notice through completion of the Project, including testing, training of Company Personnel and final Project invoicing. Contractor will provide the Company with a copy of such construction schedule documenting the progress of work on the Project at least monthly
10. Contractor will not commence work on the Project until the Company gives Contractor a written Commencement Notice. Contractor will complete the Project within 125 calendar days after the Commencement Notice is issued.
11. Following the Company's written notice of satisfactory completion of the Project, and upon receipt of the final Project invoice from Contractor, the Company shall pay Contractor the actual total cost of the Project, which will be calculated as shown on Page 2, except that actual labor and material quantities installed/constructed will be substituted for the estimated labor and materials quantities and the Contracting Tax will be recalculated based on such actual labor and materials quantities.
12. The amount of applicable liquidated damages for Contractor's failure to deliver or perform within the time limit shown in Paragraph 10 may be deducted from the Company's payment of the final Project invoice. This provision shall not limit the Company's ability to terminate this Proposal/Contract for Contractor's unsatisfactory performance or failure to perform as provided in the General Conditions of Contract, Specifications or Drawings, or in this Proposal/Contract.

SPECIAL CONDITIONS:

CONSTRUCT ARSENIC REMOVAL FACILITY IN ACCORDANCE WITH SCOPE OF WORK AND REQUIREMENTS AS DEFINED IN REQUEST FOR PROPOSAL DATED, AUGUST 26, 2011 AND ARSENIC REMOVAL FACILITY TECHNICAL SPECIFICATIONS DATED, AUGUST 26, 2011

CONTRACTOR	PROPOSAL/CONTRACT ACCEPTED: ARIZONA WATER COMPANY
By:	By:
Print Name: MARTIN WEBER	Print Name: Fredrick K. Schneider, PE
Title: CEO	Title: Vice President - Engineering
Date: 9/14/11	Date: 10-3-2011

ARIZONA WATER COMPANY

VERDE VALLEY
65 Coffee Pot Drive, Suite 7
Sedona, Az 86336 PH: 928-282-7092

PROPOSAL/CONTRACT

CONTRACTOR: Weber Group, L.C.	SYSTEM: VERDE VALLEY
AZ CONTRACTOR LICENSE NO: KA 146267 CLASSIFICATION: Dual Engineering	W.A. No(s).
ADDRESS: 16825 S. Weber Drive	BID DUE DATE: September 19, 2011
CITY ST ZIP Chandler, Az 85226-4112	BID BOND REQUIRED ☑ Yes ☐ No

DESCRIPTION OF PROJECT: DESIGN, PERMIT, CONSTRUCT AND MAKE OPERATIONAL AN ARSENIC REMOVAL FACILITY AT BROKEN ARROW WELL NO. 10.

1-2. MATERIALS EXEMPT FROM CONTRACTING TAX (per Paragraph 6)	QUANTITY	UNIT PRICE LABOR	UNIT PRICE MATERIALS	TOTAL COST LABOR	TOTAL COST MATERIALS
Engineering Design and Permitting	1	25882		25882	
Provide and Install On-Site Piping	1	4471	5421	4471	5421
Provide and Install Arsenic Removal Facility	1	21882	211725	21882	211725
Provide and Install Backwash Recovery System	1	6647	23176	6647	23176
Provide and Install On-Site Electrical	1	9512	21344	9512	21344
Testing, Commissioning, and On-Site Operator Training	1	1412	4235	1412	4235
				1	2
3. Total Labor to Install Exempt Materials (add the amounts in column 1)				3 69806	
4. Total Exempt Materials (add the amounts in column 2)					4 271,901

5-6. NON-EXEMPT MATERIALS	QUANTITY	LABOR	MATERIALS	LABOR	MATERIALS
Mobilization	1	4353	2353	4353	2353
Commissioning Tank & Piping	1	1529	5530	1529	5530
				5	6
7. Total Labor to Install Non-Exempt Materials (add the amounts in column 5)				7 5882	
8. Total Non-Exempt Materials (add the amounts in column 6)					8 7883
9. Subtotal A (add lines 3, 7 and 8)					9 283571
10. Contracting Tax Base (multiply the amount on line 9 by 0.65)				10 54324.15	
11. Applicable Contracting Tax Rate				11 10.35	
12. Contracting Tax (multiply the amount on line 10 by line 11)					12 5622.24
13. Subtotal B (add lines 4, 9 and 12)					13 361094.24
14. 100% Performance and Payment Bonds Cost					14 5199.76
15. Estimated Total Cost (add lines 13 and 14)					15 366294.00

NOTE: The Estimated Total Cost includes all labor and materials for backfill, pavement replacement, chip seal, and traffic control necessary for the Project.

BROKEN ARROW WELL No. 10
ARSENIC REMOVAL FACILITY UPGRADES
ARIZONA WATER COMPANY
SEDONA, AZ

OWNER:
ARIZONA WATER COMPANY
3805 N. BLACK CANYON HWY
PHOENIX, AZ 85015
PHONE: (602) 240-6860
FAX: (602) 240-6878

DESIGN ENGINEER:
TRES RIOS CONSULTING ENGINEERS
230 W. BASELINE RD. SUITE 101A
TEMPE, AZ. 85282
PHONE: (480) 755-1042
FAX: (480) 755-1043

STATE REGULATORY AGENCY :
ARIZONA DEPARTMENT OF
ENVIRONMENTAL QUALITY
WATER QUALITY DIVISION
1110 W. WASHINGTON STREET,
PHOENIX, AZ. 85007

GENERAL NOTES

1. ALL HORIZONTAL AND VERTICAL CONTROL INFORMATION PRESENTED IN THESE DRAWINGS ARE APPROXIMATE AND BASED ON REFERENCE DATA. NO SURVEYS WERE PERFORMED TO GENERATE THESE PLANS.
2. LOCATIONS, ELEVATIONS, AND DIMENSIONS OF EXISTING UTILITIES, STRUCTURES, AND OTHER FEATURES ARE SHOWN AS APPROXIMATE BASED ON THE BEST AVAILABLE INFORMATION AT THE TIME OF PREPARATION OF THESE PLANS.
3. INFORMATION IN THESE CONTRACT DOCUMENTS IS SOLELY TO ASSIST THE CONTRACTOR IN ASSESSING THE NATURE AND EXTENT OF CONDITIONS THAT MAY BE ENCOUNTERED DURING CONSTRUCTION. CONTRACTOR IS ADVISED, PRIOR TO BIDDING, TO CONDUCT ALL INVESTIGATIONS THAT THEY DEEM NECESSARY TO ARRIVE AT THEIR OWN CONCLUSIONS REGARDING THE ACTUAL CONDITIONS THAT WILL BE ENCOUNTERED, AND UPON WHICH THEIR BID WILL BE BASED.
4. THE CONTRACTOR WILL IMMEDIATELY NOTIFY THE ENGINEER WHEN CONFLICTS BETWEEN THE DRAWINGS AND ACTUAL CONDITIONS ARE DISCOVERED.
5. ALL WETTED PARTS AND MATERIALS IN THIS PROJECT SUCH AS PIPING AND FITTINGS SHALL BEAR THE SEAL OF THE NATIONAL SANITATION FOUNDATION, AND WILL CONFORM TO NSF STANDARDS 60 AND 61.
6. CONSTRUCTION MATERIALS USED IN THE WATER SYSTEM WILL BE LEAD FREE AS DEFINED BY AAC R18-5-504 AND R18-4-101.
7. NEW WATER MAINS AND CONNECTIONS WILL BE PRESSURE AND LEAKAGE TESTED IN ACCORDANCE WITH AWWA C605 STANDARD.
8. WATER MAINS AND TREATMENT FACILITIES WILL BE DISINFECTED BY CHLORINATION IN ACCORDANCE WITH AWWA C60-1 STANDARD OR ADEQ BULLETIN NO. 8.
9. MINIMUM DEPTH OF COVER FOR BURIED WATER PIPES UP TO 12-INCHES DIAMETER WILL BE 3-FEET, FOR ALL BURIED PIPES 12-INCHES DIAMETER AND LARGER, THE COVER DEPTH WILL BE 4-FEET.
10. WATER AND SEWER MAINS MUST BE SEPARATED IN ACCORDANCE WITH AAC R18-5-502..
11. THE CONTRACTOR IS RESPONSIBLE FOR LOCATING ALL UNDERGROUND UTILITIES IN THE FIELD PRIOR TO EXCAVATING.
12. PIPE, FITTINGS, VALVES, FIRE HYDRANTS, AND OTHER APPURTENANCES SHALL CONFORM TO THE CURRENT STANDARDS OF THE AMERICAN WATER WORKS ASSOCIATION, AMERICAN STANDARDS ASSOCIATION OF THE FEDERAL GOVERNMENT.
13. EVIDENCE THAT A PRODUCT CONFORMS TO THE REQUIREMENTS OF THIS SECTION SHALL BE THE APPEARANCE ON THE PRODUCT OR PRODUCT PACKAGE OF A SEAL OF A CERTIFYING ENTITY THAT IS ACCREDITED BY THE AMERICAN NATIONAL STANDARDS INSTITUTE TO PROVIDE CERTIFICATION.

PERMIT COMPLIANCE

AGENCY	PERMIT DESCRIPTION	DATE
ADEQ	SYSTEM ID 03-003,POE #008	DONE
ADEQ	APPROVAL TO CONSTRUCT (ATC) PERMIT # 20110274	12/29/2011
ADEQ	APPROVAL OF CONSTRUCTION (AOC)	
CITY OF SEDONA	BUILDING PERMIT B11729	12/27/2011

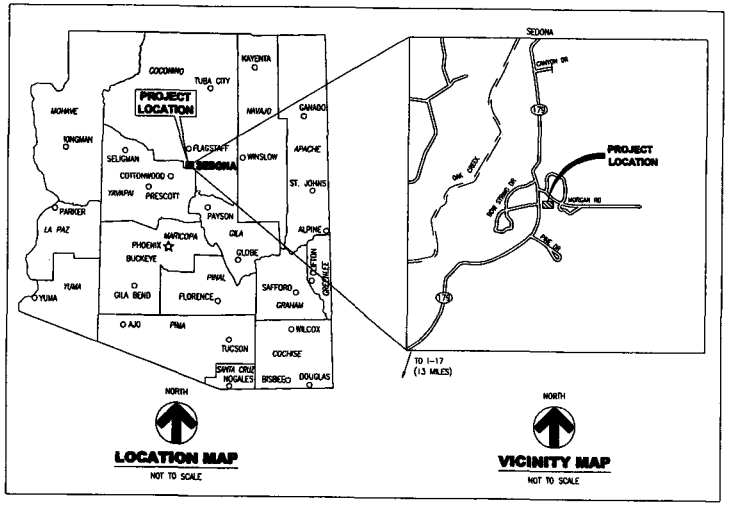

PROJECT LOCATION:
THIS PROJECT SITE IS LOCATED ON LOT 7 OF THE "BROKEN ARROW SUBDIVISION" BOOK 2 OF MAPS, PAGE 37. THE SITE IS LOCATED WITHIN THE NORTHWEST 1/4 OF THE NORTHEAST 1/4 OF SECTION 19, TOWNSHIP 17 NORTH, RANGE 5 EAST OF THE GILA & SALT RIVER MERIDIAN, LOCATED IN COCONINO COUNTY, ARIZONA.

BENCHMARK:
SITE BENCHMARK IS 1/2-INCH REBARD WITH PLASTIC CAP, RLS #18184 AT NORTHEAST CORNER OF SUBJECT PROPERTY. ELEVATION IS 4251.78-FT ABOVE SEA LEVEL.

REFERENCE DRAWING NO. 110067, SHEET 1 OF 1 ARIZONA WATER-BROKEN WELL SITE TOPOGRAPHICAL SURVEY BY HANSEN ENGINEERING & SURVEYING.

DRAWING INDEX

SHEET No.	TITLE
G-1	COVER SHEET
G-2	SITE MAP, LEGEND AND ABBREVIATIONS
G-3	SCOPE OF WORK AND SPECIFICATIONS
G-4	PROCESS FLOW DIAGRAM
C-1	ARSENIC REMOVAL FACILITY SITE PLAN
C-2	EQUIPMENT PAD DETAILS
C-3	CIVIL DETAILS
M-1	ARSENIC REMOVAL SYSTEM-1
M-2	ARSENIC REMOVAL SYSTEM-2
M-3	ARSENIC REMOVAL SYSTEM MANIFOLD
M-4	PIPING DETAILS
M-5	ARSENIC REMOVAL VESSEL
M-6	INTERNAL PIPING DETAILS
M-7	BACKWASH TANK DETAILS

AS-BUILT CERTIFICATION:

I CERTIFY THAT THE "AS-BUILT" INFORMATION SHOWN HEREON WAS OBTAINED UNDER MY DIRECT SUPERVISION AND IS CORRECT AND COMPLETE TO THE BEST OF MY KNOWLEDGE AND BELIEF.

Registered Professional Engineer 50812 BLAKE E. ABTS ARIZONA, USA
EXPIRES 03/31/2013

NAME: _____

REGISTRATION NO. 50812

REV	DESCRIPTION	APPROVED	DATE
AB	AS-BUILT DRAWING SET	B.E.A.	04/03/12
0	CONSTRUCTION SET	B.E.A.	01/05/12
A	APPROVAL TO CONSTRUCT PERMIT	J.W.B.	11/15/11

PROJECT TITLE: BROKEN ARROW ARSENIC REMOVAL FACILITY

SHEET TITLE: COVER SHEET

SHEET NO. G-1

SIGNATURES	DATE	OWNER:
DRAWN C.R.	11/15/11	
CHECKED B.E.A.	11/15/11	
ENGINEER J.W.B.	11/15/11	

SCALE: NOT TO SCALE

PROJ. NO. 109411

ARIZONA WATER COMPANY

Registered Professional Engineer 50812 BLAKE E. ABTS ARIZONA, USA
EXPIRES 03/31/2013

Tres Rios Consulting Engineers
230 W. Baseline Road, Suite 101A
Tempe, AZ 85282 (480) 755-1042
www.trios.com

Arizona Blue Stake, Inc. 811 or 1-800-STAKE-IT

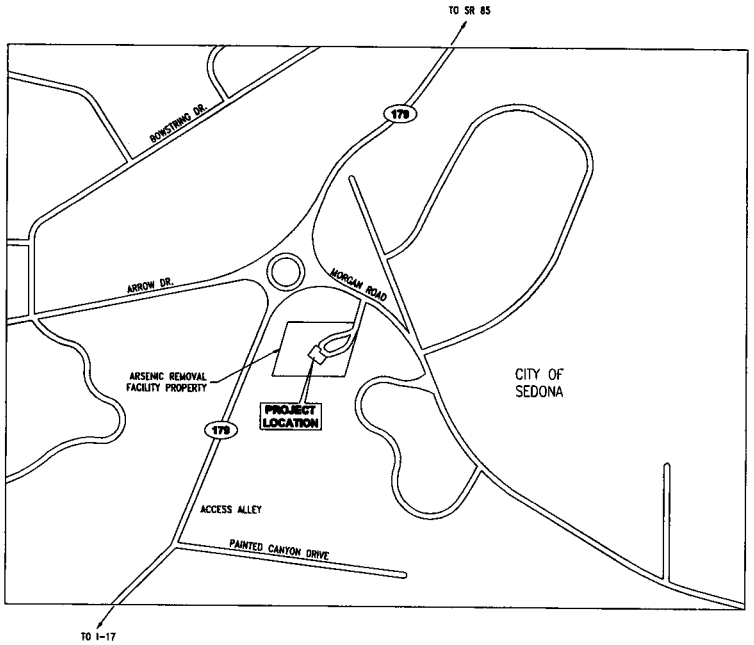

SITE LOCATION
NOT TO SCALE

NORTH

LEGEND:

- UNDERGROUND PIPE
- EXISTING PIPE
- 12" W — WATER PIPE
- 4" IR — IRRIGATION PIPE
- 10" S — SANITARY SEWER
- 2" DRAIN — DRAIN PIPE
- CONCRETE SECTION
- EARTH SECTION
- ASPHALT SECTION
- CMU WALL
- GROUNDWATER WELL
- DRAINAGE DIRECTION
- EXISTING UTILITY POLE
- EXISTING UTILITY BOX
- EXISTING CHAIN LINK FENCE
- CHAIN LINK FENCE
- PROPERTY LINE
- CENTER LINE
- MATCH LINE
- OHE — EXISTING OVERHEAD ELECTRICAL
- GATE VALVE
- SAMPLE PORT
- 8 — FLOWMETER
- PUMP CONTROL VALVE
- BALL VALVE
- WYE STRAINER
- CHECK VALVE
- REDUCER
- BUTTERFLY VALVE
- FLOW CONTROL VALVE
- M — MAGNETIC FLOWMETER
- FLEXIBLE COUPLING
- PRESSURE RELIEF VALVE
- AIR RELEASE VALVE
- HIGH PRESSURE RELIEF VALVE

SECTION LETTER OR DETAIL NUMBER IDENTIFICATION

A
C3 | C4

SHEET NUMBER FROM WHICH SECTION OR DETAIL IS TAKEN

SHEET NUMBER ON WHICH SECTION OR DETAIL IS DRAWN

ABBREVIATIONS:

ABC – AGGREGATE BASE COURSE
AGS – ABOVE GRADE SURFACE
AFF – ABOVE FINISHED FLOOR
ACC – ACCESS
AP – ACCESS PANEL
AGG – AGGREGATE
ANSI – AMERICAN NATIONAL STANDARDS INSTITUTE
ASTM – AMERICAN SOCIETY OF TESTING MATERIALS
AWWA – AMERICAN WATER WORKS ASSOCIATION
APX – APPROXIMATE
ADEQ – ARIZONA DEPARTMENT OF ENVIRONMENTAL QUALITY
ASPH – ASPHALT
ASSY – ASSEMBLY
APWA – AMERICAN PUBLIC WORKS ASSOCIATION
BEL – BELOW
B/C – BACK OF CURB
BGS – BELOW GRADE SURFACE
BM – BENCH MARK
BRZ – BRONZE
BLDG–BUILDING
BFV – BUTTERFLY VALVE
BT – BLADDER TANK
CS – CARBON STEEL
CIPC – CAST IN PLACE CONCRETE
CSMT – CASEMENT
CO – CLEAN OUT
CI – CAST IRON
CK – CAULDING
CEM – CEMENT
CV – CHECK VALVE
CPVC – CHLORINATED POLYVINYL CHLORIDE
CLR – CLEARANCE
CONC – CONCRETE
CMU – CONCRETE MASONRY UNIT
CONT – CONTINUOUS
CO – COPPER PIPE
CFT – CUBIC FOOT
CFM – CUBIC FEET PER MINUTE
CYD – CUBIC YARD
℄ – CENTERLINE
DTL – DETAIL
DIA – DIAMETER
DPI – DIFFERENTIAL PRESSURE INDICATOR
DIM – DIMENSION
DIP – DUCTILE IRON PIPE
EA – EACH
EW – EACH WAY
E – EAST
EOP–EDGE OF PAVEMENT
ELEC – ELECTRIC
ELEV – ELEVATION
EMB – EMBEDMENT
EPDM – ETHYLENE PROPYLENE DIENE MONOMER
EXIST – EXISTING
EXT – EXTERIOR
FLX – FLEXIBLE
FG – FINISHED GRADE
FLG – FLANGE
FM – FLOW METER
FND – FOUNDATION
FBO – FURNISHED BY OTHERS
FRP – FIBERGLASS REINFORCED PLASTIC
FUT – FUTURE
G – GUTTER
GALS – GALLONS
GALV – GALVANIZED
GP – GALVANIZED PIPE
GV – GLOBE VALVE
GD – GRADING
GVL – GRAVEL
GT – GROUT
HK – HOOK(S)
HMA – HOT MIX ASPHALT
HOR – HORIZONTAL
HP – HORSE POWER
HB – HOSE BIB
HPT – HYDROPNEUMATIC TANK
ID – INSIDE DIAMETER
INT – INTERIOR
INV – INVERT
IPS – IRON PIPE SIZE
JT – JOINT
JTF – JOINT FILLER
KO – KNOCKOUT
LBL – LABEL
LB – POUNDS
LWC – LIGHT WEIGHT CONCRETE
MAG – MARICOPA ASSOCIATION OF GOVERNMENT
MTL(S) – MATERIALS
MECH – MECHANICAL
MH – MANHOLE
MAX – MAXIMUM
MIN – MINIMUM
MISC – MISCELLANEOUS
NOM – NOMINAL
N – NORTH
NIC – NOT IN CONTRACT
NTS – NOT TO SCALE
NPT – NATIONAL PIPE THREAD
NFPA – NATIONAL FIRE PROTECTION ASSOCIATION
NSF – NATIONAL SANITATION FOUNDATION
OSHA – OCCUPATIONAL SAFETY AND HEALTH ADMINISTRATION
OC – ON CENTER
OCEW – ON CENTER EACH WAY
OD – OUTSIDE DIAMETER
OH –OVERHEAD
PW – PRIMING
PVMT – PAVEMENT
PVR– PRESSURE REDUCING VALVE
PVC– PUMP CONTROL VALVE
℗ – PROPERTY LINE
PVC – POLYVINYL CHLORIDE
PSI – POUNDS PER SQUARE INCH
RAD – RADIUS
RP BFP – REDUCE PRESSURE PRINCIPAL BACK FLOW PREVENTOR
REF – REFERENCE
RE – REINFORCE (D), (ING)
RMJ – RESTRAINED MECHANICAL JOINT
RBJ – RESTRAINED BELL JOINT
REV – REVISION (S), REVISED
SP – SAMPLE PORT
SCH – SCHEDULE
SMT – SEALANT
SEC – SECTION
SL – SLEEVE
S – SOUTH
SPEC – SPECIFICATION
SHT – SHEET
SPL – SPECIAL
SS – STAINLESS STEEL
STA – STATION
STD – STANDARD
SV– SURGE RELIEF VALVE
SYS – SYSTEM
THK – THICK
TDH – TOTAL DYNAMIC HEAD
TYP – TYPICAL
TBM – TEMPORARY BENCH MARK
UPC – UNIFORM PLUMBING CODE
UG – UNDERGROUND
VERT – VERTICAL
WM – WATER MAIN
WS – WATER STOP
WWF – WELDED WIRE FABRIC
W – WEST
WO – WITHOUT
WI – WROUGHT IRON
YH– YARD HYDRANT

AB	AS-BUILT DRAWING SET	B.E.A.	04/03/12
A	APPROVAL TO CONSTRUCT PERMIT	J.W.B.	11/15/11
REV	DESCRIPTION	APPROVED	DATE

PROJECT TITLE: BROKEN ARROW ARSENIC REMOVAL FACILITY

SHEET TITLE: SITE MAP, LEGEND AND ABBREVIATIONS — SHEET NO. G-2

SIGNATURES	DATE
DRAWN C.R.	11/15/11
CHECKED B.E.A.	11/15/11
ENGINEER J.W.B.	11/15/11

SCALE: NOT TO SCALE

PROJ. NO. 109411

OWNER: ARIZONA WATER COMPANY

30812 BLAKE E. ABTS — EXPIRES 03/31/2013

Tres Rios Consulting Engineers
239 W. Baseline Road, Suite 101A
Tempe, AZ 85283 (480) 755-1842
www.trescos.net

Arizona 811 — 263-1100 — 1-800-STAKE-IT

SCOPE OF WORK:

ALL WORK PRESENTED IN THESE DRAWING SET IS FOR AN ACTIVE WATER SUPPLY SYSTEM SERVING CLEAN DRINKING WATER TO THE COMMUNITY RESIDENTS. THE CONTRACTOR MAY NOT INTERRUPT WATER SUPPLIES AT ANY TIME WITHOUT PRIOR PERMISSION FROM THE OWNER AND ENGINEER. THE CONTRACTOR WILL BE CAUTIOUS WHEN WORKING AROUND EXISTING EQUIPMENT SO AS NOT TO DAMAGE IT OR CAUSE A WATER OUTAGE.

THE CONTRACTOR WILL TAKE MEASURES TO ENSURE CLEAN AND SANITARY WORK CONDITIONS, AND ALL NEW FACILITIES WILL BE PRESSURE TESTED (NO LEAKS) AND DISINFECTED PER AWWA AND ARIZONA STATE CODES.

1. GENERAL SCOPE OF WORK

THE CONTRACTOR WILL CONSTRUCT A COMPLETE, FUNCTIONING, AND LEAK-FREE ARSENIC REMOVAL FACILITY THAT WILL BE TIED-IN TO THE EXISTING WELL HEAD DISCHARGE PIPING ON-SITE AT THE BROKEN ARROW WELL NO. 10 LOCATION.

THE CONTRACTOR WILL BE RESPONSIBLE FOR THE PROCUREMENT AND INSTALLATION OF THE FILTER VESSELS, VALVES, INTERCONNECTING PIPING, SAND SEPARATOR, BAG FILTERS, BACKWASH TANK WITH BACKWASH REINJECTION SYSTEM, BURIED PIPING INCLUDING THE CONNECTIONS TO AND FROM THE EXISTING WELL HEAD DISCHARGE PIPING, CIVIL SITE WORK, PRE-CHLORINATION, AND ELECTRICAL SITE WORK AND CONTROLS WITH REGARDS TO THE ARSENIC REMOVAL FACILITY.

THE CONTRACTOR WILL BE RESPONSIBLE FOR ANY TESTING AND START-UP OPERATIONS AS REQUIRED BY THE CONTRACT DOCUMENTS, ARIZONA LAW, AND THE SITE'S APPROVAL TO CONSTRUCT PERMIT.

2. BURIED WATER PIPES

BURIED WATER PIPE ARE SHOWN IN DRAWINGS AND INCLUDE (1) WATER SUPPLY TO/FROM THE ARSENIC REMOVAL SYSTEM, (2) ARSENIC FILTER BACKWASH TO THE BACKWASH TANK, AND (3) THE AUTOMATIC PURGE WATER FROM THE SAND SEPARATOR TO THE FLUSH TO WASTE AREA TO THE WEST.

ALL BURIED PIPE 3-INCH AND LARGER WILL BE AWWA C151 CLASS 350 DUCTILE IRON WITH RESTRAINED JOINTS AT FITTINGS AND WITHIN THE INFLUENCE LENGTHS OF THE FITTINGS. ALL BURIED BELL AND MECHANICAL JOINTS WILL BE RESTRAINED USING EBAA IRON MEGA-LUGS. ANCHOR BLOCKS ARE NOT REQUIRED.

ALL BURIED PIPE WILL INCLUDE THE INSTALLATION OF TRACER WIRE AND WARNING TAPE PER ARIZONA WATER STANDARDS AND SPECIFICATIONS.

3. SITE WORK

CONTRACTOR WILL PREPARE THE SITE FOR INSTALLATION OF EQUIPMENT PADS, INSTALL ALL ABOVEGROUND PIPING, VALVES, AND FITTINGS. ALL ABOVEGROUND PIPING WILL BE DUCTILE IRON PIPE WITH CEMENT LINED INTERIOR AND EXTERIOR EPOXY COATING PER AWWA STANDARDS AND IN ACCORDANCE WITH THE TECHNICAL SPECIFICATIONS.

CONTRACTOR IS RESPONSIBLE FOR COATING AND PAINTING ALL PIPING AND VALVES AS SPECIFIED. EXTERIOR FINISH COAT WILL BE PAINTED PER THE CITY OF SEDONA'S RECOMMENDATIONS AND ARIZONA WATER COMPANY'S APPROVAL.

CONTRACTOR TO RESTORE SITE GRAVEL SURFACE TO ORIGINAL CONDITIONS.

4. ARSENIC REMOVAL FACILITY ELECTRICAL AND CONTROLS

THE WELL CONTROLS WILL REMAIN THE SAME WITH THE EXCEPTION OF A FLUSH TO WASTE UPON A HIGH PRESSURE SITUATION AS TRIGGERED BY A NEW PRESSURE SWITCH INSTALLED BY THE CONTRACTOR AND SET TO THE SET-POINT IDENTIFIED BY THE ARIZONA WATER COMPANY. THE WELL PUMP WILL CONTINUE TO FLUSH TO WASTE UNTIL AN OPERATOR ARRIVES ON-SITE TO OBSERVE THE REASON FOR THE HIGH PRESSURE SITUATION AND MANUALLY RESETS THE PRESSURE SWITCH AND VALVE CONFIGURATION TO NORMAL OPERATIONS.

THREE MAGNETIC FLOWMETERS WITH REMOTE REGISTERS WILL BE INSTALLED AT THIS ARSENIC REMOVAL FACILITY. THE REGISTER DISPLAYS WILL BE PROTECTED FROM DIRECT SUNLIGHT WITH A COVER CONSTRUCTED BY THE CONTRACTOR.

AN ELECTRICALLY ACTUATED SOLENOID VALVE WILL BE INSTALLED ON THE AUTO-PURGE OF THE DESANDER. THE SOLENOID VALVE WILL BE SET UP WITH A MANUALLY ADJUSTABLE TIMER TO ALLOW THE OPERATOR TO CONTROL THE DURATION OF THE PURGE AND THE FREQUENCY OF THE PURGING.

A BACKWASH REINJECTION PUMP WILL BE USED TO INTRODUCE THE BACKWASH WATER FROM THE BACKWASH TANK BACK INTO THE ARSENIC REMOVAL SYSTEM. THE BACKWASH REINJECTION PUMP WILL BE CAPABLE OF A 45-GPM FLOWRATE AT 370-TDH.

THE BAG FILTERS WILL HAVE A DIFFERENTIAL PRESSURE INDICATOR DEVICE INSTALLED THAT WILL SEND A SIGNAL TO THE AUTO-DIALER TO CALL AN OPERATOR IF A LARGE DIFFERENTIAL PRESSURE SITUATION ARISES ACROSS THE BAG FILTERS.

5. BACKWASH REINJECTION SYSTEM

THE BACKWASH REINJECTION SYSTEM WILL CAPTURE WATER BACKWASHED FROM THE ARSENIC REMOVAL SYSTEM FILTER VESSELS IN AN 8,000-GALLON HDPE TANK ON-SITE. THE BACKWASH WATER WILL BE GIVEN TIME TO ALLOW THE SUSUPENDED PARTICLES TO SETTLE. THE BACKWASH REINJECTION WATER WILL THEN BE SLOWLY INTRODUCED TO THE INFLUENT SIDE OF THE ARSENIC REMOVAL SYSTEM AT A RATE OF 10-PERCENT OR LESS OF THE NORMAL OPERATIONAL FLOW.

6. OPERATIONS AND MAINTENANCE MANUAL

THE CONTRACTOR WILL FURNISH AN OPERATIONS & MAINTENANCE MANUAL FOR ALL EQUIPMENT TO BE PROVIDED FOR THIS PROJECT. THE O&M MANUALS WILL INCLUDE COMPLETE CONTACT INFORMATION OF THE PRODUCT SUPPLIERS.

A LIST OF RECOMMENDED SPARE PARTS FOR AN OPERATING PERIOD OF 3 YEARS WILL BE INCLUDED. THE LIST WILL INCLUDE PRODUCT DESCRIPTION, QUANTITY RECOMMENDED, AND UNIT PRICE.

SPECIFICATIONS:

SPECIFICATIONS FOR THIS PROJECT ARE DEPICTED ON THE RELATED DRAWING SHEETS AND/OR LISTED BELOW, UNLESS STATED OTHERWISE. ARIZONA WATER COMPANY CONSTRUCTION SPECIFICATIONS & STANDARDS SHOULD BE ADHERED TO WHERE APPLICABLE FOR THIS PROJECT UNLESS NOTED OTHERWISE ON THESE PLANS.

GENERAL CONSTRUCTION NOTES:

1. FINISHED GRADE TO BE COMPACTED TO 95% STANDARD PROCTOR (ASTM D698) @ +/- OPTIMUM WATER CONTENT, UNLESS OTHERWISE REQUIRED FOR FOUNDATIONS, PADS, ETC.

BURIED PIPE AND VALVES:

1. ALL BURIED PIPE 3-INCH DIAMETER AND LARGER WILL BE AWWA C151 CLASS 350 DUCTILE IRON PIPE. DUCTILE IRON PIPE INTERIOR MUST BE CEMENT LINED AND SEAL COATED PER AWWA C104.
2. ALL BURIED PIPE SMALLER THAN 3-INCH DIAMETER WILL BE TYPE K COPPER.
3. BURIED WELL WATER PIPE WILL BE 6-INCH DIAMETER PIPE.
4. BURIED FINISHED WATER PIPE WILL BE 6-INCH DIAMETER PIPE.
5. BURIED TREATED WATER PIPE WILL BE 6-INCH DIAMETER PIPE.
6. BURIED BACKWASH OUT PIPE WILL BE 6-INCH DIAMETER PIPE.
7. BURIED AUTO-PURGE WILL BE 2-INCH TYPE K COPPER PIPE.
8. BURIED BACKWASH REINJECTION PIPE WILL BE 2-INCH DIAMETER PIPE.
9. ALL BURIED BELL AND MECHANICAL JOINTS WILL BE RESTRAINED USING EBAA IRON MEGA-LUGS.
10. MECHANICAL RESTRAINED JOINTS WILL BE CAST IRON WITH STAINLESS STEEL BOLT HARDWARE.
11. RESTRAINTS FOR PUSH-ON JOINTS WILL BE CAST IRON WITH STAINLESS STEEL BOLT HARDWARE.
12. ALL DUCTILE IRON PIPE AND FITTINGS MUST BE POLYWRAPPED. POLYWRAP WILL BE HAVE A MIN. 8 MIL THICKNESS AND WILL BE INSTALLED PER AWWA C105/A21.5-93. WRAPPING TAPE WILL HAVE A MIN. 10 MIL THICKNESS AND WILL BE 2-INCHES WIDE.
13. BURIED GATE VALVES WILL BE 6-INCH DUCTILE IRON RESILIENT WEDGE TYPE. VALVE WILL BE FUSION EPOXY COATED WITH STAINLESS STEEL BOLTS AND A NON-RISING STEM. MECHANICAL JOINTS PER AWWA C509 RESTRAINED. BRONZE, LOW ZINC STEM. 2-INCH SQUARE OPERATING NUT. LEFT HAND OPEN VALVE WILL BE OF THE A2360-23 SERIES AS MANUFACTURED BY MUELLER COMPANY OR ENGINEER APPROVED EQUAL.
14. BURIED VALVES WILL BE HOUSED IN VALVE BOXES. VALVE BOXES WILL BE 5 ¼-INCH SHAFT, CAST IRON, TWO PIECE SLIP TYPE BOX. VALVE BOX WILL BE OF THE VB462-M SERIES AS MANUFACTURED BY SIGMA.
15. 7 5/16-INCH TOP X 5 13/16-INCH INTERIOR CAST IRON DROP TYPE LID. COVER MARKED "WATER". COVER WILL BE MANUFACTURED BY SIGMA.
16. ALL BELOW GROUND PIPING WILL BE PRESSURE TESTED AT 200 PSIG FOR 2 HOURS. CONTRACTOR WILL NOTIFY THE ENGINEER AT LEAST 48 HOURS PRIOR TO PRESSURE TESTING. ENGINEER WILL OBSERVE ALL BURIED PIPE PRESSURE TESTING.

ABOVE GROUND PIPING AND VALVES:

1. ALL ABOVE GROUND PIPING 3-INCH DIAMETER AND LARGER WILL BE AWWAC151 CLASS 350 DUCTILE IRON PIPE. DUCTILE IRON PIPE INTERIOR MUST BE CEMENT LINED AND SEAL COATED PER AWWA C104.
2. ALL ABOVE GROUND PIPING SMALLER THAN 3-INCH DIAMETER WILL BE TYPE L HARD COPPER PIPE. FITTINGS FOR PIPE SMALLER THAN 3-INCH WILL BE COMPRESSION TYPE FITTINGS IN ACCORDANCE WITH ARIZONA WATER COMPANY'S CONSTRUCTION SPECIFICATIONS.
3. ABOVE GROUND PIPING WILL BE SUPPORTED USING PIPE STANCHIONS. PIPE STANCHIONS WILL BE STEEL PIPE WITH ELECTRO-GALVANIZED FINISH AND WILL BE THREADED PIPE FOR HEIGHT ADJUSTMENT. FLANGE CONNECTION OR PIPE SADDLE WITH U-BOLT CLAMP IS ACCEPTABLE.
4. MORE SPECIFICATIONS FOR ABOVE GROUND PIPING, VALVES, AND FITTING ARE LISTED ON THEIR RELATED DRAWING SHEETS.
5. ABOVE GROUND PIPING WILL BE PRESSURE TESTED AT 200-PSIG FOR 2 HOURS UNLESS STATED OTHERWISE. CONTRACTOR WILL NOTIFY THE ENGINEER OR OWNER'S REPRESENTATIVE AT LEAST 48 HOURS PRIOR TO PRESSURE TESTING FOR OBSERVATION.
6. ALL ABOVE GROUND PIPING WILL BE PAINTED PER THE CITY OF SEDONA'S RECOMMENDATIONS WITH AN AWWA APPROVED COATING. PIPING WILL BE LABELED IN ACCORDANCE WITH THE PIPE IDENTIFICATION TABLE ON SHEET M-1.
7. ABOVE GROUND PIPING WILL BE INSULATED TO PROTECT PIPING AND EQUIPMENT FROM FREEZING USING HEAT TRACE WIRE AND INSULATION TO MEET THE REQUIREMENTS SET FORTH IN THE ARIZONA WATER ARSENIC REMOVAL FACILITIES TECHNICAL SPECIFICATIONS.

MECHANICAL EQUIPMENT:

1. MECHANICAL EQUIPMENT SUCH AS THE BACKWASH REINJECTION PUMP, BAG FILTER VESSELS, DESANDER, AIR RELEASE VALVES, ETC. ARE SPECIFIED ON THEIR RESPECTIVE DRAWING SHEETS IN THIS DRAWING SET.
2. STEEL TANKS FOR THE ARSENIC REMOVAL SYSTEM ARE SPECIFIED ON SHEET M-3 OF THIS DRAWING SET.
3. THE BACKWASH TANK IS SPECIFIED ON SHEET M-7 OF THIS DRAWING SET.

MATERIALS AND TESTING

1. ALL IMPORTED BACKFILL MUST BE TESTED FOR CORROSIVITY IN ACCORDANCE WITH DIPRA'S 10-POINT SYSTEM OF "SOIL EVALUATION FOR DUCTILE IRON PIPE." PRIOR TO ORDERING THE MATERIAL. TEST RESULTS MUST BE SENT TO THE ENGINEER FOR APPROVAL BEFORE PROCUREMENT OF SUCH MATERIAL.
2. ALL TRENCHES WILL BE BACKFILLED IN LIFTS NOT TO EXCEED 8-INCHES THICK. EACH LIFT WILL BE COMPACTED TO 95% STANDARD PROCTOR IN ACCORDANCE WITH ASTM D698.
3. COMPACTED BASE MATERIAL MUST BE TESTED BY THE CONTRACTOR AND APPROVED BY THE ENGINEER PRIOR TO PLACING CONCRETE.
4. ONLY THE ENGINEER WILL DESIGNATE LOCATIONS OF COMPACTION TESTS AND INTERPRET RESULTS OF THE TESTS. CONTRACTOR MUST COORDINATE WITH THE ENGINEER TO SCHEDULE TESTS.
5. JETTING, WATER SETTLING, OR SIMILAR COMPACTION METHODS ARE NOT ALLOWED. COMPACTION WILL ONLY BE ALLOWED BY MECHANICAL MEANS (VIBRATORY OR JUMPING JACK) USING EQUIPMENT SPECIFICALLY DESIGNED FOR COMPACTION. COMPACTION METHOD MUST BE APPROVED BY ENGINEER PRIOR TO CONSTRUCTION.
6. UNLESS OTHERWISE STATED HEREIN, ALL CONCRETE MIXES WILL BE MINIMUM 4,000-PSI COMPRESSIVE STRENGTH AFTER 28 DAYS, AND REINFORCING STEEL WILL BE 60-KSI (GRADE 60) WITH NO EPOXY COATING.
7. ALL CONCRETE DELIVERED TO THE SITE MUST INCLUDE A DETAILED WEIGHMASTER TICKET. OTHERWISE, CORES MUST BE TAKEN AND LABORATORY TESTED FOR 28-DAY COMPRESSIVE STRENGTH AT NO ADDITIONAL COST TO THE OWNER OR ENGINEER.
8. HAND-MIXES WILL NOT BE PERMITTED FOR ANY REASON.

MATERIALS AND QUANTITIES TABLE

DESCRIPTION	QTY	UNITS	DESCRIPTION	QTY	UNITS
ARSENIC REMOVAL SYSTEM					
STEEL FILTER VESSEL (7'-0" DIA. 2,400-GALLON)	2	EA	6" DIP, CLASS 300 WATER PIPE	30	LF
GRANULAR FERRIC HYDROXIDE MEDIA (121.5 CF/VESSEL)	243	CF	6" 90° BEND, DIP	10	EA
BX12 COLORADO SILICA (34 CF/VESSEL)	68	CF	4" TEE	3	EA
STAINLESS STEEL INTERNAL PIPING DISTRIBUTORS	2	EA	2" STAINLESS STEEL BALL VALVE	3	EA
1" AIR/VACUUM RELEASE VALVE	2	EA	2" TYPE K COPPER	40	LF
2" PRESSURE RELIEF VALVE	2	EA	PRESSURE GAUGE	2	EA
6" BUTTERFLY VALVE	11	EA	2" CHECK VALVE	1	EA
6" DIP, CLASS 300 WATER PIPE	30	LF	OTHER PIPING AND EQUIPMENT		
4" DIP, CLASS 300 WATER PIPE	10	LF	6" GATE VALVE	1	EA
6" 90° BEND, DIP	20	EA	6" X 4" RED 90° BEND	1	EA
6" TEE, DIP	12	EA	DESANDER	1	EA
6"X4" REDUCER (CONCENTRIC)	5	EA	BAG FILTERS, SS VESSEL W/5 MICRON FELT BAGS	12	EA
PRESSURE GAUGE/SAMPLE PORT ASSEMBLY	4	EA	6" BUTTERFLY VALVES	3	EA
4" MAGNETIC FLOWMETER	3	EA	4" BUTTERFLY VALVES	26	EA
BACKWASH REINJECTION SYSTEM			6"X4" REDUCER, DIP	4	EA
HDPE BACKWASH TANK (10-FT DIA., 8,000-GALLON)	1	EA	6" DIP, CLASS 300 WATER PIPE	40	LF
7.5-HP PUMP, 45-GPM, 350-FT HEAD	1	EA	4" DIP, CLASS 300 WATER PIPE	10	LF
PRESSURE GAUGE/SAMPLE PORT ASSEMBLY	1	EA	6" 90° BEND	12	EA
6" BUTTERFLY VALVE	1	EA	6"X4" TEE	1	EA

NOTE: QUANTITIES ARE ENGINEER'S FIRST ESTIMATE FOR INFORMATIONAL PURPOSES. CONTRACTOR MUST PROVIDE HIS OR HER OWN TAKE-OFFS.

HEALTH AND SAFETY NOTES

1. IT IS THE RESPONSIBILITY OF THE CONTRACTOR TO BECOME FAMILIAR WITH THE OSHA EXCAVATION SAFETY STANDARDS AND ABIDE BY THEM AT ALL TIMES DURING CONSTRUCTION.
2. CONTRACTOR IS RESPONSIBLE FOR THE SAFE AND HEALTHFUL PERFORMANCE OF WORK BY EACH OF THEIR EMPLOYEES, SUBCONTRACTORS, OR SUPPORT PERSONNEL WHO MAY ENTER THE SITE.
3. CONTRACTOR IS RESPONSIBLE FOR PROVIDING ADEQUATE SECURITY FOR THEIR PERSONNEL, SUBCONTRACTORS, AND ALL RELATED EQUIPMENT AND PROJECT MATERIAL.
4. TEMPORARY SANITARY FACILITIES SHALL BE MAINTAINED ON THE SITE FROM BEGINNING TO COMPLETION OF CONSTRUCTION.

SITE PRACTICES AND SCHEDULE

1. ALL SITE WORK WILL BE PERFORMED ON A BUSINESS WEEK (MONDAY THROUGH FRIDAY) BETWEEN 6:00AM UNTIL 7:00PM UNLESS OTHERWISE APPROVED BY THE OWNER.

PIPE LABELING

1. SEE PIPE IDENTIFICATION TABLE ON SHEET M-1 FOR LABEL TEXT AND COLOR.
2. ALL LABELING OF PROCESS PIPING INCLUDING FLOW DIRECTION ARROWS WILL BE IN ACCORDANCE WITH ANSI/ASME A13.1 AND ADEQ BULLETIN No. 10 CHAPTER 4.
3. LABELS ON PIPING 2.5-INCHES TO 6-INCHES IN DIAMETER WILL BE A MINIMUM OF 12-INCHES IN LENGTH AND THE SIZE OF THE LETTERS WILL BE 1.25-INCHES HIGH.
4. LABELS ON PIPING 1.5-INCHES TO 2-INCHES IN DIAMETER WILL BE A MINIMUM OF 8-INCHES IN LENGTH AND THE SIZE OF THE LETTERING WILL BE 3/4-INCH HIGH.
5. LABELING WILL BE PLACED ON ON THE PIPE AFTER PAINTING AND ALSO ON THE INSULATION WRAPPED OVER THE PIPING SO AS TO EASILY IDENTIFY THE PROCESS PIPE.
6. LABELS WILL BE POSITIONED SO THEY CAN BE EASILY READ. THE LABEL WILL BE PLACED ON THE LOWER SIDE OF THE PIPE IF THE EMPLOYEE HAS TO LOOK UP ADN ON THE UPPER SIDE OF THE PIPE IF THE EMPLOYEE HAS TO LOOK DOWNWARD AT THE PIPE AND DIRECTLY FACING THE EMPLOYEE IF THE EMPLOYEE IS ON THE SAME LEVEL AS THE PIPE.
7. LABELS WILL BE LOCATED ON THE PROCESS PIPING TO AND FROM THE ARSENIC REMOVAL SYSTEM MANIFOLD AND ANY OTHER LOCATIONS AS IDENTIFIED BY THE OWNER TO MAKE IT EASIER FOR THE OPERATOR.
8. FLOW DIRECTION ARROWS TAPE WILL WRAP 360° AROUND THE PIPE ADJACENT TO THE PIPE LABEL. THE BACKGROUND COLOR WILL MATCH THE PIPE LABEL BACKGROUND COLOR. THE DIRECTION ARROW COLOR WILL MATCH THE LETERING COLOR OF THE PIPE LABEL.

REV	DESCRIPTION	APPROVED	DATE
AB	AS-BUILT DRAWING SET	B.E.A.	04/03/12
A	APPROVAL TO CONSTRUCT PERMIT	J.W.B.	11/15/11

PROJECT TITLE: BROKEN ARROW ARSENIC REMOVAL FACILITY

SHEET TITLE: SCOPE OF WORK AND SPECIFICATIONS

SHEET NO. G-3

SIGNATURES	DATE
DRAWN C.R.	11/15/11
CHECKED B.E.A.	11/15/11
ENGINEER J.W.B.	11/15/11

OWNER: ARIZONA WATER COMPANY

SCALE: NOT TO SCALE

PROJ. NO. 109411

EXPIRES 03/31/2013

Tres Rios Consulting Engineers
239 W. Baseline Road, Suite 101A
Tempe, AZ 85283 (480) 755-1042
www.trescos.net

Arizona Blue Stake, Inc. 811 or 1-800-STAKE-IT

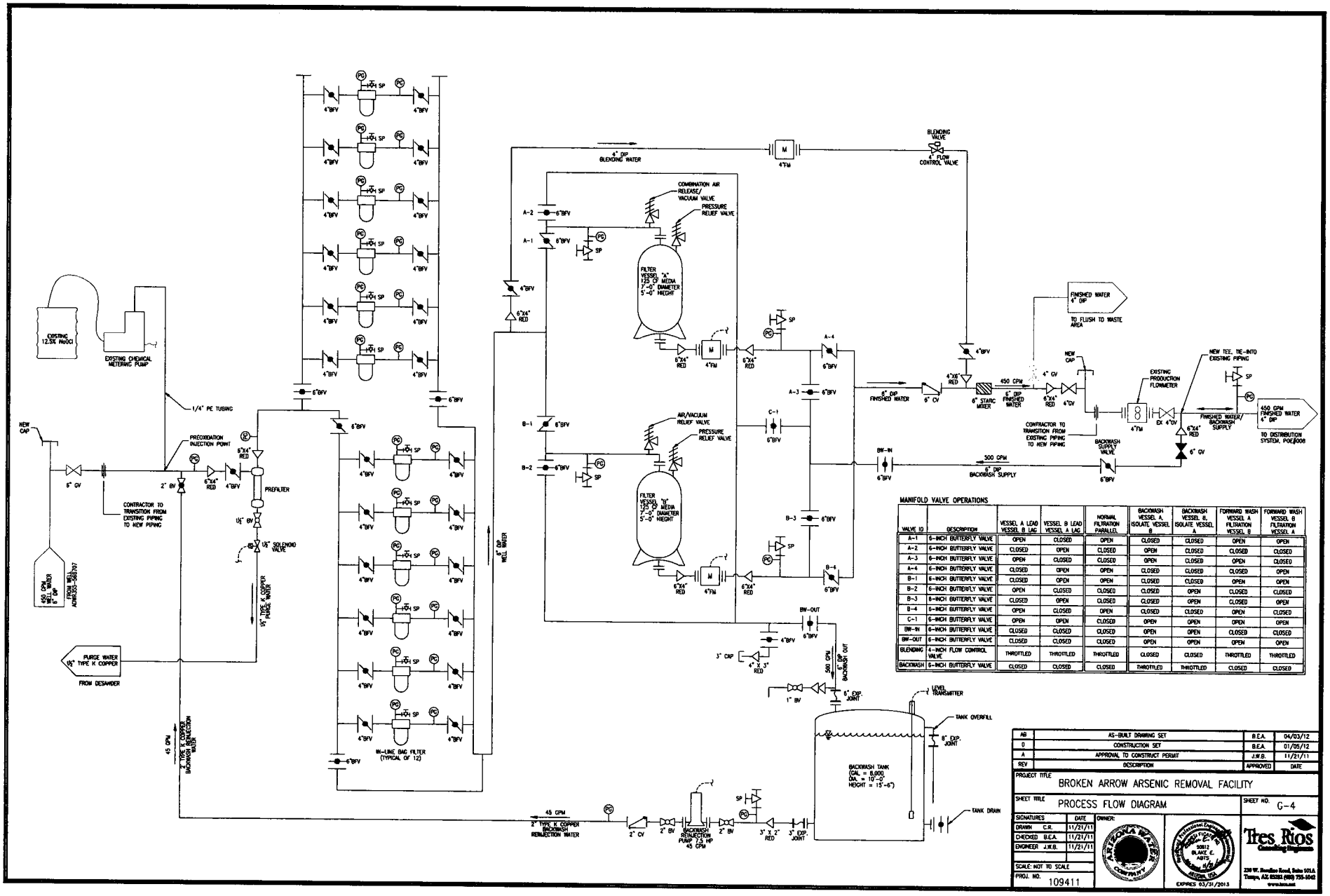

MANIFOLD VALVE OPERATIONS

VALVE ID	DESCRIPTION	VESSEL A LEAD VESSEL B LAG	VESSEL B LEAD VESSEL A LAG	NORMAL FILTRATION PARALLEL	BACKWASH VESSEL A, ISOLATE VESSEL B	BACKWASH VESSEL B, ISOLATE VESSEL A	FORWARD WASH VESSEL A FILTRATION VESSEL B	FORWARD WASH VESSEL B FILTRATION VESSEL A
A-1	6-INCH BUTTERFLY VALVE	OPEN	CLOSED	OPEN	CLOSED	CLOSED	OPEN	OPEN
A-2	6-INCH BUTTERFLY VALVE	CLOSED	OPEN	CLOSED	OPEN	CLOSED	CLOSED	CLOSED
A-3	6-INCH BUTTERFLY VALVE	OPEN	CLOSED	CLOSED	OPEN	CLOSED	OPEN	CLOSED
A-4	6-INCH BUTTERFLY VALVE	CLOSED	OPEN	OPEN	CLOSED	CLOSED	CLOSED	OPEN
B-1	6-INCH BUTTERFLY VALVE	CLOSED	OPEN	OPEN	CLOSED	CLOSED	OPEN	OPEN
B-2	6-INCH BUTTERFLY VALVE	OPEN	CLOSED	CLOSED	CLOSED	OPEN	CLOSED	CLOSED
B-3	6-INCH BUTTERFLY VALVE	CLOSED	OPEN	CLOSED	CLOSED	OPEN	CLOSED	OPEN
B-4	6-INCH BUTTERFLY VALVE	OPEN	CLOSED	OPEN	CLOSED	CLOSED	OPEN	CLOSED
C-1	6-INCH BUTTERFLY VALVE	OPEN	OPEN	CLOSED	OPEN	OPEN	OPEN	OPEN
BW-IN	6-INCH BUTTERFLY VALVE	CLOSED	CLOSED	CLOSED	OPEN	OPEN	CLOSED	CLOSED
BW-OUT	6-INCH BUTTERFLY VALVE	CLOSED	CLOSED	CLOSED	OPEN	OPEN	OPEN	OPEN
BLENDING	4-INCH FLOW CONTROL VALVE	THROTTLED	THROTTLED	THROTTLED	CLOSED	CLOSED	THROTTLED	THROTTLED
BACKWASH	6-INCH BUTTERFLY VALVE	CLOSED	CLOSED	CLOSED	THROTTLED	THROTTLED	CLOSED	CLOSED

REV	DESCRIPTION	APPROVED	DATE
AS	AS-BUILT DRAWING SET	B.E.A.	04/03/12
0	CONSTRUCTION SET	B.E.A.	01/05/12
A	APPROVAL TO CONSTRUCT PERMIT	J.W.B.	11/21/11

PROJECT TITLE: BROKEN ARROW ARSENIC REMOVAL FACILITY

SHEET TITLE: PROCESS FLOW DIAGRAM

SHEET NO.: G-4

SIGNATURES	DATE
DRAWN C.R.	11/21/11
CHECKED B.E.A.	11/21/11
ENGINEER J.W.B.	11/21/11

SCALE: NOT TO SCALE

PROJ. NO. 109411

OWNER: ARIZONA WATER COMPANY

30812 BLAKE E. ABTS REGISTERED PROFESSIONAL ENGINEER ARIZONA, USA

EXPIRES 03/31/2013

Tres Rios Consulting Engineers
230 W. Baseline Road, Suite 101A
Tempe, AZ 85283 (480) 755-1042
www.trcaz.net

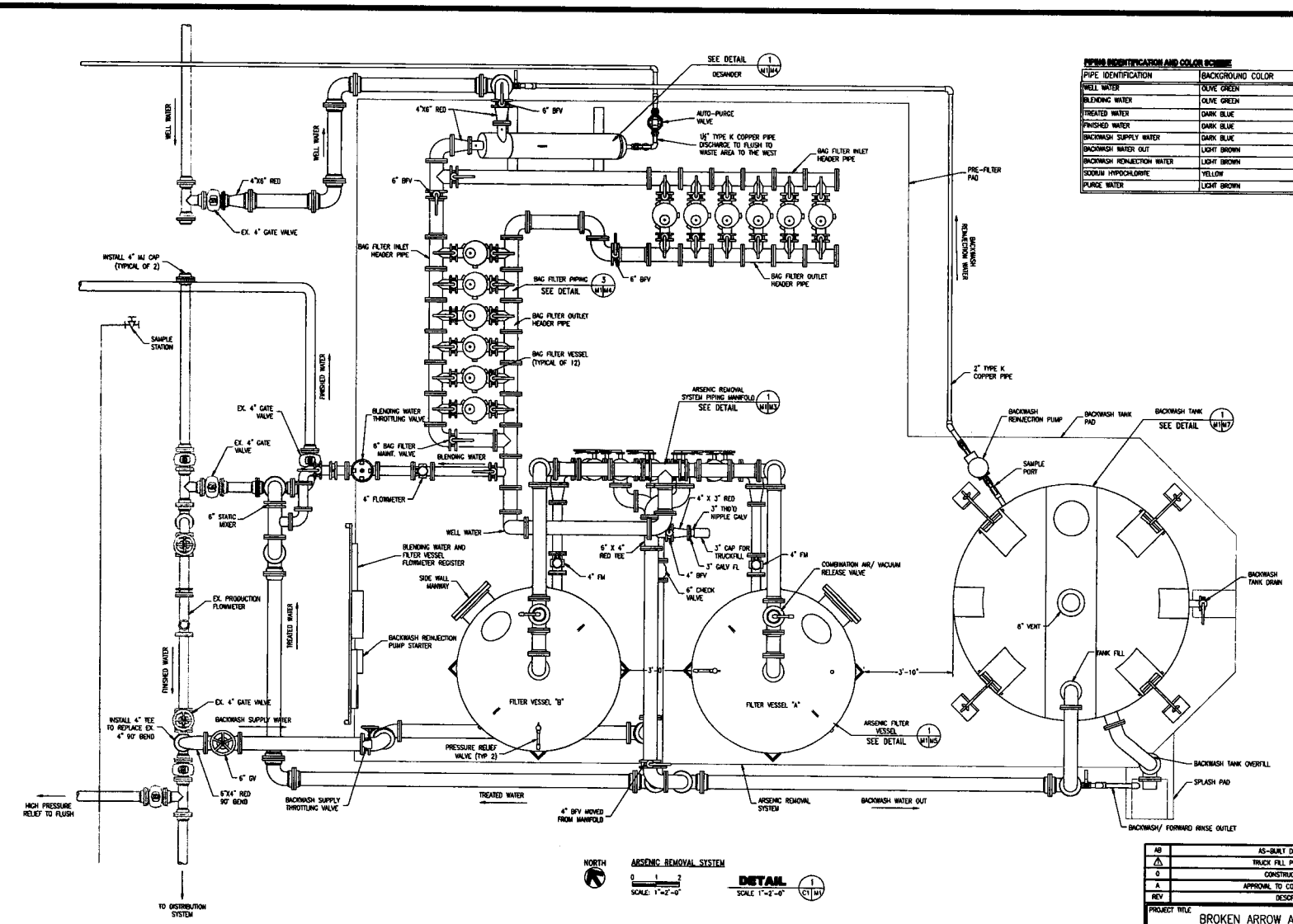

PIPING IDENTIFICATION AND COLOR SCHEME

PIPE IDENTIFICATION	BACKGROUND COLOR	LETTERING COLOR
WELL WATER	OLIVE GREEN	WHITE
BLENDING WATER	OLIVE GREEN	WHITE
TREATED WATER	DARK BLUE	WHITE
FINISHED WATER	DARK BLUE	WHITE
BACKWASH SUPPLY WATER	DARK BLUE	WHITE
BACKWASH WATER OUT	LIGHT BROWN	WHITE
BACKWASH REINJECTION WATER	LIGHT BROWN	WHITE
SODIUM HYPOCHLORITE	YELLOW	BLACK
PURGE WATER	LIGHT BROWN	WHITE

MEASUREMENTS SHOWN ON THIS DRAWING ARE PROVIDED FOR INFORMATION ONLY. CONTRACTOR MUST MAKE HIS OR HER OWN MEASUREMENTS PRIOR TO CONSTRUCTION.

REV	DESCRIPTION	APPROVED	DATE
AB	AS-BUILT DRAWING SET	B.E.A.	04/03/12
2	TRUCK FILL PIPING CHANGE	B.E.A.	03/14/12
0	CONSTRUCTION SET	B.E.A.	01/05/12
A	APPROVAL TO CONSTRUCT PERMIT	J.W.B.	11/21/11

PROJECT TITLE: BROKEN ARROW ARSENIC REMOVAL FACILITY

SHEET TITLE: ARSENIC REMOVAL SYSTEM-1

SHEET NO. M-1

SIGNATURES	DATE
DRAWN C.R.	11/21/11
CHECKED B.E.A.	11/21/11
ENGINEER J.W.B.	11/21/11

SCALE: NOT TO SCALE

PROJ. NO. 109411

OWNER: ARIZONA WATER COMPANY

BLAKE E. ASH'S 50017 ARIZONA U.S.A. REGISTERED PROFESSIONAL ENGINEER EXPIRES 03/31/2013

Tres Rios Consulting Engineers
233 W. Baseline Road, Suite 101A
Tempe, AZ 85283 (480) 755-1042
www.trescos.net

811 ARIZONA 1-800-STAKE-IT

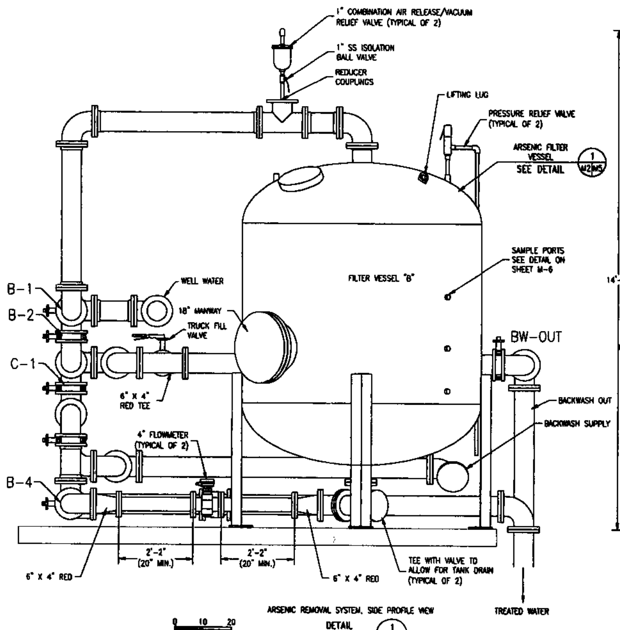

ARSENIC REMOVAL SYSTEM, SIDE PROFILE VIEW
DETAIL 1 M1 M2
SCALE 1"=20"

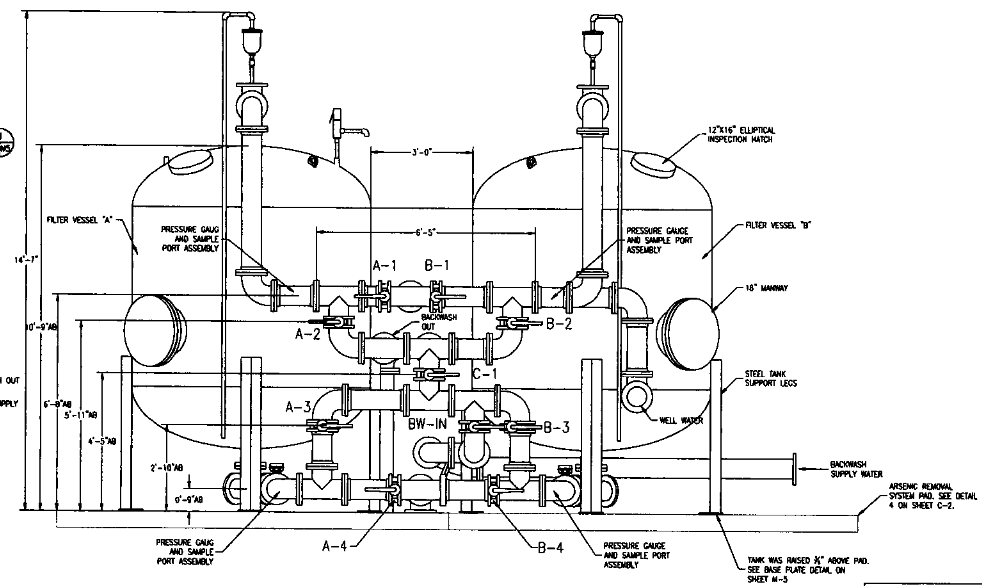

ARSENIC REMOVAL SYSTEM, FRONT PROFILE VIEW
DETAIL 2 M1 M2
SCALE 1"=20"

MEASUREMENTS SHOWN ON THIS DRAWING ARE PROVIDED FOR INFORMATION ONLY. CONTRACTOR MUST MAKE HIS OR HER OWN MEASUREMENTS PRIOR TO CONSTRUCTION.

REV	DESCRIPTION	APPROVED	DATE
AB	AS-BUILT DRAWING SET	B.E.A.	04/03/12
A	APPROVAL TO CONSTRUCT PERMIT	J.W.B.	11/21/11

PROJECT TITLE: BROKEN ARROW ARSENIC REMOVAL FACILITY

SHEET TITLE: ARSENIC REMOVAL SYSTEM-2

SHEET NO. M-2

SIGNATURES		DATE
DRAWN	C.R.	11/21/11
CHECKED	B.E.A.	11/21/11
ENGINEER	J.W.B.	11/21/11

OWNER: ARIZONA WATER COMPANY

SCALE: AS SHOWN

PROJ. NO. 109411

50812 BLAKE E. ABTS ARIZONA, USA
EXPIRES 03/31/2013

Tres Rios Consulting Engineers

263-1100 1-800-STAKE-IT

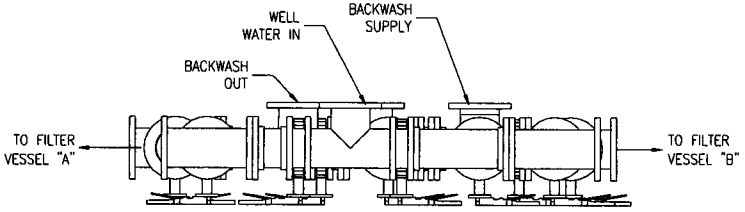

TOP VIEW

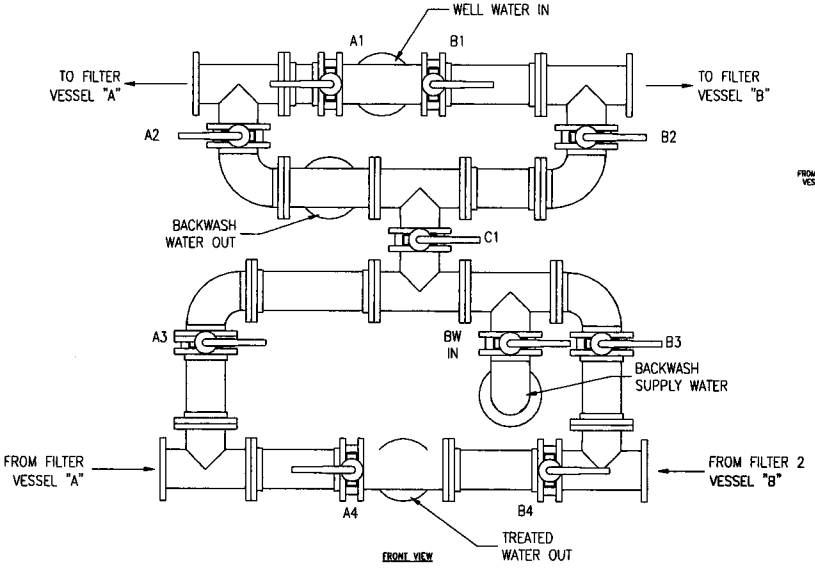

FRONT VIEW

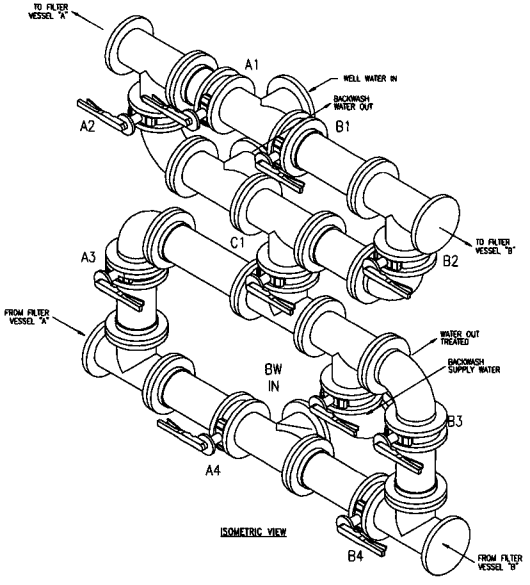

ISOMETRIC VIEW

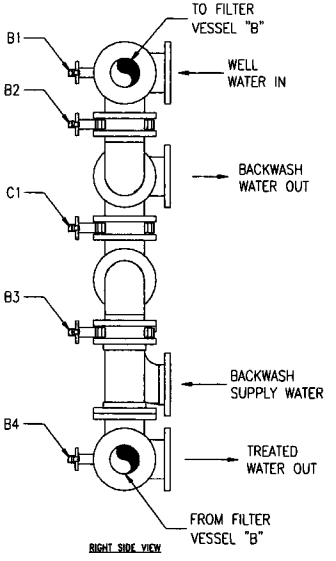

RIGHT SIDE VIEW

AB	AS-BUILT DRAWING SET	B.E.A.	04/03/12
A	APPROVAL TO CONSTRUCT	J.W.B.	11/15/11
REV	DESCRIPTION	APPROVED	DATE

PROJECT TITLE: BROKEN ARROW ARSENIC REMOVAL FACILITY

SHEET TITLE: PIPE MANIFOLD DETAILS

SHEET NO. M-3

SIGNATURES	DATE
DRAWN C.R.	11/15/11
CHECKED B.E.A.	11/15/11
ENGINEER J.W.B.	11/15/11

SCALE: NOT TO SCALE

PROJ. NO. 109411

OWNER:

ARIZONA WATER COMPANY

50812 BLAKE C. ARTS REGISTERED PROFESSIONAL ENGINEER ARIZONA, USA

EXPIRES 03/31/2013

Tres Rios Consulting Engineers

220 W. Baseline Road, Suite 101A Tempe, AZ 85283 (480) 733-1042 www.trios.net

263-100 1-800-STAKE-IT

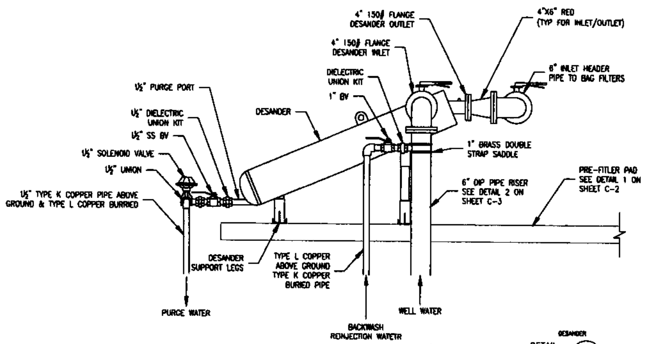

DESANDER DETAIL 1 (M1/M4)
SCALE: 1"=20"

DESANDER NOTES:

1. DESANDER WILL REMOVE LARGE PARTICULATES SUSPENDED IN SOLUTION AT A FLOWRATE OF 450-GPM.
2. A PRESSURE LOSS OF 3-12 PSIG IS EXPECTED AT THE DESIGN FLOWRATE OF 450-GPM.
3. DESANDER IS CONSTRUCTED OF STEEL AND WILL BE HYDROSTATICALLY TESTED AT 200-PSIG BY THE MANUFACTURER. A CERTIFICATE OF THE RESULTS FROM THE HYDROSTATIC TEST WILL BE PROVIDED TO THE CONTACTOR.
4. THE DESANDER HAS 4-INCH 150-LB FLANGE CONNECTIONS FOR THE INLET AND OUTLET.
5. THE DESANDER IS NSF CERTIFIED AND IS DESIGNED FOR DRINKING WATER APPLICATIONS.
6. THE DESANDER WILL BE OF THE MODEL IHB-285 AS MANUFACTURED BY LAKOS.

AUTO-PURGE SYSTEM NOTES:

1. THE DESANDER WILL AUTOMATICALLY PURGE SEDIMENT COLLECTED IN THE COLLECTION CHAMBER.
2. THE AUTO-PURGE DURATION AND FREQUENCY WILL BE CONTROLLED BY A TIMER SET AT PARAMETERS DETERMINED BY THE ENGINEER. THE CONTROLLER WILL TELL A SOLENOID VALVE INSTALLED AT THE PURGE PORT OF THE DESANDER WHEN TO OPEN AND CLOSE.
3. THE DURATION AND FREQUENCY ARE MANUALLY ADJUSTABLE BY THE OPERATOR.
4. THE PURGE WATER WILL BE DISCHARGED TO THE FLUSH TO WASTE AREA ADJACENT WEST OF THE FACILITY.
5. THE SOLENOID VALVE WILL BE OF THE MODEL CW-15-MBV AS SUPPLIED BY LAKOS.

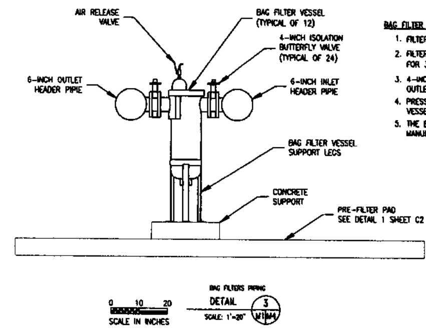

BAG FILTERS PIPING DETAIL 3 (M1/M4)
SCALE: 1"=20"

BAG FILTER NOTES:

1. FILTER BAGS WILL BE 5 MICRON RATED FILTER BAGS. (TYPICAL OF 12)
2. FILTER BAGS WILL BE HOUSED INSIDE A STAINLESS STEEL VESSEL RATED FOR 300-PSIG (TYPICAL OF 12)
3. 4-INCH ISOLATION BUTTERFLY VALVES WILL BE LOCATED ON THE INLET AND OUTLET OF EACH BAG FILTER VESSEL FOR MAINTENANCE.
4. PRESSURE GAUGES WILL BE INSTALLED ON THE INLET AND OUTLET OF THE VESSEL TO DETERMINE THE PRESSURE DROP ACROSS THE BAG FILTER.
5. THE BAG FILTER VESSELS WILL BE OF THE MODEL FSPN-85 AS MANUFACTURED BY FSI.

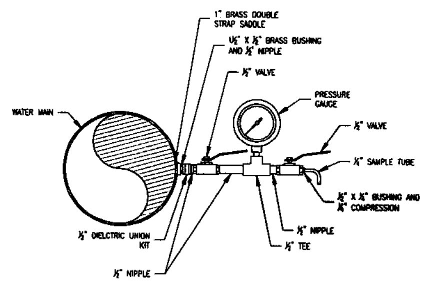

SAMPLE PORT DETAIL 2 (M4/M4)
NOT TO SCALE

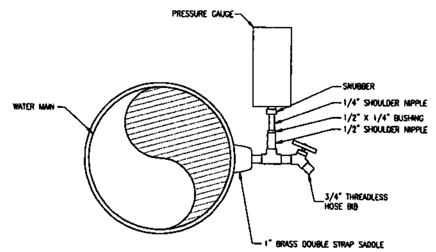

PRESSURE GAUGE AND SAMPLE PORT ASSEMBLY DETAIL 4 (M1/M4)
NOT TO SCALE

PRESSURE GAUGE NOTES:

1. PRESSURE GAUGE WILL BE 4 ½" DIAL SIZE.
2. PRESSURE RANGE WILL BE 0 - 300 PSI.
3. ½" LOWER MOUNT, 316 SS CONNECTION.
4. DIAL IS WHIT ALUMINUM WITH BLACK LETTERING. STOP PIN AT THE 6 O'CLOCK POSITION.
5. CASE WILL BE BLACK GLASS REINFORCED THERMOPLASTIC (PBTP) WITH A SOLID FRONT AND BLOW-OUT BACK.
6. NEMA 4X / IP 65 SILICONE LIQUID FILLED CASE.
7. PRESSURE GAUGE WILL BE OF THE BOURDON TUBE TYPE AS MANUFACTURED BY WIKA OR ENGINEER APPROVED EQUAL.

NOTE:
ALL MATERIAL DOWNSTREAM OF DIELECTRIC UNION KIT TO BE STAINLESS STEEL.

263-1100
1-800-STAKE-IT

REV	DESCRIPTION	APPROVED	DATE
AB	AS-BUILT DRAWING SET	B.E.A.	04/03/12
A	APPROVAL TO CONSTRUCT	J.W.B.	11/15/11

PROJECT TITLE: BROKEN ARROW ARSENIC REMOVAL FACILITY

SHEET TITLE: PIPING DETAILS-1

SHEET NO. M-4

SIGNATURES		DATE
DRAWN	C.R.	11/15/11
CHECKED	B.E.A.	11/15/11
ENGINEER	J.W.B.	11/15/11

OWNER: ARIZONA WATER COMPANY

SCALE: NOT TO SCALE

PROJ. NO. 109411

50812 BLAKE E. ABTS ARIZONA, USA
EXPIRES 03/31/2013

Tres Rios Consulting Engineers
230 W. Baseline Road, Suite 105A Tempe, AZ 85283 (480) 755-3042

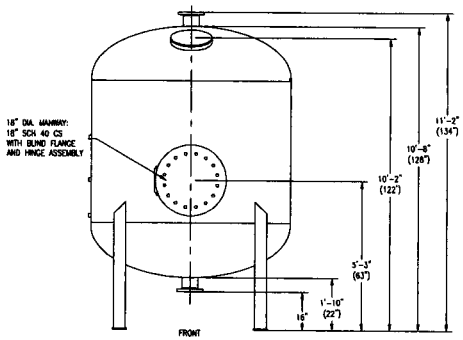

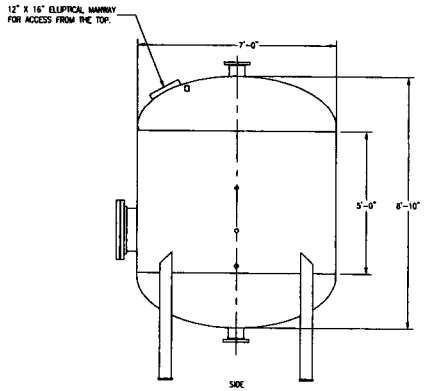

ARSENIC FILTER VESSEL
DETAIL C1/N5

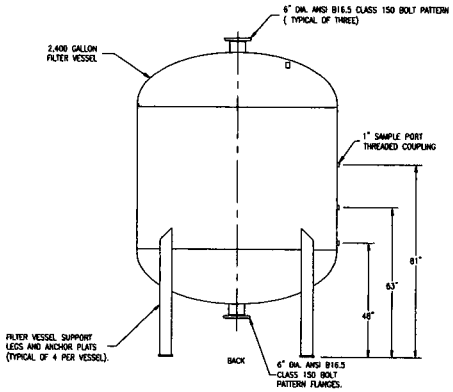

ARSENIC FILTER VESSEL NOTES:

1. FILTER VESSEL WILL BE 7'-0" DIAMETER CARBON STEEL CONSTRUCTION WITH MINIMUM 200-PSIG PRESSURE RATING.
2. FILTER VESSEL WILL BE ASME-CERTIFIED.
3. INTERIOR COATING WILL BE PRIMER AND EPOXY PER NSF 61. EXTERIOR COATING WILL BE PRIMED WITH EPOXY FINISH COAT. CONTRACTOR TO TOUCH UP ANY COATING SCRATCHES.
4. THE FILTER VESSEL WILL CONTAIN A DESCRIPTIVE NAMEPLATE INCLUDING INFORMATION ABOUT VESSEL ID "FILTER VESSEL," DIMENSIONS (DIAMETER AND HEIGHT IN FEET AND INCHES), SHIPPING WEIGHT (LBS), MATERIAL INCLUDING RATING OR CODE INFORMATION, VOLUME (CF) AND MANUFACTURER'S INFORMATION INCLUDING PHONE NUMBER.
5. CONTRACTOR WILL PROVIDE AND INSTALL ALL TEMPORARY PIPES AND CONNECTIONS AS REQUIRED FOR INITIAL BACKWASHING AND START-UP TESTING OF THIS SYSTEM.
6. UPON DELIVERY, CONTRACTOR WILL PROVIDE ALL EQUIPMENT AND PERSONNEL REQUIRED TO REMOVE THE SYSTEM FROM THE DELIVERY TRUCK AND PLACE IT UPON THE FOUNDATION AS SHOWN.
7. WHEN ALL EQUIPMENT IS DELIVERED AND UNPACKED, CONTRACTOR WILL NOTIFY ENGINEER AND CONDUCT AN INVENTORY REVIEW AND INSPECTION FOR DAMAGES.

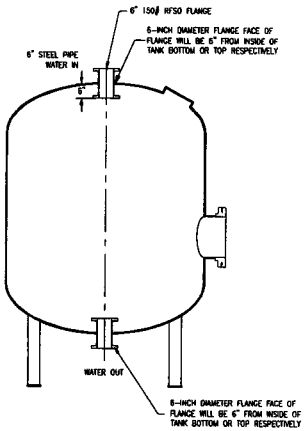

INSIDE PIPING

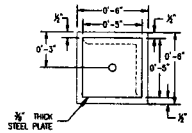

BASE PLATE DETAIL, PLAN VIEW
(TYPICAL)

NOTE:
ONE TANK WILL REQUIRE AN ADDITIONAL ½" PLATE AND ONE TANK WILL REQUIRE AN ADDITIONAL ½" PLATE UNDER ONE LEG FOR LEVELING, NOT SHOWN IN THIS DETAIL

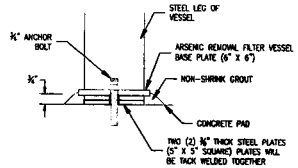

BASE PLATE DETAIL, ELEVATION VIEW
(TYPICAL)

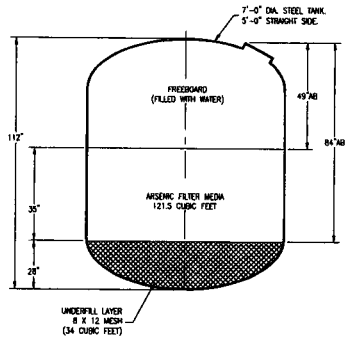

MEDIA LEVELS

MEDIA NOTES:

1. ARSENIC FILTER MEDIA WILL BE GRANULAR TYPE IRON OXIDE OR TITANIUM OXIDE. PER THE ADEQ APPROVED PERMIT.
2. 121.5 CUBIC FEET OF MEDIA WILL BE PROVIDED BY CONTRACTOR FOR THE VESSEL.
3. ARSENIC FILTER MEDIA IS NON-REGENERATIVE AND WILL NEED TO BE REPLACED WHEN EXAUSTED.
4. THE UNDERFILL LAYER BELOW THE MEDIA WILL BE 8 X 12 MESH COLORADO SILICA OR MONTERREY SAND WITH NSF 61 APPROVAL.
5. THE CONTRACTOR WILL PROVIDE 34 CUBIC FEET OF UNDERFILL FOR THE VESSEL.
6. THE UNDER FILL LAYER WILL COMPLETELY COVER THE UNDER DRAIN PIPING LATERALS AND HUB BY A MINIMUM OF 2-INCHES.
7. ALL MATERIALS INSIDE THE VESSEL WILL BE NSF 61 CERTIFIED.
8. THE MEDIA WILL BE INSTALLED BY CONTRACTOR IN ACCORDANCE WITH THE MEDIA MANUFACTURER'S INSTRUCTIONS. ANY EQUIPMENT DAMAGED DURING THE INSTALLATION OF THE UNDERFILL OR MEDIA WILL BE REPLACED BY THE CONTRACTOR AT NO COST TO THE OWNER.
9. STORAGE AND HANDLING OF THE MEDIA MATERIALS WILL BE IN ACCORDANCE WITH THE MANUFACTURER'S INSTRUCTIONS. THE MEDIA MAY NOT BE DELIVERED TO THE SITE MORE THAN ONE WEEK PRIOR TO PLACEMENT INSIDE THE VESSELS. THE SYSTEM MUST BE READY FOR BACKWASHING PRIOR TO PLACEMENT OF THE MEDIA INSIDE THE VESSEL.
10. DIMENSION SHOWN ON MEDIA LEVELS FOR DEPTH TO MEDIA ARE MEASURED FROM THE TOP OF THE HIGHER SIDE OF THE 16" ELLIPTICAL MANWAY.

REV	DESCRIPTION	APPROVED	DATE
AB	AS-BUILT DRAWING SET	B.E.A.	04/03/12
A	APPROVAL TO CONSTRUCT PERMIT	J.W.B.	11/15/11

PROJECT TITLE: BROKEN ARROW REMOVAL FACILITY

SHEET TITLE: ARSENIC REMOVAL VESSEL — SHEET NO. M-5

SIGNATURES	DATE
DRAWN C.R.	11/15/11
CHECKED B.E.A.	11/15/11
ENGINEER J.W.B.	11/15/11

SCALE: NOT TO SCALE

PROJ. NO. 109411

OWNER:

811 ARIZONA BLUE STAKE, INC. — CALL FOR BLUE STAKE — 263-1100 — 1-800-STAKE-IT

ARIZONA WATER COMPANY

REGISTERED PROFESSIONAL ENGINEER — 30893 — BLAKE E. ASPITS — ARIZONA, USA — EXPIRES 03/31/2013

Tres Rios Consulting Engineers
230 W. Baseline Road, Suite 101A
Tempe, AZ 85283 (602) 755-1042
www.trios.net

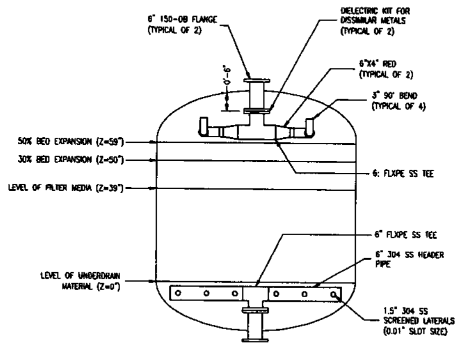

INTERNAL PIPING

DETAIL 1 M5 M6

NTS

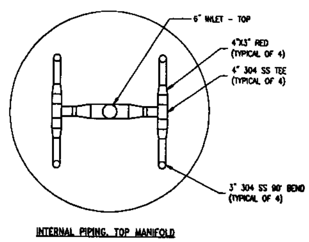

INTERNAL PIPING, TOP MANIFOLD

DETAIL 2 M5 M6

NTS

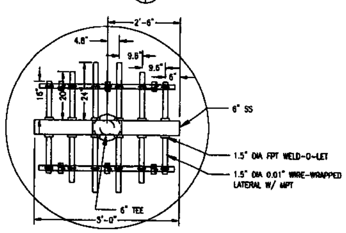

INTERNAL PIPING, BOTTOM MANIFOLD

DETAIL 3 M5 M6

NTS

INTERNAL PIPING NOTES:

1. ALL INTERNAL PIPING WILL BE 304 SS.
2. A DIELECTRIC KIT FOR DISSIMILAR METALS WILL BE USED TO TRANSITION FROM CARBON STEEL TO 316 SS.
3. INTERNAL PIPING DETAILS ARE EXACTLY THE SAME FOR EACH VESSEL. WHERE STATED TYPICAL IS REPRESENTATIVE OF EACH VESSEL.
4. INTERNAL PIPING WILL BE CONSTRUCTED AS DIRECTED BY THE ENGINEER SO THAT THERE WILL BE SUFFICIENT HEADSPACE ABOVE THE FILTER MEDIA FOR BACKWASHING EVENTS.

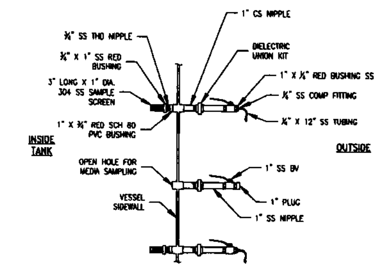

ARSENIC FILTER VESSEL SAMPLE PORT DETAIL (TYPICAL)

NOTES:

ALL EXTERIOR CARBON STEEL ("CS") FITTINGS WILL BE PAINTED.

COLOR OF EXTERIOR FITTINGS TO MATCH ARSENIC FILTER VESSELS.

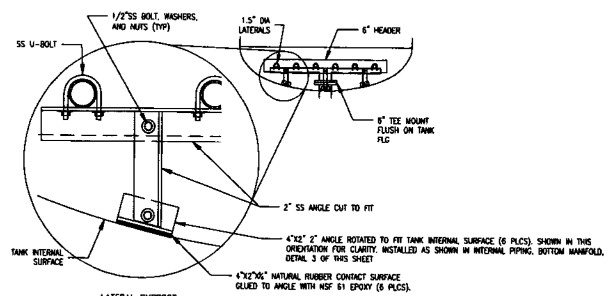

LATERAL SUPPROT

DETAIL 4 M5 M6

NTS

AB	AS-BUILT DRAWING SET	B.E.A.	04/03/12
A	APPROVAL TO CONSTRUCT PERMIT	J.W.B.	11/15/11
REV	DESCRIPTION	APPROVED	DATE

PROJECT TITLE: BROKEN ARROW ARSENIC REMOVAL FACILITY

SHEET TITLE: INTERNAL PIPING DETAILS

SHEET NO. M-6

SIGNATURES	DATE
DRAWN C.R.	11/15/11
CHECKED B.E.A.	11/15/11
ENGINEER J.W.B.	11/15/11

SCALE: NOT TO SCALE

PROJ. NO. 109411

OWNER: ARIZONA WATER COMPANY

50812 BLAKE E. ABTS

EXPIRES 03/31/2013

Tres Rios Consulting Engineers

263-1100 1-800-STAKE-IT

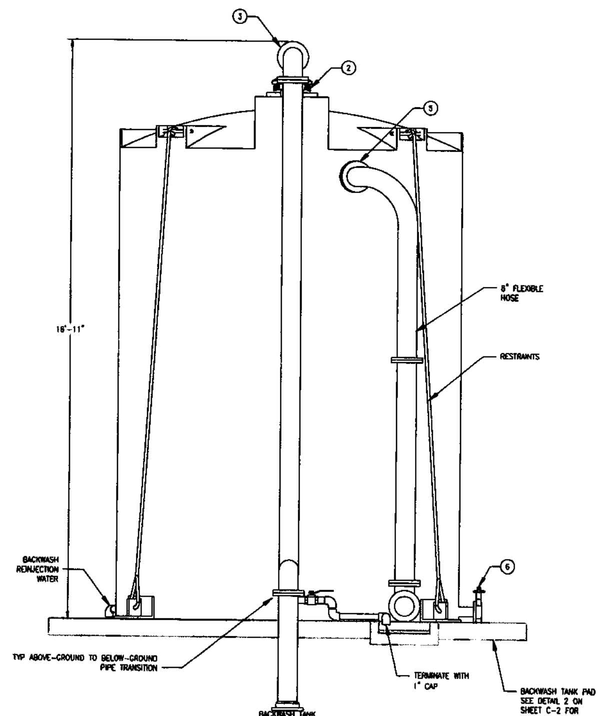

BACKWASH TANK DETAIL 1"=20" (1 / M1 M7)

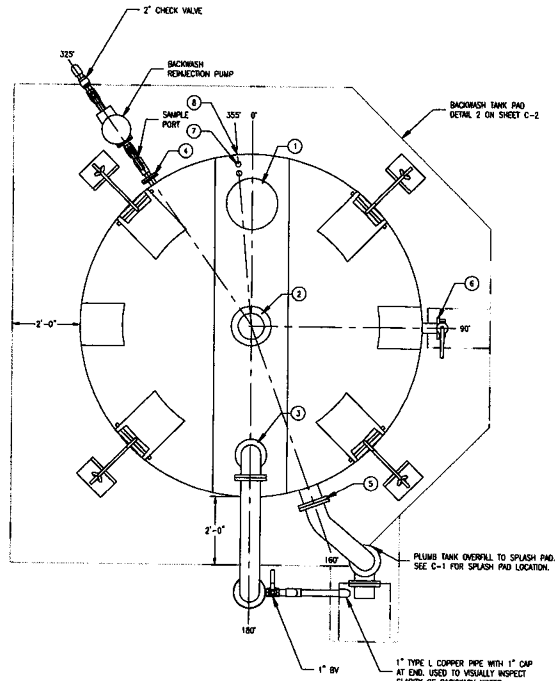

BACKWASH TANK PLAN 1"=20" (2 / M1 M7)

BACKWASH TANK SPECIFICATIONS:

1. BACKWASH TANK DIMENSIONS:
   CAPACITY = 8,000 GALLONS
   DIAMETER = 10'-0", HEIGHT = 15'-6".
2. DESIGN SPECIFIC GRAVITY = 1.5
3. DESIGN TEMPERATURE = 100°F.
4. DESIGN PRESSURE = ATMOSPHERIC
5. THE TANK IS COSNTRUCTED OF HIGH DENSITY LINEAR POLYETHYLENE ("HDLPE").
6. FITTING CONNECTIONS WILL BE CONSTRUCTED OF PVC, 304 SS, OR 316 SS AND ALL FITTINGS WILL HAVE EPDM GASKETS AND 316 SS HARDWARE.
7. A SIGHT GLASS WILL BE INCLUDED FOR A VISUAL INDICATION OF THE LEVEL OF LIQUID INSIDE THE RECLAIM TANK.
8. THE BOTTOM OF THE BACKWASH REINJECTION PUMP SUCTION FITTING WILL BE PLACED AT 9-INCHES ABOVE THE FLOOR OF THE RECLAIM TANK TO ALLOW FOR THE PARTICULATES TO SETTLE BELOW THIS LEVEL AFTER A BACKWASH EVENT. A FLEXIBLE CONNECTION FITTING WILL BE USED.
9. THE VENT WILL BE A MUSHROOM STYLE VENT WITH A SS 16 MESH BUG SCREEN.
10. TANK DRAIN WILL BE OF THE SUMO STYLE ALLOWING FOR THE MAXIMUM LOW LEVEL TO BE DRAINED OR WASHED OUT OF THE TANK. THE TANK DRAIN WILL BE FLUSH WITH THE TANK FLOOR AND WILL HAVE A FLEXIBLE CONNECTION WITH AN ISOLATION VALVE.
11. THE MANWAY ON TOP OF THE TANK WILL BE LOCKABLE TO PREVENT ENTRANCE BY UNAUTHORIZED PERSONNEL.
12. PRESSURE GAUGES WILL BE PLACED ON BOTH SIDES OF THE BACKWASH REINJECTION PUMP.

CONSTRUCTION NOTES:

1. SEE PLAN VIEW FOR TRUE ORIENTATION OF FITTINGS.
2. TANK FILL AND TANK OVERFILL PIPING WILL BE SUPPORTED TO THE SIDEWALL OF THE RECLAIM TANK AND ON THE RECLAIM TANK PAD.
3. CONNECTION ENDS WILL BE CLASS 150, A105 FLANGE (ANSI B16.5)
4. LEVEL TRANSMITTERS WILL INDICATE THE LEVEL OF LIQUID INSIDE THE RECLAIM TANK WITH RESPECT TO THE BOTTOM OF THE TANK.
5. LEVEL TRANSMITTER DISPLAY WILL BE PROTECTED FROM THE DIRECT SUNLIGHT AND WILL BE DESIGNED AND RATED FOR OUTDOOR USE.

BACKWASH TANK FITTINGS TABLE:

ID	SIZE	DESCRIPTION	LOCATION	HEIGHT
1	18-INCH	MANWAY	0°	CEILING
2	8-INCH	VENT	0° CENTER	CEILING
3	6-INCH	TANK FILL	180°	CEILING
4	3-INCH	PUMP SUCTION	325°	0'-9"
5	8-INCH	TANK OVERFILL	160°	14'-0"
6	3-INCH	TANK DRAIN	90°	0'-0"
7	2-INCH	LEVEL TRANSMITTERS	355°	CEILING
8	¾-INCH	LEVEL TRANSMITTER	355°	1'-0"

BACKWASH TANK PAINT SPECIFICATIONS

1. SURFACE PREPARATION
   A. POWER TOOL WITH ABRASIVE SANDPAPER OR GRINDERS (40-60 GRIT) TO CREATE A MINIMUM 1.0 MIL PROFILE.
   B. SOLVENT WIPE (MEK OR ACETONE) THE ENTIRE SUBSTRATE DOWN JUST PRIOR TO COATING.
2. PRIMER:
   A. THEMEC SERIES 135 CHEMBUILD AT 2.5-3.5 MILS DRY FILM THICKNESS.
3. FINISH:
   A. TENEMC SERIES 1075 ENDURA-SHIELD II AT 2.5-3.5 MILS DRY FILM THICKNESS.

   TOTAL SYSTEM: 5.0-7.0 MILS

263-1100
1-800-STAKE-IT

REV	DESCRIPTION	APPROVED	DATE
AB	AS-BUILT DRAWING SET	B.E.A.	04/03/12
A	APPROVAL TO CONSTRUCT PERMIT	J.W.B.	11/21/11

PROJECT TITLE: BROKEN ARROW ARSENIC REMOVAL FACILITY

SHEET TITLE: BACKWASH TANK DETAILS

SHEET NO. M-7

SIGNATURES		DATE
DRAWN	C.R.	11/21/11
CHECKED	B.E.A.	11/21/11
ENGINEER	J.W.B.	11/21/11

SCALE: NOT TO SCALE

PROJ. NO. 109411

OWNER: ARIZONA WATER COMPANY

30892 BLAKE C. ABTS ARIZONA, U.S.A. EXPIRES 03/31/2013

Tres Rios Consulting Engineers

ARIZONA DEPARTMENT OF ENVIRONMENTAL QUALITY
CERTIFICATE OF APPROVAL TO CONSTRUCT
WATER FACILITIES

ADEQ File No: 20110274 **LTF No:** 55274

System Name: Az Water Co-Sedona **System Number:** 03-003

Project Owner: Arizona Water Company

Address: P O Box 29006, Phoenix, AZ 85038

Project Location: Sedona **County :** Coconino

Description: ARIZONA WATER COMPANY-BROKEN ARROW WELL #10 ARSENIC TREATMENT FACILITY. ATC PERMIT FOR 1-450 GPM ARSENIC TREATMENT FACILITY UTILIZING SIEMEMS GRANULAR FERRIC HYDROXIDE SORPTION MEDIA & BLENDING PLAN TO ENSURE COMPLIANT DRINKING WATER.

Approval to construct the above-described facilities as represented in the approved documents on file with the Arizona Department of Environmental Quality is hereby given subject to provisions 1 through 6 continued on page 2 through 2

1. This project must be constructed in accordance with all applicable laws, including Title 49, Chapter 2, Article 9 of the Arizona Revised Statutes and Title 18, Chapter 5, Article 5 of the Arizona Administrative Code.
2. Upon completion of construction, the engineer shall fill out the Engineer's Certificate of Completion and forward it to the Central Regional Office located in Phoenix. If all requirements have been completed, that unit will issue a Certificate of Approval of Construction. R18-5-507(B), Ariz. Admin.Code. At the project owner's request, the Department **may** conduct the final inspection required pursuant to R18-5-507(B); such a request must be made in writing in accordance with the time requirements of R18-5-507(C), Ariz. Admin. Code.
3. This certificate will be void if construction has not started within one year after the Certificate of Approval to Construct is issued, there is a halt in construction of more than one year, or construction is not completed within three years of the approval date. Upon receipt of a written request for an extension of time, the Department may grant an extension of time; an extension of time must be in writing. R18-5-505(E), Ariz. Admin. Code.
4. Operation of a newly constructed facility shall not begin until a Certificate of Approval of Construction has been issued by the Department. R18-5-507(A), Ariz. Admin. Code.

Reviewed by: FMS

By: _____ FOR JKD 12/29/11

Janak K. Desai, P.E. Unit Manager Date
Engineering Review Section
Water Quality Division

cc: File No : 20110274
Regional Office: Central
Owner: Arizona Water Company
County Health Department: Coconino
Engineer: Tres Rios Consulting Eng
Planning and Zoning/Az Corp. Commission
Engineering Review Database - Etr021

5. The Arizona Department of Environmental Quality's review of this application was subject to the requirements of the licensing time frames ("LTF") statute under Arizona Revised Statutes ("A.R.S.") § 41-1072 through § 41-1079 and the LTF rules under Arizona Administrative Code ("A.A.C.") R18-1-501 through R18-1-525. This Notice is being issued within the overall time frame for your application.

   ADEQ hereby approves your application for Approve to Construct Drinking Water Facilities under A.R.S. § 49-351. Your copy is enclosed.

   This decision is an appealable agency action under A.R.S. § 41-1092. You have a right to request a hearing and file an appeal under A.R.S. § 41-1092.03(B). You must file a written Request for Hearing or Notice of Appeal within **30 days** of your receipt of this Notice. A Request for Hearing or Notice of Appeal is filed when it is received by ADEQ's Hearing Administrator as follows:

   Office of Administrative Counsel
   Arizona Department of Environmental Quality
   1110 W. Washington Street
   Phoenix, AZ 85007

   The Request for Hearing or Notice of Appeal shall identify the party, the party's address, the agency and the action being appealed and shall contain a concise statement of the reasons for the appeal. Upon proper filing of a Request for Hearing or Notice of Appeal, ADEQ will serve a Notice of Hearing on all parties to the appeal. If you file a timely Request for Hearing or Notice of Appeal you have a right to request an informal settlement conference with ADEQ under A.R.S. § 41-1092.06. This request must be made in writing no later than **20 days** before a scheduled hearing and must be filed with the Hearing Administrator at the above address.

   Please contact Frank M. Smaila at (602) 771-4237 if you have questions regarding this Notice or the Certificate of Approved to Construct.

6. **Start-up Monitoring-** Per Arizona Administrative Code R18-4-105 Monitoring and Analytical Requirements §141.23(c)(9),ADEQ has instituted a start-up monitoring plan to ensure that the Arsenic Treatment System and Blending Plan are providing drinking water that is below arsenic MCL. All new system(s) that use a new source of water that begins operation after January 22, 2004 must demonstrate compliance with the MCL within a period of time specified by the State. The Initial Monitoring Reporting Form is attached.

ARIZONA DEPARTMENT OF ENVIRONMENTAL QUALITY

GROUNDWATER TREATMENT PLANT/BLENDING PLAN INITIAL MONITORING REPORTING FORM

Public Water System Name: ARIZONA WATER COMPANY-SEDONA

PWS Identification Number (AZ04-XX-XXX): AZ04-03-003

Name of Contact Person / Title:

Telephone / Email:

Entry Point to the Distribution System (EPDS) #:

Contaminant: X Arsenic ☐ Fluoride ☐ Nitrate ☐ Other

Sample	Date	Time (24h)	Raw Water Result (mg/L)	Test Method	Name of Field Test Kit or Lab Used	Treated Water Result (mg/L)	Name of Lab Used
DAY 1				☐Field ☐Lab			
DAY 2				☐Field ☐Lab			
DAY 3				☐Field ☐Lab			
DAY 4				☐Field ☐Lab			
DAY 5				☐Field ☐Lab			
WEEK 2				☐ Lab			
WEEK 3				☐ Lab			
WEEK 4				☐ Lab			
MONTH 2				☐ Lab			
MONTH 3				☐ Lab			

All treated water samples must be submitted to a certified laboratory for analysis.

I hereby certify that the information listed above is accurate to the best of my knowledge. Furthermore, unless otherwise directed by the State, I understand that quarterly compliance monitoring shall commence for the above noted contaminant after initial monitoring has been completed. This quarterly routine compliance monitoring frequency shall remain in effect for the life of the treatment plant.

Water System Owner/Representative (Print) **Signature** **Date**

Please mail completed form to: ADEQ Drinking Water Section, Drinking Water Monitoring & Protection Unit, 1110 W. Washington St., Mail Code 5415B-2, Phoenix, AZ 85007 or send via fax to (602) 771-4634.

DWAR-19: Revised 6/2009

N
MotionX by Fullpower
© SPOT IMAGE
© 2012 Google
Google earth
Imagery Date: 6/21/2011
1997
34°50'49.85" N 111°45'56.93" W elev 4250 ft
Eye alt 4593 ft

mx35
MX35

HCPS

mx35
MITSUBISHI
mx35

mx35
mx35

32
LAKOS
GROUT

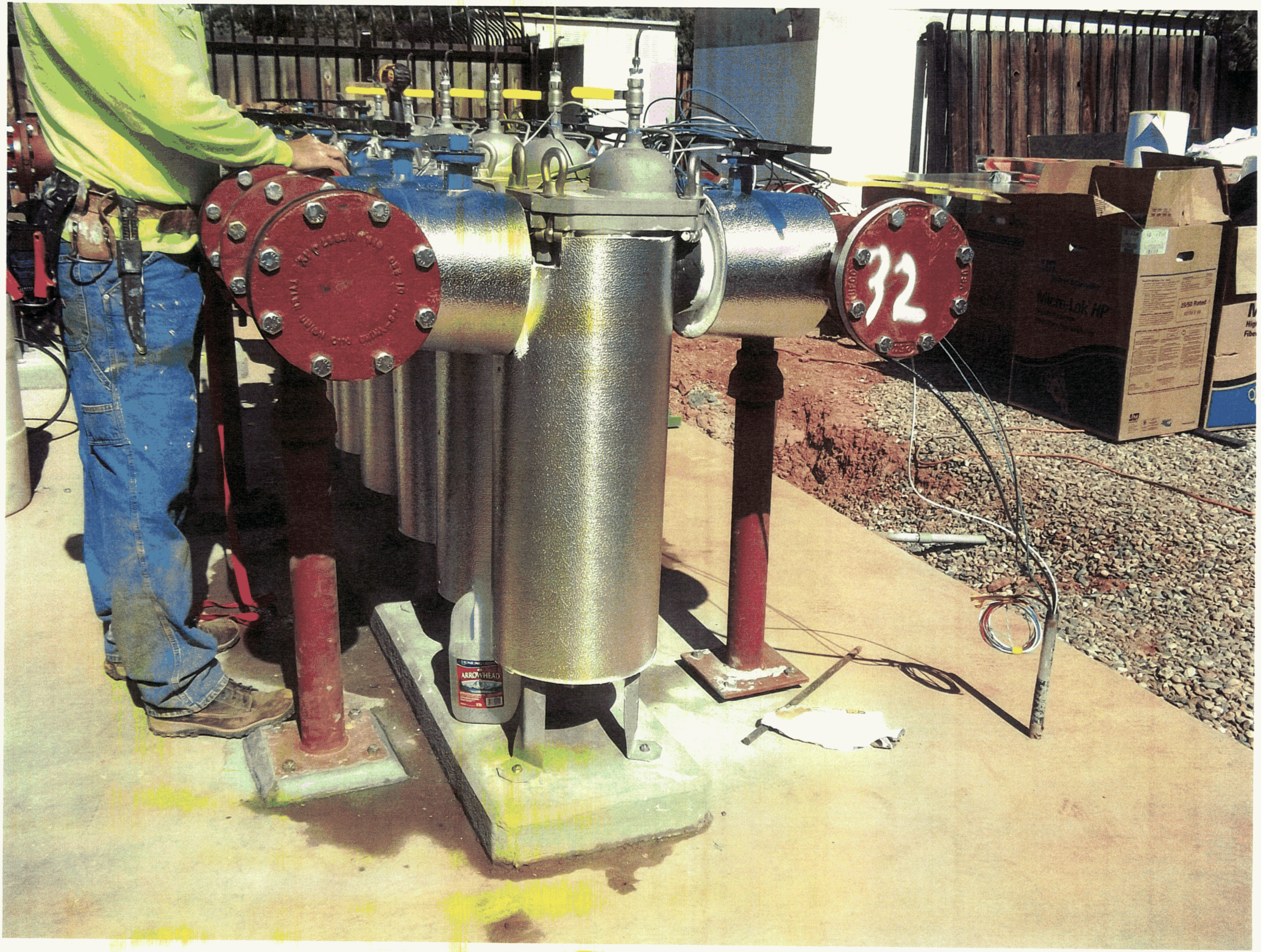
32
ARROWHEAD
Micro-Lok HP

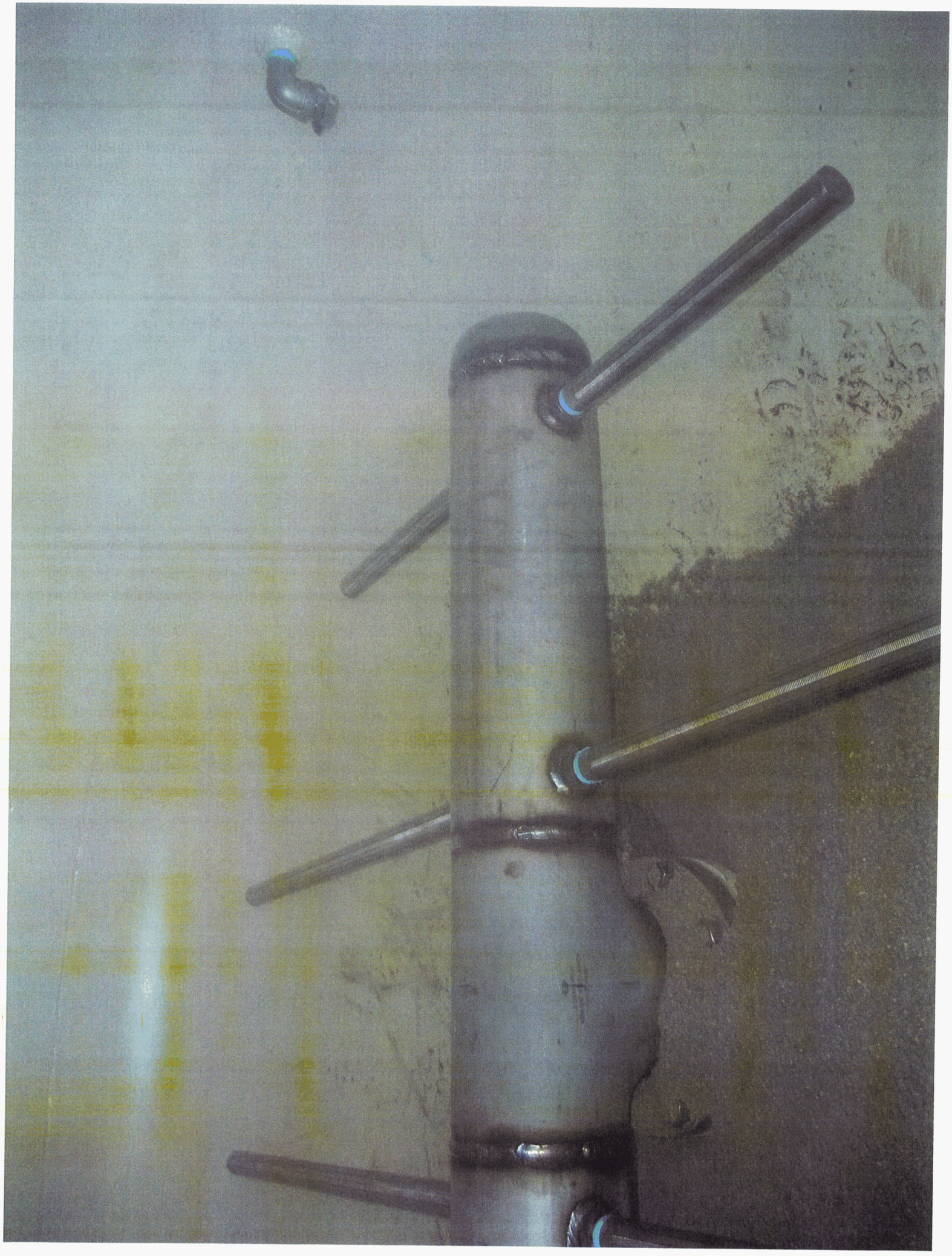

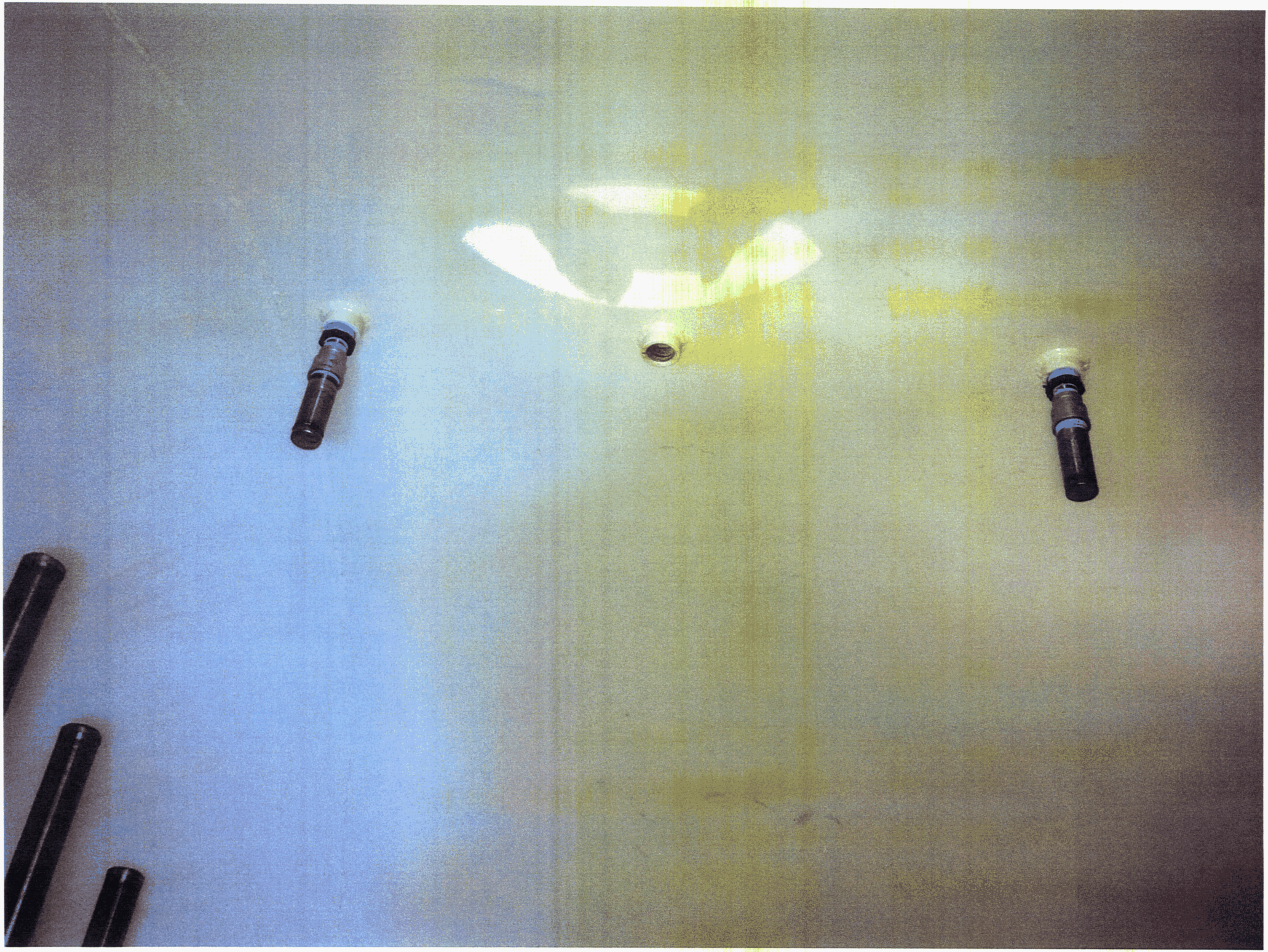

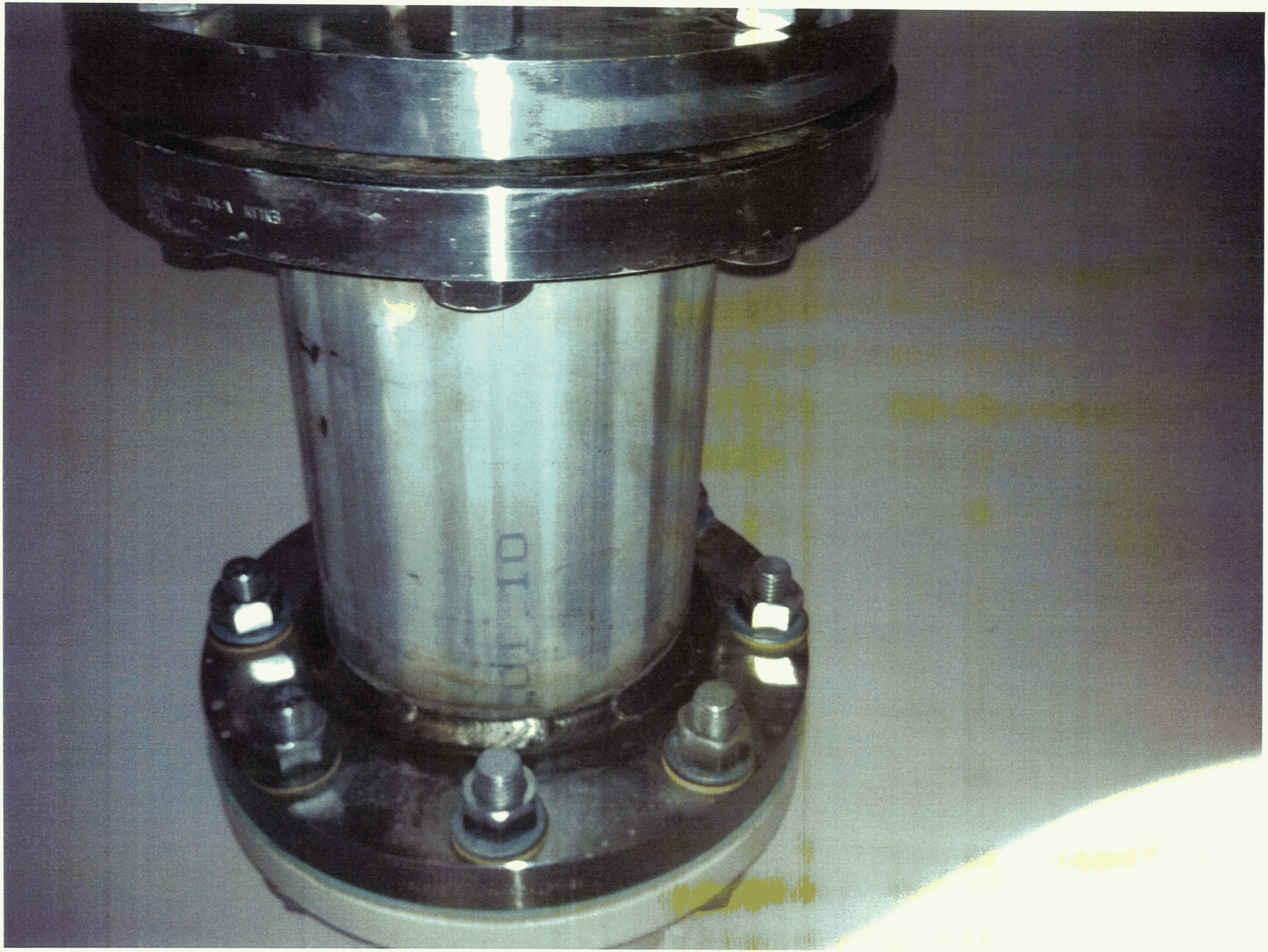

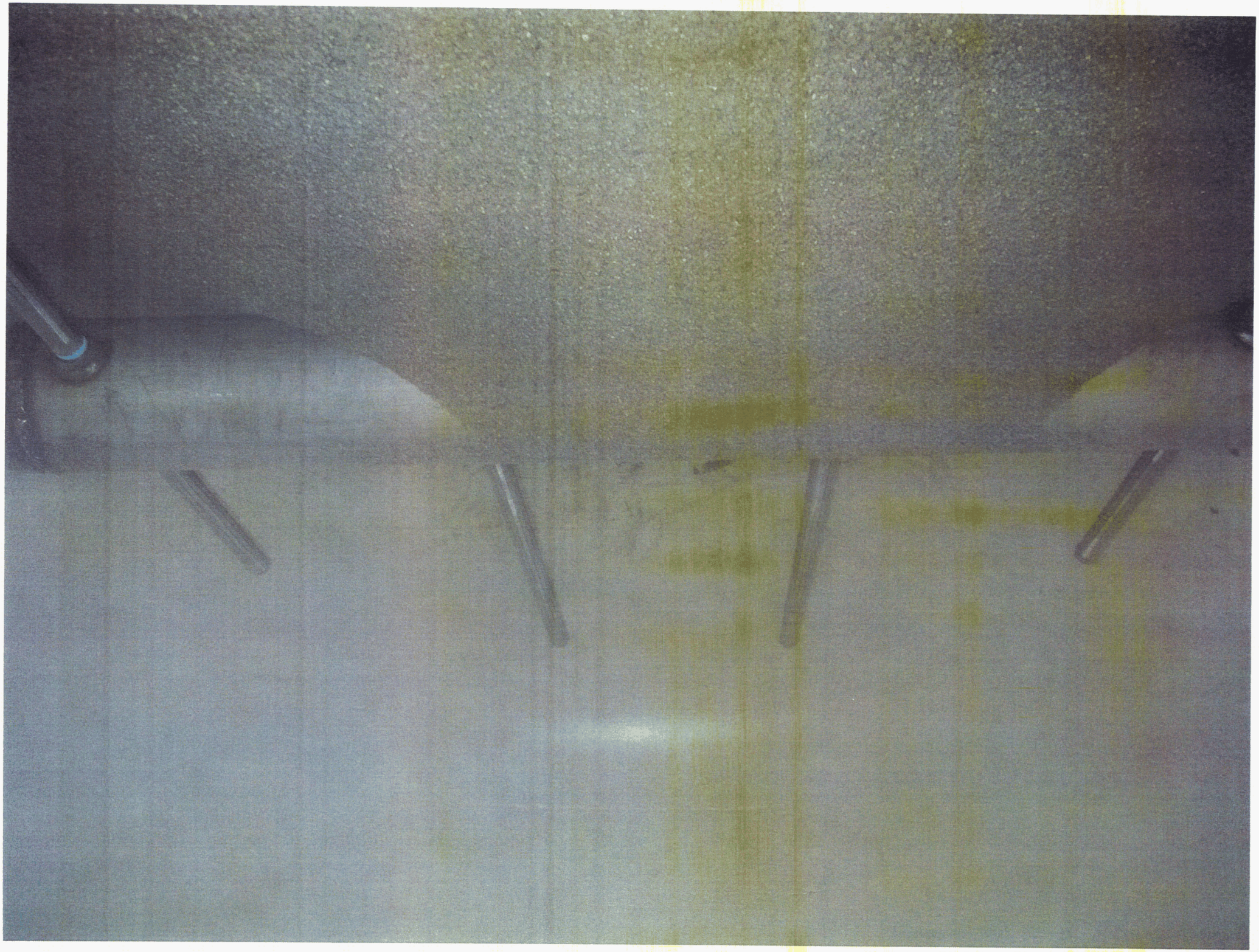

LAKOS
FILTRATION SYSTEMS

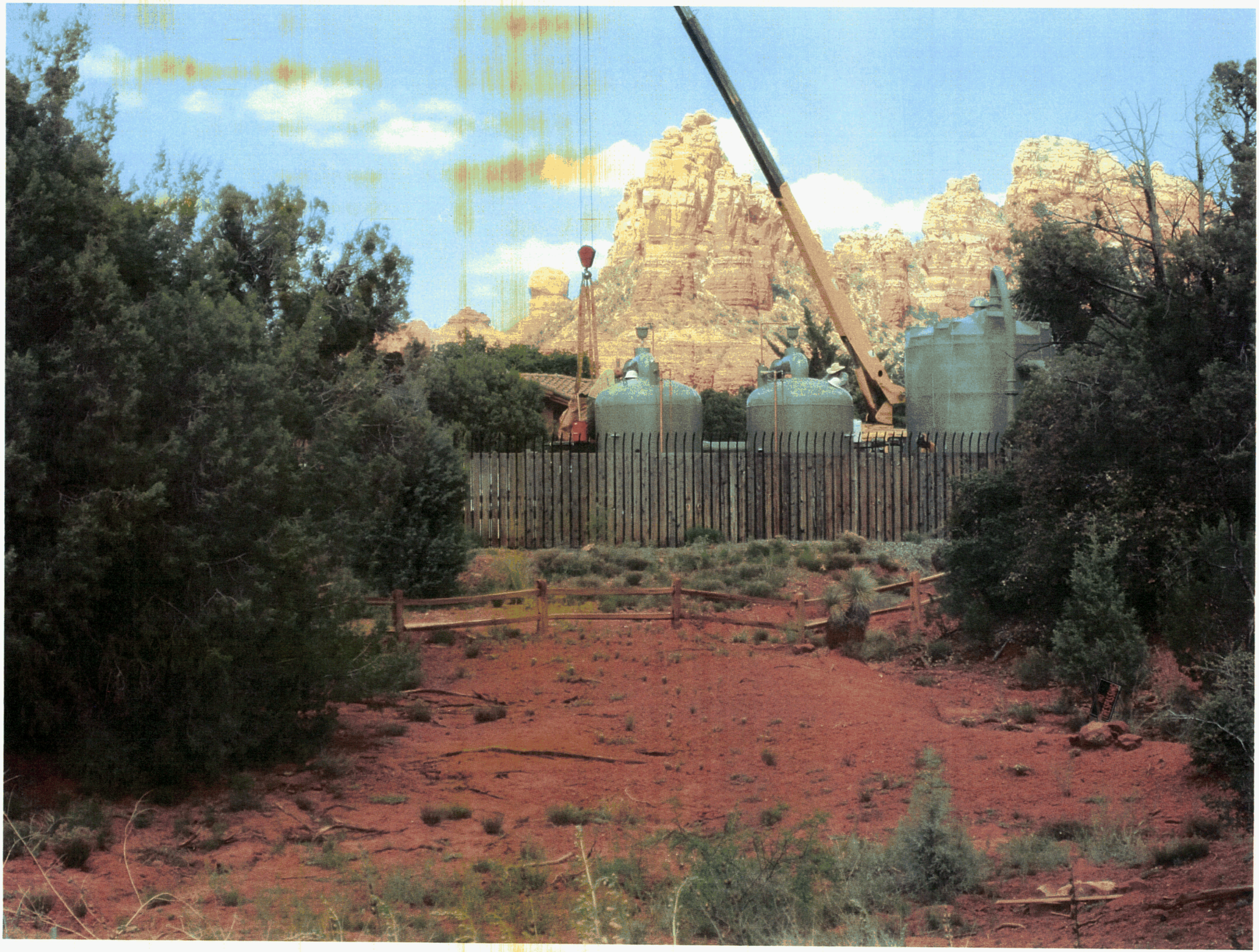

90
327
LAVOS

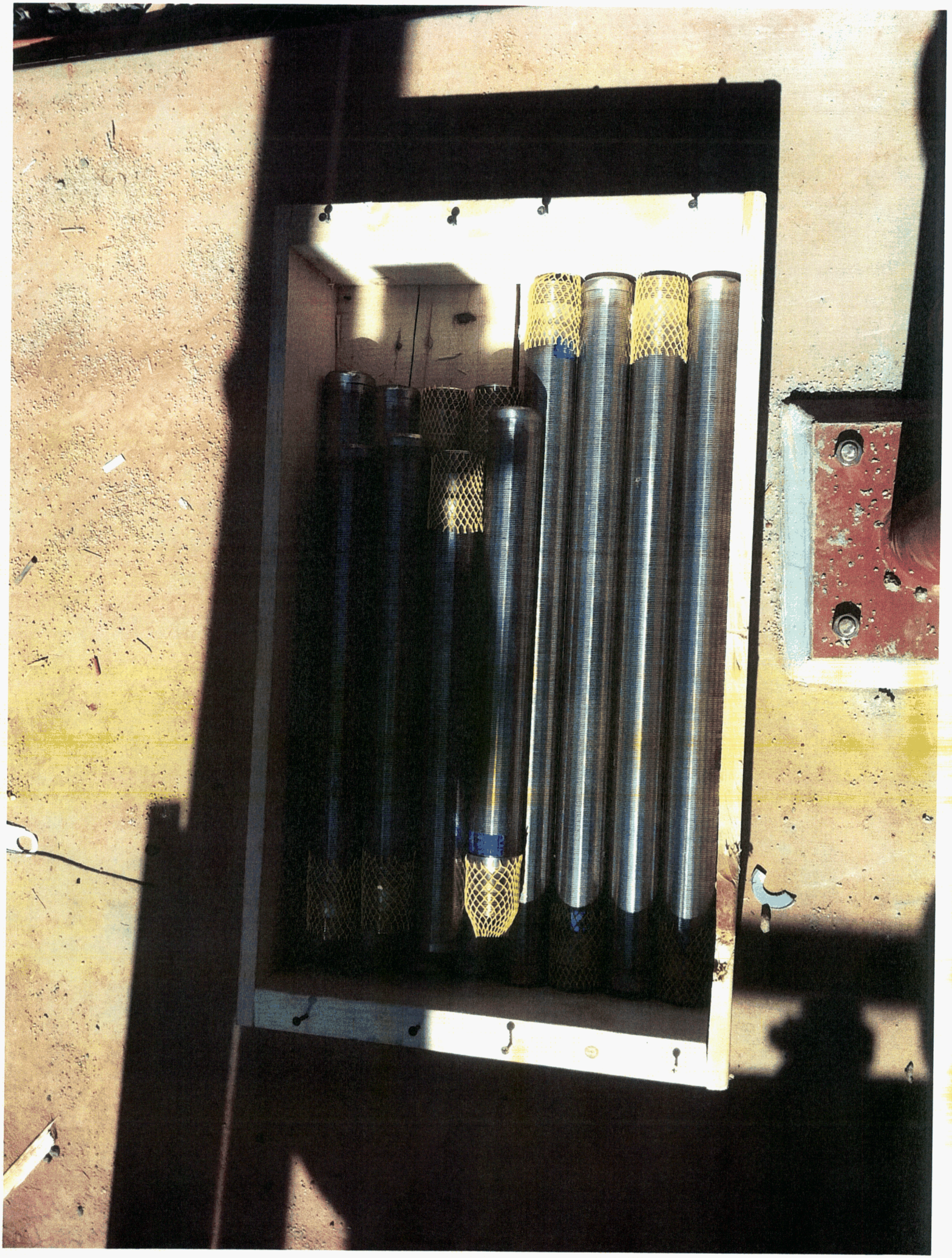

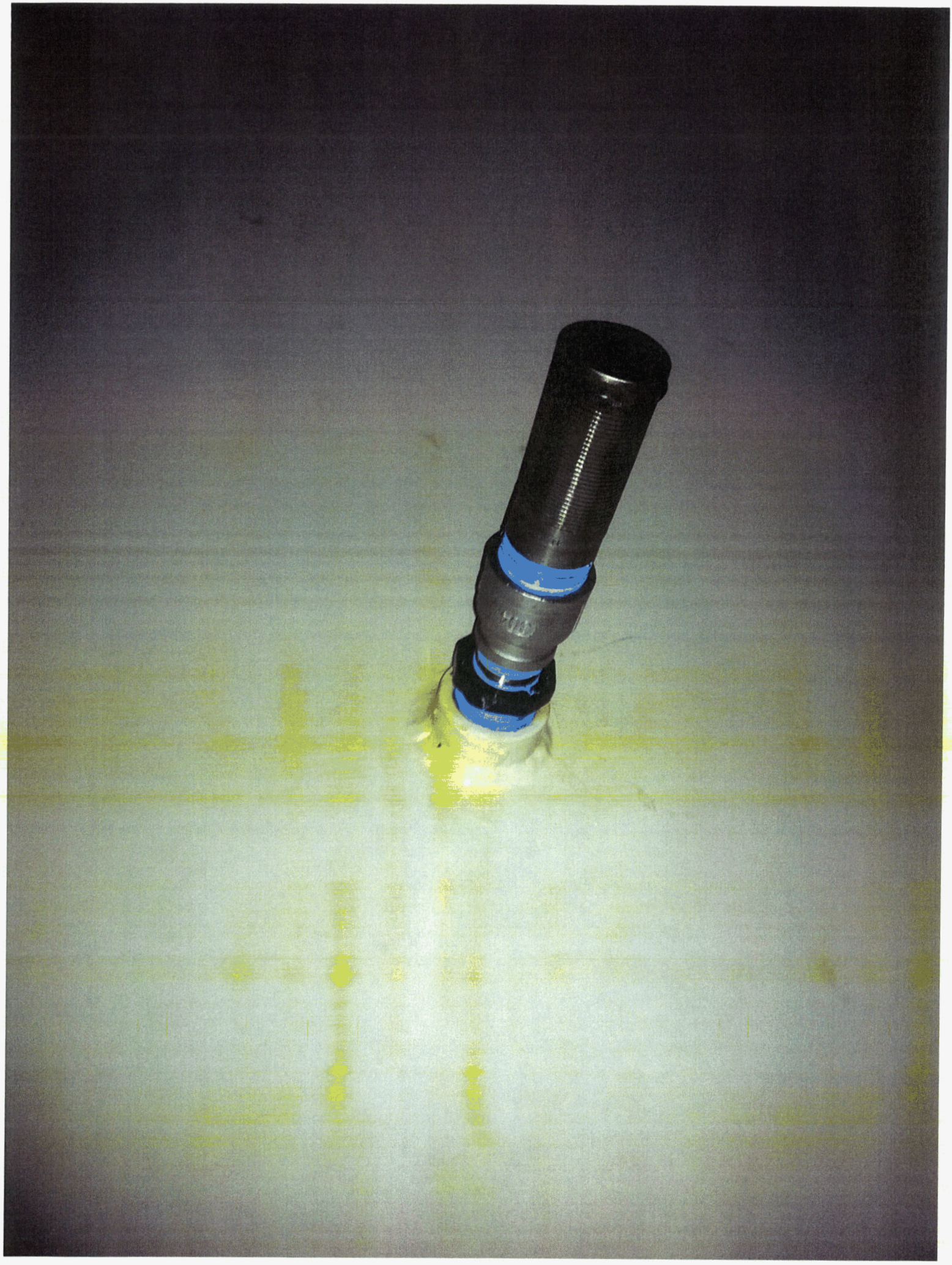

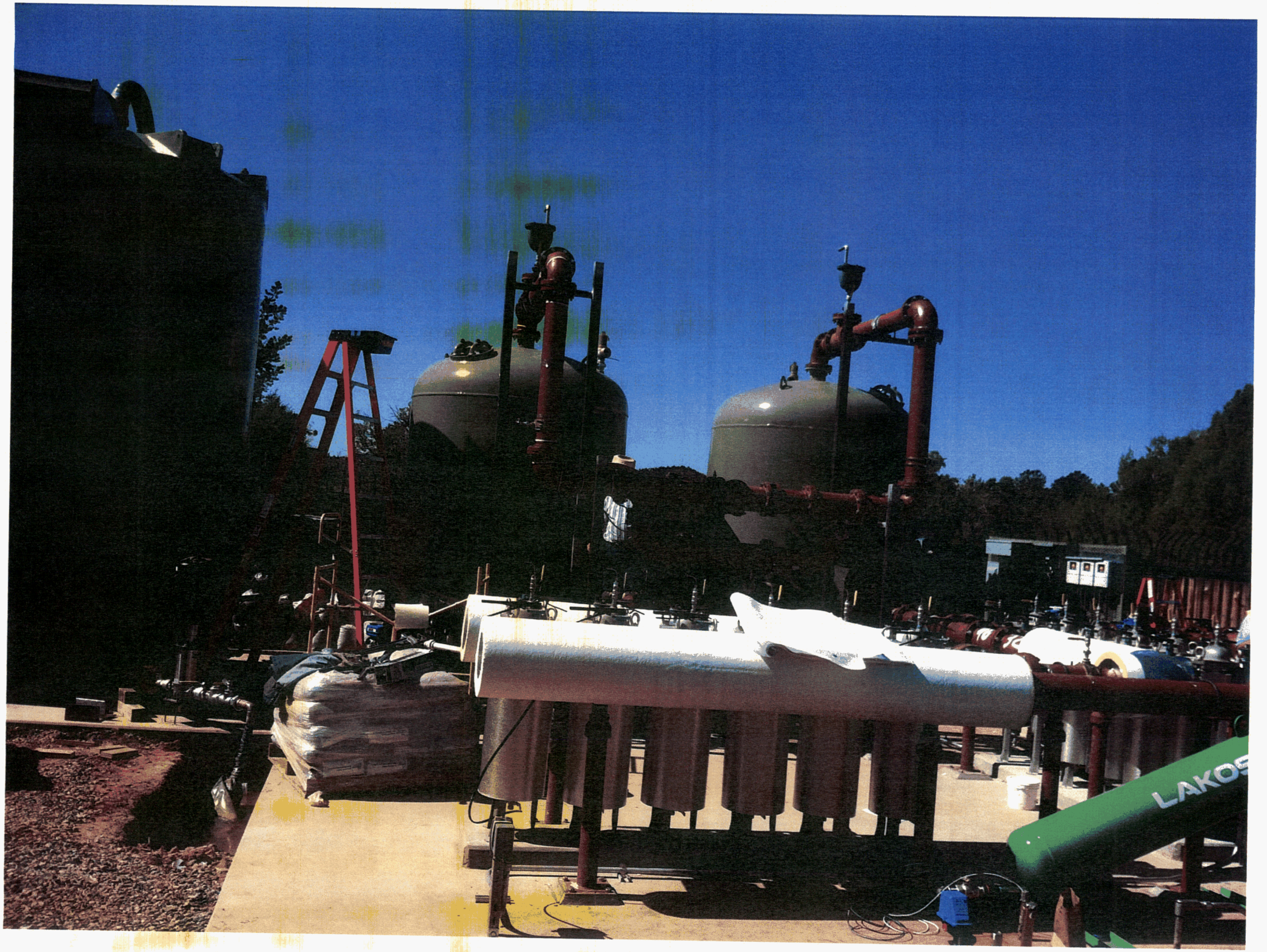
LAKOS

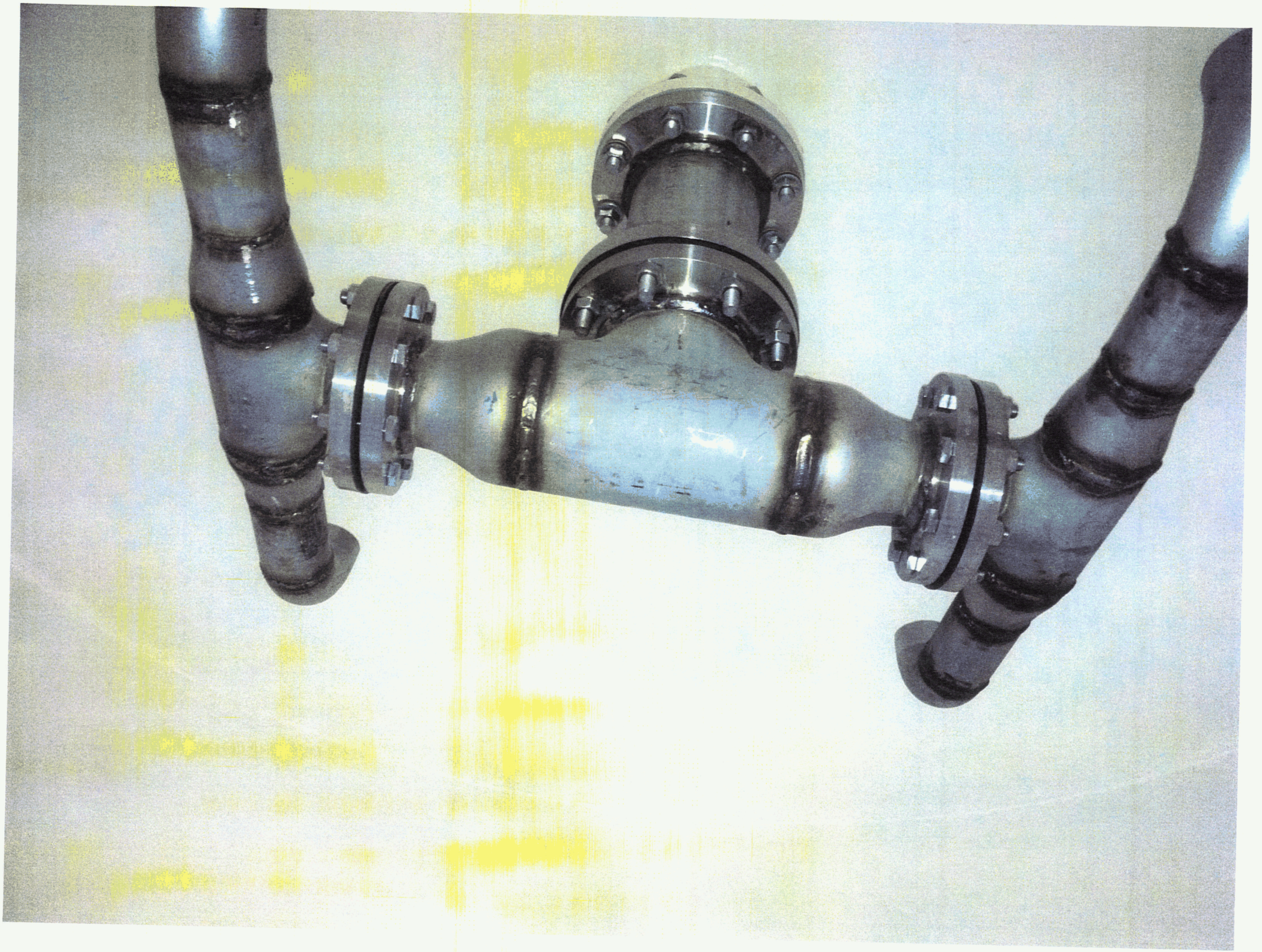

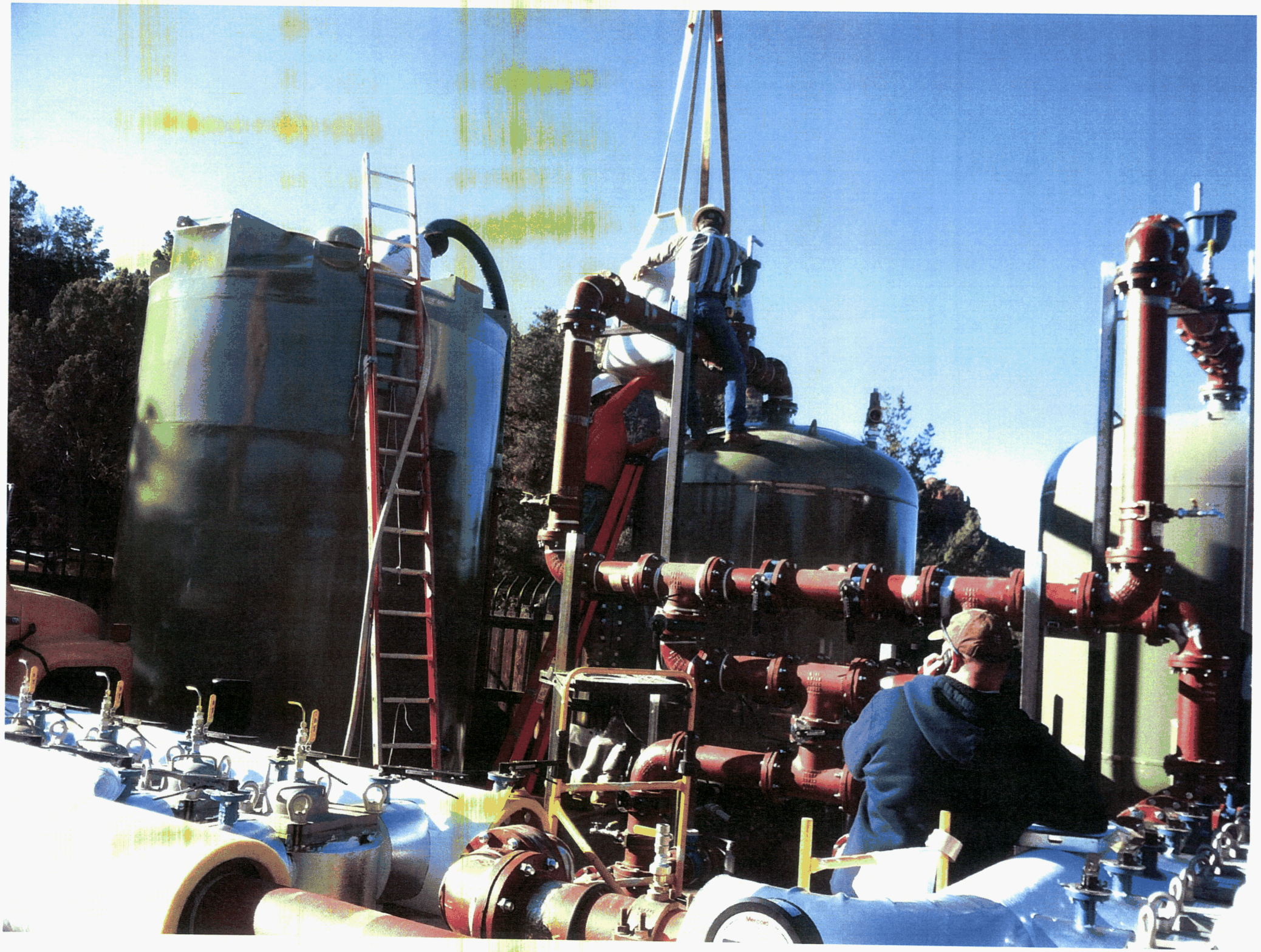

50 LB/ 22.68 kg
Carmeuse
Industrial Sands
DRINKING WATER SYSTEM COMPONENTS
CERTIFIED IN ACCORDANCE WITH
ANSI/NSF 61
NSF
CARMEUSE
NATURAL CHEMICALS

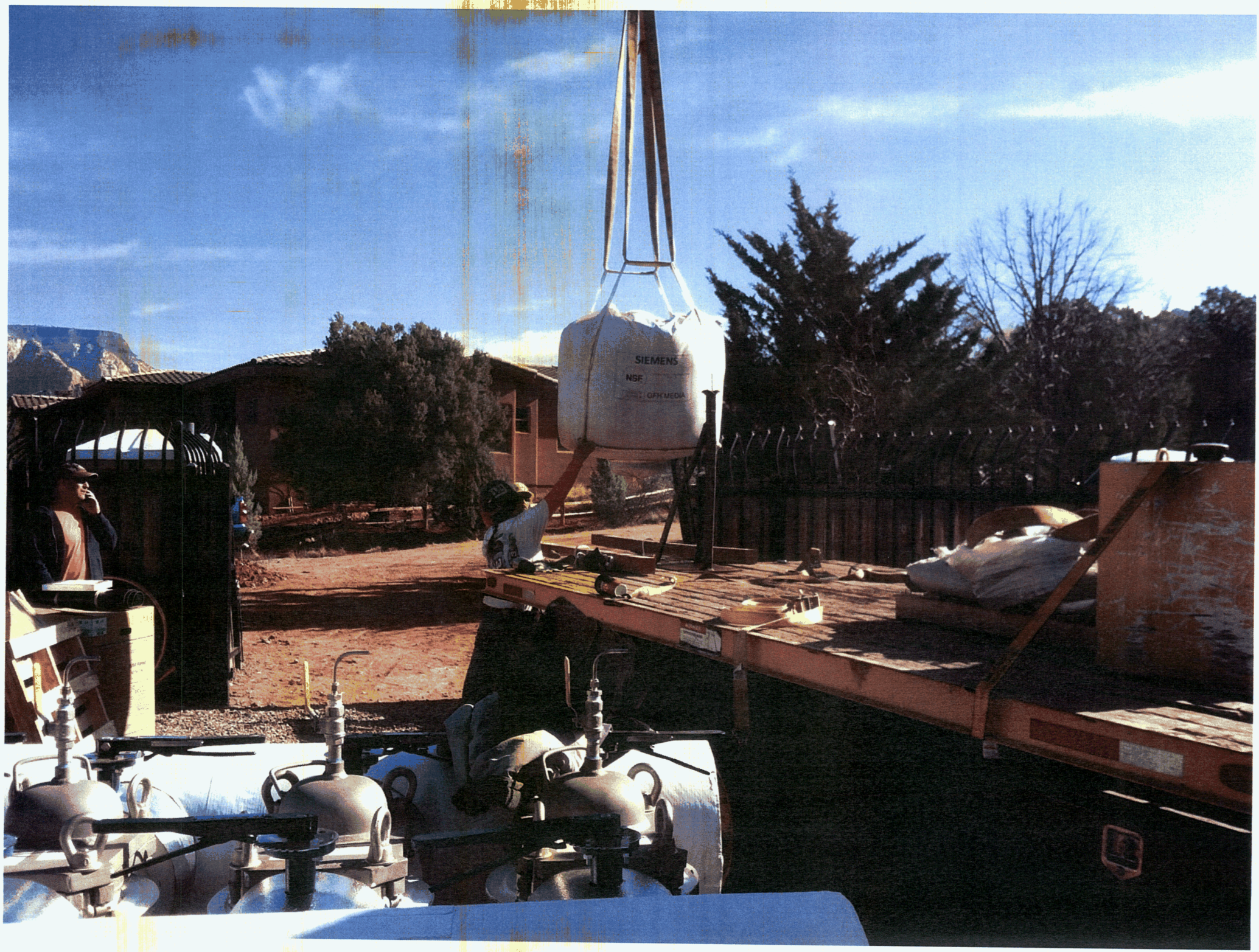
SIEMENS
NSF

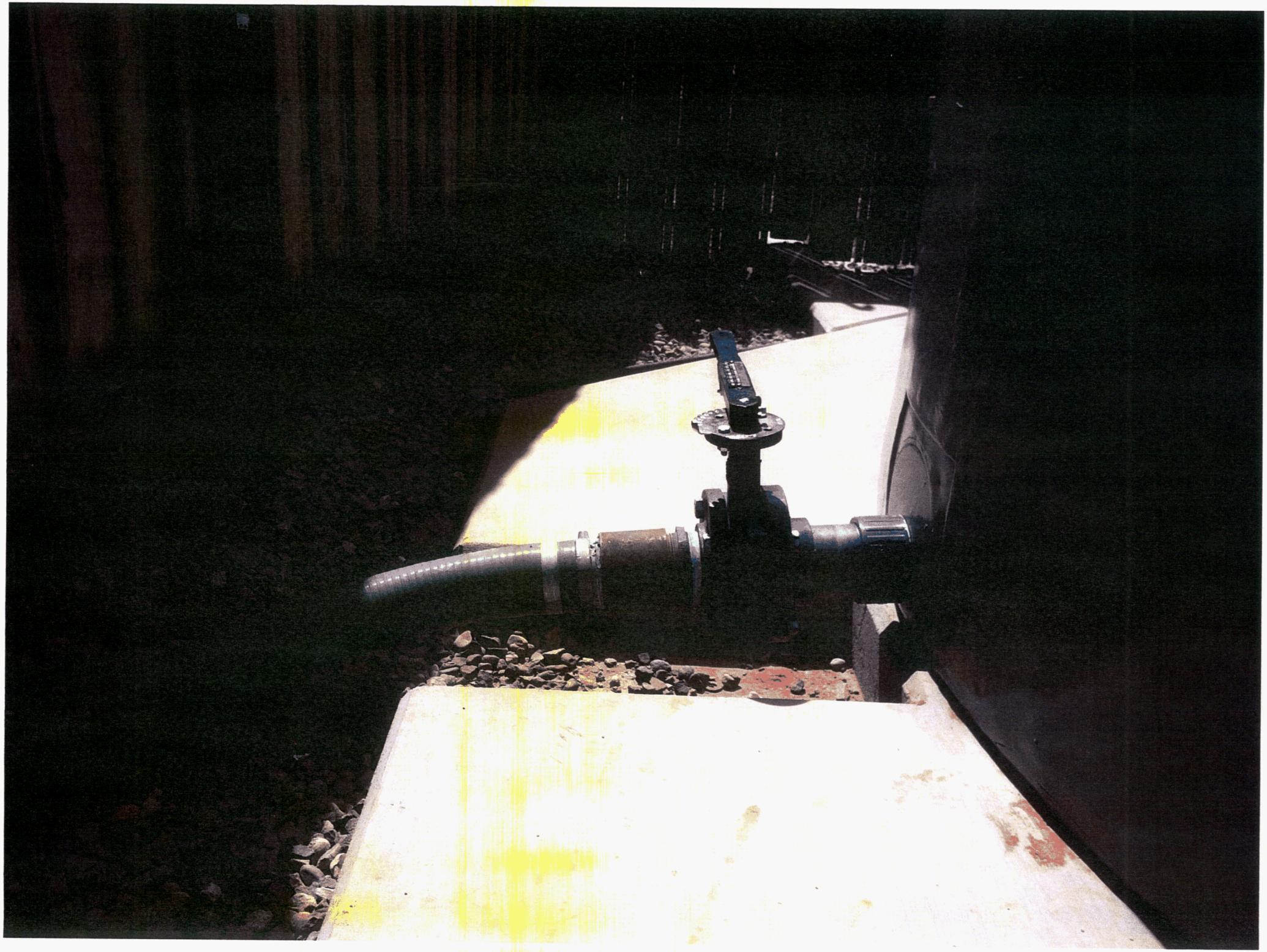

OPEN
SHUT
CLA-VAL
CLA-VAL
CLA-VAL
RETURN THIS TAG TO YOUR
SERVICE CENTER WITH THE
Assem. by
Insp. by
Pkgd by
Tested by
Date
ASSEMBLY
LOCATION

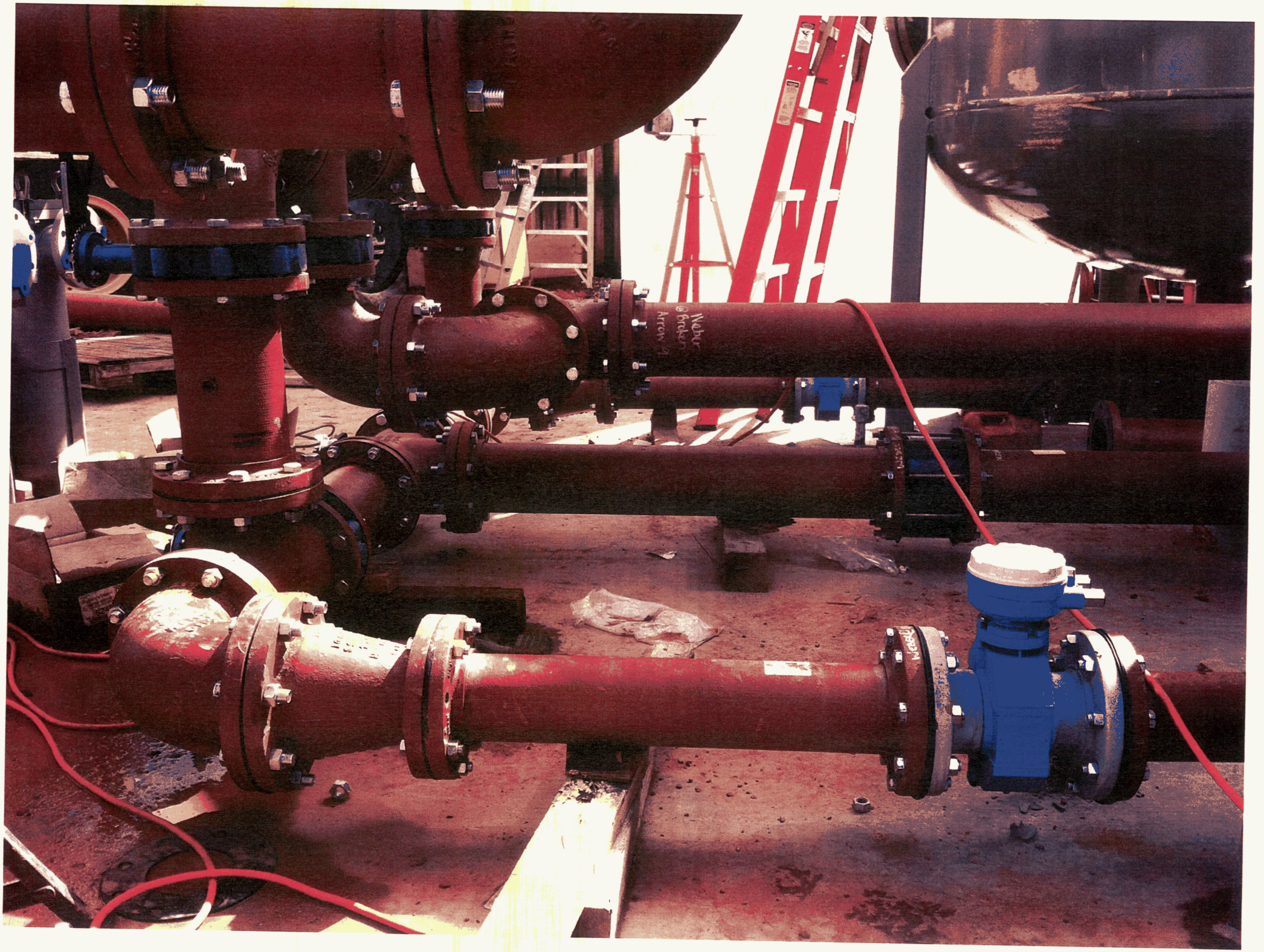

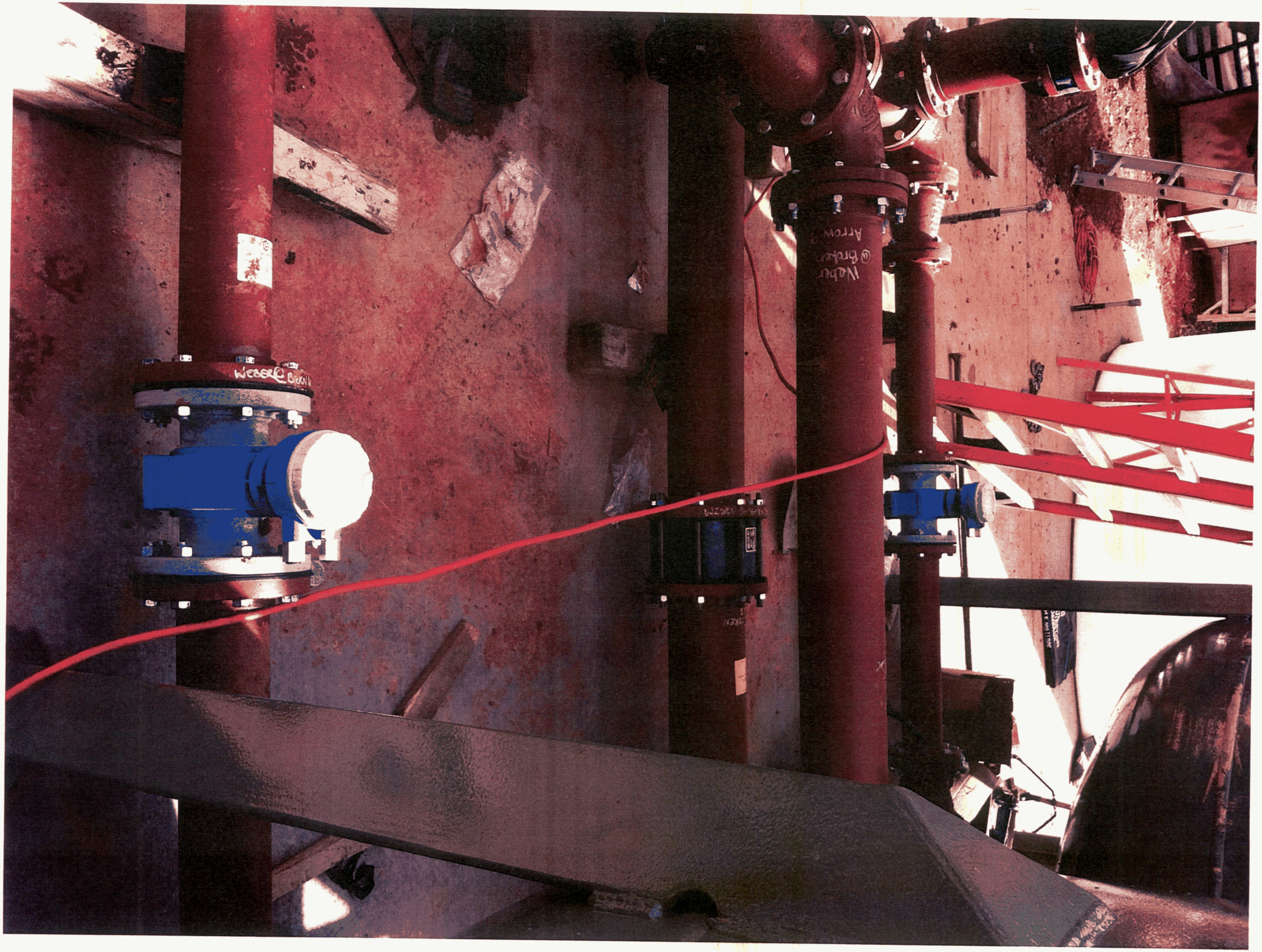

WERNER
FSI

SIEMENS
NSF
SIEMENS
NSF
GFH MEDIA

SIEMENS
NSF®
CERTIFIED TO
ANSI/NSF 61
Siemens Water Technologies Corp.
Ames, IA
GFH® MEDIA

GEH
wasserchemie

Granular Ferric Hydroxide (GFH "HiCap")
High-Capacity Adsorbent for Drinking Water Treatment
NSF/ANSI Standard 61 certified

Big Bag	**7925**
Order	Siemens 4500178998
Manufacturing Place	Osnabrück / Germany
Net Weight	980 kg
Lot No.	[illegible] - 2208 2777 f
Quality Control	08.09.2011

Date Signature

Quality management system certified in accordance with ISO 9001:2008

GEH wasserchemie
GEH Wasserchemie GmbH & Co. KG
Heinrich-Hasemeier-Straße 33
D-49076 Osnabrück | Germany
Tel +49 (0) 541 122009
Fax +49 (0) 541 18 11 990
info@geh-wasserchemie.de
www.geh-wasserchemie.de

LAKO
FILTRATION SYS

50 LB/ 22.68
Industrial Sands
Colorado Silica Sand
WARN
CORROSION P
REPAIR AN

Indust
TO READ THIS WARNIN
COLORAD
CORROSION P
REPAIR AN

ARIZONA WATER COMPANY
Verde Valley Division
55 Coffee Pot Drive, Ste 7 Sedona, AZ 86336
928-282-5555 | FAX 928-282-6131

PROPOSAL/CONTRACT

CONTRACTOR: American Fence Company of Arizona, Inc.	SYSTEM: Verde Valley/Sedona
ADDRESS: 7301 1st St.	W.A. No(s): 1-4875 ~~Blanket Funded~~
CITY ST ZIP: Prescott Valley, AZ 86314	BID DUE DATE: November 21, 2011

CONTRACTOR SUBMITS this PROPOSAL/CONTRACT to ARIZONA WATER COMPANY, an Arizona corporation (the "Company"), to perform the work and complete the project described on Page 2 (the "Project"), as an independent prime contractor.

1 Contractor certifies that it has a complete copy of, and has read, understands and accepts, the Company's General Conditions of Contract, and the Company's Construction Specifications and Standard Specification Drawings, (the "Specifications"), all of which are attached hereto. Contractor has examined the specific plans and related construction drawings for the Project (the "Drawings"), copies of which are also attached hereto. The General Conditions of Contract, Specifications and Drawings are incorporated into this Proposal/Contract. Contractor affirms that all work and materials to be furnished or purchased for the Project will be in strict conformance with the General Conditions of Contract, Specifications and Drawings.

2. Contractor represents and warrants that it has satisfied and complied with the provisions of Section 6, Contractor Understands Work and Working Conditions, of the General Conditions of Contract prior to submitting this Proposal/Contract.

3 Contractor represents that this Proposal/Contract is fair and honest in all respects, is submitted in good faith and is not submitted in collusion with any other company, entity or person.

4 Contractor acknowledges that one hundred percent (100%) Performance and Payment Bonds are required and must be provided to the Company prior to the commencement of work.

5 Prior to the commencement of work, Contractor will submit to the Company a list of all materials to be used in the Project. The materials list will include the manufacturer, part number, price and quantity included in this Proposal/Contract.

6 Contractor will furnish all labor, tools, equipment and materials required to complete the Project according to the General Conditions of Contract, Specifications and Drawings. No materials purchased by Contractor to be incorporated into the Project are subject to tax at the time of purchase and Contractor will not charge the Company for any such tax. Contractor will pay the applicable transaction privilege tax (the "Contracting Tax") on the Project after Contractor receives payment of the final Project invoice from the Company. The cost of materials incorporated into the Project which are exempt by Arizona Revised State Statues ("A.R.S.") from the Contracting Tax, for example, pipes or valves having a diameter of four (4) inches or larger, including equipment, fittings and any other related part that is used in operating the pipes or valves (A.R.S. §42-5061 B.6.), will not be included in the total cost of the labor and materials upon which the Contracting Tax is computed. Contractor retains full liability and obligation to pay the Contracting Tax and will defend and indemnify the Company against any demand or obligation to pay the Contracting Tax.

7. Contractor will maintain detailed accounting records of all materials purchased and incorporated into the Project. Such records will include all supporting original vendor invoices for all materials purchased. Following completion of the Project, Contractor will submit an itemized accounting to the Company which will include all supporting original vendor invoices and satisfactory evidence of payment thereof. The Company will not pay Contractor for materials not actually incorporated into the Project, and the disposition of such materials will remain Contractor's responsibility.

8 The Estimated Total Cost of the Project, shown on Page 2, is based on estimated labor and material quantities to be furnished. It includes an estimate of the Contracting Tax and the cost of the required Performance and Payment Bonds. Contractor will not cancel, modify or withdraw this Proposal/Contract during a ninety-day (90) period commencing on the Bid Due Date. The Company may accept this Proposal/Contract by signing and mailing, or otherwise delivering, a copy hereof to Contractor during such ninety-day (90) period. If the Company does not accept this Proposal/Contract during such ninety-day (90) period, Contractor may cancel this Proposal/Contract by giving written notice of cancellation to the Company.

9. Prior to the commencement of work, Contractor will provide the Company with a detailed construction schedule, in either Gantt or CPM form, identifying all tasks to be performed from the date of the written Commencement Notice through completion of the Project, including testing, training of Company Personnel and final Project invoicing. Contractor will provide the Company with a copy of such construction schedule documenting the progress of work on the Project at least monthly.

10. Contractor will not commence work on the Project until the Company gives Contractor a written Commencement Notice. Contractor will complete the Project within 25 calendar days after the Commencement Notice is issued.

11. Following the Company's written notice of satisfactory completion of the Project, and upon receipt of the final Project invoice from Contractor, the Company shall pay Contractor the actual total cost of the Project, which will be calculated as shown on Page 2, except that actual labor and material quantities installed/constructed will be substituted for the estimated labor and materials quantities and the Contracting Tax will be recalculated based on such actual labor and materials quantities.

12. The amount of applicable liquidated damages for Contractor's failure to deliver or perform within the time limit shown in Paragraph 10 may be deducted from the Company's payment of the final Project invoice. This provision shall not limit the Company's ability to terminate this Proposal/Contract for Contractor's unsatisfactory performance or failure to perform as provided in the General Conditions of Contract, Specifications or Drawings, or in this Proposal/Contract.

SPECIAL CONDITIONS:

CONTRACTOR	PROPOSAL/CONTRACT ACCEPTED:
American Fence Company of Arizona, Inc.	ARIZONA WATER COMPANY
By: [signature]	By: [signature]
Print Name: Kip Garasha	Print Name: Fredrick K. Schneider, PE
Title: Branch Manager	Title: Vice President - Engineering
Date: 11/21/11	Date: 2-10-2012

ARIZONA WATER COMPANY

Verde Valley Division
65 Coffee Pot Drive, Ste 7 Sedona, AZ 86336
928-282-6565 | FAX 928-282-6121

PROPOSAL/CONTRACT

CONTRACTOR: American Fence Company of Arizona, Inc.	SYSTEM: Verde Valley/Sedona
AZ CONTRACTOR LICENSE NO: ROC 069390 CLASSIFICATION: L-14	W.A. No(s): Blanket Funded
ADDRESS: 7301 1st St.	BID DUE DATE: November 21, 2011
CITY ST ZIP Prescott Valley, AZ 86314	BID BOND REQUIRED ☐ Yes ☑ No

DESCRIPTION OF PROJECT: Remove existing two rail fencing around Broken Arrow Well #10 property boundary and replace with two rail split cedar fencing.

1-2. MATERIALS EXEMPT FROM CONTRACTING TAX (per Paragraph 6)	QUANTITY	UNIT PRICE LABOR	UNIT PRICE MATERIALS	TOTAL COST LABOR	TOTAL COST MATERIALS

3. Total Labor to Install Exempt Materials (add the amounts in column 1)	3	
4. Total Exempt Materials (add the amounts in column 2)		4

5-6. NON-EXEMPT MATERIALS	QUANTITY	UNIT PRICE LABOR	UNIT PRICE MATERIALS	TOTAL COST LABOR	TOTAL COST MATERIALS
Remove existing two rail fence	866 LF	940.73		940.73	
Install two rail split cedar fencing	731 LF	2784.11	1722.00	2784.11	1722.00

7. Total Labor to Install Non-Exempt Materials (add the amounts in column 5)	7	3724.84	
8. Total Non-Exempt Materials (add the amounts in column 6)			8 $ 1722.00
9. Subtotal A (add lines 3, 7 and 8)			9 $ 5446.84
10. Contracting Tax Base (multiply the amount on line 9 by 0.85)	10	$ 3540.45	
11. Applicable Contracting Tax Rate	11	10.73 %	
12. Contracting Tax (multiply the amount on line 10 by line 11)			12 379.89
13. Subtotal B (add lines 4, 9 and 12)			13 5826.73
14. 100% Performance and Payment Bonds Cost			14 58.27
15. Estimated Total Cost (add lines 13 and 14)			15 5885.00

NOTE: The Estimated Total Cost includes all labor and materials for backfill, pavement replacement, chip seal, and traffic control necessary for the Project.

TT

ARIZONA WATER COMPANY

Verde Valley Division
66 Coffee Pot Drive, Ste 7 Sedona, AZ 86336
928-282-5585 | Fax: 928-282-0131

PROPOSAL/CONTRACT

CONTRACTOR: Care Scape	SYSTEM: Verde Valley
ADDRESS: 3021 Centerpointe East Drive	W.A. No(s): 1-4875
CITY ST ZIP: Prescott, AZ 86301	BID DUE DATE: April 20, 2012

CONTRACTOR SUBMITS this PROPOSAL/CONTRACT to ARIZONA WATER COMPANY, an Arizona corporation (the "Company"), to perform the work and complete the project described on Page 2 (the "Project"), as an independent prime contractor.

1. Contractor certifies that it has a complete copy of, and has read, understands and accepts, the Company's General Conditions of Contract, and the Company's Construction Specifications and Standard Specification Drawings, (the "Specifications"), all of which are attached hereto. Contractor has examined the specific plans and related construction drawings for the Project (the "Drawings"), copies of which are also attached hereto. The General Conditions of Contract, Specifications and Drawings are incorporated into this Proposal/Contract. Contractor affirms that all work and materials to be furnished or purchased for the Project will be in strict conformance with the General Conditions of Contract, Specifications and Drawings.
2. Contractor represents and warrants that it has satisfied and complied with the provisions of Section 6, Contractor Understands Work and Working Conditions, of the General Conditions of Contract prior to submitting this Proposal/Contract.
3. Contractor represents that this Proposal/Contract is fair and honest in all respects, is submitted in good faith and is not submitted in collusion with any other company, entity or person.
4. Contractor acknowledges that one hundred percent (100%) Performance and Payment Bonds are required and must be provided to the Company prior to the commencement of work.
5. Prior to the commencement of work, Contractor will submit to the Company a list of all materials to be used in the Project. The materials list will include the manufacturer, part number, price and quantity included in this Proposal/Contract.
6. Contractor will furnish all labor, tools, equipment and materials required to complete the Project according to the General Conditions of Contract, Specifications and Drawings. No materials purchased by Contractor to be incorporated into the Project are subject to tax at the time of purchase and Contractor will not charge the Company for any such tax. Contractor will pay the applicable transaction privilege tax (the "Contracting Tax") on the Project after Contractor receives payment of the final Project invoice from the Company. The cost of materials incorporated into the Project which are exempt by Arizona Revised State Statute ("A.R.S.") from the Contracting Tax, for example, pipes or valves having a diameter of four (4) inches or larger, including equipment, fittings and any other related part that is used in operating the pipes or valves (A.R.S. §42-5061 B.9.), will not be included in the total cost of the labor and materials upon which the Contracting Tax is computed. Contractor retains full liability and obligation to pay the Contracting Tax and will defend and indemnify the Company against any demand or obligation to pay the Contracting Tax.
7. Contractor will maintain detailed accounting records of all materials purchased and incorporated into the Project. Such records will include all supporting original vendor invoices for all materials purchased. Following completion of the Project, Contractor will submit an itemized accounting to the Company which will include all supporting original vendor invoices and satisfactory evidence of payment thereof. The Company will not pay Contractor for materials not actually incorporated into the Project, and the disposition of such materials will remain Contractor's responsibility.
8. The Estimated Total Cost of the Project, shown on Page 2, is based on estimated labor and material quantities to be furnished. It includes an estimate of the Contracting Tax and the cost of the required Performance and Payment Bonds. Contractor will not cancel, modify or withdraw this Proposal/Contract during a ninety-day (90) period commencing on the Bid Due Date. The Company may accept this Proposal/Contract by signing and mailing, or otherwise delivering, a copy hereof to Contractor during such ninety-day (90) period. If the Company does not accept this Proposal/Contract during such ninety-day (90) period, Contractor may cancel this Proposal/Contract by giving written notice of cancellation to the Company.
9. Prior to the commencement of work, Contractor will provide the Company with a detailed construction schedule, in either Gantt or CPM form, identifying all tasks to be performed from the date of the written Commencement Notice through completion of the Project, including testing, training of Company Personnel and final Project invoicing. Contractor will provide the Company with a copy of such construction schedule documenting the progress of work on the Project at least monthly.
10. Contractor will not commence work on the Project until the Company gives Contractor a written Commencement Notice. Contractor will complete the Project within 15 calendar days after the Commencement Notice is issued.
11. Following the Company's written notice of satisfactory completion of the Project, and upon receipt of the final Project invoice from Contractor, the Company shall pay Contractor the actual total cost of the Project, which will be calculated as shown on Page 2, except that actual labor and material quantities installed/constructed will be substituted for the estimated labor and materials quantities and the Contracting Tax will be recalculated based on such actual labor and materials quantities.
12. The amount of applicable liquidated damages for Contractor's failure to deliver or perform within the time limit shown in Paragraph 10 may be deducted from the Company's payment of the final Project invoice. This provision shall not limit the Company's ability to terminate this Proposal/Contract for Contractor's unsatisfactory performance or failure to perform as provided in the General Conditions of Contract, Specifications or Drawings, or in this Proposal/Contract.

SPECIAL CONDITIONS:

Contractor will be responsible for Blue Stake
Performance and payment bonds are not required.

CONTRACTOR	PROPOSAL/CONTRACT ACCEPTED:
Care Scape	ARIZONA WATER COMPANY
By: [signature]	By: [signature]
Print Name: Frank Abbott	Print Name: Fredrick K. Schneider, PE
Title: General Mgr. Northern AZ	Title: Vice President - Engineering
Date: 4/26/12	Date: 5-7-2012

ARIZONA WATER COMPANY

Verde Valley Division
65 Coffee Pot Drive, Bldg 7 Sedona, AZ 86336
928-282-5636 | Fax: 928-282-0131

PROPOSAL/CONTRACT

CONTRACTOR: Care Scape	SYSTEM: Verde Valley
AZ CONTRACTOR LICENSE NO: CLASSIFICATION:	W.A. Rep#: 1-4875
ADDRESS: 3021 Centerpointe East Drive	BID DUE DATE: April 26, 2012
CITY ST ZIP Prescott, AZ 86301	BID BOND REQUIRED: ☐ Yes ☑ No

DESCRIPTION OF PROJECT: Provide labor and equipment to plant (12) twelve 10' to 12', 30" box Arizona Cypress trees in pre-determined locations at 1480 SR 179 in Sedona.

1-2. MATERIALS EXEMPT FROM CONTRACTING TAX (per Paragraph 6)	QUANTITY	UNIT PRICE LABOR	UNIT PRICE MATERIALS	TOTAL COST LABOR	TOTAL COST MATERIALS
3. Total Labor to Install Exempt Materials (add the amounts in column 1)				3	
4. Total Exempt Materials (add the amounts in column 2)					4

5-6. NON-EXEMPT MATERIALS	QUANTITY	UNIT PRICE LABOR	UNIT PRICE MATERIALS	TOTAL COST LABOR	TOTAL COST MATERIALS
Labor and equipment to plant 10' to 12', 30" box Arizona Cypress trees	12	350.00		4200.00	
7. Total Labor to Install Non-Exempt Materials (add the amounts in column 5)				7 4200.00	
8. Total Non-Exempt Materials (add the amounts in column 6)					8 $ -
9. Subtotal A (add lines 3, 7 and 8)					9 $ 4200.00
10. Contracting Tax Base (multiply the amount on line 9 by 0.65)				10 $ -	
11. Applicable Contracting Tax Rate				11 %	
12. Contracting Tax (multiply the amount on line 10 by line 11)					12
13. Subtotal B (add lines 4, 9 and 12)					13
14. 100% Performance and Payment Bonds Cost					14 XXXX
15. Estimated Total Cost (add lines 13 and 14)					15 4200.00

NOTE: The Estimated Total Cost includes all labor and materials for backfill, pavement replacement, chip seal, and traffic control necessary for the Project.

ARIZONA WATER COMPANY

COMMENCEMENT NOTICE

CONTRACTOR:

Mr. Frank Abbott
Carescape Construction, LLC
3021 Centerpointe East Drive
Prescott, AZ 86301

DATE: May 24, 2012
DIVISION: VERDE VALLEY
SYSTEM: VERDE VALLEY
W.A.: 1-4875

THIS IS YOUR NOTICE TO PROCEED WITH THE FOLLOWING PROJECT(S):

DESCRIPTION OF WORK:

Provide labor and equipment to plant (12) twelve 10' to 12', 30" box Arizona Cypress trees in pre-determined locations at 1480 ST 179 in Sedona.

PERFORMANCE AND PAYMENT BONDS REQUIRED: [X] Yes [ ] No

TOTAL DAYS ALLOWED: 15

COMPLETION DATE: June 8, 2012

Prior to the start of construction, please call Keith Self, Division Manager at 928-282-7092 to schedule a pre-construction meeting.

ARIZONA WATER COMPANY
Company

By _____
Title Vice President - Engineering

CARESCAPE CONSTRUCTION LLC
Contractor *(type name)*

By _____
Title _____

AFH
W:\PROJECTS\2011\WA\1-4875 SPECIAL #16 BROKEN ARROW WELL NO. 16 AR\AGREEMENTS\CONTRACTS\E-3-16-2 CARESCAPE CONSTRUCTION COMMENCEMENT NOTICE 1-4875 BROKEN ARROW-2.DOCX 1/15/09 | FKS:tr

ARIZONA WATER COMPANY

Verde Valley Division
65 Coffee Pot Drive, Ste 7 Sedona, AZ 86336
928-282-5555 | FAX: 928-282-6131

PROPOSAL/CONTRACT

CONTRACTOR: Tiffany Construction Company, Inc.	SYSTEM: Verde Valley / Sedona
ADDRESS: 75 Kallof Place, Ste 101	W.A. No(s): 1-4875
CITY ST ZIP: Sedona, AZ 86336	BID DUE DATE: May 16, 2012

CONTRACTOR SUBMITS this PROPOSAL/CONTRACT to ARIZONA WATER COMPANY, an Arizona corporation (the "Company"), to perform the work and complete the project described on Page 2 (the "Project"), as an independent prime contractor.

1. Contractor certifies that it has a complete copy of, and has read, understands and accepts, the Company's General Conditions of Contract, and the Company's Construction Specifications and Standard Specification Drawings, (the "Specifications"), all of which are attached hereto. Contractor has examined the specific plans and related construction drawings for the Project (the "Drawings"), copies of which are also attached hereto. The General Conditions of Contract, Specifications and Drawings are incorporated into this Proposal/Contract. Contractor affirms that all work and materials to be furnished or purchased for the Project will be in strict conformance with the General Conditions of Contract, Specifications and Drawings.
2. Contractor represents and warrants that it has satisfied and complied with the provisions of Section 6, Contractor Understands Work and Working Conditions, of the General Conditions of Contract prior to submitting this Proposal/Contract.
3. Contractor represents that this Proposal/Contract is fair and honest in all respects, is submitted in good faith and is not submitted in collusion with any other company, entity or person.
4. Contractor acknowledges that one hundred percent (100%) Performance and Payment Bonds are required and must be provided to the Company prior to the commencement of work.
5. Prior to the commencement of work, Contractor will submit to the Company a list of all materials to be used in the Project. The materials list will include the manufacturer, part number, price and quantity included in this Proposal/Contract.
6. Contractor will furnish all labor, tools, equipment and materials required to complete the Project according to the General Conditions of Contract, Specifications and Drawings. No materials purchased by Contractor to be incorporated into the Project are subject to tax at the time of purchase and Contractor will not charge the Company for any such tax. Contractor will pay the applicable transaction privilege tax (the "Contracting Tax") on the Project after Contractor receives payment of the final Project invoice from the Company. The cost of materials incorporated into the Project which are exempt by Arizona Revised State Statues ("A.R.S.") from the Contracting Tax, for example, pipes or valves having a diameter of four (4) inches or larger, including equipment, fittings and any other related part that is used in operating the pipes or valves (A.R.S. §42-5061 B.6.), will not be included in the total cost of the labor and materials upon which the Contracting Tax is computed. Contractor retains full liability and obligation to pay the Contracting Tax and will defend and indemnify the Company against any demand or obligation to pay the Contracting Tax.
7. Contractor will maintain detailed accounting records of all materials purchased and incorporated into the Project. Such records will include all supporting original vendor invoices for all materials purchased. Following completion of the Project, Contractor will submit an itemized accounting to the Company which will include all supporting original vendor invoices and satisfactory evidence of payment thereof. The Company will not pay Contractor for materials not actually incorporated into the Project, and the disposition of such materials will remain Contractor's responsibility.
8. The Estimated Total Cost of the Project, shown on Page 2, is based on estimated labor and material quantities to be furnished. It includes an estimate of the Contracting Tax and the cost of the required Performance and Payment Bonds. Contractor will not cancel, modify or withdraw this Proposal/Contract during a ninety-day (90) period commencing on the Bid Due Date. The Company may accept this Proposal/Contract by signing and mailing, or otherwise delivering, a copy hereof to Contractor during such ninety-day (90) period. If the Company does not accept this Proposal/Contract during such ninety-day (90) period, Contractor may cancel this Proposal/Contract by giving written notice of cancellation to the Company.
9. Prior to the commencement of work, Contractor will provide the Company with a detailed construction schedule, in either Gantt or CPM form, identifying all tasks to be performed from the date of the written Commencement Notice through completion of the Project, including testing, training of Company Personnel and final Project invoicing. Contractor will provide the Company with a copy of such construction schedule documenting the progress of work on the Project at least monthly.
10. Contractor will not commence work on the Project until the Company gives Contractor a written Commencement Notice. Contractor will complete the Project within 12 calendar days after the Commencement Notice is issued.
11. Following the Company's written notice of satisfactory completion of the Project, and upon receipt of the final Project invoice from Contractor, the Company shall pay Contractor the actual total cost of the Project, which will be calculated as shown on Page 2, except that actual labor and material quantities installed/constructed will be substituted for the estimated labor and materials quantities and the Contracting Tax will be recalculated based on such actual labor and materials quantities.
12. The amount of applicable liquidated damages for Contractor's failure to deliver or perform within the time limit shown in Paragraph 10 may be deducted from the Company's payment of the final Project invoice. This provision shall not limit the Company's ability to terminate this Proposal/Contract for Contractor's unsatisfactory performance or failure to perform as provided in the General Conditions of Contract, Specifications or Drawings, or in this Proposal/Contract.

SPECIAL CONDITIONS:

Contractor to obtain S.W.P.P.P. from City of Sedona.
Supplying and planting trees is not included in this proposal.

CONTRACTOR	PROPOSAL/CONTRACT ACCEPTED:
Tiffany Construction Company, Inc.	*ARIZONA WATER COMPANY*
By:	By:
Print Name: HERB C. TIFFANY III	Print Name: Fredrick K. Schneider, PE
Title: PRESIDENT	Title: Vice President - Engineering
Date: 5/15/12	Date: 5-24-2012

ARIZONA WATER COMPANY

Verde Valley Division
65 Coffee Pot Drive, Ste 7 Sedona, AZ 86336

RECEIVED
MAY 15 2012
ARIZONA WATER COMPANY

PROPOSAL/CONTRACT

CONTRACTOR: Tiffany Construction Company, Inc.	SYSTEM: Verde Valley/Sedona
AZ CONTRACTOR LICENSE NO: 071494 CLASSIFICATION: A	W.A. No(s): 1-4875
ADDRESS: 75 Kallof Place, Ste 101	BID DUE DATE: May 16, 2012
CITY ST ZIP Sedona, AZ 86336	BID BOND REQUIRED ☑ Yes ☐ No

DESCRIPTION OF PROJECT: Install landscape screening at Broken Arrow Well #10 per DWG No. VV-0012

1-2. MATERIALS EXEMPT FROM CONTRACTING TAX (per Paragraph 6)	QUANTITY	UNIT PRICE LABOR	UNIT PRICE MATERIALS	TOTAL COST LABOR	TOTAL COST MATERIALS
				1	2
3. Total Labor to Install Exempt Materials (add the amounts in column 1)				3	
4. Total Exempt Materials (add the amounts in column 2)					4

5-6. NON-EXEMPT MATERIALS	QUANTITY	LABOR	MATERIALS	LABOR	MATERIALS
Extend 18" CMP	30 LF	32.00	15.48	960.00	464.40
Rip rap CMP outlet per mag section 220	1 Lot	643.00	116.00	643.00	116.00
Install Pavestone retaining wall per plan	50 LF	58.44	19.18	2922.00	959.00
Install red soil to match plan contours	1 Lot	11,419.00	4416.00	11,419.00	4416.00
Tie-in new 1/2" Poly tubing to existing	1 Lot	375.00	206.00	375.00	206.00
Hydro seed disturbed area with approved native seed	1 Lot	450.00	170.00	450.00	170.00
SWPPP	1 Lot	224.00	319.00	224.00	319.00
				5	6
7. Total Labor to Install Non-Exempt Materials (add the amounts in column 5)				7 16,993.00	
8. Total Non-Exempt Materials (add the amounts in column 6)					8 $6650.00
9. Subtotal A (add lines 3, 7 and 8)					9 $23,643.4
10. Contracting Tax Base (multiply the amount on line 9 by 0.65)				10 $15,368.	21
11. Applicable Contracting Tax Rate				11 .10735 %	
12. Contracting Tax (multiply the amount on line 10 by line 11)					12 1649.78
13. Subtotal B (add lines 4, 9 and 12)					13 25,293.18
14. 100% Performance and Payment Bonds Cost					14 640.00
15. Estimated Total Cost (add lines 13 and 14)					15 25,933.18

NOTE: The Estimated Total Cost includes all labor and materials for backfill, pavement replacement, chip seal, and traffic control necessary for the Project.

Tres Rios
Consulting Engineers

4 April 2012

Hand Delivery

Mr. Janak Desai, PE
Manager, Drinking Water Facilities Review Unit
Arizona Department of Environmental Quality
1110 West Washington Street
Phoenix, AZ 85007

RE: Approval Of Construction: ADEQ File No. 20110274
Arizona Water Company - Arsenic Removal Facility Upgrades & Blending Plan
Broken Arrow Well No. 10, Sedona, AZ

Dear Mr. Desai:

On behalf or our client, Arizona Water Company, Tres Rios Consulting Engineers is providing the following documents for approval of construct ("AOC") review for the Arsenic Removal Facility Upgrades & Blending Plan for the Broken Arrow Well No. 10 site in Sedona, Arizona. This project is under the **expedited** review process.

- Approval to Construct (ATC) Permit. (3 pages).
- One (1) Each: Full-size (24"x36") As-built Drawings.
- One (1) Each: Operations & Maintenance Manual.
- Engineer's Certificate of Completion and Final Inspection. (1 page).
- Data Required with ECC. (1 page).
- Laboratory Test Results for the following parameters: (8 pages).
    - Bacteria (absent)
    - Arsenic in groundwater (pre-treatment) = 0.0133-mg/L
    - Arsenic after Vessel A (treated) = non-detect
    - Arsenic after Vessel B (treated) = non-detect
    - Arsenic in Blended Finished Water = 0.0053-mg/L
- Photos of Arsenic Removal Facility construction and media loading (2 pages).

As always, please feel free to call us at (480) 755-1042 if you have any questions.

Sincerely,

Blake E. Abts

Blake E. Abts, PE
Water & Wastewater Engineer
Tres Rios Consulting Engineers, Inc.

Enclosures
XC: Andrew J. Haas – Engineer, Arizona Water Company

230 W. Baseline Road, Suite 101-A Tempe, Arizona 85282 (480) 755-1042 Fax (480) 755-1043

ENGINEER'S CERTIFICATE OF COMPLETION AND FINAL INSPECTION "ECC"

ARIZONA DEPARTMENT OF ENVIRONMENTAL QUALITY (ADEQ) - WATER QUALITY DIVISION

ADEQ FILE NO.: 20110274 **DRINKING WATER DESIGN** *(Separate form now used for WASTEWATER DESIGN)* If separate Drinking Water & Wastewater Approvals to Construct were issued, separate ECCs required	**COUNTY:** Coconino County
	OWNER: Arizona Water Company

Project Name: Broken Arrow No. 10 Arsenic Removal Facility Upgrades & Blending Plan *(as shown on Approval to Construct)*

Project Description:
Arizona Water Company is installing a new Arsenic Removal Facility utilizing Siemens Granular Ferric Hydroxide ("GFH") sorption media to treat up to 450-gpm of groundwater from the well. The upgrades

(as shown on Approval to Construct, unless completed project differed, in which case describe in detail)

I, Jeffrey W. Bower *(print name)*, a **Professional Engineer registered in the State of Arizona, have inspected the construction of the above described project, and certify that** *(check all applicable boxes, complete applicable blanks)*:

ITEMS 1) THRU 4) MUST BE COMPLETED

☒ **1) The work on this project was completed on** 04/02/12 *(date)*.

☒ **2) On** 04/02/12 **(date) a final construction inspection was conducted by** ☒ **MYSELF or** ☐ **under MY DIRECT SUPERVISION by** _____ *(print name)*.

☒ **3) The materials utilized and the installation and construction of those materials and equipment are in conformance with the approved plans and specifications**

☒ **4) All provisions listed in the ADEQ Approval to Construct for this project, a copy of which I have attached to this certificate, have been fully satisfied or exceptions are listed on the reverse side of this certificate.**

☒ **5) All construction and preoperational tests (infiltration, exfiltration, pressure, deflection, chlorination, bacti, etc.)** *[circle types performed]* **were properly conducted, met ADEQ requirements, and are presented in attachments to this Certificate. The total number of pages of test results attached is** 8 pages.

EITHER 6A) or 6B) MUST BE CHECKED

☐ **6A) Any deviation from the approved plans and the ADEQ Certificate of Approval to Construct have been noted on the attached "As-Built" plans (as stipulated in the Approval to Construct provisions) prepared and sealed pursuant to A.R.S.§ 32-125 on** _____ *(date)*. **Of the total** _____ **sheets of "As-Built" plans attached, deviations from the approved plans are shown on sheets numbered** _____. **All deviations from the approved plans comply with the ADEQ minimum design and construction standards contained in statute, rule, bulletin or referenced codes, and with the key elements of the approved plans.**

☒ **6B) The completed project did not deviate from the plans which received the Approval to Construct.**

EITHER 7A) or 7B) MUST BE CHECKED

☐ **7A) This project did not require the preparation of an Operation and Maintenance Manual** *(the only projects which do NOT require an O&M manual are gravity-only sewage collection systems, single-family residence septic systems, and drinking water distribution projects that include no source, storage, or pressurization facilities). distribution projects that include no source, storage, or pressurization facilities).*

☒ **7B) A FINAL Operation and Maintenance Manual has been prepared for this project and a copy is attached. This manual meets all ADEQ minimum design and construction standards contained in statute, rule, bulletin, referenced codes, the key elements of the approved plans, and, if applicable, with Attachment B of the September 10, 1994 Engineering Advisory for Individual Alternate Systems.**

EITHER 8A) or 8B) MUST BE CHECKED

☒ **8A) Review of this project for Approval of Construction issuance does not require a fee because this project involves only drinking water, not wastewater.**

☐ **8B) In accordance with A.A.C. R18-14-103 Schedule B, a check in the amount of $**_____ **is attached as initial fee for review of the submitted and other information for issuance of an Approval of Construction.**

ADDITIONAL INFORMATION

☒ **9) Other, see additional Information on reverse side.**

Engineer Address Tres Rios Consulting Engineers, Inc. 230 W. Baseline Road, Suite 101-A, Tempe, AZ 85283 **Phone** (480) 755-1042

ENGINEER'S SEAL per AAC R4-30-304.B9

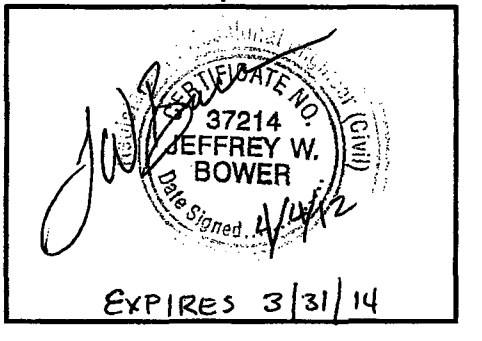

AZ DEPARTMENT OF ENVIRONMENTAL QUALITY ACCEPTANCE

EMPLOYEE SIGNATURE (PRINTED NAME) DATE

ADEQ Arizona Department of Environmental Quality

ENGINEERING REVIEW SECTION
DATA REQUIRED WITH ECC

INSTRUCTIONS

Please complete the test data and submit this form with the Engineers Certificate of Completion. An Approval of Construction cannot be issued without the data identified below in accordance with Arizona Administrative Code (A.A.C.) R18-5-508(C). Please attach all supplemental information and calculations to this form.

DATA

1.

PRESSURE TEST DATA				
Indicate Segment Tested	ALL NEW WORK		RE-TEST AFTER TANK LIFTS	
Pressure and Leakage Test Results (Pass/Fail)	PASS		PASS	
Date Tested	3-9-12		3-28-12	
Time Started	09:45		10:00	
Time Finished	11:45		12100	
Pipe Diameter	4" + 6"		4" + 6"	
Footage Tested	ALL		ALL	
Allowable Leakage	NONE		NONE	
Leakage Observed	NONE		NONE	
Pressure at Test Point	200 psi		200 psi	
Employee Observing the Test (Please Print Legibly)	JEFFREY W. BOWER			
Signature of Employee Observing the Test	JWB		JWB	

2.

DISINFECTION SAMPLING					
Initial Sampling (Minimum 50 ppm available chlorine)	Date	3/31/12			
	Time	3:00 pm			
	ppm Cl_2	70			
After 24 Hours Detention Time (Minimum 10 ppm free chlorine)	Date	4/2/12			
	Time	08:30 AM			
	ppm Cl_2	20			
After Sufficient Flushing (Water is clear and system Cl_2 residual is measured)	Date	4/3/12			
	Time	08:30 AM			
	ppm Cl_2	1.3			
Bacteriological Sampling(s):	Date	4/3/12			
	Time	09:58 AM			
	Attached (Y/N)	Yes			
		(Yes)/No	Yes/No	Yes/No	Yes/No

3.

Certification

I, JEFFREY W. BOWER, certify that I have inspected the work performed and have found it to be satisfactory and in accordance with Arizona Administrative Code, Arizona Engineering Bulletins, and the approved specifications.

Authorized Persons Signature

3 April 2012
Date

Professional Seal
As per A.A.C. R18-5-507(B)(1)

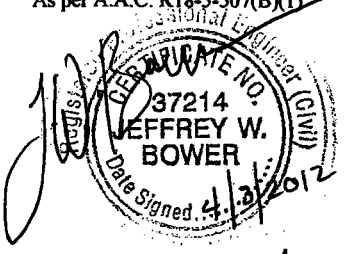

EXPIRES 3/31/14

LEGEND
Technical Services, Inc.
www.legend-group.com

17631 North 25th Avenue • Phoenix, AZ 85023
P (602) 324-6100 • F (602) 324-6101

04 April 2012

Jeff Wold
Weber Group LC
16825 S.Weber Drive
Chandler, AZ 85226

RE: Drinking Water

Laboratory Work Order No.: 2040159

Legend Technical Services of Arizona, Inc. is pleased to provide the enclosed analytical results for the aforementioned project. These results relate only to the items tested. This cover letter and the accompanying pages represent the full report for these analyses and should only be reproduced in full. Samples for this project were received by the laboratory on 04/03/12 11:55.

The samples were processed in accordance with the Chain of Custody document and the results presented relate only to the samples tested. The Chain of Custody is considered part of this report.

All samples will be retained by LEGEND for 30 days from the date of this report and then discarded unless other arrangements are made.

This entire report was reviewed and approved for release by the undersigned. If you have any questions concerning this report, please feel free to contact me.

Sincerely,
LEGEND TECHNICAL SERVICES OF ARIZONA, INC.

Barbara Frank

Barbara Frank
Client Services Representative
(602) 324-6100

This laboratory report is confidential and is intended for the sole use of LEGEND and it's client.

Weber Group LC	Project: Drinking Water	
16825 S.Weber Drive	Project Number: Broken Arrow ARS PWS # 03-003 4/3/12	**Reported:**
Chandler, AZ 85226	Project Manager: Jeff Wold	04/04/12 16:07

ANALYTICAL REPORT FOR SAMPLES

Sample ID	Laboratory ID	Matrix	Type	Date Sampled	Date Received
ARS Finish (Finished Water on ARS)	2040159-01	Drinking Water	Grab	04/03/12 09:58	04/03/12 11:55
Well (Groundwater from well 10)	2040159-02	Drinking Water	Grab	04/03/12 09:50	04/03/12 11:55
Tank A East (FW @ tank bottom)	2040159-03	Drinking Water	Grab	04/03/12 09:52	04/03/12 11:55
Tank B West (FW @ tank bottom)	2040159-04	Drinking Water	Grab	04/03/12 09:54	04/03/12 11:55
Blend 180 (Blended FW @ 140 gpm)	2040159-05	Drinking Water	Grab	04/03/12 09:56	04/03/12 11:55

Sample Condition Upon Receipt:

Temperature: 2.00 C

All samples were received in acceptable condition unless noted otherwise in the case narrative.

Case Narrative:

Holding Times: All holding times were met unless otherwise qualified.

QA/QC Criteria: All analyses met method requirements unless otherwise qualified.

Certifications: AZ(PHX)0004, AZ(TUC)OOO4, AIHA#102982, CDC ELITE Member.

Accreditation is applicable only to the test methods specified on each scope of accreditation held by LEGEND.

Comments: There were no problems encountered during the processing of the samples, unless otherwise noted. All samples were analyzed on a "wet" basis unless designated as "dry weight".

Weber Group LC	Project: Drinking Water	
16825 S.Weber Drive	Project Number: Broken Arrow ARS PWS # 03-003 4/3/12	**Reported:**
Chandler, AZ 85226	Project Manager: Jeff Wold	04/04/12 16:07

ARS Finish (Finished Water on ARS) (2040159-01) Drinking Water (Grab) Sampled: 04/03/12 09:58 Received: 04/03/12 11:55

Analyte	Result	PQL	Units	Dilution	Batch	Prepared	Analyzed	Method	Notes
Legend Technical Services of Arizona, Inc.									
Microbiology									
E. coli	Absent		P/A	1	B2D0073	04/03/12 16:10	04/03/12 16:10	SM 9223B	
Total Coliforms	Absent		P/A	1	B2D0073	04/03/12 16:10	04/03/12 16:10	SM 9223B	

Well (Groundwater from well 10) (2040159-02) Drinking Water (Grab) Sampled: 04/03/12 09:50 Received: 04/03/12 11:55

Analyte	Result	PQL	Units	Dilution	Batch	Prepared	Analyzed	Method	Notes
Legend Technical Services of Arizona, Inc.									
Total Metals									
Arsenic	**0.0133**	0.0010	mg/L	1	B2D0054	04/03/12 16:14	04/03/12 21:44	EPA 200.8	

Tank A East (FW @ tank bottom) (2040159-03) Drinking Water (Grab) Sampled: 04/03/12 09:52 Received: 04/03/12 11:55

Analyte	Result	PQL	Units	Dilution	Batch	Prepared	Analyzed	Method	Notes
Legend Technical Services of Arizona, Inc.									
Total Metals									
Arsenic	<0.0010	0.0010	mg/L	1	B2D0054	04/03/12 16:14	04/03/12 21:48	EPA 200.8	

Tank B West (FW @ tank bottom) (2040159-04) Drinking Water (Grab) Sampled: 04/03/12 09:54 Received: 04/03/12 11:55

Analyte	Result	PQL	Units	Dilution	Batch	Prepared	Analyzed	Method	Notes
Legend Technical Services of Arizona, Inc.									
Total Metals									
Arsenic	<0.0010	0.0010	mg/L	1	B2D0054	04/03/12 16:14	04/03/12 21:51	EPA 200.8	

Blend 180 (Blended FW @ 140 gpm) (2040159-05) Drinking Water (Grab) Sampled: 04/03/12 09:56 Received: 04/03/12 11:55

Analyte	Result	PQL	Units	Dilution	Batch	Prepared	Analyzed	Method	Notes
Legend Technical Services of Arizona, Inc.									
Total Metals									
Arsenic	**0.0053**	0.0010	mg/L	1	B2D0054	04/03/12 16:14	04/03/12 21:55	EPA 200.8	

Weber Group LC	Project: Drinking Water	
16825 S.Weber Drive	Project Number: Broken Arrow ARS PWS # 03-003 4/3/12	**Reported:**
Chandler, AZ 85226	Project Manager: Jeff Wold	04/04/12 16:07

Microbiology - Quality Control

Legend Technical Services of Arizona, Inc.

Analyte	Result	Reporting Limit	Units	Spike Level	Source Result	%REC	%REC Limits	RPD	RPD Limit	Notes
Batch B2D0073 - micro_prep										
Blank (B2D0073-BLK1)				*Prepared & Analyzed: 04/03/12*						
E. coli	Absent		P/A							
Total Coliforms	Absent		P/A							

Total Metals - Quality Control

Legend Technical Services of Arizona, Inc.

Analyte	Result	Reporting Limit	Units	Spike Level	Source Result	%REC	%REC Limits	RPD	RPD Limit	Notes
Batch B2D0054 - EPA 200.8										
Blank (B2D0054-BLK1)				*Prepared & Analyzed: 04/03/12*						
Arsenic	<0.0010	0.0010	mg/L							
LCS (B2D0054-BS1)				*Prepared & Analyzed: 04/03/12*						
Arsenic	0.0260	0.0010	mg/L	0.0250		104	85-115			
Matrix Spike (B2D0054-MS1)		**Source: 2040159-05**		*Prepared & Analyzed: 04/03/12*						
Arsenic	0.0311	0.0010	mg/L	0.0250	0.0053	103	70-130			
Matrix Spike (B2D0054-MS2)		**Source: 2040182-01**		*Prepared & Analyzed: 04/03/12*						
Arsenic	0.0389	0.0010	mg/L	0.0250	0.0136	101	70-130			
Matrix Spike Dup (B2D0054-MSD1)		**Source: 2040159-05**		*Prepared & Analyzed: 04/03/12*						
Arsenic	0.0306	0.0010	mg/L	0.0250	0.0053	101	70-130	2	20	
Matrix Spike Dup (B2D0054-MSD2)		**Source: 2040182-01**		*Prepared & Analyzed: 04/03/12*						
Arsenic	0.0387	0.0010	mg/L	0.0250	0.0136	100	70-130	0.6	20	

Notes and Definitions

BLK	Method Blank
LCS/Dup	Laboratory Control Sample/Laboratory Fortified Blank/Duplicate
MS/Dup	Matrix Spike/Duplicate
Dry	Sample results reported on a dry weight basis
RPD	Relative Percent Difference

The results in this report apply to the samples analyzed in accordance with the chain of custody document. This analytical report must be reproduced in its entirety.

2040159

CHAIN OF CUSTODY RECORD

LEGEND Technical Services, Inc.
www.legend-group.com

☒ 17631 N. 25th Avenue • Phoenix, AZ 85023 • (602) 324-6100 • Fax (602) 324-6101
☐ 4585 S. Palo Verde Rd, Ste 423 • Tucson, AZ 85714 • (520) 327-1234 • Fax (520) 327-0518

Page 1 of 1

Please Print Clearly

CLIENT INFORMATION

Client Name	Address	City	State	Zip	Phone	Fax Number or Email Address
WEBER WATER RESOURCES	16825 S Weber Dr.	CHANDLER	AZ	85226	480-961-1141	Jeffwold@webergroupllc.com

Project Name	Project Number	Contact	P.O. No.	
BROKEN ARROW ARS	PWS # 03-003	JEFF Wold	44904	Fax Results ☐ Email Results ☑ QC Report ☐ EDD ☐ Special Detection Limits ☐

SAMPLE TYPE CODES

DW=Drinking Water (circled), S=Soil/Solid, T=Travel Blank, WW=Wastewater, F=Food, SW=Surface Water, G=Sludge/Biosolids, G=Groundwater, O=Other

TURNAROUND TIME — Laboratory Authorization Required for Rush

☐ Standard 10 - 15 Day
☒ Other 24 HR RUSH

REQUESTED ANALYSES

Client's Sample Identification	Date	Time	Sample Location	Composite	Grab	Sample Type	Compliance	No. of Containers	[illegible] (struck out)	Arsenic	Lab No.
ARS Finish	4/3/12	9:58	Finished Water on ARS		X	DW		1	X		01
WELL	4/3/12	9:50	Groundwater from Well 10		X			1		X	02
TANK A (EAST)	4/8/12	9:52	FW @ Tank bottom		X			1		X	03
TANK B (WEST)	4/3/12	9:54	FW @ Tank bottom		X			1		X	04
BLEND 180	4/3/12	9:56	Blended FW @ 140 gpm		X			1		X	05

RUSH 4/4/12

TO ENSURE COMPLETION OF ANALYSIS, SAMPLES MUST BE RECEIVED AT LEAST 3 HOURS PRIOR TO THE HOLD TIME EXPIRATION

Comments / Special Instructions:

SAMPLE CONDITION UPON RECEIPT (LAB USE)

[illegible]	5
[illegible]	2.0 C
[illegible]	Y (N)
[illegible]	Y N
[illegible]	(Y) N

WHITE-LAB YELLOW-CLIENT

	RELINQUISHED BY		SAMPLES RECEIVED BY	
①	Sampler Signature: Dave Lemons	Date: 4-3	Signature: H Ward	Date: 4/3/12
	Sampler Printed Name: DAVE LEMONS	Time: 11:55	Printed Name: H Ward	Time: 1155
②	Sampler Signature	Date	Signature	Date
	Sampler Printed Name	Time	Printed Name	Time
③	Sampler Signature	Date	Signature	Date
	Sampler Printed Name	Time	Printed Name	Time

FORM GEN-170 (05/06)

Weber Group LC 16825 S.Weber Drive Chandler, AZ 85226	Project: Drinking Water Project Number: Broken Arrow ARS PWS # 03-003 4/3/12 Project Manager: Jeff Wold	**Reported:** 04/04/12 16:07

RUSH NOTICE

W.O. #: 2040159

Company: Weber Group Phone: 480-245-2249

Contact: Jeff Wold

Prelim Due Date: _____ Final Due Date: _____

Analysis: As (4) Coliert (1)

Number of Samples: 4 Date Samples Expected: 4/3/12

Matrix: DW Expiration Date: _____

Supervisor Approval

Inorganics:	_____	Specifics:	_____
Metals:	4/2/12	Specifics:	_____
Micro:	4/6/12	Specifics:	_____
SOC:	_____	Specifics:	_____
VOC:	_____	Specifics:	_____
Sub1:	_____	Specifics:	_____
Sub2:	_____	Specifics:	_____

Comments: 24 rush -

COST: _____ Project Manager: _____

RUSH Initiator: _____

RM GE N-086.1 (10/05)

cop

Tres Rios

PHOTOGRAPH LOG

Project Name:	Site Location:	Project No.
Arsenic Removal Facility Upgrades	Broken Arrow Well No. 10	109411

Photo No.	Date:
1	3/30/12

Direction Photo Taken:

Southeast

Description:

GFH Filter Media Loading Vessel A. Arsenic Removal System

Photo No.	Date:
2	3/14/12

Direction Photo Taken:

Southwest

Description:

Arsenic Removal System Vessels and Valve Manifold.

Tres Rios
Consulting Engineers

PHOTOGRAPH LOG

Project Name:	Site Location:	Project No.
Arsenic Removal Facility Upgrades	Broken Arrow Well No. 10	109411

Photo No.	Date:
3	3/30/12

Direction Photo Taken:

South

Description:

Pre-filters (left), Blending By-pass Valve (center), and Finished Water piping and production meter (right) going out to distribution system.

Photo No.	Date:
4	3/14/12

Direction Photo Taken:

West

Description:

Valve Manifold (Left), Pre-filters (center) in two (2) banks of 6 filters each, and Lakos De-sander (right) in green color.

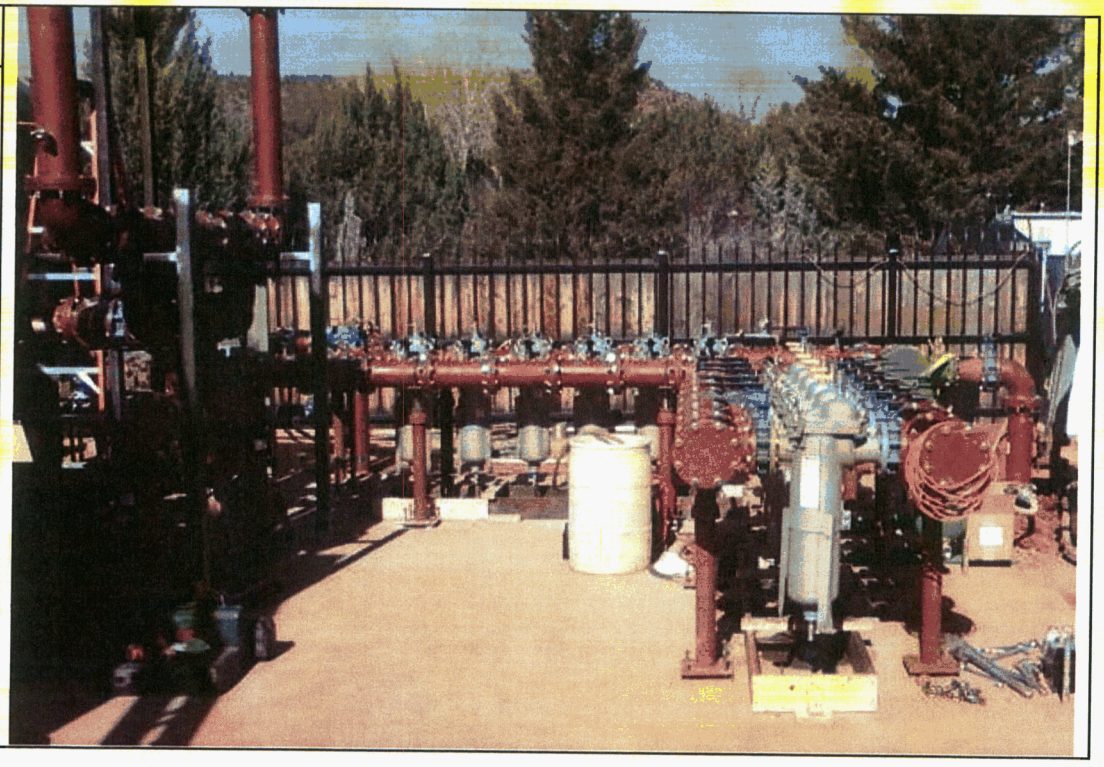

Janice K. Brewer
Governor

ARIZONA DEPARTMENT OF ENVIRONMENTAL QUALITY

1110 West Washington Street • Phoenix, Arizona 85007
(602) 771-2300 • azdeq.gov

Henry R. Darwin
Director

APPROVAL OF CONSTRUCTION

Project Description: Arizona Water Company-Broken Arrow Well No. 10 Arsenic Treatment Facility. AOC Permit for 1-Arsenic Treatment Facility Utilizing Siemens Granular Ferric Hydroxide Sorption Media and Blending Plan. Treating up-to 450 gpm of groundwater from Broken Arrow Well No. 10.

Location: Sedona, AZ

Project Owner: Arizona Water Company, c/o Mr. Andrew Haas
Address: P.O. Box 29006, Phoenix, AZ 85038

The Arizona Department of Environmental Quality (ADEQ) hereby issues an Approval of Construction for the above-described facility based on the following provisions of Arizona Administrative Code (A.A.C.) R18-5-507 et seq.

On December 29, 2011, ADEQ issued a Certificate of Approval to Construct for the referenced project.

On April 4, 2012 Jeffrey W. Bower, P.E., certified the following:

- A final construction inspection was conducted on April 2, 2012;
- The referenced project was constructed according to the as-built plans and specifications and ADEQ's Certificate of Approval to Construct;
- Water system pressure and leakage tests were conducted on March 9 & 28, 2012, and the results were within the allowable leakage rates;
- ADEQ reserves the right to revoke AOC Permit if attached Monitoring Plan is not completed, per AAC R18-4-105;
- The Treatment Components & Waterlines were disinfected according to an ADEQ-approved method; and
- The applicant has the right to appeal this AOC Permit. Appeal information is on reverse side of this Permit.

Microbiological samples were collected on April 3, 2012 and analyzed on April 4, 2012 by Legend Technical Services of Arizona, Inc., ADHS License No. AZ0004. The sample results were negative for total coliform.

This Approval of Construction authorizes the owner to begin operating the above-described facilities as represented in the approved plan on file with the ADEQ. Be advised that A.A.C. R18-5-124 requires the owner of a public water system to maintain and operate all water production, treatment and distribution facilities in accordance with ADEQ Safe Drinking Water Rules.

FMS

PWS No.: 03-003
LTF No.: 55808

Janak K. Desai, P.E., Manager
Drinking Water Facilities Review Unit
Drinking Water Section

4/11/2012
Date Approved

c: TEU File No.: 20110274
CRO Approval of Construction File
Coconino County Health Department
Coconino County Planning & Zoning Department
AZ Corporation Commission
Engineer

Sedona Fire District

R11729

2860 Southwest Drive, Sedona, Arizona 86336
Telephone: (928) 282-6800 FAX: (928) 282-6857

Occupancy Inspection Record

Address: 14180 STATE ROUTE 179

Occupancy: AZ WATER (WELL SITE)

Annual____ Tenant Improvement____ Tenant Occupancy____ Other____

Violation Fire Code #	Description of Violation	Correct By: (date)
L NOTE	FINAL INSPECTION	
	PASSED - NO VIOLATIONS NOTED	

NO VIOLATIONS ✓ CERTIFICATE OF OCCUPANCY APPROVAL ✓

RE-INSPECTION DATE (if applicable):_____

The items noted above are in violation of Sedona Fire District's Fire Code. This is an official notice of code violation requiring correction within the specified time. Failure to comply with these requirements may lead to legal action. This inspection is intended for your safety and the safety of the citizens of Sedona Fire District. Your cooperation is greatly appreciated. For more information concerning this inspection, call (928) 282-6800.

Inspected By: #50 CRAIG HASSEBROCK

Inspection Date: 4/10/2012

Received By: David G. Lemon

Form: 10/08/08 Code References on Back **File #:**

#3102 P.001/002
STAPLES
04/12/2012 11:30 9282825785

CITY OF SEDONA – *Building Safety Division*

As indicated below, the work is on this building is

Building	☐
Plumbing	☑
Electrical	☑
Mechanical	☐

APPROVED

For the following Construction Phase:

ARSENIC REMOVAL FACILITY
1480 Hwy 179
SEDONA

FINAL INSPECTION

4/11/12 — Date

BARRY W — Inspector

BSD/005 7/88

ARIZONA WATER COMPANY

CONSTRUCTION PLACED IN SERVICE NOTICE

WORK AUTHORIZATION NO.: 1-4875

DIVISION: Verde Valley

DATE PLACED IN SERVICE: 5 | 15 | 12

CONTRACT NO:

FOR PURPOSES OF *MODIFIED ACCELERATED COST RECOVERY SYSTEM*, AN ASSET IS "PLACED IN SERVICE" WHEN IT IS IN A CONDITION OR STATE OF READINESS AND AVAILABILITY FOR A SPECIFICALLY ASSIGNED FUNCTION, WHETHER IT BE FOR USE IN A TRADE OR BUSINESS, OR FOR THE PRODUCTION OF INCOME.

I CERTIFY THAT THE ASSET(S) CONSTRUCTED PURSUANT TO THE PROVISIONS OF THE ABOVE-REFERENCED WORK AUTHORIZATION ARE READY FOR SERVICE AS OF THE DATE SHOWN ABOVE.

John L. Sikes.

Division Manager or Operations Superintendent
(signature)

5/15/12 .

Date

SUBMIT ORIGINAL TO ACCOUNTING DEPARTMENT

A-1-3-1
FKS 11/24/11

ARIZONA WATER COMPANY

CONSTRUCTION PLACED IN SERVICE NOTICE

WORK AUTHORIZATION NO.: 1-4875

DIVISION: Verde Valley

DATE PLACED IN SERVICE: 5 | 15 | 12

CONTRACT NO:

FOR PURPOSES OF *MODIFIED ACCELERATED COST RECOVERY SYSTEM*, AN ASSET IS "PLACED IN SERVICE" WHEN IT IS IN A CONDITION OR STATE OF READINESS AND AVAILABILITY FOR A SPECIFICALLY ASSIGNED FUNCTION, WHETHER IT BE FOR USE IN A TRADE OR BUSINESS, OR FOR THE PRODUCTION OF INCOME.

I CERTIFY THAT THE ASSET(S) CONSTRUCTED PURSUANT TO THE PROVISIONS OF THE ABOVE-REFERENCED WORK AUTHORIZATION ARE READY FOR SERVICE AS OF THE DATE SHOWN ABOVE.

J. M. Sykes.

Division Manager or Operations Superintendent
(signature)

5/15/12 .

Date

SUBMIT ORIGINAL TO ACCOUNTING DEPARTMENT

A-1-3-1
FKS 11/24/11

WA 1-4928

ARIZONA WATER COMPANY
WORK AUTHORIZATION

W.A. NUMBER: 3-4928
P.E. NUMBER:
BUDGET ITEM NO.: B-1
SHEET NO.: 1 of 2

SYSTEM:	VERDE VALLEY	WORK TO START BY:	UPON AUTHORIZATION
DIVISION:	VERDE VALLEY	WORK TO BE FINISHED BY:	WITHIN 60 DAYS
TAX CODE:	0976		

DESCRIPTION OF WORK:

Install two vertical realignments and one well discharge catch basin with air gap on a 15-inch CMP to accommodate the City of Sedona's Harmony Windsong Phase 3 drainage channel on Lyric Drive and Windsong Drive. Construct in accordance with attached drawings and/or Arizona Water Company specifications.

FACTORS JUSTIFYING WORK:

City of Sedona is constructing a new drainage channel, which is in conflict with the Company's existing facilities located in City right-of-way. The City has requested in writing the Company relocate the facilities in conflict. Pursuant to Section 3 of the City Franchise Agreement, the Company must relocated its facilities and pay 75% of the cost of relocation and the City will pay 25% of the cost within 20 days following the presentation of an invoice by the Company.

COST ESTIMATE		AUTHORIZATION	DATE
COST OF WORK:		PREPARED BY:	
MATERIAL	0	Joseph Whelan	
LABOR	8,000	REVIEWED FOR ESMT/ROW VERIFICATION:	
CONTRACT PORTION	45,022	Charles Briggs	
OVERHEAD	5,832	REVIEWED BY:	
TOTAL AUTHORIZED EXPENDITURES CHARGEABLE TO THIS W.A.	$ 58,854	Andy Haas	
FUNDS RECEIVED:		APPROVED BY ENGINEERING:	
CONTRIBUTIONS RECEIVED	0	Fredrick Schneider	
REFUNDABLE ADVANCES RECEIVED	0	APPROVED BY FINANCE:	
TOTAL CONTRIBUTIONS/ADVANCES	0	Joseph Harris	
NET CASH REQUIRED	$ 58,854	AUTHORIZED BY PRESIDENT:	
		William Garfield	

COMMENTS:

The total project cost is equal to $60,975. In accordance with the City Franchise Agreement, the Company shall pay 75% of the project cost which is equal to $45,732. The City of Sedona shall pay 25% of the project cost which is equal to $15,244 within 20 days upon presentation of an invoice.

CONSTRUCTION RELEASE:

AFH

ARIZONA WATER COMPANY

WORK AUTHORIZATION - DETAIL SHEET

W.A. NUMBER: 3-4928
P.E. NUMBER:
BUDGET ITEM NO.: B-1
SHEET NO.: 2 of 2

RETIREMENT PROPERTY UNITS	PLANT PROPERTY ACCOUNT	UNIT DESCRIPTION	QUANTITY	YEAR INSTALLED AND W.A. NUMBER

PROJECT DESCRIPTION:

Install two vertical realignments and one well discharge with 15-inch CMP catch basin to accommodate the City of Sedona's Harmony Windsong Phase 3 drainage channel on Lyric Drive and Windsong Drive.

	DESCRIPTION	PLANT PROP ACCT	QUANTITY	UNIT COST	TOTAL
CONTRACT WORK	INSTALL 6" VERTICAL REALIGNMENT	343	45	$ 580.91	$ 26,141
	INSTALL 16" STEEL CASING	343	30	243.74	7,312
	INSTALL AIR RELEASE VALVE	343	2	2,577.82	5,156
	INSTALL 6" WELL DISCHARGE PIPING	343	1	1,805.50	1,806
	INSTALL 15" CATCH BASIN	343	1	1,212.64	1,213
	CONTRACTING TAX	343	1	2,083.00	2,083
	PERFORMANCE AND PAYMENT BOND	343	1	1,311.00	1,311
	SERVICE CONNECTIONS COMPLETE: DOUBLE-LONG	345			
	SERVICE CONNECTIONS COMPLETE: DOUBLE-SHORT	345			
	SERVICE CONNECTIONS COMPLETE: SINGLE-LONG	345			
	SERVICE CONNECTIONS COMPLETE: SINGLE-SHORT	345			
TOTAL CONTRACT WORK					$ 45,022
MATERIALS					
	SERVICE CONNECTIONS: DOUBLE-LONG	345			
	SERVICE CONNECTIONS: DOUBLE-SHORT	345			
	SERVICE CONNECTIONS: SINGLE-LONG	345			
	SERVICE CONNECTIONS: SINGLE-SHORT	345			
	METERS	346			
TOTAL MATERIALS					$ -
LABOR					
	TESTING FEE	343	1	$ 500.00	500
	PERMIT FEE	343	1	1,000.00	1,000
	SURVEY FEE	343	1	2,500.00	2,500
	FIELD INSPECTION	343	1	4,000.00	4,000
	INSTALL SERVICE CONNECTIONS: DOUBLE-LONG	345			
	INSTALL SERVICE CONNECTIONS: DOUBLE-SHORT	345			
	INSTALL SERVICE CONNECTIONS: SINGLE-LONG	345			
	INSTALL SERVICE CONNECTIONS: SINGLE-SHORT	345			
TOTAL LABOR					$ 8,000
SUBTOTAL - CONTRACT WORK, MATERIALS, AND LABOR					$ 53,022
OVERHEAD					5,832
TOTAL	REFUNDABLE PORTION ☐	NON-REFUNDABLE PORTION ☐		**COST ESTIMATE**	$ 58,854

AFH

WA 1-4928 - Re-Alignments for City of Sedona's Harmony Windsong Drainage Challen Project - Phase 3

ID	Task Name	Duration	Start	Finish
1	**Harmony Windsong Drainage Channel Phase 3**	**240 days**	**1/30/2012**	**12/28/2012**
2	Phase 2 Construction	80 days	1/30/2012	5/18/2012
3	Award Contract	10 days	5/21/2012	6/1/2012
4	Coordinate Realignment Construction w/ City of S	150 days	6/4/2012	12/28/2012

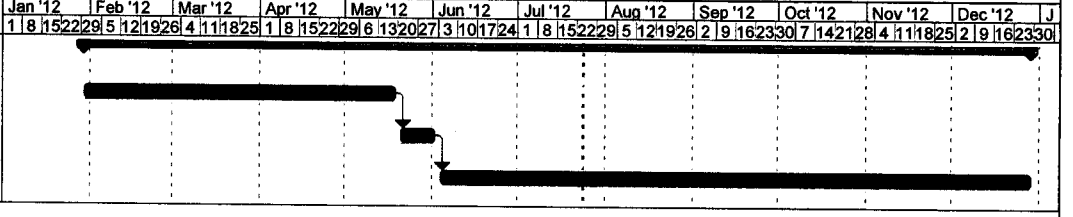

Project: Harmony Windsong Phase 3 S
Date: 7/24/2012

Task
Split
Progress
Milestone
Summary
Project Summary
External Tasks
External Milestone
Deadline

102 Roadrunner Drive
Sedona, Arizona 86336
TDD (928) 204-7102
www.SedonaAZ.gov

December 13, 2011

Arizona Water Company
Joe Whelan
3805 N. Black Canyon Hwy
Phoenix, AZ 85015

Attention: Joe Whelan, Engineering Development Coordinator
SUBJECT: WATER FACILITY RELOCATION – HARMONY/WINDSONG DRAINAGE PROJECT PHASE 3

This letter is to formally request Arizona Water Company relocate their facilities, which are in conflict with the City improvements proposed in the above referenced project.

The City plans to move forward with the project. Currently, we anticipate bidding the project in January 2012 and beginning construction in late February or early March 2012. We are requesting Arizona Water Company begin design and relocation efforts for the water lines in conflict with the proposed improvements. Please provide us with a schedule as soon as possible so that we may coordinate your efforts with other utilities. Your contact for permitting through the City of Sedona is Victor Estrada, he may be contacted at 928-204-7800.

The relocation shall accommodate improvements in the final construction plans dated July 8, 2011, which you received on September 9, 2011.

If you have any further questions or require any further assistance please feel free to contact me at 928-203-5039.

Sincerely,

J. Andy Dickey, PE
Assistant City Engineer
City of Sedona

JAD/tz
cc: Charles Mosley, PE MPA, Public Works Director/City Engineer (e-copy)
Dan Neimy, Maintenance Superintendent (e-copy)
Victor Estrada, Traffic Aide (e-copy)

L:\HARMONY PHASE 3\Letters\Arizona Water - Relocate Facilities.doc

CITY OF SEDONA
HARMONY–WINDSONG DRAINAGE WAY IMPROVEMENTS PHASE III

LOCATED IN PORTIONS OF SECTION 11 & 14, TOWNSHIP 17 NORTH,
RANGE 5 EAST, GILA AND SALT RIVER MERIDIAN,
YAVAPAI COUNTY, ARIZONA.

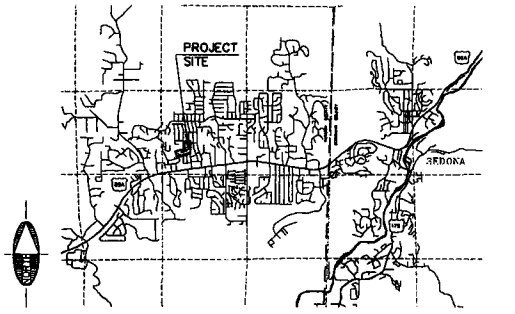

VICINITY MAP

NO SCALE

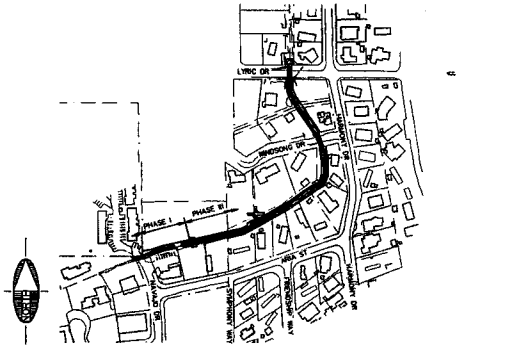

LOCATION MAP

NO SCALE

COORDINATE SYSTEM DETAILS

LINEAR UNIT: INTERNATIONAL FOOT

GEODETIC DATUM: NAD 1983 (NSRS 2007)

VERTICAL DATUM: NAVD 1988 (SEE BELOW)

SYSTEM: STATE PLANE COORDINATE SYSTEM (CITY OF SEDONA)

ZONE: ARIZONA CENTRAL 0202

PROJECTION:
TRANSVERSE MERCATOR
LATITUDE OF GRID ORIGIN: 31°00'00" N
LONGITUDE OF CENTRAL MERIDIAN: 111°55'00" W
NORTHING AT GRID ORIGIN: 0.000 FT
EASTING AT CENTRAL MERIDIAN: 700,000 FT
CENTRAL MERIDIAN SCALE FACTOR: 0.9999 (EXACT)

ALL DISTANCES AND BEARINGS SHOWN HEREON ARE NOT GRID VALUES BUT PROJECTED FOR THE PRECEDING COORDINATE SYSTEM DEFINITION. THIS DEFINITION IS SUCH THAT GRID DISTANCES ARE NOT EQUIVALENT TO "GROUND" DISTANCES IN THE PROJECT AREA.

ORTOMETRIC HEIGHTS (ELEVATIONS) WERE TRANSFERRED TO THE SITE FROM POINT "VORTEX" (NGS PID AJ5637) USING GPS WITH NGS GEOID MODEL "GEOID03". ELEVATIONS SHOWN HEREON ARE REFERENCED TO THE PUBLISHED ELEVATION OF THIS STATION.

THE SURVEY WAS CONDUCTED USING GPS REFERENCED TO THE NATIONAL SPATIAL REFERENCE SYSTEM, 2007 READJUSTMENT. A PARTIAL LIST OF POINT COORDINATES FOR THIS SURVEY IS GIVEN BELOW (ADDITIONAL COORDINATES ARE AVAILABLE UPON REQUEST).

POINT #28 "VORTEX" (NGS PID AJ5637)
LATITUDE: 34°50'46.53562"N NORTHING: 1399355.912
LONGITUDE: 111°49'41.94433"W EASTING: 726507.379
ELLIPSOID HEIGHT: 4384.140 FT ELEVATION: 4465.054 FT

POINT #32 "Y492" (NGS PID DS0652)
LATITUDE: 34°51'45.45699"N NORTHING: 1400532818
LONGITUDE: 111°48'53.08508"W EASTING: 740572.409
ELLIPSOID HEIGHT: 4359.495 FT ELEVATION: 4439.536 FT

POINT #1017 CITY OF SEDONA CONTROL POINT NO. 17 1990
LATITUDE: 34°51'47.65121"N NORTHING: 1400542.185
LONGITUDE: 111°48'07.88433"W EASTING: 734331.138
ELLIPSOID HEIGHT: 4304.266 FT ELEVATION: 4384.655 FT

UTILITY COORDINATION BLOCK

☐ ARIZONA PUBLIC SERVICE	SANDY FINLEY (COMPANY REPRESENTATIVE CONTACTED)	RECEIVED:	
☐ ARIZONA WATER COMPANY	KEITH SELF (COMPANY REPRESENTATIVE CONTACTED)	RECEIVED:	
☐ CABLE VISION	JOHN PATTERSON (COMPANY REPRESENTATIVE CONTACTED)	RECEIVED:	
☐ UNISOURCE	JIM DUNCAN (COMPANY REPRESENTATIVE CONTACTED)	RECEIVED:	
☐ QWEST	KAREN PRUTZMAN (COMPANY REPRESENTATIVE CONTACTED)	RECEIVED:	

LEGEND

- RECORD PARCEL BOUNDARIES
- RECORD EASEMENTS
- TEMPORARY CONSTRUCTION EASEMENTS (TCE)
- NEW PUBLIC UTILITY EASEMENT (PUE)
- 4440 EXISTING INDEX CONTOURS
- EXISTING INTERMEDIATE CONTOURS
- EXISTING BUILDINGS
- X X X X EXISTING FENCE
- SWALE
- W WATER BLUESTAKE
- OHE OVERHEAD UTILITY LINE
- TV TV CABLE BLUESTAKE
- G GAS LINE BLUESTAKE
- GAS LINE (APPROXIMATE)
- UGE ELECTRIC BLUESTAKE
- SS SEWER BLUESTAKE
- CLEAN OUT
- PULL BOX
- CATCH BASIN
- TR TRANSFORMER
- GAS METER
- GAS RISER
- UTILITY POLE
- DOWN GUY
- ELECTRIC METER
- TELEPHONE RISER
- MANHOLE
- LIGHT POLE
- SIGN
- FIRE HYDRANT
- IRRIGATION VALVE
- JUNCTION BOX
- WATER METER
- WATER RISER
- WATER VALVE
- CMP CORRUGATED METAL PIPE
- SRMP SPIRAL RIBBED METAL PIPE
- CONCRETE
- REMOVE & REPLACE EXISTING AC PAVEMENT

CONTACT INFORMATION

OWNER	CITY OF SEDONA 102 ROADRUNNER DRIVE SEDONA, ARIZONA 86336 (928) 204-7111 CHARLES MOSLEY, PE – PUBLIC WORKS DIRECTOR
MAYOR	ROB ADAMS
VICE MAYOR	CLIFF HAMILTON
CITY COUNCIL	BARBARA LITRELL MARK DINUZIO DAN MCILROY DENNIS RAYNER MIKE WARD
CITY MANAGER	TIM ERNSTER
ENGINEER	SHEPHARD–WESNITZER, INC. 75 KALLOF PLACE SEDONA, ARIZONA 86336 (928) 282–1061 ART BECKWITH, PE
GEOTECHNICAL	SPEEDIE & ASSOCIATES 4025 E. HUNTINGTON DR, SUITE 140 FLAGSTAFF, ARIZONA 86004 (928) 526–6681 CLAY SPENCER

"IN ACCORDANCE WITH AAC R18–4–119, ALL MATERIALS INSTALLED AFTER JANUARY 1, 1993, WHICH MAY COME INTO CONTACT WITH DRINKING WATER SHALL CONFORM TO NATIONAL SANITATION FOUNDATION STANDARDS 60 & 61."

SHEET INDEX

SHT NO.	DWG NO.	DESCRIPTION
1	C1	COVER SHEET
2	C2	NOTES AND DETAILS
3	C3	MANHOLE DETAILS
4	C4	SURVEY AND GEOTECHNICAL CONTROL SHEET
5	P1	CHANNEL PLAN AND PROFILE
6	P2	CHANNEL PLAN AND PROFILE
7	P3	ROADWAY PLAN AND PROFILES
8	S1	SECTIONS
9	S2	SECTIONS
10	T1	TRAFFIC CONTROL PLAN

APPROVAL

APPROVED:

CHARLES P. MOSLEY, P.E. DATE
DIRECTOR OF PUBLIC WORKS, CITY ENGINEER

RECORD DRAWING STATEMENT

I _____, HEREBY STATE, BASED ON MY FIELD OBSERVATION AND INFORMATION PROVIDED BY THE GENERAL CONTRACTOR AND OTHERS, THAT THE WORK ON SHEETS 1 THROUGH 9, MARKED AS "RECORD DRAWING" HAS BEEN CONSTRUCTED IN SUBSTANTIAL CONFORMANCE WITH THESE CONSTUCTION PLANS, SPECIFICATIONS, INCLUDING CHANGES AND REVISIONS.

REGISTERED LAND SURVEYOR/ENGINEER DATE

REGISTRATION NUMBER EXPIRATION DATE

CALL TWO WORKING DAYS BEFORE YOU DIG
1-800-STAKE-IT

REVISIONS			
NO.	DESCRIPTION	DATE	BY

SWI Shephard Wesnitzer, Inc.
75 Kallof Place
Sedona, AZ 86336
928.282.1061
928.282.2058 fax
www.swiaz.com

JOB NO:	10478
DATE:	JUL 11
SCALE:	AS SHOWN
DRAWN:	MRJ
DESIGN:	AHB
CHECKED:	AHB

HARMONY–WINDSONG PHASE III — SEDONA ARIZONA

COVER SHEET

DRAWING NO. C1

SHT NO. 1 OF 10

PLOTTED: Jul 08, 2011–12:27pm

FILE: C:\Documents and Settings\Administrator\Desktop\Projects\2010\10478\DWG\COVER.dwg 3W–C2D–09

GENERAL NOTES

1. ALL WORK SHALL CONFORM TO MAG STANDARD SPECIFICATIONS FOR PUBLIC WORKS CONSTRUCTION DATED 2009 AND CURRENT REVISIONS THERETO AS MODIFIED BY THE CITY OF SEDONA CITY CODE SECTION 7.
2. THE INFORMATION ON THESE DRAWINGS SHOWING THE TYPE, SIZE AND LOCATION OF EXISTING UTILITIES IS BASED ON THE BEST INFORMATION AVAILABLE. IT IS THE CONTRACTOR'S RESPONSIBILITY TO DETERMINE THEIR EXACT LOCATION AND PROTECT ALL UTILITIES THAT ARE TO REMAIN. UNLESS OTHERWISE NOTED OR SPECIFIED.
3. THE CONTRACTOR SHALL BE RESPONSIBLE FOR CONTACTING BLUE STAKE (TELEPHONE 1-800-782-5348) TO INSURE ALL UTILITIES ARE PROPERLY MARKED PRIOR TO EXCAVATION.
4. THE COORDINATES, BEARINGS AND BENCHMARKS USED FOR THE PROJECT ARE BASED UPON THE CONTROL SURVEY FOR THE HARMONY-WINDSONG DRAINAGE CHANNEL IMPROVEMENTS PRODUCED BY SHEPHARD-WESNITZER, INC.
   PRIME BENCHMARK: SEE COORDINATE SYSTEM DETAILS, SHEET G3
   BASIS OF BEARING: SEE COORDINATE SYSTEM DETAILS, SHEET G1
5. ALL TAPER, RADII AND TURNOUT DIMENSIONS ARE TO THE EDGE OF NEW PAVEMENT, UNLESS OTHERWISE NOTED. ALL STATION AND CALL-OUT DISTANCES LEFT AND RIGHT REFER TO THE CONSTRUCTION CENTERLINE.
6. EXACT POINT OF MATCHING, TERMINATION AND OVERLAY MAY BE ADJUSTED IN THE FIELD BY THE ENGINEER IF NECESSARY.
7. THE CONTRACTOR SHALL REMOVE ALL STRUCTURES AND OBSTRUCTIONS WITHIN THE PROJECT RIGHT-OF-WAY AND TEMPORARY CONSTRUCTION EASEMENTS, UNLESS OTHERWISE NOTED ON THE PLANS.
8. THE CONTRACTOR SHALL MAINTAIN UTILITY SERVICES AND DRAINAGE WITHOUT INTERRUPTION THROUGHOUT THIS CONTRACT.
9. ELEVATIONS SHOWN ON PLAN ARE TO FINISHED GRADE, UNLESS OTHERWISE NOTED OR SPECIFIED.
10. LIMITED GEOTECHNICAL EVALUATION BY SPEEDIE AND ASSOCIATES.
11. DRAINAGE SUMMARY BY SHEPHARD-WESNITZER, INC. TO SUPPLEMENT THE DRAINAGE DESIGN WITH SUPPORTING HYDROLOGY AND HYDRAULICS.
12. CONTRACTOR AGREES TO ASSUME SOLE AND COMPLETE RESPONSIBILITY FOR THE JOB SITE DURING THE COURSE OF CONSTRUCTION OF THIS PROJECT, INCLUDING SAFETY OF ALL PERSONS AND PROPERTY; THAT THIS REQUIREMENT SHALL APPLY CONTINUOUSLY AND NOT BE LIMITED TO NORMAL WORKING HOURS; AND THAT THE CONTRACTOR SHALL DEFEND, INDEMNIFY, AND HOLD THE CITY REPRESENTATIVES HARMLESS FROM ANY AND ALL LIABILITY, REAL AND/OR ALLEGED, IN CONJUNCTION WITH THE PERFORMANCE OF THIS PROJECT.
13. CONTRACTOR SHALL BE HELD RESPONSIBLE FOR ANY AND ALL DAMAGES TO EXISTING STRUCTURES AND UTILITIES DURING CONSTRUCTION.
14. A SET OF SIGNED AND APPROVED CONSTRUCTION DOCUMENTS WILL BE KEPT AT ALL TIMES AT THE JOB SITE ON WHICH ALL CHANGES OR VARIATIONS IN THE WORK, INCLUDING ALL EXISTING UTILITIES, ARE TO BE RECORDED AND/OR CORRECTED DAILY AND SUBMITTED TO THE CITY ENGINEER WHEN THE WORK TO BE DONE IS COMPLETED.
15. CONTRACTOR SHALL NOTIFY ALL PUBLIC OR PRIVATE UTILITY COMPANIES 6 HOURS PRIOR TO COMMENCEMENT OF WORK ADJACENT TO EXISTING UTILITY LINES UNLESS ENCROACHMENT PERMIT SPECIFIES OTHERWISE.
16. CONTRACTOR SHALL PROVIDE AND MAINTAIN SUFFICIENT BARRICADES TO PROVIDE FOR THE SAFETY OF THE GENERAL PUBLIC TO THE SATISFACTION OF THE PUBLIC WORKS DIRECTOR.
17. ALL MATERIALS SHALL BE FURNISHED AND INSTALLED BY THE CONTRACTOR UNLESS OTHERWISE NOTED.
18. THE CONTRACTOR SHALL PROVIDE AND MAINTAIN ACCESS AT ALL TIMES TO ADJACENT PROPERTY OWNERS. IF DRIVE PLATES OR OTHER LIMITED ACCESS MECHANISMS ARE EMPLOYED, ADEQUATE SAFETY DEVICES SHALL BE USED TO INSURE THAT THE VEHICLE IS ABLE TO DIFFERENTIATE THE CROSSING FROM THE TRENCH IN BOTH DAYLIGHT AND NIGHTTIME HOURS.
19. ALL EXPOSED CONCRETE SHALL BE SEDONA RED.

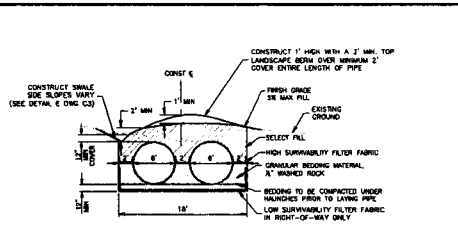

NOTES:
1. BACKFILL SHOULD BE FREE OF LARGE STONES, ORGANIC MATERIAL, FROZEN LUMPS, AND OTHER DEBRIS.
2. HAUNCHES SHOULD BE COMPACTED PRIOR TO LAYING PIPE.
3. CONTRACTOR SHALL RESTRAIN PIPE TO ENSURE NO VERTICAL MOVEMENT DURING DURING BEDDING PLACEMENT AND COMPACTION.
4. CONTRACTOR SHALL SUPPORT PIPE AS REQUIRED DURING INSTALLATION, BACKFILLING, COMPACTION AND SURFACE CONSTRUCTION.
5. CONTRACTOR SHALL SUPPORT TRENCH IN ACCORDANCE WITH OSHA REQUIREMENTS.

DUAL 72" DIAMETER CMP OR SRMP – 12 GAUGE
STA 28+60 TO STA 42+98 — NO SCALE (P1-P2)

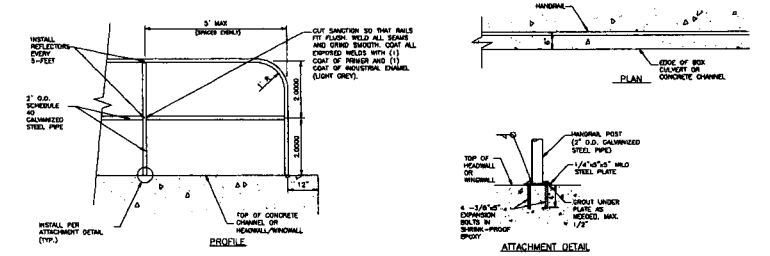

NOTE
1. HANDRAIL SHALL HAVE A FINISH COLOR OF "SAFARI BROWN" PITTSBURGH PAINTS COLOR #429-6, WITH A MINIMUM OF 3-5 MILS THICKNESS.

HANDRAIL DETAIL (B)
NO SCALE (P1-P2)

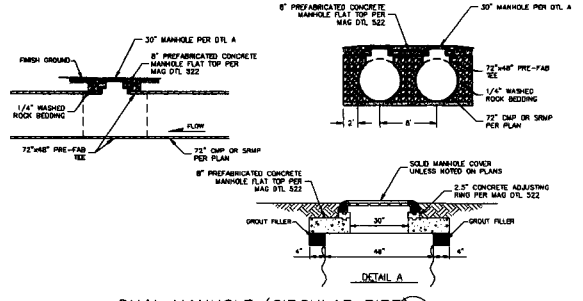

DUAL MANHOLE (CIRCULAR PIPE) (C)
NO SCALE (P1-P2)

STA 33+50.00
STA 35+58.51
STA 38+50.82
STA 40+50.00

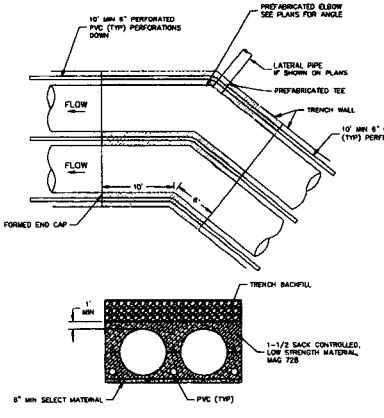

SLURRY BACKFILL DETAIL (D)
NO SCALE

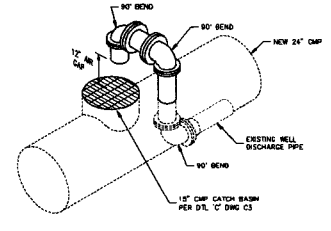

WELL DISCHARGE PIPING (G)
NO SCALE (P2)

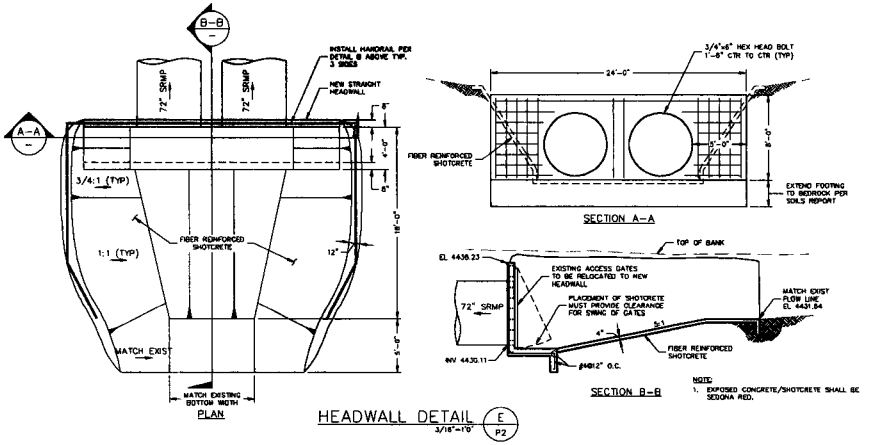

NOTE:
1. EXPOSED CONCRETE/SHOTCRETE SHALL BE SEDONA RED.

HEADWALL DETAIL (E)
3/16"=1'-0" (P2)

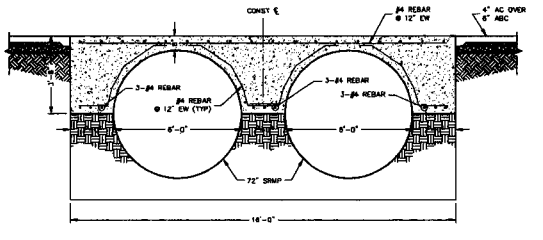

ROADWAY CROSSING DETAIL (F)
STA 40+07 AND STA 42+65 — 3/8"=1'-0" (P2)

CALL TWO WORKING DAYS BEFORE YOU DIG
1-800-STAKE-IT

REVISIONS			
NO.	DESCRIPTION	DATE	BY

SWI Shephard Wesnitzer, Inc.
75 Kaitaf Place
Sedona, AZ 86336
928.282.1061
928.282.2058 fax
www.swiaz.com

JOB NO:	1047B
DATE:	JUL 11
SCALE:	AS SHOWN
DRAWN:	MNJ
DESIGN:	AHB
CHECKED:	AHB

HARMONY-WINDSONG PHASE III — SEDONA ARIZONA

NOTES AND DETAILS

DRAWING NO. C2
SHT NO. 2 OF 10

PLOTTED: Jul 08, 2011 - 12:27pm
FILE: C:\Documents and Settings\jakesmith\Desktop\Projects\2010\1047B\WINDNOTES & DETAILS.dwg DW-C2D-96

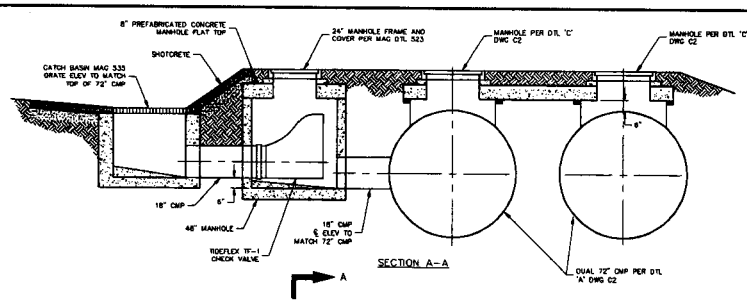

DUAL MANHOLE CATCH BASIN WITH CHECK VALVE (A) P1
3/8"=1'-0"

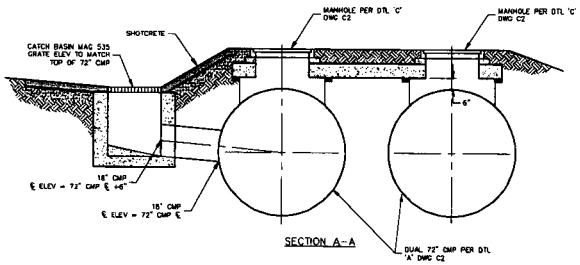

DUAL MANHOLE WITH CATCH BASIN (B) P1,P2
3/8"=1'-0"

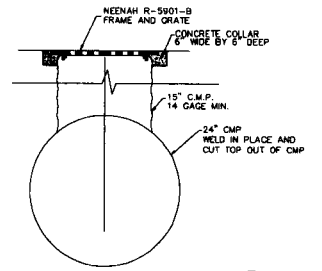

CMP CATCH BASIN DETAIL (C) P2
NO SCALE

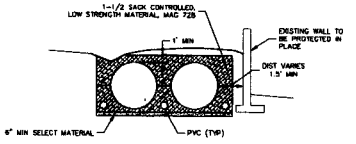

TRENCH SECTION AT EXIST WALL (D) P1
STA 33+83 TO 34+66
NO SCALE

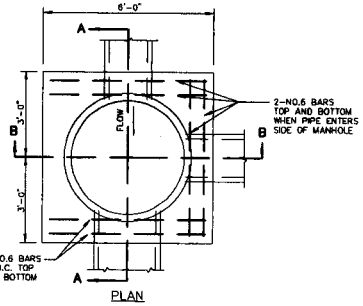

PLAN

NOTES

1. ALL CONCRETE TO BE CLASS 'A' PER SECT. 725, 505.
2. MATCH SPRING LINES OF PIPE ENTERING MANHOLE UNLESS OTHERWISE NOTED.
3. CUT PIPES TO ALLOW SETTING OF 4" DIA. CYLINDRICAL FORM FROM 6" ABOVE MAIN LINE PIPE TO SPRING LINE. CUT PIPE 2" LARGER THAN FORM TO ALLOW 2" CONCRETE OVER ENDS OF ALL CUT PIPE.
4. INVERT AND BASE OF MANHOLE TO BE POURED AND INVERT TO BE SHAPED BY HAND TO MAKE SMOOTH TRANSITION. FINISH WITH RUBBER FLOAT.
5. CENTER MANHOLE ON PIPE JOINT WHERE PIPE CHANGES SIZES, LEAVING A GAP OF 12" MINIMUM, 24" MAXIMUM.

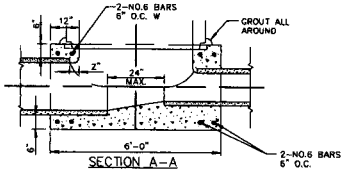

SECTION A-A

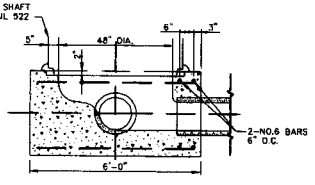

SECTION B-B

MANHOLE BASE (F)
NO SCALE

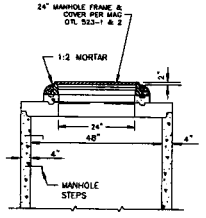

ALL JOINTS SHALL BE FILLED WITH 1:2 MORTAR AND NEATLY POINTED OR WIPED ON INSIDE OF SHAFT.

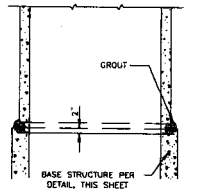

VERTICAL SECTION OF ECCENTRIC MANHOLE SHAFT

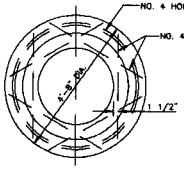

PLAN

NOTES:

1. PRECAST CONCRETE CONES AND SECTIONS TO BE A.S.T.M. C-478M.
2. PRECAST CONCRETE SECTIONS 48" DIA. PIPE MAY BE FURNISHED IN STANDARD LENGTHS.
3. USE 2-2 ½" PRECAST CONCRETE ADJUSTING RINGS.
4. MANHOLE STEPS SHALL BEGIN 2' BELOW FINISHED GRADE AND CONTINUE AT 1' INTERVALS TO APPROXIMATELY 2' ABOVE MANHOLE SHELF. (AS REQUIRED BY AGENCY.)

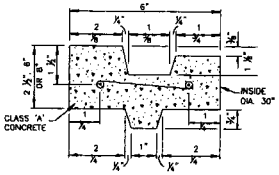

2 ½" RINGS SHALL BE REINFORCED WITH TWO ¼" ROUND STEEL HOOPS; 6" AND 8" RINGS SHALL BE REINFORCED WITH FOUR ¼" HOOPS, TIED WITH NO. 14 A.S. & W. GAUGE WIRE 8" O.C.

REINFORCED CONCRETE ADJUSTING RING

MANHOLE (G)
NO SCALE

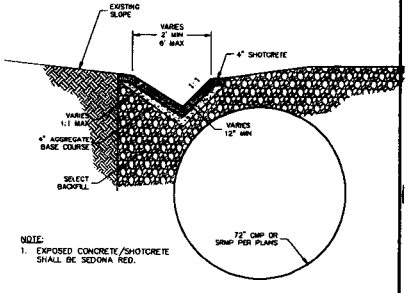

NOTE:
1. EXPOSED CONCRETE/SHOTCRETE SHALL BE SEDONA RED.

SHOTCRETE CHANNEL SECTION (E) P1,P2
NO SCALE

CALL TWO WORKING DAYS BEFORE YOU DIG
1-800-STAKE-IT

REVISIONS			
NO.	DESCRIPTION	DATE	BY

Shephard Wesnitzer, Inc.
75 Kallof Place
Sedona, AZ 86336
928.282.1061
928.282.2058 fax
www.swiaz.com

JOB NO:	10478
DATE:	JUL '11
SCALE:	AS SHOWN
DRAWN:	
DESIGN:	
CHECKED:	

HARMONY-WINDSONG PHASE III — SEDONA ARIZONA

MANHOLE DETAILS

DRAWING NO. C3

SHT NO. 3 OF 10

PLOTTED: Jul 06, 2011 - 12:27pm

FILE: C:\Documents and Settings\jshoesmith\Desktop\Projects\2010\10478\plan\civil DETAILS.dwg 06-C3D-09

SURVEY CONTROL TABLE

POINT NO.	ELEVATION	NORTHING	EASTING	DESCRIPTION
1004	4437.01	1408928.37	733157.41	PANEL POINT 1004
1005	4411.13	1409161.70	733821.23	CONTROL POINT 1005
2003	4418.14	1406342.74	732298.17	FOUND 5/8IN REBAR RLS 40829 CAPPED/PIPE/REBAR
2004	4421.68	1406374.07	732378.27	FOUND 1.9IN IP NO ID OPEN PIPE
2005	4422.74	1406404.23	732474.21	FOUND 5/8IN REBAR LS 28384 CAPPED/PIPE/REBAR
2006	4426.11	1406716.80	732991.28	FOUND 1/2IN REBAR LS 19853 CAPPED/PIPE/REBAR
2007	4427.92	1406818.06	733038.66	FOUND 5/8IN REBAR TAG 19853 REBAR
2017	4418.86	1406316.48	732300.14	FOUND 5/8IN REBAR NO ID SPUN CAPPED/PIPE/REBAR
2019	4421.10	1406253.89	732078.05	FOUND SPIKE LS22384 SPIKE
2019	4421.09	1406253.87	732076.05	FOUND PK NO ID SURVEY NAIL
2027	4426.09	1406971.06	732715.13	FOUND 1/2IN REBAR AND CAP LS 28384 CAPPED/PIPE/REBAR
2030	4420.29	1406432.39	732544.31	FOUND 5/8IN SMOOTH BAR NO ID bent and leaning
2031	4421.42	1406495.10	732598.82	FOUND 1/2IN RB 28263 CAPPED/PIPE/REBAR
2032	4436.92	1406838.91	732720.49	SET 40D NAIL RBT OF SURVEY NAIL
2033	4413.26	1406411.14	732476.11	FOUND 1IN IP NO ID OPEN PIPE
2034	4421.76	1406466.06	732630.67	FOUND 1/2IN RB 28625 CAPPED/PIPE/REBAR
2035	4421.76	1406516.53	732671.11	FOUND 1/2IN RB AND TAG 28263 REBAR
2039	4427.34	1406542.89	732720.98	FOUND 40D NAIL SURVEY NAIL
4003	4436.36	1406834.66	733062.90	SET MAG NAIL CONTROL POINT
4004	4433.79	1406913.28	732816.28	SET MAG NAIL CONTROL POINT
4007	4431.53	1406694.49	732692.75	MAG NAIL CONTROL POINT
4008	4427.21	1406983.83	732803.32	MAG NAIL CONTROL POINT

POTHOLE LOCATION TABLE

POTHOLE NO.	NORTHING	EASTING	SURFACE EL	UTILITY EL	DESCRIPTION
PH-1	1406838.43	732908.80	4435.63	N/A	WATER POTHOLED TO 8' DEEP NOTHING FOUND
PH-2	1406932.84	732906.71	4436.85	N/A	ELECTRIC POTHOLED TO 8' DEEP NOTHING FOUND
PH-3	1406899.22	732907.40	4435.17	N/A	GAS POTHOLED TO 8' DEEP NOTHING FOUND
PH-4	1406871.52	732712.44	4424.52	4422.5	8" WATER MAIN TO TOP OF PIPE (24")

SCALE 1" : 30'
0 15 30

LEGEND
- MONUMENT
- BENCHMARK
- REBAR OR NAIL

NOTE: SEE SHEET C1 FOR COORDINATE SYSTEM DETAILS

- GEOTECHNICAL TEST PIT (TP-1)
- SEISMIC REFRACTION LINE LOCATION (SR-1)

NOTE: FOR GEOTECHNICAL INFORMATION SEE SPEEDIE AND ASSOCIATES – REPORT ON GEOTECHNICAL INVESTIGATION – HARMONY WINDSONG DRAINAGE – PHASE 3 DATED MARCH 17, 2011

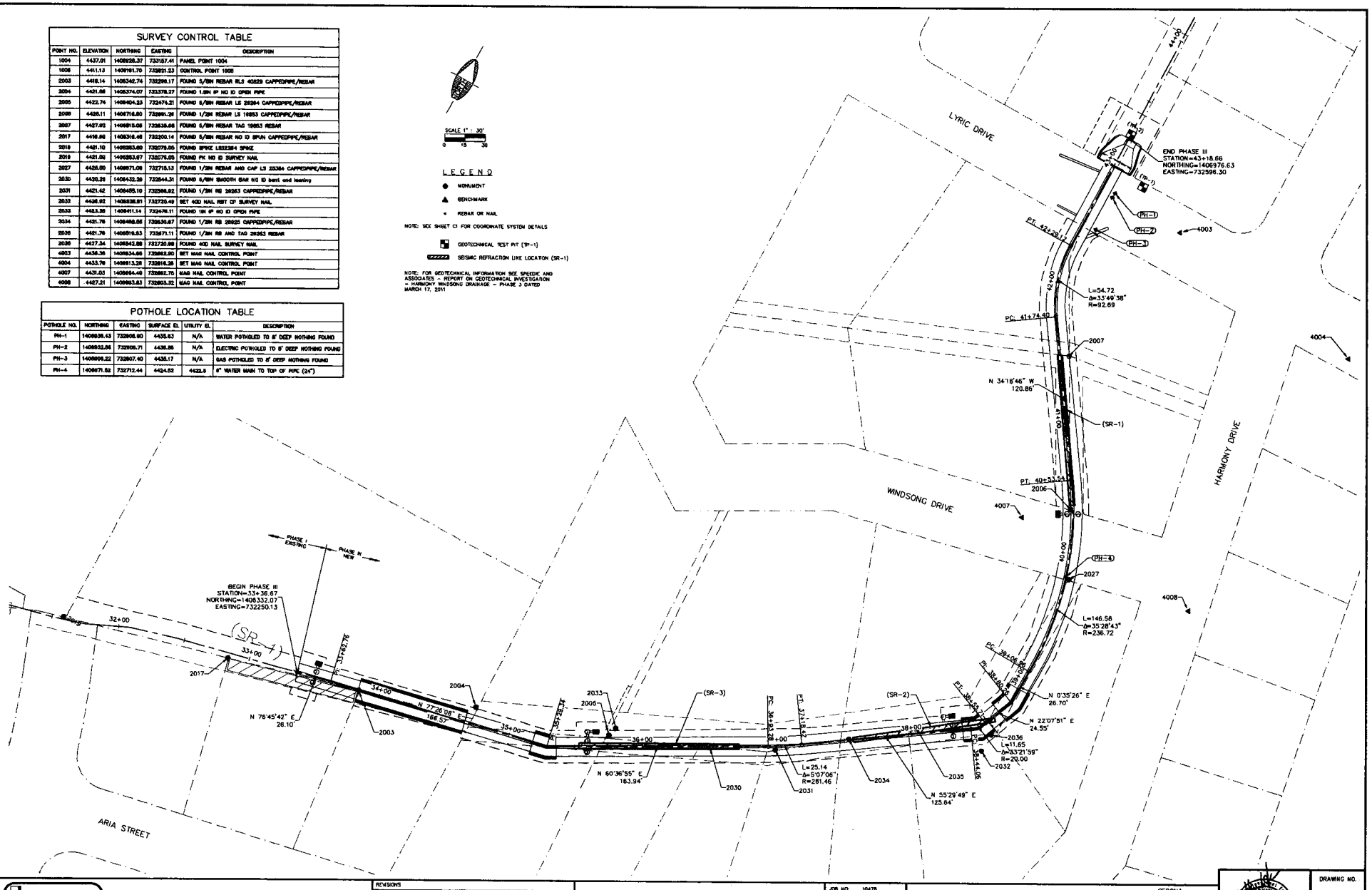

CALL TWO WORKING DAYS BEFORE YOU DIG
1-800-STAKE-IT

REVISIONS			
NO.	DESCRIPTION	DATE	BY

SWI
Shephard Wesnitzer, Inc.
75 Kaitaf Place
Sedona, AZ 86336
928.282.1081
928.282.2058 fax
www.swiaz.com

JOB NO:	1047B
DATE:	JUL 11
SCALE:	1"=30'
DRAWN:	MWJ
DESIGN:	AHB
CHECKED:	AHB

HARMONY–WINDSONG PHASE III — SEDONA ARIZONA

SURVEY AND GEOTECHNICAL CONTROL SHEET

DRAWING NO. C4
SHT NO. 4 OF 10

PLOTTED: Jul 08, 2011 - 12:29pm
FILE: C:\Documents and Settings\phardwick\Desktop\Projects\1000\104-78\DWG\SURVEY CONTROL.dwg SM-C3D-09

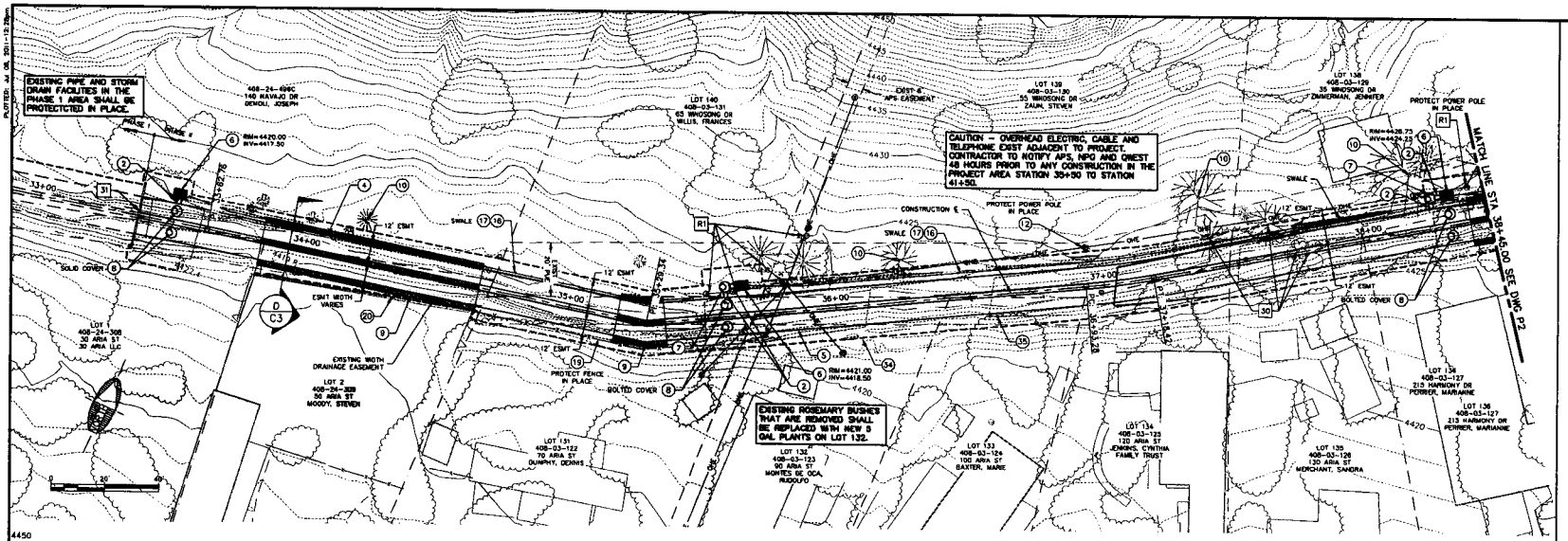

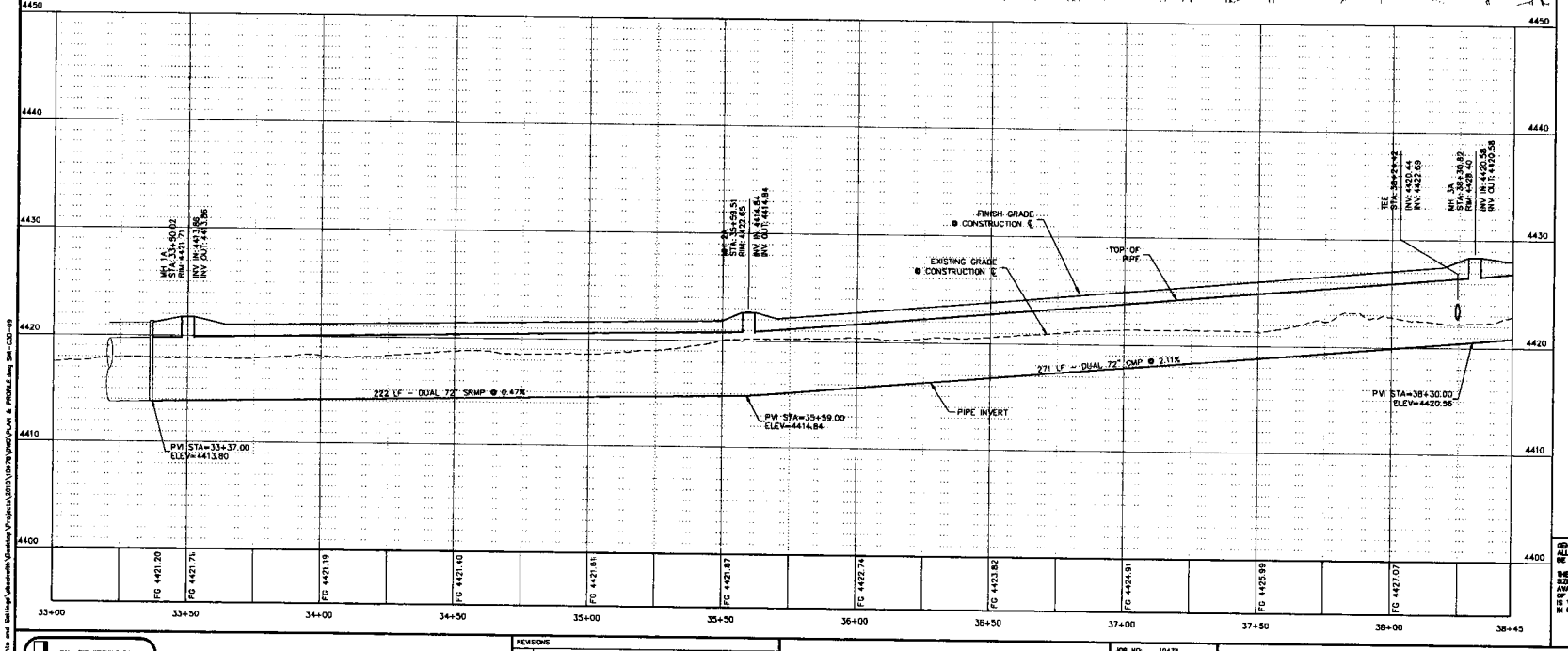

REMOVE/RELOCATE

- R1 (2 EA.) APS TO RELOCATE OVERHEAD UTILITY POLE AND GUY WIRES (NON PAY ITEM) THIS WORK IS BY OTHERS.
- 30 (4 EA) REMOVE TREE
- 31 (1 LS) REMOVE EXISTING HEADWALL AND SHOTCRETE CHANNEL. GRATES TO BE PRESERVED AND REUSED AT NEW HEADWALL STA 42+96.

CONSTRUCTION NOTES

- (2) (12 L.F.) 18" CMP
- (4) (222 L.F.) DUAL 72" SRMP
- (5) (271 L.F.) DUAL 72" CMP
- (6) (3 EA.) MAG 535 CATCH BASIN PER DETAIL 'B' SHEET C3
- (7) (2 EA.) 48" MANHOLE WITH CHECK VALVE PER DETAIL 'A' SHEET C3
- (8) (6 EA.) 48" DIAM. MANHOLE PER DETAIL 'C' SHEET C2
- (9) (101 L.F.) SLURRY BEDDING AND BACKFILL PER DETAIL 'D' SHEET C2
- (10) (4 EA.) PROTECT TREE IN PLACE
- (12) (1 EA.) PROTECT POWER POLE IN PLACE
- (16) (455 L.F.) GRADE SWALE
- (17) (455 L.F.) SHOTCRETE SWALE PER DETAIL E SHEET C3
- (19) (1 L.S.) PROTECT EXISTING FENCE IN PLACE
- (20) (1 L.S.) PROTECT RETAINING WALL IN PLACE
- (33) (9 EA.) SURVEYOR TO REPLACE EXISTING SURVEY MONUMENTS PER LOCATION SHOWN ON SHEET C4. (SEE SHEET C4 FOR EXISTING LOCATIONS)
- (34) (16 EA.) EXISTING ROSEMARY BUSHES THAT NEED TO BE REMOVED SHALL BE REPLACED WITH NEW 5 GAL PLANTS.
- (35) (1 L.S.) EXISTING SANDBAGS TO BE REMOVED AT NORTH END OF LOT 133.
- (36) (508 L.F.) CONSTRUCT LANDSCAPE BERM PER DETAIL A, SHEET C2.

GENERAL NOTES:
ALL STATIONING TO BE SET ALONG THE CENTERLINE OF STREETS, AND WILL BE USED TO DETERMINE THE LOCATION OF FIRE HYDRANTS, CULVERTS, ETC.

THE INFORMATION ON THESE CONSTRUCTION PLANS CONCERNING THE TYPE, SIZE & LOCATION OF UTILITIES HAS BEEN BASED ON THE BEST INFORMATION AVAILABLE. THE CONTRACTOR SHALL BE RESPONSIBLE FOR DETERMINATION OF EXACT LOCATION OF ALL EXISTING UTILITIES PRIOR TO CONSTRUCTION. IT IS THE CONTRACTORS RESPONSIBILITY TO PROTECT ALL EXISTING UTILITIES IN PLACE, UNLESS OTHERWISE NOTED OR SPECIFIED.

CALL TWO WORKING DAYS BEFORE YOU DIG
1-800-STAKE-IT

REVISIONS			
NO.	DESCRIPTION	DATE	BY

Shephard Wesnitzer, Inc.
75 Kallof Place
Sedona, AZ 86336
928.282.1061
928.282.2058 fax
www.swiaz.com

JOB NO:	10478
DATE:	JUL 11
SCALE:	H=1:20 V=1:
DRAWN:	MWJ
DESIGN:	AHB
CHECKED:	AHB

HARMONY–WINDSONG PHASE III
SEDONA ARIZONA

CHANNEL PLAN AND PROFILE
STA 33+00 TO 38+50

ARTHUR H. BECKWITH — REGISTERED ARIZONA LAND SURVEYOR — 7/08/11

DRAWING NO. P1
SHT NO. 5 OF 10

PLOTTED: Jul 08, 2011 - 13:39pm
FILE: C:\Documents and Settings\Administrator\Desktop\Projects\2010\10478\DWG\PLAN & PROFILE.dwg SWI-C3D-09

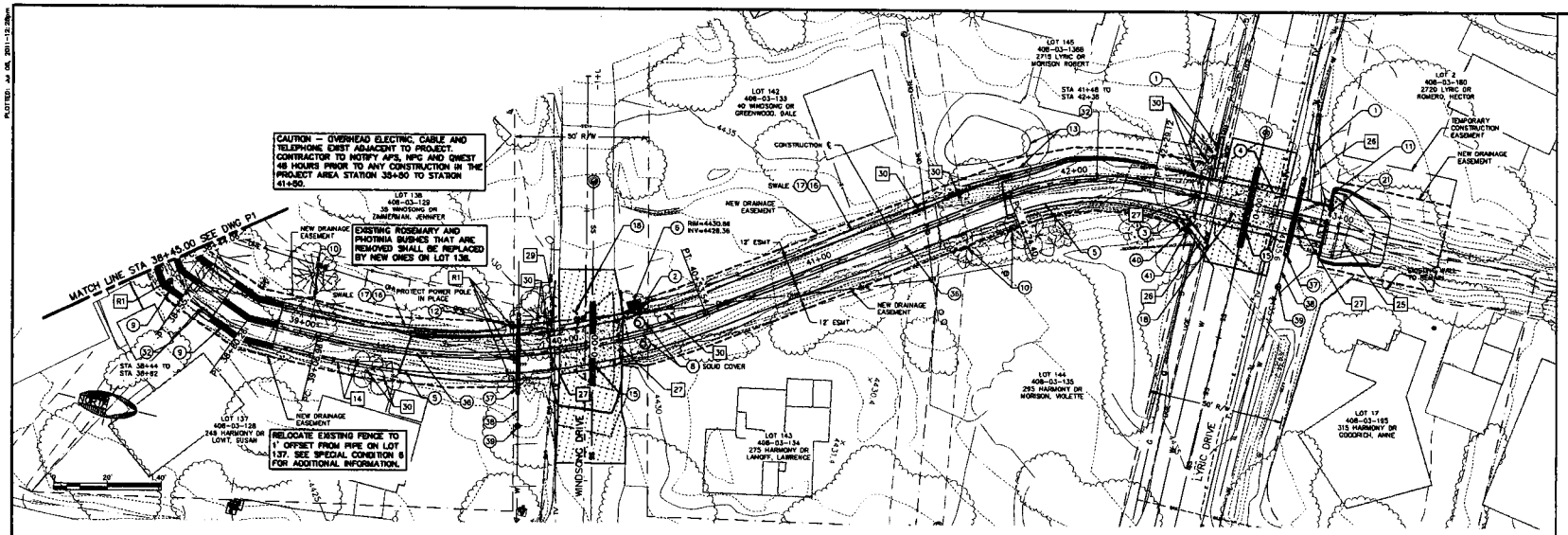

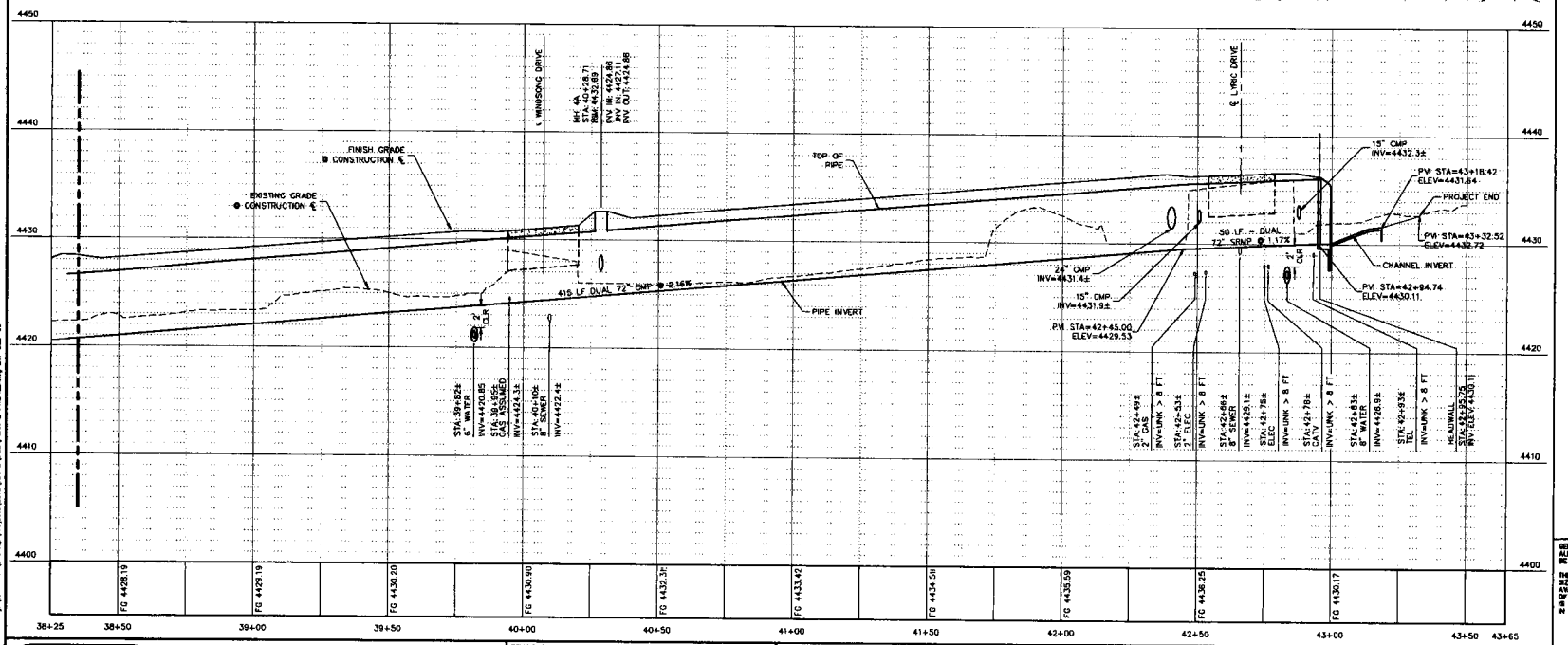

REMOVE/RELOCATE

- R1 (1 EA.) APS TO RELOCATE OVERHEAD UTILITY POLE AND GUY WIRES (NON PAY ITEM) THIS WORK IS BY OTHERS.
- 14 (80 L.F.) REMOVE AND RELOCATE EXISTING FENCE TO 1' OFFSET FROM PIPE SEE SPECIAL CONDITION SECTION 6 FOR ADDITIONAL INFORMATION.
- 25 (342 S.F.) REMOVE EXISTING SHOTCRETE CHANNEL LINING
- 26 (53 L.F.) REMOVE EXISTING CMP
- 27 (2 EA.) REMOVE EXISTING BOX CULVERT, HEADWALL & GUARDRAILS
- 29 (1 EA.) REMOVE & REPLACE MAILBOX
- 30 (10 EA.) REMOVE EXIST TREE

CONSTRUCTION NOTES

1. (48 L.F.) 15" CMP
2. (3 L.F.) 18" CMP
3. (22 L.F.) 24" CMP
4. (50 L.F.) DUAL 72" SRMP
5. (415 L.F.) DUAL 72" CMP
6. (1 EA.) MAG 535 CATCH BASIN PER DETAIL 'B' SHEET C3
8. (2 EA.) 48" DIAM MANHOLE PER MANHOLE DETAIL SHEET C2
9. (44 L.F.) SLURRY BEDDING AND BACKFILL PER DETAIL 'D' SHEET C2
10. (3 EA.) PROTECT TREE IN PLACE
11. (1 EA.) HEADWALL AND GRATES PER DETAIL 'E' SHEET C2
12. (1 EA.) PROTECT POWER POLE IN PLACE
13. (1 L.S.) PROTECT EXISTING POOL, DECKING AND FENCE IN PLACE
15. (60 L.F.) CONCRETE ENCASEMENT PER MAC STD DET 404
16. (338 L.F.) GRADE SWALE
17. (338 L.F.) SHOTCRETE SWALE PER DETAIL E SHEET C3
18. (2 EA.) PROTECT ALL UTILITY LINES IN PLACE AT ROAD CROSSING UNLESS NOTED OTHERWISE
21. (85 L.F.) STEEL HANDRAIL PER DETAIL B SHEET C2
32. (128 L.F.) REMOVE EXISTING CONCRETE ROCK WALL
33. (4 EA.) SURVEYOR TO REPLACE EXISTING SURVEY MONUMENTS PER LOCATION SHOWN ON SHEET C4. (SEE SHEET C4 FOR COORDINATES)
36. (251 L.F.) CONSTRUCT LANDSCAPE BERM PER DETAIL A, SHEET C2
37. (60 L.F.) STEEL WATER LINE CASING PER AZ WTR CO STD DTL C-8-24-1
38. (100 L.F.) 8" DIP WATER LINE AND FITTINGS PER AZ WTR CO STANDARDS
39. (2 EA.) AIR RELEASE VALVE PER AZ WTR CO STD DTL C-8-16-1
40. (1 EA.) 15" CMP CATCH BASIN WITH GRATED COVER PER DETAIL 'C' SHEET C3
41. (1 L.S.) WELL DISCHARGE REPIPING PER DETAIL SHEET C2

GENERAL NOTES:
ALL STATIONING TO BE SET ALONG THE CENTERLINE OF STREETS, AND WILL BE USED TO DETERMINE THE LOCATION OF FIRE HYDRANTS, CULVERTS, ETC.

THE INFORMATION ON THESE CONSTRUCTION PLANS CONCERNING THE TYPE, SIZE & LOCATION OF UTILITIES HAS BEEN BASED ON THE BEST INFORMATION AVAILABLE. THE CONTRACTOR SHALL BE RESPONSIBLE FOR DETERMINATION OF EXACT LOCATION OF ALL EXISTING UTILITIES PRIOR TO CONSTRUCTION. IT IS THE CONTRACTORS RESPONSIBILITY TO PROTECT ALL EXISTING UTILITIES IN PLACE, UNLESS OTHERWISE NOTED OR SPECIFIED.

CALL TWO WORKING DAYS BEFORE YOU DIG
1-800-STAKE-IT

REVISIONS			
NO.	DESCRIPTION	DATE	BY

Shephard Wesnitzer, Inc.
75 Kallof Place
Sedona, AZ 86336
928.282.1061
928.282.2058 fax
www.swinz.com

JOB NO:	10478
DATE:	JUL 11
SCALE:	Hor: 1:20 Ver:
DRAWN:	MW
DESIGN:	ANB
CHECKED:	ANB

HARMONY–WINDSONG PHASE III
SEDONA ARIZONA

CHANNEL PLAN AND PROFILE
STA 38+35 TO 43+75

DRAWING NO. P2
SHT NO. 6 OF 10

PLOTTED: JUL 08, 2011 - 12:28pm
FILE: C:\Documents and Settings\Administrator\Desktop\Projects\2010\10478\WORK\PLAN & PROFILE.dwg SM-C3D-09

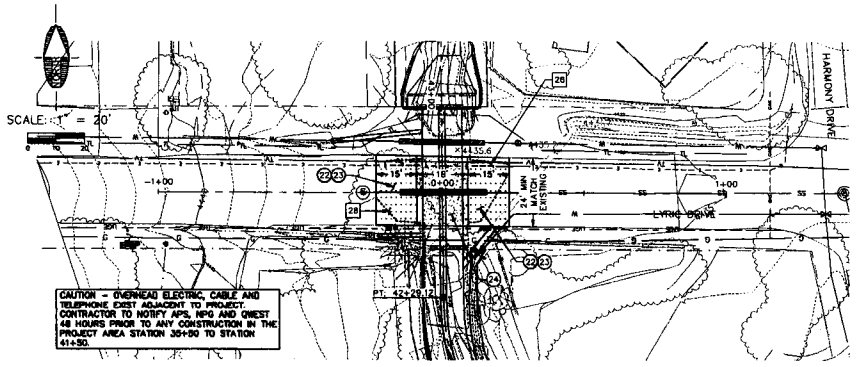

REMOVE/RELOCATE

28 (128 S.Y.) REMOVE AND REPLACE EXISTING AC PAVEMENT

CONSTRUCTION NOTES

22 (13 C.Y.) 6" AGGREGATE BASE COURSE

23 (77 S.Y.) 4" ASPHALTIC SURFACE COURSE

24 (34 C.Y.) CONCRETE PAVEMENT SECTION PER DETAIL F SHEET C2

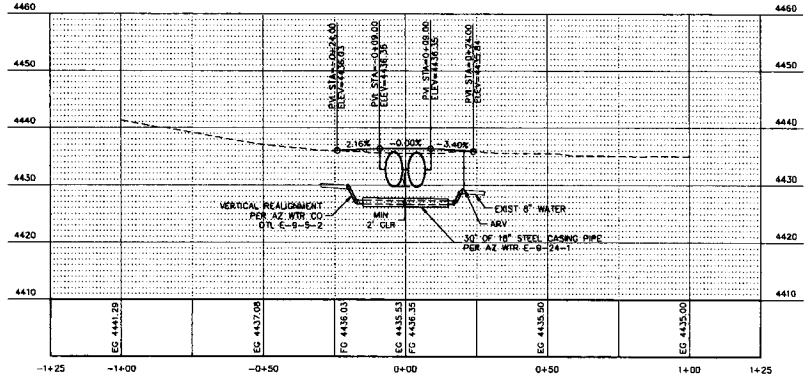

LYRIC CROSSING
1"=20'

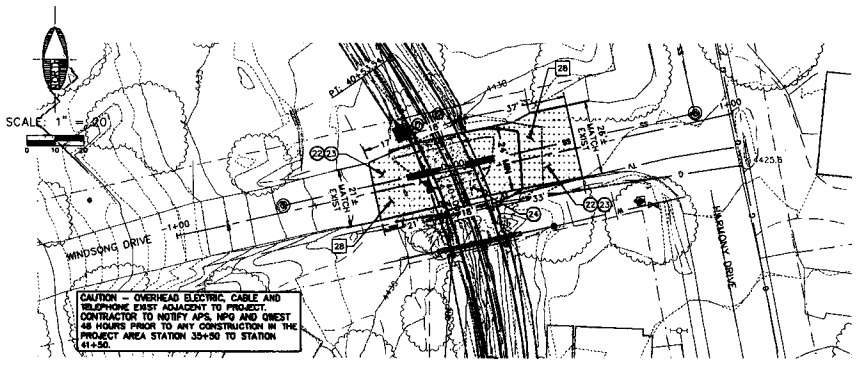

REMOVE/RELOCATE

28 (187 S.Y.) REMOVE AND REPLACE EXISTING AC PAVEMENT

CONSTRUCTION NOTES

22 (24 C.Y.) 6" AGGREGATE BASE COURSE

23 (140 S.Y.) 4" ASPHALTIC SURFACE COURSE

24 (34 C.Y.) CONCRETE PAVEMENT SECTION PER DETAIL F SHEET C2

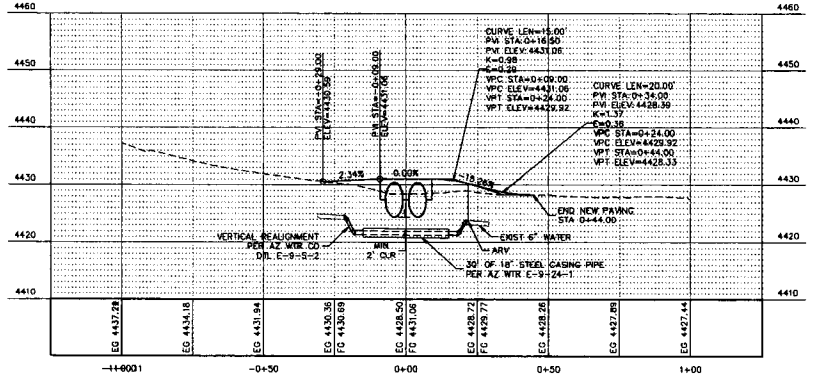

WINDSONG CROSSING
1"=20'

CALL TWO WORKING DAYS BEFORE YOU DIG
1-800-STAKE-IT

REVISIONS			
NO.	DESCRIPTION	DATE	BY

Shephard Wesnitzer, Inc.
75 Kallof Place
Sedona, AZ 86336
928.282.1061
928.282.2058 fax
www.swiaz.com

JOB NO:	10478
DATE:	JUL 11
SCALE:	AS SHOWN
DRAWN:	MWJ
DESIGN:	AHB
CHECKED:	AHB

HARMONY-WINDSONG PHASE III — SEDONA ARIZONA

ROADWAY PLAN AND PROFILES

ARTHUR H. GOODWIN 7/22/11 ARIZONA 9/31/2013

DRAWING NO. P3

SHT NO. 7 OF 10

PLOTTED: Jul 08, 2011 - 12:29pm
FILE: C:\Documents and Settings\Administrator\Desktop\Projects\2010\10478\DWG\ROADWAY PLAN & PROFILE.dwg SW-CD-09

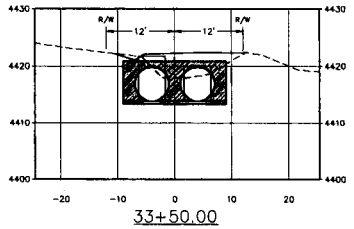

33+50.00

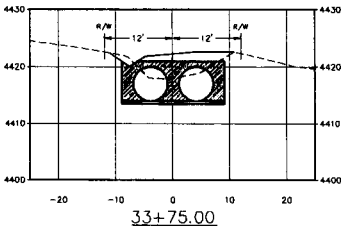

33+75.00

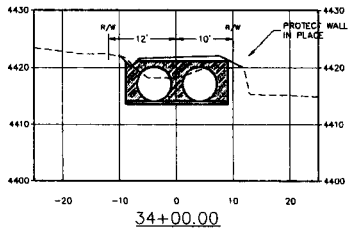

34+00.00

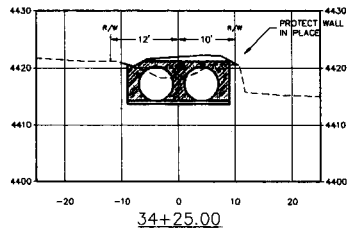

34+25.00

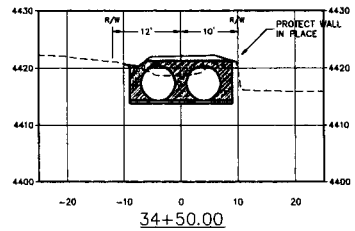

34+50.00

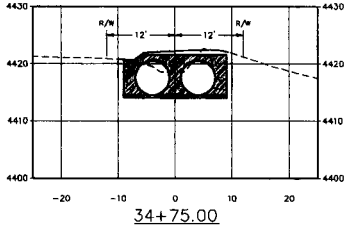

34+75.00

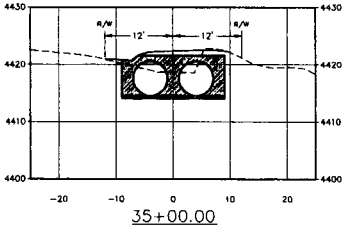

35+00.00

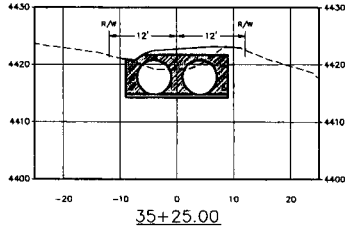

35+25.00

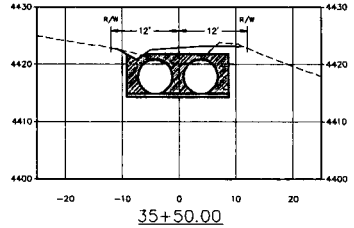

35+50.00

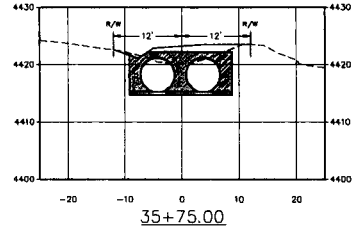

35+75.00

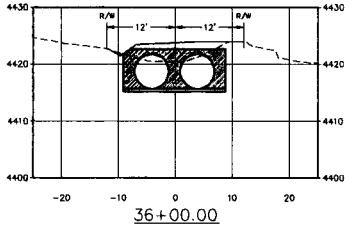

36+00.00

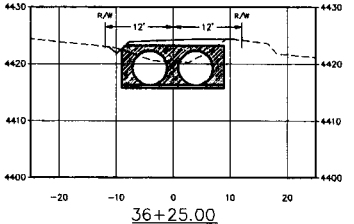

36+25.00

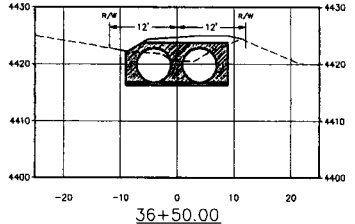

36+50.00

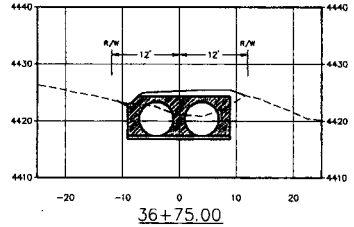

36+75.00

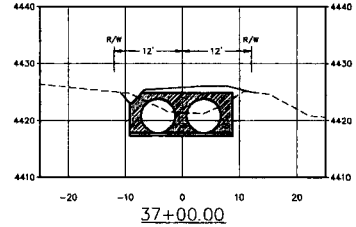

37+00.00

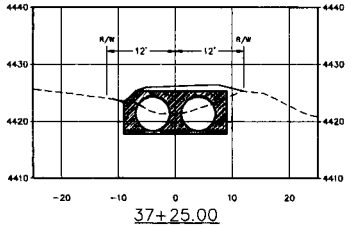

37+25.00

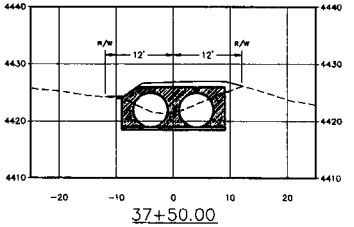

37+50.00

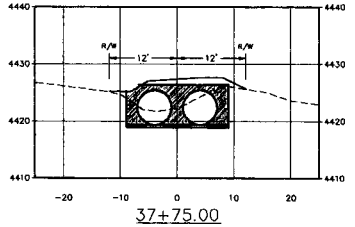

37+75.00

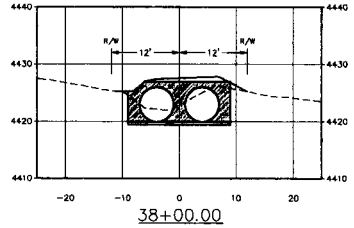

38+00.00

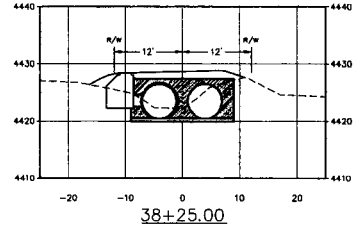

38+25.00

NOTE:
1. CONSTRUCT LANDSCAPE BERM OVER TYPICAL SECTION SHOWN PER DETAIL A, SHEET C2.

CALL TWO WORKING DAYS BEFORE YOU DIG
1-800-STAKE-IT

REVISIONS			
NO.	DESCRIPTION	DATE	BY

Shephard Wesnitzer, Inc.
75 Kallof Place
Sedona, AZ 86336
928.282.1061
928.282.2058 fax
www.swiaz.com

JOB NO.	10478
DATE:	JUL 11
SCALE:	1"=10'
DRAWN:	MWJ
DESIGN:	AHB
CHECKED:	AHB

HARMONY–WINDSONG PHASE III
SEDONA ARIZONA

SECTIONS

DRAWING NO. S1
SHT NO. 8 OF 10

PLOTTED: Jul 08, 2011 - 2:30pm
FILE: C:\Documents and Settings\wesnitzer\Desktop\Projects\2010\10478\Proj\SECTIONS.dwg SW-CB-09

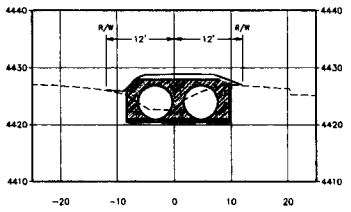

38+50.00

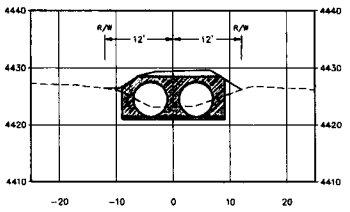

38+75.00

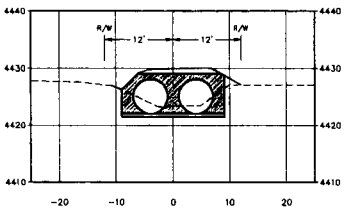

39+00.00

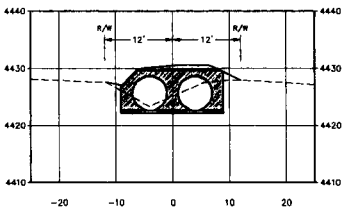

39+25.00

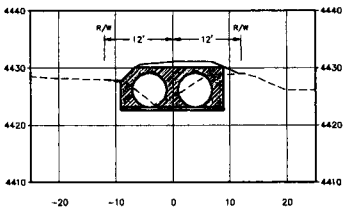

39+50.00

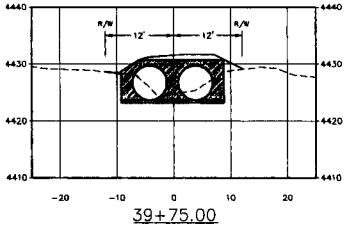

39+75.00

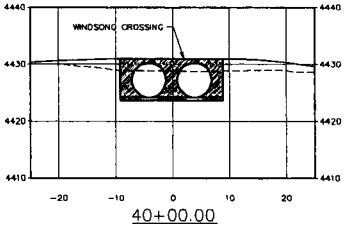

40+00.00

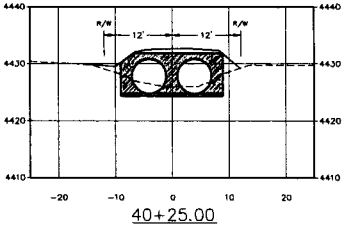

40+25.00

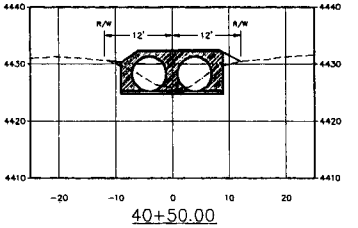

40+50.00

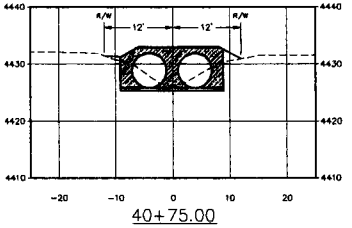

40+75.00

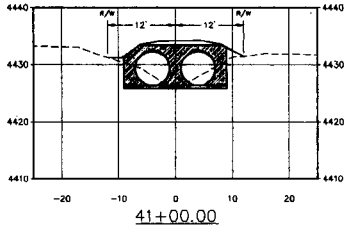

41+00.00

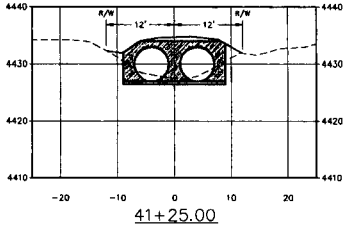

41+25.00

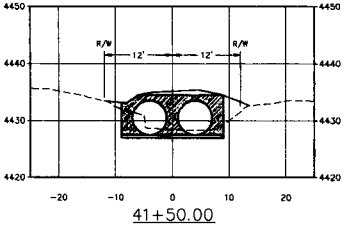

41+50.00

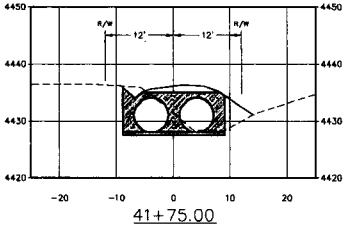

41+75.00

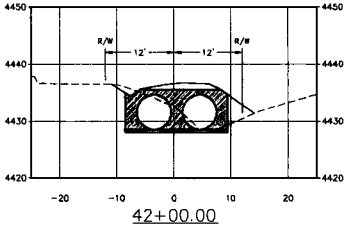

42+00.00

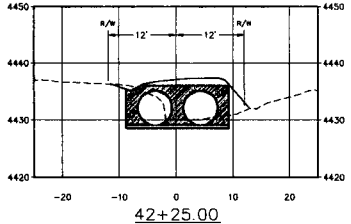

42+25.00

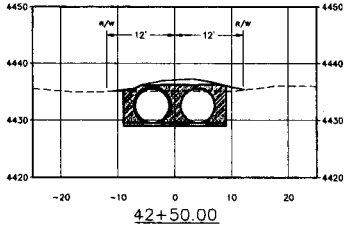

42+50.00

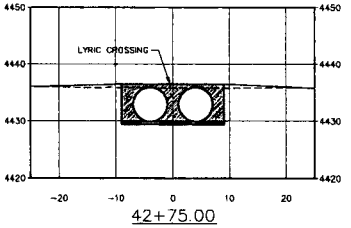

42+75.00

NOTE:
1. CONSTRUCT LANDSCAPE BERM OVER TYPICAL SECTION SHOWN PER DETAIL A, SHEET C2.

CALL TWO WORKING DAYS BEFORE YOU DIG
1-800-STAKE-IT

REVISIONS			
NO.	DESCRIPTION	DATE	BY

Shephard Wesnitzer, Inc.
75 Kallof Place
Sedona, AZ 86336
928.282.1061
928.282.2058 fax
www.swinz.com

JOB NO:	10478
DATE:	JUL 11
SCALE:	1"=10'
DRAWN:	MNJ
DESIGN:	AHS
CHECKED:	AHS

HARMONY – WINDSONG PHASE III
SEDONA ARIZONA

SECTIONS

ARTHUR H. BECKWITH 7/29/11 REGISTERED LANDSCAPE ARCHITECT ARIZONA 32717 expires 3/31/2013

DRAWING NO. S2

SHT NO. 9 OF 10

PLOTTED: Jul 08, 2011 - 12:30pm
PLE: C:\Documents and Settings\ahsteffen\Desktop\Projects\2010\104-HW\DWG\SECTIONS.dwg DW - C3D - 09

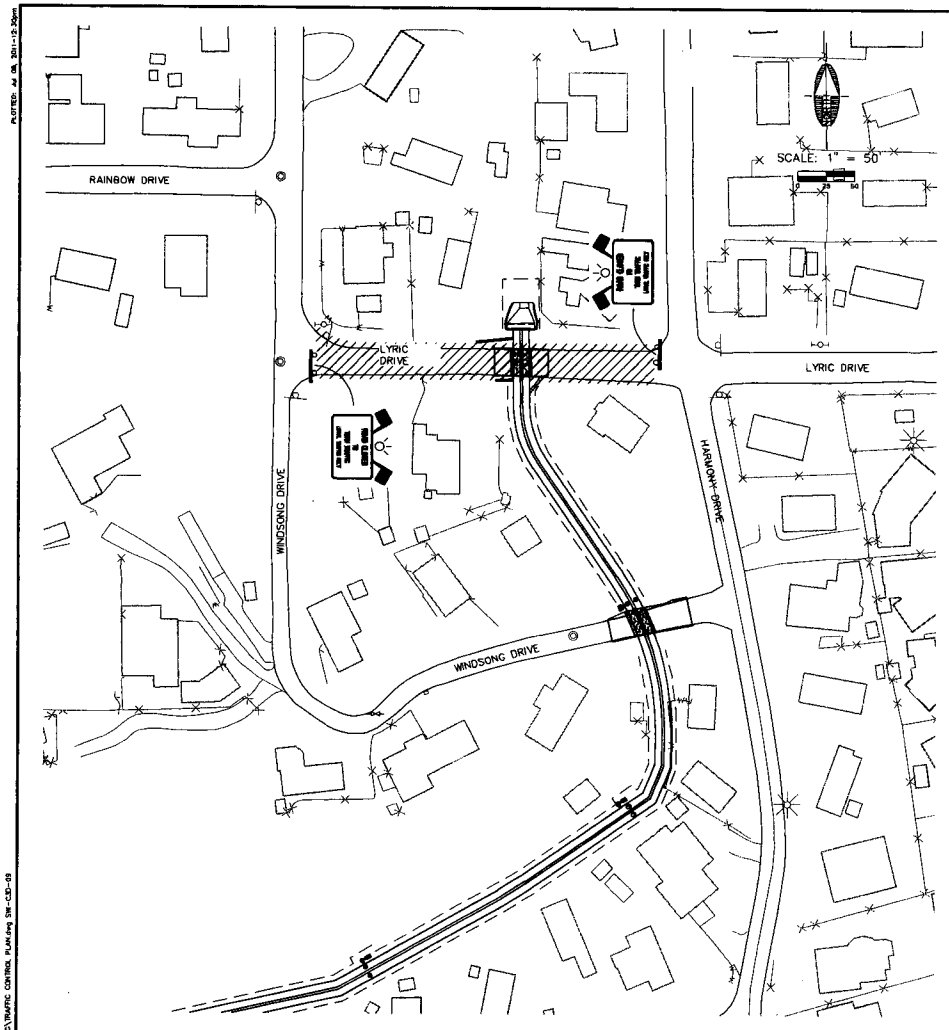

LYRIC CLOSURE TRAFFIC CONTROL PLAN
1"=50'

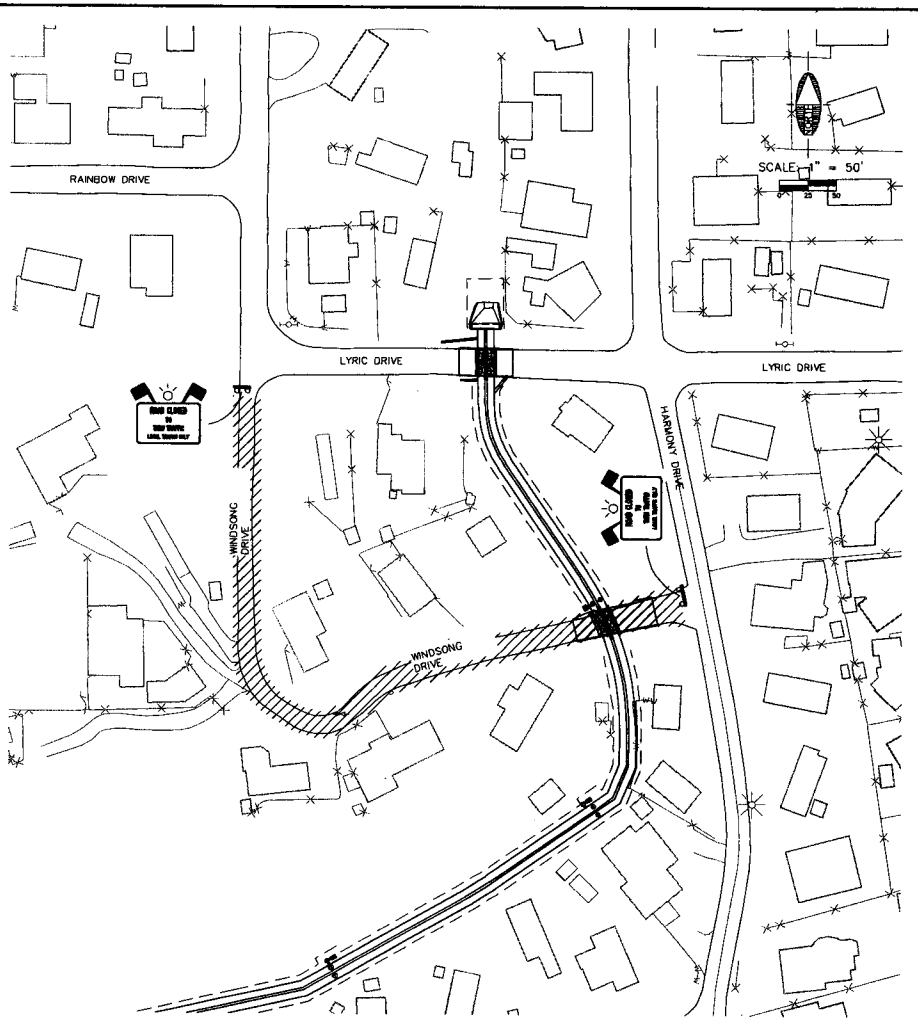

WINDSONG CLOSURE TRAFFIC CONTROL PLAN
1"=50'

CALL TWO WORKING DAYS BEFORE YOU DIG
1-800-STAKE-IT

REVISIONS			
NO.	DESCRIPTION	DATE	BY

SWI
Shephard Wesnitzer, Inc.
75 Kaliof Place
Sedona, AZ 86336
928.282.1061
928.282.2058 fax
www.swiaz.com

JOB NO:	10478
DATE:	JUL 11
SCALE:	1"=50'
DRAWN:	MNU
DESIGN:	AHB
CHECKED:	AHB

HARMONY-WINDSONG PHASE III — SEDONA ARIZONA

TRAFFIC CONTROL PLAN

DRAWING NO. T1

SHT NO. 10 OF 10

PLOTTED: Jul 08, 2011 - 12:20pm
P:\Documents and Settings\dwadsworth\Desktop\Projects\2010\10478\DWG\TRAFFIC CONTROL PLAN.dwg SWI-CAD-09

ARIZONA WATER COMPANY

VERDE VALLEY DIVISION
65 COFFEE POT DRIVE, STE 7 SEDONA, AZ 86336
928-282-5555 | FAX 928-282-6131

PROPOSAL/CONTRACT

CONTRACTOR: Rocky Construction, Inc	SYSTEM: Verde Valley/Sedona
ADDRESS: PO Box 1365	W.A. No(s):
CITY ST ZIP: Camp Verde, Az. 86322	BID DUE DATE: Oct 21, 2011 ~~October 20, 2011~~

CONTRACTOR SUBMITS this PROPOSAL/CONTRACT to ARIZONA WATER COMPANY, an Arizona corporation (the "Company"), to perform the work and complete the project described on Page 2 (the "Project"), as an independent prime contractor.

1. Contractor certifies that it has a complete copy of, and has read, understands and accepts, the Company's General Conditions of Contract, and the Company's Construction Specifications and Standard Specification Drawings, (the "Specifications"), all of which are attached hereto. Contractor has examined the specific plans and related construction drawings for the Project (the "Drawings"), copies of which are also attached hereto. The General Conditions of Contract, Specifications and Drawings are incorporated into this Proposal/Contract. Contractor affirms that all work and materials to be furnished or purchased for the Project will be in strict conformance with the General Conditions of Contract, Specifications and Drawings.
2. Contractor represents and warrants that it has satisfied and complied with the provisions of Section 6, Contractor Understands Work and Working Conditions, of the General Conditions of Contract prior to submitting this Proposal/Contract.
3. Contractor represents that this Proposal/Contract is fair and honest in all respects, is submitted in good faith and is not submitted in collusion with any other company, entity or person.
4. Contractor acknowledges that one hundred percent (100%) Performance and Payment Bonds are required and must be provided to the Company prior to the commencement of work.
5. Prior to the commencement of work, Contractor will submit to the Company a list of all materials to be used in the Project. The materials list will include the manufacturer, part number, price and quantity included in this Proposal/Contract.
6. Contractor will furnish all labor, tools, equipment and materials required to complete the Project according to the General Conditions of Contract, Specifications and Drawings. No materials purchased by Contractor to be incorporated into the Project are subject to tax at the time of purchase and Contractor will not charge the Company for any such tax. Contractor will pay the applicable transaction privilege tax (the "Contracting Tax") on the Project after Contractor receives payment of the final Project invoice from the Company. The cost of materials incorporated into the Project which are exempt by Arizona Revised State Statues ("A.R.S.") from the Contracting Tax, for example, pipes or valves having a diameter of four (4) inches or larger, including equipment, fittings and any other related part that is used in operating the pipes or valves (A.R.S. §42-5061 B.6.), will not be included in the total cost of the labor and materials upon which the Contracting Tax is computed. Contractor retains full liability and obligation to pay the Contracting Tax and will defend and indemnify the Company against any demand or obligation to pay the Contracting Tax.
7. Contractor will maintain detailed accounting records of all materials purchased and incorporated into the Project. Such records will include all supporting original vendor invoices for all materials purchased. Following completion of the Project, Contractor will submit an itemized accounting to the Company which will include all supporting original vendor invoices and satisfactory evidence of payment thereof. The Company will not pay Contractor for materials not actually incorporated into the Project, and the disposition of such materials will remain Contractor's responsibility.
8. The Estimated Total Cost of the Project, shown on Page 2, is based on estimated labor and material quantities to be furnished. It includes an estimate of the Contracting Tax and the cost of the required Performance and Payment Bonds. Contractor will not cancel, modify or withdraw this Proposal/Contract during a ninety-day (90) period commencing on the Bid Due Date. The Company may accept this Proposal/Contract by signing and mailing, or otherwise delivering, a copy hereof to Contractor during such ninety-day (90) period. If the Company does not accept this Proposal/Contract during such ninety-day (90) period, Contractor may cancel this Proposal/Contract by giving written notice of cancellation to the Company.
9. Prior to the commencement of work, Contractor will provide the Company with a detailed construction schedule, in either Gantt or CPM form, identifying all tasks to be performed from the date of the written Commencement Notice through completion of the Project, including testing, training of Company Personnel and final Project invoicing. Contractor will provide the Company with a copy of such construction schedule documenting the progress of work on the Project at least monthly.
10. Contractor will not commence work on the Project until the Company gives Contractor a written Commencement Notice. Contractor will complete the Project within 42 calendar days after the Commencement Notice is issued.
11. Following the Company's written notice of satisfactory completion of the Project, and upon receipt of the final Project invoice from Contractor, the Company shall pay Contractor the actual total cost of the Project, which will be calculated as shown on Page 2, except that actual labor and material quantities installed/constructed will be substituted for the estimated labor and materials quantities and the Contracting Tax will be recalculated based on such actual labor and materials quantities.
12. The amount of applicable liquidated damages for Contractor's failure to deliver or perform within the time limit shown in Paragraph 10 may be deducted from the Company's payment of the final Project invoice. This provision shall not limit the Company's ability to terminate this Proposal/Contract for Contractor's unsatisfactory performance or failure to perform as provided in the General Conditions of Contract, Specifications or Drawings, or in this Proposal/Contract.

SPECIAL CONDITIONS:

* The materials for the well discharge re-piping will be ductile iron pipe and cast iron flange x flange with joint restraint at the tie in to the existing flushline.

CONTRACTOR	PROPOSAL/CONTRACT ACCEPTED:
Rocky Construction	ARIZONA WATER COMPANY
By: Linda Harkness	By:
Print Name: Linda Harkness	Print Name: Fredrick K. Schneider, PE
Title: Estimator/PM	Title: Vice President - Engineering
Date:	Date: 7-20-2012

ARIZONA WATER COMPANY

VERDE VALLEY DIVISION
65 COFFEE POT DRIVE, STE 7 SEDONA, AZ 86336
928-282-5555 | FAX 928-282-6131

PROPOSAL/CONTRACT

CONTRACTOR: Rocky Construction, Inc	SYSTEM: Verde Valley/Sedona
AZ CONTRACTOR LICENSE NO: ROC150728 CLASSIFICATION: KA-Dual	W.A. No(s):
ADDRESS: PO Box 1365	BID DUE DATE: October 20, 2011
CITY ST ZIP Camp Verde, Az 86322	BID BOND REQUIRED ☑ Yes ☐ No

DESCRIPTION OF PROJECT: Install vertical realignments with casing and air releases, well discharge re-piping and a 15" CMP catch basin, per Arizona Water Company specifications to accommodate the City of Sedona Harmony/Windsong Drainage Project Phase III.

1-2. MATERIALS EXEMPT FROM CONTRACTING TAX (per Paragraph 6)	QUANTITY	UNIT PRICE LABOR	UNIT PRICE MATERIALS	TOTAL COST LABOR	TOTAL COST MATERIALS
Install 6" vertical realignment on Lyric Drive, as per AWC Spec E-9-5-2	45 LF	254.96	33.87	11,473.35	1524.15
Install 16" steel casing on Lyric Drive, as per AWC Spec E-9-24-1	30 LF	44.20	17.67	1,326.10	530.10
Install 6" vertical realignment on Windsong Dr, as per AWC spec E-9-5-2	45 LF	236.14	55.94	10,626.44	2,517.16
Install 16" steel casing on Windsong Drive, per AWC Spec E-9-24-1	30 LF	44.20	17.67	1,326.10	530.10
Install air release valve 6" x 1" w/saddle, as per AWC Spec E-9-14-1	2	2009.60	568.22	4,019.19	1,136.43
* Install 6" well discharge re-piping, as per Detail G DWG C2 (see note)	1	975.19	830.31	975.19	830.31
				1	2
3. Total Labor to Install Exempt Materials (add the amounts in column 1)				3 29,746.97	
4. Total Exempt Materials (add the amounts in column 2)					4 10,667.90

5-6. NON-EXEMPT MATERIALS	QUANTITY	LABOR	MATERIALS	LABOR	MATERIALS
Install 15" CMP catch basin with grated cover, as per Detail C DWG C3	1	346.92	865.72	346.92	865.72
				5	6
7. Total Labor to Install Non-Exempt Materials (add the amounts in column 5)				7 346.92	
8. Total Non-Exempt Materials (add the amounts in column 6)					8 $865.72
9. Subtotal A (add lines 3, 7 and 8)					9 $30,959.-
10. Contracting Tax Base (multiply the amount on line 9 by 0.65)				10 $20,123.	
11. Applicable Contracting Tax Rate				11 10.35 %	
12. Contracting Tax (multiply the amount on line 10 by line 11)					12 2083.00
13. Subtotal B (add lines 4, 9 and 12)					13 43,709.90
14. 100% Performance and Payment Bonds Cost					14 1,311.
15. Estimated Total Cost (add lines 13 and 14)					15 45,020.90

NOTE: The Estimated Total Cost includes all labor and materials for backfill, pavement replacement, chip seal, and traffic control necessary for the Project.

TT

ARIZONA WATER COMPANY

SPECIFICATIONS

GENERAL CONDITIONS OF CONTRACT: E-4-1

CONSTRUCTION SPECIFICATIONS: E-8-1

STANDARD SPECIFICATION DRAWINGS: E-9-1

2007 EDITION WITH 2010 REVISIONS

ARIZONA WATER COMPANY

GENERAL CONDITIONS OF CONTRACT: E-4-1

ARIZONA WATER COMPANY

E-4-1

GENERAL CONDITIONS OF CONTRACT

DEFINITIONS

A. Company. The words "Company" or "Arizona Water Company" mean Arizona Water Company, and where applicable, any division of Arizona Water Company, whose principal place of business is located at 3805 North Black Canyon Highway, Phoenix, Arizona 85015-5351 (Post Office Box 29006, Phoenix, Arizona 85038-9006).

B. Company's Authorized Representative. The words "Company's Authorized Representative" mean any officer of the Company, and any of the Company's Engineers, any Division Manager or Superintendent of the Company and/or such other person(s) designated in writing as the "Company's Authorized Representative" by the President or any Vice President of the Company.

C. Contractor. The word "Contractor" means either an individual or other entity employed to do the work as shown on the Construction Drawings and as specified herein.

D. Construction Drawings. The words "Construction Drawings" mean plans prepared by or on behalf of Arizona Water Company.

E. Invitation to Bid. The term "Invitation to Bid" means the current copy of Arizona Water Company's Form E-3-11-4 Request for Proposal/Contract or Form E-3-12-2 Invitation to Bid.

F. Contract. The word "Contract" means the written document titled "Contract" or "Proposal/Contract" when such document has been signed by an officer or other authorized representative of both the Contractor and the Company.

G. Inspector. The word "Inspector" means the Company's Authorized Representative or a person designated in writing by the Company's Authorized Representative.

GENERAL CONDITIONS OF CONTRACT

1. GENERAL

These General Conditions of Contract govern all works of installation and construction unless deviations are provided for on the Construction Drawings or in the Contract.

2. BONDS

The Contractor shall, upon request by the Company, furnish a performance bond and a material payment bond in the amount of 100% of the Contract price, in a form and from a surety acceptable to the Company.

3. LABOR AND/OR MATERIAL RELEASES

The Contractor shall supply labor and/or material releases satisfactory to the Company when requested to do so. Forms will be provided by the Company.

4. LICENSE

The Contractor shall have, as may be required by law, a valid license applicable to the work to be performed.

5. INSURANCE

The Contractor shall maintain in full force and effect insurance at no less than the following minimum amounts:

WORKER'S COMPENSATION	In accordance with requirements of the laws of the State of Arizona.
COMPREHENSIVE GENERAL LIABILITY (Including contractual liability covering death, bodily injury and property damage)	Combined single limit of not less than $1,000,000 for each occurrence.
AUTOMOTIVE LIABILITY (Including owned, non-owned and hired vehicles)	Combined single limit of not less than $1,000,000 for each occurrence.
SUBCONTRACTOR'S PUBLIC LIABILITY AND PROPERTY DAMAGE INSURANCE AND VEHICLE LIABILITY INSURANCE	Contractor shall either require each of its subcontractors to procure and to maintain Subcontractor's Public Liability and Property Damage Insurance and Vehicle Liability Insurance of the type and in the amounts specified in this Section 5 or insure the activities of its subcontractors in Contractor's own policy, in like amounts.

Such insurance shall name the Company, its officers, agents, and employees as additional insured and be primary for all purposes.

The Company will at all times have the right to require that all of such insurance be placed with insurance companies that are satisfactory to it. The Contractor shall file with the Company a certificate evidencing that each policy of insurance for the above coverages in the minimum amounts specified has been purchased and is in good standing.

Such certificate shall provide that notice be given to the Company at least thirty (30) days prior to cancellation or material change in the form of such policies or any of them. Such certificates shall be kept on file by the Company and the Company must have current certificates on file, or a certificate must accompany any bid proposal, before that proposal will be accepted by the Company.

6. CONTRACTOR UNDERSTANDS WORK AND WORKING CONDITIONS

By executing a Contract with the Company, the Contractor warrants that it has, by careful examination, satisfied itself as to the nature and location of the work, including soil conditions, the character, quality and quantity of the materials to be encountered, the character of the equipment and facilities needed preliminary to and during prosecution of the work, the general and local conditions, and all other matters which can in any way be expected to affect its work under the Contract. Verbal agreements or conversations with any officer, agent or employee of the Company, either before or after the execution of the Contract, are not binding upon the Company and shall not affect or modify any of the terms or obligations herein contained.

7. SPECIFICATIONS AND DRAWINGS

The Contractor shall keep on the job a complete copy of all drawings and specifications furnished by the Company which are applicable to the Contract with the Company. Anything mentioned in the specifications and not shown on the drawings or shown on the drawings and not mentioned in the specifications shall be of like effect as if shown or mentioned in both. In case of a discrepancy between the figures, drawings or specifications and physical conditions of the job, the matter shall be immediately submitted to the Company's Authorized Representative for decision as to adjustments, if any, because of the discrepancy; without a decision from the Company's Authorized Representative no discrepancy shall be adjusted by the Contractor, save only at its own risk and expense. Any deviation from the specifications must be approved in writing by the Company's Authorized Representative.

8. PROPERTY PROTECTION

Trees, fences, poles, underground structures and all other property shall be protected unless their removal is authorized on the Construction Drawings. Any property damaged shall be restored by the Contractor, at its expense, to the owner's satisfaction.

9. SPECIAL PERMITS, LICENSES AND INSURANCE

The Company shall obtain all permits for railroad, county, state, city and irrigation district rights-of-way as well as Forest Service, State Land Department and Bureau of Land Management permits. (Pipeline Contractors)

Whenever blasting is required, the Contractor shall obtain all permits, licenses and insurance required at its expense. (All Contractors)

The Contractor will be required to obtain, and shall certify in writing to the Company that it has obtained, all additional permits required to perform the work including, but not limited to, a National Pollution Discharge Elimination System Permit and/or an Aquifer Protection Permit as those permits relate to disposal of drilling, development and test waters and/or any other discharge or similar activity. (Well Drilling Contractors)

10. SURVEYS

The Company shall be responsible, or arrange, for all surveys required for the work covered in the Contract, unless otherwise specified.

11. BENCH MARKS, PROPERTY STAKES AND SURVEY STAKES

Bench marks, property stakes and survey stakes shall be preserved by the Contractor; in case they are destroyed or removed by Contractor or its employees, the Company will replace them at the Contractor's expense, and the Contractor and its sureties shall be liable therefore.

12. TOOLS, EQUIPMENT AND MATERIALS

The Contractor shall furnish all of the necessary tools, equipment, and pipeline materials required for the work. All material furnished by the Contractor shall be of the quality specified by the Company in its Construction Specifications (E-8-1).

13. SUPERINTENDENCE BY CONTRACTOR

The Contractor shall assure adequate superintendence of the work by a competent foreman or superintendent (with full authority to act on behalf of Contractor) satisfactory to the Company, who will be on the job at all times when work is in progress.

14. ORDER AND DISCIPLINE

The Contractor shall at all times enforce strict discipline and good order among its employees.

15. INDEPENDENT CONTRACTOR

The Contractor is an independent contractor and any provisions in the Contract, the specifications, or these General Conditions of Contract and Arizona Water Company's Construction Specifications which may appear to give the Company the right to direct the Contractor as to the details of the doing of any work to be performed by the Contractor, or to exercise a measure of control over said work, shall be deemed to mean and shall

mean, that the Contractor shall follow the desires of the Company in the results of the work only and not in the means whereby said work is to be accomplished, and the Contractor shall use its own discretion and shall have complete and authoritative control over the work and as to the details of the doing of the work.

16. PUBLIC SAFETY AND CONVENIENCE

Contractor shall at all times conduct its work so as to ensure the least possible obstruction to traffic and other inconvenience to the general public and the residents and businesses in the vicinity of the work, and to ensure the protection of persons and property.

To protect persons from injury and to avoid property damage, Contractor shall provide and maintain adequate barricades as required during the progress of the work and until it is safe to use the property for its intended purpose. The rules and regulations of the local governmental agencies and specific permit requirements respecting safety provisions shall be observed at all times.

In the case of blasting, the Contractor shall exercise extreme caution to protect the general public and personal and public property from harm or damage.

17. PROPERTY PROTECTION

Trees, fences, poles, and all other property shall be protected unless their removal is authorized by the Company. Any property damaged shall be restored by Contractor, at his expense, to Company's satisfaction.

18. RESPONSIBILITY OF CONTRACTOR

The work shall be under Contractor's responsible care and charge. Contractor shall bear all loss and damage whatsoever and from whatsoever cause, except that caused solely by the act of Company, which may occur on or to the work during the fulfillment of the Contract. If any loss or damage occurs, Contractor shall immediately make good any such loss or damage, and in the event of Contractor refusing or neglecting to do so, Company may, or by the employment of some other person, make good any such loss or damage, and the cost and expense of so doing shall be charged to Contractor.

The mention of any specific responsibility or liability imposed upon Contractor shall not be construed as a limitation or restriction of any general liability or duty imposed upon Contractor by the Contract. The reference to any specific duty or liability being made herein is merely for the purpose of explanation.

Contractor alone shall at all times be responsible for the safety of Contractor, Contractor's employees, and its subcontractors' employees, and for Contractor and its subcontractors' plant and equipment and the method of performing the work.

19. ERRORS AND OMISSIONS

If Contractor, in the course of the work, becomes aware of any errors or omissions in the Contract Documents or in the instructions, or if Contractor becomes aware of any discrepancy between the Contract Documents and the physical conditions of the site of

the work, Contractor shall immediately inform Company in writing. Any work done by Contractor after such discovery, until authorized by Company, will be done at Contractor's risk.

20. LAWS, REGULATIONS

Contractor shall give all notices required by law and comply with all laws, ordinances, rules and regulations, including, but not limited to, all applicable federal, state, local and other legally required health and safety standards, orders, rules, regulations or other laws, pertaining to the conduct of the work. Contractor shall be liable for, and shall defend and indemnify Company against and hold it harmless from, all violations of any law, ordinance, rule, regulation, standard, or order in connection with work furnished by or on behalf of Contractor. If Contractor observes that the Contract Documents are at variance with any law, ordinance, rule, regulation, standard, or order it shall promptly notify Company in writing and any necessary changes shall be adjusted as provided in the Contract for changes in the work. Contractor shall not perform any work contrary to such laws ordinances, rules, regulations, standards, or orders.

21. PERMITS, FEES AND INSPECTIONS

Permits and licenses necessary for the prosecution of the work, including, but not limited to, any National Pollution Discharge Elimination Systems (NPDES) Permits required by U.S. Environmental Protection Agency or the Arizona Department of Environmental Quality shall be secured, paid for, and complied with by Contractor.

Contractor shall be responsible for its actions and shall abide by all conditions and/or restrictions set forth in the NPDES Permit and any other permit or license required for this project.

Company shall at all times have access to the work whenever it is in preparation or in progress and Contractor shall provide proper facilities for such access and for all inspections. If the Contract Documents, the General Superintendent's instructions, laws, ordinances or any public authority require any work to be inspected or approved, Contractor shall give timely notice of its readiness for inspection.

Inspection of the work shall not relieve Contractor of any of its obligations even if defective work or unsuitable materials may have been previously overlooked by Company and accepted or estimated for payment. If any work is found not in accordance with the Contract Documents, Contractor, at its sole cost and expense, shall promptly make good such defective work.

22. CONSTRUCTION MARKING (PIPELINE ONLY)

Each job shall be marked and/or barricaded by the Contractor in such a manner that the construction is clearly visible at all times.

23. EXTRA WORK AND/OR MATERIALS

Except as otherwise herein provided, no charge for any extra work and/or material will be allowed unless the same has been ordered in writing by the Company's Authorized Representative, and the price stated in such order.

24. CHANGES

The Company shall have the right to make any changes in the work that it may determine to be necessary. If such changes affect the cost of the work, an equitable adjustment shall be negotiated. Changes shall in no way affect or void the obligations of both parties under the original Contract.

25. INSPECTION

All work and material shall be open at all times to inspection and acceptance or rejection by the Company's Inspector. Any work covered up by the Contractor prior to inspection and acceptance by the Company shall be subject to being uncovered at the expense of the Contractor for inspection by the Company. The Contractor shall give the Company reasonable notice of starting new work and shall provide, without extra charge, reasonable and necessary facilities for inspection, even to the extent of taking out portions of finished work. In case any such finished work removed is found satisfactory, however, the actual direct cost of such removal and replacement, plus 15% of such cost, will be paid by the Company; in addition, if completion of the work has been delayed thereby, the Contractor shall be granted a suitable extension of time on account of the additional work involved.

26. DEFECTIVE WORK OR MATERIAL

The Contractor shall remove, at its own expense, any work or material found defective by the Company's Inspector and shall rebuild and replace the same without extra charge; in default thereof, the same may be done by the Company at the Contractor's expense.

27. ASSIGNMENT

Neither party to the Contract may assign the Contract or sublet it in whole or in part without the written consent of the other, nor shall the Contractor assign any monies due or which may become due hereunder without the previous written consent of the Company, nor shall such consent release the Contractor from any of its obligations and liabilities under the Contract.

28. RIGHTS OF VARIOUS INTERESTS

Whenever work that is being done for the Company other than by the Contractor is contiguous to work being done by the Contractor, the respective rights of the various interests involved shall be established by the Company to secure the completion of the various portions of the work in general harmony.

29. SUSPENSION OF WORK

The Company's Authorized Representative may at any time and for any reason suspend all or any portion of the work under the Contract. This right to suspend work shall not be construed as denying the Contractor compensation for actual, reasonable and necessary expenses due to suspension to which it may be entitled.

The Company's Authorized Representative may order the Contractor to suspend any work because of certain conditions, such as inclement weather, or because the

Contractor is in violation of these General Conditions of Contract or the Construction Specifications. It is understood that compensation for expenses will not be allowed for such suspension when ordered by the Company's Authorized Representative on account of such conditions.

30. PROCEDURE OF WORK (PIPELINE ONLY)

All work under the Contract shall be planned and performed so as to cause a minimum of interference with normal vehicular and pedestrian traffic. At no time shall the Contractor completely obstruct the traffic to any business establishment during normal work hours of that business. It shall be the Contractor's responsibility to maintain facilities for ingress and egress to any business establishment. When crossing any street, not more than one-half of the street may be blocked at one time. All federal, state, county and city laws, rules and regulations relating to this subject are to be obeyed.

The Contractor shall complete any portion or portions of the work in such order of time as the Company may require. The Company shall have the right to take possession of and use any completed or partially completed portions of the work. If such prior possession or use increases the cost of or delays the work, the Contractor will be entitled to extra compensation or extension of time or both, as the Company may determine.

31. DISPUTES

All questions or controversies which arise between the Contractor and the Company, under, or in reference to, the Contract, shall be decided by the Company's Authorized Representative and a representative of the Contractor, and their decision shall be final and conclusive upon both parties.

32. CONNECTION TO EXISTING SYSTEM (PIPELINE ONLY)

Unless approved in writing by the Company's Authorized Representative, no tie-in or hot tap on the existing system shall be made unless the Company's Inspector is present. When the tie-in requires the operation of an existing valve or other control equipment, the conditions of Paragraph(s) 30 and 33 shall be complied with. The Contractor shall notify the Company twenty-four (24) hours prior to tie-in as to the exact time the Contractor plans to make tie-in so that the Company's Inspector will have sufficient time to locate valves and make necessary preliminary arrangements for shut down.

33. PLANNED INTERRUPTION OF WATER SERVICE (PIPELINE ONLY)

No valve or other control on an existing Company water system shall be operated for any purpose by the Contractor without approval of the Company's Inspector. All of the Company's water customers whose service is interrupted by a planned interruption, other than in cases of emergency, shall be notified by the Contractor at least twenty-four (24) hours before the planned interruption and advised of the probable time when the service will be restored.

34. EXISTING UTILITY FACILITIES (PIPELINE ONLY)

The Contractor shall notify all known utilities in the area of the work to be performed under the Contract and shall make arrangements to have their facilities marked in

accordance with A.R.S. 40-360.022 ("Blue Stake Law"). The Contractor shall be responsible for locating and preserving all marked facilities. Any damages to these marked facilities shall be repaired at the expense of the Contractor.

The Company will pay the cost to relocate its or other structures when such structures are found occupying the physical space of the proposed installation. It is understood that the Contractor will be reimbursed for such work only when written authorization from the Company has been obtained in advance of such work.

35. CLEANING UP

The Contractor shall remove from the Company's property and from all public and private property, at its own expense, all temporary structures, rubbish and waste materials resulting from its operations. In the event Contractor fails to do so, the Company may remove same at the expense of the Contractor.

36. WORKING HOURS (PIPELINE ONLY)

Unless stated to the contrary in the Invitation to Bid and/or so stated on the Construction Drawings, or agreed to by the Company during a Pre-Construction Conference, the Contractor shall not be permitted to perform work on Saturdays, Sundays, or Company holidays, or commence work such as tie-ins that cannot be completed during normal working hours.

37. INDEMNITY

A. The Contractor shall indemnify the Company against, and save and hold it harmless from, any and all liability, claims, demands, loss, actions, causes of action, expense, penalties, fines, assessments, damages and costs of every kind and nature for injury to or death of any and all persons, including, without limitation, employees or representatives of the Company or of the Contractor or of any subcontractor, or any other person or persons, and for damage, destruction or loss, consequential or otherwise, to or of any and all property, real or personal, including, without limitation, property of the Company or of the Contractor or of any subcontractor, or of any other person or persons, and the violation of any law, ordinance, rule, regulation, standard, or order resulting from or in any manner arising out of or in connection with the performance of the work under the Contract, howsoever same may be caused, including, without limitation, the Company's active or passive negligence. The Contractor shall also, upon request by the Company, and at no expense to the Company, defend the Company in any and all suits, concerning such injury to or death of any and all persons, and concerning such damage, destruction or loss, consequential or otherwise, to or of any and all property, real or personal, including, without limitation, suits by employees or representatives of the Company or of the Contractor or of any subcontractor, or any other person or persons, or concerning any court or administrative proceeding concerning the violation of any law, ordinance, rule, regulation, standard, or order. Excluded from this paragraph are only those injuries to or deaths of persons and damage, destruction or loss, to or of property arising from the sole negligence or willful misconduct of the Company.

B. Contractor shall indemnify the Company against, and save and hold it harmless from, any and all liability, claims, demands, damages, costs, expenses and attorney's fees, suffered or incurred on account of any breach of any obligation, covenant or other

provision of this contract, including without limitation, breach of the indemnity provisions of subsection A of this Section 37.

C. Contractor further agrees to defend, indemnify and hold harmless the Company, its directors, officers, employees, and agents, from and against any and all costs, damages, claims, expenses, violations, notices of violations, penalties, liens, assessments, and liabilities of every kind and nature, foreseeable or unforeseeable, directly or indirectly, arising from any release, removal, generation, use, storage or disposal on, under, around, or from the well site of any material, substance, or waste, hazardous or non-hazardous, including, without limitation, drilling fluids, mud, cuttings and development and test water howsoever same may be caused, including, without limitation, the Company's active or passive negligence.

38. LIENS

If at any time there shall be evidence of any lien or claim for which the Company might become liable and which is chargeable to the Contractor, the Company shall have the right to retain out of any payment then due or thereafter to become due, an amount sufficient to completely indemnify the Company against such lien or claim. If the Company determines that such lien or claim is valid, the Company may pay and discharge the same, and deduct the amount so paid from any monies which may be or become due and payable to the Contractor.

39. PAYMENT

Upon completion of the installation or construction, the Company will, within thirty (30) days after receipt of proper invoice and labor and material releases, pay the amount due the Contractor. If the Company believes that additional work, such as clean up, is required, it may deduct the total cost of such additional work from the amount to be paid to Contractor.

40. COMPANY'S RIGHT TO TERMINATE CONTRACT: DAMAGES DUE TO DELAY

If the Company finds the Contractor to be in material violation of any section of these General Conditions of Contract, Construction Specifications or Standard Specification Drawings or if the Contractor refuses or fails to prosecute the work, or any separable part thereof, with such diligence as will insure its completion within the time specified or any extension thereof, or fails to complete said work within such time, or when any other cause exists to justify such action, the Company may, without prejudice to any other right or remedy, by written notice to the Contractor, terminate its right to proceed with the work or such part of the work as to which there has been such violation, delay or other cause.

In the event the Contractor's right to proceed is terminated, the Company may take over the work and take possession of, and utilize in completing the work, such materials as may be on the site of the work and necessary therefore and prosecute said work to completion by whatever method it may deem expedient. The Contractor and its sureties shall be liable to the Company for any excess cost caused thereby.

In the event the Contractor's right to proceed with the work is terminated, the Contractor shall not be entitled to receive any further payment until the work is completed or the job is canceled. If the unpaid balance of the Contract price exceeds the expense of finishing

the work, including compensation for additional managerial and administrative services, such excess shall be paid to the Contractor. If such expenses exceed such unpaid balance, the Contractor shall pay the difference to the Company.

41. GUARANTEE

The Contractor shall guarantee all labor and workmanship and any materials it installs for a period of one year following the date of completion and acceptance by the Company. If any portion of the work or any of the materials become defective within the guarantee period, the Company will notify the Contractor of such defect. The Contractor must repair any defect within fifteen (15) days of such notification. If repairs are not completed within this time period, the Company may repair the defect, or cause such defect to be repaired, and the cost of such repairs shall be paid by the Contractor. The Company reserves the right to determine which defects are the result of poor labor and workmanship and which are caused by defective materials.

42. LIQUIDATED DAMAGES FOR NON PERFORMANCE: REQUEST FOR EXTENSION(S) OF TIME

Time is of the essence in the Contract. The time period required for completion of the work will be specified in the Contract. The Contractor agrees that the Company will suffer substantial damages in the event the Contractor fails to complete the work within the agreed upon time period. The Contractor and the Company agree that since it would be impracticable or extremely difficult to precisely fix such damages, a reasonable approximation of such actual damages suffered by the Company shall be a sum equal to 0.5% of the Contract price for each working day beyond the time period for completion of the work specified in the Contract.

Request by the Contractor for extensions of the time period shall be in writing and shall not become effective until approved in writing by the Company's Authorized Representative.

43. PAYMENT FOR REQUIRED TESTING

Whenever testing is required by any governmental agency or by the Company to assure conformance of the Contractor's work with the appropriate standard, it will be paid for as follows:

a. For testing required under permits obtained by the Company or testing specifically requested by the Company, the cost of the first test will be paid for by the Company. In the event of failure of the first test, the cost of all further testing associated with the failure will be paid by the Contractor.

b. For testing required under permits obtained by the Contractor, all costs will be paid by the Contractor. Testing of the pipeline for pressure and leakage will be included in the Contract price.

44. CONTRACT DEADLINES AND BONDS REQUIREMENTS

The time limits to be allowed for the completion of any work covered in the Contract shall be established as follows: In the proposal submitted to the Company, in response to the Invitation to Bid, the Contractor shall state the number of calendar days required for completion of the work. The time required will become a part of the Contract. When the Company is ready to proceed with the work, a Commencement Notice will be issued by the Company to the Contractor by mail. The Commencement Notice will allow the time required in the Contract plus ten (10) calendar days and will indicate the final day of the time allowed. The work cannot begin until the Company has received a performance bond and materials payment bond for the Contract price unless the bonds have been waived under the special conditions section of the Contract. The additional ten (10) days is the allowance for time to deliver the Commencement Notice to the Contractor and for the Contractor to return the performance bond and materials payment bond to the Company. Time extensions will be granted if warranted, and only at the time of the delay, thus extending the final day of the time allowed.

If the Company elects not to require a performance bond and a material payment bond for the work, the cost of the bonds will be deducted from the proposed total cost and the Contract will reflect this reduced cost and the bonds requirements will be waived under special conditions of the Contract.

ARIZONA WATER COMPANY

CONSTRUCTION SPECIFICATIONS: E-8-1

ERRATA 2010

CONSTRUCTION SPECIFICATIONS FOR THE INSTALLATION OF WATER DISTRIBUTION SYSTEMS DUCTILE IRON

DEFINITIONS

A. Company. The words "Company" or "Arizona Water Company" mean Arizona Water Company, and where applicable, any division of Arizona Water Company, whose principal place of business is located at 3805 North Black Canyon Highway, Phoenix, Arizona 85015-5351 (Post Office Box 29006, Phoenix, A rizona 85038-9006).

B. Company's Authorized Representative. The words "Company's Authorized Representative" mean any officer of the Company, and any of the Company's Engineers, any Division Manager or Superintendent of the Company and/or such other person(s) designated in writing as the "Company's Authorized Representative" by the President or any Vice President of the Company.

C. Contractor. The word "Contractor" means either an individual or other entity employed to do the work as shown on the Construction Drawi ngs and as specified herein.

D. Construction Drawings. The words "Construction Drawings" mean plans prepared by or on behalf of Arizona Water Com pany.

E. Contract. The word "Contract" means the written document titled "Proposal/Contract" when such document has been signed by an officer or other authorized representative of both the Contractor and the Company.

CONSTRUCTION SPECIFICATIONS
FOR THE INSTALLATION OF WATER DISTRIBUTION SYSTEMS
DUCTILE IRON

1. GENERAL

All work is to be completed in a safe, workmanlike manner and in accordance with these Construction Specifications; any deviation therefrom must be approved in writing by the Company.

Installations must conform with the requirements of all governmental regulating agencies and the cost of conforming to such regulations must be included in the unit bid prices. Examples of such regulations, without attempting to be inclusive, are:

a. Special compaction and paving for street crossing.
b. Shoring when required because of the trench depth.
c. Closing a trench in those areas where no open trench is allowed overnight.
d. Barricading and traffic control as required.

2. LOCATION MARKING

Alignment stakes as required in the opinion of the Company shall be furnished by the Company to the Contractor and shall be set by the Company at agreed upon intervals and offsets. Under normal circumstances these will reference the pipeline location five feet (5') into the right-of-way measured from property pins. Grade stakes will be provided only when the Construction Drawings show a pipeline depth other than covered in these Specifications. It is the responsibility of the Contractor to preserve all survey work.

3. TRENCH EXCAVATION

The trench location is to be determined by the Construction Drawings.

FOR 8-INCH OR SMALLER PIPE: The depth of the trench prior to pipe laying shall be such that the finished pipeline shall have between thirty-six inches (36") and forty-two inches (42") of cover unless otherwise specified on the Construction Drawings.

FOR 12-INCH AND LARGER PIPE: The depth of the trench prior to pipe laying shall be such that the finished pipeline shall have between forty-eight inches (48") and sixty inches (60") of cover unless otherwise specified on the Construction Drawings.

The width of the trench at and below the level at the top of the pipe shall be a minimum of twelve inches (12") plus the outside diameter of the pipe barrel and a maximum of twenty-four inches (24") plus the outside diameter of the pipe barrel.

The bottom of the trench shall be accurately graded to provide a uniform bearing for each length of pipe for the full length of the pipe. If the native material on the trench bottom can be reasonably dug by hand, bell holes shall be dug for the joints so that the joints in no way support the pipe. When native materials such as rock are encountered during trenching that will not provide a uniform support for the pipe, the trench will be over-excavated an additional six inches (6") and suitable bedding material will be placed in the trench.

Bedding material will be placed by hand in four-inch (4") lifts and compacted to ensure uniform compaction and to eliminate any voids under the pipe. When the space between the pipe and trench bottom varies, this must be backfilled and compacted in four-inch (4") lifts to the mid-section of the pipe.

Whenever the trench is over-excavated for whatever reason, the trench bottom will be brought up to the correct depth at the Contractor's expense using either method (a) or (b) as follows:

a. A.B.C. material shall be used and compacted to a uniform density of not less than 80% of the maximum density as determined by AASHTO T-99 method A and T-191.

b. Native material 100% of which will pass through a one and one-half inch (1½") screen and at least 20% of which will pass through a number-8 screen shall be used and compacted to a uniform density of not less than 85% of the maximum density as determined by AASHTO T-99 method A and T-191.

4. MATERIALS TO BE PROVIDED BY CONTRACTOR

Unless otherwise specified on the Construction Drawings or in the Contract, the Contractor will supply all of the necessary materials which will become a permanent and integral part of the water distribution system, including concrete blocking, anchors, backfill material, paving material and supplies used during the prosecution of the work. All materials provided by the Contractor to construct the water distribution system must be NSF Standard 61 approved. All potable water pipes and fittings shall have NSF-PW seal. Construction materials used in the water system shall be lead free as defined at AAC R28-4-504 and R18-1-101. The Contractor will provide the following m aterials:

a. FIRE HYDRANTS: Mueller Super Centurion 250 Fire Hydrant, meets ANSI/AWWA C502 Standard, Model No. A-423, 5¼" main valve opening, three way, 6" Mechanical Joint Shoe, 1½" pentagon operating nut, color - yellow, drain open, open direction - left, 4' or 4'6" bury depending on application. For pumper and hose nozzle inform ation see below.

(1) 1 - 4" Pumper Nozzle, NST and 2 – 2½" Hose Nozzles, NST. (These locations only: Ajo, Casa Grande, Coolidge and San M anuel.)

(2) 1 – 4½" Pumper Nozzle, NST and 2 – 2½ " Hose Nozzles, NST. (These locations only: Apache Junction, Arizona City, Lakeside, Oracle, Overgaard, Pinewood, Rimrock, Sedona, Sierra Vista, White Tank and Winkelman.)

(3) 1 – 4½" Pumper Nozzle, NST and 2 – 2½" Hose Nozzles, NPT (Bisbee only.)

(4) 1 - 3" Pumper Nozzle GA 6-350 (6 threads per inch, 3.50 pitch diameter) and 2 – 2½" Hose Nozzles, NPT (Miami only.)

(5) 1 – 3½" Pumper Nozzle GA 6-411 (6 threads per inch, 4.11 pitch diameter) and 2 – 2½" Hose Nozzle, NST (Superior only.)

b. FITTINGS: Manufactured by Tyler or Union. Crosses, Elbows, Tees, Cap, Reducer, Adapter, Plug, Blind Flange and Tapped Flange; Ductile Iron, Class 350, SSB, Cast Iron Cement Lined.

(1) Foster Adaptors for MJ, made by Infact Corporation: Available in size 4" to 16". Part No. 4" = 4FA-BC, 6" = 6FA-BC, 8" = 8FA-BC, 10" = 10FA-BC, 12" = 12FA-BC, 16" = 16FA-BC.

c. DETECTOR CHECK VALVE: Mueller/ Hersey EDC III, iron body, including 5/8" x ¾" Trim Kit. Trim Kit Part No.: 4" = 282080, 6" = 282082, 8" = 282085, 10" = 282496.

d. GATE VALVES: Mueller Resilient Wedge Gate Valves, meets AWWA C509 specification, 250 psig, Non-rising stem, Part No. A-2360 sizes 4" through 12" ; Part No. A-2361 sizes 14" through 36", low zinc stems, epoxy coated inside and outside to meet the NSF 61 rating. The bonnet and stuffing box shall have 304 stainless steel bolts/nuts.

e. TRACER WIRE and WARNING TAPE:

1. TRACER WIRE: Shall be direct bury AWG #14 solid copper wire, Color: Blue.

2. WARNING TAPE: Reef Industries, Standard Terra Tape in 3" widths. Color: Blue and imprinted 'Arizona Water Company'.

f. AIR RELEASE VALVE: Crispin Model AR10 with 1" NPT inlet and ½" NPT outlet, cast iron body and top flange; with a 5/64" orifice with stainless steel valve sealing faces and BUNA-N rubber.

g. PRESSURE RELIEF VALVE: Watts 174A, Model M, 2" inlet, 2" outlet, Bronze Body, 30lb. to 150lb. pressure range.

h. MEGA LUG: Mechanical Joint restraint made of ductile iron conforming to ASTM 536-80, 250 psi made by EBAA Iron, Inc., series 1100 or equal.

i. METER BOXES:

(1) Concrete Box with a steel regular lid, Number 1: Tucson specification.

(2) Concrete Box with a steel regular lid, Number 2, 3, and 4: Phoenix specification.

j. PIPE, COPPER: Type K soft copper in 60 or 100-foot coils, per ASTM B88.

k. PIPE, DUCTILE IRON: Ductile Iron Pipe, Cement Lined, Push-on, conform to current ANSI/AWWA Specification A21.51/C151, Pressure Class 350 (sizes 4" through 12"), Pressure Class 250 (sizes 14" through 20"), or Pressure Class 200 for 24" through 36" pipe. Vendors:

(1) Pacific States Cast Iron Pipe Company
(2) Griffin Pipe
(3) United States Pipe and Foundry Company
(4) American Ductile Iron Pipe
(5) Clow Pipe (McWane, Inc.)

l. PIPE, PLASTIC: Plastic pipe, C-900 PVC per ANSI/AWWA C900, Class 150, sizes 6" through 12". NSF61 approved. Furnished in laying lengths of 20'. The barrel shall conform to the outside dimensions of steel pipe (IPS) or cast iron (CI) pipe equivalent and the wall thickness of dimension-ratio (DR) 18.

m. POLYETHYLENE ENCASEMENT (Polywrap): For all pipeline and related fittings installed, EXCEPT for the Coolidge Division. Minimum 8 Mil. and installed per AWWA C105/A21.5-93 and ASTM A-674-89. Manufactured by the Pacific States Cast Iron Pipe Company. The wrapping tape shall be minimum 10 mil. vinyl tape. No duct tape shall be used.

n. COUPLING: Mueller, straight three part union, tested to meet ANSI/AWWA C800, H15403, conductive com pression.

Mueller, H15428, straight coupling, conductive compression by male iron pipe, tested to meet ANSI/AWWA C800 specification. Size: 2".

Mueller, H15451, straight coupling, conductive compression by female iron pipe, tested to meet ANSI/AWWA C800 specification. Size: 2".

Viking Johnson brand, sold by Mueller: MaxiFit Straight (2"-24"), MaxiFitXtra Straight (4"-8") or MaxiStep Transition, tested to meet AWWA/ANSI C.219-91 specifications – certified to ISO 9001:1994 / Smith – Blair Quantum.

o. STOP, ANGLE METER, BALL: Mueller, valve, B24258, conductive compression by meter swivel nut, tested to meet ANSI/AWWA C800, size 5/8 " x ¾" x ¾" for a ¾" service or size 1" for a 1" service.

Mueller, valve, B24265, female pipe thread by meter swivel nut, tested to meet ANSI/AWWA C800, size 5/8" x ¾" x ¾" for a ¾" service or size 1" for a 1" service.

p. STOP, CORP: Mueller, ball valve, B25008, taper thread by conductive compression, tested to meet ANSI/AWWA C800 specification, sizes: ¾", 1" and 2".

Mueller, ball valve, B25028, iron pipe thread by conductive compression, tested to meet ANSI/AWWA C800 specification. Sizes ¾", 1", and 2".

Mueller, 300 Ball Curb Valve, B-25122, taper thread by conductive compression, tested to meet ANSI/AWWA C800 specifications, size: 2". (2" service)

q. STOP, CURB: Oriseal valve, H10291, iron pipe thread by iron pipe thread, quarter turn check, brass, tested to 300 psi working pressure, tested to meet ANSI/AWWA C800 specification, size: 2".

Mueller, B20283, Mueller 300 ball curb valve, female iron pipe by female iron pipe, quarter turn check, tested to meet ANSI/AWWA C800 specification. Size: 2". (Blow-off E-9-8-1).

r. TAPPING SADDLE: Smith Blair, Cast Bronze ASTM-B584 85-5-5-5, double strap, iron pipe threads, Models 321 and 323. Washers are silicon bronze, ASTM-B36. Gaskets are grade 60 Buna N, or Mueller bronze double strap service saddle, BR 2 B series, cast bronze, ASTM-B585, 85-5-5-5, or H16084, 200 psig, meets ANSI/AWWA C800.

s. TAPPING SLEEVE: Mueller H304 Stainless Steel Tapping Sleeve, JCM 432 18-8 Type 304 Stainless Steel Tapping Sleeve, Romac "SST" Type 304 Stainless Steel Tapping Sleeve or CASCADE-style CST-EX stainless steel pressure-rated tapping sleeve.

t. TAPPING VALVE: Mueller Resilient Wedge tapping valve, Catalog Number T-2360-16, Class 125, sizes 4" through 12"; T-2361-16, Class 125, sizes 14" to 36" all with Type 304 stainless steel fasteners; bypass valves are required on 18" – 36" valves flange by mechanical joint per ANSI/AWWA C111, iron wedge, non-rising stem. Epoxy coated interior/exterior per ANSI/AWWA C550 for NSF 61 compliance. 250 PSI range for valves 4" to 12". 150 PSI range for valves 14" to 36".

u. U-BRANCH: Mueller, H15364, 1" male iron pipe by ¾" male iron pipe, tested to meet ANSI/AWWA C800 specification. Size: 1" x ¾" x 13½", straight line.

v. VALVE BOXES: Valve Box with Cover, adjustable, Tyler 562-A or equal, made of cast iron.

w. VAULTS: Utility Vault Company, Chandler, AZ.

(1) 4484-WA concrete vault with a 3660 aluminum double torsion door with a recessed padlock hasp, two - 18" x 24" center knockouts.

(2) 575-WA concrete vault with a 4874 aluminum double torsion door with a recessed padlock hasp, two - 18" x 24" center knock outs and adjustable frame.

(3) 612-5X-WA concrete vault with a 4874 aluminum double torsion door with a recessed padlock hasp, two - 18" x 24" center knockouts.

x. VALVE, METER: Mueller, B24265-1, Mueller 300 ball angle meter valve, female iron pipe by meter nut, quarter turn check, lock wing, tested to meet ANSI/AWWA C800 specification. Size: 1".

Mueller, B25170, Mueller 300 ball straight valve, conductive compression by female iron pipe, quarter turn check, lock wing, tested to meet ANSI/AWWA C800 specification. Size: 1".

y. YOKES, METER: Relocator type copper meter yoke with horizontal inlet and outlet and meter thread ends, B24118, with lock wing Mueller 300 angle ball valve, full port, sizes: 1" x 12", 5/8" x ¾" x 7", 5/8 x ¾" x 9".

Mueller, 2" copper meter yoke with horizontal inlet and outlet and female iron pipe threads, B2423-99000, with lock wing Mueller 300 ball angle meter valves on inlet and outlet risers. Raised 1" by-pass with lock wing Mueller 300 ball valve.

The Contractor also will be required to provide the following materials, the cost of which will be included in its unit bid price:

All material and concrete for thrust blocks, other anchors, reinforcing steel; all gravel, crushed stone, A.B.C., earth, sand, or screened material which may be required; all material for bracing and shoring trenches and for construction of forms; all barricades and traffic control equipment; all material for paving replacement and any water used for compaction of backfill.

5. INSTALLATION OF MATERIALS

All materials are to be installed in accordance with manufacturer's recommendations unless otherwise directed by these S pecifications.

All pipe, fittings and valves shall be laid true to the lines, grades and locations established by the Specifications and the Construction Drawings.

The ends and inside of the pipe shall be thoroughly cleaned and inspected for damage. No damaged materials shall be installed in the water distribution system .

Whenever the work ceases for any reason, all open pipeline ends shall be tightly plugged by the Contractor. Plugs shall be watertight and approved by the company.

Concrete thrust blocks of the sizes required by the plans and specifications are to be provided at all valves, changes in direction or size, or at any other point where an unbalanced thrust due to water pressure would exist. Thrust blocks are to be formed to prevent any concrete from spilling over or into a joint.

Trench curves as shown on the Construction Drawings may be made without fittings when using push on joint pipe up to twelve inches (12") in diameter, if the deflection of the pipe does not exceed five degrees (5°) or nineteen inches (19") per eighteen-foot (18') length of pipe. The minimum radius of such curves will be two hundred five feet (205').

Prior to construction, the appropriate agency(ies) will be notified as required by the permit(s).

It shall be the Contractor's responsibility to uncover all existing water lines being connected to, and to verify the location, depth and size of pipe befor e any construction begins.

Any construction performed without the knowledge of the duly authorized representative is liable for removal and replacem ent at the Contractor's expense.

All fire hydrants, frames, covers and valve boxes, etc. shall be adjusted to finished grade prior to the placing of the asphalt concrete surface course by the Contractor (where applicable).

Air release valves shall be installed at water system high points per Standard Detail E-9-8-2.

All water services shall be set a minimum of two feet (2') on the customer's property, preferably within the P.U.E. and not within right-of-way.

Unless otherwise specified on the construction drawings, all water mains shall be installed five feet (5') from the property line inside the right-of-way or easement.

Water valves shall be spaced not more than five hundred feet (500') in commercial districts and not more than eight hundred feet (800') in other districts. Variations may be required for transmission mains or special applications.

Installation of water line casing shall be per Standard Speci fication E-9-24-1.

Tracer Wire and Warning Tape are to be installed on all mains, tees, crosses, ells and fire hydrant laterals. They will not be installed on service lines. The tracer wire will be installed on the water main 45 degrees from the vertical centerline of the pipe and shall be taped to the fittings directly and on the main every 10 feet using a minimum 10 mil vinyl tape. The tracer wire shall be placed between the valve riser and box with a minimum of 12" of wire inside. The warning tape shall be installed a minimum of two feet below the surface, being measured from final grade, directly over the center of the pipe. Any splices in the tracer wire shall be joined using waterproof connectors. Any splices in the warning tape shall be joined using minimum 10 mil vinyl tape. The tracer wire shall be tested for continuity after backfill and compaction, but before paving. Any detected damages to the wire shall be repaired before paving will be allowed.

6. BACKFILL OF WATER MAIN TRENCHES

Backfill of any excavation shall conform to the requirements of any of the governmental agencies having jurisdiction over the location. If no governmental agency having such jurisdiction specifies backfill or compaction requirements, and no special requirements are shown on the Construction Drawings, the procedure set forth in this section will apply for water line trenches.

The bedding material above the pipe and backfill material shall be compacted to a minimum of 70% compaction within a utility easement and 80% compaction within a right-of-way as determined by AASHTO T-99 method A and T-191. If water settling is used for compaction, it is the responsibility of the Contractor to prevent the pipe from floating.

The bedding material shall be either native material, 100% of which will pass through a one and one-half inch (1½") screen and at least 20% of which will pass through a number-8 screen, or imported material which conforms to M.A.G. specifications for A.B.C. or type-B

select materials. Bedding material shall be used below and around the pipe and a minimum of twelve inches (12") above the pipe. Shade and bedding material to be mechanically compacted prior to remainder of trench back-fill.

The remainder of the trench shall be backfilled with native or imported material which shall be of sound earthen material free from broken concrete, wood, broken pavement, or other unsuitable substances. Except as otherwise specified, backfill may be material containing no pieces larger than six inches (6") in greatest dimension.

Where settlement occurs, additional backfill material shall be placed and compacted and the trench shall be brought to final grade.

7. HYDROSTATIC TESTING OF COMPLETED PIPELINES

Hydrostatic testing of water pipelines will be completed before the new system is connected into the existing water system so that all testing can be done against all new materials.

The completed section of water pipeline to be tested shall be slowly filled with water with care being taken to expel all air from the pipe. If necessary, the pipe will be tapped at high points to vent air.

The Contractor shall provide all equipment and labor necessary to accomplish this testing and the price shall be included in the unit prices. The Contractor shall notify the Company in advance of the testing so that the Company can schedule a duly authorized representative to be at the site during testing. The Contractor, at its own expense, shall make any necessary repairs to the system being tested in order to cause the section being tested to meet the test limits set below. The Contractor may request authorization of the Company to connect the new pipelines to the existing system prior to completion of pressure testing when, in the Company's sole opinion and judgment, conditi ons warrant such connection.

The Contractor shall assume all responsibility to complete pressure testing to Company's specifications after such connection, including, but not limited to, isolation of the new pipelines from the existing system, if necessary.

Connections prior to completion of pressure testing shall not be made unless prior Company authorization has been obtained, and any extra expenses resulting from such connections shall be the sole responsibi lity of the Contractor.

Leakage tests will be for a period of two hours at 200± 5 psi at the point of lowest elevation; leakage may not exceed 0.1 gallons per hour per one thousand feet (1,000') of pipe per inch of diameter. If dry utilities are not installed, a second pressure test is required.

8. STERILIZATION AND FLUSHING OF COMPLETED WATER PIPELINES

Sterilization and flushing will conform to recommendations of Arizona State Department of Health Services Engineering Bulletin Number 8, latest edition, or any future Arizona Department of Environmental Quality bulletins. Contractor to follow all conditions of any discharge permit.

9. NO OTHER UTILITIES ALLOWED IN OR NEAR WATER PIPELINE TRENCHES

No other utility installations will be permitted in the water pipeline trench or within five feet (5') of the Company's water pipeline when running parallel to the water pipelines.

10. PROTECTION OF WATER MAINS NEAR SEWERS

In order to protect water mains from contamination by sewers, the installation of the water mains must conform to the following requirements:

a. Horizontal - When water lines and sewers are laid parallel with each other, the horizontal distance between them shall not be less than six feet (6'). Each line shall be laid on undisturbed or bedded material in a separate trench. Where conditions prevent the minimum horizontal separation set forth above, extra protection will be required. Extra protection shall consist of constructing the sewer main with mechanical joint ductile iron pipe or with slip-joint ductile iron pipe if joint restraint is provided, or encasing both the water main and sewer main in concrete. See Detail E-9-30-1 and E-9-30-2

The Construction Drawings shall indicate the installation requirements. The drawings showing these exceptions shall have been approved by the appropriate state and/or county health department. Refer to the diagram below for clarification.

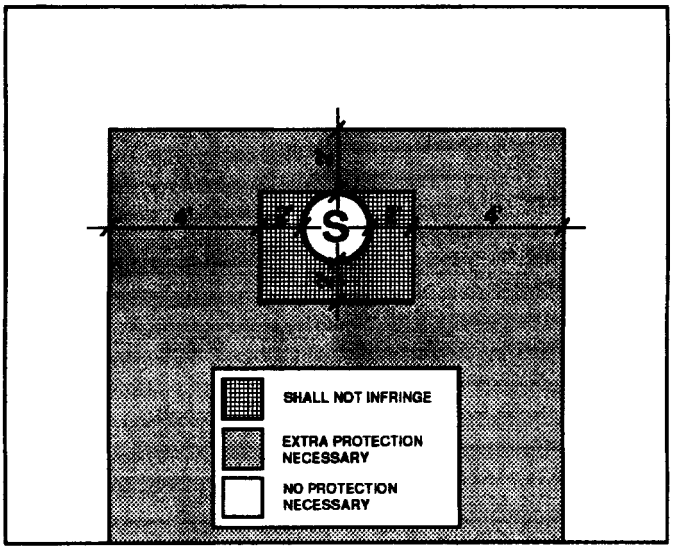

Under no circumstances will the horizontal separation between sewer mains and water mains be less than two feet (2'). All distances are to be measured from the outside of the sewer main to the outside of the water main.

b. Vertical - When a water main is parallel with or crosses a sewer main within two feet (2') above the sewer or greater than two feet (2') below the sewer, extra protection will be required. Extra protection shall consist of constructing the sewer main with mechanical joint ductile iron pipe or with slip-joint ductile iron pipe if joint restraint is provided, or encasing both the water main and sewer main in concrete. See Detail E-9-30-1 and E-9-30-2.

The Construction Drawings shall indicate the installation requirements. The drawings showing these exceptions shall have been approved by the appropriate state and/or county health department.

Under no circumstances will the vertical separation of a sewer main installed above a water main be less than two feet (2'). All distances are to be measured from the outside of the sewer main to the outside of the water main. Refer to the diagram above for clarification.

c. When unusual conditions such as, but not limited to, highway or bridge crossings prevent the water and sewer main separations required from being met, the appropriate state and/or county health department will review and may approve requests for authorization to use alternate construction techniques, materials and joints on a case-by-case basis.

d. No water pipe shall pass through or come into contact with any part of a sewer manhole. The minimum horizontal separation between water mains and manholes shall be six feet (6'), measured from the center of the manhole.

e. The minimum separation between force mains or pressure sewers and water mains shall be two feet (2') vertically and six feet (6') horizontally under all conditions. Where a sewer force main crosses above, or less than six feet (6') below, a water line, the sewer main shall be encased in at least six inches (6") of concrete for ten feet (10') on either side of the water main. Refer to the diagram below for clarification.

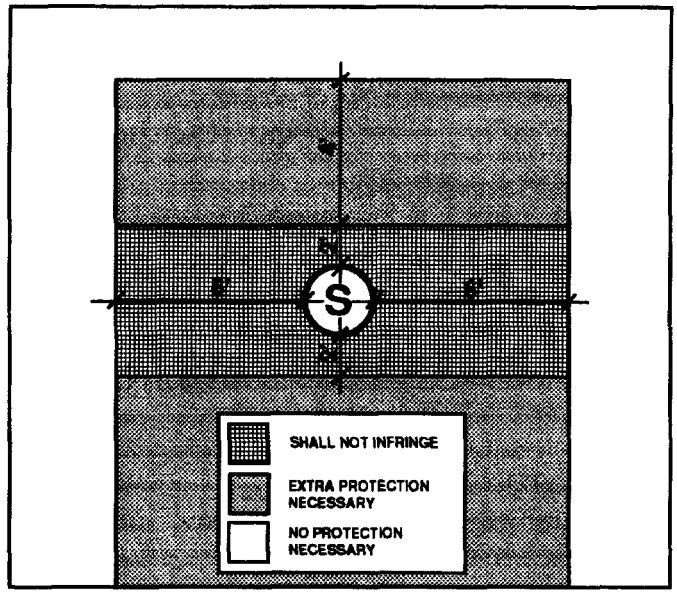

f. Sewer mains (gravity, pressure, force) shall be kept a minimum of fifty feet (50') from drinking water wells, unless the following conditions are met:

1. Water main pipe, pressure tested in place to 50 psi without excessive leakage, may be used for gravity sewers at distances greater than twenty feet (20') from drinking water wells.

2. Water main pipe, pressure tested in place to 150 psi without excessive leakage, may be used for pressure sewers and force mains at distances greater than twenty feet (20') from drinking water wells.

g. No septic tank/disposal field system shall be constructed within one hundred feet (100') of a drinking water well.

h. All distances are measured perpendicularly from the outside of the sewer main to the outside of the water main. These separation requirements do not apply to building, plumbing or individual house service connections.

i. Use Mechanical Joint ductile iron pipe with Megalug thrust restraints a minimum of ten (10') feet on each side of a sewer or storm drain crossing.

11. COMPACTION

When crossing existing water mains a minimum of 95% compaction is required to the bottom of existing mains.

Arizona Water Company requires that no slurry be permitted to contact existing cement/asbestos or ductile iron pipes, unless authorized by the company. Slurry may be poured in the bottom of the sewer trench stopping three inches (3") below the existing water main. The backfill used around the main should be AB in sufficient depth to prevent slurry from contacting existing main.

12. WATER MAIN MATERIAL SPECIFICATIONS

Ductile iron pipe (Push-on type) minimum class 350, cement lined and conform to AWWA C151.

All main line valves shall conform to AWWA C500 with a minimum working pressure of 200 psi.

All cast iron fittings to be cement lined in accordance with AWWA C104 and shall conform to AWWA C110 with a minimum working pressure of 250 psi. Except for the Coolidge System – See Note 4L.

Maximum joint deflection for 6" mechanical joint ductile iron pipe is seven degrees, seven minutes (7°, 7') or twenty-seven inches (27") per eighteen-foot (18') length pipe, for a maximum curve of one hundred forty-five feet (145').
Maximum joint deflection for 8" and 12" mechanical joint ductile iron pipe is five degrees, twenty-one minutes (5° 21') or twenty inches (20") per eighteen-foot (18') length pipe, for a maximum curve of one hundred ninety-five feet (195').

Maximum joint deflection for 6", 8" and 12" push-on joint ductile iron pipe is five degrees (5°) or nineteen inches (19") per eighteen-foot (18') length pipe for a maximum curve of two hundred five feet (205').

ARIZONA WATER COMPANY

3805 N. BLACK CANYON HIGHWAY, PHOENIX, ARIZONA 85015-5351 • P.O. BOX 29006, PHOENIX, ARIZONA 85038-9006
PHONE: (602) 240-6860 • FAX: (602) 240-6878 • WWW.AZWATER.COM

November 24, 2010

Mr. Tony Geiger
US Pipe – Waterworks Marketing Consultants
34522 N. Scottsdale Road
Scottsdale, Arizona 85226

Re: US Pipe Sentinel Fire Hydrants and Resilient Wedge Gate Valves

Dear Mr. Geiger:

Thank you for your interest in working with Arizona Water Company (the "Company") to add US Pipe Sentinel Fire Hydrants and Resilient Wedge Gate Valves to the Company's material and equipment specifications. Based on the US Pipe product information you provided and your field presentations to our operations and engineering staff, the Company is pleased to inform you that the following items are approved for use in the Company's water systems in Arizona.

Sentinel Fire Hydrant:

- Model Sentinel 250
  - 5¼" MVO
  - 4½" pumper
  - 2½" hose
  - Meets AWWA C-502 standard and approval by ULFM

Resilient Wedge Gate Valves:

- Model US Pipe A-USP0
  - Meets AWWA C-509 Full Body Cast Iron includes 304 SS Nuts, Bolts & Low Zinc Bronze Stem
  - Size range 2" thru 12"
- Model US Pipe A-USP1
  - Meets AWWA C-515 Reduced Wall Ductile Iron includes 304 SS Nuts, Bolts & Low Zinc Bronze Stem
  - Size range 14" thru 48"

We look forward to developing a long-term relationship with you and the US Pipe products. If I can be of any assistance, please call me.

Very truly yours,

Fredrick K. Schneider
Vice President – Engineering

afh

VIA EMAIL: TGEIGER4@COX.NET

ARIZONA WATER COMPANY

3805 N. BLACK CANYON HIGHWAY, PHOENIX, ARIZONA 85015-5351 • P.O. BOX 29006, PHOENIX, ARIZONA 85038-9006
PHONE: (602) 240-6860 • FAX: (602) 240-6878 • WWW.AZWATER.COM

October 19, 2010

Mr. Jim Ryan
Clow Valve Company
8121 N. 10th Avenue
Phoenix, Arizona 85021

Re: Clow Medallion Fire Hydrants and Resilient Wedge Gate Valves

Dear Mr. Ryan:

Thank you for your interest in working with Arizona Water Company (the "Company") to add Clow Medallion Fire Hydrants and Resilient Wedge Gate Valves to the Company's material and equipment specifications. Based on the Clow product information you provided and your field presentations to our operations and engineering staff, the Company is pleased to inform you that the following items are approved for use in the Company's water systems in Arizona.

Medallion Fire Hydrant:

- Model F-2545
  - 5¼" MVO
  - 4½" pumper
  - 2½" hose
  - Meets AWWA C-502 standard and approval by ULFM

Resilient Wedge Gate Valves:

- Model 2639 & 2640
  - Meets AWWA C-509 Full Body Cast Iron includes 304 SS Nuts, Bolts & Low Zinc Bronze Stem
  - Size range 2½" thru 12"
- Model 2638
  - Meets AWWA C-515 Reduced Wall Ductile Iron includes 304 SS Nuts, Bolts & Low Zinc Bronze Stem
  - Size range 14" thru 48"

We look forward to developing a long-term relationship with you and the Clow products. If I can be of any assistance, please call me.

Very truly yours,

Fredrick K. Schneider
Vice President – Engineering

lar

VIA EMAIL: JIM.RYAN@CLOWVALVE.COM

February 21, 2012

Contractor

Re: Fitting Specifications

Dear Contractor:

Effective March 1, 2012, Arizona Water Company (the "Company") has changed its fitting specifications for Ductile Iron Fittings and Ductile Iron Flanged Fittings ("Fittings"). All Fittings purchased by the Company, on the Company's behalf or installed with the intent of being conveyed to the Company, must comply with the requirements noted below.

Previous Fitting Specifications:

Fittings

Manufactured by Tyler or Union, Crosses, Elbows, Tees, Cap Reducer, Adapter, Plug, Blind Flange and Tapped Flange: Ductile Iron, Class 350, SSB, and Cast Iron Cement Lined.

New Fitting Specification:

Ductile Iron Fittings (Push-On and Mechanical Joint)

Ductile Iron Push-On and Mechanical Joint ("MJ") fittings for water lines shall be made of ductile iron per ASTM A536 and be cast in the United States of America. Fittings shall have USA cast on the fitting to designate they are made in the United States. All fittings will be manufactured and tested in accordance with ANSI/AWWA C153/A21.53 for compact design and ANSI/AWWA C110/A21.10 for full body design. In accordance with ANSI/AWWA C104/A21.4 fittings 2" – 3" will be single thickness cement mortar lined and 4" – 64" will be cement mortar lined. Fittings will be Asphaltic seal coated on the exterior in accordance with ANSI/AWWA C104/A21.4. MJ fittings with flanged end(s) will match ANSI/AWWA C115/A21.15 and ANSI B16.1 class 125 flanges. All fittings shall be NSF-61 listed for use with potable water.

Ductile Iron Flanged Fittings

Ductile Iron flanged fittings for water lines shall be made of ductile iron per ASTM A536 and be cast in the United States of America. Fittings shall have USA cast on the fitting to designate they are made in the United States. All fittings will be manufactured and tested in accordance with ANSI/AWWA C110/A21.10 design. Flange ends will match ANSI/AWWA C115/A21.15 and ANSI B16.1 class 125 flanges. In accordance with ANSI/AWWA C104/A21.4 fittings 2" – 3" will be single thickness lined and 4" – 64" will be cement mortar lined. Fittings will be Asphaltic seal coated on the exterior in accordance with ANSI/AWWA C104/A21.4. All fittings shall be NSF-61 listed for use with potable water.

If you have any questions or require further information, please contact me at 602-240-6860.

Very truly yours,

Fredrick K. Schneider, PE
Vice President - Engineering
engineering@azwater.com

afh
Enclosure

ARIZONA WATER COMPANY

STANDARD SPECIFICATION DRAWINGS: E-9-1

ERRATA 2010

ARIZONA WATER COMPANY

STANDARD SPECIFICATION DRAWINGS - DUCTILE IRON

INDEX (E-9)

E-9-1	TYPICAL GATE VALVE LOCATIONS
E-9-2	INSTALLATION OF TYPICAL VERTICAL AND HORIZONTAL GATE VALVES
E-9-3	INSTALLATION OF TYPICAL TAPPING SLEEVE AND VALVE
E-9-4	INSTALLATION OF TYPICAL VALVE SUBJECT TO NON-VEHICULAR AND VEHICULAR TRAFFIC
E-9-5	INSTALLATION OF TYPICAL THRUST BLOCKING SCHEDULE THRUST BLOCK FOR VERTICAL BENDS, AND MEGALUG THRUST RESTRAINTS
E-9-6	INSTALLATION OF TYPICAL PERPENDICULAR FIRE HYDRANT
E-9-7	INSTALLATION OF TYPICAL PARALLEL FIRE HYDRANT
E-9-8	INSTALLATION OF TYPICAL 2" BLOWOFF DEVICE, AND AIR RELEASE VALVE
E-9-9	INSTALLATION OF TYPICAL SINGLE SERVICE CONNECTION FOR A $^{3}/_{4}$" OR 1" METER
E-9-10	INSTALLATION OF TYPICAL DOUBLE SERVICE CONNECTION FOR A $^{3}/_{4}$" AND 1" METER
E-9-11	INSTALLATION OF TYPICAL 2" SERVICE CONNECTION
E-9-12	INSTALLATION OF 3" COMPOUND METER, 4" COMPOUND METER, 6" COMPOUND METER, 6" COMPOUND SERVICE, CONCRETE VAULT, AND NON-POTABLE PROPELLER METER
E-9-13	INSTALLATION OF TYPICAL 4" THRU 8" DETECTOR CHECK VALVES AND 3" THRU 10" REDUCED PRESSURE PRINCIPLE DETECTOR WITH BYPASS METER ASSEMBLY (RPDA) FOR FIRE LINE SERVICES
E-9-14	INSTALLATION OF TYPICAL PRESSURE RELIEF VALVE ASSEMBLY
E-9-15	INSTALLATION OF TYPICAL PRESSURE REDUCING STATION
E-9-16	PAINT COLOR SELECTION
E-9-17	STEEL WATER STORAGE TANK
E-9-18	HYDROPNEUMATIC TANK
E-9-19	INSTALLATION OF WELL SHELTER

E-9-20	INSTALLATION OF TYPICAL WELL WITH LINE SHAFT TURBINE PUMP
E-9-21	INSTALLATION OF TYPICAL WELL WITH SUBMERSIBLE TURBINE PUMP
E-9-22	INSTALLATION OF COLUMN PIPE, OIL TUBE AND LINE SHAFT
E-9-23	HOT TAP AND JUMPER METER CONNECTION
E-9-24	INSTALLATION OF TYPICAL WATER LINE ENCASEMENT
E-9-25	INSTALLATION OF CALCIUM HYPOCHLORITE TABLET CHLORINATOR
E-9-26	INSTALLATION OF CHAIN LINK FENCE
E-9-27	INSTALLATION OF SIDE HUNG WATER LINE SUSPENSION
E-9-28	PIPE WARNING TAPE, LOCATOR WIRE, AND LOCATOR WIRE TERMINATION
E-9-29	INSTALLATION OF A TYPICAL SAMPLING STATION
E-9-30-1	WATER AND SANITARY SEWER SEPARATION/PROTECTION PERPENDICULAR
E-9-30-2	WATER AND SANITARY SEWER SEPARATION/PROTECTION – PARALLEL

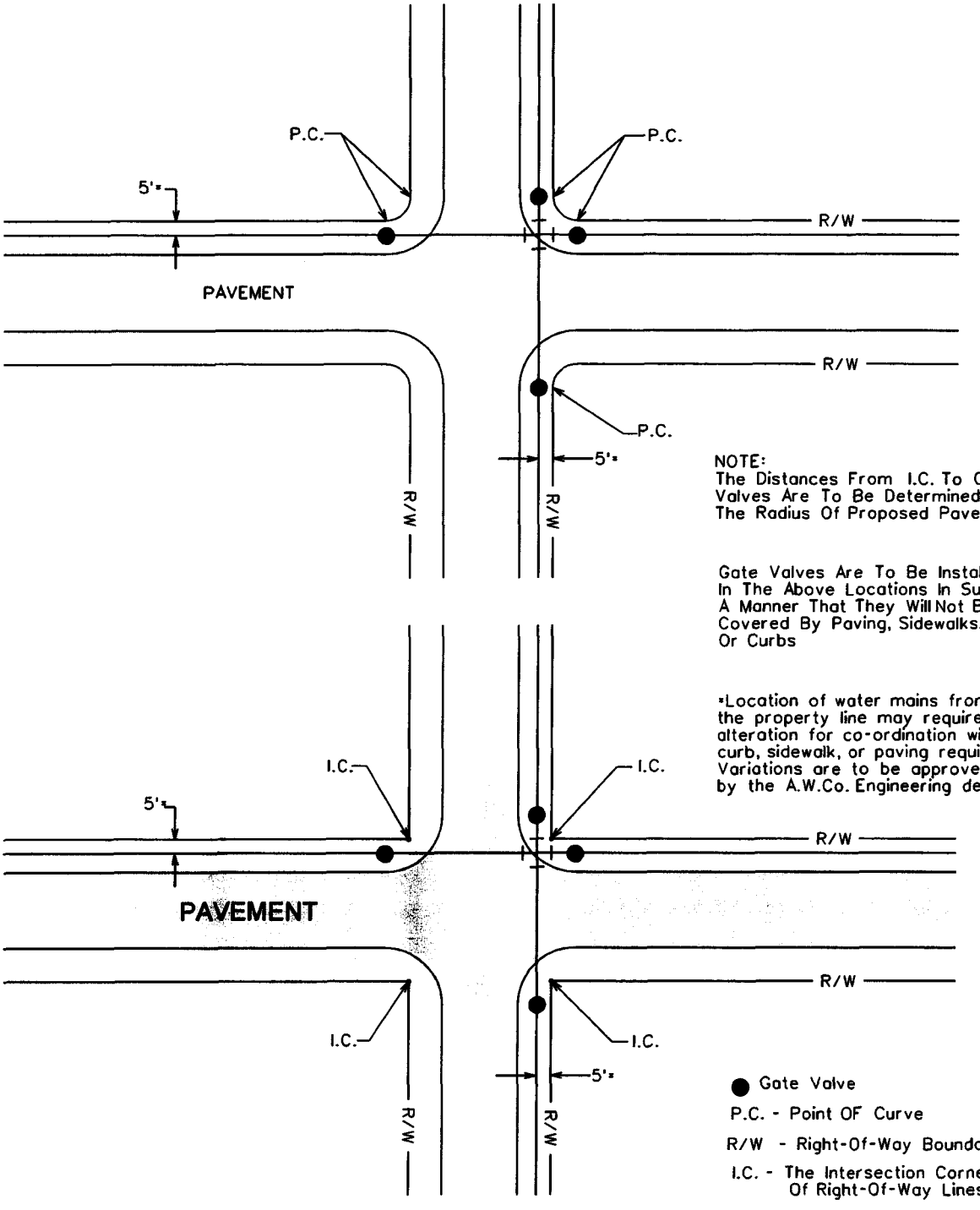

NOTE:
The Distances From I.C. To Gate Valves Are To Be Determined By The Radius Of Proposed Pavement.

Gate Valves Are To Be Installed In The Above Locations In Such A Manner That They Will Not Be Covered By Paving, Sidewalks, Or Curbs

*Location of water mains from the property line may require alteration for co-ordination with curb, sidewalk, or paving requirements. Variations are to be approved by the A.W.Co. Engineering dept.

● Gate Valve

P.C. - Point OF Curve

R/W - Right-Of-Way Boundary

I.C. - The Intersection Corner Of Right-Of-Way Lines

ARIZONA WATER COMPANY

STANDARD SPECIFICATION

FOR THE INSTALLATION OF

TYPICAL GATE VALVE LOCATIONS

DRAWN BY:	APPROVED BY:	DATE:	△ 1/31/2001	E-9-1-1
CCO	M.W.	3/20/86		

FOR 6" THROUGH 12" GATE VALVES

Mueller Resiliant Wedge Gate Valves
Catalog Number A-2360-__
ANSI/AWWA C509 Compliant

FOR 14" THROUGH 16" GATE VALVES

Mueller Resiliant Wedge Gate Valves
Catalog Number A-2361-__
ANSI/AWWA C509 Compliant

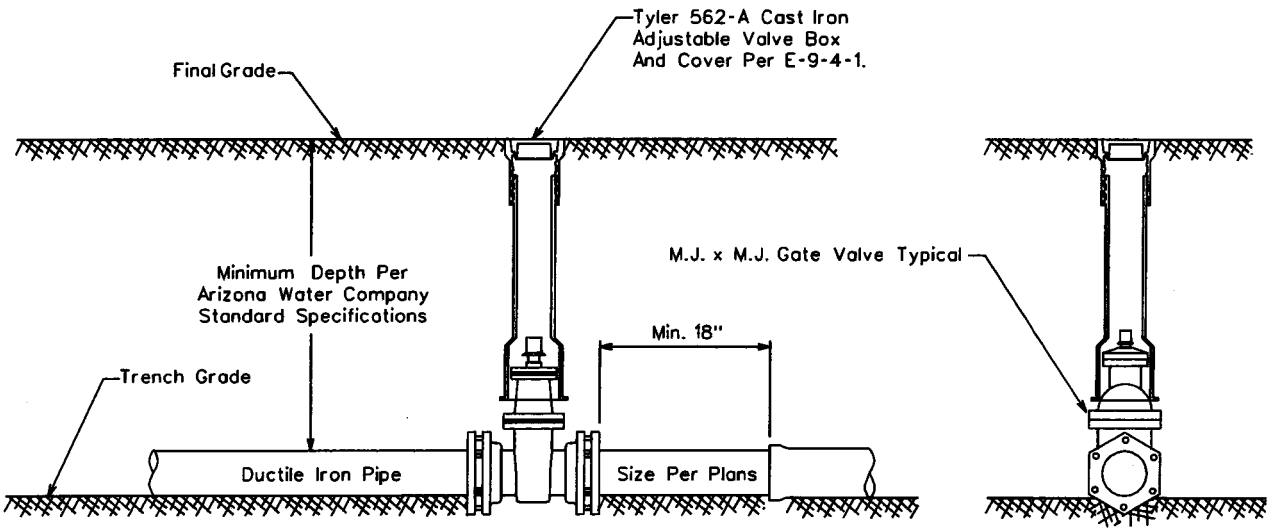

All Valves Installed On Pipe Five Feet (5') Deep And Greater Are To Be Installed With A Valve Operator Extension, Mueller Catalog No. A-26441.

ARIZONA WATER COMPANY

STANDARD SPECIFICATION
FOR THE INSTALLATION OF

TYPICAL VERTICAL GATE VALVES

DRAWN BY:	APPROVED BY:	DATE:	△ 08.23.2006	E-9-2-1
CB	MW	03.20.1986		

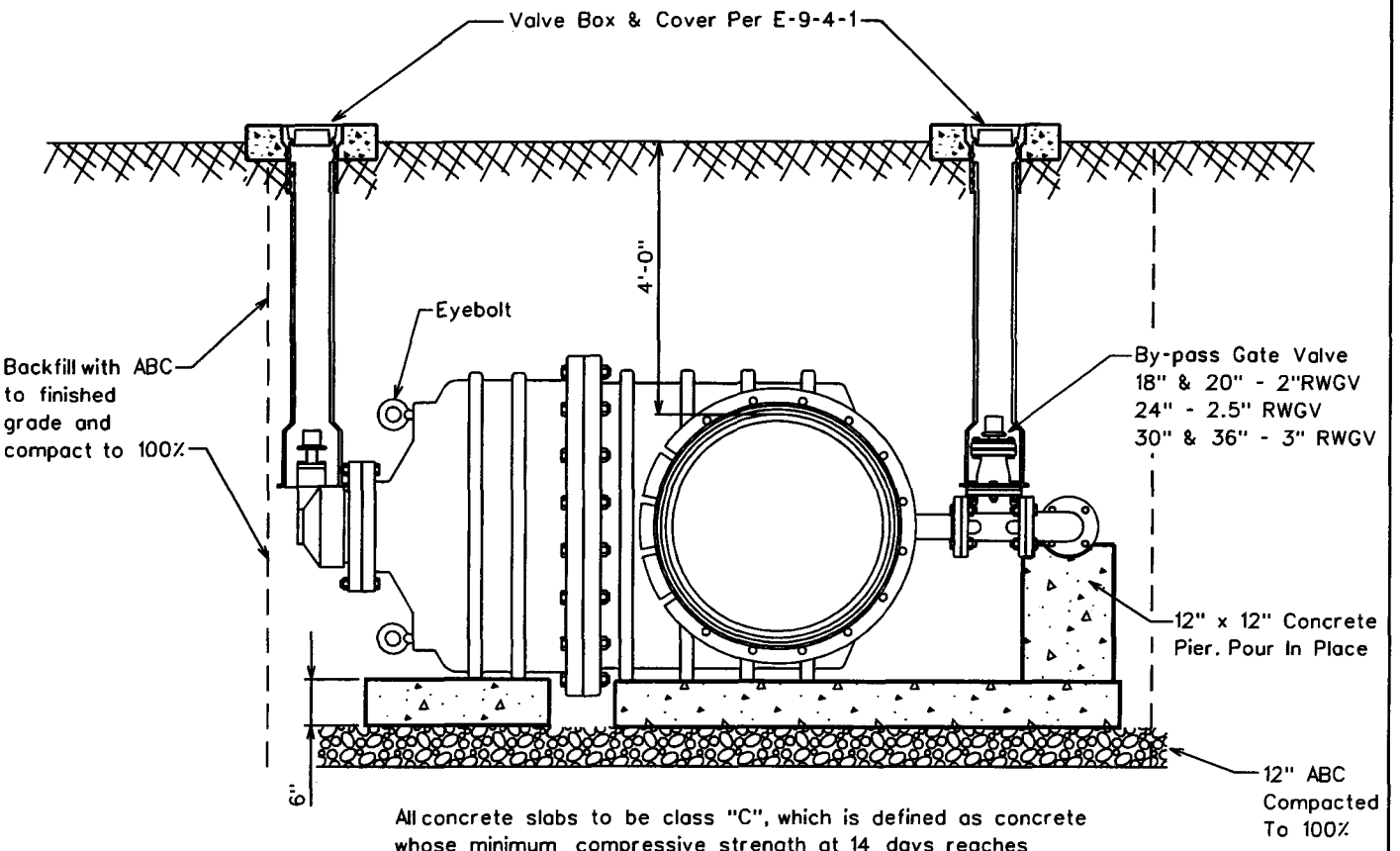

All concrete slabs to be class "C", which is defined as concrete whose minimum compressive strength at 14 days reaches 1600psi and at 28 days reaches 2000psi. per MAG Section 725, Table 725-1. Slabs to be formed and poured prior to valve installation.

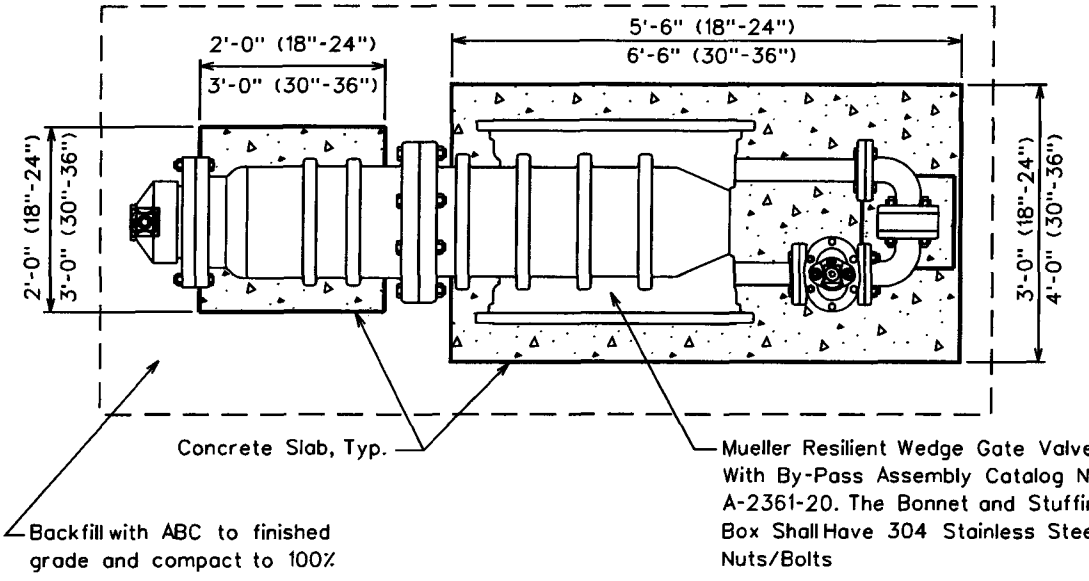

All valves installed on pipe five feet and greater are to be installed with a valve operator extension Mueller catalog No.A-26441 The distance is measured from the top of the operating nut to final grade.

ARIZONA WATER COMPANY

STANDARD SPECIFICATION

FOR THE INSTALLATION OF

INSTALLATION OF BEVEL GEARED HORIZONTAL GATE VALVES WITH BY-PASS FOR 18" AND LARGER VALVES

DRAWN BY:	APPROVED BY:	DATE:	△	
CB		12.07.2004		E-9-2-2

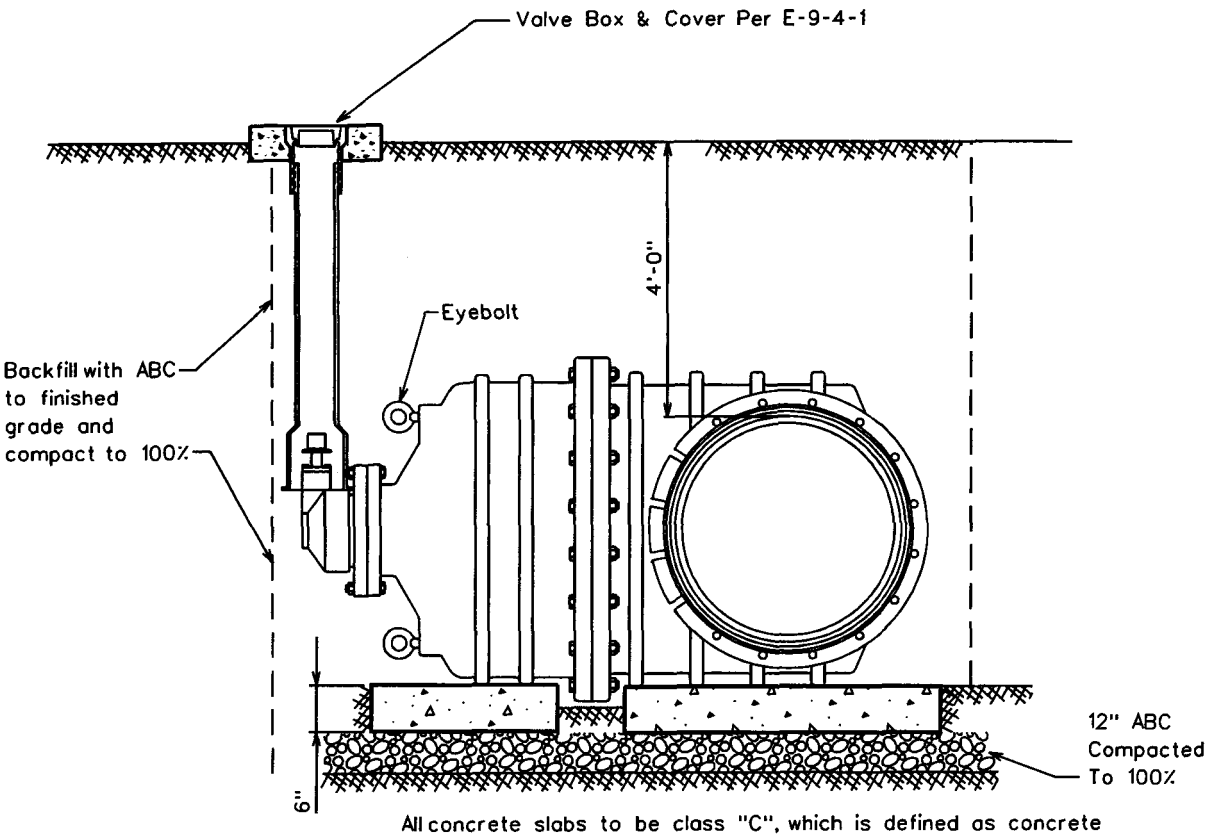

All concrete slabs to be class "C", which is defined as concrete whose minimum compressive strength at 14 days reaches 1600psi and at 28 days reaches 2000psi. per MAG Section 725, Table 725-1. Slabs to be formed and poured prior to valve installation.

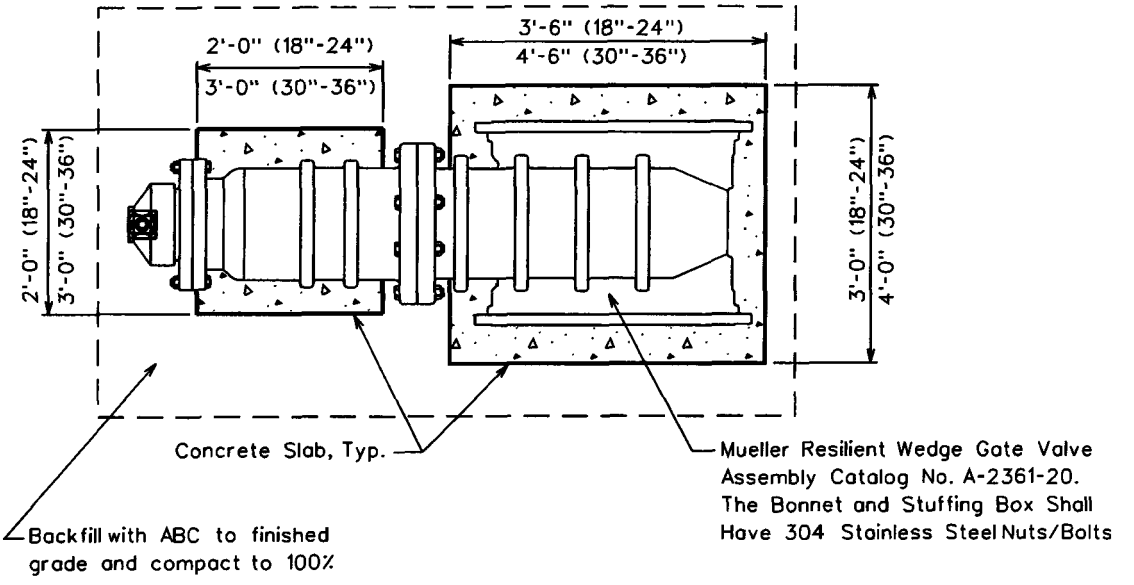

All valves installed on pipe five feet and greater are to be installed with a valve operator extension Mueller catalog No.A-26441 The distance is measured from the top of the operating nut to final grade.

ARIZONA WATER COMPANY

STANDARD SPECIFICATION

FOR THE INSTALLATION OF

INSTALLATION OF BEVEL GEARED HORIZONTAL GATE VALVES WITHOUT A BY-PASS FOR 18" AND LARGER VALVES

DRAWN BY:	APPROVED BY:	DATE:	△ 5.13.2005	E-9-2-3
CB		12.07.2004		

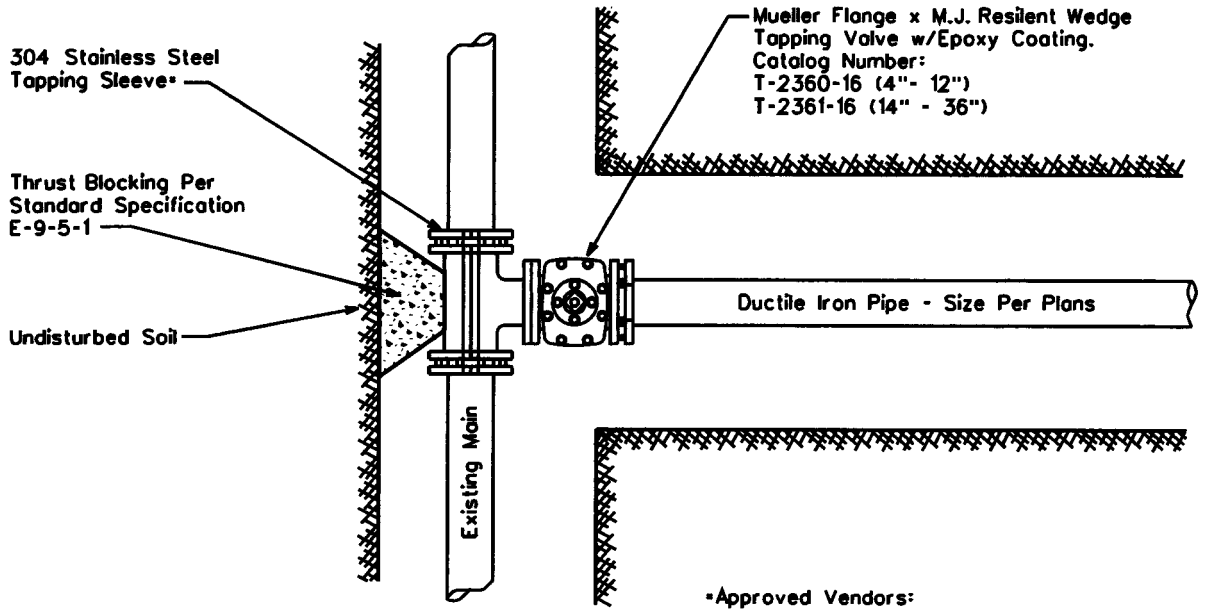

NOTE:

1. All flanges, bolts, and nuts shall be kept free of concrete.
2. Air pressure test the tapping sleeve before the live tap is made.
3. Polywrap all new fittings

*Approved Vendors:

Mueller, Catalog No. H304, 304 Stainless Steel

JCM, Model 432, 304 Stainless Steel

Romac, 'SST', 304 Stainless Steel

Cascade, 'CST-EX', 304 Stainless Steel

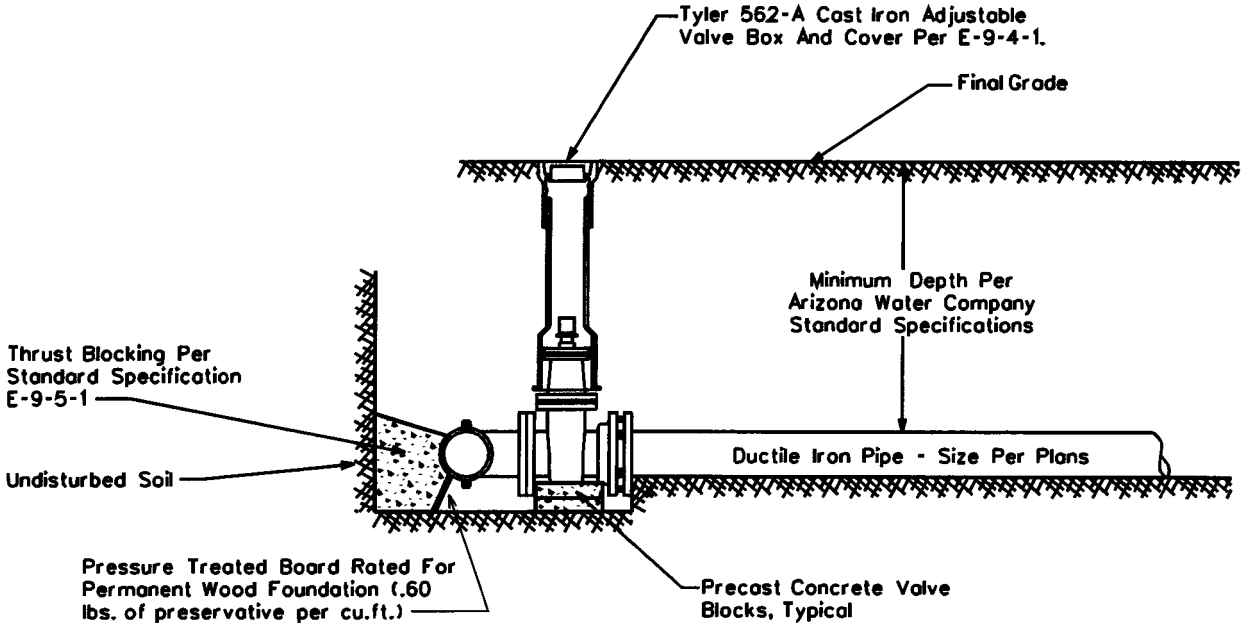

ARIZONA WATER COMPANY

STANDARD SPECIFICATION

FOR THE INSTALLATION OF

TYPICAL TAPPING SLEEVE AND VALVE

DRAWN BY:	APPROVED BY:	DATE:	△ 08.23.2006	E-9-3-1
CB	MW	03.20.1986		

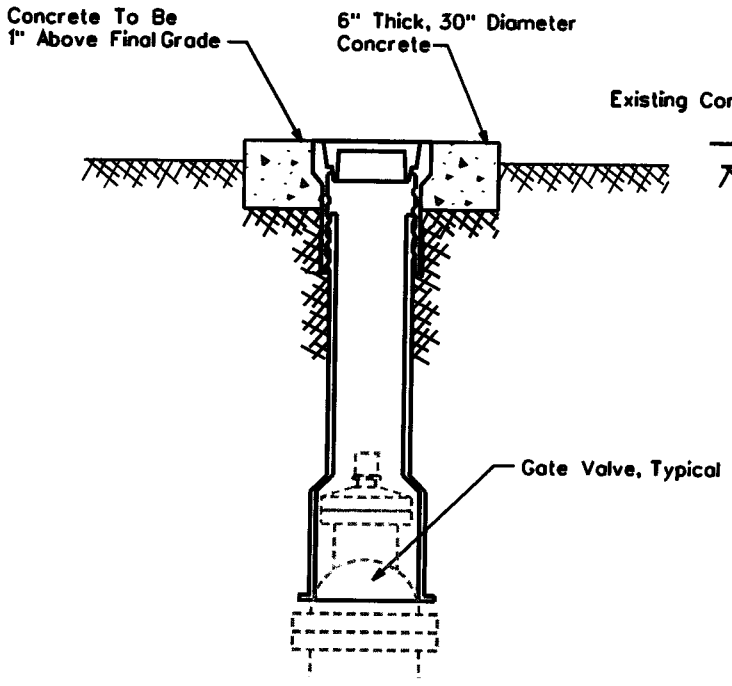

NON-VEHICULAR VALVE BOX

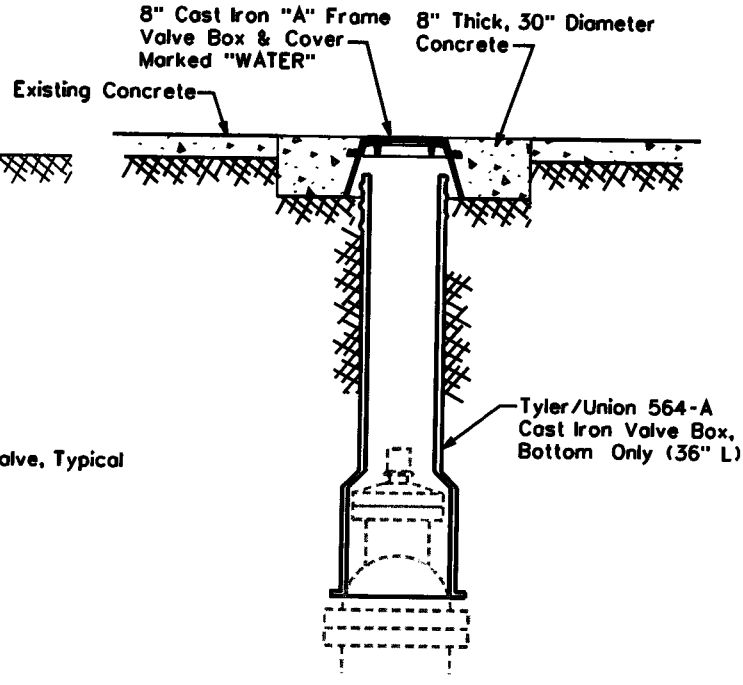

CONCRETE VALVE BOX

For Areas Subject To Vehicular Traffic

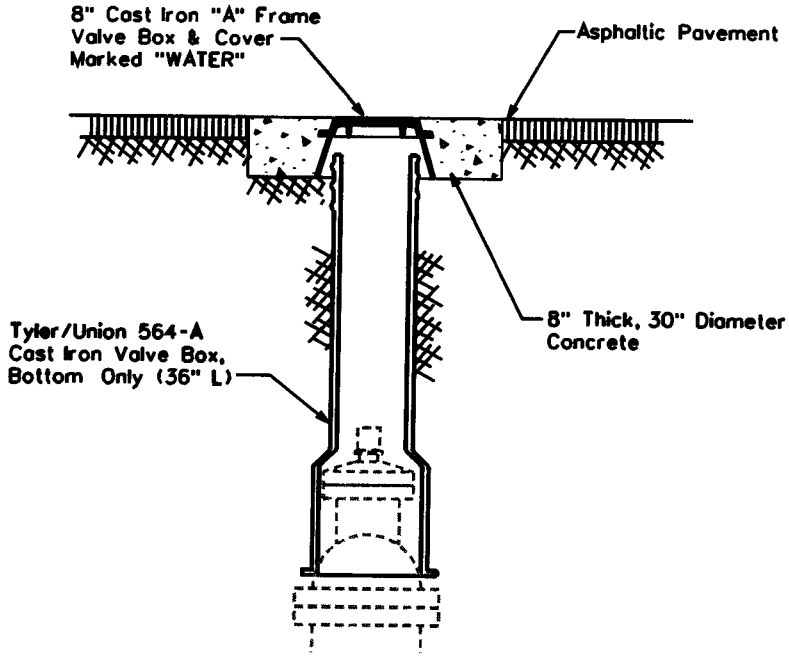

ASPHALT VALVE BOX

For Areas Subject To Vehicular Traffic

NOTE:

1. The Valve Box Shall Be Adjusted To Finished Grade Prior To Placing Of Asphalt And/Or Concrete.
2. For Non-Traffic Areas Use Tyler/Union 562-A, Two-Piece, 6855 Series Or Equivalent Adjustable Cast Iron Valve Box And Cover. Valves 4" To 12"

   For Traffic Areas, Use Tyler/Union 564-A Bottom Section Only With An 8" Cast Iron "A" Frame With Cover. Valves 4" To 12"
3. All Valves Installed Five Feet (5') Deep And Greater Are To Be Installed With A Valve Operator Extension, Mueller Catalog No. A-26441 And Shall Have A Debris Cap
4. Use Minimum Class 'C' Concrete which is defined as concrete whose minimum compressive strength at 14 days reaches 1600psi and at 28 days reaches 2000psi. per MAG Section 725, Table 725-1.

ARIZONA WATER COMPANY

STANDARD SPECIFICATION

FOR THE INSTALLATION OF

TYPICAL VALVE SUBJECT TO NON-VEHICULAR AND VEHICULAR TRAFFIC

DRAWN BY:	APPROVED BY:	DATE:	△ 8.24.2006	E-9-4-1
CB	MW	03.20.1986		

CROSSES

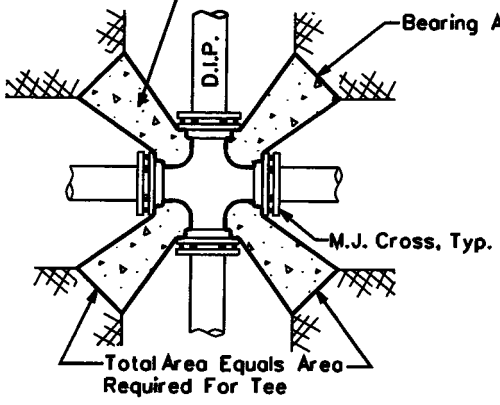

TEES

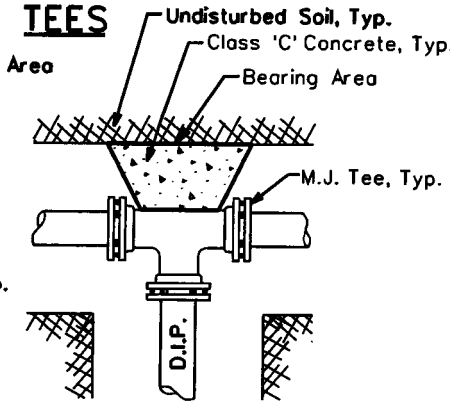

ELLS

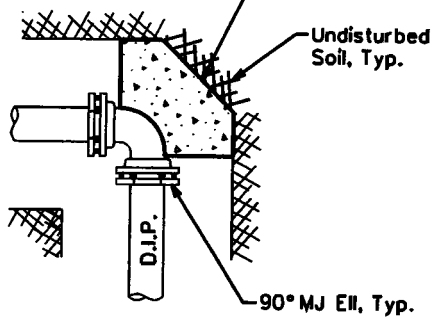

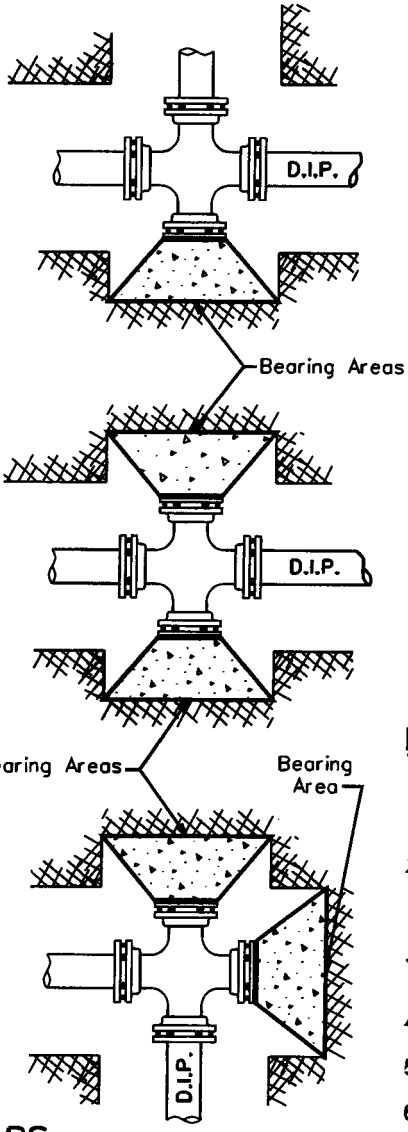

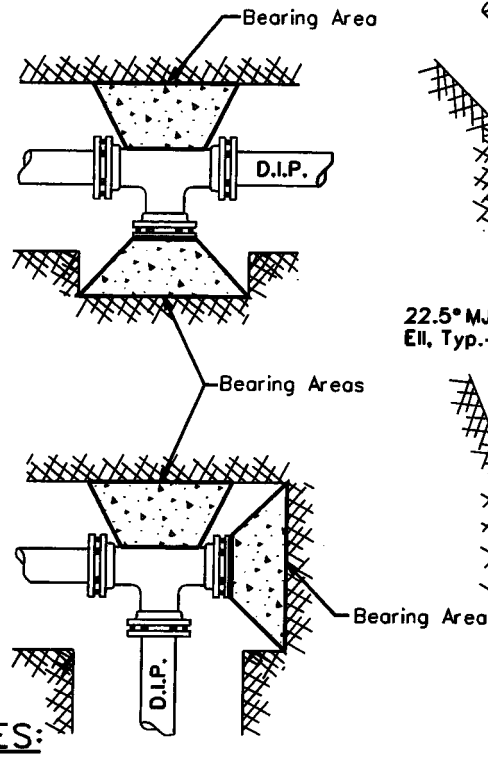

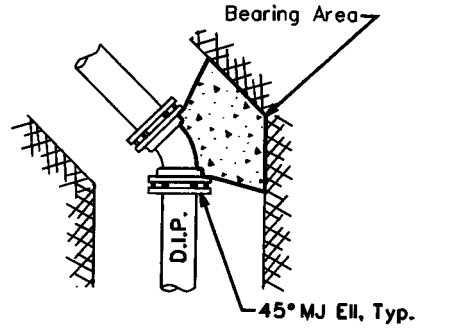

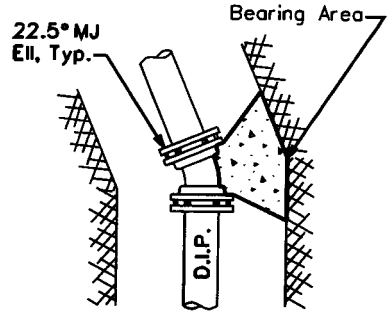

CROSS SECTION

TYPICAL

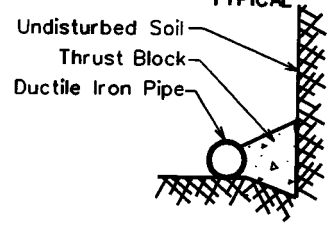

NOTES:

1. Use minimum Class 'C' concrete, which is defined as concrete whose minimum compressive strength at 14 days reaches 1600psi and at 28 days reaches 2000psi. per MAG Section 725, Table 725-1.
2. Thrust blocks are to bear on undisturbed earth with minimum bearing area as shown. If not undisturbed, areas will be increased as required.
3. Place the pressure treated form board in front of all plugs before pouring thrust blocks.
4. Form all non-bearing areas to prevent any concrete from entering any joint.
5. All flanges, bolts and nuts shall be kept free of concrete.
6. Center the bearing area on the pipe centerline and force line.
7. All pipe fittings to be wrapped with polyethylene pipe wrap prior to thrust block installation. (where applicable)

THRUST BLOCK SCHEDULE

PIPE SIZE	TEE, 45°, AND 22.5° ELLS, & PLUGS	90° ELLS
6" And Under	4 Sq.Ft.	6 Sq.Ft.
8"	6 Sq.Ft.	9 Sq.Ft.
12"	13 Sq.Ft.	20 Sq.Ft.
16"	23 Sq.Ft.	32 Sq.Ft.
18" And Larger	Calculated Per Project	

CAPS

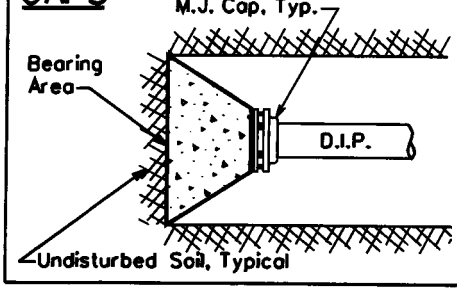

STANDARD SPECIFICATION

FOR THE INSTALLATION OF

TYPICAL THRUST BLOCKING SCHEDULE

DRAWN BY:	APPROVED BY:	DATE:	△ 05.27.2005	E-9-5-1
CB	MW	03.20.1986		

NOTES

1. Bars In Conc. Thrust Block To Be Coated w/ 2 Coats Coal Tar Epoxy or by Other Approved Method.
2. Bars To Have 90° Hook @ Their Ends, As Per Table Below.

Pipe Size	Min. Bar Size	"A" Dimension (Hook)	* Min. Block Dimension (WxHxL)
6"	#6	6"	3'x3'x3'
8"	#6	9"	4'x3'x4'
12"	#8	9"	5'x4'x5'
16"	#9	12"	7'x6'x7'

* For 125 P.S.I. Working Pressure

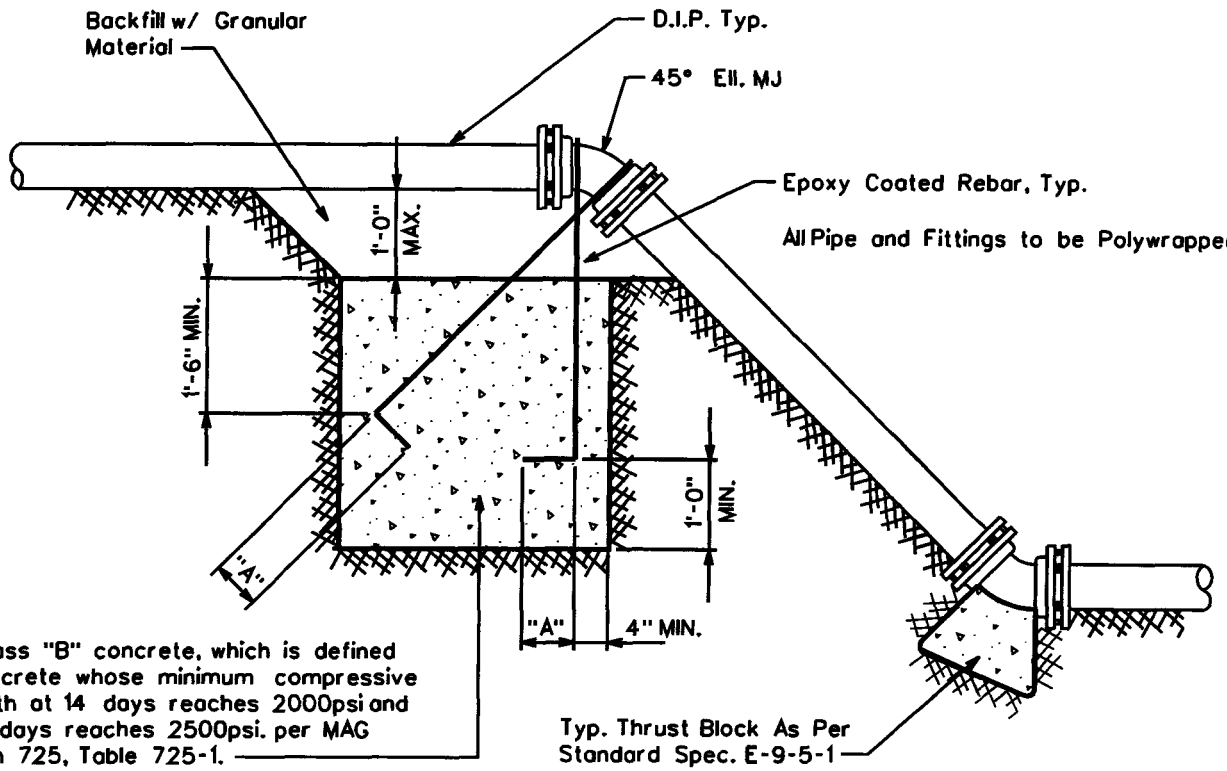

ARIZONA WATER COMPANY

STANDARD SPECIFICATION
FOR THE INSTALLATION OF

THRUST BLOCK FOR VERTICAL BENDS

DRAWN BY:	APPROVED BY:	DATE:	△ 01.16.2007	E-9-5-2
JPK	MJW	7-5-96		

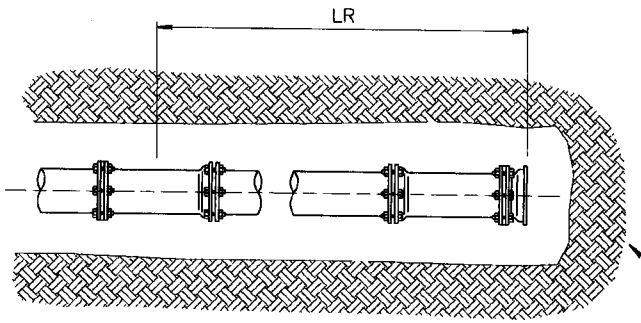

DEAD ENDS

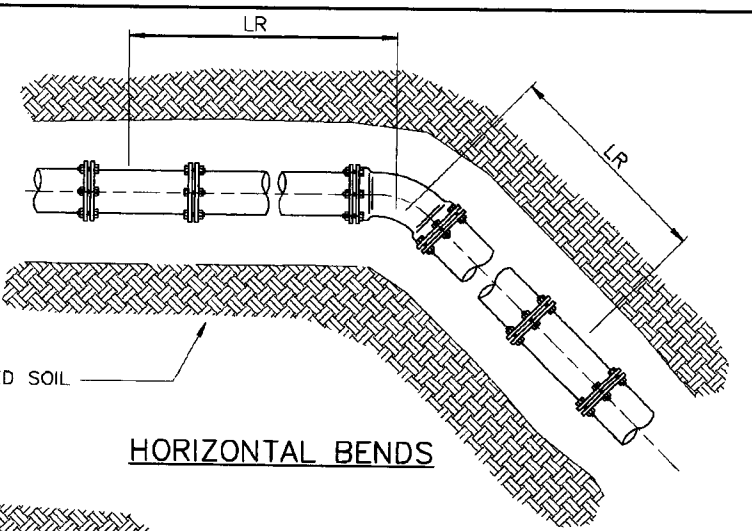

HORIZONTAL BENDS

UNDISTURBED SOIL

LRN = SHORTEST LENGTH OF PIPE RESTRAINED TO THE RUN OF THE TEE FITTING (BOTH SIDES OF TEE).

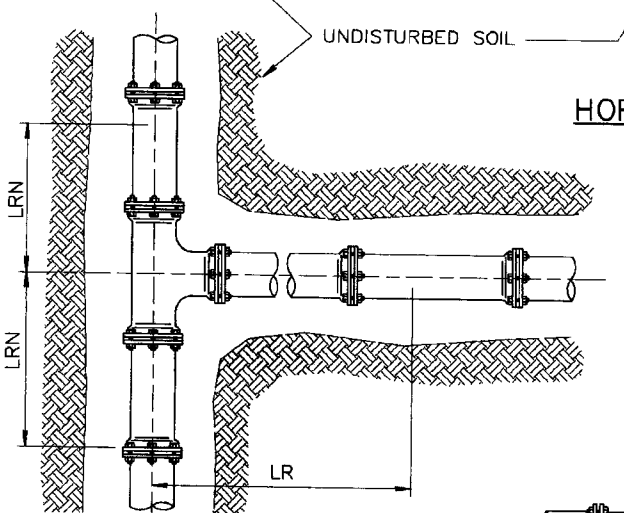

TEES

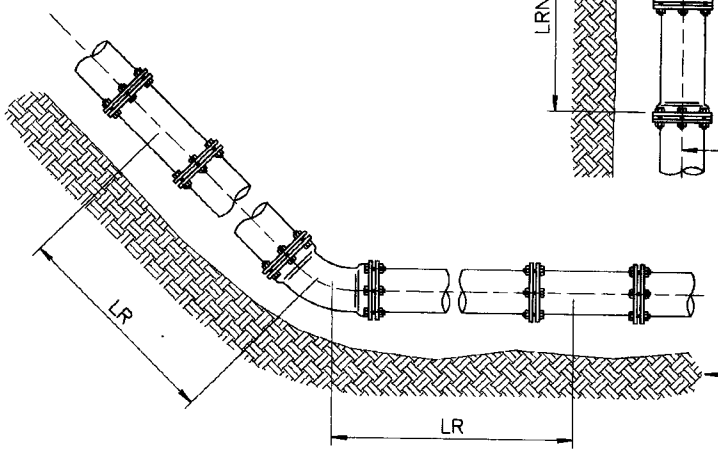

VERTICAL UP BEND

UNDISTURBED SOIL

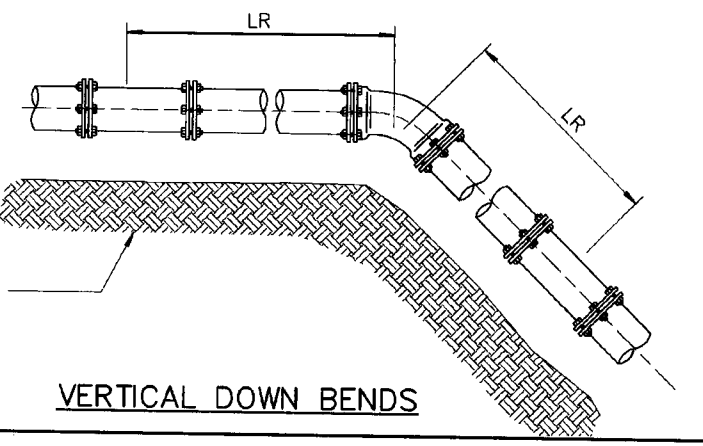

VERTICAL DOWN BENDS

ARIZONA WATER COMPANY

STANDARD SPECIFICATION
FOR THE INSTALLATION OF

JOINT RESTRAINT FOR NEW DUCTILE IRON AND C-900 PVC MAINS

DRAWN BY:	APPROVED BY:	DATE:	△	
CB	MW	01.16.2007		E-9-5-3-1

RESTRAINED LENGTHS, LR, FOR DUCTILE IRON PIPE

NOMINAL PIPE SIZE INCHES	HORIZONTAL BENDS			TEES		VERTICAL OFFSETS						DEAD ENDS
						90° BEND FITTINGS		45° BEND FITTINGS		22-1/2° BEND FITTINGS		
	90°	45°	22-1/2°	LRN=0'	LRN=10'	DOWN BEND	UP BEND	DOWN BEND	UP BEND	DOWN BEND	UP BEND	
4	18	7	4	30	8	31	18	13	7	6	3	31
6	25	10	5	43	20	44	25	18	10	9	5	44
8	32	13	6	56	34	58	32	24	13	11	6	58
10	38	16	8	68	45	69	38	29	16	14	8	69
12	45	19	9	80	57	81	45	34	19	16	9	81
14	51	21	10	91	68	92	51	38	21	18	10	92
16	57	24	11	103	79	104	57	43	24	21	11	104
18	62	26	12	113	90	115	62	48	26	23	12	115
20	68	28	14	125	100	126	68	52	28	25	14	126
24	79	33	16	145	121	147	79	61	33	29	16	147

RESTRAINED LENGTHS, LR, FOR DUCTILE IRON PIPE WITH POLYETHYLENE WRAP

NOMINAL PIPE SIZE INCHES	HORIZONTAL BENDS			TEES		VERTICAL OFFSETS						DEAD ENDS
						90° BEND FITTINGS		45° BEND FITTINGS		22-1/2° BEND FITTINGS		
	90°	45°	22-1/2°	LRN=0'	LRN=10'	DOWN BEND	UP BEND	DOWN BEND	UP BEND	DOWN BEND	UP BEND	
4	26	11	5	69	18	72	26	30	11	14	5	72
6	36	15	7	99	47	102	36	42	15	20	7	102
8	47	19	9	130	78	133	47	55	19	26	9	133
10	56	23	11	157	103	159	56	66	23	32	11	159
12	65	27	13	185	131	187	65	77	27	37	13	187
14	74	31	15	211	156	214	74	89	31	42	15	214
16	82	34	16	238	183	241	82	100	34	48	16	241
18	90	37	18	263	207	266	90	110	38	53	18	266
20	98	41	20	289	233	292	98	121	41	58	20	292
24	113	47	22	337	280	340	113	141	47	68	22	340

NOTES:

1. ALL JOINTS WITHIN THE SPECIFIED LENGTH LR MUST BE RESTRAINED. ALL LENGTHS ARE GIVEN IN FEET.
2. THE MAXIMUM TEST PRESSURE SHALL NOT EXCEED 200 PSI
3. THE MINIMUM DEPTH OF BURY SHALL BE 3' TO TOP OF PIPE.
4. RESTRAINED LENGTHS MAY BE REDUCED WHEN SUPPORTED BY ENGINEERING CALCULATIONS.

ARIZONA WATER COMPANY

STANDARD SPECIFICATION
FOR THE INSTALLATION OF

JOINT RESTRAINT FOR NEW DUCTILE IRON AND C-900 PVC MAINS

DRAWN BY:	APPROVED BY:	DATE:	△	
CB	MW	01.16.2007		E-9-5-3-2

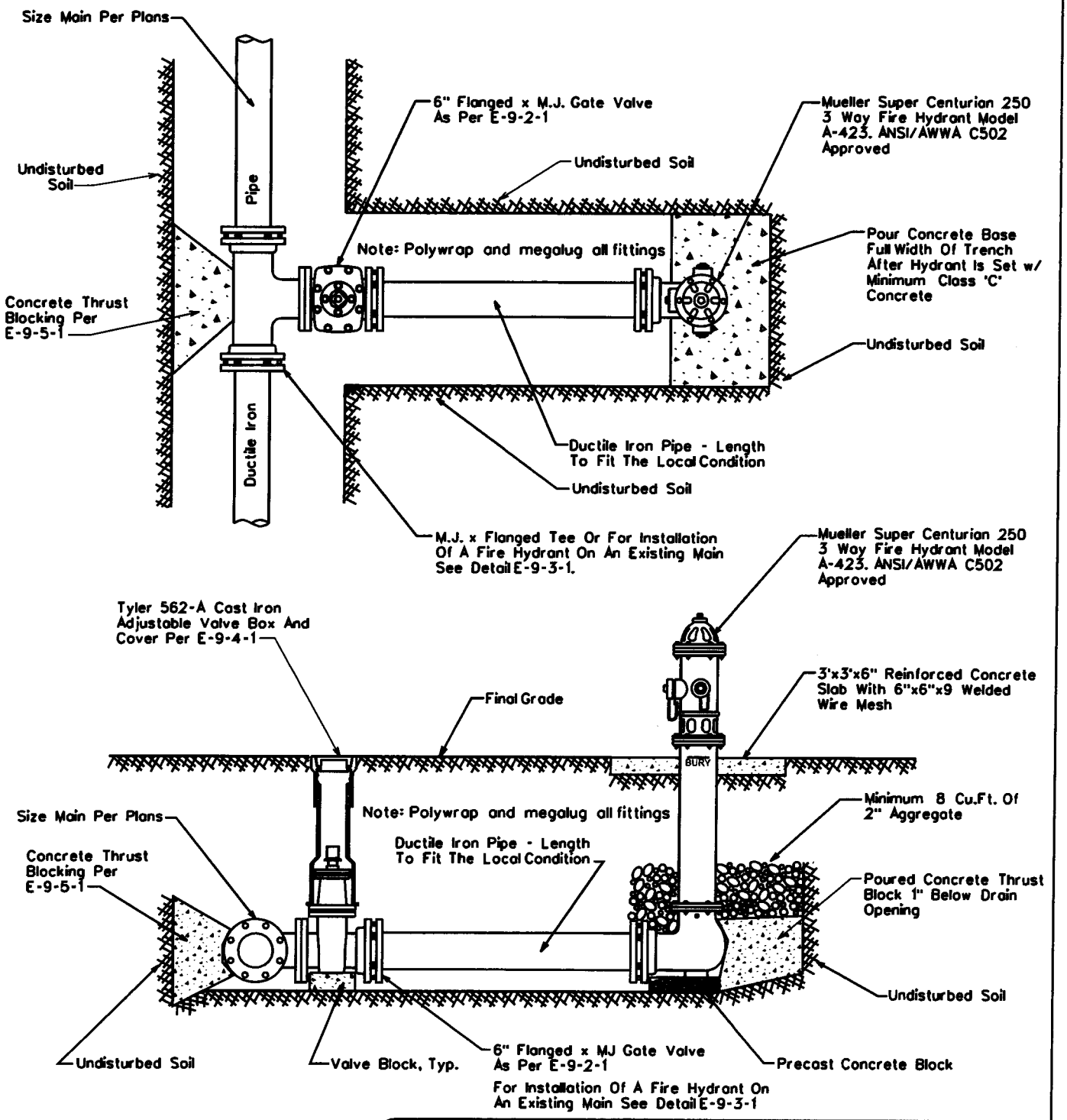

NOTE: All Flanges, Bolts, Nuts and Drain Holes Shall Be Kept Free Of Concrete

ARIZONA WATER COMPANY

STANDARD SPECIFICATION

FOR THE INSTALLATION OF

TYPICAL PERPENDICULAR FIRE HYDRANT

DRAWN BY:	APPROVED BY:	DATE:	△ 08.24.2006	E-9-6-1
CB	MW	1-28-91		

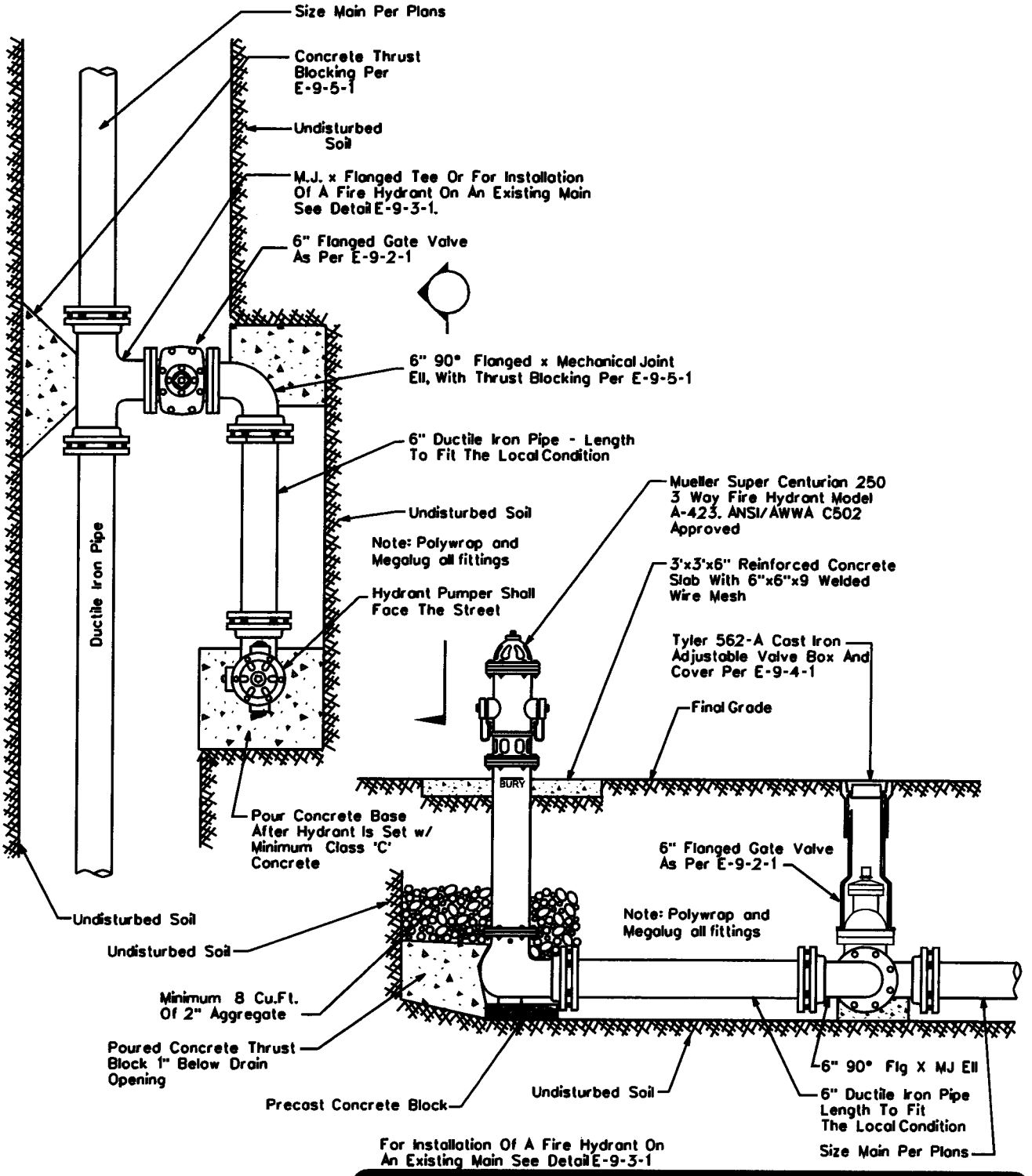

NOTE: All Flanges, Bolts, Nuts And Drain Holes Shall Be Kept Free Of Concrete.

ARIZONA WATER COMPANY

STANDARD SPECIFICATION

FOR THE INSTALLATION OF

TYPICAL PARALLEL FIRE HYDRANT

DRAWN BY:	APPROVED BY:	DATE:	△ 08.24.2006	E-9-7-1
JW	MW	03.20.1986		

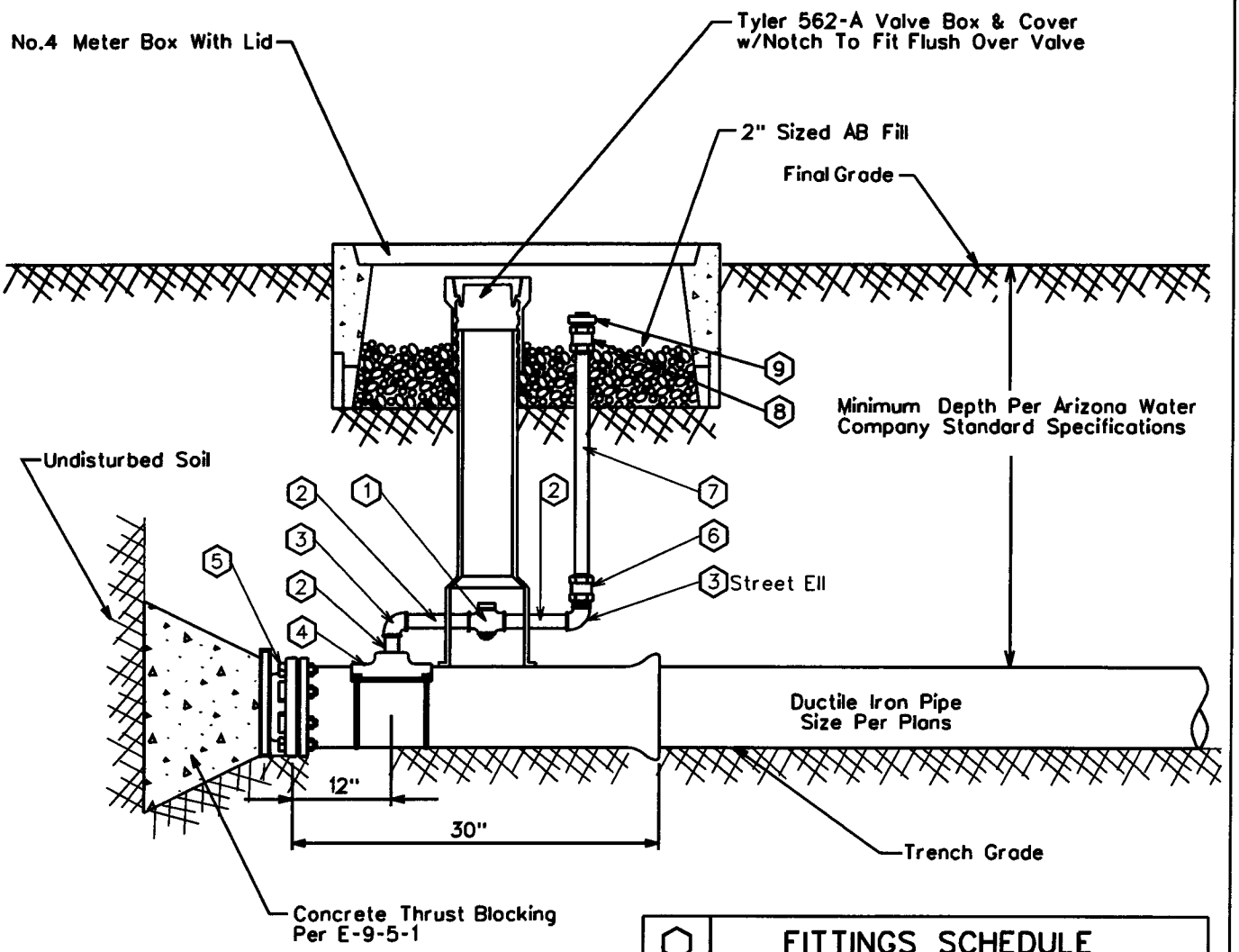

⬡	FITTINGS SCHEDULE
1.	2" Mueller 300 Ball Curb Valve B-20283 FIP x FIP W/ 2" Mueller Brass Square Wrench Nut Adapter B-20299
2.	2" Brass Nipple - Length To Fit Field Conditions
3.	2" Brass 90° Elbow, IPST
4.	Mueller Double Strap Bronze Service Saddle - BR2B
5.	M.J. Plug - Megalug Restraints May Be Required
6.	2" Straight Coupling CC x FIP H-15451
7.	2" Copper Pipe
8.	2" Straight Coupling CC x MIP H-15428
9.	2" Square Head Plug, MIP

ARIZONA WATER COMPANY

STANDARD SPECIFICATION
FOR THE INSTALLATION OF

2" BLOWOFF ASSEMBLY

DRAWN BY:	APPROVED BY:	DATE:	△	
CB	MW	03.20.1986	△ 03.21.2006	E-9-8-1

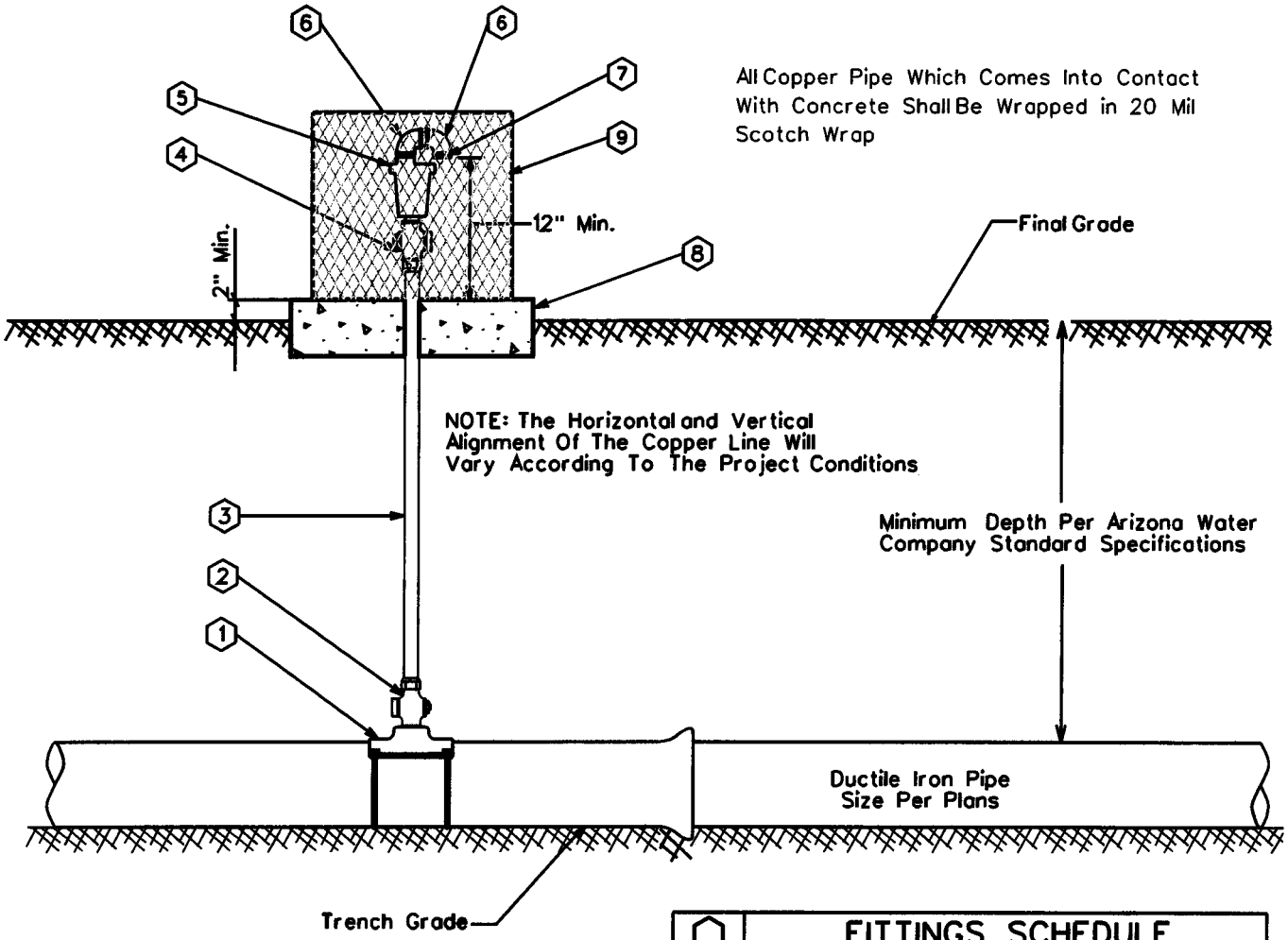

⬡	FITTINGS SCHEDULE
1.	Mueller BR2B Bronze Service Saddle - Double Strap
2.	1" Mueller B-25008 Taper x Comp. Ball Corp Stop
3.	1" Type 'K' Copper w/NO Splices - Field Fit
4.	1" Mueller B-25028 IP x Comp. Ball Corp Stop
5.	Crispin 1" Air Release Valve, Model AR10
6.	½" Brass Street Elbow
7.	No.16 Wire Mesh Screen (Non-Corrodible)
8.	4" Thick Concrete Pad - Class 'C' Concrete
9.	Guardshack, Model GS-1, Available From BPDI, Inc. Available In Leaf Green Or Desert Tan

GENERAL NOTES:

1. The valve shall be installed at high points and on long runs to vent the accumulation of air with the line under pressure- see the construction plans for specific locations.
2. The valve shall have a 5/64" orifice with valve sealing faces of stainless steel and BUNA-N rubber.
3. The valve shall be Crispin model AR10 for 6" and larger water mains.
4. Crispin model AR10 valve construction consists of a 1" IPST inlet & ½" IPST outlet, cast iron body and top flange with stainless steel float and trim.
5. The air release assembly shall be located out of the path of traffic but within right-of-way or easement.

ARIZONA WATER COMPANY

STANDARD SPECIFICATION
FOR THE INSTALLATION OF

TYPICAL AIR RELEASE VALVE

DRAWN BY:	APPROVED BY:	DATE:	△08.24.2006	E-9-8-2
CB	MW	03.20.1997		

All Copper Pipe Which Comes Into Contact With Concrete Shall Be Wrapped In 20 Mil Scotch Wrap

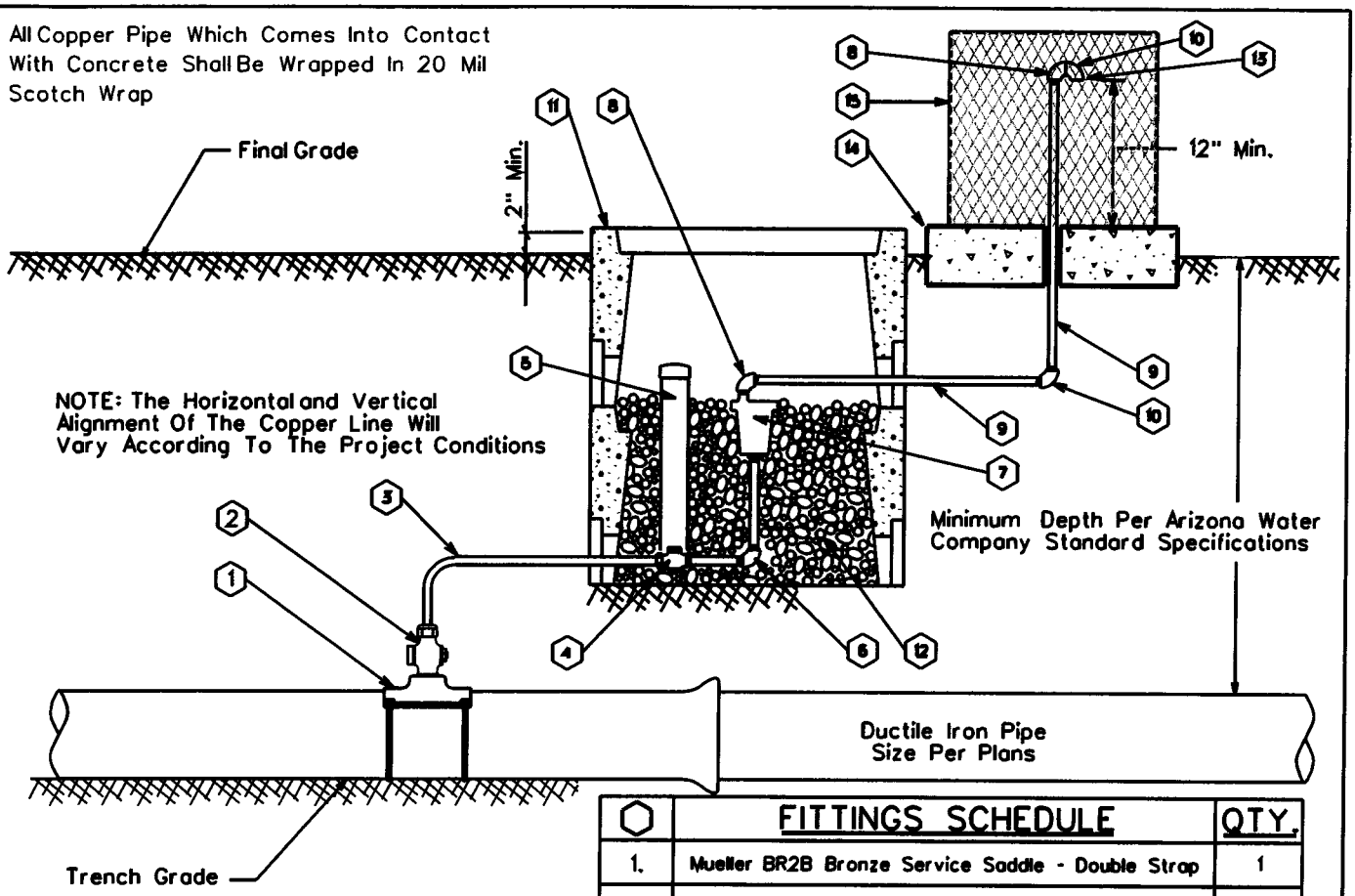

⬡	FITTINGS SCHEDULE	QTY.
1.	Mueller BR2B Bronze Service Saddle - Double Strap	1
2.	1" Mueller B-25008 Taper x Comp. Ball Corp Stop	1
3.	1" Type 'K' Copper w/NO Splices - Field Fit	As Req'd
4.	1" Mueller B-25028 IP x Comp. Ball Corp Stop	1
5.	3" PVC Pipe w/ Cap (Loose Fit)	1
6.	1" x 4" Brass Nipple w/90° Elbow	1
7.	Crispin 1" Air Release Valve, Model AR10	1
8.	½" Brass Street Elbow	2
9.	½" Galvanized Pipe - Length as req'd	2
10.	½" Galvanized 90° Ell	2
11.	Number 1 Meter Box	2
12.	2" Sized AB (Fill Meter Box To The Top Of The Air Release Valve)	As Req'd
13.	No.16 Wire Mesh Screen (Non-Corrodible)	1
14.	4" Thick Concrete Pad - Class 'C' Concrete	1
15.	Guardshack, Model GS-1, Available From BPDI, Inc. Available In Leaf Green Or Desert Tan	1

GENERAL NOTES:

1. The valve shall be installed at high points and on long runs to vent the accumulation of air with the line under pressure- see the construction plans for specific locations.
2. The valve shall have a 5/64 " orifice with valve sealing faces of stainless steel and BUNA-N rubber.
3. The valve shall be Crispin model AR10 for 6" and larger water mains.
4. Crispin model AR10 valve construction consists of a 1" IPST inlet & ½" IPST outlet, cast iron body and top flange with stainless steel float and trim.
5. The air release assembly shall be located out of the path of traffic but within the right-of-way or easement.

ARIZONA WATER COMPANY

STANDARD SPECIFICATION
FOR THE INSTALLATION OF

AIR RELEASE VALVE FOR THE NORTHERN REGION

DRAWN BY:	APPROVED BY:	DATE:		
CB	MW	03.20.1997	△08.24.2006	E-9-8-3

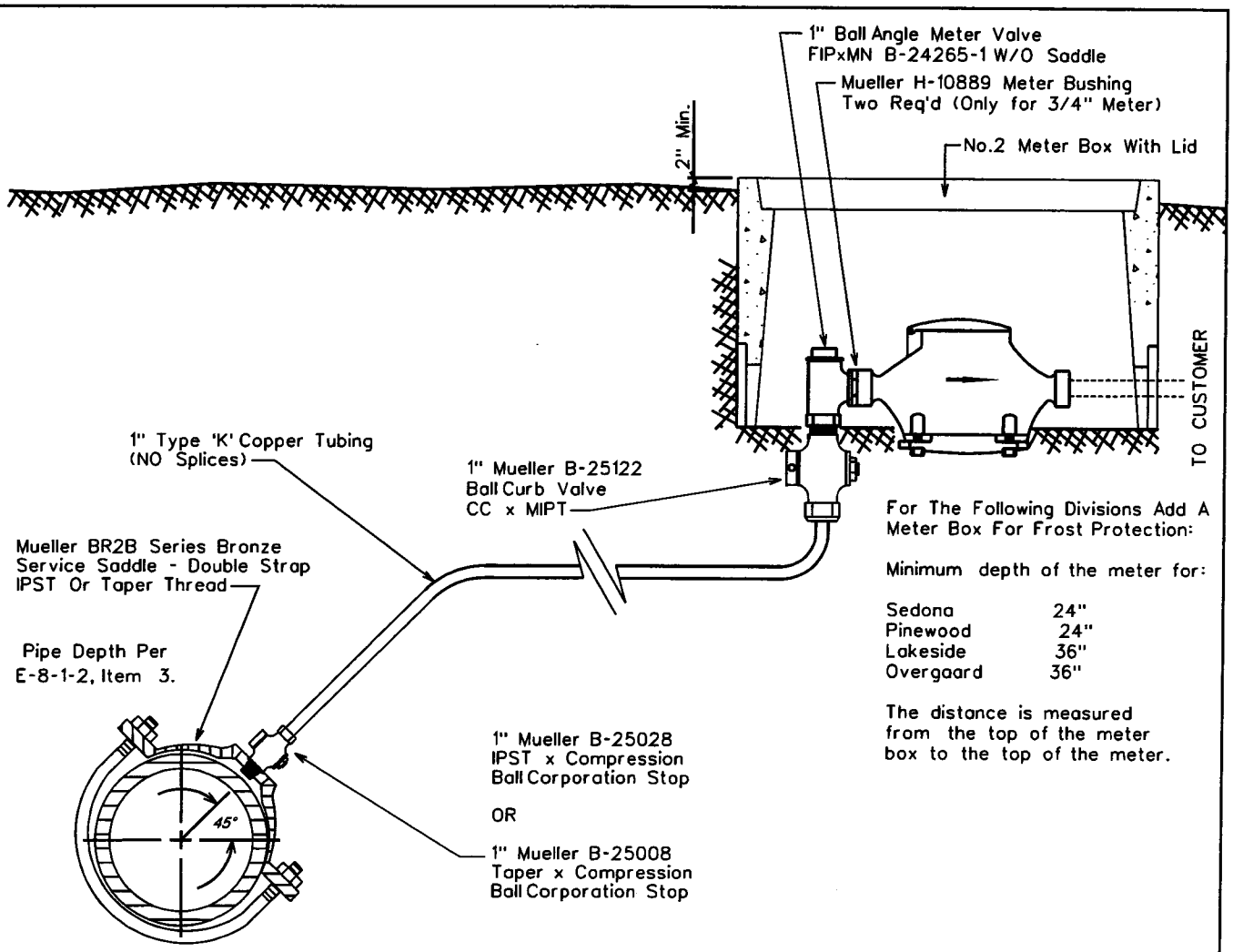

For The Following Divisions Add A Meter Box For Frost Protection:

Minimum depth of the meter for:

Sedona	24"
Pinewood	24"
Lakeside	36"
Overgaard	36"

The distance is measured from the top of the meter box to the top of the meter.

SADDLE TAP TO CA, PVC, OR DI PIPE

NOTE: The minimum distance between taps on mains other than ductile iron is 12"

NOTE:
Only the meter is supplied by Arizona Water Company

ARIZONA WATER COMPANY

STANDARD SPECIFICATION
FOR THE INSTALLATION OF

SINGLE SERVICE CONNECTION FOR A 3/4" OR 1" METER

DRAWN BY:	APPROVED BY:	DATE:	△ 03.17.2006	E-9-9-1
CCO	M.W.	3/20/86		

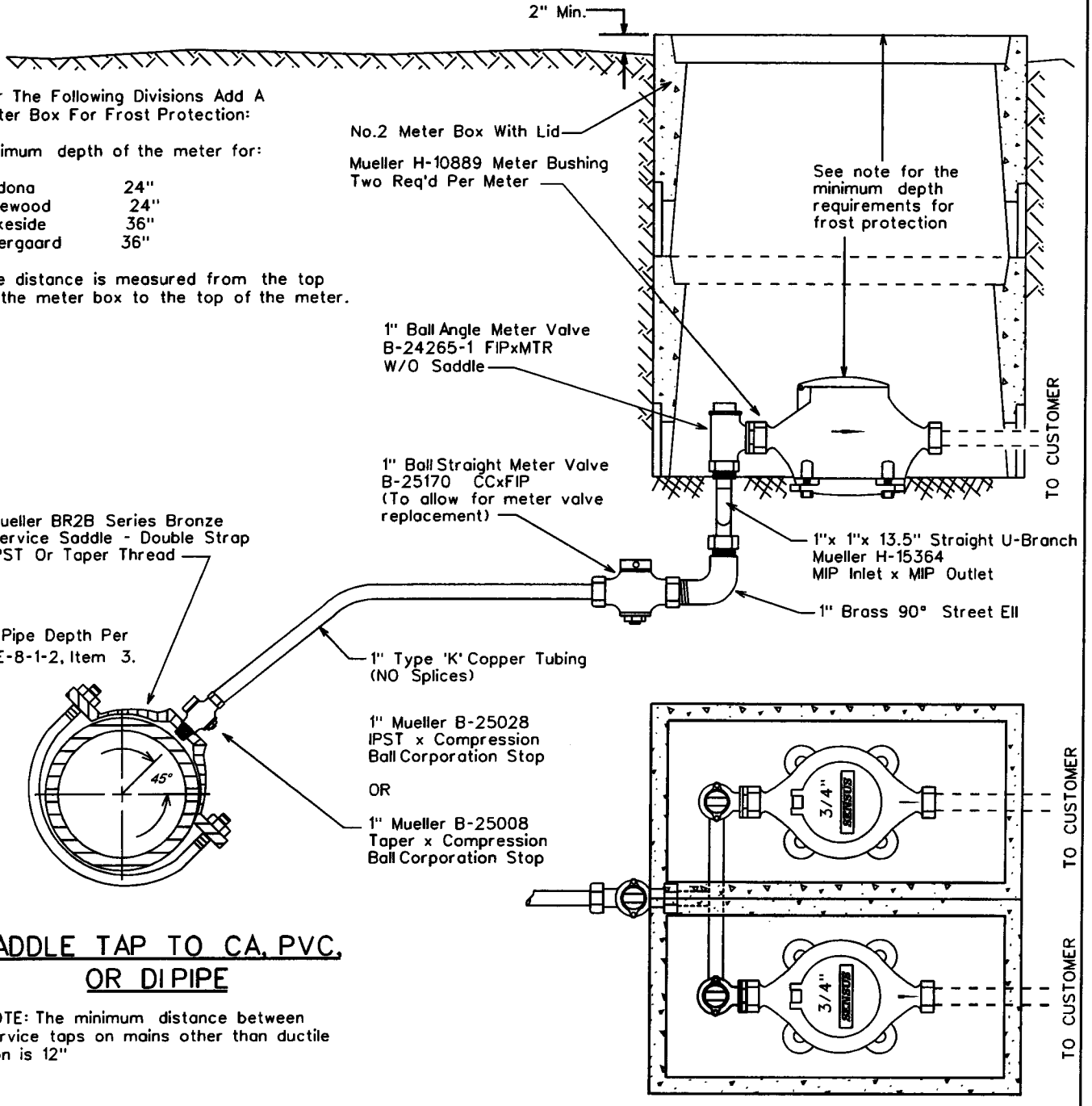

SADDLE TAP TO CA, PVC, OR DI PIPE

NOTE: The minimum distance between service taps on mains other than ductile iron is 12"

NOTE:
Only the meter is supplied by Arizona Water Company

ARIZONA WATER COMPANY

STANDARD SPECIFICATION
FOR THE INSTALLATION OF

DOUBLE SERVICE CONNECTION FOR 3/4" METERS

DRAWN BY:	APPROVED BY:	DATE:	△ 08.25.2006	E-9-10-1
CCO	M.W.	3-20-86		

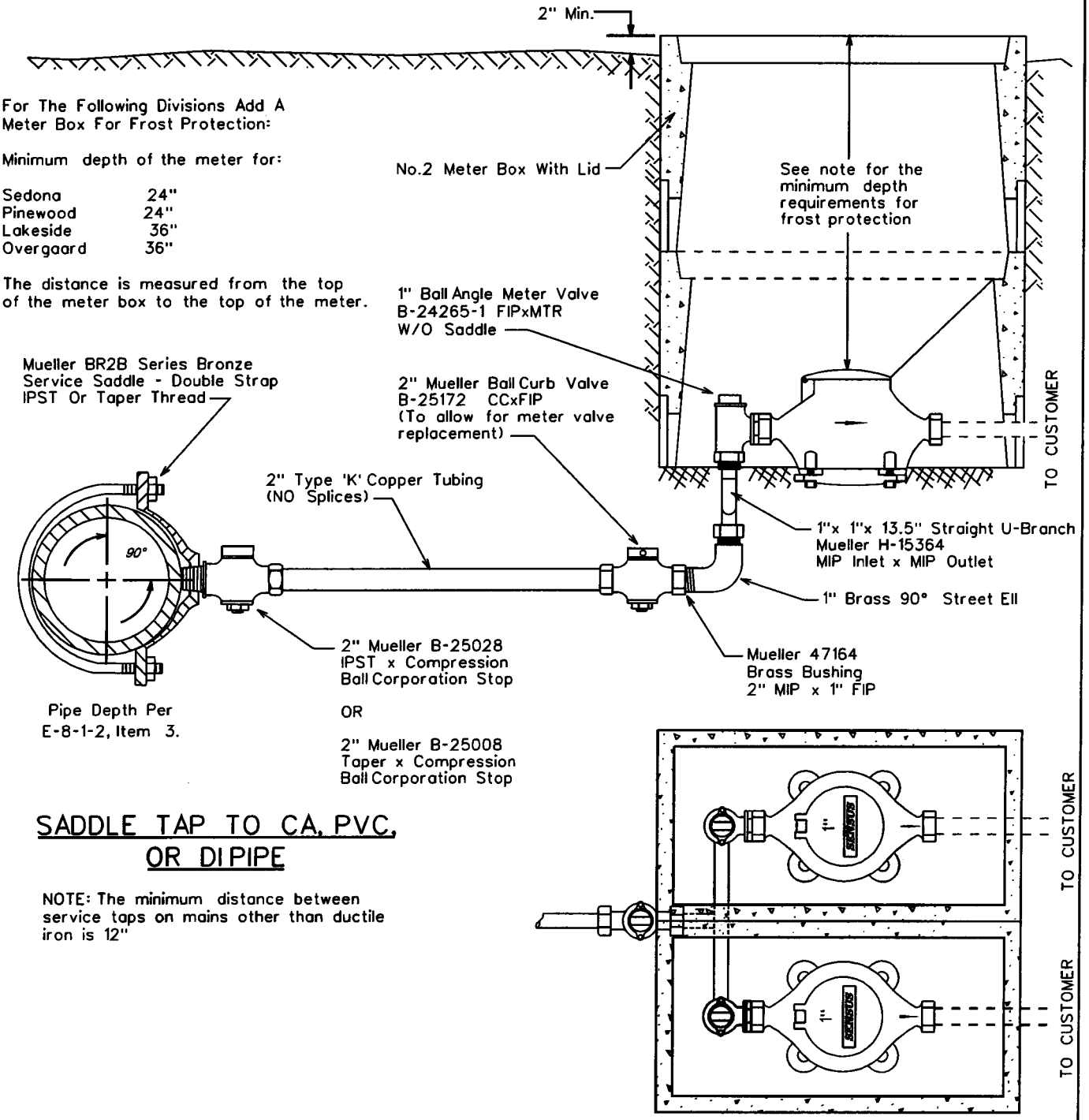

SADDLE TAP TO CA, PVC, OR DI PIPE

NOTE: The minimum distance between service taps on mains other than ductile iron is 12"

NOTE: THE LENGTH OF SERVICE IS LIMITED TO COMMERICIALLY AVAILABLE ROLLS, TYPICALLY 60 FEET

NOTE:
Only the meter is supplied by Arizona Water Company

ARIZONA WATER COMPANY

STANDARD SPECIFICATION
FOR THE INSTALLATION OF

DOUBLE SERVICE CONNECTION FOR 1" METERS

DRAWN BY:	APPROVED BY:	DATE:	△ 08.29.2006	E-9-10-2
CB	M.W.	03.17.2006		

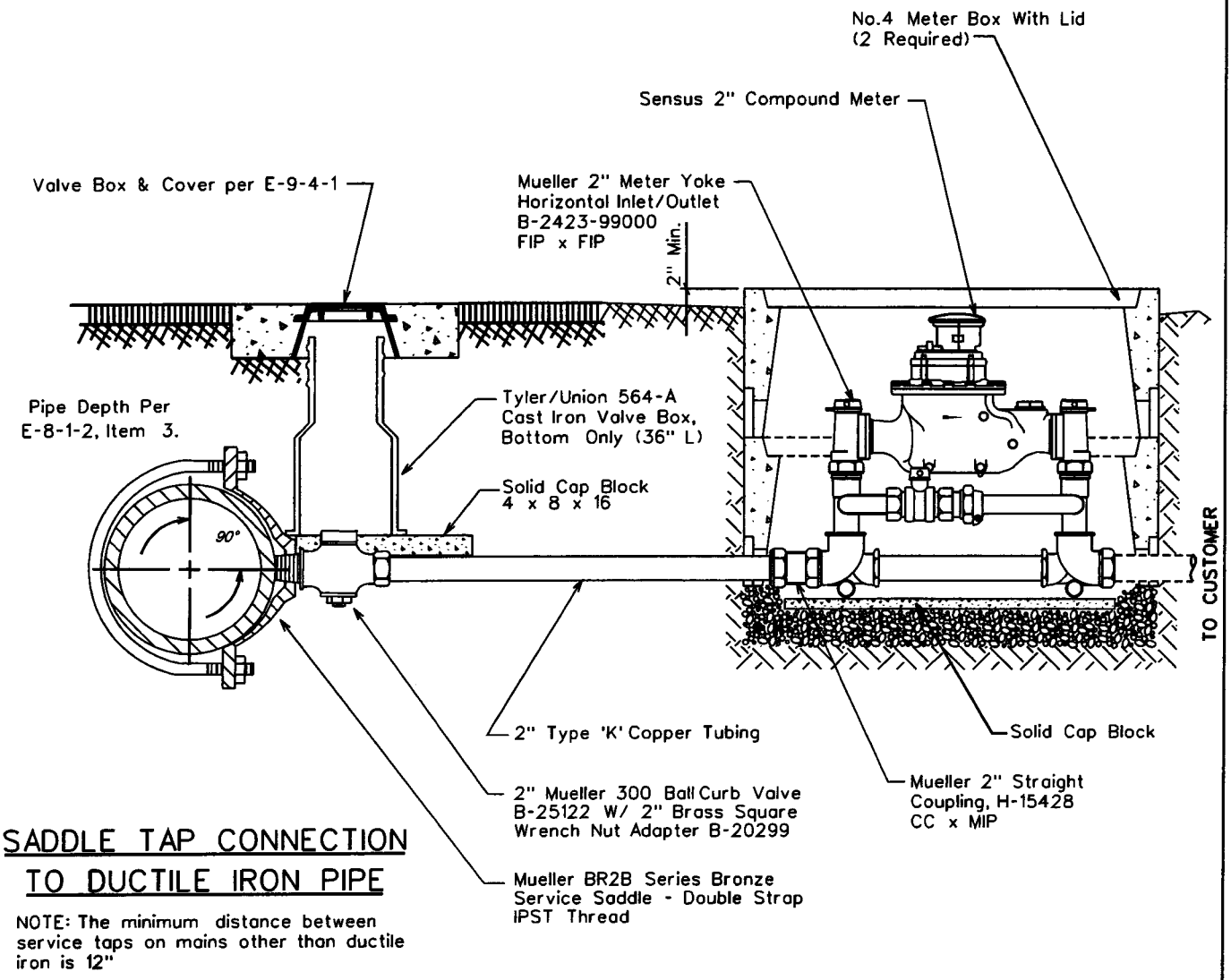

SADDLE TAP CONNECTION TO DUCTILE IRON PIPE

NOTE: The minimum distance between service taps on mains other than ductile iron is 12"

NOTE: THE LENGTH OF SERVICE IS LIMITED TO COMMERICIALLY AVAILABLE ROLLS, TYPICALLY 60 FEET

NOTE:

Only the meter is supplied by Arizona Water Company

ARIZONA WATER COMPANY

STANDARD SPECIFICATION
FOR THE INSTALLATION OF

TYPICAL 2" SERVICE CONNECTIONS

DRAWN BY:	APPROVED BY:	DATE:	△ 08.29.2006	E-9-11-1
JW	M.W.	3/20/86		

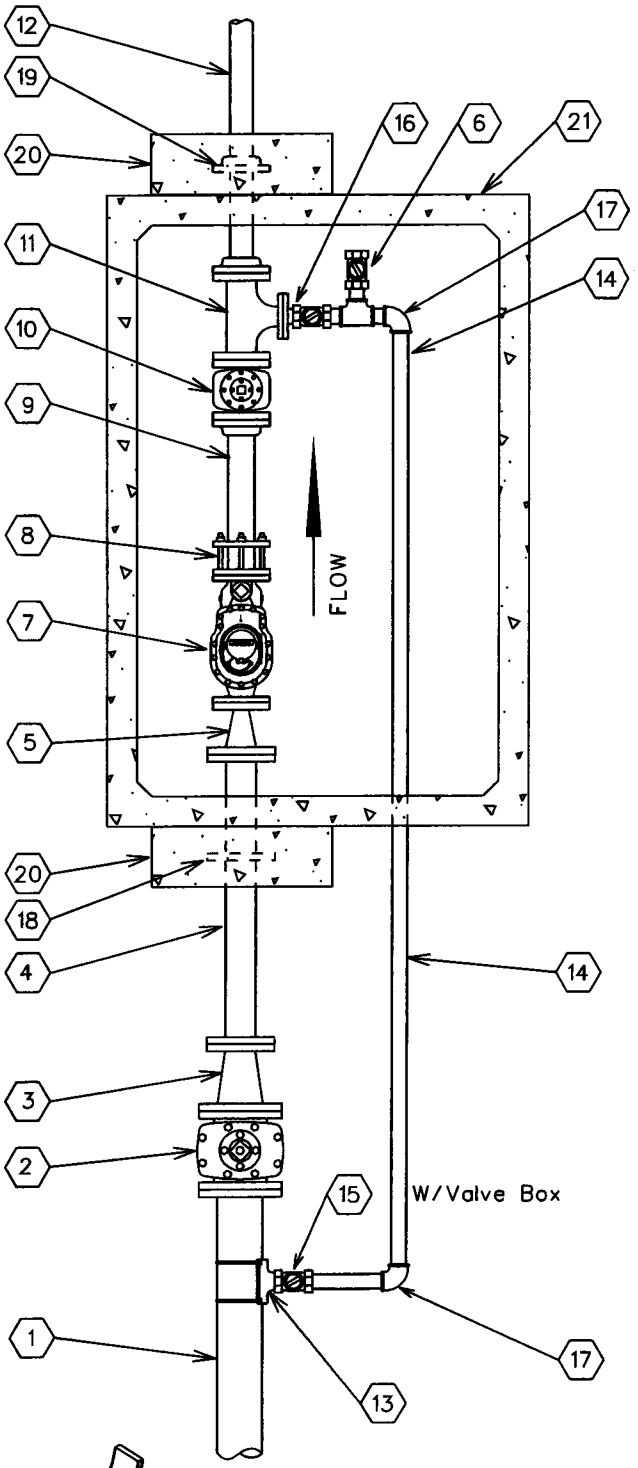

No.	FITTINGS SCHEDULE
1.	6" D.I.P.
2.	6" G.V.B.&C. mj x flng
3.	6"x4" Reducer flng x mj
4.	4"x3'-0" D.I.P. Spool flng x pe
5.	4" x 3" Reducer flng
6.	2" Test Port
7.	3" Compound Meter
8.	3" F.C.A.
9.	3"x2'-0" D.I. Spool flng x pe
10.	3" Gate Valve flng
11.	3"x2" Flg Tee w/ 2" Companion Flange
12.	3"x4'-0" D.I. Spool flng x pe
13.	6"x2" Tapping Saddle
14.	2" Copper Pipe
15.	2" Mueller B25122 Ball Valve w/B20299 Nut
16.	2" Locking Ball Valve (normally closed)
17.	2" Mueller H-15526 90° Ell CC x CC
18.	4" Megalug
19.	3" Slip-On Welding Flange
20.	24"x24"x8" Conc. Thrust Block P.I.P.
21.	575-LA Conc. Vault

NOTE:

1. Use Rowley pipe supports or equivalent as needed (See detail below).
2. Pipe support locations to be determined by field personnel.
3. All copper pipe that comes in contact with concrete to be wrapped w/10-20 Mil. Scotchwrap corrosion protection tape.
4. All mechanical joint fittings are to be megalugged.
5. Use deflection fittings (45° Ells.) to achieve necessary depths & cover as shown on the standard specification for the installation of a concrete vault (E-9-12-5).

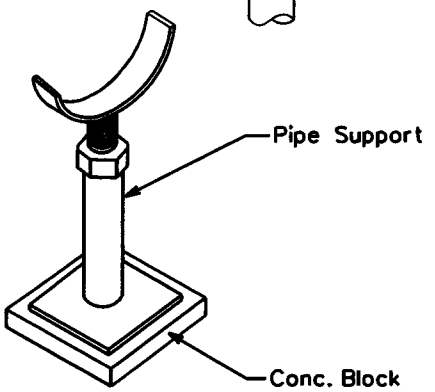

ARIZONA WATER COMPANY

STANDARD SPECIFICATION

FOR THE INSTALLATION OF

3" COMPOUND METER

DRAWN BY:	APPROVED BY:	DATE:	△08.29.2006	E-9-12-1
CCO	MW	10/5/1993		

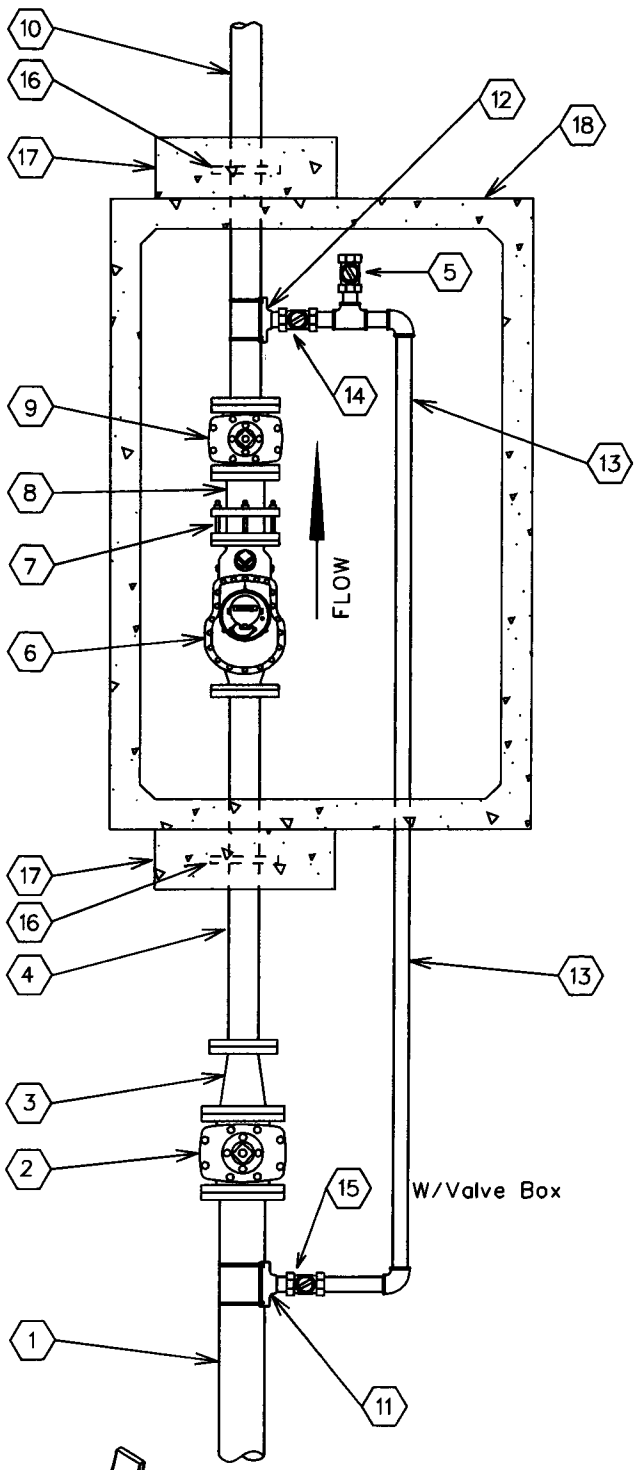

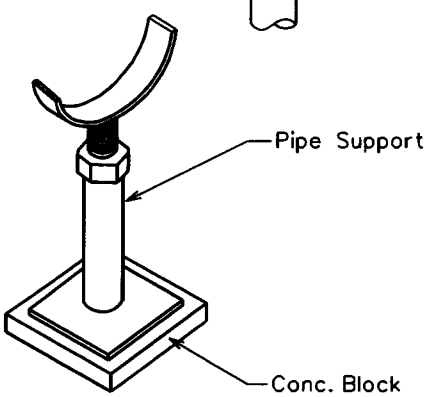

No.	FITTINGS SCHEDULE
1.	6" D.I.P.
2.	6" G.V.B.&C. mj x flng
3.	6"x4" Reducer flng x mj
4.	4"x3'-0" D.I.P. Spool flng x pe
5.	2" Test Port
6.	4" Compound Meter
7.	4" F.C.A.
8.	4"x1'-0" D.I.P. Spool flng x pe
9.	4" Gate Valve flng
10.	4"x4'-0" D.I.P. Spool flng x pe
11.	6"x2" Tapping Saddle
12.	4"x2" Tapping Saddle
13.	2" Copper Pipe
14.	2" Ball Valve / Locking (Normally Closed)
15.	2" Mueller B25122 Ball Valve w/B20299 Nut
16.	4" Megalug
17.	24"x24"x8" Conc. Thrust Block P.I.P.
18.	575-LA Conc. Vault

NOTE:

1. Use Rowley pipe supports or equivalent as needed (See detail below).
2. Pipe support locations to be determined by field personnel.
3. All copper pipe that comes in contact with concrete to be wrapped w/10-20 Mil. Scotchwrap corrosion protection tape.
4. All mechanical joint fittings are to be megalugged.
5. Use deflection fittings (45° Ells.) to achieve necessary depths & cover as shown on the standard specification for the installation of a concrete vault (E-9-12-5).

ARIZONA WATER COMPANY

STANDARD SPECIFICATION

FOR THE INSTALLATION OF

4" COMPOUND METER

DRAWN BY:	APPROVED BY:	DATE:	△08.29.2006	E-9-12-2
CCO	MW	10/5/1993		

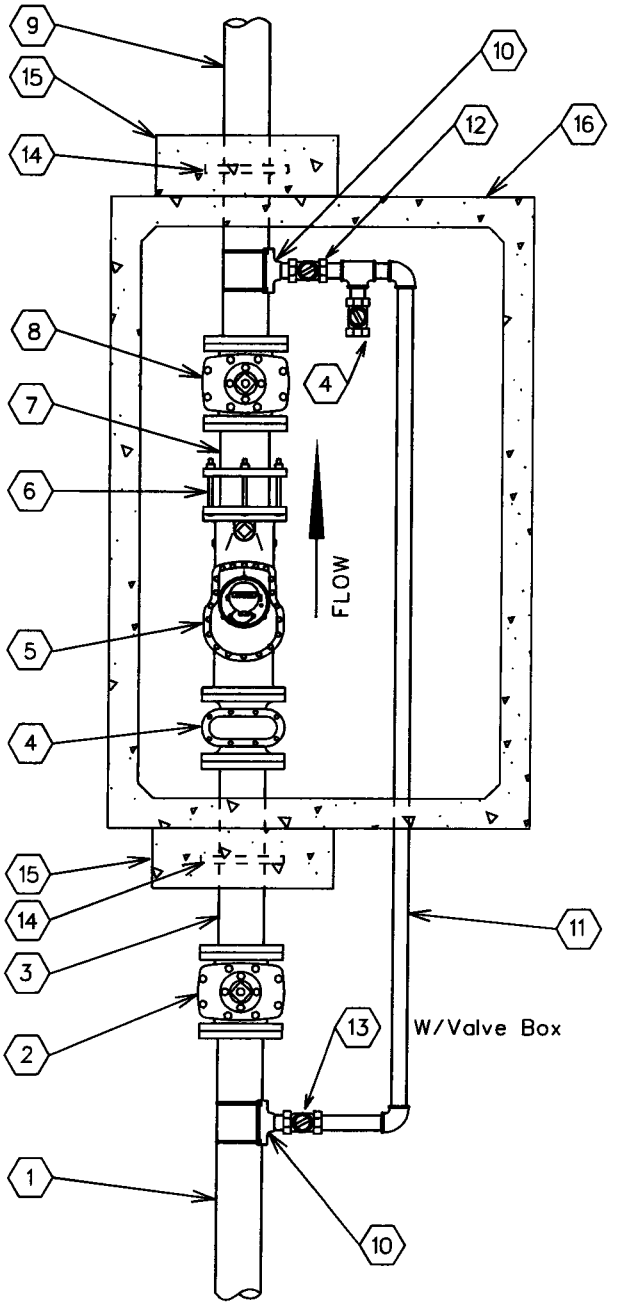

No.	FITTINGS SCHEDULE
1.	6" D.I.P.
2.	6" G.V.B.&C. mj
3.	6"x 3'-0" D.I.P. Spool flng x pe
4.	2" Test Port
5.	6" Compound Meter
6.	6" F.C.A.
7.	6"x 1'-0" D.I.P. Spool flng x pe
8.	6" Gate Valve flng
9.	6"x 4'-0" D.I.P. Spool flng x pe
10.	6"x2" Tapping Saddle
11.	2" Copper Pipe
12.	2" Ball Valve / Locking (Normally Closed)
13.	2" Mueller B25122 Ball Valve w/B20299 Nut
14.	6" Megalug
15.	24"x24"x8" Conc. Thrust Block P.I.P.
16.	575-LA Conc. Vault

NOTE:

1. Use Rowley pipe supports or equivalent as needed (See detail below).
2. Pipe support locations to be determined by field personnel.
3. All copper pipe that comes in contact with concrete to be wrapped w/10-20 Mil. Scotchwrap corrosion protection tape.
4. All mechanical joint fittings are to be megalugged.
5. Use deflection fittings (45° Ells.) to achieve necessary depths & cover as shown on the standard specification for the installation of a concrete vault (E-9-12-5).

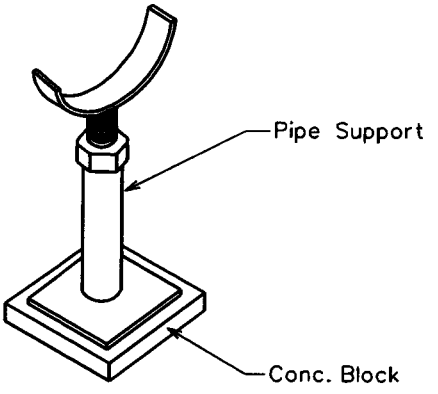

ARIZONA WATER COMPANY

STANDARD SPECIFICATION
FOR THE INSTALLATION OF

6" COMPOUND METER

DRAWN BY:	APPROVED BY:	DATE:	△08.29.2006	E-9-12-3
CCO	MW	10/5/1993		

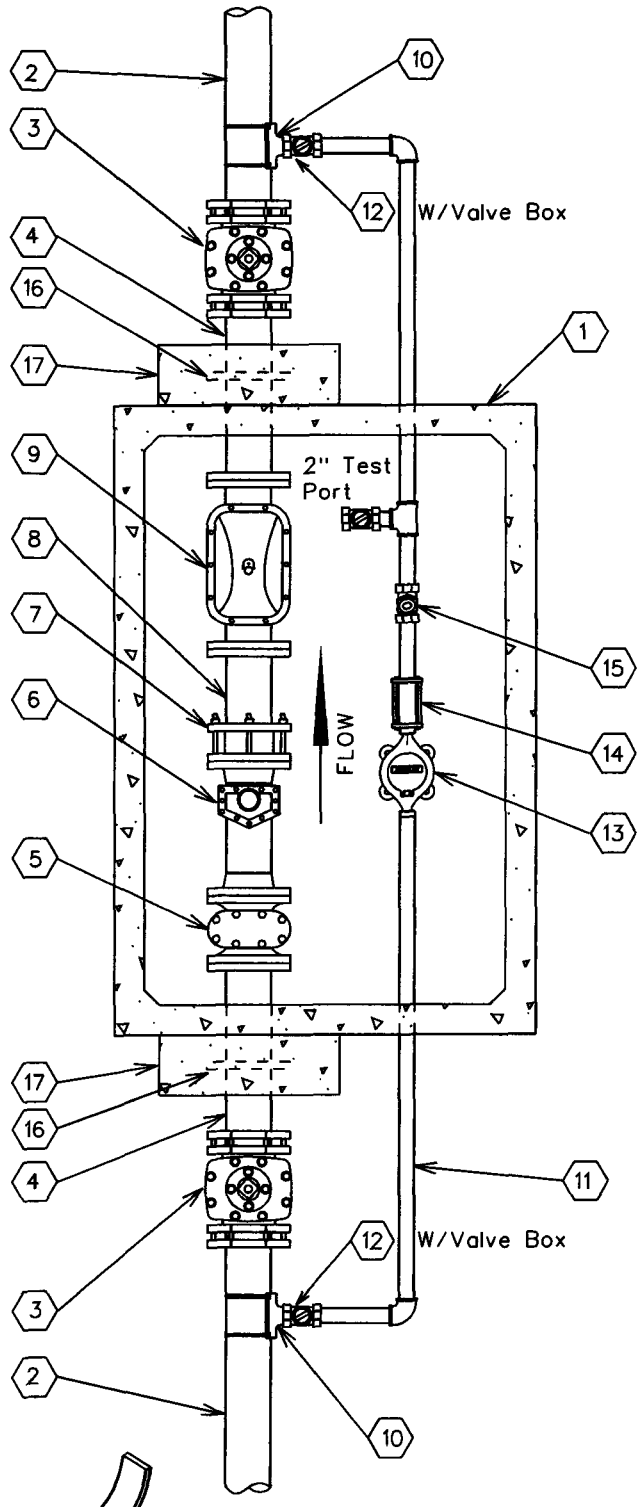

No.	FITTINGS SCHEDULE
1.	575-LA Conc. Vault
2.	6" D.I.P.
3.	6" G.V.B.&C. m.j.
4.	6" x 3'-0" D.I.P. SPool Piece flng x pe
5.	6" Strainer
6.	6" Turbo Meter
7.	6" F.C.A.
8.	6" x 2'-0" D.I.P. Spool Piece flng x pe (TRIM SPOOL PIECE TO 3x THE PIPE DIA.)
9.	6" Detector Check
10.	6"x*N" Tapping Saddle
11.	*N" Copper Pipe
12.	*N" Ball Valve (Locking)
13.	*N" Meter
14.	*N" Coup. Adapt.
15.	*N" Flapper Check Valve
16.	6" Megalug
17.	24"x24"x8" Conc. Thrust Block P.I.P.

*N - Size To Be determined By A.W.Co.

NOTE:

1. Use Rowley pipe supports or equivalent as needed (See detail below).
2. Pipe support locations to be determined by field personnel.
3. All copper pipe that comes in contact with concrete to be wrapped w/10-20 Mil. Scotchwrap corrosion protection tape.
4. All mechanical joint fittings are to be megalugged.
5. Use deflection fittings (45° Ells.) to achieve necessary depths & cover as shown on the standard specification for the installation of a concrete vault (E-9-12-5).
6. To change from a 6" service to a 4" service, change all listed 6" materials to 4" materials.

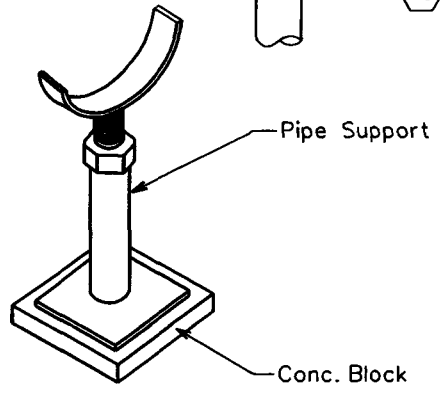

ARIZONA WATER COMPANY

STANDARD SPECIFICATION

FOR THE INSTALLATION OF

6" COMPOUND SERVICE

DRAWN BY:	APPROVED BY:	DATE:	△08.29.2006	E-9-12-4
CCO	MW	10/05/1993		

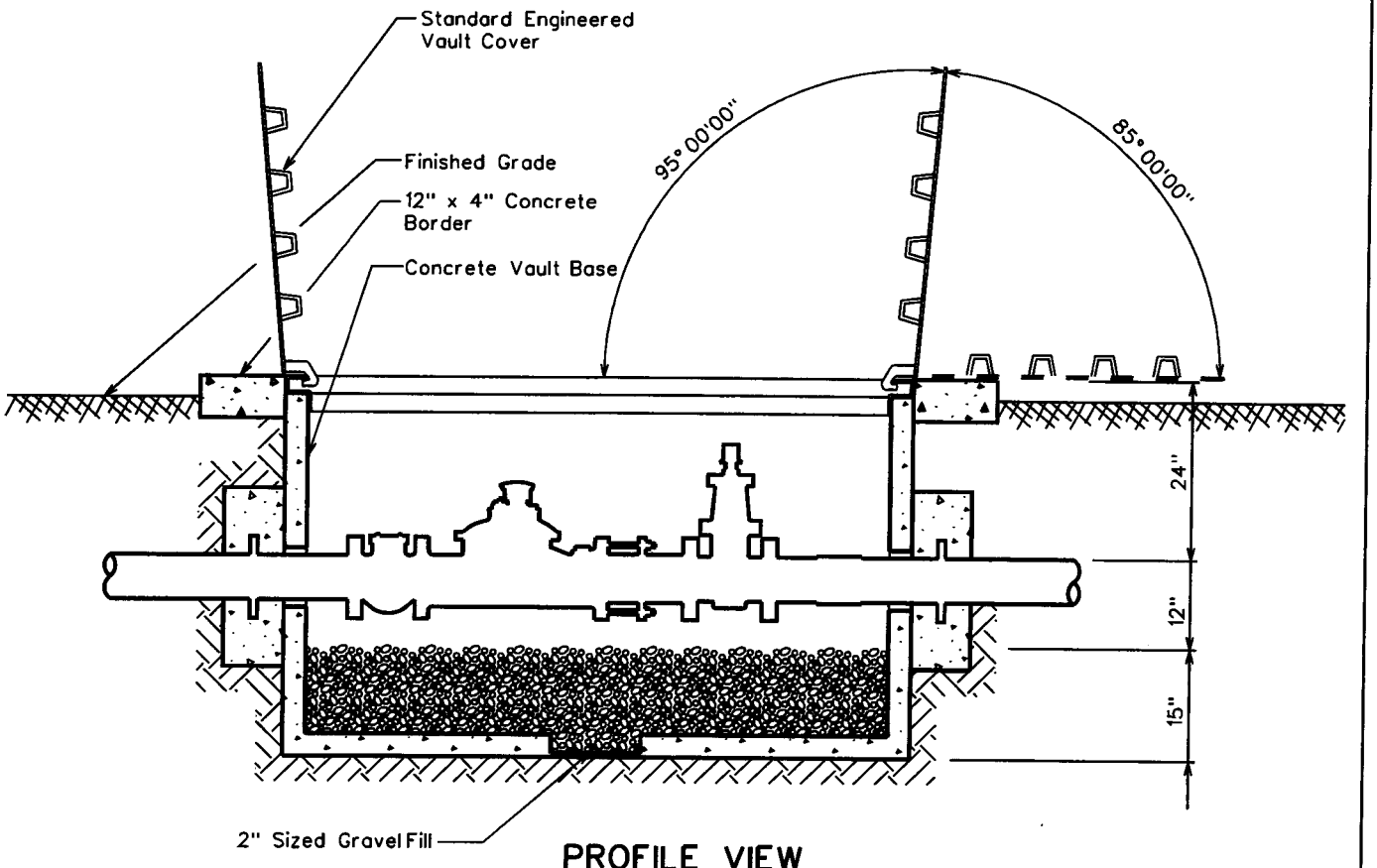

PROFILE VIEW

CONCRETE VAULT & COVER SPECIFICATIONS

Vault - Base No. 575-BL
Cover - Standard Engineered Vault Cover
. 4874 Aluminum Diamond Plate Cover For Non-Traffic Loading Areas
Or
. 4874 Galvanized Steel Diamond Plate Cover W/ H-20 Traffic Loading
. Double Torsion Spring Assisted Doors W/ Recessed Hasp & Safety Latches

NOTES

1. Total Depth Of Concrete Vault To Be A Maximum Of 3'-0" From Top Of Vault Cover To Top Of Gravel Fill.
2. Service Connections Larger Than 6" In Diameter Will Conform To The Same Vault & Cover Specifications. Size Of Vault & Cover To Be Determined By A.W.Co. Engineers.

ARIZONA WATER COMPANY

STANDARD SPECIFICATION
FOR THE INSTALLATION OF

CONCRETE VAULT

DRAWN BY:	APPROVED BY:	DATE:	△	
CCO	MW	10/5/1993	△ 05.17.2001	E-9-12-5

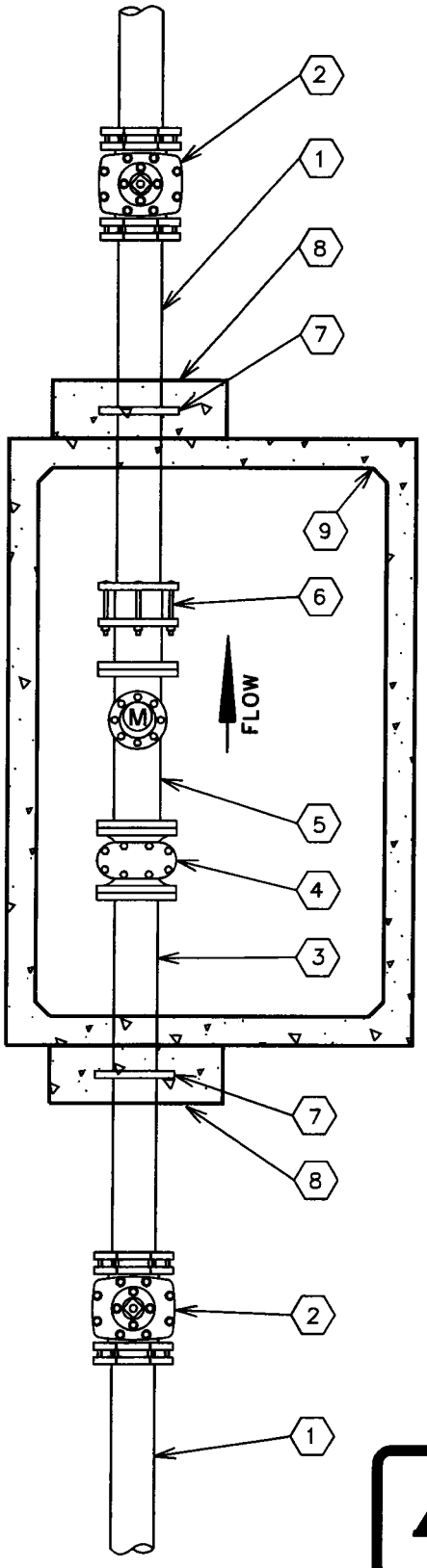

No.	FITTINGS SCHEDULE
1.	Ductile Iron Pipe
2.	Gate Valve M.J.
3.	D.I.P. Spool Piece Flg x Pe (10xDia.)
4.	Meter Strainer
5.	Propeller Meter
6.	Flanged Coupling Adapter
7.	Megalug Gland (Thrust Anchor)
8.	Concrete Thrust Block P.I.P.
9.	Concrete Vault

NOTE:

1. Use Rowley pipe supports or equivalent as needed (See E-9-12-4).
2. Pipe support locations to be determined by field personnel.
3. All Sched. 40 Stl. pipe outside of vault to be wrapped w/10-20 Mil. Scotchwrap corrosion protection tape.
4. All mechanical joint fittings to are to be megalugged.
5. Use deflection fittings (45° Ells.) to achieve necessary depths & cover as shown on the standard specification for the installation of a concrete vault (E-9-12-5).

ARIZONA WATER COMPANY

STANDARD SPECIFICATION

FOR THE INSTALLATION OF

NON-POTABLE PROPELLER METER

DRAWN BY:	APPROVED BY:	DATE:	△	
JPK	MW	7-20-95		E-9-12-6

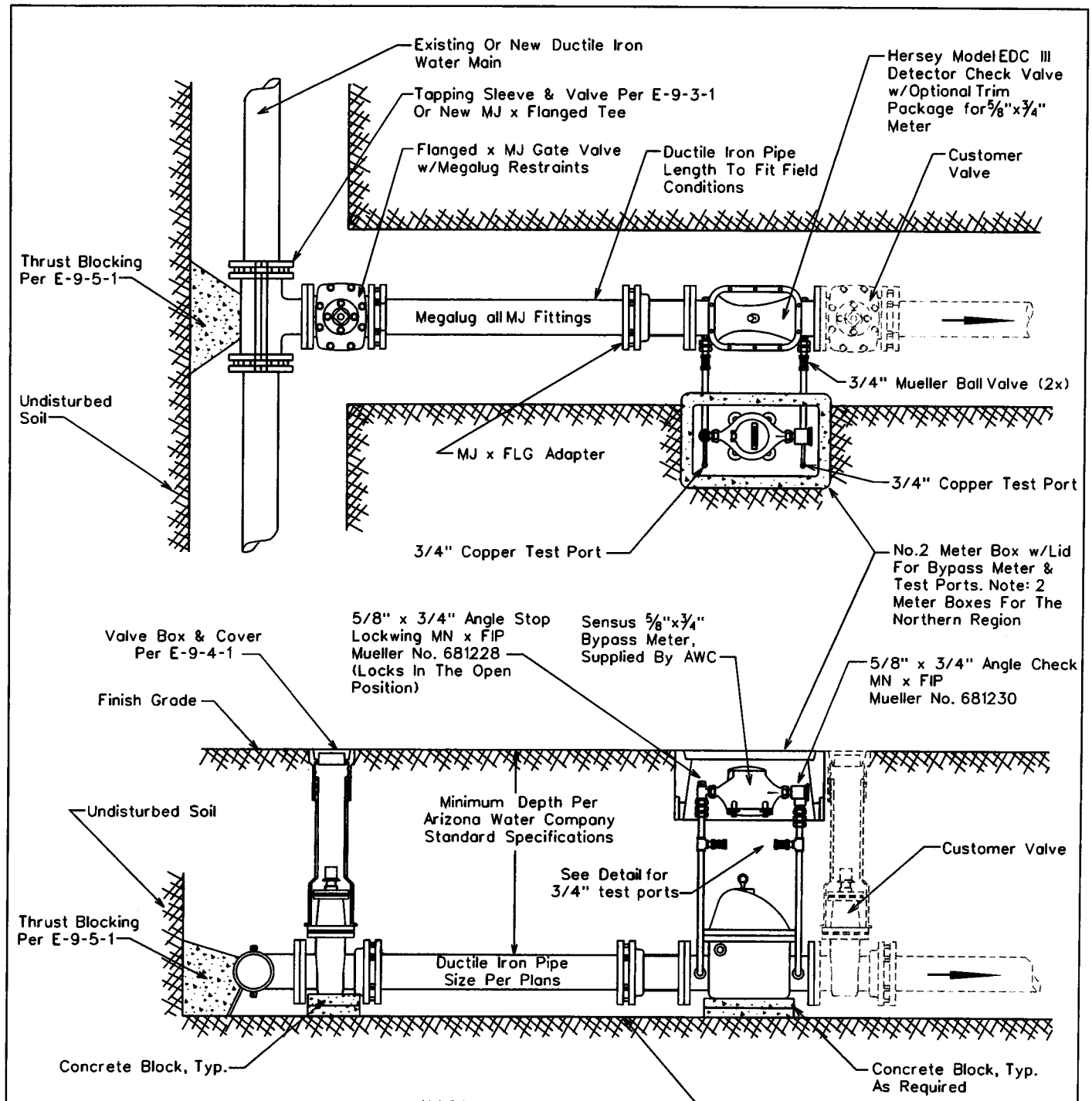

ARIZONA WATER COMPANY

STANDARD SPECIFICATION

FOR THE INSTALLATION OF

TYPICAL 4" THRU 8" DETECTOR CHECK VALVES

DRAWN BY:	APPROVED BY:	DATE:	△03.09.2007	E-9-13-1
CB	MW	10.16.1990		

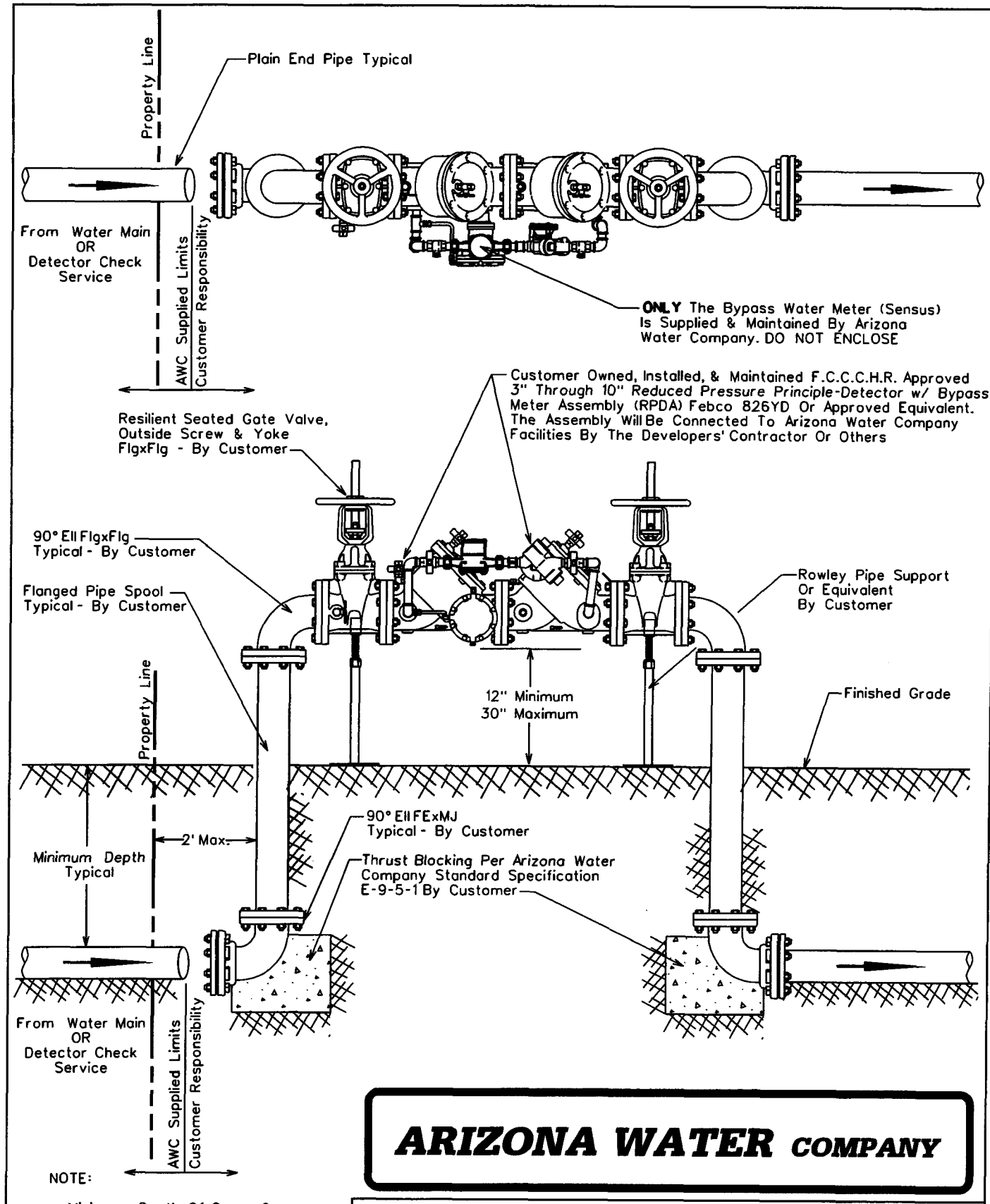

NOTE:

Minimum Depth Of Cover Over 6" & 8" Mains is 36 Inches, 12" & Greater is 48 Inches Unless Otherwise Specified

ARIZONA WATER COMPANY

STANDARD SPECIFICATION

FOR THE INSTALLATION OF

3" THRU 10" REDUCED PRESSURE PRINCIPLE-DETECTOR WITH BYPASS METER ASSEMBLY (RPDA) FOR FIRELINE SERVICES

DRAWN BY:	APPROVED BY:	DATE:	△1-19-2000	E-9-13-2
CB	MW	10-13-98		

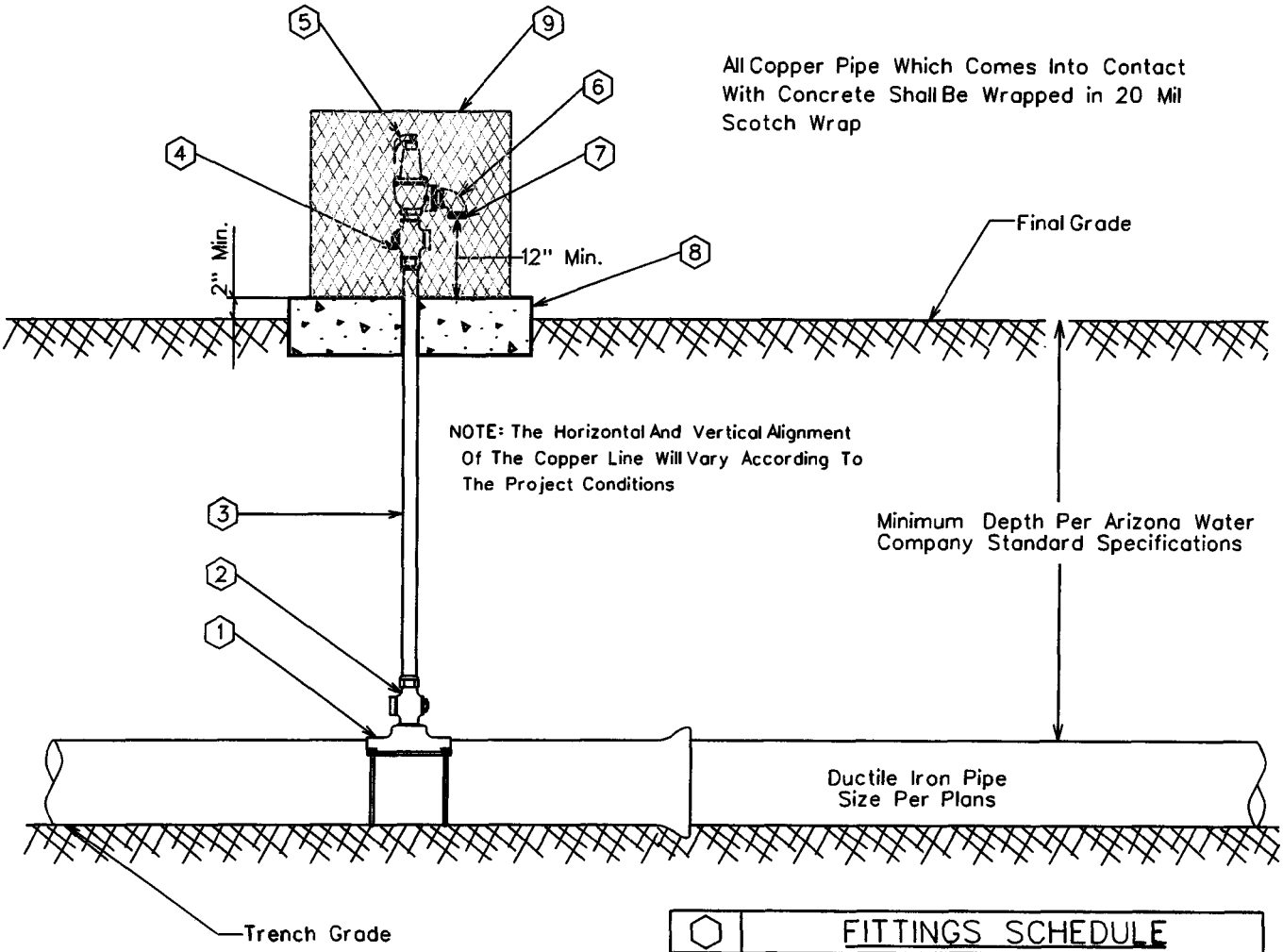

⬡	FITTINGS SCHEDULE
1.	Mueller BR2B Bronze Service Saddle - Double Strap
2.	2" Mueller B-25008 Taper x Comp. Ball Corp Stop
3.	2" Type 'K' Copper w/NO Splices - Field Fit
4.	2" Mueller B-25028 IP x Comp. Ball Corp Stop
5.	2" Pressure Relief Valve Watts 174A With A 2" Inlet / 2" Outlet 30-150 psi W/ Bronze Body
6.	2" Brass Street Elbow
7.	No.16 Wire Mesh Screen (Non-Corrodible)
8.	4" Thick Concrete Pad - Class 'C' Concrete
9.	Vandal enclosure to be centered on the concrete pad

NOTE:

1. Pressure relief valves are typically located just down stream of a pressure reducing station or where system conditions might be subject to greater than allowable pressures.
2. The relief valve assembly and vandal enclosure shall be located out of the roadway, but within the right-of-way or easement.

ARIZONA WATER COMPANY

STANDARD SPECIFICATION
FOR THE INSTALLATION OF

TYPICAL PRESSURE RELIEF VALVE ASSEMBLY

DRAWN BY:	APPROVED BY:	DATE:	△ 08.29.2006	E-9-14-1
CCO	MW	3/20/1986		

All Copper Pipe Which Comes Into Contact With Concrete Shall Be Wrapped in 20 Mil Scotch Wrap

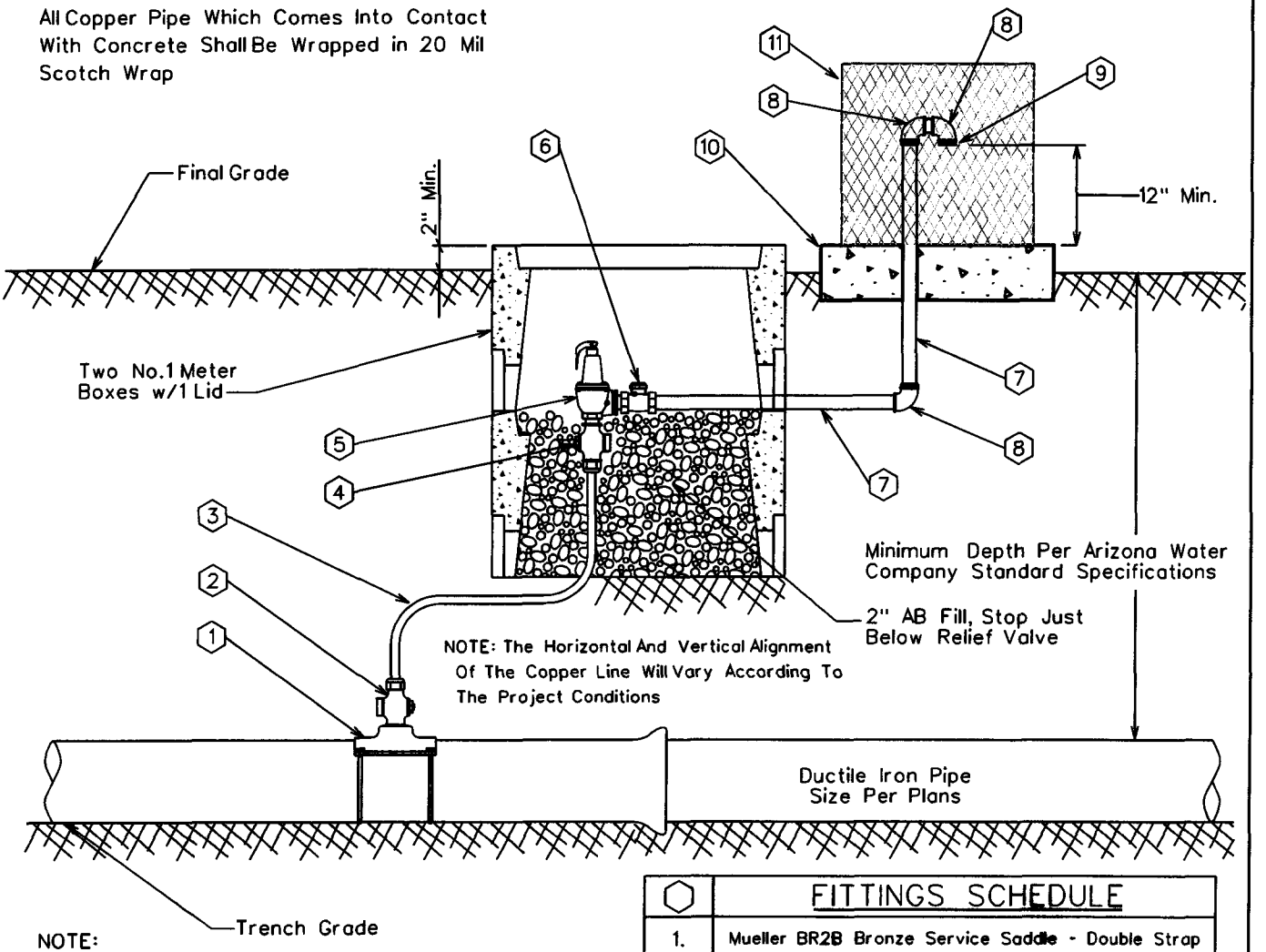

NOTE:

1. Pressure relief valves are typically located just down stream of a pressure reducing station or where system conditions might be subject to greater than allowable pressures.
2. The relief valve assembly and vandal enclosure shall be located out of the roadway, but within the right-of-way or easement.

⬡	FITTINGS SCHEDULE
1.	Mueller BR2B Bronze Service Saddle - Double Strap
2.	2" Mueller B-25008 Taper x Comp. Ball Corp Stop
3.	2" Type 'M' Rigid Copper w/NO Splices - Field Fit
4.	2" Mueller B-25028 IP x Comp. Ball Corp Stop
5.	2" Pressure Relief Valve Watts 174A With A 2" Inlet / 2" Outlet 30-150 psi W/ Bronze Body
6.	2" Bronze Check Valve Watts Series CV
7.	2" Schedule 40 Cut Pipe - Field Fit
8.	2" Brass Street Elbow
9.	No.16 Wire Mesh Screen (Non-Corrodible)
10.	4" Thick Concrete Pad - Class 'C' Concrete
11.	Guardshack, Model GS-1, Available From BPDI, Inc. Available In Leaf Green Or Desert Tan

ARIZONA WATER COMPANY

STANDARD SPECIFICATION

FOR THE INSTALLATION OF

PRESSURE RELIEF VALVE - NORTHERN REGION

DRAWN BY:	APPROVED BY:	DATE:	△08.29.2006	
CCO	MW	3/20/1986		E-9-14-2

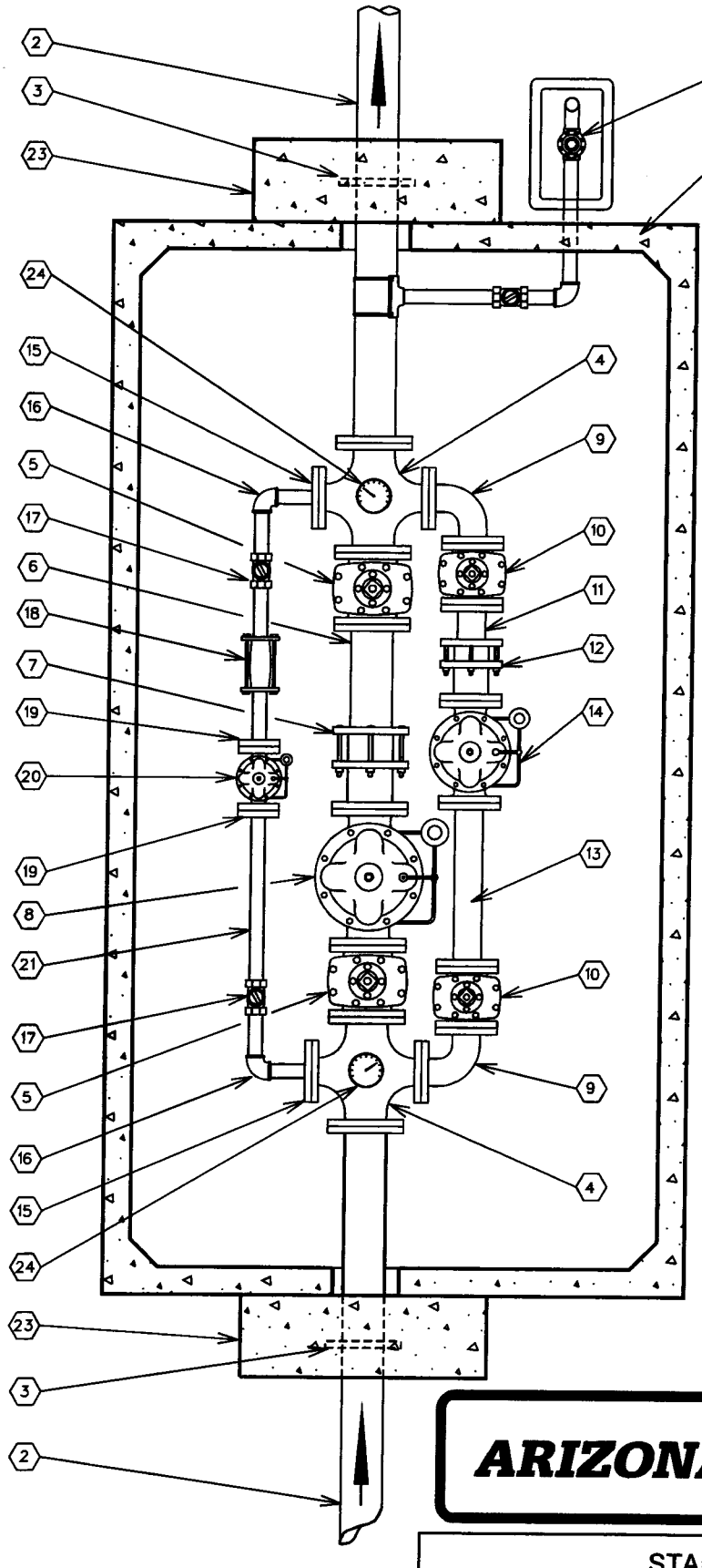

No.	FITTINGS SCHEDULE
1.	612 LA Conc. Vault (See Note 3)
2.	6"x6'-0" D.I.P. Spool Flg.xP.E.
3.	6" Megalug (Thrust Anchor)
4.	6"x4" Cross Flg.
5.	6" Gate Valve Flg.
6.	6"x2'-0" D.I.P. Spool Flg.xP.E.
7.	6" Flg. Coup. Adapt. (Rockwell 913)
8.	6" High Flow Pressure Reducing Valve Flg.
9.	4" 90° Ell. Flg.
10.	4" Gate Valve Flg.
11.	4"x1'-0" D.I.P. Spool Flg.xP.E.
12.	4" FLg. Coup. Adapt. (Rockwell 913)
13.	4"x2'-0" D.I.P. Spool Flg.
14.	4" Medium Flow Pressure Reducing Valve Flg.
15.	2"x9" O.D. Reducing Flg. (I.P.T.)
16.	2" 90° Ell. F.I.P.
17.	2" Ball Valve F.I.P.
18.	2" Comp. Coup. (Rockwell 411)
19.	2" Companion Flg. (I.P.T.)
20.	2" Low Flow Pressure Reducing Valve Flg.
21.	2" Sched. 40 Stl. Pipe
22.	2" Pressure Relief Valve (See E-9-14-1)
23.	12"x36"x36" Conc. Thrust Block P.I.P.
24.	Pressure Gauge w/shut off valve

NOTE:

1. Use Rowley pipe supports or equivalent as needed. (See E-9-12-4)
2. Pipe support locations to be determined by field personnel.
3. Vault-612 LA top section w/12" Dia. sump hole. Cover-concrete slab top w/(4) 4'-0" x2'-6" aluminum spring loaded hinged style covers for non-traffic loading areas. For areas w/low density traffic, cover is to be designed for H-20 traffic loading.
4. All Sched. 40 Stl. pipe outside of vault to be wrapped w/10-20 Mil. Scotchwrap corrosion protection tape.
5. Use deflection fittings (45° Ells.) to achieve necessary depths & cover as shown on the standard specification for the installation of a concrete vault (E-9-12-5).

ARIZONA WATER COMPANY

STANDARD SPECIFICATION

FOR THE INSTALLATION OF

PRESSURE REDUCING STATION

DRAWN BY:	APPROVED BY:	DATE:	△	
JPK	MW	11-16-88	△ 9-27-95	E-9-15-1

1. Specific Items To Be Painted Deer-O Pure White Enamel:

A. All Booster Pumps.
B. All Electrical Motors And Gas Engines.
C. Well Pump Discharge Heads.
D. Electrical Panel.

2. Specific Items To Be Painted Frost Cap White Or Deer-O Pure White Enamel:

A. Well Shelter.

3. Specific Items To Be Painted OSHA Orange:

A. Electrical Conduit.

4. All Other Items To Be Painted With Either:
(At Manager's Discretion)

A. Cholla Green
B. Forest Green
C. Sonora Beige
D. Red Rock
E. Rock Brown
F. Deer-O Pure White
G. Elkhorn Cactus

ARIZONA WATER COMPANY

STANDARD SPECIFICATION
FOR THE INSTALLATION OF

PAINT COLOR SELECTION

DRAWN BY:	APPROVED BY:	DATE:	△	
CCO		3/20/1986	△ 2/13/2001	E-9-16-1

1. Tank shall conform to AWWA Specification D100-84 with exceptions noted below.

*2. 1/4" minimum shell plate.

3. Minimum of 12" diameter roof vent, screened with No. 16 non-corrodible wire mesh, to be located on a 24" diameter round hinged manhole opening at the center of the tank to provide access to the dollar plate.

4. Overflow pipe shall be the same diameter as the inlet pipe and shall terminate 12 to 24 inches above splash pad or a minimum of 2 overflow pipe diameters above weir box high water level.

5. Storage tank shall be placed upon adequately compacted base material.

6. 6" minimum floor mounted tank drain outlet to be located close to the outer shell.

7. Tank and related fittings shall be enclosed with a 6 foot chain link fence with lockable gates and anti-personnel wire on top of fence.

8. Liquid level shall be indicated by a target and target board on the outside surface of the tank.

9. 24 inch diameter manholes shall be provided on the roof and on the shell near the bottom of the tank. The roof manhole cover shall overlap the manhole by at least 2 inches to provide a rain tight closure. Roof manhole shall be hinged and equipped with a lock. Shell manhole cover to be hinged and bolted in place. *Tanks larger than a 60 foot diameter require 2 shell manholes.

10. Inside and outside ladders shall be located at the roof manhole. Outside ladder shall be caged with locking trap door. Bottom 8 feet of cage shall be enclosed to within 1/2" of shell with 10 gauge sheet steel.

11. Finished tank shall be disinfected in accordance with Arizona Department of Health Services Engineering Bulletin No. 8 before being placed into service.

12. The following information will be included with application for approval to construct:

    1. Tank location_____
    2. Tank height_____
    3. Tank diameter_____
    4. Tank capacity_____
    5. Method of water level control_____

13. The storage tank will not be constructed within the 100 year flood plain and the tank site will be graded to slope away from the tank.

14. The welded steel storage tank will be coated as per AWWA Specification D102, and N.S.F. Standard 61.

*Exceptions to AWWA Specification D100-84

FOUNDATION NOTES

1. FINISH CONCRETE SURFACE MUST SLOPE UPWARDS FROM THE STEEL BAND APPROX. 1" IN 10'-0".

2. TOP OF STEEL BAND MUST BE MAINTAINED LEVEL TO WITHIN 1/8".

3. INSTALL 8-2" DIA.x10'-0" P.V.C. WEEP LINES, EQUALLY SPACED (EVERY 45°). PERFORATE 8'-0" OF LINE WITH 1/2" DIA. HOLES @ 6" O.C. PLUG INTERIOR END OF LINE w/2" CAP.

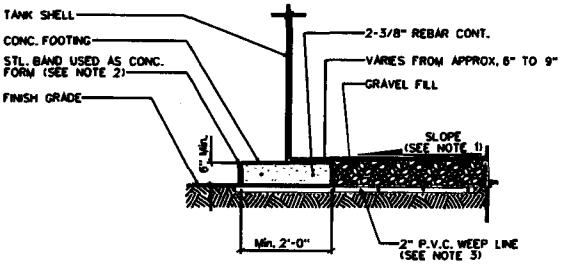

FOUNDATION DETAIL

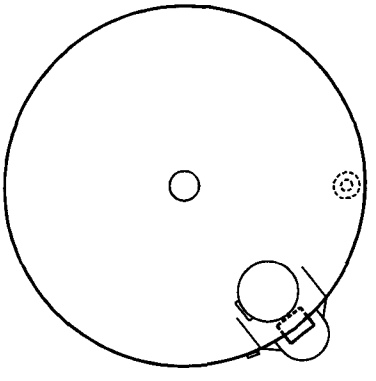

PLAN VIEW

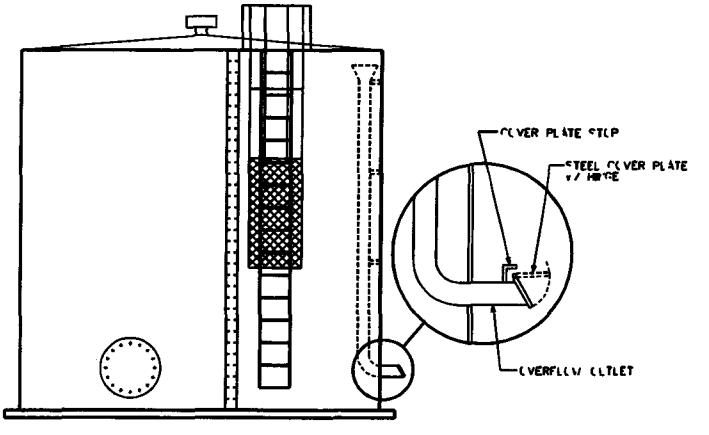

PROFILE VIEW

ARIZONA WATER COMPANY

STANDARD SPECIFICATION

FOR THE INSTALLATION OF

STEEL WATER STORAGE TANK

DRAWN BY:	APPROVED BY:	DATE:	△	
JPK	MJW	10-17-88	2-12-96	E-9-17-1

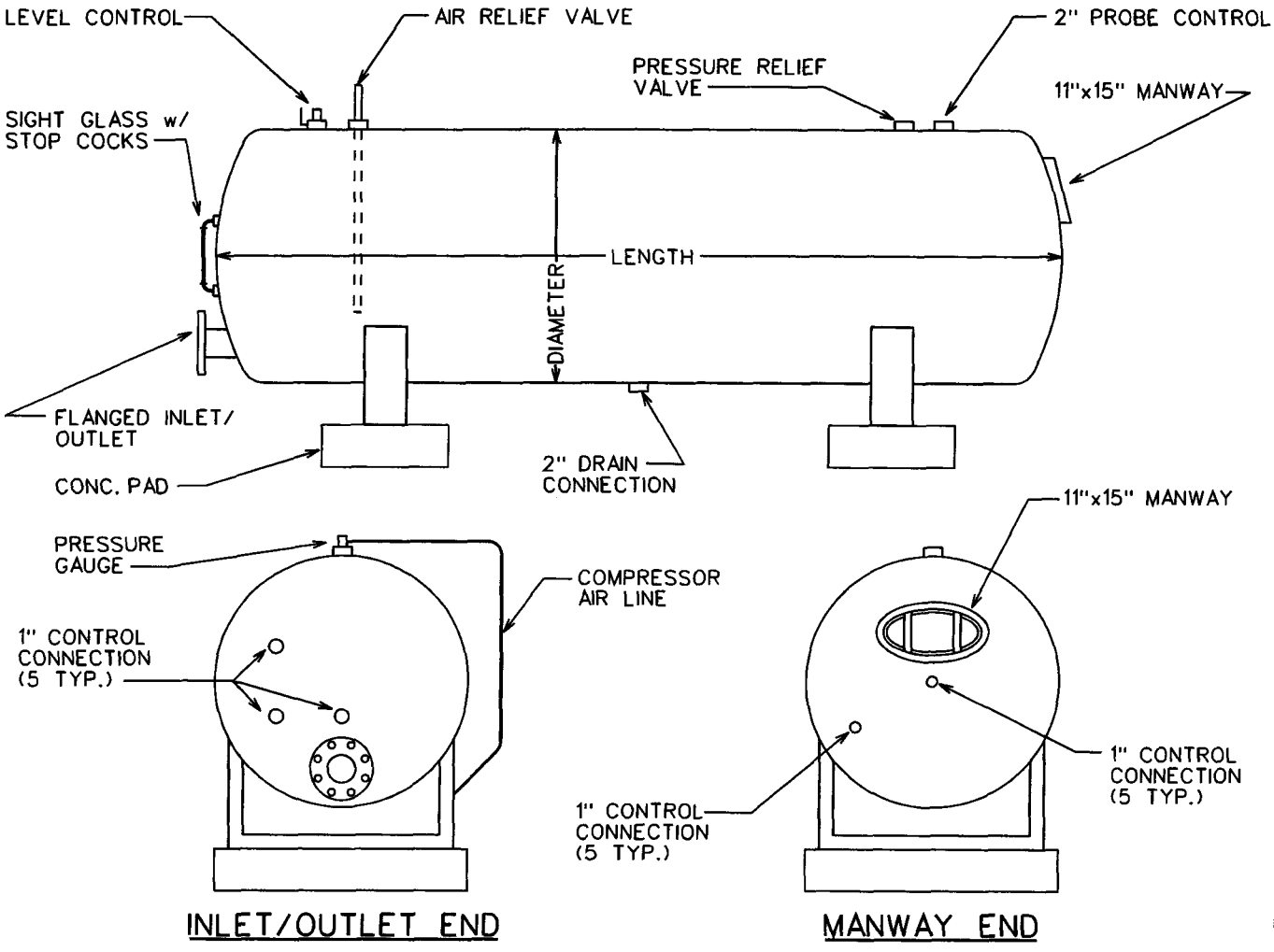

1. ALL HYDROPNEUMATIC TANKS SHALL BE DESIGNED & CONSTRUCTED IN ACCORDANCE WITH THE CURRENT REQUIREMENTS OF THE ASME CODE FOR UNFIRED PRESSURE VESSELS, SECTION VIII, DIVISION 1.
2. FINISHED TANK SHALL BE DISINFECTED IN ACCORDANCE WITH ADEQ BULLETIN No. 8 BEFORE BEING PLACED INTO SERVICE.
3. THE WELDED STEEL HYDROPNEUMATIC TANK WILL BE COATED AS PER AWWA SPECIFICATION D102 & NSF STANDARD 61.
4. THE FOLLOWING INFORMATION WILL BE INCLUDED WITH THE APPLICATION FOR APPROVAL TO CONSTRUCT.
   1. Tank Location _____
   2. Tank Length _____
   3. Tank Diameter _____
   4. Tank Capacity _____
   5. Maximum Working Pressure _____

ARIZONA WATER COMPANY

STANDARD SPECIFICATION
FOR THE INSTALLATION OF
HYDROPNEUMATIC TANK

DRAWN BY:	APPROVED BY:	DATE:	△ 01.16.2007	E-9-18-1
JPK	MW	3-20-1986		

NOT
CONVERTED
TO
CAD

ARIZONA WATER COMPANY

STANDARD SPECIFICATION
FOR THE INSTALLATION OF

WELL SHELTER

DRAWN BY:	APPROVED BY:	DATE:	△	
CB		03.20.1986	△04.03.2001	E-9-19-1

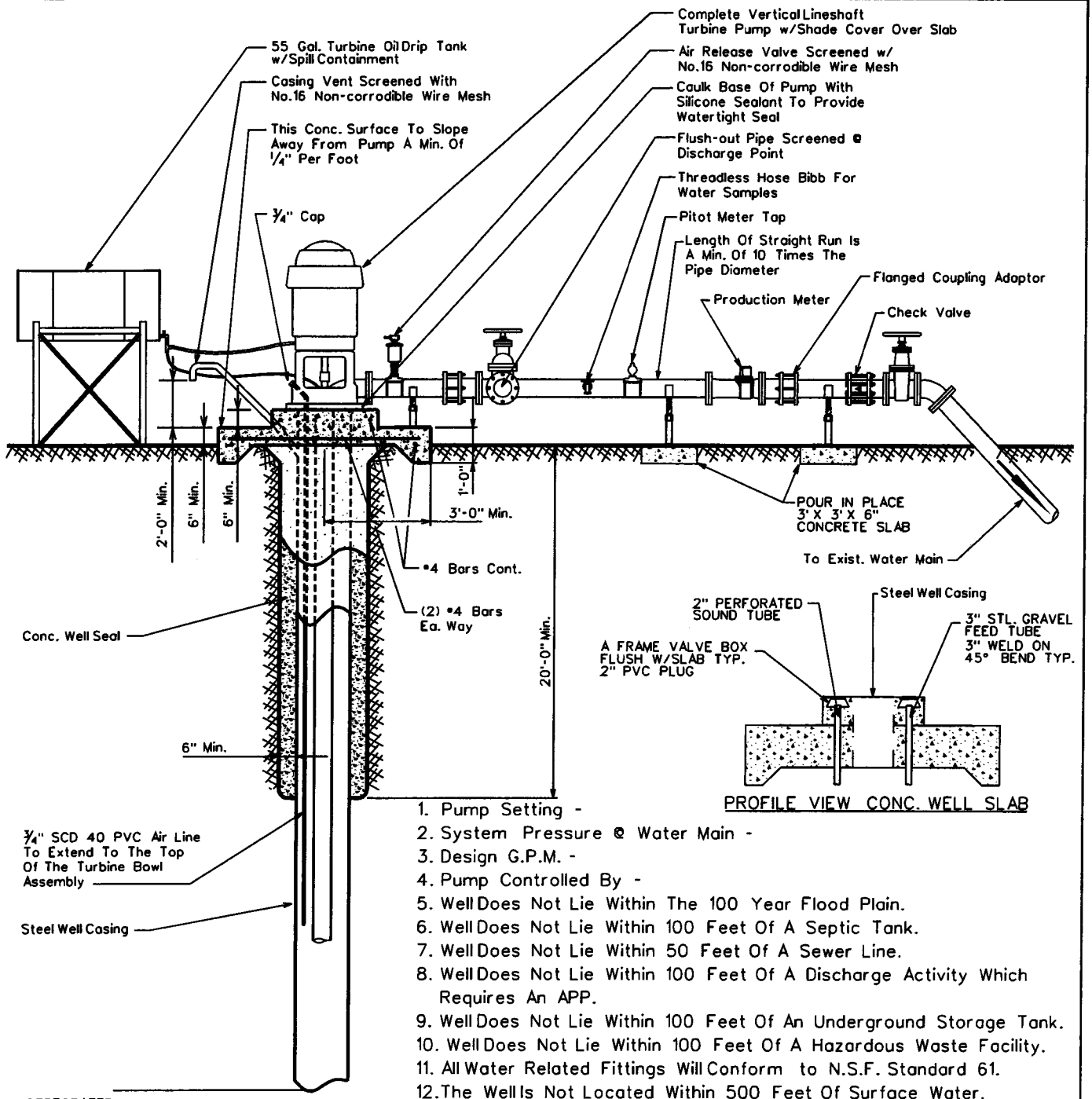

1. Pump Setting -
2. System Pressure @ Water Main -
3. Design G.P.M. -
4. Pump Controlled By -
5. Well Does Not Lie Within The 100 Year Flood Plain.
6. Well Does Not Lie Within 100 Feet Of A Septic Tank.
7. Well Does Not Lie Within 50 Feet Of A Sewer Line.
8. Well Does Not Lie Within 100 Feet Of A Discharge Activity Which Requires An APP.
9. Well Does Not Lie Within 100 Feet Of An Underground Storage Tank.
10. Well Does Not Lie Within 100 Feet Of A Hazardous Waste Facility.
11. All Water Related Fittings Will Conform to N.S.F. Standard 61.
12. The Well Is Not Located Within 500 Feet Of Surface Water.
13. The Site Will Be Graded To Provide Adequate Drainage Away From The Well.
14. 6.88 lbs. of Davis #8084 Grey Dye, Per Yard, For 2500 PSI Concrete

ARIZONA WATER COMPANY

STANDARD SPECIFICATION

FOR THE INSTALLATION OF

TYPICAL WELL W/ LINESHAFT TURBINE PUMP

DRAWN BY:	APPROVED BY:	DATE:	△	
JW	M.W.	3-20-86	9/15/04	E-9-20-1

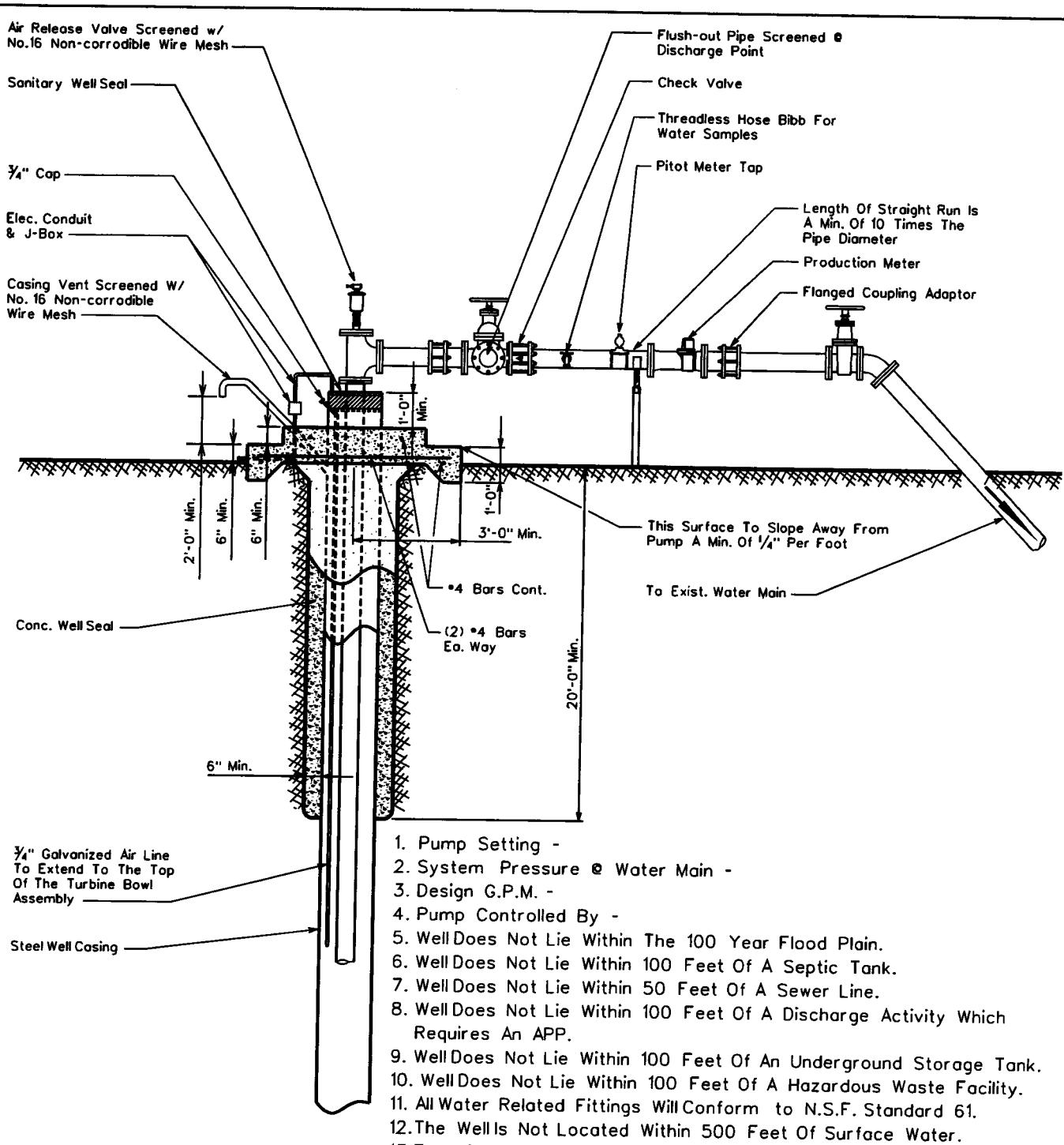

1. Pump Setting -
2. System Pressure @ Water Main -
3. Design G.P.M. -
4. Pump Controlled By -
5. Well Does Not Lie Within The 100 Year Flood Plain.
6. Well Does Not Lie Within 100 Feet Of A Septic Tank.
7. Well Does Not Lie Within 50 Feet Of A Sewer Line.
8. Well Does Not Lie Within 100 Feet Of A Discharge Activity Which Requires An APP.
9. Well Does Not Lie Within 100 Feet Of An Underground Storage Tank.
10. Well Does Not Lie Within 100 Feet Of A Hazardous Waste Facility.
11. All Water Related Fittings Will Conform to N.S.F. Standard 61.
12. The Well Is Not Located Within 500 Feet Of Surface Water.
13. The Site Will Be Graded To Provide Adequate Drainage Away From The Well.

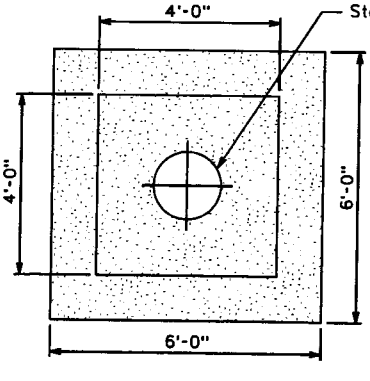

PLAN VIEW CONC. WELL SLAB

ARIZONA WATER COMPANY

STANDARD SPECIFICATION
FOR THE INSTALLATION OF

TYPICAL WELL W/ SUBMERSIBLE TURBINE PUMP

DRAWN BY:	APPROVED BY:	DATE:	△	
jpk	M.W.	3-20-86	2-16-01	E-9-21-1

All New Purchases To Conform To The Following:

Column Pipe

4" I.D. - 8	Threads	Per	Inch	Tapered	3/4"	Per	Foot	Right	Hand
6" I.D. - 8	"	"	"	"	"	"	"	"	"
8" I.D. - 8	"	"	"	"	"	"	"	"	"
10" I.D.- 8	"	"	"	"	"	"	"	"	"
12" I.D.- 8	"	"	"	"	"	"	"	"	"
14" I.D.- 8	"	"	"	"	"	"	"	"	"

Oil Tube - Peerless Type

1 1/2" O.D. - 14	Threads	Per	Inch	Right	Hand
2" O.D. - 12	"	"	"	"	"
2 1/2" O.D. - 10	"	"	"	"	"
3" O.D. - 10	"	"	"	"	"
3 1/2" O.D. - 10	"	"	"	"	"
4" O.D. - 10	"	"	"	"	"

Line Shaft

3/4" O.D. - 10	Threads	Per	Inch	Left	Hand
1" O.D. - 14	"	"	"	"	"
1-3/16" O.D. - 10	"	"	"	"	"
1-1/2" O.D. - 10	"	"	"	"	"
1-11/16" O.D. - 10	"	"	"	"	"
1-15/16" O.D. - 10	"	"	"	"	"
2-3/16" O.D. - 10	"	"	"	"	"
2-7/16" O.D. - 8	"	"	"	"	"

ARIZONA WATER COMPANY

STANDARD SPECIFICATION
FOR THE INSTALLATION OF

COLUMN PIPE, OIL TUBE AND LINE SHAFT

DRAWN BY:	APPROVED BY:	DATE:	△	
CCO		3/20/1996	2/13/2001	E-9-22-1

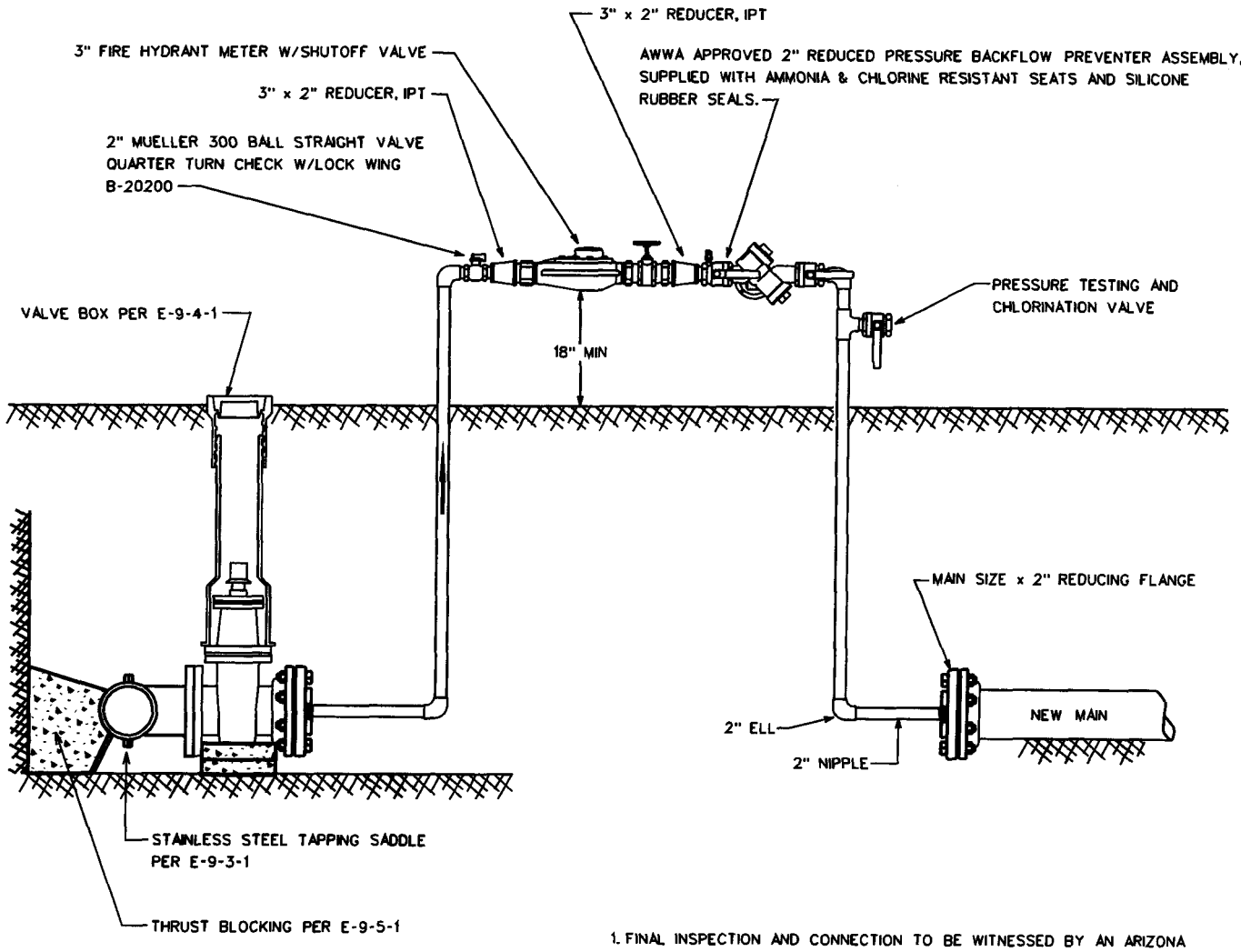

1. FINAL INSPECTION AND CONNECTION TO BE WITNESSED BY AN ARIZONA WATER COMPANY REPRESENTATIVE.
2. REDUCING FLANGES TO BE PROPERLY RESTRAINED.
3. INSTALL JUMPER TAP FOR TEMPORARY METER DOWNSTREAM OF THE REDUCING FLANGE FOR PRESSURE AND BACTEE TESTING.
4. JUMPER ASSEMBLY MUST BE A MINIMUM OF 18" ABOVE FINISHED GRADE.
5. BACKFLOW ASSEMBLY REQUIRES CERTIFICATION.
6. ASSEMBLY NOT TO BE REMOVED AND SPOOL PIECE INSTALLED FOR FINAL CONNECTION UNTIL ALL TESTING, BACTERIAL CLEARANCE AND FINAL INSPECTIONS HAVE BEEN OBTAINED.
7. ALL NEW PIPING SHALL BE PROPERLY RESTRAINED.

ARIZONA WATER COMPANY

STANDARD SPECIFICATION

FOR THE INSTALLATION OF

HOT TAP & JUMPER METER CONNECTION

DRAWN BY:	APPROVED BY:	DATE:	△	
CB	MJW	05.14.2004		E-9-23-1

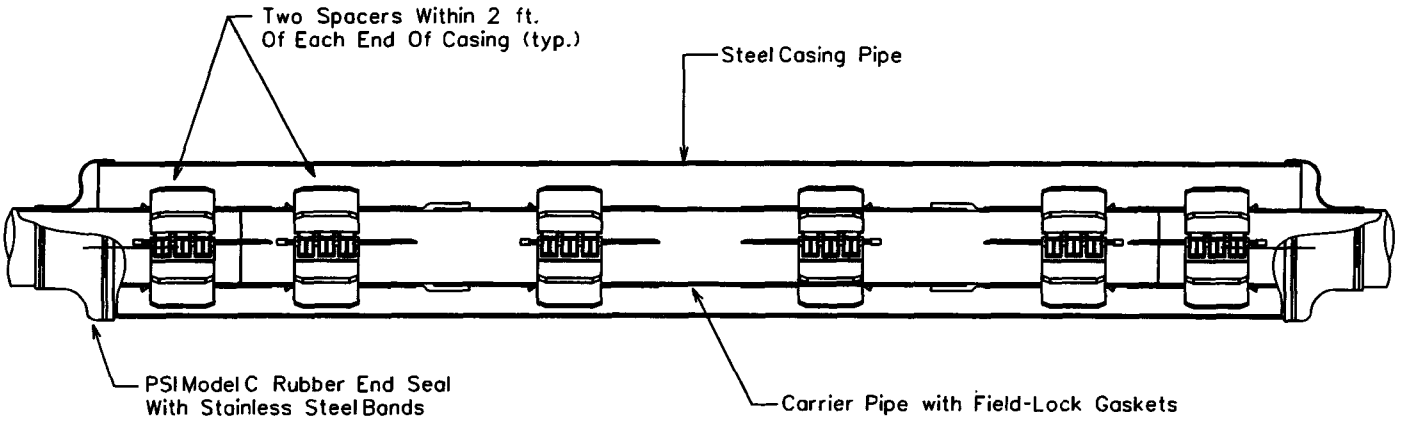

CROSS SECTION

The casing spacers shall be the PSI Ranger II Casing Spacers as manufactured by Pipeline Seal and Insulator, Inc., Houston, Texas.

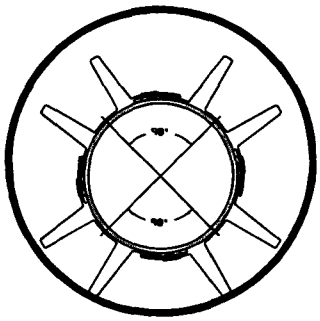

SECTION CUT

End Seals

After insertion of the carrier pipe into the casing, the ends of the casing shall be closed by installing 1/8" thick synthetic rubber end seals equal to the PSI Model "C" end seal as manufactured by Pipeline Seal and Insulator, Inc., Houston, Texas.

NOTE: The Carrier Pipe Shall Be Polywrapped Prior To The Skid Installation & Insertion Into The Carrier Casing For Divisions Requiring Polywrapped Pipe.

OD Push On Joint Bell	OD M.J. BELL
6" - 8.66"	6" - 11.12"
8" - 10.82"	8" - 13.37"
12" - 15.05"	12" - 17.94"
16" - 19.74"	16" - 22.56"
20" - 23.98"	20" - 27.08"
24" - 28.16"	24" - 31.58"
30" - 35.40"	30" - 39.12"
36" - 41.84"	36" - 46.00"
48" - 55.94"	48" - 60.00"

*Thickness Of Skid To Extend A Minimum of 1/2" Above The O.D. Of The Pipe Bell or Gland.

PIPE SIZE	CASING SIZE	CASING SIZE ID	CASING SCHEDULE	WALL THICKNESS	SKID SIZE
6"	16"	15.25"	STD.	.375	*x4x12
8"	18"	18.25"	STD.	.375	*x4x12
12"	22"	21.25"	STD.	.375	*x4x12
16"	28"	27.25"	STD.	.375	*x4x12
20"	32"	31.25"	STD.	.375	*x4x12
24"	36"	35.25"	STD.	.375	*x4x12
30"	48"	47.25"	STD.	.375	*x4x12
36"	54"	53.25"	STD.	.375	*x4x12
48"	66"	65.25"	STD.	.375	*x4x12

ARIZONA WATER COMPANY

STANDARD SPECIFICATION

FOR THE INSTALLATION OF

TYPICAL WATER LINE ENCASEMENT

DRAWN BY:	APPROVED BY:	DATE:	△ 09.27.2006	E-9-24-1
CB		3/20/1996		

CALCIUM HYPOCHLORITE TABLET CHLORINATOR FEEDER SPECIFICATIONS

SCOPE - This specification describes a ARCH Chemicals Calcium Hypochlorite Tablet Chlorination System as manufactured by ARCH Chemicals, 501 Merritt Seven, P.O. Box 5204, Norwalk, CT, 06856-5204.

DESCRIPTION - The chlorination system shall be completely assembled, ready to install. The chlorination system shall be a ARCH Chemicals Calcium Hypochlorite Tablet Feeder, or its equivalent, and shall be supplied with all its components factory mounted.

COMPONENTS - The Chlorination system shall have the following components:
A. 1-¼" ARCH Chemical solid calcium hypochlorite tablet feeder
B. Polyethylene system enclosure
C. Integrated, level controlled solution tank
D. Adjustable flow control valve
E. Manual on/off valve (at inlet)
F. Chemical metering pump
G. On/off pump control switch
H. Waterproof electrical junction box
I. Corrosion resistant schedule 40 piping
J. Reverse flow check valves
K. Total solution output control valve

ELECTRICAL FIXTURES - The following electrical fixtures shall be provided:
A. Safety switch, 2 pole, fused for 30 Amps, for 120 Volts, 60 cycle, single phase power.

CHLORINATOR DESIGN - The chlorination facility shall be designed and constructed in accordance with Arizona State Department of Health Engineering Bulletin Number 8 - "Disinfection of Water Systems". Latest Revision.

CHLORINATION EQUIPMENT - The chlorination equipment shall be a ARCH Chemicals Calcium Hypochlorite tablet chlorinator, approved by NSF Standard 61.

CHLORINATOR OPERATION - The chlorination facility shall be operated in accordance with Arizona State Department of Health Engineering Bulletin Number 8, "Disinfection of Water Systems", Table 1, latest revision.

CHLORINATOR SYSTEM DESCRIPTION - ARCH Chemicals tablet chlorinator systems incorporate a patented chlorinator which is designed to utilize ARCH Chemicals 1-¼" solid calcium hypochlorite tablets (Approved NSF Standard 60). Meets AWWA Standard B-300, EPA Registration # 1258-1179.The chlorinator is mounted on a polyethylene system enclosure. The inlet water is sprayed on the calcium hypochlorite tablet and collected in a solution tank. This chlorinated solution is then pumped out of the tank through a chemical metering pump. This metering pump is then adjusted to obtain the desired CL residual.

ARCH Chemicals Calcium Hypochlorite Tablet Chlorinator

NTS

HYPOCHLORINATOR COMPONENTS:

1. Chemical Metering Pump
2. Pump Suction Connection
3. Pump Discharge Connection
4. Inlet Water Assembly
5. Inlet Water Solenoid Valve
6. Inlet Shut-Off Valve
7. Inlet Pressure Regulator
8. Inlet Water Pressure Gauge
9. Spray Nozzle Water Pressure Gauge
10. Inlet Strainer
11. Inlet Tubing Connection
12. Dry Chemical Hopper
13. Suction Line
14. Electrical Control Box With Power On/Off
15. Electric Mixer
16. Solution Discharge Connection
17. Tank Drain Valve
18. Observation Port
19. Mixed Chemical Holding Tank
20. Pressure Relief Valve
21. Pump Speed Control
22. High Level Shut-Off Float Switch
23. Water Spray Nozzles

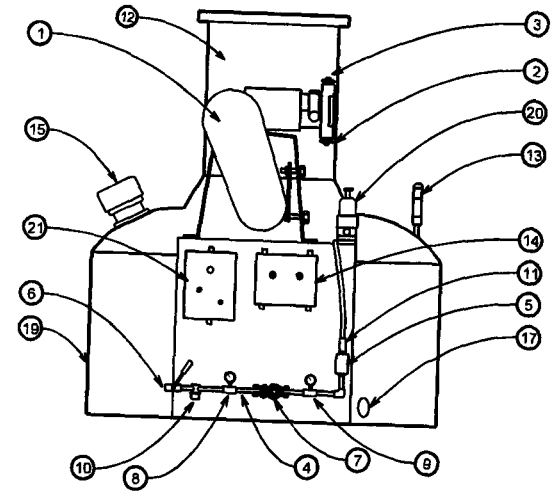

FRONT VIEW

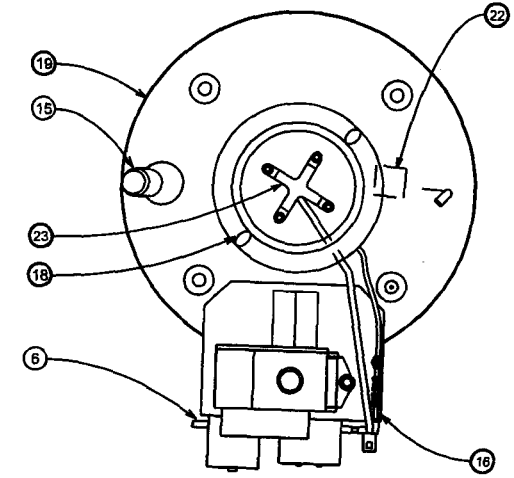

TOP VIEW
HOPPER REMOVED FOR CLARITY

Chlorinator Fluid Schematic

NTS

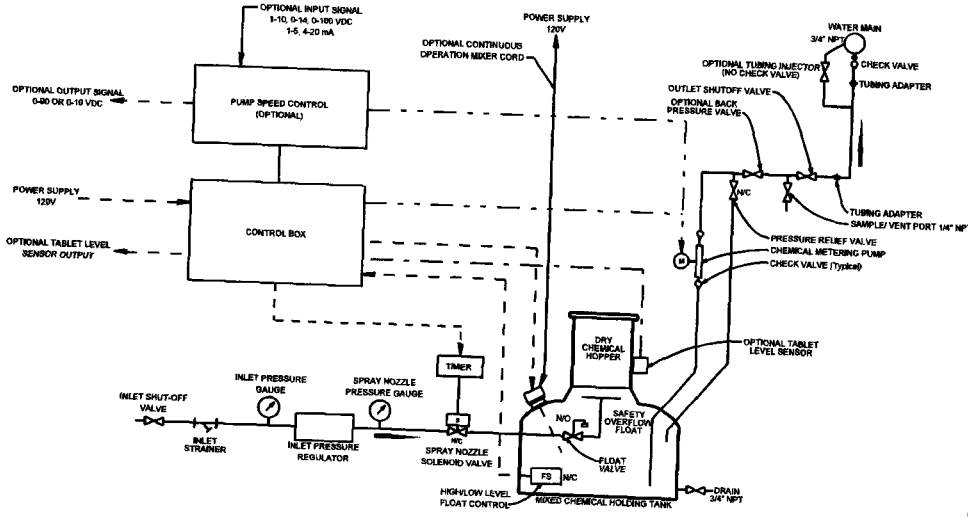

ARIZONA WATER COMPANY

STANDARD SPECIFICATION
FOR THE INSTALLATION OF
CALCIUM HYPOCHLORITE TABLET CHLORINATOR

DRAWN BY:	APPROVED BY:	DATE:	△	
CB	MW	02-09-2000		E-9-25-1

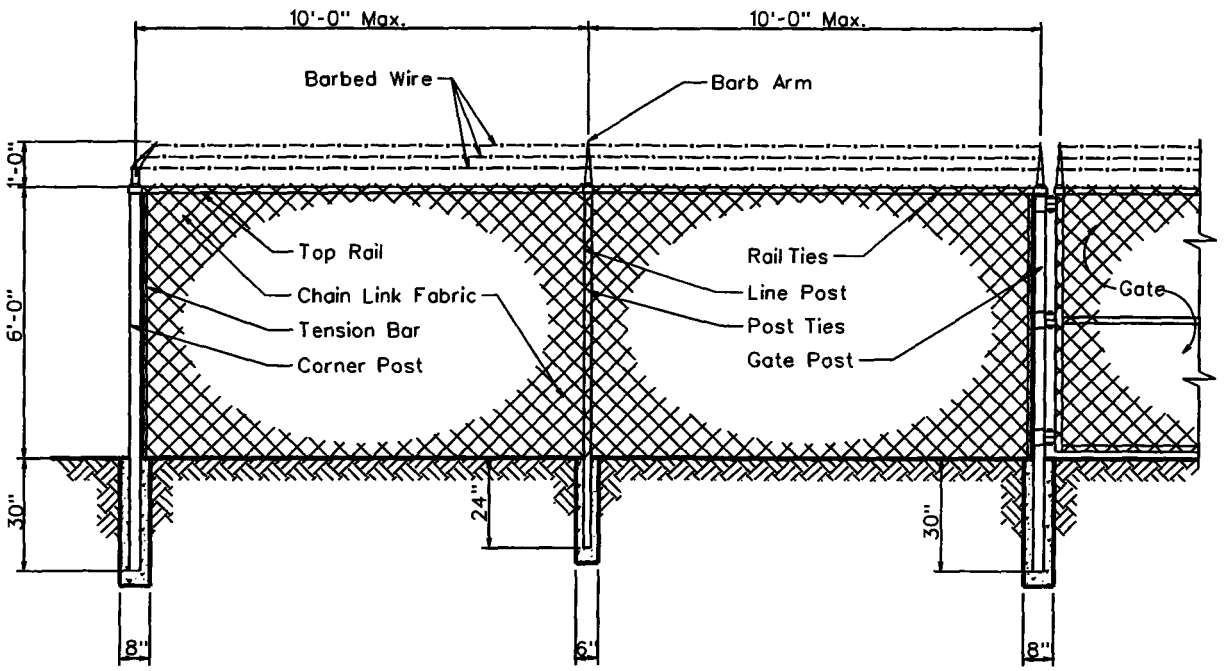

Line Post:	1-7/8" O.D.	1.74 lbs. P/L.F.	ASTM A-256
End Post:	2-7/8" O.D.	4.64 lbs. P/L.F.	ASTM A-256
Corner Post:	2-7/8" O.D.	4.64 lbs. P/L.F.	ASTM A-256
Gate Post:	2-7/8" O.D.	4.64 lbs. P/L.F.	ASTM A-256
Top Rail:	1-5/8" O.D.	4.64 lbs. P/L.F.	ASTM A-256
Chain Link Fabric:	9 Ga. 2" Mesh Galv. Before Weave		
Selvage:	Barb/Knuckle		
Fittings:	Pressed Steel		
Barb Wire:	2-1/2 Ga./2 Point		
Barb Arm:	1 Piece/45° Arm		
Tension Wire:	9 Ga./Galv.		
Line Post Set:	6"x24" In Concrete		
Terminal Post Set:	8"x30" In Concrete		

ARIZONA WATER COMPANY

STANDARD SPECIFICATION
FOR THE INSTALLATION OF

CHAIN LINK FENCE

DRAWN BY:	APPROVED BY:	DATE:	△	
CCO	MW	7/7/1992	△ 2/9/2001	E-9-26-1

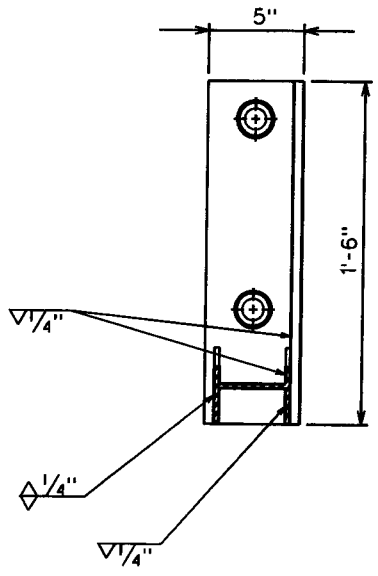

SECTION X-X

NOTES

1. Minimum 2 Supports Per Joint Of Pipe.
2. All Bolts Shall Have A Lock Washer Under The Nut.
3. All Nuts Shall Be Stainless Steel Series 304.

PIPE SIZE	A	B
8"	8"	15"
10"	9"	17"
12"	10"	19"

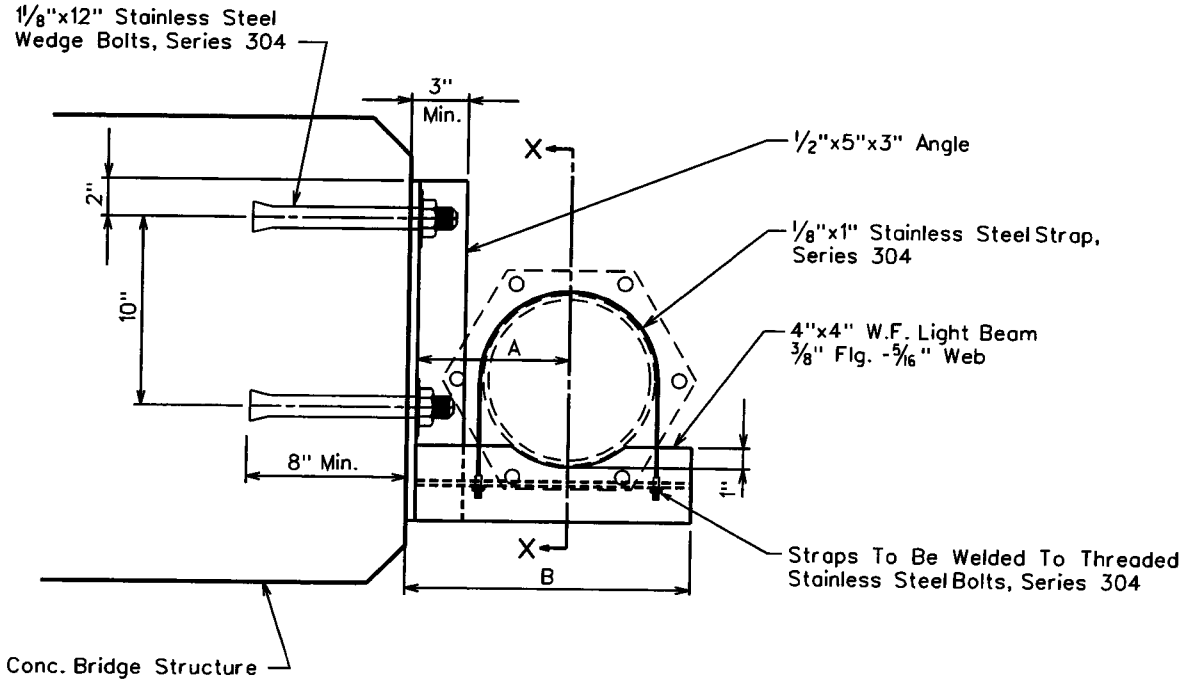

SUSPENSION DETAIL

ARIZONA WATER COMPANY

STANDARD SPECIFICATION
FOR THE INSTALLATION OF

SIDE HUNG WATER LINE SUSPENSION

DRAWN BY:	APPROVED BY:	DATE:	△	
JPK	MJW	7-12-96		E-9-27-1

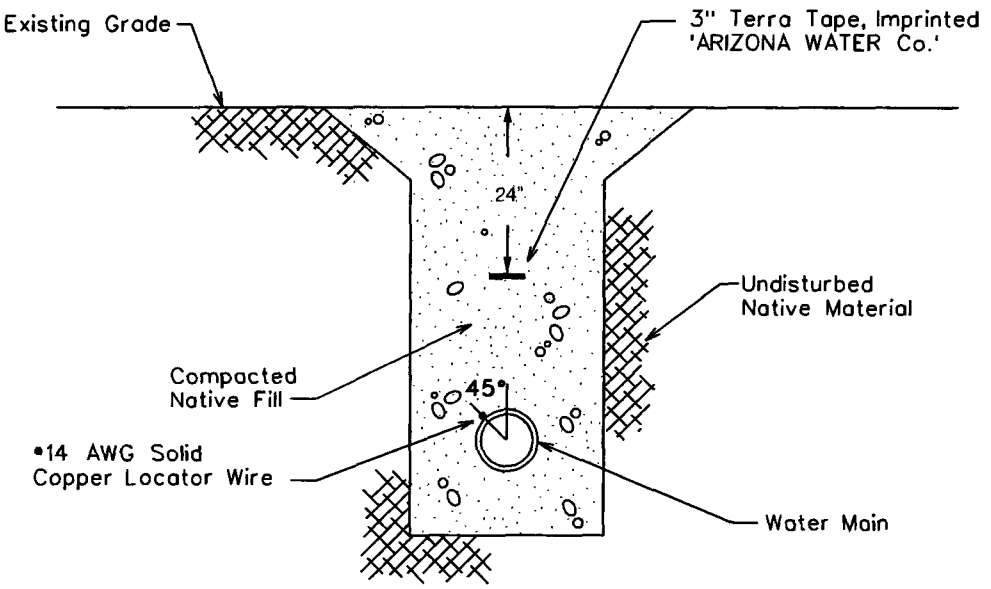

TYPICAL WATER TRENCH DETAIL

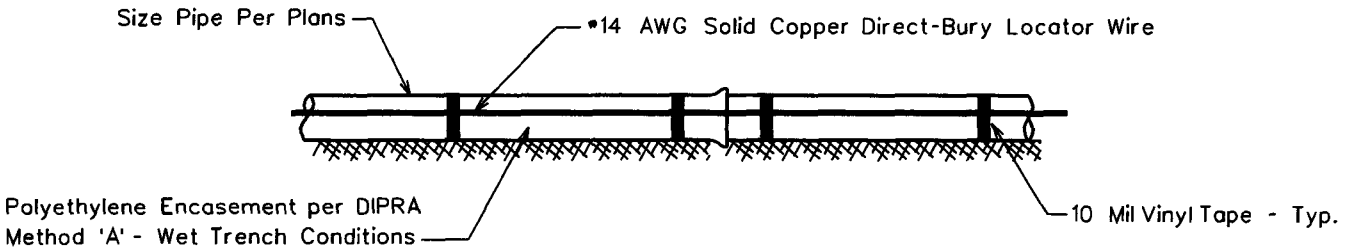

TYPICAL PROFILE VIEW

WIRE GENERAL NOTES:

1. All pipe shall have #14 AWG Solid Copper Direct-Bury Locator Wire Installed Directly To The Polywrap At 45° From The Vertical Center Of The Pipe and Shall Be Attached Using 10 Mil Vinyl Tape.
2. The Locating Wire Shall Terminate At the Top Of Each Valve Box and Be Capable of Extending 12" Above the Top Of The Box In Such A Manner So As Not To Interfere With Valve Operation.

TAPE GENERAL NOTES:

1. Use Terra Tape 3" Marking Tape As Manufactured By Reef Industries Inc. Of Houston, Texas (1-800-231-2417)
2. The Tape Is Blue & Imprinted 'ARIZONA WATER Co.'
3. INSTALLATION: The Pipe Warning Tape Shall Be Installed Over All Water Mains And Shall Be Buried 24 Inches Below The Surface Over The Center Of The Pipe.
   A) The Backfill Shall Be Sufficiently Leveled So That The Tape Is Installed On A Flat Surface.
   B) The Tape Shall Be Centered In The Trench With The Printed Side Up.
   C) Care Shall Be Exercised To Avoid Movement Of The Tape While The Remaining Backfill Is Moved Into The Trench.

ARIZONA WATER COMPANY

STANDARD SPECIFICATION
FOR THE INSTALLATION OF

PIPE WARNING TAPE AND LOCATOR WIRE

DRAWN BY:	APPROVED BY:	DATE:	△09.27.2006	E-9-28-1
CB		03.24.1997		

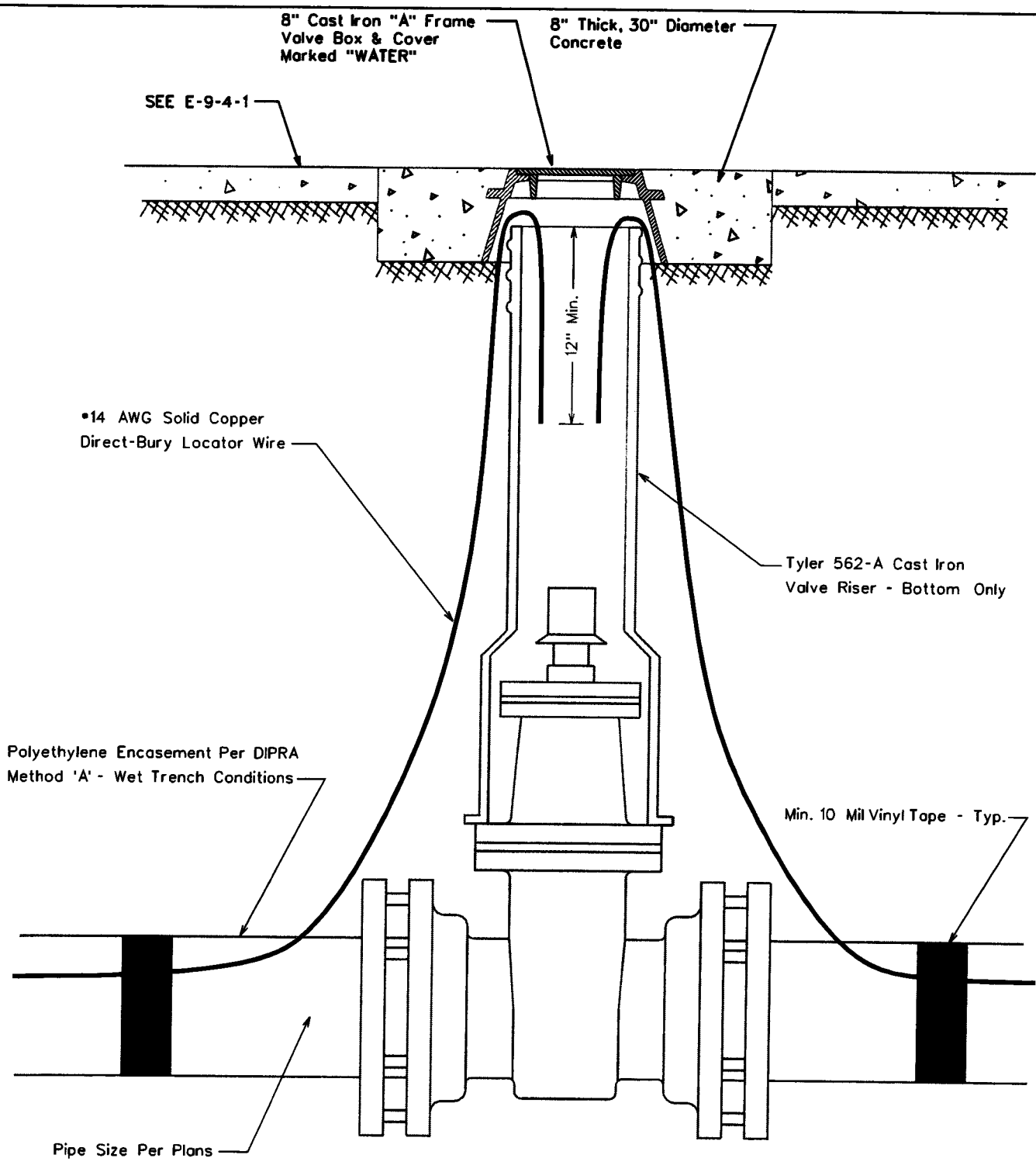

ARIZONA WATER COMPANY

STANDARD SPECIFICATION

FOR THE INSTALLATION OF

LOCATOR WIRE TERMINATION

DRAWN BY:	APPROVED BY:	DATE:	△	
CB		09.27.2006		E-9-28-2

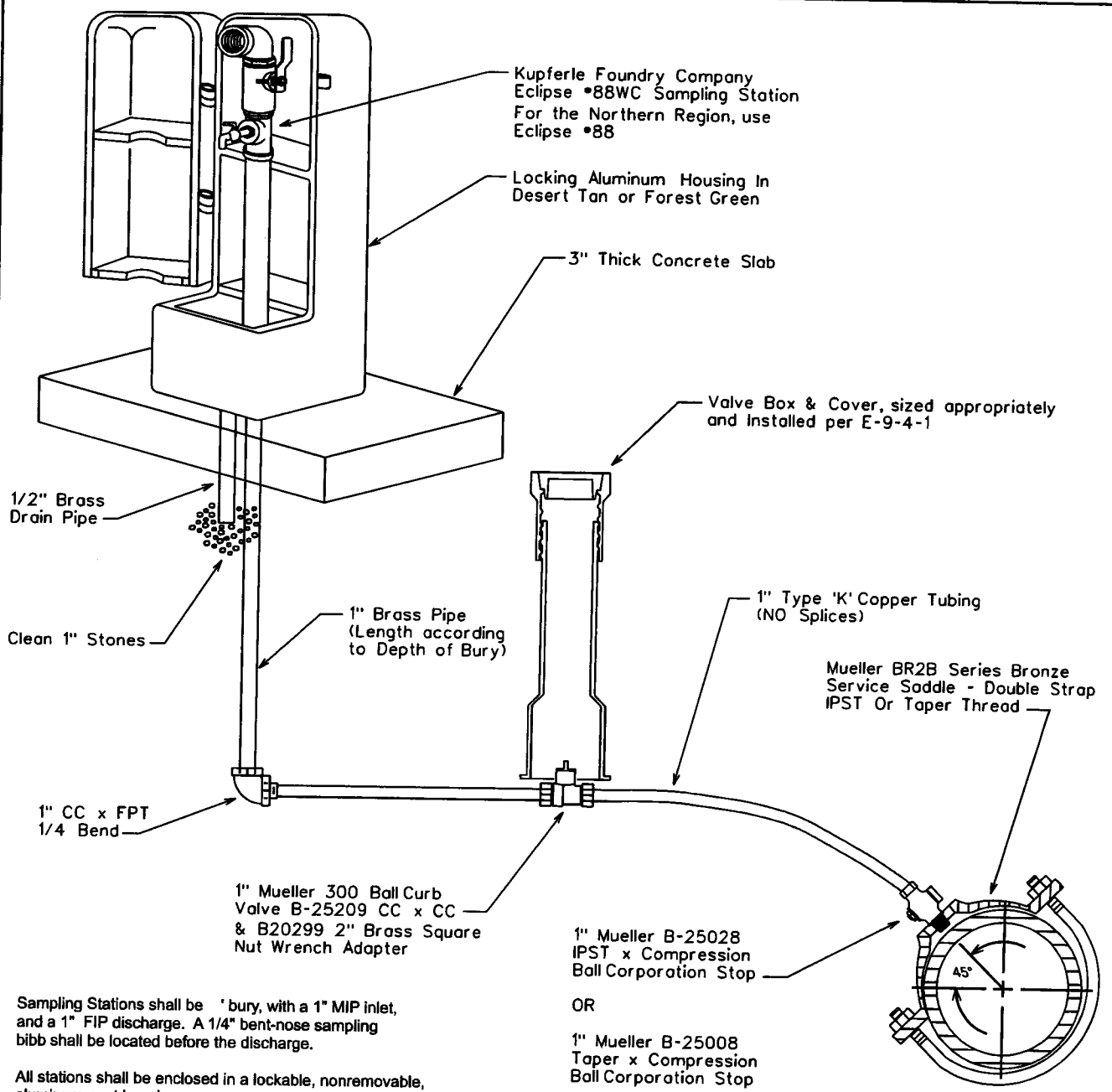

Sampling Stations shall be ' bury, with a 1" MIP inlet, and a 1" FIP discharge. A 1/4" bent-nose sampling bibb shall be located before the discharge.

All stations shall be enclosed in a lockable, nonremovable, aluminum-cast housing.

When opened, the station shall require no key for operation, and the water will flow in an all brass waterway.

All working parts will be of brass and serviceable from above ground with no digging. (OPTIONAL: if desired, a 1/2" brass drain tube will be provided within the locking cover).

A 1" ball valve will control the water flow, and be located before (or after) the sampling bibb, as manufactured by Kupferle Foundry, St. Louis, MO 63102.

SADDLE TAP TO CA, PVC, OR DI PIPE

NOTE: The minimum distance between taps on mains other than ductile iron is 12"

Pipe Depth Per
E-8-1-2, Item 3.

ARIZONA WATER COMPANY

STANDARD SPECIFICATION
FOR THE INSTALLATION OF

SAMPLING STATION

DRAWN BY:	APPROVED BY:	DATE:	△	
CB	MW	01.24.2007		E-9-29-1

ENCASEMENT FOR PIPE CROSSING

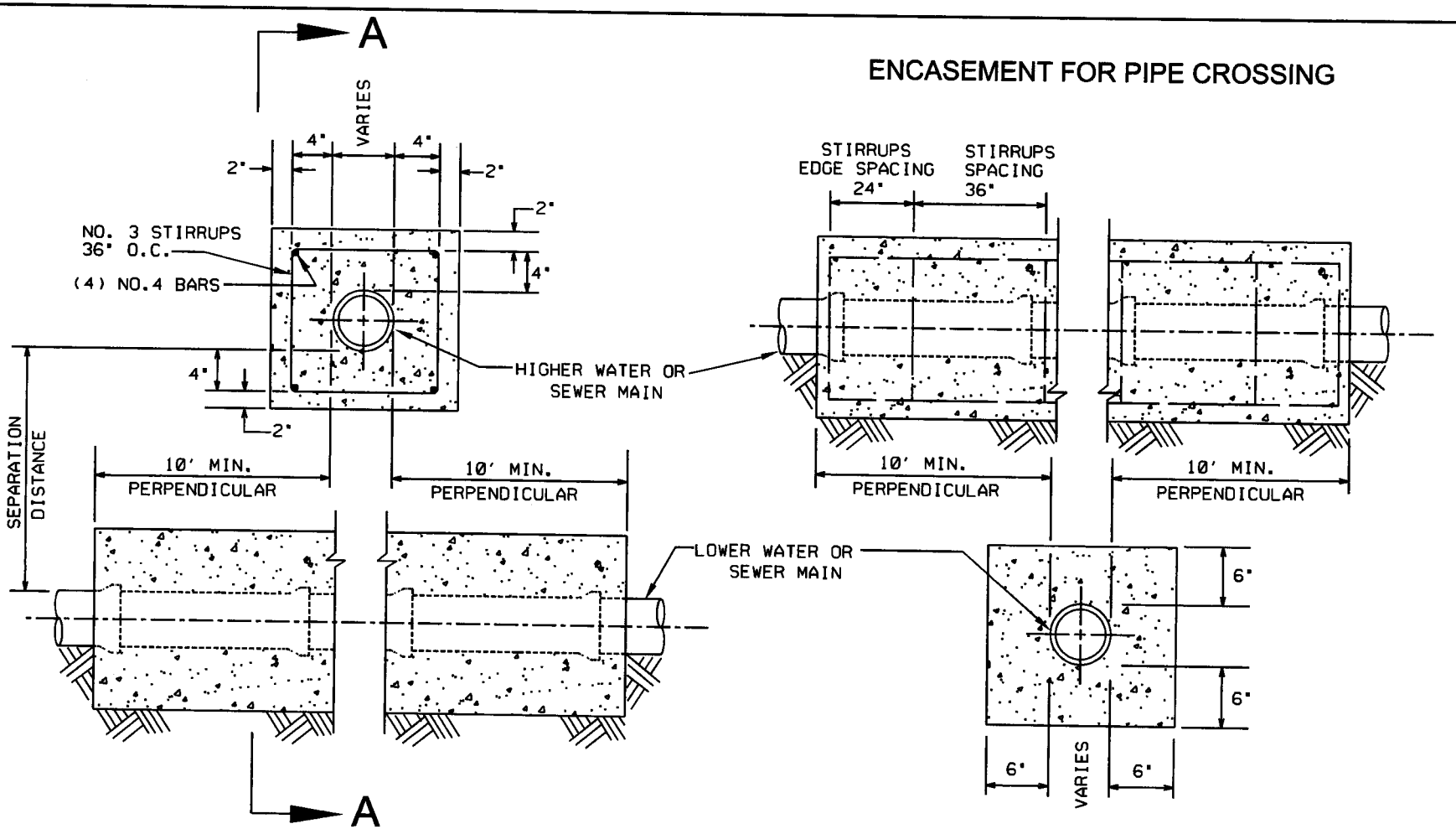

SECTION A-A

NOTES:

1. 2,000 PSI CONCRETE
2. SEPARATION DISTANCES AND/OR OTHER EXTRA PROTECTION SHALL BE REQUIRED TO PROTECT WATER MAINS FROM CONTAMINATION BY SANITARY SEWER MAINS. SEE AWC STANDARD SPECIFICATION PAGES E-8-1-9 AND E-8-1-10.
3. SEE CROSS SECTION DETAIL FOR LIMITS OF SEPARATION/EXTRA PROTECTION. ALL DISTANCES ARE MEASURED PERPENDICULARLY FROM THE OUTSIDE OF THE PIPES.
4. RECLAIMED WATER SHALL BE CONSIDERED A SANITARY SEWER WHEN PLACED NEXT TO A POTABLE WATER MAIN.

ARIZONA WATER COMPANY

STANDARD SPECIFICATION
FOR THE INSTALLATION OF
WATER AND SANITARY SEWER
SEPARATION/PROTECTION

DRAWN BY:	APPROVED BY:	DATE:	△	
CB	JW	04.07.2008		E-9-30-1

NOTES:

1. 2,000 PSI CONCRETE

2. SEPARATION DISTANCES AND/OR OTHER EXTRA PROTECTION SHALL BE REQUIRED TO PROTECT WATER MAINS FROM CONTAMINATION BY SANITARY SEWER MAINS. SEE AWC STANDARD SPECIFICATION PAGES E-8-1-9 AND E-8-1-10.

3. SEE CROSS SECTION DETAIL FOR LIMITS OF SEPARATION/EXTRA PROTECTION. ALL DISTANCES ARE MEASURED PERPENDICULARLY FROM THE OUTSIDE OF THE PIPES.

4. RECLAIMED WATER SHALL BE CONSIDERED A SANITARY SEWER WHEN PLACED NEXT TO A POTABLE WATER MAIN.

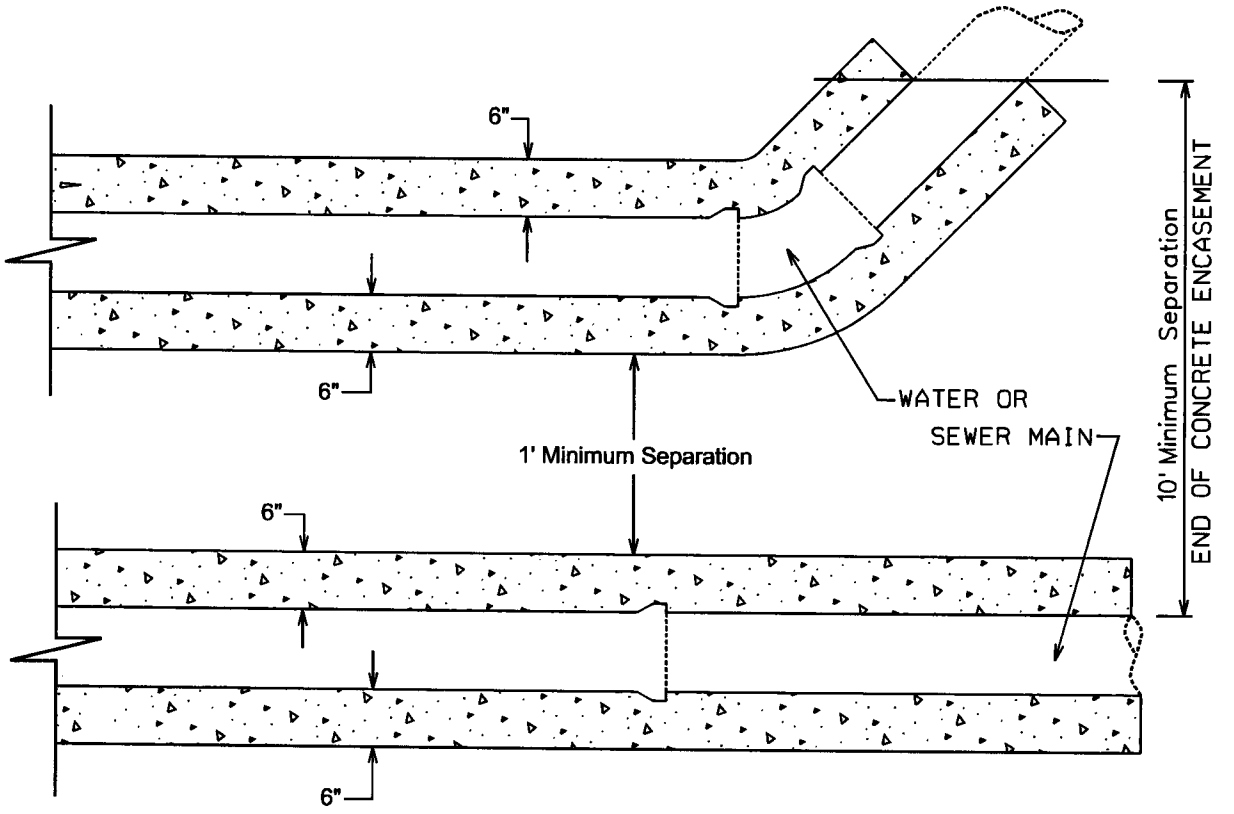

PLAN VIEW

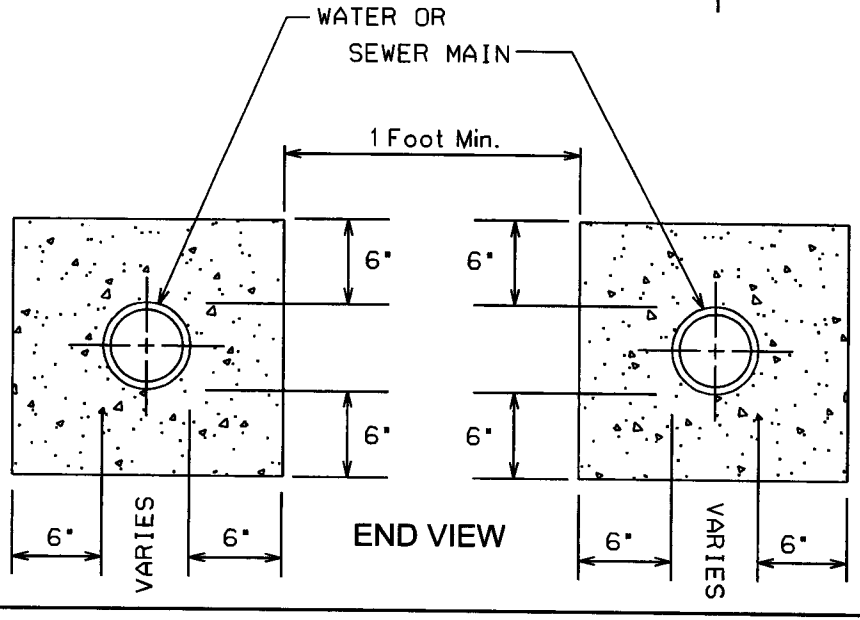

END VIEW

ENCASEMENT FOR PARALLEL PIPES

ARIZONA WATER COMPANY

STANDARD SPECIFICATION
FOR THE INSTALLATION OF
WATER AND SANITARY SEWER
SEPARATION/PROTECTION

DRAWN BY:	APPROVED BY:	DATE:	△	
CB	JW	04.07.2008		E-9-30-2

YAVAPAI COUNTY

Development Services
Prescott - (928) 771-3214 Fax: (928) 771-3432
Cottonwood - (928) 639-8151 Fax: (928) 639-8153

Flood Control District
Prescott -(928) 771-3197 Fax: (928) 771-3427
Cottonwood - (928) 639-8151 Fax: (928) 639-8118

500 S. Marina Street, Prescott, AZ 86303 and 10 S. 6th Street, Cottonwood, AZ 86326
Addressing – Building Safety – Customer Service & Permitting – Environmental – Flood Control District – Land Use – Planning & Design Review

CERTIFICATE OF APPROVAL TO CONSTRUCT WATER FACILITIES

Y. C. D. S. E.U. File No: A52009001236	**APN: 800-16-003P**
System Name: Arizona Water Company – Sedona	**03-003**
System Owner/Address: Az Water Co., 3805 N. Black Canyon Hwy., Phoenix, AZ 85015	
Project Name: Harmony-Windsong Water Line Replacement	
Project Owner/Address: Az Water Co., 3805 N. Black Canyon Hwy., Phoenix, AZ 85015	
Project Location: Sedona, Arizona	
Project Description: Lower and replace existing water distribution system with 6", 8" and 12" DIP at various locations along the Harmony Hills Drainage Channel.	

Approval to construct the above-described facilities, as represented in the approved plan documents on file at Yavapai County Development Services- Environmental Unit, is hereby subject to the following Provisions:

- Construction shall be in accordance with plans and specifications stamped "YCDS-EU Construction Authorization (Approval to Construct)", which are dated and signed by the authorized Environmental Unit staff.
- Issuance of this "Approval to Construct" does not authorize construction in any County, Town, City or State road rights-of-way for this project. A separate permit may be required. Please contact the appropriate jurisdiction for this permit.

Provisions are continued on following pages.

The state law, A. R. S. §49-104.B.10, requires that construction of the project must be in accordance with rules and regulations of Arizona Department of Environmental Quality and Yavapai County Development Services-Environmental Unit. If construction has not started within one year of the date of this approval, this certificate will be void and a written extension of time shall be required.

9/30/09
Date Approved

Geoff Meek, RS, Manager
Environmental Unit

CC: Project Owner
System Owner
Engineer
Public Works: Foster Thrift

Revised on 9/28/2009 11:50:00 AM

- The Project Owner shall retain the services of a professional engineer before starting project construction to provide detailed construction inspection of this project. Upon completion of construction, the engineer shall fill out the Engineer's Certificate of Completion and forward it to the Environmental Unit staff with sealed "As- Built" plans, construction and test data. "clouding" or other effective identification method shall conspicuously identify the changes shown in the "as-built" plans. Upon receipt of these materials, the Environmental Unit staff will review the file and if in order, issue an APPROVAL TO OPERATE.
- The Project Owner shall not begin operation of the newly constructed facility until an APPROVAL TO OPERATE is issued by the Department.
- Approval to Construct is based on plans submitted by Arizona Water Company , signed by James T. Wilson, PE, and dated August 14, 2009.
- Microbiological testing must be completed in accordance with AWWA requirements.
- System must have an agreement with an appropriate Certified Operator for system operation.
- This approval does not supersede or eliminate the necessity of obtaining permits or approvals from other county, state or federal agencies or departments.