ORIGINAL

GILA BEND POWER PARTNERS, LLC
5949 Sherry Lane, Suite1900
Dallas, Texas 75225-6553
Telephone: (214) 210-5000
Facsimile: (214) 210-5087

0000138125

RECEIVED
AZ CORP COMMISSION
DOCKET CONTROL

2012 JUL 20 PM 1 17

July 16, 2012

Arizona Corporation Commission
DOCKETED
JUL 20 2012
DOCKETED BY DM

VIA OVERNIGHT DELIVERY

Arizona Corporation Commission
Utilities Division
1200 West Washington Street
Phoenix, Arizona 85007
Attention: Ernest Johnson, Director

Re: Self-Certification Letter
Arizona Corporation Commission – Decision #63552, as amended by Decision #69177, and 72189; Docket Control #L-00000V-00-0106-00000 AND L-00000V-01-0109

Dear Mr. Johnson:

Gila Bend Power Partners, LLC ("GBPP" or "Applicant") submits this self-certification letter pursuant to the above Decision Number for the Certificate of Environmental Compatibility ("CEC") for GBPP's project in Gila Bend, AZ.

On or about December 5, 2006, the Arizona Corporation Commission issued Decision Number 69177 extending the expiration date of this CEC until February 7, 2011 (the "First Extension Order"), and the CEC was subsequently extended to February 7, 2018 pursuant to ACC Decision Number 72189 docketed February 15, 2011 (the "Second Extension Order"). The First Extension Order added nine additional conditions to the existing CEC, including among them the requirement that GBPP file a self-certification letter on or before August 1, 2007 and each August 1st thereafter describing the conditions met as of June 30 for the reporting year. The First Extension Order did not specifically state whether the new August self-certification letter was *in addition to* or *in lieu of* the annual certification letter GBPP has filed each February, nor did it indicate which of the CEC conditions were to be addressed in each letter. As it has in years past, GBPP is filing this self-certification letter addressing the original CEC conditions and will file an additional August letter addressing GBPP's compliance efforts as of June 30th with the CEC conditions contained in the First Extension Order. The Second Extension Order does not add any additional conditions necessitating self-certification.

The activities relating to the conditions established by the Extension Order are as follows and the reference numbers correspond to the conditions as numbered in the Extension Order:

19. GBPP is filing this self-certification letter prior to August 1st, describing conditions that have been met as of June 30. This letter with the documents

enclosed herewith explains or demonstrates compliance efforts for those conditions fulfilled or in the process of being fulfilled.

20. GBPP reports the status of its continuing actions to comply with Condition Numbers 1, 3, 4, 14 and 17 from Decision # 63552:

Condition 1. The construction of the power generation station has been delayed due to market conditions; however, its construction and operation will comply with applicable air and water pollution control standards and regulations, and with all applicable ordinances, master plans, and regulations of the State of Arizona, the County of Maricopa, the United States, and any other governmental entity having jurisdiction.

Condition 3. Not applicable at this time. GBPP is still in the planning phase and has not yet commenced construction of the plant and therefore a technical study regarding the sufficiency of the transmission capacity to the plant is premature and study results would be uncertain. GBPP will provide the Commission with such a study 12 months prior to the commercial operation of the plant.

Condition 4. GBPP has not yet entered into an interconnection agreement with a transmission provider. The interconnect agreement with the transmission provider will be submitted to the Arizona Corporation Commission when completed and signed.

Condition 14. GBPP has identified several researchers at nearby Arizona institutions of higher education as potential partners for research on salt cedar-resistant vegetation. As GBPP has not yet begun construction of its facilities, it has not yet established new vegetation to be subject to such study.

Condition 17. GBPP continues to monitor the energy needs in the area and recognizes the importance of the transmission line being completed in accordance with the needs of the integrated transmission grid. GBPP has met with representatives from SRP and a solar power project in the Gila Bend area to assess and evaluate the market as well as explore opportunities for synergy in the transmission of power in the integrated transmission grid. In addition, GBPP intends to monitor and participate in discussions regarding the Gila Bend Transmission Initiative.

21. GBPP has annually filed all required ten-year plans with the Commission in accordance with A.R.S. §40-360-2.A., a copy of the most recent of which is enclosed. Historical copies of ten year plans are available on request.

22. GBPP has not entered into a contract for capacity and energy production out of its plant.

23. GBPP has not identified an appropriate workshop or other assessment of the natural gas infrastructure. GBPP will participate in any upcoming Commission-sponsored natural gas infrastructure workshops and requests the Staff advise of those that would be appropriate for GBPP to attend.

24. GBPP will pursue all necessary steps to ensure a reliable supply and delivery of natural gas for its plant.

25. GBPP made the required request to El Paso Natural Gas Company and filed its letter and El Paso's response with the Commission on or about March 12, 2007.

26. Once operational, GBPP will offer as Ancillary Services, a total of 10% of its total plant capacity to: (a) the local control area with which it is interconnected, and (b) Arizona's regional ancillary services market (i) once a Regional Transmission Organization (RTO) is declared operational by FERC order, and (ii) until such time that an RTO is so declared, to a regional reserve sharing pool.

27. GBPP has not initiated or pursued a legal challenge to any of the conditions contained in the First Extension Order.

Should you need any additional information, please do not hesitate to contact the undersigned.

Regards,

GILA BEND POWER PARTNERS, LLC
By: Sammons Power Development, Inc.,
Its: Its Managing Member

By: Heather Kreager
Heather Kreager, President

Enclosures

cc: Arizona Attorney General (w/encls.)
Department of Commerce Energy Office (w/encls.)
Arizona Department of Water Resources (w/encls.)

GILA BEND POWER PARTNERS, LLC
5949 Sherry Lane, Suite1900
Dallas, Texas 75225-6553
Telephone: (214) 210-5000
Facsimile: (214) 210-5087

January 30, 2012

VIA OVERNIGHT DELIVERY

Arizona Corporation Commission
Utilities Division
1200 West Washington Street
Phoenix, Arizona 85007

Re: 10-YEAR TRANSMISSION PLAN-2012

Gentlemen:

Enclosed please find 13 copies of the 10-Year Transmission Plan–2012 for Gila Bend Power Partners, LLC. The project is on hold due to current market conditions, so the plan has not been revised since Gila Bend's prior submission.

If you need anything further, please let me know.

Yours truly,

HEATHER KREAGER

HK:lk

GILA BEND POWER PARTNERS, LLC
5949 Sherry Lane, Suite 1900
Dallas, Texas 75225-6553
Telephone: (214) 210-5000
Facsimile: (214) 210-5087

January 30, 2012

Arizona Corporation Commission
Docket Control, Room 108
1200 West Washington Street
Phoenix, Arizona 85007

Re: Transmission Line 10-year Plan – 2012
Docket No. E-00000D-09-0020

Gentlemen:

Gila Bend Power Partners, LLC is planning to build a 500KV Transmission line and related switchyard as part of the Gila Bend Power Project (GBPP); CEC Case 106, (approved through 2/7/2018), CEC Case 109 (approved through 2/7/2018), and CEC Case 119 (approved through 2/7/18). (See attached interconnection diagram, Exhibit 1 and route map, Exhibit 2).

The following, as per A.R.S. 40-360.02, outlines the 10-year plan for 500KV transmission lines and related switchyard:

> The 500kV transmission line will run from the GBPP site, in the northwest corner of Gila Bend along Watermelon Road to a new switchyard approximately one quarter mile east of Arizona State Highway, Route 85. (See attached interconnection diagram, Exhibit 2 and route map, Exhibit 3). At the new Switchyard, referred to as Watermelon Switchyard, the 500kV transmission line will interconnect with the Arizona Public Service Gila River Line, which connects the Watermelon Switchyard to the Jojoba Switchyard.
>
> Case 109: The 500kV transmission line will run from the GBPP site, in the northwest corner of Gila Bend along Watermelon Road to a new switchyard approximately one quarter mile east of Arizona State Highway, Route 85. At the new switchyard, referred to as the Watermelon Switchyard, the 500kV transmission line will interconnect with the Arizona

Public Service Gila River Line, which connects the Watermelon Switchyard to the Jojoba Switchyard.

Case 119: The 500kV transmission line will be constructed from the Jojoba Switchyard to the Hassayampa Switchyard. The line will be constructed in an established BLM Transmission corridor, adjacent to the existing Kyrene line and the Palo Verde to Pinal West line currently under construction. The 500kV transmission line will interconnect at the Hassayampa Switchyard.

The GBPP and related transmission system were included in the 2002 Biennial Transmission Assessment dated December 2002, the Report on the "Preliminary Study for the Palo Verde Interconnection", dated March 2, 2001, version (i), as well as the Report on Phase I Study of the Central Arizona Transmission System (CATS), dated July 20, 2001.

The attached Exhibit I entitled Report on "The Gila Bend Power Partners, LLC's Generation Project System Impact Study" was prepared by James C. Hsu of Salt River Project to demonstrate flow and stability at the Watermelon Switchyard point of interconnection for the GBPP transmission line.

Respectfully submitted,

GILA BEND POWER PARTNERS, LLC
By: Sammons Power Development, Inc.,
Its Managing Member

By: Heather Kreager
Heather Kreager, President

147100 – 10 year Plan

G:\CORP\Gila Bend Power Partners, LLC\17\014-az corp commission-10-yr plan 2011-Letter 2.doc

GILA BEND POWER PROJECT

2012
10-YEAR TRANSMISSION PLAN

Prepared for the:

ARIZONA CORPORATION COMMISSION
UTILITY DIVISION

BY: GILA BEND POWER PARTNERS, LLC

EXHIBIT 1

Report on the Gila Bend Power Partners, LLC.'s Generation Project System Impact Study

Prepared For the

Industrial Power Technology

And

Palo Verde E & O Committee

By

James C. Hsu

Salt River Project

November 1, 2001

Version (C)

Gila Bend Power Partners Generation Project
System Impact Study Report

I. Introduction

Industrial Power Technology (IPT), on behalf of the Gila Bend Power Partners, LLC (GBPP) has requested Salt River Project (SRP) to perform a system impact study that will assist GBPP in the determination of the Palo Verde transmission system and the WSCC interconnected system impact of interconnecting the proposed GBPP Generation Project with the another proposed Panda Gila River Generation Project's planned Gila River-Jojoba 500 kV double circuit lines. These double circuit 500 kV lines will be tied to the existing Hassayampa-Kyrene 500 kV line. Currently, GBPP has proposed to build a combined cycle power plant of 833 MW in addition to the 2080 MW of new generation power plant proposed by the Gila River Panda Project (Panda) in the same vicinity. In response to this request, SRP has carried out the study work accordingly, and documented the study results in this brief report.

For this analysis, the proposed size of the GBPP project was assumed to be 833 MW. Coincident with the development of the GBPP project, a separate generation proposal called the Gila River Panda Project (2080 MW) is also being developed and it will be interconnected to the Palo Verde transmission system via a double circuit 500kV line from the Gila River generation site to Jojoba, a new switchyard that is being developed to interconnect the two 500kV lines with the existing Palo Verde – Kyrene 500kV line. The GBPP project will interconnect with the system via a new, single circuit 500kV line to Watermelon substation, a new switchyard the GBPP plans to build, located approximately 2 miles from the Gila River Power facility. The Gila River – Jojoba 500kV lines will be looped into the Watermelon switchyard. SRP's system analysis assessed the system impact of both the Gila River Panda and GBPP generation projects on the interconnected WSCC system.

SRP's analysis focused on the capability of the Palo Verde area transmission system to deliver a total of 2913 MW of new generation from both proposed projects (GBPP and Gila River Panda) into the interconnected system. The scope of the study was to identify any significant system impacts that may be caused by interconnecting the GBPP generation project with the Jojoba-Gila River double circuit 500 kV lines, the Hassayampa-Kyrene 500 kV line, and their associated switchyards. This study did not identify any mitigation measures that may be required as a result of system impacts attributable to the GBPP Generation Project. Therefore, neither a preliminary plan of service nor a cost estimate for interconnecting the Proposed Generation Project with the existing and planned 500 kV transmission system was provided.

The purpose of this System Study was to assess the impact of the GBPP project on the Palo Verde transmission and the integrated WSCC EHV transmission system. The study is comprised of limited power flow and stability studies, but does not include any short circuit, post-transient power flow or subsynchronous resonance studies. Any conclusions presented from this System Impact Study represent the opinion of SRP and not necessarily the opinion of the Palo Verde Transmission System Engineering and Operating Committee.

The following two transmission configurations were assessed in this analysis:

Configuration 1:

The GBPP Project will be interconnected to the planned Jojoba-Gila River 500 double circuit lines at a location approximately 2 miles from the Gila River 500 kV switchyard (Watermelon substation). This transmission configuration assumed that the Gila River Generating Project would install a 500/230 kV transformer at their Gila River substation to accommodate an interconnection of the existing Liberty-Gila Bend 230 kV line.

Configuration 2:

Configuration 2 represents the same 500 kV transmission configuration as Configuration 1, however, the 500/230 kV transformer at the Gila River 500kV substation was not modeled.

II. Review of Panda System Development and Pertinent Study Results

Included in the "Report on the Preliminary Study For the Palo Verde Interconnection" and "Report on the Panda Generation Project Sensitivity Study', some technical study results pertinent to the Panda Generation Project and the impact assessment of its system development were documented in a number of different sections throughout these reports. It should be pointed out that these study results varied depending upon the system conditions, system models and the Panda's transmission network used in those studies. The following table summarizes the study results, associated information, and specific references from these reports.

New Generation Accommodated	Panda Interconnection To Palo Verde	Panda 500/230 KV Transformer	Transmission Constraint	Reference
4,850 MW (Including Panda 1250 MW & PDE 550 MW GEN)	Panda Project Looping in & out of PV-KY line	No	Thermal and Stability	PV Interconnection Study Report Section.III.B2 (Pg.27) Exhbit.2
5,240 MW (Including Panda 1640 MW & PDE 550 MW GEN)	Building Jojoba-Panda 500 KV double circuit lines and Jojoba cutting into PV-Kyrene line	Yes (with 390 MW flow)	Thermal and Stability	Panda Project Sensitivity Study Report Section III.1&2 (Pg.4) Tables PF-7 & TS-15

These previous study results revealed the following observations:

1. For the 2003 heavy summer condition with the addition of Palo Verde-Estrella line, "New Generation" in the amount of 4,850 MW can be accommodated by the Palo Verde transmission system without installation of a Panda 500/230 kV transformer.
2. Approximately 390 MW increase in the Panda Gila River Generation Plant output can be dispatched if the Panda project is interconnected with the Arizona local 230 kV transmission system by installing a 500/230 kV transformer.
3. The Palo Verde transmission thermal limits were constrained by the respective continuous rating of either the Hassayampa-N. Gila 500 kV line or the Hassayampa-Kyrene 500 kV line.
4. The Palo Verde stability limit was determined by a three-phase fault on the Palo Verde 500 kV bus and a subsequent loss of both Palo Verde-Westwing 500 kV lines.

As mentioned in the summary table above, the Panda sensitivity studies were performed based on the following assumptions:

1. The Panda Gila River Generation Project (Panda Gen) was the only project to interconnect with the Hassayampa-Kyrene 500 kV line.
2. The GBPP Generation Project was interconnected to the Hassayampa 500 kV Switchyard via a single circuit 500 kV line.
3. The generation output for the Panda Gen and GBPP projects were not maximized. The Panda Gen Project was dispatched in the ranges of 1250 MW to 1640 MW and PDE Gen Project was dispatched at 550 MW.

The current plan, as proposed by GBPP, is to interconnect with the Jojoba-Gila River 500 kV double circuit lines at an intersection about 2 miles north of the Gila River 500 kV Switchyard (Watermelon). Given these modifications in system representation, it was necessary to perform additional study work to assess the impact of these system modifications on the Palo Verde and the interconnected WSCC system with an emphasis on dispatching the maximum generation for both Panda Gen Project (2080 MW) and GBPP Generation Project (833 MW).

III. Conclusions

Based on the results of this impact study, the following was concluded:

1. The maximum generation that can be scheduled out of the Gila River vicinity to the Arizona and California load centers is a function of the capability of some of the Palo Verde transmission system components. This transmission capability is based on a thermal limitations on either the Hassayampa- N. Gila line 500 kV line or the Hassayampa-Kyrene 500 kV line.

a) The maximum GBPP generation that can be accommodated by the Configuration 1 transmission system (without Panda 500/230 kV transformer) is about 583 MW if the Panda Gila River generation is maximized at 2080 MW output.

b) The maximum new GBPP generation can be increased to 683 MW for the Configuration 2 transmission system (with Panda 500/230 kV transformer) if the Panda generation was still at its maximum output of 2080 MW.

2. The interconnection of the proposed GBPP Generation Project with the respective amount of power schedule noted in 1.a and 1.b above will not have any adverse impact on the Palo Verde Nuclear Plant, its associated transmission system, and the WSCC interconnected system.

3 The common corridor outage for a simultaneous loss of both Jojoba-Gila River double circuit 500 kV lines and a subsequent trip of combined maximum generation output (a total of 2911 MW) will not cause a stability problem. The interconnected transmission system can withstand such critical outage without causing wide spread cascading outages. The consequence of this double circuit outage is comparable to the result of a simultaneous trip of two Palo Verde generators. Both double contingencies are acceptable and meet the WSCC Performance Criteria Level C.

4. The stability performance resulting from a three-phase fault on the Palo Verde 500 kV bus and fault cleared by loss of both two Palo Verde-Westwing 500 kV lines became less severe due to power flow displacement for these two critical lines when more Panda and GBPP generation was dispatched at the Gila River location, which is further away from the Palo Verde vicinity.

IV. Discussion on Study Results

(A) Power Flow Impact

The following technical discussion is based on the various system conditions studied and demonstrate no adverse power flow impact on the Palo Verde and the Southwest interconnected transmission system due to the Gila River interconnection of the GBPP Generation Project.

1. Configuration 1 (Without Panda 500/230 kV Connection):

(See PF-TABLE 1)

Benchmark System (Without GBPP Project):

For base case conditions, that included accommodation of new generation of 4,650 MW by the Palo Verde transmission system, the heaviest loadings on both the Hassayampa-N. Gila and Jojoba-Kyrene 500 kV lines were occurred. They were reached at 100.5% and 100.4% of their continuous ratings, respectively. Neither N-1 contingency problems nor low system voltages were noted.

Post-GBPP System (With GBPP Project):

For base case conditions with 4,650 MW of new generation that included the power schedule of 833 MW of GBPP generation and 2080 MW of Panda Gila River generation to deliver to the Palo Verde transmission system, the heaviest loadings on both the Hassayampa-N. Gila and Jojoba-Kyrene 500 kV lines occurred. Flow on these lines reached 100.6% and 106.4% of their continuous ratings, respectively. A slight overload also occurred on the remaining Jojoba-Gila River Tap 500 kV line (101.1% of its emergency rating) for loss of one Jojoba-Gila River Tap 500 kV line.

Further studies indicated that these overloading problems could be overcome if the GBPP generation output was reduced to 583 MW. As a result, the loading on the Jojoba-Kyrene 500 kV line was reduced to 100.3% of its continuous rating. The remaining Gila River Tap-Jojoba 500 kV line loading was reduced to 91.5% of its emergency rating for a loss of one Gila River Tap-Jojoba 500 kV line.

1. **Configuration 2 (With Panda 500/230 kV Connection):**

(See PF-TABLE 2)

Benchmark System (Without GBPP Project):

For base case conditions, that included accommodation of new generation of 5,040 MW by the Palo Verde 500 kV and local 230 kV transmission systems, the heaviest loadings on both the Hassayampa-N. Gila and Jojoba-Kyrene 500 kV lines occurred. Flows on these lines reached 100.1% and 100.0% of their continuous ratings, respectively. No N-1 contingency problems or low system voltages were noted.

Post-GBPP System (With GBPP Project):

For base case conditions with 5,070 MW of new generation that included the power schedule of 833 MW of GBPP generation and 2080 MW of Panda Gila River generation to deliver to the Palo Verde 500 kV and local 230 kV transmission systems, the heaviest loadings on both the Hassayampa-N. Gila and Jojoba-Kyrene 500 kV lines occurred. They reached 100.2% and 104.6% of their continuous ratings, respectively. No overload occurred on the remaining Jojoba-Gila River Tap 500 kV line (84.1% of its emergency rating) for loss of one Jojoba-Gila River Tap 500 kV line. No voltage problems were detected for any N-1 contingencies.

Further studies indicated that this overloading problem could be overcome if the GBPP generation output was reduced to 683 MW. As a result, the loading on the Jojoba-Kyrene 500 kV line was reduced to 100.3% of its continuous rating. The remaining Gila River Tap-Jojoba 500 kV line loading was reduced to 79.0% of its emergency rating for a loss of one Gila River Tap-Jojoba 500 kV line.

(B) Transient Stability Impact

The stability analysis based on the following various system conditions indicated that no adverse impact on the Palo Verde plant stability and the integrated WSCC transmission system due to the interconnection of the GBPP Generation Project to the Palo Verde transmission system.

1. **Configuration 1 (Without Panda 500/230 kV Connection):**

   (See TS-TABLE 1)

   Benchmark System (Without GBPP Gen Project):

   The following three N-2 contingency outages were established for stability benchmark performance using the pre-GBPP Project power flow limit case:

   (a) Three-phase fault at the Jojoba 500 kV bus with outage of two Jojoba-Gila River 500 kV lines and a subsequent trip Panda generation of 2080 MW

   (b) A simultaneous trip of two Palo Verde generators (loss of 2909 MW generation)

   (c) Three-phase fault at the Palo Verde 500 kV bus with outage of two Palo Verde-Westwing 500 kV lines

   For the Pre-GBPP Project benchmark system, the stability results showed that all three N-2 contingency outages were stable and damped. The worst case was a simultaneous loss of two Palo Verde generators (loss of 2809 MW generation). This case resulted in a maximum transient voltage dip of 0.86 P.U. (22% deviation) at the Malin 500 kV bus. The next worst case was a three-phase fault at the Palo Verde 500 kV bus and fault cleared by the loss of two Palo Verde-Westwing 500 kV circuits. This case resulted in maximum voltage dips of 0.91 P.U. (15% deviation) and 0.92 P.U. (16% deviation) respectively, at the Palo Verde and Malin 500 kV buses. The least critical case was a three-phase fault at the Jojoba 500 kV bus with outage of two Jojoba-Gila River 500 kV circuits and a subsequent trip of 2080 MW of Panda generation. This case caused a maximum transient voltage dip of 0.95 P.U. (13% deviation) at the Malin 500 kV bus.

   Post-GBPP(833 MW) Project System (With GBPP Project):

   All three contingency outages simulated for the Pre-Project system were also tested in the Post-Project system. All stability results were stable and damped. The worst case was a three-phase fault at the Jojoba 500 kV bus with outage of two Jojoba-Gila River 500 kV circuits and a subsequent trip of about 2900 MW of combined Panda and GBPP generation. This case resulted in a maximum transient voltage dip of 0.81 P.U. (27% deviation) at the Malin 500 kV bus. The next worst case was a simultaneous loss of two Palo Verde generators (loss of 2809 MW generation). This case resulted in a maximum transient voltage dip of 0.86 P.U. (22% deviation) at the Malin 500 kV bus. The least critical case was a three-phase fault at the Palo Verde 500 kV bus with fault cleared by the loss of two Palo Verde-Westwing 500 kV circuits. This case resulted in maximum voltage dips of 0.95 P.U. (11% deviation) and 0.98 P.U. (10% deviation) respectively, at the Palo Verde and Malin 500 kV buses.

2. **Configuration 2 (With Panda 500/230 kV Connection):**

(See TS-TABLE 2)

Benchmark System (Without GBPP Project):

The following three N-2 contingency outages were established for stability benchmark performance using the pre-GBPP Project power flow limit case:

(a) Three-phase fault at the Jojoba 500 kV bus with outage of two Jojoba-Gila River 500 kV lines and a subsequent trip Panda generation of 1560 MW

(b) A simultaneous trip of two Palo Verde generators (loss of 2809 MW generation)

(c) Three-phase fault at the Palo Verde 500 kV bus with outage of two Palo Verde-Westwing 500 kV lines

For the Pre-GBPP Project benchmark system, the stability results showed that all three N-2 contingency outages were stable and damped. The worst case was a simultaneous loss of two Palo Verde generators (loss of 2809 MW generation). This case resulted in a maximum transient voltage dip of 0.86 P.U. (22% deviation) at the Malin 500 kV bus. The next worst case was a three-phase fault at the Palo Verde 500 kV bus and fault cleared by the loss of two Palo Verde-Westwing 500 kV circuits. This case resulted in maximum voltage dips of 0.95 P.U. (11% deviation) and 0.98 P.U. (10% deviation) respectively, at the Palo Verde and Malin 500 kV buses. The least critical case was a three-phase fault at the Jojoba 500 kV bus with outage of two Jojoba-Gila River 500 kV circuits and a subsequent trip of 1560 MW of Panda generation. This case caused a maximum transient voltage dip of 0.98 P.U. (13% deviation) at the Malin 500 kV bus.

Post-GBPP(833 MW) Project System (With GBPP Project):

All three contingency outages simulated for the Pre-Project system were also tested in the Post-Project system. All stability results were stable and damped. The worst case was a simultaneous loss of two Palo Verde generators (loss of 2809 MW). This case resulted in a maximum transient voltage dip of 0.86 P.U. (22% deviation) at the Malin 500 kV bus. The next worst case was a three-phase fault at the Jojoba 500 kV bus with outage of two Jojoba-Gila River 500 kV circuits and a subsequent trip of about 2393 MW of combined Panda and GBPP generations. This case caused a maximum transient voltage dip of 0.90 P.U. (18% deviation) at the Malin 500 kV bus. The least critical case was a three-phase fault at the Palo Verde 500 kV bus with fault cleared by the loss of two Palo Verde-Westwing 500 kV circuits. This case resulted in maximum voltage dips of 0.95 P.U. (11% deviation) and 0.98 P.U. (10% deviation) respectively, at the Palo Verde and Malin 500 kV buses.

V. Exhibit

Exhibit 1 shows a one-line system diagram of transmission alternatives associated with the GBPP interconnection.

VI. Summary Tables of Study Results

(The attached tables summarize the study results)

1. PF-Table 1: Power Flow Impact With And Without GBPP (833 MW) Project (Without the Panda Gila River 500/230 KV Transformer)
2. TS-Table1: Stability Impact With And Without GBPP (833 MW) Project (Without the Panda Gila River 500/230 KV Transformer)
3. PF-Table 2: Power Flow Impact With And Without GBPP (833 MW) Project (With the Panda Gila River 500/230 KV Transformer)
2. TS-Table 2: Stability Impact With And Without GBPP (833 MW) Project (With the Panda Gila River 500/230 KV Transformer)

GILA BEND POWER PARTNERS (GBPP) GENERATION PROJECT TRANSMISSION ALTERNATIVE 1

Configuration 1: GBPP Project w/o Panda 500/230KV Transformer

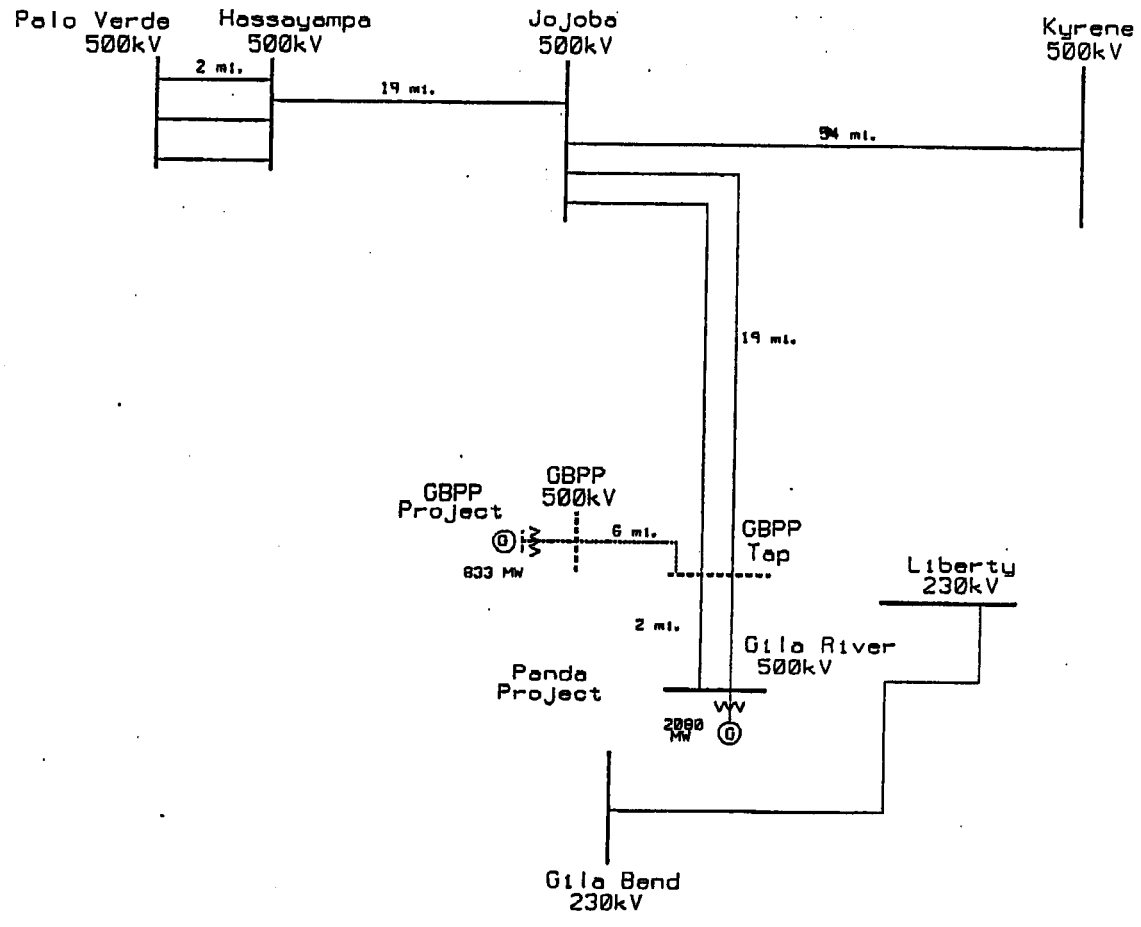

11/1/01 /jh
pde.dgn

GILA BEND POWER PARTNERS (GBPP) GENERATION PROJECT TRANSMISSION ALTERNATIVE 2

Configuration 2: GBPP Project w/ Panda 500/230KV Transformer

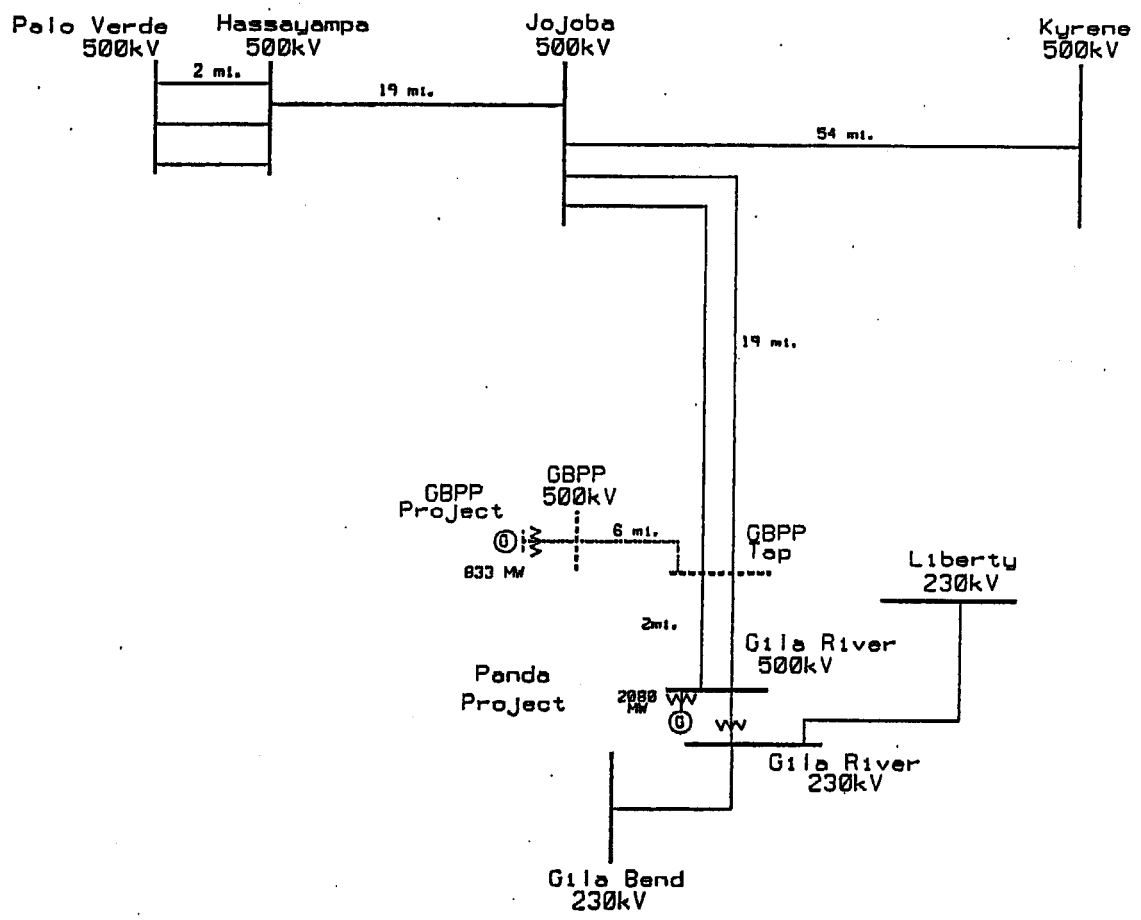

11/7/01 /jh
pde.dgn

PF-TABLE 1

POWER FLOW IMPACT WITH AND WITHOUT THE GBPP(833MW) GEN PROJECT

(WITHOUT THE PANDA GILA RIVER 500/230 KV TRANSFORMER)

BENCH MARK	CASE DESCRIPTION	FOR WITHOUT GBPP GEN PROJECT FLOW (MW)	GBPP GEN (MW)	PANDA GEN (MW)	PV GEN (MW)	NEW GEN (MW)	PANDA 500/230 (MW)	PV-N.G. (MW)	PV-DV (MW)	PV-WWG#1 (MW)	PV-WWG#2 (MW)	JOJOBA KYR (MW)	GILA RV-JOJOBA1 (MW)	PV-EST (MW)	PPK 230KV (PU)	KYR 230KV (PU)	COMMENTS
2003HS PDE-01																	
	BASE CASE FLOW	6022	833	2080	3300	4850	250	1263	1341	1528	1528	1784	1009	1182	1.03	1.01	
	FACILITY RATING							(AMP)	(AMP)	(AMP)	(AMP)	(AMP)	(AMP)	(AMP)			
	CONTINUOUS RATING							1400	1900	3000	3000	2000	2100	2000	5% MAX	5% MAX	
	EMERGENCY RATING							1890	2430	3200	3200	2521	3150	2521			
	BASE CASE FLOW							1407	1477	1676	1675	2008	1114	1346	1.03	1.01	NO THERMAL LIMITATION
	% OF CONTINUOUS RATING							100.50%	77.70%	55.70%	55.70%	100.40%	55.10%	67.30%			
	OUTAGE CASE FLOW																
ALT A	ONE PALO VERDE-WWG OUT							1483	1607	OUT	2706	2262	1118	1586	1.02	1.00	NO PROBLEM
	% OF EMERGENCY RATING							78.50%	66.10%		84.60%	89.70%	35.50%	62.90%			
ALT B	PALO VERDE-ESTRELLA OUT							1458	1557	2113	2113	2397	1122	OUT	1.01	0.99	NO PROBLEM
	% OF EMERGENCY RATING							77.20%	64.10%	66.00%	66.00%	95.10%	35.60%				
ALT C	JOJOBA-KYRENE OUT							1496	1617	2330	2330	OUT	1102	1892	1.00	0.98	NO PROBLEM
	% OF EMERGENCY RATING							79.20%	66.60%	72.80%	72.80%		35.00%	75.10%			
ALT D	ONE JOJOB- GILA RIVER OUT							1407	1477	1676	1676	2008	2239	1348	1.03	1.01	NO PROBLEM
	% OF EMERGENCY RATING							74.40%	60.80%	52.40%	52.40%	79.70%	71.10%	53.50%			
2003HS-PDE-02		FOR WITHOUT GBPP GEN PROJECT FLOW (MW)	GBPP GEN (MW)	PANDA GEN (MW)	PV GEN (MW)	NEW GEN (MW)	PANDA 500/230 (MW)	PV-N.G. (MW)	PV-DV (MW)	PV-WWG#1 (MW)	PV-WWG#2 (MW)	JOJOBA KYR (MW)	GILA RV-JOJOBA#1 (MW)	PV-EST (MW)	PPK 230KV (PU)	KYR 230KV (PU)	COMMENTS
	BASE CASE FLOW	6042	833	2080	3300	4850	250	1265	1343	1489	1489	1884	1431	1154	1.03	1.01	
								(AMP)	(AMP)	(AMP)	(AMP)	(AMP)	(AMP)	(AMP)			
	BASE CASE FLOW							1409	1479	1632	1632	2129	1588	1314	1.03	1.01	EXCEEDS KYR LIMITATION
	% OF CONTINUOUS RATING							100.60%	77.80%	54.40%	54.40%	106.40%	75.60%	65.70%			
	OUTAGE CASE FLOW																
ALT A	ONE PALO VERDE-WWG OUT							1483	1605	OUT	2637	2376	1592	1549	1.02	1.00	NO PROBLEM
	% OF EMERGENCY RATING							78.50%	66.10%		82.40%	94.30%	50.50%	61.40%			
ALT B	PALO VERDE-ESTRELLA OUT							1459	1557	2060	2060	2509	1595	OUT	1.01	0.99	NO PROBLEM
	% OF EMERGENCY RATING							77.20%	64.10%	64.40%	64.40%	99.50%	50.60%				
ALT C	JOJOBA-KYRENE OUT							1506	1631	2328	2328	OUT	1577	1892	1.00	0.97	NO PROBLEM
	% OF EMERGENCY RATING							79.70%	66.60%	72.80%	72.80%		50.10%	75.10%			
ALT D	ONE JOJOB- GILA RIVER OUT							1409	1479	1634	1634	2129	1589	1316	1.03	1.00	EXCEEDING LIMITATION
	% OF EMERGENCY RATING							74.60%	60.90%	51.10%	51.10%	84.50%	101.10%	52.20%			
PDE-02R	BASE CASE (IN MW)	6047	585 (-248)	2080	3395	4300 (-250)	50	1257	1330	1440	1440	1792	1308	1128	1.03	1.01	
	BASE CASE FLOW(IN AMP)							1400	1465	1578	1578	2007	1434	1285	1.03	1.01	NO THERMAL LIMITATION
	% OF CONTINUOUS RATING							100.00%	77.10%	52.60%	52.60%	100.30%	68.80%	64.20%			
ALT D	ONE JOJOB- GILA RIVER OUT							1400	1465	1580	1580	2007	2894	1286	1.03	1.00	NO PROBLEM
	% OF EMERGENCY RATING							74.10%	60.30%	49.40%	49.40%	79.80%	91.50%	51.02%			

TS-TABLE 1

STABILITY IMPACT WITH AND WITHOUT THE GBPP(833 MW) GENERATION PROJECT
(WITHOUT THE PANDA GILA RIVER 500/230 KV TRANSFORMER)

WITHOUT GBPP GEN PROJECT

CASE NO.	CASE DESCRIPTION	POWER FLOW (MW) SCIT FLOW	EOR FLOW	COI FLOW	GBPP GEN	PANDA GEN	PVNG GEN	PVNG MARG	NEW GEN	PV /NEW TOT	PANDA 500/230	STABILITY RESULTS PV500 (P.U.)	MA500 (P.U.)	COMMENTS
2003HS	BASE CASE (2003HS-PDE-01)	2201	6022	4205	0	2080	3991	0%	4650	8641	0	1.06	1.08	
STAB-1	3 PH FLT @ JOJOBA 500KV BUS L/O TWO JOJOBA-GILA RIVER (TRIP PANDA GENERATION OF 2080 MW)											1.03 3% Dip	0.95 13% Dip	STABLE & DAMPED
STAB-2	L/O TWO PALO VERDE UNITS (TRIP A TOTAL OF 2809 MW GEN)											1.04 2% DIP	0.86 22% DIP	STABLE & DAMPED
STAB-3	3 PH FLT @ PV 500 KV BUS L/O TWO PV-WWG											0.91 15% Dip	0.92 16% Dip	STABLE & DAMPED

WITH GBPP GEN PROJECT

CASE NO.	CASE DESCRIPTION	POWER FLOW (MW) SCIT FLOW	EOR FLOW	COI FLOW	GBPP GEN	PANDA GEN	PVNG GEN	PVNG MARG	NEW GEN	PV /HSP TOT	PANDA 500/230	STABILITY RESULTS PV500 (P.U.)	MA500 (P.U.)	COMMENTS
ADDED	NO ADDITIONAL NEW GEN.													
2003HS	BASE CASE (2003HS-PDE-02)	2213	6045	4205	0	2080	3991	0%	4650	8641	0	1.06	1.08	
STAB-1	3 PH FLT @ JOJOBA 500KV BUS L/O TWO JOJOBA-GILA RIVER (TRIP PDE & PANDA GENERATION A TOTAL OF 2911 MW)											1.03 3% Dip	0.81 27% Dip	STABLE & DAMPED
STAB-2	L/O TWO PALO VERDE UNITS (TRIP A TOTAL OF 2809 MW GEN)											1.04 2% Dip	0.86 22% Dip	STABLE & DAMPED
STAB-3	3 PH FLT @ PV 500 KV BUS L/O TWO PV-WWG											0.95 11% Dip	0.98 10% Dip	STABLE & DAMPED

PF-TABLE 2

POWER FLOW IMPACT WITH AND WITHOUT THE GBPP(833MW) GEN PROJECT

(WITH THE PANDA GILA RIVER 500/230 KV TRANSFORMER)

BENCH MARK	CASE DESCRIPTION	FOR FLOW	GBPP GEN	PANDA GEN	PV GEN	NEW GEN	PANDA 500/230	PV-N.G.	PV-DV	PV-WWG#1	PV-WWG#2	JOJOBA KYR	GILA RV-JOJOBA1	PV-EST	PPK 230KV	KYR 230KV	COMMENTS
2003HS PDE-03	WITHOUT GBPP GEN PROJECT	(MW)	(MW)	(MW)	(MW)	(MW)	(MW)	(MW)	(MW)	(MW)	(MW)	(MW)	(MW)	(MW)	(PU)	(PU)	
	BASE CASE (IN MW)	[redacted]						1259	1336	1518	1518	1772	808	1194	1.02	1.00	
	FACILITY RATING							(AMP)	(AMP)	(AMP)	(AMP)	(AMP)	(AMP)	(AMP)			
	CONTINUOUS RATING							1400	1900	3000	3000	2000	2100	2000			
	EMERGENCY RATING							1890	2430	3200	3200	2521	3150	2521	5% MAX	5% MAX	
	BASE CASE FLOW(AMP)							[redacted]	1471	1675	1675	[redacted]	894	1361	1.02	1.00	NO THERMAL LIMITATIONS
	% OF CONTINUOUS RATING							[redacted]	77.40%	55.70%	55.70%	[redacted]	42.60%	68.20%			
	OUTAGE CASE FLOW(AMP)																
ALT A	ONE PALO VERDE-WWG OUT							1467	1583	OUT	2707	2238	872	1596	1.02	1.00	NO PROBLEM
	% OF EMERGENCY RATING							77.60%	65.10%		84.60%	88.80%	27.70%	63.30%			
ALT B	PALO VERDE-ESTRELLA OUT							1444	1536	2105	2105	2377	866	OUT	1.01	0.99	NO PROBLEM
	% OF EMERGENCY RATING							76.40%	63.20%	65.80%	65.80%	94.30%	27.50%				
ALT C	JOJOBA-KYRENE OUT							1474	1586	2274	2274	OUT	793	1870	1.00	0.97	NO PROBLEM
	% OF EMERGENCY RATING							78.00%	65.30%	71.10%	71.10%		25.20%	74.20%			
ALT D	ONE JOJOB- GILA RIVER OUT							1400	1469	1668	1668	1989	1761	1358	1.02	1.00	NO PROBLEM
	% OF EMERGENCY RATING							74.10%	60.50%	52.10%	52.10%	78.90%	55.50%	53.80%			

2003HS-PDE-04	WITH GBPP GEN PROJECT	FOR FLOW	GBPP GEN	PANDA GEN	PV GEN	NEW GEN	PANDA 500/230	PV-N.G.	PV-DV	PV-WWG#1	PV-WWG#2	JOJOBA KYR	GILA RV-JOJOBA#1	PV-EST	PPK 230KV	KYR 230KV	COMMENTS
		(MW)	(MW)	(MW)	(MW)	(MW)	(MW)	(MW)	(MW)	(MW)	(MW)	(MW)	(MW)	(MW)	(PU)	(PU)	
	BASE CASE FLOW	[redacted]						1259	1336	1486	1486	1850	1213	1159	1.02	1.00	
								(AMP)	(AMP)	(AMP)	(AMP)	(AMP)	(AMP)	(AMP)			
	BASE CASE FLOW							[redacted]	1472	1630	1630	[redacted]	1345	1322	1.02	1.00	EXCEEDS NO LIMITATIONS
	% OF CONTINUOUS RATING							[redacted]	77.50%	54.30%	54.30%	[redacted]	64.10%	66.10%			
	OUTAGE CASE FLOW																
ALT A	ONE PALO VERDE-WWG OUT							1473	1594	OUT	2616	2323	1324	1547	1.02	1.00	NO PROBLEM
	% OF EMERGENCY RATING							78.00%	65.60%		81.70%	92.10%	42.00%	61.40%			
ALT B	PALO VERDE-ESTRELLA OUT							1449	1546	2043	2043	2453	1321	OUT	1.01	0.99	NO PROBLEM
	% OF EMERGENCY RATING							76.70%	63.60%	63.90%	63.90%	97.30%	41.90%				
ALT C	JOJOBA-KYRENE OUT							1486	1605	2251	2251	OUT	1243	1845	1.00	0.97	NO PROBLEM
	% OF EMERGENCY RATING							78.60%	66.00%	70.30%	70.30%		39.50%	73.20%			
ALT D	ONE JOJOB- GILA RIVER OUT							1400	1469	1621	1621	2078	2646	1317	1.02	1.00	NO PROBLEM
	% OF EMERGENCY RATING							74.10%	60.50%	50.70%	50.70%	82.40%	84.01%	52.20%			
PDE-04R	BASE CASE (IN MW)	[redacted]						1257	1333	1463	1463	1793	1143	1141	1.03	1.01	
	BASE CASE FLOW(IN AMP)							[redacted]	1468	1604	1604	[redacted]	1265	1300	1.03	1.01	NO THERMAL LIMITATIONS
	% OF CONTINUOUS RATING							[redacted]	77.20%	53.50%	53.50%	[redacted]	60.30%	65.00%			
ALT D	ONE JOJOB- GILA RIVER OUT							1398	1466	1596	1596	1993	2489	1294	1.03	1.01	NO PROBLEM
	% OF EMERGENCY RATING							74.00%	60.30%	49.90%	49.90%	79.10%	79.00%	51.40%			

TS-TABLE 2

STABILITY IMPACT WITH AND WITHOUT THE GBPP(833 MW) GENERATION PROJECT

(WITH THE PANDA GILA RIVER 500/230 KV TRANSFORMER)

	WITHOUT GBPP GEN PROJECT	POWER FLOW (MW)										STABILITY RESULTS		
CASE NO.	CASE DESCRIPTION	SCIT FLOW	EOR FLOW	COI FLOW	GBPP GEN	PANDA GEN	PVNG GEN	PVNG MARG	NEW GEN	PV /NEW TOT	PANDA 500/230	PV500 (P.U.)	MA500 (P.U.)	COMMENTS
2003HS	BASE CASE (2003HS-PDE-03)	1220	1584	4200	50	2010	1991	1070	1600	2001	402	1.06	1.00	
STAB-1	3 PH FLT @ JOJOBA 500KV BUS L/O TWO JOJOBA-GILA RIVER (TRIP PANDA GENERATION OF 1560 MW; 3 UNITS OUT OF TOTAL4)											1.03 3% Dip	0.98 10% Dip	STABLE & DAMPED
STAB-2	L/O TWO PALO VERDE UNITS (TRIP A TOTAL OF 2809 MW GEN)											1.04 2% DIP	0.86 22% DIP	STABLE & DAMPED
STAB-3	3 PH FLT @ PV 500 KV BUS L/O TWO PV-WWG											0.95 11% Dip	0.98 10% Dip	STABLE & DAMPED

	WITH GBPP GEN PROJECT	POWER FLOW (MW)										STABILITY RESULTS		
CASE NO.	CASE DESCRIPTION	SCIT FLOW	EOR FLOW	COI FLOW	GBPP GEN	PANDA GEN	PVNG GEN	PVNG MARG	NEW GEN	PV /HSP TOT	PANDA 500/230	PV500 (P.U.)	MA500 (P.U.)	COMMENTS
ADDED	NO ADDITIONAL NEW GEN.													
2003HS	BASE CASE (2003HS-PDE-04)	1225	2001	4209	1833	2050	1991	1103	2570	2906	402	1.06	1.00	
STAB-1	3 PH FLT @ JOJOBA 500KV BUS L/O TWO JOJOBA-GILA RIVER (TRIP PDE=833MW & PANDA=1560 MW; A TOTAL OF 2393 MW GEN)											1.03 3% Dip	0.90 18% Dip	STABLE & DAMPED
STAB-2	L/O TWO PALO VERDE UNITS (TRIP A TOTAL OF 2809 MW GEN)											1.04 2% Dip	0.86 22% Dip	STABLE & DAMPED
STAB-3	3 PH FLT @ PV 500 KV BUS L/O TWO PV-WWG											0.95 11% Dip	0.98 10% Dip	STABLE & DAMPED

EXHIBIT 2

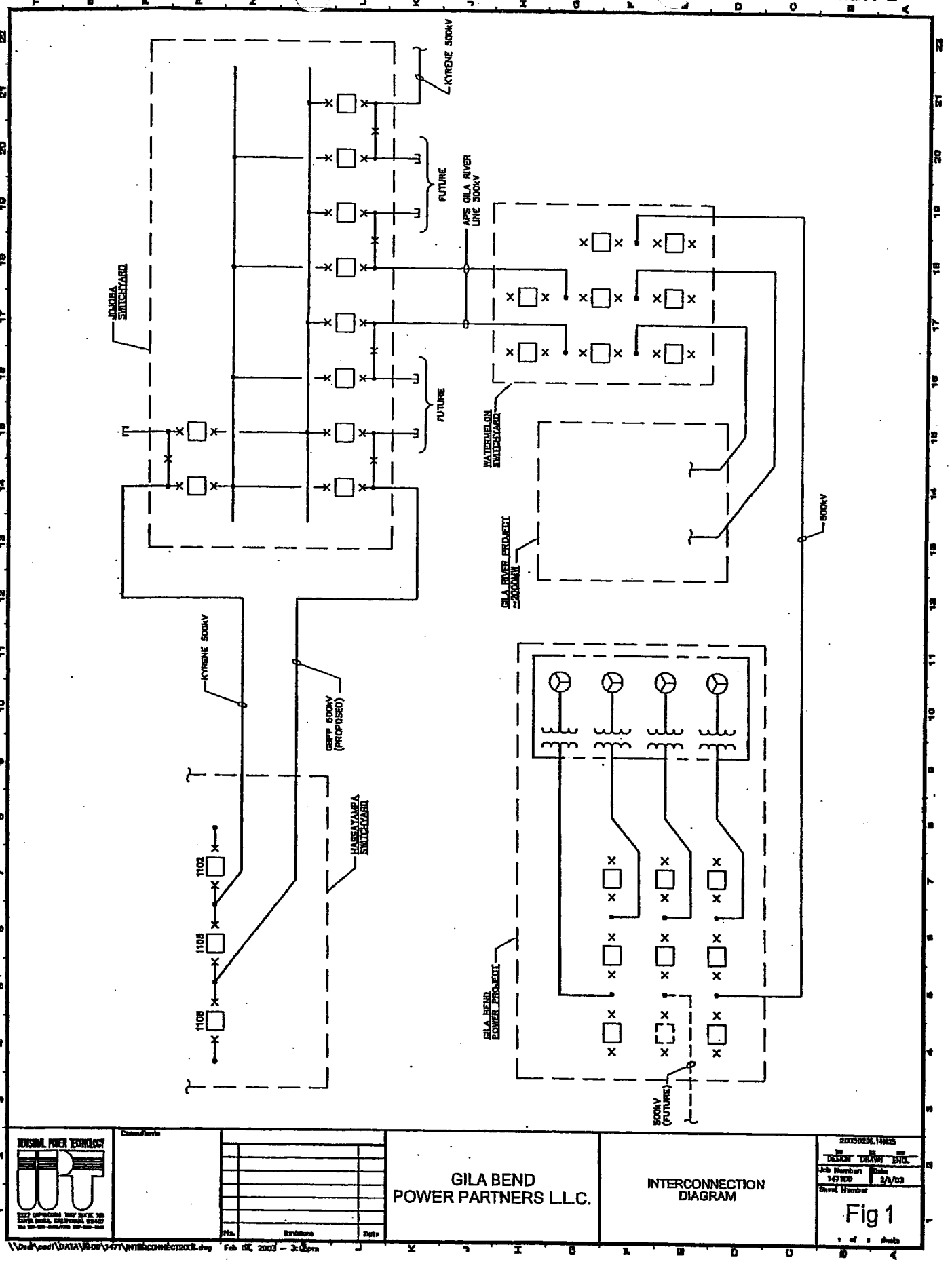
KYRENE 500kV
FUTURE
APS GILA RIVER LINE 500kV
JOJOBA SWITCHYARD
FUTURE
WATERMELON SWITCHYARD
GILA RIVER PROJECT ~2000MW
500kV
KYRENE 500kV
GBPP 500kV (PROPOSED)
HASSAYAMPA SWITCHYARD
1102
1105
1108
GILA BEND POWER PROJECT
500kV (FUTURE)
Consultants
No.
Revisions
Date
GILA BEND
POWER PARTNERS L.L.C.
INTERCONNECTION
DIAGRAM
DESIGN
DRAWN
ENG.
Job Number
147100
Date
2/8/03
Sheet Number
Fig 1
1 of 1 sheets

EXHIBIT 3

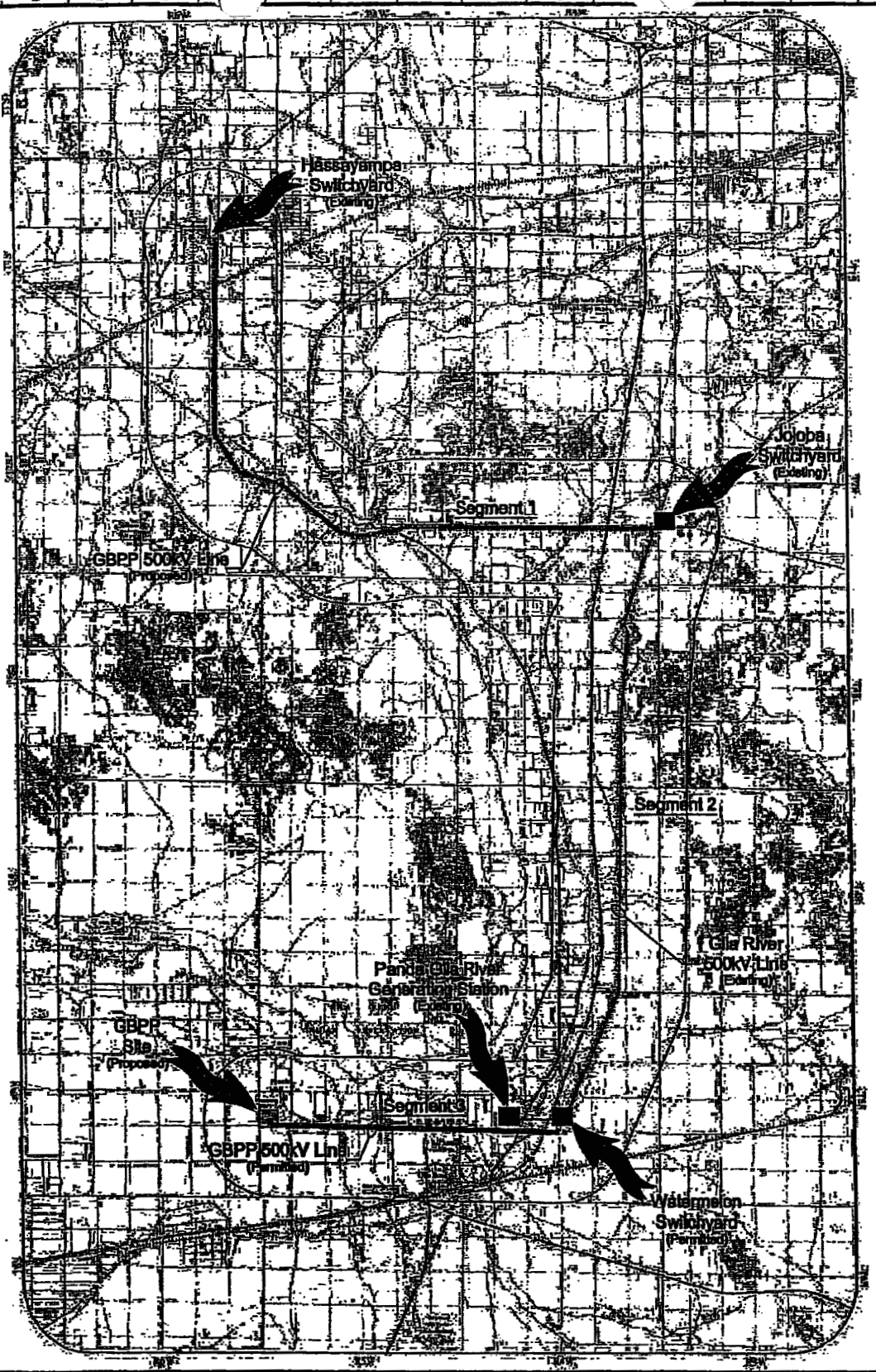

NORTHWEST POWER TECHNOLOGY	Consultants	GILA BEND POWER PARTNERS L.L.C.	ROUTE MAP	Job Number: 147100 Date: 2/8/03 Sheet Number Fig 2
	No. Revisions Date			1 of 1 sheets