APPLICATION
W-01445A-11-0310

0000128636

PART 5 OF 7
BARCODE # 0000128636

To review Part 1 please see:
BARCODE #0000128632

To review Part 2 please see:
BARCODE # 0000128633

To review Part 3 please see:
BARCODE # 0000128634

To review Part 4 please see:
BARCODE # 0000128635

To review Part 6 please see:
BARCODE #0000128637

To review Part 7 please see:
BARCODE #0000128638

FSK-14

ARIZONA WATER COMPANY

PRELIMINARY COST ESTIMATE

DATE PREPARED:
7/1/2011

PREPARED BY:	APPROVED BY:	SYSTEM:	DIVISION:
MRL	FKS	BISBEE	COCHISE

PROJECT LOCATION:	PROJECT NUMBER:	REFERENCE MAP:

PROJECT DESCRIPTION:

BISBEE WATER SYSTEM 10-YEAR INFRASTRUCTURE REPLACEMENT PLAN

MATERIALS AND LABOR

QUANTITY	UNIT	$/UNIT	DESCRIPTION	ESTIMATED ITEM COST
40,379	LF	$ 70	REPLACE 1900-1909 MAINS w/ 6" DIP	$ 2,826,530
3,153	LF	100	REPLACE 1900-1909 MAINS w/ 8" DIP	315,300
20,139	LF	130	REPLACE 1900-1909 MAINS w/ 12" DIP	2,618,070
21,701	LF	70	REPLACE 1910-1919 MAINS w/ 6" DIP	1,519,070
14,077	LF	70	REPLACE 1920-1929 MAINS w/ 6" DIP	985,390
6,731	LF	70	REPLACE 1930-1939 MAINS w/ 6" DIP	471,170
23,684	LF	70	REPLACE 1940-1949 MAINS w/ 6" DIP	1,657,880
58,551	LF	70	REPLACE PROBLEMATIC MAINS 1950&NEWER W/ 6" DIP	4,098,570
1,500	EA	2,000	REPLACE SERVICES ON MAINS 1900-1949	3,000,000
215	EA	2,000	REPLACE PLASTIC SERVICES	430,000
				-
				-
				-

(1) **SUBTOTAL - MATERIALS AND LABOR**	17,921,980
(2) PERFORMANCE BOND @ 1.5% OF LINE (1)	268,830
(3) SURVEY, R.O.W. PERMITTING, TESTING AND FIELD INSPECTION	1,254,539
(4) SUBTOTAL - LINES (1), (2) AND (3)	**$ 19,445,349**
(5) OVERHEAD - 15% OF LINE (4)	2,916,802
(6) PREPARATION OF DETAILED PLANS, SPECIFICATIONS & BIDDING DOCUMENTS	1,166,721
SUBTOTAL - LINES (4), (5) AND (6)	**$ 23,528,872**
ESTIMATED COST OF CONSTRUCTION	**$ 23,528,872**

AFH

FSK-15

ARIZONA WATER COMPANY

PRELIMINARY COST ESTIMATE

DATE PREPARED:
7/1/2011

PREPARED BY:	APPROVED BY:	SYSTEM:	DIVISION:
MRL	FKS	ORACLE	SAN MANUEL

PROJECT LOCATION:	PROJECT NUMBER:	REFERENCE MAP:

PROJECT DESCRIPTION:

ORACLE WATER SYSTEM 10-YEAR INFRASTRUCTURE REPLACEMENT PLAN

MATERIALS AND LABOR

QUANTITY	UNIT	$/UNIT	DESCRIPTION	ESTIMATED ITEM COST
10,689	LF	$ 55	REPLACE PROBLEMATIC MAINS 1950&NEWER W/ 6" DIP	$ 587,895
450	EA	1,750	REPLACE PLASTIC SERVICES	787,500
				-
				-
				-
				-
				-
				-
				-
				-
				-
				-

(1) **SUBTOTAL - MATERIALS AND LABOR**	1,375,395
(2) PERFORMANCE BOND @ 1.5% OF LINE (1)	20,631
(3) SURVEY, R.O.W. PERMITTING, TESTING AND FIELD INSPECTION	96,278
(4) SUBTOTAL - LINES (1), (2) AND (3)	**$ 1,492,304**
(5) OVERHEAD - 15% OF LINE (4)	223,846
(6) PREPARATION OF DETAILED PLANS, SPECIFICATIONS & BIDDING DOCUMENTS	89,538
SUBTOTAL - LINES (4), (5) AND (6)	**$ 1,805,688**
ESTIMATED COST OF CONSTRUCTION	**$ 1,805,688**

AFH

FSK-16

ARIZONA WATER COMPANY

PRELIMINARY COST ESTIMATE

DATE PREPARED:	PREPARED BY:	APPROVED BY:	SYSTEM:	DIVISION:
7/1/2011	MRL	FKS	SUPERSTITION	SUPERSTITION

PROJECT LOCATION:	PROJECT NUMBER:	REFERENCE MAP:

PROJECT DESCRIPTION:

SUPERSTITION DIVISION 10-YEAR INFRASTRUCTURE REPLACEMENT PLAN

MATERIALS AND LABOR

QUANTITY	UNIT	$/UNIT	DESCRIPTION	ESTIMATED ITEM COST
1,011	LF	$ 68	REPLACE 1910-1919 MAINS w/ 6" DIP	$ 68,748
860	LF	68	REPLACE 1920-1929 MAINS w/ 6" DIP	58,480
40,984	LF	68	REPLACE 1930-1939 MAINS w/ 6" DIP	2,786,912
5,903	LF	98	REPLACE 1930-1939 MAINS w/ 8" DIP	578,494
856	LF	128	REPLACE 1930-1939 MAINS w/ 12" DIP	109,568
51,333	LF	68	REPLACE 1940-1949 MAINS w/ 6" DIP	3,490,644
70,509	LF	68	REPLACE PROBLEMATIC MAINS 1950&NEWER W/ 6" DIP	4,794,612
2,350	EA	3,000	REPLACE SERVICES ON MAINS 1910-1949	7,050,000
4,250	EA	3,000	REPLACE PLASTIC SERVICES	12,750,000
				-
				-
				-
				-

(1) **SUBTOTAL - MATERIALS AND LABOR**	31,687,458
(2) PERFORMANCE BOND @ 1.5% OF LINE (1)	475,312
(3) SURVEY, R.O.W. PERMITTING, TESTING AND FIELD INSPECTION	2,218,122
(4) SUBTOTAL - LINES (1), (2) AND (3)	**$ 34,380,892**
(5) OVERHEAD - 15% OF LINE (4)	5,157,134
(6) PREPARATION OF DETAILED PLANS, SPECIFICATIONS & BIDDING DOCUMENTS	2,062,854
SUBTOTAL - LINES (4), (5) AND (6)	**$ 41,600,880**
ESTIMATED COST OF CONSTRUCTION	**$ 41,600,880**

AFH

WA 1-4226

ARIZONA WATER COMPANY
WORK AUTHORIZATION

W.A. NUMBER: 1-4226
P.E. NUMBER:
BUDGET ITEM NO.: 1-4226
SHEET NO.: 1 of 2

SYSTEM:	SUPERSTITION	WORK TO START BY:	UPON AUTHORIZATION
DIVISION:	SUPERSTITION	WORK TO BE FINISHED BY:	WITHIN 210 DAYS
TAX CODE:	0458		

DESCRIPTION OF WORK:

Design and Construct Oasis Arsenic Treatment Plant Expansion (Part 3 of 3). Construct in accordance with attached drawings and/or Arizona Water Company specifications.

FACTORS JUSTIFYING WORK:

APPROVED 2008 BUDGET ITEM (Part 1 of 3) $124,543 - Amount Spent $124,543
APPROVED 2009 BUDGET ITEM (Part 1 of 3) $186,473 - Amount Spent $97,179.21
APPROVED 2010 BUDGET ITEM (Part 2 of 3) $950,000 - Est. Amount Spent $750,000
APPROVED 2011 BUDGET ITEM (Part 3 of 3) $1,900,000

COST ESTIMATE		AUTHORIZATION	DATE
COST OF WORK:		PREPARED BY: Mike Loggins ML 5-4-11	1-10-11
Money Spent in 2008, 2009 & 2010	971,722		
LABOR	22,600	REVIEWED FOR ESMT/ROW VERIFICATION: Charles Briggs CB 05-04-2011	01-10-2011
CONTRACT PORTION	1,509,936		
OVERHEAD *24% of 2010 Exp	367,809	REVIEWED BY: James Wilson JW 5/4/11	1/10/11
TOTAL AUTHORIZED EXPENDITURES CHARGEABLE TO THIS W.A.	$ 2,872,067		
FUNDS RECEIVED:		APPROVED BY ENGINEERING: Fredrick Schneider FS 5-4-11	1-10-11
CONTRIBUTIONS RECEIVED	0		
REFUNDABLE ADVANCES RECEIVED	0	APPROVED BY FINANCE: Joseph Harris	1/11/11
TOTAL CONTRIBUTIONS/ADVANCES	0		
NET CASH REQUIRED	$ 2,872,067	AUTHORIZED BY PRESIDENT: William M Garfield William Garfield	1-12-2011

COMMENTS:

The total funds required to complete this project is $2,872,067.

CONSTRUCTION RELEASE:

RELEASED TO CONSTRUCTION
Authorized by: FRED SCHNEIDER
Date 5/9/2011

AFH

ARIZONA WATER COMPANY

WORK AUTHORIZATION - DETAIL SHEET

W.A. NUMBER: 1-4226
P.E. NUMBER:
BUDGET ITEM NO.: 1-4226
SHEET NO.: 2 of 2

RETIREMENT PROPERTY UNITS	PLANT PROPERTY ACCOUNT	UNIT DESCRIPTION	QUANTITY	YEAR INSTALLED AND W.A. NUMBER

PROJECT DESCRIPTION:

Design and construct Oasis Arsenic Treatment Plant Expansion.

	DESCRIPTION	PLANT PROP ACCT	QUANTITY	UNIT COST	TOTAL
CONTRACT WORK					
	Construct Oasis ATP Expansion	332	1	1,334,964.00	1,334,964
	Submittal Review	332	1	13,752.00	13,752
	Construction Administration and inspection Services	332	1	111,220.00	111,220
	Construction Contingency	332	1	50,000.00	50,000
	SERVICE CONNECTIONS COMPLETE: DOUBLE-LONG	345			
	SERVICE CONNECTIONS COMPLETE: DOUBLE-SHORT	345			
	SERVICE CONNECTIONS COMPLETE: SINGLE-LONG	345			
	SERVICE CONNECTIONS COMPLETE: SINGLE-SHORT	345			
TOTAL CONTRACT WORK					$ 1,509,936
MATERIALS					
	Amount Spent 2008	332	1	124,543.00	124,543
	Amount Spent 2009	332	1	97,179.00	97,179
	Amount Spent 2010	332	1	750,000.00	750,000
	SERVICE CONNECTIONS: DOUBLE-SHORT	345			
	SERVICE CONNECTIONS: SINGLE-LONG	345			
	SERVICE CONNECTIONS: SINGLE-SHORT	345			
	METERS	346			
TOTAL MATERIALS					$ 971,722
LABOR					
	TESTING FEE	332	250	$ 20.00	5,000
	PERMIT FEE	332			
	SURVEY FEE	332			
	FIELD INSPECTION	332	55	320.00	17,600
	INSTALL SERVICE CONNECTIONS: DOUBLE-LONG	345			
	INSTALL SERVICE CONNECTIONS: DOUBLE-SHORT	345			
	INSTALL SERVICE CONNECTIONS: SINGLE-LONG	345			
	INSTALL SERVICE CONNECTIONS: SINGLE-SHORT	345			
TOTAL LABOR					$ 22,600
SUBTOTAL - CONTRACT WORK, MATERIALS, AND LABOR					$ 2,504,258
OVERHEAD					367,809
TOTAL	REFUNDABLE PORTION ☐	NON-REFUNDABLE PORTION ☐		COST ESTIMATE	$ 2,872,067

afh

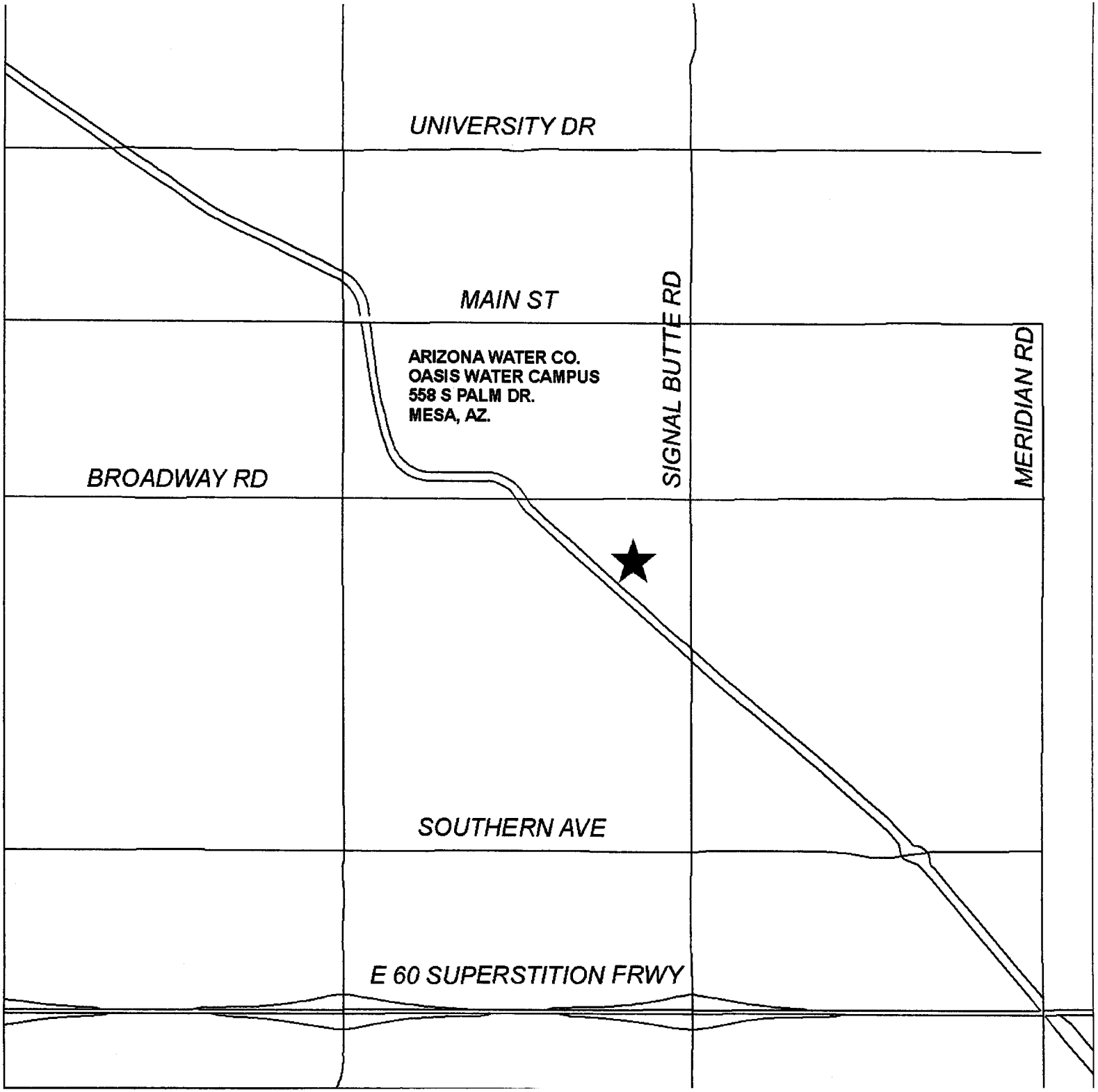
UNIVERSITY DR
MAIN ST
ARIZONA WATER CO.
OASIS WATER CAMPUS
558 S PALM DR.
MESA, AZ.
SIGNAL BUTTE RD
MERIDIAN RD
BROADWAY RD
SOUTHERN AVE
E 60 SUPERSTITION FRWY

BACKWASH

BACKWASH

AGREEMENT FOR CONSULTING SERVICES BETWEEN
ARIZONA WATER COMPANY AND
RICKER ATKINSON MCBEE MORMAN & ASSOCIATES, INC.

THIS AGREEMENT is made and entered into on this 7th day of October, 2010, by and between Arizona Water Company, an Arizona corporation, hereinafter referred to as "Company," and Ricker Atkinson McBee Morman & Associates, an Arizona corporation hereinafter referred to as "Consultant".

RECITALS

WHEREAS, Company is authorized to and desires to retain Consultant to provide engineering design, post design and construction administration services for a Geotechnical Engineering Service for the Oasis Water Campus Arsenic Treatment Facility Expansion.

WHEREAS, Consultant is agreeable to providing personnel and facilities necessary to perform the desired services within Company's required time; and

WHEREAS, Company desires to retain Consultant to perform the services in the manner, at the time, and for the compensation set forth herein;

NOW, THEREFORE, Company and Consultant agree as follows:

1. Description of Project.

Company and Consultant agree that Project is as described in Exhibit B, hereto, incorporated by reference herein and entitled "Scope of Work," dated October 7, 2010. If, during the course of Project, Company and Consultant agree to changes in Project, such changes shall be effective only after being incorporated in this Agreement by written amendment, signed by representative of Company and Consultant.

2. Scope of Consultant Services.

Consultant agrees to perform those services described hereafter. Unless modified in writing by both parties, duties of Consultant shall not be construed to exceed those services specifically set forth herein.

a. Basic Services. Consultant agrees to perform those services described in the Scope of Work (the "Services"). Any tasks not specifically described in the Scope of Work will be Additional Services.

b. Additional Services. Company shall pay Consultant all fees and costs incurred in performing Additional Services provided the services were authorized by Company in writing. Unless otherwise agreed in writing, Additional Services shall be

compensated in accordance with Consultant's standard billing rates at the time the Additional Services are performed.

c. Litigation Assistance. Unless specifically stated therein, the Scope of Work does not include assistance to support, prepare, document, bring, defend or assist in litigation undertaken or defended by Company. All such services required or requested of the Consultant by Company or any third party (except claims between Company and Consultant) will be reimbursed at Consultant's applicable rates for such litigation services.

3. Responsibilities of Company.

In addition to payment for the Services performed under this Agreement, Company shall:

a. Assist and cooperate with Consultant in any manner necessary and within its ability to facilitate Consultant's performance under this Agreement.

b. Designate in writing a person to act as Company's representative with respect to this Agreement. Such person shall have complete authority to transmit instructions, receive information, interpret and define Company's policies, make decisions and execute documents on Company's behalf.

c. Furnish Consultant with all technical data in Company's possession including, but not limited to, maps, surveys, drawings, soils or geotechnical reports and any other information required by or useful to Consultant in performance of the Services under this Agreement.

d. Notify Consultant of any known or potential health or safety hazards existing at or near the project site.

e. Provide access to and/or obtain permission for Consultant to enter upon project related property during normal business hours, whether or not owned by Company, as required to perform and complete the Services.

4. Americans with Disabilities Act.

Any other provision of this Agreement to the contrary notwithstanding, unless otherwise specified in the Scope of Services, Company's contractors shall have sole responsibility as between Company and Consultant for compliance with the Americans With Disabilities Act ("ADA") 42 U.S.C. 12101 et. Seq. and the related regulations. Consultant shall provide Company with applicable ADA criteria, which maybe required.

5. Authorization and Completion.

In signing this Agreement Company grants Consultant specific authorization to proceed with work as described in Scope of Work and under the terms of this Agreement.

6. Compensation.

a. Amount. For the Services described in Exhibit A, Company agrees to pay, and Consultant agrees to accept compensation in accordance with Exhibit B, attached hereto and incorporated herein. Where Consultant has provided Company with a breakdown of the total compensation into subtasks, such breakdowns are estimates only. Consultant may reallocate compensation between tasks, provided total compensation is not exceeded without the prior written approval of Company.

b. Payment. As long as Consultant has not defaulted under this Agreement, Company shall pay Consultant within thirty (30) days of the date of Consultant's invoices for services performed and reimbursable expenses incurred under this Agreement. If Company has reason to question or contest any portion of any such invoice, amounts questioned or contested shall be identified and notice given to Consultant within thirty (30) days of the date of the invoice. Any portion of any invoice not contested shall be deemed to be accepted and approved for payment and shall be paid to Consultant within thirty (30) days of the date of the invoice. Company agrees to cooperate with Consultant in a mutual effort to resolve promptly any contested portions of Consultant's invoices.

In the event any uncontested portions of any invoice are not paid within thirty (30) days of the date of Consultant's invoice, interest on the unpaid balance shall accrue beginning with the 31st day at the rate of 1.5% per month, and Consultant shall have the right to suspend work per Article XV, Suspension of Work.

7. Responsibility of Consultant.

a. Standard of Care Professional Services.

Subject to the limitations inherent in the agreed scope of work as to the degree of care, amount of time and expenses to be incurred, and subject to any other limitations contained in this Agreement, Consultant shall perform the Services and any Additional Services in accordance with generally accepted standards and practices customarily utilized by competent engineering firms in effect at the time Services and any Additional Services are rendered. Consultant does not expressly or impliedly warrant or guarantee its Services.

b. Reliance upon Information Provided by Others.

If Consultant's performance of services hereunder requires Consultant to rely on information provided by other parties (excepting Consultant's subcontractors), Consultant

shall not independently verify the validity, completeness, or accuracy of such information unless otherwise expressly engaged to do so in writing by Company.

c. Consultant's Opinion of Costs.

Company acknowledges that construction cost estimates, financial analyses and feasibility projections are subject to many influences including, but not limited to, price of labor and materials, unknown or latent conditions of existing equipment or structures, and time or quality of performance by third parties. Company acknowledges that such influences may not be precisely forecasted and are beyond the control of Consultant and that actual costs incurred may vary substantially from the estimates prepared by Consultant. Consultant does not warrant or guarantee the accuracy of construction or development cost estimates, however, Consultant agrees to exercise its best Professional Judgment in rendering its opinions.

d. Construction Phase Services.

1. Consultant's Activities at Construction Site. The presence of Consultant's personnel at a construction site, whether as on-site representative, resident engineer, construction manager, or otherwise, does not make Consultant responsible for those duties that belong to Company and/or construction contractors or others, and does not relieve construction contractors or others of their obligations, duties, and responsibilities, including, but not limited to, construction methods, means, techniques, sequences, and procedures necessary for completing all portions of the construction work in accordance with the contract documents, any health or safety programs and precautions required by such construction work, and any compliance with applicable laws and regulations. Any inspection or observation of the contractor's work is for the purpose of determining that the work is proceeding in conformance with the intent of the project specifications and contract documents. Consultant has no authority to exercise control over any construction contractor in connection with their work or health or safety programs and precautions. Except to protect Consultant's own personnel and except as may be expressly required elsewhere in the Scope of Work, Consultant has no duty to inspect, observe, correct, or report on health or safety deficiencies of the construction contractor.

2. Shop Drawing and Submittal Review. If required by Consultant's Scope of Services, Consultant shall review shop drawings or other contractor submittals for general conformance with the intent of the contract documents. Except for services completed under direct contract to Consultant, Consultant shall not be required to verify dimensions, to engineer contractor's shop drawings or submittals, nor to coordinate shop drawings or other submittals with other shop drawings or submittals provided by contractor.

3. Record Drawings. Record drawings, if required, will be prepared, in part, on the basis of information compiled and furnished by others, and may not always represent the exact location, type of various components, or exact manner in which the Project was finally constructed. Except for services completed under direct contract to

Consultant, Consultant is not responsible for any errors or omissions in the information from others that are incorporated into the record drawings.

e. Scope of Work.

1. Before preparing the scope of work, Consultant specifically acknowledges and agrees that it has inspected and familiarized itself with Company's site The Consultant has received, or had the opportunity to inquire about and/or request all relevant information concerning the Scope of Work from Company or any other source Consultant deems necessary. The Scope of Work has been prepared by the Consultant and to the best of its knowledge includes all applicable work required to successfully a Geotechnical Engineering Service for the Oasis Water Campus Arsenic Treatment Facility Expansion.

8. Asbestos/Hazardous Material.

Consultant and Consultant's subcontractors shall have no responsibility for the discovery, handling, removal, or disposal of, or exposure of persons to asbestos or hazardous or toxic materials that are present in any form at the Project site. Professional services related to or in any way connected with the investigation, detection, abatement, replacement, use, specification, or removal of products, materials, or processes containing asbestos or hazardous or toxic materials are beyond the scope of this Agreement.

In the event Consultant encounters asbestos or hazardous materials at the jobsite, Consultant may, at its option and without liability for damages, suspend the performance of services on the Project until such time as Company and Consultant mutually agree on an amendment to this Agreement to address the issue, or Company retains another specialist consultant or contractor to identify, classify, abate and/or remove the asbestos and/or hazardous materials.

9. Consultant's Work Product.

a. Scope.

Consultant's work product which is prepared solely for the purposes of this Agreement, including, but not limited to, drawings, test results, recommendations and technical specifications, whether in hard copy or electronic form, shall become the property of Company when Consultant has been fully compensated as set forth herein. Consultant may keep copies of all work product(s) for its records.

Consultant and Company recognize that Consultant's work product submitted in performance of this Agreement is intended only for the project described in this Agreement. Company's alteration of Consultant's work product or its use by Company for any other purpose shall be at Company's sole risk.

b. Electronic Copies.

If requested, solely as an aid and accommodation to Company, Consultant may provide copies of its work product documents in computer-readable media ("electronic copies", "CADD"). These documents will duplicate the documents provided as work product, but will not bear the signature and professional seals of the registered professionals responsible for the work. Company is cautioned that the accuracy of electronic copies and CADD documents may be compromised by electronic media degradation, errors in format translation, file corruption, printing errors and incompatibilities, operator inexperience and file modification. Consultant will maintain the original copy, which shall serve as the official, archived record of the electronic and CADD documents.

10. Indemnification.

a. The Consultant shall indemnify the Company against, and save and hold it harmless from, any and all liability, claims, demands, loss, actions, causes of action, expense, penalties, fines, assessments, damages and costs of every kind and nature for injury to or death of any and all persons, including, without limitation, employees or representatives of the Company or of the Consultant or of any subcontractor, or any other person or persons, and for damage, destruction or loss, consequential or otherwise, to or of any and all property, real or personal, including, without limitation, property of the Company or of the Consultant or of any subcontractor, or of any other person or persons, and the violation of any law, ordinance, rule, regulation, standard, or order resulting from, or in any manner arising out of, or in connection with, the performance of the work under the Contract, howsoever same may be caused, including, without limitation, the Company's active or passive negligence. The Consultant shall also, upon request by the Company, and at no expense to the Company, defend the Company in any and all suits, concerning such injury to or death of any and all persons, and concerning such damage, destruction or loss, consequential or otherwise, to or of any and all property, real or personal, including, without limitation, suits by employees or representatives of the Company or of the Consultant or of any subcontractor, or any other person or persons, or concerning any court or administrative proceeding concerning the violation of any law, ordinance, rule, regulation, standard, or order. Excluded from this paragraph are only those injuries to or deaths of persons and damage, destruction or loss, to or of property arising from the sole negligence or willful misconduct of the Company.

b. Consultant shall indemnify the Company against, and save and hold it harmless from, any and all liability, claims, demands, damages, costs, expenses and attorney's fees, suffered or incurred on account of any breach of any obligation, covenant or other provision of this contract, including without limitation, breach of the indemnity provisions of subsection A of this Section 36.

c. Consultant further agrees to defend, indemnify and hold harmless the Company, its directors, officers, employees, and agents, from and against any and all

costs, damages, claims, expenses, violations, notices of violations, penalties, liens, assessments, and liabilities of every kind and nature, foreseeable or unforeseeable, directly or indirectly, arising from any release, removal, generation, use, storage or disposal on, under, around, or from the site of any material, substance, or waste, hazardous or nonhazardous, including, without limitation, drilling fluids, mud, cuttings and development and test water howsoever same may be caused, including, without limitation, the Company's active or passive negligence.

11. Consultant's Insurance.

Consultant shall procure and maintain the following minimum insurance:

a. Commercial general liability insurance, including personal injury liability, blanket contractual liability and broad-form property damage liability coverage. The combined single limit for bodily injury and property damage shall be not less than $1,000,000.

b. Automobile bodily injury and property damage liability insurance covering owned, non-owned, rented, and hired cars. The combined single limit for bodily injury and property damage shall be not less than $1,000,000.

c. Statutory workers' compensation and employer's liability insurance as required by state law.

d. Professional liability insurance. The policy limit shall be not less than $1,000,000.

Consultant shall either require each of its subconsultants to procure and to maintain the insurance specified in this section or insure its subconsultants in the Consultants own policy, in like amounts.

Company shall be named as additional insured on policies 1 and 2 above. Upon execution of this Agreement, Consultant will provide a certificate of insurance to Company. Consultant will keep the certificate current at all times while this Agreement is in effect. The Consultant will provide a 30-day written notice in the event the above policies are cancelled.

12. Confidentiality.

Consultant agrees it will maintain the confidentiality of all material it receives from Company and will not disclose, distribute, or publish to any third party such information without the prior permission of Company. Notwithstanding the foregoing, Consultant shall have no confidentiality obligation with respect to information that:

a. becomes generally available to the public other than as a result of disclosure by Consultant or its agents or employees;

b. was available to Consultant prior to its disclosure by Company;

c. becomes available to Consultant from a third party who is not, to the knowledge of Consultant, bound to retain such information in confidence.

In the event Consultant is compelled by subpoena, court order, or administrative order to disclose any confidential information, Consultant shall promptly notify Company and shall cooperate with Company prior to disclosure so that Company may take necessary actions to protect such confidential information from disclosure.

13. Subcontracts.

Consultant shall be entitled, to the extent determined appropriate by Consultant, to subcontract any portion of the services to be performed under this Agreement.

14. Suspension of Work.

Work under this Agreement may be suspended as follows:

a. By Company. By written notice to Consultant, Company may suspend all or a portion of the Work under this Agreement if unforeseen circumstances beyond Company's control make normal progress of the Work impracticable.

b. By Consultant. By written notice to Company, Consultant may suspend the work if Consultant reasonably determines that working conditions at the Site (outside Consultant's control) are unsafe, or in violation of applicable laws, or in the event Company has not made timely payment in accordance with Article VI, compensation.

15. Termination of Work.

a. This Agreement may be terminated by Company as follows: (1) for its convenience on thirty (30) days' notice to Consultant, or (2) for cause, if Consultant materially breaches this Agreement through no fault of Company and Consultant neither cures such material breach nor makes reasonable progress toward cure within fifteen (15) days after Company has given written notice of the alleged breach to Consultant.

b. This Agreement may be terminated by Consultant as follows: (1) for cause, if Company materially breaches this Agreement through no fault of Consultant and Company neither cures such material breach nor makes reasonable progress toward cure within thirty (30) days after Consultant has given written notice of the alleged breach to Company.

c. Payment upon Termination. In the event of termination, Consultant shall perform such additional work as is reasonably necessary for the orderly closing of the work. Consultant shall be compensated for all work performed prior to the effective date

of termination, plus work required for the orderly closing of the work, including: (1) authorized work performed up to the termination date plus termination expenses, including all labor and expenses, at Consultant's standard billing rates, directly attributable to termination; (2) all efforts necessary to document the work completed or in progress; and (3) any termination reports requested by Company.

16. Assignment.

This Agreement is binding on the heirs, successors, and assigns of the parties hereto. Except as otherwise set forth under Article VIII, Assignment of Tasks to Affiliates, this Agreement may not be assigned by Company or Consultant without prior, written consent of the other.

17. No Benefit for Third Parties.

The services to be performed by Consultant are intended solely for the benefit of Company, and no benefit is conferred on, nor contractual relationship established with any person or entity not a party to this Agreement. No such person or entity shall be entitled to rely on Consultant's services, opinions, recommendations, plans, or specifications without the express written consent of Consultant. No right to assert a claim against the Consultant, its officers, employees, agents, or consultants shall accrue to the construction Contractor or to any subcontractor, supplier, manufacturer, lender, insurer, surety, or any other third party as a result of this Agreement or the performance or nonperformance of the Consultant's services hereunder.

18. Force Majeure.

Consultant and Company shall not be responsible for delays caused by circumstances beyond their reasonable control, including, but not limited to: (1) strikes, lockouts, work slowdowns or stoppages, or accidents; (2) acts of God; (3) failure of Company to furnish timely information or to approve or disapprove Consultant's instruments of service promptly; and (4) faulty performance or nonperformance by Consultant or Company, Company's or Consultant independent consultants or contractors, or governmental agencies. Consultant and Company shall not be liable for damages arising out of any such delay, nor shall the Consultant or Company be deemed to be in breach of this Agreement as a result thereof.

19. Integration.

This Agreement represents the entire understanding of Company and Consultant as to those matters contained herein. No prior oral or written understanding shall be of any force or effect with respect to those matters covered herein. This Agreement may not be modified or altered except in writing signed by both parties.

20. Severability.

If any part of this Agreement is found unenforceable under applicable laws, such part shall be inoperative, null, and void insofar as it conflicts with said laws, but the remainder of this Agreement shall be in full force and effect.

21. Choice of Law/Jurisdiction.

This Agreement shall be administered and interpreted under the laws of the State of Arizona Jurisdiction of litigation arising from the Agreement shall be in The State of Arizona.

22. Attorneys' Fees.

In the event any claim, controversy, or legal action arises under this Agreement, the prevailing party shall be entitled to recover from the other party all attorneys' fees, costs, expenses and other fees incurred by the prevailing party.

23. Notice Provisions.

Notices concerning this Agreement shall be in writing and sent by certified mail or by courier (such as Federal Express), or by hand-delivery addressed as follows:

To the Company:

Arizona Water Company
3805 North Black Canyon Highway
Phoenix, Arizona 85015-5351
Attention: President

or

Arizona Water Company
Post Office Box 29006
Phoenix, Arizona 85038-9006
Attention: President

To Consultant:

Ricker Atkinson McBee Morman & ASSO, INC
2105 S. Hardy Drive, Suite 13
Tempe, Arizona 85282
Attention: President

Either party may change its address for purposes of this Section by giving written notice of such change of address to the other party.

24. Authorization.

The persons executing this Agreement on behalf of the parties hereto represent and warrant that the parties have all legal authority and authorization necessary to enter into this Agreement, and that such persons have been duly authorized to execute this Agreement on their behalf.

IN WITNESS WHEREOF, each of the parties hereto has caused this instrument to be executed by their respective duly authorized officers as of the date first written above.

RICKER ATKINSON MCBEE
Morman & Associates, Inc.
an **Arizona corporation**

By: _____

Its: President

ARIZONA WATER COMPANY,
an Arizona corporation

By: _____

Its: Engineer

R·A·M·M

RICKER • ATKINSON • McBEE • MORMAN & ASSOCIATES, INC.

Geotechnical Engineering • Construction Materials Testing

Arizona Water Company
3805 North Black Canyon Highway
Phoenix, Arizona 85015

October 7, 2010

Attn: Mike Loggins, Engineer/Email: mloggins@azwater.com

Re: Proposal for Geotechnical Engineering Services
Oasis Water Campus
Arsenic Treatment Facility Expansion
558 South Palm Drive
Maricopa County, Arizona
AWC Project No. 1-4226

RAMM Proposal No. PG11626

Ricker, Atkinson, McBee, Morman & Associates, Inc. is pleased to submit this proposal to conduct Geotechnical Engineering Services for the above-referenced project.

If this proposal meets with your approval, please sign, date and return one copy of the enclosed Attachment "A", which outlines project description, our scope of services, completion time and fee to perform services.

If there are any questions regarding the proposed scope of work, please call. Thank you for considering our firm for this project.

Respectfully submitted,

RICKER, ATKINSON, MCBEE, MORMAN & ASSOCIATES, INC.

Kip E. Reese, P.E.
Project Engineer

/dcw

2105 South Hardy Drive, Suite 13, Tempe, AZ 85282-1924 • Telephone (480) 921-8100 • Facsimile (480) 921-4081
www.rammeng.com

RICKER, ATKINSON, McBEE, MORMAN & ASSOCIATES, INC.

ATTACHMENT "A" Proposal for Geotechnical Engineering Services
For: Arizona Water Company
RAMM Proposal No. PG11626

PROJECT: Oasis Water Campus
Arsenic Treatment Facility Expansion
558 South Palm Drive
Maricopa County, Arizona

DESCRIPTION:

The proposed development will include an approximately 25-foot diameter, 8-foot high arsenic backwash tank, founded on a tapered, thickened, concrete slab-on-grade and 2-foot deep, turn-down footings. Improvements will include a canopy structure, auxiliary equipment, underground piping and expanding a retention basin.

SCOPE OF SERVICES:

1. Arizona Blue Stake will be contacted and utility clearance and field explorations will be coordinated with Arizona Water Company personnel.

2. Test borings will be performed to determine subsurface conditions and obtain representative samples for laboratory analyses. One test boring 20 feet in depth is proposed in the tank area, and one soil profile test boring 15 feet in depth is proposed for the retention area. As an option, one percolation test three feet in depth is proposed in the retention basin expansion area. The percolation test will be performed in accordance with ASTM D-3385 Double-Ring Infiltrometer methods. Excavation equipment will be provided by Arizona Water Company.

3. Laboratory analyses of representative samples will include:

   Moisture Content and Dry Density
   Compression
   Swell
   Minus No. 200 Sieve and Plasticity Index
   Standard Proctor
   pH/Minimum Resistivity, Soluble Salts, Sulfate, Chloride

4. The field and laboratory data will be used in engineering evaluation and analyses to formulate our geotechnical recommendations.

RICKER, ATKINSON, McBEE, MORMAN & ASSOCIATES, INC.

ATTACHMENT "A" Proposal for Geotechnical Engineering Services
For: Arizona Water Company
RAMM Proposal No. PG11626

PROJECT: Oasis Water Campus
Arsenic Treatment Facility Expansion
558 South Palm Drive
Maricopa County, Arizona

5. An Engineer's report will be provided presenting the results of the field and laboratory testing, corrosion potential parameters of on-site soils in contact with concrete and buried ferrous materials and recommendations for foundation support (including footing depth, bearing capacity, and estimated settlement), lateral earth pressures, site development, earthwork factors, materials suitability requirements, site grading and preparation procedures. The results of percolation testing (optional) will be presented under separate cover.

COMPLETION TIME:

Final report approximately 2 to 3 weeks after authorized to proceed.
Contingent upon utility clearance and field exploration coordination.

FEE: $ 1,800.00
As an option an additional fee of $ 700.00 would apply for percolation testing.

The undersigned agrees to the forgoing Scope and Fee.

RICKER, ATKINSON, McBEE, MORMAN & ASSOCIATES, INC.

By: _____
Kip E. Reese, P.E., Project Engineer

Client: _____

By: _____

Date: _____

AGREEMENT FOR CONSULTING SERVICES BETWEEN ARIZONA WATER COMPANY AND CAROLLO ENGINEERS, PC

THIS AGREEMENT is made and entered into on this 24th day of August 2009, by and between Arizona Water Company, an Arizona corporation, hereinafter referred to as "Client," and Carollo Engineers, P.C., a Professional corporation hereinafter referred to as "Consultant."

RECITALS

WHEREAS, Client is authorized to and desires to retain Consultant to provide engineering design, post design and bidding services for a 2,800 gpm arsenic treatment system at the Oasis water campus (the "site").

WHEREAS, Consultant is agreeable to providing personnel and facilities necessary to perform the desired services within Client's required time; and

WHEREAS, Client desires to retain Consultant to perform the services in the manner, at the time, and for the compensation set forth herein;

NOW, THEREFORE, Client and Consultant agree as follows:

1. Description of Project.

Client and Consultant agree that Project is as described in Exhibit A, hereto, incorporated by reference herein and entitled "Scope of Work," dated August 21, 2009. If, during the course of Project, Client and Consultant agree to changes in Project, such changes shall be effective only after being incorporated in this Agreement by written amendment, signed by representative of Client and Consultant.

2. Scope of Consultant Services.

Consultant agrees to perform those services described hereafter. Unless modified in writing by both parties, duties of Consultant shall not be construed to exceed those services specifically set forth herein.

a. Basic Services. Consultant agrees to perform those services described in the Scope of Work (the "Services"). Any tasks not specifically described in the Scope of Work will be Additional Services.

b. Additional Services. Client shall pay Consultant all fees and costs incurred in performing Additional Services provided the services were authorized by Client in writing. Unless otherwise agreed in writing, Additional Services shall be compensated in accordance with Consultant's standard billing rates at the time the Additional Services are performed.

c. Litigation Assistance. Unless specifically stated therein, the Scope of Work does not include assistance to support, prepare, document, bring, defend or assist in litigation undertaken or defended by Client. All such services required or requested of the Consultant by Client or any third party (except claims between Client and Consultant) will be reimbursed at Consultant's applicable rates for such litigation services.

3. Responsibilities of Client.

In addition to payment for the Services performed under this Agreement, Client shall:

a. Assist and cooperate with Consultant in any manner necessary and within its ability to facilitate Consultant's performance under this Agreement.

b. Designate in writing a person to act as Client's representative with respect to this Agreement. Such person shall have complete authority to transmit instructions, receive information, interpret and define Client's policies, make decisions and execute documents on Client's behalf.

c. Furnish Consultant with all technical data in Client's possession including, but not limited to, maps, surveys, drawings, soils or geotechnical reports and any other information required by or useful to Consultant in performance of the Services under this Agreement.

d. Notify Consultant of any known or potential health or safety hazards existing at or near the project site.

e. Provide access to and/or obtain permission for Consultant to enter upon project related property during normal business hours, whether or not owned by Client, as required to perform and complete the Services.

4. Americans with Disabilities Act.

Any other provision of this Agreement to the contrary notwithstanding, unless otherwise specified in the Scope of Services, Client's contractors shall have sole responsibility as between Client and Consultant for compliance with the Americans With Disabilities Act ("ADA") 42 U.S.C. 12101 et. Seq. and the related regulations. Consultant shall provide client with applicable ADA criteria, which maybe required.

5. Authorization and Completion.

In signing this Agreement Client grants Consultant specific authorization to proceed with work as described in Scope of Work and under the terms of this Agreement.

6. Compensation.

a. Amount. For the Services described in Exhibit A, Client agrees to pay, and Consultant agrees to accept compensation in accordance with Exhibit B, attached hereto and incorporated herein. Where Consultant has provided Client with a breakdown of the total compensation into subtasks, such breakdowns are estimates only. Consultant may reallocate compensation between tasks, provided total compensation is not exceeded without the prior written approval of Client.

b. Payment. As long as Consultant has not defaulted under this Agreement, Client shall pay Consultant within thirty (30) days of the date of Consultant's invoices for services performed and reimbursable expenses incurred under this Agreement. If Client has reason to question or contest any portion of any such invoice, amounts questioned or contested shall be identified and notice given to Consultant within thirty (30) days of the date of the invoice. Any portion of any invoice not contested shall be deemed to be accepted and approved for payment and shall be paid to Consultant within thirty (30) days of the date of the invoice. Client agrees to cooperate with Consultant in a mutual effort to resolve promptly any contested portions of Consultant's invoices.

In the event any uncontested portions of any invoice are not paid within thirty (30) days of the date of Consultant's invoice, interest on the unpaid balance shall accrue beginning with the 31st day at the rate of 1.5% per month, and Consultant shall have the right to suspend work per Article XV, Suspension of Work.

7. Responsibility of Consultant.

a. Standard of Care Professional Services.

Subject to the limitations inherent in the agreed scope of work as to the degree of care, amount of time and expenses to be incurred, and subject to any other limitations contained in this Agreement, Consultant shall perform the Services and any Additional Services in accordance with generally accepted standards and practices customarily utilized by competent engineering firms in effect at the time Services and any Additional Services are rendered. Consultant does not expressly or impliedly warrant or guarantee its Services.

b. Reliance upon Information Provided by Others.

If Consultant's performance of services hereunder requires Consultant to rely on information provided by other parties (excepting Consultant's subcontractors), Consultant shall not independently verify the validity, completeness, or accuracy of such information unless otherwise expressly engaged to do so in writing by Client.

c. Consultant's Opinion of Costs.

Client acknowledges that construction cost estimates, financial analyses and feasibility projections are subject to many influences including, but not limited to, price of labor and materials, unknown or latent conditions of existing equipment or structures, and time or quality of performance by third parties. Client acknowledges that such influences may not be precisely forecasted and are beyond the control of Consultant and that actual costs incurred may vary substantially from the estimates prepared by Consultant. Consultant does not warrant or guarantee the accuracy of construction or development cost estimates, however, Consultant agrees to exercise its best Professional Judgment in rendering its opinions.

d. Construction Phase Services.

1. Consultant's Activities at Construction Site. The presence of Consultant's personnel at a construction site, whether as on-site representative, resident engineer, construction manager, or otherwise, does not make Consultant responsible for those duties that belong to Client and/or construction contractors or others, and does not relieve construction contractors or others of their obligations, duties, and responsibilities, including, but not limited to, construction methods, means, techniques, sequences, and procedures necessary for completing all portions of the construction work in accordance with the contract documents, any health or safety programs and precautions required by such construction work, and any compliance with applicable laws and regulations. Any inspection or observation of the contractor's work is for the purpose of determining that the work is proceeding in conformance with the intent of the project specifications and contract documents. Consultant has no authority to exercise control over any construction contractor in connection with their work or health or safety programs and precautions. Except to protect Consultant's own personnel and except as may be expressly required elsewhere in the Scope of Work, Consultant has no duty to inspect, observe, correct, or report on health or safety deficiencies of the construction contractor.

2. Shop Drawing and Submittal Review. If required by Consultant's Scope of Services, Consultant shall review shop drawings or other contractor submittals for general conformance with the intent of the contract documents. Except for services completed under direct contract to Consultant, Consultant shall not be required to verify dimensions, to engineer contractor's shop drawings or submittals, nor to coordinate shop drawings or other submittals with other shop drawings or submittals provided by contractor.

3. Record Drawings. Record drawings, if required, will be prepared, in part, on the basis of information compiled and furnished by others, and may not always represent the exact location, type of various components, or exact manner in which the Project was finally constructed. Except for services completed under direct contract to Consultant, Consultant is not responsible for any errors or omissions in the information from others that are incorporated into the record drawings.

e. Scope of Work.

1. Before preparing the scope of work, Consultant specifically acknowledges and agrees that it has inspected and familiarized itself with Client's site. The Consultant has received, or had the opportunity to inquire about and/or request all relevant information concerning the Scope of Work from Client or any other source Consultant deems necessary. The Scope of Work has been prepared by the Consultant and to the best of its knowledge includes all applicable work required to successfully complete the design and bidding of an arsenic treatment system.

8. Asbestos/Hazardous Material.

Consultant and Consultant's subcontractors shall have no responsibility for the discovery, handling, removal, or disposal of, or exposure of persons to asbestos or hazardous or toxic materials that are present in any form at the Project site. Professional services related to or in any way connected with the investigation, detection, abatement, replacement, use, specification, or removal of products, materials, or processes containing asbestos or hazardous or toxic materials are beyond the scope of this Agreement.

In the event Consultant encounters asbestos or hazardous materials at the jobsite, Consultant may, at its option and without liability for damages, suspend the performance of services on the Project until such time as Client and Consultant mutually agree on an amendment to this Agreement to address the issue, or Client retains another specialist consultant or contractor to identify, classify, abate and/or remove the asbestos and/or hazardous materials.

9. Consultant's Work Product.

a. Scope.

Consultant's work product which is prepared solely for the purposes of this Agreement, including, but not limited to, drawings, test results, recommendations and technical specifications, whether in hard copy or electronic form, shall become the property of Client when Consultant has been fully compensated as set forth herein. Consultant may keep copies of all work product(s) for its records.

Consultant and Client recognize that Consultant's work product submitted in performance of this Agreement is intended only for the project described in this Agreement. Client's alteration of Consultant's work product or its use by Client for any other purpose shall be at Client's sole risk.

b. Electronic Copies.

If requested, solely as an aid and accommodation to Client, Consultant may provide copies of its work product documents in computer-readable media ("electronic copies",

"CADD"). These documents will duplicate the documents provided as work product, but will not bear the signature and professional seals of the registered professionals responsible for the work. Client is cautioned that the accuracy of electronic copies and CADD documents may be compromised by electronic media degradation, errors in format translation, file corruption, printing errors and incompatibilities, operator inexperience and file modification. Consultant will maintain the original copy, which shall serve as the official, archived record of the electronic and CADD documents.

10. Indemnification.

a. The Consultant shall indemnify the Client against, and save and hold it harmless from, any and all liability, claims, demands, loss, actions, causes of action, expense, penalties, fines, assessments, damages and costs of every kind and nature for injury to or death of any and all persons, including, without limitation, employees or representatives of the Client or of the Consultant or of any subcontractor, or any other person or persons, and for damage, destruction or loss, consequential or otherwise, to or of any and all property, real or personal, including, without limitation, property of the Client or of the Consultant or of any subcontractor, or of any other person or persons, and the violation of any law, ordinance, rule, regulation, standard, or order resulting from, or in any manner arising out of, or in connection with, the performance of the work under the Contract, howsoever same may be caused, including, without limitation, the Client's active or passive negligence. The Consultant shall also, upon request by the Client, and at no expense to the Client, defend the Client in any and all suits, concerning such injury to or death of any and all persons, and concerning such damage, destruction or loss, consequential or otherwise, to or of any and all property, real or personal, including, without limitation, suits by employees or representatives of the Client or of the Consultant or of any subcontractor, or any other person or persons, or concerning any court or administrative proceeding concerning the violation of any law, ordinance, rule, regulation, standard, or order. Excluded from this paragraph are only those injuries to or deaths of persons and damage, destruction or loss, to or of property arising from the sole negligence or willful misconduct of the Client.

b. Consultant shall indemnify the Client against, and save and hold it harmless from, any and all liability, claims, demands, damages, costs, expenses and attorney's fees, suffered or incurred on account of any breach of any obligation, covenant or other provision of this contract, including without limitation, breach of the indemnity provisions of subsection A of this Section 36.

c. Consultant further agrees to defend, indemnify and hold harmless the Client, its directors, officers, employees, and agents, from and against any and all costs, damages, claims, expenses, violations, notices of violations, penalties, liens, assessments, and liabilities of every kind and nature, foreseeable or unforeseeable, directly or indirectly, arising from any release, removal, generation, use, storage or disposal on, under, around, or from the site of any material, substance, or waste, hazardous or nonhazardous, including, without limitation, drilling fluids, mud, cuttings

and development and test water howsoever same may be caused, including, without limitation, the Client's active or passive negligence.

11. Consultant's Insurance.

Consultant shall procure and maintain the following minimum insurance:

a. Commercial general liability insurance, including personal injury liability, blanket contractual liability and broad-form property damage liability coverage. The combined single limit for bodily injury and property damage shall be not less than $1,000,000.

b. Automobile bodily injury and property damage liability insurance covering owned, non-owned, rented, and hired cars. The combined single limit for bodily injury and property damage shall be not less than $1,000,000.

c. Statutory workers' compensation and employer's liability insurance as required by state law.

d. Professional liability insurance. The policy limit shall be not less than $1,000,000.

Consultant shall either require each of its subconsultants to procure and to maintain the insurance specified in this section or insure its subconsultants in the Consultants own policy, in like amounts.

Client shall be named as additional insured on polices 1 and 2 above. Upon execution of this Agreement, Consultant will provide a certificate of insurance to Client. Consultant will keep the certificate current at all times while this Agreement is in effect. The Consultant will provide a 30-day written notice in the event the above policies are cancelled.

12. Confidentiality.

Consultant agrees it will maintain the confidentiality of all material it receives from Client and will not disclose, distribute, or publish to any third party such information without the prior permission of Client. Notwithstanding the foregoing, Consultant shall have no confidentiality obligation with respect to information that:

a. becomes generally available to the public other than as a result of disclosure by Consultant or its agents or employees;

b. was available to Consultant prior to its disclosure by Client;

c. becomes available to Consultant from a third party who is not, to the knowledge of Consultant, bound to retain such information in confidence.

In the event Consultant is compelled by subpoena, court order, or administrative order to disclose any confidential information, Consultant shall promptly notify Client and shall cooperate with Client prior to disclosure so that Client may take necessary actions to protect such confidential information from disclosure.

13. Subcontracts.

Consultant shall be entitled, to the extent determined appropriate by Consultant, to subcontract any portion of the services to be performed under this Agreement.

14. Suspension of Work.

Work under this Agreement may be suspended as follows:

a. By Client. By written notice to Consultant, Client may suspend all or a portion of the Work under this Agreement if unforeseen circumstances beyond Client's control make normal progress of the Work impracticable.

b. By Consultant. By written notice to Client, Consultant may suspend the work if Consultant reasonably determines that working conditions at the Site (outside Consultant's control) are unsafe, or in violation of applicable laws, or in the event Client has not made timely payment in accordance with Article VI, compensation

15. Termination of Work.

a. This Agreement may be terminated by Client as follows: (1) for its convenience on thirty (30) days' notice to Consultant, or (2) for cause, if Consultant materially breaches this Agreement through no fault of Client and Consultant neither cures such material breach nor makes reasonable progress toward cure within fifteen (15) days after Client has given written notice of the alleged breach to Consultant.

b. This Agreement may be terminated by Consultant as follows: (1) for cause, if Client materially breaches this Agreement through no fault of Consultant and Client neither cures such material breach nor makes reasonable progress toward cure within thirty (30) days after Consultant has given written notice of the alleged breach to Client.

c. Payment upon Termination. In the event of termination, Consultant shall perform such additional work as is reasonably necessary for the orderly closing of the work. Consultant shall be compensated for all work performed prior to the effective date of termination, plus work required for the orderly closing of the work, including: (1) authorized work performed up to the termination date plus termination expenses, including all labor and expenses, at Consultant's standard billing rates, directly attributable to termination; (2) all efforts necessary to document the work completed or in progress; and (3) any termination reports requested by Client.

16. Assignment.

This Agreement is binding on the heirs, successors, and assigns of the parties hereto. Except as otherwise set forth under Article VIII, Assignment of Tasks to Affiliates, this Agreement may not be assigned by Client or Consultant without prior, written consent of the other.

17. No Benefit for Third Parties.

The services to be performed by Consultant are intended solely for the benefit of Client, and no benefit is conferred on, nor contractual relationship established with any person or entity not a party to this Agreement. No such person or entity shall be entitled to rely on Consultant's services, opinions, recommendations, plans, or specifications without the express written consent of Consultant. No right to assert a claim against the Consultant, its officers, employees, agents, or consultants shall accrue to the construction Contractor or to any subcontractor, supplier, manufacturer, lender, insurer, surety, or any other third party as a result of this Agreement or the performance or nonperformance of the Consultant's services hereunder.

18. Force Majeure.

Consultant and Client shall not be responsible for delays caused by circumstances beyond their reasonable control, including, but not limited to: (1) strikes, lockouts, work slowdowns or stoppages, or accidents; (2) acts of God; (3) failure of Client to furnish timely information or to approve or disapprove Consultant's instruments of service promptly; and (4) faulty performance or nonperformance by Consultant or Client, Client's or Consultant independent consultants or contractors, or governmental agencies. Consultant and Client shall not be liable for damages arising out of any such delay, nor shall the Consultant or Client be deemed to be in breach of this Agreement as a result thereof.

19. Integration.

This Agreement represents the entire understanding of Client and Consultant as to those matters contained herein. No prior oral or written understanding shall be of any force or effect with respect to those matters covered herein. This Agreement may not be modified or altered except in writing signed by both parties.

20. Severability.

If any part of this Agreement is found unenforceable under applicable laws, such part shall be inoperative, null, and void insofar as it conflicts with said laws, but the remainder of this Agreement shall be in full force and effect.

21. Choice of Law/Jurisdiction.

This Agreement shall be administered and interpreted under the laws of the State of Arizona Jurisdiction of litigation arising from the Agreement shall be in The State of Arizona.

22. Attorneys' Fees.

In the event any claim, controversy, or legal action arises under this Agreement, the prevailing party shall be entitled to recover from the other party all attorneys' fees, costs, expenses and other fees incurred by the prevailing party.

23. Notice Provisions.

Notices concerning this Agreement shall be in writing and sent by certified mail or by courier (such as Federal Express), or by hand-delivery addressed as follows:

To the Company:

Arizona Water Company
3805 North Black Canyon Highway
Phoenix, Arizona 85015-5351
Attention: President

or

Arizona Water Company
Post Office Box 29006
Phoenix, AZ 85038-9006
Attention: President

To Consultant:

Carollo Engineers, P.C.
3033 N. 44th Street, Suite 101
Phoenix, AZ 85018
Attn: Ron Joost, P. E.
Partner in Charge

Either party may change its address for purposes of this Section by giving written notice of such change of address to the other party

24. Authorization.

The persons executing this Agreement on behalf of the parties hereto represent and warrant that the parties have all legal authority and authorization necessary to enter

into this Agreement, and that such persons have been duly authorized to execute this Agreement on their behalf.

IN WITNESS WHEREOF, each of the parties hereto has caused this instrument to be executed by their respective duly authorized officers as of the date first written above.

CAROLLO ENGINEERS, P.C.
a Professional corporation

By: Ronald D. Joost

Its: Partner

Robert A. Ardizzone
Partner

ARIZONA WATER COMPANY,
an Arizona corporation

By: [illegible]

Its: Vice President - Engineering

EXHIBIT A

Arizona Water Company

Carollo Engineers

Oasis Arsenic Treatment Facility Expansion

Scope of Work

August 21, 2009

INTRODUCTION

This Scope of Work defines the engineering services to be provided by Carollo Engineers, P.C. (Carollo) for the Oasis Arsenic Treatment Facility Expansion project for Arizona Water Company (AWC). The purpose of this project is to select and then install a 2,800 gpm arsenic wellhead treatment system at the Oasis water campus (Campus), owned and operated by AWC. The project generally consists of the design of additional arsenic treatment facilities at the Campus. The Campus consists of three wells 11, 13, and 19, a booster pump station, 550,000 gallon finished water storage tank, and a 3.6 MGD coagulation/filtration arsenic treatment facility (ATF) supplied by Layne Christensen. The existing ATF is dedicated to treating water from Well #13 and reduces the arsenic concentration from 16 ppb to less than 5 ppb. The new facilities shall be designed and constructed to reduce the arsenic concentrations from Well #19 from approximately 26 ppb to 8 ppb or less. Carollo will use the existing well water quality data and plant information to develop a preliminary treatment method recommendation and detailed analysis to AWC. Upon review, AWC will select the treatment method. The design will include engineering design services for civil, structural, mechanical, and electrical/I&C integration of the arsenic treatment facility into AWC's current water system. Currently, the existing on-site water tank level controls operation of Well #13 with a permissive control from the existing ATF. Well #19 is controlled solely by the storage tank level but it is anticipated that Well #19 will also require permissive controls from the new ATF.

A summary of the tasks is listed below. The 100 series through 400 series tasks are basic services as defined in the Agreement for Consulting Services, while the 500-600 series tasks are optional additional services to be negotiated at a later date.

Task Series 100 - Project Management, Schedule Updates

Task 110 – Monitor progress, monthly status reports/invoices, schedule updates

Task 120 – Conduct meetings, distribute meeting minutes

Task 130 - Data Gathering

Assumptions: 9 month design phase duration, one project kick-off meeting, and up to 6 design phase progress meetings.

AWC inputs: 1) Confirm schedule for project meetings, 2) provide applicable data for Oasis Campus well site including pump curves, existing SCADA equipment as-builts, existing 480-volt as-builts, water quality data, and electronic CAD files for the site plan.

Deliverables: Monthly invoices and status reports, monthly schedule updates.

Task Series 200 - Selection of Treatment Method and Preliminary Design

Task 210 – Solicit arsenic system proposals and generate life cycle costs

Task 220 – Evaluate contract procurement methods (pre-purchase vs. pre-select vs. bid), and develop equipment selection documents

Task 225 - Prepare Technology Selection Tech Memo

Task 230 – Collect site data including site survey, confirm regulatory permits

Task 240 – Develop preliminary site plan, process schematic drawings, and P&IDs

Task 250 - Prepare Opinion of Probable Cost for Construction

Task 260 - Prepare Preliminary Design Report (30% design level)

Assumptions: 1) If sufficient geotechnical information is currently not available for site, additional services will be provided or coordinated by Carollo under Optional Task 610. Its not anticipated that a geotechnical survey for soils conditions will be required. 2) The site survey includes on-site topographic and existing facility data collection. If a boundary survey, or easements/right-of-way delineation level of survey is required, additional scope may be required.

AWC inputs: Technology Selection Tech Memo and Preliminary Design Report review comments

Deliverables: Technology Selection Tech Memo, Preliminary Design Report, and Equipment Selection Documents package if needed.

Task Series 300 - Design Development

Task 310 – Design CAMP, Sixty Percent (60%) Design, design review meeting

Task 320 – Construction sequence plan

Task 330 – Ninety Percent (90%) Design Progress Submittal, design review meeting

Task 340 – Regulatory agency coordination and permit packages development, including ADEQ ATC, MC Use Permit Minor Amendment and Bldg. Permit

Task 350 – Final (100%) Submittal, optional design review meeting

Task 360 – Opinions of Construction Cost

Assumptions: 1) Existing electrical utility service to well-site is sufficient for new on-site arsenic treatment system or system expansion, and will be able to service new electrical load from on-site panel, so minimal electrical utility coordination required. 2) The 60%

design will not require a design submittal package to AWC. A 60% design review meeting/workshop will be conducted by Carollo to review selected 60% level drawings and specifications. 3) AWC will pay all permit fees to regulatory agencies. 4) Carollo will assist AWC with obtaining a minor amendment to the existing special use permit and building permit from Maricopa County by completing and submitting permit package. It is assumed that AWC will take the lead in coordinating and conducting any potential public hearing or outreach meetings. Carollo will provide technical support and send a representative if necessary for a public hearing or outreach meeting. 5) For the 90% submittal Carollo will provide unsigned electronic documents (drawings and specifications) to AWC on CD for their in-house reproduction needs. AWC will provide hard copies as needed for Carollo to submit sealed drawings and specifications packages to regulatory agencies, and for Carollo's internal files and use. 6) Technical specifications will be prepared in accordance with 1995 CSI format. Carollo will use AWC front-end documents and Carollo's Divisions 1-17 specifications for templates. 7) Design drawings will be produced in Microstation V XM in 2-D format. 8) Fire protection will not be required for the new arsenic treatment system or system expansion. 9) Architectural or landscape architectural drawings will not be required for the project. Limited landscaping requirements will be shown on the civil drawings. 10) A total of 24 design drawings are estimated. A preliminary drawing list is attached (Exhibit C).

AWC inputs: Provide review comments on submittals.

Deliverables: 60% design review workshop materials, 90% design package, 100% design package, opinion of probable construction cost

Task Series 400 – Bidding Phase Services

Task 410 – Conduct pre-bid meeting at site

Task 420 – Issue pre-bid meeting minutes

Task 430 – Prepare clarifications and addenda, respond to Contractor questions

Task 450 – Issue conformed construction documents

Assumptions: 1) AWC will be provided hard copy sets of signed/sealed full size drawings and specifications for distribution to bidding Contractors. 2) AWC will directly provide to pre-selected Contractors the bid package.

AWC inputs: Copies of bid packages to Contractors.

Deliverables: Pre-bid meeting minutes, clarifications & addenda, conformed construction documents. AWC will distribute construction documents to bidding Contractors and the selected Contractor.

OPTIONAL/TBD: Task Series 500 - Office Engineering during Construction Phase Services (this task to be defined upon completion of the design phase)

Task 510 – Review up to 20 submittals

Task 520 – Review and respond up to 15 RFI's and issue clarifications

Task 530 – Review up to 0 (zero) requests for change orders

Task 540 – Provide record drawings per Contractor's red lines at project close-out

Task 550 – Obtain ADEQ AOC

Assumptions: 1) AWC will maintain the administrative files and logs for the project during construction including submittals, correspondence, payment applications, etc. 2) AWC will review payment applications. 3) Carollo will review the submittals only for conformance with the design concept of the project and compliance with the information given in the construction documents. This review shall not extend to means, methods, sequences, techniques, or procedures of construction selected by the Contractor. 4) Submittal review efforts are based on 50% of the submittals requiring two reviews. 5) AWC's project manager during construction will take the lead on interfacing with Contractor and coordinating or delegating construction related questions. 6) AWC will provide on-site resident representation.

AWC inputs: Review and input on Carollo's submittal reviews and clarifications

Deliverables: ADEQ AOC and Record Drawings

OPTIONAL/TBD: Task 600 – Other Additional Services

Task 610 – Perform geotechnical investigation of the site (subconsultant)

Task 620 – Provide on-site field inspection and resident engineering during construction

PROJECT SCHEDULE

The estimated schedule for the project is as follows:

Notice to Proceed:	August 24, 2009
Preliminary Design Phase Complete	October 28, 2009
Detailed Design Phase Complete	February 24, 2010
Construction Phase Starts	April 12, 2010

General Conditions

Carollo has no control over the cost of labor, materials, equipment, or services furnished by others, or over Contractor's methods of determining prices, or other competitive bidding or market conditions, practices, or bidding strategies. Cost estimates are based on Carollo's opinion based on experience and judgment. Carollo cannot and does not guarantee that proposals, bids, or actual Project construction costs will not vary from cost estimates prepared by Carollo.

EXHIBIT B - Oasis Arsenic Treatment Facility Expansion
Carollo Engineers Fee Proposal
August 21, 2009

Base Services

TASK DESCRIPTIONS	Partner	Proj. Mgr.	Disc. Eng.	Proj. Eng.	Staff Eng.	Tech	Word Pro.	Total Labor	Total $
Rate ($)	$235	$170	$145	$125	$92	$120	$80		
TASK SERIES 100 - PROJECT MANAGEMENT, MEETINGS									
Tasks 110-120; Monitor progress, meetings, schedule updates	4	20	16					40	$8,660
Task 130 - Data gathering		2		2				4	$590
TASK SERIES 200 - SELECTION OF MEDIA AND PRELIMINARY DESIGN									
Tasks 210 - 225; Solicit arsenic system proposals, life cycle costs	4	16	16	36		16	4	92	$12,720
Tasks 230 - 260; Prepare Preliminary Design Report	4	20	48	12		24	8	116	$16,320
TASK SERIES 300 - DESIGN DEVELOPMENT									
Task 310 - 60% Design and review workshop	2	24	84	30		176	22	338	$43,360
Task 320 - Construction sequence plan		6						6	$1,020
Task 330 - 90% design package	2	24	86	18		167	20	299	$38,300
Task 340 - Regulatory agency coordination		12			40			52	$5,720
Task 350 - Final 100% design package	2	4	8	12		6	8	42	$5,410
Task 360 - Opinions of probable cost	2	4	16					22	$3,470
TASK SERIRES 400 - BIDDING PHASE SERVICES									
Task 400 - Bidding Phase Services		12	8	24	12	24	8	86	$10,664
Total Hrs	20	144	264	134	52	415	88		
							Sub-Total	1097	$144,234
PECE @ $9/hour									$9,873
Reproduction - AWC receives one full size set of signed/sealed dwgs. /specs.									$0
Mileage/Travel									$2,000
Subconsultant (Entellus - Surveying)									$2,500
							Total		$158,607

OPTIONAL TBD - Additional Services

TASK DESCRIPTIONS	Partner	Proj. Mgr.	Disc. Eng.	Proj. Eng.	Staff Eng.	Tech	Word Pro.	Total Labor	Total $
Rate ($)	$235	$170	$145	$125	$92	$120	$80		
TASK SERIES 500 - OFFICE ENGINEERING DURING CONSTRUCTION									
Task 510 - Review 20 submittals									$0
Task 520 - Review and respond to 15 RFIs									$0
Task 530 - Review 0 (zero) change orders (by AWC)									$0
Task 540 - Provide record drawings									$0
Apply for ADEQ AOC (by AWC)									$0
TASK SERIES 600 - ADDITIONAL SERVICES									
Task 610 - Perform geotechnical investigation									$0
Task 620 - On-site field inspection and resident engineering services									$0
Total Hrs	0	0	0	0	0	0	0	0	$0
							Sub-Total	0	$0
PECE @ $9/hour									$0
Reproduction									$0
Mileage/Travel									$0
Subconsultant (Geotechnical consultant TBD) - placeholder cost									$0
							Total		$0

EXHIBIT C
Arizona Water Company
Carollo Engineers
Oasis Arsenic Treatment Facility Expansion
Drawing List
August 21, 2009

Sheet No.	Drawing No.	Drawing Title
1	G-1	Cover sheet, location map, drawing index
2	G-2	Abbreviations, notes, design criteria
3	G-3	Process Flow Schematic
4	C-1	Site plan (piping, grading, demo)
5	S-1	Vessel foundation pad (plan, section and details)
6	M-1	Vessel piping (plan, section and details)
7	M-2	Vessel sections and details
8	E-1	Standard electrical symbols and legend
9	E-2	Single line diagram and notes
10	E-3	Electrical schedules
11	E-4	Site electrical and grounding plan
12	E-5	Control schematic diagrams
13	E-6	PLC connection diagrams - Arsenic Treatment System
14	E-7	System communications diagram
15	I-1	Instrumentation standard symbols and legend
16	I-2	Piping and instrumentation diagram - Arsenic Treatment System
17	I-3	Treatment System P&ID - Vendor supplied, panel details
18	I-4	Treatment System P&ID - Vendor supplied, I/O
19	I-5	Treatment System P&ID - Vendor supplied, misc.
20	T-1	Typical details and sections (civil, mec, struc)
21	T-2	Typical details and sections (civil, mec, struc)
22	T-3	Typical details and sections (civil, mec, struc)
23	T-4	Typical details and sections (civil, mec, struc)
24	T-5	Typical details and sections (electrical, instrumentation)

OASIS ARSENIC TREATMENT FACILITY EXPANSION
DESIGN SERVICES FOR ARIZONA WATER COMPANY
Carollo Engineers

ID	Task	Task Name	Duration	Start	Finish
1	1	Notice to Proceed	0 days	Mon 8/24/09	Mon 8/24/09
2	2	MEETING - Project Kickoff	0 days	Thu 8/27/09	Thu 8/27/09
3	100	PHASE 1 - SELECTION OF TREATMENT METHOD	16 days	Thu 8/27/09	Thu 9/17/09
4	110	MEETING - Kick Off, Gather Inputs from AWC Engineers and Operators	1 day	Thu 8/27/09	Thu 8/27/09
5	120	Solicit vendor proposals	10 days	Fri 8/28/09	Thu 9/10/09
6	130	Generate life cycle costs	5 days	Fri 9/11/09	Thu 9/17/09
7	140	Evaluate contract procurement methods	5 days	Fri 9/11/09	Thu 9/17/09
8	150	Submit Technology Selection Tech Memo to AWC	0 days	Thu 9/17/09	Thu 9/17/09
9	200	PHASE 2 - PRELIMINARY DESIGN REPORT	44 days	Fri 8/28/09	Wed 10/28/09
10	210	Process Schematics and Design Criteria	8 days	Fri 8/28/09	Tue 9/8/09
11	220	P & ID's	5 days	Wed 9/9/09	Tue 9/15/09
12	230	Land survey, or confirm existing available survey data	3 days	Wed 9/9/09	Fri 9/11/09
13	240	Develop site layouts (30% design level)	6 days	Mon 9/14/09	Mon 9/21/09
14	250	Confirm regulatory permits list	6 days	Mon 9/14/09	Mon 9/21/09
15	260	Opinion of probable costs	5 days	Tue 9/22/09	Mon 9/28/09
16	270	Submit preliminary design report (30% design level)	0 days	Mon 9/28/09	Mon 9/28/09
17	271	AWC review of preliminary design report	15 days	Tue 9/29/09	Mon 10/19/09
18	272	MEETING - Receive Preliminary Design Report comments from AWC	0 days	Mon 10/19/09	Mon 10/19/09
19	280	Optional Pre-Purchase for Arsenic Equipment to decrease lead time	2 days	Tue 10/20/09	Wed 10/21/09
20	290	Finalize Predesign Report	5 days	Thu 10/22/09	Wed 10/28/09
21	300	PHASE 3 - DETAILED DESIGN	85 days	Wed 10/28/09	Wed 2/24/10
22	310	MEETING - Design CAMP workshop	0 days	Wed 10/28/09	Wed 10/28/09
23	320	60% Design package preparation and submittal	20 days	Thu 10/29/09	Wed 11/25/09
24	330	AWC review of 60% design	15 days	Thu 11/26/09	Wed 12/16/09
25	340	60% Design estimate of probable cost update	5 days	Thu 10/29/09	Wed 11/4/09
26	350	MEETING - 60% design review w/ AWC	0 days	Wed 12/16/09	Wed 12/16/09
27	360	90% Design package preparation and submittal	20 days	Thu 11/26/09	Wed 12/23/09

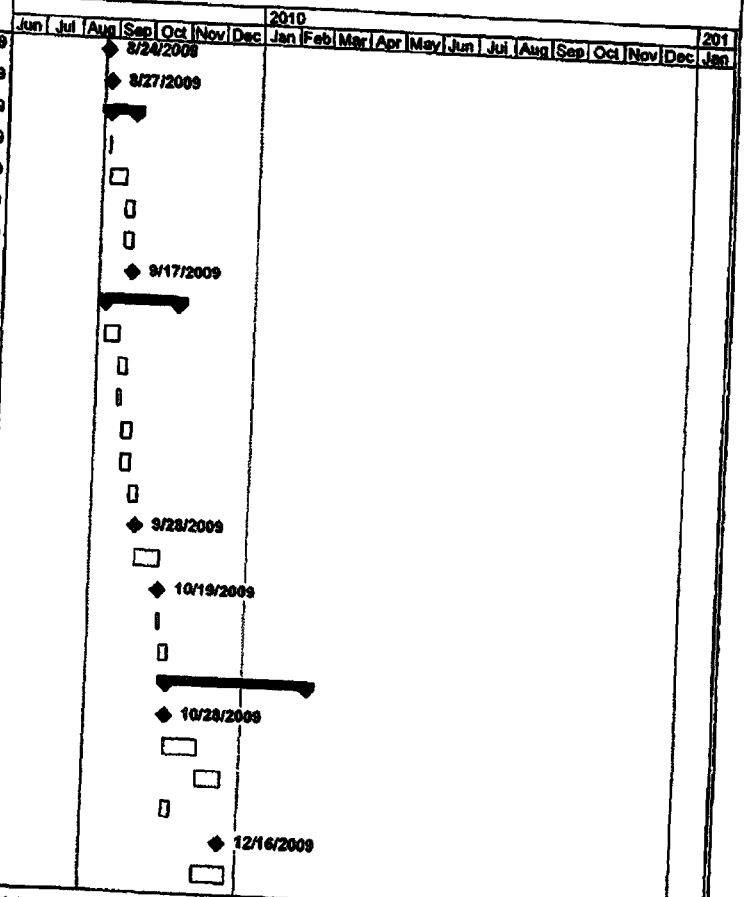

Project: Oasis_Project_Schedule_final
Date: Fri 8/21/09

Task | Task Progress | Critical Task | Critical Task Progress | Milestone | Summary | Rolled Up Task | Rolled Up Critical Task | Rolled Up Milestone | Rolled Up Progress | Split | External Tasks | Project Summary

Updated: Fri 8/21/09

OASIS ARSENIC TREATMENT FACILITY EXPANSION
DESIGN SERVICES FOR ARIZONA WATER COMPANY
Carollo Engineers

ID	Task	Task Name	Duration	Start	Finish
28	365	AWC review of 90% design	15 days	Thu 12/24/09	Wed 1/13/10
29	370	Construction sequence plan schedule	5 days	Thu 11/26/09	Wed 12/2/09
30	375	90% Design estimate of probable cost update	15 days	Thu 11/26/09	Wed 12/16/09
31	376	MEETING - 90% design review w/ AWC	0 days	Wed 1/13/10	Wed 1/13/10
32	380	Agency Coordination	45 days	Thu 12/24/09	Wed 2/24/10
33	381	ADEQ ATC	20 days	Thu 12/24/09	Wed 1/20/10
34	382	MC Use Permit Minor Amendment and Bldg. Permit	35 days	Thu 12/24/09	Wed 2/10/10
35	383	Agency review comments coordination	10 days	Thu 2/11/10	Wed 2/24/10
36	390	Final Design Package Complete	0 days	Wed 2/24/10	Wed 2/24/10
37	395	MEETING - Optional Design Progress Meeting	0 days	Wed 2/24/10	Wed 2/24/10
38	400	PHASE 4 - BIDDING SERVICES	23 days	Thu 2/25/10	Mon 3/29/10
39	410	Advertise project	10 days	Thu 2/25/10	Wed 3/10/10
40	420	Conduct pre-bid meeting	0 days	Wed 3/10/10	Wed 3/10/10
41	430	Issue pre-bid meeting minutes and clarifications (if needed)	3 days	Thu 3/11/10	Mon 3/15/10
42	440	Prepare clarifications, respond to Contractor RFI's	4 days	Tue 3/16/10	Fri 3/19/10
43	450	Open bids and select qualified winner	1 day	Mon 3/22/10	Mon 3/22/10
44	460	Issue Conformed Specifications and Drawings	5 days	Tue 3/23/10	Mon 3/29/10
45	500	PHASE 5 - CONSTRUCTION MANAGEMENT - OPTIONAL	195 days	Mon 4/12/10	Mon 1/10/11
46	501	AWC issues NTP to Contractor	0 days	Mon 4/12/10	Mon 4/12/10
47	510	Contractor mobilization	5 days	Tue 4/13/10	Mon 4/19/10
48	515	Critical mechanical/yard piping tie-ins (8 hours tie-ins)	5 days	Tue 4/20/10	Mon 4/26/10
49	520	Contractor makes initial submittals for long-lead items	20 days	Tue 4/13/10	Mon 5/10/10
50	550	Arsenic treatment facility structural / mechanical	120 days	Tue 4/20/10	Mon 10/4/10
51	560	Electrical	80 days	Tue 8/24/10	Mon 12/13/10
52	561	ADEQ AOC permit	15 days	Tue 12/14/10	Mon 1/3/11
53	570	Start-up, Commissioning, AWC Staff training, D&Ms	20 days	Tue 12/14/10	Mon 1/10/11

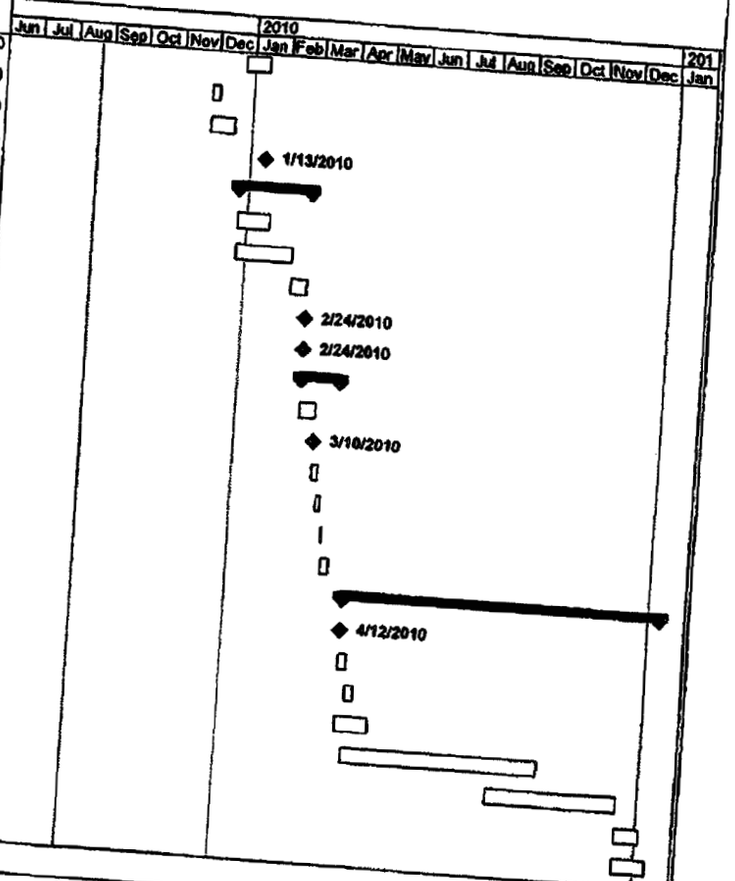

Project: Oasis_Project_Schedule_final
Date: Fri 8/21/09

Task | Task Progress | Critical Task | Critical Task Progress | Milestone | Summary | Rolled Up Task | Rolled Up Critical Task | Rolled Up Milestone | Rolled Up Progress | Split | External Tasks | Project Summary

ARIZONA WATER COMPANY

Oasis Arsenic Treatment Facility Expansion

DESIGN REPORT

September 2010

The undersigned has approved this document for and on behalf of Carollo Engineers, P.C.

Partner

Registered Professional Engineer (Environmental)
CERTIFICATE NO.
31736
MARK J
GROSS
Date Signed 9/20/10
ARIZONA, U.S.A.

EXPIRES 09-30-2012

carollo

Engineers...Working Wonders With Water™

3033 NORTH 44TH STREET • SUITE 101 • PHOENIX, ARIZONA 85018 • (602) 263-9500 • FAX (602) 265-1422

pw://Carollo/Documents/Client/AZ/Arizona Water Co/8340A10/Correspondence/Permitting/Design Report.docx (A)

Arizona Water Company
Oasis Arsenic Treatment Facility Expansion Preliminary Design Project

PRELIMINARY DESIGN REPORT

TABLE OF CONTENTS

Page No.

SECTION 1 INTRODUCTION 1-1
1.1 PROJECT BACKGROUND 1-1
1.2 SITE INFORMATION 1-2
1.3 SUMMARY OF MAJOR DECISIONS TO-DATE 1-3

SECTION 2 FULL-SCALE TEST RESULTS 2-1
2.1 ARSENIC TREATMENT SYSTEM TEST PROTOCOL 2-2
2.2 ARSENIC TREATMENT SYSTEM TEST RESULTS 2-2
2.2.1 Conclusions 2-10
2.3 ARSENIC RESIDUALS SLUDGE FILTER PRESS DEWATERING EVALUATION 2-10

SECTION 3 CONCEPTUAL DESIGN CRITERIA 3-1
3.1 SYSTEM EXPANSION AND PROCESS FLOW DIAGRAM 3-1
3.1.1 Raw Water Quality 3-1
3.1.2 Finished Water Goals 3-1
3.2 FILTER PRESSURE VESSELS 3-2
3.3 FERRIC CHLORIDE AND SODIUM HYPOCHLORITE CHEMICAL FEED SYSTEMS 3-4
3.3.1 Ferric Chloride 3-4
3.3.2 Sodium Hypochlorite 3-6
3.4 PIPING MODIFICATIONS FILTER BACKWASHING AND CONNECTION TO EXISTING DISTRIBUTION SYSTEM 3-7
3.4.1 Influent Piping 3-7
3.4.2 Filter Inlet Piping 3-9
3.4.3 Filter Effluent Piping 3-9
3.4.4 Filter Backwash Piping 3-10
3.4.5 Existing Finished Water Pump Station and Storage Tank 3-10
3.4.6 Connection to Existing Distribution System Piping 3-10

Registered Professional Engineer (Environmental)
CERTIFICATE NO.
31736
MARK J
GROSS
Date Signed 9/20/10
ARIZONA, U.S.A.
EXPIRES 09-30-2012

3.5 RESIDUALS HANDLING SYSTEMS 3-10
3.5.1 Backwash Waste Tank Upgrades 3-11
3.6 OPERATIONAL MODES AND CONTROLS DESCRIPTIONS 3-12

SECTION 4 SITE LAYOUT AND PREPURCHASE CONSIDERATIONS 4-14
4.1 PRELIMINARY SITE LAYOUT 4-14
4.2 FILTER SYSTEM PACKAGE 4-14
4.3 ELECTRICAL AND INSTRUMENTATION 4-14
4.4 RESIDUALS HANDLING AND DISPOSAL 4-15
4.5 SITE DRAINAGE 4-16

LIST OF APPENDICES

APPENDIX A OASIS WATER CAMPUS WELLS WATER QUALITY
APPENDIX B FIELD DATA FROM FULL SCALE TESTING

LIST OF TABLES

Table 2.1 Full-Scale Testing Conditions 2-2
Table 2.3 Water Quality Summary during Full-Scale Testing 2-3
Table 2.4 Filter Press Dewatering Evaluation 2-11
Table 3.1 Water Quality Data for Oasis Well No. 19 (1) 3-2
Table 3.2 Summary of Production Flows at Various Loading Rates 3-3
Table 3.3 Impact of Backwash on Filter Loading Rates(1) 3-3
Table 3.4 Filter Design Criteria 3-4
Table 3.5 Ferric Chloride Storage and Feed System Design Criteria 3-5
Table 3.6 Sodium Hypochlorite Storage and Feed System Design Criteria 3-6
Table 3.7 Chemical Mixing Options 3-8
Table 3.8 Backwash Design Criteria 3-11

LIST OF FIGURES

Figure 2.1 Flow Rates and FLRs during Full-Scale Testing 2-6
Figure 2.2 Combined Filter Effluent Turbidity during Full-Scale Testing 2-6
Figure 2.3 Differential Pressure for Combined Filter Effluent during Full-Scale Testing 2-7
Figure 2.4 Filter Effluent Arsenic Concentration during Full-Scale Testing 2-7
Figure 2.5 Filter Effluent Arsenic Concentration Immediately Before and After a Backwash 2-8
Figure 2.6 Backwash Waste Turbidity Profile at FLR of 5.2 gpm/ft^2 2-8
Figure 2.7 Backwash Waste Turbidity Profile at FLR of 5.8 gpm/ft^2 2-9
Figure 2.8 Backwash Waste Turbidity Profile at FLR of 6.8 gpm/ft^2 2-9

INTRODUCTION

1.1 PROJECT BACKGROUND

Arizona Water Company (AWC) has contracted Carollo Engineers (Carollo) to provide engineering design services for an expanded arsenic groundwater treatment system at their Oasis Water Campus in Mesa, Arizona. The purpose of this memorandum is to define the design criteria for the arsenic treatment facility expansion. The Oasis Water Campus site currently has a 2,460 gallons per minute (gpm) coagulation/filtration (C/F) arsenic treatment process, treating water from Well No. 13. Layne Christensen (Layne) designed and installed this system. AWC intends to also bring into production the existing 2,900 gpm Well No. 19. Well No. 19 has an average arsenic concentration of around 0.025 milligram per liter (mg/L), exceeding the US EPA standard of 0.010 mg/L and therefore will require treatment.

AWC's intent for the original scope of the project was for Carollo to perform an arsenic treatment system technology selection and costs analysis before moving forward with design of the new arsenic treatment system. Based on a preliminary life cycle costs analysis, AWC elected to expand the existing system in lieu of installing a different or separate treatment system. Capital costs will be saved by expanding and reusing existing system components rather than constructing a whole new system. In addition, using a single treatment technology at Oasis will provide a simpler and easier to maintain system. The following tasks were performed in order to develop project design criteria:

- Full-scale testing on the existing Layne system using higher filter loading rates (FLRs), and monitor waste backwash water turbidity to potentially decrease backwash durations. If these could be achieved, additional capital costs would be saved for the system expansion.
- Bench-top testing of backwash residuals at an off-site mechanical dewatering vendor laboratory. This testing will review the amenability of using mechanical dewatering at the site.
- Testing of dewatering/thickening polymer at the site, to increase the percent solids of residual sludge hauled off-site.

In November 2009, Carollo prepared a Testing Protocol for AWC staff. The purpose of this full-scale testing protocol was to better define key design criteria for the system expansion, including pressure vessel loading criteria, and a potential reduction in backwash volume generated per vessel. Full- scale testing was performed on the existing Layne C/F system by AWC operations personnel in January 2010. The results of this full-scale testing is presented later in this report, and were also presented to the Arizona Department of Environmental Quality (ADEQ) in a letter dated April 23, 2010.

Preliminary design criteria presented in this report was developed based on the anticipated raw water quality for Well No. 19, AWC's treated water quality goals, the anticipated well production rate, integration of the new system within the existing site infrastructure, and AWC inputs. Each of these is discussed and defined in the following sections. The preliminary design criteria contained herein will be used to guide the detailed design efforts.

1.2 SITE INFORMATION

The Oasis Water Campus site is located in Mesa, Arizona at 558 South Palm Drive. This site is located in a single family residential zoned area (per the Maricopa County Special Use Permit) with the Central Arizona Project aqueduct located to the southwest, a church to the southeast, rehabilitation center, park, and residential housing on the other sides. Three groundwater wells are located at the site, Well No. 11, Well No. 13, and Well No. 19. Each of these wells is tied in to the existing Layne arsenic treatment system, currently only Well No. 13 is typically used for production. AWC intends to bring the new Well No. 19 into full-time production after the arsenic treatment system capacity is expanded. Well No. 19 was installed in April 2007.

The existing Layne C/F system includes three horizontal pressure vessels operated in parallel. Treated water is stored in an on-site 550,000 gallon storage tank, which is then boosted into the AWC Apache Junction District distribution system. The arsenic treatment process equipment is located on the south side of the 0.9-acre site. The main electrical panels and site transformer are situated on the eastern border of the site. A retention pond equipped with a dry well at the northwest border receives the initial well start-up pump out, and is equipped with an overflow to a storm structure on the southwest side which drains into the adjacent canal right of way.

On the Maricopa County Special Use permit site map supplied by AWC, it appears that a setback requirement of four feet on either side of the perimeter site boundary fence line is identified. The current arsenic treatment chemical feed and storage area has a setback of about seven feet from the fence line. It is anticipated that new or relocated arsenic treatment facilities will maintain at a minimum the same setbacks currently in place. Carollo contracted Entellus, Inc. to conduct a site survey locating pertinent site features.

1.3 SUMMARY OF MAJOR DECISIONS TO-DATE

AWC and Carollo have developed some baseline project requirements for the arsenic treatment system expansion based on the full-scale testing results, AWC's preferences and requirements, and Carollo's recommendations. The major decisions used to develop this preliminary design report include:

- The original intent for the arsenic system expanded treatment design capacity was 5,300 gpm. This flow rate is provided by the combined output of Well No. 13 and Well No. 19. However, AWC will decide what the ultimate system capacity will be based on the data presented in this report, taking in to consideration the full- scale testing results to analyze potential elevated loading rates (see Section 2.0 Full-Scale Test Results).
- The existing Layne C/F treatment system will be expanded, with selected equipment provided by Layne or another approved vendor.
- Treated and untreated well water will not normally be blended; the full well production flow will be pumped through the arsenic C/F treatment system. However, AWC staff may fine tune the system ferric chloride dosing as needed to achieve a target arsenic effluent concentration of 7 ppb or less.
- The new pressure vessels will be situated adjacent to the existing vessels, in a similar configuration. The existing chemical feed system will be relocated and expanded, and located under a metal shade canopy.
- Carollo will prepare arsenic treatment system pre-purchase documents for Layne and other vendors. AWC will select and pre-purchase select arsenic treatment equipment, assuming that pricing provided by Layne or other vendor is acceptable.
- AWC will invite a short list of general contractors to bid on installing the arsenic treatment system and project work shown in the design package and then make a selection.
- Electric power from the existing power panels at the Oasis Water Campus site will be used to power the expanded arsenic treatment facilities. The site currently has computer controls and remote monitoring for critical alarms.

FULL-SCALE TEST RESULTS

The purpose of the full-scale testing of the existing Layne treatment system was to develop design criteria for the expansion of the system. Three pressure vessels provide filtration in the existing system, and an 80,700 gallon bolted steel backwash tank receives filter backwash and settles out residuals for further thickening in a Sludge Mate® bin container system. The current filters operate at a FLR of about 5.1 gpm/ft^2 when all vessels are in service and 7.7 gpm/ft^2 when two cells (or one vessel) is taken offline so that a cell can be backwashed. Although FLRs are generally designed around 5 gpm/ft^2, each water supply is unique and should be tested to demonstrate the upper limit at which the C/F can be pushed and reliably produce low-arsenic water.

AWC has already performed some testing at the Oasis Water Campus. For example, they have determined that a ferric chloride dose of around 2.6 mg/L is optimal for arsenic removal down to approximately 0.007 mg/L when treating Well No. 19, at the current loading rates. The fundamental questions that need to be answered prior to completing the detailed design for the system expansion include:

- Is Well No. 13 and 19 combined water quality amenable to arsenic removal using the C/F process?
- How many pressure vessel filters should be added to achieve the required treatment capacity? To answer this question, the proposed testing should demonstrate how much the FLR can be increased, and if so to what loading rate?
- At the higher pressure vessel filters loading rates, does the backwash frequency need to change? AWC has indicated that minimum 24-hour intervals between backwashes is required in order to match staff availability. To answer this question, the proposed testing should evaluate the current backwash strategy to determine if the backwash volume can be reduced/optimized. Layne has indicated that the backwash flow rate should not be reduced, however the backwash duration may be able to be shortened, decreasing the total amount of backwash water generated.
- Can the residuals from the arsenic treatment process be thickened beyond the current average of 2 percent solids? Answering this question will involve two steps; 1) can the existing Sludge Mate® system performance be improved by adding polymer, and 2) would a mechanical dewatering process such as a plate and frame press be suitable?
- One question that was immediately answered was whether filter aid polymer fed upstream of the filters could provide a benefit by extending filter runs, and therefore reduce backwash waste volume. Per Layne, filter aid polymer is not recommended due to decreased filter run hours. Layne believes that their LayneOx filter media is

typically negatively impacted by shorter filter runs due to faster head loss which leads to shorter filter runs.

2.1 ARSENIC TREATMENT SYSTEM TEST PROTOCOL

The existing Layne system will be expanded, and existing system components will be reused where practical to reduce project costs. In order to determine if the current FLRs could be increased, potentially reducing the number of new pressure vessel filters needed, full-scale testing was performed. A full-scale test protocol for different FLRs was developed.

2.2 ARSENIC TREATMENT SYSTEM TEST RESULTS

Full-scale testing was conducted at the Oasis Campus site from January 15 to March 3, 2010. Table 2.1 summarizes the various tests that were conducted. The feed water flow and ferric chloride dose were varied during this time to determine the maximum FLR that the existing system could achieve. Based on field conditions including actual flow output from the wells, and iron breakthrough that occurred during Test 3, the highest loading rate, loading rates were not pushed to 7.2 gpm/ft^2. The two primary goals during operations were:

1. Filter effluent arsenic remains below 0.010 mg/L.
2. Effective backwashing is maintained (i.e., solids are effectively flushed out of the filter bed).

Table 2.1 Full-Scale Testing Conditions
Preliminary Design Report
Arizona Water Company

Test No.	Test Objectives	Operating Conditions (average)		
		Treated Flow (gpm)	No. of Cells in Filtration	Filter Loading Rate (gpm/ft^2)
1	Monitor Effluent Water Quality at Baseline Conditions, Evaluate Effectiveness of Backwashes	2,500	6	5.2
2	Monitor Effluent Water Quality at Higher Loading Rate, Evaluate Effectiveness of Backwashes	2,800	6	6.0
3	Monitor Effluent Water Quality at Higher Loading Rate, Evaluate Effectiveness of Backwashes	3,300	6	6.7
4	Confirm 6 gpm/ft^2 FLR	2,900	6	6.0

Water quality data collected during testing is presented in Table 2.2. Water quality remained relatively constant as would be expected for a groundwater supply.

Table 2.2 Water Quality Summary during Full-Scale Testing
Preliminary Design Report
Arizona Water Company

Parameter	Units	No. of Samples	Minimum	Maximum	Average
RAW WATER					
Alkalinity	mg/L $CaCO_3$	3	133	136	134
Calcium	mg/L	3	94	102	99
Hardness	mg/L $CaCO_3$	3	283	302	297
Temperature	°C	3	34	37	35
Arsenic	mg/L	6	0.021	0.025	0.023
FILTER EFFLUENT					
Alkalinity	mg/L $CaCO_3$	3	132	133	133
Calcium	mg/L	3	93	100	97
Hardness	mg/L $CaCO_3$	3	282	301	294
pH	SU	226	7.4	7.8	7.6
Arsenic	mg/L	127	0.006	0.012	0.009
Free Chlorine	mg/L	131	0.4	3.6	1.6
Iron (Total)	mg/L	239	< 0.01	0.33	0.03

Filter performance results a presented in Figures 2.1, 2.2, 2.3, 2.4, 2.5, 2.6, 2.7 and 2.8. A discussion of these results are highlighted as follows:

- Flow Rate and FLRs (Figure 2.1)
  - Flow rates varied from 2,500 gpm to 3,300 gpm with three filter vessels in production.
  - Field recorded flow rates were corrected as the effluent flowmeter from the filters was determined to register approximately only 96 percent of the actual flow. This was determined near the end of testing when the production flowmeter used to measure flow entering the distribution system was not reporting the same values as the arsenic system flowmeter. Two different production flowmeters were installed to confirm the percent difference between the arsenic system flowmeter and the production meter.
  - Four distinct areas of testing were done and included:
    - Test 1: Existing loading rate tested with Well No. 13 being sent to the filters. In part of the testing, Well No. 11 was also sent to the filters.

    - Test 2: Increased loading rate to observe impacts on process performance.
    - Test 3: Increased loading rate to observe impacts on process performance.
    - Test 4: Same loading rate as Test 2, to confirm stable operations at around 6 gpm/ft^2
  - Within a given FLR test, flow rate fluctuated 100 to 200 gpm. This was due to the development of headloss in the filters. After backwashing, headloss would decrease and more water could be pumped through the system. The well pumps are constant-speed pumps and vary in flow based on downstream pressure head.
- Differential Pressure (Figure 2.2)
  - Differential pressure ranged between 2 and 10 psi for the FLR test at around 5.1 and 5.8 gpm/ft^2. At around 6.8 gpm/ft^2 the range extended from 3 to 14 psi.
  - "Clean bed headloss" (i.e., immediately following a backwash) appeared to stabilize at around 5.8 gpm/ft^2 while slowly increasing from 3 to 4 psi when filters were operated at around 6.8 gpm/ft^2. While this may be indicative of the filters not being effectively backwashed, the backwash waste turbidity profiles indicated effective backwashing (see discussion below). Another explanation is instrument drift or error in the pressure transmitters.
- Effluent Turbidity (Figure 2.3)
  - Effluent turbidity appeared stable for operations for FLR Tests 1 and 2. Even at the higher loading rate during Test 3, the turbidities were low enough not to detrimentally impact aesthetics of the water in terms of clarity. The highest turbidity measured during Test 3, at 0.14 NTU, was still very low for potable water.
  - A handheld turbidimeter was used as an approximation to check the online turbidimeter. Typically the handheld turbidimeter read 0.1 to 0.4 NTU higher than the online turbidimeter (refer to Appendix for raw data). These results are typical and often attributed to sensitivity of the instruments in regards to sample collection, handling and preparation.
- Effluent Arsenic Trends (Figure 2.4)
  - Effluent arsenic remained below 0.010 mg/L for most of the test at all FLRs.
  - During part of the testing at around 5.8 and 6.8 gpm/ft^2, the arsenic increased to approximately 0.010-0.12 mg/L. Interestingly, this increase correlated to chemical delivery at the Oasis Water Campus. Poor performance was also noticed by AWC staff at the other well sites. Because the increased arsenic levels dropped after the next chemical delivery on February 4, one possible explanation is that the ferric chloride bulk was different than normal. AWC staff

has encountered similar problems in the past regarding quality of the bulk ferric chloride product.

  - Feed water arsenic levels during testing ranged from 0.021 to 0.025 mg/L.

- Effluent Arsenic Pre- and Post-Backwash (Figure 2.5)
  - Immediately before and after a backwash are typically the times when a filter will produce the highest effluent arsenic levels. However when the data from the arsenic trend were compiled into these two categories, there was only a slight difference. Arsenic levels following a backwash were slightly lower compared to levels before a backwash (0.0087 vs. 0.0097 mg/L).
  - These results were collected for a standard backwash interval of 24 hours.
- Backwash Waste Turbidity Profile (Figures 2.6, 2.7 and 2.8)
  - After 4 minutes of backwashing at the standard rate of 2,460 gpm (around 30 gpm/ft^2 per filter cell), the turbidity drops below 10 NTU. 10 NTU is often used in the water treatment industry to determine when most of the solids from the filter have been removed.
  - The highest concentration of solids were removed within the first 2 minutes of backwashing.
  - All 6 filter cells exhibited similar trends. A common method used to confirm all filters are performing similarly in regards to backwashing is to collect filter cores before and after a backwash and compare turbidities of the cored samples. AWC may wish to consider an annual inspection that records filter coring results and media analysis.

Figure 2.1 Flow Rates and FLRs during Full-Scale Testing

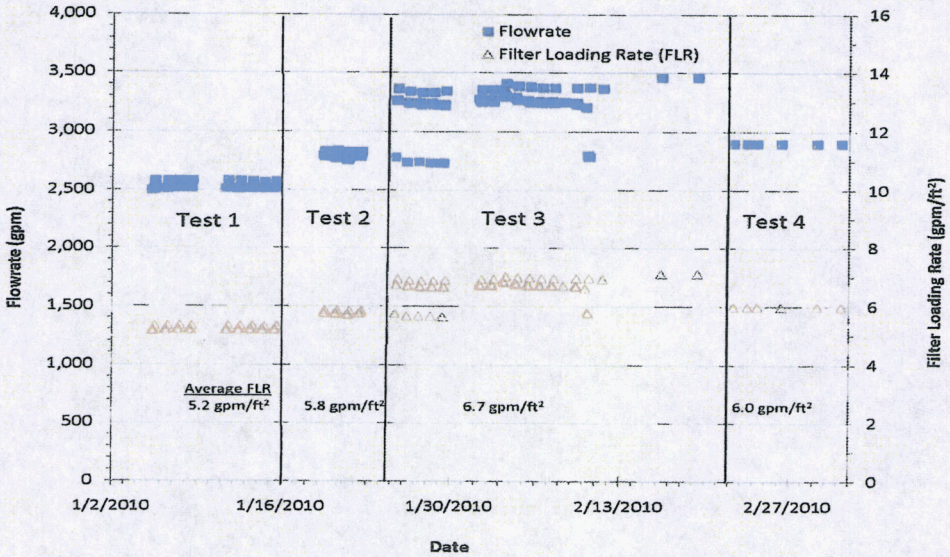

Figure 2.2 Combined Filter Effluent Turbidity during Full-Scale Testing

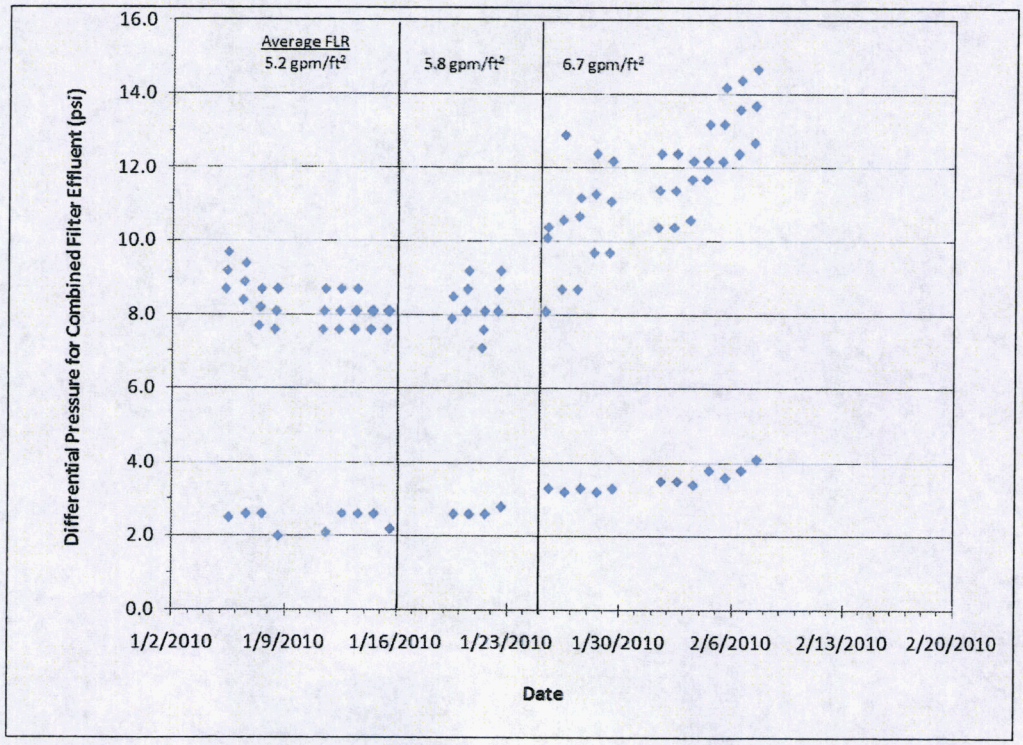

Figure 2.3 Differential Pressure for Combined Filter Effluent during Full-Scale Testing

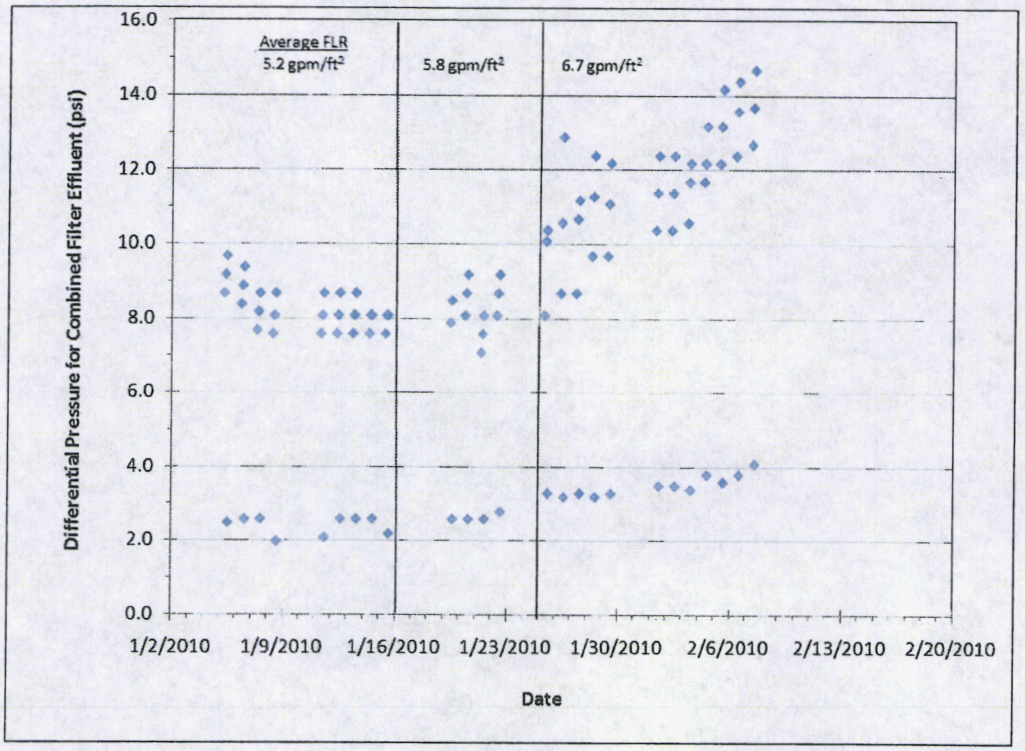

Figure 2.4 Filter Effluent Arsenic Concentration during Full-Scale Testing

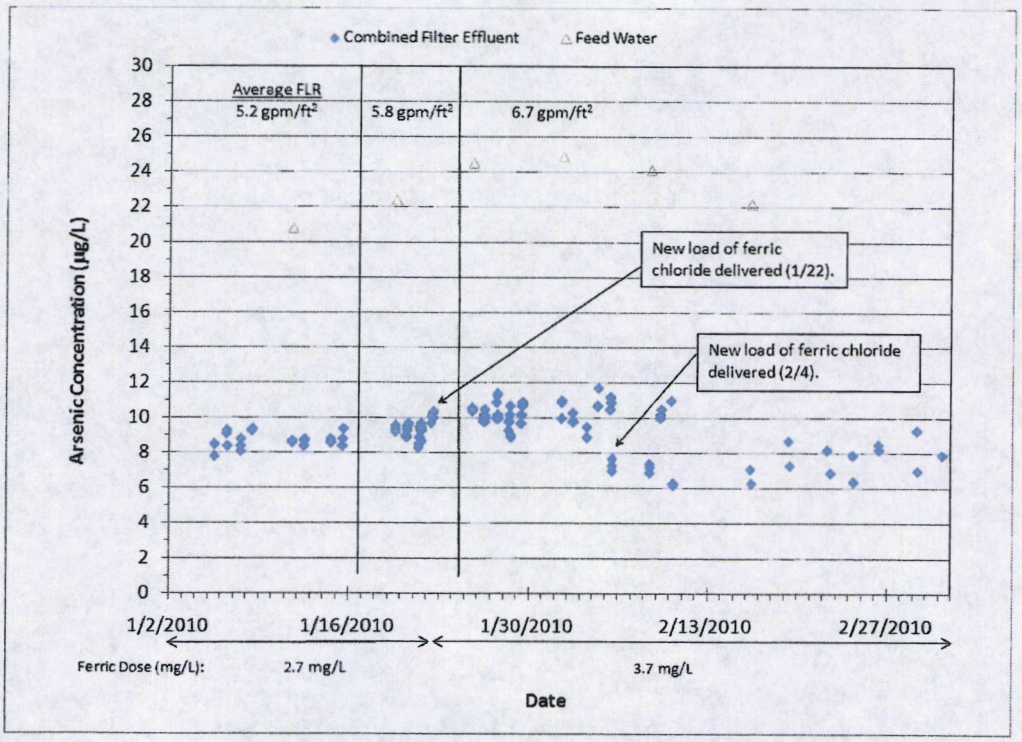

Figure 2.5 Filter Effluent Arsenic Concentration Immediately Before and After a Backwash

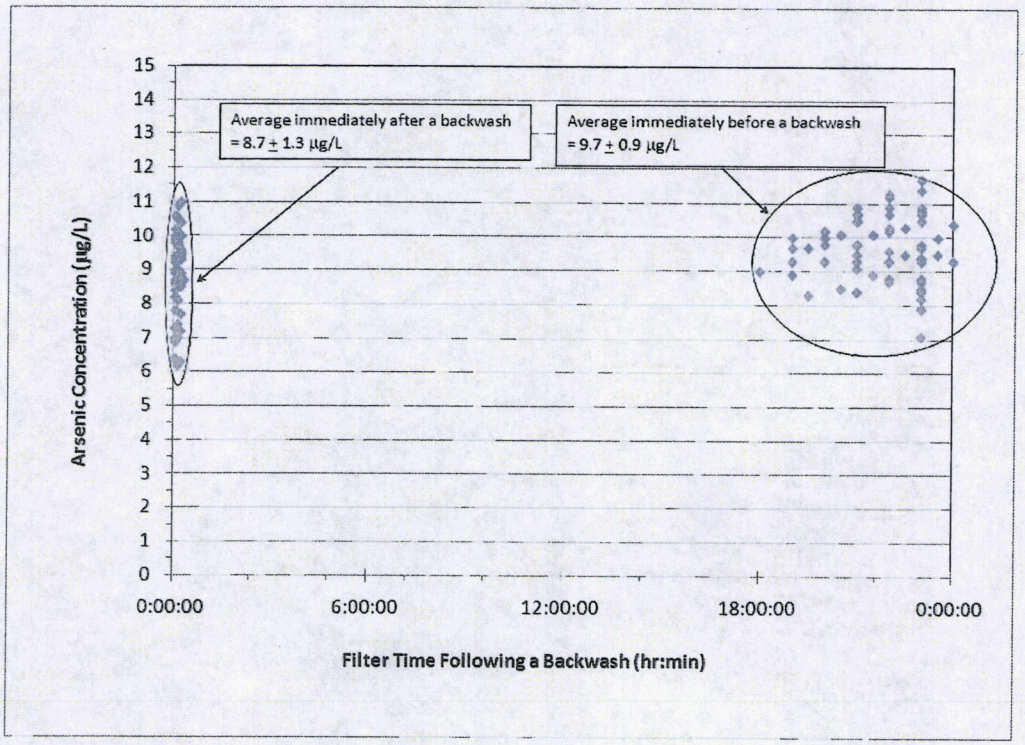

Figure 2.6 Backwash Waste Turbidity Profile at FLR of 5.2 gpm/ft²

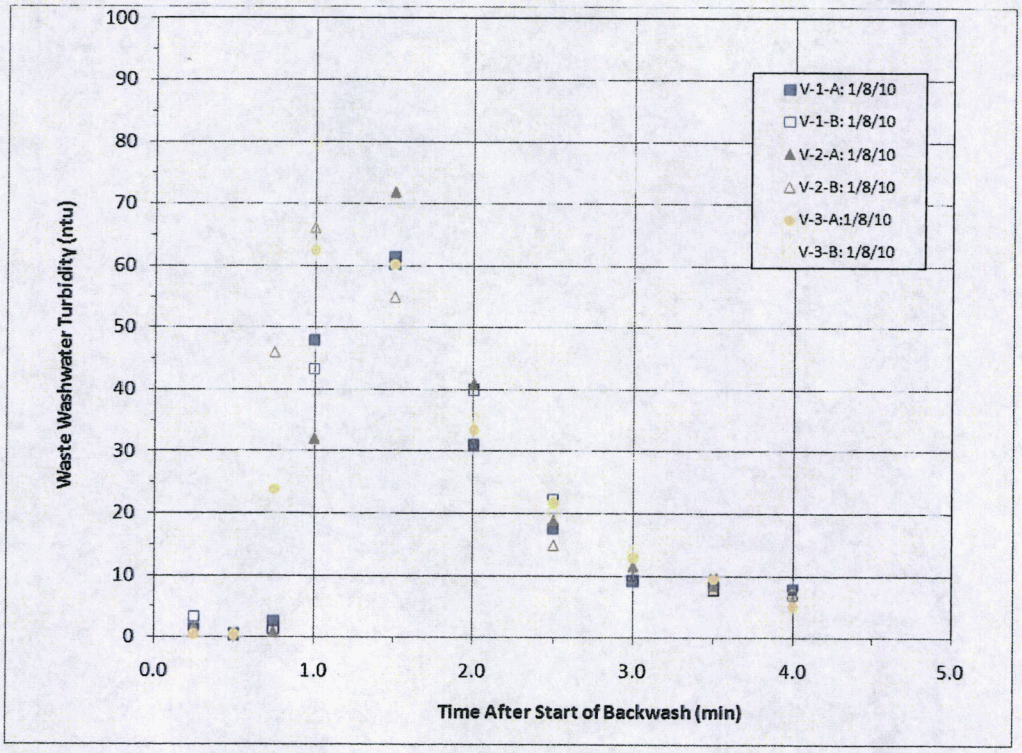

Figure 2.7 Backwash Waste Turbidity Profile at FLR of 5.8 gpm/ft²

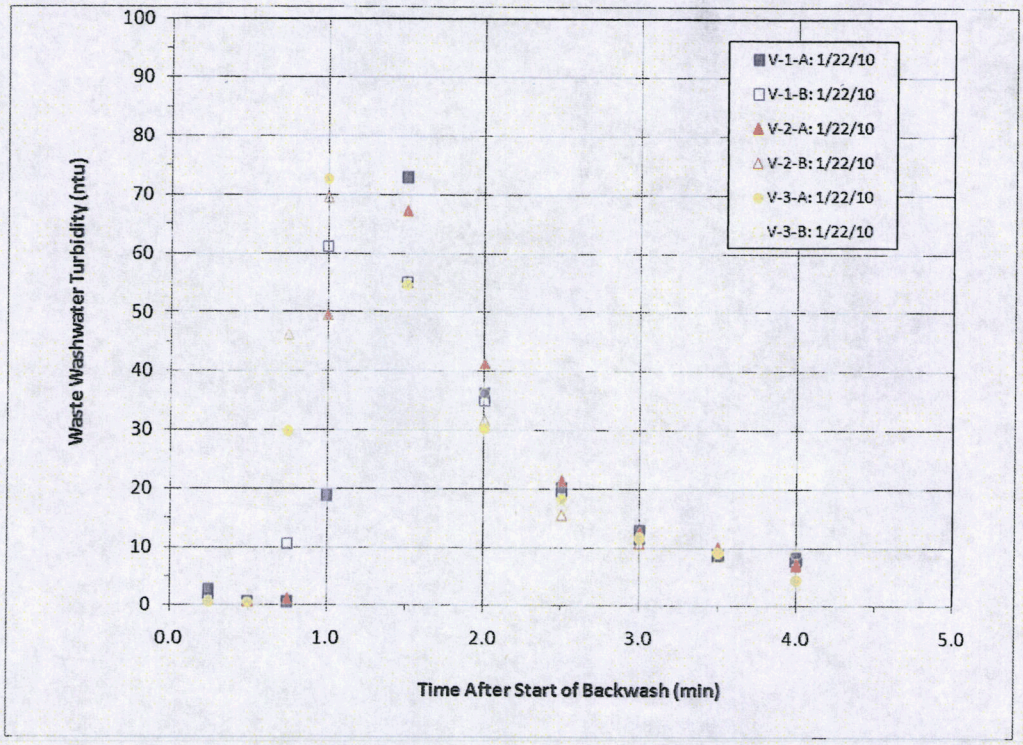

Figure 2.8 Backwash Waste Turbidity Profile at FLR of 6.8 gpm/ft²

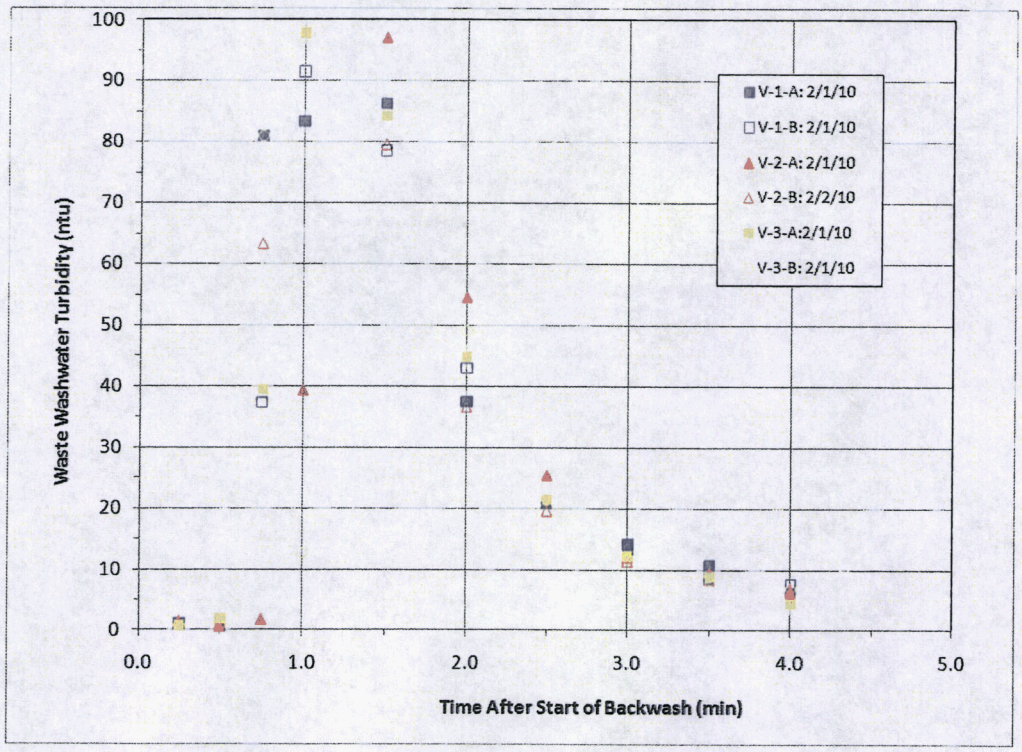

2.2.1 Conclusions

Based on the results of the full-scale analysis and vendor's literature, the following conclusions were made:

- Operating the existing OATF system at an increased FLR of 6 – 6.7 gpm/ft^2 will provide adequate treatment for arsenic removal.
- The current backwash protocol of once approximately every 24 hours will be adequate for at least a 6 gpm/ft^2 loading rate.
- The filter media is suitable for loading rates of at least 6 gpm/ft^2.

2.3 ARSENIC RESIDUALS SLUDGE FILTER PRESS DEWATERING EVALUATION

AWC staff believes that the percent solids achieved in the existing Sludge Mate® dewatering container ranges is approximately 2 percent, just prior to being hauled off-site for disposal by Layne. In a phone conversation between Layne and Carollo, Layne confirmed that the solids content for residuals sludge hauled off-site is around 2 percent. With the remaining fraction (i.e., 98 percent) being water, hauling, and disposal costs are higher than would be for a more concentrated waste stream. Additionally, the higher water content may also preclude disposal of the residuals at a municipal landfill since it probably will not pass a paint filter test. Currently the residuals are disposed of at the Waste Management Butterfield landfill in Mobile, Arizona. Implementation of thickening or mechanical dewatering was considered to decrease the water content of the backwash sludge prior to final disposal.

In November 2009, AWC collected a sample of arsenic residuals sludge from the backwash waste tank and shipped it to Siemens Water Technologies in Holland, Michigan for bench-scale testing. The purpose of the testing was to evaluate the dewatering characteristics of arsenic backwash sludge from the Oasis Water Campus site using plate and frame press technology. A summary of the test results is presented in Table 2.4 with key findings as follows:

- Waste stream could be dewatered to 18-22 percent solids.
- 18 percent solids was obtained under the following conditions:
  - 1.4 percent solids' concentration of feed water to the press.
  - 225 psig pressure.
  - 60 minute cycle time.
  - 34 pounds of neat polymer per dry ton of solids.

- 22 percent solids was obtained under the following conditions:
  - 3.9 percent solids' concentration of feed water to the press.
  - 225 psig pressure.
  - 120 minute cycle time.
  - 71 pounds of neat polymer per dry ton of solids.
- An anion emulsion polymer improved dewaterability of the solids.
- Solids concentration of feed stream to the press should be greater than 1 percent. At 0.6 percent solids, the final cake was "soft" and would likely not pass the paint filter test.
- The cake produced from Trial #1 was not hazardous with respect to the Toxicity Characteristic Leaching Potential (TCLP) test. This test is used to determine if a waste is classified as an EPA hazardous waste.

Table 2.1 Filter Press Dewatering Evaluation Preliminary Design Report Arizona Water Company

Parameter	Trial #				
	1	2	3	4	5
Starting Concentration of Suspended Solids (%w/w)	1.63	1.63	3.90	1.39	.62
Polymer Dose (pounds active polymer per dry ton arsenic residuals solids)	14.5	14.5	13.7	28.6	19.4
Max Filtration Pressure (psig)	100	100	225	225	225
Filtration Time (minutes)	50	55	65	120	125
Filtrate Quality	Turbid	Clear	Clear	Clear	Clear
Cake Dry Solids (%w/w)	10.9	11.1	18.4	21.5	-
Cake Quality	Good	Good	Good	Good	Poor

Conclusions

Based on the results from the filter press dewatering evaluation performed by Siemens in November 2009, and an economic analysis, installing a new Sludge Mate® and reusing the existing Sludge Mate® , and adding a polymer feed system for the Sludge Mate® influent, will provide a lower life-cycle cost than installing a plate and frame press mechanical dewatering system. The filter press will provide a dryer cake reducing the tonnage of arsenic residuals hauled off-site for disposal. However, installing a filter press system at the site will have a higher initial capital cost than upgrading the Sludge Mate® system currently on site. Based on the results of the analysis, if the Sludge Mate®

produces a sludge with a solids' concentration less than 4 percent, then the plate and frame press will have a higher life-cycle cost.

Layne reported that solids concentrations of about 6 percent were achieved using their polymer test skid at an AWC Layne system in Casa Grande, also using the Sludge Mate® system. Emulsion type dewatering polymer (Ciba MagnaFLOC LT20) was blended then applied downstream of the backwash residuals tank and upstream of the Sludge Mate® . The cake with polymer applied also appeared to be drier than the no-polymer cake.

CONCEPTUAL DESIGN CRITERIA

3.1 SYSTEM EXPANSION AND PROCESS FLOW DIAGRAM

The existing system will be expanded using filter pressure vessels and LayneOx media, or similar. The process flows are as shown on the P&IDs included in the design drawings.

3.1.1 Raw Water Quality

Raw water quality for Oasis Well No. 19 is presented in Table 3.1. This well is relatively new, having been constructed in April 2007. Thus, historical water quality is relatively limited. The well driller's log does not indicate that any water quality sampling at various aquifer levels was conducted, however AWC will check their records for zonal samples that may have been collected. There are two screened intervals, 600 to 680 feet below ground surface (bgs) and 700 to 1,370 feet bgs. The bottom of the casing is 1,370 feet bgs.

Based on water samples collected this year, the arsenic concentration in Oasis Well No. 19 is over the MCL. The arsenic is also primarily in the oxidized state (As^{V}) which is more amendable to treatment compared to the reduced form of arsenic (As^{III}). Oxidized arsenic tends to carry greater electrostatic charges, translating into higher/better removal efficiencies.

- Well No. 13 is currently being treated using the Layne C/F system. The raw water quality data from both wells is similar and is anticipated to provide consistent treatment results.

3.1.2 Finished Water Goals

The following finished water goals for Oasis Well No. 19 have been identified:

1. Arsenic - Arsenic no greater than 0.007 mg/L (or 70 percent of the MCL).
2. Turbidity - Filter effluent turbidity generally less than 1.5 NTU.
3. Corrosivity - Langlier Index > 0.0.

Table 3.1	Water Quality Data for Oasis Well No. 19 [1] Preliminary Design Report Arizona Water Company			
Constituent	**Units**	**No. of Samples**	**Range**	**Average**
Arsenic (Total) [2]	mg/L	3	0.010 - 0.026	0.020
Alkalinity	mg/L $CaCO_3$	2	135 - 140	138
Fluoride	mg/L	2	0.77 - 0.89	0.83
Hardness	mg/L $CaCO_3$	2	245 - 250	248
Iron	mg/L	2	< 0.05	< 0.05
Langelier Index (LI)	---	2	0.39 - 0.48	0.44
Manganese	mg/L	2	< 0.02	< 0.02
Nitrate	mg/L-NO_3^-	1	---	1.78
pH	---	3	7.5 -7.6	7.6
Phosphate	mg/L-P	2	< 0.05	< 0.05
Selenium	mg/L	2	<0.002	<0.002
Silica	mg/L	2	51 -54	53
Solids (Total Dissolved)	mg/L	2	920 - 1000	960
Sulfate	mg/L	2	65 - 72	68
Sulfide	mg/L	1	---	< 0.03
Turbidity	NTU	1	---	< 1.00
Vanadium	mg/L	2	0.007 - 0.009	0.008

Notes:
(1) Data collected from April 2007 to August 2009
(2) AsIII concentration is less than detection limit (<0.002 mg/L).

3.2 FILTER PRESSURE VESSELS

Pressure vessels will be added to the existing train of three Layne vessels. Table 3.2 and Table 3.3 summarize the range of flow rates for various FLRs. Based on the full-scale testing it is recommended that the existing and new filters be rated for 6 gpm/ft^2. Higher loading rates are possible, depending on the backwash frequency. At 6 gpm/ft^2, this results in an average filter production flow rate of 5,800 gpm for six vessels respectively. During a backwash one filter vessel (or two filter cells) will be taken offline and result in an increased loading rate for the other vessels. For example, a system designed at 6 gpm/ft^2 when all six vessels are in filtration mode will result in an increase in FLR to 7.2 gpm/ ft^2 when one filter goes into backwash and five filters remain in filtration mode. Given 4 minutes of backwashing and 2 minutes of valve transitioning per filter cell, the total time that filters will be operated at a higher FLR will be approximately 72 minutes, just over an hour a day.

Table 3.2 Summary of Production Flows at Various Loading Rates Preliminary Design Report Arizona Water Company				
Filter Loading Rate (gpm/ft^2)	No. of Filter Vessels[1]			
	3	4	5	6
5.0	2,400[2]	3,200	4,100	4,900
5.5	2,700	3,600	4,500	5,300
6.0	2,900	3,900	4,900	5,800
6.5	3,200	4,200	5,300	6,300
7.0	3,400	4,500	5,700	6,800

Notes:
(1) Each filter vessel contains two (2) cells. Filter area per each cell is 80.5 ft^2.
(2) Existing design at Oasis Campus site.

Table 3.3 Impact of Backwash on Filter Loading Rates[1] Preliminary Design Report Arizona Water Company				
Filter Loading Rate[2] (gpm/ft^2)	No. of Filter Vessels			
	3	4	5	6
5.0	7.5[3]	6.6	6.3	6.0
5.5	8.3	7.4	6.9	6.5
6.0	9.0	8.0	7.6	7.2
6.5	9.9	8.6	8.2	7.8
7.0	10.5	9.3	8.8	8.4

Notes:
(1) FLR when one filter (i.e., two cells) is taken offline for backwashing.
(2) FLR when all vessels are in filtration mode.
(3) Existing design at Oasis Campus site.

OWNER:

ARIZONA WATER COMPANY
P.O. BOX 29006
PHOENIX, AZ. 85038 - 9006

CONTACT: MIKE LOGGINS
VOICE: 602-240-6860
FAX: 602-240-6878

ENGINEER: carollo

CAROLLO ENGINEERS, INC

3633 North 44th Street, Suite 101
Phoenix, Arizona 85018
Phone (602)263-9500
FAX (602)265-1422

CONTACT: MARK GROSS
VOICE: 602-263-9500
FAX: 602-265-1422

APPLICANT: ARIZONA WATER COMPANY

OASIS WATER CAMPUS
ARSENIC TREATMENT FACILITY EXPANSION

AWC PROJECT NO. 1-4226

OCTOBER 2010

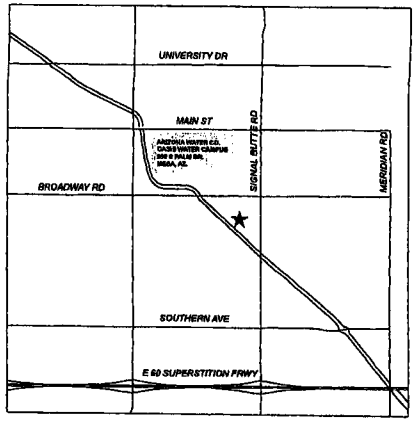

LOCATION MAP
NTS

558 SOUTH PALM DRIVE
MESA, ARIZONA 85208

NORTH

SITE SUMMARY

A.P.N.: 220-73-021
ZONING: R43 SINGLE FAMILY RESIDENTIAL DISTRICT
CURRENT USE: WATER PUMPING, WATER STORAGE, WATER CHLORINATION, WATER TREATMENT, AND WATER TREATMENT
PROPOSED USE: WATER PUMPING, WATER STORAGE, WATER CHLORINATION, AND WATER TREATMENT
GROSS ACREAGE: 9.6252 ACRE (419,270.47 SQ. FT.) THE GROSS ACREAGE CONSISTS OF THE EXISTING SITE(9.4), USE PERMIT AREA INCLUDING ARIZONA WATER COMPANY'S BASEMENT FROM THE ADJACENT CHURCH. THE PARCEL NUMBER FOR THE CHURCH PROPERTY IS 220-71-004H
NET ACREAGE: 9.781 ACRE (426,086.00 SQ. FT.)
SITE ELEVATION: 1874 FT.

OTHER SITE INFORMATION

ELECTRICAL UTILITY: SALT RIVER PROJECT
SCHOOL DISTRICT: MESA PUBLIC SCHOOLS
SUBDIVISION: OASIS PARK
BUILDING HEIGHT: 8'-0"
BUILDING AREA: 144 SQ. FT.
BUILDING AREA AS PERCENT OF SITE AREA: .3835% OF GROSS AND .4137% OF NET AREA.

LEGAL DESCRIPTION OF ARIZONA WATER COMPANY OASIS SITE

OASIS PARK MCR 797 TR A BGN NW COR NE4 NE4 TN E 1531.28F N 940.46M 1102.5 ALG ELY LN A 8636F CONTINUE ELY 423.20F TN TN FOR CURV ELY 184.9F ALG CURV TO LEFT ELY 134.86F SWLY 206F TN E 158F T 8 POB AS CRD CONV DKT 3894/99 & ALSO THAT NO OF ABAND LARG DR ADJ TO DESC ABOVE P/D.

DRAWING INDEX

GENERAL

SHEET NO.	DWG NO.	
1	G-01	COVER SHEET
2	G-02	GENERAL NOTES, SYMBOLS, & LEGEND
3	G-03	EQUIPMENT & FLOW IDENTIFICATION

CIVIL

SHEET NO.	DWG NO.	
4	C-01	SITE PLAN - EXISTING CONDITIONS & DEMOLITION
5	C-02	SOUTH SITE PLAN & DETAILS
6	C-03	NORTH SITE PLAN & SECTION
7	C-04	STORMWATER RETENTION BASIN - SECTIONS

STRUCTURAL

SHEET NO.	DWG NO.	
8	S-01	STRUCTURAL NOTES & LEGEND
9	S-02	CHEMICAL FEED SYSTEM - PLANS & SECTION
10	S-03	VESSELS & SOLID HANDLING - SECTIONS

MECHANICAL

SHEET NO.	DWG NO.	
11	M-01	DEMOLITION
12	M-02	ARSENIC TREATMENT SYSTEM - PLAN & SECTIONS
13	M-03	CHEMICAL FEED SYSTEM - PLAN & SECTIONS
14	M-04	SECTION & DETAIL
15	M-05	SLUDGE DRYING & POLYMER FEED - PLAN & SECTIONS

ELECTRICAL

SHEET NO.	DWG NO.	
16	E-01	ELECTRICAL NOTES, SYMBOLS, & LEGEND
17	E-02	SINGLE LINE DIAGRAM
18	E-03	ELECTRICAL SCHEDULES
19	E-04	ELECTRICAL & GROUNDING SITE PLAN
20	E-05	POWER AND CONTROL PLAN
21	E-06	LIGHTING, GROUND & RECEPTACLE PLANS

INSTRUMENTATION

SHEET NO.	DWG NO.	
22	N-01	LEGEND, SYMBOLS & ABBREVIATIONS
23	N-02	P & ID NO. 1
24	N-03	P & ID NO. 2
25	N-04	P & ID NO. 3
26	N-05	CABINET DETAILS
27	N-06	CONTROL SYSTEM BLOCK DIAGRAM

TYPICAL DETAILS

SHEET NO.	DWG NO.	
28	T-01	TYPICAL DETAILS I
29	T-02	TYPICAL DETAILS II
30	T-03	TYPICAL DETAILS III
31	T-04	TYPICAL DETAILS IV
32	T-05	TYPICAL DETAILS V
33	T-06	TYPICAL DETAILS VI
34	T-07	TYPICAL DETAILS VII
35	T-08	TYPICAL DETAILS VIII
36	T-09	TYPICAL DETAILS IX

APPROVED: _____
ARIZONA WATER COMPANY ENGINEERING

APPROVED: _____
ARIZONA WATER COMPANY OPERATIONS

MARK J. GROSS
EXPIRES 03-30-2012

The undersigned has approved this document for and behalf of Carollo Engineers, P.C.

Partner

PROJECT NO. 8340A10 FILE NAME: 8340A10_G-01ADEQ.dgn

LAST SAVED BY: dhsalis Model: Layout1 ColorTable: ghsalis.ctb DesignScript: Carollo_Std_Plot_v0905.pen PlotScale: 1:1 User: GDavis Plot Date: 15-OCT-2010 10:24:51 AM

GENERAL NOTES

1. THE TERMS "OWNER" AND "OWNERS" HEREIN SHALL REFERENCE THE ARIZONA WATER COMPANY, EITHER IN PART OR IN WHOLE.
2. ALL CONSTRUCTION INCLUDING BACKFILLING SHALL BE IN ACCORDANCE WITH THE PROJECT PLANS AND SPECIFICATIONS AND ARIZONA WATER COMPANY CONSTRUCTION STANDARD DETAILS.
3. THE CONTRACTOR SHALL OBTAIN ALL NECESSARY PERMITS PRIOR TO CONSTRUCTION.
4. ANY WORK PERFORMED WITHOUT THE PRIOR APPROVAL OF THE OWNER AND/OR ALL WORK AND MATERIAL NOT IN CONFORMANCE WITH THE SPECIFICATIONS IS SUBJECT TO REMOVAL AND REPLACEMENT AT THE CONTRACTOR'S EXPENSE.
5. KNOWN EXISTING BURIED PIPING, ELECTRICAL DUCT BANKS AND OTHER BURIED UTILITIES ARE SHOWN IN THE APPROXIMATE LOCATION AND ARE FOR INFORMATIONAL PURPOSES ONLY TO INDICATE THE EXISTENCE OF SUCH UTILITIES. CONTRACTOR SHALL BE RESPONSIBLE FOR LOCATING AND EXPOSING BURIED PIPE, ELECTRICAL DUCT BANK AND OTHER UTILITIES PRIOR TO COMMENCING WORK. LOCATE AND EXPOSE EXISTING STRUCTURES, PIPING, CONDUITS, AND OTHER FACILITIES AND OBSTRUCTIONS WHICH MAY AFFECT CONSTRUCTION OF UNDERGROUND PIPING BEFORE STARTING EXCAVATION FOR NEW UNDERGROUND PIPING AND APPURTENANCES. VERIFY SIZES, ELEVATIONS, LOCATIONS, AND OTHER RELEVANT FEATURES OF EXISTING FACILITIES AND OBSTRUCTIONS. DETERMINE CONFLICTS FOR THE CONSTRUCTION OF THE NEW UNDERGROUND PIPING AND APPURTENANCES. MAKE PIPING LOCATION AND GRADE ADJUSTMENTS TO RESOLVE CONFLICTS BETWEEN NEW PIPING AND EXISTING FACILITIES AND OBSTRUCTIONS. OBTAIN APPROVAL OF ENGINEER PRIOR TO INITIATING WORK
6. DISPOSAL OF AND STOCKPILING OF EXCESS MATERIAL WILL BE DONE IN SUCH A WAY THAT WILL NOT CREATE A NUISANCE. THE PLACING OF MATERIAL ON PRIVATE PROPERTY OF ANOTHER REQUIRES PRIOR WRITTEN AUTHORIZATION BY PROPERTY OWNER.
7. THE CONTRACTOR SHALL PROVIDE ADEQUATE MEANS FOR CLEANING TRUCKS AND/OR OTHER EQUIPMENT OF MUD PRIOR TO ENTERING PUBLIC STREETS, AND IT IS THE CONTRACTOR'S RESPONSIBILITY TO CLEAN STREETS AND TAKE WHATEVER MEASURES ARE NECESSARY TO ENSURE THAT ALL ROADS ARE MAINTAINED IN A CLEAN, AND DUST-FREE CONDITION AT ALL TIMES. CONTRACTOR MUST ALSO FOLLOW MARICOPA COUNTY & CITY OF MESA RULES FOR DUST CONTROL AND TRACK OUT.
8. CONTRACT REFUSE SERVICE SHALL BE PROVIDED BY THE CONTRACTOR.
9. AN APPROVED SET OF PLANS SHALL BE MAINTAINED ON THE JOBSITE AT ALL TIMES WORK IS IN PROGRESS. DEVIATION FROM THE PLANS WILL NOT BE PERMITTED WITHOUT AN APPROVED PLAN REVISION BY THE OWNER.
10. PRIOR TO FINAL APPROVAL AND ACCEPTANCE OF THE WORK, THE CONTRACTOR WILL BE REQUIRED TO CLEAN AND REPAIR ADJACENT (OFF-PROJECT) ROADWAYS USED DURING THE COURSE OF THEIR CONSTRUCTION.
11. ALL LANDSCAPE MATERIAL REMOVED OR DAMAGED DURING CONSTRUCTION MUST BE BE REPLACED IN KIND, UNLESS OTHERWISE NOTED IN THE CONTRACT DOCUMENTS.
12. EXCEPT FOR AREAS WHERE EXISTING PAVEMENT IS ALREADY SCHEDULED TO BE REMOVED AND REPLACED, ALL PIPING, CONDUITS AND DUCT BANKS THAT ARE INSTALLED UNDER EXISTING PAVEMENT SHALL INCLUDE THE COST TO SAW CUT, REMOVE AND REPLACE EXISTING PAVEMENT. REPLACEMENT SHALL CONFORM TO THICKNESSES INDICATED IN THE SPECIFICATIONS. TRENCHING, BEDDING, BACKFILLING AND COMPACTING SHALL BE IN ACCORDANCE THE SPECIFICATIONS. REPLACEMENT OF EXISTING ROADWAY PAVING SHALL COMPLY WITH THE APPLICABLE STANDARD DETAIL.
13. THE ELEVATION OF EXISTING TOPOGRAPHY SHOWN MAY VARY. GRADE TOLERANCE IS ± 1 FOOT.
14. THE CONTRACTOR SHALL CONTACT THE UTILITY PRIOR TO PROCEEDING WITH WORK WHICH INVOLVES OR AFFECTS EXISTING FEATURES OR EXISTING UTILITIES. ALL UTILITIES SHALL BE PROTECTED FROM DAMAGE AS A RESULT OF THE WORK. THE CONTRACTOR SHALL RELOCATE, REPAIR OR REPLACE ANY UTILITIES TO THE SATISFACTION OF THE UTILITIES OR THE OWNER.
15. THE CONTRACTOR SHALL BE RESPONSIBLE FOR REPLACING AND INSTALLING ANY EXISTING SURVEY MONUMENTS REMOVED OR DAMAGED DURING CONSTRUCTION.
16. PROVIDE TEMPORARY THRUST RESTRAINT FOR EXISTING PIPING WHENEVER THE WORK REQUIRES. CONTRACTOR TO REPLACE OR RESTORE THE EXISTING RESTRAINT SYSTEM TO LIKE NEW CONDITION.
17. WELL NO'S 11, 13 AND 19 AND SOME OR ALL ARSENIC TREATMENT EQUIPMENT WILL CONTINUE TO OPERATE DURING CONSTRUCTION. DEMOLITION WORK WILL REQUIRE COORDINATION TO MAINTAIN PLANT OPERATION. THE CONTRACTORS ATTENTION IS DIRECTED TO SPECIFICATION SECTION 01140, WORK RESTRICTIONS.
18. (*) INDICATES DIMENSIONS TO BE DETERMINED BASED UPON EQUIPMENT MANUFACTURER SELECTED.
19. (**) INDICATES DIMENSIONS TO BE FIELD VERIFIED.
20. EXISTING EQUIPMENT TO BE REMOVED AND SALVAGED WILL BE MARKED BY OWNER PRIOR TO WORK UNLESS OTHERWISE NOTED ON DRAWINGS OR SPECIFICATIONS. CONTRACTOR TO DELIVER SALVAGED EQUIPMENT AS DIRECTED BY ENGINEER.
21. CONTRACTOR TO MAINTAIN PLANT ROADWAY ACCESS TO ALL FACILITIES FOR MAINTAINING PLANT OPERATIONS DURING CONSTRUCTION. IF THE WORK REQUIRES INTERRUPTION OF EXISTING ACCESS TO OPERATING PLANT FACILITIES THE CONTRACTOR SHALL PROVIDE TEMPORARY ACCESS (APPROVED BY THE ENGINEER) TO THESE FACILITIES.
22. THE CONTRACTOR SHALL BE AWARE THAT THERE ARE EXISTING FACILITIES OWNED AND OPERATED BY OTHERS WITHIN AND AROUND THE CONTRACT LIMITS. THE LOCATION OF THESE FACILITIES HAS BEEN SHOWN ON THE PLANS BASED UPON AVAILABLE RECORD DRAWINGS FOR INFORMATIONAL PURPOSES ONLY. ACTUAL LOCATIONS MAY VARY. THE CONTRACTOR SHALL MAINTAIN ACCESS REQUIRED BY OTHERS TO MAINTAIN OR REPAIR THESE FACILITIES.
23. REFERENCES TO AWC STANDARD DETAILS REFER TO THE "ARIZONA WATER COMPANY CONSTRUCTION STANDARD DETAIL DRAWINGS" ENGINEERING DEPARTMENT, (LATEST VERSION).
24. THE CONTRACTOR SHALL ADJUST ALL EXISTING MANHOLES, VALVE BOXES, CLEANOUTS, BLIND FLANGED PIPING AND FIRE HYDRANTS WITHIN WORK LIMITS REQUIRED TO MATCH PROPOSED FINAL GRADE.
25. PIPING, ELECTRICAL DUCTBANKS, INSTRUMENTATION AND OTHER FACILITIES TO BE CONTINUED BY OTHER CONSTRUCTION CONTRACTS SHALL:
    - (IF THE WORK BY OTHERS IS NOT IN PLACE) BE TERMINATED AT THE LIMITS SHOWN, TESTED AND CAPPED WITH AN APPROPRIATE TERMINATION FLANGE OR DEVICE PRIOR TO COMPLETION OF THE WORK. SITE FACILITIES SHALL BE LOCATED (SURVEYED) BY THE PLANT COORDINATES AND ELEVATIONS. MARKERS EXTENDING 4'-0" ABOVE FINISHED GRADE SHALL BE PROVIDED WITH THE ABOVE INFORMATION. PROVIDE THE ENGINEER WITH THE SURVEY NOTES UPON COMPLETION OF THE WORK; OR
    - (IF THE WORK BY OTHERS IS IN PLACE) BE TERMINATED AND TESTED TO THE LIMIT OF THE WORK. THE CONTRACTOR SHALL PROVIDE ALL NECESSARY APPURTENANCES AND ACCESSORIES, NUTS, BOLTS, ETC.REQUIRED TO COMPLETE THE CONNECTION TO THE WORK BY OTHERS.
26. THE COORDINATES SHOWN AND NOTED WITHIN THE CONTRACT DOCUMENTS ARE BASED ON THE BEST AVAILABLE INFORMATION FROM RECORD DRAWINGS. REFERENCES TO BENCHMARKS ARE GIVEN WITH ELEVATION, NORTH OR SOUTH AND EAST OR WEST COORDINATES.
27. INSTALL AIR/VACUUM RELIEF ASSEMBLIES AT ALL HIGH POINTS ON THE POTABLE WATER, SERVICE WATER, RAW WATER AND PROCESS PIPING. ACTUAL LOCATIONS TO BE DETERMINED DURING CONSTRUCTION. SEE TYPICAL DETAILS.
28. REFER TO C/S DRAWINGS FOR CONTINUATION OF PIPING AT STRUCTURES.
29. ALL BURIED PIPING SHALL BE BACKFILLED ACCORDING TO THE CONTRACT DOCUMENTS AND EXISTING PAVEMENT REPAIRED.
30. SCREENED CONTOURS INDICATE EXISTING GRADES AND SOLID CONTOURS INDICATE FINAL GRADES.
31. THE CONTRACTOR SHALL VERIFY ALL DIMENSIONS BEFORE STARTING WORK AND SHALL IMMEDIATELY NOTIFY THE ENGINEER OF ANY DISCREPANCIES.
32. WHERE CONSTRUCTION DETAILS ARE SHOWN OR NOTED FOR ANY PART OF THE WORK, DETAILS SHALL BE THE SAME AS FOR OTHER SIMILAR WORK.
33. UNLESS DETAILED, SPECIFIED OR INDICATED OTHERWISE, CONSTRUCTION SHALL BE AS INDICATED IN THE APPLICABLE TYPICAL DETAILS AND GENERAL NOTES. TYPICAL DETAILS ARE MEANT TO APPLY EVEN THOUGH NOT REFERENCED AT SPECIFIC LOCATIONS OR IN SPECIFIC DRAWINGS. WHERE DISCREPANCIES OCCUR, ARIZONA WATER COMPANY TYPICALS GOVERN.
34. MINIMUM COVER OVER ALL BURIED PIPING SHALL BE 40" IN ACCORDANCE WITH ARIZONA WATER COMPANY REQUIREMENTS UNLESS OTHERWISE APPROVED BY ENGINEER. FOR PIPELINES 12" OR LARGER IN DIAMETER, LESS THAN 48" COVER SHALL BE CONCRETE ENCASED. SEE TYPICAL DETAIL P040 TYP. FOR PIPELINES SMALLER THAN 12" IN DIAMETER, LESS THAN 36" COVER SHALL BE CONCRETE ENCASED PER P040 TYP.
35. CONTRACTOR SHALL USE EQUIPMENT SPECIFIED IN THE PRESELECTION PACKAGE (11209A).
36. ALL BURIED PIPING SHALL BE MECHICALLY RESTRAINED. CONCRETE THRUST BLOCKS ARE NOT ALLOWED.

LEGEND:

NEW STRUCTURE	
NEW PIPE	FW-48
NEW ELECTRICAL DUCT	UGE
EXISTING CONTOUR	1258
NEW CONTOUR	1320
PROPERTY LINE	
RIGHT OF WAY LINE	
CURB AND GUTTER	
EXISTING EDGE OF PAVEMENT	
EXISTING UNDERGROUND ELECTRIC	ELEC
EXISTING OVERHEAD ELECTRIC	OHE
EXISTING UNDERGROUND TELEPHONE	T
EXISTING OVERHEAD TELEPHONE	OHT
EXISTING UNDERGROUND CABLE TELEVISION	
EXISTING WATER MAIN	W
EXISTING SEWER	
EXISTING GAS LINE	G
EXISTING WALL	
REMOVAL	
NEW AGGREGATE BASE COURSE	
NEW DECOMPOSED GRANITE	
POWER POLE	
NEW SPOT ELEVATION	
EXISTING SPOT ELEVATION	
ELECTRICAL MANHOLE AND PULL BOX	EMH
MANHOLE	MH
ROADWAY CROSS-SLOPE	0.02 (ft/ft)
ROADWAY GRADE	S=0.0100 (ft/ft)
CONSTRUCTION REFERENCE LINE	A
PLANT COORDINATES (REFER TO COORDINATE TABLE)	#
COORDINATES AT STRUCTURES (OUTSIDE FACE AT FINISHED GRADE) (REFER TO COORDINATE TABLE)	METER VAULT PLAN; METER VAULT SECTION; PLAN; WALL W/PIER
EXISTING TREE	
STORMWATER FLOW DIRECTION	

REFERENCE SYMBOLS

NORTH ARROW — NORTH

PLAN or DETAIL TITLE — VIEW, A, TITLE

SECTION CUT — A, VIEW, SHOWN ON SAME DWG

SECTION CUT — A, M-4, VIEW, SHOWN ON DWG INDICATED

PLAN, SECTION or DETAIL TITLE w/ REFERENCE — VIEW, A, M-4, TITLE, DWG WHERE CUT ORGINATED

ELEVATION — 1325.00

KEYNOTE — 34

TYPICAL DETAIL REFERENCE — M555 TYP, TYPICAL DETAIL #

PIPE IDENTIFIER — FLOW STREAM, PSW-24, PIPE SIZE (INCH)

REFERENCE PIPING SCHEDULE & PIPING ABBREVIATIONS AS SPECIFIED IN SPECIFICATION SECTION 15052

LINEWORK & TEXT LEGEND

EXISTING CONSTRUCTION (screened) — PSW-2

DEMO CONSTRUCTION (screened) — PSW-2

NEW CONSTRUCTION (solid) — PSW-2

FUTURE CONSTRUCTION — PSW-2

DRAWING IDENTIFICATION

C-01 — DRAWING NO.

DISCIPLINE	
GENERAL	G
CIVIL / SITE	C
STRUCTURAL	S
MECHANICAL	M
ELECTRICAL	E
INTRUMENTATION	N
TYPICAL DETAILS	T

DESIGNED	MG
DRAWN	GD
CHECKED	RDJ
DATE	OCTOBER 2010

REV	DATE	BY	DESCRIPTION

PROJECT NO. 8340A10 FILE NAME: 8340A10_G-02.dgn

37736 MARK J. GROSS EXPIRES 09-30-2012

ARIZONA WATER COMPANY

OASIS ARSENIC TREATMENT FACILITY EXPANSION

GENERAL

GENERAL NOTES, SYMBOLS, & LEGEND

VERIFY SCALES — BAR IS ONE INCH ON ORIGINAL DRAWING — 0 1" — IF NOT ONE INCH ON THIS SHEET, ADJUST SCALES ACCORDINGLY

JOB NO. 8340A.10

DRAWING NO. G-02

SHEET NO. 2 OF 38

Plot Date: 15-OCT-2010 10:34:42 AM User: GDavis Model: Layout1 ColorTable: gshade.ctb DesignScript: Carollo_Std_Pen_v0805.pen PlotScale: 1:1 LAST SAVED BY: admin

DEVICE & INSTRUMENT NUMBERS

EQUIPMENT DEVICE IDENTIFIER

A	ACC	AIR CONDITIONING COMPRESSOR
	ACH	AIR CONDITIONING/HEATING UNIT
	ACI	INDOOR FAN COIL
	ACO	OUTFOOR FAN COIL
	ACU	AIR CONDITIONING UNIT
	AER	AERATOR
	AHC	AIR HANDLING UNIT WITH COIL
	AHU	AIR HANDLING UNIT
	AIC	AIR COMPRESSOR
	AID	AIR DRYER
	AIF	AIR FILTER
	ALF	AIRLIFT PUMP
	ALP	ALARM PANEL
	ALT	ALTERNATE
	ANV	VALVE - ANGLE
	ARV	AIR RELEASE VALVE
	ATS	AUTOMATIC TRANSFER SWITCH
	ATV	ACTIVATOR
	AVV	VALVE - AIR AND VACUUM
B	BAV	VALVE - BALL
	BFV	VALVE - BUTTERFLY
	BLR	BOILER
	BNR	BURNER
	BOX	HVAC BOX
	BPR	BACK PRESSURE REGULATOR
	BFP	BACKFLOW PREVENTER
	BWR	BLOWER
C	CAM	CCTV CAMERA
	CB	CIRCUIT BREAKER
	CD	CEILING DIFFUSER
	CDR	CONDENSER
	CEF	CEILING EXHAUST FAN
	CEP	CONDUCTIVITY PROBE
	CHF	CHEMICAL FEEDER
	CHG	CHEMICAL GENERATOR
	CHR	CHILLER
	CKA	CHECK VALVE - ANGLE
	CKB	CHECK VALVE - BALL
	CKG	CHECK VALVE - CENTER GUIDED
	CKF	CHECK VALVE - FLAP
	CKS	CHECK VALVE - SWING
	CLA	CHLORINE ANALYZER
	CLD	CHLORINE LEAK DETECTOR
	CLR	CHLORINATOR, CLARIFIER
	CNV	CONVEYOR
	CO	CLEAN OUT
	COL	COLLECTOR
	CPT	CONTROL POWER TRANSFORMER
	CPU	COMPUTER
	CRN	CRANE
	CRR	CEILING RETURN/EXHAUST REGISTER
	CRU	CONDENSATE RETURN UNIT
	CSO	CEILING SUPPLY DIFFUSER
	CSP	CHEMICAL SUMP PUMP
	CT	CURRENT TRANSFORMER
	CYL	CYLINDER
D	DAF	DISSOLVED AIR FLOTATION
	DES	DENSITY METER, SONIC
	DHU	DEHUMIDIFIER
	DIF	CHLORINE DIFFUSER
	DIS	DISTRIBUTOR
	DIR	DIRECTION
	DPB	DISTRIBUTION PANELBOARD
	DPR	DAMPER
	DPT	DIFFERENTIAL PRESSURE TRANSMITTER
	DU	DRIVE UNIT
E	EB	ENGINE-DRIVEN BLOWER
	ECU	EVAPORATIVE COOLER
	EOV	ELECTRICAL DISCRETE VALVE
	EFU	EXHAUST FAN UNIT
	EG	ENGINE-DRIVEN GENERATOR
	EJR	CHLORINE EJECTOR
	ELEV	ELEVATOR
	ENG	ENGINE
	ERH	ELECTRIC RADIANT HEATER
	ESE	EMERGENCY SHOWER AND EYEWASH
	ESWT	ETHERNET SWITCH
	EUH	ELECTRIC UNIT HEATER
	EWH	ELECTRIC WATER HEATER
F	FAN	FAN
	FACP	FIRE ALARM CONTROL PANEL
	FCU	FAN COIL UNIT
	FCV	VALVE - FLOW CONTROLLED
	FDR	FEEDER
	FLC	FLOCCULATOR
	FLT	FILTER
	FUR	FURNANCE
G	GAT	GATE
	GAV	VALVE - GATE
	GC	GROOVED COUPLING
	GBX	GEARBOX
	GEN	GENERATOR
	GLV	VALVE - GLOBE
H	HEX	HEAT EXCHANGER
	HH	HANDHOLE (ELECTRICAL)
	HMI	HUMAN-MACHINE INTERFACE
	HOP	HYDRAULIC OPERATOR
	HTR	HEATER
	HUM	HUMIDIFIER
	HV	VALVE - HAND (MANUALLY OPERATED)
I	IMC	INDIVIDUAL MOTOR CONTROLLER
	INJ	INJECTOR (INDUCTOR)
J	JB	JUNCTION BOX
L	LAB	LABORATORY EQUIPMENT
	LBP	GREASE (LUBE) PUMP
	LBS	POUNDS
	LCP	LOCAL CONTROL PANEL
	LCV	VALVE - LEVEL CONTROL
	LDC	LOAD CELL
	LPB	LIGHTING PANEL BOARD
	LTG	LIGHTING
	LV	VALVE - LEVEL CONTROLLED
	LVR	LOUVER
M	MAU	MAKE-UP AIR UNIT
	MCC	MOTOR CONTROL CENTER
	MCP	MOTOR CIRCUIT PROTECTOR
	MH	MANHOLE (ELECTRICAL)
	MIX	MIXER
	MOD	MODEM
	MOP	MOTOR OPERATOR
	MOV	MOTOR OPERATED VALVE
	MS	MOTOR STARTER
	MTR	MOTOR
	MTS	MANUAL TRANSFER SWITCH
	MV	MUD VALVE
	MWH	MOTOR WINDING HEATER
N	NEV	VALVE - NEEDLE
	NSVR	NETWORK SERVER
O	ORF	ORIFICE PLATE
	ORP	ORP PROBE
P	PB	PULL BOX (ELECTRICAL)
	PBD	PANEL BOARD
	PC	PERSONAL COMPUTER
	PCV	VALVE - PRESSURE CONTROLLED
	PDCV	VALVE - DIFFERENTIAL PRESSURE CONTROLLED
	PHM	PH METER
	PHP	PH PROBE
	PIT	PRESSURE INDICATING TRANSMITTER
	PLC	PROGRAMMABLE LOGIC CONTROLLER
	PLD	PULSATION DAMPENER
	PLV	VALVE - PLUG
	PMP	PUMP (NOT SUMP OR GREASE)
	PNBD	PANELBOARD
	PNL	PANEL
P	POP	PNEUMATIC OPERATOR
	PRV	PRESSURE RELIEF VALVE
	PSH	PRESSURE SWITCH HIGH
	PSL	PRESSURE SWITCH LOW
	PSV	VALVE - PRESSURE SAFETY
	PVL	PRESSURE VESSEL
	PVV	VALVE - PRESSURE RELIEF OR VACUUM RELIEF
R	RIO	REMOTE IO
	RECT	RECTIFIER
	ROT	ROTAMETER, VARIABLE AREA FLOWMETER
S	SAV	VALVE - SURGE ANTICIPATOR
	SBD	SWITCHBOARD (ELECTRICAL)
	SCADA	SUPERVISORY CONTROL AND DATA AQUISITION
	SCL	WEIGH SCALE
	SCB	SCRUBBER
	SCR	SCREEN
	SD	SMOKE DETECTOR
	SHM	SKIMMER
	SEP	SEPARATOR
	SES	SERVICE ENTRANCE SWITCH
	SF	SUPPLY FAN
	SLC	SLUDGE COLLECTOR
	SLG	SLUICE GATE
	SLR	SILENCER
	SMP	SAMPLE PUMP
	SOV	VALVE - SOLENOID
	SSS	SOLID STATE STARTER
	SUB	SUBSTATION
	SVA	SWITCHING VALVE ASSEMBLY
	SWBD	SWITCHBOARD
	SWGR	SWITCHGEAR
T	TB	TERMINAL BOX, BOARD OR CABINET
	TBA	TURBIDITY ANALYZER
	TBM	TURBIDITY METER
	TBS	TURBIDITY SENSOR
	TCV	VALVE - TEMPERATURE CONTROLLED
	TLV	VALVE - TELESCOPING
	TNK	TANK
	TPM	TEMPERATURE METER
	TOS	TOP OF SLAB
	TOW	TOP OF WALL
	TWV	VALVE - THREE-WAY
U	UPS	UNINTERUPTABLE POWER SUPPLY
	US	UTILITY STATION
	UVR	UV REACTOR
V	VACP	VALVE ACTUATOR CONTROL PANEL
	VCG	VACUUM GAUGE
	VCP	VENDOR CONTROL PANEL
	VEN	VENTILATOR
	VFD	VARIABLE FREQUENCY DRIVE
	VIB	VIBRATOR
	VRV	VALVE - VACUUM REGULATOR
	VSC	VARIABLE SPEED CONTROLLER (ELECTRONIC)
	VSD	VARIABLE SPEED DRIVE (MECHANICAL)
	VTP	VERTICAL TURBINE PUMP
W	WEF	WALL EXHAUST FAN
	WH	WATER HEATER
	WRG	WEIR GATE
	WSU	WATER SOFTENER UNIT
X	XFMR	TRANSFORMER

FLOWSTREAM IDENTIF[illegible]S

FLOW STREAM → FFF-NN + — PIPE SIZE (INCH)

A	AIR	AIR
	ALM	ALUMINUM SULFATE
	AS	AIR SCOURER
B	BWA	BACKWASH AIR
	BW	BACKWASH
	BWR	BACKWASH RETURN
	BYP	BYPASS
C	CAP	COAGULANT AID POLYMER
	CD	CHEMICAL DRAIN
	CLG	CHLORINE GAS
	CSA	CAUSTIC SODA
	CSO	CHEMICAL SOLUTION DRAIN
	CSDL	CHEMICAL SUMP DISCHARGE LINE
D	DCT	DECANT
	DL	DRAIN LINE
	DWP	DEWATERING POLYMER
E	EFF	EFFLUENT
	EQD	EQUIPMENT DRAIN
F	FCL	FERRIC CHLORIDE
	FLW	FILTER-TO-WASTE
	FSS	FIRE SPRINKLER SYSTEM
G	GRW	GROUNDWATER
H	HPA	HIGH PRESSURE AIR
	HW	HOT WATER
	HYP	SODIUM HYPOCHLORITE
I	INA	INSTRUMENT AIR
	INF	INFLUENT
	IRR	IRRIGATION
L	LPA	LOW PRESSURE AIR
N	NPW	NON-POTABLE WATER
O	OF	OVERFLOW
P	POL	PROCESS DRAINLINE
	PW	POTABLE WATER
	PRM	PERMEATE
	PRL	PRESSURE RELIEF LINE
	PSS	PRESSURE SANITARY SEWER
R	RDL	ROOF DRAIN LINE
	ROOF	ROOF DRAIN OVERFLOW
	RNS	RINSE WATER
	RWD	RECOVERED WATER DRAIN (SAMPLE DRAIN, ECU DRAIN, SEAL WATER DRAIN)
	RWR	RETURN WATER
S	SA	SULFURIC ACID
	SSW	SPENT FILTER BACKWASH
	SD	STORM DRAINAGE LINE (CULVERT, GRAVITY)
	SDL	SUMP DISCHARGE LINE
	SDO	SLUDGE DRAWOFF
	SF	SQUARE FOOT
	SLG	SLUDGE
	SPDL	SAMPLE DRAIN LINE
	SPL	SAMPLE LINE
	SPLR	SAMPLE RETURN LINE
	SPR	SPARE LINE
	SQ	SQUARE
	SRW	SERVICE WATER
	SS	SANITARY SEWER
	SW	SANITARY WASTE
T	TD	TANK DRAIN
	TOF	TANK OVERFLOW
	TRF	TRANSFER FILTRATE
	TWE	TREATED WATER EFFLUENT
U	UW	UTILITY WATER
V	VNT	VENT
	VAC	VACUUM
W	WI	RAW WATER

LEGEND

- AIR / VACUUM RELEASE VALVE
- BUTTERFLY VALVE
- CHECK VALVE
- PRESSURE GAUGE
- PRESSURE SUSTAINING VALVE
- SAFETY RELIEF VALVE
- SAMPLE TAP

VALVE TAGS

SCV	BACKWASH CONTROL VALVE
BWE	BACKWASH EFFLUENT
BWI	BACKWASH INFLUENT
BPV	BYPASS VALVE
EQV	BACKWASH EQUALIZATION VALVE
FRE	FILTER RINSE EFFLUENT
PFE	PREFILTER EFFLUENT
PFI	PREFILTER INFLUENT
PSV	PRESSURE SUSTAINING VALVE
RWI	RAW WATER INFLUENT
TWE	TREATED WATER EFFLUENT

REV	DATE	BY	DESCRIPTION

PROJECT NO. 8340A10 FILE NAME: 8340A10_G-03.dgn

DESIGNED MG
DRAWN GD
CHECKED RDJ
DATE OCTOBER 2010

31736 MARK J. GROSS EXPIRES 09-30-2012

carollo

ARIZONA WATER COMPANY
OASIS ARSENIC TREATMENT FACILITY EXPANSION
GENERAL
EQUIPMENT & FLOW IDENTIFICATION

VERIFY SCALES
BAR IS ONE INCH ON ORIGINAL DRAWING
0 1"
IF NOT ONE INCH ON THIS SHEET, ADJUST SCALES ACCORDINGLY

JOB NO. 8340A.10
DRAWING NO. G-03
SHEET NO. 3 OF 36

Model: Layout1 ColorTable: pbtable.ctb DesignScript: Carollo_Std_Plot_V8XM.pgn PlotScale: 1:1 User: GDavis Plot Date: 15-OCT-2010 10:34:54 AM
LAST SAVED BY: dbaila

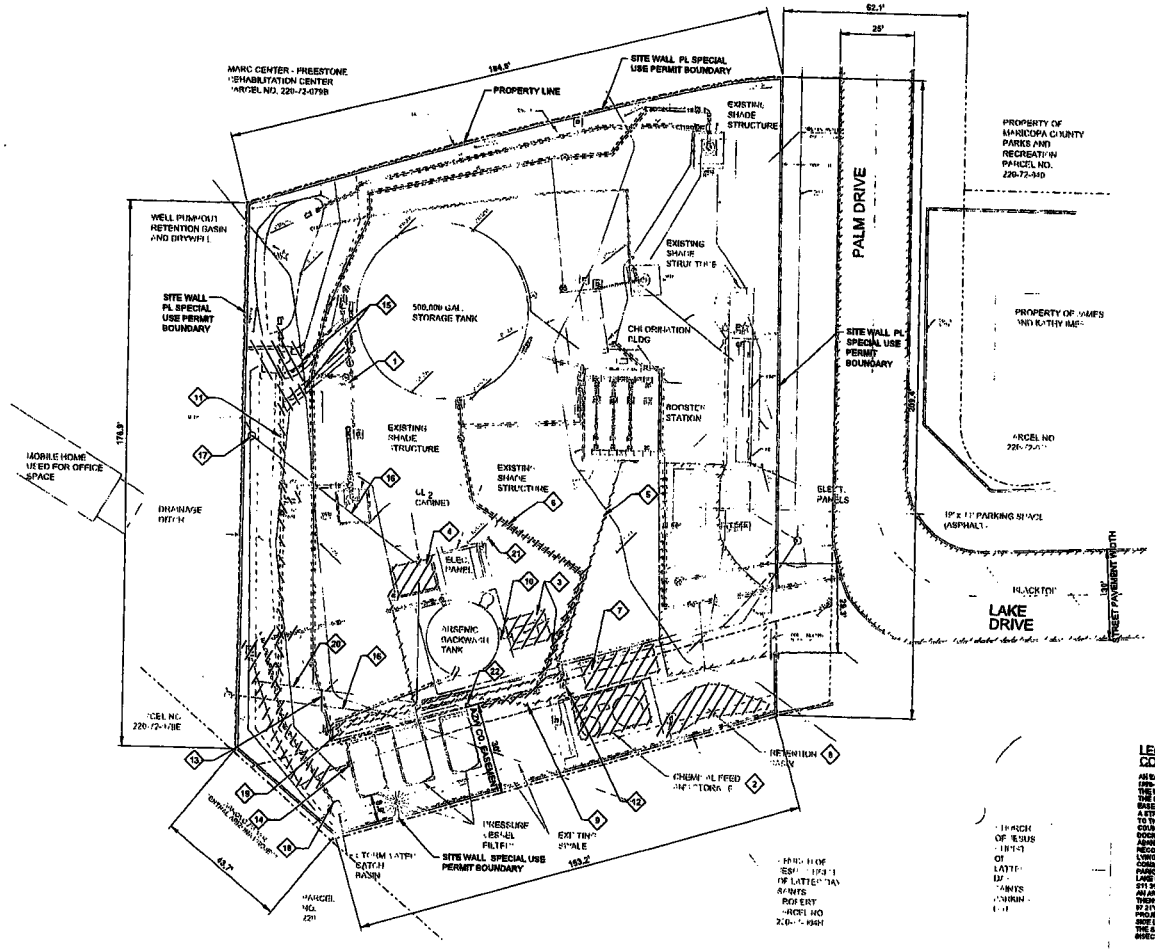

A SITE PLAN

SCALE: 1" = 20'-0"
FILE: 8340A10-010-C-101

0 10' 20' 40'

NORTH

GENERAL NOTES

1. ALL WORK SHALL BE COORDINATED WITH OWNER AND AS PER SECTION 01140 - WORK RESTRICTIONS.
2. ROUTING OF UNDERGROUND STRUCTURES AND UTILITIES IS NOT KNOWN. CONTRACTOR SHALL CONFIRM BY POTHOLING. ASSUME 20 POTHOLES.
3. LIGHT POLES: EMERGENCY (NORMALLY OFF AT NIGHT) HI PRESSURE SODIUM LIGHTING WITH FULLY CUTOFF FIXTURES - 16.5' (H) - COMPLIANT WITH SECTION 1112 OF ZONING ORDINANCE
4. CONTRACTOR SHALL REPAIR OR REPLACE IN-KIND EXISTING LANDSCAPING DISTURBED DURING CONSTRUCTION

KEY NOTES:

1. NUMBER REPRESENTS BURIED VALVE ID - TYPICAL
2. REMOVE SHADE CANOPY AND DEMOLISH EXISTING CHEMICAL FEED AND STORAGE AREA
3. REMOVE DECANT PUMP SLAB AND EQUIPMENT AND UNDERGROUND PIPING BACK TO RAW WATER INLET
4. AWC WILL REMOVE AND SALVAGE EXISTING CARBON DIOXIDE CABINET. CONTRACTOR TO DEMO CONCRETE PAD, CUT AND CAP EXISTING ELECTRICAL CONDUITS. NOT ALL ELECTRICAL LINES ARE SHOWN IN THIS AREA, CONTRACTOR TO PROTECT IN PLACE ALL CONDUITS.
5. RE-ROUTE THE POTABLE WATER TO EYEWASH LINE AS PER C-02
6. RE-ROUTE 16" ARSENIC TREATMENT SYSTEM EFFLUENT LINE AS PER C-02
7. DEMOLISH SLUDGE MATE PAD AND RELOCATE CONTAINER AS PER C-02
8. FILL IN AND COMPACT EXISTING RETENTION BASIN WITH ABC
9. DEMOLISH EXISTING FERRIC CHLORIDE AND SODIUM HYPOCHLORITE FEED LINES. SEE DRAWING NO. M-01
10. RE-ROUTE EXISTING DECANT AND SLUDGE LINES AS PER CIVIL AND MECHANICAL DRAWINGS
11. DEMOLISH 12" WELL NO. 13, FLUSH PIPING AND ASSOCIATED YARD VALVES
12. REMOVE AND RELOCATE THE EYEWASH STATION AS PER DRAWING NO. C-02
13. REMOVE INFLUENT PIPING SYSTEM. REFER TO DRAWING NO. M-01 FOR ADDITIONAL DETAIL
14. CUT AND CAP 2" COPPER LINE
15. DEMO CONCRETE SPILLWAY BACK TO EDGE OF NEW RETENTION BASIN. SEE DRAWING NO. C-02.
16. PROTECT EXISTING ELECTRICAL CONDUITS. MODIFY AS REQUIRED TO HAVE 2' MINIMUM COVER UNDER BOTTOM OF NEW RETENTION BASIN.
17. PROTECT EXISTING LIGHT POLE IN PLACE. SEE GENERAL NOTES
18. MAINTAIN LENGTH OF EXISTING LINES AT CATCH BASIN FOR RE -CONNECTION OF RE-ROUTE. SEE DRAWING NO. C-02.
19. REMOVE BACKWASH RETURN PIPING. REFER TO DRAWING NO. M-01 FOR ADDITIONAL DETAIL
20. PROTECT EXISTING 2" WATER SERVICE LINE. MODIFY AS NECESSARY TO HAVE 36" MINIMUM COVER UNDER BOTTOM OF NEW RETENTION BASIN.
21. RECONNECT EXISTING 1" PVC TURBIDIMETER LINE TO RELOCATED (INF-16)
22. RELOCATE EXISTING CHLORINE RESIDUAL ANALYZER PER C-02

LEGAL DESCRIPTION OF ARIZONA WATER COMPANY EASEMENT ON CHURCH PROPERTY

AN EASEMENT OVER A PARCEL OF LAND, SAID PARCEL OF LAND RECORDED IN FEE [illegible] OF RECORDS MARICOPA COUNTY, ARIZONA, AND IS SITUATED WITHIN THE NORTHEAST QUARTER OF SECTION 36, TOWNSHIP 1 NORTH, RANGE 1 EAST OF THE GILA AND SALT RIVER BASE AND MERIDIAN, MARICOPA COUNTY, ARIZONA; SAID EASEMENT DESCRIBED AS FOLLOWS:

A STRIP OF LAND 24.00 FEET WIDE OVER THAT PORTION OF LAKE DRIVE ACCORDING TO THE PLAT OF OASIS PARK, BOOK 77 OF MAPS, PAGE 31, RECORDS OF MARICOPA COUNTY AND ABANDONED BY THE MARICOPA COUNTY BOARD OF SUPERVISORS IN DOCKET 16817, PAGES 212-213, RECORDS OF MARICOPA COUNTY, ARIZONA, SHOWN ON A MARICOPA COUNTY ROAD PLAT ACCORDING TO BOOK 26 OF ROADS, PAGE 51, RECORDS OF MARICOPA COUNTY, SAID STRIP BEING MORE PARTICULARLY DEFINED AS LYING SOUTH OF AND ADJACENT TO THE FOLLOWING DESCRIBED SIDE LINE:

COMMENCING AT THE INTERSECTION OF LAKE DRIVE AND PALM DRIVE OF SAID OASIS PARK; THENCE WESTERLY ALONG A CURVE, CONCENTRIC WITH THE CENTERLINE OF SAID LAKE DRIVE, SAID CURVE CONCAVE TO THE SOUTHWEST, HAVING RADIUS VENIS 211 57'16", A DISTANCE OF 1523.61 FEET, THROUGH A CENTRAL ANGLE OF 69 57'41", AN ARC LENGTH OF 25.57 FEET TO THE POINT OF BEGINNING OF SAID SIDE LINE; THENCE CONTINUE WESTERLY ALONG SAID CURVE, THROUGH A CENTRAL ANGLE OF 37 31'00", AN ARC LENGTH OF 1013.25 FEET TO A POINT ON THE CENTRAL ARIZONA PROJECT SALT-GILA AQUADUCT, REACH 1 RIGHT OF WAY AND THE TERMINUS SIDE LINE.

THE SIDELINES OF SAID EASEMENT BEING LENGTHENED OR SHORTENED TO MEET ANGLE POINTS.

UTILITY COMMITMENT TABLE

ELECTRICAL SERVICE:	SALT RIVER PROJECT
SEWER SERVICE:	SITE DOES NOT HAVE SEWER SERVICE
WATER SERVICE:	ARIZONA WATER COMPANY
REFUSE SERVICE:	THE SITE DOES NOT HAVE REFUSE SERVICE
POLICE SERVICE:	MARICOPA COUNTY SHERIFF'S DEPARTMENT
FIRE SERVICE:	RURAL METRO FIRE DEPARTMENT

REV	DATE	BY	DESCRIPTION

PROJECT NO. 8340A10 FILE NAME: 8340A10_C-01.dgn

DESIGNED MJG
DRAWN GD
CHECKED GDT
DATE OCTOBER 2010

Registered Professional Engineer (Civil) CERTIFICATE NO. 46757 GORDON D. THELIN ARIZONA U.S.A. EXPIRES 06-30-2012

carollo

ARIZONA WATER COMPANY

ARIZONA WATER COMPANY

OASIS ARSENIC TREATMENT FACILITY EXPANSION

CIVIL

SITE PLAN - EXISTING CONDITIONS & DEMOLITION

VERIFY SCALES
BAR IS ONE INCH ON ORIGINAL DRAWING
0 1"
IF NOT ONE INCH ON THIS SHEET, ADJUST SCALES ACCORDINGLY

JOB NO. 8340A.10
DRAWING NO. C-01
SHEET NO. 4 OF 36

Plot Date: 15-OCT-2010 10:25:03 AM
User: GDavis
Model: Layout1 ColorTable: gsheets.ctb Design/Scale: Carollo Std Pen_v6905.pen PlotScale: 1:1
LAST SAVED BY: admin

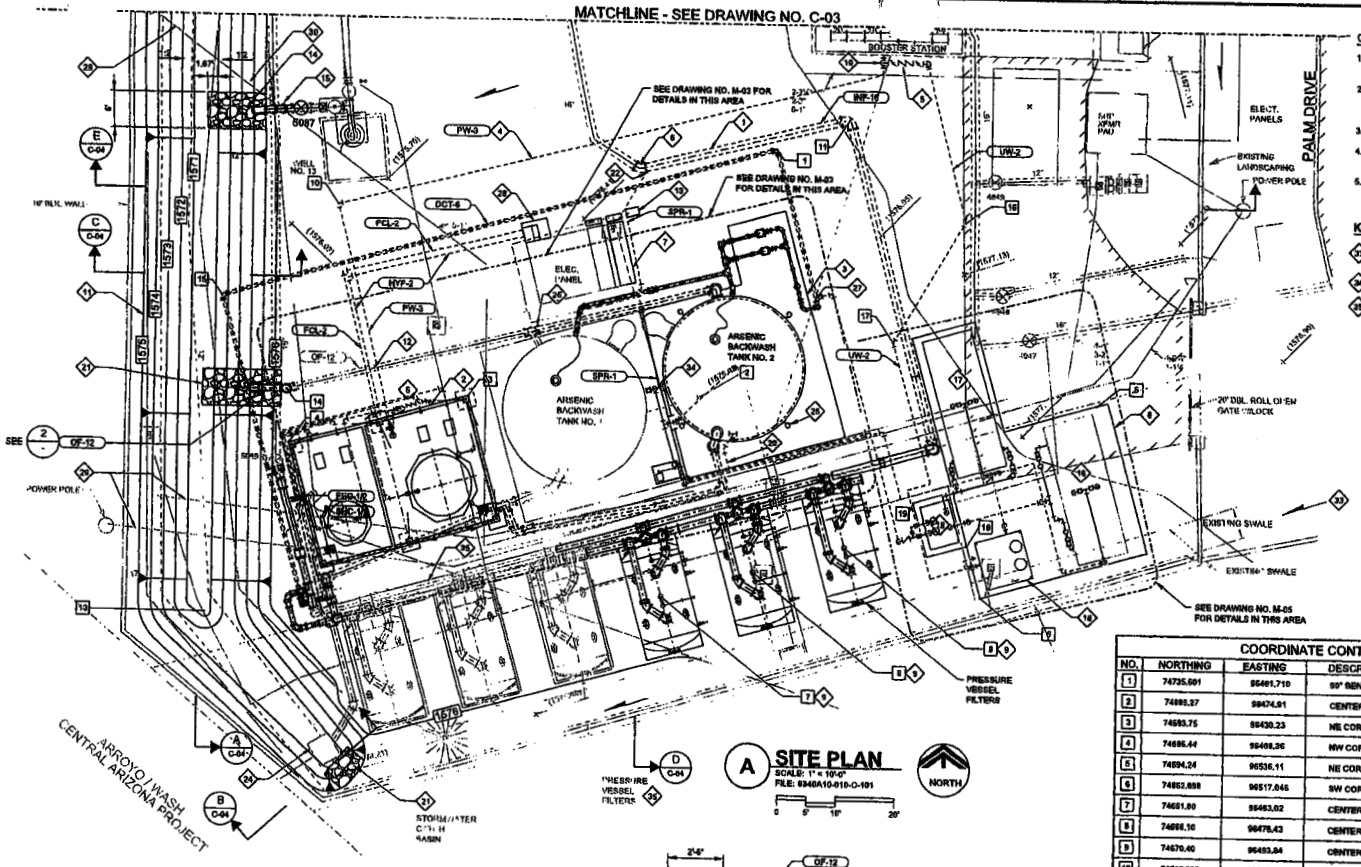

A SITE PLAN

SCALE: 1" = 10'-0"
FILE: 8340A10-010-C-101

0 5' 10' 20'

GENERAL NOTES:

1. ALL WORK SHALL BE COORDINATED WITH OWNER AND AS PER SECTION 01140 - WORK RESTRICTIONS.
2. ROUTING OF UNDERGROUND STRUCTURES AND UTILITIES IS NOT KNOWN. CONTRACTOR SHALL CONFIRM BY POTHOLING.
3. ALL PIPING SHALL HAVE 3' COVER MINIMUM
4. REFER TO P602 TYP FOR PIPING INSTALLATION DETAILS
5. FOR PRE- SELECTED EQUIPMENT SEE SPECIFICATION SECTION 13209

KEY NOTES (CON'T):

23. EXISTING STORMWATER FLOW THROUGH BLOCK WALL OPENING
24. SPR-1 TIED TO TRF-2
25. RE COAT EXTERIOR OF EXISTING FILTER PRESSURE VESSELS AND EXISTING VESSEL PIPING PER COATING SPECIFICATION SECTION 09974AAWC 0-13-2

KEY NOTES:

1. RE-ROUTE 16" ARSENIC EFFLUENT LINE
2. SEE DRAWING NO. S-02 FOR CONCRETE SLAB AND CANOPY DETAILS, TOW 1576.67
3. REINFORCED CONCRETE SLAB FOR DECANT PUMP. SEE DRAWING NO. S-02. TOS 1576.42
4. NEW 3" COPPER EYEWASH SHOWER LINE CONNECTED UPSTREAM OF BFP IN SUPPORT ABOVE GROUND PIPING PER P519 TYP (5)
5. NEW 2-INCH BACKFLOW PREVENTER, WILKINS MODEL 975XL OR EQUAL PER M510 TYP
6. ELEVATION TO MATCH EXISTING (INF-10)
7. 6" THICK REINFORCED CONCRETE SLAB FOR NEW ELECTRICAL AND CONTROL PANEL PER S202 TYP
8. REINFORCED CONCRETE SLAB FOR SLUDGE MATES. SEE B S-03 TOS 1577.50
9. VESSEL SLAB AT 1577.50
10. INSTALL 2" x 3" INCREASER DOWNSTREAM OF 2" x 2" x 2" TEE ON PUMP DISCHARGE LINE
11. NEW STORMWATER RETENTION BASIN, APPROXIMATELY 7500 ft^3 AT A 2:1 SLOPE
12. PROTECT EXISTING 10" BACKWASH TANK OVERFLOW LINE WHILE CONSTRUCTING NEW RETENTION BASIN. POT-HOLE DEPTH BEFORE BEGINNING CONSTRUCTION
13. RELOCATE TURBIDIMETER AND CHLORINE RESIDUAL ANALZER
14. RELOCATE EXISTING FLUSH PIPE SPOUT FOR WELL NO. 13 AND INSTALL 6-FOOT WIDE RIP RAP PER 1
15. RELOCATE EXISTING ISOLATION VALVE 5087
16. RELOCATE EXISTING 30 yd^3 SLUDGEMATE
17. NEW 30 yd^3 SLUDGEMATE, MODEL SM-30-0-RS, FLO TREND SYSTEMS, HOUSTON, TX
18. DEWATERING POLYMER FEED SYSTEM, SEE DRAWING NO. M-04
19. FILTRATE SUMP. SEE DRAWING NO. M-05
20. TRANSFER PUMP DISCHARGE TO TANKS
21. INSTALL 6-FOOT WIDE RIP RAP PER 1
22. SAMPLE TAP RELOCATED INTO INF-10
23. NOT USED
24. RAISE EXISTING CATCH BASIN TO TOP ELEVATION 1575.00
25. OUTDOOR LIGHT MOUNTED ON TOP OF NEW TANK. TYP OF 4, COMPLIANT WITH SECTION OF ZONING ORDANANCE, NORMALLY OFF AT NIGHT
26. REPLACE EXISTING 90° ELBOW WITH TEE
27. NEW 2" BALL VALVE WITH 2" SQUARE STEM NUT AND STEM EXTENSION. VALVE BOX PER P602 TYP
28. REINFORCED CONCRETE SUMP FOR CHEMICAL FILL STATION. SIZED AT 2'x3' (INT DIM) WITH 6" CURB. SIM TO SECTION D ON DRAWING S-03.
29. PROTECT EXISTING ELECTRICAL CONDUITS, POTHOLE LOCATIONS AND RE-ROUTE AT SAME LOCATION BUT DEEPER TO 1569.00 UNDER NEW RETENTION BASIN
30. INSTALL 14-FOOT WIDE RIP-RAP ON RETENTION BASIN PER 1
31. PIPE SUPPORT
32. PIPE SUPPORT PER P569 TYP

COORDINATE CONTROL DATA

NO.	NORTHING	EASTING	DESCRIPTION
1	74735.601	96461.710	90° BEND
2	74695.27	96474.91	CENTER OF BACKWASH TANK
3	74693.75	96430.23	NE CORNER CHEMICAL FEED
4	74686.44	96408.36	NW CORNER CHEMICAL FEED
5	74694.24	96536.11	NE CORNER SOLIDS HANDLING SLAB
6	74662.888	96517.045	SW CORNER SOLIDS HANDLING SLAB
7	74661.80	96463.02	CENTER OF PRESSURE VESSEL 4
8	74666.10	96476.43	CENTER OF PRESSURE VESSEL 5
9	74670.40	96493.84	CENTER OF PRESSURE VESSEL 6
10	74735.205	96408.232	90° BEND
11	74740.72	96494.12	90° BEND
12	74801.76	96386.37	CENTER OF NORTH TOE OF RETENTION BASIN
13	74657.93	96366.65	RADIUS POINT OF RETENTION BASIN
14	74694.295	96336.933	90° BEND
15	74709.714	96366.938	90° BEND
16	74724.247	96513.872	45° BEND
17	74704.03	96501.76	45° BEND
18	74671.101	96514.626	SW CORNER OF FILTRATE SUMP
19	74677.860	96595.421	NW CORNER OF FILTRATE SUMP

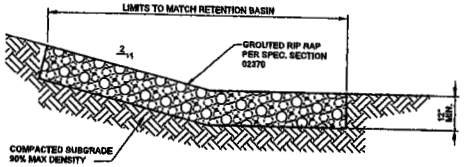

1 DETAIL-GROUTED RIP RAP

SCALE: NTS
FILE: -

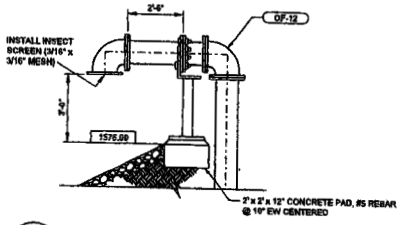

2 DETAIL-OVERFLOW DISCHARGE

SCALE: 3/8" = 1'-0"
FILE: 8340A10-C-102

0 2' 4' 6'

REV	DATE	BY	DESCRIPTION

PROJECT NO. 8340A10 FILE NAME: 8340A10_C-02.dgn

DESIGNED MJR
DRAWN GD
CHECKED GDT
DATE OCTOBER 2010

carollo

ARIZONA WATER COMPANY

OASIS ARSENIC TREATMENT FACILITY EXPANSION

CIVIL

SOUTH SITE PLAN & DETAILS

VERIFY SCALES
BAR IS ONE INCH ON ORIGINAL DRAWING
0 1"
IF NOT ONE INCH ON THIS SHEET, ADJUST SCALES ACCORDINGLY

JOB NO. 8340A.10
DRAWING NO. C-02
SHEET NO. 6 OF 38

Plot Date: 15-OCT-2010 10:35:17 AM User: GDavis Model Layout Colortable: ptbwts.ctb Designfolder: Dwg$$_SM_Pen: ctb$$$.pen PlotScale: 1:1 LAST SAVED BY: davis

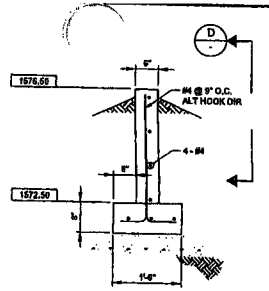

C SECTION
SCALE: 3/4" = 1'-0"
FILE: 8340A10-010-C-102

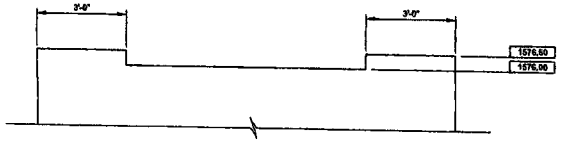

D SECTION
SCALE: 1/2" = 1'-0"
FILE: 8340A10-010-C-102

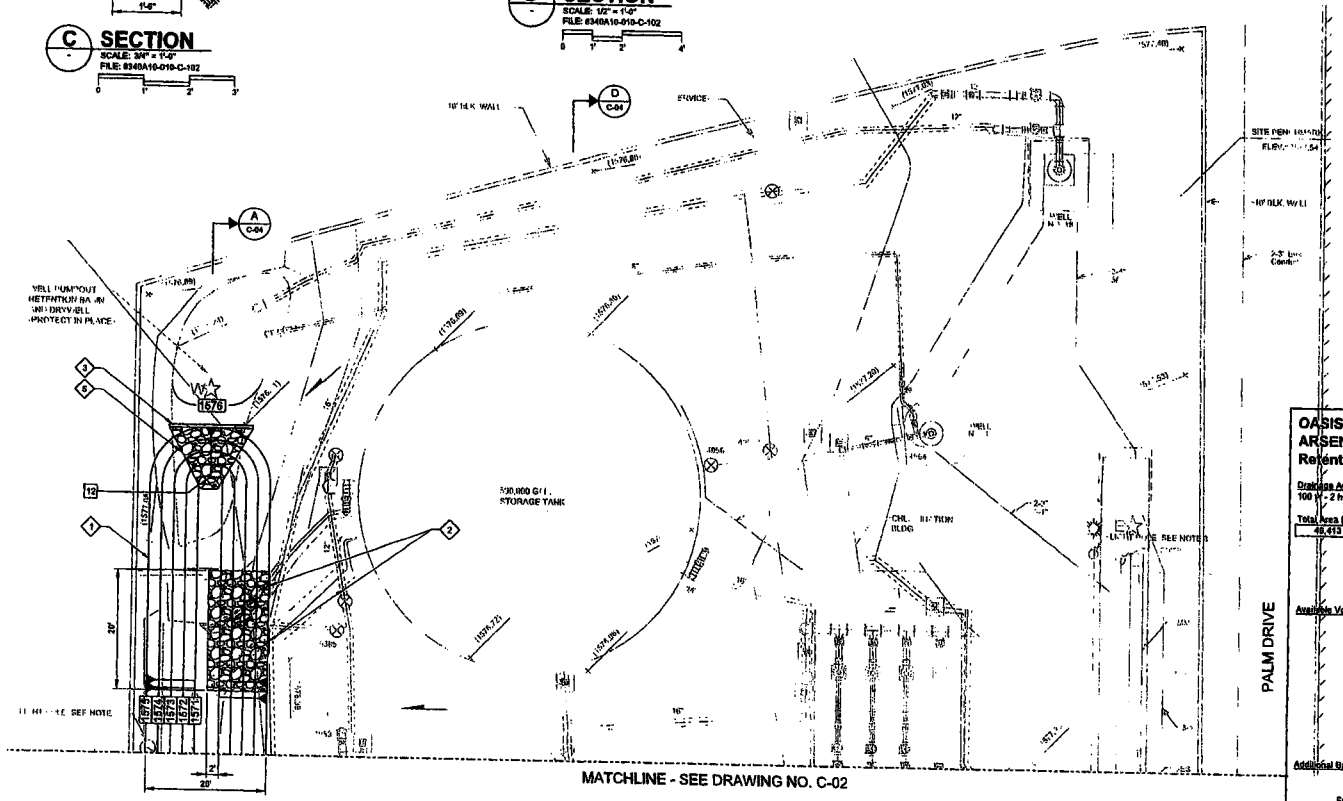

B SITE PLAN
SCALE: 1" = 10'-0"
FILE: 8340A10-010-C-101

NORTH

GENERAL NOTES

1. ALL WORK SHALL BE COORDINATED WITH OWNER AND AS PER SECTION 01140 - WORK RESTRICTIONS.
2. ROUTING OF UNDERGROUND STRUCTURES AND UTILITIES IS NOT KNOWN. CONTRACTOR SHALL CONFIRM BY POTHOLING.
3. ALL PIPING SHALL HAVE 3' COVER MINIMUM.
4. REFER TO PM02 TYP FOR PIPING INSTALLATION DETAILS.
5. SEE DRAWING NO. C-02 FOR COORDINATE CONTROL DATA.

KEY NOTES:

1. NEW STORMWATER RETENTION BASIN, APPROXIMATELY 7500 ft² AT A 2:1 SLOPE
2. REPAIR EXISTING CONCRETE DRAINAGE CHUTE AND TERMINATE AT EDGE OF BASIN. INSTALL 20-FOOT WIDE RIP-RAP IN RETENTION BASIN PER 1/C-02
3. INSTALL 14 FOOT LONG WEIR WALL. MATCH FOR DIMENSIONS AND REINFORCEMENT. TOP ELEVATION AT 1576.90 C/-
4. NOT USED
5. INSTALL RIP-RAP ON NORTH SLOPE OF RETENTION BASIN PER 1/-

OASIS WATER CAMPUS
ARSENIC TREATMENT FACILITY EXPANSION - DRAINAGE CALCULATIONS
Retention Basin #1

Drainage Areas (square feet)
100 Yr - 2 hr storm: 2.7 inches

Total Area (sf): 46,413

	Area (sf)
Bare Ground	0
Desert Landscape	38,256
Pavement	7,216
Structure or Concrete	9,244
Off-site (Bare Ground)	0

Required Volume (cubic feet) = Sum(C-factor x Areas) x 0.225'

	C-factor	Area (sf)	Sum	Volume (cf)
Bare Ground	0.45	0.00	0.00	0.00
Desert Landscape	0.45	38,256.00	17,215.20	3,873.42
Pavement	0.95	7,216.00	6,855.20	1,542.42
Structure or Concrete	0.95	9,244.00	8,781.80	1,975.91
Off-site (Bare Ground)	0.45	0.00	0.00	0.00
			* Total Volume	7,391.75

Available Volume (cubic feet) = $[(A_s+A_b)+(A_s A_b)^{1/2}]*[(Elev_b-Elev_s)*(1/3)]$

Surface Elevation (ft)	Surface Area (sf)	Avg. Surf. Area (sf)	Incremental Depth (ft)	Incremental Vol. (cf)	Total Depth (ft)	Total Vol. (cf)	Total Vol. (af)
1571	576						
		877	1.0	859	1.0	859	0.02
1572	1,178						
		1,523	1.0	1,516	2.0	2,375	0.05
1573	1,868						
		2,219	1.0	2,209	3.0	4,578	0.11
1574	2,570						
		2,934	1.0	2,926	4.0	7,505	0.17
1575	3,298						

Additional Basin Volume Requirement Check (cubic feet) = $[V_a/(V_a+V_r)]*100$

Freeboard Depth (ft) = 0
Freeboard volume (cf) = 0

Additional Basin Volume (%) = 0.0

* TOTAL VOLUME REQUIRED INCLUDES EASEMENT ALONG PALM DRIVE

REV	DATE	BY	DESCRIPTION

PROJECT NO. 8340A10 FILE NAME: 8340A10_C-03.dgn

DESIGNED MJG
DRAWN GD
CHECKED GDT
DATE OCTOBER 2010

14737 GORDON D. THEUN

carollo

ARIZONA WATER COMPANY

ARIZONA WATER COMPANY
OASIS ARSENIC TREATMENT FACILITY EXPANSION
CIVIL
NORTH SITE PLAN & SECTION

VERIFY SCALES
BAR IS ONE INCH ON ORIGINAL DRAWING
0 1"
IF NOT ONE INCH ON THIS SHEET, ADJUST SCALES ACCORDINGLY

JOB NO. 8340A.10
DRAWING NO. C-03
SHEET NO. 6 OF 36

Model: Layout1 ColorTable: gsbw.ctb DesignScript: Carollo Std Pen v8i.pen PlotScale: 1:1 User: GDave Plot Date: 15-OCT-2010 10:35:31 AM
LAST SAVED BY: sdurbin

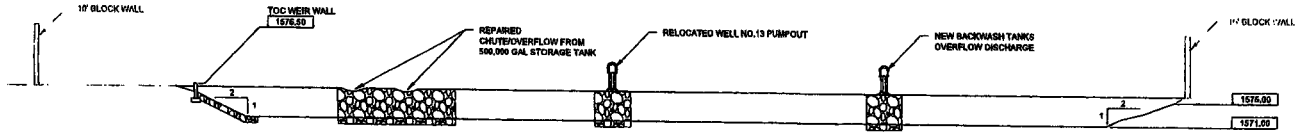

A C-02 **SECTION**
SCALE: 1" = 10'-0"
FILE: 8340A10-010-C-04
C-03
0 5' 10' 20'

KEY NOTES:

1. SUBMIT PLAN FOR RAISING BASIN TO ENGINEER FOR APPROVAL. REUSE EXISTING GRATING

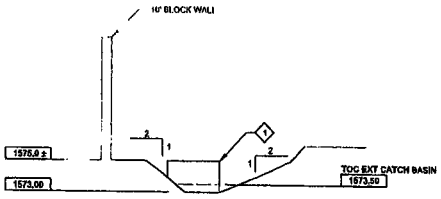

B C-02 **SECTION**
SCALE: 3/8" = 10'-0"
FILE: 8340A10-010-C-04
0 2' 4' 6'

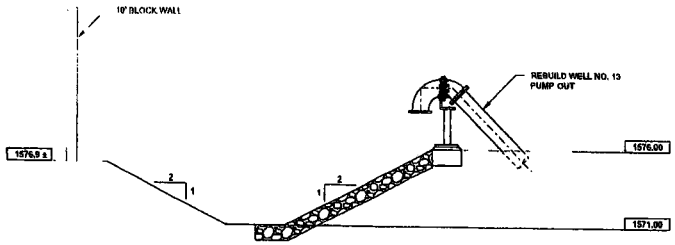

C C-02 **SECTION**
SCALE: 3/8" = 10'-0"
FILE: 8340A10-010-C-04
0 2' 4' 6'

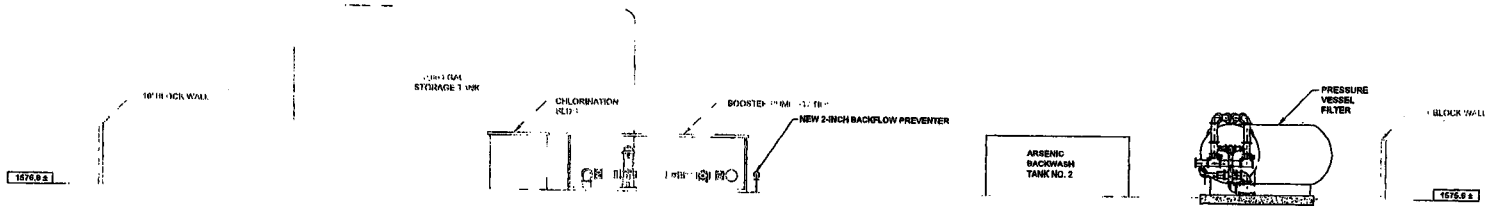

D C-02 **SECTION**
SCALE: 1" = 10'-0"
FILE: 8340A10-010-C-04
C-03
0 5' 10' 20'

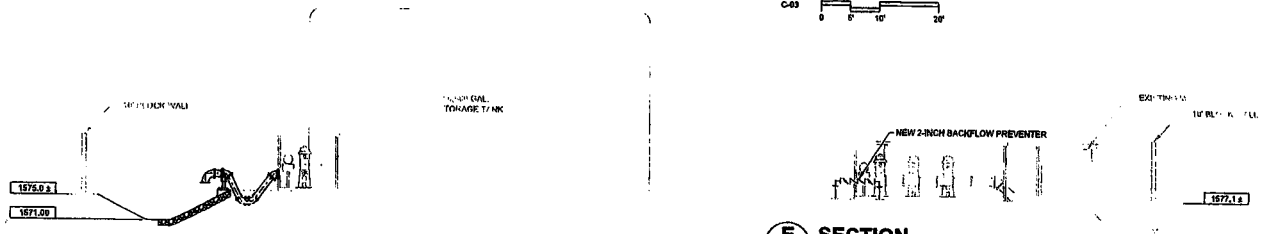

E C-02 **SECTION**
SCALE: 1" = 10'-0"
FILE: 8340A10-010-C-04
0 5' 10' 20'

REV	DATE	BY	DESCRIPTION

PROJECT NO. 8340A10 FILE NAME: 8340A10_C-04.dgn

DESIGNED MJG
DRAWN GD
CHECKED GDT
DATE OCTOBER 2019

44737 GORDON D. THELIN — EXPIRES 06-30-2012

carollo

ARIZONA WATER COMPANY

OASIS ARSENIC TREATMENT FACILITY EXPANSION

CIVIL

STORMWATER RETION BASIN - SECTIONS

VERIFY SCALES: BAR IS ONE INCH ON ORIGINAL DRAWING 0 1" — IF NOT ONE INCH ON THIS SHEET, ADJUST SCALES ACCORDINGLY

JOB NO. 8340A.10
DRAWING NO. C-04
SHEET NO. 7 OF 35

Plot Date: 15-OCT-2019 10:55:49 AM User: GDeis Model: Layout1 ColorTable: gsfuels.ctb DesignScript: Carollo_Std_Fmt_v8105.pen PlotScale: 1:1 LAST SAVED BY: gdeis

JAL:

1. THE CONTRACTOR SHALL VERIFY ALL DIMENSIONS BEFORE STARTING WORK AND SHALL IMMEDIATELY NOTIFY THE ENGINEER OF ANY DISCREPANCIES.
2. UNLESS DETAILED, SPECIFIED, OR INDICATED OTHERWISE, CONSTRUCTION SHALL BE AS INDICATED IN THE APPLICABLE TYPICAL DETAILS AND GENERAL NOTES. TYPICAL DETAILS ARE MEANT TO APPLY EVEN THOUGH NOT REFERENCED AT SPECIFIC LOCATIONS ON DRAWINGS.
3. WHERE NO CONSTRUCTION DETAILS ARE SHOWN OR NOTED FOR ANY PART OF WORK, DETAILS SHALL BE THE SAME AS FOR OTHER SIMILAR WORK.
4. VERIFY LOCATION & SIZE OF OPENINGS AT ROOF, FLOORS, AND WALLS WITH MECHANICAL AND ELECTRICAL PLANS AND AS REQUIRED FOR EQUIPMENT FURNISHED. FOR ADDITIONAL OPENINGS AT ROOF, FLOORS AND WALLS SEE STRUCTURAL, MECHANICAL, AND ELECTRICAL DRAWINGS. SEE SPECS AND MFR'S DATA FOR THIMBLES AND OTHER EMBEDDED ITEMS AROUND MECHANICAL OPENINGS.

CODES:
5. INTERNATIONAL BUILDING CODE IBC 2006 W/ REINFORCED CONCRETE: AMERICAN CONCRETE INSTITUTE ACI 318-05

LOADING CRITERIA:
6. MINIMUM LOADING REQUIREMENTS PER CHAPTER 16 OF THE IBC.

DEAD LOAD ..... CALCULATED

LIVE LOADS ..... REFER TO PLANS

ACTIVE SOIL PRESSURE = 35 pcf

AT-REST SOIL PRESSURE = 80 pcf

LATERAL SURCHARGE ..... EQUIVALENT TO 2 FT OF SOIL

WIND LOAD: (ASCE 7)
BASIC WIND SPEED ..... 90 MPH
EXPOSURE C
IMPORTANCE FACTOR 1.25

EARTHQUAKE DESIGN DATA:

1. SEISMIC IMPORTANCE FACTOR - 1.25: OCCUPANCY CATEGORY-III
2. S_s = .226 S_1 = .070
3. SITE CLASS-D (assumed)
4. S_{DS} = .241 S_{D1} = .112
5. SEISMIC DESIGN CATEGORY-B

FOR OTHER SEISMIC INFORMATION, SEE SPECIFICATIONS.

7. CONSTRUCTION LOADS:
STRUCTURES HAVE BEEN DESIGNED FOR OPERATIONAL LOADS ON COMPLETED STRUCTURES. DURING CONSTRUCTION, STRUCTURES SHALL BE PROTECTED BY BRACING AND BALANCING WHEREVER EXCESSIVE LOADS MAY OCCUR.

FOUNDATION:

1. ALLOWABLE SPREAD FOOTING LOADING = 2000 psf (24" BELOW GRADE)
2. THE SUB GRADE SHALL BE PREPARED AS INDICATED ON THE DRAWINGS AND SPECIFICATIONS AND AS APPROVED BY THE ENGINEER BEFORE COMMENCING FOUNDATION CONSTRUCTION.

ALUMINUM:

1. ALUMINUM CONSTRUCTION SHALL CONFORM TO THE LATEST EDITION OF THE ALUMINUM MANUAL OF THE ALUMINUM ASSOCIATION.
2. UNLESS OTHERWISE NOTED, STRUCTURAL ALUMINUM SHALL BE ALLOY 6061-T6 AS SPECIFIED IN ASTM B211 OR ASTM B221 FOR BARS, AND ASTM B308 FOR STRUCTURAL SHAPES.
3. WHERE ALUMINUM IS IN CONTACT WITH MASONRY OR CONCRETE SURFACES, CONTACT SURFACES SHALL BE COATED WITH EPOXY.
4. EACH BOLTED CONNECTION SHALL HAVE MINIMUM OF TWO BOLTS.
5. BOLT SPACING SHALL BE 3 INCHES, UNO.

CONCRETE:

1. ALL CONCRETE STRENGTH SHALL BE 4,000 PSI MINIMUM AT 28 DAYS UNO.
2. LOCATION OF CONSTRUCTION JOINTS SHALL BE APPROVED BY THE ENGINEER. IF NOT SHOWN ON DRAWINGS. CONSTRUCTION JOINTS SHALL BE ROUGH AND CLEAN. REMOVE LOOSE AGGREGATE AND DAMAGED CONCRETE.
3. PROVIDE 3/4 INCH CHAMFERS AT ALL EXPOSED EDGES.
4. FOR ADDITIONAL CONCRETE NOTES SEE S101 TYP

REINFORCING STEEL:

1. REINFORCING STEEL SHALL BE DEFORMED BARS CONFORMING TO ASTM SPECIFICATION A615 GRADE 60.
2. PROVIDE SPACER BARS, SPREADERS, CHAIRS, BLOCKS, ETC., AS REQUIRED TO SECURELY HOLD STEEL IN PLACE.
3. MAINTAIN 3 INCHES MINIMUM CLEARANCE BETWEEN REINFORCING STEEL AND PIPELINES UNLESS OTHERWISE NOTED.
4. WELDED WIRE FABRIC SHALL CONFORM TO ASTM A185.
5. NO WELDING OF REINFORCEMENT BARS SHALL BE PERMITTED UNLESS APPROVAL IS OBTAINED FROM THE ENGINEER PRIOR TO CONSTRUCTION.
6. ALL REINFORCING STEEL SHALL BE LAP SPLICED PER S101 TYP ALL BARS SHALL BE DEVELOPED BEYOND POINT OF TERMINATION, AS SHOWN ON DRAWINGS. IF DEVELOPMENT LENGTH IS NOT SHOWN, WHETHER HOOKED OR STRAIGHT, DEVELOPMENT LENGTH SHALL BE PER ACI 318-05.
7. REINFORCING AT ALL CORNERS AND JUNCTIONS AS PER S144 TYP PLUS ANY ADD BARS SHOWN ON PLANS.
8. PROVIDE ADDITIONAL REINF AT OPENINGS AS PER S160 TYP.

STEEL AND STAINLESS STEEL:

1. ALL MATERIAL AND WORK SHALL CONFORM TO THE AISC SPECIFICATION, LATEST EDITION, FOR THE DESIGN, FABRICATION AND ERECTION OF STRUCTURAL STEEL FOR BUILDINGS.
2. STRUCTURAL STEEL SHALL CONFORM TO ASTM A36 OR A992
3. STRUCTURAL PIPE MEMBERS SHALL CONFORM TO ASTM A53, GRADE B.
4. STRUCTURAL TUBE MEMBERS SHALL CONFORM TO ASTM A-500, GRADE B, FY=46 KSI.
5. STRUCTURAL STAINLESS STEEL SHALL CONFORM TO ASTM A276 FOR BARS AND SHAPES, TYPE 304L OR 316L.
6. UNLESS DETAILED OTHERWISE, ALL CONNECTIONS SHALL BE MADE WITH 3/4 INCH DIAMETER HIGH STRENGTH BOLTS. HIGH STRENGTH BOLTS SHALL CONFORM TO A325SC UNLESS NOTED OTHERWISE.
7. EACH CONNECTION SHALL HAVE A MINIMUM OF TWO BOLTS.
8. BOLT SPACING SHALL BE 3 INCHES, UNLESS NOTED OTHERWISE.
9. MINIMUM EDGE DISTANCE (DISTANCE FROM CENTER OF BOLT TO NEAREST EDGE OF PLATE OR STRUCTURAL ELEMENT) SHALL BE 1 1/2 INCHES FOR 3/4 INCH DIAMETER BOLTS UNLESS NOTED OTHERWISE.
10. ANCHOR BOLTS SHALL BE PER ASTM A307, UNO.
11. ALL BOLTED STAINLESS STEEL CONNECTIONS SHALL CONSIST OF STAINLESS STEEL BOLTS, NUTS, AND WASHERS.

WELDING STEEL:

1. WELDING SHALL BE DONE BY ELECTRIC SHIELDED ARC PROCESS USING E-70XX ELECTRODES.
2. ALL WELDING SHALL BE PERFORMED BY CERTIFIED WELDERS.
3. ALL WELDS SHALL BE MADE IN CONFORMANCE WITH THE LATEST EDITION OF THE STRUCTURAL WELDING CODE AWS A5.1 AND AWS D1.1 OF THE AMERICAN WELDING SOCIETY.
4. ALL FILLET WELDS SHALL BE A MINIMUM 3/16 INCH, IF NOT CALLED OUT.

WELDING ALUMINUM:

1. WELDING ALUMINUM SHALL BE IN CONFORMANCE WITH AWS D1.2-80
2. WELDING SHALL BE DONE BY USING ER4043 ELECTRODES.
3. ALL WELDING SHALL BE CONTINUOUS AND SHALL BE 3/16" FILLET WELDS, UNO.
4. CONTINUOUS INSPECTION IS REQUIRED FOR WELDING OF STRUCTURAL ALUMINUM.

WELDING STAINLESS STEEL:

1. WELDING SHALL BE DONE BY USING E304L-15 ELECTRODES FOR ASTM304L AND E316L-15 ELECTRODES FOR ASTM316L.
2. SEE NOTE 4 UNDER WELDING STEEL.
3. WELD PER AWS B2.1 OR D10.4 AS APPLICABLE.

BACKFILL:

1. UNLESS OTHERWISE NOTED, BACKFILL SHALL NOT BE PLACED AGAINST WALLS UNTIL TOP SLAB HAS BEEN PLACED IN ITS ENTIRETY AND ALL CONCRETE HAS REACHED ITS DESIGN STRENGTH.

SPECIAL INSPECTION:

SPECIAL INSPECTION OF THE FOLLOWING ITEMS SHALL BE IN ACCORDANCE WITH 2006 IBC CHAPTER 17, SECTION 1704.

A. CONCRETE:
- PLACING OF REINFORCING STEEL.
- PLACING OF ANCHOR BOLTS OR EMBEDDED PLATES.
- INSTALLATION OF MECHANICAL COUPLERS.
- INSTALLATION OF EXPANSION ANCHORS AND ADHESIVE ANCHORS.

B. WELDING:
- ALL STRUCTURAL STEEL.
- HEADED STUDS FOR EMBEDDED PLATES.

C. CONCRETE MASONRY UNITS:
- PLACING REINFORCING
- GROUTING CELLS
- PLACEMENT AND PREPARATION OF MORTAR

D. SOILS:
- BEARING REGION OF FOOTERS
- EXCAVATION
- FILL TESTING AND INSTALLATION

DEFERRED SUBMITTALS:

1. THE FOLLOWING PORTIONS OF THE PROJECT ARE DEFERRED SUBMITTAL ITEMS AND HAVE NOT BEEN DESIGNED BY THE ENGINEER OF RECORD.
   A. STEEL TANK
2. DEFERRED SUBMITTAL ITEMS WILL BE SUBMITTED TO THE BUILDING OFFICIAL FOR APPROVAL DURING THE CONSTRUCTION PHASE OF THE PROJECT.
3. DEFERRED SUBMITTAL ITEMS SHALL NOT BE INSTALLED UNTIL THE ENGINEER OF RECORD HAS REVIEWED THE SUBMITTAL DOCUMENTS AND INDICATED THAT THEY HAVE BEEN REVIEWED AND THAT THEY HAVE BEEN FOUND TO BE IN GENERAL CONFORMANCE WITH THE DESIGN OF THE BUILDING STRUCTURE.

ARCH/STRUCT HATCH PATTERNS:

UNDISTURBED SOIL
ABC
1 SACK CLSM
CONCRETE
GROUT/ CONC FILL
DRAIN ROCK
GRATING (section)
GRATING (plan)
INDICATES DIRECTION OF BEARING BARS
METAL DECKING (plan)
SELECT BACKFILL
WELDED WIRE FABRIC
GRAVEL
PAVEMENT
MASONRY WALLS (plan)
REMOVAL
CHECKER PLATE
STEEL (section)
ROCK

ADDITIONAL ABBREVIATIONS:

CL	CENTER LINE
FM	FIELD MEASURE
H1E	HOOK ONE END
H2E	HOOK TWO ENDS
HAS	HEADED ANCHOR STUD
BRG	BEARING
LLH	LONG LEG HORIZONTAL
LLV	LONG LEG VERTICAL
PL	PLATE
WP	WORK POINT

REV	DATE	BY	DESCRIPTION

PROJECT NO. 8340A10 FILE NAME: 8340A10_S-01.dgn

DESIGNED JDS
DRAWN GD
CHECKED DAG
DATE OCTOBER 2010

carollo

ARIZONA WATER COMPANY
OASIS ARSENIC TREATMENT FACILITY EXPANSION
STRUCTURAL
STRUCTURAL NOTES & LEGEND

VERIFY SCALES
BAR IS ONE INCH ON ORIGINAL DRAWING
0 1"
IF NOT ONE INCH ON THIS SHEET, ADJUST SCALES ACCORDINGLY

JOB NO. 8340A.10
DRAWING NO. S-01
SHEET NO. 9 OF 38

Model: Layout1 Color/Table: pdmstd.ctb Design/Script: Carollo_Std_Plot_v2005.pen PlotScale: 1:1 Plot Date: 15-OCT-2010 10:35:53 AM User: GDavis
LAST SAVED BY: gdavis

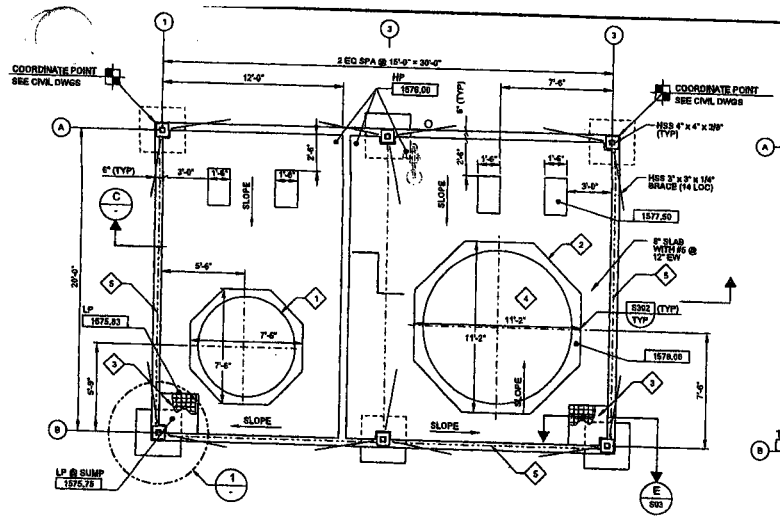

A PLAN - SLAB

SCALE: 1/4" = 1'-0"
FILE: 8340A10-040-S-101

NORTH

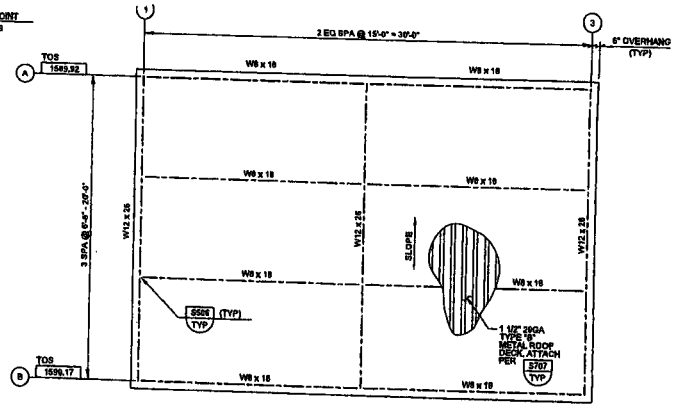

B PLAN - ROOF

SCALE: 1/4" = 1'-0"
FILE: 8340A10-040-S-101

NORTH

GENERAL NOTES:

1. TOP DECK DESIGN LL = 20 PSF

KEY NOTES:

1. FERRIC CHLORIDE TANK
2. SODIUM HYPOCHLORITE TANK
3. 2-FOOT SQUARE BY 2'-6" DEEP SUMP WITH 2" MIN FRP GRATING
4. CONTRACTOR TO FIELD VERIFY EXISTING TANK. TANK PAD SHALL BE SIZED TO FIT NEW TANK AND ANCHORS WITH 6 INCHES OF EDGE DISTANCE FROM ANCHOR TO EDGE OF PAD
5. SHADE FABRIC FROM CURB TO UNDERSIDE OF SHADE CANOPY STRUCTURE ON EAST, WEST AND SOUTH SIDES

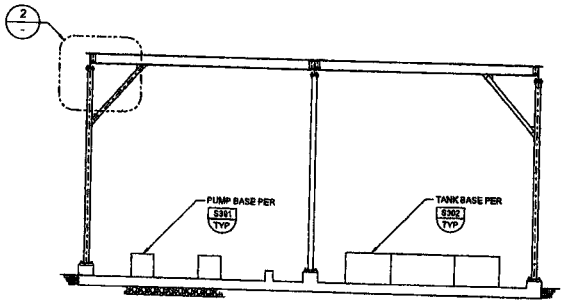

C SECTION

SCALE: 1/4" = 1'-0"
FILE: 8340A10-010-C-101

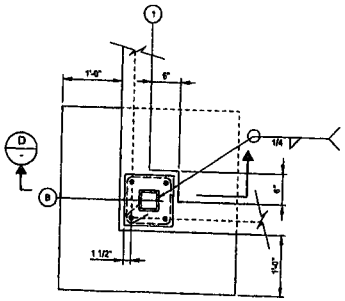

1 DETAIL

SCALE: 1" = 1'-0"
FILE: 8340A10-040-S-101

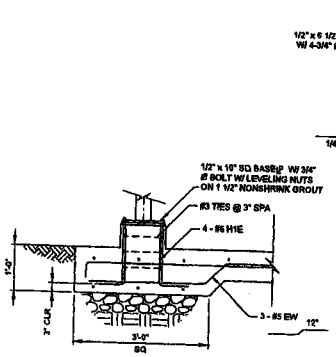

D SECTION

SCALE: 3/4" = 1'-0"
FILE: 8340A10-010-C-101

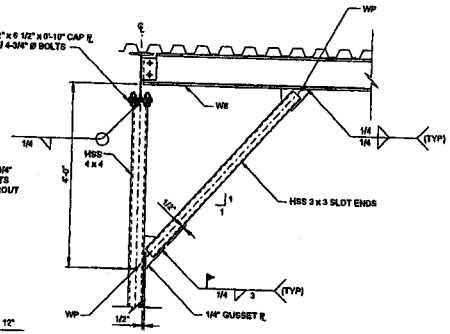

2 DETAIL

SCALE: 3/4" = 1'-0"
FILE: 8340A10-040-S-101

REV	DATE	BY	DESCRIPTION

PROJECT NO. 8340A10 FILE NAME: 8340A10_S-02.dgn

DESIGNED JDS
DRAWN GD
CHECKED DAG
DATE OCTOBER 2016

41080 DAVID A. GEISLER ARIZONA U.S.A. 10/31/16
EXPIRES 06-30-2018

carollo

ARIZONA WATER COMPANY

OASIS ARSENIC TREATMENT FACILITY EXPANSION

STRUCTURAL

CHEMICAL FEED SYSTEM
PLANS & SECTION

VERIFY SCALES
BAR IS ONE INCH ON ORIGINAL DRAWING
0 1"
IF NOT ONE INCH ON THIS SHEET, ADJUST SCALES ACCORDINGLY

JOB NO. 8340A.10
DRAWING NO. S-02
SHEET NO. 9 OF 36

LAST SAVED BY: gdavis
Model: Layout1 Color/Table: gdavis.ctb Design/Script: Carollo_SM_Plan_v8x65.pgs Plot/Scale: 1:1
User: GDavis
Plot Date: 18-OCT-2016 10:28:56 AM

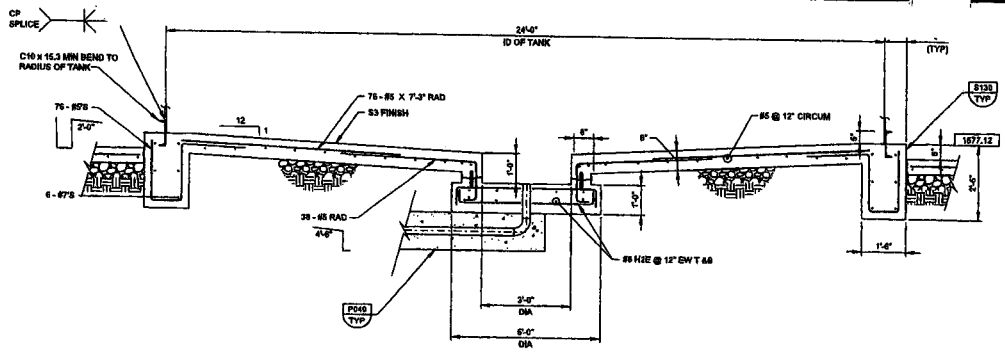

A SECTION - ARSENIC BACKWASH TANK

SCALE: 1/2" = 1'-0"
FILE: 8340A10-040-102

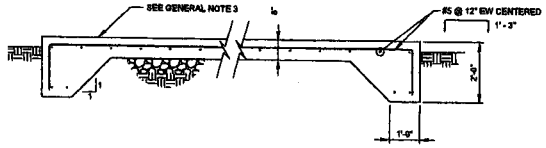

B C-02 SECTION - TYPICAL SLAB

SCALE: 1/2" = 1'-0"
FILE: 8340A10-040-102

GENERAL NOTES:

1. ★ COORDINATE WITH EQUIPMENT SUPPLIED.
2. SET CAST-IN-PLACE ANCHOR BOLTS WITH FILTER VESSEL MANUFACTURER SUPPLIED TEMPLATE.
3. AT SLUDGE TREATMENT NO. 1 AND 2 APPLY MASTERPLATE 206 BY BASF BUILDING SYSTEMS OR EQUAL @ 2.0 LBS/SF

KEY NOTES:

1. REBATE TWO SIDES. SEAT TWO SIDES

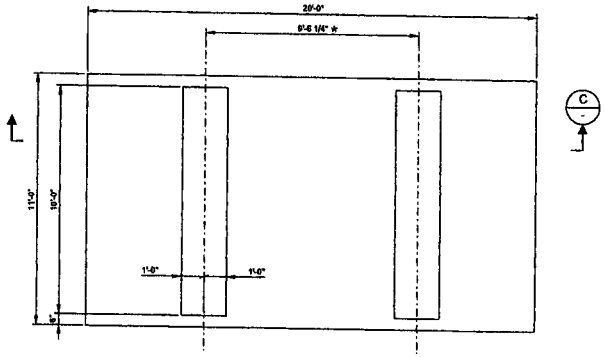

PLAN - FILTER FDN

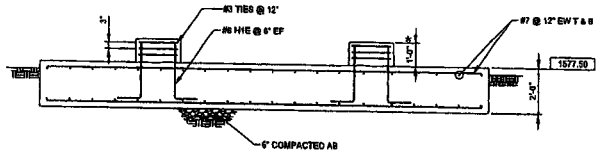

C SECTION - FILTER FDN

SCALE: 3/8" = 1'-0"
FILE: 8340A10-040-102

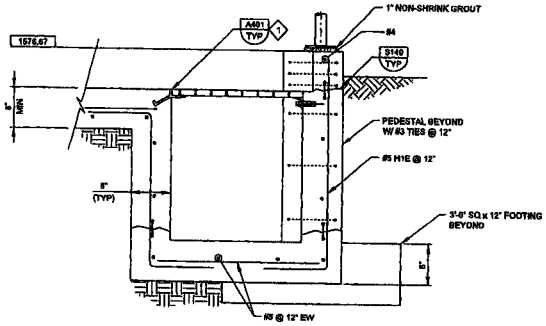

E S-02 SECTION

SCALE: 1" = 1'-0"
FILE: 8340A10-040-S-101

REV	DATE	BY	DESCRIPTION

PROJECT NO. 8340A10 FILE NAME: 8340A10_S-03.dgn

DESIGNED JDB
DRAWN GD
CHECKED DAG
DATE OCTOBER 2010

41060 DAVID A. GEISLER EXPIRES 06-30-2012

carollo

ARIZONA WATER COMPANY

OASIS ARSENIC TREATMENT FACILITY EXPANSION

STRUCTURAL

VESSELS & SOLIDS HANDLING SECTIONS

VERIFY SCALES: BAR IS ONE INCH ON ORIGINAL DRAWING 0 — 1"
IF NOT ONE INCH ON THIS SHEET, ADJUST SCALES ACCORDINGLY

JOB NO. 8340A.10
DRAWING NO. S-03
SHEET NO. 10 OF 35

Model: Layout1 ColorTable: ghafe.ctb DesignScript: Carollo_Std_Pen_v2001.pen PlotScale: 1:1 User: GDavis PlotDate: 15-OCT-2010 10:36:14 AM LAST SAVED BY: gdavis

GENERAL NOTE

1. -

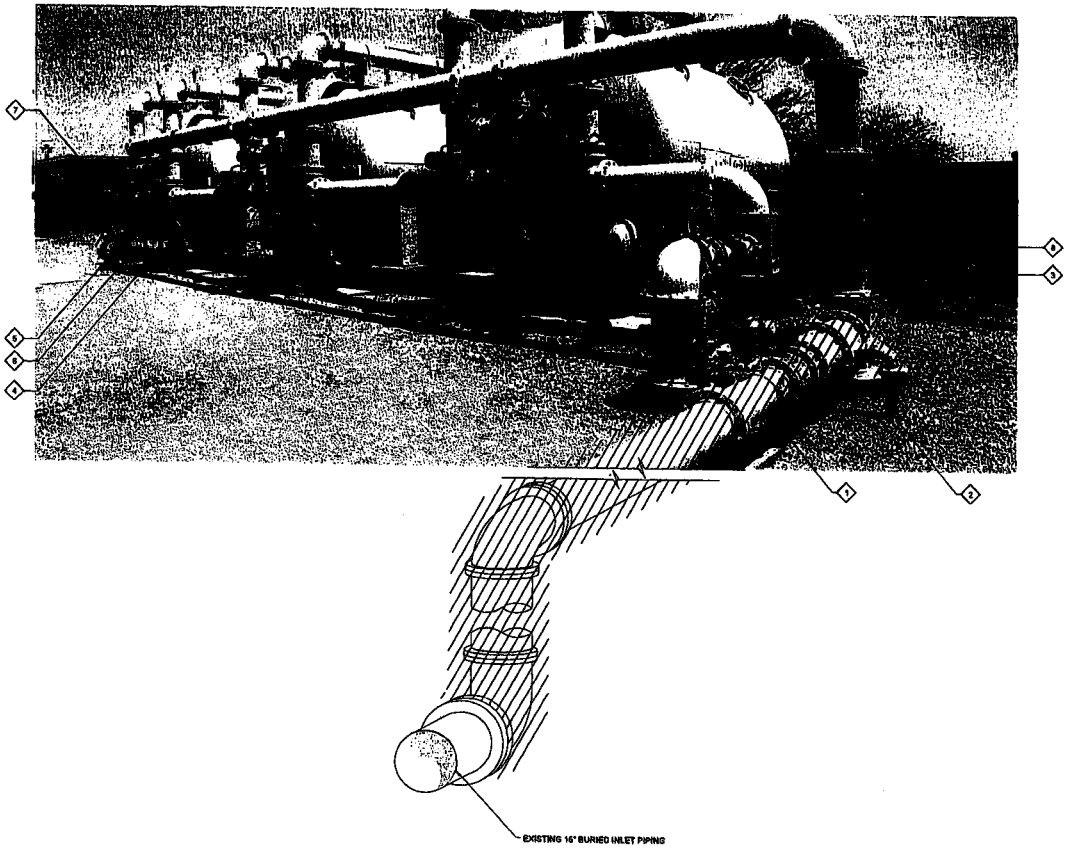

KEY NOTES:

1. REMOVE INFLUENT PIPING SYSTEM AND RETURN TO OWNER
2. REFER TO CIVIL DRAWINGS FOR CONTINUATION OF PIPE
3. REMOVE (FCL), AND (HYP) CHEMICAL LINES AT LEAST 50 PSI TO A POINT 3' BELOW GRADE, FLUSH LINES WITH WATER AND CAP PIPE END. EXISTING CHEMICAL INJECTORS SHALL NOT BE REMOVED UNTIL NEW CHEMICAL STORAGE, FEED, AND INJECTION SYSTEMS ARE INSTALLED AND APPROVED BY OWNER. TEMPORARY CHEMICAL PIPING, OF THE SAME MATERIAL AS FINAL PIPING, SHALL BE PROVIDED WHILE INFLUENT PIPING FOR VESSELS 4, 5, AND 6 IS INSTALLED
4. REMOVE 12" VALVE AND ACTUATOR. REUSE DOWNSTREAM OF MEDIA STRAINER
5. REMOVE MEDIA STRAINER AND BLIND FLANGE. RETURN TO OWNER
6. REMOVE AND DISPOSE OF EFFLUENT PIPING SYSTEM
7. REMOVE BLIND FLANGE AND TIE-IN NEW BACKWASH RETURN PIPING AT THIS LOCATION
8. REMOVE BACKWASH RETURN PIPING. RETURN PIPING TO OWNER. REUSE FLOW CONTROL VALVE.

REV	DATE	BY	DESCRIPTION

PROJECT NO. 8340A10 FILE NAME: 8340A10_M-01.dgn

DESIGNED JD
DRAWN GD
CHECKED SKG
DATE OCTOBER 2010

22949 STEVEN K. GARDNER ARIZONA U.S.A. EXPIRES 12-31-2011

carollo

ARIZONA WATER COMPANY

ARIZONA WATER COMPANY

ARIZONA WATER COMPANY

OASIS ARSENIC TREATMENT FACILITY EXPANSION

MECHANICAL

DEMOLITION

VERIFY SCALES
BAR IS ONE INCH ON ORIGINAL DRAWING
0 1"
IF NOT ONE INCH ON THIS SHEET, ADJUST SCALES ACCORDINGLY

JOB NO. 8340A.10

DRAWING NO. M-01

SHEET NO. 11 OF 36

LAST SAVED BY: sdavis

Model: Layout1 ColorTable: ctbsfa.ctb DesignScript: CivilB_Std_Pen_v2005.pen PlotScale: 1:1 User: GDavis Plot Date: 15-OCT-2010 10:26:39 AM

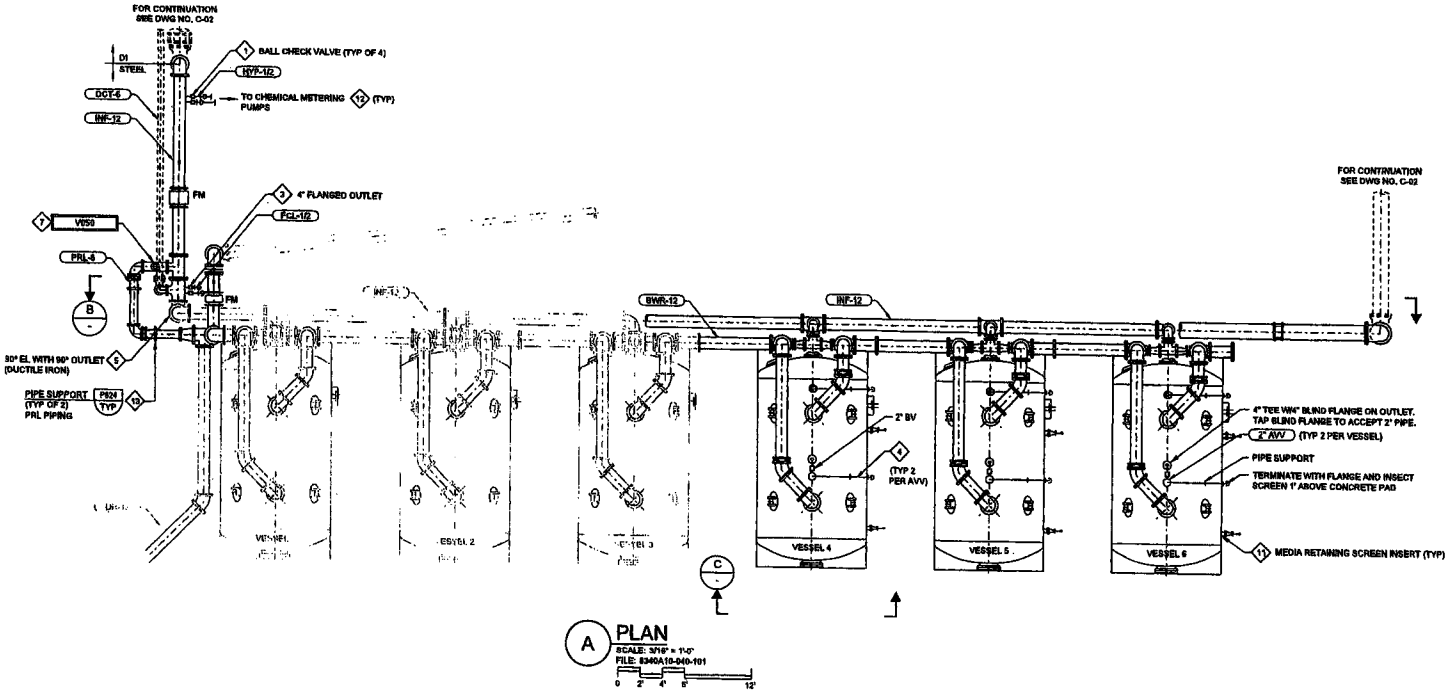

A PLAN

SCALE: 3/16" = 1'-0"
FILE: 8340A10-040-101

0 2' 4' 8' 12'

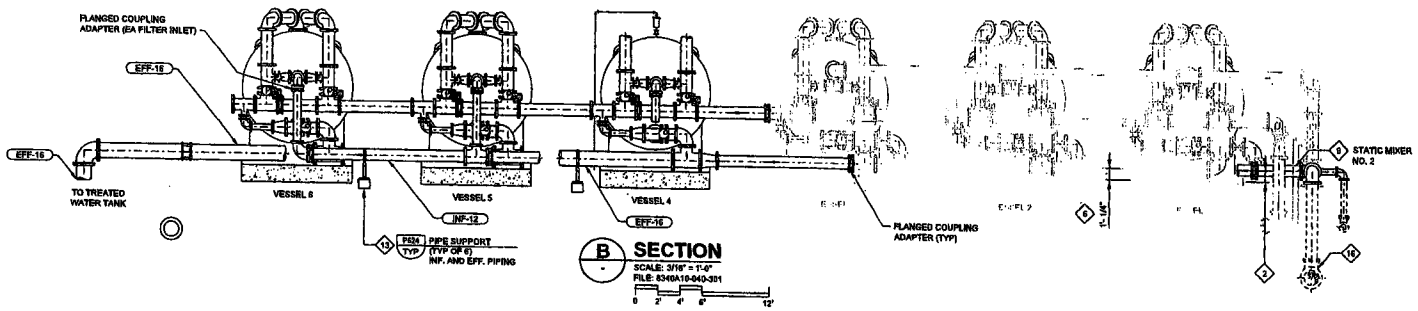

B SECTION

SCALE: 3/16" = 1'-0"
FILE: 8340A10-040-301

0 2' 4' 8' 12'

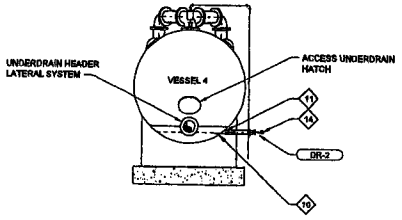

C SECTION

SCALE: 3/16" = 1'-0"
FILE: 8340A10-040-301

0 2' 4' 8' 12'

GENERAL NOTES

1. COORDINATE WITH OWNER ALL TIE-IN CONNECTIONS OF NEW PIPING WITH EXISTING PIPING. REFER TO SPECIFICATIONS FOR ALLOWABLE SHUTDOWN TIME.

KEY NOTES:

1. INSTALL CHECK VALVE IN VERTICAL RUN OF PIPE
2. FIELD MEASURE EXISTING PIPING BEFORE DEVELOPMENT OF SHOP DRAWINGS. PROVIDE FABRICATED FITTING OR DEFLECTED JOINT FOR NEW INFLUENT PIPING
3. TYPICAL FOR ALL SAMPLE TAPS, INSTRUMENT TAPS AND PROCESS LINE CONNECTIONS
4. TANK FABRICATOR SHALL DESIGN TANK WITH 4" x 4" x 1/2" PLATES WITH 1-1/4"Ø HOLE TO SERVE AS PIPE SUPPORT. PLATE NEAR AVV SHALL BE VERTICALLY ORIENTED
5. PROVIDE WITH FLANGED BASE AND INSTALL ON EXISTING CONCRETE PAD
6. FIELD MEASURE EXISTING VESSEL TO PIPE DIMENSION BEFORE DEVELOPMENT OF SHOP DRAWINGS. NEW EFFLUENT PIPING CENTERLINE SHALL MATCH WITH EXISTING EFFLUENT CENTERLINE. COORDINATE PIPING DIMENSIONS WITH VESSEL FABRICATOR, APPROXIMATE DIMENSION SHOWN
7. PROVIDE CLA-VAL PRESSURE RELIEF VALVE, (MODEL 50-01) WITH LOW FLOW SWITCH, (MODEL X105 LOW)
8. PROVIDE STATIC MIXER WITH 3 ELEMENTS AND CARBON STEEL BODY (KOMAX OR EQUAL)
9. NOT USED
10. PROVIDE SLOPED AREA 12" ALL AROUND DRAIN CONNECTION INVERT. DRAIN PIPE INVERT SHALL BE 1" BELOW FF ELEV OF CONC INSIDE VESSEL
11. INSTALL SCREENED V-CONE (45 x 45 MESH) ON EACH FILTER DRAIN. ALSO PROVIDE THREE (3) SPARE SCREEN INSERTS.
12. ROUTE TO CHEMICAL STORAGE AND FEED SYSTEM. SUBMIT PIPE ROUTING PLAN BEFORE STARTING WORK.
13. COAT PIPE SUPPORTS WITH HIGH SOLIDS EPOXY SYSTEM AS SPECIFIED IN SECTION 09900.
14. TERMINATE WITH 2" MALE CAMLOCK
15. REMOVE EXISTING ELBOW AND INSTALL 90° ELBOW WITH 90° OUTLET (DUCTILE IRON). AN ALTERNATE OPTION IS TO INSTALL A TEE FITTING ON THE EXISTING ELBOW
16. INSTALL NEW 16" x 12" REDUCING ELBOW (DUCTILE IRON) ONTO EXISTING BURIED 16" PIPE (DUCTILE IRON)

REV	DATE	BY	DESCRIPTION

PROJECT NO. 8340A10 FILE NAME: 8340A10_M-02.dgn

DESIGNED JD
DRAWN GD
CHECKED SKG
DATE OCTOBER 2010

22943 STEVEN K. GARDNER ARIZONA U.S.A. EXPIRES 12-31-2011

carollo

ARIZONA WATER COMPANY

OASIS ARSENIC TREATMENT FACILITY EXPANSION

MECHANICAL

ARSENIC TREATMENT SYSTEM PLAN & SECTIONS

VERIFY SCALES BAR IS ONE INCH ON ORIGINAL DRAWING 0 1"
IF NOT ONE INCH ON THIS SHEET, ADJUST SCALES ACCORDINGLY

JOB NO. 8340A.10
DRAWING NO. M-02
SHEET NO. 12 OF 36

Plot Date: 15-OCT-2010 10:36:52 AM User: GDavis Model: Layout1 ColorTable: pltstyle.ctb DesignScript: Carollo_Std_Pack_v2005.pcs PlotScale: 1:1 LAST SAVED BY: rbrooks

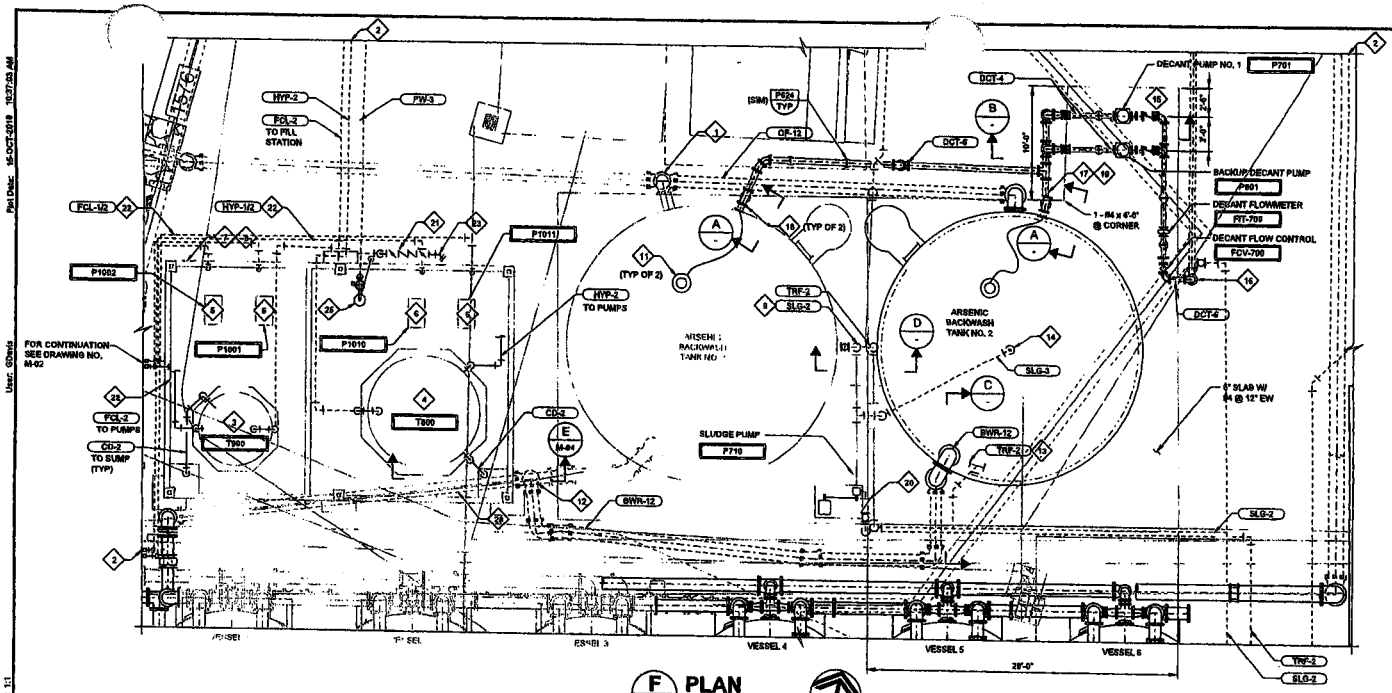

F PLAN

SCALE: 3/16" = 1'-0"
FILE: 8340A10-C-101

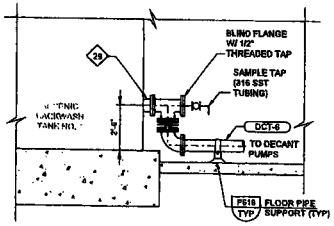

A SECTION

SCALE: 3/8" = 1'-0"
FILE: 8340A10-040-303

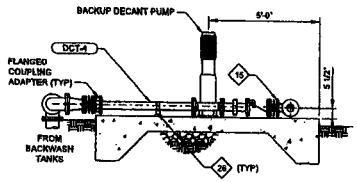

B SECTION

SCALE: 3/8" = 1'-0"
FILE: 8340A10-040-303

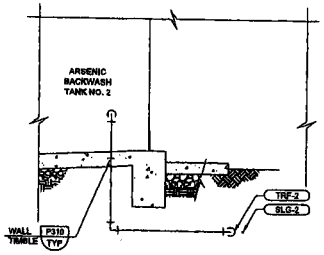

C SECTION

SCALE: 3/8" = 1'-0"
FILE: 8340A10-040-303

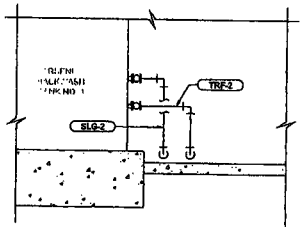

D SECTION

SCALE: 3/8" = 1'-0"
FILE: 8340A10-040-303

GENERAL NOTES:

1. ALL PLASTIC PIPING TO BE SCHEDULE 80 PVC AND PAINTED FOR UV PROTECTION.
2. ALL PLASTIC BALL VALVES TO BE CPVC WITH UNION ENDS, UNLESS NOTED OTHERWISE.
3. PIPING SUPPORTS FOR HYP AND FCL TO BE FRP AND PER P618 TYP OR P615 TYP AS REQUIRED.

KEY NOTES:

1. REMOVE EXISTING BURIED 90° ELBOW AND INSTALL TEE (MJ x MJ)
2. FOR CONTINUATION SEE DRAWING NO. C-02
3. 1,500 GALLON HDPE TANK, T900, 38% FERRIC CHLORIDE. REFER TO SPECIFICATIONS.
4. 3,150 GALLON HDPE TANK, T800, 12.5% SODIUM HYPOCHLORITE. EXISTING TANK RELOCATED
5. FERRIC CHLORIDE METERING PUMPS ARE GRUNDFOS MODEL NO. DME-69-10-AR-PV-V-C-F-2-1-A3A38. INSTALL ON PUMP PAD PER M340 TYP
6. SODIUM HYPOCHLORITE METERING PUMPS ARE GRUNDFOS MODEL NO. DME-60-10-AR-PV-V-C-F-2-1-A3A38. INSTALL ON PUMP PAD PER M340 TYP
7. CONCRETE SLAB AND CONTAINMENT CURBING ON 6-inch ABC COMPACTED BASE. SEE S-02 FOR STRUCTURAL DETAILS
8. 10' TALL SHADE STRUCTURE MANUFACTURED BY ALUMA-LINE WITH ROOF DECKING SLOPED TO DRAIN AND SHADE FABRIC ON THREE SIDES, DOWN TO 3-feet AFF. NORTH SIDE TO HAVE NO FABRIC
9. ROTATE ELBOW ON SLG-2 TO AVOID INTERFERENCE WITH TRF-2
10. NOT USED
11. MEGATOR CORPORATION 4" DOLPHIN STRAINER OR EQUAL. INSTALL INSIDE OF TANK
12. FIELD VERIFY EXISTING BACKWASH RETURN PIPING HORIZONTAL ALIGNMENT AND DEPTH BEFORE DEVELOPMENT OF SHOP DRAWINGS. INSTALL 90° ELBOW W/ 90° OUTLET
13. TERMINATE WITH TEE AND BOTH OUTLET ENDS DIRECTED ALONG PERIMETER OF THE TANK
14. STUB UP PIPE AND TERMINATE FLUSH WITH FINISH FLOOR OF SUMP. USE P310 TYP WALL THIMBLE. REFER TO STRUCTURAL DRAWINGS. TOP OF PIPE SHALL BE AT LEAST 6" BELOW CONCRETE SLABS/FOOTERS
15. BUTTERFLY VALVE (TYP)
16. INSTALL 4" x 6" REDUCING 90° ELBOW ABOVE GRADE AND 6" ELBOW BELOW GRADE
17. ROTATE ELBOW TO ALIGN TANK OUTLET WITH 6" SUCTION HEADER FOR DECANT PUMPS
18. LOCATE 6" FLANGE OUTLET 2 FEET ABOVE FINISH FLOOR OF TANK
19. FIELD VERIFY SPOOL LENGTH OF DROP PIPE TO MATCH CENTERLINE OF 6" HEADER WITH CENTERLINE OF DECANT PUMPS
20. CHECK VALVE (TYP)
21. INSTALL BACKFLOW PREVENTER (WILKINS MODEL 975XL OR EQUAL).
22. SUBMIT PIPING FOR REVIEW. REFER TO INSTRUMENTATION DRAWINGS FOR ADDITIONAL DETAIL
23. 1" HOSE VALVE PER M376 TYP
24. INSTALL EYEWASH SHOWER PER M370 TYP. DISCHARGE TO FRENCH DRAIN. ROUTE ANTI SCALD VALVE, WITH AIR GAP
25. INSULATE EYEWASH SHOWER PER SPECIFICATIONS
26. FLOOR PIPE SUPPRT PER P618 TYP
27. NOT USED
28. CONCRETE ENCASE [illegible] UNDER CHEMICAL STORAGE PER P340 TYP
29. INSTALL NEW CONNECTION TAP AND REINFORCING PLATE SUPPLIED BY COLUMBIAN TECTANK

REV	DATE	BY	DESCRIPTION

PROJECT NO. 8340A10 FILE NAME: 8340A10_M-03.dgn

DESIGNED JD
DRAWN GD
CHECKED SKG
DATE OCTOBER 2010

STEVEN K. GARDNER EXPIRES 12-31-2011

carollo

ARIZONA WATER COMPANY

OASIS ARSENIC TREATMENT FACILITY EXPANSION

MECHANICAL

CHEMICAL FEED SYSTEM PLAN & SECTIONS

VERIFY SCALES
BAR IS ONE INCH ON ORIGINAL DRAWING
0 1"
IF NOT ONE INCH ON THIS SHEET, ADJUST SCALES ACCORDINGLY

JOB NO. 8340A.10
DRAWING NO. M-03
SHEET NO. 13 OF 35

Model: Layout1 CelsTable: sheets.db DesignScript: Carollo_Std_Pen_v8i05.pen PlotScale: 1:1 User: GDavis Plot Date: 15-OCT-2010 10:37:33 AM LAST SAVED BY: rbelle

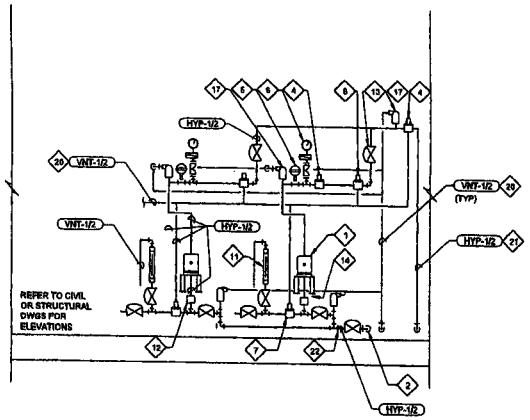

E M-03 SECTION - CHEMICAL FEED PUMPS

SCALE: NTS
FILE: 8340A10-040-302

GENERAL NOTES:

1. ALL PIPE SUPPORTS FOR (HYP) TO BE FRP AND ALL OTHER PIPE SUPPORTS IN THE BUILDING TO BE TYPE 316SS
2. ALL PIPE SUPPORTS PER (P501 / TYP) (SIM)

KEY NOTES:

1. CHEMICAL METERING PUMP
2. REFER TO MECHANICAL PLAN FOR CONTINUATION OF SUCTION PIPING
3. NOT USED
4. DISCHARGE PRESSURE RELIEF VALVE (TYP) SET @ 125 PSIG
5. PULSATION DAMPENER (TYP)
6. PRESSURE GAUGE
7. SUCTION PRESSURE RELIEF VALVE
8. BACKPRESSURE REGULATOR
9. NOT USED
10. NOT USED
11. CALIBRATION COLUMN WITH TOP VENT PIPE ELBOWED DOWN TO FLOOR ALONG PIPE SUPPORT (TYP)
12. FLOW DETECTOR
13. TRUE UNION DIAPHRAGM VALVE (TYP) OR DRILLED BALL VALVE (TYP)
14. PUMP PADS NOT SHOWN. REFER TO STRUCTURAL DRAWINGS
15. NOT USED
16. NOT USED
17. DEGASSING VALVE, PLASTOMATIC DGV VITON (TYP)
18. NOT USED
19. NOT USED
20. ROUTE VENT LINE BACK TO HEADSPACE OF BULK STORAGE TANK VIA A COMMON PIPE
21. REFER TO MECHANICAL PLAN FOR CONTINUATION OF DISCHARGE PIPING
22. REDUCING BUSHING

REV	DATE	BY	DESCRIPTION

PROJECT NO. 8340A10 FILE NAME: 8340A10_M-04.dgn

DESIGNED JD
DRAWN GD
CHECKED SKG
DATE OCTOBER 2010

32942 STEVEN K. GARDNER EXPIRES 12-31-2011

carollo

ARIZONA WATER COMPANY

ARIZONA WATER COMPANY
OASIS ARSENIC TREATMENT FACILITY EXPANSION
MECHANICAL
SECTION & DETAIL

VERIFY SCALES
BAR IS ONE INCH ON ORIGINAL DRAWING
0 1"
IF NOT ONE INCH ON THIS SHEET, ADJUST SCALES ACCORDINGLY

JOB NO. 8340A.10
DRAWING NO. M-04
SHEET NO. 14 OF 36

Model: Layout1 ColorTable: pdmdc.ctb DesignStyle: Carollo_BW_Pen_v0105.pen PlotScale: 1:1 User: GDavis Plot Date: 15-OCT-2010 10:27:14 AM
LAST SAVED BY: dbaile

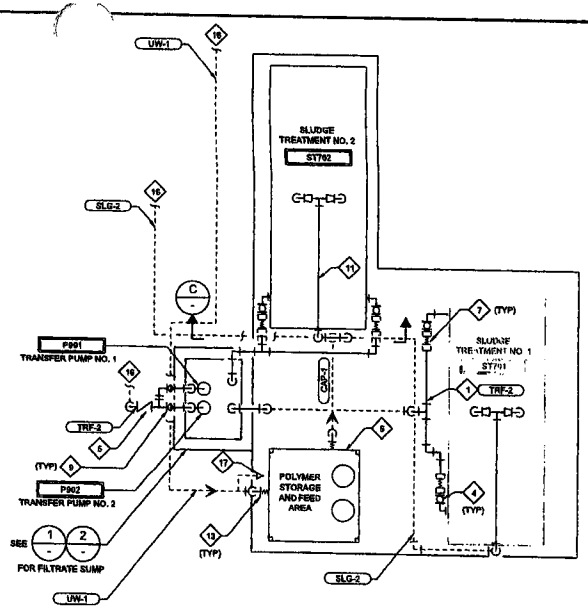

A PLAN
SCALE: 3/16" = 1'-0"
FILE: 8340A10-040-102

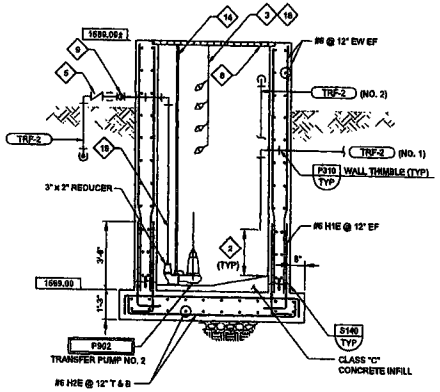

B SECTION
SCALE: 3/8" = 1'-0"
FILE: 8340A10-040-302

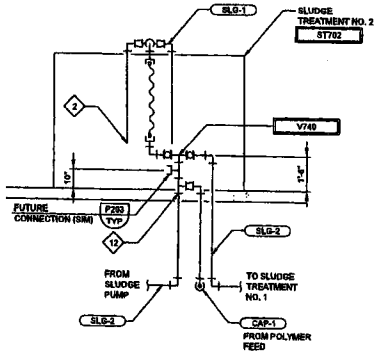

C SECTION
SCALE: 3/8" = 1'-0"
FILE: 8340A10-040-302

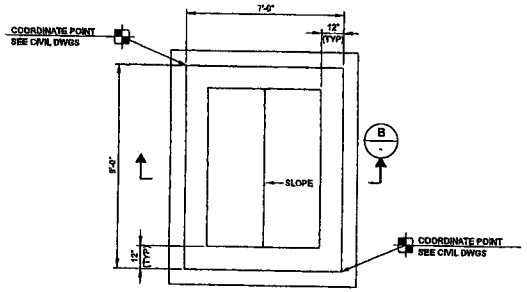

1 BOTTOM PLAN
SCALE: 3/8" = 1'-0"
FILE: 8340A10-040-302

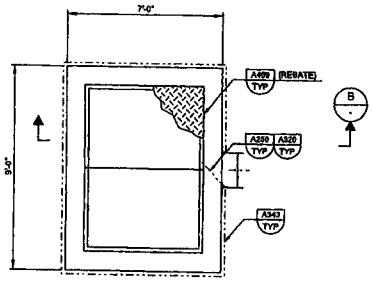

2 TOP PLAN
SCALE: 3/8" = 1'-0"
FILE: 8340A10-040-302

GENERAL NOTES:

1. PIPE SUPPORTS PER P515 TYP OR P516 TYP AS REQUIRED, UNLESS OTHERWISE NOTED.

KEY NOTES:

1. FLEXIBLE HOSE WITH CAMLOCKS
2. TERMINATE TRF-2 2' AFF
3. FLOAT SWITCHES, LSL SET AT 10 INCHES AFF, LSM SET AT 16 INCHES AFF, LSH SET AT 5 FOOT AFF, LSHH SET AT 7 FOOT AFF
4. 2 INCH BALL VALVE WITH CAMLOCK AT DRAIN OUTLETS AND SLUDGE INLETS. PROVIDE 3" x 2" (PLG & THREAD) REDUCER FOR DRAIN OUTLETS
5. SEE S890 TYP FOR POLYMER BLENDER SHADE CANOPY
6. CHECK VALVE
7. FLEXIBLE CONNECTION
8. ALUMINUM COVER - 300 PSF, WITH SPRING ASSIST (BILCO OR EQUAL)
9. PLUG VALVE, PROVIDE PRESSURE GAUGE UPSTREAM PER M294 TYP
10. INSTALL 3-WAY VALVE 6 INCHES ABOVE FINISHED FLOOR ELEVATION
11. WELD 2 INCH INLET SUPPORTS TO SLUDGE TREATMENT UNIT DIVIDER WALL
12. INSTALL 2 INCH TEE WITH 1 INCH REDUCER FOR POLYMER FEED
13. CONNECT TO POLYMER SIOD WITH FLEXIBLE CONNECTOR. COORDINATE WITH EQUIPMENT MANUFACTURER TO PROVIDE NECESSARY FITTINGS AND PIPING
14. INSTALL GUIDE BAR AND BRACKETS PER PUMP MANUFACTURER'S REQUIREMENTS. REFER TO SPECIFICATION FOR ADDITIONAL DETAIL RELATED TO PUMP STATION
15. NOT USED
16. FOR CONTINUATION SEE DWG NO. C-02
17. INSTALL 1" HOSE VALVE PER M276 TYP
18. INSTALL FLOAT SWITCHES PER NL100 TYP
19. INSTALL FLOAT SWITCHES PER P568 TYP

REV	DATE	BY	DESCRIPTION

PROJECT NO. 8340A10 FILE NAME: 8340A10_M-05.dgn

DESIGNED JD
DRAWN GD
CHECKED SKG
DATE OCTOBER 2010

22942 STEVEN K. GARDINER EXPIRES 12-31-2011

41088 DAVID A. GESLER EXPIRES 06-30-2012

carollo

ARIZONA WATER COMPANY

OASIS ARSENIC TREATMENT FACILITY EXPANSION

MECHANICAL

SLUDGE DRYING & POLYMER FEED PLAN & SECTIONS

VERIFY SCALES
BAR IS ONE INCH ON ORIGINAL DRAWING
0 1"
IF NOT ONE INCH ON THIS SHEET, ADJUST SCALES ACCORDINGLY

JOB NO. 8340A.10
DRAWING NO. M-05
SHEET NO. 15 OF 35

Plot Date: 15-OCT-2010 10:37:22 AM User: GDavis Model: Layout1 ColorTable: pmwsk.ctb DesignScript: CardOp_Std_Fac_v2005.pen PlotScale: 1:1 LAST SAVED BY: dhalls

...NTIFICATION SYMBOLS

- EQUIPMENT IDENTIFICATION
- INSTRUMENT IDENTIFICATION
- EQUIPMENT/INSTRUMENT LOCATOR
- XXXX — CONDUIT IDENTIFICATION XXXX = CONDUIT NUMBER, REFER TO CONDUIT SCHEDULE
- 1 — INDICATES KEYNOTE 1 (PERTAINS ONLY TO SHEET WHERE NOTE IS FOUND)
- 1 — OPERATOR INTERFACE STATION 1 = STATION TYPE

GROUNDING

- UNDERGROUND GROUND GRID #4/0 SDBC UNLESS OTHERWISE NOTED
- GROUND ROD
- GROUND ROD AND GROUND WELL
- COMPRESSION OR EXOTHERMIC GROUNDING CONNECTION

LUMINAIRES

- 2', 4', OR 8' FLUORESCENT STRIP
- 2' X 2' LAY-IN TROFFER REFER TO LUMINAIRE SCHEDULE
- 2' X 4' LAY-IN TROFFER REFER TO LUMINAIRE SCHEDULE
- LUMINAIRE POLE MOUNTED
- A — STROBE a = COLOR R = RED G = GREEN A = AMBER
- LUMINAIRE, EMERGENCY BATTERY-POWERED
- LUMINAIRE, EMERGENCY/EXIT BATTERY-POWERED
- LUMINAIRE, EMERGENCY BATTERY-POWERED REMOTE
- LUMINAIRE, SURFACE OR PENDANT MOUNTED
- LUMINAIRE, WALL MOUNTED
- LUMINAIRE, FLOOD/SPOT
- LUMINAIRE, EXIT ONE OR TWO FACES AS INDICATED. ARROW POINTS IN DIRECTION OF EGRESS.
- LUMINAIRE, WALL WASHER

SWITCHES/RECEPTACLES

- S — SINGLE POLE SWITCH a = DEVICE SWITCHED DESIGNATION b = CIRCUIT DESIGNATION
- S — c = 2 = DOUBLE POLE SWITCH; 3 = THREE-WAY SWITCH; 4 = FOUR-WAY SWITCH; K = KEY OPERATED SWITCH; F = SWITCH AND FUSESTAT HOLDER; P = SWITCH AND PILOT LIGHT; T = THERMOSTAT; D = DIMMER SWITCH; L = LOW VOLTAGE LIGHT SWITCH; M = MANUAL MOTOR STARTER
- OCCUPANCY SENSOR a = CIRCUIT DESIGNATION b = DEVICE SWITCHED DESIGNATION
- SWITCH AND SINGLE RECEPTACLE a = CIRCUIT DESIGNATION b = DEVICE TYPE DESIGNATION S = SWITCH AND SINGLE RECEPTACLE
- DUPLEX RECEPTACLE a = CIRCUIT DESIGNATION b = DEVICE TYPE DESIGNATION
- QUADRUPLEX RECEPTACLE a = CIRCUIT DESIGNATION b = DEVICE TYPE DESIGNATION
- IN FLOOR DUPLEX RECEPTACLE a = CIRCUIT DESIGNATION b = DEVICE TYPE DESIGNATION
- IN FLOOR QUADRUPLEX RECEPTACLE a = CIRCUIT DESIGNATION b = DEVICE TYPE DESIGNATION
- DUPLEX RECEPTACLE W/SPLIT WIRE a = CIRCUIT DESIGNATION b = DEVICE TYPE DESIGNATION
- WELDING OR APPLIANCE RECEPTACLE a = CIRCUIT DESIGNATION b = DEVICE TYPE DESIGNATION
- WELDING RECEPTACLE a = CIRCUIT DESIGNATION b = DISCONNECT TYPE
- SPECIAL PURPOSE RECEPTACLE a = CIRCUIT DESIGNATION b = DEVICE TYPE DESIGNATION
- CLOCK RECEPTACLE a = MOUNTING HEIGHT
- FAN RECEPTACLE a = MOUNTING HEIGHT
- TWIST LOCK RECEPTACLE a = AMP RATING
- TELEPHONE OUTLET a = MOUNTING HEIGHT
- DATA COMMUNICATIONS OUTLET a = MOUNTING HEIGHT
- DISCONNECT SWITCH a = TYPE, REFER TO DISCONNECT SCHEDULE
- PE — PHOTOCELL
- SMOKE DETECTOR a = TYPE; I = IONIZATION; P = PHOTOELECTRIC; d = DUCT DETECTOR
- FACP — FIRE ALARM CONTROL PANEL
- F — FIRE ALARM PULL STATION
- F — FIRE ALARM HORN/STROBE COMBINATION
- F — FIRE ALARM STROBE
- CCTV CAMERA

RACE...

- EXPOSED CONDUIT
- CONDUIT CONCEALED OR IN FLOOR SLAB
- UNDERGROUND CONDUIT; DIRECT BURIED OR IN DUCTBANK
- CONDUIT VERTICAL CHANGE IN DIRECTION
- J — JUNCTION BOX
- CONDUIT SEAL

CONDUIT SIZE AND CONDUCTORS

INDIVIDUAL CONDUCTORS

W"C-[3-X (#)], 1-#Y (N) & 1-Z (G))

W"C (WHERE INDICATED): W = CONDUIT TRADE SIZE

3-X TYPE (#):
- 3 = QUANTITY
- X = SIZE OF CONDUCTORS
- (#) = DESIGNATES PHASE CONDUCTORS

1-Y TYPE (N)(WHERE INDICATED):
- 1 = QUANTITY
- Y = SIZE OF CONDUCTORS
- (N) = DESIGNATES NEUTRAL CONDUCTORS

1-Z TYPE (G)(WHERE INDICATED):
- 1 = QUANTITY
- Z = SIZE OF CONDUCTORS
- (G) = DESIGNATES GROUND CONDUCTORS

U[3-X TYPE (#) & 1-X TYPE (G)]

U = NUMBER OF PARALLEL RUNS

MULTI CONDUCTOR CABLES

K/2/C#16S
- K (WHERE INDICATED) = NUMBER OF PAIRS
- 2/C#16S = TWO CONDUCTOR, 16 GAUGE, TWISTED SHIELDED PAIR

K/3/C#16S
- K (WHERE INDICATED) = NUMBER OF TRIPLETS
- 3/C#16S = THREE CONDUCTOR, 16 GAUGE, TWISTED SHIELDED TRIPLETS

N/CX TYPE
- N = NUMBER OF CONDUCTORS IN THE CABLE
- X = SIZE OF CONDUTORS

FIBER OPTIC CABLES

F/N
- N = NUMBER OF INDIVIDUAL FIBERS

LOW VOLTAGE

LOW VOLTAGE CIRCUIT BREAKER
- a = TYPE: MCP = MOTOR CIRCUIT PROTECTOR; TM = THERMAL MAGNETIC; SS = SOLID STATE
- b = FRAME SIZE (MANUFACTURER TO DETERMINE FRAME SIZE UNLESS INDICATED)
- c = NUMBER OF POLES
- d = TRIP SETTING (AT = AMP TRIP) (AC = MCP CONTINUOUS RATING)
- e = DESIGNATION
- f = INTERRUPTING RATING

LOW VOLTAGE CIRCUIT BREAKER AUXILIARY OPERATOR
- a = S = SHUNT TRIP; = K = KINK KEY INTERLOCK; = G = GROUND FAULT INTERRUPTER; = V = SOLENOID KEY RELEASE

DISCONNECT SWITCH
- a = TYPE, REFER TO DISCONNECT SCHEDULE

FUSED DISCONNECT SWITCH
- a = TYPE, REFER TO DISCONNECT SCHEDULE
- b = FUSE RATING

FUSE

COMBINATION STARTER WITH CONTROL POWER TRANSFORMER
- a = CIRCUIT BREAKER DISCONNECT, TYPE AS NOTED
- b = STARTER TYPE
- c = NEMA STARTER SIZE
- d = OVERLOAD HEATERS

VARIABLE FREQUENCY DRIVE WITH FEATURES AS SHOWN
- a = INPUT CONTACTOR
- b = OUTPUT CONTACTOR
- c = BYPASS STARTER
- d = INPUT CIRCUIT BREAKER

LR — LINE REACTOR

LL — LOAD REACTOR

REDUCED VOLTAGE SOLID STATE STARTER WITH FEATURES AS SHOWN
- BC = BYPASS CONTACTOR

MISCELL...OUS

MOTOR
- HP = HORSEPOWER RATING
- FULL LOAD AMPS AS NOTED

PACKAGED EQUIPMENT LOAD RATING AS INDICATED
- a = RATED LOAD
- b = UNIT(HP, KW, KVA) AS INDICATED

TRANSFORMER
- a = DEVICE I.D.
- b = KVA RATING
- c = NUMBER OF PHASES
- d = PRIMARY VOLTAGE
- e = SECONDARY VOLTAGE
- f,g = CONNECTION TYPE SYMBOL
- h = IMPEDANCE

GROUNDED WYE CONNECTION

DELTA CONNECTION

ENGINE-GENERATOR RATINGS AS INDICATED ON THE DRAWINGS
- a = KVA/KW
- b = VOLTAGE/CONNECTION
- c = PHASE
- d = WIRE
- e = pf

CURRENT TRANSFORMER WITH SHORTING TERMINAL BLOCK
- a = QUANTITY
- b = RATIO

POTENTIAL TRANSFORMER
- a = QUANTITY
- b = RATIO
- c,d = CONNECTION TYPE SYMBOL

SSM — SOLID STATE MULTIFUNCTION METER

ATP — AMPERE TEST POINT

VTP — VOLTAGE TEST POINT

UTILITY METER

LIGHTNING ARRESTER

TVSS — TRANSIENT VOLTAGE SURGE SUPRESSOR

DRAWOUT CONNECTION

GROUND

CAPACITOR

BATTERY

K — KINK KEY INTERLOCK

RSV	DATE	BY	DESCRIPTION

PROJECT NO. 8340A10 FILE NAME: 8340A10_E-01.dgn

DESIGNED CSP
DRAWN GD
CHECKED KAO
DATE OCTOBER 2010

27404 CHARLES S. PASARIBAU EXPIRES 03-30-2011

carollo

ARIZONA WATER COMPANY

ARIZONA WATER COMPANY

OASIS ARSENIC TREATMENT FACILITY EXPANSION

ELECTRICAL

ELECTRICAL NOTES, SYMBOLS & LEGEND

VERIFY SCALES: BAR IS ONE INCH ON ORIGINAL DRAWING 0 — 1"; IF NOT ONE INCH ON THIS SHEET, ADJUST SCALES ACCORDINGLY

JOB NO. 8340A.10

DRAWING NO. E-01

SHEET NO. 16 OF 26

Model: Layout1 Color Table: gdsafe.ctb DesignScript: Carollo_SIG_Plan_v8i9S.pen Plot Scale: 1:1 User: GDavis Plot Date: 15-OCT-2010 10:37:32 AM LAST SAVED BY: gdavis

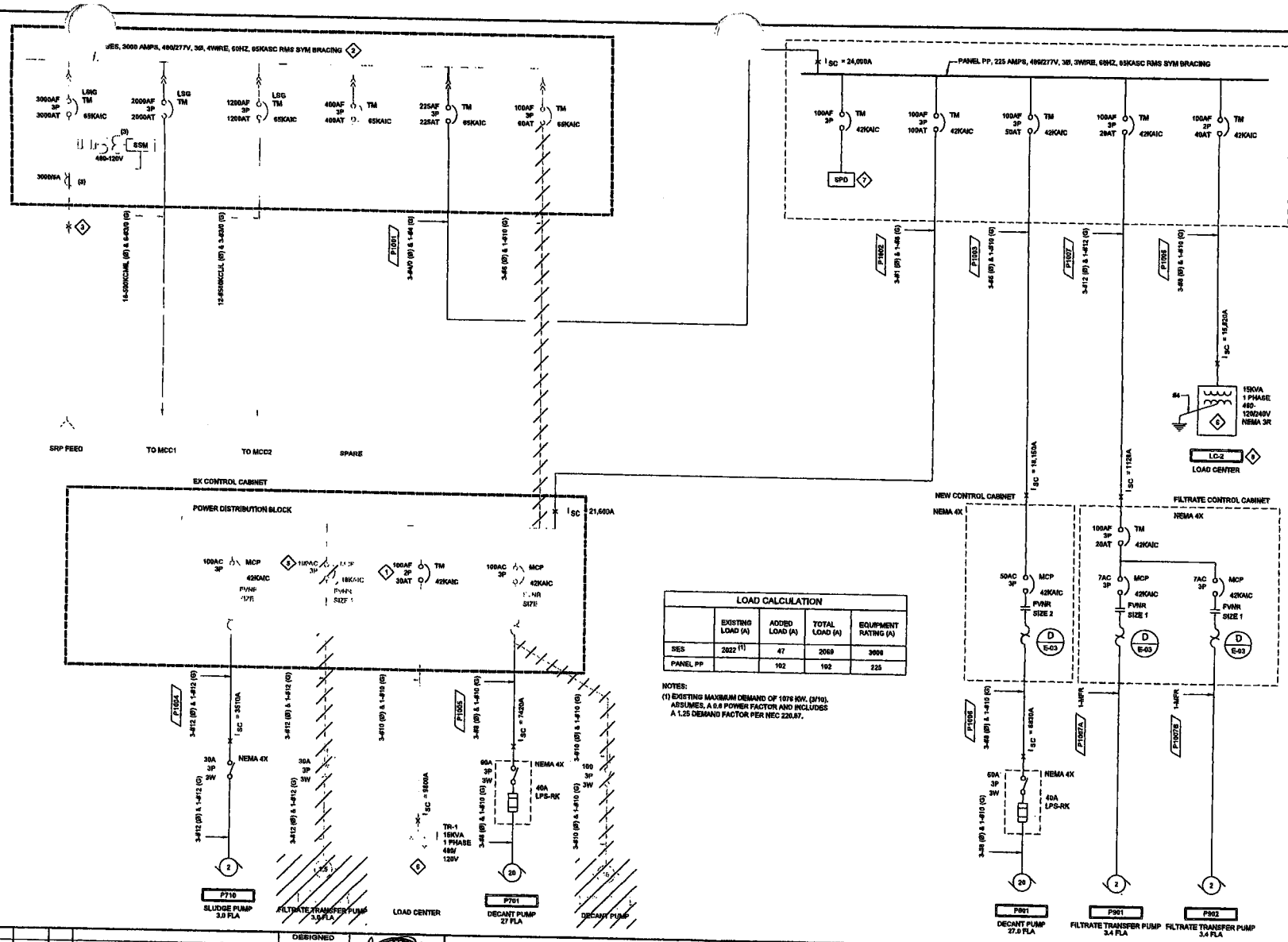

LOAD CALCULATION				
	EXISTING LOAD (A)	ADDED LOAD (A)	TOTAL LOAD (A)	EQUIPMENT RATING (A)
SES	2022 (1)	47	2069	3000
PANEL PP		102	192	225

NOTES:
(1) EXISTING MAXIMUM DEMAND OF 1076 KW. (3/10). ASSUMES, A 0.8 POWER FACTOR AND INCLUDES A 1.25 DEMAND FACTOR PER NEC 220.87.

GENERAL

1. ALL NEMA 4X DEVICES/EQUIPMENT SHALL BE STAINLESS STEEL UNLESS NOTED OTHERWISE.

KEY NOTES:

1. REPLACE EXISTING BREAKER WITH NEW 42KAIC RATED BREAKER
2. EXISTING CUTLER-HAMMER POW-R LINE C SWITCHBOARD
3. I_{SC} = 42,000A RMS SYM PER SRP FAULT TABLE
4. REPLACE EXISTING MCP WITH NEW
5. REPLACE EXISTING 18KAIC MCP. STARTER TO REMAIN
6. FAULT CURRENT AT SECONDARY OF TRANSFORMER LESS THAN 10,000A
7. 120KA PER PHASE MINIMUM
8. PACKAGED POWER SUPPLY CENTER INCLUDES PRIMARY BREAKER, TRANSFORMER, SECONDARY BREAKER AND LIGHTING PANELBOARD. REFER TO SPECIFICATIONS FOR ADDITIONAL INFORMATION

REV	DATE	BY	DESCRIPTION

DESIGNED CBP
DRAWN GD
CHECKED RAO
DATE OCTOBER 2010

PROJECT NO. 8340A10 FILE NAME: 8340A10_E-02.dgn

carollo

ARIZONA WATER COMPANY

OASIS ARSENIC TREATMENT FACILITY EXPANSION

ELECTRICAL

SINGLE LINE DIAGRAM

VERIFY SCALES: BAR IS ONE INCH ON ORIGINAL DRAWING 0 — 1" IF NOT ONE INCH ON THIS SHEET, ADJUST SCALES ACCORDINGLY

JOB NO. 8340A.10
DRAWING NO. E-02
SHEET NO. 17 OF 38

LAST SAVED BY: ebarnes
Model: Layout1 Color/Table: ctbutile.ctb Display/Color: Cyan/Bk, Sht_Fmt_v10R5.pen Plot/Scale: 1:1
User: GDeto
File Date: 15-OCT-2010 10:37:46 AM

EX LOAD CENTER 7/15/2010

LOCATION:
VOLTS: 240 / 120
PHASE & WIRE: 1PH 3W
INTERRUPT: 10 KAIC
OPTIONS: SPD

NEMA: 1
FEED: TOP
MTG. SURFACE
BUS RATING: 225
MAIN
MAIN RATING:

PH A WEIGHTED VA 0
PH B WEIGHTED VA 0
EQUIP SIZING VA 0
PANEL AMPS 0.0

M/CP	DESCRIPTION	LOAD (VA)	BKR	CIR	Ø	CIR	BKR	LOAD (VA)	DESCRIPTION	M/CP
	[illegible]		20A-1P	1	A	2	20A-1P		[illegible]	
	[illegible]		20A-1P	3	B	4	20A-1P		[illegible]	
	[illegible]		15A-1P	5	A	6	15A-1P		[illegible]	
	[illegible]		15A-1P	7	B	8	15A-1P		[illegible]	
	[illegible]		15A-1P	9	A	10	15A-1P		[illegible]	
	[illegible]		15A-1P	11	A	12	20A-1P		[illegible]	
	[illegible]		15A-1P	13	A	14	20A-1P		[illegible]	
	[illegible]		15A-1P	15	B	16	20A-1P		[illegible]	
	SPARE			17	A	18			SPARE	
	SPARE			19	B	20			SPARE	

A EXISTING LOAD CENTER
SCALE: -
FILE: LOAD CENTER.XLS

PANEL PP 8/24/2010

LOCATION:
VOLTS: 480 / 277
PHASE & WIRE: 3PH 4W
INTERRUPT: 10 KAIC
OPTIONS: SPD

NEMA: 4
FEED: BOTTOM
MTG. SURFACE
BUS RATING: 225
MAIN: MLO

PH A WEIGHTED VA 33031
PH B WEIGHTED VA 33031
PH C WEIGHTED VA 33031
EQUIP SIZING VA 99093
PANEL AMPS 119.2

M/CP	DESCRIPTION	LOAD (VA)	BKR	CIR	Ø	CIR	BKR	LOAD (VA)	DESCRIPTION	M/CP
C		17174		1	A	2		7479		C
C	EX CONTROL CABINET	17174	100A-3P	3	B	4	50A-3P	7479	DECANT PUMP P801	C
C		17174		5	C	6		7479		C
				7	A	8		841		C
				9	B	10	15A-3P	841	SUMP PUMP P710	C
				11	C	12		841		C
				13	A	14		831		C
				15	B	16	15A-3P	831	FILTRATE TRANSFER PUMPS P901/P902	C
				17	C	18		831		C
				19	A	20				
				21	B	22				
				23	C	24				
				25	A	26				
				27	B	28				
				29	C	30				
				31	A	32				
				33	B	34				
				35	C	36				
				37	A	38				
				39	B	40				
				41	C	42				

B PANEL PP
SCALE:
FILE: PANEL PP.XLS

LOAD CENTER LC-2 10/15/2010

LOCATION:
VOLTS: 240 / 120
PHASE & WIRE: 1PH 3W
INTERRUPT: 10 KAIC

NEMA: 3R
FEED: BOTTOM
MTG. SURFACE
BUS RATING: 225
MAIN: CB
MAIN RATING: 100 AF 100 AT

PH A WEIGHTED VA 2844
PH B WEIGHTED VA 2830
EQUIP SIZING VA 5660
PANEL AMPS 23.6

M/CP	DESCRIPTION	LOAD (VA)	BKR	CIR	Ø	CIR	BKR	LOAD (VA)	DESCRIPTION	M/CP
	MT14	200	20A-1P	1	A	2	20A-1P	60	P1901	I
I	PDV700	200	20A-1P	3	B	4	20A-1P	60	P1902	I
C	PT700	30	20A-1P	5	A	6	20A-1P	60	P1910	I
I	POLYMER BLENDER	350	20A-1P	7	B	8	20A-1P	60	P1911	I
C	[illegible]	30	20A-1P	9	A	10	20A-1P	360	RECEPTACLES	I
	VALVES 4 VALVES	600	20A-1P	11	B	12	20A-1P	480	LIGHTS	C
	VALVES 5 VALVES	600	20A-1P	13	A	14	20A-1P	600	SAMPLE RETURN PUMP	I
	VALVES 6 VALVES	600	20A-1P	15	B	16				
C	AHU#2	120	20A-1P	17	A	18				
		60	20A-1P	19	B	20				
		60	20A-1P	21	A	22				
		60	20A-1P	23	B	24				

C LOAD CENTER LC2
SCALE: -
FILE: LOAD CENTER LC2.XLS

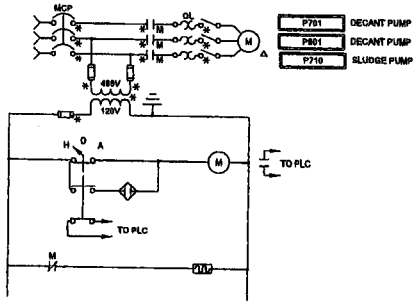

D DECANT AND SLUDGE PUMP SCHEMATIC
SCALE:
FILE: -

LUMINAIRE SCHEDULE

ITEM	DESCRIPTION	MOUNTING METHOD	LAMP QUANTITY	LAMP TYPE	LUMINAIRE SPECIFICATIONS MANUFACTURER	CATALOG	VOLTS	VA
A	SURFACE MOUNTED, WET LOCATION, NON-METALLIC, 2-LAMP, ACRYLIC LENS, STAINLESS STEEL LATCHES	SURFACE	2	F32T9	LITHONIA	DMW-2-32-120-GEB10IS-GLR-STSL	120	64
B	FLOOD LIGHT, DIE-CAST LOW COPPER ALUMINUM HOUSING, 1/8" MINIMUM WALL THICKNESS, GASKETED WITH 3/16" TEMPERED GLASS LENS, STAINLESS STEEL HARDWARE, LOCKING SWIVEL BASE, WIDE THROW, FINED HOOD, FUSED	CONDUIT FITTING	1	100 HPS	IGM	AFL11-100HPS120-DB-FH-FUSE	120	140

E LUMINAIRE SCHEDULE
SCALE: -
FILE: LUMINAIRE SCHEDULE.XLS

PANEL LEGEND:
I: INTERMITTENT LOAD
C: CONTINUOUS LOAD

REV	DATE	BY	DESCRIPTION

PROJECT NO. 8340A10 FILE NAME: 8340A10_E-03.dgn

DESIGNED CSP
DRAWN GD
CHECKED KAC
DATE OCTOBER 2010

27404 CHARLES S. PARNHAM REGISTERED PROFESSIONAL ENGINEER ELECTRICAL
SUPPRESS 09-30-2011

carollo

ARIZONA WATER COMPANY
OASIS ARSENIC TREATMENT FACILITY EXPANSION
ELECTRICAL
ELECTRICAL SCHEDULES

VERIFY SCALES
BAR IS ONE INCH ON ORIGINAL DRAWING
0 1"
IF NOT ONE INCH ON THIS SHEET, ADJUST SCALES ACCORDINGLY

JOB NO. 8340A.10
DRAWING NO. E-03
SHEET NO. 18 OF 36

LAST SAVED BY: dbsala
Model: Layout1 ColorTable: sdsafe.ctb DesignScript: Combo_Std_Pen_v5895.scr PlotScale: 1:1 User: GDsala PlotDate: 15-OCT-2010 10:37:55 AM

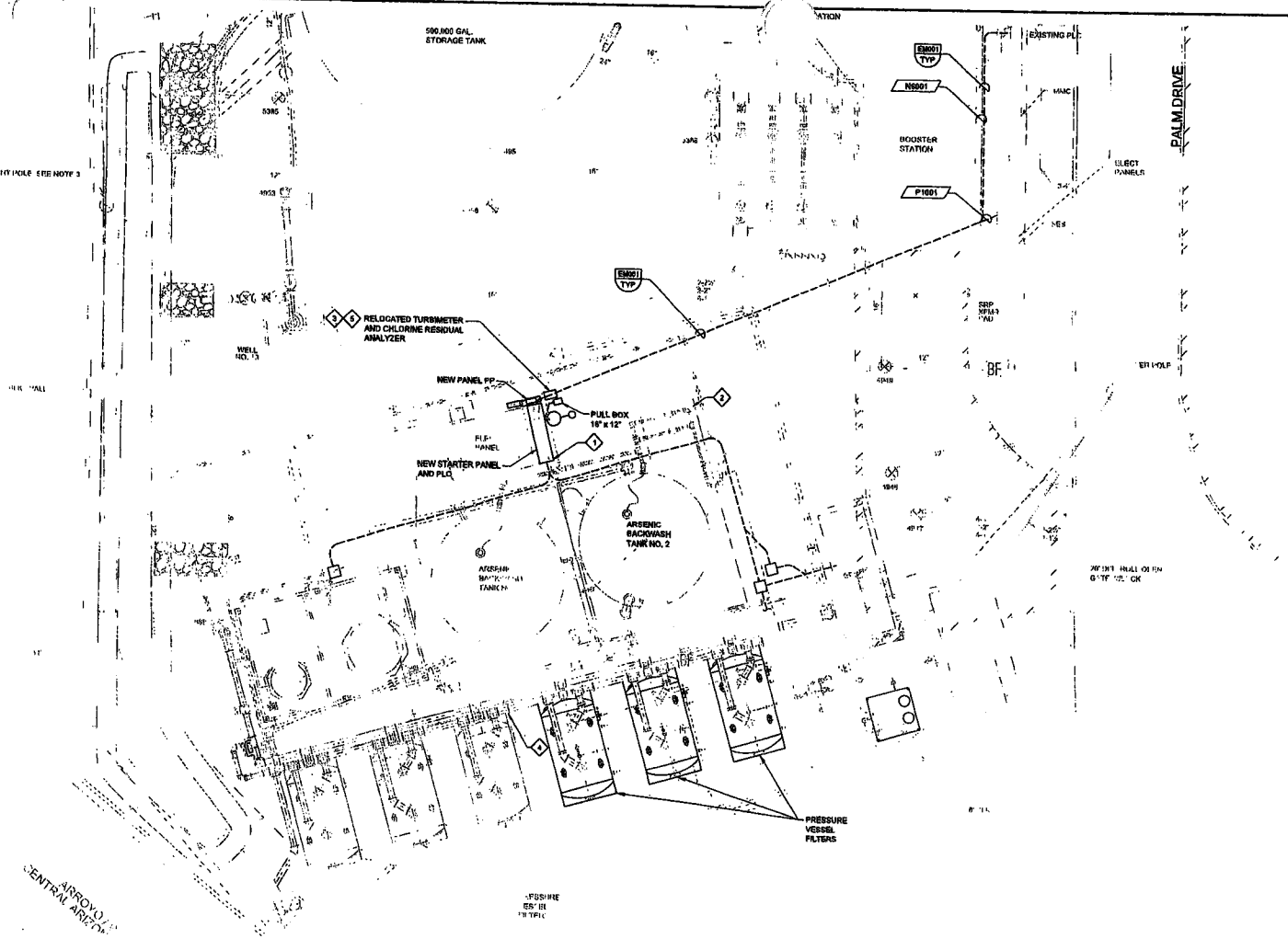

A SITE PLAN

SCALE: 1" = 10'-0"
FILE: 8340A10-010-C-101

0 5' 10' 20'

NORTH

GENERAL NOTES

1. ALL WORK SHALL BE COORDINATED WITH OWNER AND AS PER SECTION 01140 - WORK RESTRICTIONS.
2. ROUTING OF UNDERGROUND STRUCTURES AND UTILITIES IS NOT KNOWN. CONTRACTOR SHALL CONFIRM BY POTHOLING.

KEY NOTES:

1. REINFORCED CONCRETE SLAB FOR NEW ELECTRICAL AND CONTROL PANEL. SEE CIVIL AND STRUCTURAL DRAWINGS FOR DETAILS
2. REINFORCED CONCRETE SLAB FOR DECANT PUMP. SEE CIVIL AND STRUCTURAL DRAWINGS FOR DETAILS
3. MOUNT ON ROUTE EM210 TYP WITH SHADE CANOPY, RE POWER AND SIGNAL
4. APPROXIMATE LOCATION OF EXISTING ANALYZERS
5. 1/3 HP 120V 1,750 RPM "AURORA PUMP CONDENSATE RETURN UNIT" PACKAGE FOR TURBIMETER AND CHLORINE ANALYZER SAMPLE RETURN. ROUTE POWER FROM PPLC-2

REV	DATE	BY	DESCRIPTION

PROJECT NO. 8340A10 FILE NAME: 8340A10_E-04.dgn

DESIGNED CSP
DRAWN GD
CHECKED KAO
DATE OCTOBER 2010

27404 CHARLES S. B. PAGADUAN EXPIRES 06-30-2011

carollo

ARIZONA WATER COMPANY

ARIZONA WATER COMPANY

OASIS ARSENIC TREATMENT FACILITY EXPANSION

ELECTRICAL

ELECTRICAL & GROUNDING SITE PLAN

VERIFY SCALES
BAR IS ONE INCH ON ORIGINAL DRAWING
0 1"
IF NOT ONE INCH ON THIS SHEET, ADJUST SCALES ACCORDINGLY

JOB NO. 8340A.10
DRAWING NO. E-04
SHEET NO. 19 OF 38

Model: Layout1 ColorTable: pltsafe.ctb DesignScript: Carollo_Std_Pen_v8i16.pen PlotScale: 1:1 User: GDavis Plot Date: 15-OCT-2010 10:35:04 AM LAST SAVED BY: dhill5

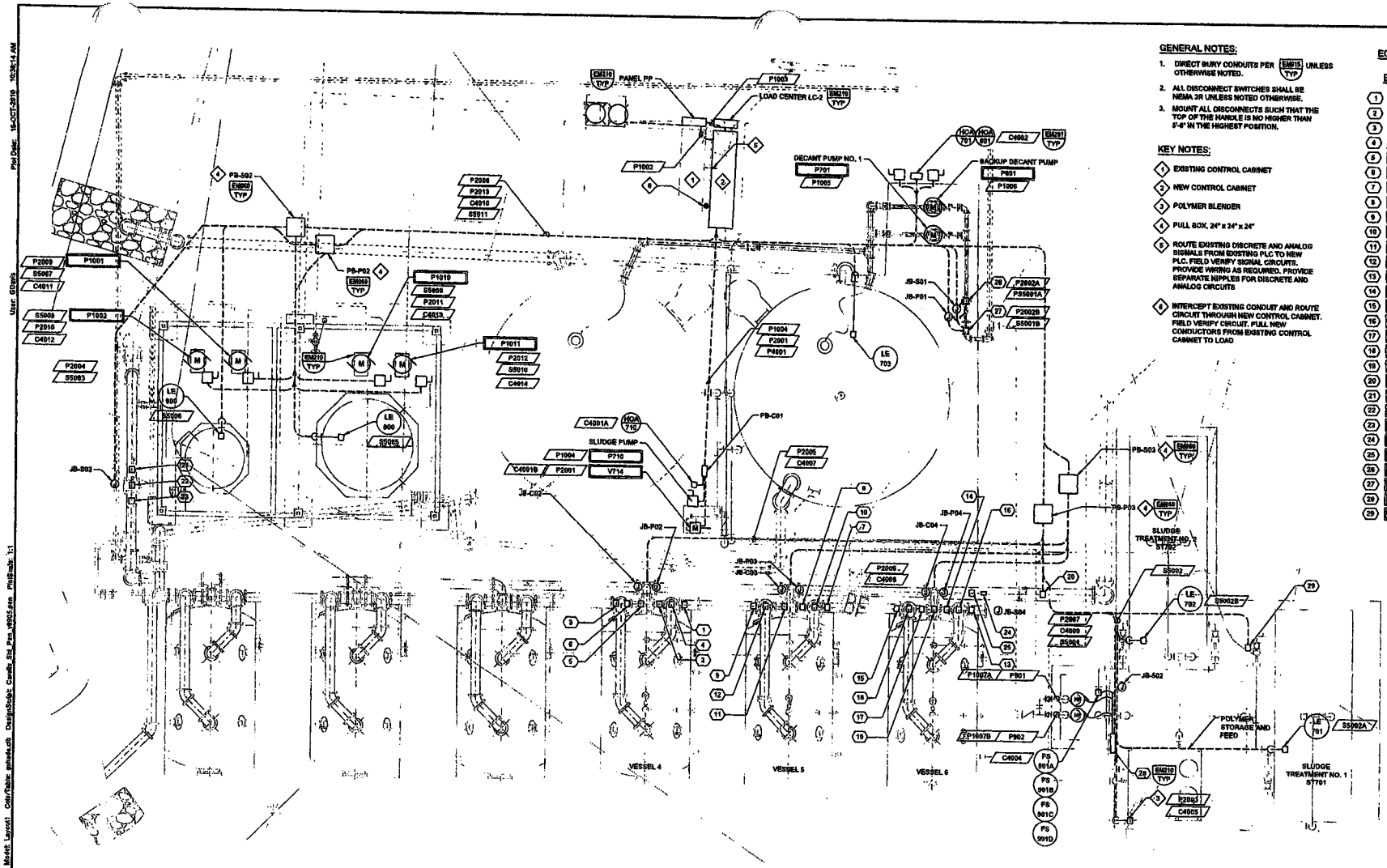

A PLAN

SCALE: 3/16" = 1'-0"
FILE: 8340A10-040-101

0 2' 4' 8' 12'

GENERAL NOTES:

1. DIRECT BURY CONDUITS PER EM015 TYP UNLESS OTHERWISE NOTED.
2. ALL DISCONNECT SWITCHES SHALL BE NEMA 3R UNLESS NOTED OTHERWISE.
3. MOUNT ALL DISCONNECTS SUCH THAT THE TOP OF THE HANDLE IS NO HIGHER THAN 5'-6" IN THE HIGHEST POSITION.

KEY NOTES:

1. EXISTING CONTROL CABINET
2. NEW CONTROL CABINET
3. POLYMER BLENDER
4. PULL BOX, 24" x 24" x 24"
5. ROUTE EXISTING DISCRETE AND ANALOG SIGNALS FROM EXISTING PLC TO NEW PLC. FIELD VERIFY SIGNAL CIRCUITS. PROVIDE WIRING AS REQUIRED. PROVIDE SEPARATE NIPPLES FOR DISCRETE AND ANALOG CIRCUITS
6. INTERCEPT EXISTING CONDUIT AND ROUTE CIRCUIT THROUGH NEW CONTROL CABINET. FIELD VERIFY CIRCUIT. PULL NEW CONDUCTORS FROM EXISTING CONTROL CABINET TO LOAD

EQUIPMENT

	EQUIP TAGS:	ASSOCIATED CONDUIT:	
1	V400	P2005A	C4007A
2	V401	P2005B	C4007B
3	V402	P2005C	C4007C
4	V403	P2005D	C4007D
5	V404	P2005E	C4007E
6	V405	P2005F	C4007F
7	V500	P2006A	C4008A
8	V501	P2006B	C4008B
9	V502	P2006C	C4008C
10	V503	P2006D	C4008D
11	V504	P2006E	C4008E
12	V505	P2006F	C4008F
13	V600	P2007A	C4009A
14	V601	P2007B	C4009B
15	V602	P2007C	C4009C
16	V603	P2007D	C4009D
17	V604	P2007E	C4009E
18	V605	P2007F	C4009F
19	V610		
20	PDIS	C4006	
21	PI600	S5003A	
22	PIT600	S5003B	P2004
23	TI600	S5003C	
24	V610	P2007H	S5004B
25	AIT600	P2007G	S5004A
26	PCV700		
27	FIT700		
28	VCP700	P1007	C6003
29	V740		

REV	DATE	BY	DESCRIPTION

DESIGNED CSP
DRAWN CD
CHECKED KAO
DATE OCTOBER 2010

27404 CHARLES E. CARROLL ARIZONA
EXPIRES 09-30-2011

carollo

ARIZONA WATER COMPANY

OASIS ARSENIC TREATMENT FACILITY EXPANSION

ELECTRICAL

POWER AND CONTROL PLAN

VERIFY SCALES
BAR IS ONE INCH ON ORIGINAL DRAWING
0 1"
IF NOT ONE INCH ON THIS SHEET, ADJUST SCALES ACCORDINGLY

JOB NO. 8340A.10
DRAWING NO. E-05
SHEET NO. 20 OF 36

PROJECT NO. 8340A10 FILE NAME: 8340A10_E-05.dgn

LAST SAVED BY: cbaldo
Model: Layout1 Color/Table: ctb44.ctb Design/Subpc Cavalb_Std_Pen_KB05.pen Plot Scale: 1:1
User: CDavis Plot Date: 15-OCT-2010 10:36:14 AM

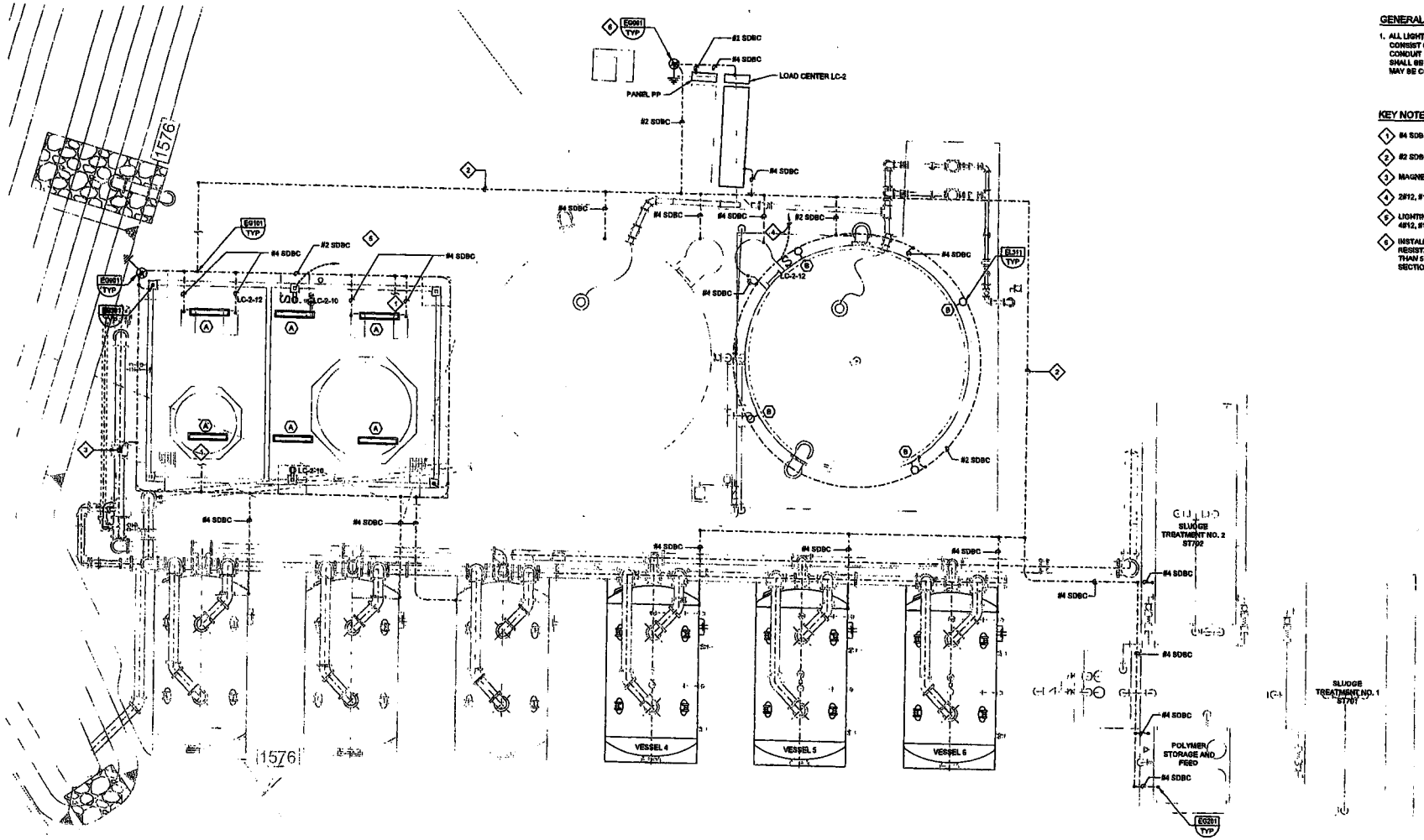

A PLAN

SCALE: 3/16" = 1'-0"
FILE: 8340A10-040-101

0 2' 4' 8' 12'

GENERAL NO

1. ALL LIGHTING AND RECEPTACLES CIRCUITS SHALL CONSIST OF 2#12, #12G PER CIRCUIT. EXPOSED CONDUIT SHALL BE 3/4", UNDERGROUND CONDUIT SHALL BE 1", LIGHTING AND RECEPTACLES CIRCUITS MAY BE COMBINED IN A COMMON CONDUIT.

KEY NOTES:

1. #4 SDBC TO SLAB REBAR PER EG303 TYP
2. #2 SDBC INSTALLED WITH DUCTBANK
3. MAGNETIC FLOW METER
4. 2#12, #12G, 1"C TO LOAD CENTER LC-2.
5. LIGHTING AND RECEPTACLE CIRCUITS: 4#12, #12G, 1"C TO PS-P02 (SEE SHEET E-05).
6. INSTALL 2ND GROUND ROD IF GROUND RESISTANCE MEASUREMENT IS GREATER THAN 5 OHMS. REFER TO SPECIFICATION SECTION 16060 FOR ADDITIONAL INFORMATION.

REV	DATE	BY	DESCRIPTION

PROJECT NO. 8340A10 FILE NAME: 8340A10_E-06.dgn

DESIGNED CSP
DRAWN GD
CHECKED KAO
DATE OCTOBER 2010

27404 CHARLES S. PARSONS ARIZONA U.S.A. EXPIRES 09-30-2011

carollo

ARIZONA WATER COMPANY

ARIZONA WATER COMPANY

OASIS ARSENIC TREATMENT FACILITY EXPANSION

ELECTRICAL

LIGHTING, GROUND & RECEPTACLE PLANS

VERIFY SCALES
BAR IS ONE INCH ON ORIGINAL DRAWING
0 1"
IF NOT ONE INCH ON THIS SHEET, ADJUST SCALES ACCORDINGLY

JOB NO. 8340A.10
DRAWING NO. E-06
SHEET NO. 21 OF 36

LAST SAVED BY: ahernandez
Model: Layout1 ColorTable: ptstate.ctb DesignScript: Carollo_Std_Plan_v8i95.pen PlotScale: 1:1
User: GDyerk
Plot Date: 15-OCT-2010 10:35:24 AM

INSTRUMENT IDENTIFICATION

INSTRUMENT OR FUNCTION TYPE

FIRST LETTER(S)

FIC

SUCCEEDING LETTERS

P&ID HIERARCHY SYMBOLS

DISCRETE INSTRUMENTS	SHARED DISPLAY/ CONTROL
XX	OPERATOR ACCESSIBLE
	INACCESSIBLE
	FIELD MOUNTED
	PANEL MOUNTED
	FACE OF PANEL MOUNTED
	INSTRUMENT SHARING COMMON HOUSING

A "AND" GATE LOGIC (ALL SIGNALS)

O "O" GATE LOGIC (ANY ONE SIGNAL)

I XXX ELECTRICAL INTERLOCK INTERLOCK NUMBER

S XXX SOFTWARE INTERLOCK NUMBER

HANDSWITCH/INDICATING LIGHTS FUNCTION DESIGNATION

XX VL STATUS OR EVENT LIGHT

XX YA ALARM LIGHT

XX HS SELECTOR OR PUSHBUTTON SWITCH MOMENTARY OR MAINTAINED CONTACTS

GENERAL NOTE

THE P&ID SYMBOLS AND DEVICE IDENTIFICATIONS ARE BASED ON INSTRUMENT SOCIETY OF AMERICA, STANDARD PRACTICE ISA-S5.1 (1992). SOME MODIFICATIONS, ADDITIONS, AND ALTERATIONS HAVE BEEN MADE AS NEEDED TO ACCOMMODATE THE PROJECT REQUIREMENTS.

LETTER SYMBOLS

LETTER	FIRST LETTER(S) PROCESS OR INITIATING VARIABLE	FIRST LETTER(S) MODIFIER	SUCCEEDING LETTERS READOUT OR PASSIVE FUNCTION	SUCCEEDING LETTERS OUTPUT FUNCTION	SUCCEEDING LETTERS MODIFIER
A	ANALYSIS (*)		ALARM		
B	BURNER FLAME				
C	CONDUCTIVITY			CONTROL	
D	DENSITY (S.G.)	DIFFERENTIAL			
E	VOLTAGE		PRIMARY ELEMENT		
F	FLOW RATE	RATIO			
G	GAUGE		GLASS	GATE	
H	HAND (MANUAL)				HIGH
I	CURRENT		INDICATE		
J	POWER	SCAN			
K	TIME OR SCHEDULE			CONTROL STATION	
L	LEVEL		LIGHT (PILOT)		LOW
M	MOTION				MIDDLE
N	INTRUSION				NORMAL
O	TORQUE		ORIFICE		
P	PRESSURE (OR VACUUM)		POINT (TEST CONNECTION)		
Q	QUANTITY		INTEGRATE		
R	RATIO		RECORD OR PRINT		
S	SPEED OR FREQUENCY	SAFETY		SWITCH	
T	TEMPERATURE			TRANSMIT	
U	MULTIVARIABLE (*)		MULTIFUNCTION (*)		MULTIFUNCTION
V	VIBRATION			VALVE	
W	WEIGHT		WELL		
X	STATUS				UNCLASSIFIED
Y	EVENT, STATE		LIGHT SOURCE	RELAY OR COMPUTE (*)	
Z	POSITION			DRIVE, ACTUATE OR UNCLASSIFIED FINAL CONTROL ELEMENT	

(*) WHEN USED, EXPLANATION IS SHOWN EITHER ADJACENT TO INSTRUMENT SYMBOL

FUNCTION DESIGNATION

XXX	
A	AUTO
AUX	AUXILIARY
C	CLOSE
DCS	DISTRIBUTED CONTROL SYSTEM
DPS	DUTY PUMP SELECTOR
HOA	HAND-OFF-AUTO
ESS	EMERGENCY START-STOP
LLS	LEAD-LAG-STANDBY
L	LOCAL
LL	LEAD/LAG
LN	LOW-NORMAL
LOR	LOCAL-OFF-REMOTE
LOS	LOCK OUT STOP
MA	MANUAL-AUTO
MOA	MANUAL-OFF-AUTO
MASS	MASS FLOW
O	OPEN
OC	OPEN-CLOSE
OL	OVERLOAD
OO	ON-OFF
OOA	ON-OFF-AUTO
OSC	OPEN-STOP-CLOSE
P	PROCESS
PC	PARTICLE COUNTER
PCC	PLANT CONTROL CENTER
R/I	RESISTANCE TO CURRENT CONVERTER
SPD	SPEED
SC	STREAMING CURRENT
SLOS	START-LOCK OUT STOP
SP	SETPOINT
SPC	SPEED CONTROL
SS	START-STOP
RST	RESET
TURB	TURBIDITY

MISC. ABBREVIATIONS

DCS	DISTRIBUTED CONTROL SYSTEM
I/O	INPUT/OUTPUT
I/M	IRON/MANGANESE
MCC	MOTOR CONTROL CENTER
PLC	PROGRAMMABLE LOGIC CONTROLLER
R/O	REMOTE I/O
SCR	SILICON CONTROLLED RECTIFIER
SSS	SOLID STATE STARTER
VAC	VACUUM
VFD	VARIABLE FREQUENCY DRIVE
WRA	WASTE-RUN-AUTO
ATS	AUTO TRANSFER SWITCH

PROCESS CONTROL/CONVERTOR FUNCTION DESIGNATION

A	ANALOG	△	DIFFERENCE
D	DIGITAL	÷	DIVIDE
E	VOLTAGE	X	MULTIPLY
F	FREQUENCY	▷	SELECT HIGHEST SIGNAL
I	CURRENT	◁	SELECT LOWEST SIGNAL
P	PNEUMATIC	√	SQUARE ROOT
PF	PULSE FREQUENCY	Σ	SUM
PD	PULSE DURATION		
SP	SET POINT		
R/I	RESISTANCE TO CURRENT CONVERTER		
I/I	CURRENT TO CURRENT CONVERTER OR OR SIGNAL SPLITTER		

SIGNALS

ANALOG INPUT

DIGITAL INPUT

PULSE INPUT

ANALOG MODULATION OUTPUT

X MODULATING OUTPUT
X BLANK TIME DURATION (PULSE WIDTH)
F PULSE TRAIN
T TRIAC

X CONTROL OUTPUT
X BLANK MAINTAINED (ELECTRICALLY HELD)
L LATCHED (MAGNETICALLY OR MECHANICALLY HELD)

LINE SYMBOLS

PRIMARY PROCESS FLOW

SECONDARY PROCESS FLOW OR CONNECTION TO PROCESS, OR MECHANICAL LINK, OR INSTRUMENT SUPPLY

ELECTRIC SIGNAL

COMPUTER OR DATA CONNECTION

IA INSTRUMENT AIR SUPPLY

STRUCTURES/WALLS/BASINS ETC

XXX PROCESS LINE CONTINUED TO ANOTHER DWG.

XXX PROCESS LINE CONTINUED FROM ANOTHER DWG.

ES ELECTRICAL SUPPLY

PW PLANT WATER

QUICK CONNECTION

AIR OR CHEMICAL SOLUTION DIFFUSER

AIR COMPRESSOR

AIR VENT

BACKFLOW PREVENTER

BLOWER

CALIBRATION COLUMN

DIAPHRAGM SEAL - STANDARD

EJECTOR

ELECTRIC MOTOR

EYEWASH/SHOWER WITH FLOW SWITCH

V-CONE FLOW METER

FLOWMETER - INSERTION

FLOWMETER - THERMAL

FLOWMETER - MAGNETIC

FLOWMETER - ORIFICE PLATE

FLOWMETER - ROTOMETER

FLOWMETER - TURBINE OR PROPELLER

FLOWMETER - ULTRASONIC DOPPLER

FLOWMETER - VENTURI TUBE

GATE - SLIDE OR SLUICE

GATE - WEIR

LEVEL PROBE - CONDUCTANCE

LEVEL SENSOR - ULTRASONIC

LEVEL - FLOAT SWITCH

MIXER

POLYMER BLENDER

PULSATION DAMPENER

PUMP - VERTICAL TURBINE

PUMP - CENTRIFUGAL

PUMP - TURBINE

PUMP - METERING

PUMP - PROGRESSIVE CAVITY

SAMPLE PORT

PNEUMATIC VALVE ACTUATOR

SOLENOID - VALVE OPERATOR

STATIC MIXER

STRAINER BASKET

DUPLEX STRAINER

HEATER

HORN

VALVE - AIR RELEASE

VALVE - ANGLE

VALVE - BACK PRESSURE CONTROL

VALVE - BALL

VALVE - BALL CHECK

VALVE - BUTTERFLY

VALVE - CONCENTRIC PLUG

VALVE - DIAPHRAGM

VALVE - ECCENTRIC PLUG

VALVE - FLAPPER CHECK

VALVE - GATE

VALVE - GLOBE

VALVE - NEEDLE

VALVE - PRESSURE REDUCING (PRR)

VALVE - PRESSURE RELIEF (PRV)

VALVE - SWING CHECK

VALVE - TELESCOPING

VALVE - THREE WAY

VALVE - VACUUM BREAKER

VALVE - PRESSURE AND VACUUM RELIEF

VALVE - VACUUM REGULATION

WYE TYPE STRAINER

WYE TYPE STRAINER W/BLOWOFF

FLOW RESTRICTOR

POSITIVE DEPLACEMENT HOSE PUMP

MAGNETIC VARIABLE SPEED DRIVE

AIR FILTER

DEGASSING VALVE

REV	DATE	BY	DESCRIPTION

PROJECT NO. 8340A10 FILE NAME: 8340A10_N-01.dgn

DESIGNED CSP
DRAWN SD
CHECKED MJC
DATE OCTOBER 2010

27494 CHARLES S. PAGADIAN ARIZONA U.S.A. EXPIRES 09-30-2011

carollo

ARIZONA WATER COMPANY

OASIS ARSENIC TREATMENT FACILITY EXPANSION

INSTRUMENTATION

LEGEND, SYMBOLS & ABBREVIATIONS

VERIFY SCALES: BAR IS ONE INCH ON ORIGINAL DRAWING 0 1" IF NOT ONE INCH ON THIS SHEET, ADJUST SCALES ACCORDINGLY

JOB NO. 8340A.10

DRAWING NO. N-01

SHEET NO. 22 OF 36

Model: Layout1 ColorTable: ganska.ctb DesignStudio: Carollo_Std_Pen_v8i95.pen PlotScale: 1:1 User: 6Davis Plot Date: 15-OCT-2010 10:36:33 AM LAST SAVED BY: 6davis

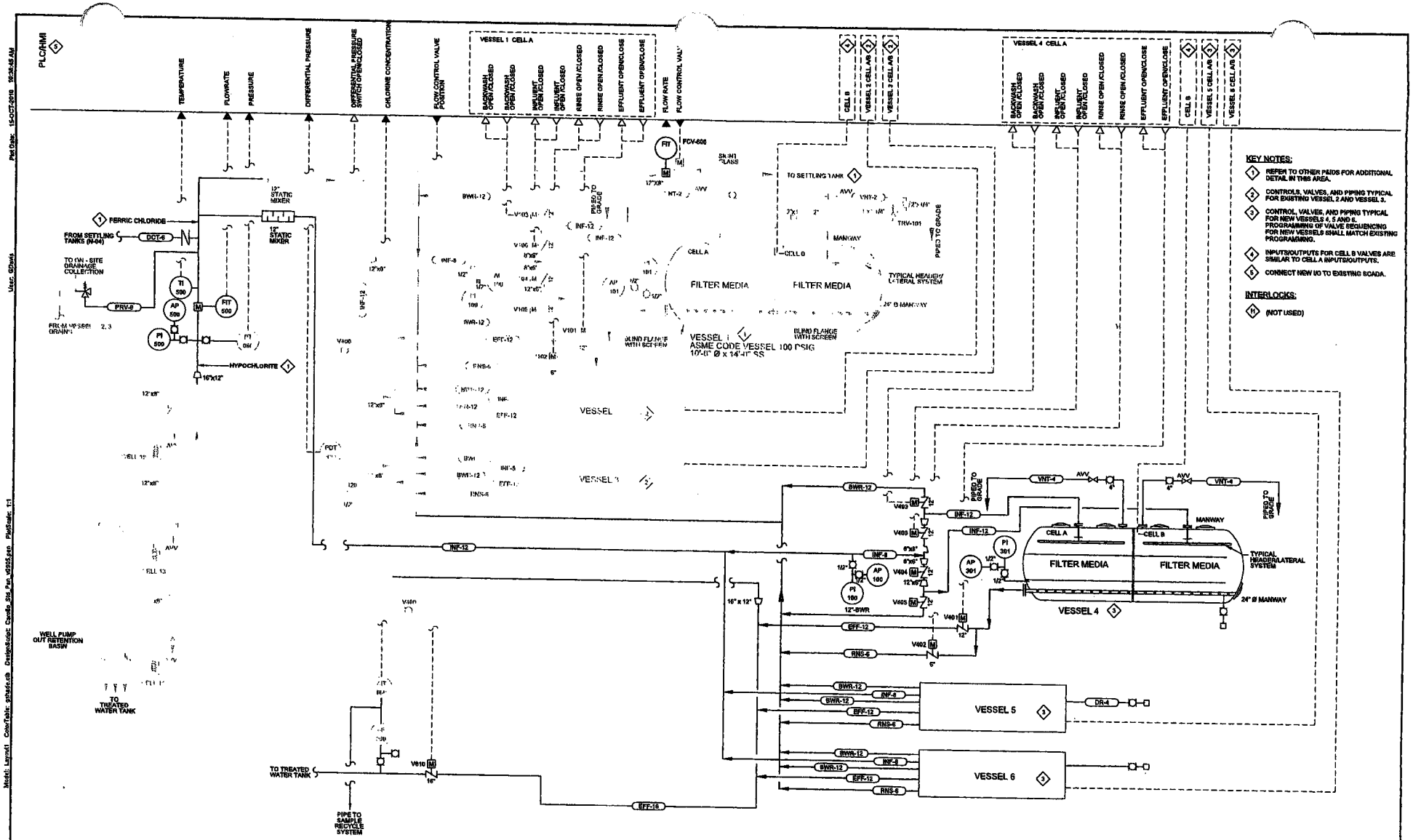

REV	DATE	BY	DESCRIPTION

PROJECT NO. 8340A10 FILE NAME: 8340A10_N-02.dgn

DESIGNED CSP
DRAWN GD
CHECKED MJG
DATE OCTOBER 2010

carollo

ARIZONA WATER COMPANY

OASIS ARSENIC TREATMENT FACILITY EXPANSION

INSTRUMENTATION

P & ID NO. 1

VERIFY SCALES: BAR IS ONE INCH ON ORIGINAL DRAWING 0 1"
IF NOT ONE INCH ON THIS SHEET, ADJUST SCALES ACCORDINGLY

JOB NO. 8340A.10
DRAWING NO. N-02
SHEET NO. 23 OF 36

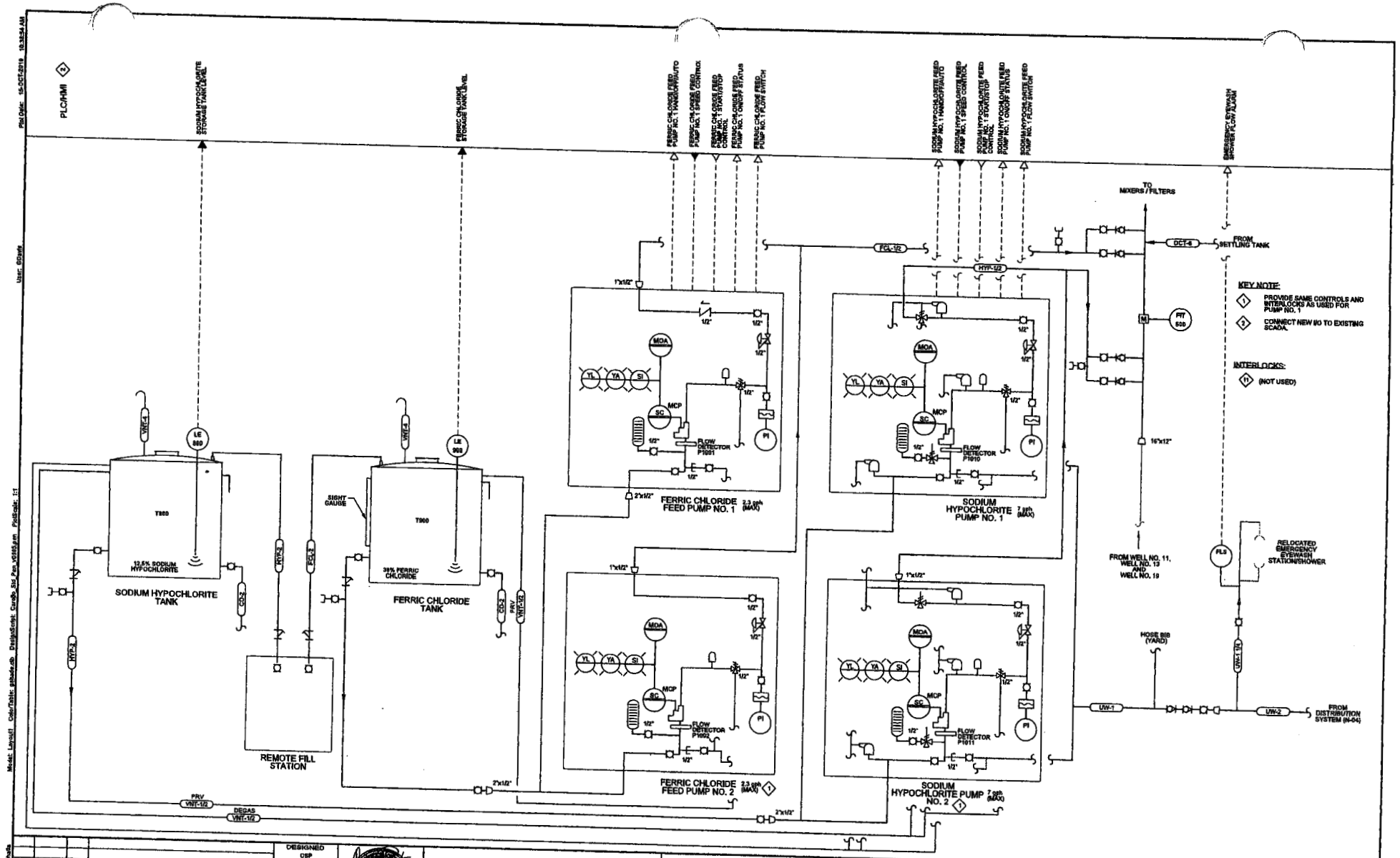

REV	DATE	BY	DESCRIPTION

PROJECT NO. 8340A10 FILE NAME: 8340A10_N-03.dgn

DESIGNED CSP
DRAWN GD
CHECKED MJG
DATE OCTOBER 2010

carollo

ARIZONA WATER COMPANY

OASIS ARSENIC TREATMENT FACILITY EXPANSION

INSTRUMENTATION

P & ID NO. 2

VERIFY SCALES: BAR IS ONE INCH ON ORIGINAL DRAWING 0 1" IF NOT ONE INCH ON THIS SHEET, ADJUST SCALES ACCORDINGLY

JOB NO. 8340A.10

DRAWING NO. N-03

SHEET NO. 24 OF 36

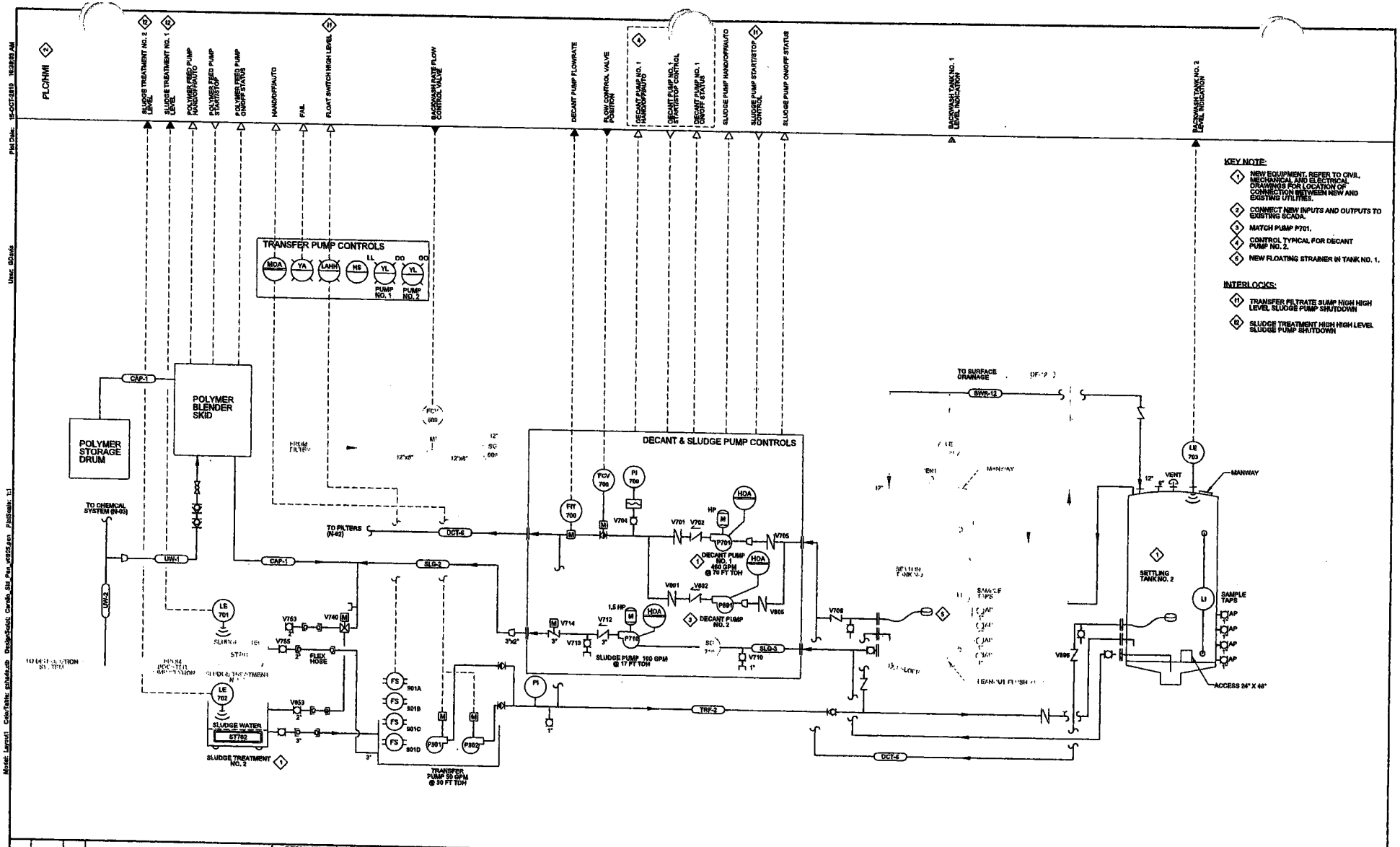

KEY NOTE:

1. NEW EQUIPMENT. REFER TO CIVIL, MECHANICAL AND ELECTRICAL DRAWINGS FOR LOCATION OF CONNECTION BETWEEN NEW AND EXISTING UTILITIES.
2. CONNECT NEW INPUTS AND OUTPUTS TO EXISTING SCADA.
3. MATCH PUMP P701.
4. CONTROL TYPICAL FOR DECANT PUMP NO. 2.
5. NEW FLOATING STRAINER IN TANK NO. 1.

INTERLOCKS:

H1 TRANSFER FILTRATE SUMP HIGH HIGH LEVEL SLUDGE PUMP SHUTDOWN

H2 SLUDGE TREATMENT HIGH HIGH LEVEL SLUDGE PUMP SHUTDOWN

REV	DATE	BY	DESCRIPTION

PROJECT NO. 8340A10 FILE NAME: 8340A10_N-04.dgn

DESIGNED CSP
DRAWN GD
CHECKED MJG
DATE OCTOBER 2010

27404 CHARLES E. PARADIAN, ARIZONA, EXPIRES 06-30-2011

carollo

ARIZONA WATER COMPANY

OASIS ARSENIC TREATMENT FACILITY EXPANSION

INSTRUMENTATION

P & ID NO. 3

VERIFY SCALES: BAR IS ONE INCH ON ORIGINAL DRAWING 0 — 1"; IF NOT ONE INCH ON THIS SHEET, ADJUST SCALES ACCORDINGLY

JOB NO. 8340A.10

DRAWING NO. N-04

SHEET NO. 25 OF 26

LAST SAVED BY: dsnide
Model: Layout1 ColorTable: ephelv.ctb DesignScale: Canelle_SB_Pen_v0808.pen PlotScale: 1:1
User: SDavis
Plot Date: 15-OCT-2010 10:38:03 AM

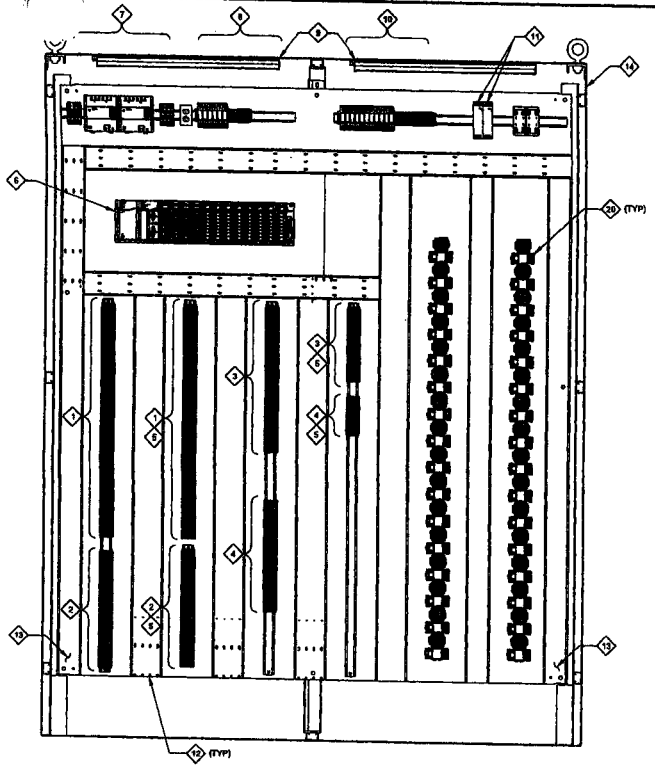

A PLC CABINET - INTERIOR

SCALE: 1-1/2" = 1'-0"
FILE: -

0 6" 1'-0" 1'-6"

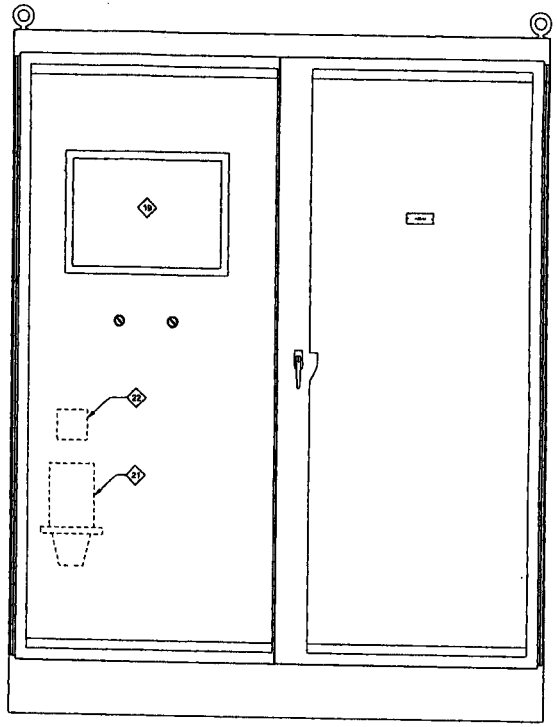

B PLC CABINET - EXTERIOR

SCALE: 1-1/2" = 1'-0"
FILE: -

0 6" 1'-0" 1'-6"

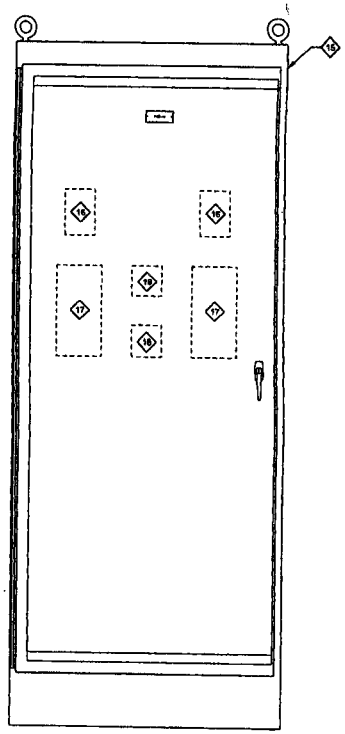

C STARTER CABINET

SCALE: 1-1/2" = 1'-0"
FILE: -

0 6" 1'-0" 1'-6"

KEY NOTES:

1. DISCRETE INPUT TERMINAL BLOCKS, DIN RAIL MOUNTED
2. DISCRETE OUTPUT TERMINAL BLOCKS, DIN RAIL MOUNTED
3. ANALOG INPUT TERMINAL BLOCKS, DIN RAIL MOUNTED
4. ANALOG OUTPUT TERMINAL BLOCKS, DIN RAIL MOUNTED
5. TERMINAL BLOCKS FOR EXISTING PLC SIGNALS
6. PLC
7. 24VDC INSTRUMENT POWER DISTRIBUTION, DIN RAIL MOUNTED
8. ENCLOSURE120VAC POWER DISTRIBUTION, DIN RAIL MOUNTED
9. FLUORESCENT LIGHTING PACKAGE WITH INTEGRAL DOOR SWITCH
10. I/O MODULE 120VAC POWER DISTRIBUTION, DIN RAIL MOUNTED
11. 24VDC POWER SUPPLY, DIN RAIL MOUNTED
12. 4" WIDE SURFACE WIREWAY WITH COVER HEIGHT AS REQUIRED
13. 3" WIDE SURFACE WIREWAY WITH COVER HEIGHT AS REQUIRED
14. ENCLOSURE, NEMA 4, STEEL, FREESTANDING 90" x 72" x 24"
15. ENCLOSURE, NEMA 4, STEEL, FREESTANDING 90" x 36" x 24"
16. MCP
17. STARTER WITH OVERLOADS
18. CONTROL POWER TRANSFORMER
19. HMI
20. RELAY, DIN RAIL MOUNTED
21. UPS, INSTALL MOUNTING SHELF ON CABINET DOOR
22. UPS MAINTENANCE BYPASS SWITCH. MOUNT ON CABINET DOOR

REV	DATE	BY	DESCRIPTION

PROJECT NO. 8340A10 FILE NAME: 8340A10_N-05.dgn

DESIGNED CBP
DRAWN GD
CHECKED MJG
DATE OCTOBER 2010

CHARLES B. PAGAGUIAN 27404 ARIZONA EXPIRES 06-30-2011

carollo

ARIZONA WATER COMPANY

OASIS ARSENIC TREATMENT FACILITY EXPANSION

INSTRUMENTATION

CABINET DETAILS

VERIFY SCALES
BAR IS ONE INCH ON ORIGINAL DRAWING
0 1"
IF NOT ONE INCH ON THIS SHEET, ADJUST SCALES ACCORDINGLY

JOB NO. 8340A.10
DRAWING NO. N-05
SHEET NO. 26 OF 36

Model: Layout1 ColorTable: gsbwfx.ctb DesignScript: Carollo_BW_Pen_v8105.pen PlotScale: 1:1 User: GBeale Plot Date: 15-OCT-2010 10:39:12 AM
LAST SAVED BY: bfeldm

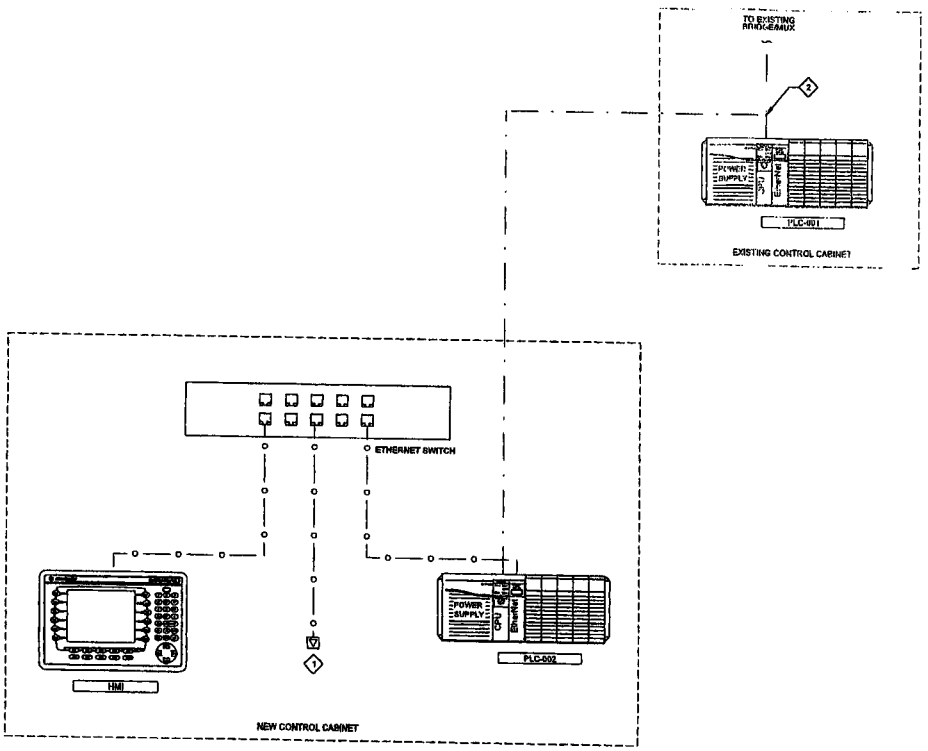

KEY NOTES:

1. RJ-45 MOUNTED ON FACE OF CABINET. PROVIDE WITH WEATHERPROOF COVER
2. TAP INTO EXISTING MODBUS TRUNK

LEGEND THIS SHEET ONLY

- ETHERNET COPPER
- MODBUS PLUS CABLE
- COPPER SWITCH TERMINATION

REV	DATE	BY	DESCRIPTION

PROJECT NO. 8340A10 FILE NAME: 8340A10_N-06.dgn

DESIGNED CSP
DRAWN GD
CHECKED MJG
DATE OCTOBER 2010

27404 CHARLES S. PARADUAN EXPIRES 12-31-2011

carollo

ARIZONA WATER COMPANY

OASIS ARSENIC TREATMENT FACILITY EXPANSION

INSTRUMENTATION

CONTROL SYSTEM BLOCK DIAGRAM

VERIFY SCALES: BAR IS ONE INCH ON ORIGINAL DRAWING 0 — 1" IF NOT ONE INCH ON THIS SHEET, ADJUST SCALES ACCORDINGLY

JOB NO. 8340A.10

DRAWING NO. N-06

SHEET NO. 27 OF 36

Model: Layout1 ColorTable: pbtable.tb DesignScript: Carollo_Std_Pen_v2005.pen PlotScale: 1:1 User: GDavis Plot Date: 15-OCT-2010 10:40:23 AM LAST SAVED BY: dhuda

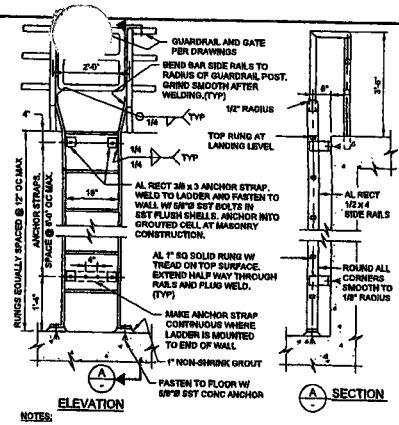

NOTES:

1. INSTALL FALL PREVENTION SYSTEM, OR SAFETY CAGE, WHERE HEIGHT OF LADDER EXCEEDS 20'-0". SEE A294 TYP.
2. MINIMUM CLEARANCE TO ANY OBSTRUCTION ADJACENT TO LADDER: 2'-6" AT CLIMBING SIDE (2'-3" AT SMOOTH WALL) AND 1'-3" EACH SIDE OF CENTER LINE, AT SIDES OF LADDER.
3. COAT ALL AL SURFACES IN CONTACT WITH CONCRETE OR MASONRY, IN ACCORDANCE WITH THE SPECIFICATIONS.
4. WHERE GUARDRAIL IS SST, BOLT PIPE TO RAIL W/ 2- 1/2"Ø SST BOLTS.

A250 TYP S — ALUMINUM LADDER FASTENED TO WALL — 08-01-05

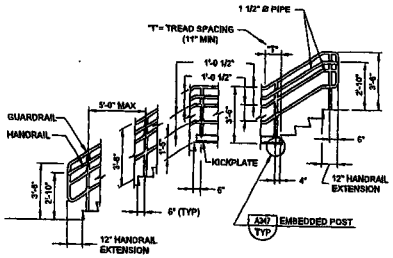

STAIR GUARDRAIL/HANDRAIL ELEVATION

NOTES:

1. SEE SPECIFICATIONS AND A349 TYP FOR ADDITIONAL REQUIREMENTS.
2. HANDRAIL EXTENSIONS ARE REQUIRED ON BOTH SIDES OF STAIR; THEY ARE NOT REQUIRED WHERE HANDRAIL IS CONTINUOUS.

A343 TYP NS — THREE RAIL GUARDRAIL (PRIVATE) FOR IBC — SHEET 2 OF 3 — 03-01-06

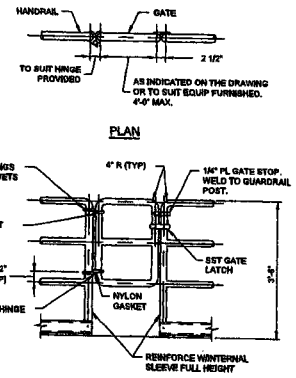

NOTES:

1. GATE MATERIAL AND FINISH SHALL MATCH GUARDRAIL.
2. GATE SHALL OPEN TOWARD THE WALKWAY.
3. THREE RAIL GATE SHOWN. FOR PICKET TYPE GUARDRAIL, RAILS IN GATE SHALL MATCH GUARDRAIL. PICKET TYPE GATE SHALL EXTEND DOWN TO 4" ABOVE FLOOR.

A320 TYP S — GATE AT GUARDRAIL FOR UBC — 08-01-05

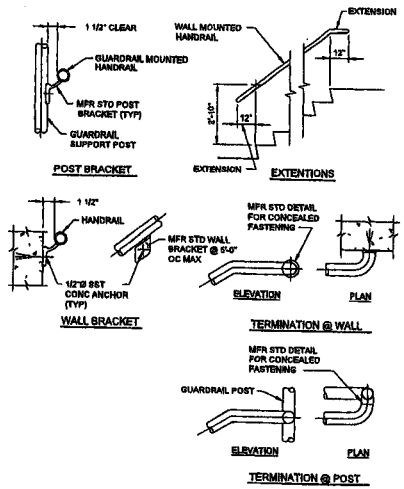

HANDRAIL DETAILS

A343 TYP NS — THREE RAIL GUARDRAIL (PRIVATE) FOR IBC — SHEET 3 OF 3 — 03-01-06

1. STAIRS, WALKING SURFACES AND ROOFS (WHERE EQUIPMENT IS LOCATED <10' FROM ROOF EDGE) ELEVATED >30" ABOVE GRADE OR ADJACENT CONSTRUCTION SHALL BE PROVIDED WITH A 42" HIGH GUARDRAIL FORMING A PROTECTIVE BARRIER. A PARAPET WALL 42" OR MORE IN HEIGHT MAY BE THAT GUARDRAIL AT ROOF LOCATIONS.
2. SEE DRAWINGS OR SPECIFICATIONS FOR GUARDRAIL MATERIAL TYPE(S).
3. HANDRAIL SHALL BE PROVIDED AT BOTH SIDES OF EVERY STAIR HAVING TWO OR MORE RISERS.
4. HANDRAIL SHALL BE CONTINUOUS THE FULL LENGTH OF THE STAIR.
5. HANDRAIL EXTENSIONS SHALL BE PROVIDED AT BOTH SIDES OF STAIRS AND AT TOP AND BOTTOM. HANDRAIL EXTENSION ON STAIR MOUNTED GUARDRAIL MAY BE OMITTED WHERE IT IS PERPENDICULAR TO AND IMPEDES EXIT FLOW.
6. INSIDE HANDRAIL ON SWITCHBACK STAIRS SHALL BE CONTINUOUS.
7. WALL MOUNTED HANDRAILS SHALL BE SINGLE RAIL WITH TOP OF RAIL AT 2'-10" HEIGHT ABOVE LANDINGS OR TREAD NOSINGS, MATCHING RAILING ON OPPOSITE SIDE.
8. ALL GUARDRAIL SHALL BE FIXED UNLESS OTHERWISE INDICATED ON THE DRAWINGS.
9. PLACE CENTER OF EMBEDDED POSTS 4" FROM EDGE OF CONCRETE AND 6" FROM EDGE OF CONCRETE STAIR NOSINGS UNLESS OTHERWISE INDICATED ON THE DRAWINGS.
10. PLACE GUARDRAIL POSTS OPPOSITE EACH OTHER WHERE RAILINGS ARE PARALLEL.
11. FOR GUARDRAIL POSTS MOUNTED TO BEAM OR STAIR CHANNEL, PROVIDE MANUFACTURERS REINFORCED CONNECTION FROM POST TO PLATE. PLATE AND REINFORCED INSERTS SHALL BE ALUMINUM OR STAINLESS STEEL.
12. PROVIDE SLIP JOINTS AT 20' MAX CENTERS FOR EXPANSION OF RAIL AND KICKPLATE. LOCATE RAIL SLIP JOINTS AT FACE OF POST. GAP AT TIME OF INSTALLATION SHALL BE BASED ON TEMPERATURE OF GUARDRAIL (3/8" GAP AT 20°F, 5" GAP AT 100°F). AT CONCRETE EXPANSION JOINTS, PROVIDE MINIMUM OF 1" GAP IN SLIP JOINTS BUT NOT LESS THAN WIDTH OF CONCRETE EXPANSION JOINT. INSERT SLEEVES SHALL BE LONG ENOUGH TO ALLOW FOR THE FULL RANGE OF MOVEMENT.
13. MATERIAL FOR SLIP JOINT PLATE AND KICKPLATE CHANNEL SHALL BE OF THE SAME MATERIAL AS THE GUARDRAIL.
14. ALL JOINTS FOR STAINLESS STEEL GUARDRAIL AND HANDRAIL SHALL BE COPED, WELDED, AND GROUND SMOOTH.
15. PROVIDE KICKPLATE AT ALL LOCATIONS EXCEPT AT SLOPING GUARDRAIL ON STAIRS AND WHERE GUARDRAIL IS MOUNTED ON A 4" MIN CURB. KICKPLATE MAY BE EXTRUDED OR BENT PLATE AND SHALL BE ATTACHED WITH SST BOLTS IN 5/16" x 3/4" SLOTTED HOLES. BOLT KICKPLATE TO POST WITH BOTTOM 1/4" CLEAR FROM FLOOR. FOR SIDE MOUNTED GUARDRAIL, PROVIDE STANDARD SPACER BLOCK BETWEEN POST AND KICKPLATE TO MAINTAIN 1/4" MAX CLEAR SPACING. HAND TIGHTEN AND CENTER PUNCH BOLT TO LOCK. SPLICES SHALL ACCOMMODATE TEMPERATURE EXPANSION PER NOTE 12.
16. COAT ALL SURFACES OF ALUMINUM THAT COME IN CONTACT WITH CONCRETE IN ACCORDANCE WITH SPECIFICATIONS. PLACE NEOPRENE GASKET BETWEEN ALUM AND STEEL.

A340 TYP NS — GUARDRAIL/HANDRAIL NOTES FOR IBC — 08-01-05

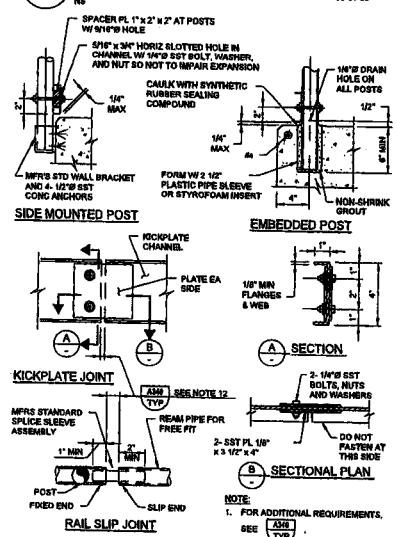

NOTE:

1. FOR ADDITIONAL REQUIREMENTS, SEE A349 TYP.

A347 TYP NS — GUARDRAIL DETAILS FOR IBC — 08-01-05

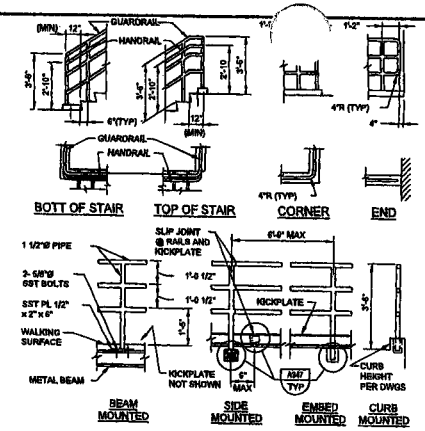

GUARDRAIL ELEVATION

NOTES:

1. THIS DETAIL IS APPLICABLE AT PRIVATE STAIRS WHERE OPERATOR ONLY ACCESSIBILITY IS REQUIRED. DETAILS AND INSTALLATION SHALL COMPLY WITH THE BUILDING CODE.
2. FOR ADDITIONAL REQUIREMENTS, SEE SPECIFICATIONS AND A349 TYP.
3. VARIOUS POST MOUNTING DETAILS ARE ILLUSTRATED. SEE DRAWINGS FOR SPECIFIC MOUNTING REQUIREMENTS.

A343 TYP NS — THREE RAIL GUARDRAIL (PRIVATE) FOR IBC — SHEET 1 OF 3 — 03-01-06

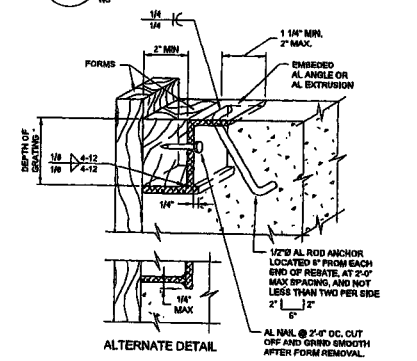

GRATING REBATE

NOTES:

1. FOR AL GRATING, SEE SPECIFICATIONS.
2. REBATE ANGLE TO BE CONTINUOUS AROUND ENTIRE OPENING.
3. ANGLE AND BEARING PLATE SHALL BE 1/4" MIN THICK.
4. REBATE MAY BE EXTRUDED, SUBJECT TO ENGINEER'S ACCEPTANCE.
5. COAT ALL ALUMINUM IN CONTACT WITH CONCRETE PER SPECIFICATIONS.
6. * = DIMENSION AS REQUIRED BY GRATING MANUFACTURER.

A400 TYP S — ALUMINUM GRATING REBATE AND SEAT — SHEET 1 OF 2 — 07-31-06

REV	DATE	BY	DESCRIPTION

DESIGNED MJG
DRAWN GD
CHECKED RDJ
DATE OCTOBER 2010

carollo

ARIZONA WATER COMPANY

OASIS ARSENIC TREATMENT FACILITY EXPANSION

TYPICAL

TYPICAL DETAILS I

VERIFY SCALES: BAR IS ONE INCH ON ORIGINAL DRAWING 0 — 1"; IF NOT ONE INCH ON THIS SHEET, ADJUST SCALES ACCORDINGLY

JOB NO. 8340A.10
DRAWING NO. T-01
SHEET NO. 28 OF 36

PROJECT NO. 8340A10 FILE NAME: 8340A10_T-01.dgn

LAST SAVED BY: rdoss
Model: Layout1 ColorTable: pstyle.ctb DesignScript: CellSt_Sig_Pos.v8dgns PlotScale: 1:1
Plot Date: 15-OCT-2010 10:46:31 AM User: GDavis

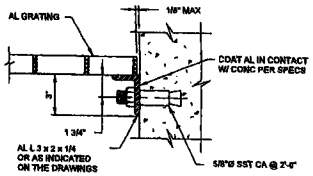

GRATING SEAT

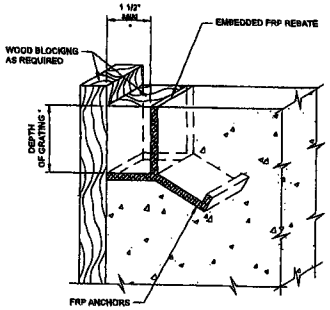

GRATING REBATE

NOTES:

1. FOR FRP GRATING, SEE SPECIFICATIONS.
2. REBATE ANGLE SHALL BE CONTINUOUS AROUND ENTIRE OPENING.
3. REBATE ANGLE SHALL BE 1/4" MINIMUM THICKNESS.
4. REBATE MAY BE EXTRUDED.
5. * DIMENSION AS REQUIRED BY GRATING MANUFACTURER.

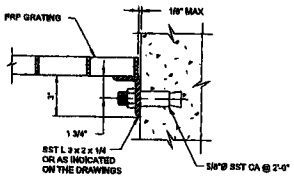

GRATING SEAT

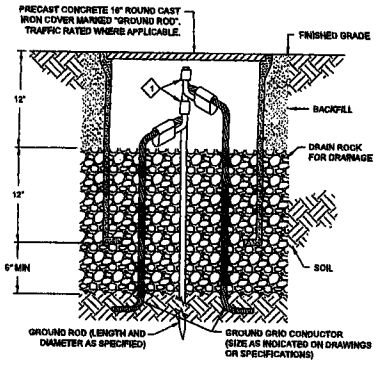

KEY NOTES:

1. GROUND ROD TO GROUND GRID CROSS CONNECTOR. SIZE FOR ROD AND CABLE PER MANUFACTURERS GUIDELINES.

A400 TYP S — ALUMINUM GRATING REBATE AND SEAT
SHEET 2 OF 2 — 07-31-09

A401 TYP S — FRP GRATING REBATE AND SEAT
SHEET 1 OF 2 — 07-31-09

A401 TYP S — FRP GRATING REBATE AND SEAT
SHEET 2 OF 2 — 07-31-09

EG001 TYP S — GROUND ROD AND GROUNDWELL COMPRESSION CONNECTION

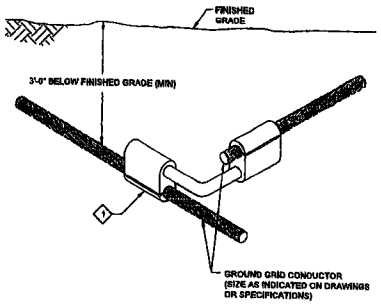

KEY NOTES:

1. GROUND ROD TO GROUND GRID CROSS CONNECTOR. SIZE FOR ROD AND CABLE PER MANUFACTURERS GUIDELINES.

EG101 TYP S — COPPER GROUNDING CABLE CONNECTION COMPRESSION CONNECTION

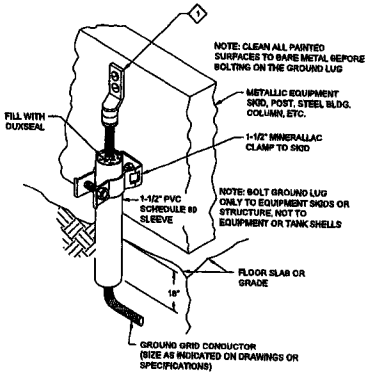

KEY NOTES:

1. HEAVY DUTY COMPRESSION TERMINAL

EG201 TYP S — EQUIPMENT SKID GROUNDING COMPRESSION CONNECTION

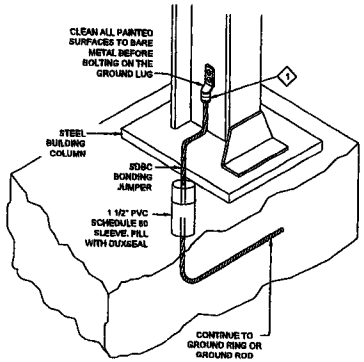

KEY NOTES:

1. HEAVY DUTY COMPRESSION TERMINAL

EG301 TYP S — BUILDING STRUCTURE GROUNDING COMPRESSION CONNECTION

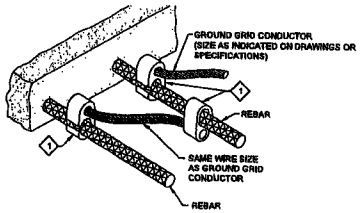

NOTES:

1. CLEAN RUST AND PROTECTIVE COATING FROM REBAR BEFORE CONNECTOR INSTALLATION TO PROVIDE GROUND CONNECTION. PRECRIMPING IS NOT REQUIRED.

KEY NOTES:

1. TAP/LAP SPLICE CONNECTOR

EG303 TYP S — REBAR TO CABLE GROUNDING COMPRESSION CONNECTION

REV	DATE	BY	DESCRIPTION

PROJECT NO. 6340A10 — FILE NAME: 6340A10_T-02.dgn

DESIGNED MJG
DRAWN GD
CHECKED RDJ
DATE OCTOBER 2010

STATE OF ARIZONA — 27736 — MARK J. GROSS — EXPIRES 09-30-2012

carollo

ARIZONA WATER COMPANY

OASIS ARSENIC TREATMENT FACILITY EXPANSION

TYPICAL

TYPICAL DETAILS II

VERIFY SCALES — BAR IS ONE INCH ON ORIGINAL DRAWING 0 — 1" — IF NOT ONE INCH ON THIS SHEET, ADJUST SCALES ACCORDINGLY

JOB NO. 6340A.10

DRAWING NO. T-02

SHEET NO. 29 OF 36

Plot Date: 15-OCT-2010 10:40:46 AM
User: GDavis
Model: Layout1 ColorTable: gs3d4x.ctb DesignStock: Carollo_Std_Pen_v8bSE.pen PlotScale: 1:1
LAST SAVED BY: gdavis

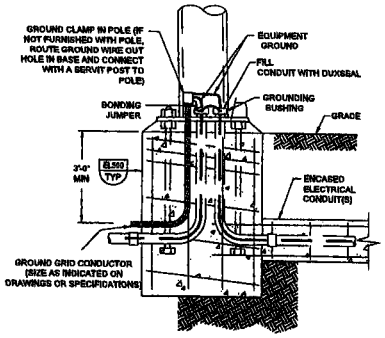

EG402 TYP — LIGHT POLE GROUNDING INTERIOR

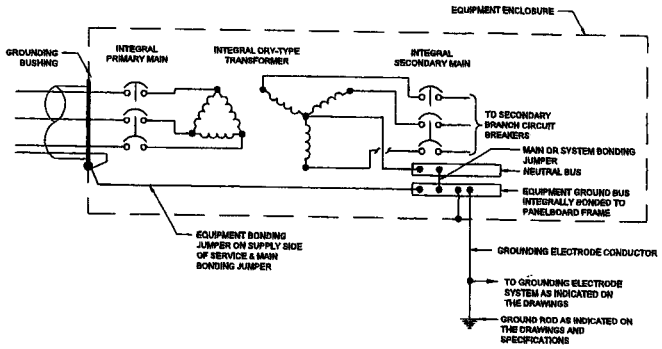

EG507 TYP — PACKAGED POWER SUPPLY GROUNDING DETAIL

NOTES:

1. DIMENSIONS SHOWN ARE MINIMUM.
2. ADJUST SIZE OF DUCT BANK BASED UPON THESE GUIDELINES AND SPECIFICATION SECTION 16133 TO ACCOMMODATE ACTUAL NUMBER OF CONDUITS WITHIN DUCT BANK, REFER TO DUCT BANK SECTIONS, AND CONDUIT SCHEDULE FOR NUMBER AND SIZE OF CONDUITS.

KEY NOTES:

1. #4 REINFORCING STEEL 12" MAXIMUM ON CENTER AROUND ENTIRE PERIMETER OF DUCT BANK.
2. #4 REINFORCING STEEL HOOPS 36" MAXIMUM ON CENTER ALONG LENGTH OF DUCT BANK.
3. DRIVE #4 REINFORCING STEEL 36" MINIMUM INTO UNDISTURBED SOIL AT EVERY PVC CONDUIT SPACER LOCATION ALONG LENGTH OF DUCT BANK TO PREVENT DUCT BANK FROM FLOATING. PROVIDE A MINIMUM OF TWO (2) #4 REINFORCING STEEL UPRIGHTS PER PVC CONDUIT SPACER LOCATION.
4. PVC CONDUIT SPACERS ON 8'-0" CENTERS (MAXIMUM) LOCATE 12" FROM HOOPS.
5. REFER TO DUCTBANK SECTIONS AND CONDUIT SCHEDULES FOR CONDUIT REQUIREMENTS

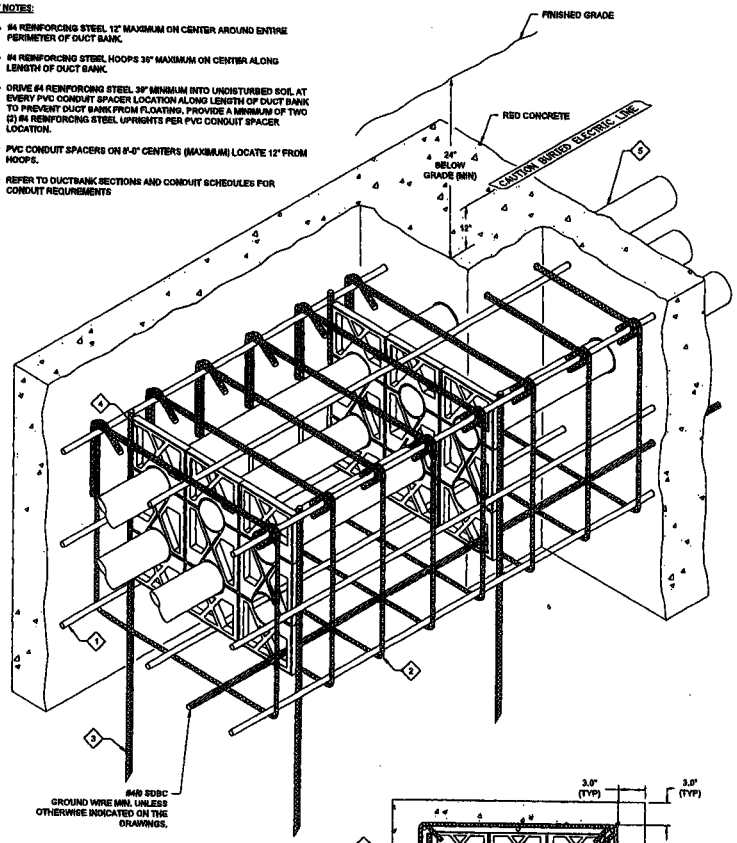

EM001 TYP — REINFORCED CONCRETE DUCT BANK

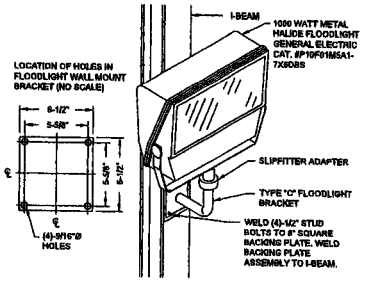

EL311 TYP — FLOODLAMP LUMINAIRE MOUNTING TO I-BEAM

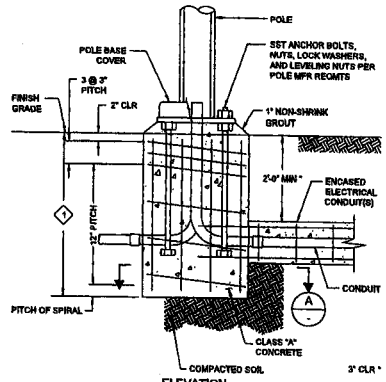

ELEVATION

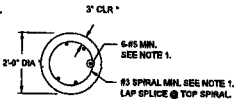

A SECTION

KEY NOTES:

1. AS REQUIRED, REFER TO SECTION 16500.

EL500 TYP — LUMINAIRE FOUNDATION

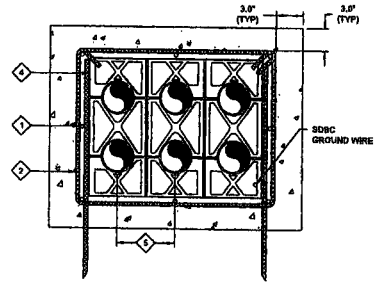

REV	DATE	BY	DESCRIPTION

PROJECT NO. 8340A10 FILE NAME: 8340A10_T-03.dgn

DESIGNED MJG
DRAWN GD
CHECKED RDJ
DATE OCTOBER 2010

EXPIRES 06-30-2012

carollo

ARIZONA WATER COMPANY

OASIS ARSENIC TREATMENT FACILITY EXPANSION

TYPICAL

TYPICAL DETAILS III

VERIFY SCALES — BAR IS ONE INCH ON ORIGINAL DRAWING 0 1" — IF NOT ONE INCH ON THIS SHEET, ADJUST SCALES ACCORDINGLY

JOB NO. 8340A.10

DRAWING NO. T-03

SHEET NO. 30 OF 36

LAST SAVED BY: sdavis

Model: Layout1 ColorTable: sahsla.ctb DesignScript: Carollo_Std_Pen_v5000.pen PlotScale: 1:1 User: SDAVIS Plot Date: 15-OCT-2010 10:46:39 AM

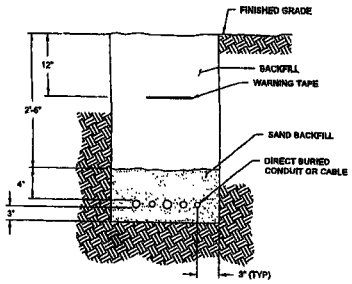

NOTES:

1. ALL DIMENSIONS ARE MINIMUM UNLESS OTHERWISE INDICATED ON THE DRAWINGS.
2. REFER TO SPECIFICATION 16133 FOR TRENCH BACKFILL REQUIREMENTS.

EM015 TYP S DIRECT BURIED CONDUIT OR CABLE

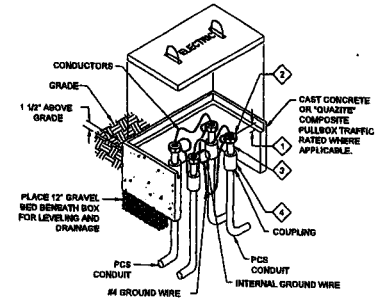

KEY NOTES:

1. ALLOW SUFFICIENT SPACE BETWEEN THE CONDUIT AND HANDHOLE LID FOR THE BENDING RADIUS OF THE WIRES OR CABLES.
2. INSULATED GROUNDING BUSHINGS. BOND BUSHINGS TO EACH OTHER WITH #4 WIRE AND TO GROUND CONDUCTORS IN EACH CONDUIT.
3. NIPPLE (USED TO COMPACT DUCT SEAL IN COUPLING).
4. PACK COUPLING AREA WITH DUCT SEAL BY MANVILLE OR APPROVED EQUAL.

EM060 TYP S PULLBOX CONDUIT INSTALLATION DETAIL

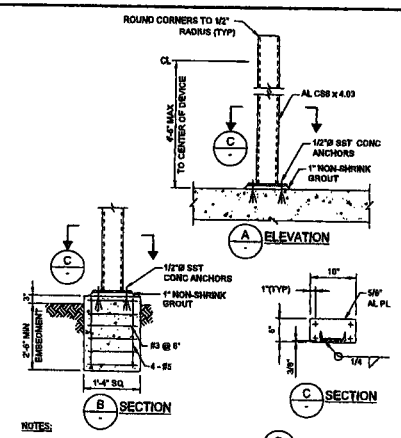

NOTES:

1. WHERE SEPARATE FOUNDATION IS REQD, SEE B
2. COAT ALUMINUM SURFACES IN CONTACT W/CONCRETE PER SPECS.
3. USE SST FASTENERS FOR MOUNTING DEVICES.
4. WEIGHT OF DEVICE(S) SHALL NOT EXCEED 100 POUNDS.

EM201 TYP S DEVICE SUPPORT AND MOUNTING

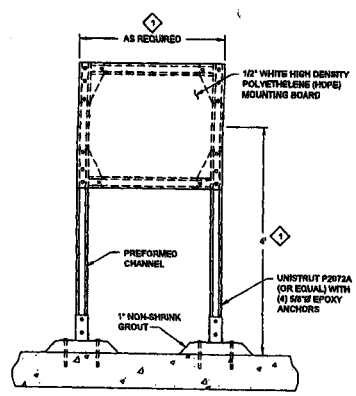

KEY NOTES:

1. PROVIDE CROSS BRACING AND SUPPORT LEGS EVERY 3 FEET.

EM210 TYP S EQUIPMENT MOUNTING STAND

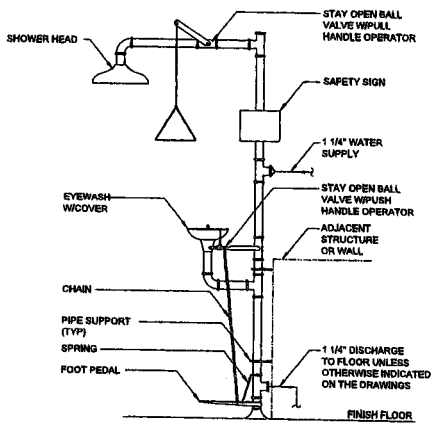

M270 TYP NS EMERGENCY SHOWER & EYEWASH

11-01-96

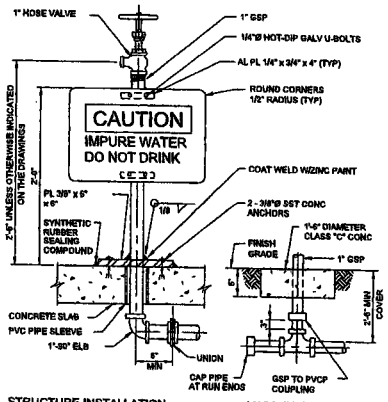

NOTES:

1. SIGN SHALL BE 3/8" THICK PLASTIC RESISTANT TO SUNLIGHT (ULTRAVIOLET) DETERIORATION.
2. SIGN SHALL BE 7" x 10" AND SHALL CONFORM TO THE SPECIFICATIONS.
3. SIGN AS SHOWN IS ROTATED 90° OFF TRUE POSITION. SIGN SHALL BE MOUNTED TO PERMIT EASY READING.
4. INSTALL HOSE RACK, M269 TYP, AT EACH HOSE VALVE.

M276 TYP NS 1" HOSE VALVE AND SIGN

09-01-05

NOTES:

1. ALL GAUGES SHALL BE DUAL SCALE. SCALES ON THE GAUGE FACE SHALL BE MARKED IN PSIG AND FEET OF WATER (FOR POSITIVE READINGS) OR INCHES OF MERCURY (FOR VACUUM READINGS).
2. MOUNTING PLATE DIMENSIONS VARY ACCORDING TO SIZE AND NUMBER OF GAUGES REQUIRED.
3. AT GAUGE STAND, DIAPHRAGM SHALL BE LOCATED BELOW THE MOUNTING PLATE. ONE INCH PIPE SHALL BE ROUTED BETWEEN DIAPHRAGM AND SERVICE PIPE PLUG VALVE. CROSSES WITH THREADED PLUGS SHALL BE USED IN LIEU OF 90° ELBOWS, WITH AT LEAST ONE UNION PER CROSS.
4. COAT ALUMINUM IN CONTACT WITH CONCRETE PER SPECIFICATIONS.

M294 TYP S PRESSURE GAUGE DETAILS

09-01-05

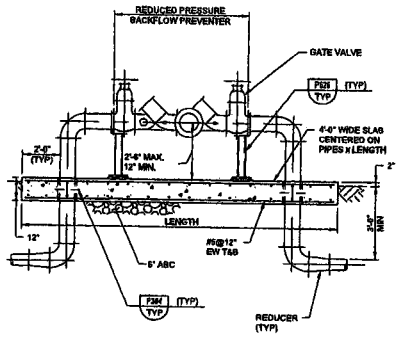

MK	SIZE

M310 TYP REDUCED PRESSURE DOUBLE BACKFLOW PREVENTER

09-01-05

REV	DATE	BY	DESCRIPTION

DESIGNED MJG
DRAWN GD
CHECKED RDJ
DATE OCTOBER 2010

EXPIRES 09-30-2012

carollo

ARIZONA WATER COMPANY

OASIS ARSENIC TREATMENT FACILITY EXPANSION

TYPICAL

TYPICAL DETAILS IV

VERIFY SCALES: BAR IS ONE INCH ON ORIGINAL DRAWING 0 — 1"; IF NOT ONE INCH ON THIS SHEET, ADJUST SCALES ACCORDINGLY

JOB NO. 8340A.10

DRAWING NO. T-04

SHEET NO. 31 OF 36

PROJECT NO. 8340A10 FILE NAME: 8340A10_T-04.dgn

LAST SAVED BY: dfrets

Model: Layout1 ColorTable: pstable.ctb DesignScript: Cardo_Std_Pen_v08.Epen PlotScale: 1:1 User: GDrets Plot Date: 15-OCT-2010 10:41:10 AM

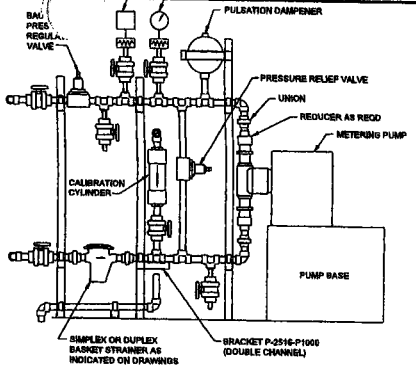

NOTES:

1. ALL VALVES TO BE TRUE UNION BALL VALVES OR DIAPHRAM FOR 12.5% SODIUM HYPOCHLORITE SERVICE.
2. ALL PREFORMED CHANNEL SUPPORTS TO BE FRP UNLESS OTHERWISE INDICATED ON DRAWINGS.
3. PRESSURE RELIEF VALVES DISCHARGE FOR 12.5% SODIUM HYPOCHLORITE SERVICE SHALL BE DIRECTED BACK TO BULK STORAGE TANK

M340 TYP — CHEMICAL METERING PUMP

M340-N-P 03-02-09

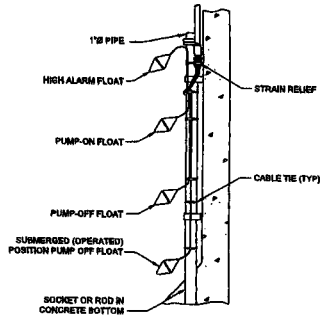

NOTES:

1. NUMBER OF FLOATS SHALL BE AS SHOWN ON SCHEMATICS AND P&IDS.
2. FLOATS SHOWN IN FREE HANGING POSITION.

NL100 TYP S — FLOAT SWITCH INSTALLATION

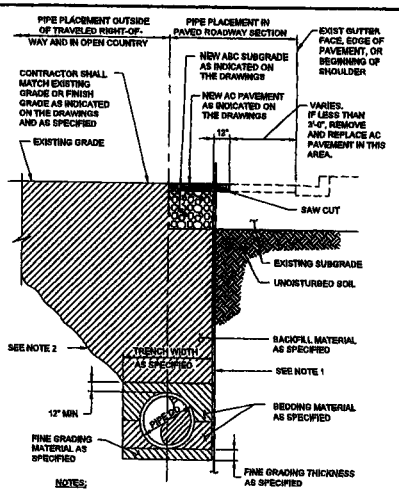

NOTES:

1. SEE SPECIFICATIONS FOR SHORING REQUIREMENTS.
2. SEE SPECIFICATIONS FOR SLOPING REQUIREMENTS.

P002 TYP N — PIPE INSTALLATION AND PAVEMENT REPLACEMENT

08-01-05

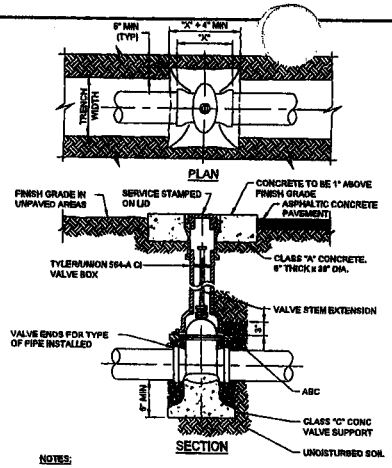

NOTES:

1. ALL BURIED VALVES SHALL BE PROVIDED W/ EXTENSION STEM OPERATOR W/ 2" SQ AWWA NUT WITHIN 39" OF VALVE BOX COVER. NUT IS TO INDICATE DIRECTION OF ROTATION TO OPEN VALVE.
2. COAT BURIED PIPE AND VALVE BOX PER SPECIFICATIONS.
3. CLEAN VALVE BOX OF ALL DEBRIS AND SOIL.
4. VALVE TYPE AS INDICATED ON THE DRAWINGS.

P022 TYP — VALVE BOX INSTALLATION

08-01-05

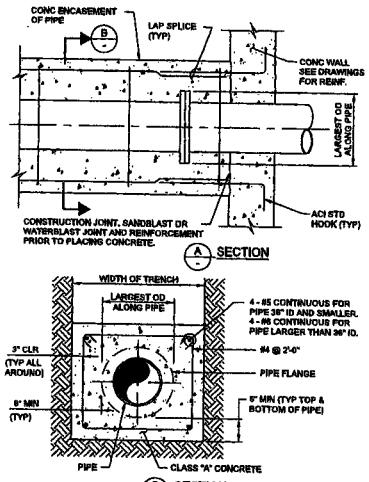

NOTE:

1. TYPE OF PIPE AND TYPE OF PIPE JOINT OR COUPLER AS INDICATED ON THE DRAWINGS.

P040 TYP NS — CONCRETE ENCASEMENT OF PIPE

SHEET 1 OF 2 — 03-16-09

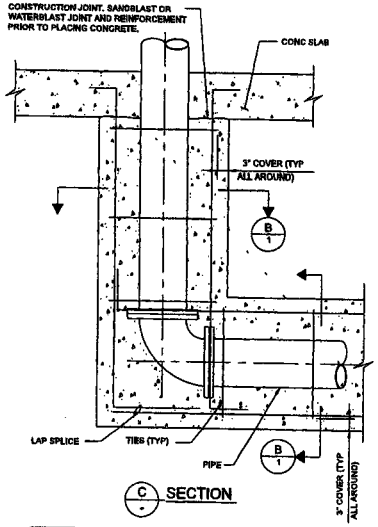

P040 TYP NS — CONCRETE ENCASEMENT OF PIPE

SHEET 2 OF 2 — 03-16-09

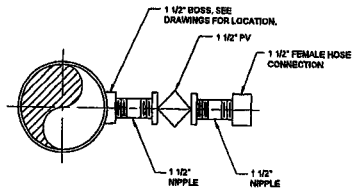

P203 TYP — FLUSHING CONNECTION

08-01-05

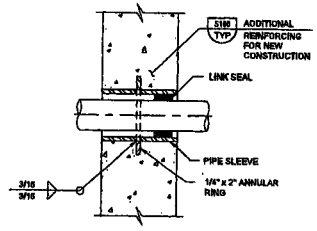

NOTES:

1. 5"Ø SLEEVES AND SMALLER SHALL BE SCH 40 STL PIPE.
2. SLEEVES LARGER THAN 5"Ø SHALL BE 1/4" THICK STL PIPE.
3. IN WALLS THICKER THAN 12", LINK SEAL SHALL BE INSTALLED AT BOTH ENDS OF WALL SLEEVE. SLEEVE DIAMETER SHALL BE PER LINK SEAL MANUFACTURER'S RECOMMENDATION.
4. SLEEVE SHALL BE HOT-DIP GALVANIZED AFTER FABRICATION.

P304 TYP NS — SLEEVE INSTALLATION THROUGH WALLS AND FLOOR SLABS

08-01-05

REV	DATE	BY	DESCRIPTION

PROJECT NO. 8340A10 FILE NAME: 8340A10_T-05.dgn

DESIGNED	MJG
DRAWN	GD
CHECKED	RDJ
DATE	OCTOBER 2010

37736 MARK J. GROSS 10-15-10 ARIZONA U.S.A. EXPIRES 06-30-2012

carollo

ARIZONA WATER COMPANY

OASIS ARSENIC TREATMENT FACILITY EXPANSION

TYPICAL

TYPICAL DETAILS V

VERIFY SCALES: BAR IS ONE INCH ON ORIGINAL DRAWING 0 — 1" IF NOT ONE INCH ON THIS SHEET, ADJUST SCALES ACCORDINGLY

JOB NO. 8340A.10

DRAWING NO. T-05

SHEET NO. 32 OF 35

LAST SAVED BY: ahsis

Model: Layout1 Color Table: ghsdefault.tbl DesignScript: Carollo_Std_Pen_v8i95.pen PlotScale: 1:1 User: GDyess Plot Date: 15-OCT-2010 10:41:23 AM

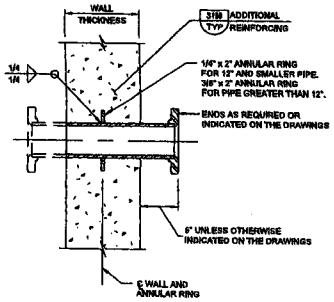

P310 TYP N — WALL THIMBLE FOR STEEL PIPE

05-16-09

ADJUSTABLE PIPE SADDLE SUPPORT SCHEDULE DIMENSIONS IN INCHES					
SIZE OF SUPPORTED PIPE	PIPE SIZE "A"	PIPE SIZE "B"	"C"	"D"	
				MINIMUM	MAXIMUM
2 1/2 *	2 1/2	1 1/2	9	8	13
3	2 1/2	1 1/2	9	8 1/2	13 1/2
3 1/2	2 1/2	1 1/2	9	9 1/2	13 1/2
4	3	2 1/2	9	9 1/2	14
5	3	2 1/2	9	10 1/2	15 1/2
6	3	2 1/2	9	11 1/2	16 1/2
10	3	2 1/2	9	13 1/2	18 1/2
12	3	2 1/2	9	15	19 1/2
14	4	3	11	16 1/2	20 1/2
16	4	3	11	17 1/2	22 1/2
18	6	3 1/2	13 1/2	19 1/2	24
20	6	3 1/2	13 1/2	21	25 1/2
24	6	4	13 1/2	23 1/2	28 1/2
30	6	4	13 1/2	27	31 1/2
32	6	4	13 1/2	28 1/2	32 1/2
36	6	4	13 1/2	30 1/2	34 1/2

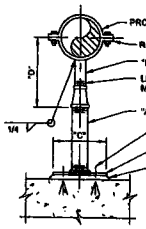

NOTES:

1. HOT-DIP GALVANIZE SUPPORT AFTER FABRICATION.
2. *USE 2 1/2" SUPPORTS FOR PIPES LESS THAN 2 1/2"Ø

P624 TYP NS — ADJUSTABLE PIPE SUPPORT

05-16-09

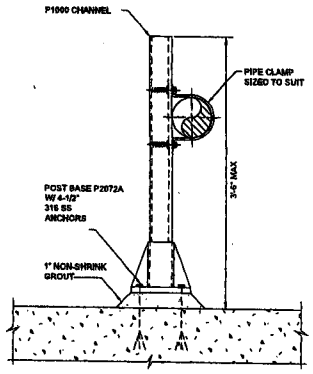

NOTES:

1. MODEL NUMBERS ARE BASED ON UNISTRUT OR EQUAL.

P601 TYP — PIPE SUPPORT

P601-N-P 8-26-09

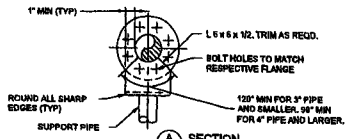

A SECTION

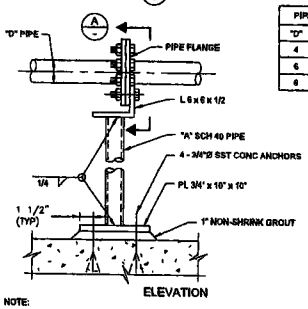

PIPE SIZE	
"D"	"A"
4	2
6	2 1/2
8	4

ELEVATION

NOTE:

1. HOT-DIP GALVANIZE SUPPORT AFTER FABRICATION.

P626 TYP NS — PIPE SUPPORT

07-31-09

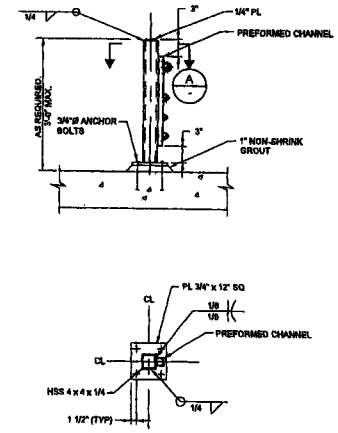

A SECTIONAL PLAN

P615 TYP N — PIPE SUPPORT

08-20-09

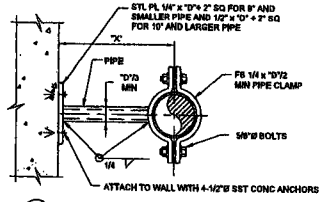

A PLAN - FOR "X" GREATER THAN 12"

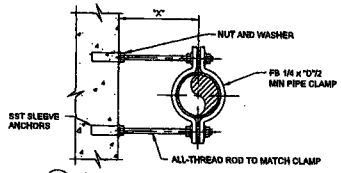

B PLAN - FOR "X" LESS THAN 12"

NOTE:

1. HOT-DIP GALVANIZE SUPPORT AFTER FABRICATION.

P668 TYP N — VERTICAL PIPE SWAY BRACE

07-31-09

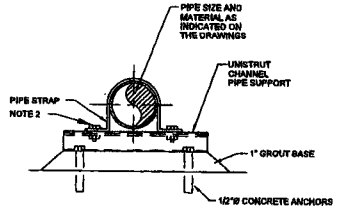

A SECTION

NOTES

1. CHANNELS SHALL BE HOT DIPPED GALVANIZED UNLESS NOTED OTHERWISE.
2. BOLTS & CHANNEL NUTS SHALL BE STAINLESS STEEL HARDWARE AND NON-STAINLESS STEEL CHANNEL AND STRAPS UNLESS OTHERWISE NOTED.

P618 TYP — FLOOR PIPE SUPPORT

P618-N-P 06-01-09

1. CONCRETE CONSTRUCTION SHALL COMPLY WITH ACI "BUILDING CODE REQUIREMENTS FOR STRUCTURAL CONCRETE" (ACI 318) AND "CODE REQUIREMENTS FOR ENVIRONMENTAL ENGINEERING CONCRETE STRUCTURES (ACI 350-06) AND COMMENTARY (ACI 350R-06)."
2. UNLESS OTHERWISE INDICATED ON THE DRAWINGS, MINIMUM REINFORCEMENT OF CONCRETE WALLS OR SLABS SHALL BE:
   10" THICK OR LESS - USE #5 @ 12" EW
   MORE THAN 10" THICK - USE #5 @ 12" EWEF
3. WALL REINFORCEMENT AT CORNERS OR JUNCTIONS OF WALLS SHALL BE CONTINUOUS, LAP SPLICED, OR TERMINATED IN AN ACI STANDARD 90 DEGREE HOOK. LAP SPLICES SHALL CONFORM WITH NOTE 12.
4. UNLESS OTHERWISE INDICATED ON THE DRAWINGS, BARS SHALL BE DOWELED. DOWELS SHALL BE THE SAME SIZE AND SPACING AS THE REINFORCEMENT WHICH IS SPLICED TO THE DOWELS.
5. SLABS, BEAMS AND COLUMN REINFORCING BARS SHALL HAVE A MINIMUM EXTENSION OR ANCHORAGE INTO SUPPORTS IN ACCORDANCE WITH ACI 318 AND ACI 350.
6. STIRRUP SUPPORT BARS SHALL BE PROVIDED TO SECURE TOP BARS AGAINST DISPLACEMENT AS REQUIRED.
7. UNLESS OTHERWISE INDICATED ON THE DRAWINGS, CONCRETE COVER OVER #11 AND SMALLER REINF BARS SHALL BE AS FOLLOWS:
   A. SLABS AND JOISTS:
      FORMED CONCRETE SURFACES AND UNFORMED TOP SURFACES FOR DRY CONDITIONS:
         #7 BARS AND SMALLER.....1"
         #8 BARS AND LARGER.....1 1/2"
      FORMED CONCRETE SURFACES AND UNFORMED TOP SURFACES EXPOSED TO WEATHER, IN CONTACT WITH SOIL OR WATER, OR LOCATED OVER WATER.....2"
   B. BEAMS AND COLUMNS:
      FORMED CONCRETE SURFACES FOR DRY CONDITIONS:
         STIRRUPS, SPIRALS, AND TIES.....1 1/2"
         PRINCIPAL REINFORCEMENT.....2"
      FORMED CONCRETE SURFACES EXPOSED TO WEATHER, IN CONTACT WITH SOIL OR WATER, OR BEAMS LOCATED OVER WATER:
         STIRRUPS AND TIES.....2"
         PRINCIPAL REINFORCEMENT.....2 1/2"
   C. WALLS:
      FORMED CONCRETE SURFACES FOR DRY CONDITIONS:
         #7 BARS AND SMALLER.....1"
         #8 BARS AND LARGER.....1 1/2"
      FORMED CONCRETE SURFACES EXPOSED TO WEATHER, OR IN CONTACT WITH SOIL OR WATER.....2"

S101 TYP S — REINFORCED CONCRETE NOTES

SHEET 1 OF 3 08-31-07

REV	DATE	BY	DESCRIPTION

PROJECT NO. 8340A10 FILE NAME: 8340A10_T-06.dgn

DESIGNED MJG
DRAWN GD
CHECKED RDJ
DATE OCTOBER 2010

carollo

ARIZONA WATER COMPANY
OASIS ARSENIC TREATMENT FACILITY EXPANSION
TYPICAL
TYPICAL DETAILS VI

VERIFY SCALES
BAR IS ONE INCH ON ORIGINAL DRAWING
0 1"
IF NOT ONE INCH ON THIS SHEET, ADJUST SCALES ACCORDINGLY

JOB NO. 8340A.10
DRAWING NO. T-06
SHEET NO. 33 OF 36

Plot Date: 15-OCT-2010 10:41:40 AM User: GDavis Model: Layout1 ColorTable: gtsetup.ctb DesignDate: Carollo_Std_Pus_v0105.pen PlotScale: 1:1 LAST SAVED BY: gdavis

D. FOR FOOTINGS AND BASE SLABS:

FORMED VERTICAL CONCRETE SURFACES.....2"

AT UNFORMED CONCRETE SURFACES CAST AGAINST THE SOIL OR CONCRETE WORK MATS.....3"

TOP SURFACE OF FOOTINGS AND BASE SLABS.....SAME AS SLABS

8. KEYWAYS AND WATERSTOP SHALL END 3" BELOW THE TOP OF WALLS, UNLESS THERE IS A SLAB ON TOP OF THE WALL, IN WHICH CASE IT SHALL END AT THE BOTTOM OF THE SLAB. IN JOINTS WHERE WATERSTOP TERMINATES AT ADJOINING SLAB OR WALL, WATERSTOP SHALL BE EMBEDDED IN ADJOINING SLAB OR WALL A MINIMUM OF 6".

9. CONCRETE CURING SHALL BE IN ACCORDANCE WITH THE CONTRACT DOCUMENTS. WHERE WATER CURING IS REQUIRED, MEMBRANE CURING IS NOT ALLOWED. THE CONTRACTOR IS WARNED THAT WATER CURING IS DIFFICULT AT TIMES DUE TO WIND AND DRY CONDITIONS. THE CONTRACTOR SHALL STUDY REQUIREMENTS AND SHALL FURNISH ADEQUATE SYSTEMS TO PROVIDE WATER CURING WHERE REQUIRED. TOP OF WALLS SHALL BE KEPT VISIBLY MOIST AT ALL TIMES AND SHALL BE FLOODED NOT LESS THAN THREE TIMES DAILY.

10. WATERSTOP SHALL BE PLACED IN CONSTRUCTION, AND EXPANSION JOINTS IN WATERBEARING SLABS AND WALLS UNLESS OTHERWISE INDICATED ON THE DRAWINGS, AND IN WALLS AND SLABS SUBJECTED TO GROUNDWATER. WATERSTOP IN THE WALLS SHALL BE CARRIED INTO SLABS AND SHALL BE SPLICED WITH THE WATERSTOP IN THE SLABS.

11. NO BACKFILL SHALL BE PLACED AGAINST WALLS UNTIL:
A. WALLS HAVE BEEN CAST FULL HEIGHT OF STRUCTURE AND CONCRETE HAS REACHED THE SPECIFIED STRENGTH
B. CONNECTING SLABS AND BEAMS HAVE BEEN CAST AND CONCRETE HAS REACHED THE SPECIFIED STRENGTH.

12. LAP SPLICES:
A. WHEN MULTIPLE BARS ARE SPLICED AT THE SAME SECTION, THE CLEAR BAR SPACING IS THE MINIMUM CLEAR DISTANCE BETWEEN THE BARS OUTSIDE THE SPLICE LENGTH LESS ONE BAR DIAMETER.
B. UNLESS OTHERWISE INDICATED ON THE DRAWINGS, THE BARS AT A LAP SPLICE SHALL BE IN CONTACT WITH EACH OTHER.
C. FOLLOWING TABULATED VALUES ARE CALCULATED FOR:
FY = 60,000 PSI FOR REINFORCING BARS
FC = 4,000 PSI FOR CONCRETE
D. TOP BARS ARE HORIZONTAL REINFORCEMENT SO PLACED THAT MORE THAN 12 INCHES OF FRESH CONCRETE IS CAST IN THE MEMBER BELOW THE BAR.

E. HORIZONTAL BARS IN CIRCULAR WALLS OF HYDRAULIC STRUCTURES SHALL BE SPLICED WITH TOP BAR LAP SPLICES. ADJACENT LAP SPLICES SHALL BE STAGGERED HORIZONTALLY BY NOT LESS THAN ONE LAP LENGTH NOR 3 FEET FROM CENTER OF LAP BELOW TO ADJACENT CENTER OF LAP ABOVE, AND SHALL NOT COINCIDE IN VERTICAL ARRAYS MORE FREQUENTLY THAN EVERY THIRD BAR.

REINFORCING BAR LAP SPLICE

BAR SIZE	MINIMUM COVER (BAR DIA)	MINIMUM CLEAR BAR SPACING (BAR DIA)	LAP SPLICE LENGTH (INCHES)	
			TOP BARS	OTHER BARS
#4	MORE THAN 1	MORE THAN 2	32 *	25 *
	MORE THAN 2	MORE THAN 4	20	15
#5	MORE THAN 1	MORE THAN 2	40 *	31 *
	MORE THAN 2	MORE THAN 4	26	20
#6	MORE THAN 1	MORE THAN 2	48 *	37 *
	MORE THAN 2	MORE THAN 4	30	24
#7	MORE THAN 1	MORE THAN 2	70 *	54 *
	MORE THAN 2	MORE THAN 4	43	33
#8	MORE THAN 1	MORE THAN 2	81 *	62 *
	MORE THAN 2	MORE THAN 4	50	38
#9	MORE THAN 1	MORE THAN 2	90 *	70 *
	MORE THAN 2	MORE THAN 4	56	42
#10	MORE THAN 1	MORE THAN 2	104 *	81 *
	MORE THAN 2	MORE THAN 4	62	48
#11	MORE THAN 1	MORE THAN 2	114 *	88 *
	MORE THAN 2	MORE THAN 4	69	54

NOTES:
1. THE SPLICE LENGTH SHALL BE SELECTED ONLY WHEN BOTH REQUIREMENTS OF THE COVER AND BAR SPACING ARE SATISFIED.
2. * IF THE CLEAR SPACING IS LESS THAN OR EQUAL TO TWO BAR DIAMETERS OR THE COVER IS LESS THAN OR EQUAL TO ONE BAR DIAMETER, THE LAP SPLICE LENGTH SHALL BE INCREASED BY 50 PERCENT.

S101 TYP REINFORCED CONCRETE NOTES
SHEET 2 OF 3 09-31-07

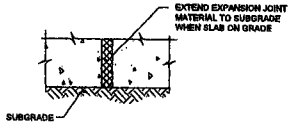

A/1 DETAIL - SLAB ON GRADE

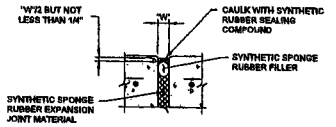

B/1 DETAIL

NOTES:
1. FOR WALLS, FORM ALL JOINT EDGES AT 1/4" CHAMFER.
2. FOR SLABS, EDGE TOP OF EXPOSED SLAB JOINT EDGES AT 1/4" RADIUS.
3. FOR UNDERSIDE OF EXPOSED SLABS, FORM JOINT EDGES AT 1/4" CHAMFER.
4. "W" = 1" THICK UNLESS OTHERWISE INDICATED ON THE DRAWINGS. MIN JOINT WIDTH = 3/8".
5. USE A/- AT UNDERSIDE OF SLABS ON GRADE ONLY. USE B/- AT ALL OTHER LOCATIONS.

S130 TYP NS EXPANSION JOINT
SHEET 3 OF 3 03-16-09

S101 TYP S REINFORCED CONCRETE NOTES
SHEET 3 OF 3 09-31-07

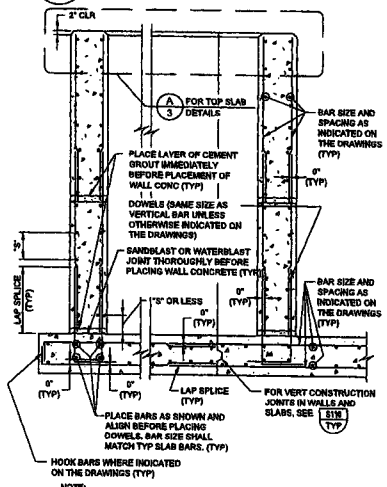

NOTE:
1. "S" = BAR SPACING INDICATED ON THE DRAWINGS.

WITHOUT WATERSTOP

S140 TYP S WALL AND SLAB JOINTS
SHEET 1 OF 3 03-16-09

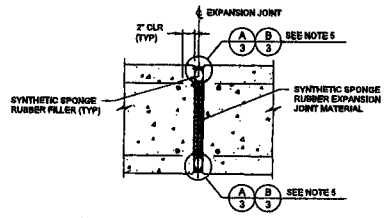

NON-WATER BEARING SLAB OR WALL

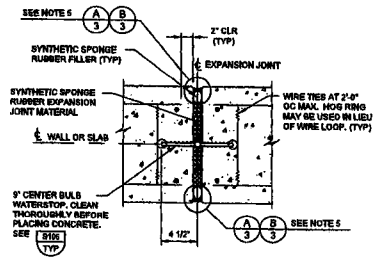

WATER BEARING SLAB OR WALL

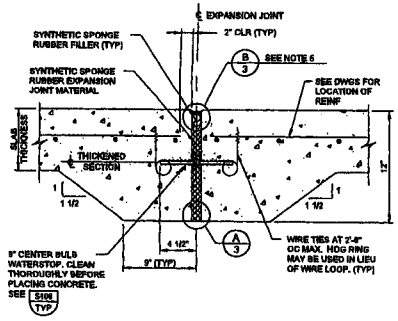

WATER BEARING SLAB LESS THAN 12" THICK

S130 TYP NS EXPANSION JOINT
SHEET 1 OF 3 03-16-09

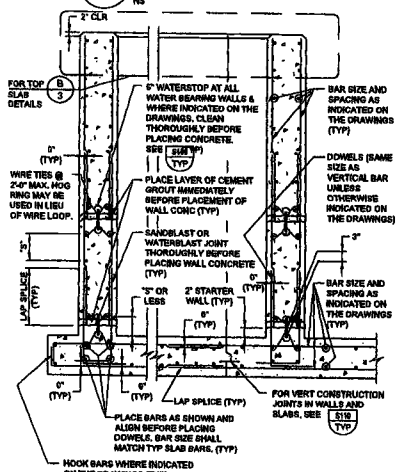

NOTE:
1. "S" = BAR SPACING INDICATED ON THE DRAWINGS.

WITH WATERSTOP

S140 TYP S WALL AND SLAB JOINTS
SHEET 2 OF 3 03-16-09

S130 TYP NS EXPANSION JOINT
SHEET 2 OF 3 03-16-09

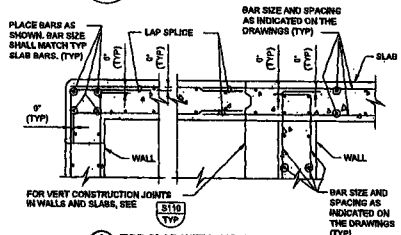

A/1 TOP SLAB WITHOUT WATERSTOP

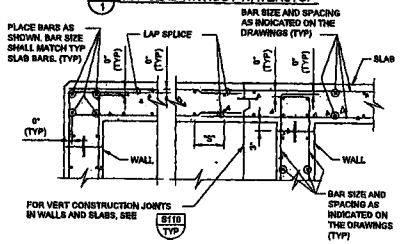

B/2 TOP SLAB WITH WATERSTOP

S140 TYP S WALL AND SLAB JOINTS
SHEET 3 OF 3 03-16-09

REV	DATE	BY	DESCRIPTION

DESIGNED MJG
DRAWN GD
CHECKED RDJ
DATE OCTOBER 2010

REGISTERED PROFESSIONAL ENGINEER 17736 MARK J. GRODS ARIZONA U.S.A. EXPIRES 09-30-2012

carollo

ARIZONA WATER COMPANY

OASIS ARSENIC TREATMENT FACILITY EXPANSION

TYPICAL

TYPICAL DETAILS VII

VERIFY SCALES: BAR IS ONE INCH ON ORIGINAL DRAWING 0 1"
IF NOT ONE INCH ON THIS SHEET, ADJUST SCALES ACCORDINGLY

JOB NO. 8340A.10
DRAWING NO. T-07
SHEET NO. 34 OF 36

PROJECT NO. 8340A10 FILE NAME: 8340A10_T-07.dgn

LAST SAVED BY: gdavis
Model: Layout1 ColorTable: gatsdk.ctb Design/Scale: Carollo_Std_Pen_KGS5.pen PlotScale: 1:1
User: GDavis Plot Date: 15-OCT-2010 10:41:53 AM

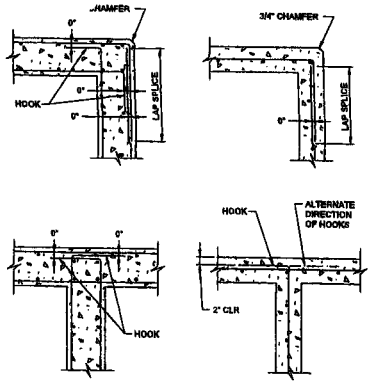

NOTE:

1. ALL HOOKS SHALL BE ACI STD 90 DEGREE HOOKS.

S144 TYP S — REINFORCEMENT AT CORNERS AND JUNCTIONS 08-01-05

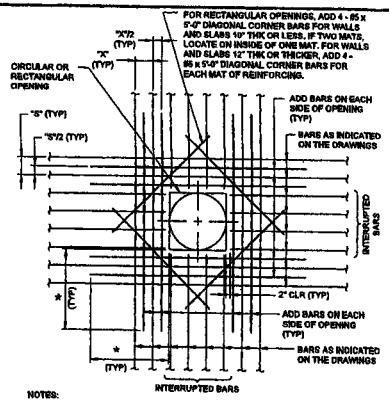

NOTES:

1. AREA OF ADD BARS AT EACH EDGE OF OPENING IN EACH DIRECTION SHALL MATCH 1/2 THE CROSS SECTIONAL AREA OF THE INTERRUPTED BARS.
2. PROVIDE STANDARD ACI HOOKS ON BARS IF STRAIGHT EXTENSION, PAST THE OPENING, CANNOT BE ACHIEVED.
3. PLACE ADD BARS IN SAME PLANES AS INTERRUPTED REINFORCING.
4. PLACE #5 DIAGONAL BARS UNDER INTERRUPTED REINFORCING.
5. *. DIMENSION EQUALS OPENING DIMENSION MEASURED PERPENDICULAR TO ADD BARS PLUS LAP SPLICE LENGTH.

S180 TYP NS — ADDITIONAL REINFORCING AT OPENINGS IN CONCRETE SLABS OR WALLS 07-31-08

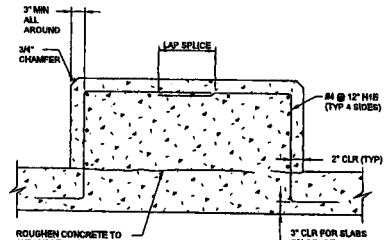

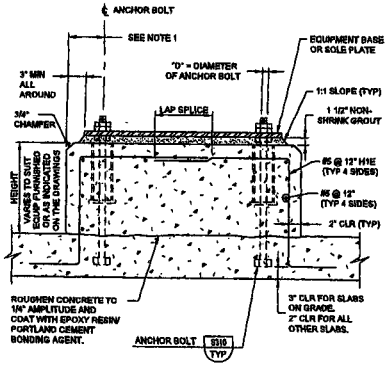

NOTES:

1. THE EDGE DISTANCE ON THE ANCHOR BOLTS SHALL NOT BE LESS THAN 5" OR 8 x "D".
2. WHERE CONCRETE SLAB OR BEAM THICKNESS WILL NOT ACCOMMODATE THE ANCHOR BOLT, PROVIDE EXTRA THICKNESS OR SLAB OR BEAM.

S301 TYP J — EQUIPMENT BASE 07-08-08

S302 TYP N — EQUIPMENT BASE 04-30-07

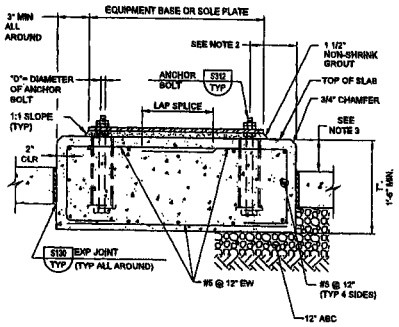

NOTES:

1. PAD DIMENSIONS AND ANCHOR BOLT SIZE SHALL CONFORM TO EQUIPMENT MANUFACTURER'S REQUIREMENTS.
2. THE EDGE DISTANCE ON THE ANCHOR BOLTS SHALL NOT BE LESS THAN 6" OR 8 x "D".
3. HEIGHT VARIES TO SUIT EQUIPMENT FURNISHED OR AS INDICATED ON THE DRAWINGS.

S306 TYP N — ISOLATED EQUIPMENT PAD 04-30-07

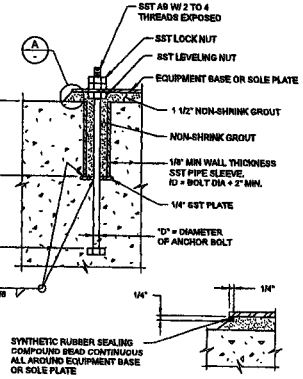

NOTES:

1. ANCHOR BOLT DIAMETER AS INDICATED ON THE DRAWINGS. IF NOT INDICATED ON THE DRAWINGS, THE ANCHOR BOLT SIZE SHALL BE AS RECOMMENDED BY THE EQUIPMENT MANUFACTURER.
2. WHERE CONCRETE SLAB OR BEAM THICKNESS WILL NOT ACCOMMODATE THE ANCHOR BOLT, PROVIDE EXTRA THICKNESS OF SLAB OR BEAM.
3. PREFABRICATED PLASTIC ANCHOR BOLT SLEEVE OPTIONAL.
4. DO NOT USE ALL THREAD RODS AS A SUBSTITUTE FOR BOLTS WITH A BOLT HEAD. SMOOTH RODS THREADED AT THE ENDS MAY BE USED IF ACCEPTABLE TO THE ENGINEER. DO NOT WELD NUTS TO THE THREADED RODS.

S310 TYP N — ANCHOR BOLT 07-31-08

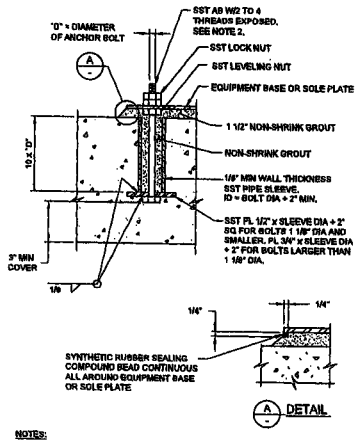

NOTES:

1. ANCHOR BOLT DIAMETER AS INDICATED ON THE DRAWINGS. IF NOT INDICATED ON THE DRAWINGS, THE ANCHOR BOLT SIZE SHALL BE AS RECOMMENDED BY THE EQUIPMENT MANUFACTURER.
2. DO NOT USE ALL THREAD RODS AS A SUBSTITUTE FOR BOLTS WITH A BOLT HEAD.

S312 TYP N — ANCHOR BOLT 07-31-08

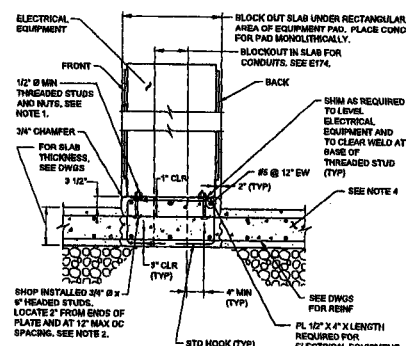

NOTES:

1. FIELD INSTALL THREADED STUDS. LOCATE STUDS TO SUIT EQUIPMENT. THREADED STUD DIA AS REQUIRED FOR ELECTRICAL EQUIPMENT.
2. THE SPACING OF HEADED STUDS ON THE PLATE SHALL BE REDUCED AS REQUIRED TO PREVENT OVERSTRESS OF THE PLATE AND HEADED STUDS DUE TO SEISMIC LOAD FROM THE ELECTRICAL EQUIPMENT SUPPLIED.
3. THE INSTALLED PLATE SHALL NOT DEVIATE FROM A STRAIGHT LINE BY MORE THAN 1/8" IN 10 FEET.
4. PLACE CONCRETE FOR ELECTRICAL EQUIPMENT CONCRETE PAD AFTER REST OF SLAB HAS BEEN PLACED. ADJUST SLAB REINFORCEMENT AS REQUIRED FOR HEADED STUD PLACEMENT.

S332 TYP NR — ELECTRICAL EQUIPMENT PAD AND ANCHORAGE 02-08-10

REV	DATE	BY	DESCRIPTION

PROJECT NO. 8340A10 FILE NAME: 8340A10_T-08.dgn

DESIGNED MJG
DRAWN GD
CHECKED RDJ
DATE OCTOBER 2010

EXPIRES 09-30-2012

carollo

ARIZONA WATER COMPANY

OASIS ARSENIC TREATMENT FACILITY EXPANSION

TYPICAL

TYPICAL DETAILS VIII

VERIFY SCALES: BAR IS ONE INCH ON ORIGINAL DRAWING 0 — 1" IF NOT ONE INCH ON THIS SHEET, ADJUST SCALES ACCORDINGLY

JOB NO. 8340A.10

DRAWING NO. T-08

SHEET NO. 35 OF 36

Plot Date: 15-OCT-2010 10:42:08 AM User: GDavis Model: Layout1 ColorTable: gbafedu.ctb DesignScript: Carollo_Std_Pen_v0805.pen PlotScale: 1:1 LAST SAVED BY: gdavis

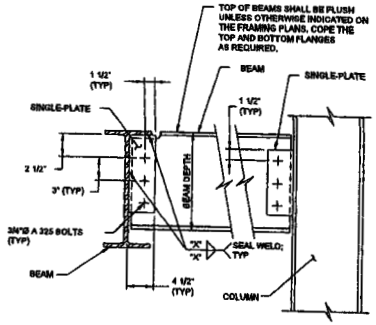

BEAM DEPTH (INCHES)	NUMBER OF BOLTS PER PLATE	PLATE THICKNESS (INCHES)	FILLET WELD SIZE "X" (INCHES)
6-10	2	1/4	1/4
12-18	3	1/4	1/4
18-21	4	3/8	5/16
24-36	6	3/8	5/16

NOTE:

1. SCHEDULE APPLIES TO ALL BEAMS UNLESS NUMBER OF BOLTS PER LEG IS OTHERWISE INDICATED ON THE FRAMING PLAN BY ⬡.

S506 / TYP — STEEL SINGLE PLATE SHEAR CONNECTION 08-01-05

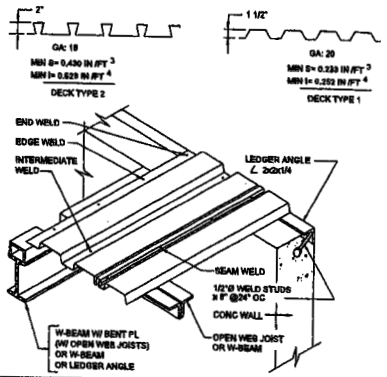

DECK TYPE	SUPPORT PERPENDICULAR TO DECK SPAN		SUPPORT PARALLEL TO DECK SPAN		REMARKS
	END WELD	INTERMEDIATE WELD	EDGE WELD	SEAM WELD	
1	3-1/2" EFFECTIVE DIA PUDDLE WELDS PER 24" UNIT	3-1/2" EFFECTIVE DIA PUDDLE WELDS PER 24" UNIT	1/2" EFFECTIVE DIA PUDDLE WELDS @ 24"OC	1 1/2" LONG FILLET WELDS @ 24"OC	

S707 / TYP — METAL DECK
S707-N-P 08-20-10

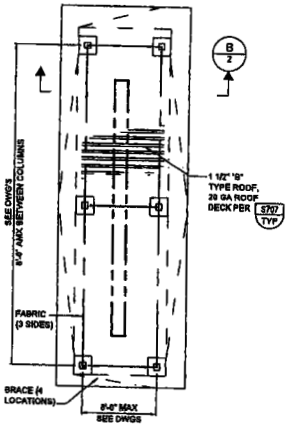

S800 / TYP — SHADE CANOPY
SHEET 1 OF 2

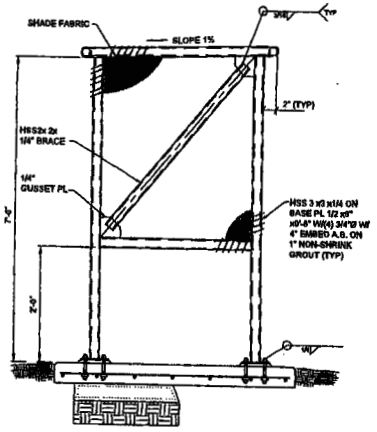

NOTE: CANOPY MEMBERS SHALL BE HSS 3" x 3" x 1/4" UNO

S800 / TYP — SHADE CANOPY
SHEET 2 OF 2

REV	DATE	BY	DESCRIPTION

PROJECT NO. 8340A10 FILE NAME: 8340A10_T-09.dgn

DESIGNED NJG
DRAWN GD
CHECKED RDJ
DATE OCTOBER 2010

carollo

ARIZONA WATER COMPANY
OASIS ARSENIC TREATMENT FACILITY EXPANSION
TYPICAL
TYPICAL DETAILS IX

VERIFY SCALES
BAR IS ONE INCH ON ORIGINAL DRAWING
0 1"
IF NOT ONE INCH ON THIS SHEET, ADJUST SCALES ACCORDINGLY

JOB NO. 8340A.10
DRAWING NO. T-09
SHEET NO. 36 OF 38

Plot Date: 15-OCT-2010 10:02:23 AM User: GDavis Model: Layout1 ColorTable: gthick.ctb DesignSoftware: Carollo_Std_Pen_v0605.pen PlotScale: 1:1 LAST SAVED BY: gdavis

CALCULATIONS FOR RETENTION BASIN

BY CAROLLO ENGINEERS / GORDON THELIN, P.E.

FEBRUARY 2, 2011

ARIZONA WATER COMPANY

OASIS WATER CAMPUS ARSENIC TREATMENT FACILITY EXPANSION

558 SOUTH PALM DRIVE, MESA, AZ 85208

Registered Professional Engineer (Civil)
CERTIFICATE NO.
44737
GORDON D.
THELIN
Date Signed 2/1/11
ARIZONA, U.S.A.

EXPIRES 06-30-2012

OWNER'S COPY

This is a true copy of the approved plan and is to be kept ...

B201005165

REVISED

FEB 1 4 2011

Drain-down Time Calculations

Elapsed Time Time (hr)	Infiltration Rate of the Retention Basin (cfs)	Infiltration Volume (ft^3)	Infiltration Rate of the Dry Well (cfs)	Infiltration Volume of the Dry Well (ft^3)	Elapsed Volume (ft^3)	Remaining Volume (ft^3)
0	0.012	0.00	0.10	0	0.00	5,593.00
0.25	0.012	11.19	0.10	90	101.19	5,491.81
0.5	0.012	11.19	0.10	90	101.19	5,390.62
0.75	0.012	11.19	0.10	90	101.19	5,289.43
1	0.012	11.19	0.10	90	101.19	5,188.24
1.25	0.012	11.19	0.10	90	101.19	5,087.05
1.5	0.012	11.19	0.10	90	101.19	4,985.86
1.75	0.012	11.19	0.10	90	101.19	4,884.67
2	0.012	11.19	0.10	90	101.19	4,783.48
2.25	0.012	11.19	0.10	90	101.19	4,682.29
2.5	0.012	11.19	0.10	90	101.19	4,581.10
2.75	0.012	11.19	0.10	90	101.19	4,479.91
3	0.012	11.19	0.10	90	101.19	4,378.72
3.25	0.012	11.19	0.10	90	101.19	4,277.53
3.5	0.012	11.19	0.10	90	101.19	4,176.34
3.75	0.012	11.19	0.10	90	101.19	4,075.15
4	0.012	11.19	0.10	90	101.19	3,973.96
4.25	0.012	11.19	0.10	90	101.19	3,872.77
4.5	0.012	11.19	0.10	90	101.19	3,771.58
4.75	0.012	11.19	0.10	90	101.19	3,670.39
5	0.012	11.19	0.10	90	101.19	3,569.20
5.25	0.012	11.19	0.10	90	101.19	3,468.01
5.5	0.012	11.19	0.10	90	101.19	3,366.82
5.75	0.012	11.19	0.10	90	101.19	3,265.63
6	0.012	11.19	0.10	90	101.19	3,164.44
6.25	0.012	11.19	0.10	90	101.19	3,063.25
6.5	0.012	11.19	0.10	90	101.19	2,962.06
6.75	0.012	11.19	0.10	90	101.19	2,860.87
7	0.012	11.19	0.10	90	101.19	2,759.68
7.25	0.012	11.19	0.10	90	101.19	2,658.49
7.5	0.012	11.19	0.10	90	101.19	2,557.30
7.75	0.012	11.19	0.10	90	101.19	2,456.11
8	0.012	11.19	0.10	90	101.19	2,354.92
8.25	0.012	11.19	0.10	90	101.19	2,253.73
8.5	0.012	11.19	0.10	90	101.19	2,152.54
8.75	0.012	11.19	0.10	90	101.19	2,051.35
9	0.012	11.19	0.10	90	101.19	1,950.16
9.25	0.012	11.19	0.10	90	101.19	1,848.97
9.5	0.012	11.19	0.10	90	101.19	1,747.78
9.75	0.012	11.19	0.10	90	101.19	1,646.59
10	0.012	11.19	0.10	90	101.19	1,545.40
10.25	0.012	11.19	0.10	90	101.19	1,444.21
10.5	0.012	11.19	0.10	90	101.19	1,343.02

10.75	0.012	11.19	0.10	90	101.19	1,241.83
11	0.012	11.19	0.10	90	101.19	1,140.64
11.25	0.012	11.19	0.10	90	101.19	1,039.45
11.5	0.012	11.19	0.00	0	11.19	1,028.26
11.75	0.012	11.19	0.00	0	11.19	1,017.07
12	0.012	11.19	0.00	0	11.19	1,005.88
12.25	0.012	11.19	0.00	0	11.19	994.69
12.5	0.012	11.19	0.00	0	11.19	983.50
12.75	0.012	11.19	0.00	0	11.19	972.31
13	0.012	11.19	0.00	0	11.19	961.12
13.25	0.012	11.19	0.00	0	11.19	949.93
13.5	0.012	11.19	0.00	0	11.19	938.74
13.75	0.012	11.19	0.00	0	11.19	927.55
14	0.012	11.19	0.00	0	11.19	916.36
14.25	0.012	11.19	0.00	0	11.19	905.17
14.5	0.012	11.19	0.00	0	11.19	893.98
14.75	0.012	11.19	0.00	0	11.19	882.79
15	0.012	11.19	0.00	0	11.19	871.60
15.25	0.012	11.19	0.00	0	11.19	860.41
15.5	0.012	11.19	0.00	0	11.19	849.22
15.75	0.012	11.19	0.00	0	11.19	838.03
16	0.012	11.19	0.00	0	11.19	826.84
16.25	0.012	11.19	0.00	0	11.19	815.65
16.5	0.012	11.19	0.00	0	11.19	804.46
16.75	0.012	11.19	0.00	0	11.19	793.27
17	0.012	11.19	0.00	0	11.19	782.08
17.25	0.012	11.19	0.00	0	11.19	770.89
17.5	0.012	11.19	0.00	0	11.19	759.70
17.75	0.012	11.19	0.00	0	11.19	748.51
18	0.012	11.19	0.00	0	11.19	737.32
18.25	0.012	11.19	0.00	0	11.19	726.13
18.5	0.012	11.19	0.00	0	11.19	714.94
18.75	0.012	11.19	0.00	0	11.19	703.75
19	0.012	11.19	0.00	0	11.19	692.56
19.25	0.012	11.19	0.00	0	11.19	681.37
19.5	0.012	11.19	0.00	0	11.19	670.18
19.75	0.012	11.19	0.00	0	11.19	658.99
20	0.012	11.19	0.00	0	11.19	647.80
20.25	0.012	11.19	0.00	0	11.19	636.61
20.5	0.012	11.19	0.00	0	11.19	625.42
20.75	0.012	11.19	0.00	0	11.19	614.23
21	0.012	11.19	0.00	0	11.19	603.04
21.25	0.012	11.19	0.00	0	11.19	591.85
21.5	0.012	11.19	0.00	0	11.19	580.66
21.75	0.012	11.19	0.00	0	11.19	569.47
22	0.012	11.19	0.00	0	11.19	558.28
22.25	0.012	11.19	0.00	0	11.19	547.09
22.5	0.012	11.19	0.00	0	11.19	535.90

22.75	0.012	11.19	0.00	0	11.19	524.71
23	0.012	11.19	0.00	0	11.19	513.52
23.25	0.012	11.19	0.00	0	11.19	502.33
23.5	0.012	11.19	0.00	0	11.19	491.14
23.75	0.012	11.19	0.00	0	11.19	479.95
24	0.012	11.19	0.00	0	11.19	468.76
24.25	0.012	11.19	0.00	0	11.19	457.57
24.5	0.012	11.19	0.00	0	11.19	446.38
24.75	0.012	11.19	0.00	0	11.19	435.19
25	0.012	11.19	0.00	0	11.19	424.00
25.25	0.012	11.19	0.00	0	11.19	412.81
25.5	0.012	11.19	0.00	0	11.19	401.62
25.75	0.012	11.19	0.00	0	11.19	390.43
26	0.012	11.19	0.00	0	11.19	379.24
26.25	0.012	11.19	0.00	0	11.19	368.05
26.5	0.012	11.19	0.00	0	11.19	356.86
26.75	0.012	11.19	0.00	0	11.19	345.67
27	0.012	11.19	0.00	0	11.19	334.48
27.25	0.012	11.19	0.00	0	11.19	323.29
27.5	0.012	11.19	0.00	0	11.19	312.10
27.75	0.012	11.19	0.00	0	11.19	300.91
28	0.012	11.19	0.00	0	11.19	289.72
28.25	0.012	11.19	0.00	0	11.19	278.53
28.5	0.012	11.19	0.00	0	11.19	267.34
28.75	0.012	11.19	0.00	0	11.19	256.15
29	0.012	11.19	0.00	0	11.19	244.96
29.25	0.012	11.19	0.00	0	11.19	233.77
29.5	0.012	11.19	0.00	0	11.19	222.58
29.75	0.012	11.19	0.00	0	11.19	211.39
30	0.012	11.19	0.00	0	11.19	200.20
30.25	0.012	11.19	0.00	0	11.19	189.01
30.5	0.012	11.19	0.00	0	11.19	177.82
30.75	0.012	11.19	0.00	0	11.19	166.63
31	0.012	11.19	0.00	0	11.19	155.44
31.25	0.012	11.19	0.00	0	11.19	144.25
31.5	0.012	11.19	0.00	0	11.19	133.06
31.75	0.012	11.19	0.00	0	11.19	121.87
32	0.012	11.19	0.00	0	11.19	110.68
32.25	0.012	11.19	0.00	0	11.19	99.49
32.5	0.012	11.19	0.00	0	11.19	88.30
32.75	0.012	11.19	0.00	0	11.19	77.11
33	0.012	11.19	0.00	0	11.19	65.92
33.25	0.012	11.19	0.00	0	11.19	54.73
33.5	0.012	11.19	0.00	0	11.19	43.54
33.75	0.012	11.19	0.00	0	11.19	32.35
34	0.012	11.19	0.00	0	11.19	21.16
34.25	0.012	11.19	0.00	0	11.19	9.97
34.5	0.012	11.19	0.00	0	11.19	0.00

Depth	Volume of the Retention Basin (ft^3)	Volume of Water Stored for 100 yr storm	
3.8	7,586.98		
3.7	7,387.32		
3.6	7,187.66		
3.5	6,988.00		
3.4	6,788.34		
3.3	6,588.69		
3.2	6,389.03		
3.1	6,189.37		
3	5,989.71		
2.9	5,790.06		
2.8	5,590.40	5,590.40	* 100-yr; 2 hr storm volume
2.7	5,390.74	5,390.74	
2.6	5,191.09	5,191.09	
2.5	4,991.43	4,991.43	
2.4	4,791.77	4,791.77	
2.3	4,592.11	4,592.11	
2.2	4,392.46	4,392.46	
2.1	4,192.80	4,192.80	
2	3,993.14	3,993.14	
1.9	3,793.49	3,793.49	
1.8	3,593.83	3,593.83	
1.7	3,394.17	3,394.17	
1.6	3,194.51	3,194.51	
1.5	2,994.86	2,994.86	
1.4	2,795.20	2,795.20	
1.3	2,595.54	2,595.54	
1.2	2,395.89	2,395.89	
1.1	2,196.23	2,196.23	
1	1,996.57	1,996.57	
0.9	1,796.91	1,796.91	
0.8	1,597.26	1,597.26	
0.7	1,397.60	1,397.60	
0.6	1,197.94	1,197.94	
0.5	998.29	998.29	
0.4	798.63	798.63	
0.3	598.97	598.97	
0.2	399.31	399.31	
0.1	199.66	199.66	
0	0	0	

Volume in the Retention Basin	Height of the Structure	
5,590.40	2.80	Starting Height
1,028.26	0.52	Dry Well Intake Height

Perc Test Results	Actual (in/hr)	De-rated (in/hr)[1]	De-rated (cfs)
P-1	1.08	0.54	0.012
P-2	1.5	0.75	0.017
Bottom Area of the Retention Basin[2]			
Width (ft)	Length (ft)	Area (ft^2)	
6.5	153	994.5	
Assumed infiltration Rate of Dry Well (cfs)			
0.1			

[1] per Drainage Design Manual for Maricopa County Hydraulics Manual - used lowest De-rated value.
[2] per Drainage Design Manual for Maricopa County Hydraulics Manual - assumed minimum infiltration rate for dry wells.

STRUCTURAL CALCULATIONS

For

Arizona Water Company
Oasis Arsenic Treatment Facility Expansion

Mesa, AZ

Registered Professional Engineer (Structural)
CERTIFICATE NO.
41080
DAVID A.
GEISLER
Date Signed 12-2-10
ARIZONA, U.S.A.
EXPIRES 6-30-2013

December 2010

Carollo Project No. 8340A.10

INDEX

RETAINING WALL:

Input Information	1
Overturning Stability	2
Sliding	3
Bearing Pressure	3
Reinforcement	4-5

B201005165
REVISED
FEB 14 2011

carollo
Engineers...Working Wonders With Water™

BY:	DAG	DATE:	Dec-10	CLIENT:	Arionza Water Company	SHEET:	1
CHKD:		DESCRIPTION:			Oasis A.T.F.E.	JOB NO:	8340A.10
DESIGN TASK:					Retention Area Retaining Wall		

Design Data Design based on a 1-ft strip of wall.

hhs=(lh)*tan(β)= 0.00

Wall:

(1) Wall height from top of foundation, h = 7 ft
(2) Wall thickness, tw = 0.67 ft

Foundation:

(1) Footing thickness, tf = 1 ft
(2) Toe length from face of wall, lt = 4.33 ft
(3) Heel length from face of wall, lh = 1 ft
(4) Shear key height, hkey = 2.5 ft
(5) Shear key thickness, bkey = 0.67 ft
(6) Distance from toe to shear key, dkey = 4.67 ft

Soil Backfill:

(1) Height toe backfill above top foun, ht = 0.5 ft
(2) Height heel backfill above top of foun, hh = 7 ft
(3) Angle of backfill w/ horz. line (max β=10°), β = 0 degree

Soil Properties:

(1) Unit weight, w = 0.11 k/ft³
(2) Active or at-rest lateral pressure, active = 0.08 k/ft³
(3) Passive lateral pressure, passive = 0.35 k/ft³
(4) Passive pressure starting Point below top of toe backfill, hp = 0 ft
(5) Coefficient of friction between footing & soil = 0.5
(6) Cohesion, co = 0 ksf
(7) Allow. static soil bearing pressure, qal = 4 ksf
(8) Allow. seismic soil bearing pressure, 5.5 ksf

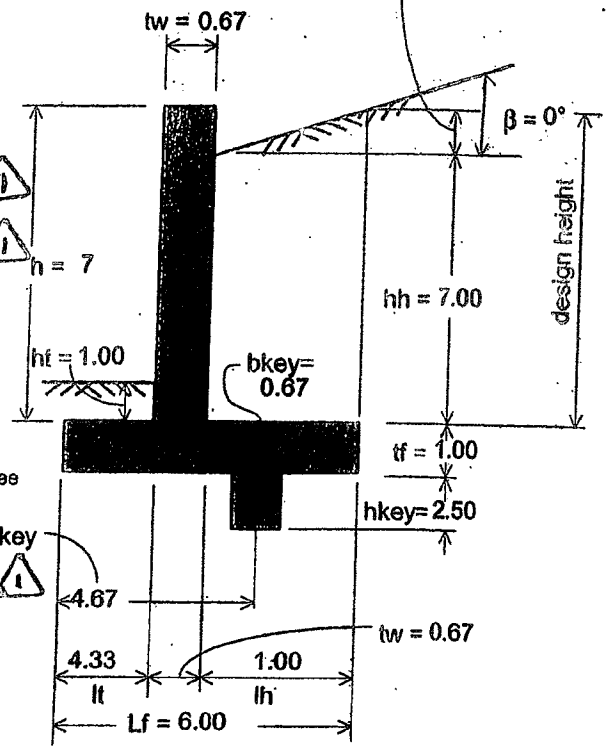

Other related load data:

(1) Vertical live load surcharge on heel soil, 0.0 ksf
(2) Horizontal live load surcharge from heel side, 0.0 ksf
(3) Misc axial load @ distance "Y", P_m = 0 klp
(4) Misc moment @ distance "Y", M_m = 0 ft-k
(5) Misc shear @ distance "Y", V_m = 0 klp
(6) Distance to misc load Pm, Mm, Vm Y_m = 0 ft
(7) Resultant lateral soil seismic load, P_{eq} = 0 klp

misc loads

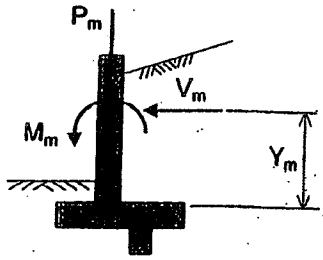

(8) Height of resultant lateral seismic soil load from bottom of footing...
Fractional height of soil to locate Peq = 0.333 c = 0.333*(hhs+hh+tf)
(9) Seismic %g design acceleration, (decimal) = 0.0
(10) Concrete strength, f'c = 4 ksi
(11) Yield strength of reinforcement, fy = 60 ksi

$pt = 6(P_{eq})c/H^2 - 2(P_{eq})/H$

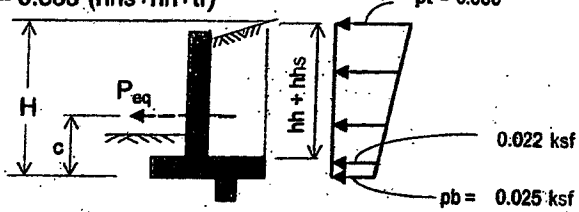

$pb = 4(P_{eq})/H - 6(P_{eq})c/H^2$

equivalent seismic soil pressure load

REV 1: CHANGED ACTIVE PRESSURE TO SATURATED COND.

carollo

Engineers...Working Wonders With Water™

BY:	DAG	DATE:	Dec-10	CLIENT:	Arionza Water Company	SHEET:	2
CHKD:		DESCRIPTION:			Oasis A.T.F.E.	JOB NO:	8340A.10
DESIGN TASK:					Retention Area Retaining Wall		

(1) COMPUTE OVERTURNING STABILITY:

(A-1) Stabilizing forces about toe tip for static resistive loads:

Component		Force (kip)	Distance from Toe (ft)		Moment (k-ft)
wall		0.704	4.665		3.282
foundation		0.900	3.000		2.700
shear key		0.251	4.670		1.173
heel soil level backfill		0.770	5.500		4.235
heel soil sloped wedge		0.000	5.667		0.000
toe soil backfill		0.476	2.165		1.031
misc load, P_m		0.000	0.000		0.000
sum w/o surcharge:	sum=	3.101	4.006	sum=	12.421
vertical surcharge		0.150	5.500		0.825
sum w/ surcharge:	sum=	3.251	4.074	sum=	13.246

(A-2) Overturning forces about toe tip for static overturning loads:

Component		Horz. Force (kip)	distance from toe or Dist. from bott footing (ft)		Moment (k-ft)
horz heel soil pressure		2.560	2.667		6.827
misc Moment M_m		-	-		0.000
misc shear V_m		0.000	0.000		0.000
sum w/o surcharge:	sum=	2.560	2.667	sum=	6.827
horizontal surcharge		0.400	4.000		1.600
sum w/ surcharge:	sum=	2.960	2.847	sum=	8.427

(A-3) Factor safety for overturning w/o surcharge = (12.421) / (6.827) = [redacted] > 1.5 ,OK

Factor safety for overturning with surcharge = (13.246) / (8.427) = [redacted] > 1.5 ,OK

(B) Seismic + static (Assume no surcharge loads.)

(B-1) overturning moment about toe tip for seismic + static lateral loads: seismic, Fp = 0.1* Wp

Component		weight (kip)		horz.forces (kip)	Distance from base (ft)		Moment (k-ft)
wall seismic		0.704		0.070	4.500		0.317
foundation seismic		0.900		0.090	0.500		0.045
shear key seismic		0.251		0.025	-1.250		-0.031
seismic misc load, P_m		0.000		0.000	0.000		0.000
seismic misc moment, M_m = 0		-		-	-		0.000
seismic misc shear, V_m = 0		-		0.000	0.000		0.000
heel soil seismic, P_{eq} = 0.1		-		0.100	2.664		0.266
static heel soil		0.770		2.560	2.667		6.827
static toe soil		0.476		-	-		-
static misc moment, M_m		-		-	-		0.000
static misc shear, V_m		-		0.000	0.000		0.000
sum w/o surcharge:	sum=	3.101	sum=	2.845	2.609	sum=	7.423

Factor safety for seismic overturning w/o surcharge = (12.421) / (7.423) = [redacted] > 1.1 ,OK

carollo
Engineers...Working Wonders With Water™

BY:	DAG	DATE:	Dec-10	CLIENT:	Arionza Water Company	SHEET:	3
CHKD:		DESCRIPTION:			Oasis A.T.F.E.	JOB NO:	8340A.10
DESIGN TASK:					Retention Area Retaining Wall		

(2) COMPUTE SLIDING STABILITY:

(A) Static loads:

	(sliding with surcharge)		(sliding without surcharge)	
(1). driving force (see A-2, page 2) =	2.960	kip	driving force = 2.560	kip
(2). resistive forces (see A-1, page 2):				
friction = (coef. fric.)(weights) = (0.35)(3.251) =	1.138	kip	friction = 1.085	kip
cohesion = 0 * 6 =	0.000	kip	cohesion = 0.000	kip
passive pressures = 0.35 * (4.5)² / 2 =	3.544	kip	passive = 3.544	kip
	4.682	kip	4.629	kip
(3). factor safety w/ surcharge = 4.682 / 2.96 =	1.582		F.S. w/o surcharge = 1.808	
	F.S. > 1.5 ,OK		F.S. > 1.5 ,OK	

(B) Seismic + static loads:

(1). driving forces (see B-1, page 2) =	2.845	kip
(2). resistive forces (see A-1, page 2):		
friction = (coef. fric.)(weights) = (0.35)(3.101) =	1.085	kip
cohesion = 0 * 6 =	0.000	kip
passive pressures = 0.35 * (4.5)² / 2 =	3.544	kip
	4.629	kip
(3). factor safety sliding = 4.629 / 2.845 =	1.627	> 1.1 ,OK

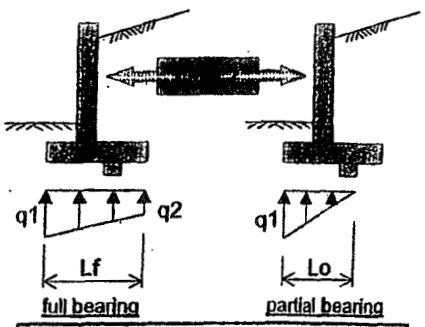

Soil Bearing Pressure Cases

(3) COMPUTE SOIL BEARING PRESSURE :

(A). static load (with surcharge): total vertical load, Po = 3.251 kip

L_{oc} = location of "Po" from the toe.

L_{oc} = (stabilizing moment - overturning moment) / Po

L_{oc} = (13.246 - 8.427) / 3.251 =	1.483	ft	
e = Lf / 2 - L_{oc} = 6 / 2 - 1.483 =	1.517	ft	e > kern, (therefore partial soil bearing will dictate the analysis)
kern = Lf / 6 = 6 / 6 =	1.000	ft	
Mo = moment at center of foundation = Po * e =	4.933	ft-k	
partial soil bearing length, Lo = 3*(Lf/2 - e) =	4.448	ft	
q1 = gross pressure @ toe side =2 * Po / Lo =	1.462	ksf,	q @ toe wall face = 0.039 ksf
q2 = gross pressure @ heel side =	0.000	ksf,	q @ heel wall face = 0.000 ksf
q1(net) = q1(gross) - (conc.-soil density)*tf - (soil)*ht =	1.312	ksf	

allowable soil bearing = 3 ksf **q1(net) < q(allow) ,OK**

(B). seismic (without surcharge): total vertical load, Po = 3.101 kip

L_{oc} = location of "Po" from the toe.

L_{oc} = (stabilizing moment - overturning moment) / Po

L_{oc} = (12.421 - 7.423) / 3.101 =	1.612	ft	
e = Lf / 2 - L_{oc} = 6 / 2 - 1.612 =	1.388	ft	e > kern, (therefore partial soil bearing will dictate the analysis)
kern = Lf / 6 = 6 / 6 =	1.000	ft	
Mo = moment at center of foundation = Po * e =	4.305	ft-k	
partial soil bearing length, Lo = 3*(Lf/2 - e) =	4.835	ft	
q1 = gross pressure @ toe side =2 * Po / Lo =	1.283	ksf,	q @ toe wall face = 0.134 ksf
q2 = gross pressure @ heel side =	0.000	ksf,	q @ heel wall face = 0.000 ksf
q1(net) = q1(gross) - (conc.-soil density)*tf - (soil)*ht =	1.133	ksf	

allowable soil bearing = 4 ksf **q1(net) < q(allow) ,OK**

carollo

Engineers...Working Wonders With Water™

BY:	DAG	DATE:	Dec-10	CLIENT:	Arionza Water Company	SHEET:	4
CHKD:		DESCRIPTION:			Oasis A.T.F.E.	JOB NO:	8340A.10
DESIGN TASK:					Retention Area Retaining Wall		

(4) COMPUTE REINFORCEMENT:

f'_c = 4 ksi

f_y = 60 ksi

(A) Load factors:

moment load factor for the static load case = [redacted]

shear load factor for the static load case = [redacted]

moment load factor for the static + seismic load case = [redacted]

shear load factor for the static + seismic load case = [redacted]

vert. rebar clear cover, wall = [redacted]

rebar clear cover, top footing = [redacted]

rebar clear cover, bottom footing = [redacted]

wall min vertical temp / shrinkage steel ratio = [redacted]

wall min horiz temp / shrinkage steel ratio = [redacted]

foundation min temp / shrinkage steel ratio = [redacted]

number of curtains wall steel (1 or 2) = [redacted]

number of layers footing steel (1 or 2) = [redacted]

crack control parameter, Z = [redacted]

(B) Retaining wall reinforcement:

Arbitrary point on the wall for shear & moments as measured at distance "y" from the top of footing = [redacted] ft

[redacted]										
Arbitrary point on the wall at y= 2-ft from top of the footing. d = 3.54 "	static	1.7	1.250	2.125	4.567	1.7	2.292	3.896	0.26	0.19
	seismic	1.4	1.089	1.525	4.567	1.4	1.857	2.600		
Bottom of wall. d = 3.54 "	static	1.7	2.310	3.927	4.567	1.7	5.798	9.857	0.73	0.19
	seismic	1.4	2.107	2.950	4.567	1.4	4.998	6.997		
Foundation Toe at the face of the wall. d = 8.50 "	static	1.7	2.123	3.609	10.967	1.7	6.820	11.594	0.31 bott. steel	0.34
	seismic	1.4	1.941	2.718	10.967	1.4	5.998	8.397		
Foundation Heel at the face of the wall. d = 9.50 "	static	1.7	1.070	1.819	12.257	1.7	-0.535	-0.910	0.02 top steel	0.18
	seismic	1.4	0.920	1.288	12.257	1.4	-0.460	-0.644		
Shear Key d = 4.54 "	full passive	1.7	2.844	4.834	5.858	1.7	4.010	6.818	0.35	0.18
Minimum Horizontal Reinforcement	Wall steel for shrinkage / temperature = 0.39 in^2/ft one curtain Foundation steel for shrinkage / temperature = 0.18 in^2/ft each face									

carollo

Engineers...Working Wonders With Water™

BY: DAG DATE: Dec-10 CLIENT: Arionza Water Company SHEET: 5

CHKD: DESCRIPTION: Oasis A.T.F.E. JOB NO: 8340A.10

DESIGN TASK: Retention Area Retaining Wall

Arbitrary point on the wall, (y=2-ft)	static	3.54	2.29	3.90	0.26		0.31	139.9
	seismic	3.54	1.86	2.60				---
bottom of wall	static	3.54	5.80	9.86	0.73		0.88	106.4
	seismic	3.54	5.00	7.00				---
foundation toe	static	8.50	6.82	11.59	0.34		0.47	100.1
	seismic	8.50	6.00	8.40				---
foundation heel	static	9.50	0.54	0.91	0.18		0.47	7.0
	seismic	9.50	0.46	0.64				---

CRACK CONTROL CRITERIA

Z < 95 for extreme exposures
Z < 115 for hydraulic structures
Z < 145 for exterior exposure
Z < 175 interior exposure

Note: crack control is not req'd for the seismic load case.

ARIZONA WATER COMPANY

Oasis Arsenic Treatment Facility Expansion

CONTRACT DOCUMENTS

TECHNICAL SPECIFICATIONS

AGENCY REVIEW SUBMITTAL

August 2010

Registered Professional Engineer (Environmental)
CERTIFICATE NO.
31736
MARK J.
GROSS
Date Signed 9/20/10
ARIZONA, U.S.A.
EXPIRES 09-30-2012

par://Carolbo/Documents/Client/AZ/Arizona Water Co/8340A10/Specifications/Cover (90%)

Arizona Water Company
Oasis Arsenic Treatment Facility Expansion

TABLE OF CONTENTS

DIVISION 1 - GENERAL REQUIREMENTS

Section No.	Title
01110	SUMMARY OF WORK
01116	PROJECT MANUAL LANGUAGE
01140	WORK RESTRICTIONS
01201	PAYMENT PROCEDURES
01292	SCHEDULE OF VALUES
01294	APPLICATIONS FOR PAYMENT
01312	PROJECT MEETINGS
01324B	PROGRESS SCHEDULES AND REPORTS
01329	SAFETY PLAN
01330	SUBMITTAL PROCEDURES
01350	SPECIAL PROCEDURES
01352	ALTERATION PROJECT PROCEDURES
01410	REGULATORY REQUIREMENTS
01424	ABBREVIATIONS
01450	QUALITY CONTROL
01455	SPECIAL TESTS AND INSPECTIONS
01500	TEMPORARY FACILITIES AND CONTROLS
01600	PRODUCT REQUIREMENTS
01610	PROJECT DESIGN CRITERIA
01612	SEISMIC DESIGN CRITERIA
01614	WIND DESIGN CRITERIA
01732	CUTTING AND PATCHING
01738	SELECTIVE DEMOLITION
01756	TESTING, TRAINING, AND FACILITY START-UP
01757	DISINFECTION
01770	CLOSEOUT PROCEDURES
01782	OPERATING AND MAINTENANCE DATA
01800	POST FINAL INSPECTION
01810	COMMISSIONING

DIVISION 2 - SITE WORK

Section No.	Title
02050	BASIC SITE MATERIALS AND METHODS
02200	SITE PREPARATION
02300	EARTHWORK
02318	TRENCHING
02370	RIPRAP
02722	AGGREGATE BASE COURSE
02742	ASPHALTIC CONCRETE PAVING
02952	PAVEMENT RESTORATION AND REHABILITATION

DIVISION 3 - CONCRETE

Section No.	Title
03055	EPOXY BONDING REINFORCING BARS AND ALL THREAD RODS IN CONCRETE
03102	CONCRETE FORMWORK
03150	CONCRETE ACCESSORIES
03154	HYDROPHILIC RUBBER WATERSTOP
03200	CONCRETE REINFORCEMENT
03300	CAST-IN-PLACE CONCRETE
03366	TOOLED CONCRETE FINISHES
03600	GROUTS

DIVISION 5 - METALS

Section No.	Title
05120	STRUCTURAL STEEL
05310	STEEL DECKING
05500	METAL FABRICATIONS

DIVISION 6 - WOOD AND PLASTICS

Section No.	Title
06611	FIBERGLASS REINFORCED PLASTIC FABRICATIONS

DIVISION 9 - FINISHES

Section No.	Title
09960	COATINGS
09974	COATING FOR WELDED STEEL WATER STORAGE TANKS

DIVISION 10 - SPECIALTIES

Section No.	Title
10732	SHADE FABRIC

DIVISION 11 - EQUIPMENT

Section No.	Title
11222	POLYMER DILUTION BLENDERS
11312A	IN-LINE CENTRIFUGAL PUMPS
11312C	RECESSED IMPELLER PUMPS
11312K	SUBMERSIBLE SUMP PUMPS

DIVISION 13 - SPECIAL CONSTRUCTIONS

Section No.	Title
13208	POLYETHYLENE STORAGE TANKS
13209A	PRESSURE FILTER VESSELS AND MEDIA
13209B	WELDED STEEL TANKS
13446	VALVE AND GATE OPERATORS
13447	MOTORIZED OPERATORS

DIVISION 15 - MECHANICAL

Section No.	Title
15050	BASIC MECHANICAL MATERIALS AND METHODS
15052	BASIC PIPING MATERIALS AND METHODS
15061	PIPE SUPPORTS
15062	PREFORMED CHANNEL PIPE SUPPORT SYSTEM
15075	MECHANICAL IDENTIFICATION
15110	VALVES
15111	BALL VALVES
15112	BUTTERFLY VALVES
15114	CHECK VALVES
15116	PLUG VALVES
15119	AIR AND VACUUM RELIEF VALVES
15120	PIPING SPECIALTIES
15121	PIPE COUPLINGS
15142	DISINFECTION OF DOMESTIC WATER LINES
15211	DUCTILE IRON PIPE, AWWA C151
15252A	STEEL PIPING
15255	STAINLESS STEEL PIPING AND TUBING
15265	PLASTIC PIPING AND TUBING
15430	EMERGENCY EYE/FACE WASH AND SHOWER EQUIPMENT
15956	PIPING SYSTEMS TESTING
15958	MECHANICAL EQUIPMENT TESTING

DIVISION 16 - ELECTRICAL

Section No.	Title
16050	GENERAL REQUIREMENTS FOR ELECTRICAL WORK
16060	GROUNDING AND BONDING
16070	HANGERS AND SUPPORTS
16075	ELECTRICAL IDENTIFICATION
16123	600 VOLT OR LESS WIRES AND CABLES
16130	CONDUITS
16133	DUCT BANKS
16134	BOXES
16140	WIRING DEVICES
16150	WIRE CONNECTIONS
16222	LOW VOLTAGE MOTORS UP TO 500 HORSEPOWER
16272	DRY TYPE TRANSFORMERS
16285	SURGE PROTECTIVE DEVICES
16305	ELECTRICAL SYSTEM STUDIES
16411	DISCONNECT SWITCHES

Section No.	Title
	DIVISION 16 - ELECTRICAL (cont.)
16412	LOW VOLTAGE MOLDED CASE CIRCUIT BREAKERS
16422	MOTOR STARTERS
16445	PANELBOARDS
16472	PACKAGED POWER SUPPLY CENTER
16494	LOW VOLTAGE FUSES
16500	LIGHTING
16950	FIELD ELECTRICAL ACCEPTANCE TESTS
16990	CONDUIT SCHEDULE
	DIVISION 17 - INSTRUMENTATION AND CONTROL SYSTEM
Section No.	**Title**
17050	PROCESS CONTROL AND INSTRUMENTATION SYSTEMS GENERAL REQUIREMENTS
17100	CONTROL STRATEGIES.
17101	SPECIFIC CONTROL STRATEGIES
17206	LEVEL MEASUREMENT - ULTRASONIC
17302	FLOW MEASUREMENT - MAGNETIC FLOWMETERS
17401	PRESSURE/VACUUM MEASUREMENT - DIAPHRAGM AND ANNULAR SEALS
17402	PRESSURE/VACUUM MEASUREMENT - INSTRUMENT VALVES
17403	PRESSURE/VACUUM MEASUREMENT - SWITCHES
17404	PRESSURE/VACUUM MEASUREMENT - GAUGES
17405	PRESSURE/VACUUM MEASUREMENT - DIRECT
17406	PRESSURE/VACUUM MEASUREMENT - DIFFERENTIAL
17710	CONTROL SYSTEMS - PANELS, ENCLOSURES, AND PANEL COMPONENTS
17712	CONTROL SYSTEMS - UNINTERRUPTIBLE POWER SUPPLIES 10 KVA AND BELOW
17720	CONTROL SYSTEMS - PROGRAMMABLE LOGIC CONTROLLERS HARDWARE
17721	CONTROL SYSTEMS - HUMAN MACHINE INTERFACE HARDWARE
17761	PLC PROGRAMMING SOFTWARE
17765	HUMAN MACHINE INTERFACE SOFTWARE
17901	SCHEDULES - FIELD INSTRUMENTS
17903	I/O LIST
17950	TESTING, CALIBRATION, AND COMMISSIONING

END OF TABLE OF CONTENTS

Activity Description	Working Days	Early Start	Early Finish
OASIS ARSENIC TREATMENT FACILITY			
ADMINISTRATIVE			
NOTICE TO PROCEED	0	04MAY11 A	
CONTRACTS & PROCUREMENT	5	16MAY11 A	20MAY11 A
SUBMITTALS & DRAWINGS - ARSENIC VESSELS	10	17MAY11 A	10JUN11
SUBMITTALS & DRAWINGS - RECESSED IMPELER PUMP	40	23MAY11 A	15JUL11
SUBMITTALS & DRAWINGS - SLUDGEMATE ROLL-OFF	35	23MAY11 A	08JUL11
SUBMITTALS & DRAWINGS - INLINE CENTRIFUGAL PUMPS	30	23MAY11 A	01JUL11
SUBMITTALS & DRAWINGS - SLUDGEMATE FILTRATE PUMP	30	23MAY11 A	01JUL11
SUBMITTALS & DRAWINGS - ELECTRICAL	40	23MAY11 A	15JUL11
SUBMITTALS & DRAWINGS - CHEMICAL SYSTEM	30	23MAY11 A	01JUL11
SUBMITTALS & DRAWINGS - BACKWASH TANK	35	23MAY11 A	08JUL11
SUBMITTALS & DRAWINGS - PIPE AND MISC. EQUIPMENT	30	23MAY11 A	24JUN11
PROCUREMENT - ARSENIC VESSEL	60	13JUN11	02SEP11
PROCUREMENT - PIPE & MISC. EQUIPMENT	15	27JUN11	15JUL11
PROCUREMENT - SLUDGEMATE FILTRATE PUMP	55	04JUL11	16SEP11
PROCUREMENT - IN-LINE CENTRIFUGAL PUMP	55	04JUL11	16SEP11
PROCUREMENT - CHEMICAL SYSTEM	45	04JUL11	02SEP11
PROCUREMENT - SLUDGEMATE ROLL-OFF	55	11JUL11	23SEP11
PROCUREMENT - BACKWASH TANK	20	11JUL11	05AUG11
PROCUREMENT - RECESSED IMPELER PUMP	70	18JUL11	21OCT11
PROCUREMENT - ELECTRICAL EQUIPMENT	40	18JUL11	09SEP11
FINAL COMPLETION	0		30DEC11 *
	1	06JUN11	06JUN11
	173	04MAY11 A	30DEC11
SYSTEMS TEMPORARY OPERATION DURING CONSTRUCTION			
RELOCATE EXISTING DECANT PUMP	88 *	09AUG11	08DEC11
RELOCATE EXISTING TRANSFER PUMP	61 *	12SEP11	05DEC11
RELOCATE EXISTING SLUDGEMATE	61 *	12SEP11	05DEC11
	88	09AUG11	08DEC11

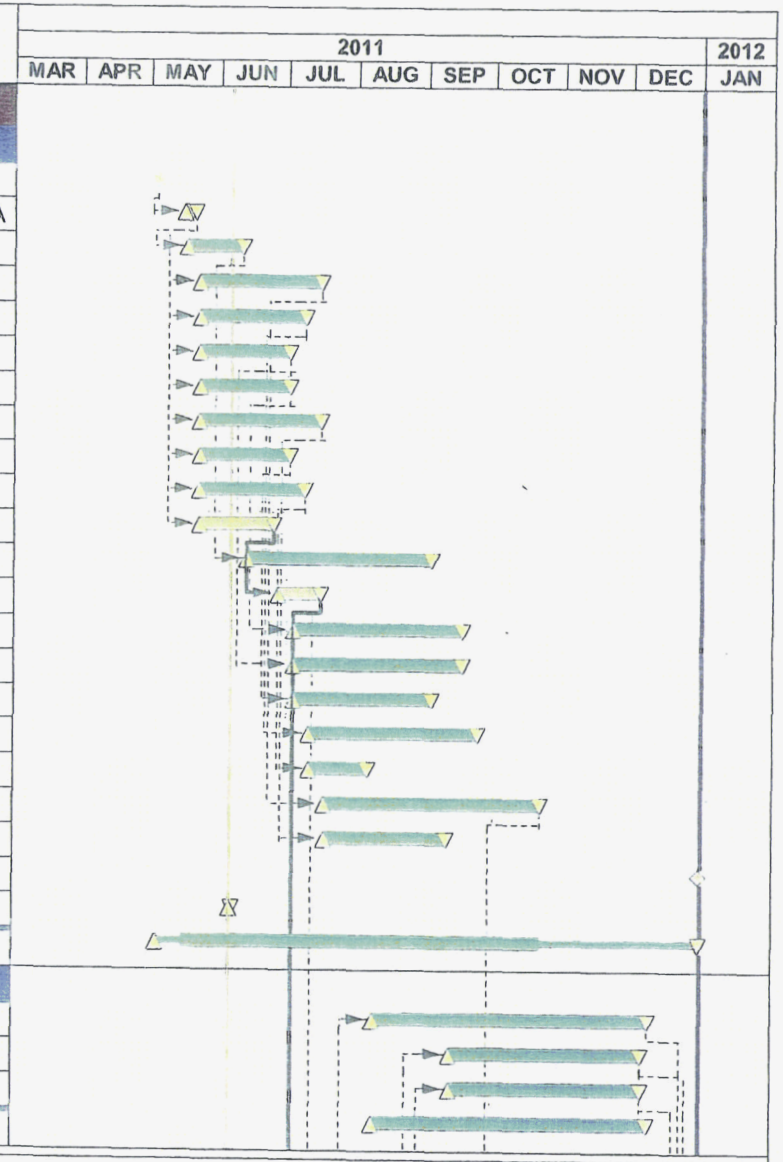

Project title	OASIS ARSENIC TREATMENT FACILITY
Start date	05NOV10
Finish date	30DEC11
Run date	06JUN11

© Primavera Systems, Inc.

ARIZONA WATER COMPANY
OASIS WATER CAMPUS
ARSENIC TREATMENT FACILITY EXPANSION
MGC CONTRACTORS, INC.

- Early start point
- Early finish point
- Early bar
- Critical bar
- Start milestone point
- Finish milestone point

Activity Description	Working Days	Early Start	Early Finish
YARD PIPE			
POTHOLE FOR EXISTING UTILITIES	5	30MAY11 A	03JUN11 A
DIG/LAY EFF-16 LINE	10	18JUL11	29JUL11
DIG/LAY BWR-12 LINE	5	01AUG11	05AUG11
DIG/LAY OF-12 LINE	5	08AUG11	12AUG11
DIG/LAY DCT-6 LINE	15	15AUG11	02SEP11
DIG/LAY DUCT BANKS	10	05SEP11	16SEP11
** MOPO 1.5 ** INSTALL ELECTRICAL GEAR & PLC	10	19SEP11	30SEP11
DIG/LAY PW-3 LINE	7	25OCT11	02NOV11
DIG/LAY SD-12	5	18OCT11	24OCT11
DIG/LAY UW-2 LINE	5	03NOV11	09NOV11
DIG/LAY SPR-2 LINE	5	10NOV11	16NOV11
	93	30MAY11 A	16NOV11
BACKWASH TANK			
** MOPO 1.3 ** RELOCATE EXISTING DECANT PUMP	1	09AUG11	09AUG11
DEMO EXISTING CONC PAD	3	10AUG11	12AUG11
EXCAVATE & GRADE FOR TANK FLOOR	5	15AUG11	19AUG11
PLACE CONCRETE TANK FLOOR	10	22AUG11	02SEP11
PLACE CONCRETE PUMP PAD	5	05SEP11	09SEP11
ERECT & PAINT STEEL TANK	25	12SEP11	14OCT11
INSTALL OF-12 & BWR-12 RISER PIPE	5	17OCT11	21OCT11
FILL & TEST TANK 02	10	24OCT11	04NOV11
** MOPO 1.4 ** DRAIN TANK 01 INSTALL NEW NOZZLE	2	07NOV11	08NOV11
FILL AND TEST TANK 01	2	09NOV11	10NOV11
PAINT TANK 01	10	11NOV11	24NOV11
	78	09AUG11	24NOV11
DECANT & SLUDGE PUMPS & PIPE			
SET IN-LINE CENTRIFUGAL PUMPS	2	22SEP11	23SEP11
INSTALL DECANT PIPE, VALVES & ELECTRICAL	3	26SEP11	28SEP11
SET RECESSED IMPELER PUMP	1	24OCT11	24OCT11

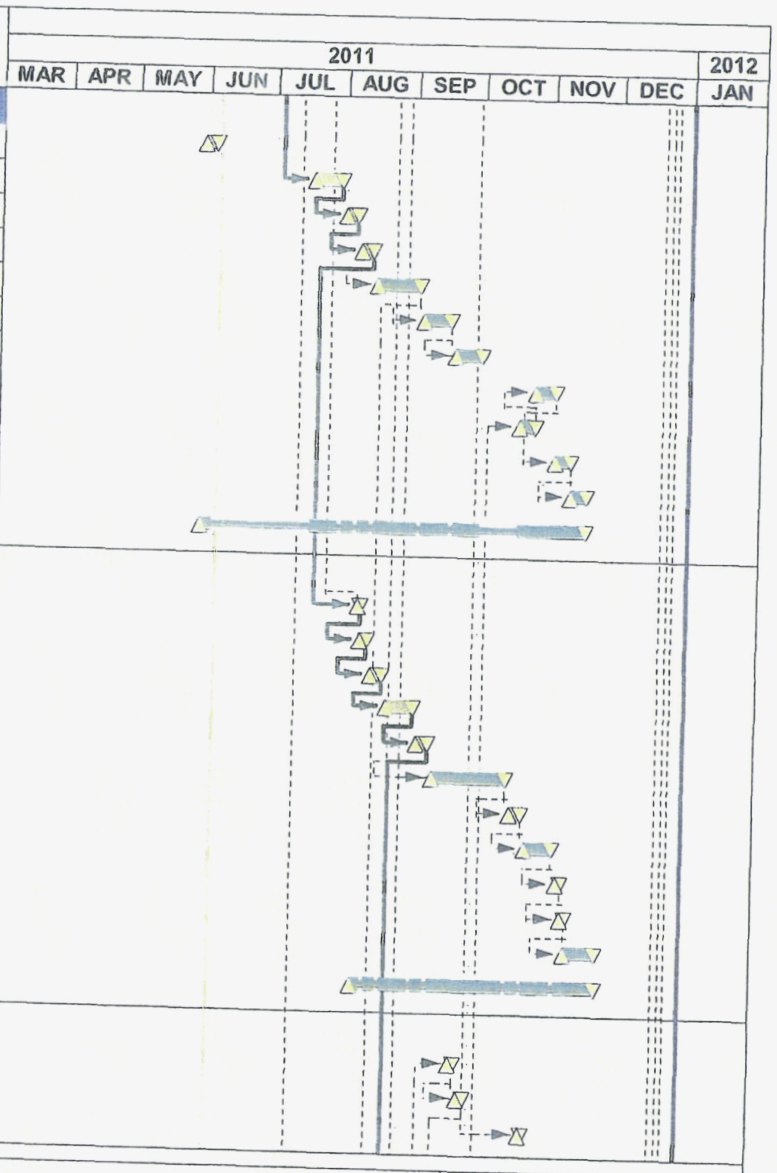

Project title	OASIS ARSENIC TREATMENT FACILITY
Start date	05NOV10
Finish date	30DEC11
Run date	06JUN11

© Primavera Systems, Inc.

ARIZONA WATER COMPANY
OASIS WATER CAMPUS
ARSENIC TREATMENT FACILITY EXPANSION
MGC CONTRACTORS, INC.

- Early start point
- Early finish point
- Early bar
- Critical bar
- Start milestone point
- Finish milestone point

Activity Description	Working Days	Early Start	Early Finish
INSTALL SLUDGE PIPE, VALVES & ELECTRICAL	3	08NOV11	10NOV11
STARTUP & TEST	20	11NOV11	08DEC11
	56	22SEP11	08DEC11
RETENTION BASIN & WELL			
BUILD RETAINING WALL	10	01AUG11	12AUG11
DEMO BURIED PIPE & VALVES	5	05SEP11	09SEP11
REROUTE LIGHTING CONDUIT	2	12SEP11	13SEP11
REROUTE PW LINE	2	14SEP11	15SEP11
EXCAVATE RETENTION BASIN	10	16SEP11	29SEP11
PLACE GROUTED RIP RAP SPLASH PADS	5	30SEP11	06OCT11
PLACE PLAIN RIP RAP	5	07OCT11	13OCT11
RAISE CATCH BASIN	2	14OCT11	17OCT11
INSTALL DRY WELL	10	18OCT11	31OCT11
INSTALL WELL #13 PUMP OUT PIPE	5	01NOV11	07NOV11
** MOPO 1.6 ** WELL 13 OFF LINE	1	08NOV11	08NOV11
	72	01AUG11	08NOV11
CHEMICAL PUMPS & STORAGE AREA			
** MOPO 1.3 RELOCATE EXISTING CHEMICAL SYSTEM	1	07SEP11	07SEP11
DIG/LAY BURIED CONDUIT & CHEMICAL LINES	2	08SEP11	09SEP11
GRADE FOR CONCRETE PAD	5	12SEP11	16SEP11
PLACE CONCRETE PADS & CONTAINMENT AREA	3	19SEP11	21SEP11
INSTALL LOADING STATION	3	29SEP11	03OCT11
SET CHEMICAL TANKS	3	04OCT11	06OCT11
INSTALL PUMPS	3	07OCT11	11OCT11
INSTALL ELECTRICAL CONDUIT & WIRE	3	12OCT11	14OCT11
INSTALL CHEMICAL PIPING & VALVES	5	12OCT11	18OCT11
INSTALL CANOPY	3	19OCT11	21OCT11
** MOPO 1.2 ** TIE IN AT INLET HEADER	1	19OCT11	19OCT11
RELOCATE EXISTING CHLORINE TANK	1	20OCT11	20OCT11
START UP & TEST	20	21OCT11	17NOV11

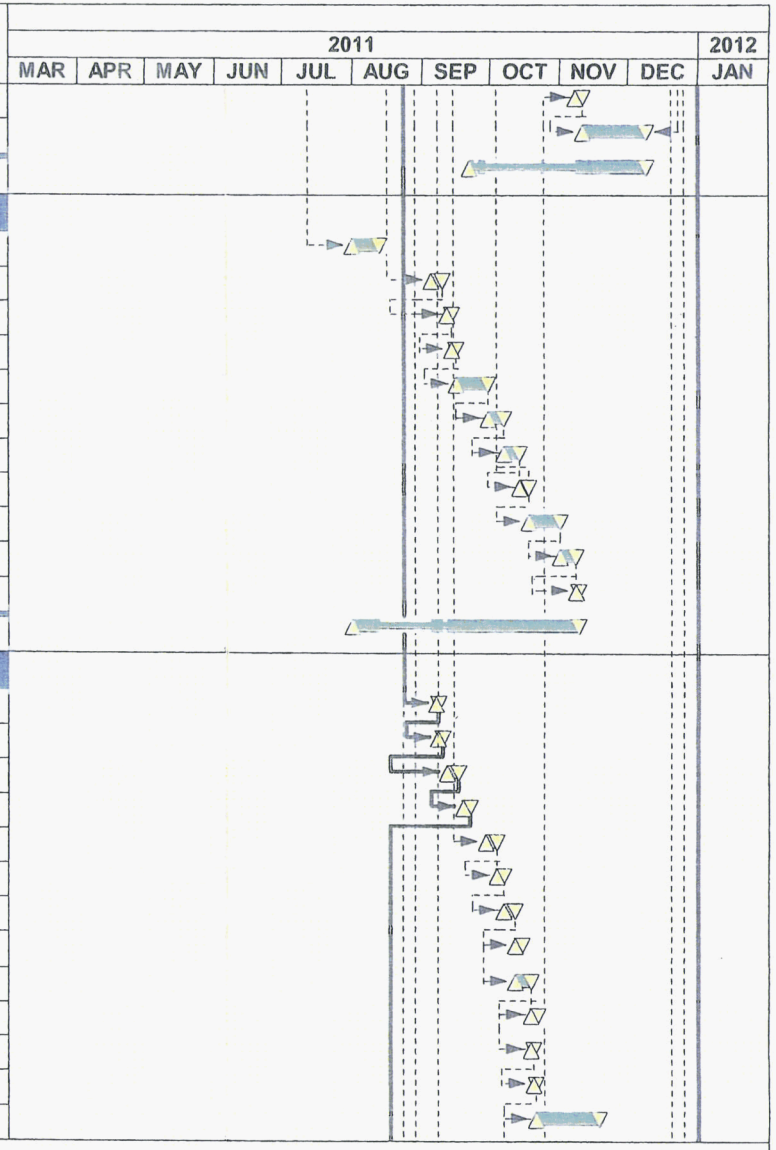

Project title	OASIS ARSENIC TREATMENT FACILITY
Start date	05NOV10
Finish date	30DEC11
Run date	06JUN11

© Primavera Systems, Inc.

ARIZONA WATER COMPANY
OASIS WATER CAMPUS
ARSENIC TREATMENT FACILITY EXPANSION
MGC CONTRACTORS, INC.

- Early start point
- Early finish point
- Early bar
- Critical bar
- Start milestone point
- Finish milestone point

Activity Description	Working Days	Early Start	Early Finish
	52	07SEP11	17NOV11
POLYMER AREA & SLUDGEMATE			
** MOPO 1.3 ** RELOCATE EXISTING TRANSFER PUMP	1	12SEP11	12SEP11
** MOPO 1.3 ** RELOCATE EXISTING SLUDGEMATE	1	12SEP11	12SEP11
DEMO EXISTING CONCRETE CONTAINMENT AREA	5	13SEP11	19SEP11
DIG/LAY SLG & TRF LINES	2	20SEP11	21SEP11
DIG/LAY BURIED ELECTRICAL CONDUIT	2	20SEP11	21SEP11
GRADE FOR CONCRETE PAD	5	22SEP11	28SEP11
PLACE CONCRETE SUMP PIT	5	29SEP11	05OCT11
PLACE CONCRETE PADS	3	06OCT11	10OCT11
INSTALL POLYMER SYSTEM	1	21OCT11	21OCT11
INSTALL TRANSFER PUMPS	1	24OCT11	24OCT11
INSTALL ELECTRICAL CONDUIT & WIRE	5	25OCT11	31OCT11
INSTALL SLUDGEMATE	2	25OCT11	26OCT11
INSTALL AG PIPING	5	27OCT11	02NOV11
INSTALL CANOPY	3	03NOV11	07NOV11
TIE IN AT BACKWASH TANKS	1	03NOV11	03NOV11
RELOCATE EXISTING SLUDGEMATE	2	04NOV11	07NOV11
STARTUP & TESTING	20	08NOV11	05DEC11
	61	12SEP11	05DEC11
ARSENIC VESSELS			
DIG/LAY BURIED ELECTRICAL CONDUIT	5	04OCT11	10OCT11
PLACE CONCRETE VESSEL SUPPORTS	5	11OCT11	17OCT11
SET VESSELS	5	18OCT11	24OCT11
INSTALL 16" - 6" PIPE & VALVES	10	25OCT11	07NOV11
INSTALL VESSEL INTERNAL HEADERS	8	08NOV11	17NOV11
LOAD FILTER MEDIA	5	18NOV11	24NOV11
INSTALL ELECTRICAL CONDUIT & WIRE	5	08NOV11	14NOV11
** MOPO 1.8 ** TIE IN TO NEW EFF-16	2	25NOV11	28NOV11
STARTUP & TEST	20	05DEC11	30DEC11

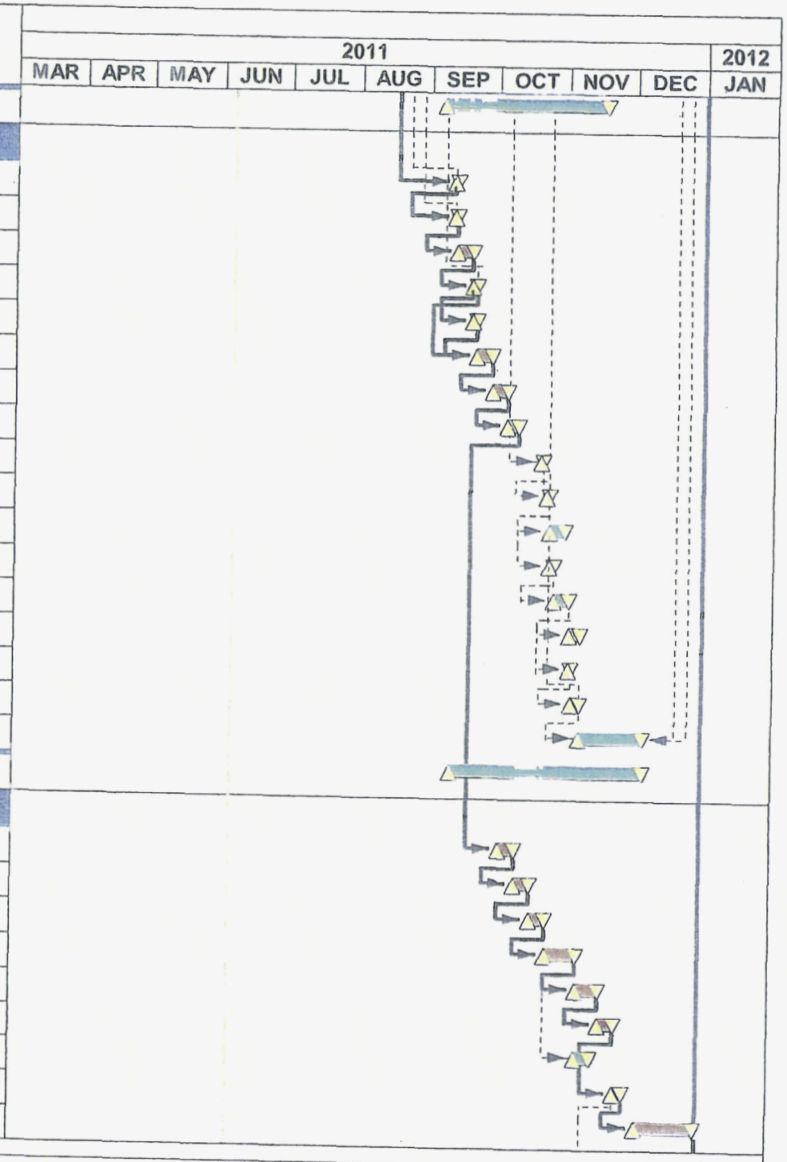

Project title	OASIS ARSENIC TREATMENT FACILITY
Start date	05NOV10
Finish date	30DEC11
Run date	06JUN11

© Primavera Systems, Inc.

ARIZONA WATER COMPANY
OASIS WATER CAMPUS
ARSENIC TREATMENT FACILITY EXPANSION
MGC CONTRACTORS, INC.

- Early start point
- Early finish point
- Early bar
- Critical bar
- Start milestone point
- Finish milestone point

Activity Description	Working Days	Early Start	Early Finish
RAW WATER PIPE & CHEMICAL INJECTION	64	04OCT11	30DEC11
** MOPO 1.1 ** INSTALL 12" - 6" PIPE & VALVES	2	25NOV11	28NOV11
	1	06JUN11	06JUN11

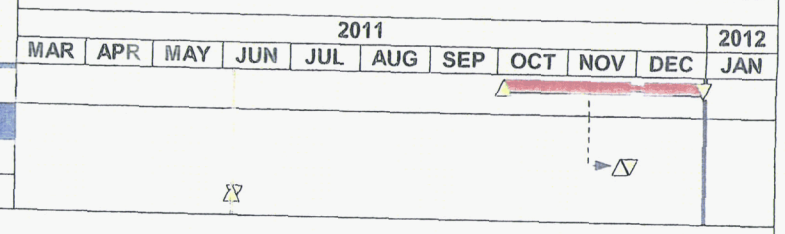

Project title	OASIS ARSENIC TREATMENT FACILITY
Start date	05NOV10
Finish date	30DEC11
Run date	06JUN11

© Primavera Systems, Inc.

ARIZONA WATER COMPANY
OASIS WATER CAMPUS
ARSENIC TREATMENT FACILITY EXPANSION
MGC CONTRACTORS, INC.

- △ Early start point
- ▽ Early finish point
- Early bar
- Critical bar
- Start milestone point
- Finish milestone point

ARIZONA DEPARTMENT OF ENVIRONMENTAL QUALITY
CERTIFICATE OF APPROVAL TO CONSTRUCT
WATER FACILITIES

ADEQ File No: 20100192	**LTF No:** 53207
System Name: Az Water Co-Apache Jct.	**System Number:** 11-004
Project Owner: Arizona Water Company	
Address: P O Box 29006, Phoenix , AZ 85038	
Project Location: Mesa	**County :** Maricopa
Description: EXPAND EXISTING 3.5 MGD ARSENIC TREATMENT FACILITY TO 7.7MGD WITH ADDITION OF 3 NEW PRESSURE FITLER VESSELS, NEW BACKWASH STORAGE TANK, REPLACE EXISTING FERRIC CHLORIDE AND SODIUM HYPOCHLORITE FEED SYSTEMS, AND RELATED APPURTENANCES.	

Approval to construct the above-described facilities as represented in the approved documents on file with the Arizona Department of Environmental Quality is hereby given subject to provisions 1 through 6 continued on page 2 through 2

1. This project must be constructed in accordance with all applicable laws, including Title 49, Chapter 2, Article 9 of the Arizona Revised Statutes and Title 18, Chapter 5, Article 5 of the Arizona Administrative Code.

2. Upon completion of construction, the engineer shall fill out the Engineer's Certificate of Completion and forward it to the Central Regional Office located in Phoenix. If all requirements have been completed, that unit will issue a Certificate of Approval of Construction. R18-5-507(B), Ariz. Admin.Code. At the project owner's request, the Department **may** conduct the final inspection required pursuant to R18-5-507(B); such a request must be made in writing in accordance with the time requirements of R18-5-507(C), Ariz. Admin. Code.

3. This certificate will be void if construction has not started within one year after the Certificate of Approval to Construct is issued, there is a halt in construction of more than one year, or construction is not completed within three years of the approval date. Upon receipt of a written request for an extension of time, the Department may grant an extension of time; an extension of time must be in writing. R18-5-505(E), Ariz. Admin. Code.

4. Operation of a newly constructed facility shall not begin until a Certificate of Approval of Construction has been issued by the Department. R18-5-507(A), Ariz. Admin. Code.

Reviewed by: NLS

By: Janak K. Desai 11/5/2010
Janak K. Desai, P.E. Unit Manager — Date
Engineering Review Section
Water Quality Division

cc: File No : 20100192
Regional Office: Central
Owner: Arizona Water Company
County Health Department: Maricopa
Engineer: Carollo Engineers, Inc
Planning and Zoning/Az Corp. Commission
Engineering Review Database - Etr021

5. On page 01757-1 of the Contract Documents and Technical Specifications submittal please include the *Division of Environmental Health Services Engineering Bulletin No. 8, Disinfection of Water Systems*, as another reference for disinfection procedures. Three (3) copies of the modified pages can be submitted with the Engineer's Certificate of Completion for the Approval of Construction application.

6. The Arizona Department of Environmental Quality's review of this application was subject to the requirements of the licensing time frames ("LTF") statute under Arizona Revised Statutes ("A.R.S.") § 41-1072 through § 41-1079 and the LTF rules under Arizona Administrative Code ("A.A.C.") R18-1-501 through R18-1-525. This Notice is being issued within the overall time frame for your application.

   ADEQ hereby approves your application for Approval to Construct Water Facilities under A.R.S. § 49-351. Your copy is enclosed.

   This decision is an appealable agency action under A.R.S. § 41-1092. You have a right to request a hearing and file an appeal under A.R.S. § 41-1092.03(B). You must file a written Request for Hearing or Notice of Appeal within **30 days** of your receipt of this Notice. A Request for Hearing or Notice of Appeal is filed when it is received by ADEQ's Hearing Administrator as follows:

   Office of Administrative Counsel
   Arizona Department of Environmental Quality
   1110 W. Washington Street
   Phoenix, AZ 85007

   The Request for Hearing or Notice of Appeal shall identify the party, the party's address, the agency and the action being appealed and shall contain a concise statement of the reasons for the appeal. Upon proper filing of a Request for Hearing or Notice of Appeal, ADEQ will serve a Notice of Hearing on all parties to the appeal. If you file a timely Request for Hearing or Notice of Appeal you have a right to request an informal settlement conference with ADEQ under A.R.S. § 41-1092.06. This request must be made in writing no later than **20 days** before a scheduled hearing and must be filed with the Hearing Administrator at the above address.

   Please contact Nancy Lou Sandoval at 602-771-4672 if you have questions regarding this Notice or the Certificate of Approval to Construct.

BUILDING TRACKING NUMBER: B201005165

Planning and Development Department

ONE STOP SHOP

COMMERCIAL ADDITION PERMIT

DATE ISSUED: 3/3/2011

DATE RE-ISSUED:

DATE RENEWED:

SITE ADDRESS: 558 S PALM Dr
MESA, AZ 85208

SUBDIVISION OR MOBILE HOME PARK: OASIS PARK

LOT/SPACE/STE:

PARCEL NUMBER: 220-72-931

THIS PERMIT IS FOR: ARIZONA WATER COMPANY// ADDITIONS TO ARSENIC TREATMENT PLANT // NEW ARSENIC BACKWASH TANK #2 & SHADE STRUCTURE// INCLUDES RELATED ELECTRICAL & GRADING AND DRAINAGE FOR ARIZONA WATER COMPANY

SETBACKS: FT:
REAR:
LEFT:
RIGHT:
LOT WIDTH:

TOTAL AREA (SQ. FT.):

HEIGHT: 10
STORIES: 1
BASEMENT:

Permit expires 180 days from the date issued or the last completed inspection.

Failure to secure required final inspections is a violation of the Maricopa County Zoning Ordinance and the Maricopa County Drainage Regulations

UTILITIES:

GAS CO.:
WATER CO.:
FIRE: Rural Metro
ELECTRIC CO.: Salt River Project
SEWER CO.:

OWNER:
Arizona Water Co
602-240-6860

CONTRACTOR:

DEPARTMENT OF TRANSPORTATION INSPECTION REQUIRED:

NOTICE: Call Maricopa County Department Of Transportation (602) 506-8609, before installing items in right-of-way such as: driveway tie-in to roadway, mailbox post (wood, metal or block), landscape (rock, trees, shrubs, etc.), sidewalks (concrete or paved).

DEPARTMENT OF ENVIRONMENTAL SERVICES:

SEWER PROVIDER:

If this section identifies "Septic" as the sewer provider, an inspection by Maricopa County Environmental Services may be required. Please call: (602) 506-6666 press 1,5,3 to comfirm.

BUILDING SAFETY\DRAINAGE INSPECTIONS

To schedule inspections, cancel inspections or obtain inspection results call (602) 506-3692.

Inspections may also be scheduled online at: www.maricopa.gov/planning, choose: **Online Permit Manager**

Inspections must be scheduled or cancelled prior to 2:30 p.m. for the following day inspections.

For building information call: (602) 506-3695. For drainage information call (602) 506-8400.

DRAINAGE INSPECTIONS REQUIRED:

801 – In Progress: Yes 803 – In Progress: Yes 804 – In Progress: Yes 970 – Final: Yes

BUILDING TRACKING NUMBER: B201005165

Planning and Development Department

ONE STOP SHOP

COMMERCIAL ADDITION PERMIT

DRAINAGE CONDITIONS:

1. FINAL INSPECTION WILL NOT BE PERFORMED UNTIL THE CERTIFIED AS-BUILTS HAVE BEEN ACCEPTED AND APPROVED. AS-BUILT ELEVATIONS AND LOCATIONS SHALL BE HAND-WRITTEN ON A COPY OF THE APPROVED PLAN SET, WHICH IS THE PLAN SET STAMPED "OWNER'S COPY", PRIOR TO A REQUEST FOR FINAL INSPECTION.

2. In-Progress Inspection for Grouted Riprap is required in order to determine that the top of the grouted riprap will be flush with adjacent finished grade, and that the grouted riprap will be the proper size, thickness, and extents to meet what is shown on the plans.

3. In-Progress Inspection for Riprap is required in order to determine that filter fabric has been properly installed per the manufacturer's installation instructions, that the top of the riprap will be flush with adjacent finished grade, and that the riprap will be the proper size, thickness, and extents to meet what is shown on the plans.

4. In-Progress Inspection for the retaining wall footer is required in order to determine that the retaining wall footer depths and dimensions match the approved plan.

5. Once the proposed drywell has been installed, the drywell will be tested with the constant-head test and the test results de-rated in accordance with Standard 6.10.13. The boring log and final drain-down time calculations will be submitted with the plan as-builts for approval prior to final approval of the permit. Proof of drywell registration with the state shall also be submitted.

6. SITE TO BE DEVELOPED IN ACCORDANCE WITH THE APPROVED GRADING AND DRAINAGE PLANS.

APPLICANT agrees to perform all work in accordance with ARTICLES 6,7,8,9, 10 as set forth in the DRAINAGE REGULATIONS FOR UNINCORPORATED AREAS OF MARICOPA COUNTY and in accordance with the plans and special provisions as approved.

This clearance is issued for the purposes described in the application and upon the express conditions that every agreement and covenant contained on this clearance is faithfully performed, and that approved work or construction shall be performed in accordance with approved plans and standard details and specification and special requirements all of which are hereby made a part of this clearance.

THIS CLEARANCE MUST BE POSTED ON THE WORK SITE IN A CONSPICUOUS PLACE. YOU ARE LEGALLY REQUIRED TO CALL THE INSPECTION PHONE NUMBER BELOW A MINIMUM OF 48 HOURS BEFORE ANY WORK STARTS. PLEASE HAVE YOUR CLEARANCE NUMBER AND LOCATION READY BEFORE CALLING.

I hereby certify that I am the owner or duly authorized owner's agent, that I have read this application and that all information is correct. I further certify that I have read, understand and will comply with all of the provisions outlined hereon. I also certify that the site plan submitted is a complete and accurate plan showing any and all existing and proposed structures on the subject property.

PROVISIONS: The applicant is advised that issuance of this clearance will not relieve responsibility of the owner or owner's agent to comply with the provisions of all laws and ordinances, including federal, state and local jurisdictions, which regulate construction and performance of construction, or with any private deed restriction or requirements of the applicable fire district. This clearance becomes null and void if the construction work authorized is not begun one hundred and eighty (180) days from the date of issue.

IT IS A VIOLATION OF SECTION 601 AND SECTION 1203 OF THE DRAINAGE REGULATION FOR FAILURE TO SECURE A FINAL DRAINAGE INSPECTION OR FAILURE TO CORRECT DEFICIENCIES NOTED AT THE TIME OF FINAL INSPECTION WITHIN THE SPECIFIED TIME LIMIT. VIOLATION OF THE DRAINAGE REGULATION IS A CLASS II MISDEMEANOR.

* MARICOPA COUNTY HOURS OF CONSTRUCTION ORDINANCE FACT SHEET - CONTINUED

Residential areas: Sites in or within 500 ft of Rural or Residential zones, and within 1,500 ft. of an occupied dwelling.

Non-residential areas: Sites in Commercial and Industrial zones not within 500 ft. of Rural or Residential zones, or within any zone but not within 1,500 ft. of an occupied dwelling.

BUILDING TRACKING NUMBER: B201005165

Planning and Development Department

ONE STOP SHOP

COMMERCIAL ADDITION PERMIT

"Construction work" includes the pouring of concrete and idling of concrete mixing trucks; operating construction-related equipment; performing outside construction work for the purposes of erection, excavation, demolition, alteration or repair of any building, structure or project; operating a pile driver, power shovel pneumatic hammer, derrick, power hoist or other construction-type device; and the loading and unloading of construction materials or idling of delivery trucks. It does not include landscaping or sod work, and termite pre-treatment.

All construction work is subject to a permit to be obtained from the Planning & Development Department.

Stop work orders may be issued on construction projects violating the provisions of this ordinance by either the Maricopa County Planning & Development Department or the Maricopa County Sheriff's Office.

Permits may be revoked by the Maricopa County Planning & Development Department upon determination of a violation of this ordinance. Permit revocations may be appealed to the Maricopa County Board of Supervisors.

Construction work by government agencies and utility companies is exempt from the provisions of the ordinance.

THIS PERMIT IS TO BE POSTED ON THE JOB SITE, VISIBLE FROM THE STREET

*MARICOPA COUNTY HOURS OF CONSTRUCTION ORDINANCE C4405004000 - Adopted 11/02/2004, Effective 12/03/2004

Construction Work in	April 15 - October 15	October 16 - April 15	Weekends/Holidays
Residential areas	5:00 AM - 7:00 PM	6:00 AM - 7:00 PM	6:00 AM - 7:00 PM
Non-Residential areas	5:00 AM - 10:00 PM	5:00 AM - 10:00 PM	5:00 AM - 10:00 PM

501 North 44th Street, 2nd Floor - Phoenix, AZ 85008 - (602) 506-3694 - (602) 506-3711 fax
Internet: www.maricopa.gov/planning

BUILDING TRACKING NUMBER: B201005165

Planning and Development Department

ONE STOP SHOP

COMMERCIAL ADDITION PERMIT

AVAILABLE INSPECTIONS

	Number	Description
	90	
	92	Drainage-Site Inspection
FOUNDATION	**100**	
	104	Drainage-Footing
	105	Footing-Setback
	110	Stem-Ground Level
	120	Mono Footing
	130	Pre-Stab-Interior Footing
	150	Fence
	151	Drainage Pre-FFE
	155	Drainage-Finish Floor Elev
UNDER FLOOR	**200**	
	205	Drain and Waste
	210	Copper
	220	Water Service
	230	Septic or Sewer Connection
	240	Electrical Conduit
	250	Return Air Duct
TOP OUT	**300**	
	305	Above Ceiling
	310	Rough Electrical
	320	Temp Construction Power
	330	Rough Plumbing
	340	Rough Mechanical
	341	Rough Mechanical
	350	Framing
	355	Noise Reduction
	360	Safety Glazing
	370	Roof Sheathing-Strap-Shear
	380	Fire Sprinklers
MASONRY	**400**	
	410	Masonary-Grout-Wall
	420	Masonry-Grout-Fireplace
	430	Masonry-Grout-Bond Beam
WALLS	**500**	
	510	Drywall
	520	External Lath

MISCELLANEOUS	**800**	
	801	Drainage-In Progress Insp
	803	Drainage-In3 Progress Insp
	804	Drainage-In Progress Insp
FINAL	**900**	
	900	FINAL
	910	Final Electrical Clearance
	915	Final Gas Clearance
	968	Drainage-Pre-Final
	969	Drainage-Pre-Final
	970	Drainage-FINAL

If required, the "970 FINAL DRAINAGE" must be approved prior to the "900 FINAL".

To Schedule Inspections, cancel inspections or obtain inspection results call (602) 506 – 3692. Inspections may also be scheduled online at www.maricopa.gov/planning, choose "Online Permit Manager". Inspections must be scheduled or cancelled prior to 2:30 for the following day inspections.

For inspection information call: (602) 506 – 3695. For drainage information call (602) 506-8400

ARIZONA WATER COMPANY

SUPERSTITION DIVISION
2380 W. SOUTHERN AVENUE
APACHE JUNCTION, AZ 85120 - 480-982-2201

PROPOSAL/CONTRACT

CONTRACTOR:	MGC CONTRACTORS, INC.	SYSTEM:	SUPERSTITION
ADDRESS:	4110 E. ELWOOD STREET	W.A. No(s):	1-4226
	PHOENIX, ARIZONA 85040	BID DUE DATE:	November 5, 2010

CONTRACTOR SUBMITS this PROPOSAL/CONTRACT to ARIZONA WATER COMPANY, an Arizona corporation (the "Company"), to perform the work and complete the project described on Page 2 (the "Project"), as an independent prime contractor.

1. Contractor certifies that it has a complete copy of, and has read, understands and accepts, the Company's General Conditions of Contract, and the Company's Construction Specifications and Standard Specification Drawings, (the "Specifications"), all of which are attached hereto. Contractor has examined the specific plans and related construction drawings for the Project (the "Drawings"), copies of which are also attached hereto. The General Conditions of Contract, Specifications and Drawings are incorporated into this Proposal/Contract. Contractor affirms that all work and materials to be furnished or purchased for the Project will be in strict conformance with the General Conditions of Contract, Specifications and Drawings.

2. Contractor represents and warrants that it has satisfied and complied with the provisions of Section 6, Contractor Understands Work and Working Conditions, of the General Conditions of Contract prior to submitting this Proposal/Contract.

3. Contractor represents that this Proposal/Contract is fair and honest in all respects, is submitted in good faith and is not submitted in collusion with any other company, entity or person.

4. Contractor acknowledges that one hundred percent (100%) Performance and Payment Bonds are required and must be provided to the Company prior to the commencement of work.

5. Prior to the commencement of work, Contractor will submit to the Company a list of all materials to be used in the Project. The materials list will include the manufacturer, part number, price and quantity included in this Proposal/Contract.

6. Contractor will furnish all labor, tools, equipment and materials required to complete the Project according to the General Conditions of Contract, Specifications and Drawings. No materials purchased by Contractor to be incorporated into the Project are subject to tax at the time of purchase and Contractor will not charge the Company for any such tax. Contractor will pay the applicable transaction privilege tax (the "Contracting Tax") on the Project after Contractor receives payment of the final Project invoice from the Company. The cost of materials incorporated into the Project which are exempt by Arizona Revised State Statues ("A.R.S.") from the Contracting Tax, for example, pipes or valves having a diameter of four (4) inches or larger, including equipment, fittings and any other related part that is used in operating the pipes or valves (A.R.S. §42-5061 B.6.), will not be included in the total cost of the labor and materials upon which the Contracting Tax is computed. Contractor retains full liability and obligation to pay the Contracting Tax and will defend and indemnify the Company against any demand or obligation to pay the Contracting Tax.

7. Contractor will maintain detailed accounting records of all materials purchased and incorporated into the Project. Such records will include all supporting original vendor invoices for all materials purchased. Following completion of the Project, Contractor will submit an itemized accounting to the Company which will include all supporting original vendor invoices and satisfactory evidence of payment thereof. The Company will not pay Contractor for materials not actually incorporated into the Project, and the disposition of such materials will remain Contractor's responsibility.

8. The Estimated Total Cost of the Project, shown on Page 2, is based on estimated labor and material quantities to be furnished. It includes an estimate of the Contracting Tax and the cost of the required Performance and Payment Bonds. Contractor will not cancel, modify or withdraw this Proposal/Contract during a ninety-day (90) period commencing on the Bid Due Date. The Company may accept this Proposal/Contract by signing and mailing, or otherwise delivering, a copy hereof to Contractor during such ninety-day (90) period. If the Company does not accept this Proposal/Contract during such ninety-day (90) period, Contractor may cancel this Proposal/Contract by giving written notice of cancellation to the Company.

9. Prior to the commencement of work, Contractor will provide the Company with a detailed construction schedule, in either Gantt or CPM form, identifying all tasks to be performed from the date of the written Commencement Notice through completion of the Project, including testing, training of Company Personnel and final Project invoicing. Contractor will provide the Company with a copy of such construction schedule documenting the progress of work on the Project at least monthly.

10. Contractor will not commence work on the Project until the Company gives Contractor a written Commencement Notice. Contractor will complete the Project within 179 calendar days after the Commencement Notice is issued.

11. Following the Company's written notice of satisfactory completion of the Project, and upon receipt of the final Project invoice from Contractor, the Company shall pay Contractor the actual total cost of the Project, which will be calculated as shown on Page 2, except that actual labor and material quantities installed/constructed will be substituted for the estimated labor and materials quantities and the Contracting Tax will be recalculated based on such actual labor and materials quantities.

12. The amount of applicable liquidated damages for Contractor's failure to deliver or perform within the time limit shown in Paragraph 10 may be deducted from the Company's payment of the final Project invoice. This provision shall not limit the Company's ability to terminate this Proposal/Contract for Contractor's unsatisfactory performance or failure to perform as provided in the General Conditions of Contract, Specifications or Drawings, or in this Proposal/Contract.

SPECIAL CONDITIONS:
TECHNICAL SPECIFICATIONS
INCLUDE ADDITIONAL ATTACHMENT: INFORMATION TO BE SUBMITTED WITH PROPOSAL
SUPPLEMENTARY CONDITIONS 00700 TO THE GENERAL CONDITIONS OF CONTRACT

CONTRACTOR		PROPOSAL/CONTRACT ACCEPTED:	
MGC Contractors, Inc.		ARIZONA WATER COMPANY	
By:	[signature]	By:	[signature]
Print Name:	Randy L. Gates	Print Name:	Frederick K. Schneider
Title:	President	Title:	Vice President - Engineering
Date:	03/18/2011 REBID	Date:	5-4-2011

MGC acknowledges receipt of Addendum No. 1 and 2.

ARIZONA WATER COMPANY

SUPERSTITION DIVISION
2380 W. SOUTHERN AVENUE
APACHE JUNCTION, AZ 85120 - 480-982-2201

PROPOSAL/CONTRACT

CONTRACTOR: MGC CONTRACTORS, INC.	SYSTEM: SUPERSTITION
AZ CONTRACTOR LICENSE NO: ROC069949 CLASSIFICATION: A - Gen Eng	W.A. No(s): 1-4226
ADDRESS: 4110 E. ELWOOD STREET	BID DUE DATE: November 5, 2010
PHOENIX, ARIZONA 85040	BID BOND REQUIRED [X] Yes [ ] No

DESCRIPTION OF PROJECT: OASIS ARSENIC TREATMENT PLANT EXPANSION FROM 3.6 TO 7.7 MGD

REBID 03/18/2011

1-2. MATERIALS EXEMPT FROM CONTRACTING TAX (per Paragraph 6)	QUANTITY	UNIT PRICE LABOR	UNIT PRICE MATERIALS		TOTAL COST LABOR		TOTAL COST MATERIALS
Equipment	1 LS	n/a	500,642		n/a		500,642
Pipe & Valves 4" and Larger	1 LS	n/a	161,195		n/a		161,195
Pre-Selected Equipment Supplier	1 LS	n/a	494,500	1	n/a	2	494,500 **
** This amount includes 6% for overhead and profit.							
3. Total Labor to Install Exempt Materials (add the amounts in column 1)				3	n/a		
4. Total Exempt Materials (add the amounts in column 2)						4	1,156,387

5-6. NON-EXEMPT MATERIALS	QUANTITY	LABOR	MATERIALS		LABOR		MATERIALS
Expand existing Arsenic Treatment Plan from 3.5 to 7.7 MGD	1	286,462	137,271		286,462		137,271
~~Pre selected equipment supplier~~	~~1~~						
Subcontractors and Vendors	1	n/a	333,791	6	n/a		333,791
7. Total Labor to Install Non-Exempt Materials (add the amounts in column 5)				7	286,462		
8. Total Non-Exempt Materials (add the amounts in column 6)						8	471,062
9. Subtotal A (add lines 3, 7 and 8)						9	757,524
10. Contracting Tax Base (multiply the amount on line 9 by 0.65)				10	492,391		
11. Applicable Contracting Tax Rate				11	0.0905		
12. Contracting Tax (multiply the amount on line 10 by line 11)						12	44,561
13. Subtotal B (add lines 4, 9 and 12)						13	1,958,422
14. 100% Performance and Payment Bonds Cost						14	13,964
15. Estimated Total Cost (add lines 13 and 14)						15	1,972,386 ***

NOTE: The Estimated Total Cost includes all labor and materials for backfill, pavement replacement, chip seal, and traffic control necessary for the Project.

*** Value of additional work required per Addendum No. 2: $ 85,900.00

ARIZONA WATER COMPANY

CONSTRUCTION SPECIFICATIONS: E-8-1

ERRATA 2010

10. PROTECTION OF WATER MAINS NEAR SEWERS

In order to protect water mains from contamination by sewers, the installation of the water mains must conform to the following requirements:

a. Horizontal - When water lines and sewers are laid parallel with each other, the horizontal distance between them shall not be less than six feet (6'). Each line shall be laid on undisturbed or bedded material in a separate trench. Where conditions prevent the minimum horizontal separation set forth above, extra protection will be required. Extra protection shall consist of constructing the sewer main with mechanical joint ductile iron pipe or with slip-joint ductile iron pipe if joint restraint is provided, or encasing both the water main and sewer main in concrete. See Detail E-9-30-1 and E-9-30-2

The Construction Drawings shall indicate the installation requirements. The drawings showing these exceptions shall have been approved by the appropriate state and/or county health department. Refer to the diagram below for clarification.

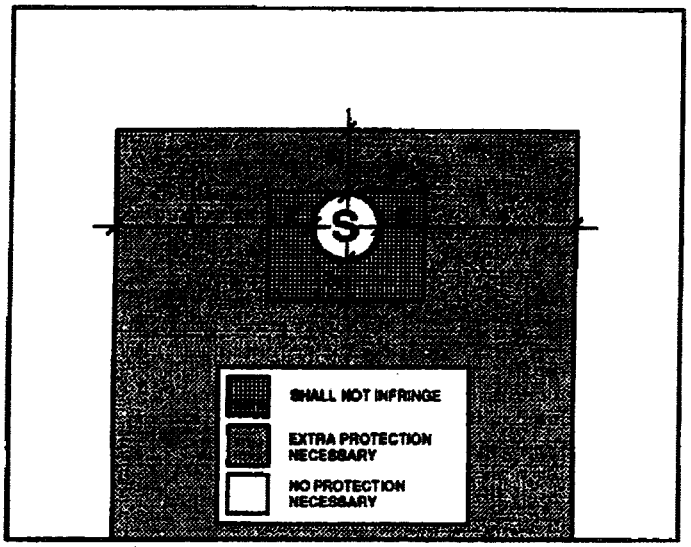

Under no circumstances will the horizontal separation between sewer mains and water mains be less than two feet (2'). All distances are to be measured from the outside of the sewer main to the outside of the water main.

b. Vertical - When a water main is parallel with or crosses a sewer main within two feet (2') above the sewer or greater than two feet (2') below the sewer, extra protection will be required. Extra protection shall consist of constructing the sewer main with mechanical joint ductile iron pipe or with slip-joint ductile iron pipe if joint restraint is provided, or encasing both the water main and sewer main in concrete. See Detail E-9-30-1 and E-9-30-2.

The Construction Drawings shall indicate the installation requirements. The drawings showing these exceptions shall have been approved by the appropriate state and/or county health department.

Under no circumstances will the vertical separation of a sewer main installed above a water main be less than two feet (2'). All distances are to be measured from the outside of the sewer main to the outside of the water main. Refer to the diagram above for clarification.

c. When unusual conditions such as, but not limited to, highway or bridge crossings prevent the water and sewer main separations required from being met, the appropriate state and/or county health department will review and may approve requests for authorization to use alternate construction techniques, materials and joints on a case-by-case basis.

d. No water pipe shall pass through or come into contact with any part of a sewer manhole. The minimum horizontal separation between water mains and manholes shall be six feet (6'), measured from the center of the manhole.

e. The minimum separation between force mains or pressure sewers and water mains shall be two feet (2') vertically and six feet (6') horizontally under all conditions. Where a sewer force main crosses above, or less than six feet (6') below, a water line, the sewer main shall be encased in at least six inches (6") of concrete for ten feet (10') on either side of the water main. Refer to the diagram below for clarification.

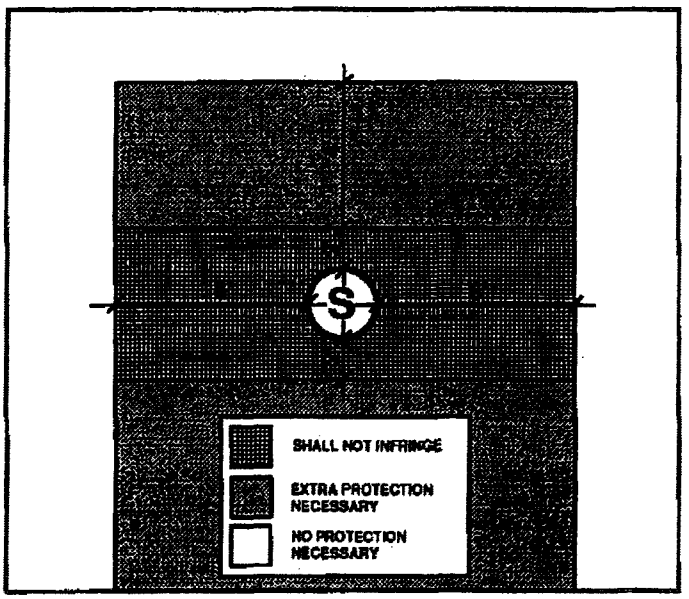

ARIZONA WATER COMPANY

STANDARD SPECIFICATION DRAWINGS: E-9-1

ERRATA 2010

E-9-20	INSTALLATION OF TYPICAL WELL WITH LINE SHAFT TURBINE PUMP
E-9-21	INSTALLATION OF TYPICAL WELL WITH SUBMERSIBLE TURBINE PUMP
E-9-22	INSTALLATION OF COLUMN PIPE, OIL TUBE AND LINE SHAFT
E-9-23	HOT TAP AND JUMPER METER CONNECTION
E-9-24	INSTALLATION OF TYPICAL WATER LINE ENCASEMENT
E-9-25	INSTALLATION OF CALCIUM HYPOCHLORITE TABLET CHLORINATOR
E-9-26	INSTALLATION OF CHAIN LINK FENCE
E-9-27	INSTALLATION OF SIDE HUNG WATER LINE SUSPENSION
E-9-28	PIPE WARNING TAPE, LOCATOR WIRE, AND LOCATOR WIRE TERMINATION
E-9-29	INSTALLATION OF A TYPICAL SAMPLING STATION
E-9-30-1	WATER AND SANITARY SEWER SEPARATION/PROTECTION PERPENDICULAR
E-9-30-2	WATER AND SANITARY SEWER SEPARATION/PROTECTION – PARALLEL

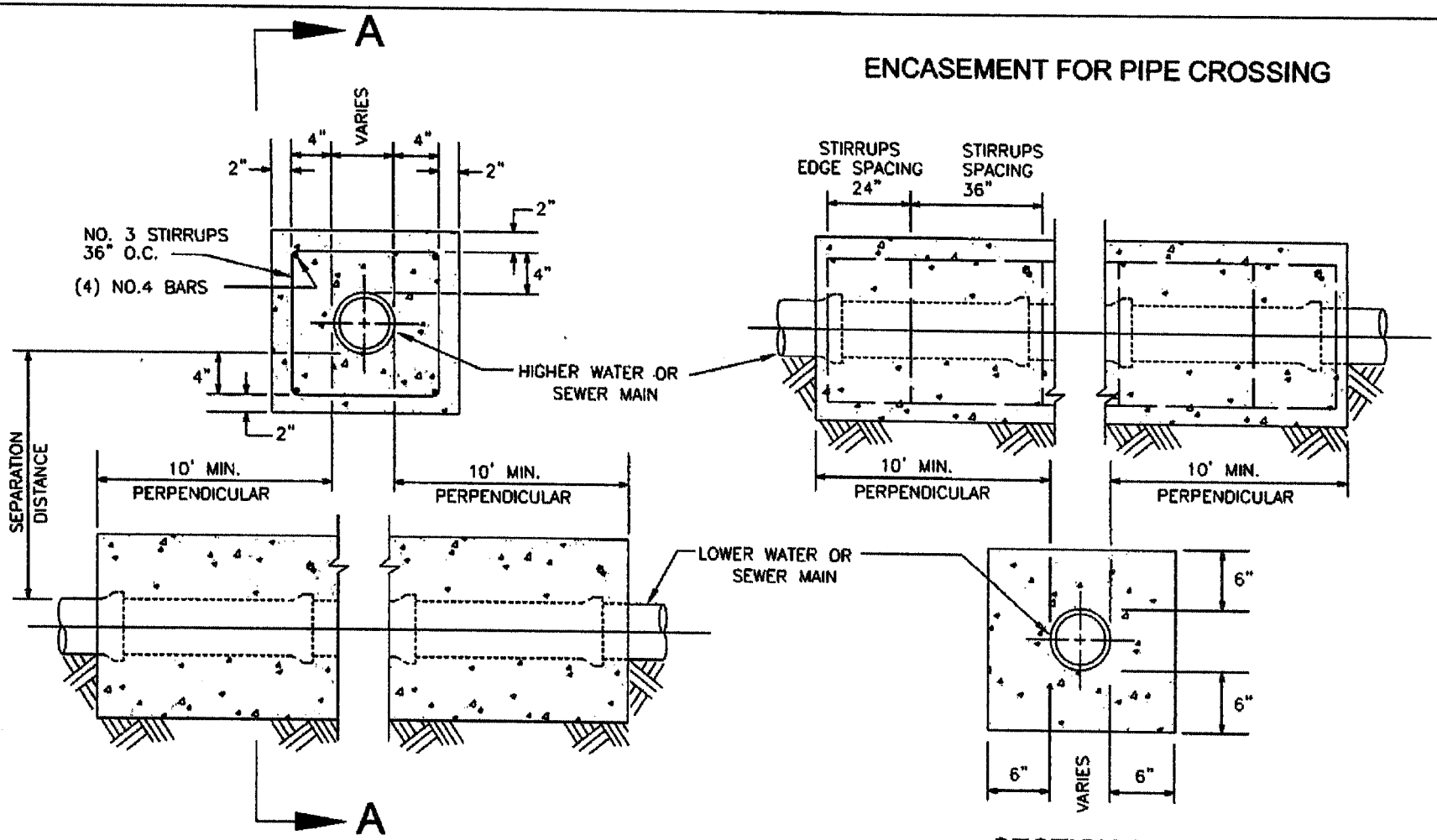

ENCASEMENT FOR PIPE CROSSING

SECTION A-A

NOTES:

1. 2,000 PSI CONCRETE
2. SEPARATION DISTANCES AND/OR OTHER EXTRA PROTECTION SHALL BE REQUIRED TO PROTECT WATER MAINS FROM CONTAMINATION BY SANITARY SEWER MAINS. SEE AWC STANDARD SPECIFICATION PAGES E-8-1-9 AND E-8-1-10.
3. SEE CROSS SECTION DETAIL FOR LIMITS OF SEPARATION/EXTRA PROTECTION. ALL DISTANCES ARE MEASURED PERPENDICULARLY FROM THE OUTSIDE OF THE PIPES.
4. RECLAIMED WATER SHALL BE CONSIDERED A SANITARY SEWER WHEN PLACED NEXT TO A POTABLE WATER MAIN.

ARIZONA WATER COMPANY

STANDARD SPECIFICATION
FOR THE INSTALLATION OF
WATER AND SANITARY SEWER
SEPARATION/PROTECTION

DRAWN BY	APPROVED BY	DATE		
CB	JW	04.07.2008		E-9-30-1

NOTES:

1. 2,000 PSI CONCRETE

2. SEPARATION DISTANCES AND/OR OTHER EXTRA PROTECTION SHALL BE REQUIRED TO PROTECT WATER MAINS FROM CONTAMINATION BY SANITARY SEWER MAINS. SEE AWC STANDARD SPECIFICATION PAGES E-8-1-9 AND E-8-1-10.

3. SEE CROSS SECTION DETAIL FOR LIMITS OF SEPARATION/EXTRA PROTECTION. ALL DISTANCES ARE MEASURED PERPENDICULARLY FROM THE OUTSIDE OF THE PIPES.

4. RECLAIMED WATER SHALL BE CONSIDERED A SANITARY SEWER WHEN PLACED NEXT TO A POTABLE WATER MAIN.

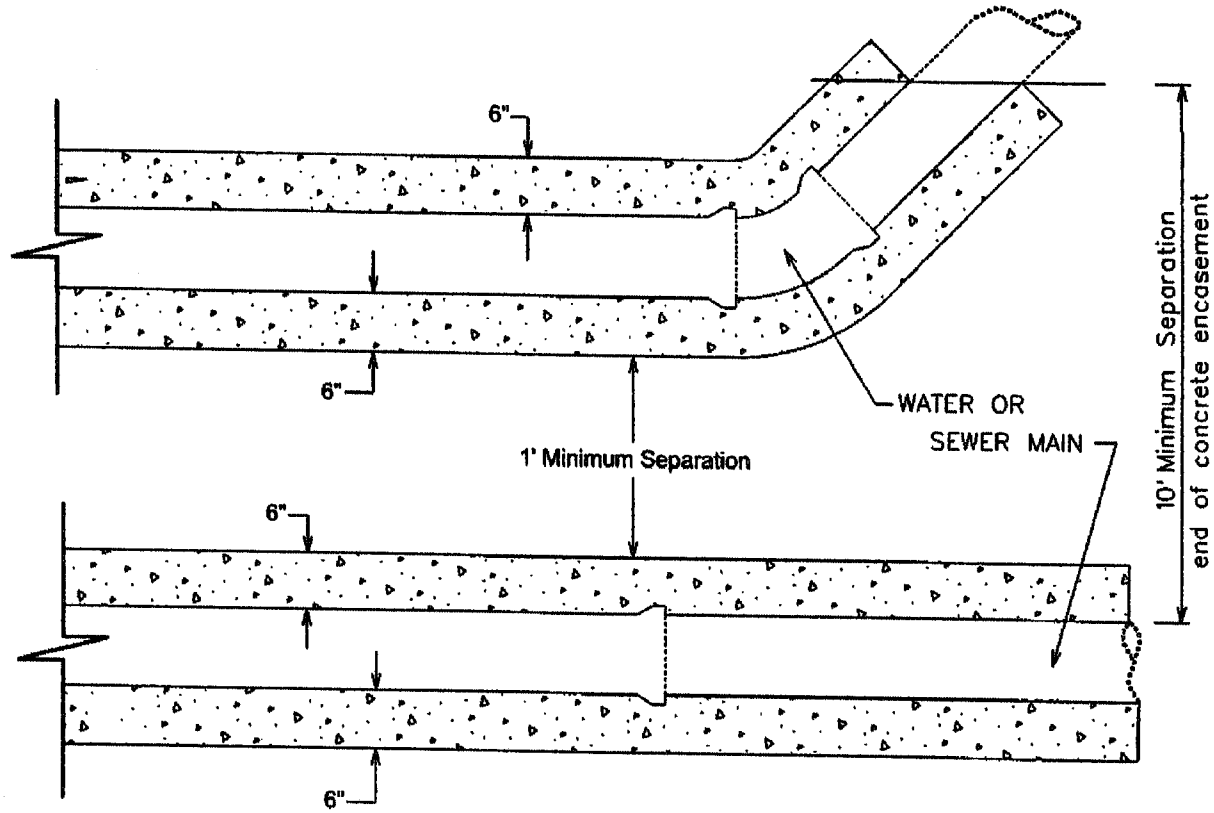

PLAN VIEW

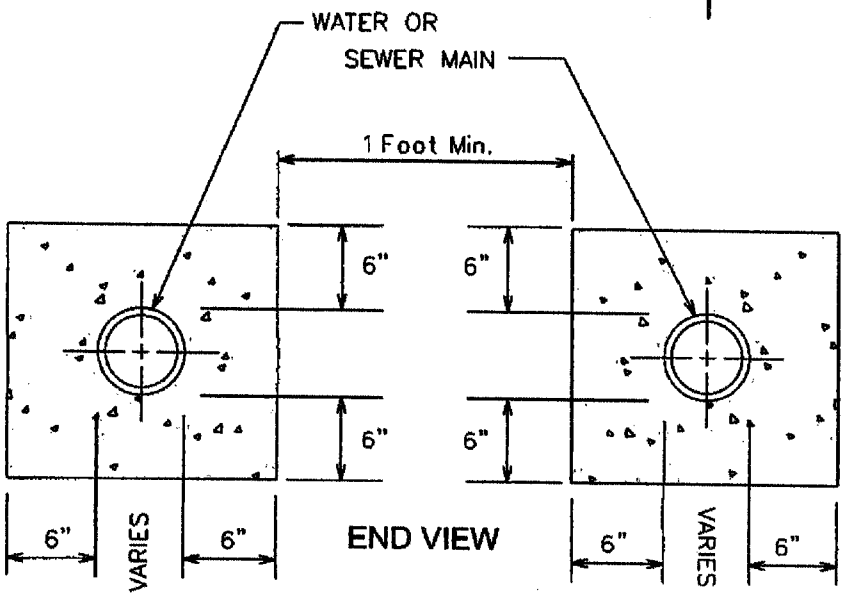

END VIEW

ENCASEMENT FOR PARALLEL PIPES

ARIZONA WATER COMPANY

STANDARD SPECIFICATION
FOR THE INSTALLATION OF
WATER AND SANITARY SEWER SEPARATION/PROTECTION

DRAWN BY	APPROVED BY	DATE		
CB	JW	04.07.2008		E-9-30-2

ARIZONA WATER COMPANY

3805 N. BLACK CANYON HIGHWAY, PHOENIX, ARIZONA 85015-5351 • P.O. BOX 29006, PHOENIX, ARIZONA 85038-9006
PHONE: (602) 240-6860 • FAX: (602) 240-6878 • WWW.AZWATER.COM

October 19, 2010

Mr. Jim Ryan
Clow Valve Company
8121 N. 10th Avenue
Phoenix, Arizona 85021

Re: Clow Medallion Fire Hydrants and Resilient Wedge Gate Valves

Dear Mr. Ryan:

Thank you for your interest in working with Arizona Water Company (the "Company") to add Clow Medallion Fire Hydrants and Resilient Wedge Gate Valves to the Company's material and equipment specifications. Based on the Clow product information you provided and your field presentations to our operations and engineering staff, the Company is pleased to inform you that the following items are approved for use in the Company's water systems in Arizona.

Medallion Fire Hydrant:

- Model F-2545
  - 5¼" MVO
  - 4½" pumper
  - 2½" hose
  - Meets AWWA C-502 standard and approval by ULFM

Resilient Wedge Gate Valves:

- Model 2639 & 2640
  - Meets AWWA C-509 Full Body Cast Iron includes 304 SS Nuts, Bolts & Low Zinc Bronze Stem
  - Size range 2½" thru 12"
- Model 2638
  - Meets AWWA C-515 Reduced Wall Ductile Iron includes 304 SS Nuts, Bolts & Low Zinc Bronze Stem
  - Size range 14" thru 48"

We look forward to developing a long-term relationship with you and the Clow products. If I can be of any assistance, please call me.

Very truly yours,

Fredrick K. Schneider
Vice President – Engineering

lar

VIA EMAIL: JIM.RYAN@CLOWVALVE.COM

ARIZONA WATER COMPANY

3805 N. BLACK CANYON HIGHWAY, PHOENIX, ARIZONA 85015-5351 • P.O. BOX 29006, PHOENIX, ARIZONA 85038-9006
PHONE: (602) 240-6860 • FAX: (602) 240-6878 • WWW.AZWATER.COM

November 24, 2010

Mr. Tony Geiger
US Pipe – Waterworks Marketing Consultants
34522 N. Scottsdale Road
Scottsdale, Arizona 85226

Re: US Pipe Sentinel Fire Hydrants and Resilient Wedge Gate Valves

Dear Mr. Geiger:

Thank you for your interest in working with Arizona Water Company (the "Company") to add US Pipe Sentinel Fire Hydrants and Resilient Wedge Gate Valves to the Company's material and equipment specifications. Based on the US Pipe product information you provided and your field presentations to our operations and engineering staff, the Company is pleased to inform you that the following items are approved for use in the Company's water systems in Arizona.

Sentinel Fire Hydrant:

- Model Sentinel 250
  - 5¼" MVO
  - 4½" pumper
  - 2½" hose
  - Meets AWWA C-502 standard and approval by ULFM

Resilient Wedge Gate Valves:

- Model US Pipe A-USP0
  - Meets AWWA C-509 Full Body Cast Iron <u>includes</u> 304 SS Nuts, Bolts & Low Zinc Bronze Stem
  - Size range 2" thru 12"
- Model US Pipe A-USP1
  - Meets AWWA C-515 Reduced Wall Ductile Iron <u>includes</u> 304 SS Nuts, Bolts & Low Zinc Bronze Stem
  - Size range 14" thru 48"

We look forward to developing a long-term relationship with you and the US Pipe products. If I can be of any assistance, please call me.

Very truly yours,

Fredrick K. Schneider
Vice President – Engineering

afh

VIA EMAIL: TGEIGER4@COX.NET

ARIZONA WATER COMPANY

SPECIFICATIONS

GENERAL CONDITIONS OF CONTRACT: E-4-1

CONSTRUCTION SPECIFICATIONS: E-8-1

STANDARD SPECIFICATION DRAWINGS: E-9-1

2007 EDITION

ARIZONA WATER COMPANY

GENERAL CONDITIONS OF CONTRACT: E-4-1

ARIZONA WATER COMPANY

E-4-1

GENERAL CONDITIONS OF CONTRACT

DEFINITIONS

A. Company. The words "Company" or "Arizona Water Company" mean Arizona Water Company, and where applicable, any division of Arizona Water Company, whose principal place of business is located at 3805 North Black Canyon Highway, Phoenix, Arizona 85015-5351 (Post Office Box 29006, Phoenix, Arizona 85038-9006).

B. Company's Authorized Representative. The words "Company's Authorized Representative" mean any officer of the Company, and any of the Company's Engineers, any Division Manager or Superintendent of the Company and/or such other person(s) designated in writing as the "Company's Authorized Representative" by the President or any Vice President of the Company.

C. Contractor. The word "Contractor" means either an individual or other entity employed to do the work as shown on the Construction Drawings and as specified herein.

D. Construction Drawings. The words "Construction Drawings" mean plans prepared by or on behalf of Arizona Water Company.

E. Invitation to Bid. The term "Invitation to Bid" means the current copy of Arizona Water Company's Form E-3-11-4 Request for Proposal/Contract or Form E-3-12-2 Invitation to Bid.

F. Contract. The word "Contract" means the written document titled "Contract" or "Proposal/Contract" when such document has been signed by an officer or other authorized representative of both the Contractor and the Company.

G. Inspector. The word "Inspector" means the Company's Authorized Representative or a person designated in writing by the Company's Authorized Representative.

GENERAL CONDITIONS OF CONTRACT

1. GENERAL

These General Conditions of Contract govern all works of installation and construction unless deviations are provided for on the Construction Drawings or in the Contract.

2. BONDS

The Contractor shall, upon request by the Company, furnish a performance bond and a material payment bond in the amount of 100% of the Contract price, in a form and from a surety acceptable to the Company.

3. LABOR AND/OR MATERIAL RELEASES

The Contractor shall supply labor and/or material releases satisfactory to the Company when requested to do so. Forms will be provided by the Company.

4. LICENSE

The Contractor shall have, as may be required by law, a valid license applicable to the work to be performed.

5. INSURANCE

The Contractor shall maintain in full force and effect insurance at no less than the following minimum amounts:

WORKER'S COMPENSATION	In accordance with requirements of the laws of the State of Arizona.
COMPREHENSIVE GENERAL LIABILITY (Including contractual liability covering death, bodily injury and property damage)	Combined single limit of not less than $1,000,000 for each occurrence.
AUTOMOTIVE LIABILITY (Including owned, non-owned and hired vehicles)	Combined single limit of not less than $1,000,000 for each occurrence.
SUBCONTRACTOR'S PUBLIC LIABILITY AND PROPERTY DAMAGE INSURANCE AND VEHICLE LIABILITY INSURANCE	Contractor shall either require each of its subcontractors to procure and to maintain Subcontractor's Public Liability and Property Damage Insurance and Vehicle Liability Insurance of the type and in the amounts specified in this Section 5 or insure the activities of its subcontractors in Contractor's own policy, in like amounts.

Such insurance shall name the Company, its officers, agents, and employees as additional insured and be primary for all purposes.

The Company will at all times have the right to require that all of such insurance be placed with insurance companies that are satisfactory to it. The Contractor shall file with the Company a certificate evidencing that each policy of insurance for the above coverages in the minimum amounts specified has been purchased and is in good standing.

Such certificate shall provide that notice be given to the Company at least thirty (30) days prior to cancellation or material change in the form of such policies or any of them. Such certificates shall be kept on file by the Company and the Company must have current certificates on file, or a certificate must accompany any bid proposal, before that proposal will be accepted by the Company.

6. CONTRACTOR UNDERSTANDS WORK AND WORKING CONDITIONS

By executing a Contract with the Company, the Contractor warrants that it has, by careful examination, satisfied itself as to the nature and location of the work, including soil conditions, the character, quality and quantity of the materials to be encountered, the character of the equipment and facilities needed preliminary to and during prosecution of the work, the general and local conditions, and all other matters which can in any way be expected to affect its work under the Contract. Verbal agreements or conversations with any officer, agent or employee of the Company, either before or after the execution of the Contract, are not binding upon the Company and shall not affect or modify any of the terms or obligations herein contained.

7. SPECIFICATIONS AND DRAWINGS

The Contractor shall keep on the job a complete copy of all drawings and specifications furnished by the Company which are applicable to the Contract with the Company. Anything mentioned in the specifications and not shown on the drawings or shown on the drawings and not mentioned in the specifications shall be of like effect as if shown or mentioned in both. In case of a discrepancy between the figures, drawings or specifications and physical conditions of the job, the matter shall be immediately submitted to the Company's Authorized Representative for decision as to adjustments, if any, because of the discrepancy; without a decision from the Company's Authorized Representative no discrepancy shall be adjusted by the Contractor, save only at its own risk and expense. Any deviation from the specifications must be approved in writing by the Company's Authorized Representative.

8. PROPERTY PROTECTION

Trees, fences, poles, underground structures and all other property shall be protected unless their removal is authorized on the Construction Drawings. Any property damaged shall be restored by the Contractor, at its expense, to the owner's satisfaction.

9. SPECIAL PERMITS, LICENSES AND INSURANCE

The Company shall obtain all permits for railroad, county, state, city and irrigation district rights-of-way as well as Forest Service, State Land Department and Bureau of Land Management permits. (Pipeline Contractors)

Whenever blasting is required, the Contractor shall obtain all permits, licenses and insurance required at its expense. (All Contractors)

The Contractor will be required to obtain, and shall certify in writing to the Company that it has obtained, all additional permits required to perform the work including, but not limited to, a National Pollution Discharge Elimination System Permit and/or an Aquifer Protection Permit as those permits relate to disposal of drilling, development and test waters and/or any other discharge or similar activity. (Well Drilling Contractors)

10. SURVEYS

The Company shall be responsible, or arrange, for all surveys required for the work covered in the Contract, unless otherwise specified.

11. BENCH MARKS, PROPERTY STAKES AND SURVEY STAKES

Bench marks, property stakes and survey stakes shall be preserved by the Contractor; in case they are destroyed or removed by Contractor or its employees, the Company will replace them at the Contractor's expense, and the Contractor and its sureties shall be liable therefore.

12. TOOLS, EQUIPMENT AND MATERIALS

The Contractor shall furnish all of the necessary tools, equipment, and pipeline materials required for the work. All material furnished by the Contractor shall be of the quality specified by the Company in its Construction Specifications (E-8-1).

13. SUPERINTENDENCE BY CONTRACTOR

The Contractor shall assure adequate superintendence of the work by a competent foreman or superintendent (with full authority to act on behalf of Contractor) satisfactory to the Company, who will be on the job at all times when work is in progress.

14. ORDER AND DISCIPLINE

The Contractor shall at all times enforce strict discipline and good order among its employees.

15. INDEPENDENT CONTRACTOR

The Contractor is an independent contractor and any provisions in the Contract, the specifications, or these General Conditions of Contract and Arizona Water Company's Construction Specifications which may appear to give the Company the right to direct the Contractor as to the details of the doing of any work to be performed by the Contractor, or to exercise a measure of control over said work, shall be deemed to mean and shall

mean, that the Contractor shall follow the desires of the Company in the results of the work only and not in the means whereby said work is to be accomplished, and the Contractor shall use its own discretion and shall have complete and authoritative control over the work and as to the details of the doing of the work.

16. PUBLIC SAFETY AND CONVENIENCE

Contractor shall at all times conduct its work so as to ensure the least possible obstruction to traffic and other inconvenience to the general public and the residents and businesses in the vicinity of the work, and to ensure the protection of persons and property.

To protect persons from injury and to avoid property damage, Contractor shall provide and maintain adequate barricades as required during the progress of the work and until it is safe to use the property for its intended purpose. The rules and regulations of the local governmental agencies and specific permit requirements respecting safety provisions shall be observed at all times.

In the case of blasting, the Contractor shall exercise extreme caution to protect the general public and personal and public property from harm or damage.

17. PROPERTY PROTECTION

Trees, fences, poles, and all other property shall be protected unless their removal is authorized by the Company. Any property damaged shall be restored by Contractor, at his expense, to Company's satisfaction.

18. RESPONSIBILITY OF CONTRACTOR

The work shall be under Contractor's responsible care and charge. Contractor shall bear all loss and damage whatsoever and from whatsoever cause, except that caused solely by the act of Company, which may occur on or to the work during the fulfillment of the Contract. If any loss or damage occurs, Contractor shall immediately make good any such loss or damage, and in the event of Contractor refusing or neglecting to do so, Company may, or by the employment of some other person, make good any such loss or damage, and the cost and expense of so doing shall be charged to Contractor.

The mention of any specific responsibility or liability imposed upon Contractor shall not be construed as a limitation or restriction of any general liability or duty imposed upon Contractor by the Contract. The reference to any specific duty or liability being made herein is merely for the purpose of explanation.

Contractor alone shall at all times be responsible for the safety of Contractor, Contractor's employees, and its subcontractors' employees, and for Contractor and its subcontractors' plant and equipment and the method of performing the work.

19. ERRORS AND OMISSIONS

If Contractor, in the course of the work, becomes aware of any errors or omissions in the Contract Documents or in the instructions, or if Contractor becomes aware of any discrepancy between the Contract Documents and the physical conditions of the site of

the work, Contractor shall immediately inform Company in writing. Any work done by Contractor after such discovery, until authorized by Company, will be done at Contractor's risk.

20. LAWS, REGULATIONS

Contractor shall give all notices required by law and comply with all laws, ordinances, rules and regulations, including, but not limited to, all applicable federal, state, local and other legally required health and safety standards, orders, rules, regulations or other laws, pertaining to the conduct of the work. Contractor shall be liable for, and shall defend and indemnify Company against and hold it harmless from, all violations of any law, ordinance, rule, regulation, standard, or order in connection with work furnished by or on behalf of Contractor. If Contractor observes that the Contract Documents are at variance with any law, ordinance, rule, regulation, standard, or order it shall promptly notify Company in writing and any necessary changes shall be adjusted as provided in the Contract for changes in the work. Contractor shall not perform any work contrary to such laws ordinances, rules, regulations, standards, or orders.

21. PERMITS, FEES AND INSPECTIONS

Permits and licenses necessary for the prosecution of the work, including, but not limited to, any National Pollution Discharge Elimination Systems (NPDES) Permits required by U.S. Environmental Protection Agency or the Arizona Department of Environmental Quality shall be secured, paid for, and complied with by Contractor.

Contractor shall be responsible for its actions and shall abide by all conditions and/or restrictions set forth in the NPDES Permit and any other permit or license required for this project.

Company shall at all times have access to the work whenever it is in preparation or in progress and Contractor shall provide proper facilities for such access and for all inspections. If the Contract Documents, the General Superintendent's instructions, laws, ordinances or any public authority require any work to be inspected or approved, Contractor shall give timely notice of its readiness for inspection.

Inspection of the work shall not relieve Contractor of any of its obligations even if defective work or unsuitable materials may have been previously overlooked by Company and accepted or estimated for payment. If any work is found not in accordance with the Contract Documents, Contractor, at its sole cost and expense, shall promptly make good such defective work.

22. CONSTRUCTION MARKING (PIPELINE ONLY)

Each job shall be marked and/or barricaded by the Contractor in such a manner that the construction is clearly visible at all times.

23. EXTRA WORK AND/OR MATERIALS

Except as otherwise herein provided, no charge for any extra work and/or material will be allowed unless the same has been ordered in writing by the Company's Authorized Representative, and the price stated in such order.

24. CHANGES

The Company shall have the right to make any changes in the work that it may determine to be necessary. If such changes affect the cost of the work, an equitable adjustment shall be negotiated. Changes shall in no way affect or void the obligations of both parties under the original Contract.

25. INSPECTION

All work and material shall be open at all times to inspection and acceptance or rejection by the Company's Inspector. Any work covered up by the Contractor prior to inspection and acceptance by the Company shall be subject to being uncovered at the expense of the Contractor for inspection by the Company. The Contractor shall give the Company reasonable notice of starting new work and shall provide, without extra charge, reasonable and necessary facilities for inspection, even to the extent of taking out portions of finished work. In case any such finished work removed is found satisfactory, however, the actual direct cost of such removal and replacement, plus 15% of such cost, will be paid by the Company; in addition, if completion of the work has been delayed thereby, the Contractor shall be granted a suitable extension of time on account of the additional work involved.

26. DEFECTIVE WORK OR MATERIAL

The Contractor shall remove, at its own expense, any work or material found defective by the Company's Inspector and shall rebuild and replace the same without extra charge; in default thereof, the same may be done by the Company at the Contractor's expense.

27. ASSIGNMENT

Neither party to the Contract may assign the Contract or sublet it in whole or in part without the written consent of the other, nor shall the Contractor assign any monies due or which may become due hereunder without the previous written consent of the Company, nor shall such consent release the Contractor from any of its obligations and liabilities under the Contract.

28. RIGHTS OF VARIOUS INTERESTS

Whenever work that is being done for the Company other than by the Contractor is contiguous to work being done by the Contractor, the respective rights of the various interests involved shall be established by the Company to secure the completion of the various portions of the work in general harmony.

29. SUSPENSION OF WORK

The Company's Authorized Representative may at any time and for any reason suspend all or any portion of the work under the Contract. This right to suspend work shall not be construed as denying the Contractor compensation for actual, reasonable and necessary expenses due to suspension to which it may be entitled.

The Company's Authorized Representative may order the Contractor to suspend any work because of certain conditions, such as inclement weather, or because the

Contractor is in violation of these General Conditions of Contract or the Construction Specifications. It is understood that compensation for expenses will not be allowed for such suspension when ordered by the Company's Authorized Representative on account of such conditions.

30. PROCEDURE OF WORK (PIPELINE ONLY)

All work under the Contract shall be planned and performed so as to cause a minimum of interference with normal vehicular and pedestrian traffic. At no time shall the Contractor completely obstruct the traffic to any business establishment during normal work hours of that business. It shall be the Contractor's responsibility to maintain facilities for ingress and egress to any business establishment. When crossing any street, not more than one-half of the street may be blocked at one time. All federal, state, county and city laws, rules and regulations relating to this subject are to be obeyed.

The Contractor shall complete any portion or portions of the work in such order of time as the Company may require. The Company shall have the right to take possession of and use any completed or partially completed portions of the work. If such prior possession or use increases the cost of or delays the work, the Contractor will be entitled to extra compensation or extension of time or both, as the Company may determine.

31. DISPUTES

All questions or controversies which arise between the Contractor and the Company, under, or in reference to, the Contract, shall be decided by the Company's Authorized Representative and a representative of the Contractor, and their decision shall be final and conclusive upon both parties.

32. CONNECTION TO EXISTING SYSTEM (PIPELINE ONLY)

Unless approved in writing by the Company's Authorized Representative, no tie-in or hot tap on the existing system shall be made unless the Company's Inspector is present. When the tie-in requires the operation of an existing valve or other control equipment, the conditions of Paragraph(s) 30 and 33 shall be complied with. The Contractor shall notify the Company twenty-four (24) hours prior to tie-in as to the exact time the Contractor plans to make tie-in so that the Company's Inspector will have sufficient time to locate valves and make necessary preliminary arrangements for shut down.

33. PLANNED INTERRUPTION OF WATER SERVICE (PIPELINE ONLY)

No valve or other control on an existing Company water system shall be operated for any purpose by the Contractor without approval of the Company's Inspector. All of the Company's water customers whose service is interrupted by a planned interruption, other than in cases of emergency, shall be notified by the Contractor at least twenty-four (24) hours before the planned interruption and advised of the probable time when the service will be restored.

34. EXISTING UTILITY FACILITIES (PIPELINE ONLY)

The Contractor shall notify all known utilities in the area of the work to be performed under the Contract and shall make arrangements to have their facilities marked in

accordance with A.R.S. ?40-360.022 ("Blue Stake Law"). The Contractor shall be responsible for locating and preserving all marked facilities. Any damages to these marked facilities shall be repaired at the expense of the Contractor.

The Company will pay the cost to relocate its or other structures when such structures are found occupying the physical space of the proposed installation. It is understood that the Contractor will be reimbursed for such work only when written authorization from the Company has been obtained in advance of such work.

35. CLEANING UP

The Contractor shall remove from the Company's property and from all public and private property, at its own expense, all temporary structures, rubbish and waste materials resulting from its operations. In the event Contractor fails to do so, the Company may remove same at the expense of the Contractor.

36. WORKING HOURS (PIPELINE ONLY)

Unless stated to the contrary in the Invitation to Bid and/or so stated on the Construction Drawings, or agreed to by the Company during a Pre-Construction Conference, the Contractor shall not be permitted to perform work on Saturdays, Sundays, or Company holidays, or commence work such as tie-ins that cannot be completed during normal working hours.

37. INDEMNITY

A. The Contractor shall indemnify the Company against, and save and hold it harmless from, any and all liability, claims, demands, loss, actions, causes of action, expense, penalties, fines, assessments, damages and costs of every kind and nature for injury to or death of any and all persons, including, without limitation, employees or representatives of the Company or of the Contractor or of any subcontractor, or any other person or persons, and for damage, destruction or loss, consequential or otherwise, to or of any and all property, real or personal, including, without limitation, property of the Company or of the Contractor or of any subcontractor, or of any other person or persons, and the violation of any law, ordinance, rule, regulation, standard, or order resulting from or in any manner arising out of or in connection with the performance of the work under the Contract, howsoever same may be caused, including, without limitation, the Company's active or passive negligence. The Contractor shall also, upon request by the Company, and at no expense to the Company, defend the Company in any and all suits, concerning such injury to or death of any and all persons, and concerning such damage, destruction or loss, consequential or otherwise, to or of any and all property, real or personal, including, without limitation, suits by employees or representatives of the Company or of the Contractor or of any subcontractor, or any other person or persons, or concerning any court or administrative proceeding concerning the violation of any law, ordinance, rule, regulation, standard, or order. Excluded from this paragraph are only those injuries to or deaths of persons and damage, destruction or loss, to or of property arising from the sole negligence or willful misconduct of the Company.

B. Contractor shall indemnify the Company against, and save and hold it harmless from, any and all liability, claims, demands, damages, costs, expenses and attorney's fees, suffered or incurred on account of any breach of any obligation, covenant or other

provision of this contract, including without limitation, breach of the indemnity provisions of subsection A of this Section 37.

C. Contractor further agrees to defend, indemnify and hold harmless the Company, its directors, officers, employees, and agents, from and against any and all costs, damages, claims, expenses, violations, notices of violations, penalties, liens, assessments, and liabilities of every kind and nature, foreseeable or unforeseeable, directly or indirectly, arising from any release, removal, generation, use, storage or disposal on, under, around, or from the well site of any material, substance, or waste, hazardous or non-hazardous, including, without limitation, drilling fluids, mud, cuttings and development and test water howsoever same may be caused, including, without limitation, the Company's active or passive negligence.

38. LIENS

If at any time there shall be evidence of any lien or claim for which the Company might become liable and which is chargeable to the Contractor, the Company shall have the right to retain out of any payment then due or thereafter to become due, an amount sufficient to completely indemnify the Company against such lien or claim. If the Company determines that such lien or claim is valid, the Company may pay and discharge the same, and deduct the amount so paid from any monies which may be or become due and payable to the Contractor.

39. PAYMENT

Upon completion of the installation or construction, the Company will, within thirty (30) days after receipt of proper invoice and labor and material releases, pay the amount due the Contractor. If the Company believes that additional work, such as clean up, is required, it may deduct the total cost of such additional work from the amount to be paid to Contractor.

40. COMPANY'S RIGHT TO TERMINATE CONTRACT: DAMAGES DUE TO DELAY

If the Company finds the Contractor to be in material violation of any section of these General Conditions of Contract, Construction Specifications or Standard Specification Drawings or if the Contractor refuses or fails to prosecute the work, or any separable part thereof, with such diligence as will insure its completion within the time specified or any extension thereof, or fails to complete said work within such time, or when any other cause exists to justify such action, the Company may, without prejudice to any other right or remedy, by written notice to the Contractor, terminate its right to proceed with the work or such part of the work as to which there has been such violation, delay or other cause.

In the event the Contractor's right to proceed is terminated, the Company may take over the work and take possession of, and utilize in completing the work, such materials as may be on the site of the work and necessary therefore and prosecute said work to completion by whatever method it may deem expedient. The Contractor and its sureties shall be liable to the Company for any excess cost caused thereby.

In the event the Contractor's right to proceed with the work is terminated, the Contractor shall not be entitled to receive any further payment until the work is completed or the job is canceled. If the unpaid balance of the Contract price exceeds the expense of finishing

the work, including compensation for additional managerial and administrative services, such excess shall be paid to the Contractor. If such expenses exceed such unpaid balance, the Contractor shall pay the difference to the Company.

41. GUARANTEE

The Contractor shall guarantee all deslabor and workmanship and any materials it installs for a period of one year following the date of completion and acceptance by the Company. If any portion of the work or any of the materials become defective within the guarantee period, the Company will notify the Contractor of such defect. The Contractor must repair any defect within fifteen (15) days of such notification. If repairs are not completed within this time period, the Company may repair the defect, or cause such defect to be repaired, and the cost of such repairs shall be paid by the Contractor. The Company reserves the right to determine which defects are the result of poor labor and workmanship and which are caused by defective materials.

42. LIQUIDATED DAMAGES FOR NON PERFORMANCE: REQUEST FOR EXTENSION(S) OF TIME

Time is of the essence in the Contract. The time period required for completion of the work will be specified in the Contract. The Contractor agrees that the Company will suffer substantial damages in the event the Contractor fails to complete the work within the agreed upon time period. The Contractor and the Company agree that since it would be impracticable or extremely difficult to precisely fix such damages, a reasonable approximation of such actual damages suffered by the Company shall be a sum equal to 0.5% of the Contract price for each working day beyond the time period for completion of the work specified in the Contract.

Request by the Contractor for extensions of the time period shall be in writing and shall not become effective until approved in writing by the Company's Authorized Representative.

43. PAYMENT FOR REQUIRED TESTING

Whenever testing is required by any governmental agency or by the Company to assure conformance of the Contractor's work with the appropriate standard, it will be paid for as follows:

a. For testing required under permits obtained by the Company or testing specifically requested by the Company, the cost of the first test will be paid for by the Company. In the event of failure of the first test, the cost of all further testing associated with the failure will be paid by the Contractor.

b. For testing required under permits obtained by the Contractor, all costs will be paid by the Contractor. Testing of the pipeline for pressure and leakage will be included in the Contract price.

44. CONTRACT DEADLINES AND BONDS REQUIREMENTS

The time limits to be allowed for the completion of any work covered in the Contract shall be established as follows: In the proposal submitted to the Company, in response to the Invitation to Bid, the Contractor shall state the number of calendar days required for completion of the work. The time required will become a part of the Contract. When the Company is ready to proceed with the work, a Commencement Notice will be issued by the Company to the Contractor by mail. The Commencement Notice will allow the time required in the Contract plus ten (10) calendar days and will indicate the final day of the time allowed. The work cannot begin until the Company has received a performance bond and materials payment bond for the Contract price unless the bonds have been waived under the special conditions section of the Contract. The additional ten (10) days is the allowance for time to deliver the Commencement Notice to the Contractor and for the Contractor to return the performance bond and materials payment bond to the Company. Time extensions will be granted if warranted, and only at the time of the delay, thus extending the final day of the time allowed.

If the Company elects not to require a performance bond and a material payment bond for the work, the cost of the bonds will be deducted from the proposed total cost and the Contract will reflect this reduced cost and the bonds requirements will be waived under special conditions of the Contract.

ARIZONA WATER COMPANY

CONSTRUCTION SPECIFICATIONS: E-8-1

CONSTRUCTION SPECIFICATIONS FOR THE INSTALLATION OF WATER DISTRIBUTION SYSTEMS DUCTILE IRON

DEFINITIONS

A. Company. The words "Company" or "Arizona Water Company" mean Arizona Water Company, and where applicable, any division of Arizona Water Company, whose principal place of business is located at 3805 North Black Canyon Highway, Phoenix, Arizona 85015-5351 (Post Office Box 29006, Phoenix, Arizona 85038-9006).

B. Company's Authorized Representative. The words "Company's Authorized Representative" mean any officer of the Company, and any of the Company's Engineers, any Division Manager or Superintendent of the Company and/or such other person(s) designated in writing as the "Company's Authorized Representative" by the President or any Vice President of the Company.

C. Contractor. The word "Contractor" means either an individual or other entity employed to do the work as shown on the Construction Drawings and as specified herein.

D. Construction Drawings. The words "Construction Drawings" mean plans prepared by or on behalf of Arizona Water Company.

E. Contract. The word "Contract" means the written document titled "Proposal/Contract" when such document has been signed by an officer or other authorized representative of both the Contractor and the Company.

CONSTRUCTION SPECIFICATIONS
FOR THE INSTALLATION OF WATER DISTRIBUTION SYSTEMS
DUCTILE IRON

1. GENERAL

All work is to be completed in a safe, workmanlike manner and in accordance with these Construction Specifications; any deviation therefrom must be approved in writing by the Company.

Installations must conform with the requirements of all governmental regulating agencies and the cost of conforming to such regulations must be included in the unit bid prices. Examples of such regulations, without attempting to be inclusive, are:

a. Special compaction and paving for street crossing.
b. Shoring when required because of the trench depth.
c. Closing a trench in those areas where no open trench is allowed overnight.
d. Barricading and traffic control as required.

2. LOCATION MARKING

Alignment stakes as required in the opinion of the Company shall be furnished by the Company to the Contractor and shall be set by the Company at agreed upon intervals and offsets. Under normal circumstances these will reference the pipeline location five feet (5') into the right-of-way measured from property pins. Grade stakes will be provided only when the Construction Drawings show a pipeline depth other than covered in these Specifications. It is the responsibility of the Contractor to preserve all survey work.

3. TRENCH EXCAVATION

The trench location is to be determined by the Construction Drawings.

FOR 8-INCH OR SMALLER PIPE: The depth of the trench prior to pipe laying shall be such that the finished pipeline shall have between thirty-six inches (36") and forty-two inches (42") of cover unless otherwise specified on the Construction Drawings.

FOR 12-INCH AND LARGER PIPE: The depth of the trench prior to pipe laying shall be such that the finished pipeline shall have between forty-eight inches (48") and sixty inches (60") of cover unless otherwise specified on the Construction Drawings.

The width of the trench at and below the level at the top of the pipe shall be a minimum of twelve inches (12") plus the outside diameter of the pipe barrel and a maximum of twenty-four inches (24") plus the outside diameter of the pipe barrel.

The bottom of the trench shall be accurately graded to provide a uniform bearing for each length of pipe for the full length of the pipe. If the native material on the trench bottom can be reasonably dug by hand, bell holes shall be dug for the joints so that the joints in no way support the pipe. When native materials such as rock are encountered during trenching that will not provide a uniform support for the pipe, the trench will be over-excavated an additional six inches (6") and suitable bedding material will be placed in the trench.

Bedding material will be placed by hand in four-inch (4") lifts and compacted to ensure uniform compaction and to eliminate any voids under the pipe. When the space between the pipe and trench bottom varies, this must be backfilled and compacted in four-inch (4") lifts to the mid-section of the pipe.

Whenever the trench is over-excavated for whatever reason, the trench bottom will be brought up to the correct depth at the Contractor's expense using either method (a) or (b) as follows:

a. A.B.C. material shall be used and compacted to a uniform density of not less than 80% of the maximum density as determined by AASHTO T-99 method A and T-191.

b. Native material 100% of which will pass through a one and one-half inch (1½") screen and at least 20% of which will pass through a number-8 screen shall be used and compacted to a uniform density of not less than 85% of the maximum density as determined by AASHTO T-99 method A and T-191.

4. MATERIALS TO BE PROVIDED BY CONTRACTOR

Unless otherwise specified on the Construction Drawings or in the Contract, the Contractor will supply all of the necessary materials which will become a permanent and integral part of the water distribution system, including concrete blocking, anchors, backfill material, paving material and supplies used during the prosecution of the work. All materials provided by the Contractor to construct the water distribution system must be NSF Standard 61 approved. All potable water pipes and fittings shall have NSF-PW seal. Construction materials used in the water system shall be lead free as defined at AAC R28-4-504 and R18-1-101. The Contractor will provide the following m aterials:

a. FIRE HYDRANTS: Mueller Super Centurion 250 Fire Hydrant, meets ANSI/AWWA C502 Standard, Model No. A-423, 5¼" main valve opening, three way, 6" Mechanical Joint Shoe, 1½" pentagon operating nut, color - yellow, drain open, open direction - left, 4' or 4'6" bury depending on application. For pumper and hose nozzle inform ation see below.

(1) 1 - 4" Pumper Nozzle, NST and 2 – 2½" Hose Nozzles, NST. (These locations only: Ajo, Casa Grande, Coolidge and San M anuel.)

(2) 1 – 4½" Pumper Nozzle, NST and 2 – 2½ " Hose Nozzles, NST. (These locations only: Apache Junction, Arizona City, Lakeside, Oracle, Overgaard, Pinewood, Rimrock, Sedona, Sierra Vista, White Tank and Winkelman.)

(3) 1 – 4½" Pumper Nozzle, NST and 2 – 2½" Hose Nozzles, NPT (Bisbee only.)

(4) 1 - 3" Pumper Nozzle GA 6-350 (6 threads per inch, 3.50 pitch diameter) and 2 – 2½" Hose Nozzles, NPT (Miami only.)

(5) 1 – 3½" Pumper Nozzle GA 6-411 (6 threads per inch, 4.11 pitch diameter) and 2 – 2½" Hose Nozzle, NST (Superior only.)

b. FITTINGS: Manufactured by Tyler or Union. Crosses, Elbows, Tees, Cap, Reducer, Adapter, Plug, Blind Flange and Tapped Flange; Ductile Iron, Class 350, SSB, Cast Iron Cement Lined.

(1) Foster Adaptors for MJ, made by Infact Corporation: Available in size 4" to 16". Part No. 4" = 4FA-BC, 6" = 6FA-BC, 8" = 8FA-BC, 10" = 10FA-BC, 12" = 12FA-BC, 16" = 16FA-BC.

c. DETECTOR CHECK VALVE: Mueller/ Hersey EDC III, iron body, including 5/8" x ¾" Trim Kit. Trim Kit Part No.: 4" = 282080, 6" = 282082, 8" = 282085, 10" = 282496.

d. GATE VALVES: Mueller Resilient Wedge Gate Valves, meets AWWA C509 specification, 250 psig, Non-rising stem, Part No. A-2360 sizes 4" through 12" ; Part No. A-2361 sizes 14" through 36", low zinc stems, epoxy coated inside and outside to meet the NSF 61 rating. The bonnet and stuffing box shall have 304 stainless steel bolts/nuts.

e. TRACER WIRE and WARNING TAPE:

1. TRACER WIRE: Shall be direct bury AWG #14 solid copper wire, Color: Blue.

2. WARNING TAPE: Reef Industries, Standard Terra Tape in 3" widths. Color: Blue and imprinted 'Arizona Water Company'.

f. AIR RELEASE VALVE: Crispin Model AR10 with 1" NPT inlet and ½" NPT outlet, cast iron body and top flange; with a 5/64" orifice with stainless steel valve sealing faces and BUNA-N rubber.

g. PRESSURE RELIEF VALVE: Watts 174A, Model M, 2" inlet, 2" outlet, Bronze Body, 30lb. to 150lb. pressure range.

h. MEGA LUG: Mechanical Joint restraint made of ductile iron conforming to ASTM 536-80, 250 psi made by EBAA Iron, Inc., series 1100 or equal.

i. METER BOXES:

(1) Concrete Box with a steel regular lid, Number 1: Tucson specification.

(2) Concrete Box with a steel regular lid, Number 2, 3, and 4: Phoenix specification.

j. PIPE, COPPER: Type K soft copper in 60 or 100-foot coils, per ASTM B88.

k. PIPE, DUCTILE IRON: Ductile Iron Pipe, Cement Lined, Push-on, conform to current ANSI/AWWA Specification A21.51/C151, Pressure Class 350 (sizes 4" through 12"), Pressure Class 250 (sizes 14" through 20"), or Pressure Class 200 for 24" through 36" pipe. Vendors:

(1) Pacific States Cast Iron Pipe Company
(2) Griffin Pipe
(3) United States Pipe and Foundry Company
(4) American Ductile Iron Pipe
(5) Clow Pipe (McWane, Inc.)

l. PIPE, PLASTIC: Plastic pipe, C-900 PVC per ANSI/AWWA C900, Class 150, sizes 6" through 12". NSF61 approved. Furnished in laying lengths of 20'. The barrel shall conform to the outside dimensions of steel pipe (IPS) or cast iron (CI) pipe equivalent and the wall thickness of dimension-ratio (DR) 18.

m. POLYETHYLENE ENCASEMENT (Polywrap): For all pipeline and related fittings installed, EXCEPT for the Coolidge Division. Minimum 8 Mil. and installed per AWWA C105/A21.5-93 and ASTM A-674-89. Manufactured by the Pacific States Cast Iron Pipe Company. The wrapping tape shall be minimum 10 mil. vinyl tape. No duct tape shall be used.

n. COUPLING: Mueller, straight three part union, tested to meet ANSI/AWWA C800, H15403, conductive com pression.

Mueller, H15428, straight coupling, conductive compression by male iron pipe, tested to meet ANSI/AWWA C800 specification. Size: 2".

Mueller, H15451, straight coupling, conductive compression by female iron pipe, tested to meet ANSI/AWWA C800 specification. Size: 2".

Viking Johnson brand, sold by Mueller: MaxiFit Straight (2"-24"), MaxiFitXtra Straight (4"-8") or MaxiStep Transition, tested to meet AWWA/ANSI C.219-91 specifications – certified to ISO 9001:1994 / Smith – Blair Quantum.

o. STOP, ANGLE METER, BALL: Mueller, valve, B24258, conductive compression by meter swivel nut, tested to meet ANSI/AWWA C800, size 5/8 " x ¾" x ¾" for a ¾" service or size 1" for a 1" service.

Mueller, valve, B24265, female pipe thread by meter swivel nut, tested to meet ANSI/AWWA C800, size 5/8" x ¾" x ¾" for a ¾" service or size 1" for a 1" service.

p. STOP, CORP: Mueller, ball valve, B25008, taper thread by conductive compression, tested to meet ANSI/AWWA C800 specification, sizes: ¾", 1" and 2".

Mueller, ball valve, B25028, iron pipe thread by conductive compression, tested to meet ANSI/AWWA C800 specification. Sizes ¾", 1", and 2".

Mueller, 300 Ball Curb Valve, B-25122, taper thread by conductive compression, tested to meet ANSI/AWWA C800 specifications, size: 2". (2" service)

q. STOP, CURB: Oriseal valve, H10291, iron pipe thread by iron pipe thread, quarter turn check, brass, tested to 300 psi working pressure, tested to meet ANSI/AWWA C800 specification, size: 2".

Mueller, B20283, Mueller 300 ball curb valve, female iron pipe by female iron pipe, quarter turn check, tested to meet ANSI/AWWA C800 specification. Size: 2". (Blow-off E-9-8-1).

r. TAPPING SADDLE: Smith Blair, Cast Bronze ASTM-B584 85-5-5-5, double strap, iron pipe threads, Models 321 and 323. Washers are silicon bronze, ASTM-B36. Gaskets are grade 60 Buna N, or Mueller bronze double strap service saddle, BR 2 B series, cast bronze, ASTM-B585, 85-5-5-5, or H16084, 200 psig, meets ANSI/AWWA C800.

s. TAPPING SLEEVE: Mueller H304 Stainless Steel Tapping Sleeve, JCM 432 18-8 Type 304 Stainless Steel Tapping Sleeve, Romac "SST" Type 304 Stainless Steel Tapping Sleeve or CASCADE-style CST-EX stainless steel pressure-rated tapping sleeve.

t. TAPPING VALVE: Mueller Resilient Wedge tapping valve, Catalog Number T-2360-16, Class 125, sizes 4" through 12"; T-2361-16, Class 125, sizes 14" to 36" all with Type 304 stainless steel fasteners; bypass valves are required on 18" – 36" valves flange by mechanical joint per ANSI/AWWA C111, iron wedge, non-rising stem. Epoxy coated interior/exterior per ANSI/AWWA C550 for NSF 61 compliance. 250 PSI range for valves 4" to 12". 150 PSI range for valves 14" to 36".

u. U-BRANCH: Mueller, H15364, 1" male iron pipe by ¾" male iron pipe, tested to meet ANSI/AWWA C800 specification. Size: 1" x ¾" x 13½", straight line.

v. VALVE BOXES: Valve Box with Cover, adjustable, Tyler 562-A or equal, made of cast iron.

w. VAULTS: Utility Vault Company, Chandler, AZ.

(1) 4484-WA concrete vault with a 3660 aluminum double torsion door with a recessed padlock hasp, two - 18" x 24" center knockouts.

(2) 575-WA concrete vault with a 4874 aluminum double torsion door with a recessed padlock hasp, two - 18" x 24" center knock outs and adjustable frame.

(3) 612-5X-WA concrete vault with a 4874 aluminum double torsion door with a recessed padlock hasp, two - 18" x 24" center knockouts.

x. VALVE, METER: Mueller, B24265-1, Mueller 300 ball angle meter valve, female iron pipe by meter nut, quarter turn check, lock wing, tested to meet ANSI/AWWA C800 specification. Size: 1".

Mueller, B25170, Mueller 300 ball straight valve, conductive compression by female iron pipe, quarter turn check, lock wing, tested to meet ANSI/AWWA C800 specification. Size: 1".

y. YOKES, METER: Relocator type copper meter yoke with horizontal inlet and outlet and meter thread ends, B24118, with lock wing Mueller 300 angle ball valve, full port, sizes: 1" x 12", 5/8" x ¾" x 7", 5/8 x ¾" x 9".

Mueller, 2" copper meter yoke with horizontal inlet and outlet and female iron pipe threads, B2423-99000, with lock wing Mueller 300 ball angle meter valves on inlet and outlet risers. Raised 1" by-pass with lock wing Mueller 300 ball valve.

The Contractor also will be required to provide the following materials, the cost of which will be included in its unit bid price:

All material and concrete for thrust blocks, other anchors, reinforcing steel; all gravel, crushed stone, A.B.C., earth, sand, or screened material which may be required; all material for bracing and shoring trenches and for construction of forms; all barricades and traffic control equipment; all material for paving replacement and any water used for compaction of backfill.

5. INSTALLATION OF MATERIALS

All materials are to be installed in accordance with manufacturers recommendations unless otherwise directed by these S pecifications.

All pipe, fittings and valves shall be laid true to the lines, grades and locations established by the Specifications and the Construction Drawings.

The ends and inside of the pipe shall be thoroughly cleaned and inspected for damage. No damaged materials shall be installed in the water distribution system .

Whenever the work ceases for any reason, all open pipeline ends shall be tightly plugged by the Contractor. Plugs shall be watertight and approved by the company.

Concrete thrust blocks of the sizes required by the plans and specifications are to be provided at all valves, changes in direction or size, or at any other point where an unbalanced thrust due to water pressure would exist. Thrust blocks are to be formed to prevent any concrete from spilling over or into a joint.

Trench curves as shown on the Construction Drawings may be made without fittings when using push on joint pipe up to twelve inches (12") in diameter, if the deflection of the pipe does not exceed five degrees (5°) or nineteen inches (19") per eighteen-foot (18') length of pipe. The minimum radius of such curves will be two hundred five feet (205').

Prior to construction, the appropriate agency(ies) will be notified as required by the permit(s).

It shall be the Contractor's responsibility to uncover all existing water lines being connected to, and to verify the location, depth and size of pipe befor e any construction begins.

Any construction performed without the knowledge of the duly authorized representative is liable for removal and replacem ent at the Contractor's expense.

All fire hydrants, frames, covers and valve boxes, etc. shall be adjusted to finished grade prior to the placing of the asphalt concrete surface course by the Contractor (where applicable).

Air release valves shall be installed at water system high points per Standard Detail E-9-8-2.

All water services shall be set a minimum of two feet (2') on the customer's property, preferably within the P.U.E. and not within right-of-way.

Unless otherwise specified on the construction drawings, all water mains shall be installed five feet (5') from the property line inside the right-of-way or easement.

Water valves shall be spaced not more than five hundred feet (500') in commercial districts and not more than eight hundred feet (800') in other districts. Variations may be required for transmission mains or special applications.

Installation of water line casing shall be per Standard Speci fication E-9-24-1.

Tracer Wire and Warning Tape are to be installed on all mains, tees, crosses, ells and fire hydrant laterals. They will not be installed on service lines. The tracer wire will be installed on the water main 45 degrees from the vertical centerline of the pipe and shall be taped to the fittings directly and on the main every 10 feet using a minimum 10 mil vinyl tape. The tracer wire shall be placed between the valve riser and box with a minimum of 12" of wire inside. The warning tape shall be installed a minimum of two feet below the surface, being measured from final grade, directly over the center of the pipe. Any splices in the tracer wire shall be joined using waterproof connectors. Any splices in the warning tape shall be joined using minimum 10 mil vinyl tape. The tracer wire shall be tested for continuity after backfill and compaction, but before paving. Any detected damages to the wire shall be repaired before paving will be allowed.

6. BACKFILL OF WATER MAIN TRENCHES

Backfill of any excavation shall conform to the requirements of any of the governmental agencies having jurisdiction over the location. If no governmental agency having such jurisdiction specifies backfill or compaction requirements, and no special requirements are shown on the Construction Drawings, the procedure set forth in this section will apply for water line trenches.

The bedding material above the pipe and backfill material shall be compacted to a minimum of 70% compaction within a utility easement and 80% compaction within a right-of-way as determined by AASHTO T-99 method A and T-191. If water settling is used for compaction, it is the responsibility of the Contractor to prevent the pipe from floating.

The bedding material shall be either native material, 100% of which will pass through a one and one-half inch (1½") screen and at least 20% of which will pass through a number-8 screen, or imported material which conforms to M.A.G. specifications for A.B.C. or type-B

select materials. Bedding material shall be used below and around the pipe and a minimum of twelve inches (12") above the pipe. Shade and bedding material to be mechanically compacted prior to remainder of trench back-fill.

The remainder of the trench shall be backfilled with native or imported material which shall be of sound earthen material free from broken concrete, wood, broken pavement, or other unsuitable substances. Except as otherwise specified, backfill may be material containing no pieces larger than six inches (6") in greatest dimension.

Where settlement occurs, additional backfill material shall be placed and compacted and the trench shall be brought to final grade.

7. HYDROSTATIC TESTING OF COMPLETED PIPELINES

Hydrostatic testing of water pipelines will be completed before the new system is connected into the existing water system so that all testing can be done against all new materials.

The completed section of water pipeline to be tested shall be slowly filled with water with care being taken to expel all air from the pipe. If necessary, the pipe will be tapped at high points to vent air.

The Contractor shall provide all equipment and labor necessary to accomplish this testing and the price shall be included in the unit prices. The Contractor shall notify the Company in advance of the testing so that the Company can schedule a duly authorized representative to be at the site during testing. The Contractor, at its own expense, shall make any necessary repairs to the system being tested in order to cause the section being tested to meet the test limits set below. The Contractor may request authorization of the Company to connect the new pipelines to the existing system prior to completion of pressure testing when, in the Company's sole opinion and judgment, conditi ons warrant such connection.

The Contractor shall assume all responsibility to complete pressure testing to Company's specifications after such connection, including, but not limited to, isolation of the new pipelines from the existing system, if necessary.

Connections prior to completion of pressure testing shall not be made unless prior Company authorization has been obtained, and any extra expenses resulting from such connections shall be the sole responsibi lity of the Contractor.

Leakage tests will be for a period of two hours at 200± 5 psi at the point of lowest elevation; leakage may not exceed 0.1 gallons per hour per one thousand feet (1,000') of pipe per inch of diameter. If dry utilities are not installed, a second pressure test is required.

8. STERILIZATION AND FLUSHING OF COMPLETED WATER PIPELINES

Sterilization and flushing will conform to recommendations of Arizona State Department of Health Services Engineering Bulletin Number 8, latest edition, or any future Arizona Department of Environmental Quality bulletins. Contractor to follow all conditions of any discharge permit.

9. NO OTHER UTILITIES ALLOWED IN OR NEAR WATER PIPELINE TRENCHES

No other utility installations will be permitted in the water pipeline trench or within five feet (5') of the Company's water pipeline when running parallel to the water pipelines.

10. PROTECTION OF WATER MAINS NEAR SEWERS

In order to protect water mains from contamination by sewers, the installation of the water mains must conform to the following requirements:

a. Horizontal - When water lines and sewers are laid parallel with each other, the horizontal distance between them shall not be less than six feet (6'). Each line shall be laid on undisturbed or bedded material in a separate trench. Where conditions prevent the minimum horizontal separation set forth above, extra protection will be required. Extra protection shall consist of constructing the sewer main with mechanical joint ductile iron pipe or with slip-joint ductile iron pipe if joint restraint is provided, or encasing the sewer main in concrete. Extra protection shall consist of constructing the water main with mechanical joint ductile iron pipe or with slip-joint ductile pipe if joint restraint is provided. The water main shall not be encased in concrete.

The Construction Drawings shall indicate the installation requirements. The drawings showing these exceptions shall have been approved by the appropriate state and/or county health department. Refer to the diagram below for clarification.

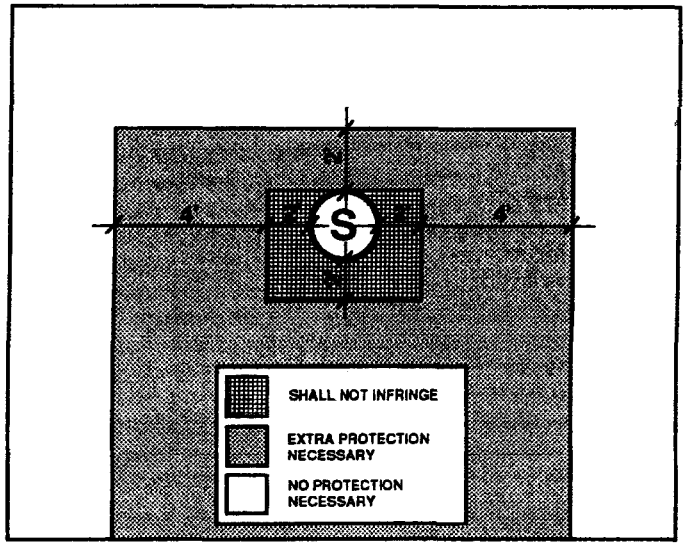

Under no circumstances will the horizontal separation between sewer mains and water mains be less than two feet (2'). All distances are to be measured from the outside of the sewer main to the outside of the water main.

b. Vertical - When a water main is parallel with or crosses a sewer main within two feet (2') above the sewer or greater than two feet (2') below the sewer, extra protection will be required. Extra protection shall consist of constructing the sewer main with mechanical joint ductile iron pipe or with slip-joint ductile iron pipe if joint restraint is provided, or encasing the sewer main in concrete. Extra protection shall consist of constructing the water main with mechanical joint ductile iron pipe or with slip-joint ductile pipe if joint restraint is provided. The water main shall not be encased in concrete.

The Construction Drawings shall indicate the installation requirements. The drawings showing these exceptions shall have been approved by the appropriate state and/or county health department.

Under no circumstances will the vertical separation of a sewer main installed above a water main be less than two feet (2'). All distances are to be measured from the outside of the sewer main to the outside of the water main. Refer to the diagram above for clarification.

c. When unusual conditions such as, but not limited to, highway or bridge crossings prevent the water and sewer main separations required from being met, the appropriate state and/or county health department will review and may approve requests for authorization to use alternate construction techniques, materials and joints on a case-by-case basis.

d. No water pipe shall pass through or come into contact with any part of a sewer manhole. The minimum horizontal separation between water mains and manholes shall be six feet (6'), measured from the center of the manhole.

e. The minimum separation between force mains or pressure sewers and water mains shall be two feet (2') vertically and six feet (6') horizontally under all conditions. Where a sewer force main crosses above, or less than six feet (6') below, a water line, the sewer main shall be encased in at least six inches (6") of concrete for ten feet (10') on either side of the water main. Refer to the diagram below for clarification.

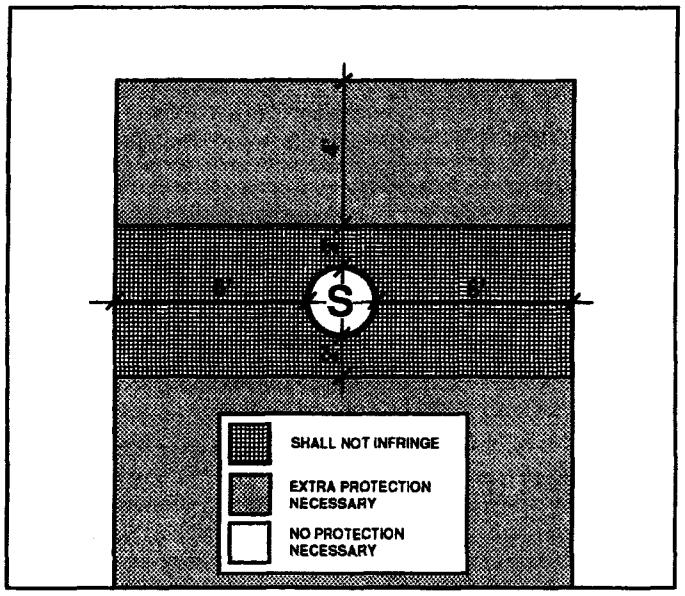

f. Sewer mains (gravity, pressure, force) shall be kept a minimum of fifty feet (50') from drinking water wells, unless the following conditions are met:

1. Water main pipe, pressure tested in place to 50 psi without excessive leakage, may be used for gravity sewers at distances greater than twenty feet (20') from drinking water wells.

2. Water main pipe, pressure tested in place to 150 psi without excessive leakage, may be used for pressure sewers and force mains at distances greater than twenty feet (20') from drinking water wells.

g. No septic tank/disposal field system shall be constructed within one hundred feet (100') of a drinking water well.

h. All distances are measured perpendicularly from the outside of the sewer main to the outside of the water main. These separation requirements do not apply to building, plumbing or individual house service connections.

i. Use Mechanical Joint ductile iron pipe with Megalug thrust restraints a minimum of ten (10') feet on each side of a sewer or storm drain crossing.

11. COMPACTION

When crossing existing water mains a minimum of 95% compaction is required to the bottom of existing mains.

Arizona Water Company requires that no slurry be permitted to contact existing cement/asbestos or ductile iron pipes, unless authorized by the company. Slurry may be poured in the bottom of the sewer trench stopping three inches (3") below the existing water main. The backfill used around the main should be AB in sufficient depth to prevent slurry from contacting existing main.

12. WATER MAIN MATERIAL SPECIFICATIONS

Ductile iron pipe (Push-on type) minimum class 350, cement lined and conform to AWWA C151.

All main line valves shall conform to AWWA C500 with a minimum working pressure of 200 psi.

All cast iron fittings to be cement lined in accordance with AWWA C104 and shall conform to AWWA C110 with a minimum working pressure of 250 psi. Except for the Coolidge System – See Note 4L.

Maximum joint deflection for 6" mechanical joint ductile iron pipe is seven degrees, seven minutes (7°, 7') or twenty-seven inches (27") per eighteen-foot (18') length pipe, for a maximum curve of one hundred forty-five feet (145').
Maximum joint deflection for 8" and 12" mechanical joint ductile iron pipe is five degrees, twenty-one minutes (5° 21') or twenty inches (20") per eighteen-foot (18') length pipe, for a maximum curve of one hundred ninety-five feet (195').

Maximum joint deflection for 6", 8" and 12" push-on joint ductile iron pipe is five degrees (5°) or nineteen inches (19") per eighteen-foot (18') length pipe for a maximum curve of two hundred five feet (205').

ARIZONA WATER COMPANY

STANDARD SPECIFICATION DRAWINGS: E-9-1

ARIZONA WATER COMPANY

STANDARD SPECIFICATION DRAWINGS

INDEX (E-9)

E-9-1	TYPICAL GATE VALVE LOCATIONS
E-9-2	INSTALLATION OF TYPICAL VERTICAL AND HORIZONTAL GATE VALVES
E-9-3	INSTALLATION OF TYPICAL TAPPING SLEEVE AND VALVE
E-9-4	INSTALLATION OF TYPICAL VALVE SUBJECT TO NON-VEHICULAR AND VEHICULAR TRAFFIC
E-9-5	INSTALLATION OF TYPICAL THRUST BLOCKING SCHEDULE, THRUST BLOCK FOR VERTICAL BENDS, AND MEGALUG THRUST RESTRAINTS
E-9-6	INSTALLATION OF TYPICAL PERPENDICULAR FIRE HYDRANT
E-9-7	INSTALLATION OF TYPICAL PARALLEL FIRE HYDRANT
E-9-8	INSTALLATION OF TYPICAL 2" BLOWOFF DEVICE, AND AIR RELEASE VALVE
E-9-9	INSTALLATION OF TYPICAL SINGLE SERVICE CONNECTION FOR A $^3/_4$" OR 1" METER
E-9-10	INSTALLATION OF TYPICAL DOUBLE SERVICE CONNECTION FOR A $^3/_4$" AND 1" METER
E-9-11	INSTALLATION OF TYPICAL 2" SERVICE CONNECTION
E-9-12	INSTALLATION OF 3" COMPOUND METER, 4" COMPOUND METER, 6" COMPOUND METER, 6" COMPOUND SERVICE, CONCRETE VAULT, AND NON-POTABLE PROPELLER METER
E-9-13	INSTALLATION OF TYPICAL 4" THRU 8" DETECTOR CHECK VALVES AND 3" THRU 10" REDUCED PRESSURE PRINCIPLE DETECTOR WITH BYPASS METER ASSEMBLY (RPDA) FOR FIRE LINE SERVICES
E-9-14	INSTALLATION OF TYPICAL PRESSURE RELIEF VALVE ASSEMBLY
E-9-15	INSTALLATION OF TYPICAL PRESSURE REDUCING STATION
E-9-16	PAINT COLOR SELECTION
E-9-17	STEEL WATER STORAGE TANK
E-9-18	HYDROPNEUMATIC TANK
E-9-19	INSTALLATION OF WELL SHELTER

E-9-20	INSTALLATION OF TYPICAL WELL WITH LINE SHAFT TURBINE PUMP
E-9-21	INSTALLATION OF TYPICAL WELL WITH SUBMERSIBLE TURBINE PUMP
E-9-22	INSTALLATION OF COLUMN PIPE, OIL TUBE AND LINE SHAFT
E-9-23	HOT TAP AND JUMPER METER CONNECTION
E-9-24	INSTALLATION OF TYPICAL WATER LINE ENCASEMENT
E-9-25	INSTALLATION OF CALCIUM HYPOCHLORITE TABLET CHLORINATOR
E-9-26	INSTALLATION OF CHAIN LINK FENCE
E-9-27	INSTALLATION OF SIDE HUNG WATER LINE SUSPENSION
E-9-28	PIPE WARNING TAPE, LOCATOR WIRE, AND LOCATOR WIRE TERMINATION
E-9-29	INSTALLATION OF A TYPICAL SAMPLING STATION

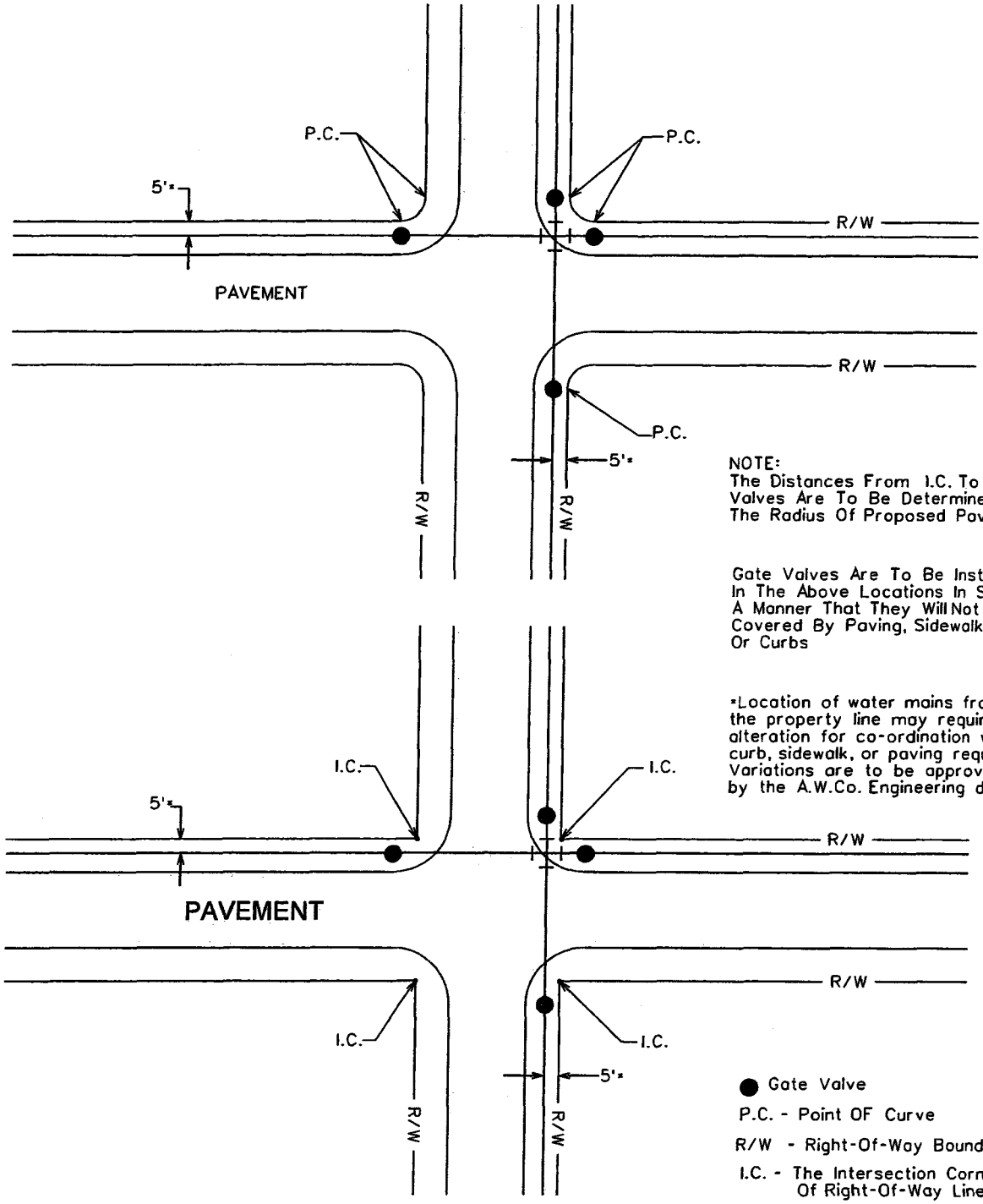

NOTE:
The Distances From I.C. To Gate Valves Are To Be Determined By The Radius Of Proposed Pavement.

Gate Valves Are To Be Installed In The Above Locations In Such A Manner That They Will Not Be Covered By Paving, Sidewalks, Or Curbs

*Location of water mains from the property line may require alteration for co-ordination with curb, sidewalk, or paving requirements. Variations are to be approved by the A.W.Co. Engineering dept.

ARIZONA WATER COMPANY

STANDARD SPECIFICATION
FOR THE INSTALLATION OF

TYPICAL GATE VALVE LOCATIONS

DRAWN BY:	APPROVED BY:	DATE:	△ 1/31/2001	
CCO	M.W.	3/20/86		E-9-1-1

FOR 6" THROUGH 12" GATE VALVES

Mueller Resiliant Wedge Gate Valves
Catalog Number A-2360-__
ANSI/AWWA C509 Compliant

FOR 14" THROUGH 16" GATE VALVES

Mueller Resiliant Wedge Gate Valves
Catalog Number A-2361-__
ANSI/AWWA C509 Compliant

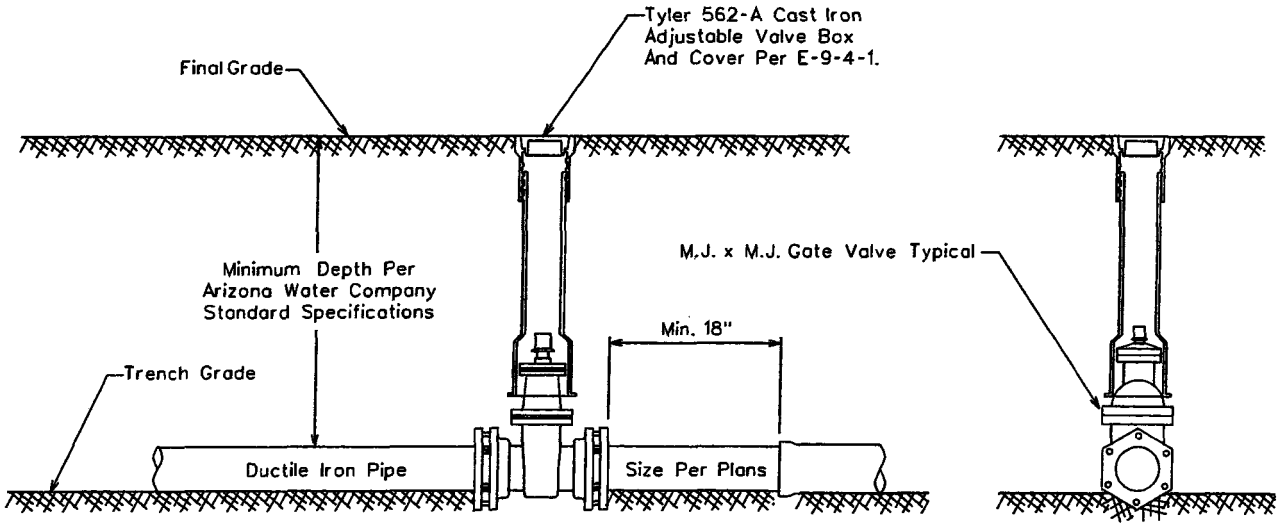

All Valves Installed On Pipe Five Feet (5') Deep And Greater Are To Be Installed With A Valve Operator Extension, Mueller Catalog No. A-26441.

ARIZONA WATER COMPANY

STANDARD SPECIFICATION
FOR THE INSTALLATION OF

TYPICAL VERTICAL GATE VALVES

DRAWN BY:	APPROVED BY:	DATE:	△	
CB	MW	03.20.1986	08.23.2006	E-9-2-1

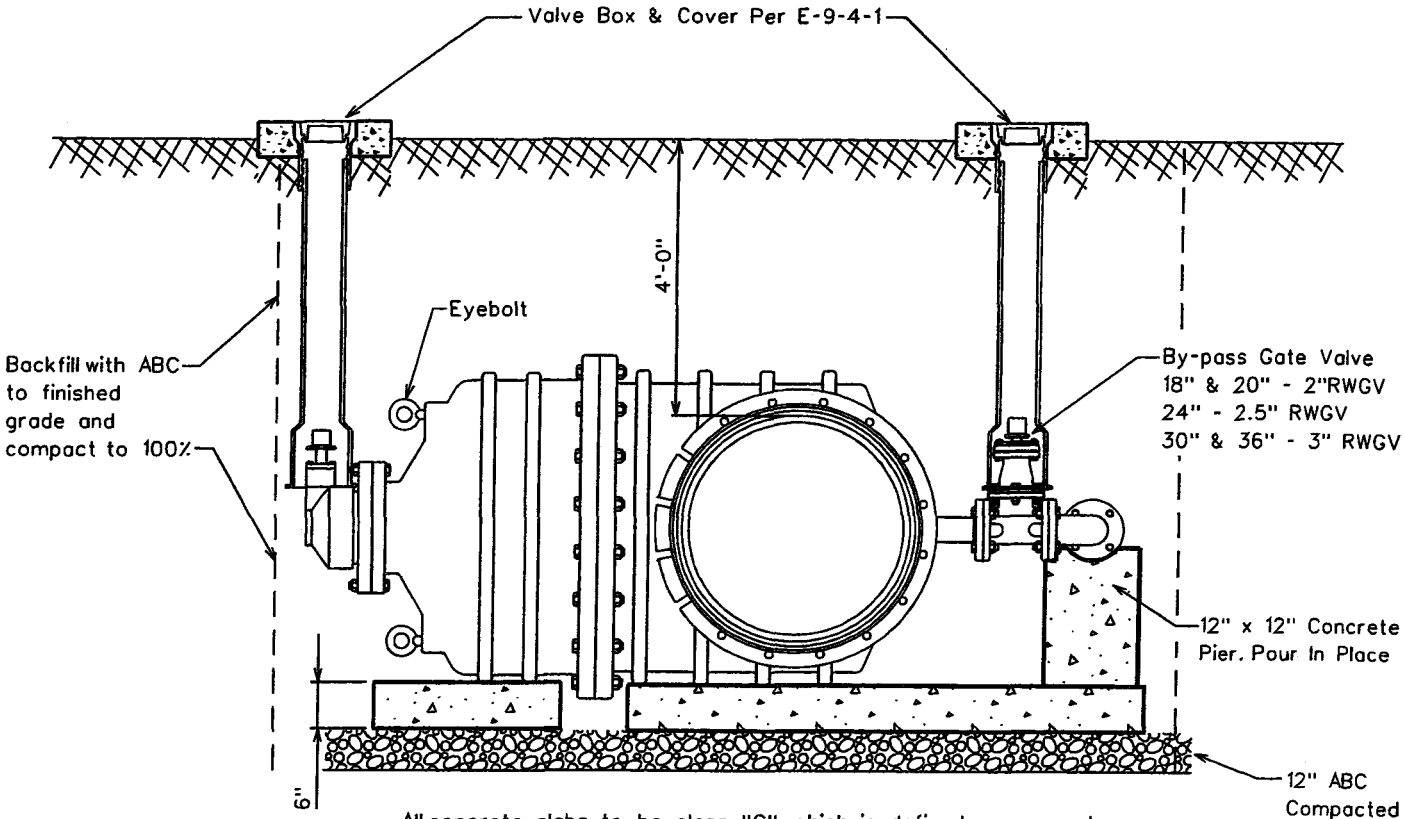

All concrete slabs to be class "C", which is defined as concrete whose minimum compressive strength at 14 days reaches 1600psi and at 28 days reaches 2000psi. per MAG Section 725, Table 725-1. Slabs to be formed and poured prior to valve installation.

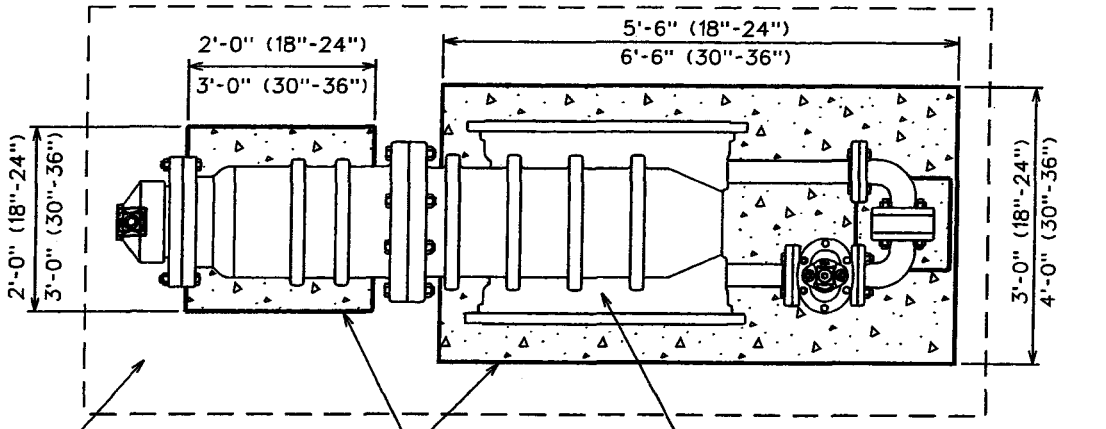

All valves installed on pipe five feet and greater are to be installed with a valve operator extension Mueller catalog No.A-26441 The distance is measured from the top of the operating nut to final grade.

ARIZONA WATER COMPANY

STANDARD SPECIFICATION

FOR THE INSTALLATION OF

INSTALLATION OF BEVEL GEARED HORIZONTAL GATE VALVES WITH BY-PASS FOR 18" AND LARGER VALVES

DRAWN BY:	APPROVED BY:	DATE:	△	
CB		12.07.2004		E-9-2-2

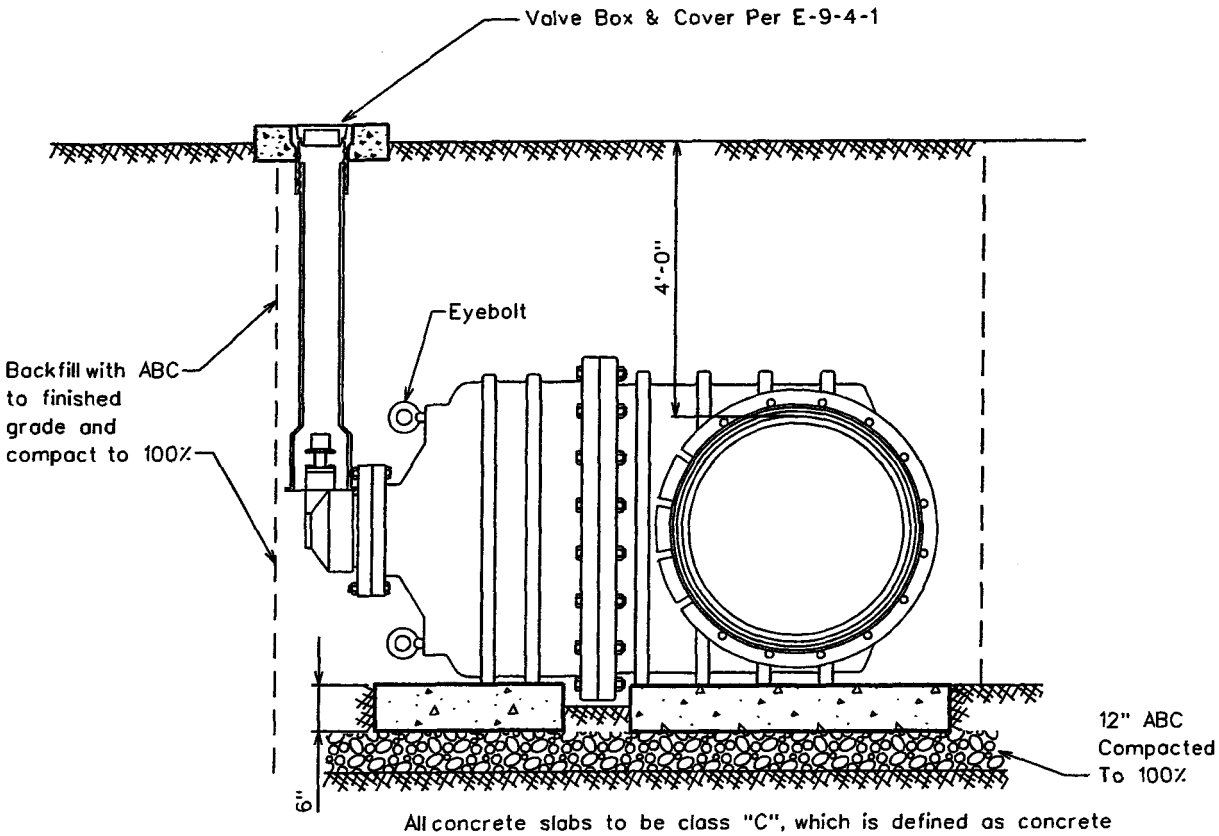

All concrete slabs to be class "C", which is defined as concrete whose minimum compressive strength at 14 days reaches 1600psi and at 28 days reaches 2000psi. per MAG Section 725, Table 725-1. Slabs to be formed and poured prior to valve installation.

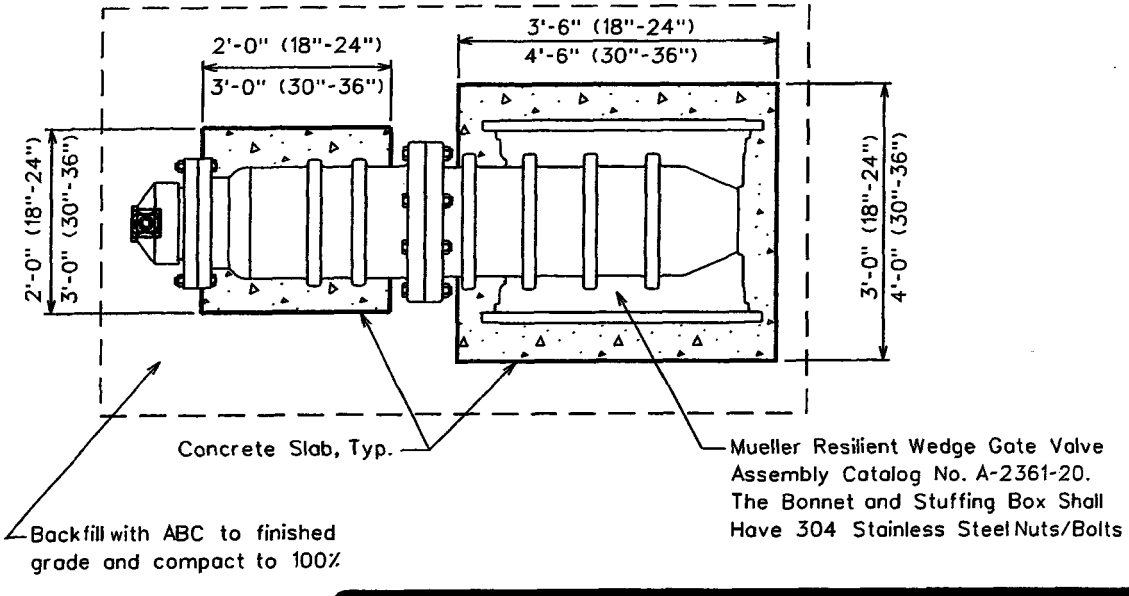

All valves installed on pipe five feet and greater are to be installed with a valve operator extension Mueller catalog No.A-26441 The distance is measured from the top of the operating nut to final grade.

ARIZONA WATER COMPANY

STANDARD SPECIFICATION

FOR THE INSTALLATION OF

INSTALLATION OF BEVEL GEARED HORIZONTAL GATE VALVES WITHOUT A BY-PASS FOR 18" AND LARGER VALVES

DRAWN BY:	APPROVED BY:	DATE:		
CB		12.07.2004	△ 5.13.2005	E-9-2-3

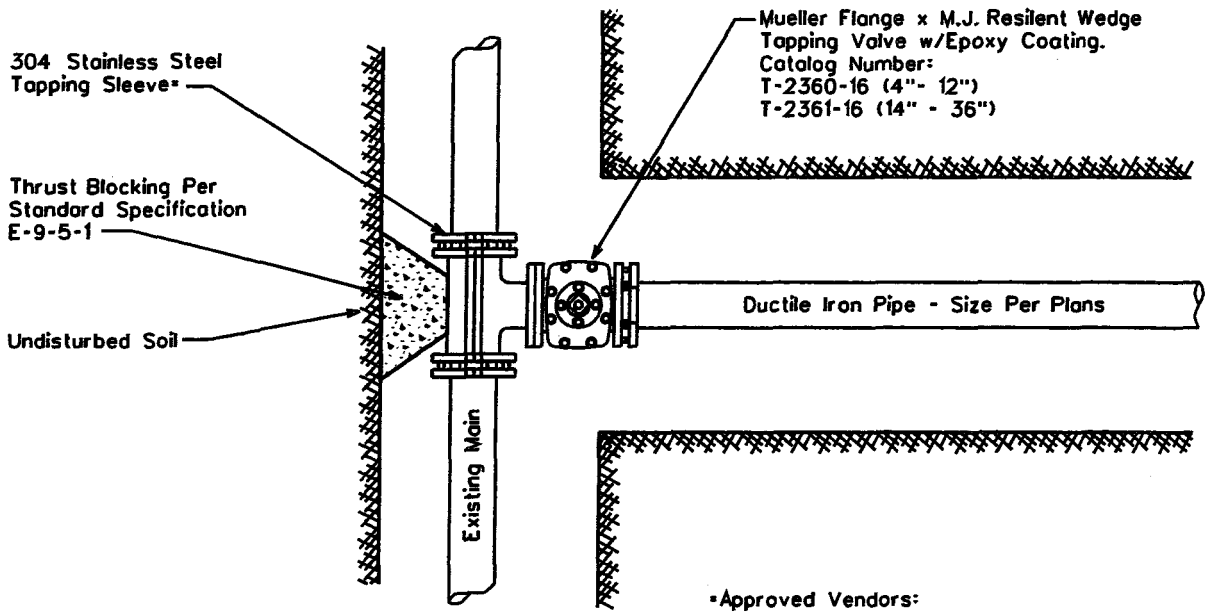

*Approved Vendors:

Mueller, Catalog No. H304, 304 Stainless Steel

JCM, Model 432, 304 Stainless Steel

Romac, 'SST', 304 Stainless Steel

Cascade, 'CST-EX', 304 Stainless Steel

NOTE:

1. All flanges, bolts, and nuts shall be kept free of concrete.
2. Air pressure test the tapping sleeve before the live tap is made.
3. Polywrap all new fittings

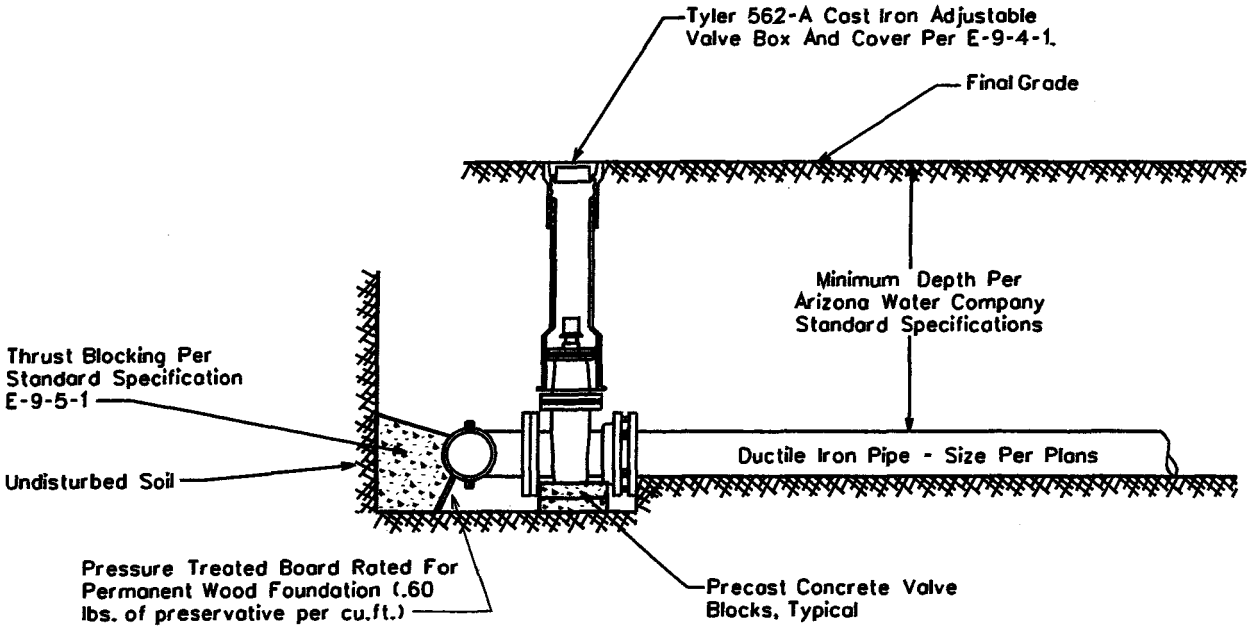

ARIZONA WATER COMPANY

STANDARD SPECIFICATION

FOR THE INSTALLATION OF

TYPICAL TAPPING SLEEVE AND VALVE

DRAWN BY:	APPROVED BY:	DATE:	△ 08.23.2006	
CB	MW	03.20.1986		E-9-3-1

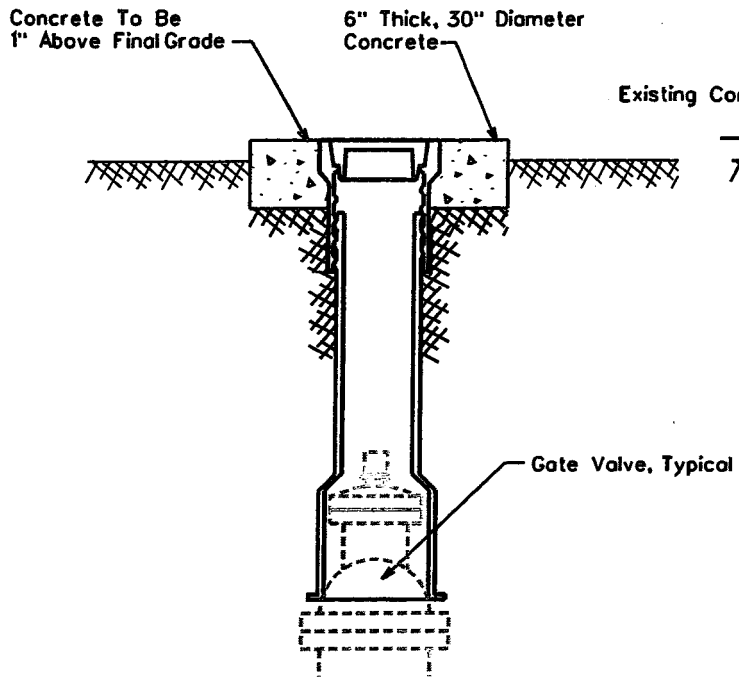

NON-VEHICULAR VALVE BOX

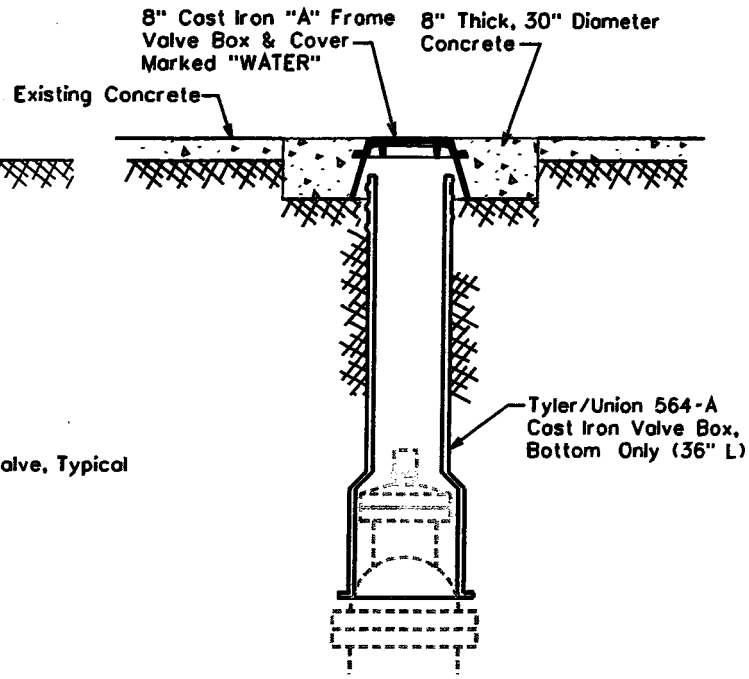

CONCRETE VALVE BOX

For Areas Subject To Vehicular Traffic

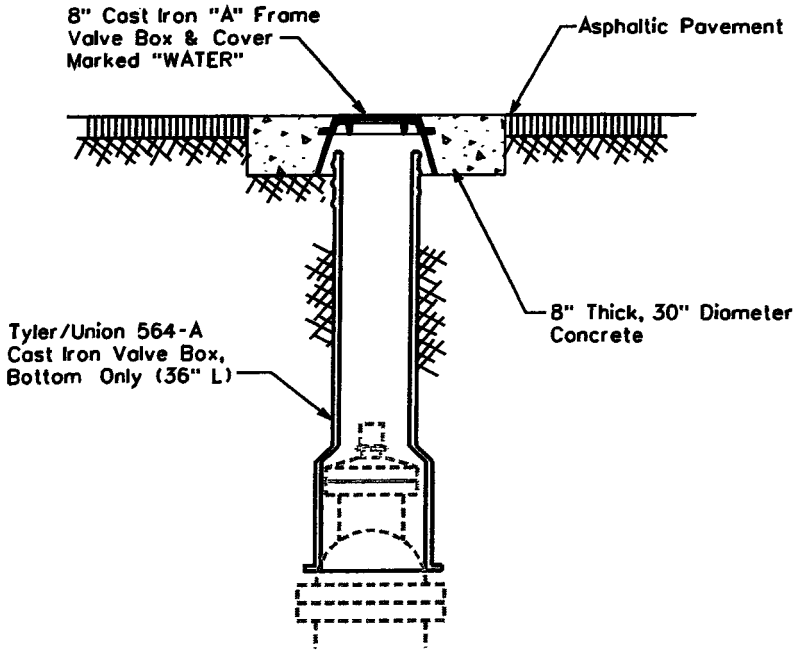

ASPHALT VALVE BOX

For Areas Subject To Vehicular Traffic

NOTE:

1. The Valve Box Shall Be Adjusted To Finished Grade Prior To Placing Of Asphalt And/Or Concrete.
2. For Non-Traffic Areas Use Tyler/Union 562-A, Two-Piece, 6855 Series Or Equivalent Adjustable Cast Iron Valve Box And Cover. Valves 4" To 12"

   For Traffic Areas, Use Tyler/Union 564-A Bottom Section Only With An 8" Cast Iron "A" Frame With Cover. Valves 4" To 12"
3. All Valves Installed Five Feet (5') Deep And Greater Are To Be Installed With A Valve Operator Extension, Mueller Catalog No. A-26441 And Shall Have A Debris Cap
4. Use Minimum Class 'C' Concrete which is defined as concrete whose minimum compressive strength at 14 days reaches 1600psi and at 28 days reaches 2000psi. per MAG Section 725, Table 725-1.

ARIZONA WATER COMPANY

STANDARD SPECIFICATION

FOR THE INSTALLATION OF

TYPICAL VALVE SUBJECT TO NON-VEHICULAR AND VEHICULAR TRAFFIC

DRAWN BY:	APPROVED BY:	DATE:	△ 8.24.2006	
CB	MW	03.20.1986		E-9-4-1

CROSSES

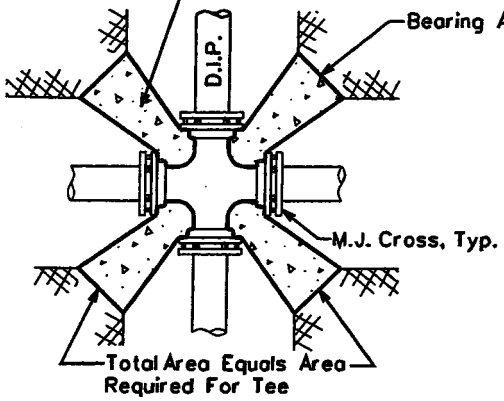

TEES

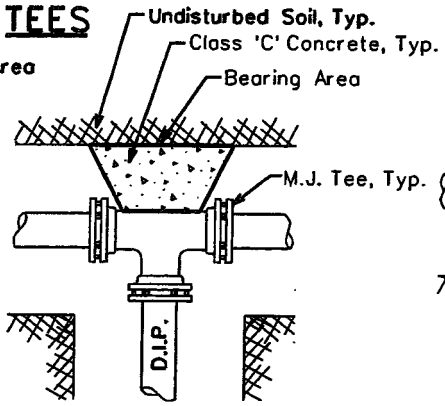

ELLS

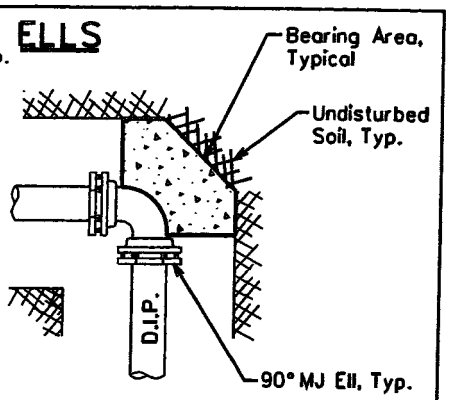

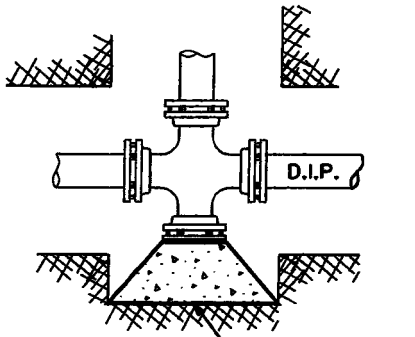

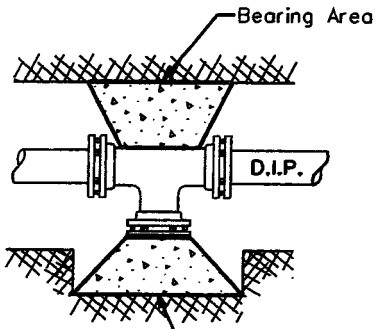

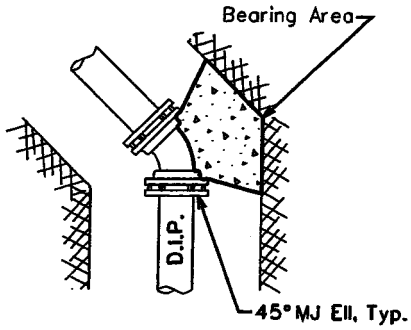

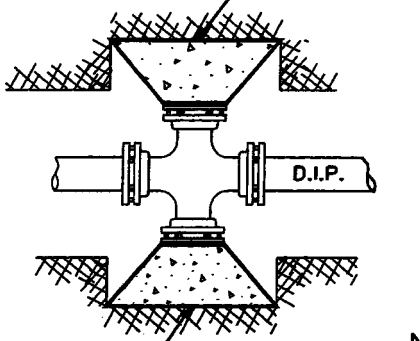

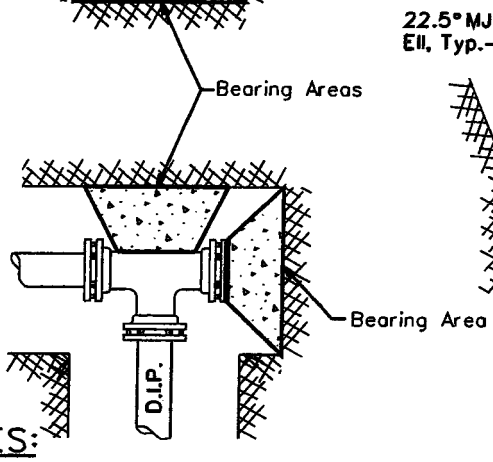

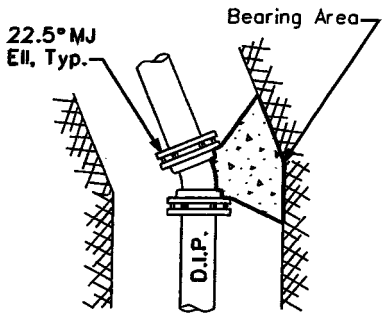

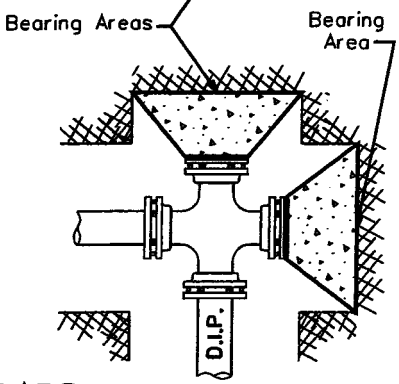

CROSS SECTION

TYPICAL

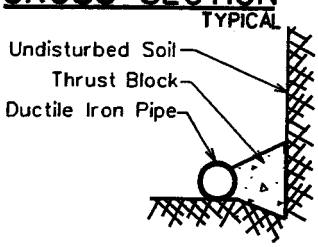

NOTES:

1. Use minimum Class 'C' concrete, which is defined as concrete whose minimum compressive strength at 14 days reaches 1600psi and at 28 days reaches 2000psi. per MAG Section 725, Table 725-1.
2. Thrust blocks are to bear on undisturbed earth with minimum bearing area as shown. If not undisturbed, areas will be increased as required.
3. Place the pressure treated form board in front of all plugs before pouring thrust blocks.
4. Form all non-bearing areas to prevent any concrete from entering any joint.
5. All flanges, bolts and nuts shall be kept free of concrete.
6. Center the bearing area on the pipe centerline and force line.
7. All pipe fittings to be wrapped with polyethylene pipe wrap prior to thrust block installation. (where applicable)

THRUST BLOCK SCHEDULE

PIPE SIZE	TEE, 45°, AND 22.5° ELLS. & PLUGS	90° ELLS
6" And Under	4 Sq.Ft.	6 Sq.Ft.
8"	6 Sq.Ft.	9 Sq.Ft.
12"	13 Sq.Ft.	20 Sq.Ft.
16"	23 Sq.Ft.	32 Sq.Ft.
18" And Larger	Calculated Per Project	

CAPS

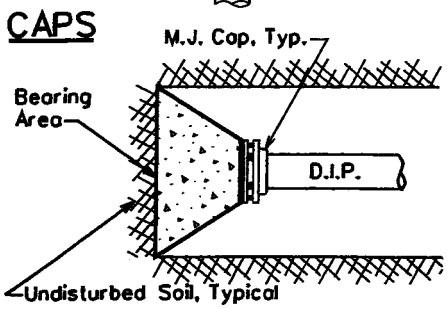

STANDARD SPECIFICATION

FOR THE INSTALLATION OF

TYPICAL THRUST BLOCKING SCHEDULE

DRAWN BY:	APPROVED BY:	DATE:		
CB	MW	03.20.1986	△ 05.27.2005	E-9-5-1

NOTES

1. Bars In Conc. Thrust Block To Be Coated w/ 2 Coats Coal Tar Epoxy or by Other Approved Method.

2. Bars To Have 90° Hook @ Their Ends, As Per Table Below.

Pipe Size	Min. Bar Size	"A" Dimension (Hook)	* Min. Block Dimension (WxHxL)
6"	#6	6"	3'x3'x3'
8"	#6	9"	4'x3'x4'
12"	#8	9"	5'x4'x5'
16"	#9	12"	7'x6'x7'

* For 125 P.S.I. Working Pressure

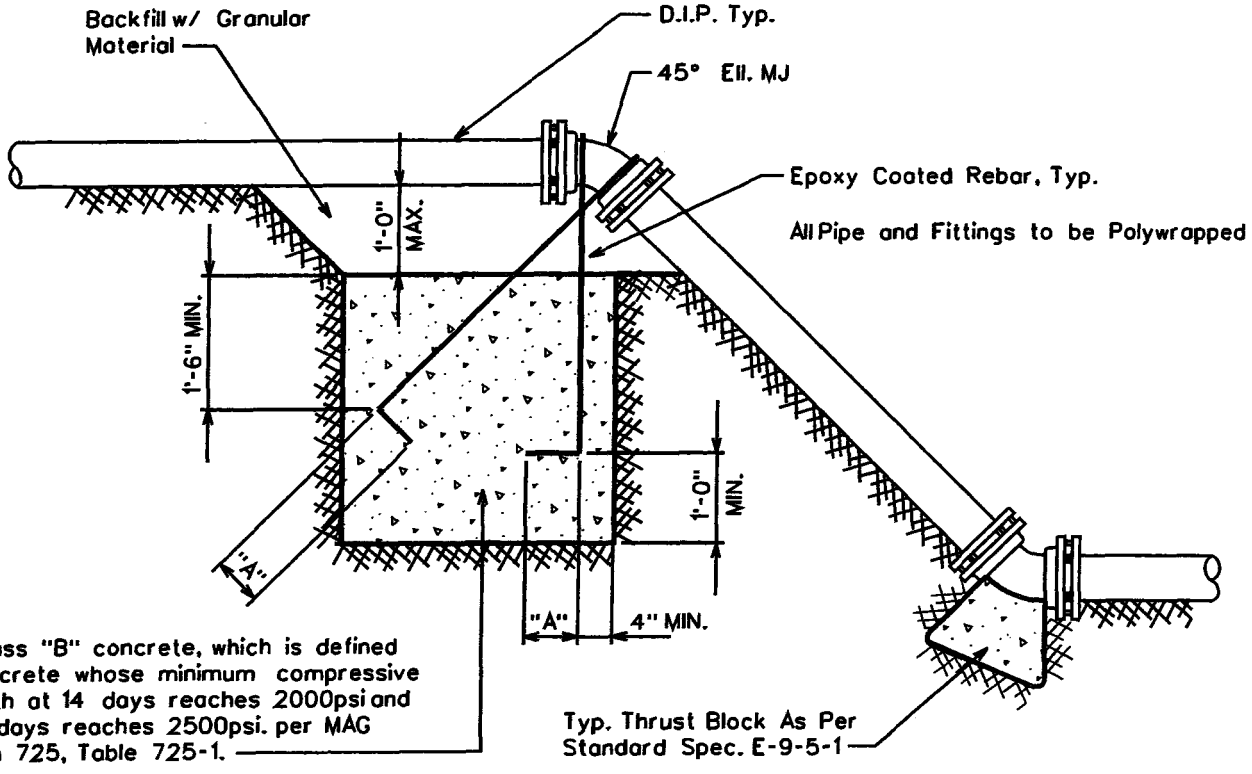

ARIZONA WATER COMPANY

STANDARD SPECIFICATION
FOR THE INSTALLATION OF

THRUST BLOCK FOR VERTICAL BENDS

DRAWN BY:	APPROVED BY:	DATE:	△ 01.16.2007	E-9-5-2
JPK	MJW	7-5-96		

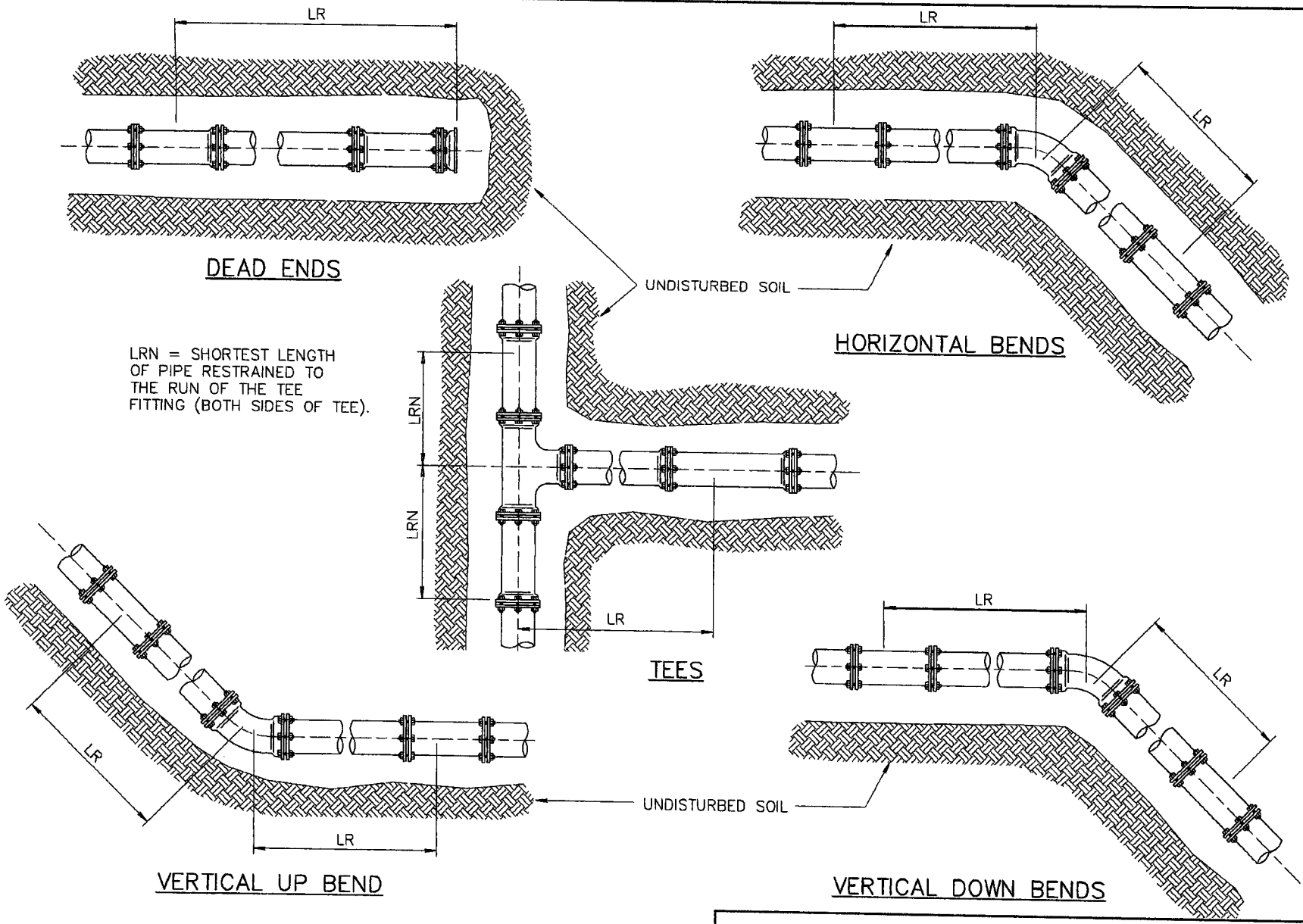

ARIZONA WATER COMPANY

STANDARD SPECIFICATION FOR THE INSTALLATION OF				
JOINT RESTRAINT FOR NEW DUCTILE IRON AND C-900 PVC MAINS				
DRAWN BY: CB	APPROVED BY: MW	DATE: 01.16.2007	△	E-9-5-3-1

RESTRAINED LENGTHS, LR, FOR DUCTILE IRON PIPE

NOMINAL PIPE SIZE INCHES	HORIZONTAL BENDS			TEES		VERTICAL OFFSETS						DEAD ENDS
						90° BEND FITTINGS		45° BEND FITTINGS		22-1/2° BEND FITTINGS		
	90°	45°	22-1/2°	LRN=0'	LRN=10'	DOWN BEND	UP BEND	DOWN BEND	UP BEND	DOWN BEND	UP BEND	
4	18	7	4	30	8	31	18	13	7	6	3	31
6	25	10	5	43	20	44	25	18	10	9	5	44
8	32	13	6	56	34	58	32	24	13	11	6	58
10	38	16	8	68	45	69	38	29	16	14	8	69
12	45	19	9	80	57	81	45	34	19	16	9	81
14	51	21	10	91	68	92	51	38	21	18	10	92
16	57	24	11	103	79	104	57	43	24	21	11	104
18	62	26	12	113	90	115	62	48	26	23	12	115
20	68	28	14	125	100	126	68	52	28	25	14	126
24	79	33	16	145	121	147	79	61	33	29	16	147

RESTRAINED LENGTHS, LR, FOR DUCTILE IRON PIPE WITH POLYETHYLENE WRAP

NOMINAL PIPE SIZE INCHES	HORIZONTAL BENDS			TEES		VERTICAL OFFSETS						DEAD ENDS
						90° BEND FITTINGS		45° BEND FITTINGS		22-1/2° BEND FITTINGS		
	90°	45°	22-1/2°	LRN=0'	LRN=10'	DOWN BEND	UP BEND	DOWN BEND	UP BEND	DOWN BEND	UP BEND	
4	26	11	5	69	18	72	26	30	11	14	5	72
6	36	15	7	99	47	102	36	42	15	20	7	102
8	47	19	9	130	78	133	47	55	19	26	9	133
10	56	23	11	157	103	159	56	66	23	32	11	159
12	65	27	13	185	131	187	65	77	27	37	13	187
14	74	31	15	211	156	214	74	89	31	42	15	214
16	82	34	16	238	183	241	82	100	34	48	16	241
18	90	37	18	263	207	266	90	110	38	53	18	266
20	98	41	20	289	233	292	98	121	41	58	20	292
24	113	47	22	337	280	340	113	141	47	68	22	340

NOTES:

1. ALL JOINTS WITHIN THE SPECIFIED LENGTH LR MUST BE RESTRAINED. ALL LENGTHS ARE GIVEN IN FEET.
2. THE MAXIMUM TEST PRESSURE SHALL NOT EXCEED 200 PSI
3. THE MINIMUM DEPTH OF BURY SHALL BE 3' TO TOP OF PIPE.
4. RESTRAINED LENGTHS MAY BE REDUCED WHEN SUPPORTED BY ENGINEERING CALCULATIONS.

ARIZONA WATER COMPANY

STANDARD SPECIFICATION
FOR THE INSTALLATION OF

JOINT RESTRAINT FOR NEW DUCTILE IRON AND C-900 PVC MAINS

DRAWN BY:	APPROVED BY:	DATE:		
CB	MW	01.16.2007	△	E-9-5-3-2

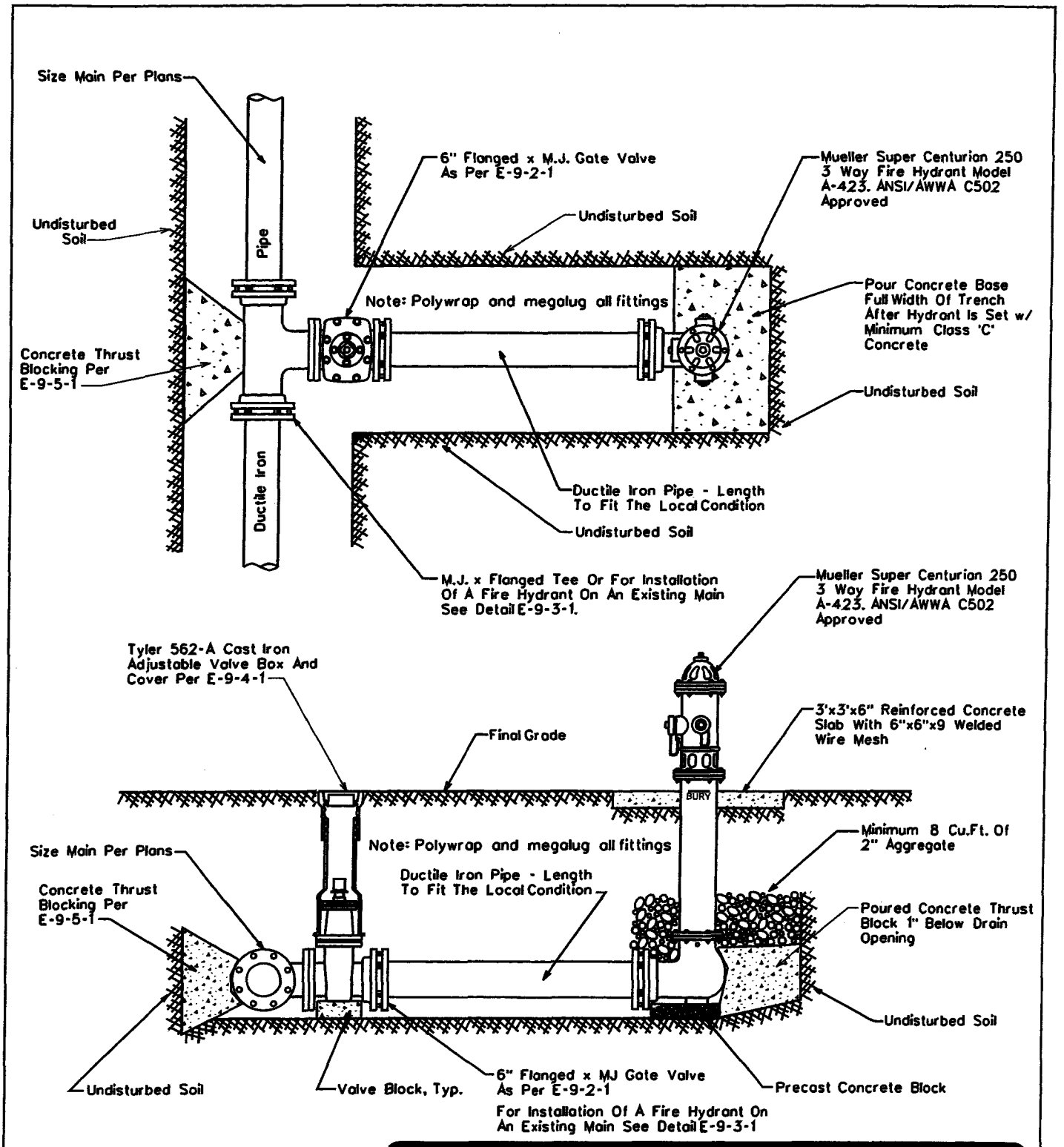

NOTE: All Flanges, Bolts, Nuts and Drain Holes Shall Be Kept Free Of Concrete

ARIZONA WATER COMPANY

STANDARD SPECIFICATION

FOR THE INSTALLATION OF

TYPICAL PERPENDICULAR FIRE HYDRANT

DRAWN BY:	APPROVED BY:	DATE:	△ 08.24.2006	E-9-6-1
CB	MW	1-28-91		

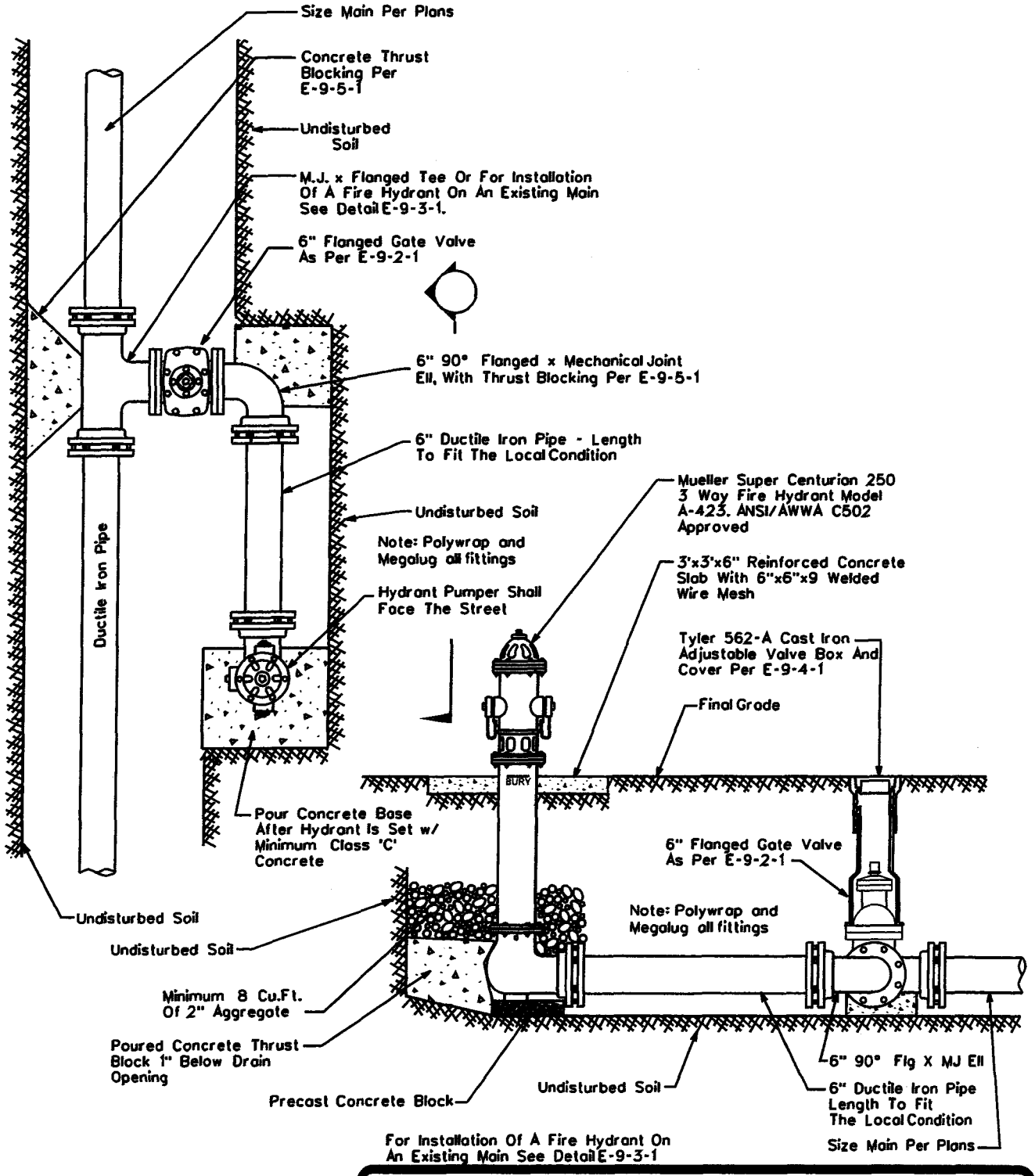

NOTE: All Flanges, Bolts, Nuts And Drain Holes Shall Be Kept Free Of Concrete.

ARIZONA WATER COMPANY

STANDARD SPECIFICATION

FOR THE INSTALLATION OF

TYPICAL PARALLEL FIRE HYDRANT

DRAWN BY:	APPROVED BY:	DATE:	△	
JW	MW	03.20.1986	08.24.2006	E-9-7-1

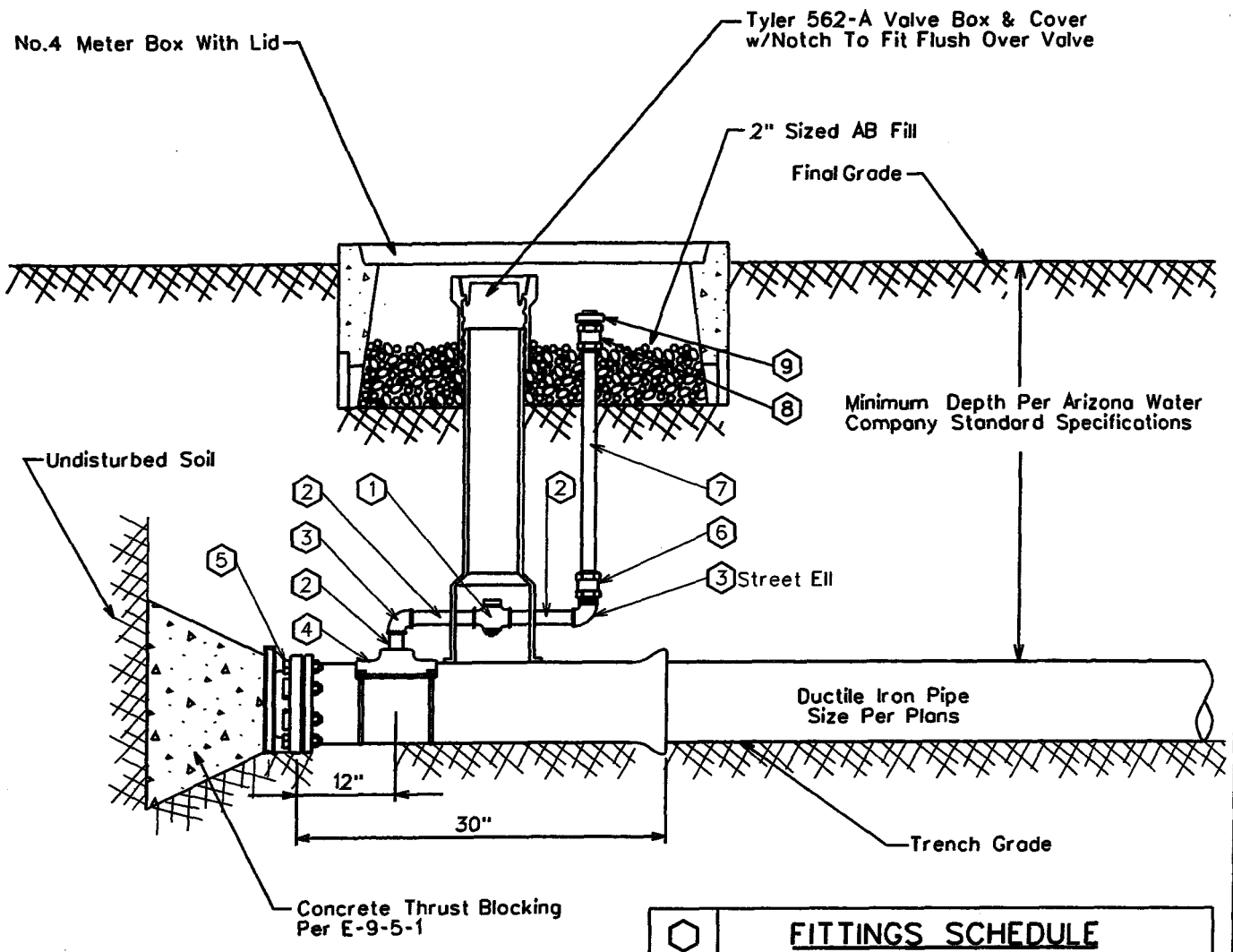

⬡	FITTINGS SCHEDULE
1.	2" Mueller 300 Ball Curb Valve B-20283 FIP x FIP W/ 2" Mueller Brass Square Wrench Nut Adapter B-20299
2.	2" Brass Nipple - Length To Fit Field Conditions
3.	2" Brass 90° Elbow, IPST
4.	Mueller Double Strap Bronze Service Saddle - BR2B
5.	M.J. Plug - Megalug Restraints May Be Required
6.	2" Straight Coupling CC x FIP H-15451
7.	2" Copper Pipe
8.	2" Straight Coupling CC x MIP H-15428
9.	2" Square Head Plug, MIP

ARIZONA WATER COMPANY

STANDARD SPECIFICATION
FOR THE INSTALLATION OF

2" BLOWOFF ASSEMBLY

DRAWN BY:	APPROVED BY:	DATE:	△	
CB	MW	03.20.1986	03.21.2006	E-9-8-1

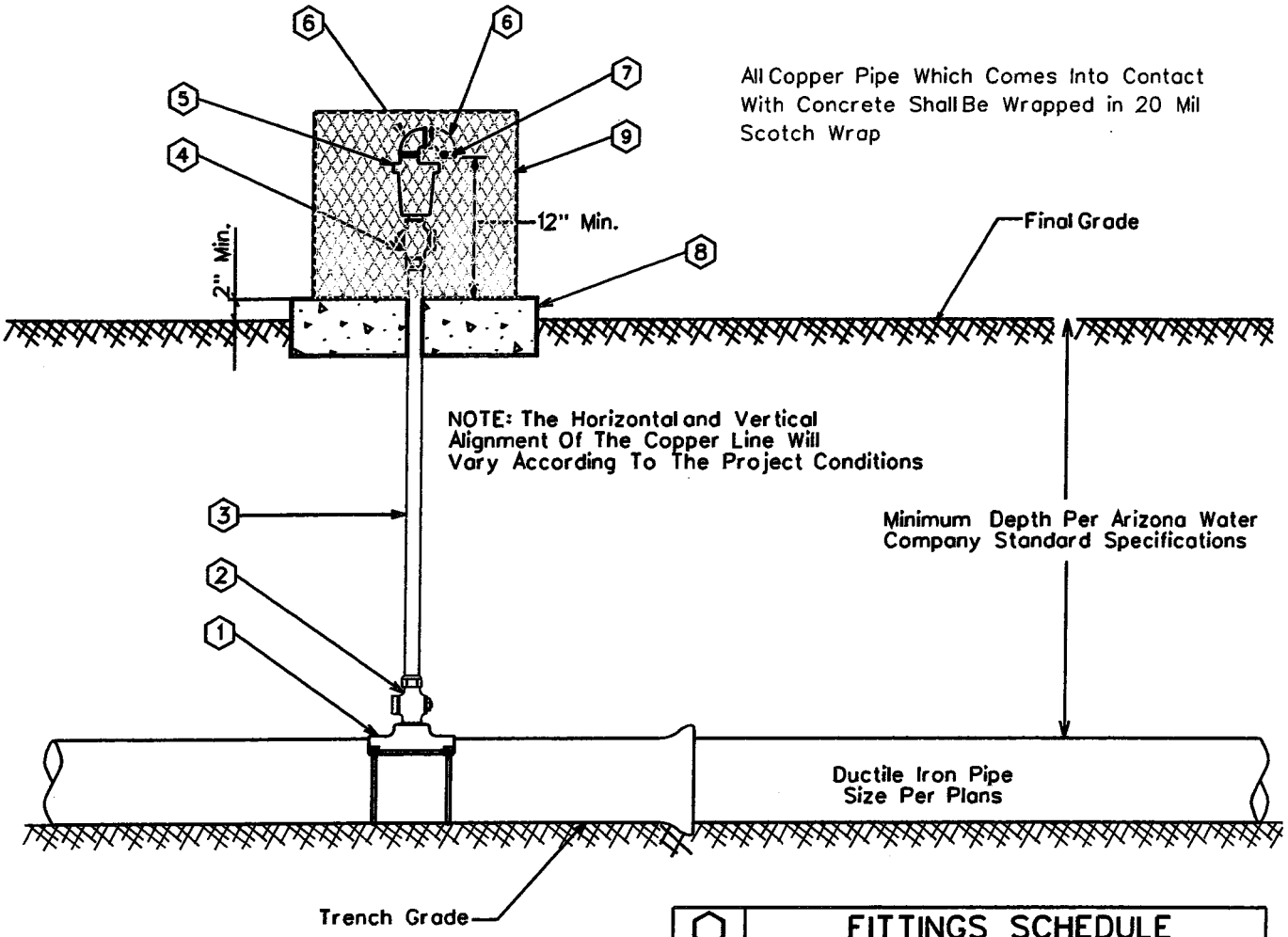

GENERAL NOTES:

1. The valve shall be installed at high points and on long runs to vent the accumulation of air with the line under pressure- see the construction plans for specific locations.
2. The valve shall have a 5/64" orifice with valve sealing faces of stainless steel and BUNA-N rubber.
3. The valve shall be Crispin model AR10 for 6" and larger water mains.
4. Crispin model AR10 valve construction consists of a 1" IPST inlet & 1/2" IPST outlet, cast iron body and top flange with stainless steel float and trim.
5. The air release assembly shall be located out of the path of traffic but within right-of-way or easement.

⬡	FITTINGS SCHEDULE
1.	Mueller BR2B Bronze Service Saddle - Double Strap
2.	1" Mueller B-25008 Taper x Comp. Ball Corp Stop
3.	1" Type 'K' Copper w/NO Splices - Field Fit
4.	1" Mueller B-25028 IP x Comp. Ball Corp Stop
5.	Crispin 1" Air Release Valve, Model AR10
6.	1/2" Brass Street Elbow
7.	No.16 Wire Mesh Screen (Non-Corrodible)
8.	4" Thick Concrete Pad - Class 'C' Concrete
9.	Guardshack, Model GS-1, Available From BPDI, Inc. Available In Leaf Green Or Desert Tan

ARIZONA WATER COMPANY

STANDARD SPECIFICATION
FOR THE INSTALLATION OF

TYPICAL AIR RELEASE VALVE

DRAWN BY:	APPROVED BY:	DATE:		
CB	MW	03.20.1997	△08.24.2006	E-9-8-2

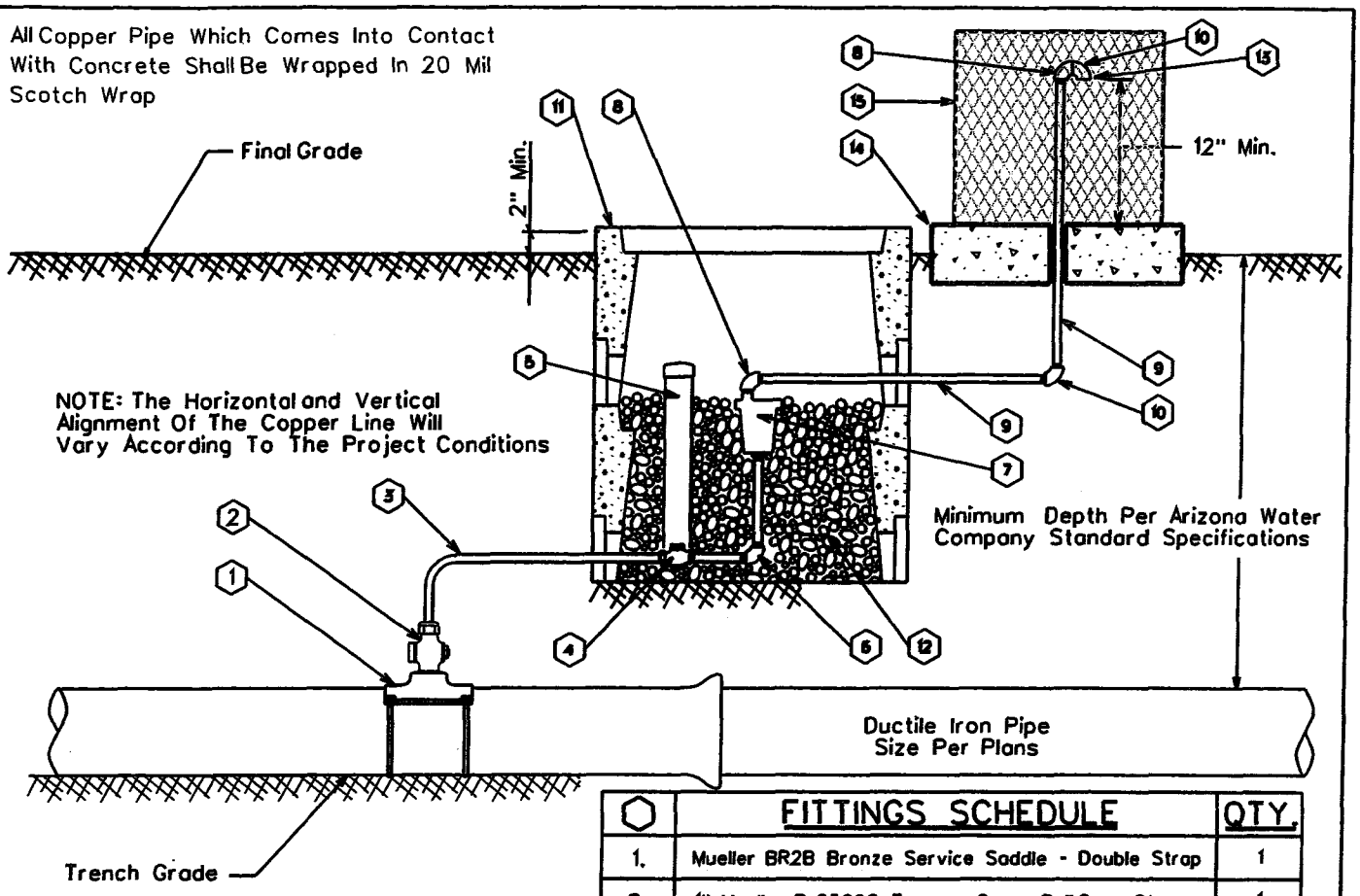

⬡	FITTINGS SCHEDULE	QTY.
1.	Mueller BR2B Bronze Service Saddle - Double Strap	1
2.	1" Mueller B-25008 Taper x Comp. Ball Corp Stop	1
3.	1" Type 'K' Copper w/NO Splices - Field Fit	As Req'd
4.	1" Mueller B-25028 IP x Comp. Ball Corp Stop	1
5.	3" PVC Pipe w/ Cap (Loose Fit)	1
6.	1" x 4" Brass Nipple w/90° Elbow	1
7.	Crispin 1" Air Release Valve, Model AR10	1
8.	½" Brass Street Elbow	2
9.	½" Galvanized Pipe - Length as req'd	2
10.	½" Galvanized 90° Ell	2
11.	Number 1 Meter Box	2
12.	2" Sized AB (Fill Meter Box To The Top Of The Air Release Valve)	As Req'd
13.	No.16 Wire Mesh Screen (Non-Corrodible)	1
14.	4" Thick Concrete Pad - Class 'C' Concrete	1
15.	Guardshack, Model GS-1, Available From BPDI, Inc. Available In Leaf Green Or Desert Tan	1

GENERAL NOTES:

1. The valve shall be installed at high points and on long runs to vent the accumulation of air with the line under pressure- see the construction plans for specific locations.
2. The valve shall have a 5/64" orifice with valve sealing faces of stainless steel and BUNA-N rubber.
3. The valve shall be Crispin model AR10 for 6" and larger water mains.
4. Crispin model AR10 valve construction consists of a 1" IPST inlet & ½" IPST outlet, cast iron body and top flange with stainless steel float and trim.
5. The air release assembly shall be located out of the path of traffic but within the right-of-way or easement.

ARIZONA WATER COMPANY

STANDARD SPECIFICATION
FOR THE INSTALLATION OF

AIR RELEASE VALVE FOR THE NORTHERN REGION

DRAWN BY:	APPROVED BY:	DATE:		
CB	MW	03.20.1997	△08.24.2006	E-9-8-3

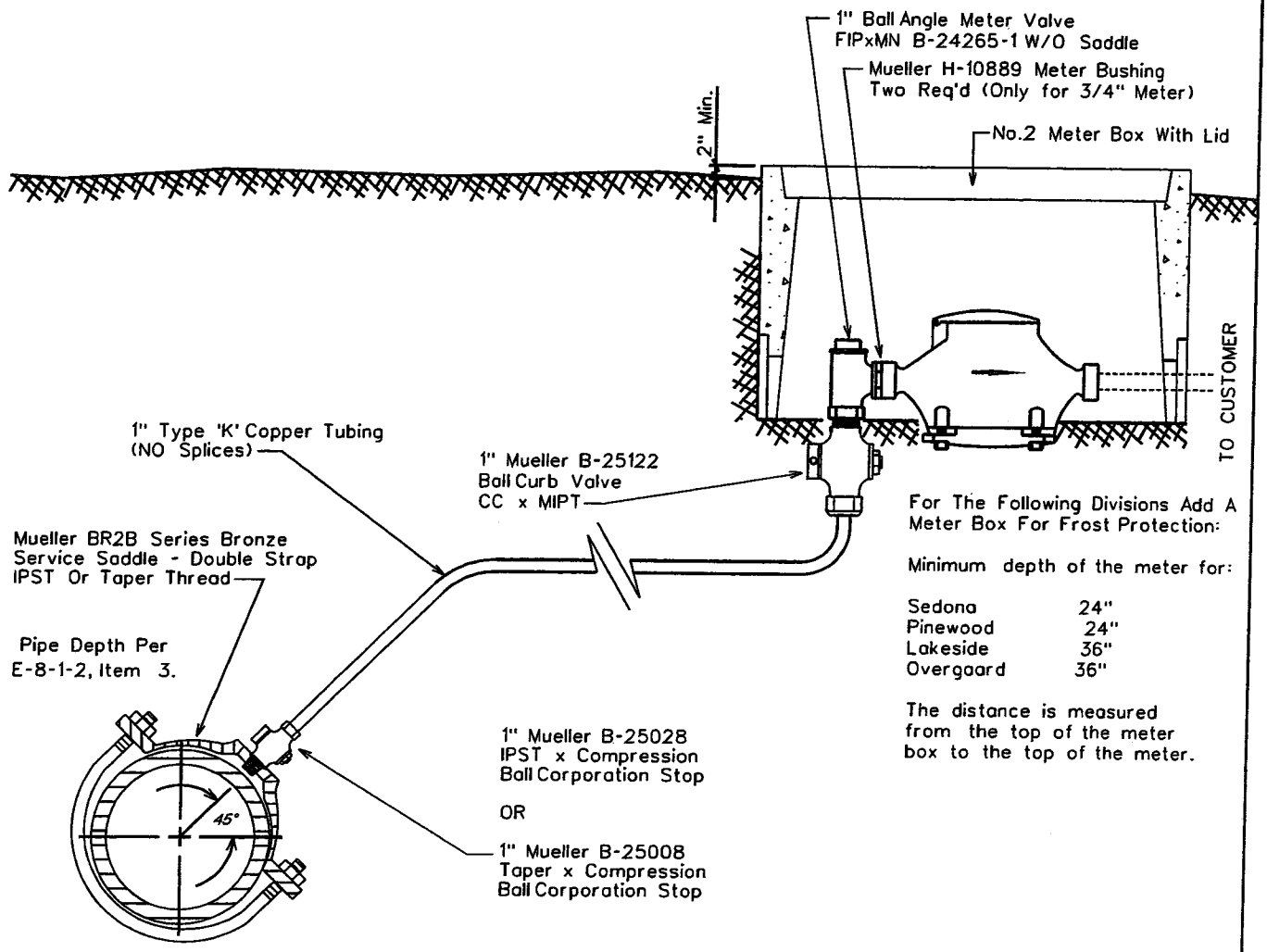

For The Following Divisions Add A Meter Box For Frost Protection:

Minimum depth of the meter for:

Sedona	24"
Pinewood	24"
Lakeside	36"
Overgaard	36"

The distance is measured from the top of the meter box to the top of the meter.

SADDLE TAP TO CA, PVC, OR DI PIPE

NOTE: The minimum distance between taps on mains other than ductile iron is 12"

NOTE:
Only the meter is supplied by Arizona Water Company

ARIZONA WATER COMPANY

STANDARD SPECIFICATION
FOR THE INSTALLATION OF

SINGLE SERVICE CONNECTION FOR A 3/4" OR 1" METER

DRAWN BY:	APPROVED BY:	DATE:		
CCO	M.W.	3/20/86	△ 03.17.2006	E-9-9-1

For The Following Divisions Add A Meter Box For Frost Protection:

Minimum depth of the meter for:

Sedona	24"
Pinewood	24"
Lakeside	36"
Overgaard	36"

The distance is measured from the top of the meter box to the top of the meter.

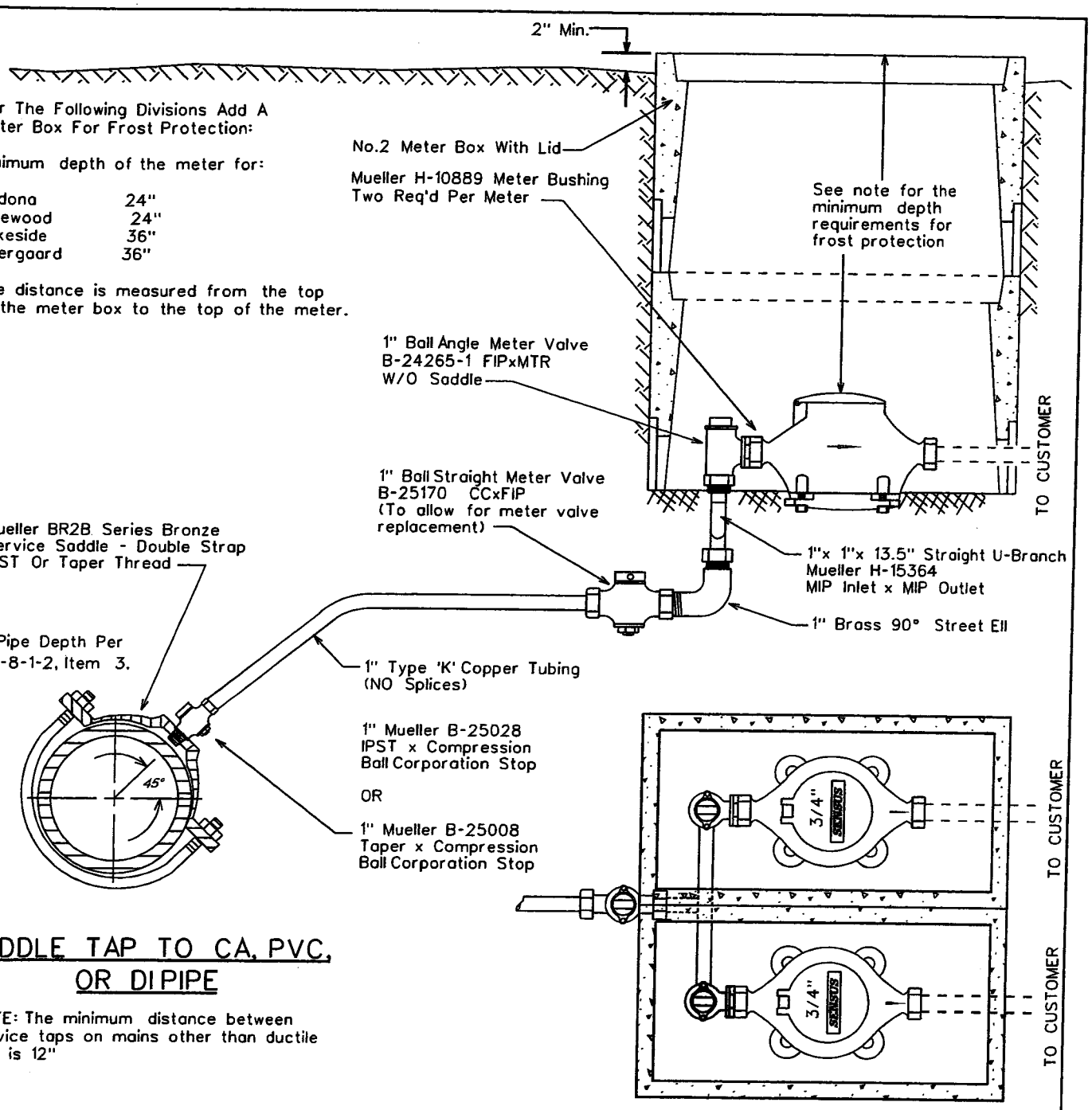

SADDLE TAP TO CA, PVC, OR DI PIPE

NOTE: The minimum distance between service taps on mains other than ductile iron is 12"

NOTE:
Only the meter is supplied by Arizona Water Company

ARIZONA WATER COMPANY

STANDARD SPECIFICATION
FOR THE INSTALLATION OF

DOUBLE SERVICE CONNECTION FOR 3/4" METERS

DRAWN BY:	APPROVED BY:	DATE:	△ 08.25.2006	E-9-10-1
CCO	M.W.	3-20-86		

For The Following Divisions Add A Meter Box For Frost Protection:

Minimum depth of the meter for:

Sedona	24"
Pinewood	24"
Lakeside	36"
Overgaard	36"

The distance is measured from the top of the meter box to the top of the meter.

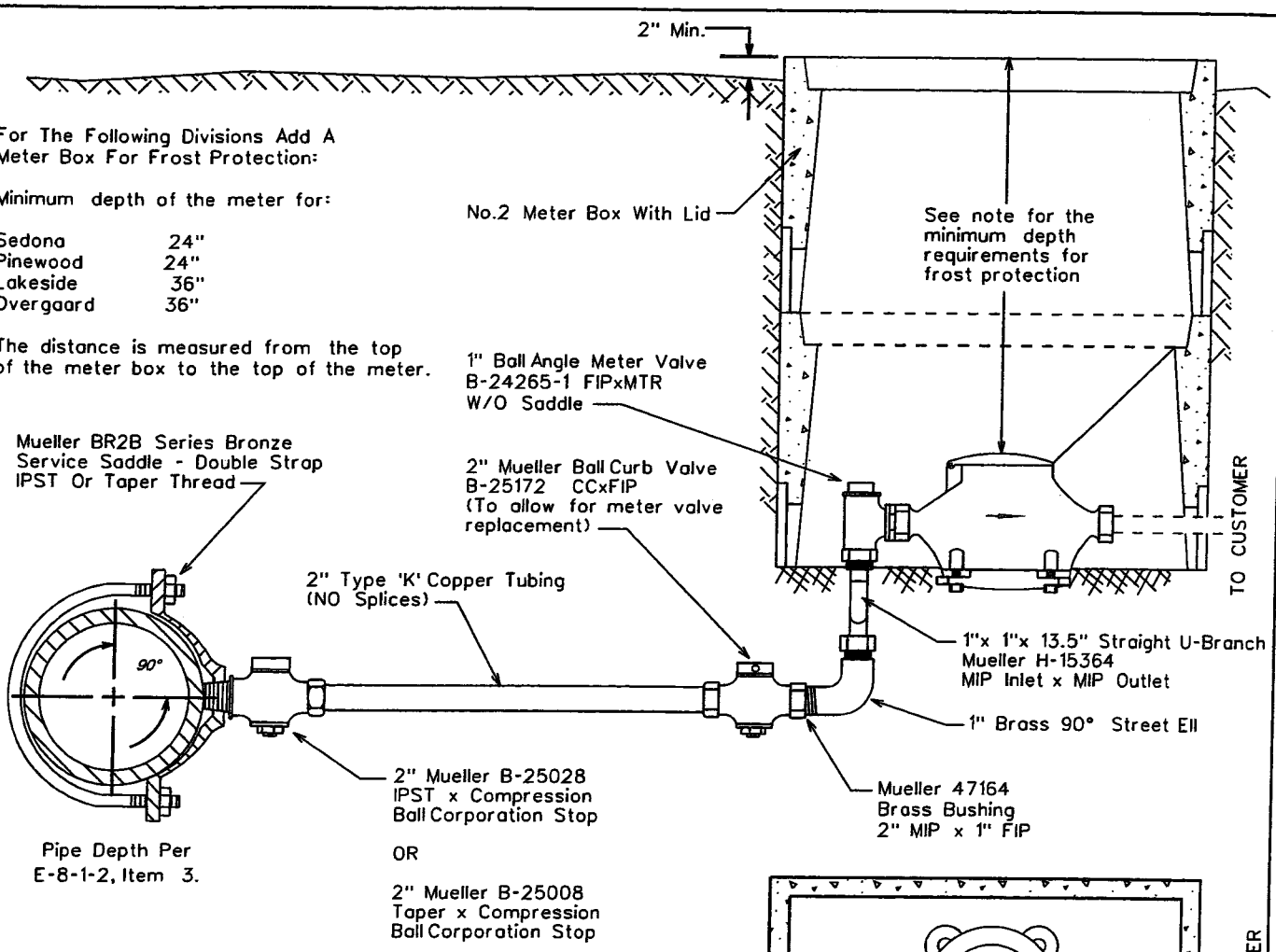

SADDLE TAP TO CA, PVC, OR DI PIPE

NOTE: The minimum distance between service taps on mains other than ductile iron is 12"

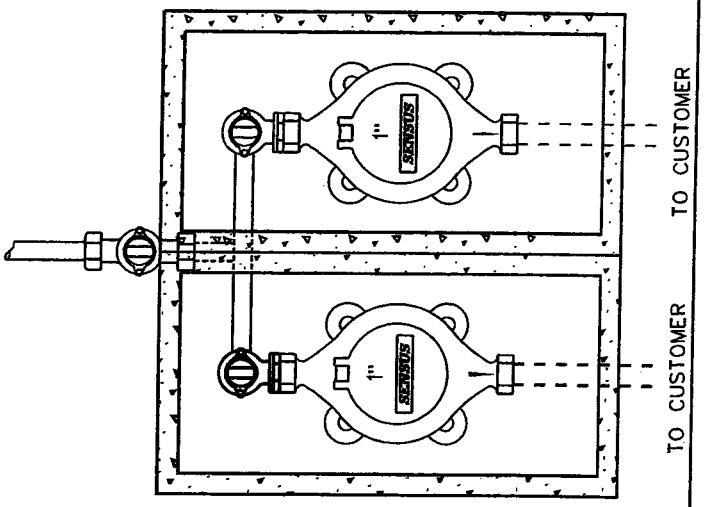

NOTE: THE LENGTH OF SERVICE IS LIMITED TO COMMERICIALLY AVAILABLE ROLLS, TYPICALLY 60 FEET

NOTE:
Only the meter is supplied by Arizona Water Company

ARIZONA WATER COMPANY

STANDARD SPECIFICATION
FOR THE INSTALLATION OF

DOUBLE SERVICE CONNECTION FOR 1" METERS

DRAWN BY:	APPROVED BY:	DATE:	△	
CB	M.W.	03.17.2006	08.29.2006	E-9-10-2

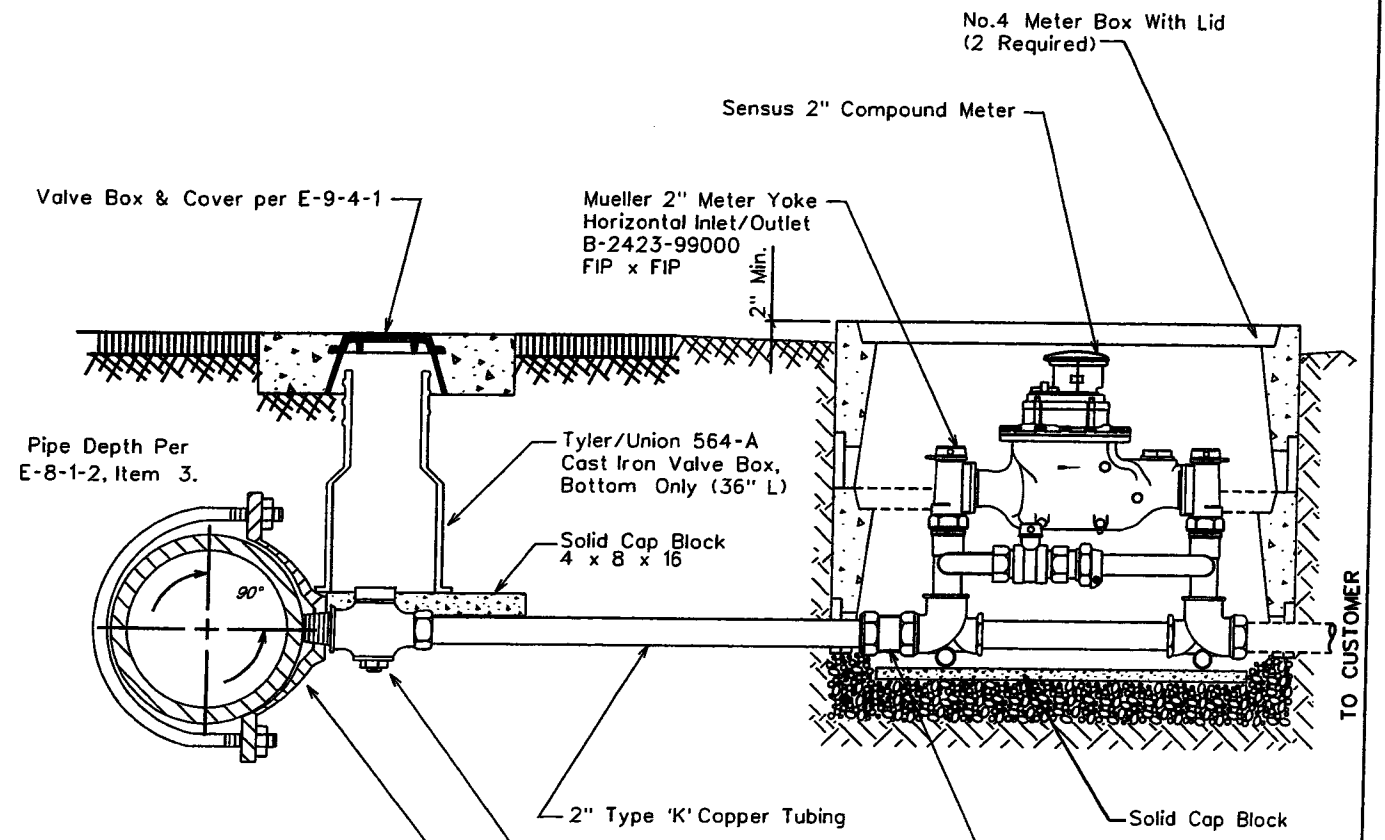

SADDLE TAP CONNECTION TO DUCTILE IRON PIPE

NOTE: The minimum distance between service taps on mains other than ductile iron is 12"

NOTE: THE LENGTH OF SERVICE IS LIMITED TO COMMERICIALLY AVAILABLE ROLLS, TYPICALLY 60 FEET

NOTE:

Only the meter is supplied by Arizona Water Company

ARIZONA WATER COMPANY

STANDARD SPECIFICATION
FOR THE INSTALLATION OF

TYPICAL 2" SERVICE CONNECTIONS

DRAWN BY:	APPROVED BY:	DATE:		
JW	M.W.	3/20/86	△ 08.29.2006	E-9-11-1

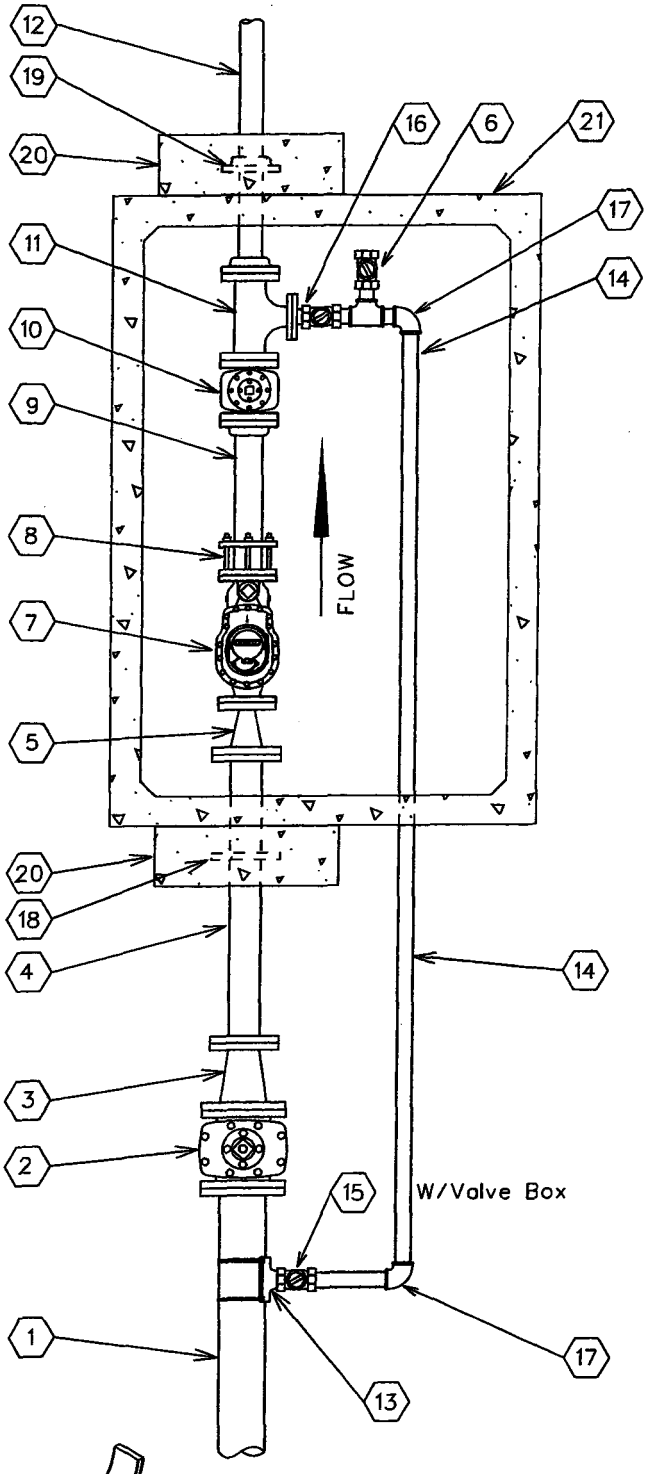

No.	FITTINGS SCHEDULE
1.	6" D.I.P.
2.	6" G.V.B.&C. mj x flng
3.	6"x4" Reducer flng x mj
4.	4"x3'-0" D.I.P. Spool flng x pe
5.	4" x 3" Reducer flng
6.	2" Test Port
7.	3" Compound Meter
8.	3" F.C.A.
9.	3"x2'-0" D.I. Spool flng x pe
10.	3" Gate Valve flng
11.	3"x2" Flg Tee w/ 2" Companion Flange
12.	3"x4'-0" D.I. Spool flng x pe
13.	6"x2" Tapping Saddle
14.	2" Copper Pipe
15.	2" Mueller B25122 Ball Valve w/B20299 Nut
16.	2" Locking Ball Valve (normally closed)
17.	2" Mueller H-15526 90° Ell CC x CC
18.	4" Megalug
19.	3" Slip-On Welding Flange
20.	24"x24"x8" Conc. Thrust Block P.I.P.
21.	575-LA Conc. Vault

NOTE:

1. Use Rowley pipe supports or equivalent as needed (See detail below).
2. Pipe support locations to be determined by field personnel.
3. All copper pipe that comes in contact with concrete to be wrapped w/10-20 Mil. Scotchwrap corrosion protection tape.
4. All mechanical joint fittings are to be megalugged.
5. Use deflection fittings (45° Ells.) to achieve necessary depths & cover as shown on the standard specification for the installation of a concrete vault (E-9-12-5).

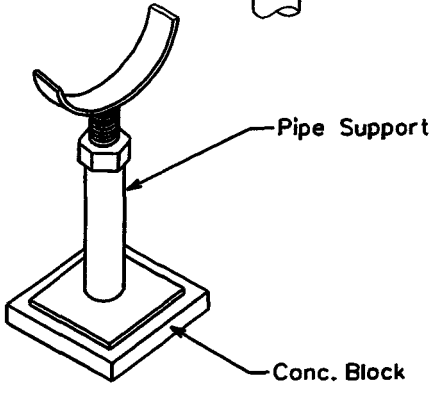

ARIZONA WATER COMPANY

STANDARD SPECIFICATION
FOR THE INSTALLATION OF

3" COMPOUND METER

DRAWN BY:	APPROVED BY:	DATE:		
CCO	MW	10/5/1993	△08.29.2006	E-9-12-1

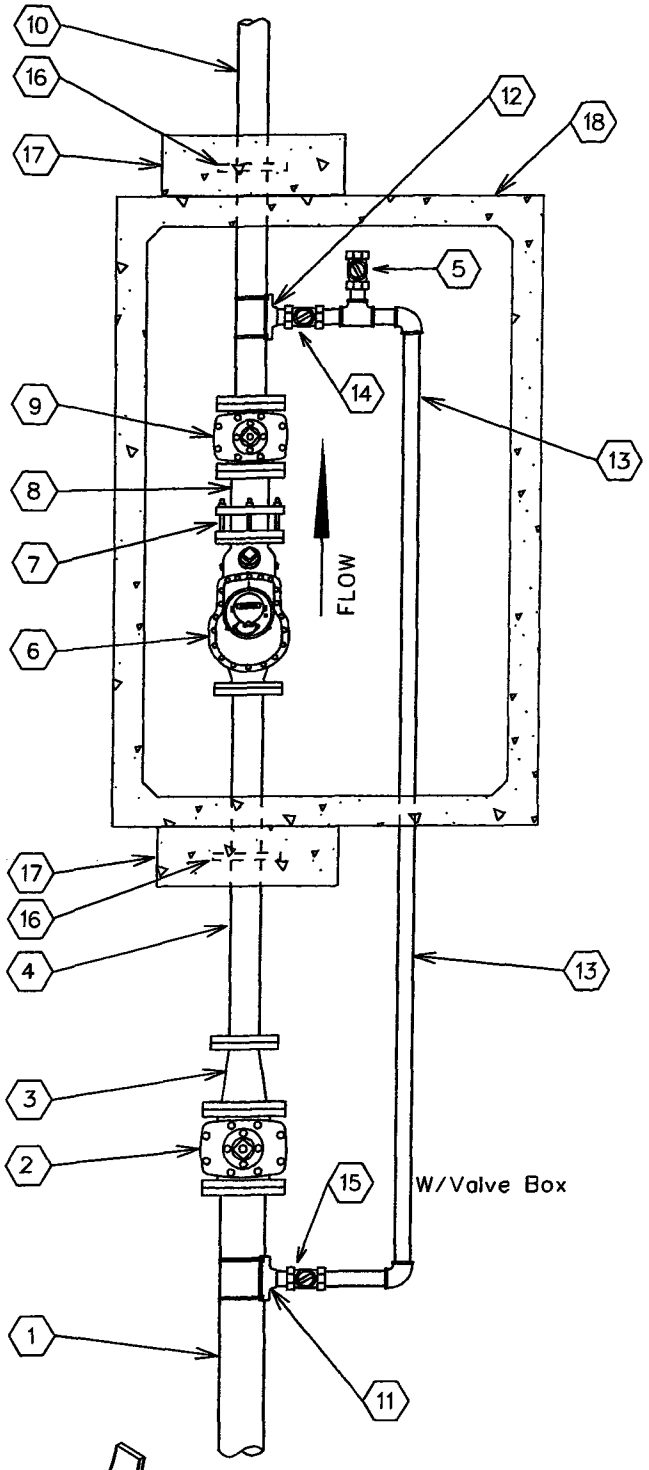

No.	FITTINGS SCHEDULE
1.	6" D.I.P.
2.	6" G.V.B.&C. mj x flng
3.	6"x4" Reducer flng x mj
4.	4"x3'-0" D.I.P. Spool flng x pe
5.	2" Test Port
6.	4" Compound Meter
7.	4" F.C.A.
8.	4"x1'-0" D.I.P. Spool flng x pe
9.	4" Gate Valve flng
10.	4"x4'-0" D.I.P. Spool flng x pe
11.	6"x2" Tapping Saddle
12.	4"x2" Tapping Saddle
13.	2" Copper Pipe
14.	2" Ball Valve / Locking (Normally Closed)
15.	2" Mueller B25122 Ball Valve w/B20299 Nut
16.	4" Megalug
17.	24"x24"x8" Conc. Thrust Block P.I.P.
18.	575-LA Conc. Vault

NOTE:

1. Use Rowley pipe supports or equivalent as needed (See detail below).
2. Pipe support locations to be determined by field personnel.
3. All copper pipe that comes in contact with concrete to be wrapped w/10-20 Mil. Scotchwrap corrosion protection tape.
4. All mechanical joint fittings are to be megalugged.
5. Use deflection fittings (45° Ells.) to achieve necessary depths & cover as shown on the standard specification for the installation of a concrete vault (E-9-12-5).

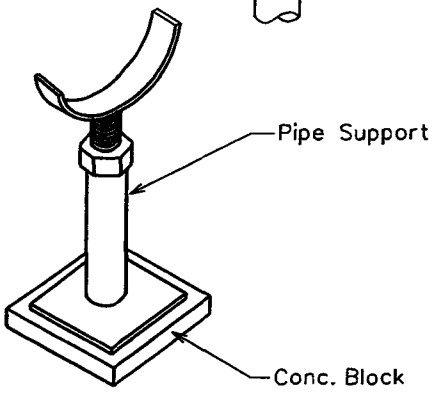

ARIZONA WATER COMPANY

STANDARD SPECIFICATION
FOR THE INSTALLATION OF

4" COMPOUND METER

DRAWN BY:	APPROVED BY:	DATE:		
CCO	MW	10/5/1993	△08.29.2006	E-9-12-2

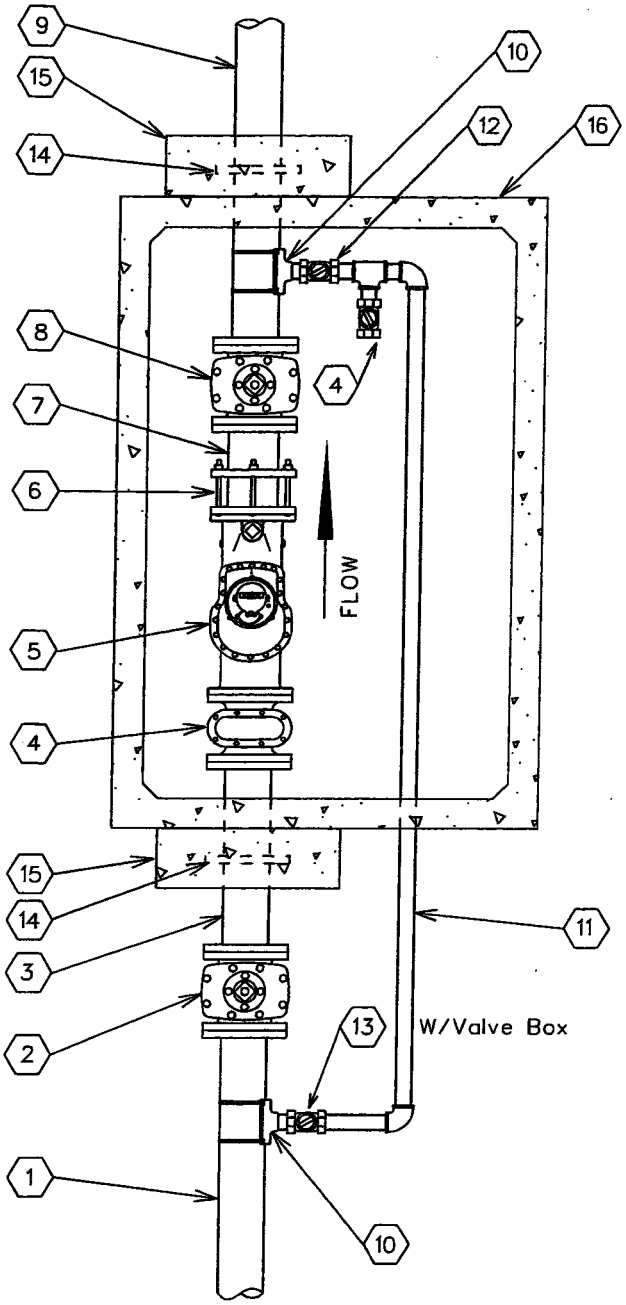

No.	FITTINGS SCHEDULE
1.	6" D.I.P.
2.	6" G.V.B.&C. mj
3.	6"x 3'-0" D.I.P. Spool flng x pe
4.	2" Test Port
5.	6" Compound Meter
6.	6" F.C.A.
7.	6"x 1'-0" D.I.P. Spool flng x pe
8.	6" Gate Valve flng
9.	6"x 4'-0" D.I.P. Spool flng x pe
10.	6"x2" Tapping Saddle
11.	2" Copper Pipe
12.	2" Ball Valve / Locking (Normally Closed)
13.	2" Mueller B25122 Ball Valve w/B20299 Nut
14.	6" Megalug
15.	24"x24"x8" Conc. Thrust Block P.I.P.
16.	575-LA Conc. Vault

NOTE:

1. Use Rowley pipe supports or equivalent as needed (See detail below).
2. Pipe support locations to be determined by field personnel.
3. All copper pipe that comes in contact with concrete to be wrapped w/10-20 Mil. Scotchwrap corrosion protection tape.
4. All mechanical joint fittings are to be megalugged.
5. Use deflection fittings (45° Ells.) to achieve necessary depths & cover as shown on the standard specification for the installation of a concrete vault (E-9-12-5).

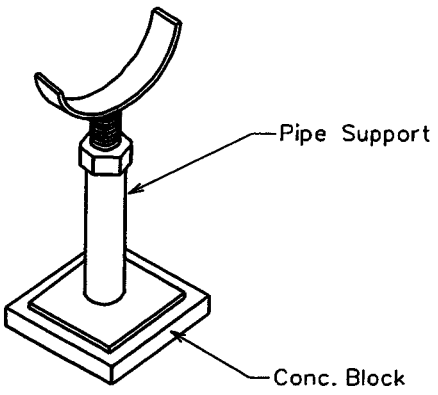

ARIZONA WATER COMPANY

STANDARD SPECIFICATION
FOR THE INSTALLATION OF

6" COMPOUND METER

DRAWN BY:	APPROVED BY:	DATE:		
CCO	MW	10/5/1993	△08.29.2006	E-9-12-3

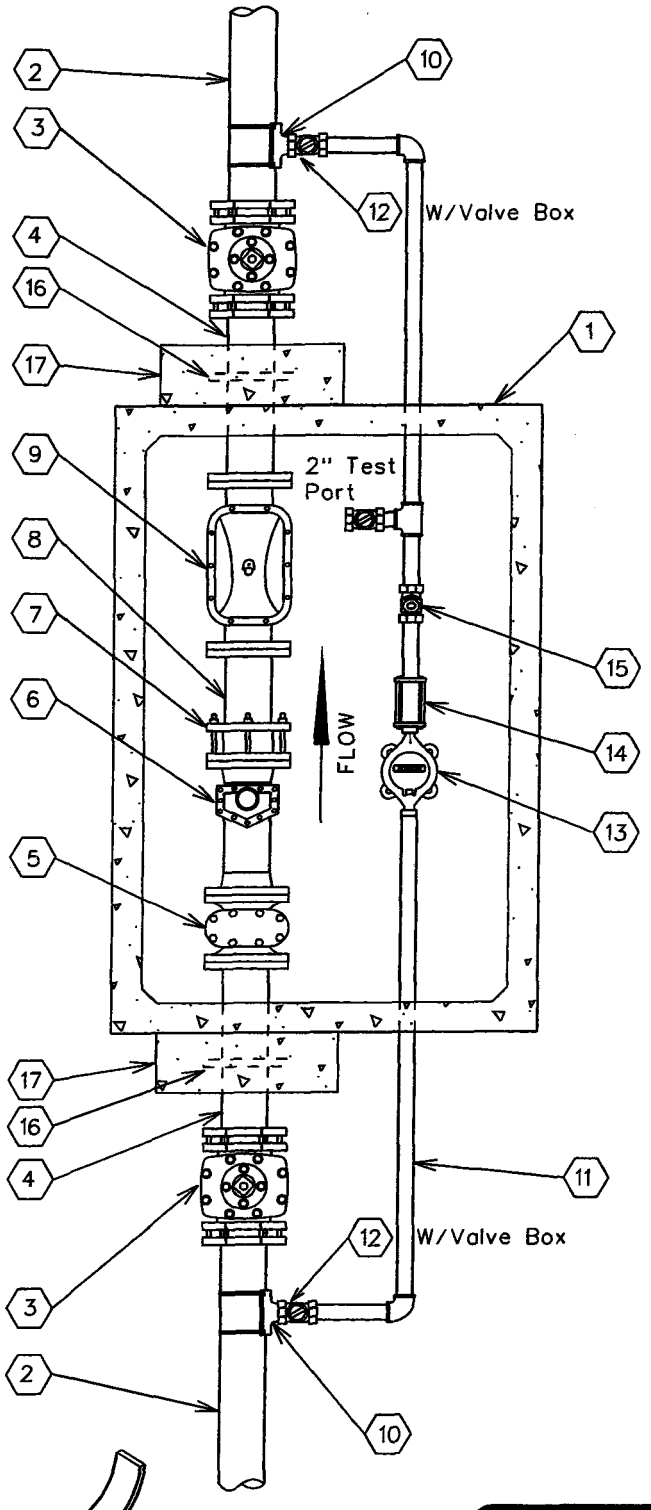

No.	FITTINGS SCHEDULE
1.	575-LA Conc. Vault
2.	6" D.I.P.
3.	6" G.V.B.&C. m.j.
4.	6" x 3'-0" D.I.P. SPool Piece flng x pe
5.	6" Strainer
6.	6" Turbo Meter
7.	6" F.C.A.
8.	6" x 2'-0" D.I.P. Spool Piece flng x pe (TRIM SPOOL PIECE TO 3x THE PIPE DIA.)
9.	6" Detector Check
10.	6"x*N" Tapping Saddle
11.	*N" Copper Pipe
12.	*N" Ball Valve (Locking)
13.	*N" Meter
14.	*N" Coup. Adapt.
15.	*N" Flapper Check Valve
16.	6" Megalug
17.	24"x24"x8" Conc. Thrust Block P.I.P.

*N - Size To Be determined By A.W.Co.

NOTE:

1. Use Rowley pipe supports or equivalent as needed (See detail below).
2. Pipe support locations to be determined by field personnel.
3. All copper pipe that comes in contact with concrete to be wrapped w/10-20 Mil. Scotchwrap corrosion protection tape.
4. All mechanical joint fittings are to be megalugged.
5. Use deflection fittings (45° Ells.) to achieve necessary depths & cover as shown on the standard specification for the installation of a concrete vault (E-9-12-5).
6. To change from a 6" service to a 4" service, change all listed 6" materials to 4" materials.

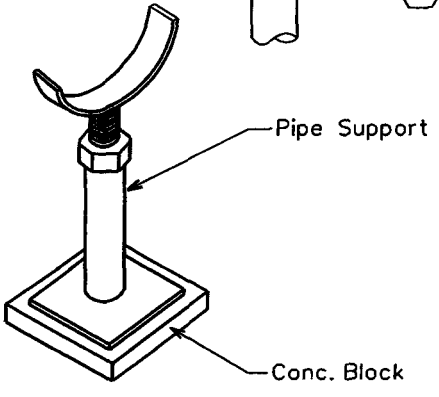

ARIZONA WATER COMPANY

STANDARD SPECIFICATION
FOR THE INSTALLATION OF

6" COMPOUND SERVICE

DRAWN BY:	APPROVED BY:	DATE:		
CCO	MW	10/05/1993	△08.29.2006	E-9-12-4

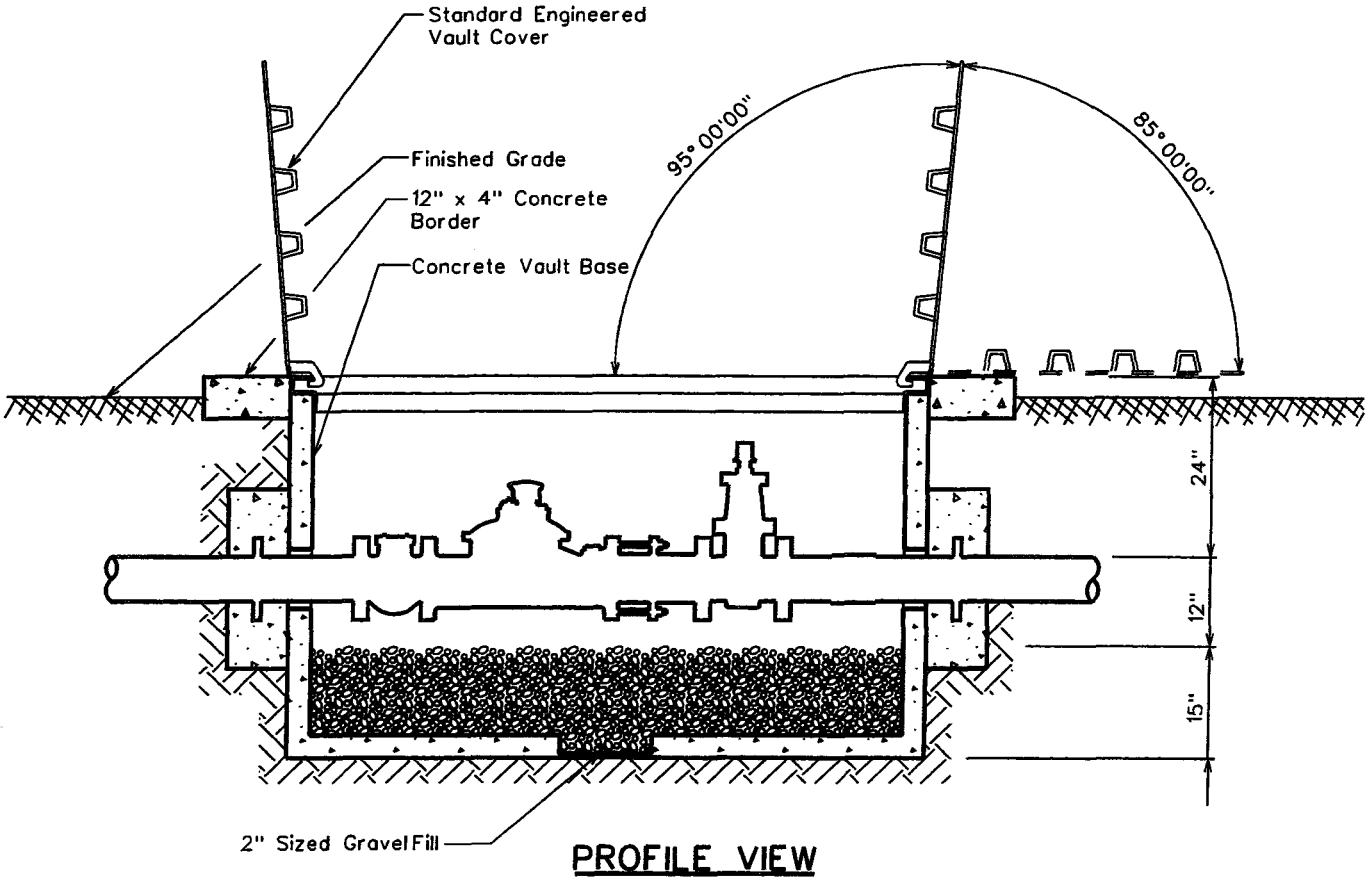

PROFILE VIEW

CONCRETE VAULT & COVER SPECIFICATIONS

Vault - Base No. 575-BL
Cover - Standard Engineered Vault Cover
- 4874 Aluminum Diamond Plate Cover For Non-Traffic Loading Areas
  Or
- 4874 Galvanized Steel Diamond Plate Cover W/ H-20 Traffic Loading
- Double Torsion Spring Assisted Doors W/ Recessed Hasp & Safety Latches

NOTES

1. Total Depth Of Concrete Vault To Be A Maximum Of 3'-0" From Top Of Vault Cover To Top Of Gravel Fill.
2. Service Connections Larger Than 6" In Diameter Will Conform To The Same Vault & Cover Specifications. Size Of Vault & Cover To Be Determined By A.W.Co. Engineers.

ARIZONA WATER COMPANY

STANDARD SPECIFICATION
FOR THE INSTALLATION OF

CONCRETE VAULT

DRAWN BY:	APPROVED BY:	DATE:	△	
CCO	MW	10/5/1993	05.17.2001	E-9-12-5

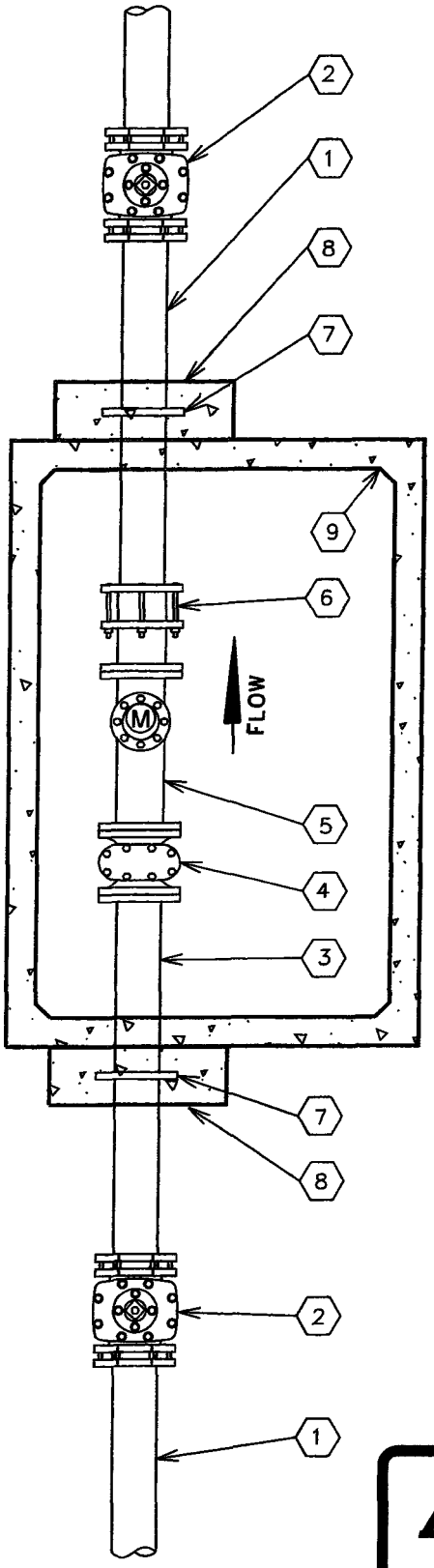

No.	FITTINGS SCHEDULE
1.	Ductile Iron Pipe
2.	Gate Valve M.J.
3.	D.I.P. Spool Piece Flg x Pe (10xDia.)
4.	Meter Strainer
5.	Propeller Meter
6.	Flanged Coupling Adapter
7.	Megalug Gland (Thrust Anchor)
8.	Concrete Thrust Block P.I.P.
9.	Concrete Vault

NOTE:

1. Use Rowley pipe supports or equivalent as needed (See E-9-12-4).
2. Pipe support locations to be determined by field personnel.
3. All Sched. 40 Stl. pipe outside of vault to be wrapped w/10-20 Mil. Scotchwrap corrosion protection tape.
4. All mechanical joint fittings to are to be megalugged.
5. Use deflection fittings (45° Ells.) to achieve necessary depths & cover as shown on the standard specification for the installation of a concrete vault (E-9-12-5).

ARIZONA WATER COMPANY

STANDARD SPECIFICATION

FOR THE INSTALLATION OF

NON-POTABLE PROPELLER METER

DRAWN BY:	APPROVED BY:	DATE:		
JPK	MW	7-20-95	△	E-9-12-6

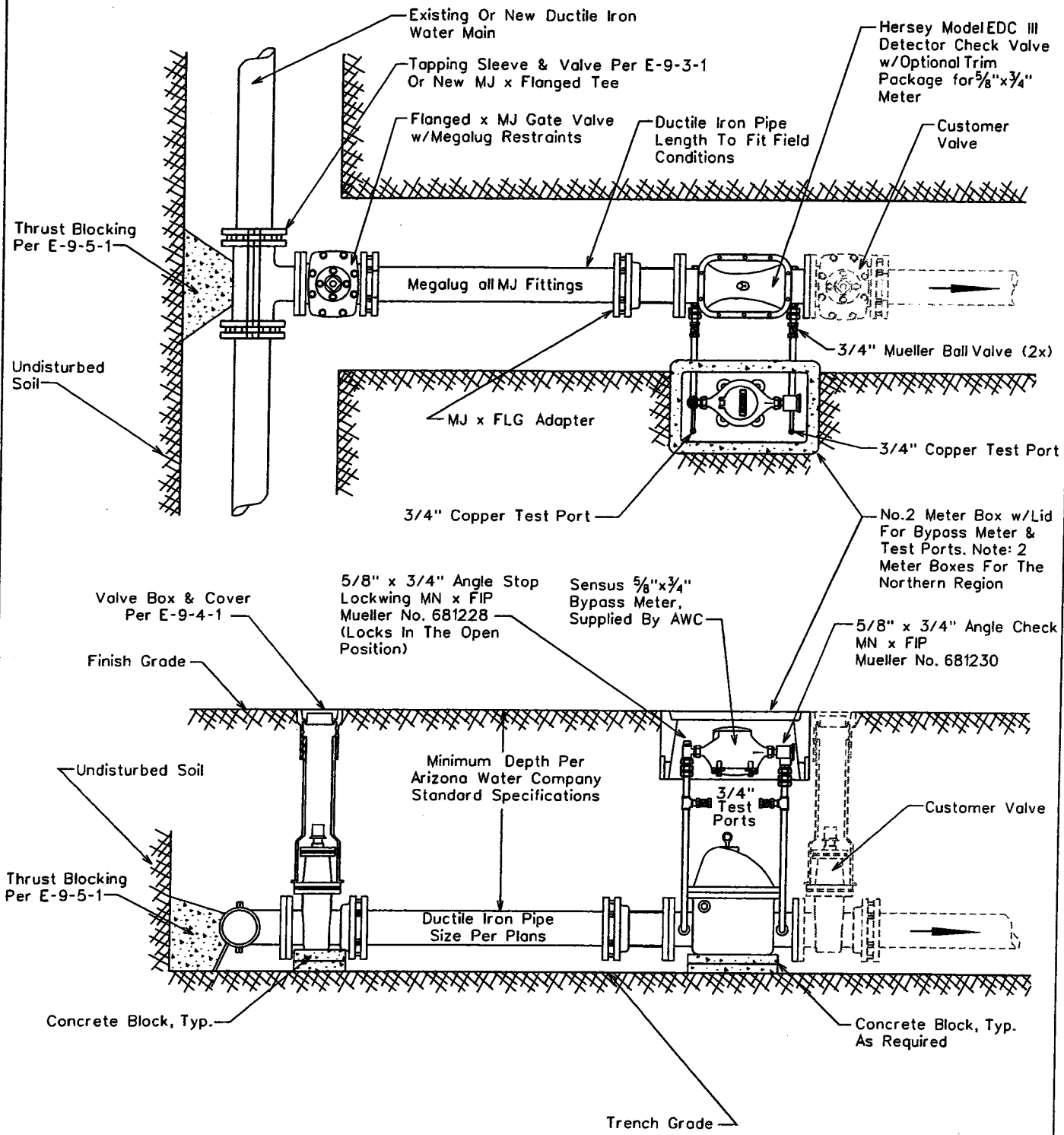

ARIZONA WATER COMPANY

STANDARD SPECIFICATION

FOR THE INSTALLATION OF

TYPICAL 4" THRU 8" DETECTOR CHECK VALVES

DRAWN BY:	APPROVED BY:	DATE:	△	
CB	MW	10.16.1990	01.16.2007	E-9-13-1

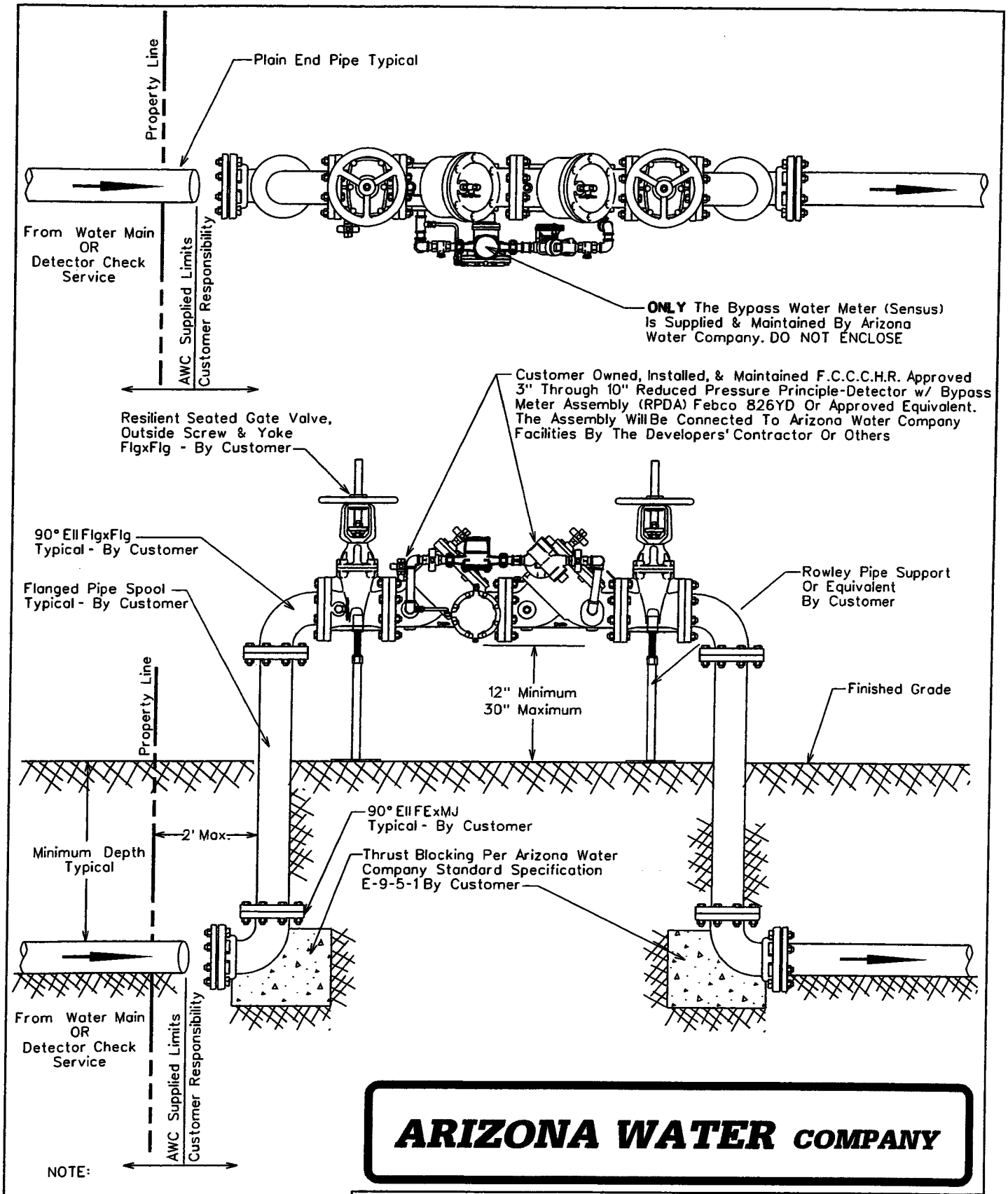

ARIZONA WATER COMPANY

NOTE:

Minimum Depth Of Cover Over
6" & 8" Mains is 36 Inches,
12" & Greater is 48 Inches
Unless Otherwise Specified

STANDARD SPECIFICATION

FOR THE INSTALLATION OF

3" THRU 10" REDUCED PRESSURE PRINCIPLE-DETECTOR
WITH BYPASS METER ASSEMBLY (RPDA) FOR FIRELINE SERVICES

DRAWN BY:	APPROVED BY:	DATE:		
CB	MW	10-13-98	△1-19-2000	E-9-13-2

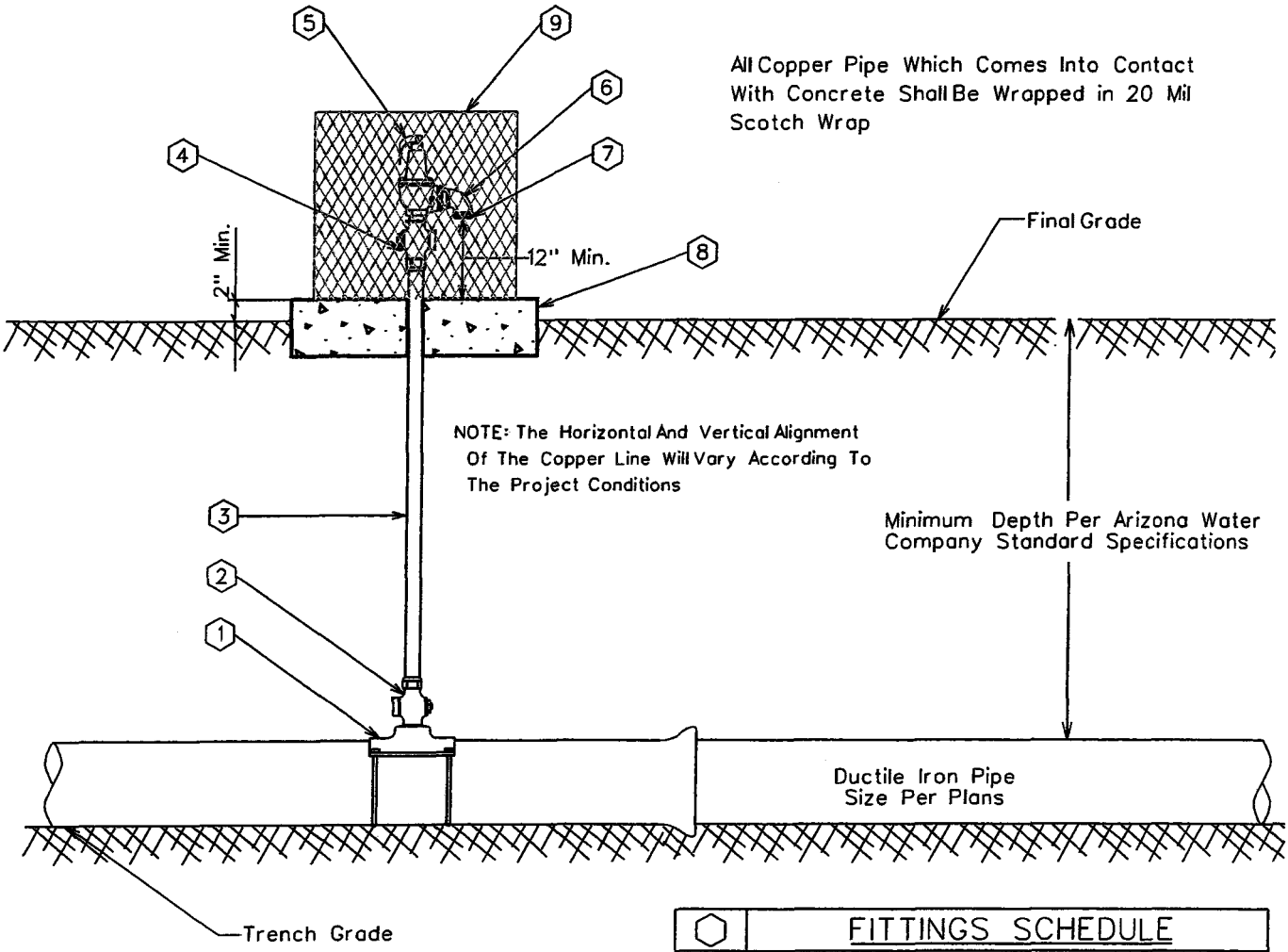

⬡	FITTINGS SCHEDULE
1.	Mueller BR2B Bronze Service Saddle - Double Strap
2.	2" Mueller B-25008 Taper x Comp. Ball Corp Stop
3.	2" Type 'K' Copper w/NO Splices - Field Fit
4.	2" Mueller B-25028 IP x Comp. Ball Corp Stop
5.	2" Pressure Relief Valve Watts 174A With A 2" Inlet / 2" Outlet 30-150 psi W/ Bronze Body
6.	2" Brass Street Elbow
7.	No.16 Wire Mesh Screen (Non-Corrodible)
8.	4" Thick Concrete Pad - Class 'C' Concrete
9.	Vandal enclosure to be centered on the concrete pad

NOTE:

1. Pressure relief valves are typically located just down stream of a pressure reducing station or where system conditions might be subject to greater than allowable pressures.
2. The relief valve assembly and vandal enclosure shall be located out of the roadway, but within the right-of-way or easement.

ARIZONA WATER COMPANY

STANDARD SPECIFICATION
FOR THE INSTALLATION OF

TYPICAL PRESSURE RELIEF VALVE ASSEMBLY

DRAWN BY:	APPROVED BY:	DATE:	△ 08.29.2006	
CCO	MW	3/20/1986		E-9-14-1

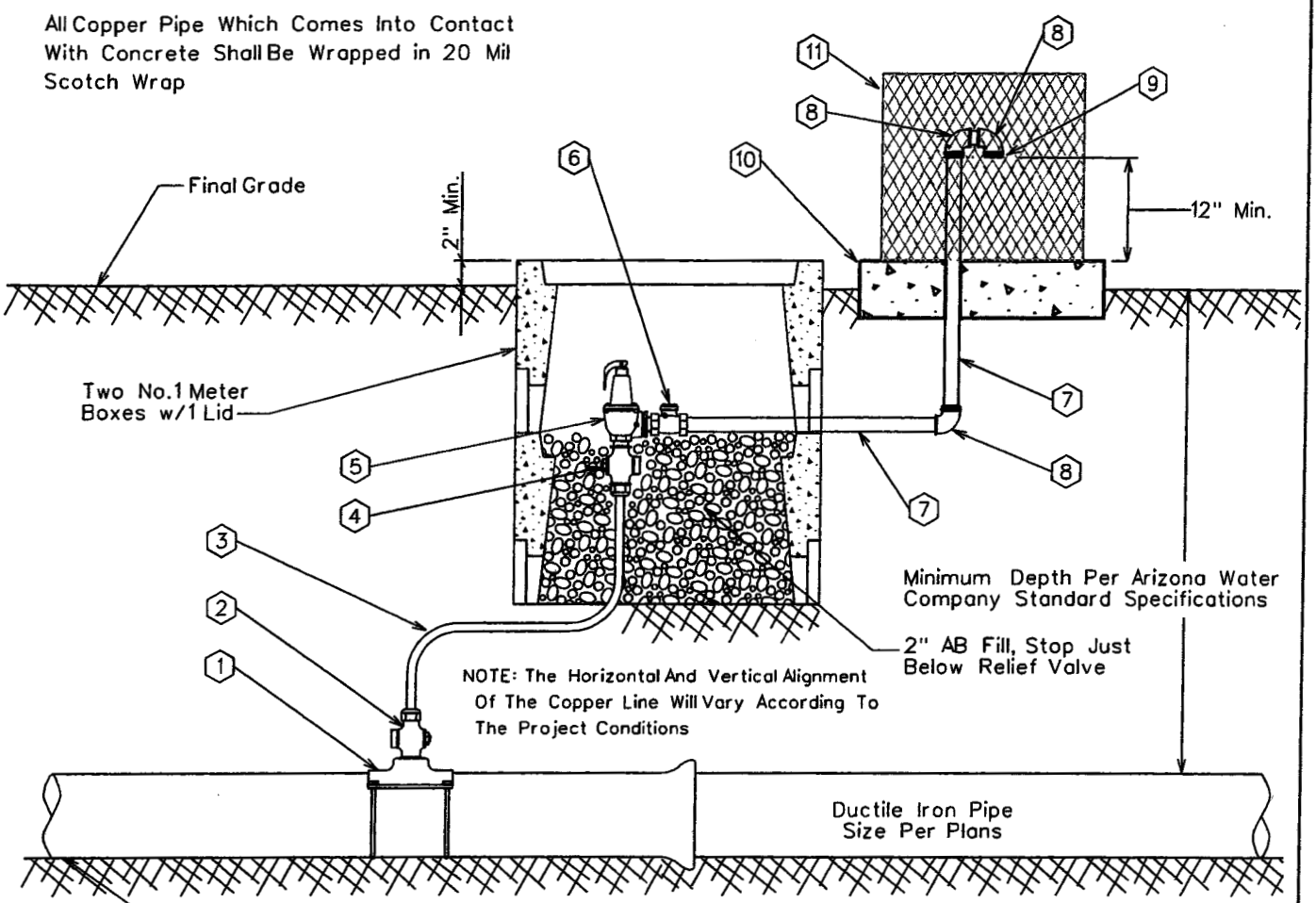

NOTE:

1. Pressure relief valves are typically located just down stream of a pressure reducing station or where system conditions might be subject to greater than allowable pressures.
2. The relief valve assembly and vandal enclosure shall be located out of the roadway, but within the right-of-way or easement.

⬡	FITTINGS SCHEDULE
1.	Mueller BR2B Bronze Service Saddle - Double Strap
2.	2" Mueller B-25008 Taper x Comp. Ball Corp Stop
3.	2" Type 'M' Rigid Copper w/NO Splices - Field Fit
4.	2" Mueller B-25028 IP x Comp. Ball Corp Stop
5.	2" Pressure Relief Valve Watts 174A With A 2" Inlet / 2" Outlet 30-150 psi W/ Bronze Body
6.	2" Bronze Check Valve Watts Series CV
7.	2" Schedule 40 Cut Pipe - Field Fit
8.	2" Brass Street Elbow
9.	No.16 Wire Mesh Screen (Non-Corrodible)
10.	4" Thick Concrete Pad - Class 'C' Concrete
11.	Guardshack, Model GS-1, Available From BPDI, Inc. Available In Leaf Green Or Desert Tan

ARIZONA WATER COMPANY

STANDARD SPECIFICATION

FOR THE INSTALLATION OF

PRESSURE RELIEF VALVE - NORTHERN REGION

DRAWN BY:	APPROVED BY:	DATE:		
CCO	MW	3/20/1986	△08.29.2006	E-9-14-2

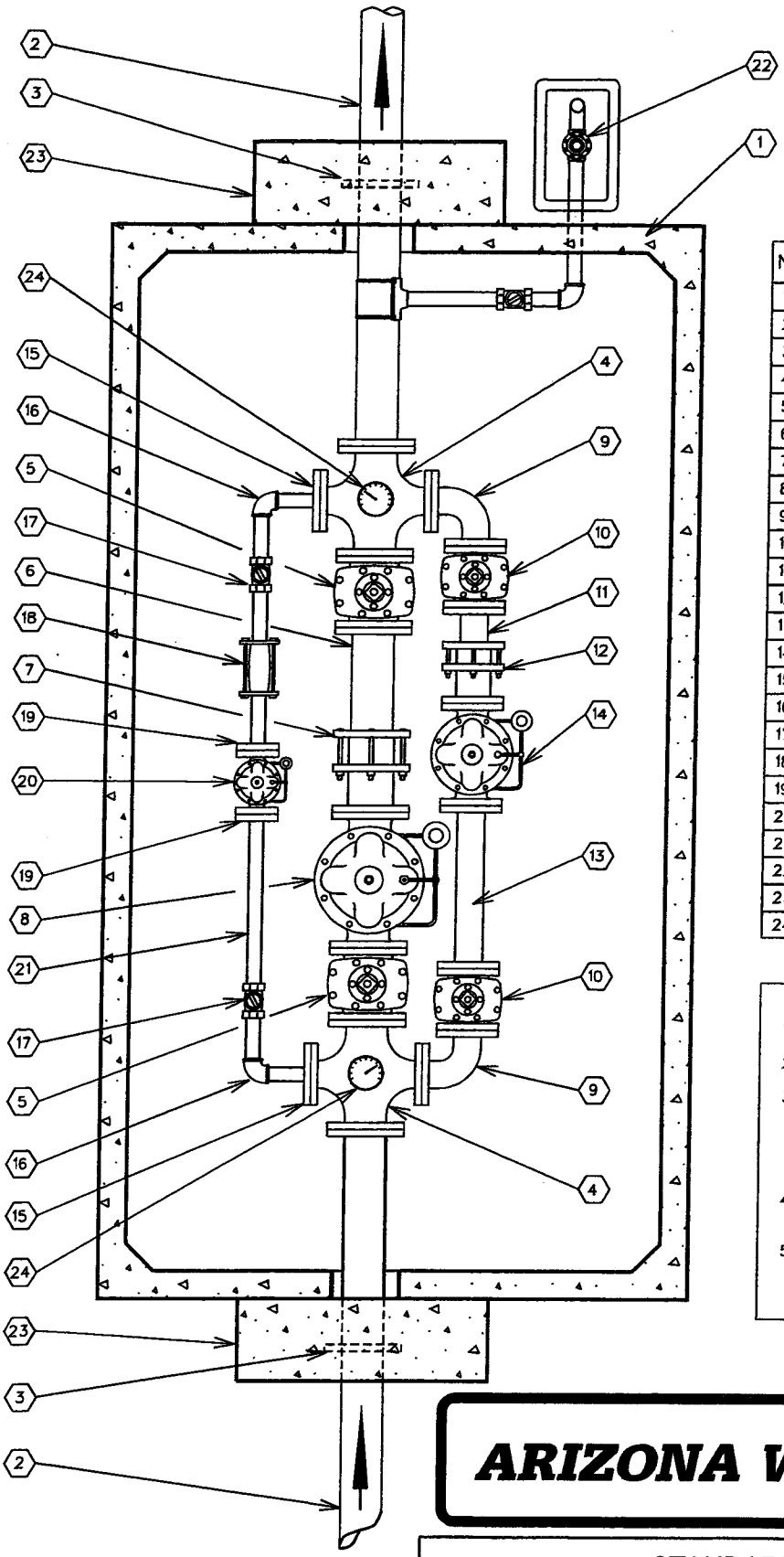

No.	FITTINGS SCHEDULE
1.	612 LA Conc. Vault (See Note 3)
2.	6"x6'-0" D.I.P. Spool Flg.xP.E.
3.	6" Megalug (Thrust Anchor)
4.	6"x4" Cross Flg.
5.	6" Gate Valve Flg.
6.	6"x2'-0" D.I.P. Spool Flg.xP.E.
7.	6" Flg. Coup. Adapt. (Rockwell 913)
8.	6" High Flow Pressure Reducing Valve Flg.
9.	4" 90° Ell. Flg.
10.	4" Gate Valve Flg.
11.	4"x1'-0" D.I.P. Spool Flg.xP.E.
12.	4" FLg. Coup. Adapt. (Rockwell 913)
13.	4"x2'-0" D.I.P. Spool Flg.
14.	4" Medium Flow Pressure Reducing Valve Flg.
15.	2"x9" O.D. Reducing Flg. (I.P.T.)
16.	2" 90° Ell. F.I.P.
17.	2" Ball Valve F.I.P.
18.	2" Comp. Coup. (Rockwell 411)
19.	2" Companion Flg. (I.P.T.)
20.	2" Low Flow Pressure Reducing Valve Flg.
21.	2" Sched. 40 Stl. Pipe
22.	2" Pressure Relief Valve (See E-9-14-1)
23.	12"x36"x36" Conc. Thrust Block P.I.P.
24.	Pressure Gauge w/shut off valve

NOTE:

1. Use Rowley pipe supports or equivalent as needed. (See E-9-12-4)
2. Pipe support locations to be determined by field personnel.
3. Vault-612 LA top section w/12" Dia. sump hole. Cover-concrete slab top w/(4) 4'-0" x2'-6" aluminum spring loaded hinged style covers for non-traffic loading areas. For areas w/low density traffic, cover is to be designed for H-20 traffic loading.
4. All Sched. 40 Stl. pipe outside of vault to be wrapped w/10-20 Mil. Scotchwrap corrosion protection tape.
5. Use deflection fittings (45° Ells.) to achieve necessary depths & cover as shown on the standard specification for the installation of a concrete vault (E-9-12-5).

ARIZONA WATER COMPANY

STANDARD SPECIFICATION

FOR THE INSTALLATION OF

PRESSURE REDUCING STATION

DRAWN BY:	APPROVED BY:	DATE:	△	
JPK	MW	11-16-88	9-27-95	E-9-15-1

1. Specific Items To Be Painted Deer-O Pure White Enamel:

A. All Booster Pumps.
B. All Electrical Motors And Gas Engines.
C. Well Pump Discharge Heads.
D. Electrical Panel.

2. Specific Items To Be Painted Frost Cap White Or Deer-O Pure White Enamel:

A. Well Shelter.

3. Specific Items To Be Painted OSHA Orange:

A. Electrical Conduit.

4. All Other Items To Be Painted With Either:
(At Manager's Discretion)

A. Cholla Green
B. Forest Green
C. Sonora Beige
D. Red Rock
E. Rock Brown
F. Deer-O Pure White
G. Elkhorn Cactus

ARIZONA WATER COMPANY

STANDARD SPECIFICATION
FOR THE INSTALLATION OF

PAINT COLOR SELECTION

DRAWN BY:	APPROVED BY:	DATE:	△	
CCO		3/20/1986	2/13/2001	E-9-16-1

1. Tank shall conform to AWWA Specification D100-84 with exceptions noted below.

*2. 1/4" minimun shell plate.

3. Minimum of 12" diameter roof vent, screened with No. 16 non-corrodible wire mesh, to be located on a 24" diameter round hinged manhole opening at the center of the tank to provide access to the dollar plate.

4. Overflow pipe shall be the same diameter as the inlet pipe and shall terminate 12 to 24 inches above splash pad or a minimum of 2 overflow pipe diameters above weir box high water level.

5. Storage tank shall be placed upon adequately compacted base material.

6. 6" minimum floor mounted tank drain outlet to be located close to the outer shell.

7. Tank and related fittings shall be enclosed with a 6 foot chain link fence with lockable gates and anti-personnel wire on top of fence.

8. Liquid level shall be indicated by a target and target board on the outside surface of the tank.

9. 24 inch diameter manholes shall be provided on the roof and on the shell near the bottom of the tank. The roof manhole cover shall overlap the manhole by at least 2 inches to provide a rain tight closure. Roof manhole shall be hinged and equipped with a lock. Shell manhole cover to be hinged and bolted in place. *Tanks larger than a 60 foot diameter require 2 shell manholes.

10. Inside and outside ladders shall be located at the roof manhole. Outside ladder shall be caged with locking trap door. Bottom 8 feet of cage shall be enclosed to within 1/2" of shell with 10 gauge sheet steel.

11. Finished tank shall be disinfected in accordance with Arizona Department of Health Services Engineering Bulletin No. 8 before being placed into service.

12. The following information will be included with application for approval to construct:

    1. Tank location_____
    2. Tank height_____
    3. Tank diameter_____
    4. Tank capacity_____
    5. Method of water level control_____

13. The storage tank will not be constructed within the 100 year flood plain and the tank site will be graded to slope away from the tank.

14. The welded steel storage tank will be coated as per AWWA Specification D102, and N.S.F. Standard 61.

*Exceptions to AWWA Specification D100-84

FOUNDATION NOTES

1. FINISH CONCRETE SURFACE MUST SLOPE UPWARDS FROM THE STEEL BAND APPROX. 1" IN 10'-0".

2. TOP OF STEEL BAND MUST BE MAINTAINED LEVEL TO WITHIN 1/8".

3. INSTALL 8-2" DIA.x10'-0" P.V.C. WEEP LINES, EQUALLY SPACED (EVERY 45°). PERFORATE 8'-0" OF LINE WITH 1/2" DIA. HOLES @ 6" O.C. PLUG INTERIOR END OF LINE w/2" CAP.

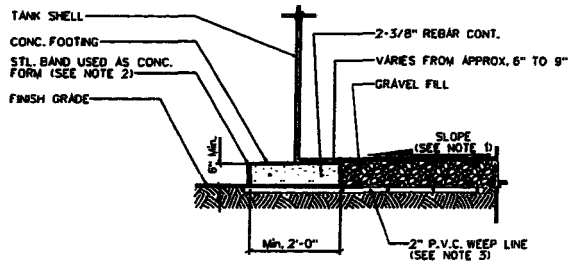

FOUNDATION DETAIL

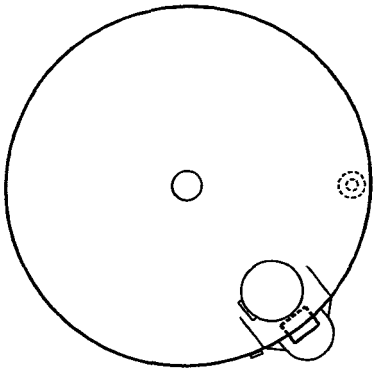

PLAN VIEW

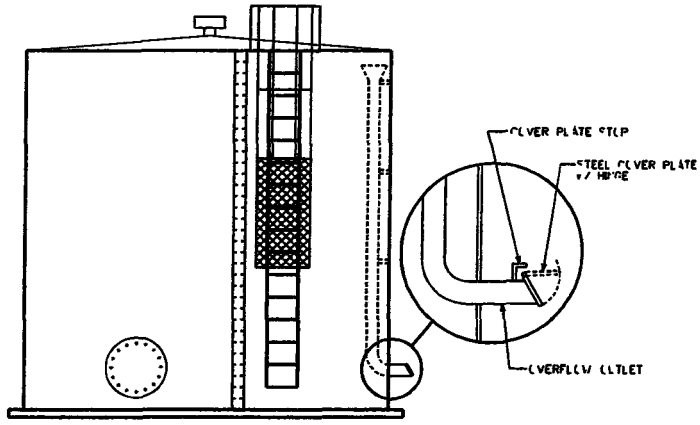

PROFILE VIEW

ARIZONA WATER COMPANY

STANDARD SPECIFICATION FOR THE INSTALLATION OF STEEL WATER STORAGE TANK				
DRAWN BY: JPK	APPROVED BY: MJW	DATE: 10-17-88	△ 2-12-96	E-9-17-1

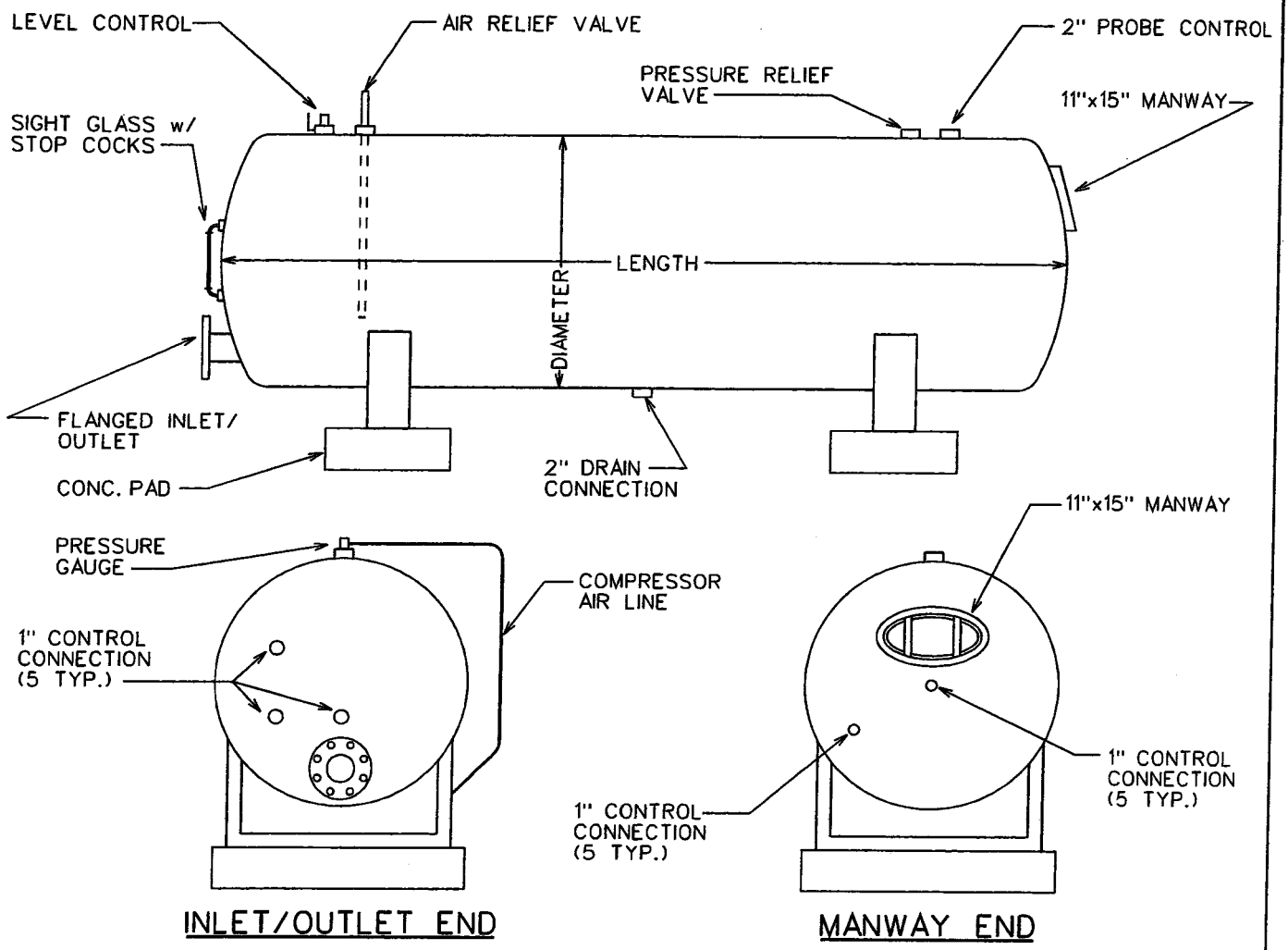

1. ALL HYDROPNEUMATIC TANKS SHALL BE DESIGNED & CONSTRUCTED IN ACCORDANCE WITH THE CURRENT REQUIREMENTS OF THE ASME CODE FOR UNFIRED PRESSURE VESSELS, SECTION VIII, DIVISION 1.
2. FINISHED TANK SHALL BE DISINFECTED IN ACCORDANCE WITH ADEQ BULLETIN No. 8 BEFORE BEING PLACED INTO SERVICE.
3. THE WELDED STEEL HYDROPNEUMATIC TANK WILL BE COATED AS PER AWWA SPECIFICATION D102 & NSF STANDARD 61.
4. THE FOLLOWING INFORMATION WILL BE INCLUDED WITH THE APPLICATION FOR APPROVAL TO CONSTRUCT.
   1. Tank Location _____
   2. Tank Length _____
   3. Tank Diameter _____
   4. Tank Capacity _____
   5. Maximum Working Pressure _____

ARIZONA WATER COMPANY

STANDARD SPECIFICATION FOR THE INSTALLATION OF				
HYDROPNEUMATIC TANK				
DRAWN BY: JPK	APPROVED BY: MW	DATE: 3-20-1986	△ 01.16.2007	E-9-18-1

NOT
CONVERTED
TO
CAD

ARIZONA WATER COMPANY

STANDARD SPECIFICATION
FOR THE INSTALLATION OF

WELL SHELTER

DRAWN BY:	APPROVED BY:	DATE:		
CB		03.20.1986	△04.03.2001	E-9-19-1

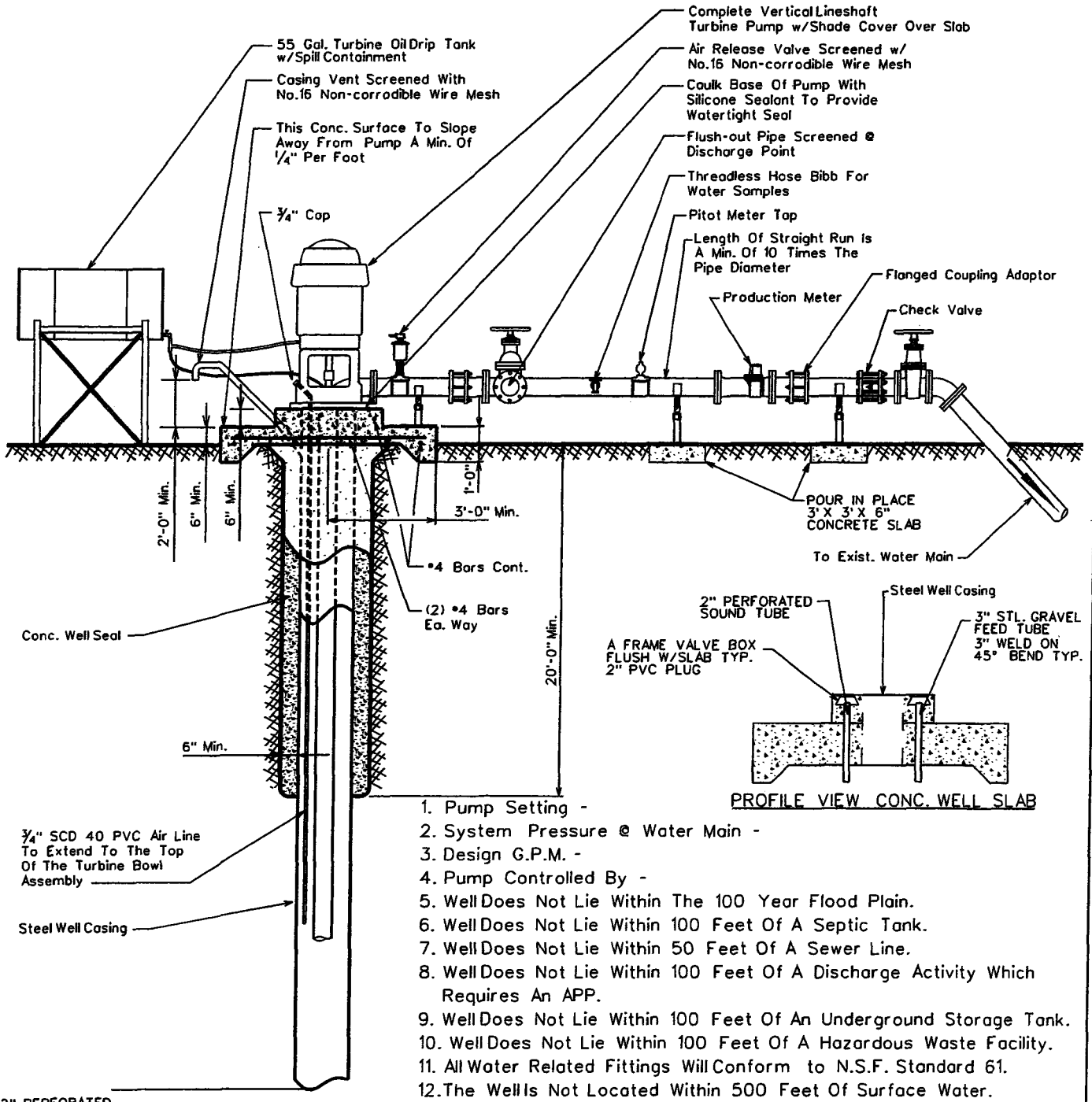

1. Pump Setting -
2. System Pressure @ Water Main -
3. Design G.P.M. -
4. Pump Controlled By -
5. Well Does Not Lie Within The 100 Year Flood Plain.
6. Well Does Not Lie Within 100 Feet Of A Septic Tank.
7. Well Does Not Lie Within 50 Feet Of A Sewer Line.
8. Well Does Not Lie Within 100 Feet Of A Discharge Activity Which Requires An APP.
9. Well Does Not Lie Within 100 Feet Of An Underground Storage Tank.
10. Well Does Not Lie Within 100 Feet Of A Hazardous Waste Facility.
11. All Water Related Fittings Will Conform to N.S.F. Standard 61.
12. The Well Is Not Located Within 500 Feet Of Surface Water.
13. The Site Will Be Graded To Provide Adequate Drainage Away From The Well.
14. 6.88 lbs. of Davis #8084 Grey Dye, Per Yard, For 2500 PSI Concrete

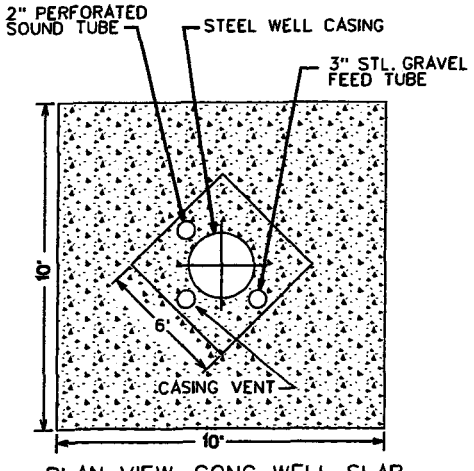

PLAN VIEW CONC. WELL SLAB

ARIZONA WATER COMPANY

STANDARD SPECIFICATION
FOR THE INSTALLATION OF

TYPICAL WELL W/ LINESHAFT TURBINE PUMP

DRAWN BY:	APPROVED BY:	DATE:	△	
JW	M.W.	3-20-86	9/15/04	E-9-20-1

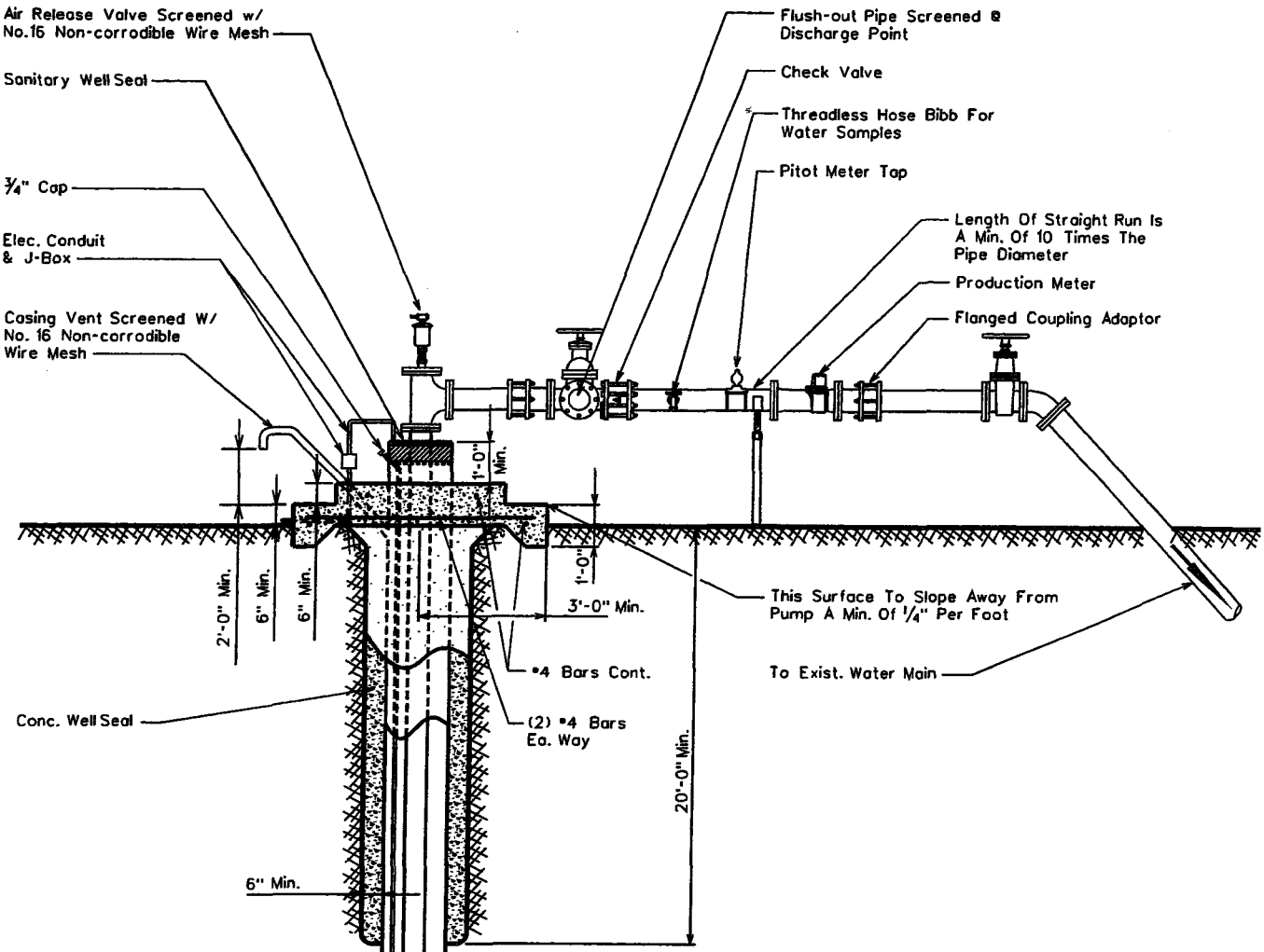

1. Pump Setting -
2. System Pressure @ Water Main -
3. Design G.P.M. -
4. Pump Controlled By -
5. Well Does Not Lie Within The 100 Year Flood Plain.
6. Well Does Not Lie Within 100 Feet Of A Septic Tank.
7. Well Does Not Lie Within 50 Feet Of A Sewer Line.
8. Well Does Not Lie Within 100 Feet Of A Discharge Activity Which Requires An APP.
9. Well Does Not Lie Within 100 Feet Of An Underground Storage Tank.
10. Well Does Not Lie Within 100 Feet Of A Hazardous Waste Facility.
11. All Water Related Fittings Will Conform to N.S.F. Standard 61.
12. The Well Is Not Located Within 500 Feet Of Surface Water.
13. The Site Will Be Graded To Provide Adequate Drainage Away From The Well.

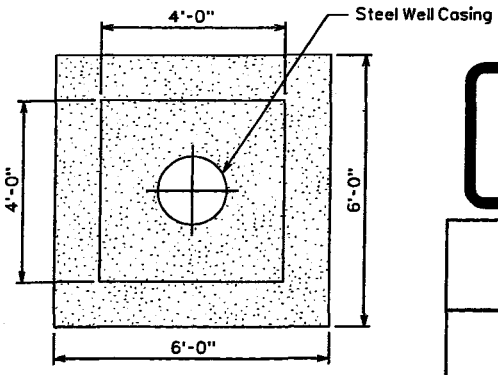

PLAN VIEW CONC. WELL SLAB

ARIZONA WATER COMPANY

STANDARD SPECIFICATION
FOR THE INSTALLATION OF

TYPICAL WELL W/ SUBMERSIBLE TURBINE PUMP

DRAWN BY:	APPROVED BY:	DATE:	△	
jpk	M.W.	3-20-86	2-16-01	E-9-21-1

All New Purchases To Conform To The Following:

Column Pipe

4" I.D. - 8	Threads	Per	Inch	Tapered	3/4"	Per	Foot	Right	Hand
6" I.D. - 8	"	"	"	"	"	"	"	"	"
8" I.D. - 8	"	"	"	"	"	"	"	"	"
10" I.D.- 8	"	"	"	"	"	"	"	"	"
12" I.D.- 8	"	"	"	"	"	"	"	"	"
14" I.D.- 8	"	"	"	"	"	"	"	"	"

Oil Tube - Peerless Type

1 1/2"	O.D. - 14	Threads	Per	Inch	Right	Hand
2"	O.D. - 12	"	"	"	"	"
2 1/2"	O.D. - 10	"	"	"	"	"
3"	O.D. - 10	"	"	"	"	"
3 1/2"	O.D. - 10	"	"	"	"	"
4"	O.D. - 10	"	"	"	"	"

Line Shaft

3/4"	O.D. - 10	Threads	Per	Inch	Left	Hand
1"	O.D. - 14	"	"	"	"	"
1-3/16"	O.D. - 10	"	"	"	"	"
1-1/2"	O.D. - 10	"	"	"	"	"
1-11/16"	O.D. - 10	"	"	"	"	"
1-15/16"	O.D. - 10	"	"	"	"	"
2-3/16"	O.D. - 10	"	"	"	"	"
2-7/16"	O.D. - 8	"	"	"	"	"

ARIZONA WATER COMPANY

STANDARD SPECIFICATION
FOR THE INSTALLATION OF

COLUMN PIPE, OIL TUBE AND LINE SHAFT

DRAWN BY:	APPROVED BY:	DATE:	△	
CCO		3/20/1996	2/13/2001	E-9-22-1

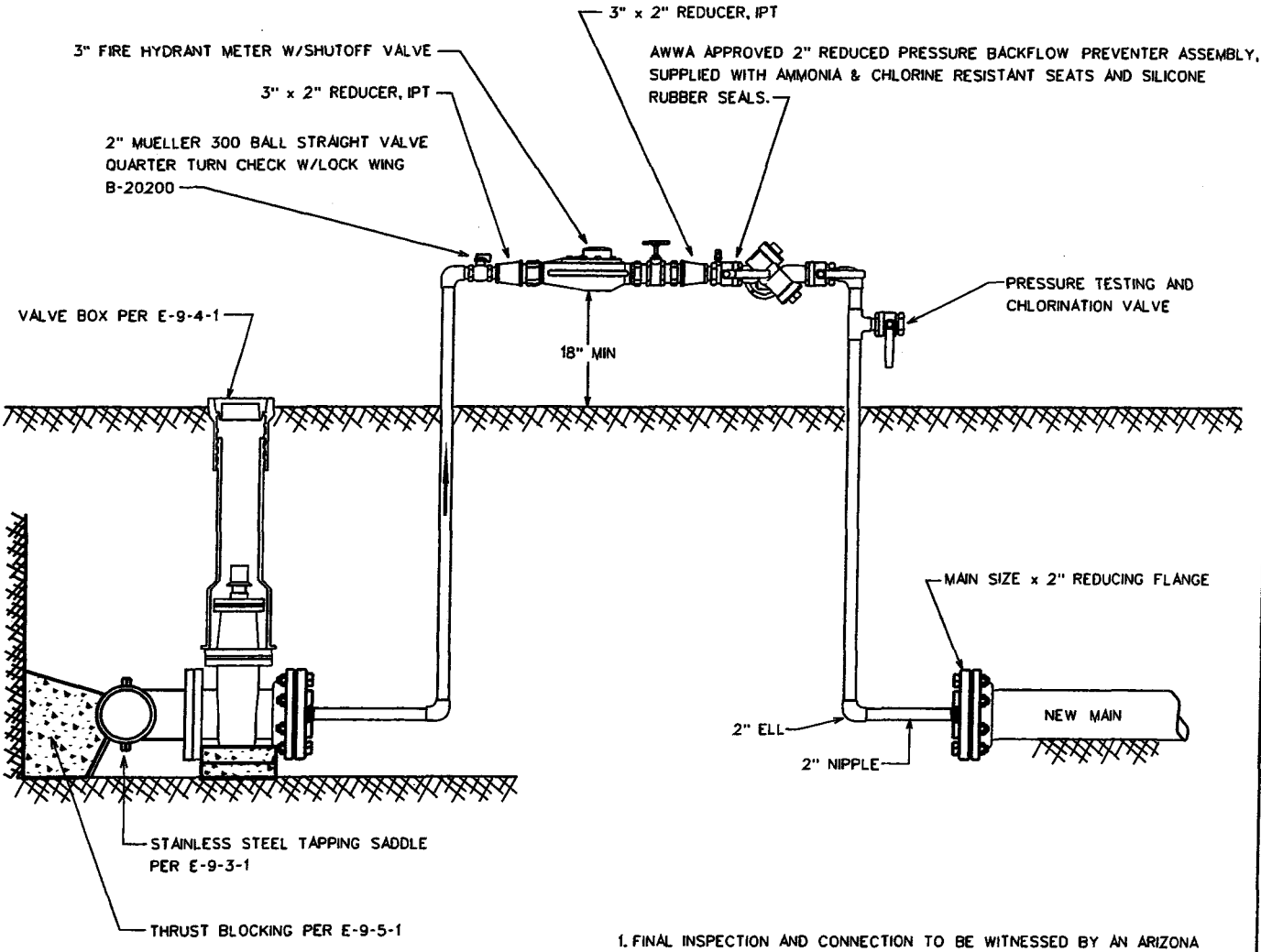

1. FINAL INSPECTION AND CONNECTION TO BE WITNESSED BY AN ARIZONA WATER COMPANY REPRESENTATIVE.
2. REDUCING FLANGES TO BE PROPERLY RESTRAINED.
3. INSTALL JUMPER TAP FOR TEMPORARY METER DOWNSTREAM OF THE REDUCING FLANGE FOR PRESSURE AND BACTEE TESTING.
4. JUMPER ASSEMBLY MUST BE A MINIMUM OF 18" ABOVE FINISHED GRADE.
5. BACKFLOW ASSEMBLY REQUIRES CERTIFICATION.
6. ASSEMBLY NOT TO BE REMOVED AND SPOOL PIECE INSTALLED FOR FINAL CONNECTION UNTIL ALL TESTING, BACTERIAL CLEARANCE AND FINAL INSPECTIONS HAVE BEEN OBTAINED.
7. ALL NEW PIPING SHALL BE PROPERLY RESTRAINED.

ARIZONA WATER COMPANY

STANDARD SPECIFICATION
FOR THE INSTALLATION OF

HOT TAP & JUMPER METER CONNECTION

DRAWN BY:	APPROVED BY:	DATE:	△	
CB	MJW	05.14.2004		E-9-23-1

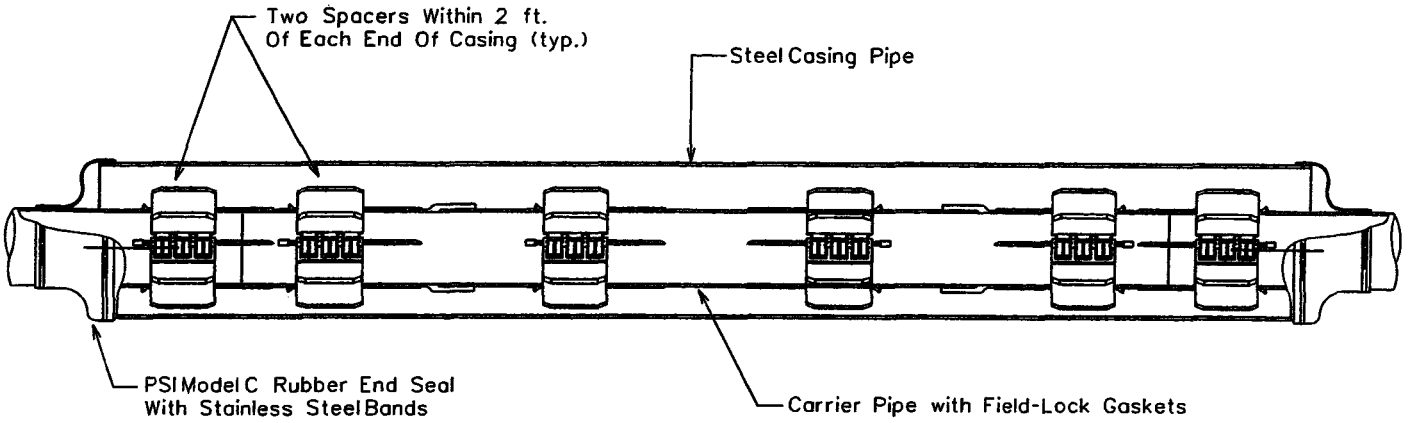

CROSS SECTION

The casing spacers shall be the PSI Ranger II Casing Spacers as manufactured by Pipeline Seal and Insulator, Inc., Houston, Texas.

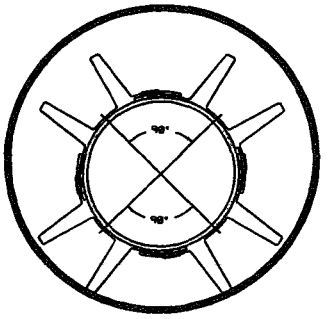

SECTION CUT

End Seals
After insertion of the carrier pipe into the casing, the ends of the casing shall be closed by installing 1/8" thick synthetic rubber end seals equal to the PSI Model "C" end seal as manufactured by Pipeline Seal and Insulator, Inc., Houston, Texas.

NOTE: The Carrier Pipe Shall Be Polywrapped Prior To The Skid Installation & Insertion Into The Carrier Casing For Divisions Requiring Polywrapped Pipe.

OD Push On Joint Bell	OD M.J. BELL
6" - 8.66"	6" - 11.12"
8" - 10.82"	8" - 13.37"
12" - 15.05"	12" - 17.94"
16" - 19.74"	16" - 22.56"
20" - 23.98"	20" - 27.08"
24" - 28.16"	24" - 31.58"
30" - 35.40"	30" - 39.12"
36" - 41.84"	36" - 46.00"
48" - 55.94"	48" - 60.00"

*Thickness Of Skid To Extend A Minimum of 1/2" Above The O.D. Of The Pipe Bell or Gland.

PIPE SIZE	CASING SIZE	CASING SIZE ID	CASING SCHEDULE	WALL THICKNESS	SKID SIZE
6"	16"	15.25"	STD.	.375	*x4x12
8"	18"	18.25"	STD.	.375	*x4x12
12"	22"	21.25"	STD.	.375	*x4x12
16"	28"	27.25"	STD.	.375	*x4x12
20"	32"	31.25"	STD.	.375	*x4x12
24"	36"	35.25"	STD.	.375	*x4x12
30"	48"	47.25"	STD.	.375	*x4x12
36"	54"	53.25"	STD.	.375	*x4x12
48"	66"	65.25"	STD.	.375	*x4x12

ARIZONA WATER COMPANY

STANDARD SPECIFICATION
FOR THE INSTALLATION OF

TYPICAL WATER LINE ENCASEMENT

DRAWN BY:	APPROVED BY:	DATE:	△ 09.27.2006	E-9-24-1
CB		3/20/1996		

CALCIUM HYPOCHLORITE TABLET CHLORINATOR FEEDER SPECIFICATIONS

SCOPE - This specification describes a ARCH Chemicals Calcium Hypochlorite Tablet Chlorination System as manufactured by ARCH Chemicals, 501 Merritt Seven, P.O. Box 5204, Norwalk, CT, 06856-5204.

DESCRIPTION - The chlorination system shall be completely assembled, ready to install. The chlorination system shall be a ARCH Chemicals Calcium Hypochlorite Tablet Feeder, or its equivalent, and shall be supplied with all its components factory mounted.

COMPONENTS - The Chlorination system shall have the following components:
- A. 1-¾" ARCH Chemical solid calcium hypochlorite tablet feeder
- B. Polyethylene system enclosure
- C. Integrated, level controlled solution tank
- D. Adjustable flow control valve
- E. Manual on/off valve (at inlet)
- F. Chemical metering pump
- G. On/off pump control switch
- H. Waterproof electrical junction box
- I. Corrosion resistant schedule 40 piping
- J. Reverse flow check valves
- K. Total solution output control valve

ELECTRICAL FIXTURES - The following electrical fixtures shall be provided:
- A. Safety switch, 2 pole, fused for 30 Amps, for 120 Volts, 60 cycle, single phase power.

CHLORINATOR DESIGN - The chlorination facility shall be designed and constructed in accordance with Arizona State Department of Health Engineering Bulletin Number 8 - "Disinfection of Water Systems". Latest Revision.

CHLORINATION EQUIPMENT - The chlorination equipment shall be a ARCH Chemicals Calcium Hypochlorite tablet chlorinator, approved by NSF Standard 61.

CHLORINATOR OPERATION - The chlorination facility shall be operated in accordance with Arizona State Department of Health Engineering Bulletin Number 8, "Disinfection of Water Systems", Table 1, latest revision.

CHLORINATOR SYSTEM DESCRIPTION - ARCH Chemicals tablet chlorinator systems incorporate a patented chlorinator which is designed to utilize ARCH Chemicals 1-¾" solid calcium hypochlorite tablets (Approved NSF Standard 60). Meets AWWA Standard B-300, EPA Registration # 1258-1179.The chlorinator is mounted on a polyethylene system enclosure. The inlet water is sprayed on the calcium hypochlorite tablet and collected in a solution tank. This chlorinated solution is then pumped out of the tank through a chemical metering pump. This metering pump is then adjusted to obtain the desired CL residual.

ARCH Chemicals Calcium Hypochlorite Tablet Chlorinator

NTS

HYPOCHLORINATOR COMPONENTS:

1. Chemical Metering Pump
2. Pump Suction Connection
3. Pump Discharge Connection
4. Inlet Water Assembly
5. Inlet Water Solenoid Valve
6. Inlet Shut-Off Valve
7. Inlet Pressure Regulator
8. Inlet Water Pressure Gauge
9. Spray Nozzle Water Pressure Gauge
10. Inlet Strainer
11. Inlet Tubing Connection
12. Dry Chemical Hopper
13. Suction Line
14. Electrical Control Box With Power On/Off
15. Electric Mixer
16. Solution Discharge Connection
17. Tank Drain Valve
18. Observation Port
19. Mixed Chemical Holding Tank
20. Pressure Relief Valve
21. Pump Speed Control
22. High Level Shut-Off Float Switch
23. Water Spray Nozzles

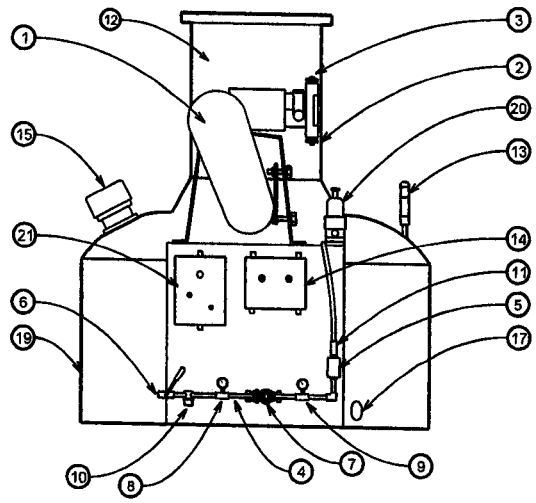

FRONT VIEW

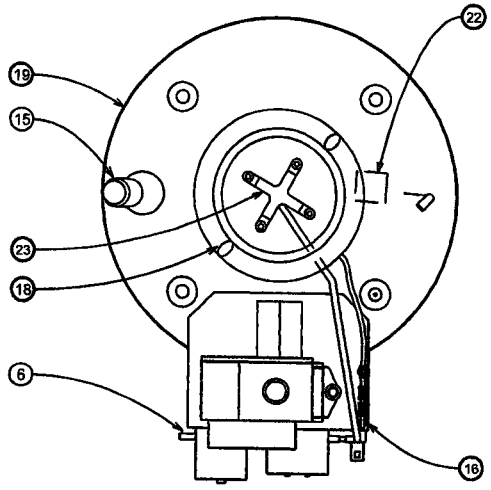

TOP VIEW

HOPPER REMOVED FOR CLARITY

Chlorinator Fluid Schematic

NTS

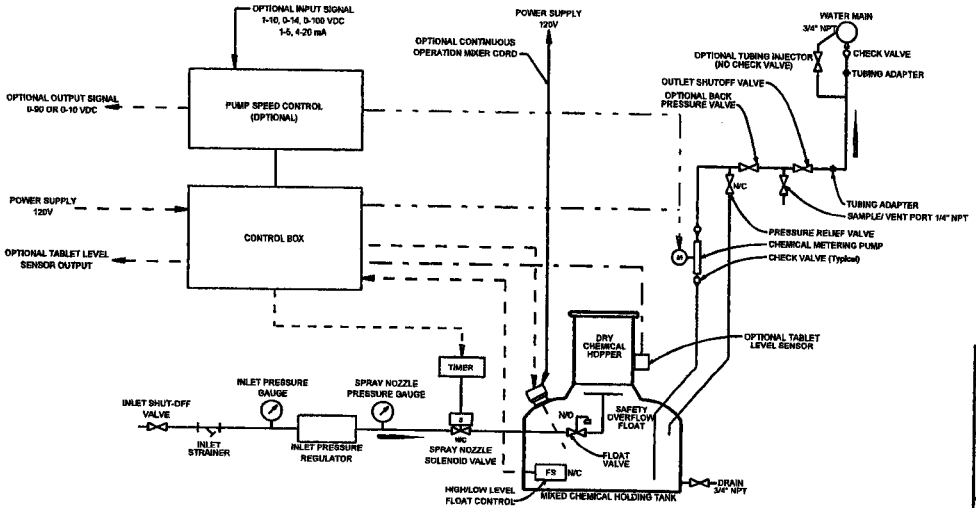

ARIZONA WATER COMPANY

STANDARD SPECIFICATION

FOR THE INSTALLATION OF

CALCIUM HYPOCHLORITE TABLET CHLORINATOR

DRAWN BY:	APPROVED BY:	DATE:		
CB	MW	02-09-2000	△	E-9-25-1

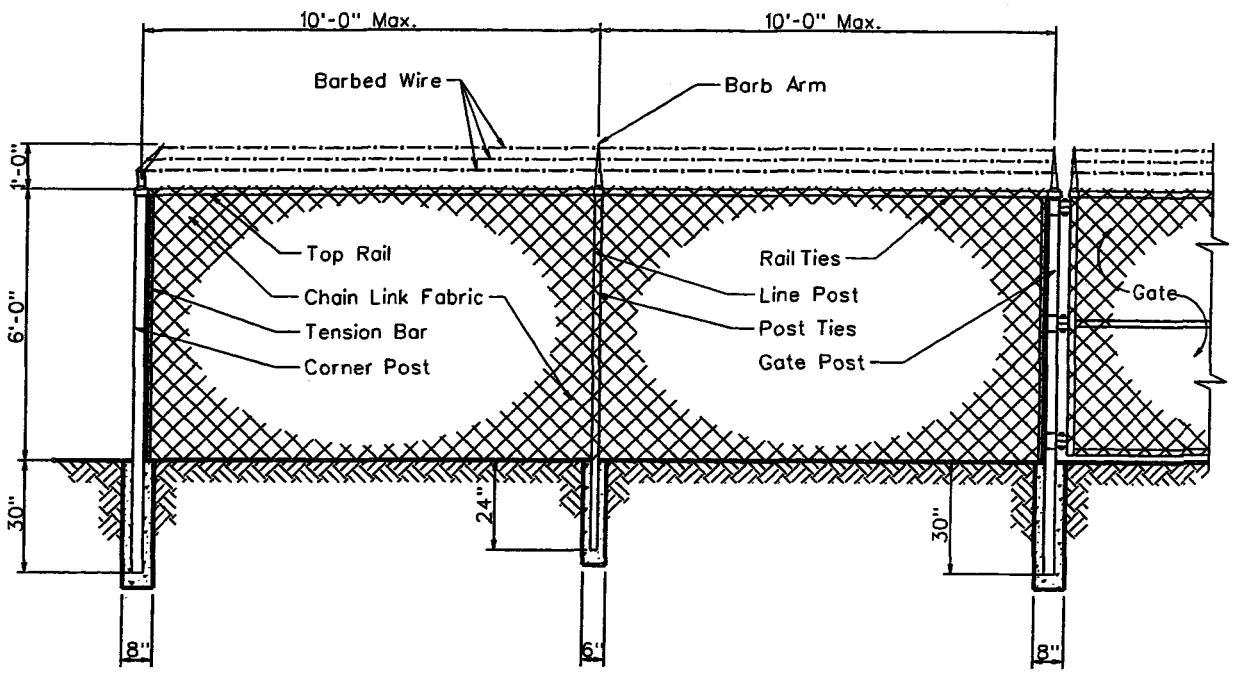

Line Post:	1-7/8" O.D.	1.74 lbs. P/L.F.	ASTM A-256
End Post:	2-7/8" O.D.	4.64 lbs. P/L.F.	ASTM A-256
Corner Post:	2-7/8" O.D.	4.64 lbs. P/L.F.	ASTM A-256
Gate Post:	2-7/8" O.D.	4.64 lbs. P/L.F.	ASTM A-256
Top Rail:	1-5/8" O.D.	4.64 lbs. P/L.F.	ASTM A-256
Chain Link Fabric:	9 Ga. 2" Mesh Galv. Before Weave		
Selvage:	Barb/Knuckle		
Fittings:	Pressed Steel		
Barb Wire:	2-1/2 Ga./2 Point		
Barb Arm:	1 Piece/45° Arm		
Tension Wire:	9 Ga./Galv.		
Line Post Set:	6"x24" In Concrete		
Terminal Post Set:	8"x30" In Concrete		

ARIZONA WATER COMPANY

STANDARD SPECIFICATION
FOR THE INSTALLATION OF

CHAIN LINK FENCE

DRAWN BY:	APPROVED BY:	DATE:	△	
CCO	MW	7/7/1992	2/9/2001	E-9-26-1

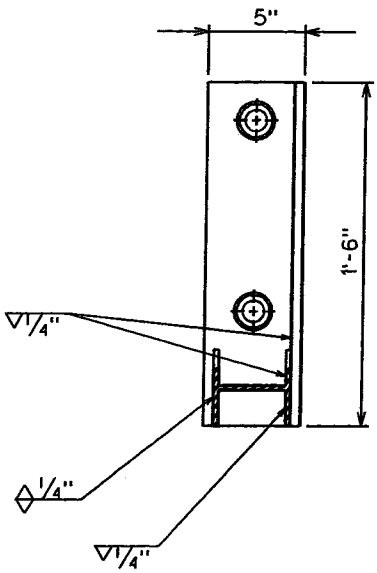

SECTION X-X

NOTES

1. Minimum 2 Supports Per Joint Of Pipe.
2. All Bolts Shall Have A Lock Washer Under The Nut.
3. All Nuts Shall Be Stainless Steel Series 304.

PIPE SIZE	A	B
8"	8"	15"
10"	9"	17"
12"	10"	19"

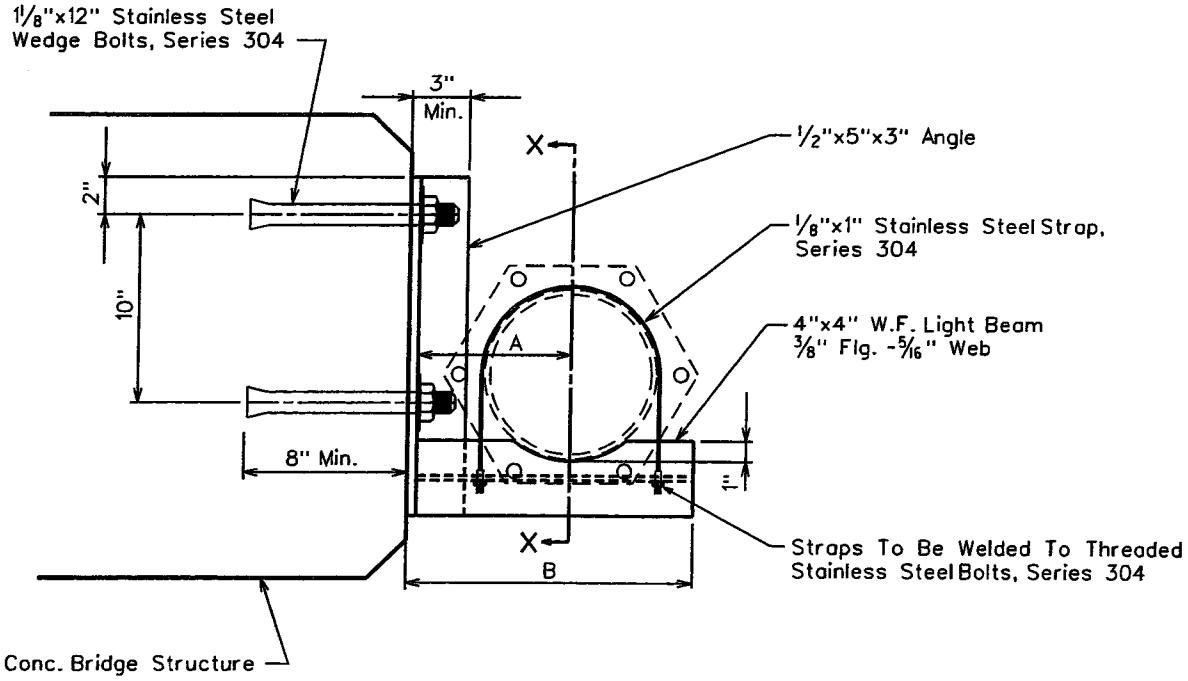

SUSPENSION DETAIL

ARIZONA WATER COMPANY

STANDARD SPECIFICATION
FOR THE INSTALLATION OF

SIDE HUNG WATER LINE SUSPENSION

DRAWN BY:	APPROVED BY:	DATE:		
JPK	MJW	7-12-96	△	E-9-27-1

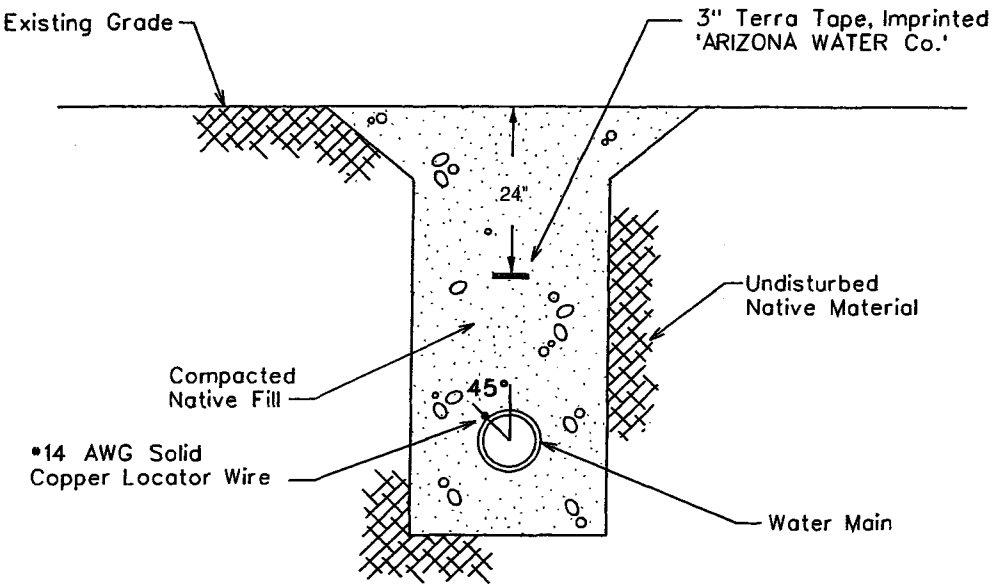

TYPICAL WATER TRENCH DETAIL

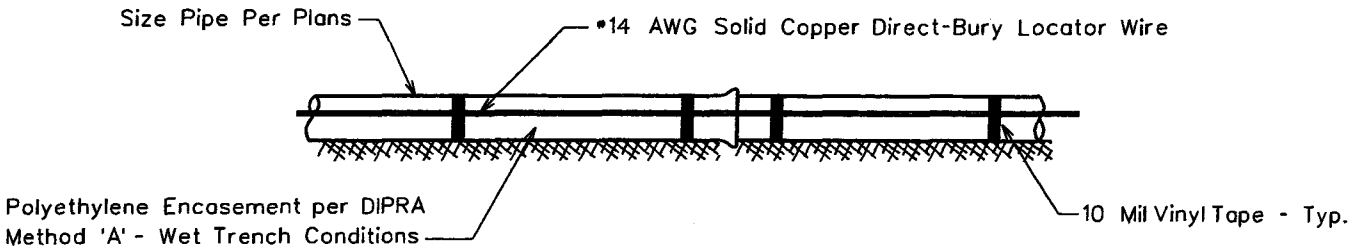

TYPICAL PROFILE VIEW

WIRE GENERAL NOTES:

1. All pipe shall have #14 AWG Solid Copper Direct-Bury Locator Wire Installed Directly To The Polywrap At 45° From The Vertical Center Of The Pipe and Shall Be Attached Using 10 Mil Vinyl Tape.
2. The Locating Wire Shall Terminate At the Top Of Each Valve Box and Be Capable of Extending 12" Above the Top Of The Box In Such A Manner So As Not To Interfere With Valve Operation.

TAPE GENERAL NOTES:

1. Use Terra Tape 3" Marking Tape As Manufactured By Reef Industries Inc. Of Houston, Texas (1-800-231-2417)
2. The Tape Is Blue & Imprinted 'ARIZONA WATER Co.'
3. INSTALLATION: The Pipe Warning Tape Shall Be Installed Over All Water Mains And Shall Be Buried 24 Inches Below The Surface Over The Center Of The Pipe.
   A) The Backfill Shall Be Sufficiently Leveled So That The Tape Is Installed On A Flat Surface.
   B) The Tape Shall Be Centered In The Trench With The Printed Side Up.
   C) Care Shall Be Exercised To Avoid Movement Of The Tape While The Remaining Backfill Is Moved Into The Trench.

ARIZONA WATER COMPANY

STANDARD SPECIFICATION
FOR THE INSTALLATION OF

PIPE WARNING TAPE AND LOCATOR WIRE

DRAWN BY:	APPROVED BY:	DATE:		
CB		03.24.1997	△09.27.2006	E-9-28-1

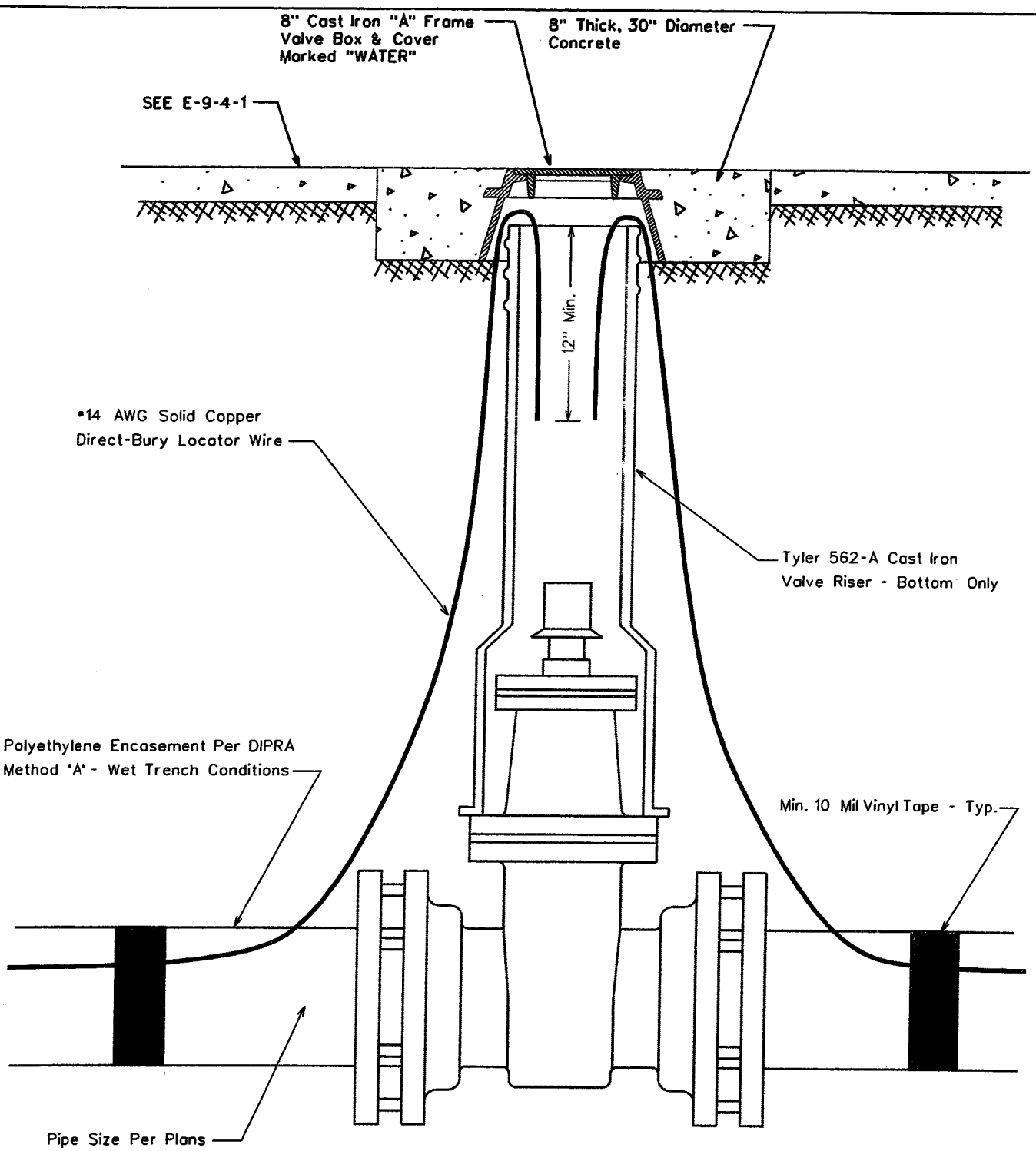

ARIZONA WATER COMPANY

STANDARD SPECIFICATION
FOR THE INSTALLATION OF

LOCATOR WIRE TERMINATION

DRAWN BY:	APPROVED BY:	DATE:		
CB		09.27.2006	△	E-9-28-2

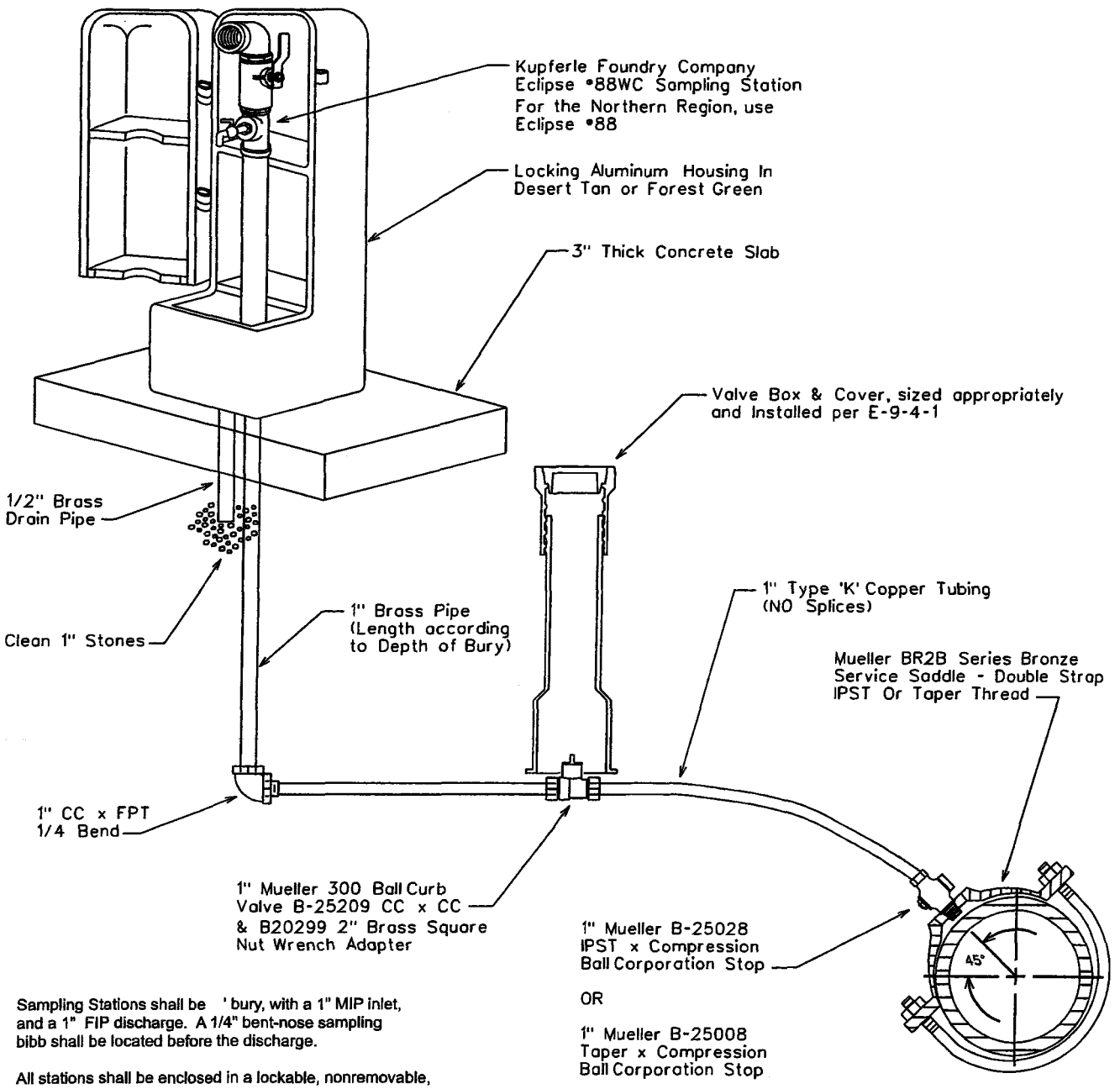

Sampling Stations shall be ' bury, with a 1" MIP inlet, and a 1" FIP discharge. A 1/4" bent-nose sampling bibb shall be located before the discharge.

All stations shall be enclosed in a lockable, nonremovable, aluminum-cast housing.

When opened, the station shall require no key for operation, and the water will flow in an all brass waterway.

All working parts will be of brass and serviceable from above ground with no digging. (OPTIONAL: if desired, a 1/2" brass drain tube will be provided within the locking cover).

A 1" ball valve will control the water flow, and be located before (or after) the sampling bibb, as manufactured by Kupferle Foundry, St. Louis, MO 63102.

SADDLE TAP TO CA, PVC, OR DI PIPE

NOTE: The minimum distance between taps on mains other than ductile iron is 12"

Pipe Depth Per
E-8-1-2, Item 3.

ARIZONA WATER COMPANY

STANDARD SPECIFICATION
FOR THE INSTALLATION OF

SAMPLING STATION

DRAWN BY:	APPROVED BY:	DATE:	△	
CB	MW	01.24.2007		E-9-29-1

AGREEMENT FOR CONSULTING SERVICES BETWEEN ARIZONA WATER COMPANY AND **CAROLLO ENGINEERS, INC**

THIS AGREEMENT is made and entered into on this 18TH day of January, 2011, by and between Arizona Water Company, an Arizona corporation, hereinafter referred to as "Company," and Carollo Engineers, an Arizona corporation hereinafter referred to as "Consultant".

RECITALS

WHEREAS, Company is authorized to and desires to retain Consultant to provide engineering design, post design and construction administration services for construction administration and inspections (CA&I) services for the Oasis Arsenic Treatment Facility Expansion project.

WHEREAS, Consultant is agreeable to providing personnel and facilities necessary to perform the desired services within Company's required time; and

WHEREAS, Company desires to retain Consultant to perform the services in the manner, at the time, and for the compensation set forth herein;

NOW, THEREFORE, Company and Consultant agree as follows:

1. Description of Project.

Company and Consultant agree that Project is as described in Exhibit A, hereto, incorporated by reference herein and entitled "Scope of Work," dated November 18, 2010. If, during the course of Project, Company and Consultant agree to changes in Project, such changes shall be effective only after being incorporated in this Agreement by written amendment, signed by representative of Company and Consultant.

2. Scope of Consultant Services.

Consultant agrees to perform those services described hereafter. Unless modified in writing by both parties, duties of Consultant shall not be construed to exceed those services specifically set forth herein.

a. Basic Services. Consultant agrees to perform those services described in the Scope of Work (the "Services"). Any tasks not specifically described in the Scope of Work will be Additional Services.

b. Additional Services. Company shall pay Consultant all fees and costs incurred in performing Additional Services provided the services were authorized by Company in writing. Unless otherwise agreed in writing, Additional Services shall be

compensated in accordance with Consultant's standard billing rates at the time the Additional Services are performed.

c. Litigation Assistance. Unless specifically stated therein, the Scope of Work does not include assistance to support, prepare, document, bring, defend or assist in litigation undertaken or defended by Company. All such services required or requested of the Consultant by Company or any third party (except claims between Company and Consultant) will be reimbursed at Consultant's applicable rates for such litigation services.

3. Responsibilities of Company.

In addition to payment for the Services performed under this Agreement, Company shall:

a. Assist and cooperate with Consultant in any manner necessary and within its ability to facilitate Consultant's performance under this Agreement.

b. Designate in writing a person to act as Company's representative with respect to this Agreement. Such person shall have complete authority to transmit instructions, receive information, interpret and define Company's policies, make decisions and execute documents on Company's behalf.

c. Furnish Consultant with all technical data in Company's possession including, but not limited to, maps, surveys, drawings, soils or geotechnical reports and any other information required by or useful to Consultant in performance of the Services under this Agreement.

d. Notify Consultant of any known or potential health or safety hazards existing at or near the project site.

e. Provide access to and/or obtain permission for Consultant to enter upon project related property during normal business hours, whether or not owned by Company, as required to perform and complete the Services.

4. Americans with Disabilities Act.

Any other provision of this Agreement to the contrary notwithstanding, unless otherwise specified in the Scope of Services, Company's contractors shall have sole responsibility as between Company and Consultant for compliance with the Americans With Disabilities Act ("ADA") 42 U.S.C. 12101 et. Seq. and the related regulations. Consultant shall provide Company with applicable ADA criteria, which maybe required.

5. Authorization and Completion.

In signing this Agreement Company grants Consultant specific authorization to proceed with work as described in Scope of Work and under the terms of this Agreement.

6. Compensation.

a. Amount. For the Services described in Exhibit A, Company agrees to pay, and Consultant agrees to accept compensation in accordance with Exhibit A, attached hereto and incorporated herein. Where Consultant has provided Company with a breakdown of the total compensation into subtasks, such breakdowns are estimates only. Consultant may reallocate compensation between tasks, provided total compensation is not exceeded without the prior written approval of Company.

b. Payment. As long as Consultant has not defaulted under this Agreement, Company shall pay Consultant within thirty (30) days of the date of Consultant's invoices for services performed and reimbursable expenses incurred under this Agreement. If Company has reason to question or contest any portion of any such invoice, amounts questioned or contested shall be identified and notice given to Consultant within thirty (30) days of the date of the invoice. Any portion of any invoice not contested shall be deemed to be accepted and approved for payment and shall be paid to Consultant within thirty (30) days of the date of the invoice. Company agrees to cooperate with Consultant in a mutual effort to resolve promptly any contested portions of Consultant's invoices.

In the event any uncontested portions of any invoice are not paid within thirty (30) days of the date of Consultant's invoice, interest on the unpaid balance shall accrue beginning with the 31st day at the rate of 1.5% per month, and Consultant shall have the right to suspend work per Article XV, Suspension of Work.

7. Responsibility of Consultant.

a. Standard of Care Professional Services.

Subject to the limitations inherent in the agreed scope of work as to the degree of care, amount of time and expenses to be incurred, and subject to any other limitations contained in this Agreement, Consultant shall perform the Services and any Additional Services in accordance with generally accepted standards and practices customarily utilized by competent engineering firms in effect at the time Services and any Additional Services are rendered. Consultant does not expressly or impliedly warrant or guarantee its Services.

b. Reliance upon Information Provided by Others.

If Consultant's performance of services hereunder requires Consultant to rely on information provided by other parties (excepting Consultant's subcontractors), Consultant

shall not independently verify the validity, completeness, or accuracy of such information unless otherwise expressly engaged to do so in writing by Company.

c. Consultant's Opinion of Costs.

Company acknowledges that construction cost estimates, financial analyses and feasibility projections are subject to many influences including, but not limited to, price of labor and materials, unknown or latent conditions of existing equipment or structures, and time or quality of performance by third parties. Company acknowledges that such influences may not be precisely forecasted and are beyond the control of Consultant and that actual costs incurred may vary substantially from the estimates prepared by Consultant. Consultant does not warrant or guarantee the accuracy of construction or development cost estimates, however, Consultant agrees to exercise its best Professional Judgment in rendering its opinions.

d. Construction Phase Services.

1. Consultant's Activities at Construction Site. The presence of Consultant's personnel at a construction site, whether as on-site representative, resident engineer, construction manager, or otherwise, does not make Consultant responsible for those duties that belong to Company and/or construction contractors or others, and does not relieve construction contractors or others of their obligations, duties, and responsibilities, including, but not limited to, construction methods, means, techniques, sequences, and procedures necessary for completing all portions of the construction work in accordance with the contract documents, any health or safety programs and precautions required by such construction work, and any compliance with applicable laws and regulations. Any inspection or observation of the contractor's work is for the purpose of determining that the work is proceeding in conformance with the intent of the project specifications and contract documents. Consultant has no authority to exercise control over any construction contractor in connection with their work or health or safety programs and precautions. Except to protect Consultant's own personnel and except as may be expressly required elsewhere in the Scope of Work, Consultant has no duty to inspect, observe, correct, or report on health or safety deficiencies of the construction contractor.

2. Shop Drawing and Submittal Review. If required by Consultant's Scope of Services, Consultant shall review shop drawings or other contractor submittals for general conformance with the intent of the contract documents. Except for services completed under direct contract to Consultant, Consultant shall not be required to verify dimensions, to engineer contractor's shop drawings or submittals, nor to coordinate shop drawings or other submittals with other shop drawings or submittals provided by contractor.

3. Record Drawings. Record drawings, if required, will be prepared, in part, on the basis of information compiled and furnished by others, and may not always represent the exact location, type of various components, or exact manner in which the Project was finally constructed. Except for services completed under direct contract to

Consultant, Consultant is not responsible for any errors or omissions in the information from others that are incorporated into the record drawings.

e. Scope of Work.

1. Before preparing the scope of work, Consultant specifically acknowledges and agrees that it has inspected and familiarized itself with Company's site The Consultant has received, or had the opportunity to inquire about and/or request all relevant information concerning the Scope of Work from Company or any other source Consultant deems necessary. The Scope of Work has been prepared by the Consultant and to the best of its knowledge includes all applicable work required to successfully complete construction administration and inspections (CA&I) services for the Oasis Arsenic Treatment Facility Expansion project.

8. Asbestos/Hazardous Material.

Consultant and Consultant's subcontractors shall have no responsibility for the discovery, handling, removal, or disposal of, or exposure of persons to asbestos or hazardous or toxic materials that are present in any form at the Project site. Professional services related to or in any way connected with the investigation, detection, abatement, replacement, use, specification, or removal of products, materials, or processes containing asbestos or hazardous or toxic materials are beyond the scope of this Agreement.

In the event Consultant encounters asbestos or hazardous materials at the jobsite, Consultant may, at its option and without liability for damages, suspend the performance of services on the Project until such time as Company and Consultant mutually agree on an amendment to this Agreement to address the issue, or Company retains another specialist consultant or contractor to identify, classify, abate and/or remove the asbestos and/or hazardous materials.

9. Consultant's Work Product.

a. Scope.

Consultant's work product which is prepared solely for the purposes of this Agreement, including, but not limited to, drawings, test results, recommendations and technical specifications, whether in hard copy or electronic form, shall become the property of Company when Consultant has been fully compensated as set forth herein. Consultant may keep copies of all work product(s) for its records.

Consultant and Company recognize that Consultant's work product submitted in performance of this Agreement is intended only for the project described in this Agreement. Company's alteration of Consultant's work product or its use by Company for any other purpose shall be at Company's sole risk.

b. Electronic Copies.

If requested, solely as an aid and accommodation to Company, Consultant may provide copies of its work product documents in computer-readable media ("electronic copies", "CADD"). These documents will duplicate the documents provided as work product, but will not bear the signature and professional seals of the registered professionals responsible for the work. Company is cautioned that the accuracy of electronic copies and CADD documents may be compromised by electronic media degradation, errors in format translation, file corruption, printing errors and incompatibilities, operator inexperience and file modification. Consultant will maintain the original copy, which shall serve as the official, archived record of the electronic and CADD documents.

10. Indemnification.

a. The Consultant shall indemnify the Company against, and save and hold it harmless from, any and all liability, claims, demands, loss, actions, causes of action, expense, penalties, fines, assessments, damages and costs of every kind and nature for injury to or death of any and all persons, including, without limitation, employees or representatives of the Company or of the Consultant or of any subcontractor, or any other person or persons, and for damage, destruction or loss, consequential or otherwise, to or of any and all property, real or personal, including, without limitation, property of the Company or of the Consultant or of any subcontractor, or of any other person or persons, and the violation of any law, ordinance, rule, regulation, standard, or order resulting from, or in any manner arising out of, or in connection with, the performance of the work under the Contract, howsoever same may be caused, including, without limitation, the Company's active or passive negligence. The Consultant shall also, upon request by the Company, and at no expense to the Company, defend the Company in any and all suits, concerning such injury to or death of any and all persons, and concerning such damage, destruction or loss, consequential or otherwise, to or of any and all property, real or personal, including, without limitation, suits by employees or representatives of the Company or of the Consultant or of any subcontractor, or any other person or persons, or concerning any court or administrative proceeding concerning the violation of any law, ordinance, rule, regulation, standard, or order. Excluded from this paragraph are only those injuries to or deaths of persons and damage, destruction or loss, to or of property arising from the sole negligence or willful misconduct of the Company.

b. Consultant shall indemnify the Company against, and save and hold it harmless from, any and all liability, claims, demands, damages, costs, expenses and attorney's fees, suffered or incurred on account of any breach of any obligation, covenant or other provision of this contract, including without limitation, breach of the indemnity provisions of subsection A of this Section 36.

c. Consultant further agrees to defend, indemnify and hold harmless the Company, its directors, officers, employees, and agents, from and against any and all

costs, damages, claims, expenses, violations, notices of violations, penalties, liens, assessments, and liabilities of every kind and nature, foreseeable or unforeseeable, directly or indirectly, arising from any release, removal, generation, use, storage or disposal on, under, around, or from the site of any material, substance, or waste, hazardous or nonhazardous, including, without limitation, drilling fluids, mud, cuttings and development and test water howsoever same may be caused, including, without limitation, the Company's active or passive negligence.

11. Consultant's Insurance.

Consultant shall procure and maintain the following minimum insurance:

a. Commercial general liability insurance, including personal injury liability, blanket contractual liability and broad-form property damage liability coverage. The combined single limit for bodily injury and property damage shall be not less than $1,000,000.

b. Automobile bodily injury and property damage liability insurance covering owned, non-owned, rented, and hired cars. The combined single limit for bodily injury and property damage shall be not less than $1,000,000.

c. Statutory workers' compensation and employer's liability insurance as required by state law.

d. Professional liability insurance. The policy limit shall be not less than $1,000,000.

Consultant shall either require each of its subconsultants to procure and to maintain the insurance specified in this section or insure its subconsultants in the Consultants own policy, in like amounts.

Company shall be named as additional insured on policies 1 and 2 above. Upon execution of this Agreement, Consultant will provide a certificate of insurance to Company. Consultant will keep the certificate current at all times while this Agreement is in effect. The Consultant will provide a 30-day written notice in the event the above policies are cancelled.

12. Confidentiality.

Consultant agrees it will maintain the confidentiality of all material it receives from Company and will not disclose, distribute, or publish to any third party such information without the prior permission of Company. Notwithstanding the foregoing, Consultant shall have no confidentiality obligation with respect to information that:

a. becomes generally available to the public other than as a result of disclosure by Consultant or its agents or employees;

b. was available to Consultant prior to its disclosure by Company;

c. becomes available to Consultant from a third party who is not, to the knowledge of Consultant, bound to retain such information in confidence.

In the event Consultant is compelled by subpoena, court order, or administrative order to disclose any confidential information, Consultant shall promptly notify Company and shall cooperate with Company prior to disclosure so that Company may take necessary actions to protect such confidential information from disclosure.

13. Subcontracts.

Consultant shall be entitled, to the extent determined appropriate by Consultant, to subcontract any portion of the services to be performed under this Agreement.

14. Suspension of Work.

Work under this Agreement may be suspended as follows:

a. By Company. By written notice to Consultant, Company may suspend all or a portion of the Work under this Agreement if unforeseen circumstances beyond Company's control make normal progress of the Work impracticable.

b. By Consultant. By written notice to Company, Consultant may suspend the work if Consultant reasonably determines that working conditions at the Site (outside Consultant's control) are unsafe, or in violation of applicable laws, or in the event Company has not made timely payment in accordance with Article VI, compensation.

15. Termination of Work.

a. This Agreement may be terminated by Company as follows: (1) for its convenience on thirty (30) days' notice to Consultant, or (2) for cause, if Consultant materially breaches this Agreement through no fault of Company and Consultant neither cures such material breach nor makes reasonable progress toward cure within fifteen (15) days after Company has given written notice of the alleged breach to Consultant.

b. This Agreement may be terminated by Consultant as follows: (1) for cause, if Company materially breaches this Agreement through no fault of Consultant and Company neither cures such material breach nor makes reasonable progress toward cure within thirty (30) days after Consultant has given written notice of the alleged breach to Company.

c. Payment upon Termination. In the event of termination, Consultant shall perform such additional work as is reasonably necessary for the orderly closing of the work. Consultant shall be compensated for all work performed prior to the effective date

of termination, plus work required for the orderly closing of the work, including: (1) authorized work performed up to the termination date plus termination expenses, including all labor and expenses, at Consultant's standard billing rates, directly attributable to termination; (2) all efforts necessary to document the work completed or in progress; and (3) any termination reports requested by Company.

16. Assignment.

This Agreement is binding on the heirs, successors, and assigns of the parties hereto. Except as otherwise set forth under Article VIII, Assignment of Tasks to Affiliates, this Agreement may not be assigned by Company or Consultant without prior, written consent of the other.

17. No Benefit for Third Parties.

The services to be performed by Consultant are intended solely for the benefit of Company, and no benefit is conferred on, nor contractual relationship established with any person or entity not a party to this Agreement. No such person or entity shall be entitled to rely on Consultant's services, opinions, recommendations, plans, or specifications without the express written consent of Consultant. No right to assert a claim against the Consultant, its officers, employees, agents, or consultants shall accrue to the construction Contractor or to any subcontractor, supplier, manufacturer, lender, insurer, surety, or any other third party as a result of this Agreement or the performance or nonperformance of the Consultant's services hereunder.

18. Force Majeure.

Consultant and Company shall not be responsible for delays caused by circumstances beyond their reasonable control, including, but not limited to: (1) strikes, lockouts, work slowdowns or stoppages, or accidents; (2) acts of God; (3) failure of Company to furnish timely information or to approve or disapprove Consultant's instruments of service promptly; and (4) faulty performance or nonperformance by Consultant or Company, Company's or Consultant independent consultants or contractors, or governmental agencies. Consultant and Company shall not be liable for damages arising out of any such delay, nor shall the Consultant or Company be deemed to be in breach of this Agreement as a result thereof.

19. Integration.

This Agreement represents the entire understanding of Company and Consultant as to those matters contained herein. No prior oral or written understanding shall be of any force or effect with respect to those matters covered herein. This Agreement may not be modified or altered except in writing signed by both parties.

20. Severability.

If any part of this Agreement is found unenforceable under applicable laws, such part shall be inoperative, null, and void insofar as it conflicts with said laws, but the remainder of this Agreement shall be in full force and effect.

21. Choice of Law/Jurisdiction.

This Agreement shall be administered and interpreted under the laws of the State of Arizona Jurisdiction of litigation arising from the Agreement shall be in The State of Arizona.

22. Attorneys' Fees.

In the event any claim, controversy, or legal action arises under this Agreement, the prevailing party shall be entitled to recover from the other party all attorneys' fees, costs, expenses and other fees incurred by the prevailing party.

23. Notice Provisions.

Notices concerning this Agreement shall be in writing and sent by certified mail or by courier (such as Federal Express), or by hand-delivery addressed as follows:

To the Company:

Arizona Water Company
3805 North Black Canyon Highway
Phoenix, Arizona 85015-5351
Attention: President

or

Arizona Water Company
Post Office Box 29006
Phoenix, AZ 85038-9006
Attention: President

To Consultant:

Carollo Engineers, Inc.
4600 E. Washington St ~~3033 N. 44th~~ Street, Suite ~~101~~ 500
Phoenix, Arizona 850~~18~~34
Attention: ~~President~~ Mark Gross

Either party may change its address for purposes of this Section by giving written notice of such change of address to the other party.

20. Severability.

If any part of this Agreement is found unenforceable under applicable laws, such part shall be inoperative, null, and void insofar as it conflicts with said laws, but the remainder of this Agreement shall be in full force and effect.

21. Choice of Law/Jurisdiction.

This Agreement shall be administered and interpreted under the laws of the State of Arizona Jurisdiction of litigation arising from the Agreement shall be in The State of Arizona.

22. Attorneys' Fees.

In the event any claim, controversy, or legal action arises under this Agreement, the prevailing party shall be entitled to recover from the other party all attorneys' fees, costs, expenses and other fees incurred by the prevailing party.

23. Notice Provisions.

Notices concerning this Agreement shall be in writing and sent by certified mail or by courier (such as Federal Express), or by hand-delivery addressed as follows:

To the Company:

Arizona Water Company
3805 North Black Canyon Highway
Phoenix, Arizona 85015-5351
Attention: President

or

Arizona Water Company
Post Office Box 29006
Phoenix, AZ 85038-9006
Attention: President

To Consultant:

Carollo Engineers, Inc.
4600 E. Washington Street, Suite 500
Phoenix, Arizona 85034
Attention: Mark Gross

Either party may change its address for purposes of this Section by giving written notice of such change of address to the other party.

24. Authorization.

The persons executing this Agreement on behalf of the parties hereto represent and warrant that the parties have all legal authority and authorization necessary to enter into this Agreement, and that such persons have been duly authorized to execute this Agreement on their behalf.

IN WITNESS WHEREOF, each of the parties hereto has caused this instrument to be executed by their respective duly authorized officers as of the date first written above.

CAROLLO ENGINEERS, INC
an Arizona corporation

By: M. J. Sroor 4-25-11
Its: Associate V.P.

ARIZONA WATER COMPANY,
an Arizona corporation

By: [illegible]
Its: VP - Engineering

Ronald D. Joost 4-25-11
Ronald D. Joost
Vice President

EXHIBIT A

Arizona Water Company

Carollo Engineers

Oasis Arsenic Treatment Facility Expansion

Scope of Work – CA&I Services

November 18, 2010

INTRODUCTION

This Scope of Work defines the construction administration and inspections (CA&I) services to be provided by Carollo Engineers, Inc. (Carollo) for the Oasis Arsenic Treatment Facility Expansion project for Arizona Water Company (AWC). The purpose of this project is to expand the capacity of the existing arsenic wellhead treatment system at the Oasis Water Campus (Campus), owned and operated by AWC. The existing equipment at the Campus consists of three wells 11, 13, and 19, a booster pump station, 550,000 gallon finished water storage tank, and a 3.6 MGD coagulation/filtration arsenic treatment facility (ATF) supplied by Layne Christensen. The existing ATF is generally treats water from Well #13, and is operated to reduce the arsenic concentration from 16 ppb to less than 5 ppb. The new facilities shall be designed and constructed to reduce the arsenic concentrations to 8 ppb or less.

This scope includes services related to the construction and start-up of the Oasis Arsenic Treatment Facility Expansion Project.

A summary of the tasks is listed below. The 500 series tasks are Office Engineering During Construction, and the 600 series tasks are Resident Inspection Services.

Task Series 500 – Office Engineering During Construction

~~Task 510 - Review 30 submittal packages~~ (provided in separate scope)
Task 520 - Review 5 test results (vessels and BW tank only)
Task 530 - Review and respond to 20 RFIs
Task 540 - Provide record drawings
~~Task 550 - Apply for ADEQ AOC and MC permits~~ (by AWC)
Task 560 - Provide plant operations O&M
Task 570 - Provide 2 design clarifications or change order packages (2 dwgs each)
Task 580 - Project correspondence with Contractor and AWC

Assumptions: 1) 6 month construction phase duration (5-month on-site) from the NTP for the Contractor, to the final acceptance of the project, 2) Carollo will respond to requests for information (RFIs), and other Contractor correspondence using AWC approved format transmittals and covers, 3) Carollo will provide .pdf and Microstation files of the record drawings, AWC will reproduce hard copies as needed for permitting and file copies, 4) The

O&M manual prepared by Carollo will document the function and control of the project elements using the following format; Background, Theory, Equipment and Controls Descriptions, Design Criteria, Operating Strategies, Alarms, and Troubleshooting. An electronic copy of the O&M will be turned over to AWC for reproduction of hard copies as needed.

AWC Inputs: 1) AWC will review submittals, RFIs, and other project correspondence in conjunction with Carollo to facilitate the project schedule, 2) AWC will maintain the project documents files by receiving and filing all project correspondence, Carollo will provide a ProjectWise file system (if requested) for AWC to electronically load, store, and access files, for the construction team, 3) AWC will submit project closeout documentation to regulatory agencies including Maricopa County, Arizona Department of Environmental Quality, and City of Mesa as applicable.

Deliverables: Project correspondence including submittal reviews, RFI responses, and design clarifications via electronic copies

Task Series 600 - Resident Inspection Services

Task 605 - Conduct preconstruction conference/meeting
Task 610 - Administer the construction schedule
-review Contractor's schedule updates
Task 620 - On-site field inspection and special inspections
-includes attending progress meetings
~~Task 630 - Assist AWC with reviewing Contractor's pay apps~~ (by AWC)
Task 640 - Assist AWC with reviewing 4 change orders
Task 650 - Assist with Substantial and Final Completion inspections
Task 660 - Startup Assistance
~~Task 670 - Post construction warranty services~~ (by AWC)

Assumptions: 1) 6-month construction phase duration from the NTP for the Contractor, to the final acceptance of the project, 2) Carollo and AWC will conduct a preconstruction meeting with the Contractor to establish lines of communication, project expectations, and project administration details, 3) Field inspection services is based on approximately 22 hours per week for 5 months of the 6-month project schedule, weekly or other progress meetings will be held in conjunction with the Carollo inspector's on-site schedule, and AWC staff will also perform some site inspections such as pipe pressure tests and disinfection tests, the tasks will be field-coordinated with Carollo and AWC staff, 4) AWC will review and approve all Contractor pay apps and change orders, 5) Startup assistance will be provided over approximately one continuous week, after Contractor has substantially completed the project work, 6) Carollo will maintain a construction punch list of deficient work items, that will be communicated to the Contractor on a regular basis, 7) Contractor will coordinate directly with AWC for providing vendor and manufacturer's training, 8) Carollo will provide on-site training for a ½ day to AWC staff, to review design criteria and operating parameters, 9) Post-construction warranty services are provided by AWC, 10) AWC will prepare a storm water pollution plan for construction, if required.

AWC Inputs: 1) Review pay apps and change orders, 2) Arrange and pay for all field testing and materials testing services such as compaction testing, soils testing, concrete testing, welding inspections, and coating inspections, 3) Take lead in reviewing HMI screens and logic with system integrators, Carollo will provide technical assistance.

Deliverables: Field inspection and special inspection services (concrete and concrete reinforcement, structural steel, filter pressure vessels, BW tank, other as needed and within the manhours budget).

PROJECT SCHEDULE

The estimated schedule for the project is as follows:

Notice to Proceed	November 24, 2010
Contractor Mobilization	November 24, 2010
Construction Phase Completed (Final Acceptance)	May 31, 2011

General Conditions

Carollo has no control over the cost of labor, materials, equipment, or services furnished by others, or over Contractor's methods of determining prices, or other competitive bidding or market conditions, practices, or bidding strategies. Cost estimates are based on Carollo's opinion based on experience and judgment. Carollo cannot and does not guarantee that proposals, bids, or actual Project construction costs will not vary from cost estimates prepared by Carollo.

EXHIBIT B.1 - Oasis Treatment Facility Expansion
Carollo Engineers Const. Services Fee Proposal
November 23, 2010

TASK DESCRIPTIONS	CA&I Services								
		Partner	Proj. Mgr.	Disc. Eng.	Proj. Eng.	Tech	Inspector	Word Pro.	Total Labor	Total $
	Rate ($)	$235	$170	$145	$125	$120	$106	$80		
TASK SERIES 500 - OFFICE ENGINEERING DURING CONSTRUCTION										
Task 510 - Review 30 submittal packages (provided under Carollo's 'Submittal Review' Contract									0	$0
Task 520 - Review 5 test results (vessels and BW tank only, AWC reviews others)				8					8	$1,160
Task 530 - Review and respond to 20 RFIs		1		20					21	$3,135
Task 540 - Provide record drawings		1	4	20		40			65	$8,615
Task 550 - Apply for ADEQ AOC and MC permits (by AWC)									0	$0
Task 560 - Provide plant operations O&M		1			80	10		20	111	$13,035
Task 570 - Provide 2 design clarifications or change order packages (2 dwgs each)		1		10	10	10			31	$4,135
Task 580 - Project correspondance with Contractor and AWC		10	20						30	$5,750
TASK SERIES 600 - ONSITE SERVICES DURING CONSTRUCTION										
Task 605 - Conduct preconstruction conference/meeting		2	2				2		6	$1,022
Task 610 - Administer the construction schedule		2	20						22	$3,870
Task 620 - On-site field inspection							440		440	$46,640
Task 630 - Reviewing Contractor's pay apps (by AWC)									0	$0
Task 640 - Assist AWC with reviewing 4 change orders			8						8	$1,360
Task 650 - Assist with Substantial and Final Completion inspections		2	8	20					30	$4,730
Task 660 - Startup Assistance		2	8	10	40				60	$8,280
Task 670 - Post construction warranty services (by AWC)									0	$0
	Total Hrs	22	70	88	130	60	442	20		
								Sub-Total	832	$101,732
PECE @ $9/hour										$7,488
Reproduction										$0
Mileage/Travel										$2,000

Assumption:
1) Based on 6-month construction schedule, 5 months of field inspections
2) Carollo's field inspection services is based on approximately 22 hours per week, 4 weeks per month, 5 month duration
3) AWC will witness testing not listed in this scope
4) Carollo will inspect rebar and formwork, concrete placement, ductbanks, mechanical and structural work, and other items designated as 'special inspections' that AWC does not inspect
5) AWC will maintain project records, and receive/distribute project correspondance

Total **$111,220**

WA 1-4787

ARIZONA WATER COMPANY
WORK AUTHORIZATION

W.A. NUMBER: 1-4787
P.E. NUMBER:
BUDGET ITEM NO. B-1
SHEET NO.: 1 of 2

SYSTEM: SUPERSTITION	WORK TO START BY: UPON AUTHORIZATION
DIVISION: SUPERSTITION	WORK TO BE FINISHED BY: WITHIN 60 DAYS
TAX CODE: ~~4300~~ 1500	

DESCRIPTION OF WORK:

Install 12" in line high pressure valve for the Superior Transmission Line in Superior, Arizona. Construct in accordance with attached drawings and/or Arizona Water Company specifications.

FACTORS JUSTIFYING WORK:

2011 APPROVED CONSTRUCTION BUDGET ITEM ($20,000)

COST ESTIMATE		AUTHORIZATION	DATE
COST OF WORK:		PREPARED BY: Mike Loggins ML 2-1-11	1-24-11
MATERIAL	0		
LABOR	1,500	REVIEWED FOR ESMT/ROW VERIFICATION: Charles Briggs CB 02-01-2011	01-25-2011
CONTRACT PORTION	17,300		
OVERHEAD	2,820	REVIEWED BY: James Wilson, JW 2/3/11	1/25/11
TOTAL AUTHORIZED EXPENDITURES CHARGEABLE TO THIS W.A.	$ 21,620		
FUNDS RECEIVED:		APPROVED BY ENGINEERING: Fredrick Schneider 2-3-11	1-26-11
CONTRIBUTIONS RECEIVED	0		
REFUNDABLE ADVANCES RECEIVED	0	APPROVED BY FINANCE: Joseph Harris	1/26/11
TOTAL CONTRIBUTIONS/ADVANCES	0		
NET CASH REQUIRED	$ 21,620	AUTHORIZED BY PRES DENT: William M Garfield	1-28-2011

COMMENTS:

CONSTRUCTION RELEASE:

RELEASED TO CONSTRUCTION
Authorized by FRED SCHNEIDER
Date 1/31/2011

AFH

ARIZONA WATER COMPANY

WORK AUTHORIZATION - DETAIL SHEET

W.A. NUMBER: 1-4787
P.E. NUMBER:
BUDGET ITEM NO.: B-1
SHEET NO.: 2 of 2

RETIREMENT PROPERTY UNITS	PLANT PROPERTY ACCOUNT	UNIT DESCRIPTION	QUANTITY	YEAR INSTALLED AND W.A. NUMBER

PROJECT DESCRIPTION

Install 12" in line high pressure valve for the Superior Transmission Line.

	DESCRIPTION	PLANT PROP ACCT	QUANTITY	UNIT COST	TOTAL
CONTRACT WORK	Purchase and install high pressure valve	343	1	$ 17,300.00	$ 17,300
	SERVICE CONNECTIONS COMPLETE: DOUBLE-LONG	345			
	SERVICE CONNECTIONS COMPLETE: DOUBLE-SHORT	345			
	SERVICE CONNECTIONS COMPLETE: SINGLE-LONG	345			
	SERVICE CONNECTIONS COMPLETE: SINGLE-SHORT	345			
TOTAL CONTRACT WORK					$ 17,300
MATERIALS					
	SERVICE CONNECTIONS: DOUBLE-LONG	345			
	SERVICE CONNECTIONS: DOUBLE-SHORT	345			
	SERVICE CONNECTIONS: SINGLE-LONG	345			
	SERVICE CONNECTIONS: SINGLE-SHORT	345			
	METERS	346			
TOTAL MATERIALS					$ -
LABOR					
	TESTING FEE	343	1	$ 500.00	500
	PERMIT FEE				
	SURVEY FEE	343	1	500.00	500
	FIELD INSPECTION	343	1	500.00	500
	INSTALL SERVICE CONNECTIONS: DOUBLE-LONG	345			
	INSTALL SERVICE CONNECTIONS: DOUBLE-SHORT	345			
	INSTALL SERVICE CONNECTIONS: SINGLE-LONG	345			
	INSTALL SERVICE CONNECTIONS: SINGLE-SHORT	345			
TOTAL LABOR					$ 1,500
SUBTOTAL - CONTRACT WORK, MATERIALS, AND LABOR					$ 18,800
OVERHEAD					2,820
TOTAL	REFUNDABLE PORTION ☐	NON-REFUNDABLE PORTION ☐		COST ESTIMATE	$ 21,620

AFH

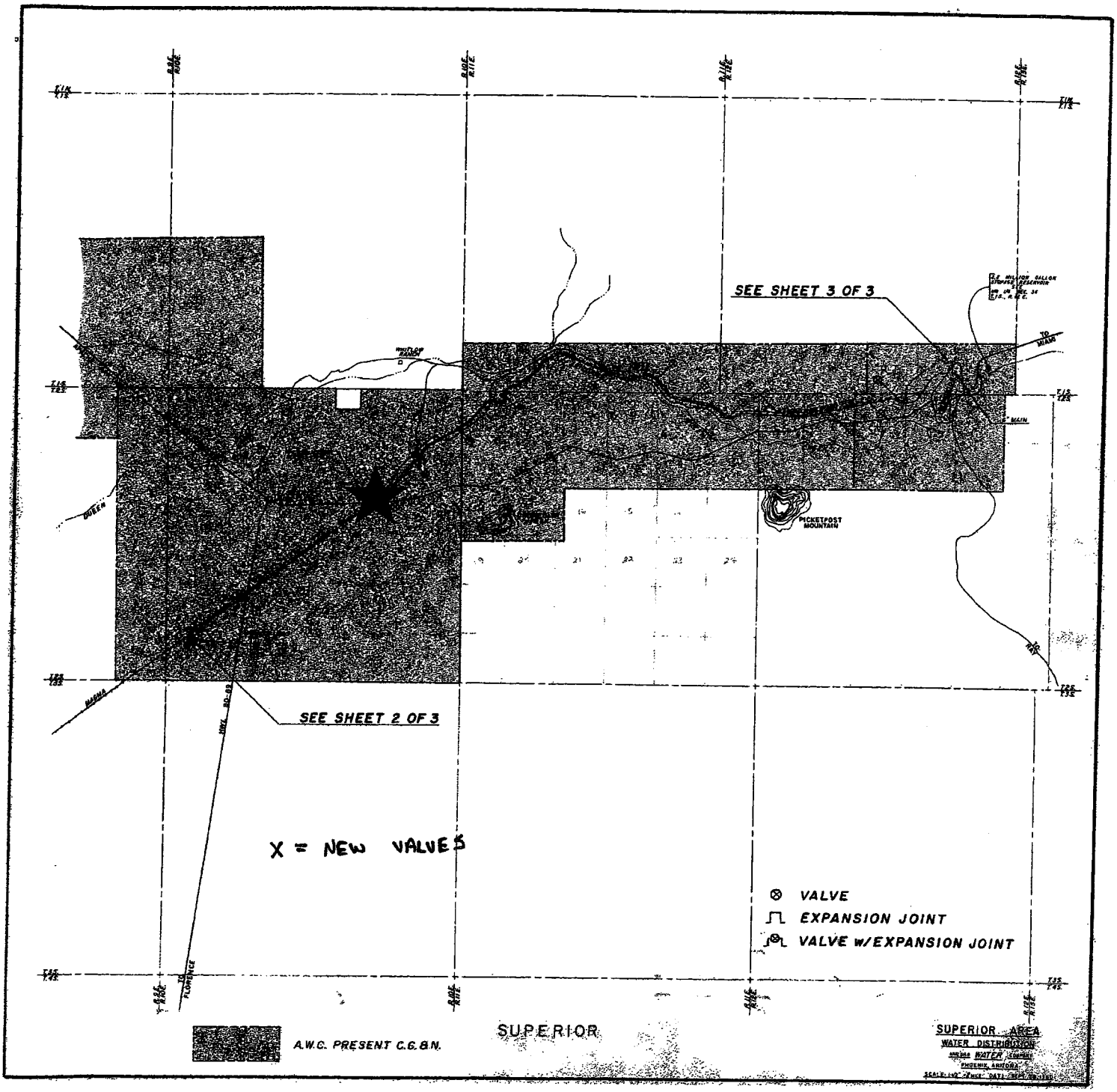

INSTALL 12" IN LINE HIGH PRESSURE VALVE
FOR SUPERIOR TRANSMISSION LINE

ID	Task Name	Duration	Start	Finish	Predecessors
1	Finish Waterline Project	77 days	Mon 1/10/11	Tue 4/26/11	
2	Waterline Design Drawings	27 days	Mon 1/10/11	Tue 2/15/11	
3	Coordinate New Waterline Location w/ Field	5 days	Mon 1/10/11	Fri 1/14/11	
4	Develop Base Drawings & Set-up Sheets/ Details	5 days	Mon 1/10/11	Fri 1/14/11	
5	Preliminary Design Drawings	10 days	Mon 1/17/11	Fri 1/28/11	4
6	Preliminary Design Drawings to Field for Comment	5 days	Mon 1/31/11	Fri 2/4/11	5
7	Final Design Drawings	5 days	Mon 2/7/11	Fri 2/11/11	6
8	QA/ QC	2 days	Mon 2/14/11	Tue 2/15/11	7
9	Bid Waterline Construction & Award Contract	20 days	Wed 2/16/11	Tue 3/15/11	8
10	Construction	30 days	Wed 3/16/11	Tue 4/26/11	9

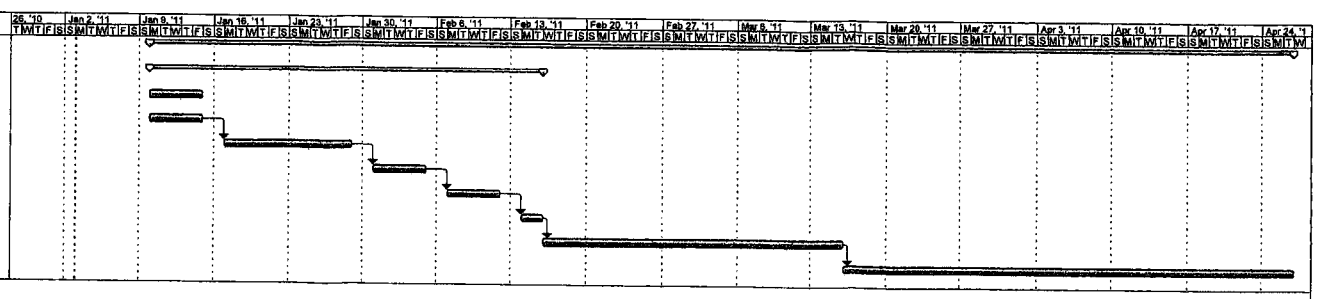

Project: SS-01
Date: Mon 1/3/11

Task | Split | Progress | Milestone | Summary | Project Summary | External Tasks | External Milestone | Deadline

ARIZONA WATER COMPANY

Superstition Division
2380 W. Southern Avenue
AJ, AZ 85120 PH: 480-982-2201 FX: 480-983-6390

PROPOSAL/CONTRACT

CONTRACTOR: J WISE CORPORATION	SYSTEM: SUPERSTITION
ADDRESS: 5851 S. WILSON DRIVE	W.A. No(s): 1-4787
CITY ST ZIP: CHANDLER ARIZONA 85249	BID DUE DATE: February 18, 2011

CONTRACTOR SUBMITS this PROPOSAL/CONTRACT to ARIZONA WATER COMPANY, an Arizona corporation (the "Company"), to perform the work and complete the project described on Page 2 (the "Project"), as an independent prime contractor.

1. Contractor certifies that it has a complete copy of, and has read, understands and accepts, the Company's General Conditions of Contract, and the Company's Construction Specifications and Standard Specification Drawings, (the "Specifications"), all of which are attached hereto. Contractor has examined the specific plans and related construction drawings for the Project (the "Drawings"), copies of which are also attached hereto. The General Conditions of Contract, Specifications and Drawings are incorporated into this Proposal/Contract. Contractor affirms that all work and materials to be furnished or purchased for the Project will be in strict conformance with the General Conditions of Contract, Specifications and Drawings.
2. Contractor represents and warrants that it has satisfied and complied with the provisions of Section 6, Contractor Understands Work and Working Conditions, of the General Conditions of Contract prior to submitting this Proposal/Contract.
3. Contractor represents that this Proposal/Contract is fair and honest in all respects, is submitted in good faith and is not submitted in collusion with any other company, entity or person.
4. Contractor acknowledges that one hundred percent (100%) Performance and Payment Bonds are required and must be provided to the Company prior to the commencement of work.
5. Prior to the commencement of work, Contractor will submit to the Company a list of all materials to be used in the Project. The materials list will include the manufacturer, part number, price and quantity included in this Proposal/Contract.
6. Contractor will furnish all labor, tools, equipment and materials required to complete the Project according to the General Conditions of Contract, Specifications and Drawings. No materials purchased by Contractor to be incorporated into the Project are subject to tax at the time of purchase and Contractor will not charge the Company for any such tax. Contractor will pay the applicable transaction privilege tax (the "Contracting Tax") on the Project after Contractor receives payment of the final Project invoice from the Company. The cost of materials incorporated into the Project which are exempt by Arizona Revised State Statues ("A.R.S.") from the Contracting Tax, for example, pipes or valves having a diameter of four (4) inches or larger, including equipment, fittings and any other related part that is used in operating the pipes or valves (A.R.S. §42-5061 B.6.), will not be included in the total cost of the labor and materials upon which the Contracting Tax is computed. Contractor retains full liability and obligation to pay the Contracting Tax and will defend and indemnify the Company against any demand or obligation to pay the Contracting Tax.
7. Contractor will maintain detailed accounting records of all materials purchased and incorporated into the Project. Such records will include all supporting original vendor invoices for all materials purchased. Following completion of the Project, Contractor will submit an itemized accounting to the Company which will include all supporting original vendor invoices and satisfactory evidence of payment thereof. The Company will not pay Contractor for materials not actually incorporated into the Project, and the disposition of such materials will remain Contractor's responsibility.
8. The Estimated Total Cost of the Project, shown on Page 2, is based on estimated labor and material quantities to be furnished. It includes an estimate of the Contracting Tax and the cost of the required Performance and Payment Bonds. Contractor will not cancel, modify or withdraw this Proposal/Contract during a ninety-day (90) period commencing on the Bid Due Date. The Company may accept this Proposal/Contract by signing and mailing, or otherwise delivering, a copy hereof to Contractor during such ninety-day (90) period. If the Company does not accept this Proposal/Contract during such ninety-day (90) period, Contractor may cancel this Proposal/Contract by giving written notice of cancellation to the Company.
9. Prior to the commencement of work, Contractor will provide the Company with a detailed construction schedule, in either Gantt or CPM form, identifying all tasks to be performed from the date of the written Commencement Notice through completion of the Project, including testing, training of Company Personnel and final Project invoicing. Contractor will provide the Company with a copy of such construction schedule documenting the progress of work on the Project at least monthly.
10. Contractor will not commence work on the Project until the Company gives Contractor a written Commencement Notice. Contractor will complete the Project within 60 calendar days after the Commencement Notice is issued.
11. Following the Company's written notice of satisfactory completion of the Project, and upon receipt of the final Project invoice from Contractor, the Company shall pay Contractor the actual total cost of the Project, which will be calculated as shown on Page 2, except that actual labor and material quantities installed/constructed will be substituted for the estimated labor and materials quantities and the Contracting Tax will be recalculated based on such actual labor and materials quantities.
12. The amount of applicable liquidated damages for Contractor's failure to deliver or perform within the time limit shown in Paragraph 10 may be deducted from the Company's payment of the final Project invoice. This provision shall not limit the Company's ability to terminate this Proposal/Contract for Contractor's unsatisfactory performance or failure to perform as provided in the General Conditions of Contract, Specifications or Drawings, or in this Proposal/Contract.

SPECIAL CONDITIONS:

CONTRACTOR	PROPOSAL/CONTRACT ACCEPTED:
J WISE CORPORATION	ARIZONA WATER COMPANY
By:	By:
Print Name: Barry L Weisdorger	Print Name: Fredrick K. Schneider, PE
Title: V.P.	Title: Vice President - Engineering
Date: 3-15-11	Date: 3-18-11

ARIZONA WATER COMPANY

Superstition Division
2380 W. Southern Avenue
AJ, AZ 85120 PH: 480-982-2201 FX: 480-983-6380

PROPOSAL/CONTRACT

CONTRACTOR: J WISE CORPORATION	SYSTEM: SUPERSTITION
AZ CONTRACTOR LICENSE NO: CLASSIFICATION:	W.A. No(s): 1-4787
ADDRESS: 5851 S. WILSON DRIVE	BID DUE DATE: February 18, 2011
CITY ST ZIP CHANDLER, ARIZONA 85249	BID BOND REQUIRED: ☐ Yes ☑ No

DESCRIPTION OF PROJECT: FURNISH AND INSTALL NEW 12" HIGH PRESSURE VALVE ON 12" LINE BETWEEN FLORENCE AND SUPERIOR

1-2. MATERIALS EXEMPT FROM CONTRACTING TAX (per Paragraph 6)	QUANTITY	UNIT PRICE LABOR	UNIT PRICE MATERIALS	TOTAL COST LABOR	TOTAL COST MATERIALS
3. Total Labor to Install Exempt Materials (add the amounts in column 1)				3 0	
4. Total Exempt Materials (add the amounts in column 2)					4 0

5-6. NON-EXEMPT MATERIALS	QUANTITY	LABOR	MATERIALS	LABOR	MATERIALS
Install new 12" high pressure valve	1	$ 6800	$ 8900	$ 6800	8900
7. Total Labor to Install Non-Exempt Materials (add the amounts in column 5)				7 6800	
8. Total Non-Exempt Materials (add the amounts in column 6)					8 8900
9. Subtotal A (add lines 3, 7 and 8)					9 15,700
10. Contracting Tax Base (multiply the amount on line 9 by 0.65)				10 0	
11. Applicable Contracting Tax Rate				11 0	
12. Contracting Tax (multiply the amount on line 10 by line 11)					12 0
13. Subtotal B (add lines 4, 9 and 12)					13 15,700
14. 100% Performance and Payment Bonds Cost					14 230
15. Estimated Total Cost (add lines 13 and 14)					15 15,930

NOTE: The Estimated Total Cost includes all labor and materials for backfill, pavement replacement, chip seal, and traffic control necessary for the Project.

ARIZONA WATER COMPANY

CONSTRUCTION SPECIFICATIONS: E-8-1

ERRATA 2010

10. PROTECTION OF WATER MAINS NEAR SEWERS

In order to protect water mains from contamination by sewers, the installation of the water mains must conform to the following requirements:

a. Horizontal - When water lines and sewers are laid parallel with each other, the horizontal distance between them shall not be less than six feet (6'). Each line shall be laid on undisturbed or bedded material in a separate trench. Where conditions prevent the minimum horizontal separation set forth above, extra protection will be required. Extra protection shall consist of constructing the sewer main with mechanical joint ductile iron pipe or with slip-joint ductile iron pipe if joint restraint is provided, or encasing both the water main and sewer main in concrete. See Detail E-9-30-1 and E-9-30-2

The Construction Drawings shall indicate the installation requirements. The drawings showing these exceptions shall have been approved by the appropriate state and/or county health department. Refer to the diagram below for clarification.

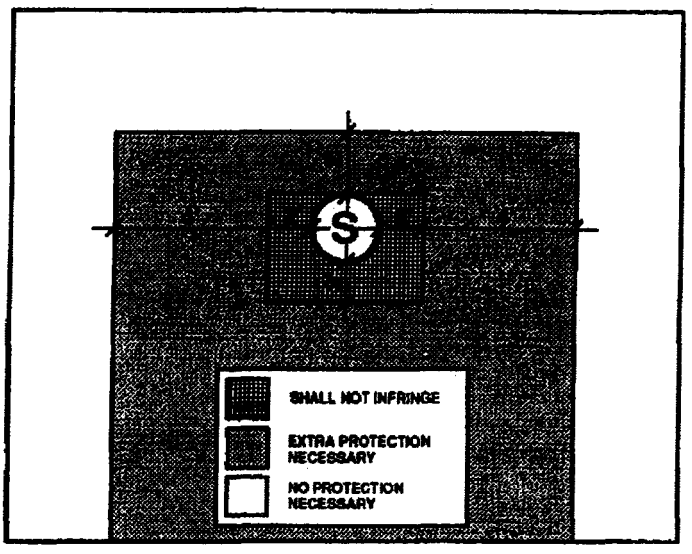

Under no circumstances will the horizontal separation between sewer mains and water mains be less than two feet (2'). All distances are to be measured from the outside of the sewer main to the outside of the water main.

b. Vertical - When a water main is parallel with or crosses a sewer main within two feet (2') above the sewer or greater than two feet (2') below the sewer, extra protection will be required. Extra protection shall consist of constructing the sewer main with mechanical joint ductile iron pipe or with slip-joint ductile iron pipe if joint restraint is provided, or encasing both the water main and sewer main in concrete. See Detail E-9-30-1 and E-9-30-2.

The Construction Drawings shall indicate the installation requirements. The drawings showing these exceptions shall have been approved by the appropriate state and/or county health department.

Under no circumstances will the vertical separation of a sewer main installed above a water main be less than two feet (2'). All distances are to be measured from the outside of the sewer main to the outside of the water main. Refer to the diagram above for clarification.

c. When unusual conditions such as, but not limited to, highway or bridge crossings prevent the water and sewer main separations required from being met, the appropriate state and/or county health department will review and may approve requests for authorization to use alternate construction techniques, materials and joints on a case-by-case basis.

d. No water pipe shall pass through or come into contact with any part of a sewer manhole. The minimum horizontal separation between water mains and manholes shall be six feet (6'), measured from the center of the manhole.

e. The minimum separation between force mains or pressure sewers and water mains shall be two feet (2') vertically and six feet (6') horizontally under all conditions. Where a sewer force main crosses above, or less than six feet (6') below, a water line, the sewer main shall be encased in at least six inches (6") of concrete for ten feet (10') on either side of the water main. Refer to the diagram below for clarification.

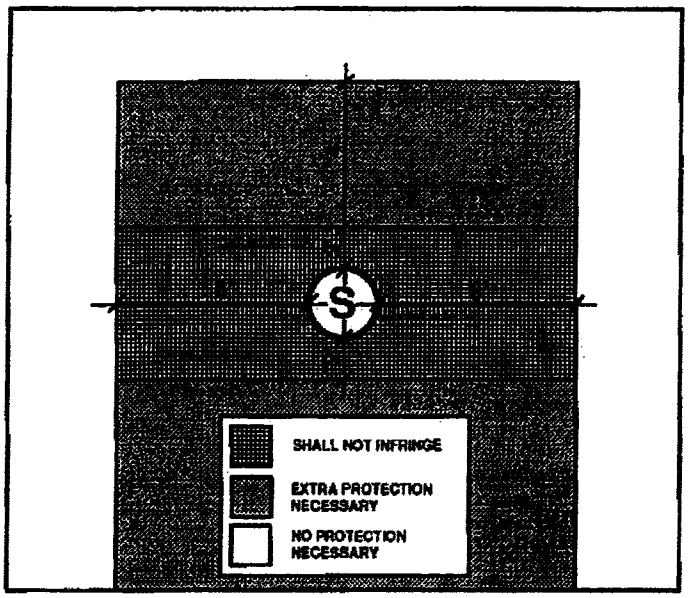

ARIZONA WATER COMPANY

STANDARD SPECIFICATION DRAWINGS: E-9-1

ERRATA 2010

E-9-20	INSTALLATION OF TYPICAL WELL WITH LINE SHAFT TURBINE PUMP
E-9-21	INSTALLATION OF TYPICAL WELL WITH SUBMERSIBLE TURBINE PUMP
E-9-22	INSTALLATION OF COLUMN PIPE, OIL TUBE AND LINE SHAFT
E-9-23	HOT TAP AND JUMPER METER CONNECTION
E-9-24	INSTALLATION OF TYPICAL WATER LINE ENCASEMENT
E-9-25	INSTALLATION OF CALCIUM HYPOCHLORITE TABLET CHLORINATOR
E-9-26	INSTALLATION OF CHAIN LINK FENCE
E-9-27	INSTALLATION OF SIDE HUNG WATER LINE SUSPENSION
E-9-28	PIPE WARNING TAPE, LOCATOR WIRE, AND LOCATOR WIRE TERMINATION
E-9-29	INSTALLATION OF A TYPICAL SAMPLING STATION
E-9-30-1	WATER AND SANITARY SEWER SEPARATION/PROTECTION PERPENDICULAR
E-9-30-2	WATER AND SANITARY SEWER SEPARATION/PROTECTION – PARALLEL

ENCASEMENT FOR PIPE CROSSING

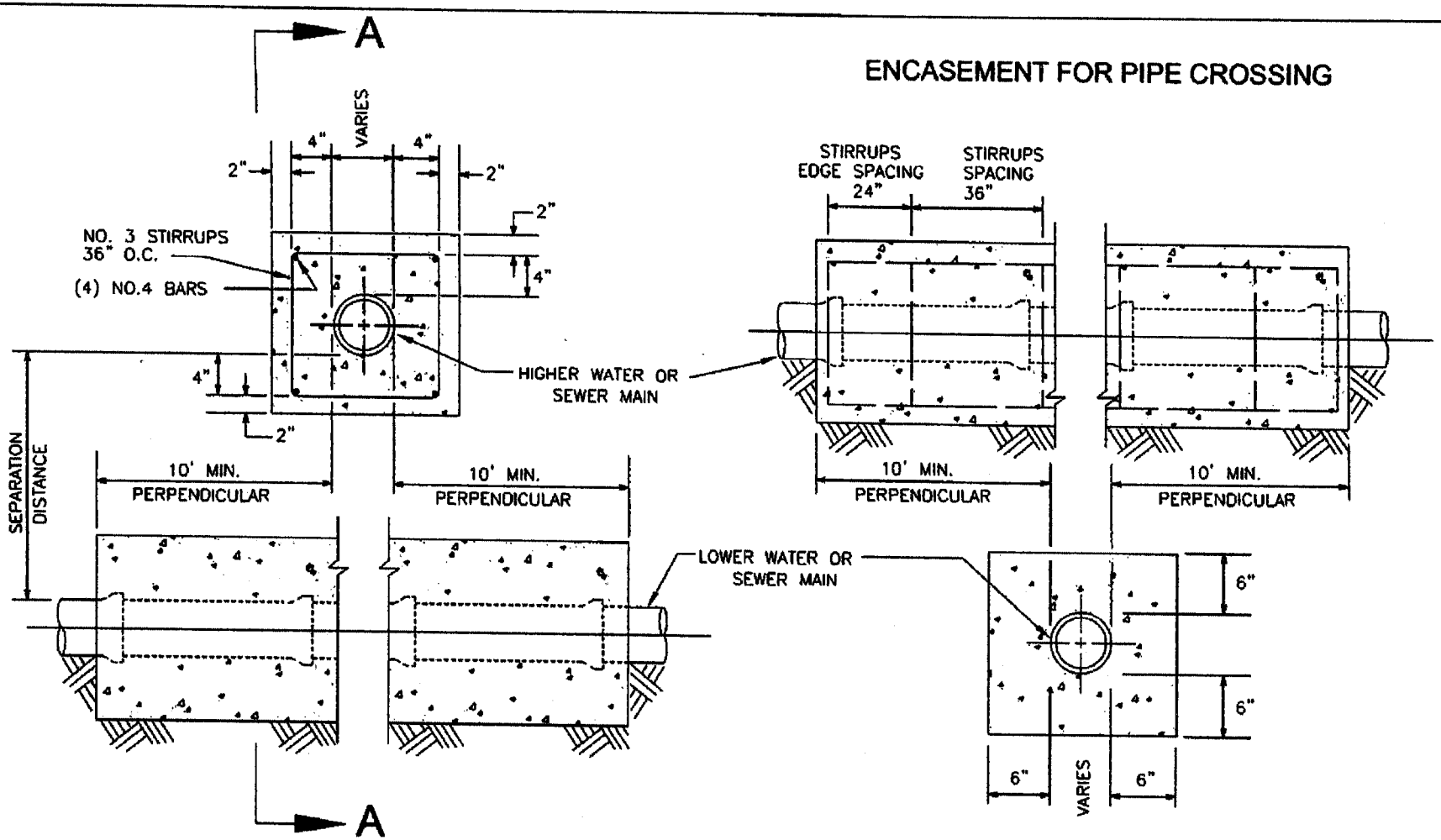

SECTION A-A

NOTES:

1. 2,000 PSI CONCRETE
2. SEPARATION DISTANCES AND/OR OTHER EXTRA PROTECTION SHALL BE REQUIRED TO PROTECT WATER MAINS FROM CONTAMINATION BY SANITARY SEWER MAINS. SEE AWC STANDARD SPECIFICATION PAGES E-8-1-9 AND E-8-1-10.
3. SEE CROSS SECTION DETAIL FOR LIMITS OF SEPARATION/EXTRA PROTECTION. ALL DISTANCES ARE MEASURED PERPENDICULARLY FROM THE OUTSIDE OF THE PIPES.
4. RECLAIMED WATER SHALL BE CONSIDERED A SANITARY SEWER WHEN PLACED NEXT TO A POTABLE WATER MAIN.

ARIZONA WATER COMPANY

STANDARD SPECIFICATION
FOR THE INSTALLATION OF
WATER AND SANITARY SEWER
SEPARATION/PROTECTION

DRAWN BY	APPROVED BY	DATE		
CB	JW	04.07.2008		E-9-30-1

NOTES:

1. 2,000 PSI CONCRETE

2. SEPARATION DISTANCES AND/OR OTHER EXTRA PROTECTION SHALL BE REQUIRED TO PROTECT WATER MAINS FROM CONTAMINATION BY SANITARY SEWER MAINS. SEE AWC STANDARD SPECIFICATION PAGES E-8-1-9 AND E-8-1-10.

3. SEE CROSS SECTION DETAIL FOR LIMITS OF SEPARATION/EXTRA PROTECTION. ALL DISTANCES ARE MEASURED PERPENDICULARLY FROM THE OUTSIDE OF THE PIPES.

4. RECLAIMED WATER SHALL BE CONSIDERED A SANITARY SEWER WHEN PLACED NEXT TO A POTABLE WATER MAIN.

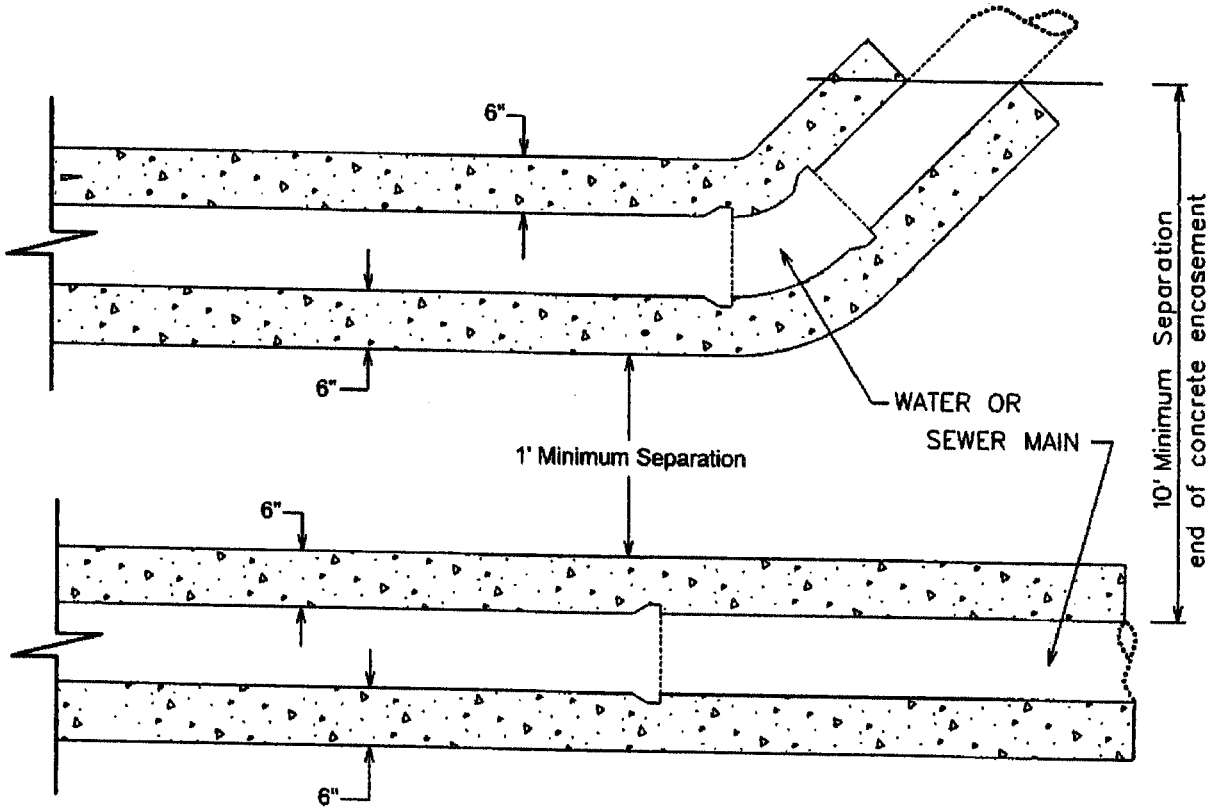

PLAN VIEW

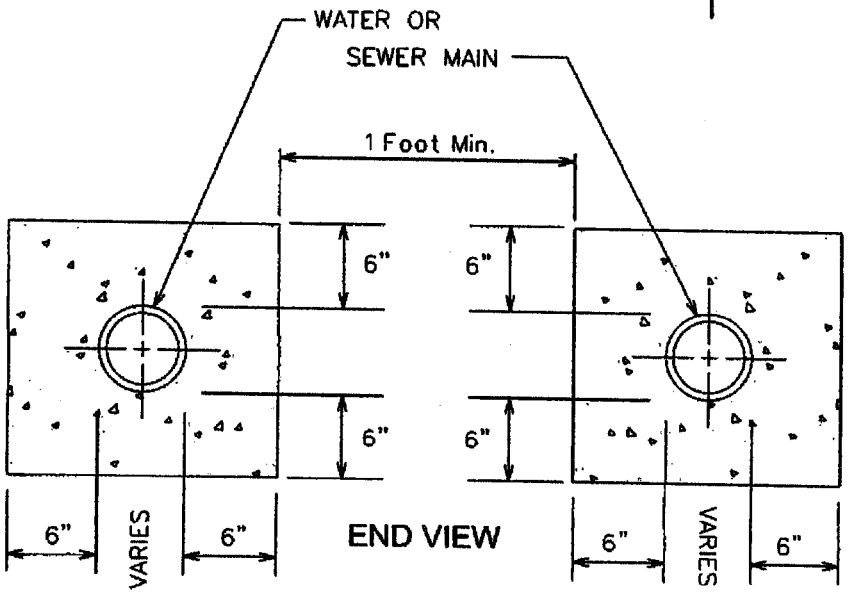

END VIEW

ENCASEMENT FOR PARALLEL PIPES

ARIZONA WATER COMPANY

STANDARD SPECIFICATION
FOR THE INSTALLATION OF
WATER AND SANITARY SEWER SEPARATION/PROTECTION

DRAWN BY:	APPROVED BY:	DATE		
CB	JW	04.07.2008		E-9-30-2

ARIZONA WATER COMPANY

3805 N. BLACK CANYON HIGHWAY, PHOENIX, ARIZONA 85015-5351 • P.O. BOX 29006, PHOENIX, ARIZONA 85038-9006
PHONE: (602) 240-6860 • FAX: (602) 240-6878 • WWW.AZWATER.COM

October 19, 2010

Mr. Jim Ryan
Clow Valve Company
8121 N. 10th Avenue
Phoenix, Arizona 85021

Re: Clow Medallion Fire Hydrants and Resilient Wedge Gate Valves

Dear Mr. Ryan:

Thank you for your interest in working with Arizona Water Company (the "Company") to add Clow Medallion Fire Hydrants and Resilient Wedge Gate Valves to the Company's material and equipment specifications. Based on the Clow product information you provided and your field presentations to our operations and engineering staff, the Company is pleased to inform you that the following items are approved for use in the Company's water systems in Arizona.

Medallion Fire Hydrant:

- Model F-2545
  - 5¼" MVO
  - 4½" pumper
  - 2½" hose
  - Meets AWWA C-502 standard and approval by ULFM

Resilient Wedge Gate Valves:

- Model 2639 & 2640
  - Meets AWWA C-509 Full Body Cast Iron includes 304 SS Nuts, Bolts & Low Zinc Bronze Stem
  - Size range 2½" thru 12"
- Model 2638
  - Meets AWWA C-515 Reduced Wall Ductile Iron includes 304 SS Nuts, Bolts & Low Zinc Bronze Stem
  - Size range 14" thru 48"

We look forward to developing a long-term relationship with you and the Clow products. If I can be of any assistance, please call me.

Very truly yours,

Fredrick K. Schneider
Vice President – Engineering

lar

VIA EMAIL: JIM.RYAN@CLOWVALVE.COM

ARIZONA WATER COMPANY

3805 N. BLACK CANYON HIGHWAY, PHOENIX, ARIZONA 85015-5351 • P.O. BOX 29006, PHOENIX, ARIZONA 85038-9006
PHONE: (602) 240-6860 • FAX: (602) 240-6878 • WWW.AZWATER.COM

November 24, 2010

Mr. Tony Geiger
US Pipe – Waterworks Marketing Consultants
34522 N. Scottsdale Road
Scottsdale, Arizona 85226

Re: US Pipe Sentinel Fire Hydrants and Resilient Wedge Gate Valves

Dear Mr. Geiger:

Thank you for your interest in working with Arizona Water Company (the "Company") to add US Pipe Sentinel Fire Hydrants and Resilient Wedge Gate Valves to the Company's material and equipment specifications. Based on the US Pipe product information you provided and your field presentations to our operations and engineering staff, the Company is pleased to inform you that the following items are approved for use in the Company's water systems in Arizona.

Sentinel Fire Hydrant:

- Model Sentinel 250
  - 5¼" MVO
  - 4½" pumper
  - 2½" hose
  - Meets AWWA C-502 standard and approval by ULFM

Resilient Wedge Gate Valves:

- Model US Pipe A-USP0
  - Meets AWWA C-509 Full Body Cast Iron <u>includes</u> 304 SS Nuts, Bolts & Low Zinc Bronze Stem
  - Size range 2" thru 12"
- Model US Pipe A-USP1
  - Meets AWWA C-515 Reduced Wall Ductile Iron <u>includes</u> 304 SS Nuts, Bolts & Low Zinc Bronze Stem
  - Size range 14" thru 48"

We look forward to developing a long-term relationship with you and the US Pipe products. If I can be of any assistance, please call me.

Very truly yours,

Fredrick K. Schneider
Vice President – Engineering

afh

VIA EMAIL: TGEIGER4@COX.NET

ARIZONA WATER COMPANY

SPECIFICATIONS

GENERAL CONDITIONS OF CONTRACT: E-4-1

CONSTRUCTION SPECIFICATIONS: E-8-1

STANDARD SPECIFICATION DRAWINGS: E-9-1

2007 EDITION

ARIZONA WATER COMPANY

GENERAL CONDITIONS OF CONTRACT: E-4-1

ARIZONA WATER COMPANY

E-4-1

GENERAL CONDITIONS OF CONTRACT

DEFINITIONS

A. Company. The words "Company" or "Arizona Water Company" mean Arizona Water Company, and where applicable, any division of Arizona Water Company, whose principal place of business is located at 3805 North Black Canyon Highway, Phoenix, Arizona 85015-5351 (Post Office Box 29006, Phoenix, Arizona 85038-9006).

B. Company's Authorized Representative. The words "Company's Authorized Representative" mean any officer of the Company, and any of the Company's Engineers, any Division Manager or Superintendent of the Company and/or such other person(s) designated in writing as the "Company's Authorized Representative" by the President or any Vice President of the Company.

C. Contractor. The word "Contractor" means either an individual or other entity employed to do the work as shown on the Construction Drawings and as specified herein.

D. Construction Drawings. The words "Construction Drawings" mean plans prepared by or on behalf of Arizona Water Company.

E. Invitation to Bid. The term "Invitation to Bid" means the current copy of Arizona Water Company's Form E-3-11-4 Request for Proposal/Contract or Form E-3-12-2 Invitation to Bid.

F. Contract. The word "Contract" means the written document titled "Contract" or "Proposal/Contract" when such document has been signed by an officer or other authorized representative of both the Contractor and the Company.

G. Inspector. The word "Inspector" means the Company's Authorized Representative or a person designated in writing by the Company's Authorized Representative.

GENERAL CONDITIONS OF CONTRACT

1. GENERAL

These General Conditions of Contract govern all works of installation and construction unless deviations are provided for on the Construction Drawings or in the Contract.

2. BONDS

The Contractor shall, upon request by the Company, furnish a performance bond and a material payment bond in the amount of 100% of the Contract price, in a form and from a surety acceptable to the Company.

3. LABOR AND/OR MATERIAL RELEASES

The Contractor shall supply labor and/or material releases satisfactory to the Company when requested to do so. Forms will be provided by the Company.

4. LICENSE

The Contractor shall have, as may be required by law, a valid license applicable to the work to be performed.

5. INSURANCE

The Contractor shall maintain in full force and effect insurance at no less than the following minimum amounts:

WORKER'S COMPENSATION	In accordance with requirements of the laws of the State of Arizona.
COMPREHENSIVE GENERAL LIABILITY (Including contractual liability covering death, bodily injury and property damage)	Combined single limit of not less than $1,000,000 for each occurrence.
AUTOMOTIVE LIABILITY (Including owned, non-owned and hired vehicles)	Combined single limit of not less than $1,000,000 for each occurrence.
SUBCONTRACTOR'S PUBLIC LIABILITY AND PROPERTY DAMAGE INSURANCE AND VEHICLE LIABILITY INSURANCE	Contractor shall either require each of its subcontractors to procure and to maintain Subcontractor's Public Liability and Property Damage Insurance and Vehicle Liability Insurance of the type and in the amounts specified in this Section 5 or insure the activities of its subcontractors in Contractor's own policy, in like amounts.

Such insurance shall name the Company, its officers, agents, and employees as additional insured and be primary for all purposes.

The Company will at all times have the right to require that all of such insurance be placed with insurance companies that are satisfactory to it. The Contractor shall file with the Company a certificate evidencing that each policy of insurance for the above coverages in the minimum amounts specified has been purchased and is in good standing.

Such certificate shall provide that notice be given to the Company at least thirty (30) days prior to cancellation or material change in the form of such policies or any of them. Such certificates shall be kept on file by the Company and the Company must have current certificates on file, or a certificate must accompany any bid proposal, before that proposal will be accepted by the Company.

6. CONTRACTOR UNDERSTANDS WORK AND WORKING CONDITIONS

By executing a Contract with the Company, the Contractor warrants that it has, by careful examination, satisfied itself as to the nature and location of the work, including soil conditions, the character, quality and quantity of the materials to be encountered, the character of the equipment and facilities needed preliminary to and during prosecution of the work, the general and local conditions, and all other matters which can in any way be expected to affect its work under the Contract. Verbal agreements or conversations with any officer, agent or employee of the Company, either before or after the execution of the Contract, are not binding upon the Company and shall not affect or modify any of the terms or obligations herein contained.

7. SPECIFICATIONS AND DRAWINGS

The Contractor shall keep on the job a complete copy of all drawings and specifications furnished by the Company which are applicable to the Contract with the Company. Anything mentioned in the specifications and not shown on the drawings or shown on the drawings and not mentioned in the specifications shall be of like effect as if shown or mentioned in both. In case of a discrepancy between the figures, drawings or specifications and physical conditions of the job, the matter shall be immediately submitted to the Company's Authorized Representative for decision as to adjustments, if any, because of the discrepancy; without a decision from the Company's Authorized Representative no discrepancy shall be adjusted by the Contractor, save only at its own risk and expense. Any deviation from the specifications must be approved in writing by the Company's Authorized Representative.

8. PROPERTY PROTECTION

Trees, fences, poles, underground structures and all other property shall be protected unless their removal is authorized on the Construction Drawings. Any property damaged shall be restored by the Contractor, at its expense, to the owner's satisfaction.

9. SPECIAL PERMITS, LICENSES AND INSURANCE

The Company shall obtain all permits for railroad, county, state, city and irrigation district rights-of-way as well as Forest Service, State Land Department and Bureau of Land Management permits. (Pipeline Contractors)

Whenever blasting is required, the Contractor shall obtain all permits, licenses and insurance required at its expense. (All Contractors)

The Contractor will be required to obtain, and shall certify in writing to the Company that it has obtained, all additional permits required to perform the work including, but not limited to, a National Pollution Discharge Elimination System Permit and/or an Aquifer Protection Permit as those permits relate to disposal of drilling, development and test waters and/or any other discharge or similar activity. (Well Drilling Contractors)

10. SURVEYS

The Company shall be responsible, or arrange, for all surveys required for the work covered in the Contract, unless otherwise specified.

11. BENCH MARKS, PROPERTY STAKES AND SURVEY STAKES

Bench marks, property stakes and survey stakes shall be preserved by the Contractor; in case they are destroyed or removed by Contractor or its employees, the Company will replace them at the Contractor's expense, and the Contractor and its sureties shall be liable therefore.

12. TOOLS, EQUIPMENT AND MATERIALS

The Contractor shall furnish all of the necessary tools, equipment, and pipeline materials required for the work. All material furnished by the Contractor shall be of the quality specified by the Company in its Construction Specifications (E-8-1).

13. SUPERINTENDENCE BY CONTRACTOR

The Contractor shall assure adequate superintendence of the work by a competent foreman or superintendent (with full authority to act on behalf of Contractor) satisfactory to the Company, who will be on the job at all times when work is in progress.

14. ORDER AND DISCIPLINE

The Contractor shall at all times enforce strict discipline and good order among its employees.

15. INDEPENDENT CONTRACTOR

The Contractor is an independent contractor and any provisions in the Contract, the specifications, or these General Conditions of Contract and Arizona Water Company's Construction Specifications which may appear to give the Company the right to direct the Contractor as to the details of the doing of any work to be performed by the Contractor, or to exercise a measure of control over said work, shall be deemed to mean and shall

mean, that the Contractor shall follow the desires of the Company in the results of the work only and not in the means whereby said work is to be accomplished, and the Contractor shall use its own discretion and shall have complete and authoritative control over the work and as to the details of the doing of the work.

16. PUBLIC SAFETY AND CONVENIENCE

Contractor shall at all times conduct its work so as to ensure the least possible obstruction to traffic and other inconvenience to the general public and the residents and businesses in the vicinity of the work, and to ensure the protection of persons and property.

To protect persons from injury and to avoid property damage, Contractor shall provide and maintain adequate barricades as required during the progress of the work and until it is safe to use the property for its intended purpose. The rules and regulations of the local governmental agencies and specific permit requirements respecting safety provisions shall be observed at all times.

In the case of blasting, the Contractor shall exercise extreme caution to protect the general public and personal and public property from harm or damage.

17. PROPERTY PROTECTION

Trees, fences, poles, and all other property shall be protected unless their removal is authorized by the Company. Any property damaged shall be restored by Contractor, at his expense, to Company's satisfaction.

18. RESPONSIBILITY OF CONTRACTOR

The work shall be under Contractor's responsible care and charge. Contractor shall bear all loss and damage whatsoever and from whatsoever cause, except that caused solely by the act of Company, which may occur on or to the work during the fulfillment of the Contract. If any loss or damage occurs, Contractor shall immediately make good any such loss or damage, and in the event of Contractor refusing or neglecting to do so, Company may, or by the employment of some other person, make good any such loss or damage, and the cost and expense of so doing shall be charged to Contractor.

The mention of any specific responsibility or liability imposed upon Contractor shall not be construed as a limitation or restriction of any general liability or duty imposed upon Contractor by the Contract. The reference to any specific duty or liability being made herein is merely for the purpose of explanation.

Contractor alone shall at all times be responsible for the safety of Contractor, Contractor's employees, and its subcontractors' employees, and for Contractor and its subcontractors' plant and equipment and the method of performing the work.

19. ERRORS AND OMISSIONS

If Contractor, in the course of the work, becomes aware of any errors or omissions in the Contract Documents or in the instructions, or if Contractor becomes aware of any discrepancy between the Contract Documents and the physical conditions of the site of

the work, Contractor shall immediately inform Company in writing. Any work done by Contractor after such discovery, until authorized by Company, will be done at Contractor's risk.

20. LAWS, REGULATIONS

Contractor shall give all notices required by law and comply with all laws, ordinances, rules and regulations, including, but not limited to, all applicable federal, state, local and other legally required health and safety standards, orders, rules, regulations or other laws, pertaining to the conduct of the work. Contractor shall be liable for, and shall defend and indemnify Company against and hold it harmless from, all violations of any law, ordinance, rule, regulation, standard, or order in connection with work furnished by or on behalf of Contractor. If Contractor observes that the Contract Documents are at variance with any law, ordinance, rule, regulation, standard, or order it shall promptly notify Company in writing and any necessary changes shall be adjusted as provided in the Contract for changes in the work. Contractor shall not perform any work contrary to such laws ordinances, rules, regulations, standards, or orders.

21. PERMITS, FEES AND INSPECTIONS

Permits and licenses necessary for the prosecution of the work, including, but not limited to, any National Pollution Discharge Elimination Systems (NPDES) Permits required by U.S. Environmental Protection Agency or the Arizona Department of Environmental Quality shall be secured, paid for, and complied with by Contractor.

Contractor shall be responsible for its actions and shall abide by all conditions and/or restrictions set forth in the NPDES Permit and any other permit or license required for this project.

Company shall at all times have access to the work whenever it is in preparation or in progress and Contractor shall provide proper facilities for such access and for all inspections. If the Contract Documents, the General Superintendent's instructions, laws, ordinances or any public authority require any work to be inspected or approved, Contractor shall give timely notice of its readiness for inspection.

Inspection of the work shall not relieve Contractor of any of its obligations even if defective work or unsuitable materials may have been previously overlooked by Company and accepted or estimated for payment. If any work is found not in accordance with the Contract Documents, Contractor, at its sole cost and expense, shall promptly make good such defective work.

22. CONSTRUCTION MARKING (PIPELINE ONLY)

Each job shall be marked and/or barricaded by the Contractor in such a manner that the construction is clearly visible at all times.

23. EXTRA WORK AND/OR MATERIALS

Except as otherwise herein provided, no charge for any extra work and/or material will be allowed unless the same has been ordered in writing by the Company's Authorized Representative, and the price stated in such order.

24. CHANGES

The Company shall have the right to make any changes in the work that it may determine to be necessary. If such changes affect the cost of the work, an equitable adjustment shall be negotiated. Changes shall in no way affect or void the obligations of both parties under the original Contract.

25. INSPECTION

All work and material shall be open at all times to inspection and acceptance or rejection by the Company's Inspector. Any work covered up by the Contractor prior to inspection and acceptance by the Company shall be subject to being uncovered at the expense of the Contractor for inspection by the Company. The Contractor shall give the Company reasonable notice of starting new work and shall provide, without extra charge, reasonable and necessary facilities for inspection, even to the extent of taking out portions of finished work. In case any such finished work removed is found satisfactory, however, the actual direct cost of such removal and replacement, plus 15% of such cost, will be paid by the Company; in addition, if completion of the work has been delayed thereby, the Contractor shall be granted a suitable extension of time on account of the additional work involved.

26. DEFECTIVE WORK OR MATERIAL

The Contractor shall remove, at its own expense, any work or material found defective by the Company's Inspector and shall rebuild and replace the same without extra charge; in default thereof, the same may be done by the Company at the Contractor's expense.

27. ASSIGNMENT

Neither party to the Contract may assign the Contract or sublet it in whole or in part without the written consent of the other, nor shall the Contractor assign any monies due or which may become due hereunder without the previous written consent of the Company, nor shall such consent release the Contractor from any of its obligations and liabilities under the Contract.

28. RIGHTS OF VARIOUS INTERESTS

Whenever work that is being done for the Company other than by the Contractor is contiguous to work being done by the Contractor, the respective rights of the various interests involved shall be established by the Company to secure the completion of the various portions of the work in general harmony.

29. SUSPENSION OF WORK

The Company's Authorized Representative may at any time and for any reason suspend all or any portion of the work under the Contract. This right to suspend work shall not be construed as denying the Contractor compensation for actual, reasonable and necessary expenses due to suspension to which it may be entitled.

The Company's Authorized Representative may order the Contractor to suspend any work because of certain conditions, such as inclement weather, or because the

Contractor is in violation of these General Conditions of Contract or the Construction Specifications. It is understood that compensation for expenses will not be allowed for such suspension when ordered by the Company's Authorized Representative on account of such conditions.

30. PROCEDURE OF WORK (PIPELINE ONLY)

All work under the Contract shall be planned and performed so as to cause a minimum of interference with normal vehicular and pedestrian traffic. At no time shall the Contractor completely obstruct the traffic to any business establishment during normal work hours of that business. It shall be the Contractor's responsibility to maintain facilities for ingress and egress to any business establishment. When crossing any street, not more than one-half of the street may be blocked at one time. All federal, state, county and city laws, rules and regulations relating to this subject are to be obeyed.

The Contractor shall complete any portion or portions of the work in such order of time as the Company may require. The Company shall have the right to take possession of and use any completed or partially completed portions of the work. If such prior possession or use increases the cost of or delays the work, the Contractor will be entitled to extra compensation or extension of time or both, as the Company may determine.

31. DISPUTES

All questions or controversies which arise between the Contractor and the Company, under, or in reference to, the Contract, shall be decided by the Company's Authorized Representative and a representative of the Contractor, and their decision shall be final and conclusive upon both parties.

32. CONNECTION TO EXISTING SYSTEM (PIPELINE ONLY)

Unless approved in writing by the Company's Authorized Representative, no tie-in or hot tap on the existing system shall be made unless the Company's Inspector is present. When the tie-in requires the operation of an existing valve or other control equipment, the conditions of Paragraph(s) 30 and 33 shall be complied with. The Contractor shall notify the Company twenty-four (24) hours prior to tie-in as to the exact time the Contractor plans to make tie-in so that the Company's Inspector will have sufficient time to locate valves and make necessary preliminary arrangements for shut down.

33. PLANNED INTERRUPTION OF WATER SERVICE (PIPELINE ONLY)

No valve or other control on an existing Company water system shall be operated for any purpose by the Contractor without approval of the Company's Inspector. All of the Company's water customers whose service is interrupted by a planned interruption, other than in cases of emergency, shall be notified by the Contractor at least twenty-four (24) hours before the planned interruption and advised of the probable time when the service will be restored.

34. EXISTING UTILITY FACILITIES (PIPELINE ONLY)

The Contractor shall notify all known utilities in the area of the work to be performed under the Contract and shall make arrangements to have their facilities marked in

accordance with A.R.S. ?40-360.022 ("Blue Stake Law"). The Contractor shall be responsible for locating and preserving all marked facilities. Any damages to these marked facilities shall be repaired at the expense of the Contractor.

The Company will pay the cost to relocate its or other structures when such structures are found occupying the physical space of the proposed installation. It is understood that the Contractor will be reimbursed for such work only when written authorization from the Company has been obtained in advance of such work.

35. CLEANING UP

The Contractor shall remove from the Company's property and from all public and private property, at its own expense, all temporary structures, rubbish and waste materials resulting from its operations. In the event Contractor fails to do so, the Company may remove same at the expense of the Contractor.

36. WORKING HOURS (PIPELINE ONLY)

Unless stated to the contrary in the Invitation to Bid and/or so stated on the Construction Drawings, or agreed to by the Company during a Pre-Construction Conference, the Contractor shall not be permitted to perform work on Saturdays, Sundays, or Company holidays, or commence work such as tie-ins that cannot be completed during normal working hours.

37. INDEMNITY

A. The Contractor shall indemnify the Company against, and save and hold it harmless from, any and all liability, claims, demands, loss, actions, causes of action, expense, penalties, fines, assessments, damages and costs of every kind and nature for injury to or death of any and all persons, including, without limitation, employees or representatives of the Company or of the Contractor or of any subcontractor, or any other person or persons, and for damage, destruction or loss, consequential or otherwise, to or of any and all property, real or personal, including, without limitation, property of the Company or of the Contractor or of any subcontractor, or of any other person or persons, and the violation of any law, ordinance, rule, regulation, standard, or order resulting from or in any manner arising out of or in connection with the performance of the work under the Contract, howsoever same may be caused, including, without limitation, the Company's active or passive negligence. The Contractor shall also, upon request by the Company, and at no expense to the Company, defend the Company in any and all suits, concerning such injury to or death of any and all persons, and concerning such damage, destruction or loss, consequential or otherwise, to or of any and all property, real or personal, including, without limitation, suits by employees or representatives of the Company or of the Contractor or of any subcontractor, or any other person or persons, or concerning any court or administrative proceeding concerning the violation of any law, ordinance, rule, regulation, standard, or order. Excluded from this paragraph are only those injuries to or deaths of persons and damage, destruction or loss, to or of property arising from the sole negligence or willful misconduct of the Company.

B. Contractor shall indemnify the Company against, and save and hold it harmless from, any and all liability, claims, demands, damages, costs, expenses and attorney's fees, suffered or incurred on account of any breach of any obligation, covenant or other

provision of this contract, including without limitation, breach of the indemnity provisions of subsection A of this Section 37.

C. Contractor further agrees to defend, indemnify and hold harmless the Company, its directors, officers, employees, and agents, from and against any and all costs, damages, claims, expenses, violations, notices of violations, penalties, liens, assessments, and liabilities of every kind and nature, foreseeable or unforeseeable, directly or indirectly, arising from any release, removal, generation, use, storage or disposal on, under, around, or from the well site of any material, substance, or waste, hazardous or non-hazardous, including, without limitation, drilling fluids, mud, cuttings and development and test water howsoever same may be caused, including, without limitation, the Company's active or passive negligence.

38. LIENS

If at any time there shall be evidence of any lien or claim for which the Company might become liable and which is chargeable to the Contractor, the Company shall have the right to retain out of any payment then due or thereafter to become due, an amount sufficient to completely indemnify the Company against such lien or claim. If the Company determines that such lien or claim is valid, the Company may pay and discharge the same, and deduct the amount so paid from any monies which may be or become due and payable to the Contractor.

39. PAYMENT

Upon completion of the installation or construction, the Company will, within thirty (30) days after receipt of proper invoice and labor and material releases, pay the amount due the Contractor. If the Company believes that additional work, such as clean up, is required, it may deduct the total cost of such additional work from the amount to be paid to Contractor.

40. COMPANY'S RIGHT TO TERMINATE CONTRACT: DAMAGES DUE TO DELAY

If the Company finds the Contractor to be in material violation of any section of these General Conditions of Contract, Construction Specifications or Standard Specification Drawings or if the Contractor refuses or fails to prosecute the work, or any separable part thereof, with such diligence as will insure its completion within the time specified or any extension thereof, or fails to complete said work within such time, or when any other cause exists to justify such action, the Company may, without prejudice to any other right or remedy, by written notice to the Contractor, terminate its right to proceed with the work or such part of the work as to which there has been such violation, delay or other cause.

In the event the Contractor's right to proceed is terminated, the Company may take over the work and take possession of, and utilize in completing the work, such materials as may be on the site of the work and necessary therefore and prosecute said work to completion by whatever method it may deem expedient. The Contractor and its sureties shall be liable to the Company for any excess cost caused thereby.

In the event the Contractor's right to proceed with the work is terminated, the Contractor shall not be entitled to receive any further payment until the work is completed or the job is canceled. If the unpaid balance of the Contract price exceeds the expense of finishing

the work, including compensation for additional managerial and administrative services, such excess shall be paid to the Contractor. If such expenses exceed such unpaid balance, the Contractor shall pay the difference to the Company.

41. GUARANTEE

The Contractor shall guarantee all deslabor and workmanship and any materials it installs for a period of one year following the date of completion and acceptance by the Company. If any portion of the work or any of the materials become defective within the guarantee period, the Company will notify the Contractor of such defect. The Contractor must repair any defect within fifteen (15) days of such notification. If repairs are not completed within this time period, the Company may repair the defect, or cause such defect to be repaired, and the cost of such repairs shall be paid by the Contractor. The Company reserves the right to determine which defects are the result of poor labor and workmanship and which are caused by defective materials.

42. LIQUIDATED DAMAGES FOR NON PERFORMANCE: REQUEST FOR EXTENSION(S) OF TIME

Time is of the essence in the Contract. The time period required for completion of the work will be specified in the Contract. The Contractor agrees that the Company will suffer substantial damages in the event the Contractor fails to complete the work within the agreed upon time period. The Contractor and the Company agree that since it would be impracticable or extremely difficult to precisely fix such damages, a reasonable approximation of such actual damages suffered by the Company shall be a sum equal to 0.5% of the Contract price for each working day beyond the time period for completion of the work specified in the Contract.

Request by the Contractor for extensions of the time period shall be in writing and shall not become effective until approved in writing by the Company's Authorized Representative.

43. PAYMENT FOR REQUIRED TESTING

Whenever testing is required by any governmental agency or by the Company to assure conformance of the Contractor's work with the appropriate standard, it will be paid for as follows:

a. For testing required under permits obtained by the Company or testing specifically requested by the Company, the cost of the first test will be paid for by the Company. In the event of failure of the first test, the cost of all further testing associated with the failure will be paid by the Contractor.

b. For testing required under permits obtained by the Contractor, all costs will be paid by the Contractor. Testing of the pipeline for pressure and leakage will be included in the Contract price.

44. CONTRACT DEADLINES AND BONDS REQUIREMENTS

The time limits to be allowed for the completion of any work covered in the Contract shall be established as follows: In the proposal submitted to the Company, in response to the Invitation to Bid, the Contractor shall state the number of calendar days required for completion of the work. The time required will become a part of the Contract. When the Company is ready to proceed with the work, a Commencement Notice will be issued by the Company to the Contractor by mail. The Commencement Notice will allow the time required in the Contract plus ten (10) calendar days and will indicate the final day of the time allowed. The work cannot begin until the Company has received a performance bond and materials payment bond for the Contract price unless the bonds have been waived under the special conditions section of the Contract. The additional ten (10) days is the allowance for time to deliver the Commencement Notice to the Contractor and for the Contractor to return the performance bond and materials payment bond to the Company. Time extensions will be granted if warranted, and only at the time of the delay, thus extending the final day of the time allowed.

If the Company elects not to require a performance bond and a material payment bond for the work, the cost of the bonds will be deducted from the proposed total cost and the Contract will reflect this reduced cost and the bonds requirements will be waived under special conditions of the Contract.

ARIZONA WATER COMPANY

CONSTRUCTION SPECIFICATIONS: E-8-1

ARIZONA WATER COMPANY

E-8-1

CONSTRUCTION SPECIFICATIONS FOR THE INSTALLATION OF WATER DISTRIBUTION SYSTEMS DUCTILE IRON

DEFINITIONS

A. Company. The words "Company" or "Arizona Water Company" mean Arizona Water Company, and where applicable, any division of Arizona Water Company, whose principal place of business is located at 3805 North Black Canyon Highway, Phoenix, Arizona 85015-5351 (Post Office Box 29006, Phoenix, Arizona 85038-9006).

B. Company's Authorized Representative. The words "Company's Authorized Representative" mean any officer of the Company, and any of the Company's Engineers, any Division Manager or Superintendent of the Company and/or such other person(s) designated in writing as the "Company's Authorized Representative" by the President or any Vice President of the Company.

C. Contractor. The word "Contractor" means either an individual or other entity employed to do the work as shown on the Construction Drawings and as specified herein.

D. Construction Drawings. The words "Construction Drawings" mean plans prepared by or on behalf of Arizona Water Company.

E. Contract. The word "Contract" means the written document titled "Proposal/Contract" when such document has been signed by an officer or other authorized representative of both the Contractor and the Company.

CONSTRUCTION SPECIFICATIONS
FOR THE INSTALLATION OF WATER DISTRIBUTION SYSTEMS
DUCTILE IRON

1. GENERAL

All work is to be completed in a safe, workmanlike manner and in accordance with these Construction Specifications; any deviation therefrom must be approved in writing by the Company.

Installations must conform with the requirements of all governmental regulating agencies and the cost of conforming to such regulations must be included in the unit bid prices. Examples of such regulations, without attempting to be inclusive, are:

a. Special compaction and paving for street crossing.
b. Shoring when required because of the trench depth.
c. Closing a trench in those areas where no open trench is allowed overnight.
d. Barricading and traffic control as required.

2. LOCATION MARKING

Alignment stakes as required in the opinion of the Company shall be furnished by the Company to the Contractor and shall be set by the Company at agreed upon intervals and offsets. Under normal circumstances these will reference the pipeline location five feet (5') into the right-of-way measured from property pins. Grade stakes will be provided only when the Construction Drawings show a pipeline depth other than covered in these Specifications. It is the responsibility of the Contractor to preserve all survey work.

3. TRENCH EXCAVATION

The trench location is to be determined by the Construction Drawings.

FOR 8-INCH OR SMALLER PIPE: The depth of the trench prior to pipe laying shall be such that the finished pipeline shall have between thirty-six inches (36") and forty-two inches (42") of cover unless otherwise specified on the Construction Drawings.

FOR 12-INCH AND LARGER PIPE: The depth of the trench prior to pipe laying shall be such that the finished pipeline shall have between forty-eight inches (48") and sixty inches (60") of cover unless otherwise specified on the Construction Drawings.

The width of the trench at and below the level at the top of the pipe shall be a minimum of twelve inches (12") plus the outside diameter of the pipe barrel and a maximum of twenty-four inches (24") plus the outside diameter of the pipe barrel.

The bottom of the trench shall be accurately graded to provide a uniform bearing for each length of pipe for the full length of the pipe. If the native material on the trench bottom can be reasonably dug by hand, bell holes shall be dug for the joints so that the joints in no way support the pipe. When native materials such as rock are encountered during trenching that will not provide a uniform support for the pipe, the trench will be over-excavated an additional six inches (6") and suitable bedding material will be placed in the trench.

Bedding material will be placed by hand in four-inch (4") lifts and compacted to ensure uniform compaction and to eliminate any voids under the pipe. When the space between the pipe and trench bottom varies, this must be backfilled and compacted in four-inch (4") lifts to the mid-section of the pipe.

Whenever the trench is over-excavated for whatever reason, the trench bottom will be brought up to the correct depth at the Contractor's expense using either method (a) or (b) as follows:

a. A.B.C. material shall be used and compacted to a uniform density of not less than 80% of the maximum density as determined by AASHTO T-99 method A and T-191.

b. Native material 100% of which will pass through a one and one-half inch (1½") screen and at least 20% of which will pass through a number-8 screen shall be used and compacted to a uniform density of not less than 85% of the maximum density as determined by AASHTO T-99 method A and T-191.

4. MATERIALS TO BE PROVIDED BY CONTRACTOR

Unless otherwise specified on the Construction Drawings or in the Contract, the Contractor will supply all of the necessary materials which will become a permanent and integral part of the water distribution system, including concrete blocking, anchors, backfill material, paving material and supplies used during the prosecution of the work. All materials provided by the Contractor to construct the water distribution system must be NSF Standard 61 approved. All potable water pipes and fittings shall have NSF-PW seal. Construction materials used in the water system shall be lead free as defined at AAC R28-4-504 and R18-1-101. The Contractor will provide the following m aterials:

a. FIRE HYDRANTS: Mueller Super Centurion 250 Fire Hydrant, meets ANSI/AWWA C502 Standard, Model No. A-423, 5¼" main valve opening, three way, 6" Mechanical Joint Shoe, 1½" pentagon operating nut, color - yellow, drain open, open direction - left, 4' or 4'6" bury depending on application. For pumper and hose nozzle inform ation see below.

(1) 1 - 4" Pumper Nozzle, NST and 2 – 2½" Hose Nozzles, NST. (These locations only: Ajo, Casa Grande, Coolidge and San M anuel.)

(2) 1 – 4½" Pumper Nozzle, NST and 2 – 2½ " Hose Nozzles, NST. (These locations only: Apache Junction, Arizona City, Lakeside, Oracle, Overgaard, Pinewood, Rimrock, Sedona, Sierra Vista, White Tank and Winkelman.)

(3) 1 – 4½" Pumper Nozzle, NST and 2 – 2½" Hose Nozzles, NPT (Bisbee only.)

(4) 1 - 3" Pumper Nozzle GA 6-350 (6 threads per inch, 3.50 pitch diameter) and 2 – 2½" Hose Nozzles, NPT (Miami only.)

(5) 1 – 3½" Pumper Nozzle GA 6-411 (6 threads per inch, 4.11 pitch diameter) and 2 – 2½" Hose Nozzle, NST (Superior only.)

b. FITTINGS: Manufactured by Tyler or Union. Crosses, Elbows, Tees, Cap, Reducer, Adapter, Plug, Blind Flange and Tapped Flange; Ductile Iron, Class 350, SSB, Cast Iron Cement Lined.

(1) Foster Adaptors for MJ, made by Infact Corporation: Available in size 4" to 16". Part No. 4" = 4FA-BC, 6" = 6FA-BC, 8" = 8FA-BC, 10" = 10FA-BC, 12" = 12FA-BC, 16" = 16FA-BC.

c. DETECTOR CHECK VALVE: Mueller/ Hersey EDC III, iron body, including 5/8" x ¾" Trim Kit. Trim Kit Part No.: 4" = 282080, 6" = 282082, 8" = 282085, 10" = 282496.

d. GATE VALVES: Mueller Resilient Wedge Gate Valves, meets AWWA C509 specification, 250 psig, Non-rising stem, Part No. A-2360 sizes 4" through 12" ; Part No. A-2361 sizes 14" through 36", low zinc stems, epoxy coated inside and outside to meet the NSF 61 rating. The bonnet and stuffing box shall have 304 stainless steel bolts/nuts.

e. TRACER WIRE and WARNING TAPE:

1. TRACER WIRE: Shall be direct bury AWG #14 solid copper wire, Color: Blue.

2. WARNING TAPE: Reef Industries, Standard Terra Tape in 3" widths. Color: Blue and imprinted 'Arizona Water Company'.

f. AIR RELEASE VALVE: Crispin Model AR10 with 1" NPT inlet and ½" NPT outlet, cast iron body and top flange; with a 5/64" orifice with stainless steel valve sealing faces and BUNA-N rubber.

g. PRESSURE RELIEF VALVE: Watts 174A, Model M, 2" inlet, 2" outlet, Bronze Body, 30lb. to 150lb. pressure range.

h. MEGA LUG: Mechanical Joint restraint made of ductile iron conforming to ASTM 536-80, 250 psi made by EBAA Iron, Inc., series 1100 or equal.

i. METER BOXES:

(1) Concrete Box with a steel regular lid, Number 1: Tucson specification.

(2) Concrete Box with a steel regular lid, Number 2, 3, and 4: Phoenix specification.

j. PIPE, COPPER: Type K soft copper in 60 or 100-foot coils, per ASTM B88.

k. PIPE, DUCTILE IRON: Ductile Iron Pipe, Cement Lined, Push-on, conform to current ANSI/AWWA Specification A21.51/C151, Pressure Class 350 (sizes 4" through 12"), Pressure Class 250 (sizes 14" through 20"), or Pressure Class 200 for 24" through 36" pipe. Vendors:

(1) Pacific States Cast Iron Pipe Company
(2) Griffin Pipe
(3) United States Pipe and Foundry Company
(4) American Ductile Iron Pipe
(5) Clow Pipe (McWane, Inc.)

l. PIPE, PLASTIC: Plastic pipe, C-900 PVC per ANSI/AWWA C900, Class 150, sizes 6" through 12". NSF61 approved. Furnished in laying lengths of 20'. The barrel shall conform to the outside dimensions of steel pipe (IPS) or cast iron (CI) pipe equivalent and the wall thickness of dimension-ratio (DR) 18.

m. POLYETHYLENE ENCASEMENT (Polywrap): For all pipeline and related fittings installed, EXCEPT for the Coolidge Division. Minimum 8 Mil. and installed per AWWA C105/A21.5-93 and ASTM A-674-89. Manufactured by the Pacific States Cast Iron Pipe Company. The wrapping tape shall be minimum 10 mil. vinyl tape. No duct tape shall be used.

n. COUPLING: Mueller, straight three part union, tested to meet ANSI/AWWA C800, H15403, conductive com pression.

Mueller, H15428, straight coupling, conductive compression by male iron pipe, tested to meet ANSI/AWWA C800 specification. Size: 2".

Mueller, H15451, straight coupling, conductive compression by female iron pipe, tested to meet ANSI/AWWA C800 specification. Size: 2".

Viking Johnson brand, sold by Mueller: MaxiFit Straight (2"-24"), MaxiFitXtra Straight (4"-8") or MaxiStep Transition, tested to meet AWWA/ANSI C.219-91 specifications – certified to ISO 9001:1994 / Smith – Blair Quantum.

o. STOP, ANGLE METER, BALL: Mueller, valve, B24258, conductive compression by meter swivel nut, tested to meet ANSI/AWWA C800, size 5/8 " x ¾" x ¾" for a ¾" service or size 1" for a 1" service.

Mueller, valve, B24265, female pipe thread by meter swivel nut, tested to meet ANSI/AWWA C800, size 5/8" x ¾" x ¾" for a ¾" service or size 1" for a 1" service.

p. STOP, CORP: Mueller, ball valve, B25008, taper thread by conductive compression, tested to meet ANSI/AWWA C800 specification, sizes: ¾", 1" and 2".

Mueller, ball valve, B25028, iron pipe thread by conductive compression, tested to meet ANSI/AWWA C800 specification. Sizes ¾", 1", and 2".

Mueller, 300 Ball Curb Valve, B-25122, taper thread by conductive compression, tested to meet ANSI/AWWA C800 specifications, size: 2". (2" service)

q. STOP, CURB: Oriseal valve, H10291, iron pipe thread by iron pipe thread, quarter turn check, brass, tested to 300 psi working pressure, tested to meet ANSI/AWWA C800 specification, size: 2".

Mueller, B20283, Mueller 300 ball curb valve, female iron pipe by female iron pipe, quarter turn check, tested to meet ANSI/AWWA C800 specification. Size: 2". (Blow-off E-9-8-1).

r. TAPPING SADDLE: Smith Blair, Cast Bronze ASTM-B584 85-5-5-5, double strap, iron pipe threads, Models 321 and 323. Washers are silicon bronze, ASTM-B36. Gaskets are grade 60 Buna N, or Mueller bronze double strap service saddle, BR 2 B series, cast bronze, ASTM-B585, 85-5-5-5, or H16084, 200 psig, meets ANSI/AWWA C800.

s. TAPPING SLEEVE: Mueller H304 Stainless Steel Tapping Sleeve, JCM 432 18-8 Type 304 Stainless Steel Tapping Sleeve, Romac "SST" Type 304 Stainless Steel Tapping Sleeve or CASCADE-style CST-EX stainless steel pressure-rated tapping sleeve.

t. TAPPING VALVE: Mueller Resilient Wedge tapping valve, Catalog Number T-2360-16, Class 125, sizes 4" through 12"; T-2361-16, Class 125, sizes 14" to 36" all with Type 304 stainless steel fasteners; bypass valves are required on 18" – 36" valves flange by mechanical joint per ANSI/AWWA C111, iron wedge, non-rising stem. Epoxy coated interior/exterior per ANSI/AWWA C550 for NSF 61 compliance. 250 PSI range for valves 4" to 12". 150 PSI range for valves 14" to 36".

u. U-BRANCH: Mueller, H15364, 1" male iron pipe by ¾" male iron pipe, tested to meet ANSI/AWWA C800 specification. Size: 1" x ¾" x 13½", straight line.

v. VALVE BOXES: Valve Box with Cover, adjustable, Tyler 562-A or equal, made of cast iron.

w. VAULTS: Utility Vault Company, Chandler, AZ.

(1) 4484-WA concrete vault with a 3660 aluminum double torsion door with a recessed padlock hasp, two - 18" x 24" center knockouts.

(2) 575-WA concrete vault with a 4874 aluminum double torsion door with a recessed padlock hasp, two - 18" x 24" center knock outs and adjustable frame.

(3) 612-5X-WA concrete vault with a 4874 aluminum double torsion door with a recessed padlock hasp, two - 18" x 24" center knockouts.

x. VALVE, METER: Mueller, B24265-1, Mueller 300 ball angle meter valve, female iron pipe by meter nut, quarter turn check, lock wing, tested to meet ANSI/AWWA C800 specification. Size: 1".

Mueller, B25170, Mueller 300 ball straight valve, conductive compression by female iron pipe, quarter turn check, lock wing, tested to meet ANSI/AWWA C800 specification. Size: 1".

y. YOKES, METER: Relocator type copper meter yoke with horizontal inlet and outlet and meter thread ends, B24118, with lock wing Mueller 300 angle ball valve, full port, sizes: 1" x 12", 5/8" x ¾" x 7", 5/8 x ¾" x 9".

Mueller, 2" copper meter yoke with horizontal inlet and outlet and female iron pipe threads, B2423-99000, with lock wing Mueller 300 ball angle meter valves on inlet and outlet risers. Raised 1" by-pass with lock wing Mueller 300 ball valve.

The Contractor also will be required to provide the following materials, the cost of which will be included in its unit bid price:

All material and concrete for thrust blocks, other anchors, reinforcing steel; all gravel, crushed stone, A.B.C., earth, sand, or screened material which may be required; all material for bracing and shoring trenches and for construction of forms; all barricades and traffic control equipment; all material for paving replacement and any water used for compaction of backfill.

5. INSTALLATION OF MATERIALS

All materials are to be installed in accordance with manufacturers recommendations unless otherwise directed by these S pecifications.

All pipe, fittings and valves shall be laid true to the lines, grades and locations established by the Specifications and the Construction Drawings.

The ends and inside of the pipe shall be thoroughly cleaned and inspected for damage. No damaged materials shall be installed in the water distribution system .

Whenever the work ceases for any reason, all open pipeline ends shall be tightly plugged by the Contractor. Plugs shall be watertight and approved by the company.

Concrete thrust blocks of the sizes required by the plans and specifications are to be provided at all valves, changes in direction or size, or at any other point where an unbalanced thrust due to water pressure would exist. Thrust blocks are to be formed to prevent any concrete from spilling over or into a joint.

Trench curves as shown on the Construction Drawings may be made without fittings when using push on joint pipe up to twelve inches (12") in diameter, if the deflection of the pipe does not exceed five degrees (5°) or nineteen inches (19") per eighteen-foot (18') length of pipe. The minimum radius of such curves will be two hundred five feet (205').

Prior to construction, the appropriate agency(ies) will be notified as required by the permit(s).

It shall be the Contractor's responsibility to uncover all existing water lines being connected to, and to verify the location, depth and size of pipe befor e any construction begins.

Any construction performed without the knowledge of the duly authorized representative is liable for removal and replacem ent at the Contractor's expense.

All fire hydrants, frames, covers and valve boxes, etc. shall be adjusted to finished grade prior to the placing of the asphalt concrete surface course by the Contractor (where applicable).

Air release valves shall be installed at water system high points per Standard Detail E-9-8-2.

All water services shall be set a minimum of two feet (2') on the customer's property, preferably within the P.U.E. and not within right-of-way.

Unless otherwise specified on the construction drawings, all water mains shall be installed five feet (5') from the property line inside the right-of-way or easement.

Water valves shall be spaced not more than five hundred feet (500') in commercial districts and not more than eight hundred feet (800') in other districts. Variations may be required for transmission mains or special applications.

Installation of water line casing shall be per Standard Speci fication E-9-24-1.

Tracer Wire and Warning Tape are to be installed on all mains, tees, crosses, ells and fire hydrant laterals. They will not be installed on service lines. The tracer wire will be installed on the water main 45 degrees from the vertical centerline of the pipe and shall be taped to the fittings directly and on the main every 10 feet using a minimum 10 mil vinyl tape. The tracer wire shall be placed between the valve riser and box with a minimum of 12" of wire inside. The warning tape shall be installed a minimum of two feet below the surface, being measured from final grade, directly over the center of the pipe. Any splices in the tracer wire shall be joined using waterproof connectors. Any splices in the warning tape shall be joined using minimum 10 mil vinyl tape. The tracer wire shall be tested for continuity after backfill and compaction, but before paving. Any detected damages to the wire shall be repaired before paving will be allowed.

6. BACKFILL OF WATER MAIN TRENCHES

Backfill of any excavation shall conform to the requirements of any of the governmental agencies having jurisdiction over the location. If no governmental agency having such jurisdiction specifies backfill or compaction requirements, and no special requirements are shown on the Construction Drawings, the procedure set forth in this section will apply for water line trenches.

The bedding material above the pipe and backfill material shall be compacted to a minimum of 70% compaction within a utility easement and 80% compaction within a right-of-way as determined by AASHTO T-99 method A and T-191. If water settling is used for compaction, it is the responsibility of the Contractor to prevent the pipe from floating.

The bedding material shall be either native material, 100% of which will pass through a one and one-half inch (1½") screen and at least 20% of which will pass through a number-8 screen, or imported material which conforms to M.A.G. specifications for A.B.C. or type-B

select materials. Bedding material shall be used below and around the pipe and a minimum of twelve inches (12") above the pipe. Shade and bedding material to be mechanically compacted prior to remainder of trench back-fill.

The remainder of the trench shall be backfilled with native or imported material which shall be of sound earthen material free from broken concrete, wood, broken pavement, or other unsuitable substances. Except as otherwise specified, backfill may be material containing no pieces larger than six inches (6") in greatest dimension.

Where settlement occurs, additional backfill material shall be placed and compacted and the trench shall be brought to final grade.

7. HYDROSTATIC TESTING OF COMPLETED PIPELINES

Hydrostatic testing of water pipelines will be completed before the new system is connected into the existing water system so that all testing can be done against all new materials.

The completed section of water pipeline to be tested shall be slowly filled with water with care being taken to expel all air from the pipe. If necessary, the pipe will be tapped at high points to vent air.

The Contractor shall provide all equipment and labor necessary to accomplish this testing and the price shall be included in the unit prices. The Contractor shall notify the Company in advance of the testing so that the Company can schedule a duly authorized representative to be at the site during testing. The Contractor, at its own expense, shall make any necessary repairs to the system being tested in order to cause the section being tested to meet the test limits set below. The Contractor may request authorization of the Company to connect the new pipelines to the existing system prior to completion of pressure testing when, in the Company's sole opinion and judgment, conditi ons warrant such connection.

The Contractor shall assume all responsibility to complete pressure testing to Company's specifications after such connection, including, but not limited to, isolation of the new pipelines from the existing system, if necessary.

Connections prior to completion of pressure testing shall not be made unless prior Company authorization has been obtained, and any extra expenses resulting from such connections shall be the sole responsibi lity of the Contractor.

Leakage tests will be for a period of two hours at 200± 5 psi at the point of lowest elevation; leakage may not exceed 0.1 gallons per hour per one thousand feet (1,000') of pipe per inch of diameter. If dry utilities are not installed, a second pressure test is required.

8. STERILIZATION AND FLUSHING OF COMPLETED WATER PIPELINES

Sterilization and flushing will conform to recommendations of Arizona State Department of Health Services Engineering Bulletin Number 8, latest edition, or any future Arizona Department of Environmental Quality bulletins. Contractor to follow all conditions of any discharge permit.

9. NO OTHER UTILITIES ALLOWED IN OR NEAR WATER PIPELINE TRENCHES

No other utility installations will be permitted in the water pipeline trench or within five feet (5') of the Company's water pipeline when running parallel to the water pipelines.

10. PROTECTION OF WATER MAINS NEAR SEWERS

In order to protect water mains from contamination by sewers, the installation of the water mains must conform to the following requirements:

a. Horizontal - When water lines and sewers are laid parallel with each other, the horizontal distance between them shall not be less than six feet (6'). Each line shall be laid on undisturbed or bedded material in a separate trench. Where conditions prevent the minimum horizontal separation set forth above, extra protection will be required. Extra protection shall consist of constructing the sewer main with mechanical joint ductile iron pipe or with slip-joint ductile iron pipe if joint restraint is provided, or encasing the sewer main in concrete. Extra protection shall consist of constructing the water main with mechanical joint ductile iron pipe or with slip-joint ductile pipe if joint restraint is provided. The water main shall not be encased in concrete.

The Construction Drawings shall indicate the installation requirements. The drawings showing these exceptions shall have been approved by the appropriate state and/or county health department. Refer to the diagram below for clarification.

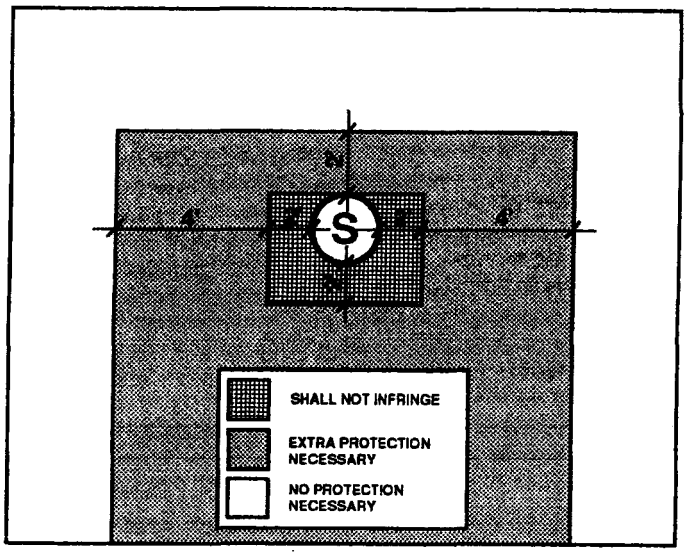

Under no circumstances will the horizontal separation between sewer mains and water mains be less than two feet (2'). All distances are to be measured from the outside of the sewer main to the outside of the water main.

b. Vertical - When a water main is parallel with or crosses a sewer main within two feet (2') above the sewer or greater than two feet (2') below the sewer, extra protection will be required. Extra protection shall consist of constructing the sewer main with mechanical joint ductile iron pipe or with slip-joint ductile iron pipe if joint restraint is provided, or encasing the sewer main in concrete. Extra protection shall consist of constructing the water main with mechanical joint ductile iron pipe or with slip-joint ductile pipe if joint restraint is provided. The water main shall not be encased in concrete.

The Construction Drawings shall indicate the installation requirements. The drawings showing these exceptions shall have been approved by the appropriate state and/or county health department.

Under no circumstances will the vertical separation of a sewer main installed above a water main be less than two feet (2'). All distances are to be measured from the outside of the sewer main to the outside of the water main. Refer to the diagram above for clarification.

c. When unusual conditions such as, but not limited to, highway or bridge crossings prevent the water and sewer main separations required from being met, the appropriate state and/or county health department will review and may approve requests for authorization to use alternate construction techniques, materials and joints on a case-by-case basis.

d. No water pipe shall pass through or come into contact with any part of a sewer manhole. The minimum horizontal separation between water mains and manholes shall be six feet (6'), measured from the center of the manhole.

e. The minimum separation between force mains or pressure sewers and water mains shall be two feet (2') vertically and six feet (6') horizontally under all conditions. Where a sewer force main crosses above, or less than six feet (6') below, a water line, the sewer main shall be encased in at least six inches (6") of concrete for ten feet (10') on either side of the water main. Refer to the diagram below for clarification.

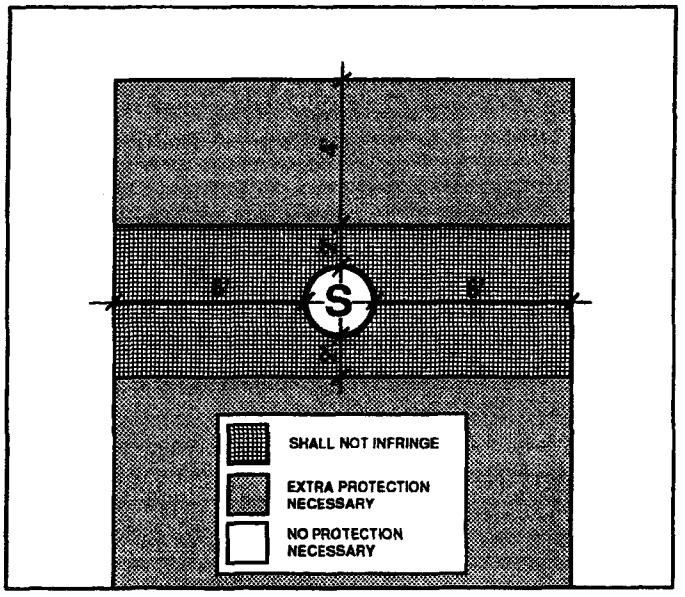

f. Sewer mains (gravity, pressure, force) shall be kept a minimum of fifty feet (50') from drinking water wells, unless the following conditions are met:

1. Water main pipe, pressure tested in place to 50 psi without excessive leakage, may be used for gravity sewers at distances greater than twenty feet (20') from drinking water wells.

2. Water main pipe, pressure tested in place to 150 psi without excessive leakage, may be used for pressure sewers and force mains at distances greater than twenty feet (20') from drinking water wells.

g. No septic tank/disposal field system shall be constructed within one hundred feet (100') of a drinking water well.

h. All distances are measured perpendicularly from the outside of the sewer main to the outside of the water main. These separation requirements do not apply to building, plumbing or individual house service connections.

i. Use Mechanical Joint ductile iron pipe with Megalug thrust restraints a minimum of ten (10') feet on each side of a sewer or storm drain crossing.

11. COMPACTION

When crossing existing water mains a minimum of 95% compaction is required to the bottom of existing mains.

Arizona Water Company requires that no slurry be permitted to contact existing cement/asbestos or ductile iron pipes, unless authorized by the company. Slurry may be poured in the bottom of the sewer trench stopping three inches (3") below the existing water main. The backfill used around the main should be AB in sufficient depth to prevent slurry from contacting existing main.

12. WATER MAIN MATERIAL SPECIFICATIONS

Ductile iron pipe (Push-on type) minimum class 350, cement lined and conform to AWWA C151.

All main line valves shall conform to AWWA C500 with a minimum working pressure of 200 psi.

All cast iron fittings to be cement lined in accordance with AWWA C104 and shall conform to AWWA C110 with a minimum working pressure of 250 psi. Except for the Coolidge System – See Note 4L.

Maximum joint deflection for 6" mechanical joint ductile iron pipe is seven degrees, seven minutes (7°, 7') or twenty-seven inches (27") per eighteen-foot (18') length pipe, for a maximum curve of one hundred forty-five feet (145').
Maximum joint deflection for 8" and 12" mechanical joint ductile iron pipe is five degrees, twenty-one minutes (5° 21') or twenty inches (20") per eighteen-foot (18') length pipe, for a maximum curve of one hundred ninety-five feet (195').

Maximum joint deflection for 6", 8" and 12" push-on joint ductile iron pipe is five degrees (5°) or nineteen inches (19") per eighteen-foot (18') length pipe for a maximum curve of two hundred five feet (205').

ARIZONA WATER COMPANY

STANDARD SPECIFICATION DRAWINGS: E-9-1

ARIZONA WATER COMPANY

STANDARD SPECIFICATION DRAWINGS

INDEX (E-9)

E-9-1	TYPICAL GATE VALVE LOCATIONS
E-9-2	INSTALLATION OF TYPICAL VERTICAL AND HORIZONTAL GATE VALVES
E-9-3	INSTALLATION OF TYPICAL TAPPING SLEEVE AND VALVE
E-9-4	INSTALLATION OF TYPICAL VALVE SUBJECT TO NON-VEHICULAR AND VEHICULAR TRAFFIC
E-9-5	INSTALLATION OF TYPICAL THRUST BLOCKING SCHEDULE, THRUST BLOCK FOR VERTICAL BENDS, AND MEGALUG THRUST RESTRAINTS
E-9-6	INSTALLATION OF TYPICAL PERPENDICULAR FIRE HYDRANT
E-9-7	INSTALLATION OF TYPICAL PARALLEL FIRE HYDRANT
E-9-8	INSTALLATION OF TYPICAL 2" BLOWOFF DEVICE, AND AIR RELEASE VALVE
E-9-9	INSTALLATION OF TYPICAL SINGLE SERVICE CONNECTION FOR A $^3/_4$" OR 1" METER
E-9-10	INSTALLATION OF TYPICAL DOUBLE SERVICE CONNECTION FOR A $^3/_4$" AND 1" METER
E-9-11	INSTALLATION OF TYPICAL 2" SERVICE CONNECTION
E-9-12	INSTALLATION OF 3" COMPOUND METER, 4" COMPOUND METER, 6" COMPOUND METER, 6" COMPOUND SERVICE, CONCRETE VAULT, AND NON-POTABLE PROPELLER METER
E-9-13	INSTALLATION OF TYPICAL 4" THRU 8" DETECTOR CHECK VALVES AND 3" THRU 10" REDUCED PRESSURE PRINCIPLE DETECTOR WITH BYPASS METER ASSEMBLY (RPDA) FOR FIRE LINE SERVICES
E-9-14	INSTALLATION OF TYPICAL PRESSURE RELIEF VALVE ASSEMBLY
E-9-15	INSTALLATION OF TYPICAL PRESSURE REDUCING STATION
E-9-16	PAINT COLOR SELECTION
E-9-17	STEEL WATER STORAGE TANK
E-9-18	HYDROPNEUMATIC TANK
E-9-19	INSTALLATION OF WELL SHELTER

E-9-20	INSTALLATION OF TYPICAL WELL WITH LINE SHAFT TURBINE PUMP
E-9-21	INSTALLATION OF TYPICAL WELL WITH SUBMERSIBLE TURBINE PUMP
E-9-22	INSTALLATION OF COLUMN PIPE, OIL TUBE AND LINE SHAFT
E-9-23	HOT TAP AND JUMPER METER CONNECTION
E-9-24	INSTALLATION OF TYPICAL WATER LINE ENCASEMENT
E-9-25	INSTALLATION OF CALCIUM HYPOCHLORITE TABLET CHLORINATOR
E-9-26	INSTALLATION OF CHAIN LINK FENCE
E-9-27	INSTALLATION OF SIDE HUNG WATER LINE SUSPENSION
E-9-28	PIPE WARNING TAPE, LOCATOR WIRE, AND LOCATOR WIRE TERMINATION
E-9-29	INSTALLATION OF A TYPICAL SAMPLING STATION

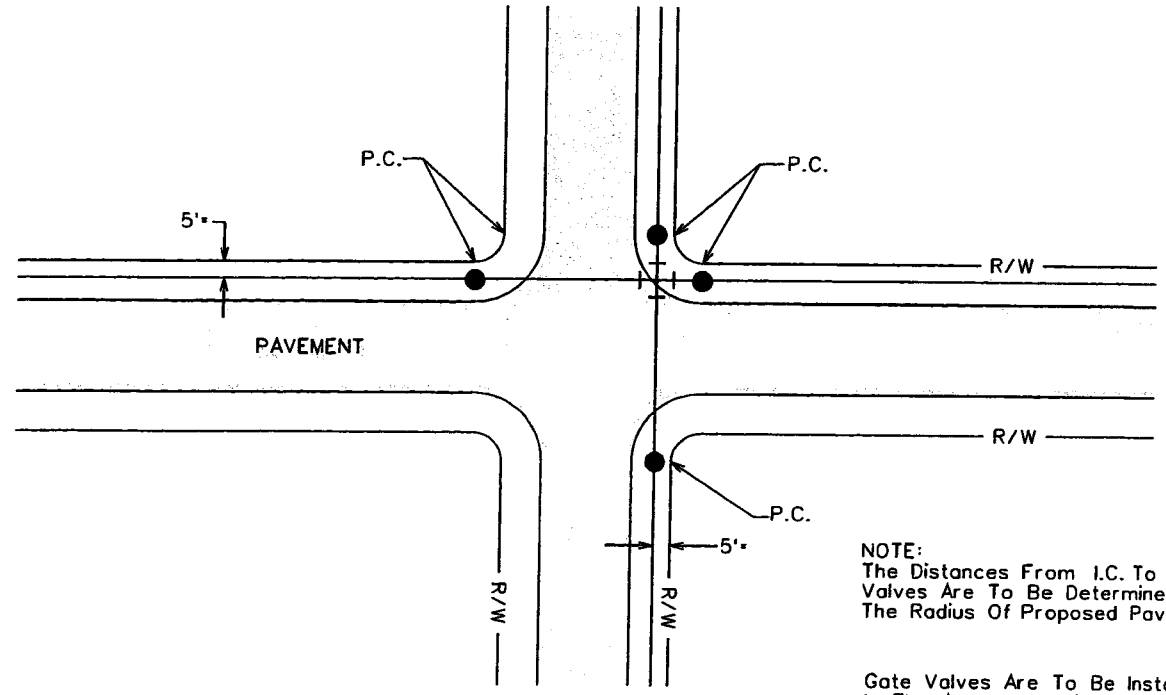

NOTE:
The Distances From I.C. To Gate Valves Are To Be Determined By The Radius Of Proposed Pavement.

Gate Valves Are To Be Installed In The Above Locations In Such A Manner That They Will Not Be Covered By Paving, Sidewalks, Or Curbs

*Location of water mains from the property line may require alteration for co-ordination with curb, sidewalk, or paving requirements. Variations are to be approved by the A.W.Co. Engineering dept.

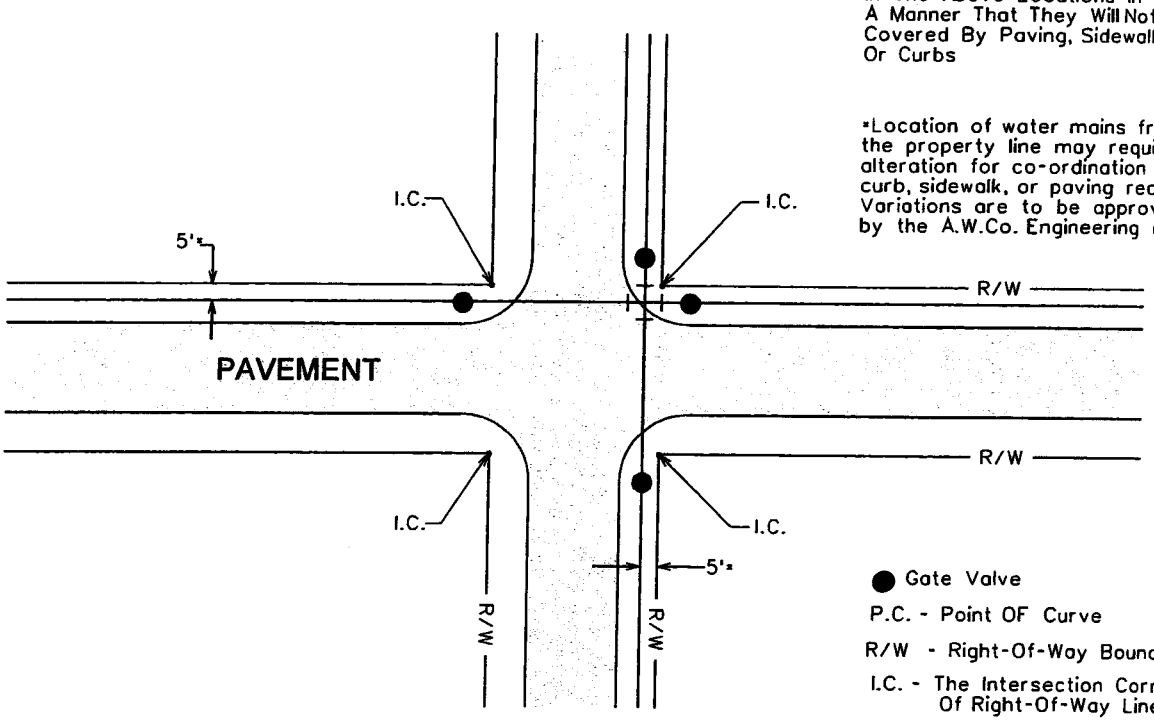

● Gate Valve

P.C. - Point OF Curve

R/W - Right-Of-Way Boundary

I.C. - The Intersection Corner Of Right-Of-Way Lines

ARIZONA WATER COMPANY

STANDARD SPECIFICATION
FOR THE INSTALLATION OF

TYPICAL GATE VALVE LOCATIONS

DRAWN BY:	APPROVED BY:	DATE:	△	
CCO	M.W.	3/20/86	1/31/2001	E-9-1-1

FOR 6" THROUGH 12" GATE VALVES

Mueller Resiliant Wedge Gate Valves
Catalog Number A-2360-__
ANSI/AWWA C509 Compliant

FOR 14" THROUGH 16" GATE VALVES

Mueller Resiliant Wedge Gate Valves
Catalog Number A-2361-__
ANSI/AWWA C509 Compliant

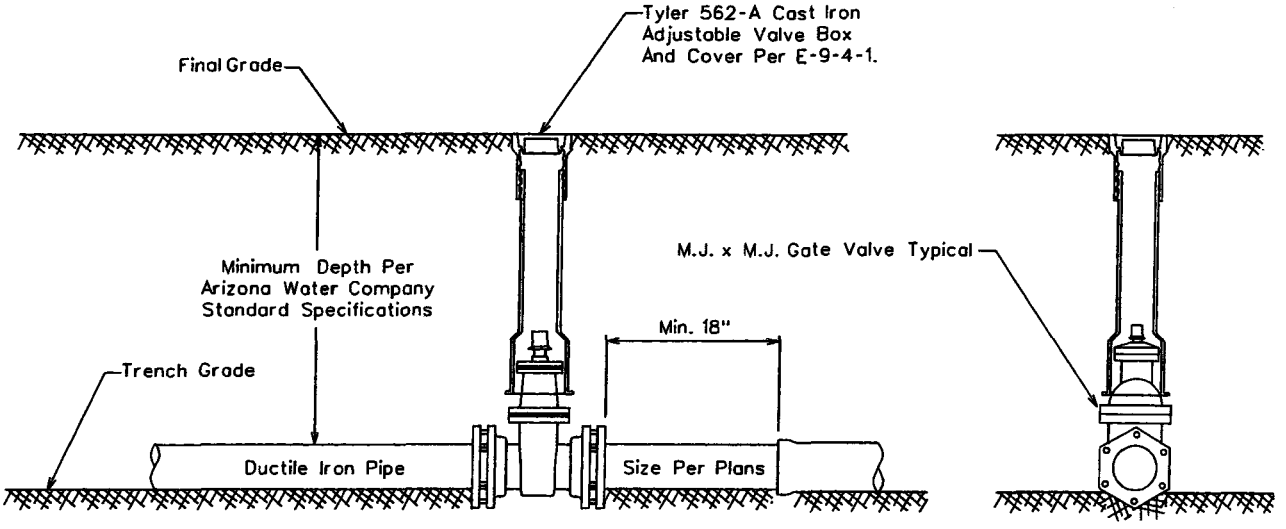

All Valves Installed On Pipe Five Feet (5') Deep And Greater Are To Be Installed With A Valve Operator Extension, Mueller Catalog No. A-26441.

ARIZONA WATER COMPANY

STANDARD SPECIFICATION
FOR THE INSTALLATION OF

TYPICAL VERTICAL GATE VALVES

DRAWN BY:	APPROVED BY:	DATE:	△	
CB	MW	03.20.1986	08.23.2006	E-9-2-1

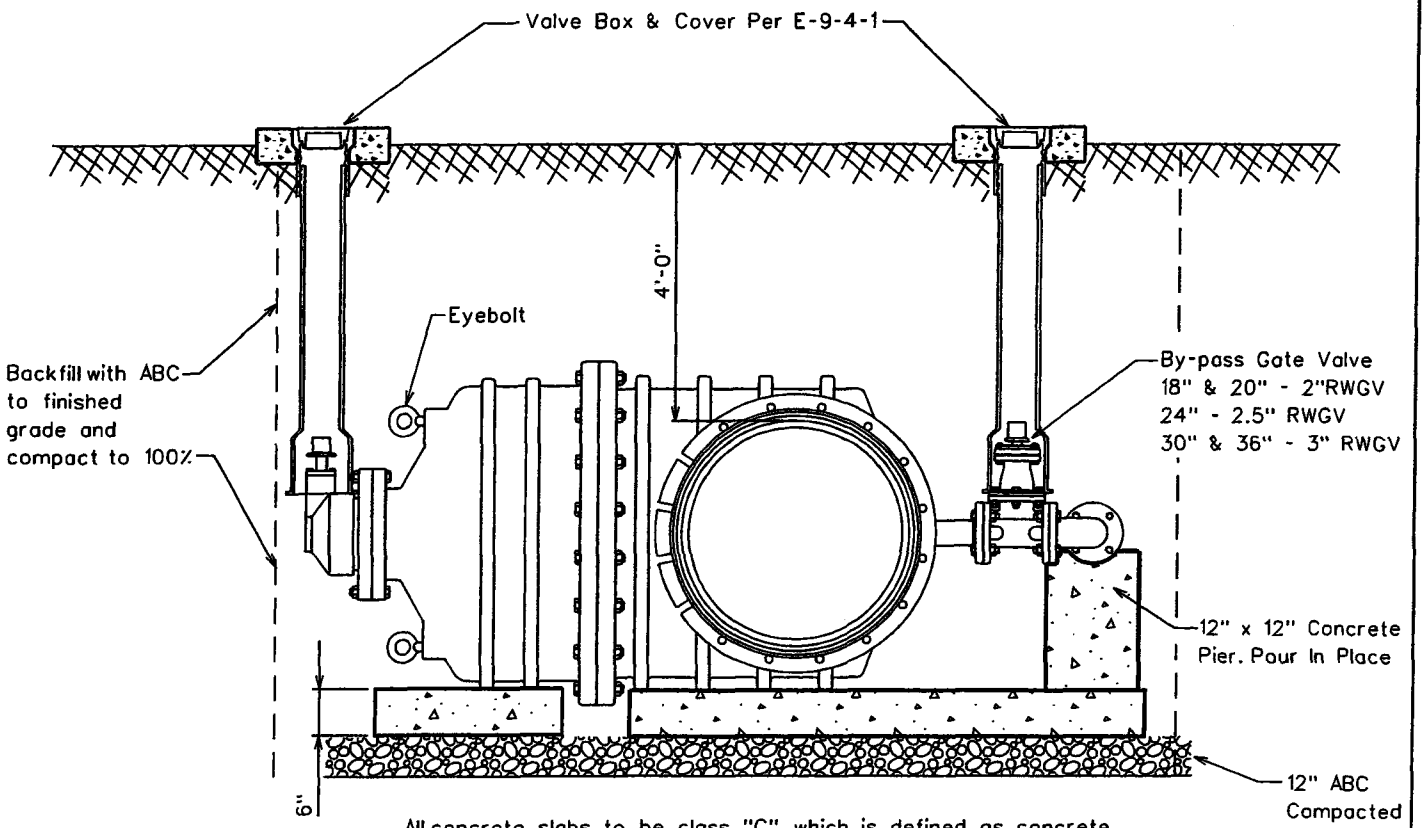

All concrete slabs to be class "C", which is defined as concrete whose minimum compressive strength at 14 days reaches 1600psi and at 28 days reaches 2000psi. per MAG Section 725, Table 725-1. Slabs to be formed and poured prior to valve installation.

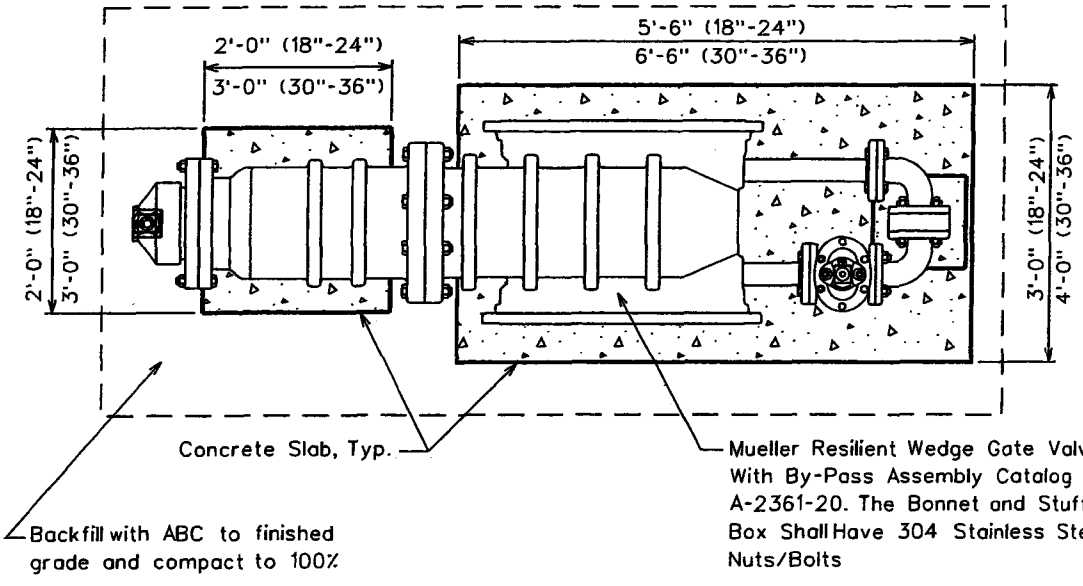

All valves installed on pipe five feet and greater are to be installed with a valve operator extension Mueller catalog No.A-26441 The distance is measured from the top of the operating nut to final grade.

ARIZONA WATER COMPANY

STANDARD SPECIFICATION

FOR THE INSTALLATION OF

INSTALLATION OF BEVEL GEARED HORIZONTAL GATE VALVES WITH BY-PASS FOR 18" AND LARGER VALVES

DRAWN BY:	APPROVED BY:	DATE:	△	
CB		12.07.2004		E-9-2-2

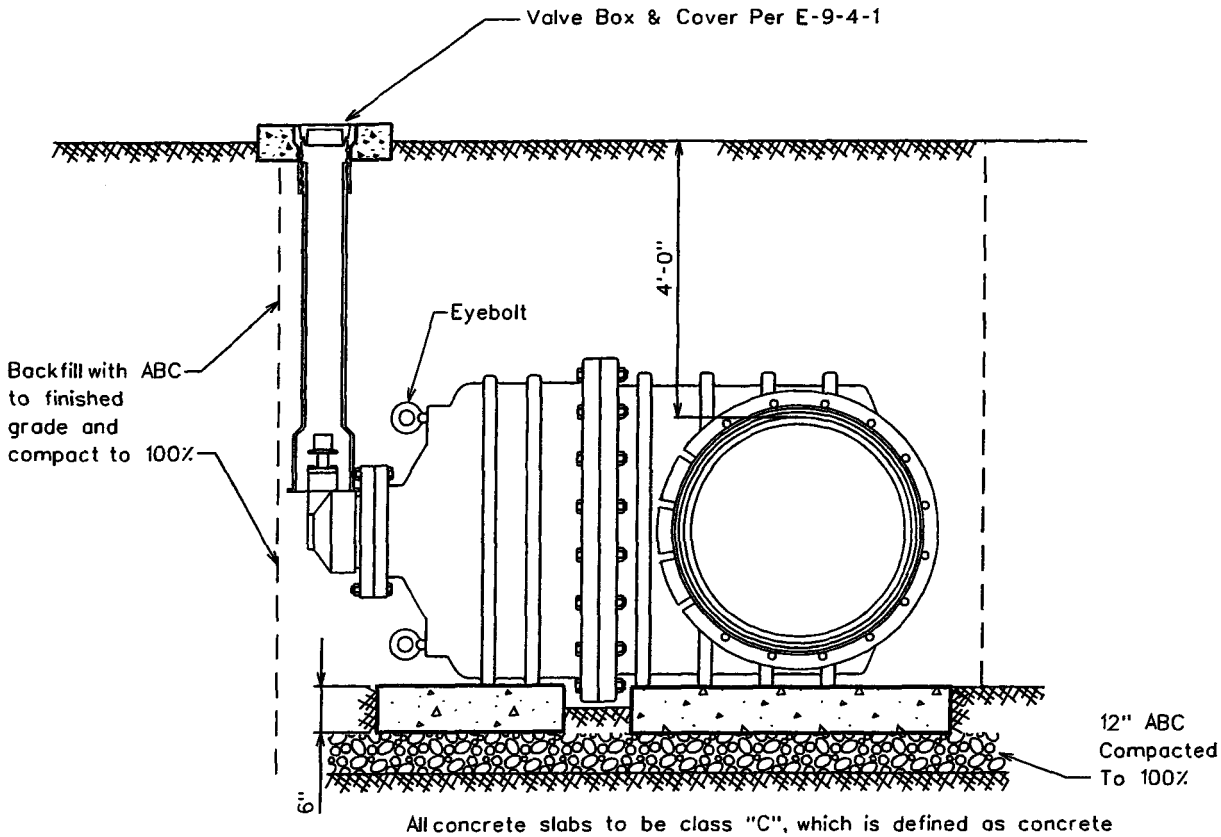

All concrete slabs to be class "C", which is defined as concrete whose minimum compressive strength at 14 days reaches 1600psi and at 28 days reaches 2000psi. per MAG Section 725, Table 725-1. Slabs to be formed and poured prior to valve installation.

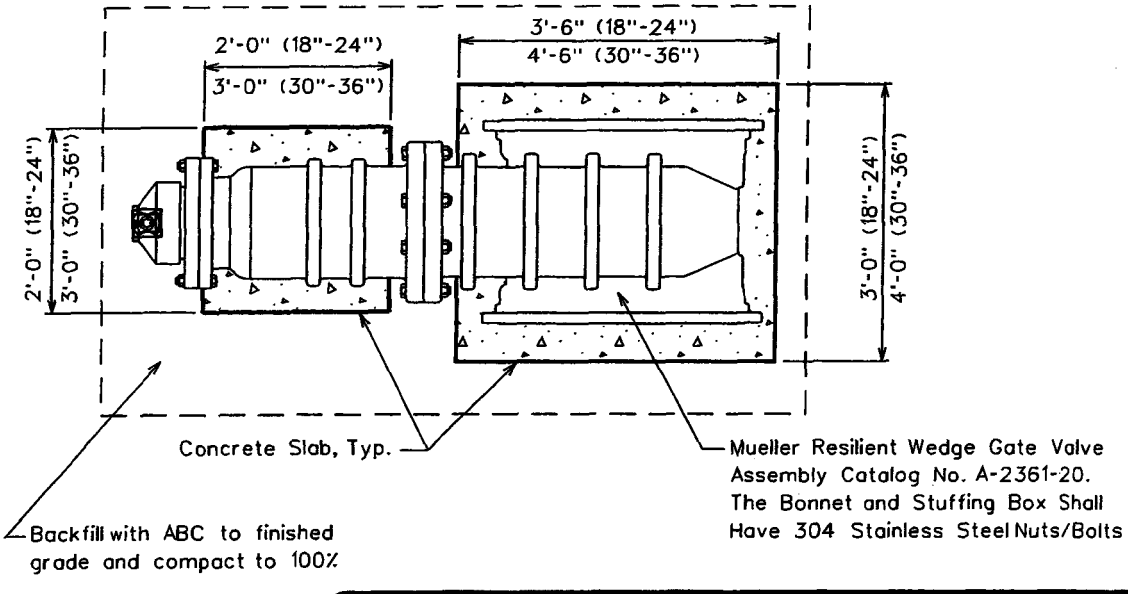

All valves installed on pipe five feet and greater are to be installed with a valve operator extension Mueller catalog No.A-26441 The distance is measured from the top of the operating nut to final grade.

ARIZONA WATER COMPANY

STANDARD SPECIFICATION

FOR THE INSTALLATION OF

INSTALLATION OF BEVEL GEARED HORIZONTAL GATE VALVES WITHOUT A BY-PASS FOR 18" AND LARGER VALVES

DRAWN BY:	APPROVED BY:	DATE:	△	
CB		12.07.2004	5.13.2005	E-9-2-3

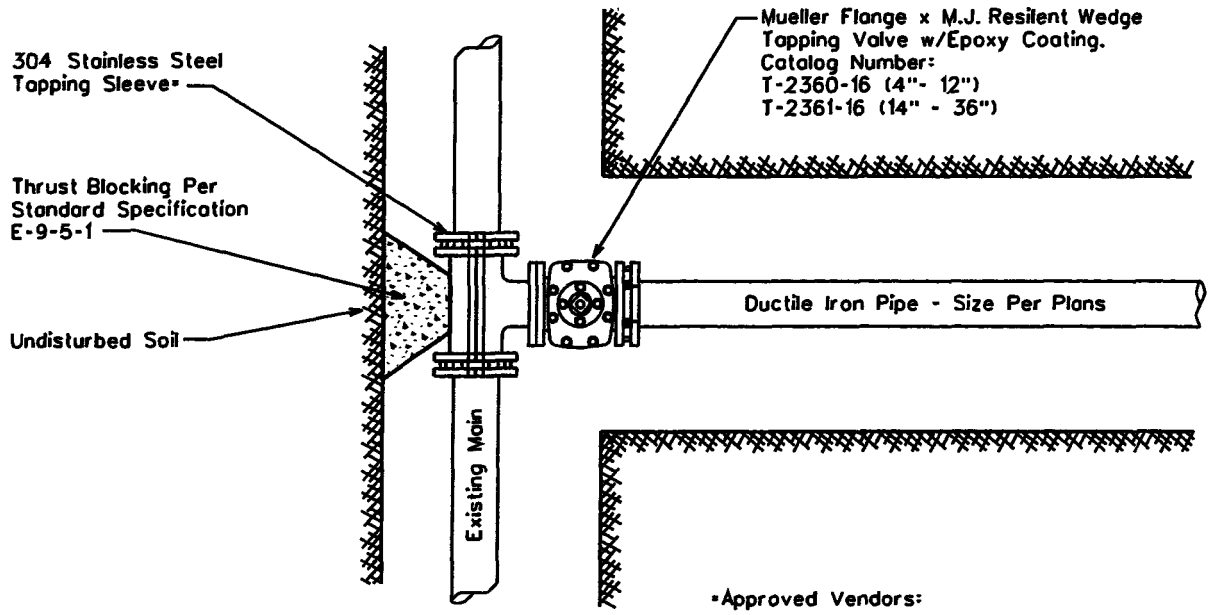

*Approved Vendors:

Mueller, Catalog No. H304, 304 Stainless Steel

JCM, Model 432, 304 Stainless Steel

Romac, 'SST', 304 Stainless Steel

Cascade, 'CST-EX', 304 Stainless Steel

NOTE:

1. All flanges, bolts, and nuts shall be kept free of concrete.
2. Air pressure test the tapping sleeve before the live tap is made.
3. Polywrap all new fittings

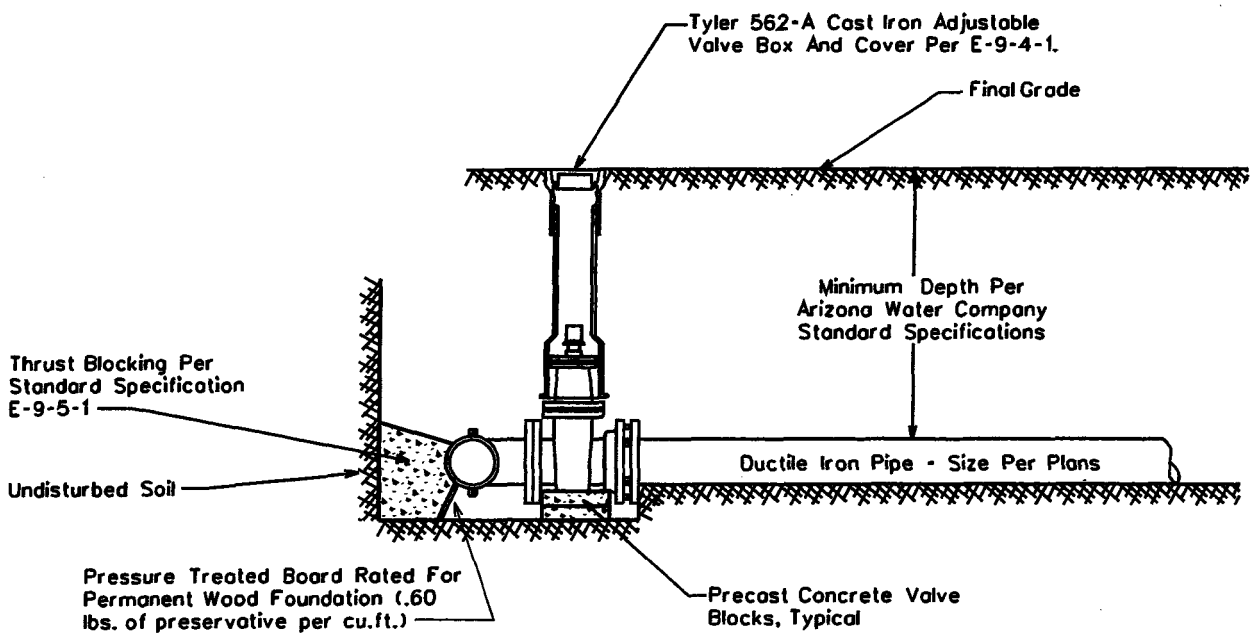

ARIZONA WATER COMPANY

STANDARD SPECIFICATION

FOR THE INSTALLATION OF

TYPICAL TAPPING SLEEVE AND VALVE

DRAWN BY:	APPROVED BY:	DATE:	△	
CB	MW	03.20.1986	△ 08.23.2006	E-9-3-1

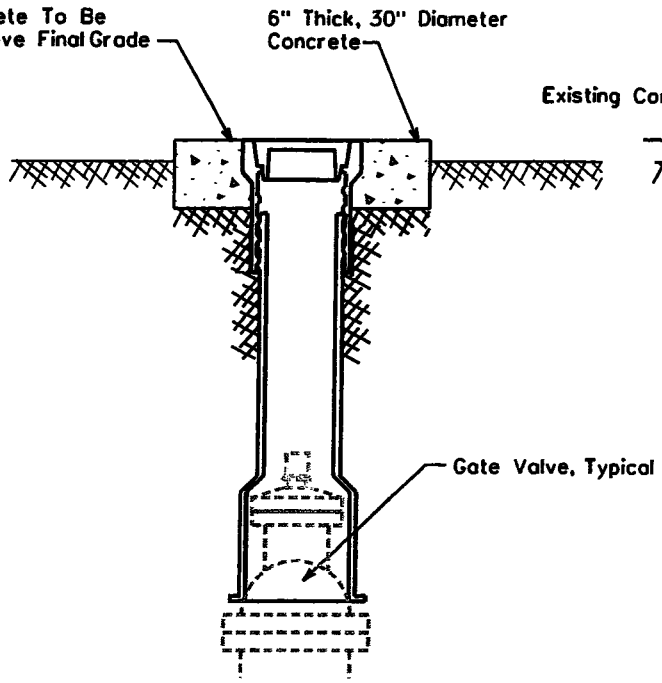

NON-VEHICULAR VALVE BOX

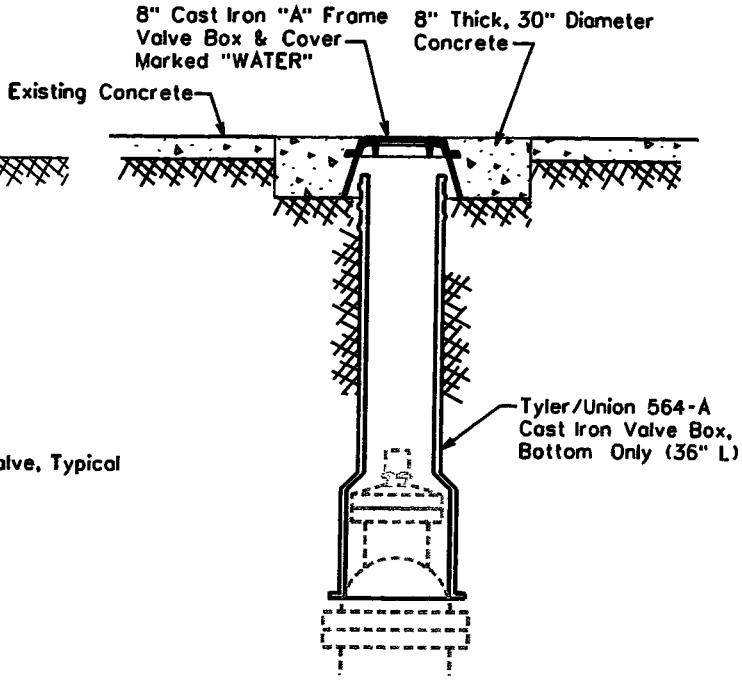

CONCRETE VALVE BOX

For Areas Subject To Vehicular Traffic

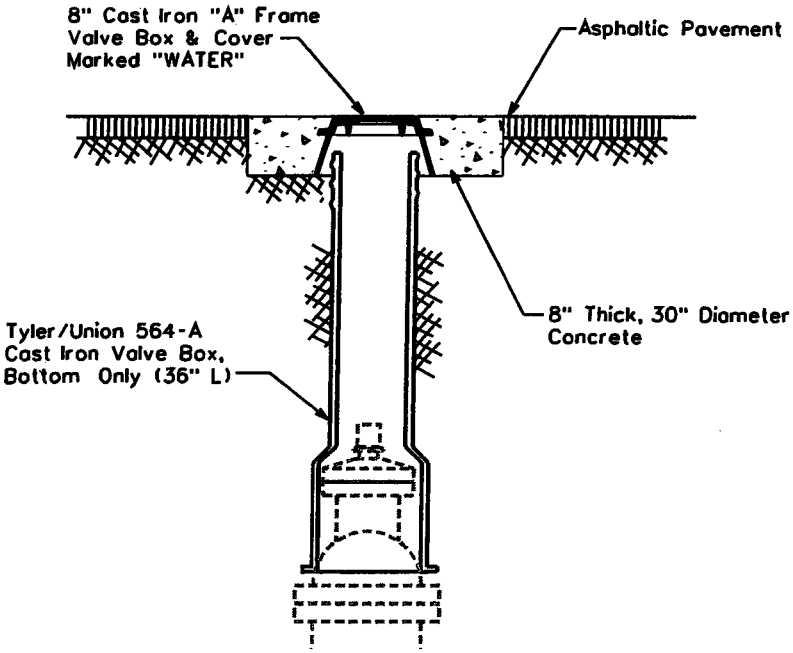

ASPHALT VALVE BOX

For Areas Subject To Vehicular Traffic

NOTE:

1. The Valve Box Shall Be Adjusted To Finished Grade Prior To Placing Of Asphalt And/Or Concrete.
2. For Non-Traffic Areas Use Tyler/Union 562-A, Two-Piece, 6855 Series Or Equivalent Adjustable Cast Iron Valve Box And Cover. Valves 4" To 12"

   For Traffic Areas, Use Tyler/Union 564-A Bottom Section Only With An 8" Cast Iron "A" Frame With Cover. Valves 4" To 12"
3. All Valves Installed Five Feet (5') Deep And Greater Are To Be Installed With A Valve Operator Extension, Mueller Catalog No. A-26441 And Shall Have A Debris Cap
4. Use Minimum Class 'C' Concrete which is defined as concrete whose minimum compressive strength at 14 days reaches 1600psi and at 28 days reaches 2000psi. per MAG Section 725, Table 725-1.

ARIZONA WATER COMPANY

STANDARD SPECIFICATION

FOR THE INSTALLATION OF

TYPICAL VALVE SUBJECT TO NON-VEHICULAR AND VEHICULAR TRAFFIC

DRAWN BY:	APPROVED BY:	DATE:	△ 8.24.2006	
CB	MW	03.20.1986		E-9-4-1

CROSSES

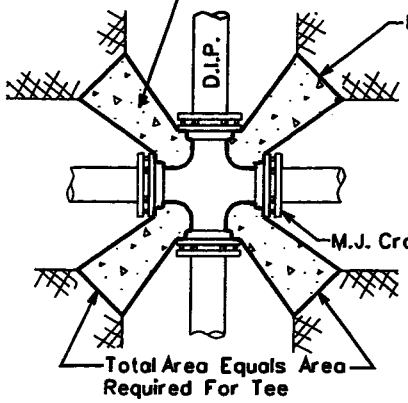

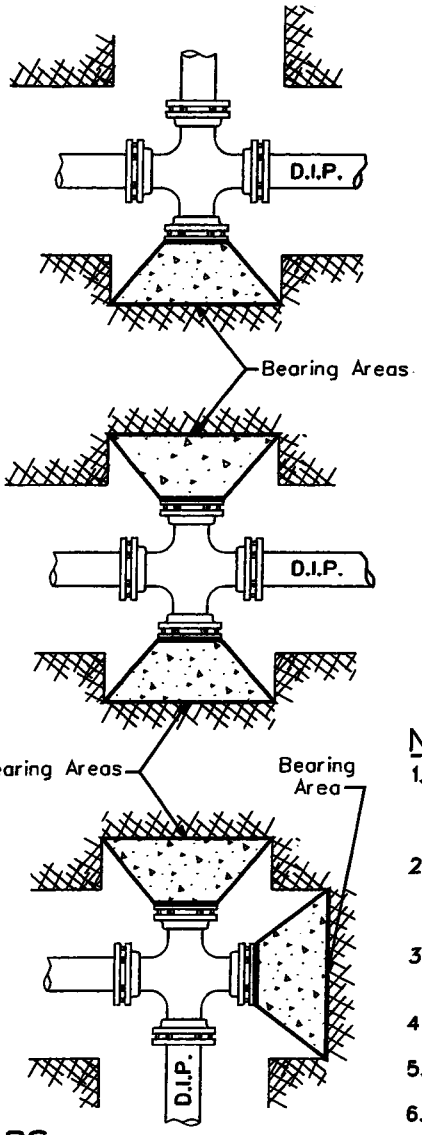

TEES

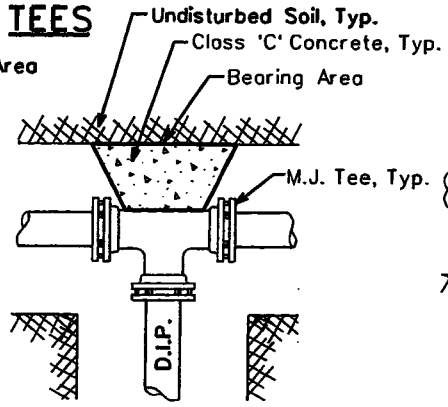

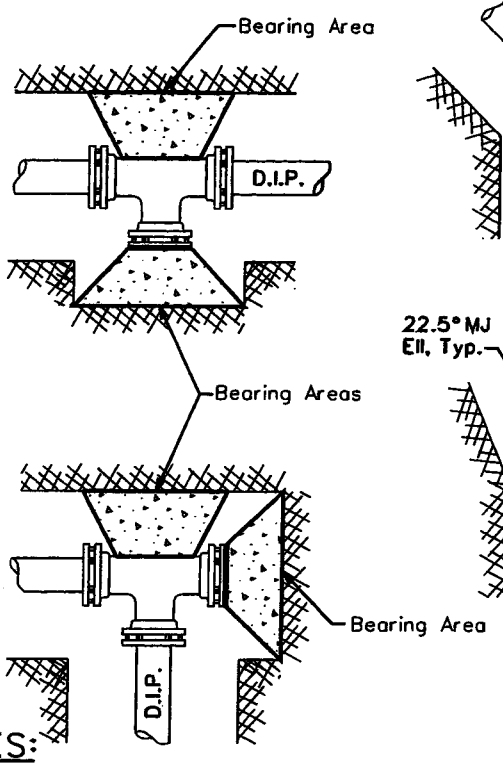

ELLS

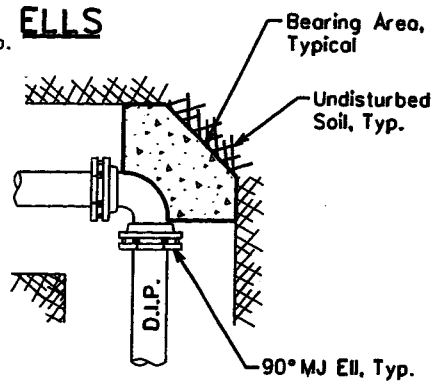

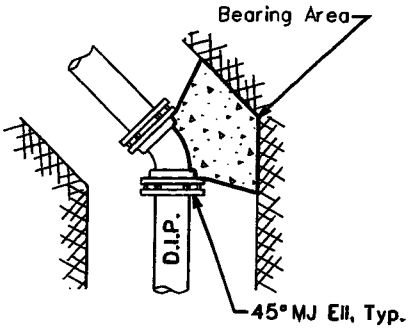

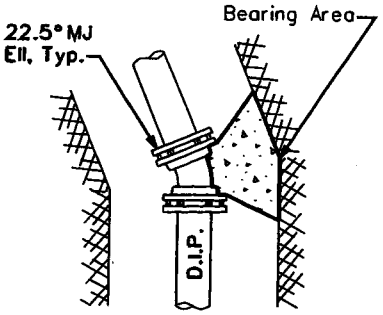

CROSS SECTION

TYPICAL

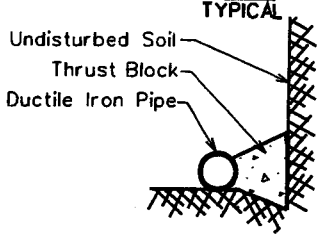

NOTES:

1. Use minimum Class 'C' concrete, which is defined as concrete whose minimum compressive strength at 14 days reaches 1600psi and at 28 days reaches 2000psi. per MAG Section 725, Table 725-1.
2. Thrust blocks are to bear on undisturbed earth with minimum bearing area as shown. If not undisturbed, areas will be increased as required.
3. Place the pressure treated form board in front of all plugs before pouring thrust blocks.
4. Form all non-bearing areas to prevent any concrete from entering any joint.
5. All flanges, bolts and nuts shall be kept free of concrete.
6. Center the bearing area on the pipe centerline and force line.
7. All pipe fittings to be wrapped with polyethylene pipe wrap prior to thrust block installation. (where applicable)

THRUST BLOCK SCHEDULE

PIPE SIZE	TEE, 45°, AND 22.5° ELLS, & PLUGS	90° ELLS
6" And Under	4 Sq.Ft.	6 Sq.Ft.
8"	6 Sq.Ft.	9 Sq.Ft.
12"	13 Sq.Ft.	20 Sq.Ft.
16"	23 Sq.Ft.	32 Sq.Ft.
18" And Larger	Calculated Per Project	

CAPS

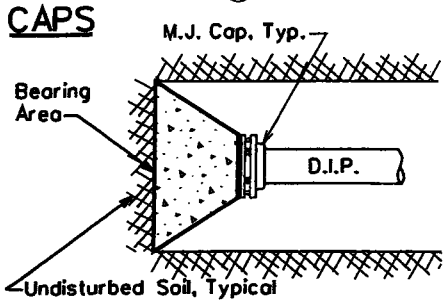

STANDARD SPECIFICATION

FOR THE INSTALLATION OF

TYPICAL THRUST BLOCKING SCHEDULE

DRAWN BY:	APPROVED BY:	DATE:	△	
CB	MW	03.20.1986	05.27.2005	E-9-5-1

NOTES

1. Bars In Conc. Thrust Block To Be Coated w/ 2 Coats Coal Tar Epoxy or by Other Approved Method.

2. Bars To Have 90° Hook @ Their Ends, As Per Table Below.

Pipe Size	Min. Bar Size	"A" Dimension (Hook)	* Min. Block Dimension (WxHxL)
6"	#6	6"	3'x3'x3'
8"	#6	9"	4'x3'x4'
12"	#8	9"	5'x4'x5'
16"	#9	12"	7'x6'x7'

* For 125 P.S.I. Working Pressure

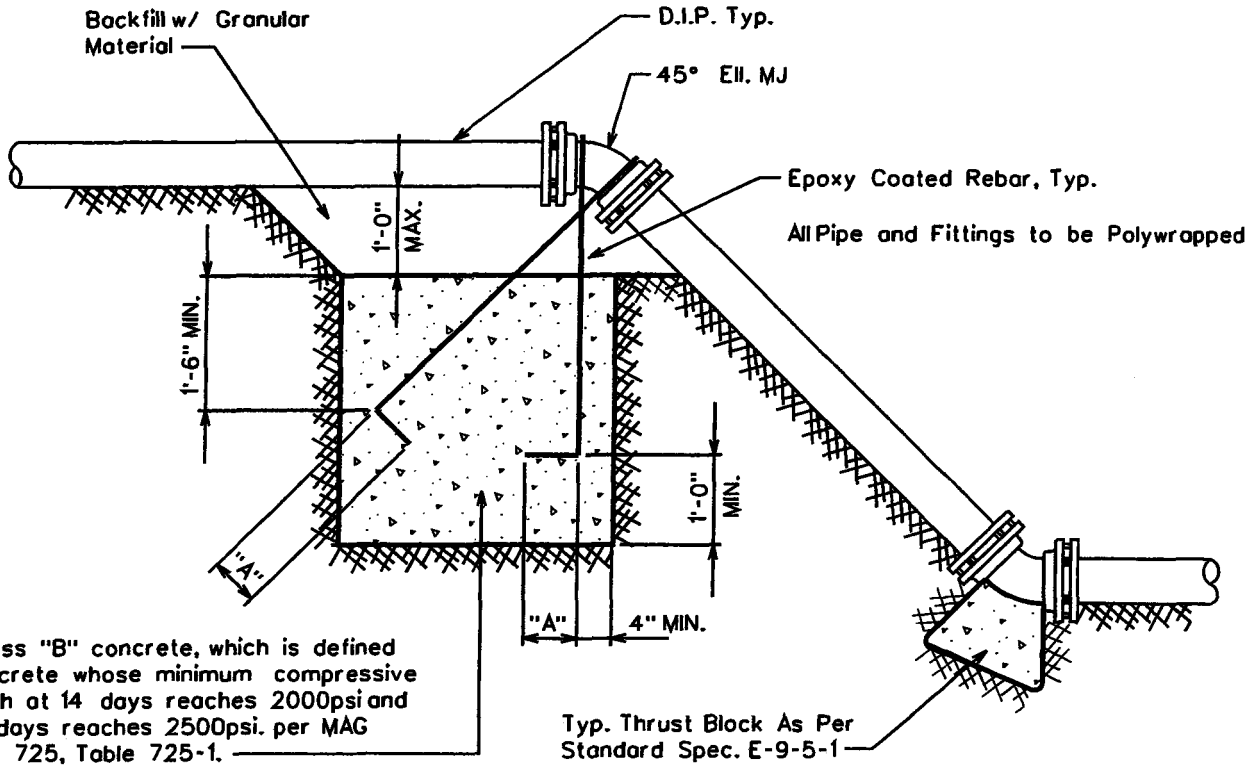

ARIZONA WATER COMPANY

STANDARD SPECIFICATION
FOR THE INSTALLATION OF

THRUST BLOCK FOR VERTICAL BENDS

DRAWN BY:	APPROVED BY:	DATE:	△ 01.16.2007	E-9-5-2
JPK	MJW	7-5-96		

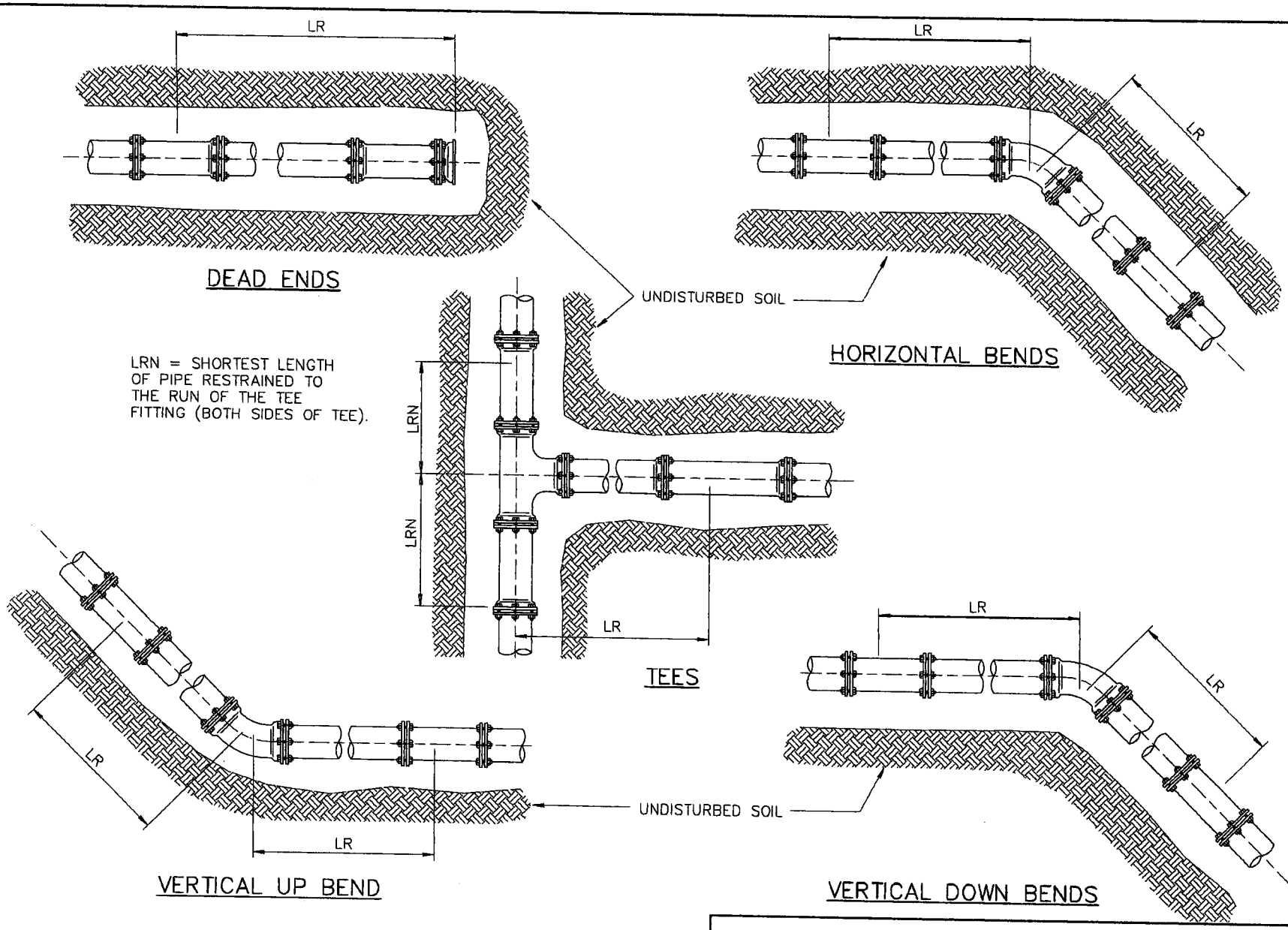

ARIZONA WATER COMPANY

STANDARD SPECIFICATION FOR THE INSTALLATION OF				
JOINT RESTRAINT FOR NEW DUCTILE IRON AND C-900 PVC MAINS				
DRAWN BY: CB	APPROVED BY: MW	DATE: 01.16.2007	△	E-9-5-3-1

RESTRAINED LENGTHS, LR, FOR DUCTILE IRON PIPE

NOMINAL PIPE SIZE INCHES	HORIZONTAL BENDS			TEES		VERTICAL OFFSETS						DEAD ENDS
						90° BEND FITTINGS		45° BEND FITTINGS		22-1/2° BEND FITTINGS		
	90°	45°	22-1/2°	LRN=0'	LRN=10'	DOWN BEND	UP BEND	DOWN BEND	UP BEND	DOWN BEND	UP BEND	
4	18	7	4	30	8	31	18	13	7	6	3	31
6	25	10	5	43	20	44	25	18	10	9	5	44
8	32	13	6	56	34	58	32	24	13	11	6	58
10	38	16	8	68	45	69	38	29	16	14	8	69
12	45	19	9	80	57	81	45	34	19	16	9	81
14	51	21	10	91	68	92	51	38	21	18	10	92
16	57	24	11	103	79	104	57	43	24	21	11	104
18	62	26	12	113	90	115	62	48	26	23	12	115
20	68	28	14	125	100	126	68	52	28	25	14	126
24	79	33	16	145	121	147	79	61	33	29	16	147

RESTRAINED LENGTHS, LR, FOR DUCTILE IRON PIPE WITH POLYETHYLENE WRAP

NOMINAL PIPE SIZE INCHES	HORIZONTAL BENDS			TEES		VERTICAL OFFSETS						DEAD ENDS
						90° BEND FITTINGS		45° BEND FITTINGS		22-1/2° BEND FITTINGS		
	90°	45°	22-1/2°	LRN=0'	LRN=10'	DOWN BEND	UP BEND	DOWN BEND	UP BEND	DOWN BEND	UP BEND	
4	26	11	5	69	18	72	26	30	11	14	5	72
6	36	15	7	99	47	102	36	42	15	20	7	102
8	47	19	9	130	78	133	47	55	19	26	9	133
10	56	23	11	157	103	159	56	66	23	32	11	159
12	65	27	13	185	131	187	65	77	27	37	13	187
14	74	31	15	211	156	214	74	89	31	42	15	214
16	82	34	16	238	183	241	82	100	34	48	16	241
18	90	37	18	263	207	266	90	110	38	53	18	266
20	98	41	20	289	233	292	98	121	41	58	20	292
24	113	47	22	337	280	340	113	141	47	68	22	340

NOTES:

1. ALL JOINTS WITHIN THE SPECIFIED LENGTH LR MUST BE RESTRAINED. ALL LENGTHS ARE GIVEN IN FEET.
2. THE MAXIMUM TEST PRESSURE SHALL NOT EXCEED 200 PSI
3. THE MINIMUM DEPTH OF BURY SHALL BE 3' TO TOP OF PIPE.
4. RESTRAINED LENGTHS MAY BE REDUCED WHEN SUPPORTED BY ENGINEERING CALCULATIONS.

ARIZONA WATER COMPANY

STANDARD SPECIFICATION
FOR THE INSTALLATION OF

JOINT RESTRAINT FOR NEW DUCTILE IRON AND C-900 PVC MAINS

DRAWN BY:	APPROVED BY:	DATE:		
CB	MW	01.16.2007	△	E-9-5-3-2

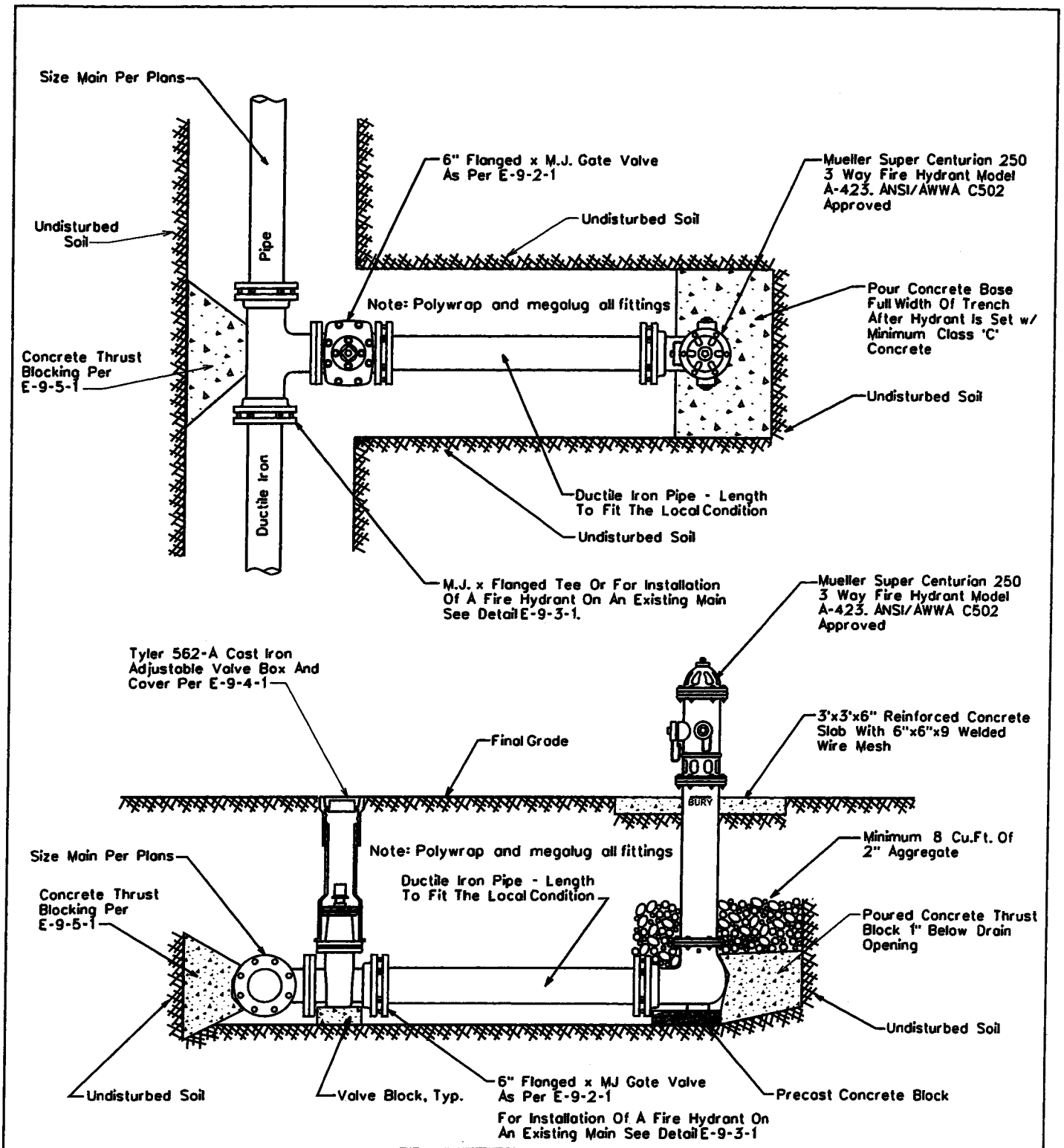

NOTE: All Flanges, Bolts, Nuts and Drain Holes Shall Be Kept Free Of Concrete

ARIZONA WATER COMPANY

STANDARD SPECIFICATION

FOR THE INSTALLATION OF

TYPICAL PERPENDICULAR FIRE HYDRANT

DRAWN BY:	APPROVED BY:	DATE:	△ 08.24.2006	E-9-6-1
CB	MW	1-28-91		

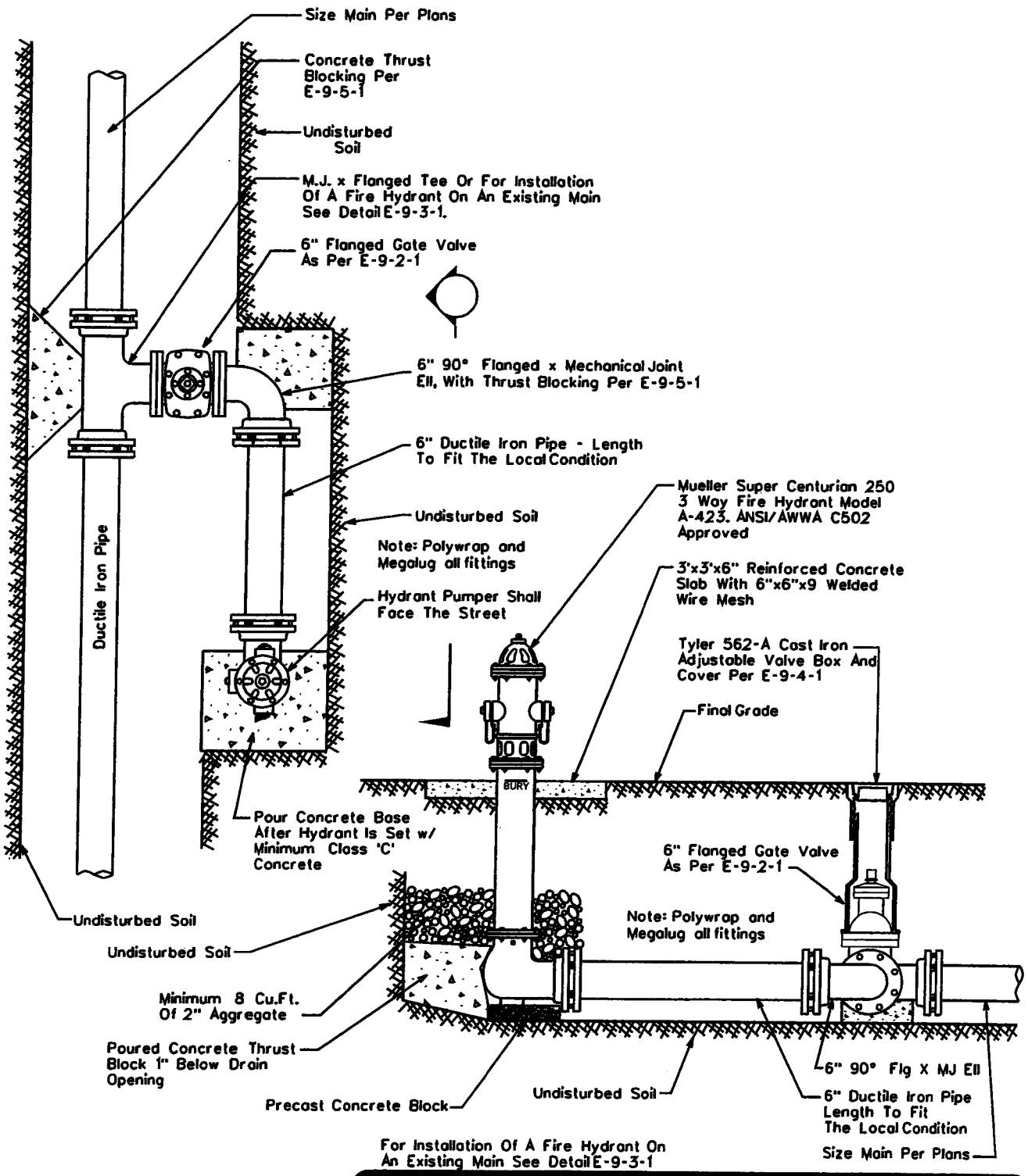

NOTE: All Flanges, Bolts, Nuts And Drain Holes Shall Be Kept Free Of Concrete.

ARIZONA WATER COMPANY

STANDARD SPECIFICATION

FOR THE INSTALLATION OF

TYPICAL PARALLEL FIRE HYDRANT

DRAWN BY:	APPROVED BY:	DATE:	△	
JW	MW	03.20.1986	08.24.2006	E-9-7-1

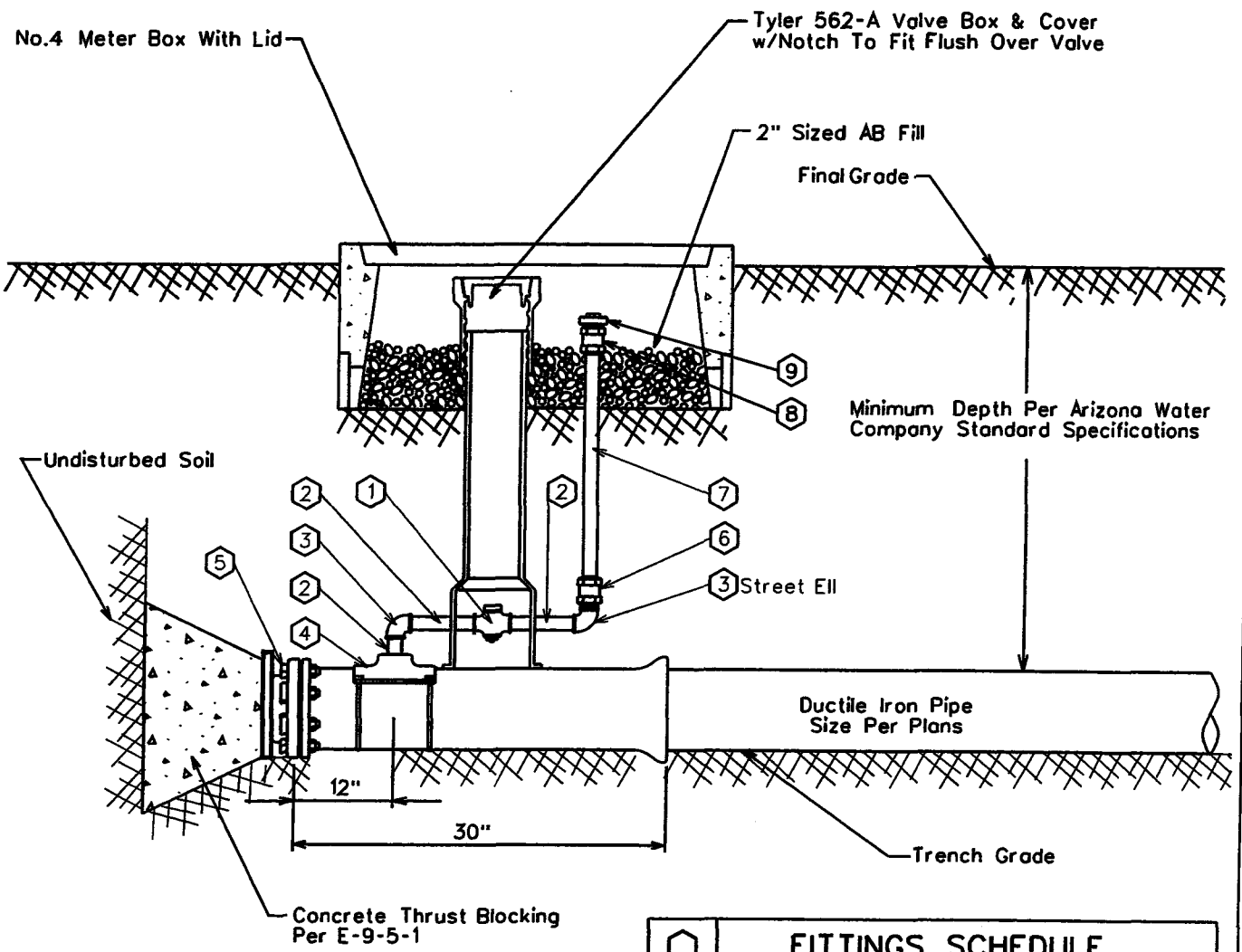

⬡	FITTINGS SCHEDULE
1.	2" Mueller 300 Ball Curb Valve B-20283 FIP x FIP W/ 2" Mueller Brass Square Wrench Nut Adapter B-20299
2.	2" Brass Nipple - Length To Fit Field Conditions
3.	2" Brass 90° Elbow, IPST
4.	Mueller Double Strap Bronze Service Saddle - BR2B
5.	M.J. Plug - Megalug Restraints May Be Required
6.	2" Straight Coupling CC x FIP H-15451
7.	2" Copper Pipe
8.	2" Straight Coupling CC x MIP H-15428
9.	2" Square Head Plug, MIP

ARIZONA WATER COMPANY

STANDARD SPECIFICATION
FOR THE INSTALLATION OF

2" BLOWOFF ASSEMBLY

DRAWN BY:	APPROVED BY:	DATE:	△	
CB	MW	03.20.1986	03.21.2006	E-9-8-1

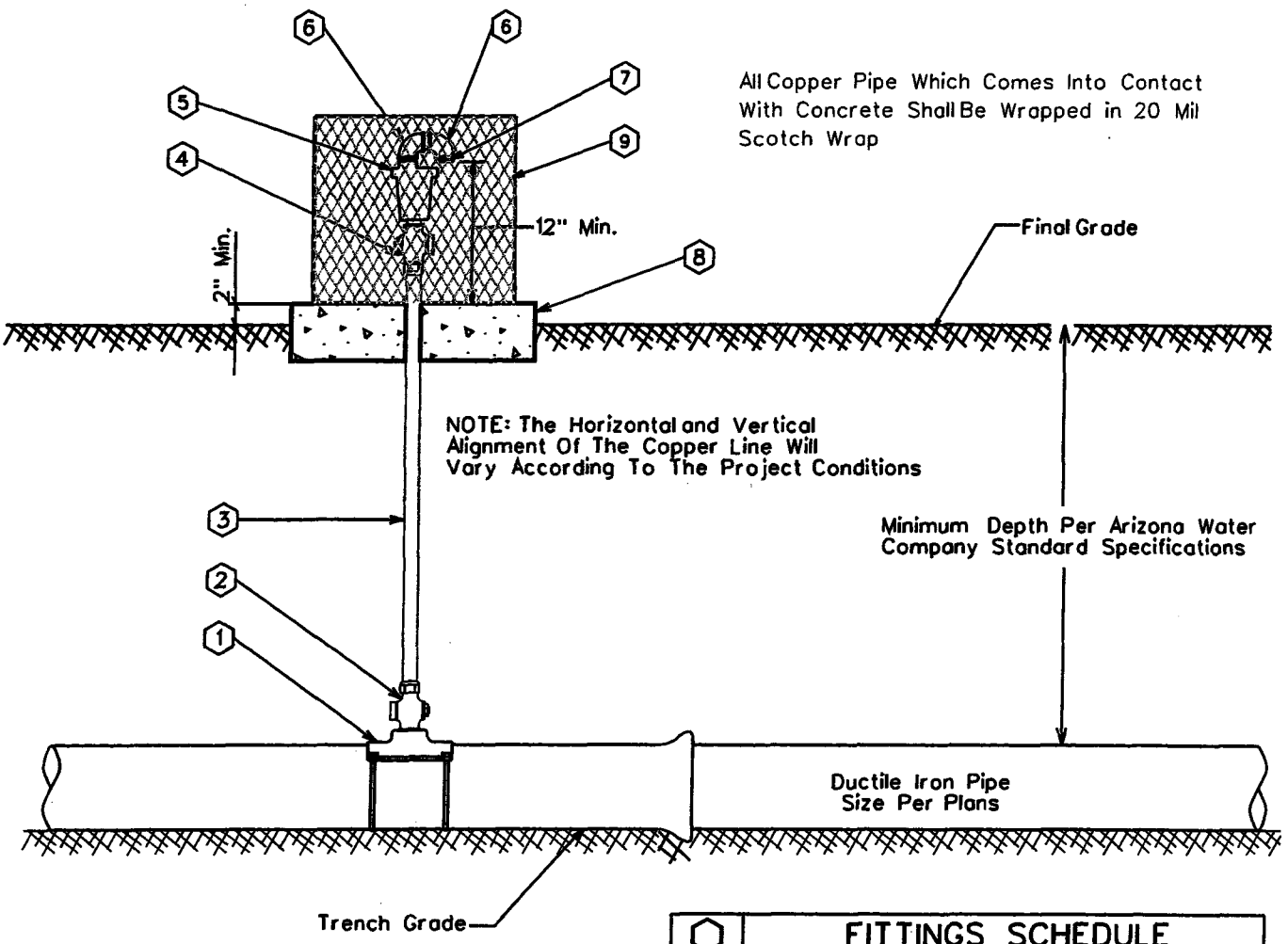

GENERAL NOTES:

1. The valve shall be installed at high points and on long runs to vent the accumulation of air with the line under pressure- see the construction plans for specific locations.
2. The valve shall have a 5/64" orifice with valve sealing faces of stainless steel and BUNA-N rubber.
3. The valve shall be Crispin model AR10 for 6" and larger water mains.
4. Crispin model AR10 valve construction consists of a 1" IPST inlet & 1/2" IPST outlet, cast iron body and top flange with stainless steel float and trim.
5. The air release assembly shall be located out of the path of traffic but within right-of-way or easement.

⬡	FITTINGS SCHEDULE
1.	Mueller BR2B Bronze Service Saddle - Double Strap
2.	1" Mueller B-25008 Taper x Comp. Ball Corp Stop
3.	1" Type 'K' Copper w/NO Splices - Field Fit
4.	1" Mueller B-25028 IP x Comp. Ball Corp Stop
5.	Crispin 1" Air Release Valve, Model AR10
6.	1/2" Brass Street Elbow
7.	No.16 Wire Mesh Screen (Non-Corrodible)
8.	4" Thick Concrete Pad - Class 'C' Concrete
9.	Guardshack, Model GS-1, Available From BPDI, Inc. Available In Leaf Green Or Desert Tan

ARIZONA WATER COMPANY

STANDARD SPECIFICATION
FOR THE INSTALLATION OF

TYPICAL AIR RELEASE VALVE

DRAWN BY:	APPROVED BY:	DATE:		
CB	MW	03.20.1997	△08.24.2006	E-9-8-2

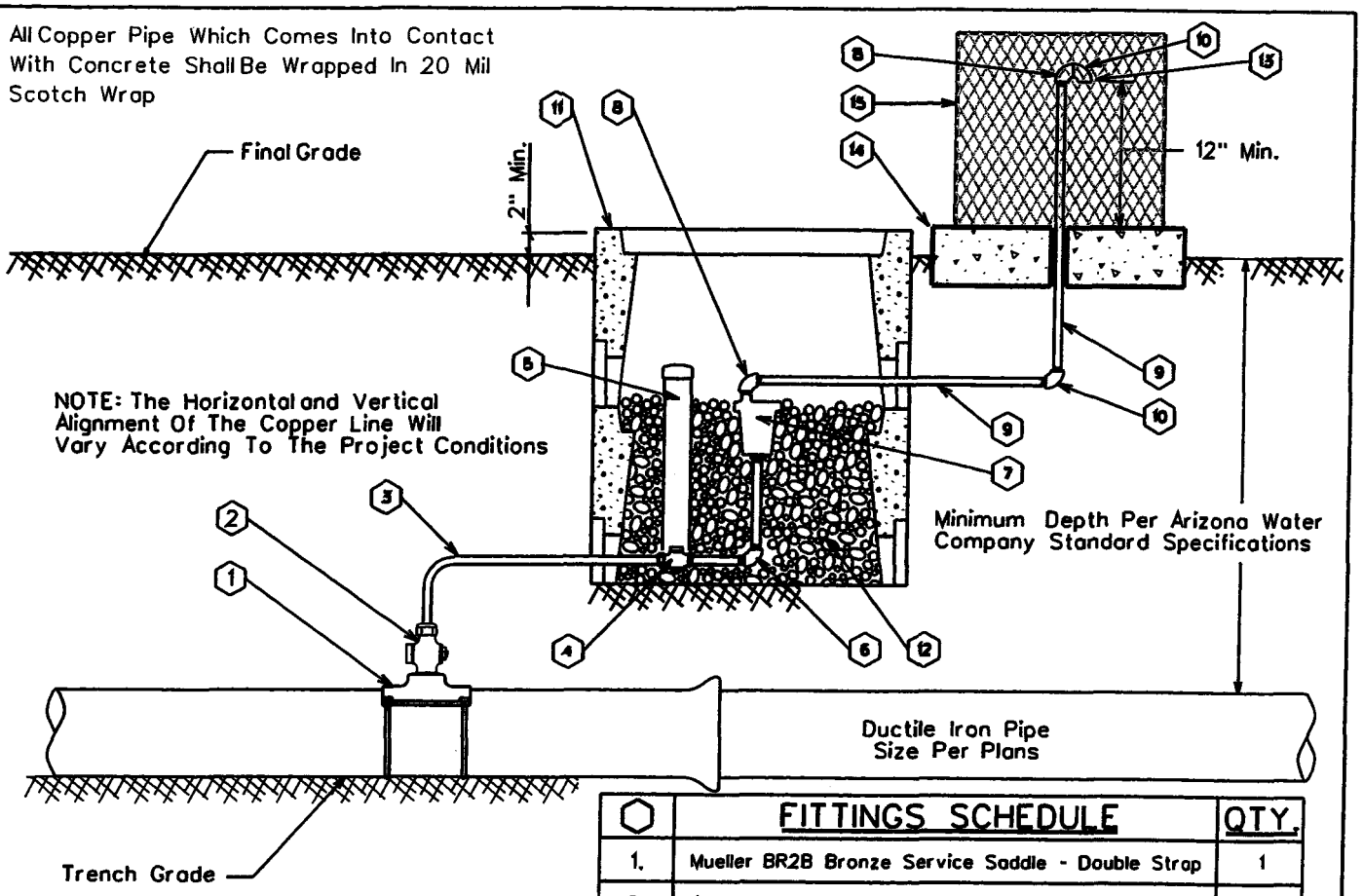

⬡	FITTINGS SCHEDULE	QTY.
1.	Mueller BR2B Bronze Service Saddle - Double Strap	1
2.	1" Mueller B-25008 Taper x Comp. Ball Corp Stop	1
3.	1" Type 'K' Copper w/NO Splices - Field Fit	As Req'd
4.	1" Mueller B-25028 IP x Comp. Ball Corp Stop	1
5.	3" PVC Pipe w/ Cap (Loose Fit)	1
6.	1" x 4" Brass Nipple w/90° Elbow	1
7.	Crispin 1" Air Release Valve, Model AR10	1
8.	½" Brass Street Elbow	2
9.	½" Galvanized Pipe - Length as req'd	2
10.	½" Galvanized 90° Ell	2
11.	Number 1 Meter Box	2
12.	2" Sized AB (Fill Meter Box To The Top Of The Air Release Valve)	As Req'd
13.	No.16 Wire Mesh Screen (Non-Corrodible)	1
14.	4" Thick Concrete Pad - Class 'C' Concrete	1
15.	Guardshack, Model GS-1, Available From BPDI, Inc. Available In Leaf Green Or Desert Tan	1

GENERAL NOTES:

1. The valve shall be installed at high points and on long runs to vent the accumulation of air with the line under pressure- see the construction plans for specific locations.
2. The valve shall have a 5/64" orifice with valve sealing faces of stainless steel and BUNA-N rubber.
3. The valve shall be Crispin model AR10 for 6" and larger water mains.
4. Crispin model AR10 valve construction consists of a 1" IPST inlet & ½" IPST outlet, cast iron body and top flange with stainless steel float and trim.
5. The air release assembly shall be located out of the path of traffic but within the right-of-way or easement.

ARIZONA WATER COMPANY

STANDARD SPECIFICATION
FOR THE INSTALLATION OF

AIR RELEASE VALVE FOR THE NORTHERN REGION

DRAWN BY:	APPROVED BY:	DATE:		
CB	MW	03.20.1997	△08.24.2006	E-9-8-3

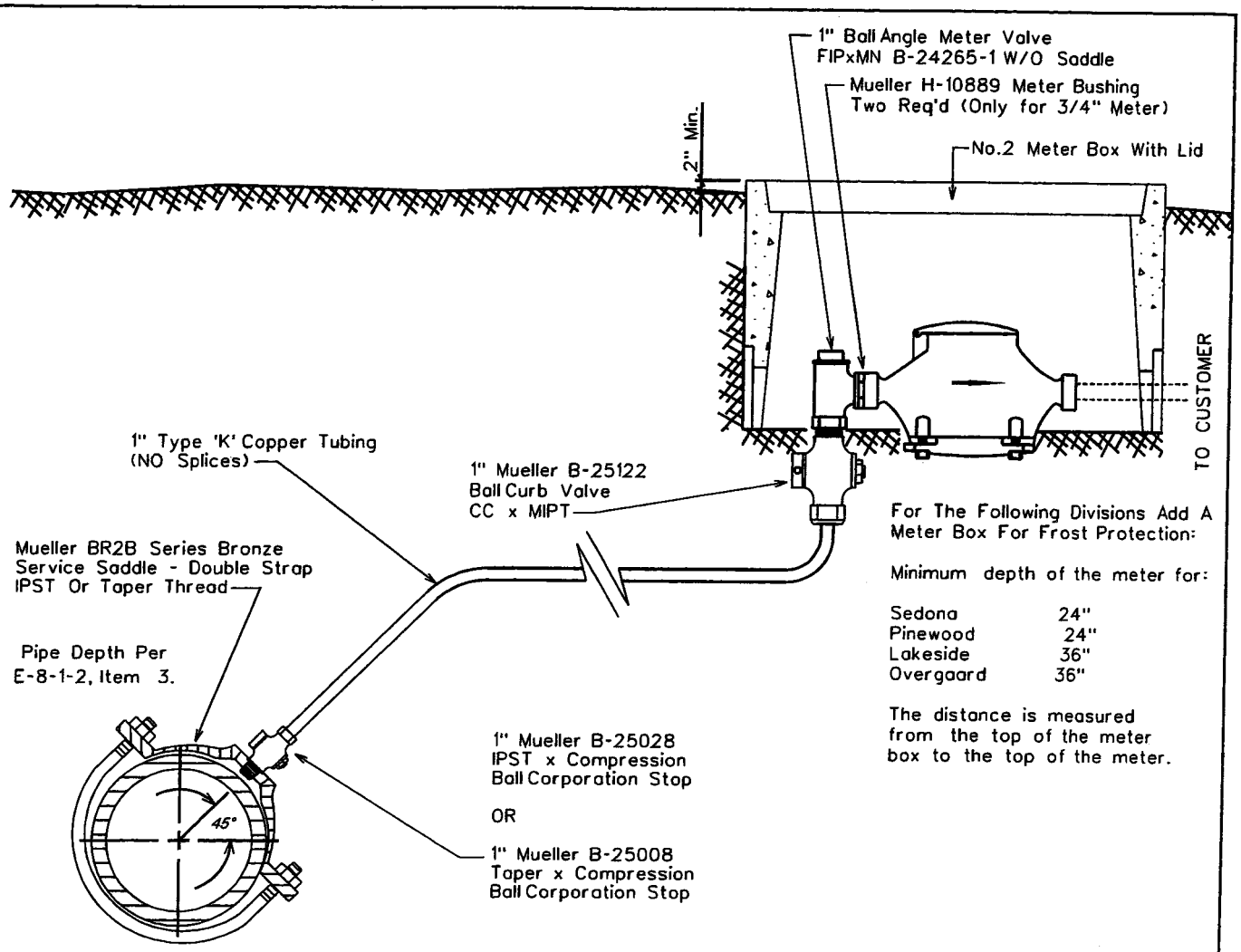

For The Following Divisions Add A Meter Box For Frost Protection:

Minimum depth of the meter for:

Sedona	24"
Pinewood	24"
Lakeside	36"
Overgaard	36"

The distance is measured from the top of the meter box to the top of the meter.

SADDLE TAP TO CA, PVC, OR DI PIPE

NOTE: The minimum distance between taps on mains other than ductile iron is 12"

NOTE:
Only the meter is supplied by Arizona Water Company

ARIZONA WATER COMPANY

STANDARD SPECIFICATION
FOR THE INSTALLATION OF

SINGLE SERVICE CONNECTION FOR A 3/4" OR 1" METER

DRAWN BY:	APPROVED BY:	DATE:		
CCO	M.W.	3/20/86	△ 03.17.2006	E-9-9-1

For The Following Divisions Add A Meter Box For Frost Protection:

Minimum depth of the meter for:

Sedona	24"
Pinewood	24"
Lakeside	36"
Overgaard	36"

The distance is measured from the top of the meter box to the top of the meter.

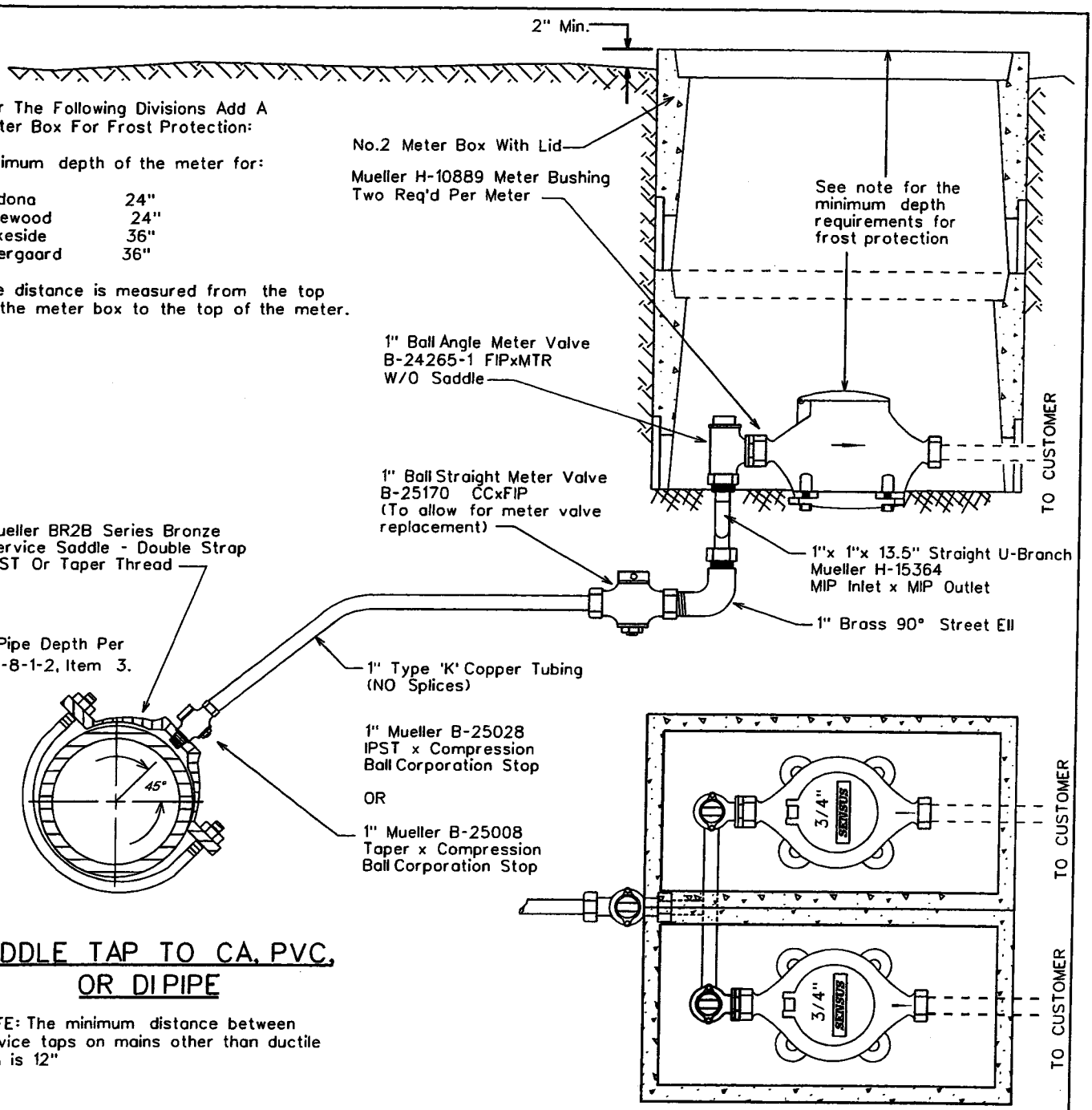

SADDLE TAP TO CA, PVC, OR DI PIPE

NOTE: The minimum distance between service taps on mains other than ductile iron is 12"

NOTE:
Only the meter is supplied by Arizona Water Company

ARIZONA WATER COMPANY

STANDARD SPECIFICATION
FOR THE INSTALLATION OF

DOUBLE SERVICE CONNECTION FOR 3/4" METERS

DRAWN BY:	APPROVED BY:	DATE:		
CCO	M.W.	3-20-86	△ 08.25.2006	E-9-10-1

For The Following Divisions Add A Meter Box For Frost Protection:

Minimum depth of the meter for:

Sedona	24"
Pinewood	24"
Lakeside	36"
Overgaard	36"

The distance is measured from the top of the meter box to the top of the meter.

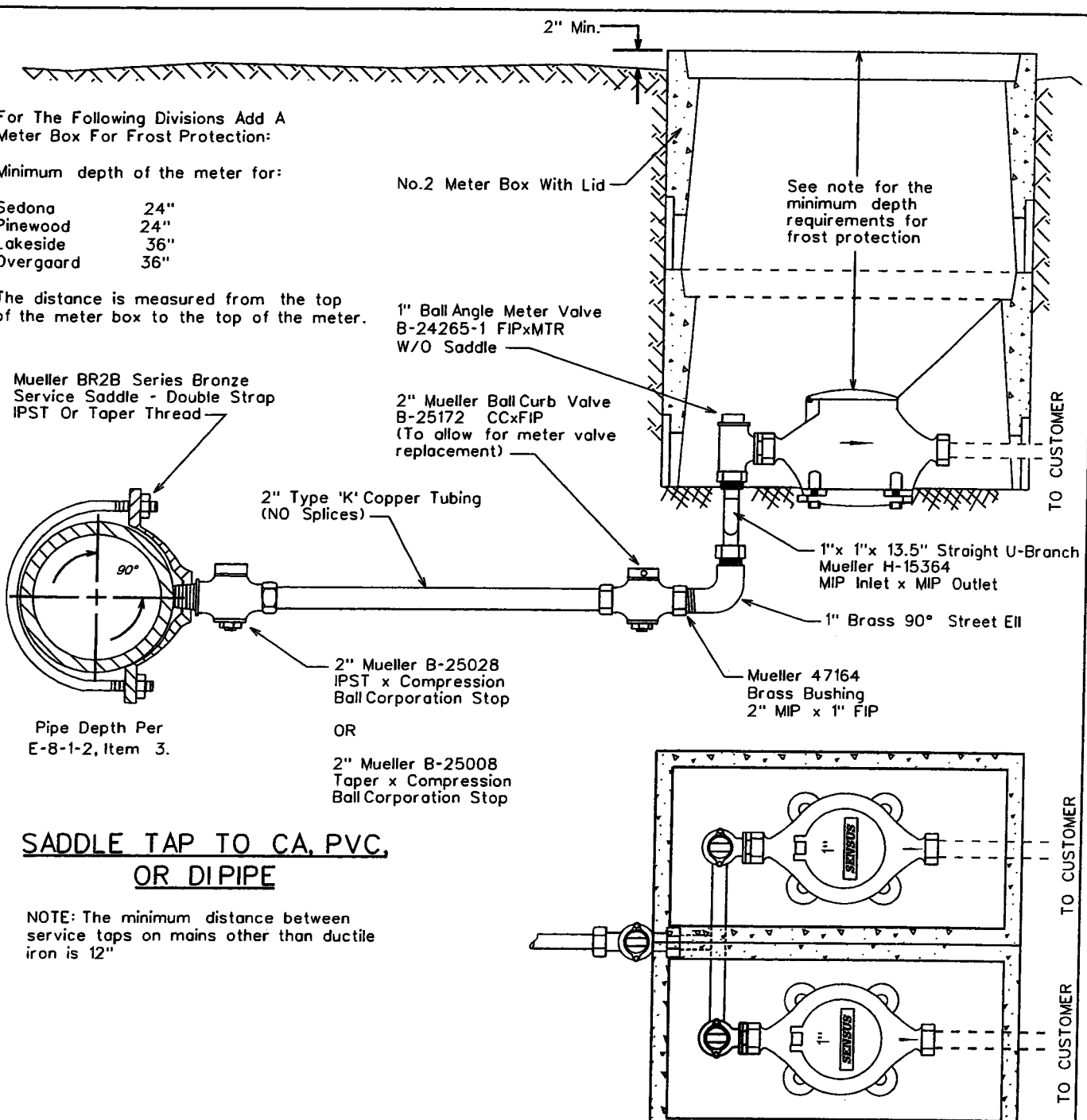

SADDLE TAP TO CA, PVC, OR DI PIPE

NOTE: The minimum distance between service taps on mains other than ductile iron is 12"

NOTE: THE LENGTH OF SERVICE IS LIMITED TO COMMERICIALLY AVAILABLE ROLLS, TYPICALLY 60 FEET

NOTE:
Only the meter is supplied by Arizona Water Company

ARIZONA WATER COMPANY

STANDARD SPECIFICATION
FOR THE INSTALLATION OF

DOUBLE SERVICE CONNECTION FOR 1" METERS

DRAWN BY:	APPROVED BY:	DATE:	△	
CB	M.W.	03.17.2006	08.29.2006	E-9-10-2

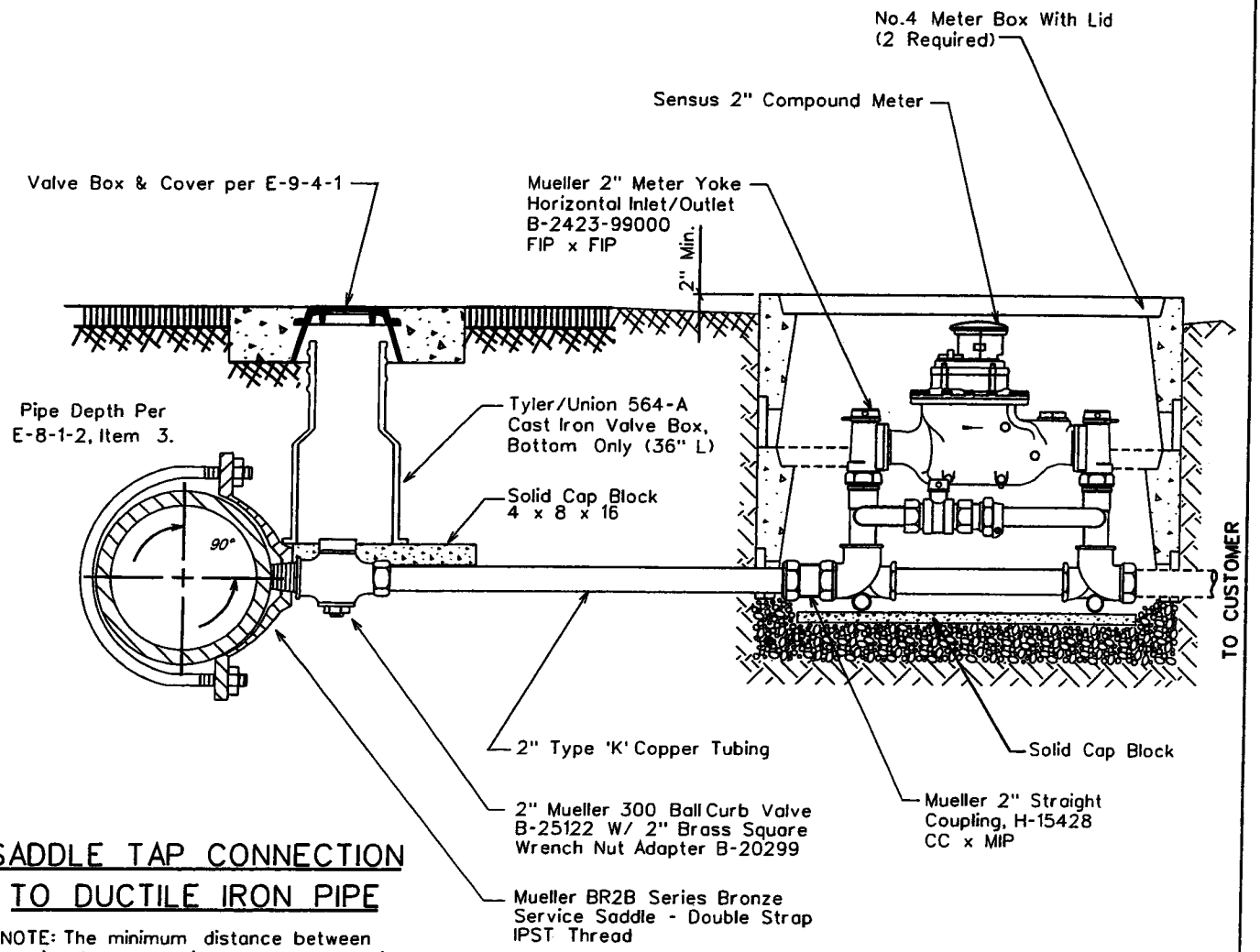

SADDLE TAP CONNECTION TO DUCTILE IRON PIPE

NOTE: The minimum distance between service taps on mains other than ductile iron is 12"

NOTE: THE LENGTH OF SERVICE IS LIMITED TO COMMERICIALLY AVAILABLE ROLLS, TYPICALLY 60 FEET

NOTE:

Only the meter is supplied by Arizona Water Company

ARIZONA WATER COMPANY

STANDARD SPECIFICATION
FOR THE INSTALLATION OF

TYPICAL 2" SERVICE CONNECTIONS

DRAWN BY:	APPROVED BY:	DATE:	△ 08.29.2006	E-9-11-1
JW	M.W.	3/20/86		

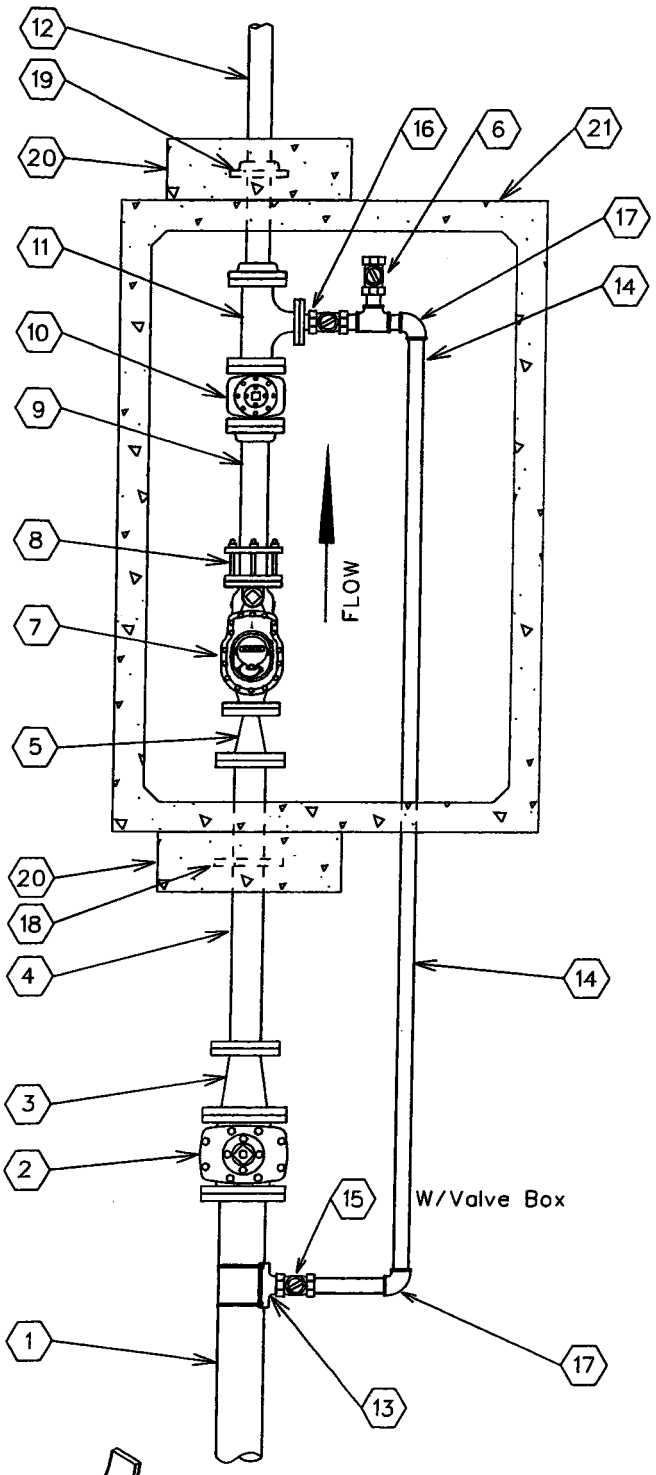

No.	FITTINGS SCHEDULE
1.	6" D.I.P.
2.	6" G.V.B.&C. mj x flng
3.	6"x4" Reducer flng x mj
4.	4"x3'-0" D.I.P. Spool flng x pe
5.	4" x 3" Reducer flng
6.	2" Test Port
7.	3" Compound Meter
8.	3" F.C.A.
9.	3"x2'-0" D.I. Spool flng x pe
10.	3" Gate Valve flng
11.	3"x2" Flg Tee w/ 2" Companion Flange
12.	3"x4'-0" D.I. Spool flng x pe
13.	6"x2" Tapping Saddle
14.	2" Copper Pipe
15.	2" Mueller B25122 Ball Valve w/B20299 Nut
16.	2" Locking Ball Valve (normally closed)
17.	2" Mueller H-15526 90° Ell CC x CC
18.	4" Megalug
19.	3" Slip-On Welding Flange
20.	24"x24"x8" Conc. Thrust Block P.I.P.
21.	575-LA Conc. Vault

NOTE:

1. Use Rowley pipe supports or equivalent as needed (See detail below).
2. Pipe support locations to be determined by field personnel.
3. All copper pipe that comes in contact with concrete to be wrapped w/10-20 Mil. Scotchwrap corrosion protection tape.
4. All mechanical joint fittings are to be megalugged.
5. Use deflection fittings (45° Ells.) to achieve necessary depths & cover as shown on the standard specification for the installation of a concrete vault (E-9-12-5).

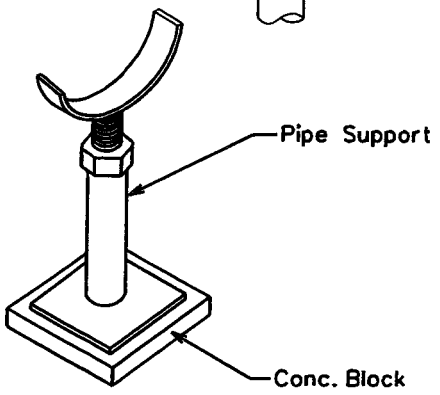

ARIZONA WATER COMPANY

STANDARD SPECIFICATION
FOR THE INSTALLATION OF

3" COMPOUND METER

DRAWN BY:	APPROVED BY:	DATE:		
CCO	MW	10/5/1993	△08.29.2006	E-9-12-1

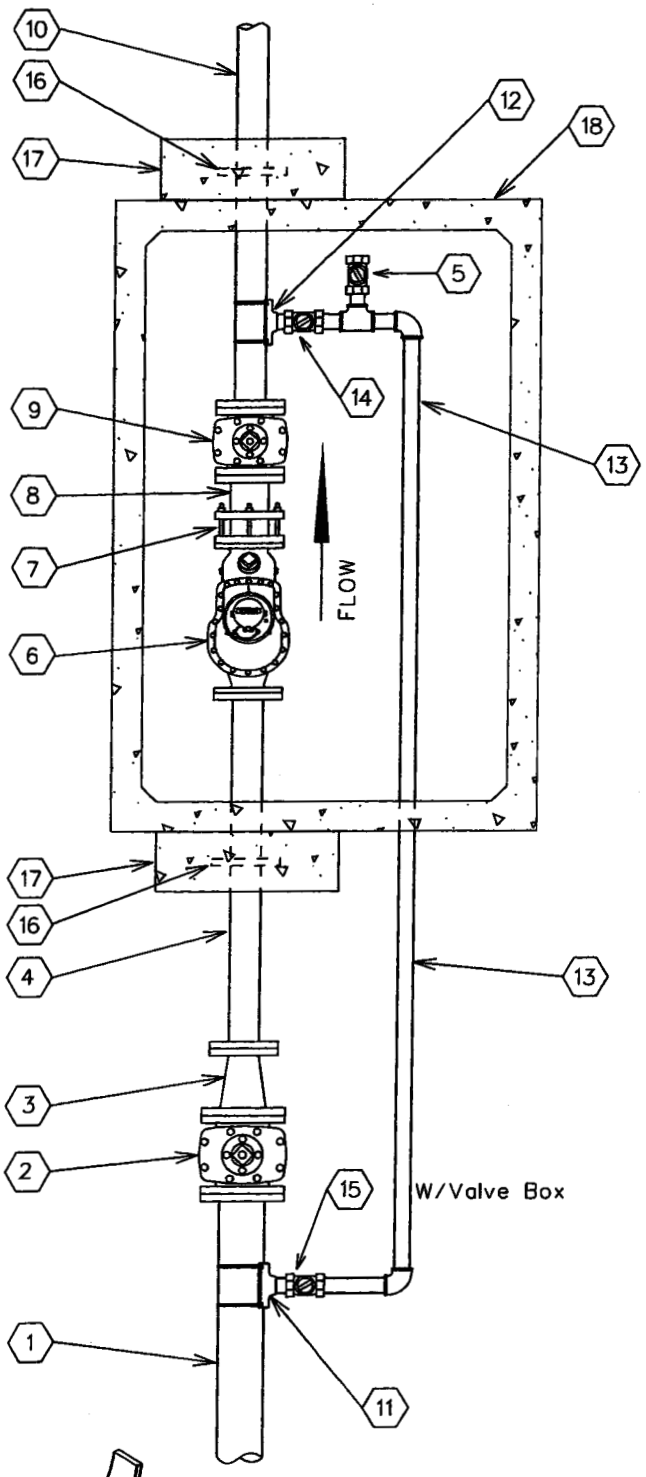

No.	FITTINGS SCHEDULE
1.	6" D.I.P.
2.	6" G.V.B.&C. mj x flng
3.	6"x4" Reducer flng x mj
4.	4"x3'-0" D.I.P. Spool flng x pe
5.	2" Test Port
6.	4" Compound Meter
7.	4" F.C.A.
8.	4"x1'-0" D.I.P. Spool flng x pe
9.	4" Gate Valve flng
10.	4"x4'-0" D.I.P. Spool flng x pe
11.	6"x2" Tapping Saddle
12.	4"x2" Tapping Saddle
13.	2" Copper Pipe
14.	2" Ball Valve / Locking (Normally Closed)
15.	2" Mueller B25122 Ball Valve w/B20299 Nut
16.	4" Megalug
17.	24"x24"x8" Conc. Thrust Block P.I.P.
18.	575-LA Conc. Vault

NOTE:

1. Use Rowley pipe supports or equivalent as needed (See detail below).
2. Pipe support locations to be determined by field personnel.
3. All copper pipe that comes in contact with concrete to be wrapped w/10-20 Mil. Scotchwrap corrosion protection tape.
4. All mechanical joint fittings are to be megalugged.
5. Use deflection fittings (45° Ells.) to achieve necessary depths & cover as shown on the standard specification for the installation of a concrete vault (E-9-12-5).

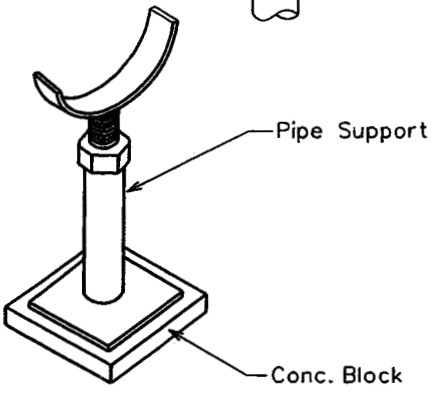

ARIZONA WATER COMPANY

STANDARD SPECIFICATION
FOR THE INSTALLATION OF

4" COMPOUND METER

DRAWN BY:	APPROVED BY:	DATE:		
CCO	MW	10/5/1993	△08.29.2006	E-9-12-2

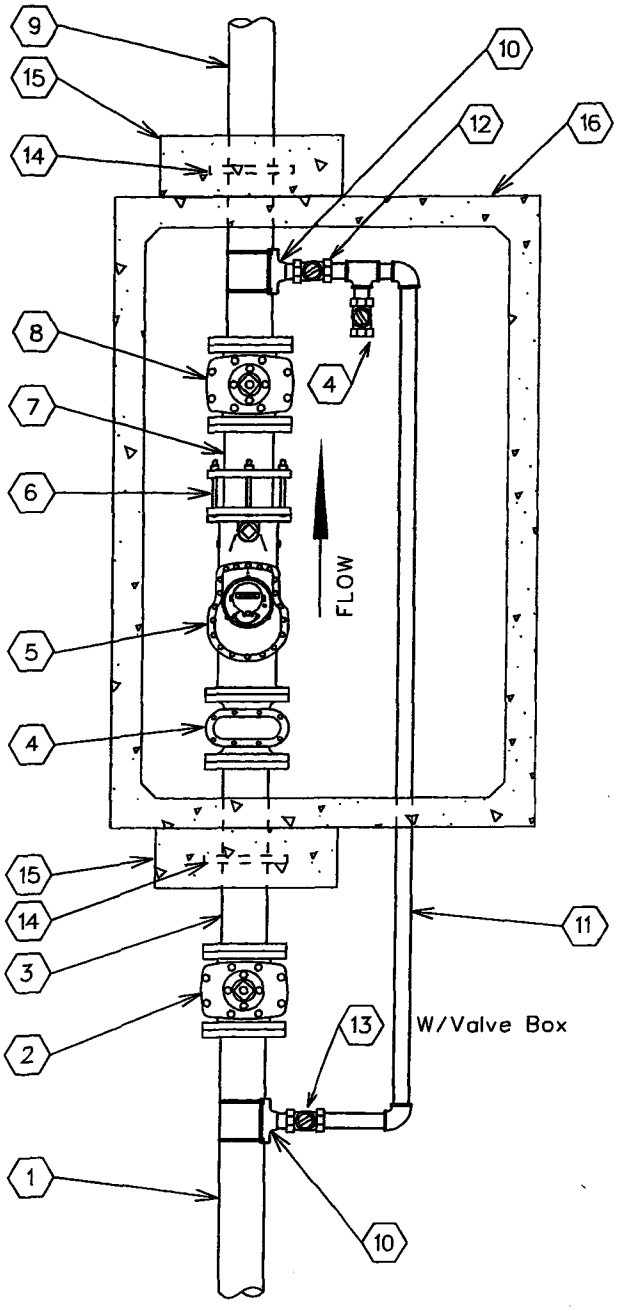

No.	FITTINGS SCHEDULE
1.	6" D.I.P.
2.	6" G.V.B.&C. mj
3.	6"x 3'-0" D.I.P. Spool flng x pe
4.	2" Test Port
5.	6" Compound Meter
6.	6" F.C.A.
7.	6"x 1'-0" D.I.P. Spool flng x pe
8.	6" Gate Valve flng
9.	6"x 4'-0" D.I.P. Spool flng x pe
10.	6"x2" Tapping Saddle
11.	2" Copper Pipe
12.	2" Ball Valve / Locking (Normally Closed)
13.	2" Mueller B25122 Ball Valve w/B20299 Nut
14.	6" Megalug
15.	24"x24"x8" Conc. Thrust Block P.I.P.
16.	575-LA Conc. Vault

NOTE:

1. Use Rowley pipe supports or equivalent as needed (See detail below).
2. Pipe support locations to be determined by field personnel.
3. All copper pipe that comes in contact with concrete to be wrapped w/10-20 Mil. Scotchwrap corrosion protection tape.
4. All mechanical joint fittings are to be megalugged.
5. Use deflection fittings (45° Ells.) to achieve necessary depths & cover as shown on the standard specification for the installation of a concrete vault (E-9-12-5).

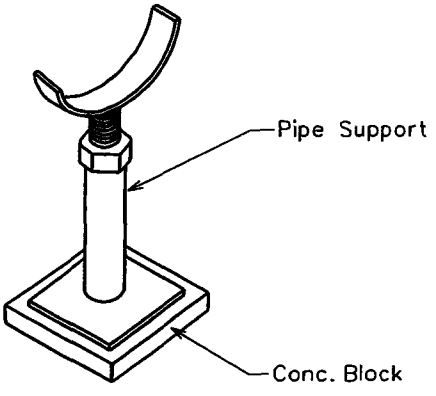

ARIZONA WATER COMPANY

STANDARD SPECIFICATION
FOR THE INSTALLATION OF

6" COMPOUND METER

DRAWN BY:	APPROVED BY:	DATE:		
CCO	MW	10/5/1993	△08.29.2006	E-9-12-3

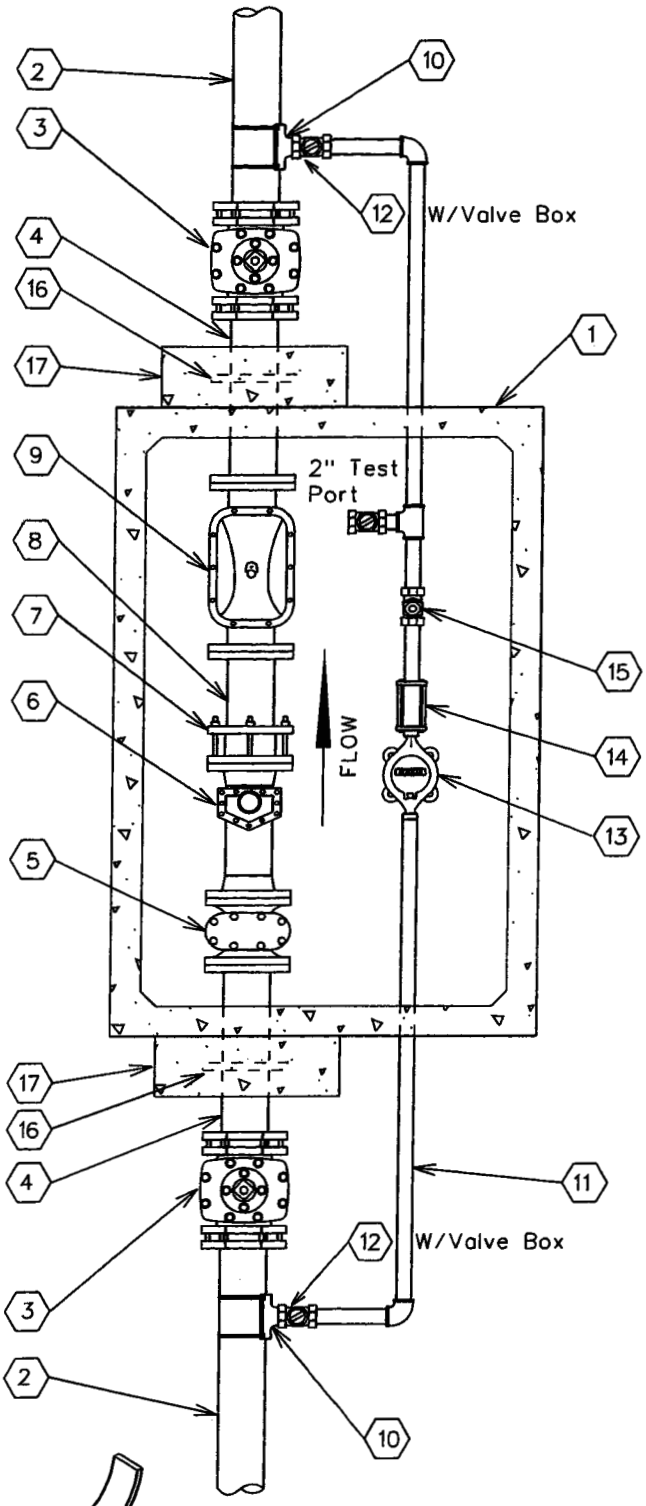

No.	FITTINGS SCHEDULE
1.	575-LA Conc. Vault
2.	6" D.I.P.
3.	6" G.V.B.&C. m.j.
4.	6" x 3'-0" D.I.P. SPool Piece flng x pe
5.	6" Strainer
6.	6" Turbo Meter
7.	6" F.C.A.
8.	6" x 2'-0" D.I.P. Spool Piece flng x pe (TRIM SPOOL PIECE TO 3x THE PIPE DIA.)
9.	6" Detector Check
10.	6"x*N" Tapping Saddle
11.	*N" Copper Pipe
12.	*N" Ball Valve (Locking)
13.	*N" Meter
14.	*N" Coup. Adapt.
15.	*N" Flapper Check Valve
16.	6" Megalug
17.	24"x24"x8" Conc. Thrust Block P.I.P.

*N - Size To Be determined By A.W.Co.

NOTE:

1. Use Rowley pipe supports or equivalent as needed (See detail below).
2. Pipe support locations to be determined by field personnel.
3. All copper pipe that comes in contact with concrete to be wrapped w/10-20 Mil. Scotchwrap corrosion protection tape.
4. All mechanical joint fittings are to be megalugged.
5. Use deflection fittings (45° Ells.) to achieve necessary depths & cover as shown on the standard specification for the installation of a concrete vault (E-9-12-5).
6. To change from a 6" service to a 4" service, change all listed 6" materials to 4" materials.

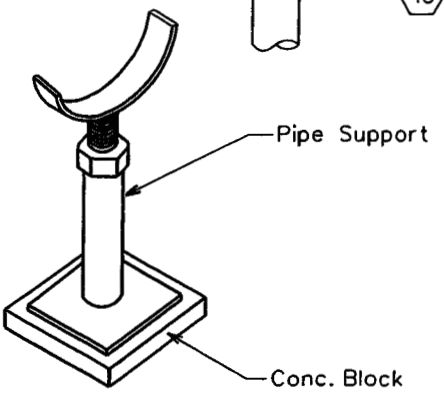

ARIZONA WATER COMPANY

STANDARD SPECIFICATION
FOR THE INSTALLATION OF

6" COMPOUND SERVICE

DRAWN BY:	APPROVED BY:	DATE:		
CCO	MW	10/05/1993	△08.29.2006	E-9-12-4

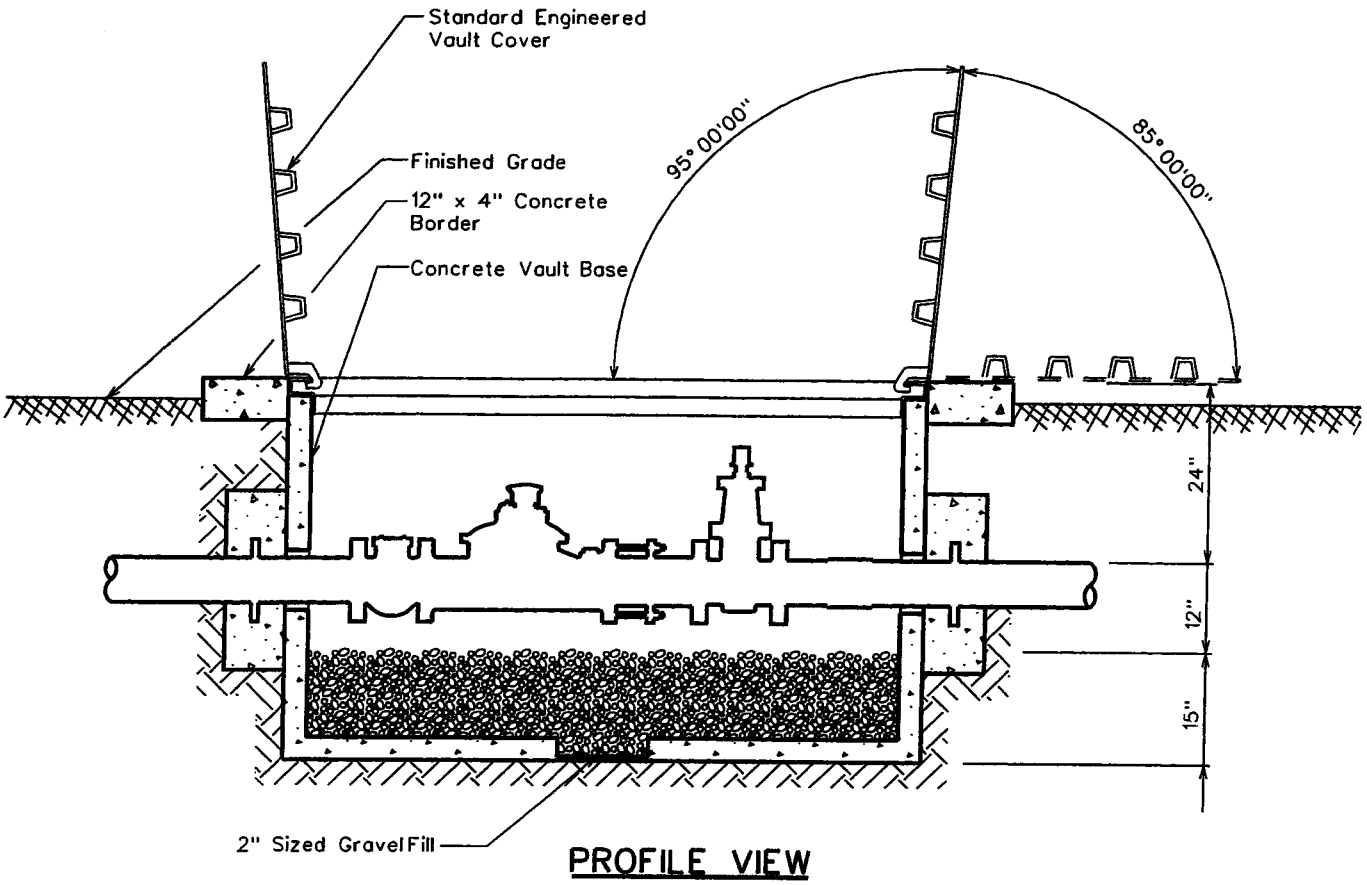

PROFILE VIEW

CONCRETE VAULT & COVER SPECIFICATIONS

Vault - Base No. 575-BL
Cover - Standard Engineered Vault Cover
- 4874 Aluminum Diamond Plate Cover For Non-Traffic Loading Areas
  Or
- 4874 Galvanized Steel Diamond Plate Cover W/ H-20 Traffic Loading
- Double Torsion Spring Assisted Doors W/ Recessed Hasp & Safety Latches

NOTES

1. Total Depth Of Concrete Vault To Be A Maximum Of 3'-0" From Top Of Vault Cover To Top Of Gravel Fill.
2. Service Connections Larger Than 6" In Diameter Will Conform To The Same Vault & Cover Specifications. Size Of Vault & Cover To Be Determined By A.W.Co. Engineers.

ARIZONA WATER COMPANY

STANDARD SPECIFICATION
FOR THE INSTALLATION OF

CONCRETE VAULT

DRAWN BY:	APPROVED BY:	DATE:	△	
CCO	MW	10/5/1993	05.17.2001	E-9-12-5

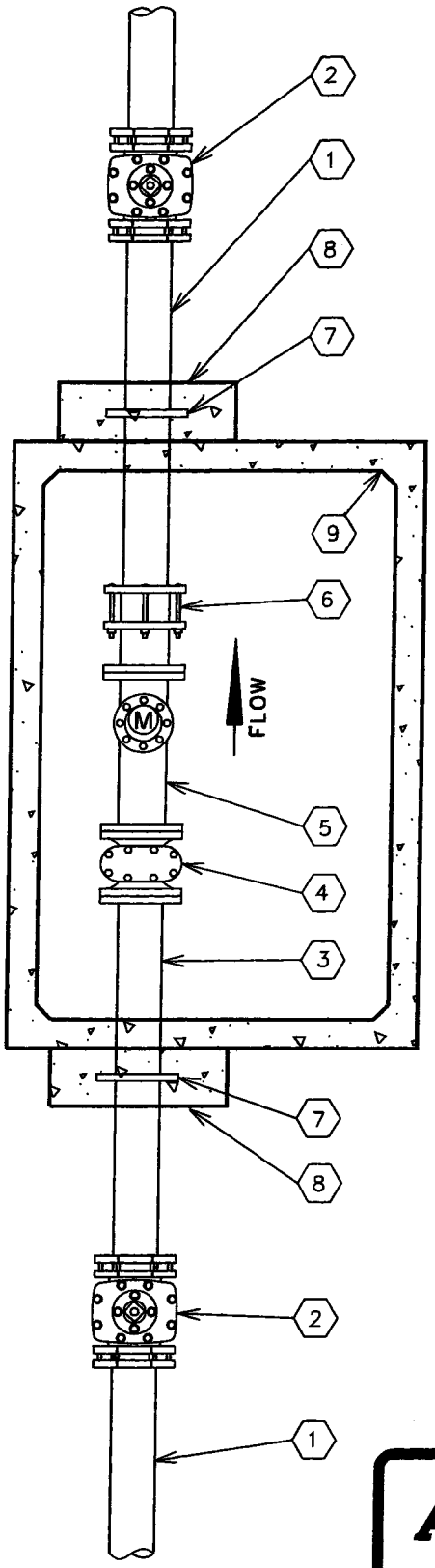

No.	FITTINGS SCHEDULE
1.	Ductile Iron Pipe
2.	Gate Valve M.J.
3.	D.I.P. Spool Piece Flg x Pe (10xDia.)
4.	Meter Strainer
5.	Propeller Meter
6.	Flanged Coupling Adapter
7.	Megalug Gland (Thrust Anchor)
8.	Concrete Thrust Block P.I.P.
9.	Concrete Vault

NOTE:

1. Use Rowley pipe supports or equivalent as needed (See E-9-12-4).
2. Pipe support locations to be determined by field personnel.
3. All Sched. 40 Stl. pipe outside of vault to be wrapped w/10-20 Mil. Scotchwrap corrosion protection tape.
4. All mechanical joint fittings to are to be megalugged.
5. Use deflection fittings (45° Ells.) to achieve necessary depths & cover as shown on the standard specification for the installation of a concrete vault (E-9-12-5).

ARIZONA WATER COMPANY

STANDARD SPECIFICATION

FOR THE INSTALLATION OF

NON-POTABLE PROPELLER METER

DRAWN BY:	APPROVED BY:	DATE:		
JPK	MW	7-20-95	△	E-9-12-6

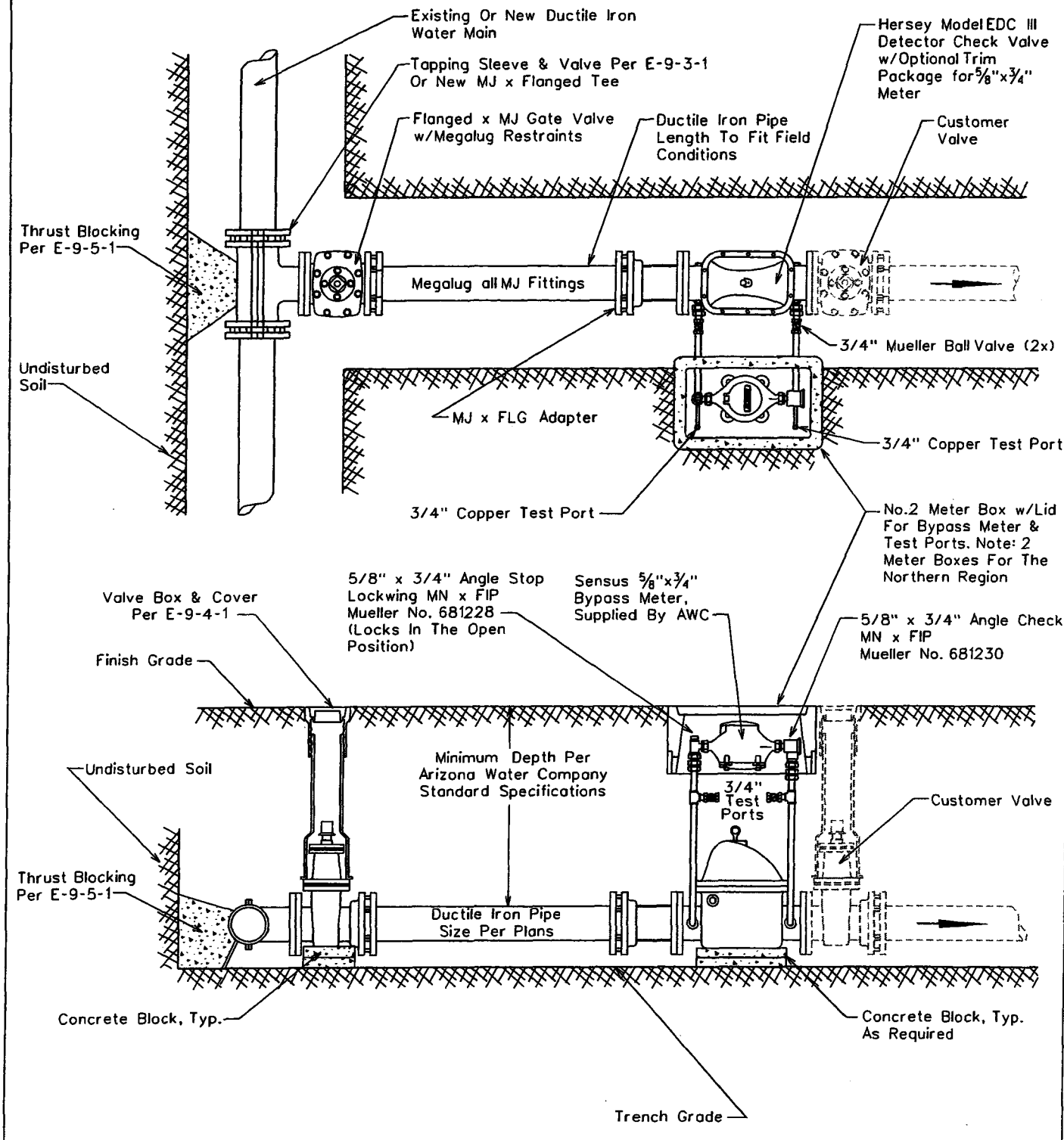

ARIZONA WATER COMPANY

STANDARD SPECIFICATION

FOR THE INSTALLATION OF

TYPICAL 4" THRU 8" DETECTOR CHECK VALVES

DRAWN BY:	APPROVED BY:	DATE:	△	
CB	MW	10.16.1990	01.16.2007	E-9-13-1

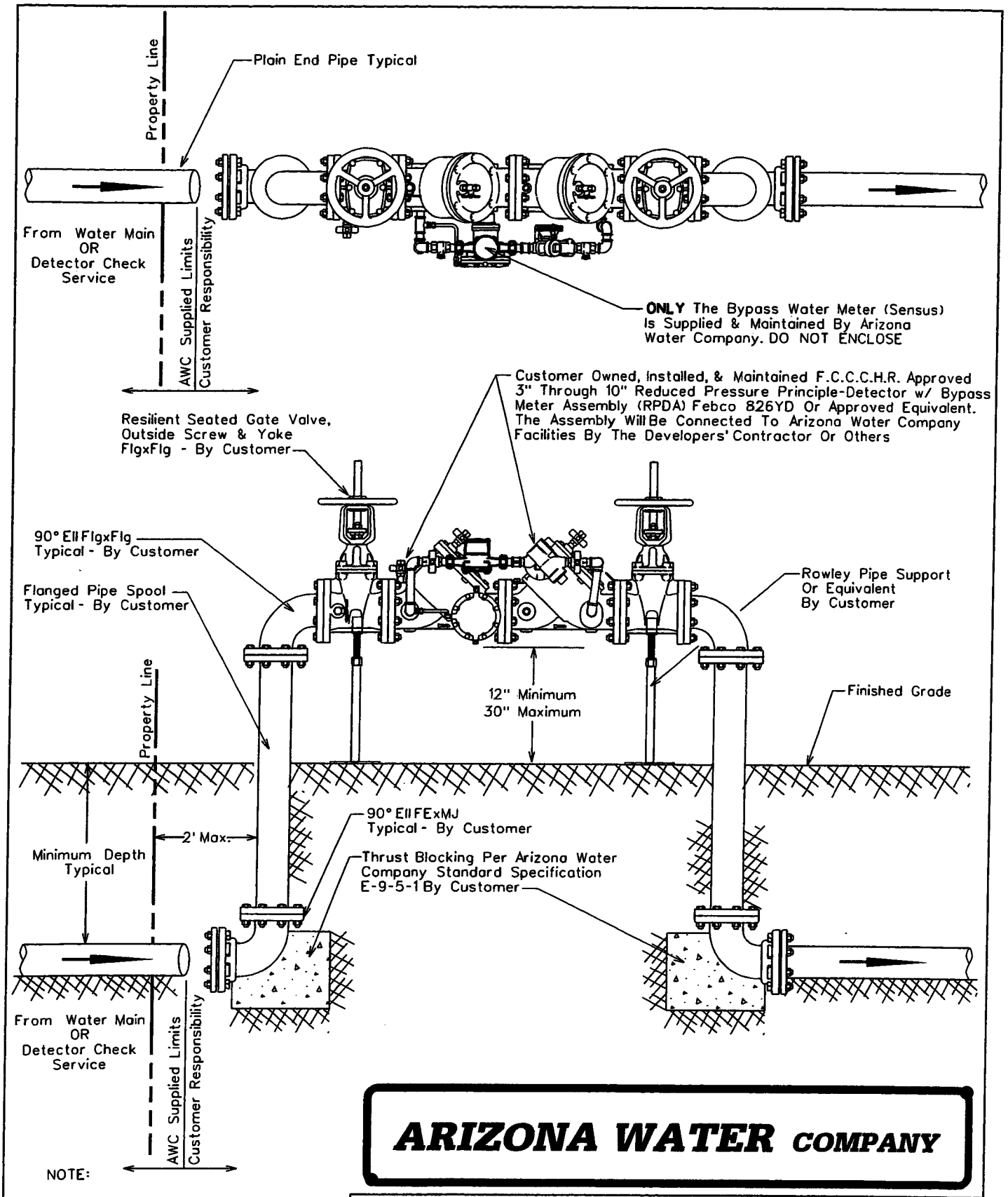

NOTE:

Minimum Depth Of Cover Over
6" & 8" Mains is 36 Inches,
12" & Greater is 48 Inches
Unless Otherwise Specified

ARIZONA WATER COMPANY

STANDARD SPECIFICATION

FOR THE INSTALLATION OF

3" THRU 10" REDUCED PRESSURE PRINCIPLE-DETECTOR
WITH BYPASS METER ASSEMBLY (RPDA) FOR FIRELINE SERVICES

DRAWN BY:	APPROVED BY:	DATE:		
CB	MW	10-13-98	△1-19-2000	E-9-13-2

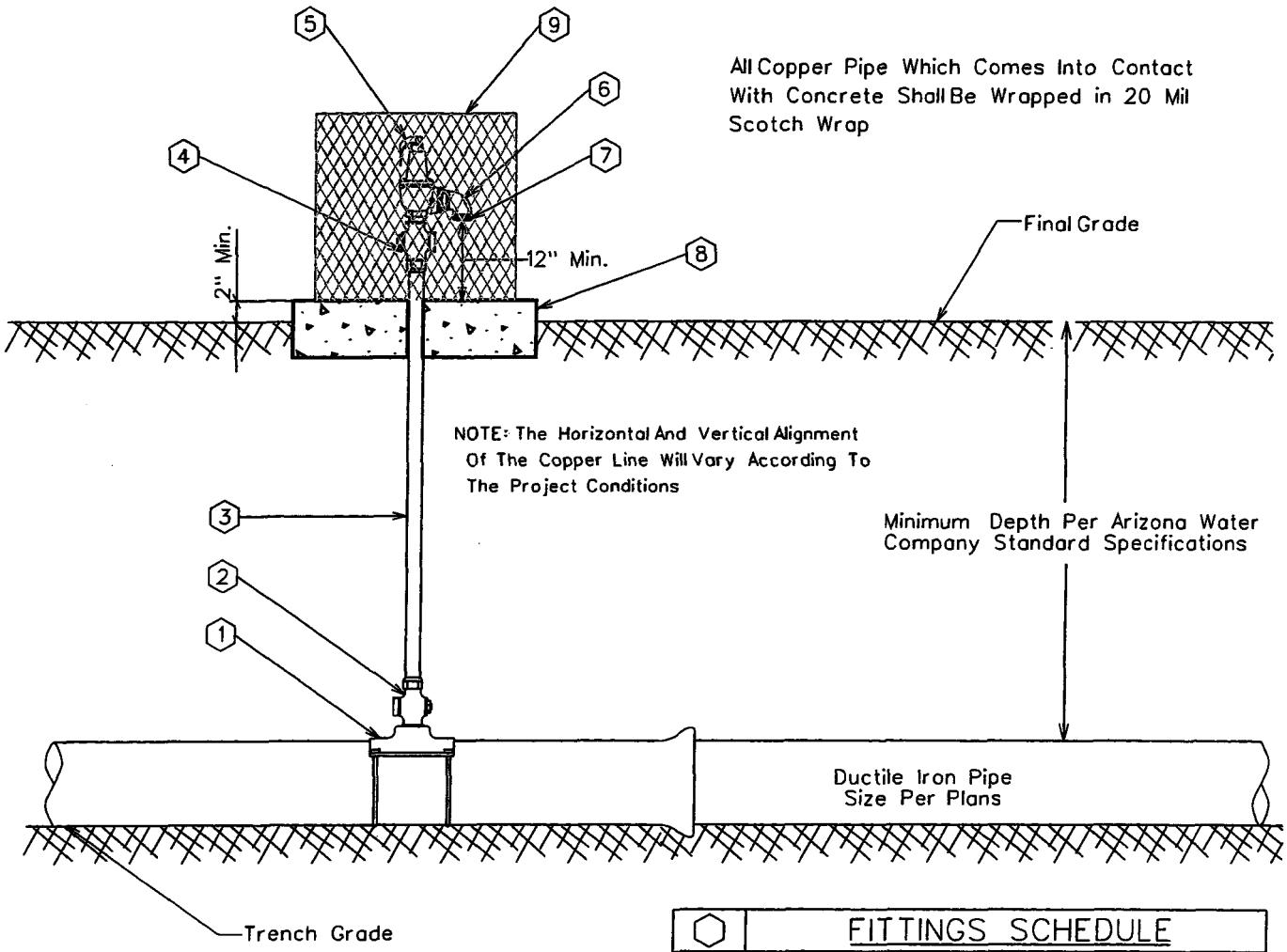

⬡	FITTINGS SCHEDULE
1.	Mueller BR2B Bronze Service Saddle - Double Strap
2.	2" Mueller B-25008 Taper x Comp. Ball Corp Stop
3.	2" Type 'K' Copper w/NO Splices - Field Fit
4.	2" Mueller B-25028 IP x Comp. Ball Corp Stop
5.	2" Pressure Relief Valve Watts 174A With A 2" Inlet / 2" Outlet 30-150 psi W/ Bronze Body
6.	2" Brass Street Elbow
7.	No.16 Wire Mesh Screen (Non-Corrodible)
8.	4" Thick Concrete Pad - Class 'C' Concrete
9.	Vandal enclosure to be centered on the concrete pad

NOTE:

1. Pressure relief valves are typically located just down stream of a pressure reducing station or where system conditions might be subject to greater than allowable pressures.
2. The relief valve assembly and vandal enclosure shall be located out of the roadway, but within the right-of-way or easement.

ARIZONA WATER COMPANY

STANDARD SPECIFICATION
FOR THE INSTALLATION OF

TYPICAL PRESSURE RELIEF VALVE ASSEMBLY

DRAWN BY:	APPROVED BY:	DATE:	△ 08.29.2006	
CCO	MW	3/20/1986		E-9-14-1

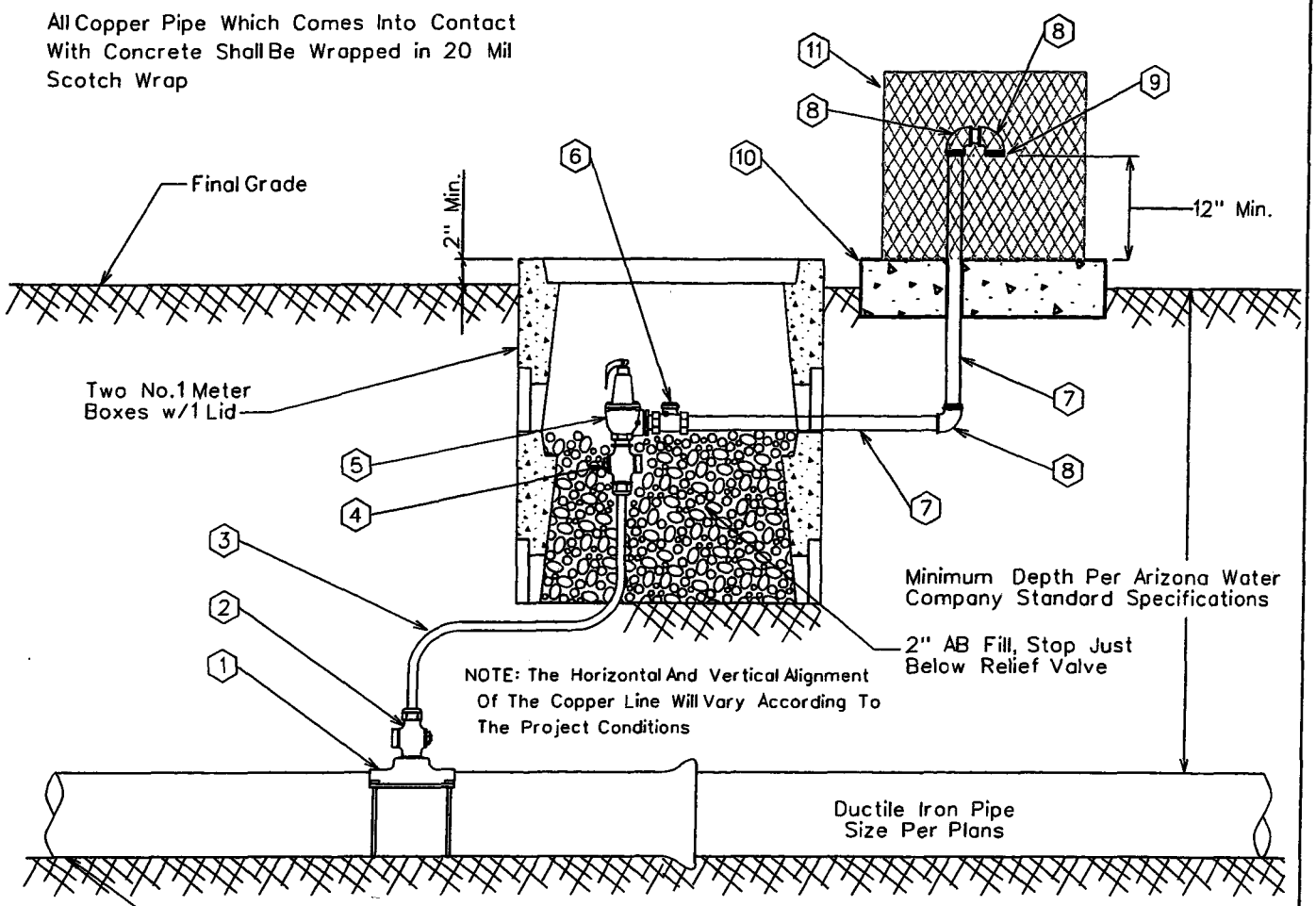

NOTE:

1. Pressure relief valves are typically located just down stream of a pressure reducing station or where system conditions might be subject to greater than allowable pressures.
2. The relief valve assembly and vandal enclosure shall be located out of the roadway, but within the right-of-way or easement.

⬡	FITTINGS SCHEDULE
1.	Mueller BR2B Bronze Service Saddle - Double Strap
2.	2" Mueller B-25008 Taper x Comp. Ball Corp Stop
3.	2" Type 'M' Rigid Copper w/NO Splices - Field Fit
4.	2" Mueller B-25028 IP x Comp. Ball Corp Stop
5.	2" Pressure Relief Valve Watts 174A With A 2" Inlet / 2" Outlet 30-150 psi W/ Bronze Body
6.	2" Bronze Check Valve Watts Series CV
7.	2" Schedule 40 Cut Pipe - Field Fit
8.	2" Brass Street Elbow
9.	No.16 Wire Mesh Screen (Non-Corrodible)
10.	4" Thick Concrete Pad - Class 'C' Concrete
11.	Guardshack, Model GS-1, Available From BPDI, Inc. Available In Leaf Green Or Desert Tan

ARIZONA WATER COMPANY

STANDARD SPECIFICATION
FOR THE INSTALLATION OF

PRESSURE RELIEF VALVE - NORTHERN REGION

DRAWN BY:	APPROVED BY:	DATE:		
CCO	MW	3/20/1986	△08.29.2006	E-9-14-2

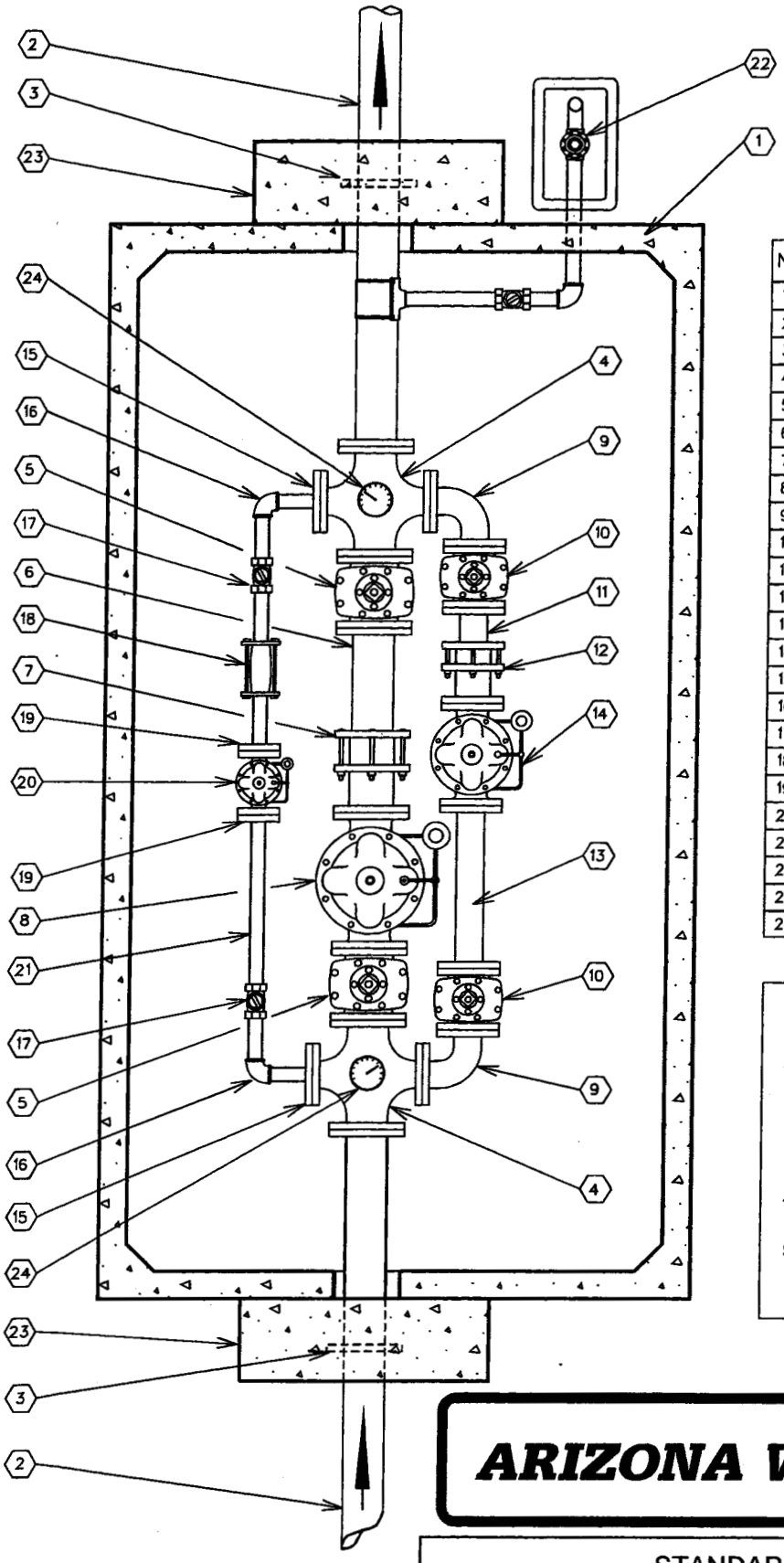

No.	FITTINGS SCHEDULE
1.	612 LA Conc. Vault (See Note 3)
2.	6"x6'-0" D.I.P. Spool Flg.xP.E.
3.	6" Megalug (Thrust Anchor)
4.	6"x4" Cross Flg.
5.	6" Gate Valve Flg.
6.	6"x2'-0" D.I.P. Spool Flg.xP.E.
7.	6" Flg. Coup. Adapt. (Rockwell 913)
8.	6" High Flow Pressure Reducing Valve Flg.
9.	4" 90° Ell. Flg.
10.	4" Gate Valve Flg.
11.	4"x1'-0" D.I.P. Spool Flg.xP.E.
12.	4" FLg. Coup. Adapt. (Rockwell 913)
13.	4"x2'-0" D.I.P. Spool Flg.
14.	4" Medium Flow Pressure Reducing Valve Flg.
15.	2"x9" O.D. Reducing Flg. (I.P.T.)
16.	2" 90° Ell. F.I.P.
17.	2" Ball Valve F.I.P.
18.	2" Comp. Coup. (Rockwell 411)
19.	2" Companion Flg. (I.P.T.)
20.	2" Low Flow Pressure Reducing Valve Flg.
21.	2" Sched. 40 Stl. Pipe
22.	2" Pressure Relief Valve (See E-9-14-1)
23.	12"x36"x36" Conc. Thrust Block P.I.P.
24.	Pressure Gauge w/shut off valve

NOTE:

1. Use Rowley pipe supports or equivalent as needed. (See E-9-12-4)
2. Pipe support locations to be determined by field personnel.
3. Vault-612 LA top section w/12" Dia. sump hole. Cover-concrete slab top w/(4) 4'-0" x2'-6" aluminum spring loaded hinged style covers for non-traffic loading areas. For areas w/low density traffic, cover is to be designed for H-20 traffic loading.
4. All Sched. 40 Stl. pipe outside of vault to be wrapped w/10-20 Mil. Scotchwrap corrosion protection tape.
5. Use deflection fittings (45° Ells.) to achieve necessary depths & cover as shown on the standard specification for the installation of a concrete vault (E-9-12-5).

ARIZONA WATER COMPANY

STANDARD SPECIFICATION

FOR THE INSTALLATION OF

PRESSURE REDUCING STATION

DRAWN BY:	APPROVED BY:	DATE:		
JPK	MW	11-16-88	△ 9-27-95	E-9-15-1

1. Specific Items To Be Painted Deer-O Pure White Enamel:

A. All Booster Pumps.
B. All Electrical Motors And Gas Engines.
C. Well Pump Discharge Heads.
D. Electrical Panel.

2. Specific Items To Be Painted Frost Cap White Or Deer-O Pure White Enamel:

A. Well Shelter.

3. Specific Items To Be Painted OSHA Orange:

A. Electrical Conduit.

4. All Other Items To Be Painted With Either:
(At Manager's Discretion)

A. Cholla Green
B. Forest Green
C. Sonora Beige
D. Red Rock
E. Rock Brown
F. Deer-O Pure White
G. Elkhorn Cactus

ARIZONA WATER COMPANY

STANDARD SPECIFICATION
FOR THE INSTALLATION OF

PAINT COLOR SELECTION

DRAWN BY:	APPROVED BY:	DATE:	△	
CCO		3/20/1986	2/13/2001	E-9-16-1

1. Tank shall conform to AWWA Specification D100-84 with exceptions noted below.

*2. 1/4" minimum shell plate.

3. Minimum of 12" diameter roof vent, screened with No. 16 non-corrodible wire mesh, to be located on a 24" diameter round hinged manhole opening at the center of the tank to provide access to the dollar plate.

4. Overflow pipe shall be the same diameter as the inlet pipe and shall terminate 12 to 24 inches above splash pad or a minimum of 2 overflow pipe diameters above weir box high water level.

5. Storage tank shall be placed upon adequately compacted base material.

6. 6" minimum floor mounted tank drain outlet to be located close to the outer shell.

7. Tank and related fittings shall be enclosed with a 6 foot chain link fence with lockable gates and anti-personnel wire on top of fence.

8. Liquid level shall be indicated by a target and target board on the outside surface of the tank.

9. 24 inch diameter manholes shall be provided on the roof and on the shell near the bottom of the tank. The roof manhole cover shall overlap the manhole by at least 2 inches to provide a rain tight closure. Roof manhole shall be hinged and equipped with a lock. Shell manhole cover to be hinged and bolted in place. *Tanks larger than a 60 foot diameter require 2 shell manholes.

10. Inside and outside ladders shall be located at the roof manhole. Outside ladder shall be caged with locking trap door. Bottom 8 feet of cage shall be enclosed to within 1/2" of shell with 10 gauge sheet steel.

11. Finished tank shall be disinfected in accordance with Arizona Department of Health Services Engineering Bulletin No. 8 before being placed into service.

12. The following information will be included with application for approval to construct:

    1. Tank location_____
    2. Tank height_____
    3. Tank diameter_____
    4. Tank capacity_____
    5. Method of water level control_____

    _____

13. The storage tank will not be constructed within the 100 year flood plain and the tank site will be graded to slope away from the tank.

14. The welded steel storage tank will be coated as per AWWA Specification D102, and N.S.F. Standard 61.

*Exceptions to AWWA Specification D100-84

FOUNDATION NOTES

1. FINISH CONCRETE SURFACE MUST SLOPE UPWARDS FROM THE STEEL BAND APPROX. 1" IN 10'-0".

2. TOP OF STEEL BAND MUST BE MAINTAINED LEVEL TO WITHIN 1/8".

3. INSTALL 8-2" DIA.x10'-0" P.V.C. WEEP LINES, EQUALLY SPACED (EVERY 45°). PERFORATE 8'-0" OF LINE WITH 1/2" DIA. HOLES @ 6" O.C. PLUG INTERIOR END OF LINE w/2" CAP.

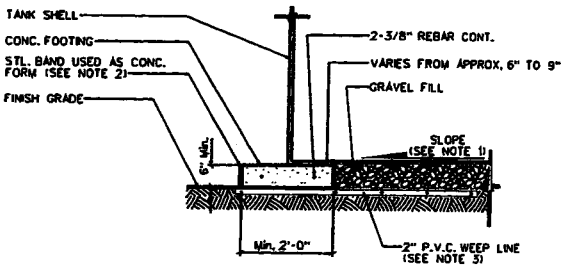

FOUNDATION DETAIL

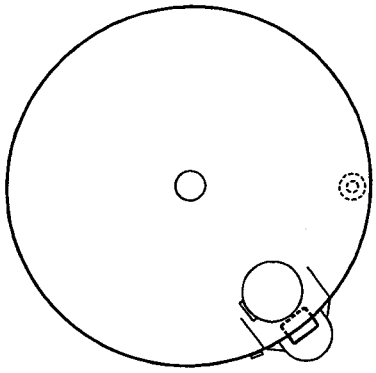

PLAN VIEW

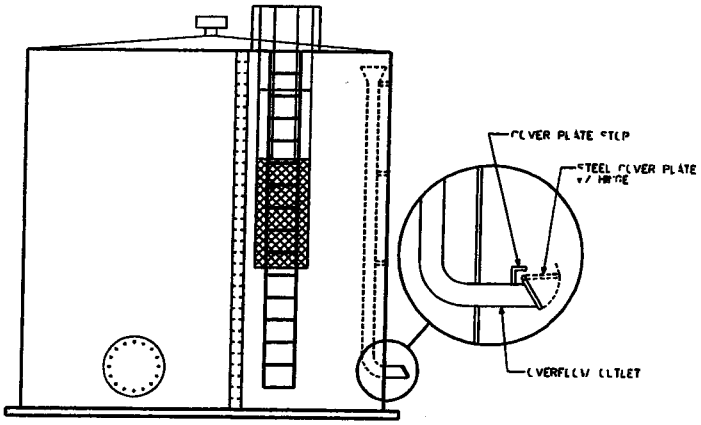

PROFILE VIEW

ARIZONA WATER COMPANY

STANDARD SPECIFICATION FOR THE INSTALLATION OF STEEL WATER STORAGE TANK				
DRAWN BY: JPK	APPROVED BY: MJW	DATE: 10-17-88	△ 2-12-96	E-9-17-1

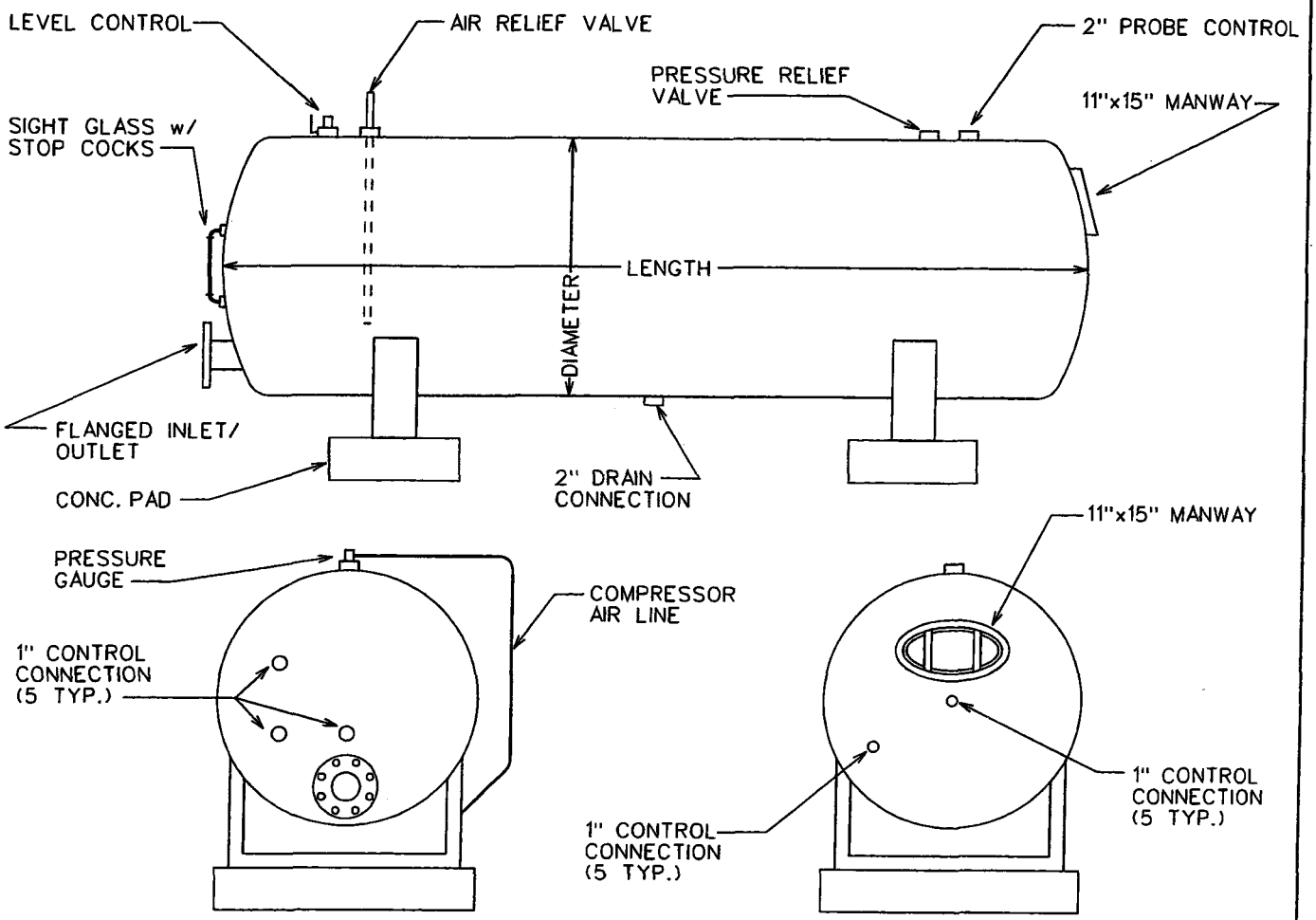

1. ALL HYDROPNEUMATIC TANKS SHALL BE DESIGNED & CONSTRUCTED IN ACCORDANCE WITH THE CURRENT REQUIREMENTS OF THE ASME CODE FOR UNFIRED PRESSURE VESSELS, SECTION VIII, DIVISION 1.
2. FINISHED TANK SHALL BE DISINFECTED IN ACCORDANCE WITH ADEQ BULLETIN No. 8 BEFORE BEING PLACED INTO SERVICE.
3. THE WELDED STEEL HYDROPNEUMATIC TANK WILL BE COATED AS PER AWWA SPECIFICATION D102 & NSF STANDARD 61.
4. THE FOLLOWING INFORMATION WILL BE INCLUDED WITH THE APPLICATION FOR APPROVAL TO CONSTRUCT.
   1. Tank Location _____
   2. Tank Length _____
   3. Tank Diameter _____
   4. Tank Capacity _____
   5. Maximum Working Pressure _____

ARIZONA WATER COMPANY

STANDARD SPECIFICATION FOR THE INSTALLATION OF				
HYDROPNEUMATIC TANK				
DRAWN BY: JPK	APPROVED BY: MW	DATE: 3-20-1986	△ 01.16.2007	E-9-18-1

NOT
CONVERTED
TO
CAD

ARIZONA WATER COMPANY

STANDARD SPECIFICATION FOR THE INSTALLATION OF				
WELL SHELTER				
DRAWN BY: CB	APPROVED BY:	DATE: 03.20.1986	△04.03.2001	E-9-19-1

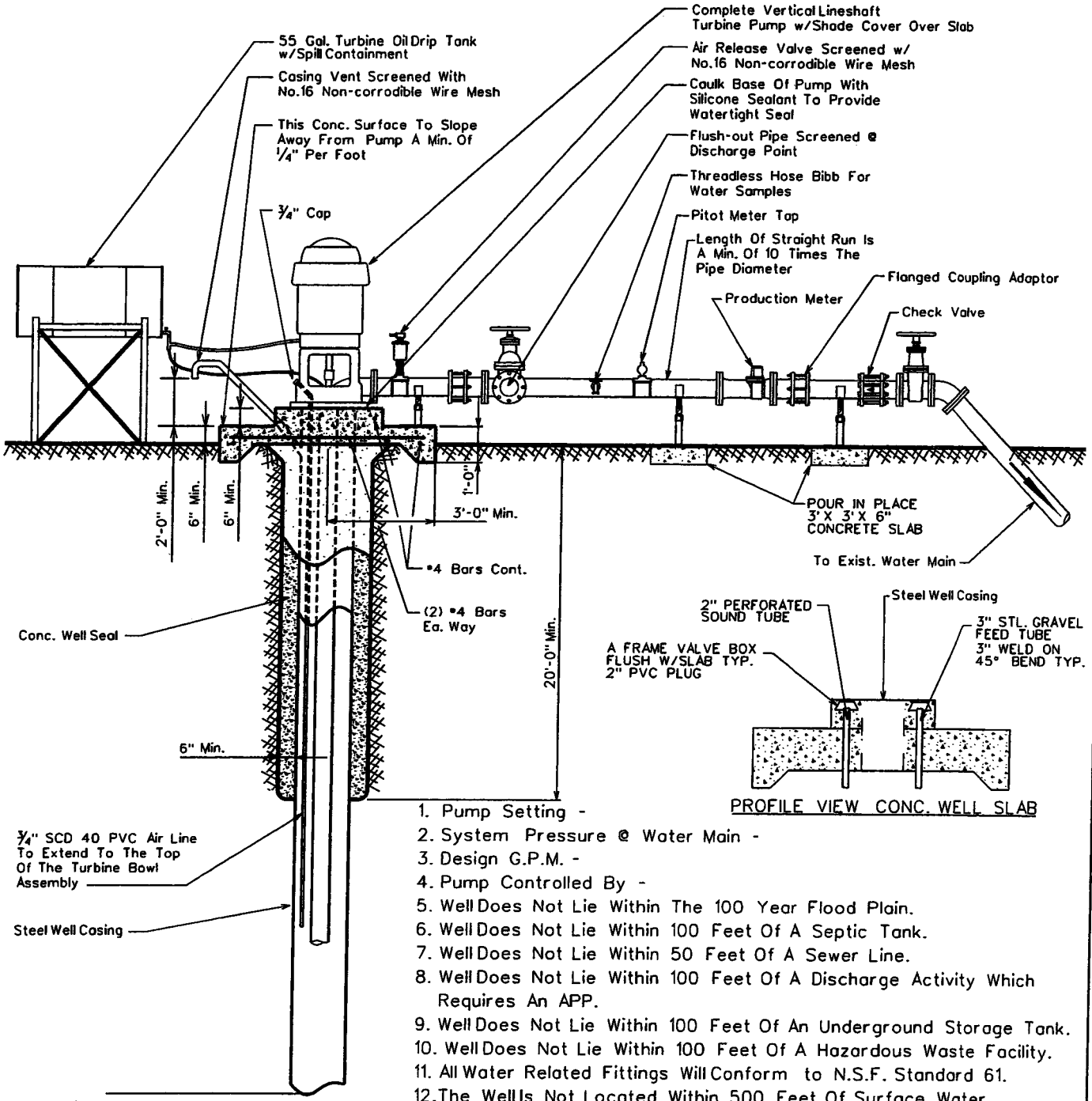

1. Pump Setting -
2. System Pressure @ Water Main -
3. Design G.P.M. -
4. Pump Controlled By -
5. Well Does Not Lie Within The 100 Year Flood Plain.
6. Well Does Not Lie Within 100 Feet Of A Septic Tank.
7. Well Does Not Lie Within 50 Feet Of A Sewer Line.
8. Well Does Not Lie Within 100 Feet Of A Discharge Activity Which Requires An APP.
9. Well Does Not Lie Within 100 Feet Of An Underground Storage Tank.
10. Well Does Not Lie Within 100 Feet Of A Hazardous Waste Facility.
11. All Water Related Fittings Will Conform to N.S.F. Standard 61.
12. The Well Is Not Located Within 500 Feet Of Surface Water.
13. The Site Will Be Graded To Provide Adequate Drainage Away From The Well.
14. 6.88 lbs. of Davis #8084 Grey Dye, Per Yard, For 2500 PSI Concrete

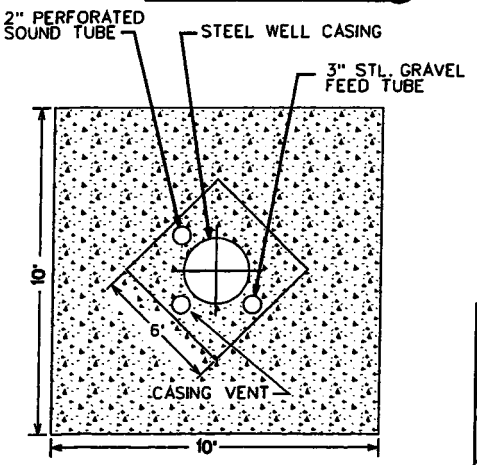

PLAN VIEW CONC. WELL SLAB

ARIZONA WATER COMPANY

STANDARD SPECIFICATION
FOR THE INSTALLATION OF

TYPICAL WELL W/ LINESHAFT TURBINE PUMP

DRAWN BY:	APPROVED BY:	DATE:	△	
JW	M.W.	3-20-86	9/15/04	E-9-20-1

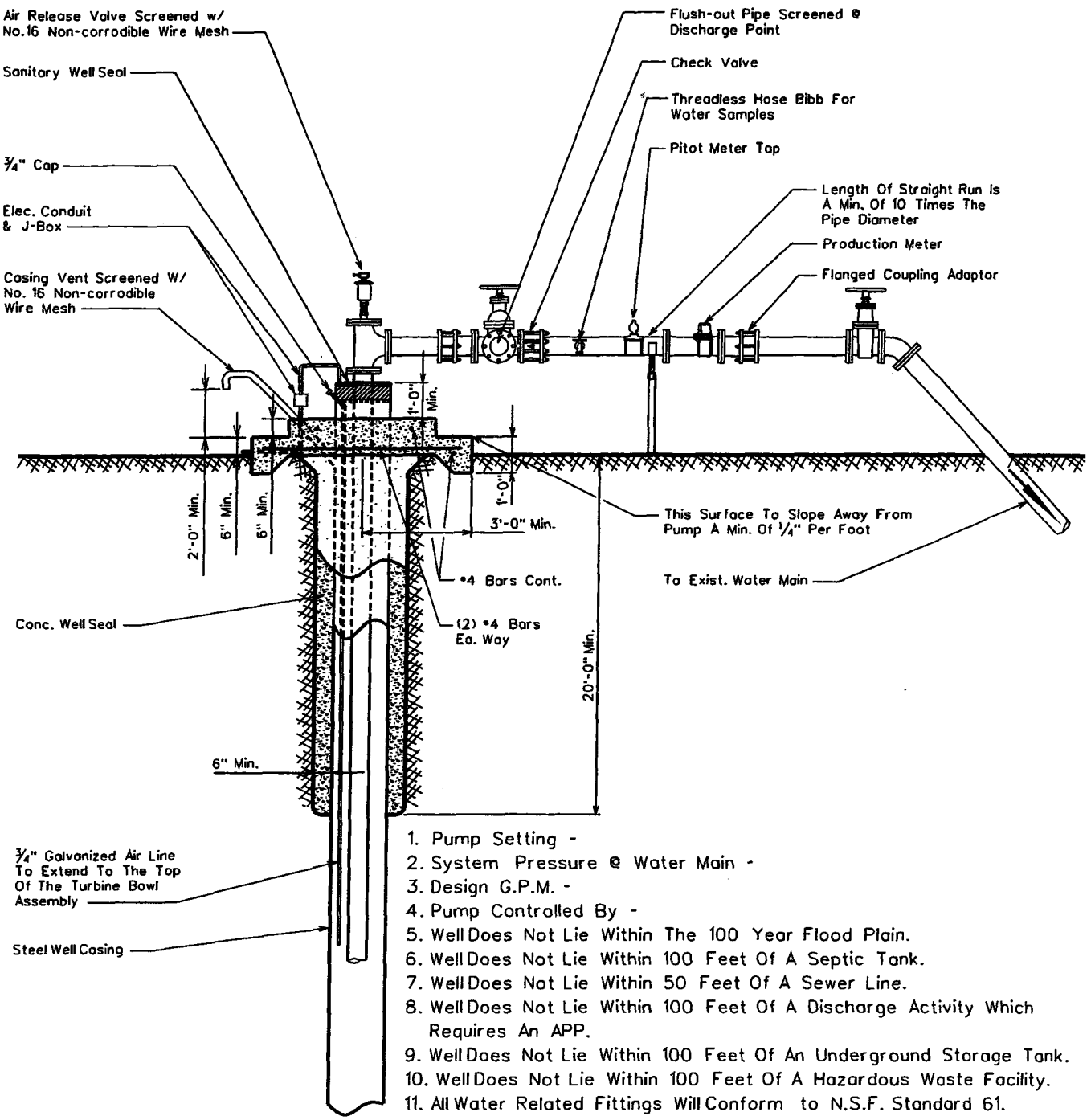

1. Pump Setting -
2. System Pressure @ Water Main -
3. Design G.P.M. -
4. Pump Controlled By -
5. Well Does Not Lie Within The 100 Year Flood Plain.
6. Well Does Not Lie Within 100 Feet Of A Septic Tank.
7. Well Does Not Lie Within 50 Feet Of A Sewer Line.
8. Well Does Not Lie Within 100 Feet Of A Discharge Activity Which Requires An APP.
9. Well Does Not Lie Within 100 Feet Of An Underground Storage Tank.
10. Well Does Not Lie Within 100 Feet Of A Hazardous Waste Facility.
11. All Water Related Fittings Will Conform to N.S.F. Standard 61.
12. The Well Is Not Located Within 500 Feet Of Surface Water.
13. The Site Will Be Graded To Provide Adequate Drainage Away From The Well.

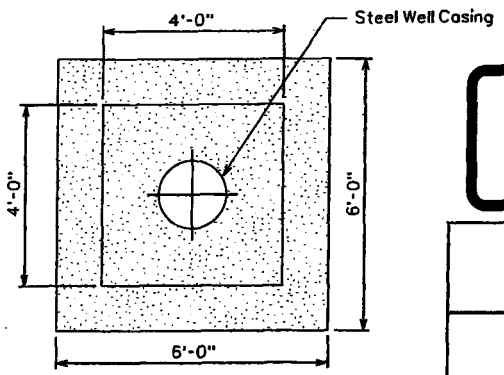

PLAN VIEW CONC. WELL SLAB

ARIZONA WATER COMPANY

STANDARD SPECIFICATION
FOR THE INSTALLATION OF

TYPICAL WELL W/ SUBMERSIBLE TURBINE PUMP

DRAWN BY:	APPROVED BY:	DATE:	△	
jpk	M.W.	3-20-86	2-16-01	E-9-21-1

All New Purchases To Conform To The Following:

Column Pipe

4" I.D. - 8	Threads	Per	Inch	Tapered	¾"	Per	Foot	Right	Hand
6" I.D. - 8	"	"	"	"	"	"	"	"	"
8" I.D. - 8	"	"	"	"	"	"	"	"	"
10" I.D.- 8	"	"	"	"	"	"	"	"	"
12" I.D.- 8	"	"	"	"	"	"	"	"	"
14" I.D.- 8	"	"	"	"	"	"	"	"	"

Oil Tube - Peerless Type

1½" O.D. - 14	Threads	Per	Inch	Right	Hand	
2" O.D. - 12	"	"	"	"	"	
2½" O.D. - 10	"	"	"	"	"	
3" O.D. - 10	"	"	"	"	"	
3½" O.D. - 10	"	"	"	"	"	
4" O.D. - 10	"	"	"	"	"	

Line Shaft

¾" O.D. - 10	Threads	Per	Inch	Left	Hand	
1" O.D. - 14	"	"	"	"	"	
1-3/16" O.D. - 10	"	"	"	"	"	
1-1/2" O.D. - 10	"	"	"	"	"	
1-11/16" O.D. - 10	"	"	"	"	"	
1-15/16" O.D. - 10	"	"	"	"	"	
2-3/16" O.D. - 10	"	"	"	"	"	
2-7/16" O.D. - 8	"	"	"	"	"	

ARIZONA WATER COMPANY

STANDARD SPECIFICATION
FOR THE INSTALLATION OF

COLUMN PIPE, OIL TUBE AND LINE SHAFT

DRAWN BY:	APPROVED BY:	DATE:	△	
CCO		3/20/1996	2/13/2001	E-9-22-1

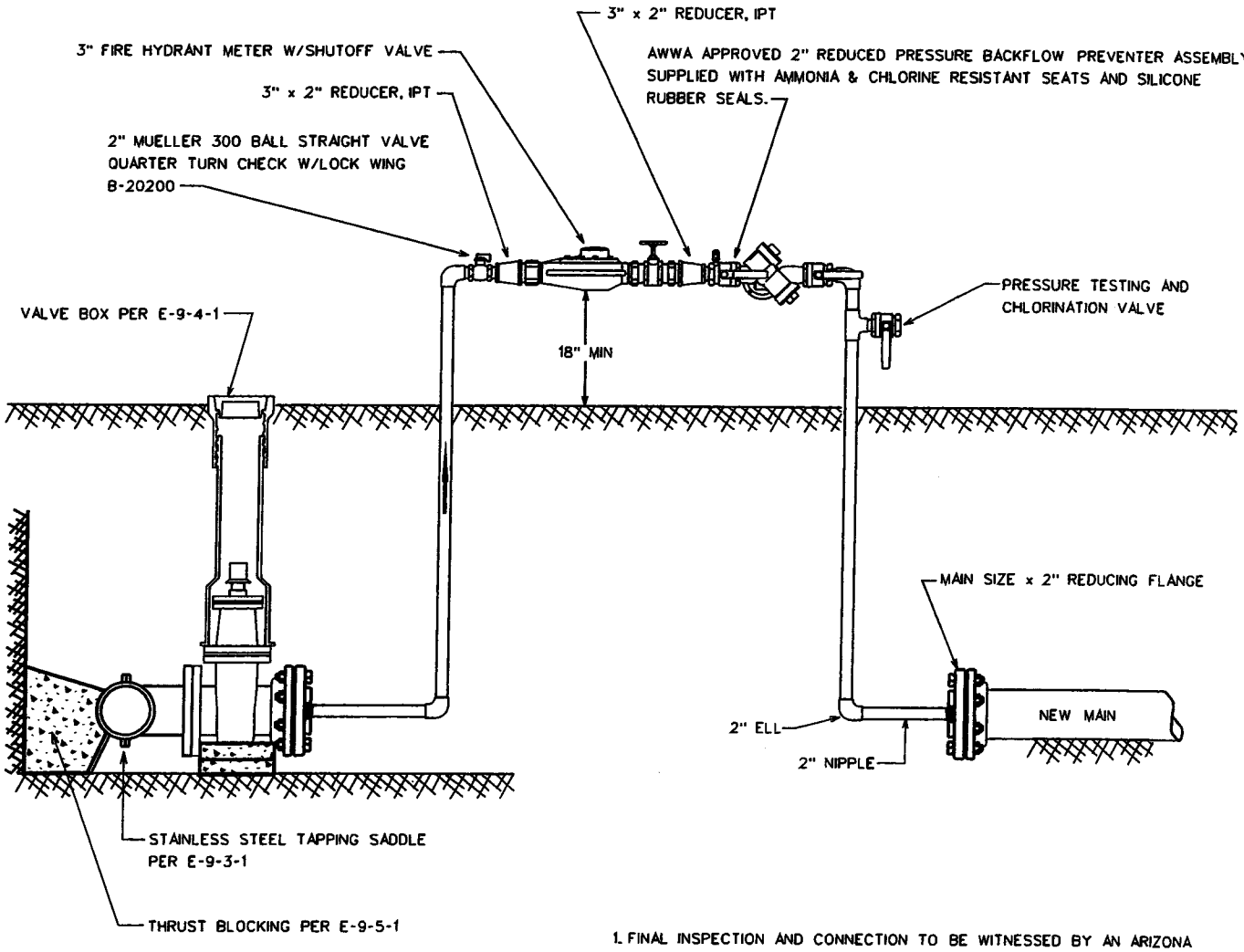

1. FINAL INSPECTION AND CONNECTION TO BE WITNESSED BY AN ARIZONA WATER COMPANY REPRESENTATIVE.
2. REDUCING FLANGES TO BE PROPERLY RESTRAINED.
3. INSTALL JUMPER TAP FOR TEMPORARY METER DOWNSTREAM OF THE REDUCING FLANGE FOR PRESSURE AND BACTEE TESTING.
4. JUMPER ASSEMBLY MUST BE A MINIMUM OF 18" ABOVE FINISHED GRADE.
5. BACKFLOW ASSEMBLY REQUIRES CERTIFICATION.
6. ASSEMBLY NOT TO BE REMOVED AND SPOOL PIECE INSTALLED FOR FINAL CONNECTION UNTIL ALL TESTING, BACTERIAL CLEARANCE AND FINAL INSPECTIONS HAVE BEEN OBTAINED.
7. ALL NEW PIPING SHALL BE PROPERLY RESTRAINED.

ARIZONA WATER COMPANY

STANDARD SPECIFICATION
FOR THE INSTALLATION OF

HOT TAP & JUMPER METER CONNECTION

DRAWN BY:	APPROVED BY:	DATE:	△	
CB	MJW	05.14.2004		E-9-23-1

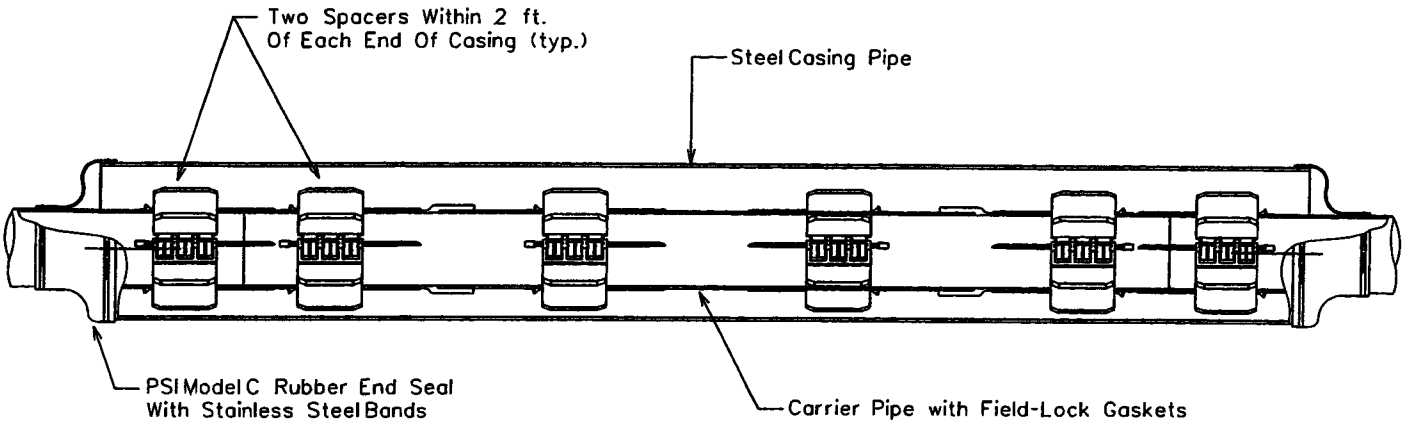

CROSS SECTION

The casing spacers shall be the PSI Ranger II Casing Spacers as manufactured by Pipeline Seal and Insulator, Inc., Houston, Texas.

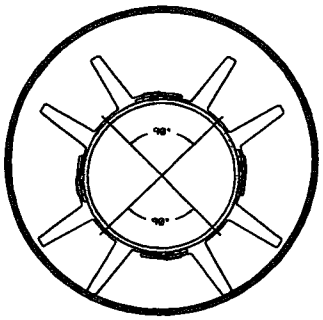

SECTION CUT

End Seals
After insertion of the carrier pipe into the casing, the ends of the casing shall be closed by installing 1/8" thick synthetic rubber end seals equal to the PSI Model "C" end seal as manufactured by Pipeline Seal and Insulator, Inc., Houston, Texas.

NOTE: The Carrier Pipe Shall Be Polywrapped Prior To The Skid Installation & Insertion Into The Carrier Casing For Divisions Requiring Polywrapped Pipe.

*Thickness Of Skid To Extend A Minimum of 1/2" Above The O.D. Of The Pipe Bell or Gland.

PIPE SIZE	CASING SIZE	CASING SIZE ID	CASING SCHEDULE	WALL THICKNESS	SKID SIZE
6"	16"	15.25"	STD.	.375	*x4x12
8"	18"	18.25"	STD.	.375	*x4x12
12"	22"	21.25"	STD.	.375	*x4x12
16"	28"	27.25"	STD.	.375	*x4x12
20"	32"	31.25"	STD.	.375	*x4x12
24"	36"	35.25"	STD.	.375	*x4x12
30"	48"	47.25"	STD.	.375	*x4x12
36"	54"	53.25"	STD.	.375	*x4x12
48"	66"	65.25"	STD.	.375	*x4x12

OD Push On Joint Bell	OD M.J. BELL
6" - 8.66"	6" - 11.12"
8" - 10.82"	8" - 13.37"
12" - 15.05"	12" - 17.94"
16" - 19.74"	16" - 22.56"
20" - 23.98"	20" - 27.08"
24" - 28.16"	24" - 31.58"
30" - 35.40"	30" - 39.12"
36" - 41.84"	36" - 46.00"
48" - 55.94"	48" - 60.00"

ARIZONA WATER COMPANY

STANDARD SPECIFICATION
FOR THE INSTALLATION OF

TYPICAL WATER LINE ENCASEMENT

DRAWN BY:	APPROVED BY:	DATE:	△	
CB		3/20/1996	09.27.2006	E-9-24-1

CALCIUM HYPOCHLORITE TABLET CHLORINATOR FEEDER SPECIFICATIONS

SCOPE - This specification describes a ARCH Chemicals Calcium Hypochlorite Tablet Chlorination System as manufactured by ARCH Chemicals, 501 Merritt Seven, P.O. Box 5204, Norwalk, CT, 06856-5204.

DESCRIPTION - The chlorination system shall be completely assembled, ready to install. The chlorination system shall be a ARCH Chemicals Calcium Hypochlorite Tablet Feeder, or its equivalent, and shall be supplied with all its components factory mounted.

COMPONENTS - The Chlorination system shall have the following components:
- A. 1-¼" ARCH Chemical solid calcium hypochlorite tablet feeder
- B. Polyethylene system enclosure
- C. Integrated, level controlled solution tank
- D. Adjustable flow control valve
- E. Manual on/off valve (at inlet)
- F. Chemical metering pump
- G. On/off pump control switch
- H. Waterproof electrical junction box
- I. Corrosion resistant schedule 40 piping
- J. Reverse flow check valves
- K. Total solution output control valve

ELECTRICAL FIXTURES - The following electrical fixtures shall be provided:
A. Safety switch, 2 pole, fused for 30 Amps, for 120 Volts, 60 cycle, single phase power.

CHLORINATOR DESIGN - The chlorination facility shall be designed and constructed in accordance with Arizona State Department of Health Engineering Bulletin Number 8 - "Disinfection of Water Systems". Latest Revision.

CHLORINATION EQUIPMENT - The chlorination equipment shall be a ARCH Chemicals Calcium Hypochlorite tablet chlorinator, approved by NSF Standard 61.

CHLORINATOR OPERATION - The chlorination facility shall be operated in accordance with Arizona State Department of Health Engineering Bulletin Number 8, "Disinfection of Water Systems", Table 1. latest revision.

CHLORINATOR SYSTEM DESCRIPTION - ARCH Chemicals tablet chlorinator systems incorporate a patented chlorinator which is designed to utilize ARCH Chemicals 1-¼" solid calcium hypochlorite tablets (Approved NSF Standard 60). Meets AWWA Standard B-300, EPA Registration # 1258-1179.The chlorinator is mounted on a polyethylene system enclosure. The inlet water is sprayed on the calcium hypochlorite tablet and collected in a solution tank. This chlorinated solution is then pumped out of the tank through a chemical metering pump. This metering pump is then adjusted to obtain the desired CL residual.

ARCH Chemicals Calcium Hypochlorite Tablet Chlorinator

NTS

HYPOCHLORINATOR COMPONENTS:

1. Chemical Metering Pump
2. Pump Suction Connection
3. Pump Discharge Connection
4. Inlet Water Assembly
5. Inlet Water Solenoid Valve
6. Inlet Shut-Off Valve
7. Inlet Pressure Regulator
8. Inlet Water Pressure Gauge
9. Spray Nozzle Water Pressure Gauge
10. Inlet Strainer
11. Inlet Tubing Connection
12. Dry Chemical Hopper
13. Suction Line
14. Electrical Control Box With Power On/Off
15. Electric Mixer
16. Solution Discharge Connection
17. Tank Drain Valve
18. Observation Port
19. Mixed Chemical Holding Tank
20. Pressure Relief Valve
21. Pump Speed Control
22. High Level Shut-Off Float Switch
23. Water Spray Nozzles

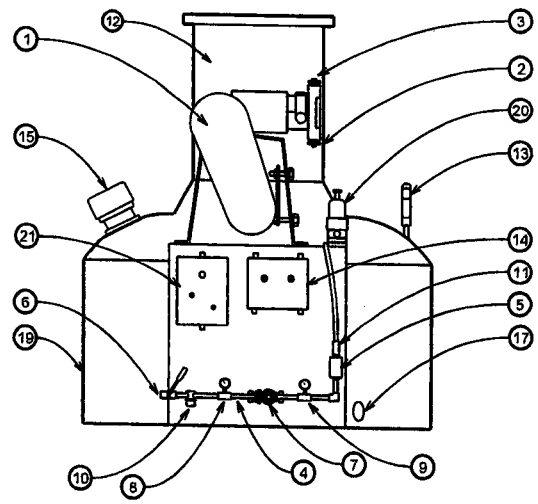

FRONT VIEW

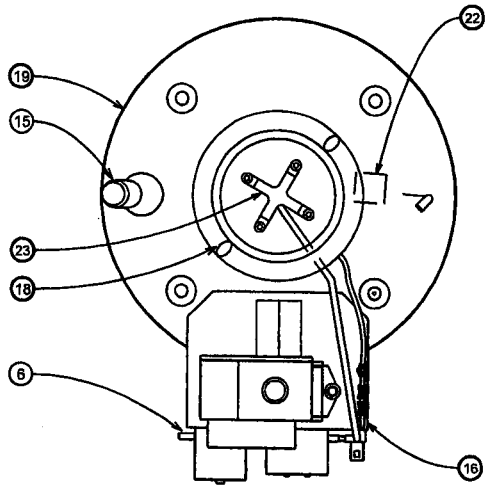

TOP VIEW

HOPPER REMOVED FOR CLARITY

Chlorinator Fluid Schematic

NTS

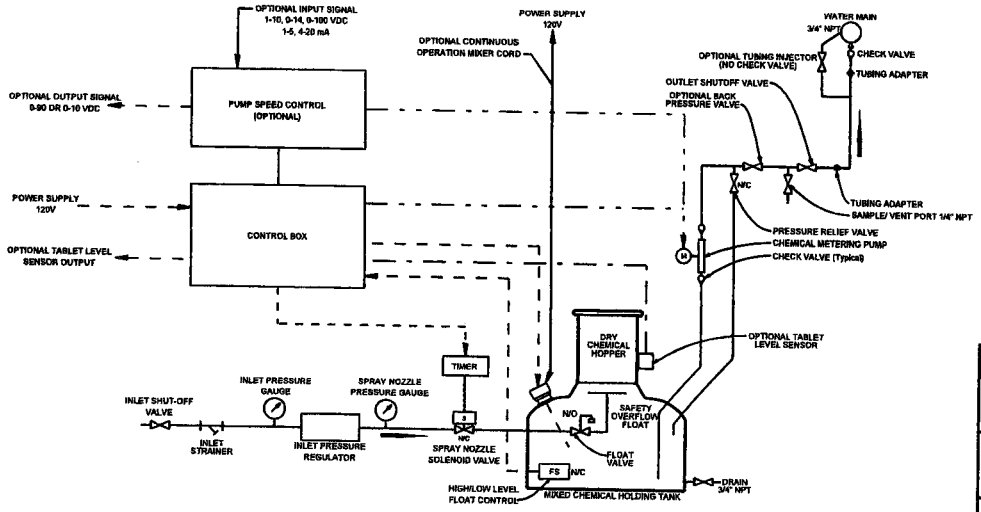

ARIZONA WATER COMPANY

STANDARD SPECIFICATION

FOR THE INSTALLATION OF

CALCIUM HYPOCHLORITE TABLET CHLORINATOR

DRAWN BY:	APPROVED BY:	DATE:		
CB	MW	02-09-2000	△	E-9-25-1

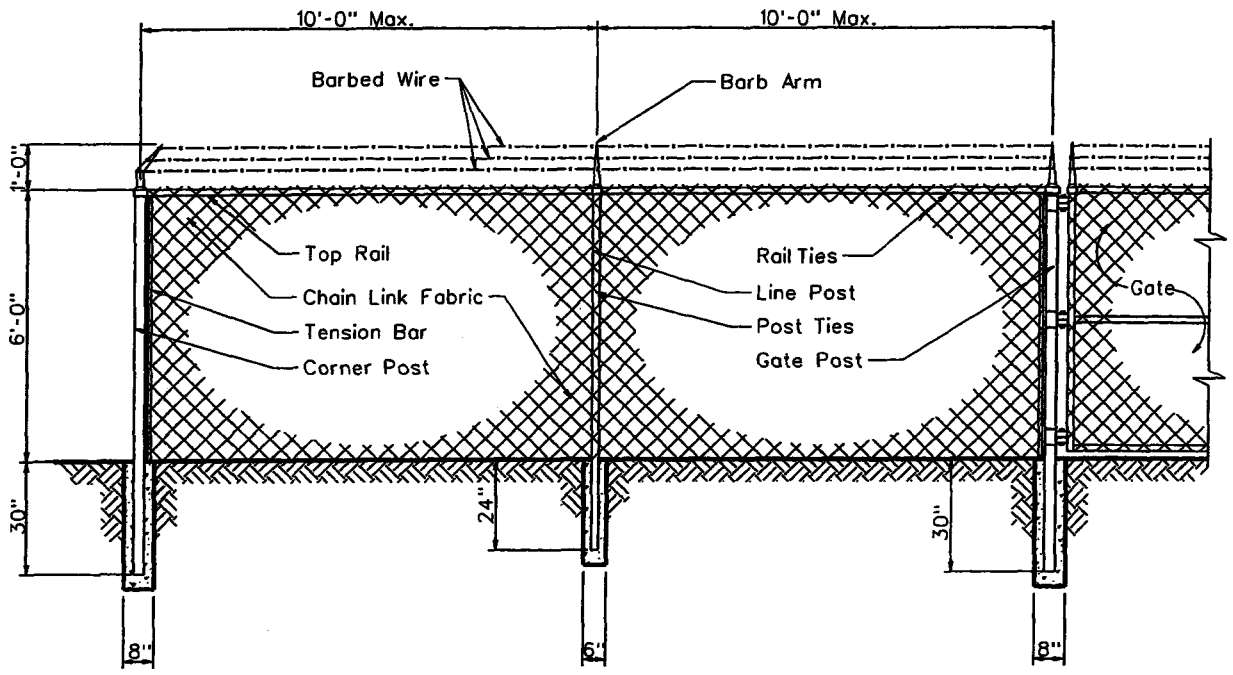

Line Post:	1-7/8" O.D.	1.74 lbs. P/L.F.	ASTM A-256
End Post:	2-7/8" O.D.	4.64 lbs. P/L.F.	ASTM A-256
Corner Post:	2-7/8" O.D.	4.64 lbs. P/L.F.	ASTM A-256
Gate Post:	2-7/8" O.D.	4.64 lbs. P/L.F.	ASTM A-256
Top Rail:	1-5/8" O.D.	4.64 lbs. P/L.F.	ASTM A-256
Chain Link Fabric:	9 Ga. 2" Mesh Galv. Before Weave		
Selvage:	Barb/Knuckle		
Fittings:	Pressed Steel		
Barb Wire:	2-1/2 Ga./2 Point		
Barb Arm:	1 Piece/45° Arm		
Tension Wire:	9 Ga./Galv.		
Line Post Set:	6"x24" In Concrete		
Terminal Post Set:	8"x30" In Concrete		

ARIZONA WATER COMPANY

STANDARD SPECIFICATION
FOR THE INSTALLATION OF

CHAIN LINK FENCE

DRAWN BY:	APPROVED BY:	DATE:	△	
CCO	MW	7/7/1992	2/9/2001	E-9-26-1

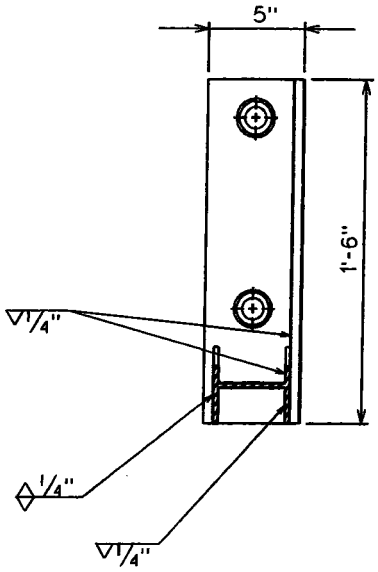

SECTION X-X

NOTES

1. Minimum 2 Supports Per Joint Of Pipe.
2. All Bolts Shall Have A Lock Washer Under The Nut.
3. All Nuts Shall Be Stainless Steel Series 304.

PIPE SIZE	A	B
8"	8"	15"
10"	9"	17"
12"	10"	19"

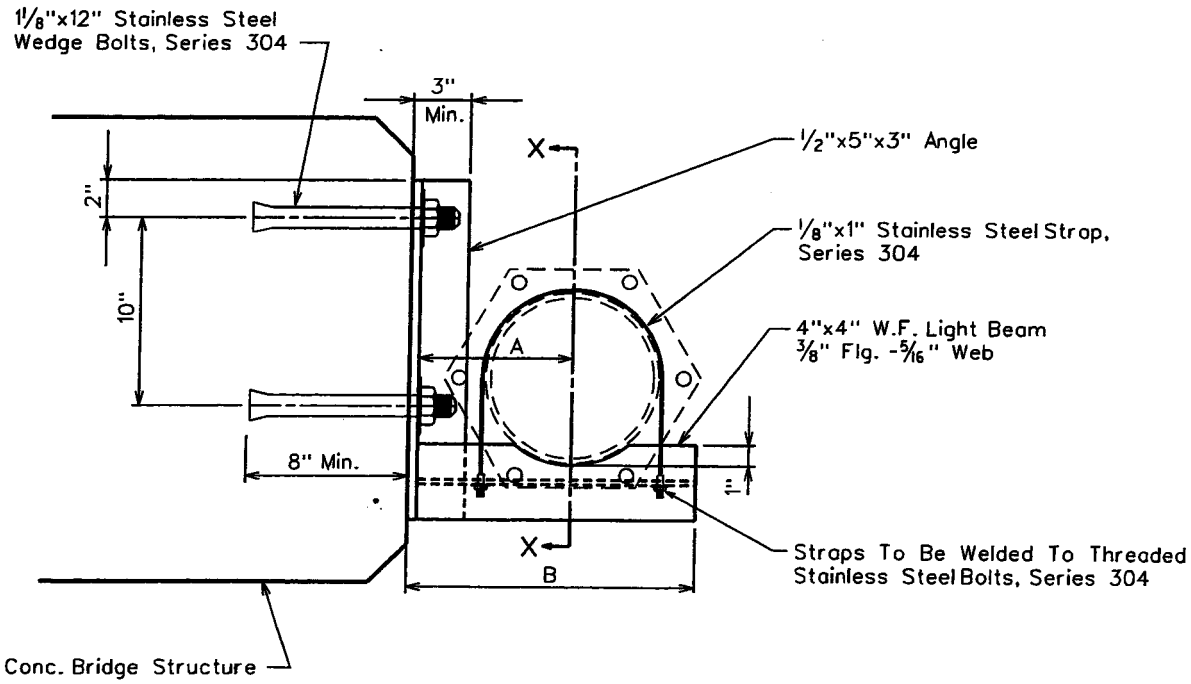

SUSPENSION DETAIL

ARIZONA WATER COMPANY

STANDARD SPECIFICATION
FOR THE INSTALLATION OF

SIDE HUNG WATER LINE SUSPENSION

DRAWN BY:	APPROVED BY:	DATE:		
JPK	MJW	7-12-96	△	E-9-27-1

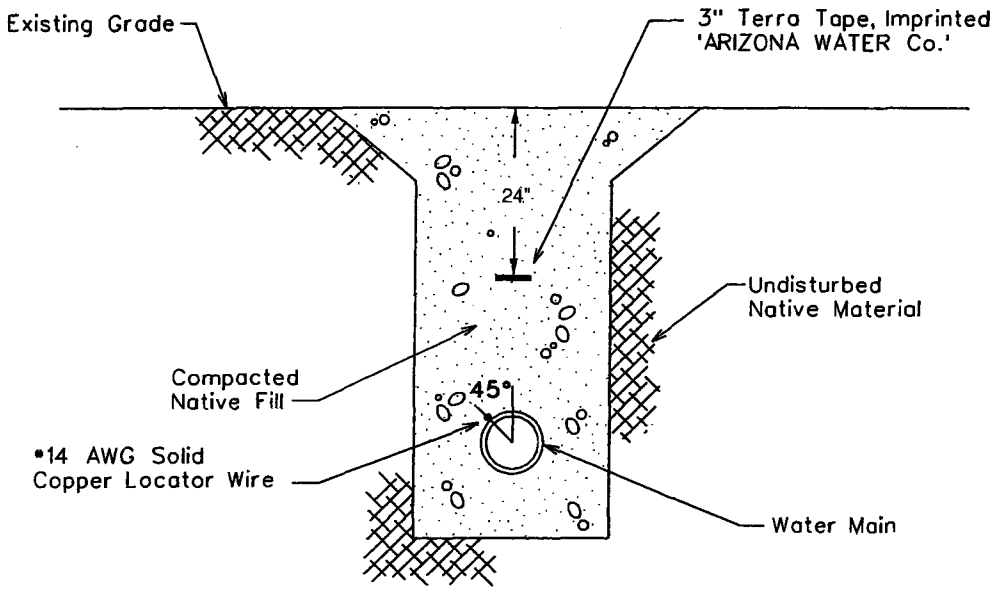

TYPICAL WATER TRENCH DETAIL

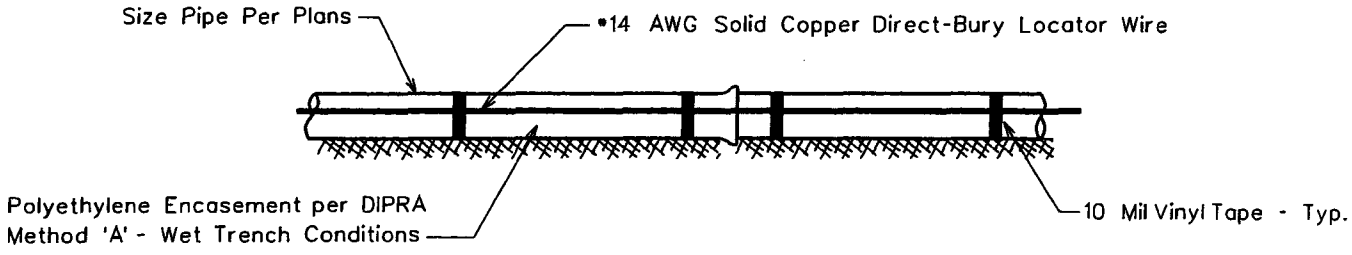

TYPICAL PROFILE VIEW

WIRE GENERAL NOTES:

1. All pipe shall have •14 AWG Solid Copper Direct-Bury Locator Wire Installed Directly To The Polywrap At 45° From The Vertical Center Of The Pipe and Shall Be Attached Using 10 Mil Vinyl Tape.
2. The Locating Wire Shall Terminate At the Top Of Each Valve Box and Be Capable of Extending 12" Above the Top Of The Box In Such A Manner So As Not To Interfere With Valve Operation.

TAPE GENERAL NOTES:

1. Use Terra Tape 3" Marking Tape As Manufactured By Reef Industries Inc. Of Houston, Texas (1-800-231-2417)
2. The Tape Is Blue & Imprinted 'ARIZONA WATER Co.'
3. INSTALLATION: The Pipe Warning Tape Shall Be Installed Over All Water Mains And Shall Be Buried 24 Inches Below The Surface Over The Center Of The Pipe.
   A) The Backfill Shall Be Sufficiently Leveled So That The Tape Is Installed On A Flat Surface.
   B) The Tape Shall Be Centered In The Trench With The Printed Side Up.
   C) Care Shall Be Exercised To Avoid Movement Of The Tape While The Remaining Backfill Is Moved Into The Trench.

ARIZONA WATER COMPANY

STANDARD SPECIFICATION
FOR THE INSTALLATION OF

PIPE WARNING TAPE AND LOCATOR WIRE

DRAWN BY:	APPROVED BY:	DATE:		
CB		03.24.1997	△09.27.2006	E-9-28-1

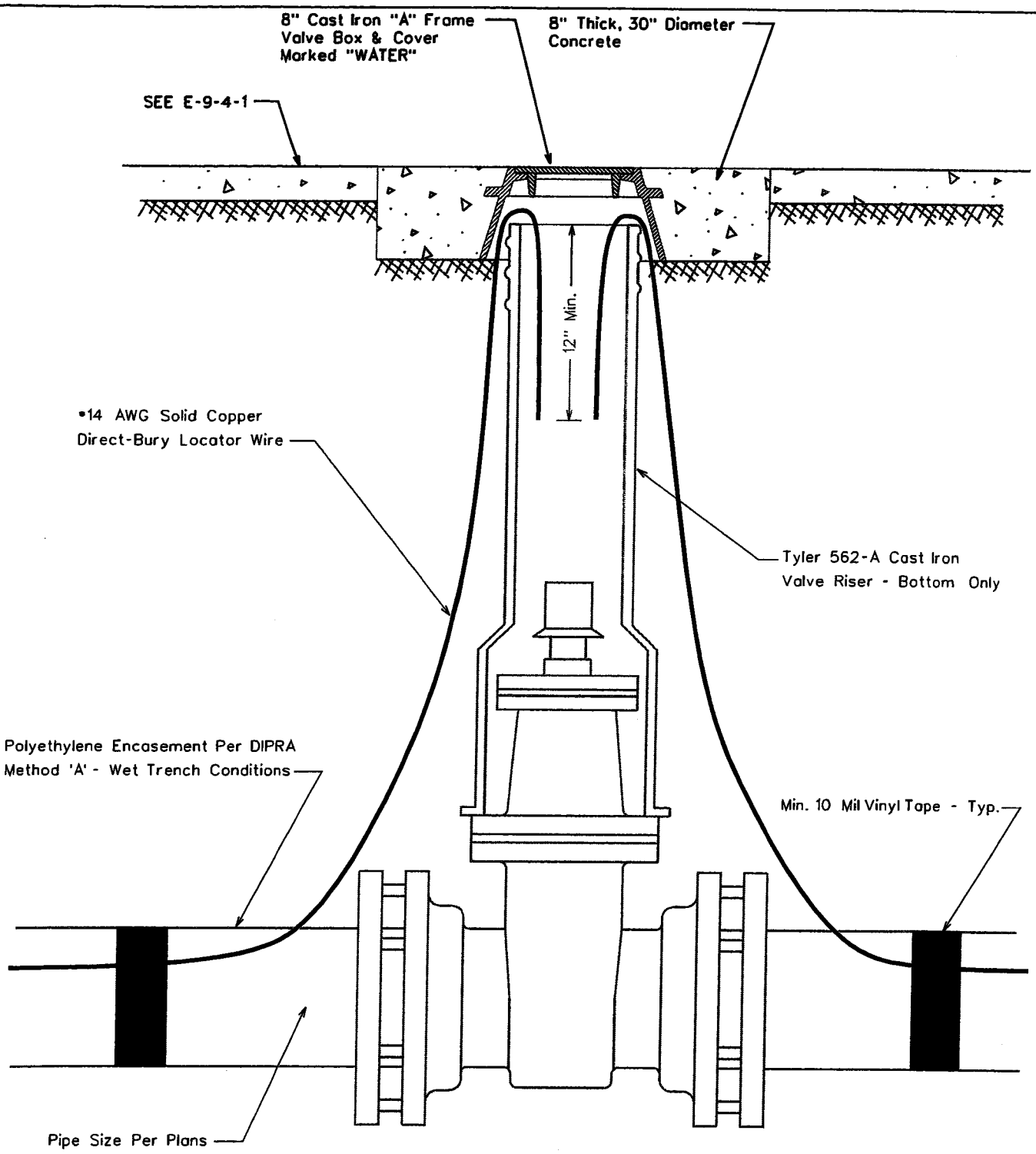

ARIZONA WATER COMPANY

STANDARD SPECIFICATION
FOR THE INSTALLATION OF

LOCATOR WIRE TERMINATION

DRAWN BY:	APPROVED BY:	DATE:	△	
CB		09.27.2006		E-9-28-2

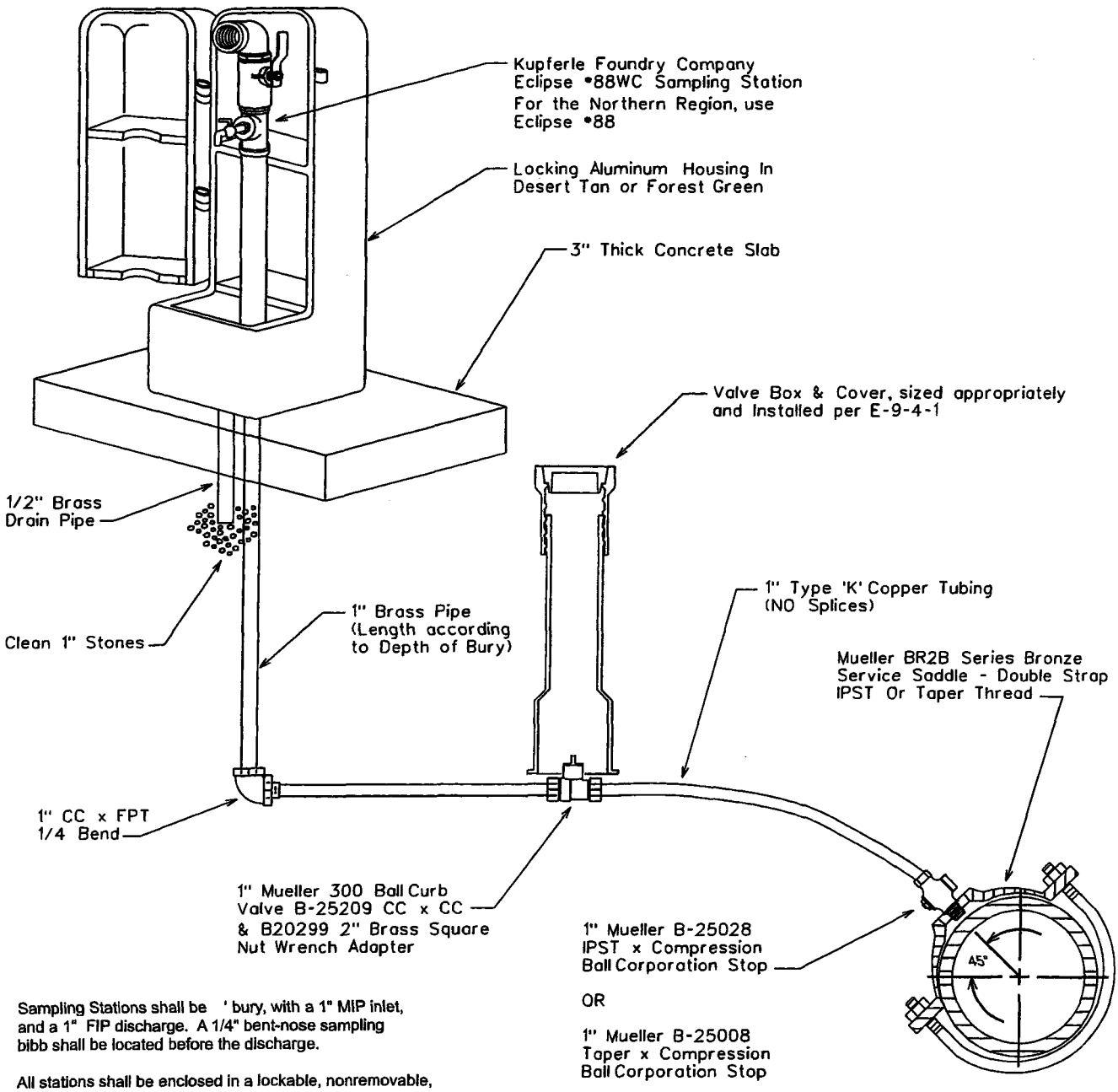

Sampling Stations shall be ' bury, with a 1" MIP inlet, and a 1" FIP discharge. A 1/4" bent-nose sampling bibb shall be located before the discharge.

All stations shall be enclosed in a lockable, nonremovable, aluminum-cast housing.

When opened, the station shall require no key for operation, and the water will flow in an all brass waterway.

All working parts will be of brass and serviceable from above ground with no digging. (OPTIONAL: if desired, a 1/2" brass drain tube will be provided within the locking cover).

A 1" ball valve will control the water flow, and be located before (or after) the sampling bibb, as manufactured by Kupferle Foundry, St. Louis, MO 63102.

SADDLE TAP TO CA, PVC, OR DI PIPE

NOTE: The minimum distance between taps on mains other than ductile iron is 12"

Pipe Depth Per
E-8-1-2, Item 3.

ARIZONA WATER COMPANY

STANDARD SPECIFICATION
FOR THE INSTALLATION OF

SAMPLING STATION

DRAWN BY:	APPROVED BY:	DATE:		
CB	MW	01.24.2007	△	E-9-29-1

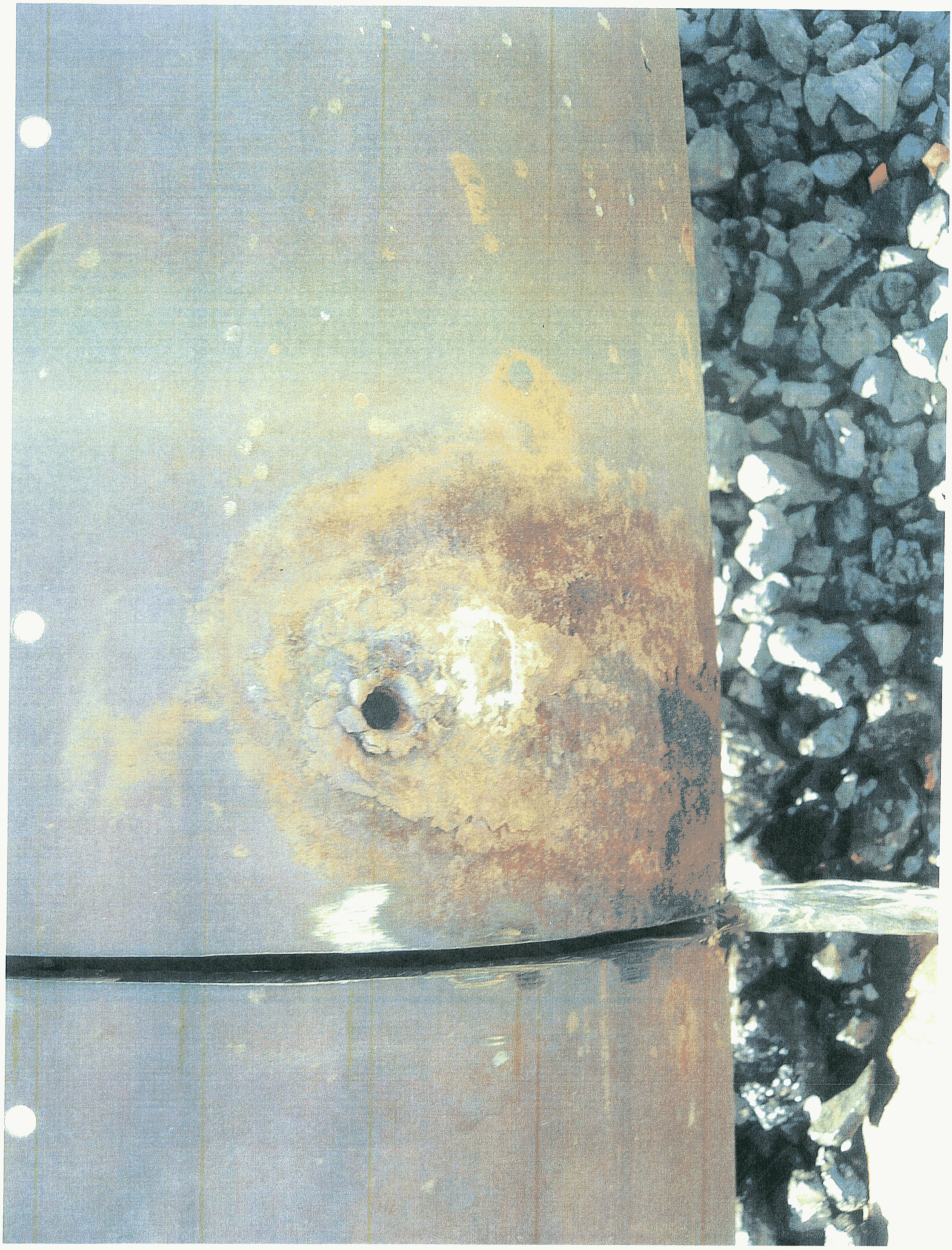

ARIZONA WATER COMPANY

CONSTRUCTION COMPLETION NOTICE

CONSTRUCTION COMPLETION DATE:	5/5/11	WORK AUTHORIZATION NUMBER:	1-4787

THE FOLLOWING RECORD REQUIREMENTS ARE ATTACHED:

	PREPARED BY
1. CONSTRUCTION DRAWINGS WITH "AS BUILT" LOCATION OF PIPE, FITTINGS, ETC. MARKED IN RED	EWS
2. VALVE CARDS	JP
3. HYDRANT CARDS WITH COPY OF COVER LETTER	N/A
4. MATERIALS INSTALLED OR RETIRED LISTED ON THE REVERSE SIDE OF THE W.A. WITH R.O.S. AND P.D.R. NUMBERS	N/A

5. PRESSURE AND LEAKAGE TEST RESULTS:

DATE TESTED				
TIME STARTED				
TIME FINISHED				
PIPE DIAMETER				
FOOTAGE TESTED				
ALLOWABLE LEAKAGE				
LEAKAGE OBSERVED				
PRESSURE AT TEST POINT				
COMPANY EMPLOYEE OBSERVING TEST *(print)*				
INITIALS OF EMPLOYEE				

6. DISINFECTION SAMPLING:

INITIAL SAMPLING	DATE				
(minimum 50 ppm available chlorine)	TIME				
	PPM Cl_2				
AFTER 24 HOURS DETENTION TIME	DATE				
(minimum 10 ppm free chlorine)	TIME				
	PPM Cl_2				
AFTER SUFFICIENT FLUSHING	DATE				
(water is clear and system Cl_2 residual is measured)	TIME				
	PPM Cl_2				
BACTERIOLOGICAL SAMPLE(S)	DATE				
	TIME				
	ATTACHED	☐ Yes ☐ No	☐ Yes ☐ No	☐ Yes ☐ No	☐ Yes ☐ No

I certify that construction on the above Work Authorization was completed as of the date shown above and for which all materials have been accounted. I further certify that I have inspected the work done and have found it to be satisfactory and in accordance with Company specifications.

Division Manager or Operations Superintendent *(Signature)*

5-19-11
Date of Notice

ATTACH TO CONSTRUCTION & ENGINEERING FILE COPY OF WORK AUTHORIZATION

WA 1-4788

ARIZONA WATER COMPANY
WORK AUTHORIZATION

W.A. NUMBER: 1-4788
P.E. NUMBER:
BUDGET ITEM NO. B-1
SHEET NO. 1 of 2

SYSTEM:	SUPERSTITION	WORK TO START BY:	UPON AUTHORIZATION
DIVISION:	SUPERSTITION	WORK TO BE FINISHED BY:	WITHIN 60 DAYS
TAX CODE:	4308		

DESCRIPTION OF WORK:

Replace obsolete SCADA System Computers and Software. Construct in accordance with attached drawings and/or Arizona Water Company specifications.

FACTORS JUSTIFYING WORK:

2011 APPROVED CONSTRUCTION BUDGET ITEM ($15,000)

COST ESTIMATE		AUTHORIZATION	DATE
COST OF WORK:		PREPARED BY: Mike Loggins ML 1-31-11	1-24-2011
MATERIAL	3,250		
LABOR	1,000	REVIEWED FOR ESMT/ROW VERIFICATION: Charles Briggs CB 01-31-2011	01-24-2011
CONTRACT PORTION	8,000		
OVERHEAD	1,838	REVIEWED BY: James Wilson JW 1/31/11	1/25/11
TOTAL AUTHORIZED EXPENDITURES CHARGEABLE TO THIS W.A.	$ 14,088		
FUNDS RECEIVED:		APPROVED BY ENGINEERING: Fredrick Schneider FS 2-1-11	1-26-11
CONTRIBUTIONS RECEIVED	0		
REFUNDABLE ADVANCES RECEIVED	0	APPROVED BY FINANCE: Joseph Harris	1/26/11
TOTAL CONTRIBUTIONS/ADVANCES	0		
NET CASH REQUIRED	$ 14,088	AUTHORIZED BY PRESIDENT: William M Garfield	1-28-2011

COMMENTS:

CONSTRUCTION RELEASE:

RELEASED TO CONSTRUCTION
Authorized by FRED SCHNEIDER
Date 1/31/2011

afh

ARIZONA WATER COMPANY

WORK AUTHORIZATION - DETAIL SHEET

W.A. NUMBER: 1-4788
P.E. NUMBER:
BUDGET ITEM NO.: B-1
SHEET NO.: 2 of 2

RETIREMENT PROPERTY UNITS	PLANT PROPERTY ACCOUNT	UNIT DESCRIPTION	QUANTITY	YEAR INSTALLED AND W.A. NUMBER

PROJECT DESCRIPTION:

Replace obsolete Scada System Computers and Software.

	DESCRIPTION	PLANT PROP ACCT	QUANTITY	UNIT COST	TOTAL
CONTRACT WORK	Program SCADA Computer	397.2	1	$ 8,000.00	$ 8,000
	SERVICE CONNECTIONS COMPLETE: DOUBLE-LONG	345			
	SERVICE CONNECTIONS COMPLETE: DOUBLE-SHORT	345			
	SERVICE CONNECTIONS COMPLETE: SINGLE-LONG	345			
	SERVICE CONNECTIONS COMPLETE: SINGLE-SHORT	345			
TOTAL CONTRACT WORK					$ 8,000
MATERIALS	Purchase SCADA Computer	397.2	1	$ 3,250.00	$ 3,250
	SERVICE CONNECTIONS: DOUBLE-LONG	345			
	SERVICE CONNECTIONS: DOUBLE-SHORT	345			
	SERVICE CONNECTIONS: SINGLE-LONG	345			
	SERVICE CONNECTIONS: SINGLE-SHORT	345			
	METERS	346			
TOTAL MATERIALS					$ 3,250
LABOR	TESTING FEE	397.2	1	$ 500.00	500
	PERMIT FEE				
	SURVEY FEE				
	FIELD INSPECTION	397.2	1	500.00	500
	INSTALL SERVICE CONNECTIONS: DOUBLE-LONG	345			
	INSTALL SERVICE CONNECTIONS: DOUBLE-SHORT	345			
	INSTALL SERVICE CONNECTIONS: SINGLE-LONG	345			
	INSTALL SERVICE CONNECTIONS: SINGLE-SHORT	345			
TOTAL LABOR					$ 1,000
SUBTOTAL - CONTRACT WORK, MATERIALS, AND LABOR					$ 12,250
OVERHEAD					1,838
TOTAL	REFUNDABLE PORTION ☐	NON-REFUNDABLE PORTION ☐		COST ESTIMATE	$ 14,088

AFH

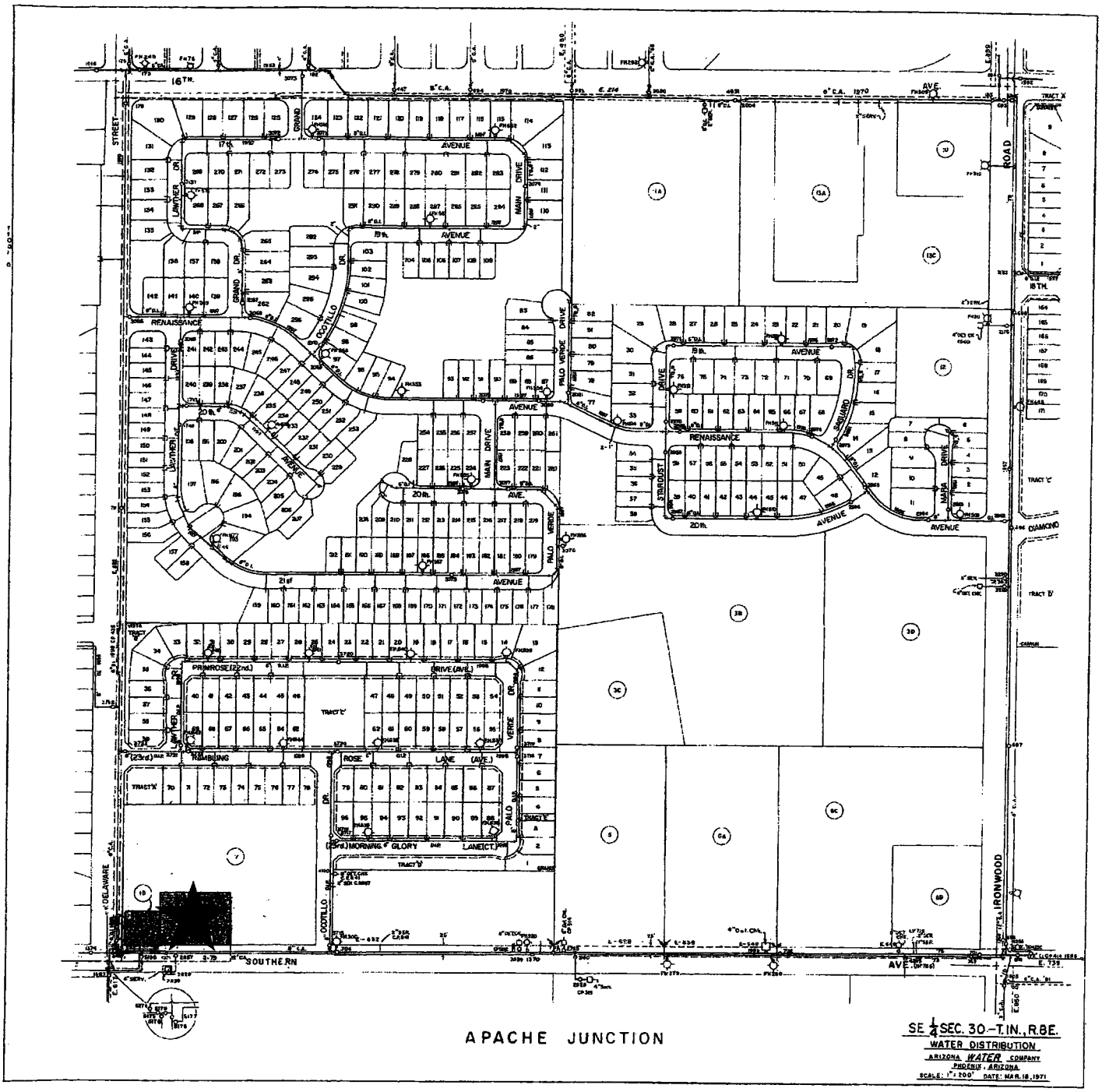

REPLACE OBSOLETE SCADA SYSTEM COMPUTER AND SOFTWARE

ID	Task Name	Duration	Start	Finish	Predecessors
1	Computer and Software Replacement	92 days	Mon 1/10/11	Tue 5/17/11	
2	Computer Design	37 days	Mon 1/10/11	Tue 3/1/11	
3	Coordinate w/ Field	15 days	Mon 1/10/11	Fri 1/28/11	
4	Preliminary Design w/ Consultant	10 days	Mon 1/31/11	Fri 2/11/11	3
5	Preliminary Design to Field for Comment	5 days	Mon 2/14/11	Fri 2/18/11	4
6	Final Design	5 days	Mon 2/21/11	Fri 2/25/11	5
7	QA/ QC	2 days	Mon 2/28/11	Tue 3/1/11	6
8	Purchase New SCADA Computer	20 days	Wed 3/2/11	Tue 3/29/11	7
9	Bid Consultant Programming & Award Contract	20 days	Wed 3/2/11	Tue 3/29/11	7
10	Construction	25 days	Wed 3/30/11	Tue 5/3/11	8
11	Close Out Job	10 days	Wed 5/4/11	Tue 5/17/11	10

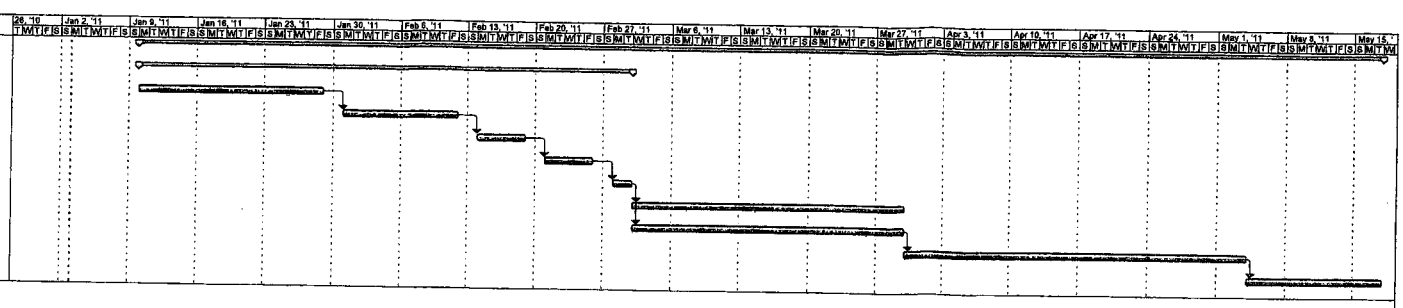

Project: SS-02 SCADA Computer.mpp
Date: Mon 1/3/11

Task | Split | Progress | Milestone | Summary | Project Summary | External Tasks | External Milestone | Deadline

MASTER AGREEMENT
FOR ONGOING CONSULTING AND ENGINEERING SERVICES
BETWEEN ARIZONA WATER COMPANY
AND BROWN AND CALDWELL

THIS MASTER AGREEMENT is made and entered into on this 22nd day of January, 2008, by and between Arizona Water Company, hereinafter referred to as "Client," and Brown and Caldwell, a California corporation, its affiliates and subsidiaries, hereinafter referred to as "Consultant."

RECITALS:

WHEREAS, Client desires that from time to time Consultant furnish Client certain consulting services;

WHEREAS, Consultant has available and offers to provide personnel and facilities necessary to perform the services desired under this Agreement;

NOW, THEREFORE, Client and Consultant agree as follows:

I. DESCRIPTION OF PROJECT

Services to be provided shall be as described in written task orders made pursuant to and referencing this Agreement; the form of such task order is attached hereto as Exhibit A.

II. SCOPE OF CONSULTANT SERVICES

Consultant agrees to perform those basic services described in separate written task order(s) signed by Client and Consultant (the "Services"). This Agreement provides the terms, obligations and conditions which shall control all work under such task order(s). The printed terms and conditions, if any, contained on the reverse side(s) of an accepted task order shall not apply to services provided under this Agreement. Unless modified in writing by both parties, duties of Consultant shall not exceed those services specifically described in each task order. Any work authorized by Client prior to the issuance of a written task order must be authorized in writing and any services then performed by Consultant will be presumed to have been completed under the terms of this Agreement.

III. RESPONSIBILITIES OF CLIENT

In addition to payment for the Services performed under this Agreement, Client shall:

1. Assist and cooperate with Consultant in any manner necessary and within its ability to facilitate Consultant's performance under this Agreement.
2. Designate in writing a person to act as Client's representative with respect to this Agreement. Such person shall have complete authority to transmit instructions, receive information, interpret and define Client's policies, make decisions and execute documents on Client's behalf.
3. Furnish Consultant with all technical data in Client's possession including, but not limited to, maps, surveys, drawings, soils or geotechnical reports, and any other information

required by, or useful to, Consultant in performance of its Services under this Agreement. Consultant shall be entitled to rely upon the information supplied by Client.

4. Notify Consultant of any known or potential health or safety hazards existing at or near the project site.

5. Provide access to and/or obtain permission for Consultant to enter upon all property, whether or not owned by Client, as required to perform and complete the Services.

6. If Consultant's scope of work includes services during construction, Client will require the construction contractor to indemnify and hold harmless Consultant, its officers, employees, agents, and consultants against claims, suits, demands, liabilities, losses, damages, and costs, including reasonable attorneys' fees and all other costs of defense, arising out of the performance of the work of the contractor, breach of contract, or willful misconduct of the contractor or its subcontractors, employees, and agents.

   Client will require the contractor to name Consultant, its directors, officers and employees as additional insureds on the contractor's general liability insurance and/or Owner's and Contractor's Protective Policy (OCP), and any builder's risk, or other property insurance purchased by Client or the contractor to protect work in progress or any materials, supplies, or equipment purchased for installation therein.

   Client will require contractor to furnish Client with contractor's certificates of insurance evidencing that Consultant, its officers, employees, agents, and consultants are named as additional insureds on contractor's general liability and property insurance applicable to the Project. Contractor's policies shall be primary and any such insurance carried by the Consultant shall be excess and noncontributory.

IV. AMERICANS WITH DISABILITIES ACT

Any other provision of this Agreement to the contrary notwithstanding, unless otherwise specified in the Scope of Services, Client's contractors shall have sole responsibility as between Client and Consultant for compliance with the Americans With Disabilities Act ("ADA") 42 U.S.C. 12101 et. Seq. and the related regulations. Consultant shall provide client with applicable ADA criteria which maybe required. Client will then determine applicable criteria which shall be followed.

V. AUTHORIZATION AND COMPLETION

In signing this Agreement, Client grants Consultant specific authorization to proceed with work as directed in executed task orders, and under the terms of this Agreement.

VI. COMPENSATION

For the Services described in each task order, Client agrees to pay, and Consultant agrees to accept the total compensation in accordance with compensation terms included in the task order. Where Consultant has provided Client with a breakdown of the total compensation into subtasks, such breakdowns are estimates only. Consultant may re-allocate compensation between tasks, provided total compensation is not exceeded without the written approval of Client. Time charges shall be in accordance with the Hourly Rate Schedule contained in Exhibit B. The rate schedule may be revised annually by mutual written Agreement. Annual revisions to the Hourly Rate Schedule shall be

submitted prior to the date that they take effect. Compensation shall be billed monthly in summary form. Payment to Consultant is due upon presentation of invoice to Client.

As long as Consultant has not defaulted under this Agreement, Client shall pay Consultant within 30 days of the date of Consultant's invoices for services performed and reimbursable expenses incurred under this Agreement. Client may contest any portion of any such invoice, amounts questioned or contested shall be identified and notice given to Consultant within 15 days of the date of the invoice. Any portion of any invoice not contested shall be deemed to be accepted and approved for payment and shall be paid to Consultant within 30 days of the date of the invoice. The Client agrees to cooperate with Consultant in a mutual effort to resolve promptly any contested portions of the Consultant's invoices.

In the event any uncontested portions of any invoice are not paid within 30 days of the date of Consultant's invoice, interest on the unpaid balance shall accrue beginning with the 31st day at the maximum interest rate permitted by law, and Consultant shall have the right to suspend work per Article XV, Suspension of Work.

VII. RESPONSIBILITY OF CONSULTANT

A. Standard of Care—Professional Services

Subject to the limitations inherent in the agreed scope of work as to the degree of care, amount of time and expenses to be incurred, and subject to any other limitations contained in this Agreement, Consultant shall perform its Services in accordance with generally accepted standards and practices customarily utilized by competent engineering firms in effect at the time Consultant's Services are rendered. Consultant does not expressly or impliedly warrant or guarantee its Services.

B. Reliance upon Information Provided by Others

If Consultant's performance of services hereunder requires Consultant to rely on information provided by other parties (excepting Consultant's subcontractors), Consultant shall not independently verify the validity, completeness, or accuracy of such information unless otherwise expressly engaged to do so in writing by Client.

C. Consultant's Opinion of Costs

Client acknowledges that construction cost estimates, financial analyses and feasibility projections are subject to many influences including, but not limited to, price of labor and materials, unknown or latent conditions of existing equipment or structures, and time or quality of performance by third parties. Client acknowledges that such influences may not be precisely forecasted and are beyond the control of Consultant and that actual costs incurred may vary substantially from the estimates prepared by Consultant. Consultant does not warrant or guarantee the accuracy of construction or development cost estimates.

D. Construction Phase Services

1. Consultant's Activities at Construction Site. The presence of Consultant's personnel at a construction site, whether as on-site representative, resident engineer,

constructi`on manager, or otherwise, does not make Consultant responsible for those duties that belong to Client and/or construction contractors or others, and does not relieve construction contractors or others of their obligations, duties, and responsibilities, including, but not limited to, construction methods, means, techniques, sequences, and procedures necessary for completing all portions of the construction work in accordance with the contract documents, any health or safety programs and precautions required by such construction work, and any compliance with applicable laws and regulations. Any inspection or observation of the contractor's work is solely for the purpose of determining that the work is generally proceeding in conformance with the intent of the project specifications and contract documents. Except for its own Contractors, Consultant makes no warranty or guarantee with respect to the performance of a contractor. Consultant has no authority to exercise control over any construction contractor in connection with their work or health or safety programs and precautions. Except to protect Consultant's own personnel and except as may be expressly required elsewhere in the scope of services, Consultant has no duty to inspect, observe, correct, or report on health or safety deficiencies of the construction contractor.

2. Shop Drawing and Submittal Review. If required by Consultant's Scope of Services, Consultant shall review shop drawings or other contractor submittals for general conformance with the intent of the contract documents. Except for its own Contractors, Consultant shall not be required to verify dimensions, to engineer contractor's shop drawings or submittals, nor to coordinate shop drawings or other submittals with other shop drawings or submittals provided by contractor.

3. Record Drawings. Record drawings, if required, will be prepared, in part, on the basis of information compiled and furnished by others, and may not always represent the exact location, type of various components, or exact manner in which the Project was finally constructed. Except for its own Contractors, Consultant is not responsible for any errors or omissions in the information from others that are incorporated into the record drawings.

VIII. ASSIGNMENT OF TASKS TO AFFILIATES

If the authorized scope of work includes construction activities or the oversight of construction, Consultant may, at its discretion and upon notice to Client, assign all of its contractual rights and obligations with respect to such activities or services to Brown and Caldwell Constructors, its wholly owned affiliate.

If the authorized scope of work requires professional services to be performed in a jurisdiction in which Consultant renders professional services solely through a locally registered engineering affiliate for purposes of compliance with professional licensing requirements in that jurisdiction, Consultant may, in its discretion, upon notice to Client, assign its contractual rights and obligations with respect to such services to such locally registered engineering affiliate.

IX. ASBESTOS/HAZARDOUS MATERIALS

Consultant and Consultant's subcontractors shall have no responsibility for the discovery, handling, removal, or disposal of or exposure of persons to asbestos or hazardous or toxic materials that are present in any form at the Project site. Professional services related to or in any way connected with the investigation, detection, abatement, replacement, use, specification, or removal of products, materials, or processes containing asbestos or hazardous or toxic materials are beyond the scope of this Agreement. Client shall be solely responsible for notifying all appropriate governmental agencies, including the potentially effected public, of the existence of any hazardous or toxic materials located on or at the project site at any time.

In the event Consultant encounters asbestos or hazardous materials at the jobsite, Consultant may, at its option and without liability for damages, suspend the performance of services on the Project until such time as Client and Consultant mutually agree on an amendment to this Agreement to address the issue, or Client retains another specialist consultant or contractor to identify, classify, abate and/or remove the asbestos and/or hazardous materials.

X. CONSULTANT'S WORK PRODUCT

A. Scope

Consultant's work product which is prepared solely for the purposes of this Agreement, including, but not limited to, drawings, test results, recommendations and technical specifications, whether in hard copy or electronic form, shall become the property of Client when Consultant has been fully compensated as set forth herein. Consultant may keep copies of all work product(s) for its records.

Consultant and Client recognize that Consultant's work product submitted in performance of this Agreement is intended only for the project described in this Agreement. Client's alteration of Consultant's work product or its use by Client for any other purpose shall be at Client's sole risk, and Client shall hold harmless and indemnify Consultant against all losses, damages, costs and expense, including attorneys' fees, arising out of or related to any such alteration or unauthorized use.

B. Electronic Copies

If requested, solely as an aid and accommodation to Client, Consultant may provide copies of its work product documents in computer-readable media ("electronic copies," "CADD"). These documents will duplicate the documents provided as work product, but will not bear the signature and professional seals of the registered professionals responsible for the work. Client is cautioned that the accuracy of electronic copies and CADD documents may be compromised by electronic media degradation, errors in format translation, file corruption, printing errors and incompatibilities, operator inexperience and file modification. Consultant will maintain the original copy, which shall serve as the official, archived record of the electronic and CADD documents. Client agrees to hold harmless, indemnify and defend Consultant from any claims arising out of or relating to any change or alteration of electronic copies and CADD documents authorized by the Client, Client's personnel, or Client's Contractor's.

XI. INDEMNIFICATION

A. Indemnification of Client

Consultant agrees to indemnify and hold Client harmless from and against any liability to the extent arising out of the negligent errors or negligent omissions of Consultant, its agents, employees, or representatives, in the performance of Consultant's duties under this Agreement.

B. Consequential Damages

Regardless of any other term of this Agreement, in no event shall either party be responsible or liable to the other for any incidental, consequential, or other indirect damages.

XII. CONSULTANT'S INSURANCE

Consultant shall procure and maintain the following minimum insurance:

1. Commercial general liability insurance, including personal injury liability, blanket contractual liability and broad-form property damage liability coverage. The combined single limit for bodily injury and property damage shall be not less than $1,000,000.
2. Automobile bodily injury and property damage liability insurance covering owned, non-owned, rented, and hired cars. The combined single limit for bodily injury and property damage shall be not less than $1,000,000.
3. Statutory workers' compensation and employer's liability insurance as required by state law.
4. Professional liability insurance. The policy limit shall be not less than $1,000,000.

Client shall be named as additional insured on polices 1 and 2 above. Upon execution of this Agreement, Consultant will provide a certificate of insurance to Client. Consultant will keep the certificate current at all times while this Agreement is in effect. The Consultant will provide a 30-day written notice in the event the above policies are cancelled.

XIII. CONFIDENTIALITY

Consultant agrees it will maintain the confidentiality of material it receives from Client which Client has clearly identified as "Confidential" and will not disclose, distribute, or publish to any third party such confidential information without the prior permission of Client. Notwithstanding the foregoing, Consultant shall have no confidentiality obligation with respect to information that:

1) becomes generally available to the public other than as a result of disclosure by Consultant or its agents or employees;
2) was available to Consultant on a non-confidential basis prior to its disclosure by Client;
3) becomes available to Consultant from a third party who is not, to the knowledge of Consultant, bound to retain such information in confidence.

In the event Consultant is compelled by subpoena, court order, or administrative order to disclose any confidential information, Consultant shall promptly notify Client and shall cooperate with Client prior to disclosure so that Client may take necessary actions to protect such confidential information from disclosure.

XIV. SUBCONTRACTS

Consultant shall be entitled, to the extent determined appropriate by Consultant, to subcontract any portion of the services to be performed under this Agreement.

XV. SUSPENSION OF WORK

Work under this Agreement may be suspended as follows:

1. By Client. By written notice to Consultant, Client may suspend all or a portion of the Work under this Agreement if unforeseen circumstances beyond Client's control make normal progress of the Work impracticable. Consultant shall be compensated for its reasonable expenses resulting from such suspension including mobilization and demobilization. If suspension is greater than 90 days, then Consultant shall have the right to terminate this Agreement in accordance with Article XVI, Termination of Work.

2. By Consultant. By written notice to Client, Consultant may suspend the Work if Consultant reasonably determines that working conditions at the Site (outside Consultant's control) are unsafe, or in violation of applicable laws, or in the event Client has not made timely payment in accordance with Article VI, Compensation, or for other circumstances not caused by Consultant that are interfering with the normal progress of the Work. Consultant's suspension of Work hereunder shall be without prejudice to any other remedy of Consultant at law or equity.

XVI. TERMINATION OF WORK

A. This Agreement may be terminated by Client as follows: (1) for its convenience on 15 days' notice to Consultant, or (2) for cause, if Consultant materially breaches this Agreement through no fault of Client and Consultant neither cures such material breach nor makes reasonable progress toward cure within 15 days after Client has given written notice of the alleged breach to Consultant.

B. This Agreement may be terminated by Consultant as follows: (1) for cause, if Client materially breaches this Agreement through no fault of Consultant and Client neither cures such material breach nor makes reasonable progress toward cure within 15 days after Consultant has given written notice of the alleged breach to Client, or (2) upon five days' notice if work under this Agreement has been suspended by either Client or Consultant for more than 90 days in the aggregate.

C. Payment upon Termination

In the event of termination, Consultant shall perform such additional work as is reasonably necessary for the orderly closing of the Work. Consultant shall be compensated for all work performed prior to the effective date of termination, plus

work required for the orderly closing of the Work, including: (1) authorized work performed up to the termination date plus termination expenses, including all labor and expenses, at Consultant's standard billing rates, directly attributable to termination; (2) all efforts necessary to document the work completed or in progress; and (3) any termination reports requested by Client.

XVII. ASSIGNMENT

This Agreement is binding on the heirs, successors, and assigns of the parties hereto. Except as otherwise set forth under Article VIII, Assignment of Tasks to Affiliates, this Agreement may not be assigned by Client or Consultant without prior, written consent of the other.

XVIII. NO BENEFIT FOR THIRD PARTIES

The services to be performed by Consultant are intended solely for the benefit of Client, and no benefit is conferred on, nor contractual relationship established with any person or entity not a party to this Agreement. No such person or entity shall be entitled to rely on Consultant's services, opinions, recommendations, plans, or specifications without the express written consent of Consultant. No right to assert a claim against the Consultant, its officers, employees, agents, or consultants shall accrue to the construction Contractor or to any subcontractor, supplier, manufacturer, lender, insurer, surety, or any other third party as a result of this Agreement or the performance or nonperformance of the Consultant's services hereunder.

XIX. FORCE MAJEURE

Consultant shall not be responsible for delays caused by circumstances beyond its reasonable control, including, but not limited to (1) strikes, lockouts, work slowdowns or stoppages, or accidents, (2) acts of God, (3) failure of Client to furnish timely information or to approve or disapprove Consultant's instruments of service promptly, and (4) faulty performance or nonperformance by Client, Client's independent consultants or contractors, or governmental agencies. Consultant shall not be liable for damages arising out of any such delay, nor shall the Consultant be deemed to be in breach of this Agreement as a result thereof.

XX. INTEGRATION

This Agreement represents the entire understanding of Client and Consultant as to those matters contained herein. No prior oral or written understanding shall be of any force or effect with respect to those matters covered herein. This Agreement may not be modified or altered except in writing signed by both parties. Any purchase order issued by Client, whether or not signed by Consultant, and any terms and conditions contained in such purchase order which are inconsistent with this Agreement shall be of no force and effect.

XXI. SEVERABILITY

If any part of this Agreement is found unenforceable under applicable laws, such part shall be inoperative, null, and void insofar as it conflicts with said laws, but the remainder of this Agreement shall be in full force and effect.

XXII. CHOICE OF LAW/JURISDICTION

This Agreement shall be administered and interpreted under the laws of the State of Arizona Jurisdiction of litigation arising from the Agreement shall be in that state.

XXIII. ATTORNEYS' FEES

In the event either party commences legal proceedings against the other, then the prevailing party shall, in addition to any other recovery, be entitled to recover its reasonable attorneys' fees and all other costs of such proceeding.

XXIV. NOTICES

All notices required under this Agreement shall be delivered by personal delivery or first class mail and shall be addressed to the following persons:

Jason Montoya Project Manager Brown and Caldwell 201 East Washington Street, Suite 500 Phoenix, Arizona 85004	Arizona Water Company 3805 North Black Canyon Highway Phoenix, Arizona 85015 or P.O. Box 29006 Phoenix, Arizona 85038 Attention: President

Notice shall be effective upon delivery to the above addresses. Project related instructions may be delivered by electronic mail. Either party may notify the other that a new person has been designated by it to receive notices, or that the address for the delivery of such notices has been changed, provided that, until such time as the other party receives such notice in the manner provided for herein, any notice addressed to the previously-designated person and/or delivered to the previously-designated address shall be effective.

XXV AUTHORIZATION

The persons executing this Agreement on behalf of the parties hereto represent and warrant that the parties have all legal authority and authorization necessary to enter into this Agreement, and that such persons have been duly authorized to execute this Agreement on their behalf.

IN WITNESS WHEREOF, the parties hereto have executed this Agreement as of the date first above written.

BROWN AND CALDWELL, INC.	ARIZONA WATER COMPANY
Signature _____	Signature _____
Printed Name Ronald L. Ablin, P.E.	Printed Name FREDERICK L. SCHNEIDER
Title Vice President	Title VICE PRESIDENT

Federal Tax ID number: 94-1446346

EXHIBIT A

BROWN AND CALDWELL/ARIZONA WATER COMPANY
Task Order Authorization

BC Project Number _____

Client Name
Client Address

Effective Date
of Authorization _____

Upon execution of this Task Order, and effective as of the date shown above, the parties agree that Brown and Caldwell shall perform the following services:

SCOPE OF SERVICES

[Describe here, or attach an Exhibit _____ entitled "Scope of Services."]

COMPENSATION

[Describe here, or attach an Exhibit _____ entitled "Compensation."]

GENERAL TERMS AND CONDITIONS

Brown and Caldwell's services shall be governed by the Master Agreement dated ___,___ together with this Task Order and any Exhibits attached hereto.

BROWN AND CALDWELL, INC.	ARIZONA WATER COMPANY
Signature _____	Signature _____
Title _____	Title _____
Date _____	Date _____

BROWN AND CALDWELL
RATE TABLE

PROFESSIONAL SERVICES				
Level	**Engineering**	**Technical/Scientific**	**Administrative**	**Rate**
A			Office/Support Services I	$47
B	Drafter Trainee Student Trainee I	Field Service Technician I	Office/Support Services II Project Assistant Word Processor I	$58
C	Assistant Drafter Student Trainee II	Field Service Technician II	Office/Support Services III Senior Project Assistant Word Processor II	$66
D	Drafter Engineering Aide Engineering Technician I Inspection Aide	Field Service Technician III	Accountant I Office/Support Services IV Project Coordinator I Word Processor III	$76
E	Assistant Designer Engineer I Engineering Technician II Inspector I Senior Drafter	Geologist/ Hydrogeologist I Scientist I Computer Programmer Senior Field Service Technician	Accountant II Project Accountant II Project Coordinator II Word Processor IV	$90
F	Designer Engineer II Engineering Technician III Inspector II Lead Drafter	Geologist/Hydrogeologist II Scientist II Computer Programmer I	Technical Writer Accountant III Senior Project Coordinator Supervising Word Processor	$108
G	Supervising Drafter Senior Designer Engineer III Senior Engineering Technician Inspector III	Geologist/Hydrogeologist III Scientist III Computer Programmer III	Accountant IV Administrative Manager	$129
H	Chief Drafter Principal Designer Senior Engineer	Senior Geologist/Hydrogeologist Senior Scientist Manager Computer Services	Accounting Manager Project Control Manager	$146
I	Supervising Designer Principal Engineer Principal Construction Engineer	Principal Geologist/Hydrogeologist Principal Scientist Senior IT Developer	Corporate Contract Administrator	$166
J	Chief Designer Supervising Engineer Supervising Construction Engineer	Supervising Geologist/Hydrogeologist Supervising Scientist Supervising IT Developer	Risk Manager	$172
K	Managing Engineer	Managing Geologist/Hydrogeologist Managing Scientist IT Program Manager	Corporate Health &Safety Director	$193
L	Chief Engineer Executive Engineer	Chief Geologist/Hydrogeologist Chief Scientist Manager IT Services	Corporate Counsel	$209
M	Vice President			As quoted
N	Senior Vice President			As quoted

Effective January 1 2008 through December 31, 2008

Hourly billing rates for professional labor are revised annually to reflect changes in actual pay rates.

BROWN AND CALDWELL

BROWN AND CALDWELL
2004 SCHEDULE OF FEES

FIELD EQUIPMENT		
Identification	**Rate Per Day**	**Rate Per Week**
Probes and Instruments		
Oil Interface Probe	$50	$200
Water Level Indicator	$15	$60
pH/Electrical Conductivity/Temperature Meter	$50	$200
Photo Ionization Detector	$100	$400
Flame Ionization Detector	$100	$400
Four-Gas Meter	$85	$250
Flow Meter	$25	$100
Hand-Held GPS	$20	$80
Hermit Data Logger and Transducer	$150	$600
Additional Transducer	$25	$100
Pumps, Bailers, and Blowers		
PVC Bailer	$10	$20
Teflon or Stainless Steel Bailer	$15	$60
Disposable Bailer	$15 each	$15 each
Cup Bailer	$10	$40
Air Monitoring Pump (low or high volume)	$25	$100
Gilibrator Calibration Primary Source Standard	$80	$320
Peristaltic Pump with Filter Holder	$30	$120
Submersible Pump	$50	$200
Trash Pump	$50	$200
Samplers and Other Equipment		
Decontamination Kit	$15	$60
Hand Auger and Kit	$25	$100
Sediment Sampler	$20	$80
Slide Hammer Sampler	$20	$80
Micropurge Groundwater Sampling System	$150	$600
Inflatable Packer	$300	$1,200
Personal Protective Equipment		
Level D (Modified)	$15/person	$60/person
Level C	$50/person	$200/person
Level B and Level A	Project-Specific Quote	

OTHER DIRECT COSTS		
Identification	**Unit**	**Rate**
Company Automobiles	Mile	$0.55
Subcontractors		Cost plus 15%
Other Outside Services, Rental Equipment, and Direct Project Expenses		Cost plus 15%

Effective January 1 2008 through December 31, 2008
Hourly billing rates for professional labor are revised annually to reflect changes in actual pay rates.

BROWN AND CALDWELL

AMENDMENT NO. 1 TO MASTER AGREEMENT FOR CONSULTING SERVICES BETWEEN ARIZONA WATER COMPANY AND BROWN AND CALDWELL

Client Name	Arizona Water Company
Client Address	3805 North Black Canyon Highway Phoenix, Arizona 85015
Consultant Name	Brown and Caldwell
Consultant Address	201 East Washington Street, Suite 500 Phoenix, Arizona 85004

THIS AMENDMENT NO. 1 to the Master Agreement for Consulting Services dated January 22, 2008 between Arizona Water Company, hereinafter referred to as "Client", and Brown and Caldwell, a California corporation, hereinafter referred to as "Consultant," is made and entered into this 8th day of December, 2010.

ARTICLE VI. COMPENSATION

Delete existing Exhibit B and replace in its entirety with the attached Exhibit B Hourly Rate Schedule.

ARTICLE XXIV. NOTICES

Replace Jason Montoya with Ron Ablin as project manager.

GENERAL TERMS AND CONDITIONS

Brown and Caldwell's services shall be governed by the Master Agreement dated January 22, 2008, together with this Amendment and any Exhibits attached hereto.

BROWN AND CALDWELL, INC.	ARIZONA WATER COMPANY
Signature	Signature
Title Vice President	Title Vice President - Engineering
Date 12/20/10	Date December 14, 2010

EXHIBIT B
BROWN AND CALDWELL
HOURLY RATE SCHEDULE

Level	Engineering	Technical/Scientific	Administrative	Rate
A			Office/Support Services I	$49
B	Drafter Trainee Student Trainee I	Field Service Technician I	Office/Support Services II Project Assistant Word Processor I	$61
C	Assistant Drafter Student Trainee II	Field Service Technician II	Office/Support Services III Sr. Project Assistant Word Processor II	$69
D	Drafter Engineering Aide Engineering Technician I Inspection Aide	Field Service Technician III	Office/Support Services IV Project Coordinator I Word Processor III Accountant I	$79
E	Sr. Drafter Assistant Designer Engineer I Engineering Technician II Inspector I	Sr. Field Service Technician Geologist/Hydrogeologist I Scientist I Computer Programmer	Word Processor IV Project/Contract Coordinator Project Coordinator II Accountant II Project Accountant II Administrative Coordinator	$94
F	Lead Drafter Designer Engineer II Engineering Technician III Inspector II	Geologist/Hydrogeologist II Scientist II Comp Sys Analyst/Programmer I	Executive Support Services II Supervising Word Processor Sr. Project Coordinator Accountant III Administrative Supervisor Technical Writer	$113
G	Supervising Drafter Sr. Designer Engineer III Sr. Engineering Technician Inspector III	Geologist/Hydrogeologist III Scientist III Comp Analyst/Program II	Contracts Administrator Accountant IV Sr. Tech Coordinator/Analyst	$135
H	Chief Drafter Principal Designer Sr. Engineer	Sr. Geologist/Hydrogeologist Sr. Scientist Manager Computer Services	Accounting Manager Project Control Manager Sr. Technical Writer	$153
I	Supervising Designer Principal Engineer	Principal Geologist/Hydrogeologist Principal Scientist Sr. IT Analyst/Developer	Corp. Contract Administrator Sr. Elect Media Specialist Product Manager I	$174
J	Chief Designer Supervising Engineer	Supervising Geol/Hydrogeologist Supervising Scientist Sr. IT Analyst/Developer	Product Manager II Risk Manager	$180
K	Managing Engineer	Managing Geol/Hydrogeologist Managing Scientist I T Program Manager Information Technology Director	Corp Health & Safety Director	$202
L	Chief Engineer Executive Engineer	Chief Geologist/Hydrogeologist Chief Scientist Manager, Info Tech Services Principal IT Analyst/Developer	Corporate Counsel	$219
M	Vice President			$235
N	Sr. Vice President			$245

EXHIBIT B
BROWN AND CALDWELL
HOURLY RATE SCHEDULE

FIELD EQUIPMENT		
Identification	**Rate Per Day**	**Rate Per Week**
Probes and Instruments		
Oil Interface Probe	$50	$200
Water Level Indicator	$15	$60
pH/Electrical Conductivity/Temperature Meter	$50	$200
Photo Ionization Detector	$100	$400
Flame Ionization Detector	$100	$400
Four-Gas Meter	$85	$250
Flow Meter	$25	$100
Hand-Held GPS	$20	$80
Hermit Data Logger and Transducer	$150	$600
Additional Transducer	$25	$100
Identification	**Rate Per Day**	**Rate Per Week**
Pumps, Bailers, and Blowers		
PVC Bailer	$10	$20
Teflon or Stainless Steel Bailer	$15	$60
Disposable Bailer	$15 each	$15 each
Cup Bailer	$10	$40
Air Monitoring Pump (low or high volume)	$25	$100
Gilibrator Calibration Primary Source Standard	$80	$320
Peristaltic Pump with Filter Holder	$30	$120
Submersible Pump	$50	$200
Trash Pump	$50	$200
Samplers and Other Equipment		
Decontamination Kit	$15	$60
Hand Auger and Kit	$25	$100
Sediment Sampler	$20	$80
Slide Hammer Sampler	$20	$80
Micropurge Groundwater Sampling System	$150	$600
Inflatable Packer	$300	$1,200
Personal Protective Equipment		
Level D (Modified)	$15/person	$60/person
Level C	$50/person	$200/person
Level B and Level A	Project-Specific Quote	

OTHER DIRECT COSTS		
Identification	**Unit**	**Rate**
Company Automobiles	Mile	$0.55
Subcontractors		Cost plus 15%
Other Outside Services, Rental Equipment, and Direct Project Expenses		Cost plus 15%

Effective January 1 through December 31, 2011

Hourly billing rates for professional labor are revised annually to reflect changes in actual pay rates.

Brown AND Caldwell

AGREEMENT FOR GENERAL ENGINEERING SERVICES BETWEEN ARIZONA WATER COMPANY AND BROWN AND CALDWELL

TASK ORDER AUTHORIZATION

BC Project Number Apache Junction SCADA Computer Upgrades

AWC Project Number WA 1-4788 Scada System Computers .

Arizona Water Company
P.O. Box 29006
Phoenix, Arizona 85038-9006

Effective Date of Authorization February 2011

Upon execution of this Task Order, and effective as of the date shown above, the parties agree that Brown and Caldwell shall perform the following services:

SCOPE OF SERVICES

As describe in the attached Exhibit entitled "Scope of Services" dated February 2011 – Provide and perform programming project management. Install current version of SCADA system software in Apache Junction and perform system testing and training. Configure two new computer with the SCADA software.

COMPENSATION

As describe in the attached Exhibit entitled "Scope of Services" dated February 2011 – Provide and perform programming project management. Install current version of SCADA system software in Apache Junction and perform system testing and training. Configure two new computer with the SCADA software. Compensation shall be $15,274.

GENERAL TERMS AND CONDITIONS

Brown and Caldwell's services shall be governed by the Master Agreement dated January 22, 2008 together with this Task Order and any Exhibits attached hereto.

The services performed within this Task Order shall commence on or about April 12, 2011, and shall be complete on or before June 17, 2011.

Brown and Caldwell's Representative in charge of the services is Ron Ablin, who may be contacted at 602-567-4000 and rablin@brwncald.com. Client's Representative in charge of the services is Mike Loggins, who may be contacted at 602-240-6860 and mloggins@azwater.com.

Arizona Water Company	**BROWN AND CALDWELL**
By	By
Title Exec VP	Title Gary R. Newman, P.C. Vice President
Date 5/3/11	Date 5/2/11

W:\Projects\2011\SS\1-4788 Scada Computers & Software\Agreements\Task Order - Brown & Caldwell 1-4788 Scada Computers.docx
RL:alh 9:34 AM 4/22/11

Brown AND Caldwell

Scope of Work

Arizona Water Company
Apache Junction SCADA Computer Upgrades

February 2011

Project Overview

Arizona Water Company (AWC) is upgrading the Supervisory Control and Data Acquisition (SCADA) Computer(s) for the Apache Junction/Superior service area. The existing SCADA application is running on three computers using Wonderware Intouch 9.0 with Modbus serial communications to a Data Radio T-96SR Radio Telemetry network via an Ethernet to Serial converter. It also has SCADAlarm alarm dial-out capabilities and PCAnywhere for remote SCADA computer access. Two of the existing computers are several years old and the software is several versions out of date. The third SCADA computer is relatively new, but is still using the older version of software. AWC is looking to upgrade one or two of the HMI computers and the HMI software to a current version.

Brown and Caldwell's (BC) scope for this project is load the software and applications for these changes for the Apache Junction office. Programming work will be to load the software on new computer(s) purchased by AWC and upgrade the existing SCADA application software to current version (Intouch 10.1).

Requirements of Client

BC will require the following items/task from Client and/or Owner to assist in the scope of this project:

- New SCADA hardware delivered to BC Phoenix office to load HMI software and configuration in BC office.
- A single point of contact for BC to interface with during the extent of the project to verify the proper coordination of the work performed.
- Time to escort BC as necessary for completion of project scope.
- Protocols and regulations regarding working within this facility; such as, parking, sign-in/sign-out and security procedures, emergency contacts and other appropriate information.
- Others to provide lockout/tag out operations, if required.
- Documentation and copies of the software applications (Intouch, SCADAlarm, Modbus driver, PCAnywhere) from the existing HMI system at the Apache Junction office.
- Client will purchase all software and hardware upgrades as required.

Phase 100 Project Management of Programming Scope

BC will perform programming project management, project tracking, report the progress of the project and provide monthly invoicing utilizing a computer based project management system, which includes all major activities of the scope of services.

Phase 200 SCADA Upgrade Programming

Task 201

Objectives: Install current version of SCADA system software onto new SCADA computer and upgrade SCADA applications for new SCADA software version. Install the new SCADA computer at the Apache Junction office and perform system testing and training to provide a functional SCADA software system.

Activities:

- Configure one new computer supplied by AWC to replace the existing SCADA 2 computer already in use at the Apache Junction Office (Use the same computer name in the new computer for proper functioning of SCADA fail-over scripting in Intouch).
- Load Wonderware Intouch Software on supplied computer (Most recent version is 10.1).
- Load Universal Server IO Driver software with Modbus Serial protocol module. Configure to use two separate serial ports on Ethernet Port Server module already in use at AJ office. Test I/O driver in office for proper polling of remote Programmable Logic Controllers (PLCs).

- Load SCADAlarm dial-out alarming software on computer. Test at AWC Apache Junction office for proper dial-out functions.
- Remove SCADAlarm dial-out modem in existing computer and install in new computer.
- Load PCAnywhere computer remote access software on computer. AWC will configure for security, etc.
- Upgrade existing SCADA 1 computer with Wonderware Intouch software to same version of Intouch as the new SCADA computer.
- Upgrade existing SCADA 3 computer with Wonderware Intouch software to same version of Intouch as the New SCADA computer (If Phase 300, below, is not to be implemented).

Assumptions: All re-used existing hardware will work with new software versions and the existing SCADAlarm dial-out modem will work on the new computer.

Deliverables: New SCADA 2 Computer with Intouch 10.1 and SCADAlarm configured.

Phase 300 Second SCADA Computer Hardware Upgrade

Task 301

Objectives: Install current version of SCADA system software onto new SCADA computer. Install the new SCADA computer at the Apache Junction office and perform system testing and training for a functional SCADA software system.

Activities:

- Configure one new computer supplied by AWC to replace the existing SCADA 1 computer already in use at the Apache Junction office (Use the same computer name in the new computer for proper functioning of SCADA failover scripting in Intouch).
- Load Wonderware Intouch Software on supplied computer (Most recent version is 10.1).
- Load Universal Server I/O Driver software with Modbus Serial protocol module. Configure to use two separate serial ports on Ethernet Port Server module already in use at AJ office. Test I/O driver in office for proper polling of remote PLCs.
- Load SCADAlarm dial-out alarming software on computer. Test at AWC Apache Junction office for proper dial-out functions.
- Remove SCADAlarm dial-out modem in existing computer and install in new computer.
- Load PCAnywhere computer remote access software on computer. AWC will configure for security, etc.
- Reconfigure and rename existing SCADA 1 computer to SCADA 3 currently in use at the Apache Junction office. SCADA 3 to be used as a view client. AWC staff will reconfigure PCAnywhere on SCADA 3 for remote access by Superior Operations staff to view Desert Station data.
- Assist AWC staff to test and verify remote access by Apache Junction staff and Superior staff is working and connecting to the appropriate computer. Apache Junction staff will have access to the SCADA 1 computer and Superior staff will have access to the SCADA 3 View Client computer.

Assumptions: All reused existing hardware will work with new software versions and the existing SCADAlarm dial-out modem will work on the new computer. Any additional time required to troubleshoot and/or correct hardware or software compatibility issues will be charged on a Time and Materials basis.

Deliverables: New SCADA 1 Computer with Intouch 10.1 and SCADAlarm configured.

Compensation

Compensation for services stated herein shall be on a lump sum basis as follows:

Phase 100 and 200	$10,898
Phase 300	$4376

Invoices will be submitted on a monthly basis.

Schedule

The work will commence once AWC provides a written Notice to Proceed and will be completed within 60 days of that date (Dependent on timely delivery of new computer hardware).

Brown AND Caldwell

Transmittal Cover Sheet

201 East Washington Street, Suite 500
Phoenix, Arizona 85004
Tel: 602-567-4000
Fax: 602-567-4001

To: Mr. Mike Loggins
Arizona Water Company
3805 N. Black Canyon Hwy.
Phoenix, Arizona 85015-5351

Date: May 2, 1011	Transmittal No.:
Project No.:	Task No.:
Project Title: Apache Junction SCADA System	
Contract No.: WA 1-4788	

We are sending the following item(s):

- ☐ Shop Drawings
- ☐ Plans
- ☐ Change Order
- ☒ Other
- ☐ Prints
- ☐ Samples
- ☐ Specifications

Sent via:

- ☐ E-Mail
- ☒ Fed Ex
- ☐ Overnite Express
- ☐ UPS
- ☐ U.S. Mail
- ☐ Hand Carried
- ☐ Courier

These are transmitted as checked below:

- ☒ For approval
- ☐ As requested
- ☐ For your use
- ☐ For review and comment
- ☐ Reviewed as noted
- ☐ For reference only
- ☐ Issued for construction
- ☐ Issued for bid
- ☐ Other:

If attachments are not as noted, please notify sender at once.

No. of Copies	Revision Date or No.	Document or Drawing No.	Description
2			Task Order Authorization

Remarks:

Per your request, attached are the above-named documents. Please send one fully-executed original to me for our records. Feel free to contact me if you require additional information.

RECEIVED
MAY 3 2011
ARIZONA WATER COMPANY
PHOENIX - ENGINEERING

cc:

Sandy Wollert, Senior Project Coordinator

Dell Precision Workstations

Workstation users who need uncompromised performance on demanding, specialized applications.

Print this page for reference

Email this page

Dell Precision T1500
Professionals looking to run workstation-class applications on a tight budget -- an ideal solution for offices working in popular 2D and entry-level 3D CAD software.
Dell Precision T1500

Dell Precision T3500
Professionals seeking certified performance on a range of workstation-class applications geared toward advanced analysis, engineering and design.
Dell Precision T3500

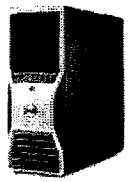

Dell Precision T5500
Incredibly powerful and scalable, the T5500 delivers dual-socket workstation performance in a compact, quiet package.
Dell Precision T5500

Dell Precision T7500
Complex multi-threaded/multitasking application environments, including engineering, digital content creation and scientific computing.
Dell Precision T7500

GREAT FOR	Professionals looking to run workstation-class applications on a tight budget -- an ideal solution for offices working in popular 2D and entry-level 3D CAD software.	Professionals seeking certified performance on a range of workstation-class applications geared toward advanced analysis, engineering and design.	Space-constrained multithreaded/multitasking workstation environments, including financial analysis, professional engineering and content design. Features Intel® Xeon® architecture with up to 12-cores of dual-processor performance.	Complex multi-threaded/multitaskir application environments, including engineerin digital content creation and scienti computing.
Processor				
Intel® Xeon® Quad Core (X5687, X5677, X5667, X5647, X5560, E5640, E5630, E5645, E5620, E5530, E5607, E5507, E5606, E5506, E5603)	),		✓	
Intel® Xeon® 6-Core (X5690, X5680, X5675, X5670, X5660, X5650, E5645)			✓	
Intel® Xeon® Dual Core (W3505, W3503)		✓		
Intel® Xeon® Quad Core (X5687, X5647, E5620, E5607, E5606, E5603)				✓
Intel® Xeon® 6-Core (X5690, X5675, X5660, X5650, E5645)				✓
Intel® Xeon® Dual Core (E5503)			✓	
Intel® Xeon® Quad Core (W3550, W3565, W3530)		✓		
Intel® Core™ i7 (880, 870)				
Intel® Xeon® Dual Core (X5260, L5240)				
Intel® Xeon® Quad Core (E5450, E5440, E5430, E5420, E5410, E5405)				
Intel® Xeon® 6-Core (W3690, W3670)				
Intel® Core™ i3 (540)				
Intel® Core™ i5 (680, 650)				
Operating System				
Genuine Windows Vista® Business 64-bit				

	Dell Precision T1500	Dell Precision T3500	Dell Precision T5500	Dell Precision T7500
Genuine Windows Vista® Business 32-bit			✓	
Genuine Windows Vista® Ultimate 32-Bit			✓	
Genuine Windows® 7 Professional 64-Bit	✓	✓	✓	✓
Genuine Windows® 7 Professional 32-Bit	✓	✓	✓	✓
Genuine Windows® 7 Ultimate 32-Bit	✓	✓	✓	✓
Genuine Windows® 7 Ultimate 64-Bit	✓	✓	✓	✓
Memory[1]	Up to 16GB[1] DDR3 SDRAM at 1333Mhz - 4 DIMMS	Up to 12GB[1] DDR3 SDRAM at 1333Mhz - 3 DIMMS	Up to 48GB[1] DDR3 SDRAM at 1333Mhz - 6 DIMMS Up to 72GB[1] DDR3 SDRAM at 1066Mhz - 9 DIMMS	Up to 12GB[1] DDR SDRAM at 1333M - 6 DIMMS
Video Card	**Entry 3D:** ATI FirePro™ V4800 NVIDIA® Quadro® FX 580 NVIDIA® Quadro® FX 380 **Professional 2D:** NVIDIA® Quadro® NVS 295 ATI FirePro™ 2260 All graphics cards support dual monitor configurations	Support for 2 PCI Express x16 Gen 2 graphics cards up to 150 watts (total) including: **High End 3D:** NVIDIA Quadro® 5000 NVIDIA Quadro® FX 4800 **Mid-range 3D:** ATI FirePro™ V7800 ATI FirePro™ V5800 NVIDIA Quadro® 2000 NVIDIA Quadro® FX 1800 **Entry 3D:** ATI FirePro™ V4800 NVIDIA Quadro® FX 580 **Professional 2D:** NVIDIA Quadro® NVS 420 quad monitor card NVIDIA Quadro® NVS 295 ATI FireMV™ V2260 All graphics cards support dual monitor configurations.	Support for 2 PCI Express x16 Gen 2 graphics cards up to 150 watts **High End 3D:** NVIDIA Quadro® 6000 NVIDIA Quadro® 5000 NVIDIA Quadro® FX 5800 NVIDIA Quadro® FX 4800 **Mid-range 3D:** ATI FirePro™ V7800 NVIDIA Quadro® 4000 NVIDIA Quadro® FX 3800 NVIDIA Quadro® 2000 NVIDIA Quadro® FX 1800 **Entry 3D:** ATI FirePro™ V4800 NVIDIA Quadro® FX 580 **Professional 2D:** NVIDIA Quadro® NVS 420 quad monitor card NVIDIA Quadro® NVS 295 ATI FireMV™ V2260 All graphics cards support dual monitor configurations.	Support for 2 PCI Express x16 Gen graphics cards u to 225 watts **High End 3D:** NVIDIA Quadro® 6000 NVIDIA Quadro® 5000 NVIDIA Quadro® FX 5800 NVIDIA Quadro® FX 4800 **Mid-Range 3D:** ATI FirePro™ V7800 NVIDIA Quadro® 4000 NVIDIA Quadro® FX 3800 NVIDIA Quadro® 2000 NVIDIA Quadro® FX 1800 **Entry 3D:** ATI FirePro™ V4800 NVIDIA Quadro® FX 580 **Professional 2D** NVIDIA Quadro® NVS 420 Quad monitor card NVIDIA Quadro® NVS 295 ATI FireMV™ V2260 All graphics cards support dual monitor configurations.
Hard Drive				
Up to 256GB[2] Solid State hard drive		✓	✓	✓
Up to 2000GB[2] SATA hard drive (7200RPM)			✓	

Up to 1536GB[2] SATA hard drive (7200RPM)				✓
Up to 1000GB[2] SATA hard drive (7200RPM)	✓	✓		
Up to 600GB[2] Serial Attached SCSI hard drive (15000RPM)		✓	✓	✓
Up to 300GB[2] SATA hard drive (10000RPM)		✓	✓	✓
Chassis	**Dimensions** (W x H x D): 6.69" x 14.58" x 17.08" (17.0cm x 37.04cm x 43.38cm) **Bays** Two internal 3.5" HDD bays Two external 5.25" optical bays One external 3.5" bay **Slots** Slot 1: PCI-e x16 Gen 2 (half length) Slot 2: PCI-e x1 Gen 2 (3/4 length) Slot 3: PCI 32bit/33Mhz 5V slot (3/4 length) Slot 4: PCI 32bit/33Mhz 5V slot (3/4 length) **Standard I/O Ports** (12) USB 2.0 (four on front panel, six on back panel, two internal) (1) IEEE 1394a (one rear when optional 1394 card is installed in PCI slot) (1) serial (2) PS/2 (1) RJ-45 Stereo line-in and headphone line-out on back panel Microphone and headphone (mutes rear line-out) connector on front panel	**Dimensions (Dual Orientation Desktop):** Mini-tower orientation: (WxHxD) 6.8" x 17.6" x 18.4" (17.2cm x 44.7cm x 46.8cm) Desktop orientation with feet: (WxHxD) 17.6" x 6.8" x 18.4" (44.7cm x 17.2cm x 46.8cm) (maximum including badge) **Bays:** Two internal 3.5" HDD bays Two external 5.25" optical bays, one of which can accommodate a third HDD in desktop orientation One external 3.5" flex bay for floppy or media card reader or third (SATA) HDD, in mini-tower orientation **Slots:** All full length except as noted. Two PCI-e x8 slot wired as x4 (one half-length) Two PCI-e x16 Gen 2 graphics slots Two PCI slots (one half-length, one half-length in desktop orientation) **Standard I/O Ports:** (11) USB 2.0 (two on front panel, six on back panel, three internal (UDOC) on motherboard) (1) eSATA (rear) (1) serial (1) parallel (2) PS/2 (1) RJ-45 Stereo line-in and headphone line-out on back panel Microphone and headphone connector on front panel IEEE 1394a ports are provided with optional 1394 PCI-e card	**Dimensions (Dual Orientation Desktop):** Desktop orientation with feet: (WxHxD) 17.64" x 6.73" x 18.54" (44.8cm x 17.1cm x 47.1cm) (maximum including badge) Mini-tower orientation with feet: (WxHxD) 6.73" x 17.64" x 18.54" (17.1cm x 44.8cm x 47.1cm) (maximum including badge) **Bays:** Two internal 3.5" HDD bays Two external 5.25" optical bays, one of which can accommodate a third HDD in desktop orientation One external 3.5" flex bay for floppy drive or media card reader or third (SATA) HDD, in mini-tower orientation. **Slots:** All full length except as noted. Two PCI-e x16 slots wired as x8 (half length) Two PCI-e x16 Gen 2 graphics slots up to 150 watts each One PCI-X 64bit/100MHz slot with support for 3.3v or universal cards (half length) One PCI 32bit/33Mhz 5V slot (half length in desktop orientation) **Standard I/O Ports:** (11) USB 2.0 (two on front panel, six on back panel, three internal on motherboard) (1) serial (1) parallel (2) PS/2 (1) RJ-45 (1) ESATA port on back panel Stereo line-in and headphone line-out on back panel Microphone and	**Dimensions** With feet: 8.5" x 22.26" 22.3" (21.59cm x 56.54cm x 56.6cm) **Bays** Four internal 3.5" HDD bays Three external 5.25" optical bays, one of which can accommoda a fifth HDD One external 3.5" flex bay for floppy drive or media card reader **Slots** All full length except as noted One PCI-e x16 Gen 2 wired as x4 Two PCI-e x16 Gen 2 slots wired as x8 (one half length) Two PCI-e x16 Gen 2 graphics slots One PCI-X 64bit/100MH slot with support for 3. or universal cards One PCI 32bit/33Mhz 5\ slot **Standard I/O Ports** (11) USB 2.0 (two on front panel, six on back panel, three internal) (2) IEEE 1394a (one front, one rear) (1) serial (1) parallel (2) PS/2 (1) RJ-45 (1) ESATA port on bac panel Stereo line-in and headphone line-out on back panel Microphone and headphone connector front panel

			headphone connector on front panel Front and rear IEEE 1394a ports are provided with optional 1394 PCI-e card **Flash BIOS:** BIOS 8MB flash memory for system BIOS SMBIOS 2.5 support	
Power	350 Watt 65% efficient power supply	525 watts Wide Ranging 85PLUS Power Factor Correcting (PFC) power supply 525 watts Active Power Factor Correcting (PFC) power supply The T3500 uses a very efficient Active Power Factor Correction (APFC) power supply. Dell recommends only Universal Power Supplies (UPS) based on Sine Wave output for APFC PSUs, not an approximation of a Sine Wave, Square Wave or quasi-Square Wave (see UPS Technical Specifications). If you have questions, please contact the manufacturer to confirm the output type.	The system uses a very efficient Active Power Factor Correction (APFC) power supply. Dell recommends only Universal Power Supplies (UPS) based on Sine Wave output for APFC PSUs, not an approximation of a Sine Wave, Square Wave or quasi-Square Wave (see UPS Technical Specifications). If you have questions, please contact the manufacturer to confirm the output type	1100 watts 85%+ Efficiency Power Factc Correcting (PFC) powe supply The system uses a ver efficient Active Power Factor Correction (APF power supply. Dell recommends only Universal Power Supplies (UPS) based c Sine Wave output for APFC PSUs, not an approximation of a Sine Wave, Square Wave oı quasi-Square Wave (sı UPS Technical Specifications). If you have questions, please contact the manufactur to confirm the output type.
Chipset	Intel® H57 chipset	Intel® X58 chipset	Intel® 5520 chipset	Intel® 5520 chipset
Drive Controllers	Integrated Intel SATA 3.0Gb/s controller supports RAID 0 or 1	The T3500 uses an integrated SATA 3.0Gb/s host controller (part of the Intel chipset) and supports host based RAID 0, 1, 5, 10, an optional PCI-e SAS 6/ir controller supports SAS drives with host based RAID 0 or 1. Single RAID 0 GPT DATA volumes greater than 2TB are available as factory installed option with the integrated controller under Windows XP64, Windows Vista 32Bit/64Bit operating systems.	The T5500 uses an integrated SATA 3.0Gb/s host controller (part of the Intel chipset) and the optional PCI-e SAS 6/ir controller supports SAS drives with host based RAID 0 or 1. The optional PERC 6/i PCI-e SAS/SATA hardware RAID card supports RAID 0, 1, 5 (RAID 5 in mini-tower orientation only). Single RAID 0 GPT DATA volumes greater than 2TB are available as factory installed option with the integrated controller and optional PERC 6/i RAID adapter under Windows XP64, Windows Vista 32Bit/ 64Bit operating systems.	Integrated LSI 1068e SAS/SATA 3.0Gb/s controller supports hos based RAID 0 or 1 Optional PERC 6/i PCI-e SAS/SATA/SSD hardware RAID card supports RAID 0, 1, 5, Single Raid 0 GPT DAT/ volumes greater than 2TB[2] are available as factory installed option with the optional PERC PCI-e RAID adapter
Network Controller	Integrated Broadcom®	Integrated Broadcom®	Integrated Broadcom®	Integrated Broadcom®

	5780 Gigabit Ethernet controller 2nd Gigabit port is available with the optional Broadcom® 5761 PCI-E card	5761 Gigabit Ethernet controller with Remote Wake UP and PXE support Dell 56K v.92 Data/Fax PCI modem	5754 Gigabit Ethernet controller 2nd Gigabit port is available with the optional PCI-e Broadcom Gigabit controller card	5761 Gigabit Ethernet controller 2nd Gigabit port is available with the optional PCI-e Broadco Gigabit controller card
Sound Card				
	Integrated High Definition Audio (Rev 1.0 Specification) implemented with a two-chip audio solution comprised of the ADI 1984a High Definition Audio CODEC and the ICH10's integrated AC97/High Definition digital controller.	Integrated High Definition Audio, 24 bit analog-to-digital; 24-bit digital-to-analog stereo conversion	Integrated High Definition Audio (Rev 1.0 Specification) implemented with a two-chip audio solution comprised of the ADI 1984a High Definition Audio CODEC and the ICH10's integrated AC97/High Definition digital controller.	Integrated High Definitic Audio (Rev 1.0 Specification) implemented with a tw chip audio solution comprised of the ADI 1984a High Definition Audio CODEC and the ICH10's integrated AC97/High Definition digital controller.
Storage Devices				
	Optional Removable Storage DVD-ROM, DVD+/-RW, Blu-ray disc®, USB media card reader **Optional Modem** Dell 56K v.92 Data/Fax PCI modem	**Optional Removable Storage** CD-RW/DVD Combo, DVD-ROM, DVD+/-RW, Blu-ray Disc™, USB Floppy Drive, USB media card reader	**Optional Removable Storage** CD-RW/DVD Combo, DVD-ROM, DVD+/-RW, Blu-Ray Disc™, USB Floppy Drive, USB media card reader **Optional Modem** Dell 56K v.92 Data/Fax PCI modem	**Optional Removable Storage** CD-RW/DVD Combo, DVD-ROM, DVD+/-RW, Blu-Ray, USB Floppy Drive, USB media card reader **Optional Modem** Dell 56K v.92 Data/Fax PCI modem
Security				
	Software Trend Micro Worry-Free Business Security Services (up to 3 year subscription) Setup/BIOS Password I/O Interface Security **Hardware** Kensington Lock Internal front panel chassis lock	**Software** Trend Micro Worry-Free Business Security Services (up to 3 year subscription) Trusted Platform Module 1.2 (TPM 1.2) Chassis intrusion switch Setup/BIOS Password I/O Interface Security **Hardware** Kensington Lock slot Padlock ring Internal front panel chassis lock	**Software** Trend Micro Worry-Free Business Security Services (up to 3 year subscription) Trusted Platform Module 1.2 (TPM 1.2) Chassis intrusion switch Setup/BIOS Password I/O Interface Security **Hardware** Kensington Lock slot Padlock ring Internal front panel chassis lock	**Software** Trend Micro Worry-Fre Business Security Services (up to 3 year subscription) Trusted Platform Modul 1.2 (TPM 1.2) Chassis intrusion switc Setup/BIOS Password I/O Interface Security **Hardware** Kensington Lock Padlock Internal front panel chassis lock
Regulatory				
	Regulatory Model: D02M **Regulatory Type: D02M001** Product Safety, EMC and Environmental Datasheets Dell Regulatory Compliance Home Page Dell and the Environment	**Regulatory Model: DCTA** Product Safety, EMC and Environmental Datasheets Dell Regulatory Compliance Home Page Dell and the Environment	**Regulatory Model: DCTA** Product Safety, EMC and Environmental Datasheets Dell Regulatory Compliance Home Page Dell and the Environment	**Regulatory Model: DCDO** Product Safety, EMC ar Environmental Datasheets Dell Regulatory Compliance Home Page Dell and the Environmer
	Dell Precision T1500	**Dell Precision T3500**	**Dell Precision T5500**	**Dell Precision T7500**

ARIZONA WATER COMPANY

CONSTRUCTION COMPLETION NOTICE

CONSTRUCTION COMPLETION DATE: 6-7-2011

WORK AUTHORIZATION NUMBER: 1-4788

PREPARED BY

THE FOLLOWING RECORD REQUIREMENTS ARE ATTACHED:

1. CONSTRUCTION DRAWINGS WITH "AS BUILT" LOCATION OF PIPE, FITTINGS, ETC. MARKED IN RED ..... N/A
2. VALVE CARDS ..... N/A
3. HYDRANT CARDS WITH COPY OF COVER LETTER ..... N/A
4. MATERIALS INSTALLED OR RETIRED LISTED ON THE REVERSE SIDE OF THE W.A. WITH R.O.S. AND P.D.R. NUMBERS .....
5. PRESSURE AND LEAKAGE TEST RESULTS:

DATE TESTED				
TIME STARTED				
TIME FINISHED				
PIPE DIAMETER				
FOOTAGE TESTED				
ALLOWABLE LEAKAGE	N/A			
LEAKAGE OBSERVED				
PRESSURE AT TEST POINT				
COMPANY EMPLOYEE OBSERVING TEST *(print)*				
INITIALS OF EMPLOYEE				

6. DISINFECTION SAMPLING:

INITIAL SAMPLING	DATE				
(minimum 50 ppm available chlorine)	TIME				
	PPM Cl_2				
AFTER 24 HOURS DETENTION TIME	DATE				
(minimum 10 ppm free chlorine)	TIME	N/A			
	PPM Cl_2				
AFTER SUFFICIENT FLUSHING	DATE				
(water is clear and system Cl_2 residual is measured)	TIME				
	PPM Cl_2				
BACTERIOLOGICAL SAMPLE(S)	DATE				
	TIME				
	ATTACHED	☐ Yes ☐ No	☐ Yes ☐ No	☐ Yes ☐ No	☐ Yes ☐ No

I certify that construction on the above Work Authorization was completed as of the date shown above and for which all materials have been accounted. I further certify that I have inspected the work done and have found it to be satisfactory and in accordance with Company specifications.

Smith

Division Manager or Operations Superintendent *(signature)*

6-30-11

Date of Notice

ATTACH TO CONSTRUCTION ENGINEERING FILE COPY OF WORK AUTHORIZATION

WA 1-4789

ARIZONA WATER COMPANY
WORK AUTHORIZATION

W.A. NUMBER: 1-4789
P.E. NUMBER:
BUDGET ITEM NO.: B-1
SHEET NO.: 1 of 2

SYSTEM: SUPERSTITION	WORK TO START BY: UPON AUTHORIZATION
DIVISION: SUPERSTITION	WORK TO BE FINISHED BY: WITHIN 60 DAYS
TAX CODE: ~~0184~~ 0100	

DESCRIPTION OF WORK:

Replace failing radios and change programs at Bandy Heights Tank and Wells 12, 27, & 28 in Miami, Arizona. Construct in accordance with attached drawings and/or Arizona Water Company specifications.

FACTORS JUSTIFYING WORK:

2011 APPROVED CONSTRUCTION BUDGET ITEM ($15,000)

COST ESTIMATE		AUTHORIZATION	DATE
COST OF WORK:		PREPARED BY: Mike Loggins ML 1-31-11	1-24-11
MATERIAL	3,500		
LABOR	1,000	REVIEWED FOR ESMT/ROW VERIFICATION: Charles Briggs CB 01-31-2011	01-25-2011
CONTRACT PORTION	7,500		
OVERHEAD	1,800	REVIEWED BY: Andy Haas AJH 1-31-11	1-25-11
TOTAL AUTHORIZED EXPENDITURES CHARGEABLE TO THIS W.A.	$ 13,800		
FUNDS RECEIVED:		APPROVED BY ENGINEERING: Fredrick Schneider FK 1-31-11	1-26-11
CONTRIBUTIONS RECEIVED	0		
REFUNDABLE ADVANCES RECEIVED	0	APPROVED BY FINANCE: Joseph Harris	1/26/11
TOTAL CONTRIBUTIONS/ADVANCES	0		
NET CASH REQUIRED	$ 13,800	AUTHORIZED BY PRESIDENT: William Garfield	1-28-2011

COMMENTS:

CONSTRUCTION RELEASE:

RELEASED TO CONSTRUCTION
Authorized by FRED SCHNEIDER
Date 1/31/2011

AFH

ARIZONA WATER COMPANY

WORK AUTHORIZATION - DETAIL SHEET

W.A. NUMBER: 1-4789
P.E. NUMBER:
BUDGET ITEM NO.: B-1
SHEET NO.: 2 of 2

RETIREMENT PROPERTY UNITS	PLANT PROPERTY ACCOUNT	UNIT DESCRIPTION	QUANTITY	YEAR INSTALLED AND W.A. NUMBER

PROJECT DESCRIPTION

Replace failing radios and change programs at Bandy Heights Well and Wells 12, 27, & 28 in the Superstition System.

	DESCRIPTION	PLANT PROP ACCT	QUANTITY	UNIT COST	TOTAL
CONTRACT WORK	Program radios	397.2	1	$ 5,000.00	$ 5,000
	Minor electrical work	397.2	1	2,500.00	2,500
	SERVICE CONNECTIONS COMPLETE: DOUBLE-LONG	345			
	SERVICE CONNECTIONS COMPLETE: DOUBLE-SHORT	345			
	SERVICE CONNECTIONS COMPLETE: SINGLE-LONG	345			
	SERVICE CONNECTIONS COMPLETE: SINGLE-SHORT	345			
TOTAL CONTRACT WORK					$ 7,500
MATERIALS	Purchase control panel	397.2	1	$ 3,500.00	$ 3,500
	SERVICE CONNECTIONS: DOUBLE-LONG	345			
	SERVICE CONNECTIONS: DOUBLE-SHORT	345			
	SERVICE CONNECTIONS: SINGLE-LONG	345			
	SERVICE CONNECTIONS: SINGLE-SHORT	345			
	METERS	346			
TOTAL MATERIALS					$ 3,500
LABOR					
	TESTING FEE	397.2	1	$ 500.00	500
	PERMIT FEE				
	SURVEY FEE				
	FIELD INSPECTION	397.2	1	500.00	500
	INSTALL SERVICE CONNECTIONS: DOUBLE-LONG	345			
	INSTALL SERVICE CONNECTIONS: DOUBLE-SHORT	345			
	INSTALL SERVICE CONNECTIONS: SINGLE-LONG	345			
	INSTALL SERVICE CONNECTIONS: SINGLE-SHORT	345			
TOTAL LABOR					$ 1,000
SUBTOTAL - CONTRACT WORK, MATERIALS, AND LABOR					$ 12,000
OVERHEAD					1,800
TOTAL	REFUNDABLE PORTION ☐	NON-REFUNDABLE PORTION ☐		COST ESTIMATE	$ 13,800

AFH

1-0003

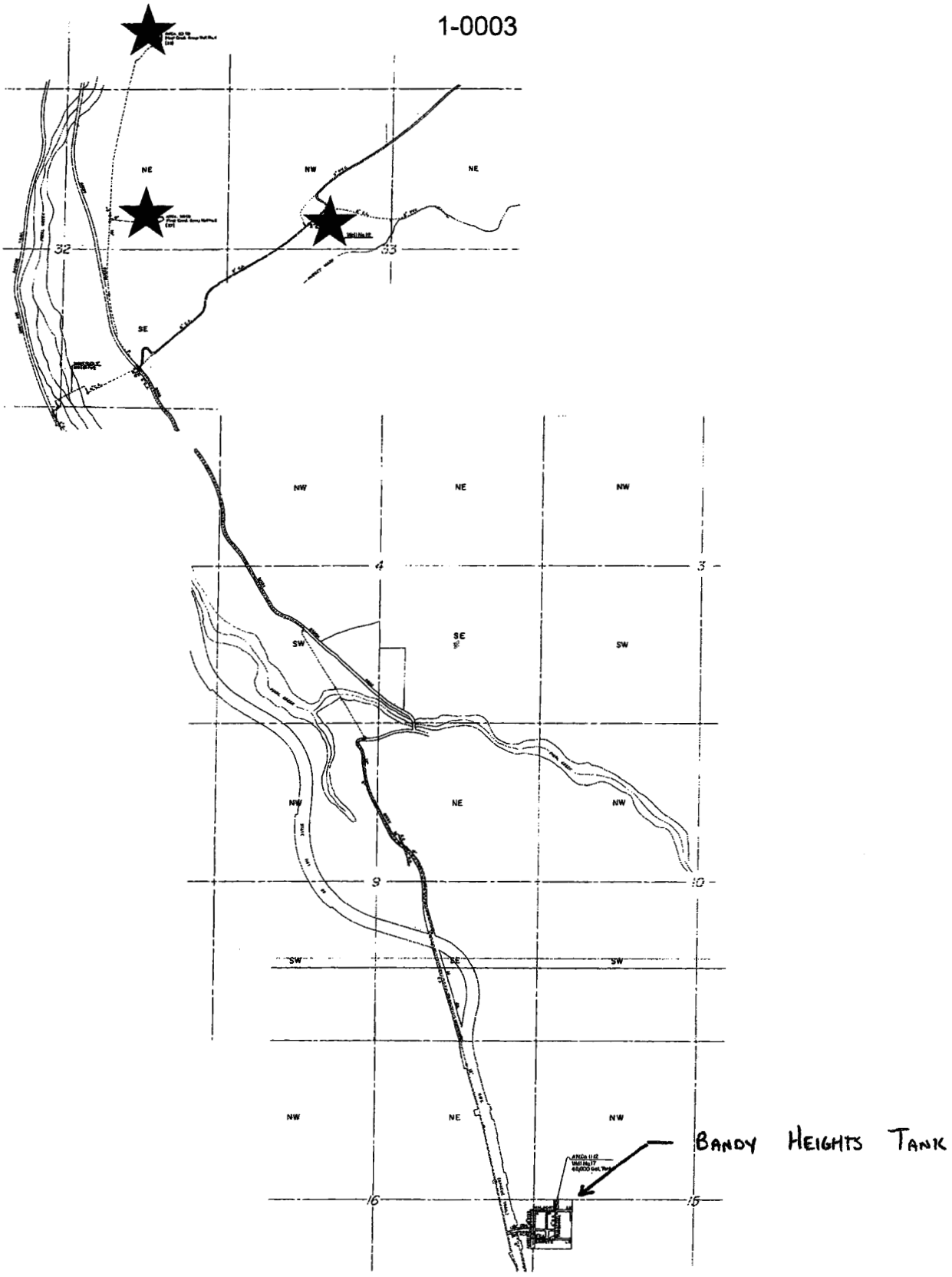

REPLACE FAILING RADIOS AND CHANGE PROGRAMS
AT WELLS 12, 27 AND 28

ID	Task Name	Duration	Start	Finish	Predecessors
1	Replace Failing Radios	92 days	Mon 1/10/11	Tue 5/17/11	
2	Radio Design	37 days	Mon 1/10/11	Tue 3/1/11	
3	Coordinate w/ Field	15 days	Mon 1/10/11	Fri 1/28/11	
4	Preliminary Design w/ Consultant	10 days	Mon 1/31/11	Fri 2/11/11	3
5	Preliminary Design to Field for Comment	5 days	Mon 2/14/11	Fri 2/18/11	4
6	Final Design	5 days	Mon 2/21/11	Fri 2/25/11	5
7	QA/ QC	2 days	Mon 2/28/11	Tue 3/1/11	6
8	Purchase Control Panel from AGM	25 days	Wed 3/2/11	Tue 4/5/11	7
9	Bid Consultant Programming & Radios & Award Contract	20 days	Wed 3/2/11	Tue 3/29/11	7
10	Bid Electrical Work	20 days	Wed 3/2/11	Tue 3/29/11	7
11	Construction	25 days	Wed 3/30/11	Tue 5/3/11	10
12	Close Out Job	10 days	Wed 5/4/11	Tue 5/17/11	11

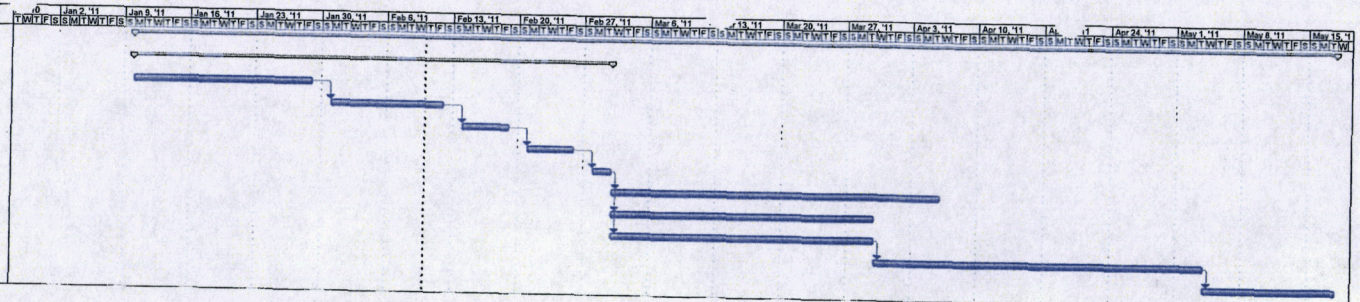

Project: SS-03 Failing Radios Mi
Date: Thu 2/10/11

Split | Progress | Milestone | Summary | Project Summary | External Tasks | External Milestone | Deadline

ARIZONA WATER COMPANY

Superstition Division
2380 W. Southern Ave., AJ, AZ 85120
PH: 480-982-2201 FX: 480-983-6390

PROPOSAL/CONTRACT

CONTRACTOR:	GLOBAL DATA SPECIALIST	SYSTEM:	SUPERSTITION
ADDRESS:	1815 W FIRST AVENUE, SUITE 110	W.A. No(s):	1-4789
CITY ST ZIP:	MESA, ARIZONA 85202	BID DUE DATE:	February 14, 2011

CONTRACTOR SUBMITS this PROPOSAL/CONTRACT to ARIZONA WATER COMPANY, an Arizona corporation (the "Company"), to perform the work and complete the project described on Page 2 (the "Project"), as an independent prime contractor.

1. Contractor certifies that it has a complete copy of, and has read, understands and accepts, the Company's General Conditions of Contract, and the Company's Construction Specifications and Standard Specification Drawings, (the "Specifications"), all of which are attached hereto. Contractor has examined the specific plans and related construction drawings for the Project (the "Drawings"), copies of which are also attached hereto. The General Conditions of Contract, Specifications and Drawings are incorporated into this Proposal/Contract. Contractor affirms that all work and materials to be furnished or purchased for the Project will be in strict conformance with the General Conditions of Contract, Specifications and Drawings.
2. Contractor represents and warrants that it has satisfied and complied with the provisions of Section 6, Contractor Understands Work and Working Conditions, of the General Conditions of Contract prior to submitting this Proposal/Contract.
3. Contractor represents that this Proposal/Contract is fair and honest in all respects, is submitted in good faith and is not submitted in collusion with any other company, entity or person.
4. Contractor acknowledges that one hundred percent (100%) Performance and Payment Bonds are required and must be provided to the Company prior to the commencement of work.
5. Prior to the commencement of work, Contractor will submit to the Company a list of all materials to be used in the Project. The materials list will include the manufacturer, part number, price and quantity included in this Proposal/Contract.
6. Contractor will furnish all labor, tools, equipment and materials required to complete the Project according to the General Conditions of Contract, Specifications and Drawings. No materials purchased by Contractor to be incorporated into the Project are subject to tax at the time of purchase and Contractor will not charge the Company for any such tax. Contractor will pay the applicable transaction privilege tax (the "Contracting Tax") on the Project after Contractor receives payment of the final Project invoice from the Company. The cost of materials incorporated into the Project which are exempt by Arizona Revised State Statues ("A.R.S.") from the Contracting Tax, for example, pipes or valves having a diameter of four (4) inches or larger, including equipment, fittings and any other related part that is used in operating the pipes or valves (A.R.S. §42-5061 B.6.), will not be included in the total cost of the labor and materials upon which the Contracting Tax is computed. Contractor retains full liability and obligation to pay the Contracting Tax and will defend and indemnify the Company against any demand or obligation to pay the Contracting Tax.
7. Contractor will maintain detailed accounting records of all materials purchased and incorporated into the Project. Such records will include all supporting original vendor invoices for all materials purchased. Following completion of the Project, Contractor will submit an itemized accounting to the Company which will include all supporting original vendor invoices and satisfactory evidence of payment thereof. The Company will not pay Contractor for materials not actually incorporated into the Project, and the disposition of such materials will remain Contractor's responsibility.
8. The Estimated Total Cost of the Project, shown on Page 2, is based on estimated labor and material quantities to be furnished. It includes an estimate of the Contracting Tax and the cost of the required Performance and Payment Bonds. Contractor will not cancel, modify or withdraw this Proposal/Contract during a ninety-day (90) period commencing on the Bid Due Date. The Company may accept this Proposal/Contract by signing and mailing, or otherwise delivering, a copy hereof to Contractor during such ninety-day (90) period. If the Company does not accept this Proposal/Contract during such ninety-day (90) period, Contractor may cancel this Proposal/Contract by giving written notice of cancellation to the Company.
9. Prior to the commencement of work, Contractor will provide the Company with a detailed construction schedule, in either Gantt or CPM form, identifying all tasks to be performed from the date of the written Commencement Notice through completion of the Project, including testing, training of Company Personnel and final Project invoicing. Contractor will provide the Company with a copy of such construction schedule documenting the progress of work on the Project at least monthly.
10. Contractor will not commence work on the Project until the Company gives Contractor a written Commencement Notice. Contractor will complete the Project within 60 calendar days after the Commencement Notice is issued.
11. Following the Company's written notice of satisfactory completion of the Project, and upon receipt of the final Project invoice from Contractor, the Company shall pay Contractor the actual total cost of the Project, which will be calculated as shown on Page 2, except that actual labor and material quantities installed/constructed will be substituted for the estimated labor and materials quantities and the Contracting Tax will be recalculated based on such actual labor and materials quantities.
12. The amount of applicable liquidated damages for Contractor's failure to deliver or perform within the time limit shown in Paragraph 10 may be deducted from the Company's payment of the final Project invoice. This provision shall not limit the Company's ability to terminate this Proposal/Contract for Contractor's unsatisfactory performance or failure to perform as provided in the General Conditions of Contract, Specifications or Drawings, or in this Proposal/Contract.

SPECIAL CONDITIONS:

See attached proposal dated February 11, 2011.

CONTRACTOR	PROPOSAL/CONTRACT ACCEPTED:
GLOBAL DATA SPECIALISTS	ARIZONA WATER COMPANY
By:	By:
Print Name: DUANE MOORE	Print Name: Fredrick K. Schneider, PE
Title: SALES MANAGER	Title: Vice President - Engineering
Date: 5/6/11	Date: 5-11-2011

ARIZONA WATER COMPANY

Superstition Division
2380 W. Southern Ave., A.J, AZ 85120
PH: 480-982-2201 FX: 480-983-6390

PROPOSAL/CONTRACT

CONTRACTOR: GLOBAL DATA SPECIALISTS	SYSTEM: SUPERSTITION
AZ CONTRACTOR LICENSE NO: CLASSIFICATION:	W.A. No(s): 1-4789
ADDRESS: 1815 W. FIRST AVENUE, SUITE 110	BID DUE DATE:
CITY ST ZIP MESA, ARIZONA 85202	BID BOND REQUIRED ☐ Yes ☑ No

DESCRIPTION OF PROJECT: Reprogram three well sites to provide Bandy Heights Tank to control Wells 12, 27 and 28, as per attached proposal dated February 15, 2011.

1-2. MATERIALS EXEMPT FROM CONTRACTING TAX (per Paragraph 6	QUANTITY	UNIT PRICE LABOR	UNIT PRICE MATERIALS		TOTAL COST LABOR	TOTAL COST MATERIALS
				1		2
3. Total Labor to Install Exempt Materials (add the amounts in column 1)				3	0	
4. Total Exempt Materials (add the amounts in column 2)						4 0

5-6. NON-EXEMPT MATERIALS	QUANTITY	LABOR	MATERIALS		LABOR	MATERIALS
Test communications and operation between RTU's	1	$ 1,893.00			$ 1,893	
				5		6
7. Total Labor to Install Non-Exempt Materials (add the amounts in column 5)				7	1,893	
8. Total Non-Exempt Materials (add the amounts in column 6)						8
9. Subtotal A (add lines 3, 7 and 8)						9
10. Contracting Tax Base (multiply the amount on line 9 by 0.65)				#		
11. Applicable Contracting Tax Rate				#		
12. Contracting Tax (multiply the amount on line 10 by line 11)						#
13. Subtotal B (add lines 4, 9 and 12)						#
14. 100% Performance and Payment Bonds Cost						# 959
15. Estimated Total Cost (add lines 13 and 14)						# 2852.00

NOTE: The Estimated Total Cost includes all labor and materials for backfill, pavement replacement, chip seal, and traffic control necessary for the Project.

1815 W. First Ave., Suite 110, Mesa, AZ 85202
Phone: 480-461-3401 FAX: 480-461-3411

QUOTE: **MDM03824C** **February 15, 2011**

by Duane Moody
480-461-3401, Ext. 223, duane@gbl-data.com
Expires 16-May-11

Quoted To: **Mike Loggins**

Arizona Water
3805 N. Black Canyon Hwy.
Phoenix, AZ 85015
Phone: 602-240-6860
FAX: 602-240-6878

End User: **Miami, Bandy Heights**

Description

Global Data Specialists is pleased to provide you with the following quotation for the Engineering Services for Miami system for the Bandy Heights Tank to control the respective pumps.

The Bandy Heights Tank will control the following pumps: Wells 12, 27, and 28 sites

The 3 well sites will need to be reprogrammed to provide the control scheme requested. Also, 2 of the wells sites will need some wiring changes for this modification as well. One well will need to have the pump wiring changed from DO1 to DO2, and the other well site will need to have its wiring changed from DO1 to DO3. The unmodified well site will have its wiring remain on DO1.

If you have any questions or need additional information please let me know.

Best Regards,

Duane Moody
Sales Manager

ENGINEERING SERVICES

Configuration, Application(s)

After all necessary information has been gathered the System Engineer will modify the applications according to the system requirements.

The Bandy Heights Tank will control the following pumps: Wells 12, 27, and 28 sites

Integration, On-site at Customer Location

- Test communications and operation between RTUs
- Test and Debug as needed
- Obtain signoff and acceptance

Engineering Services Sub-Total $ 1,893.00

TOTALS

Engineering Services	$ 1,893.00
TOTAL	**$ 1,893.00**

TERMS

Payment: ..... 100% Upon Receipt of Invoice, Net 30 Days. 1% discount if payment is received Net 15. We also accept Visa, Master Card, and American Express.

Delivery:..... TBD Upon Order Placement

Validity:..... Quotation is valid for 90 days. The above quotation is based upon the information provided at the time of quotation. Global Data Specialists is not responsible for any information that is missing or incorrect. Any new information that is received after the quotation has been submitted may result in a revised quotation being issued to cover the costs of additional equipment or services as identified.

Shipment: ..... Global Data Specialists, Mesa, AZ.

Warranty:..... The Motorola equipment is warranted for 1 year upon shipment for parts and labor. Non-Motorola equipment warranties are vendor specific and will apply. No additional warranties are expressed or implied. Warranty labor does not include the cost associated with any out of the office related travel or hourly time expenses and will be billed separately.

Cancellation:.... 10% Penalty prior to 30 days of shipment, 25% Penalty less than 30 days prior to shipment.

Note:..... Please reference quotation number on all correspondence.

ARIZONA WATER COMPANY

CONSTRUCTION SPECIFICATIONS: E-8-1

ERRATA 2010

10. PROTECTION OF WATER MAINS NEAR SEWERS

In order to protect water mains from contamination by sewers, the installation of the water mains must conform to the following requirements:

a. Horizontal - When water lines and sewers are laid parallel with each other, the horizontal distance between them shall not be less than six feet (6'). Each line shall be laid on undisturbed or bedded material in a separate trench. Where conditions prevent the minimum horizontal separation set forth above, extra protection will be required. Extra protection shall consist of constructing the sewer main with mechanical joint ductile iron pipe or with slip-joint ductile iron pipe if joint restraint is provided, or encasing both the water main and sewer main in concrete. See Detail E-9-30-1 and E-9-30-2

The Construction Drawings shall indicate the installation requirements. The drawings showing these exceptions shall have been approved by the appropriate state and/or county health department. Refer to the diagram below for clarification.

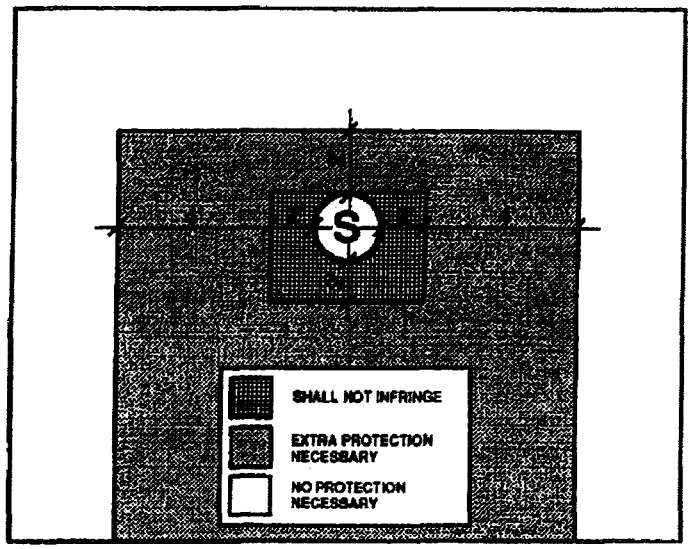

Under no circumstances will the horizontal separation between sewer mains and water mains be less than two feet (2'). All distances are to be measured from the outside of the sewer main to the outside of the water main.

b. Vertical - When a water main is parallel with or crosses a sewer main within two feet (2') above the sewer or greater than two feet (2') below the sewer, extra protection will be required. Extra protection shall consist of constructing the sewer main with mechanical joint ductile iron pipe or with slip-joint ductile iron pipe if joint restraint is provided, or encasing both the water main and sewer main in concrete. See Detail E-9-30-1 and E-9-30-2.

The Construction Drawings shall indicate the installation requirements. The drawings showing these exceptions shall have been approved by the appropriate state and/or county health department.

Under no circumstances will the vertical separation of a sewer main installed above a water main be less than two feet (2'). All distances are to be measured from the outside of the sewer main to the outside of the water main. Refer to the diagram above for clarification.

c. When unusual conditions such as, but not limited to, highway or bridge crossings prevent the water and sewer main separations required from being met, the appropriate state and/or county health department will review and may approve requests for authorization to use alternate construction techniques, materials and joints on a case-by-case basis.

d. No water pipe shall pass through or come into contact with any part of a sewer manhole. The minimum horizontal separation between water mains and manholes shall be six feet (6'), measured from the center of the manhole.

e. The minimum separation between force mains or pressure sewers and water mains shall be two feet (2') vertically and six feet (6') horizontally under all conditions. Where a sewer force main crosses above, or less than six feet (6') below, a water line, the sewer main shall be encased in at least six inches (6") of concrete for ten feet (10') on either side of the water main. Refer to the diagram below for clarification.

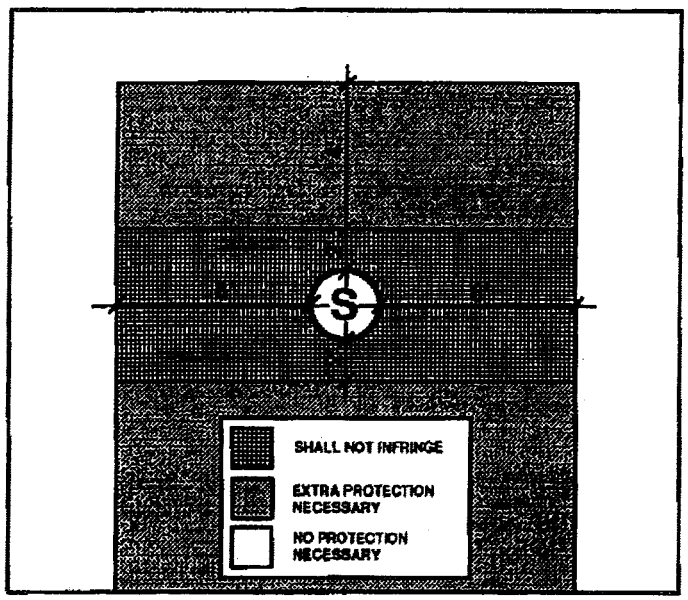

ARIZONA WATER COMPANY

STANDARD SPECIFICATION DRAWINGS: E-9-1

ERRATA 2010

E-9-20	INSTALLATION OF TYPICAL WELL WITH LINE SHAFT TURBINE PUMP
E-9-21	INSTALLATION OF TYPICAL WELL WITH SUBMERSIBLE TURBINE PUMP
E-9-22	INSTALLATION OF COLUMN PIPE, OIL TUBE AND LINE SHAFT
E-9-23	HOT TAP AND JUMPER METER CONNECTION
E-9-24	INSTALLATION OF TYPICAL WATER LINE ENCASEMENT
E-9-25	INSTALLATION OF CALCIUM HYPOCHLORITE TABLET CHLORINATOR
E-9-26	INSTALLATION OF CHAIN LINK FENCE
E-9-27	INSTALLATION OF SIDE HUNG WATER LINE SUSPENSION
E-9-28	PIPE WARNING TAPE, LOCATOR WIRE, AND LOCATOR WIRE TERMINATION
E-9-29	INSTALLATION OF A TYPICAL SAMPLING STATION
E-9-30-1	WATER AND SANITARY SEWER SEPARATION/PROTECTION PERPENDICULAR
E-9-30-2	WATER AND SANITARY SEWER SEPARATION/PROTECTION – PARALLEL

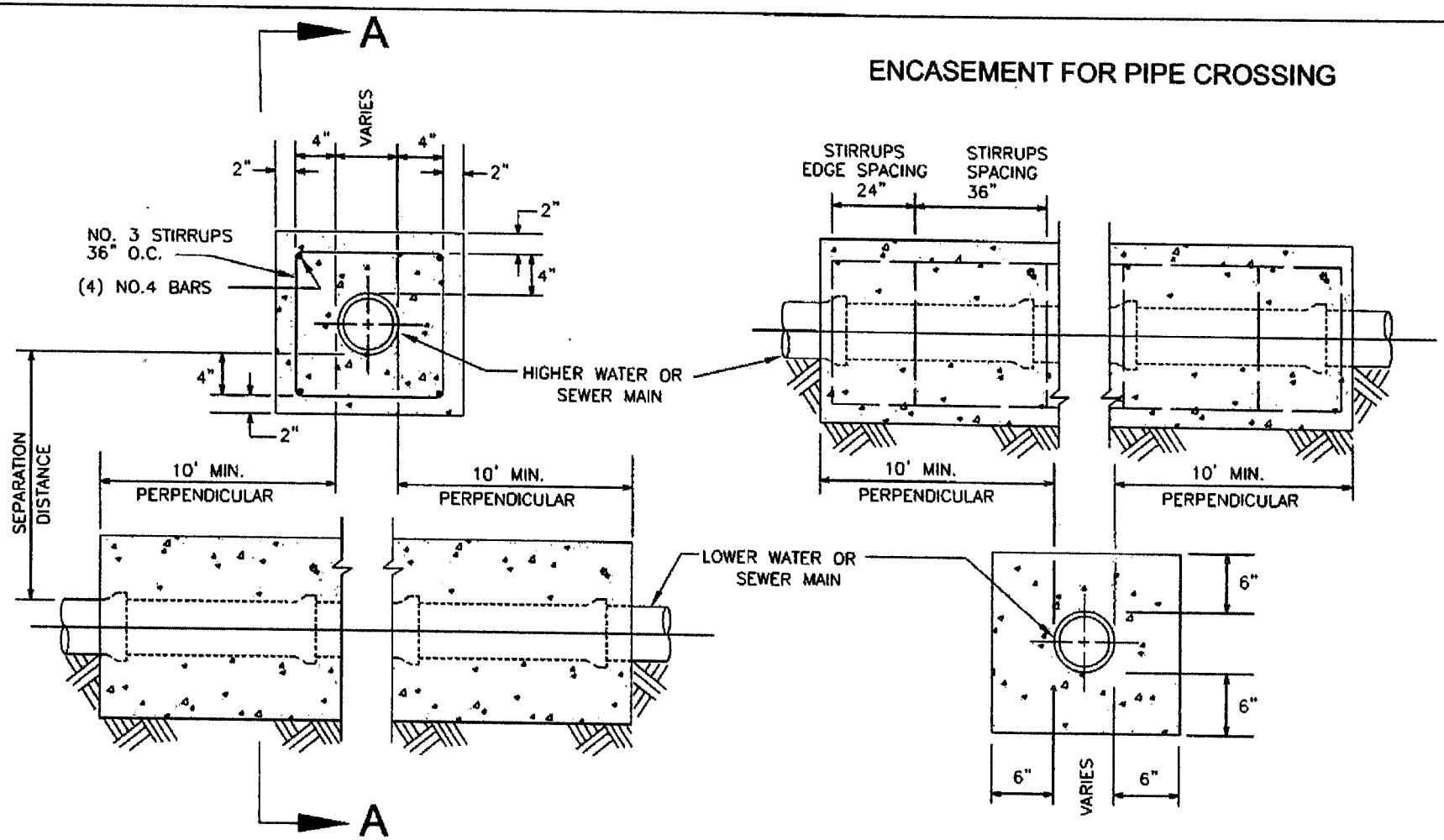

ENCASEMENT FOR PIPE CROSSING

SECTION A-A

NOTES:

1. 2,000 PSI CONCRETE
2. SEPARATION DISTANCES AND/OR OTHER EXTRA PROTECTION SHALL BE REQUIRED TO PROTECT WATER MAINS FROM CONTAMINATION BY SANITARY SEWER MAINS. SEE AWC STANDARD SPECIFICATION PAGES E-8-1-9 AND E-8-1-10.
3. SEE CROSS SECTION DETAIL FOR LIMITS OF SEPARATION/EXTRA PROTECTION. ALL DISTANCES ARE MEASURED PERPENDICULARLY FROM THE OUTSIDE OF THE PIPES.
4. RECLAIMED WATER SHALL BE CONSIDERED A SANITARY SEWER WHEN PLACED NEXT TO A POTABLE WATER MAIN.

ARIZONA WATER COMPANY

STANDARD SPECIFICATION
FOR THE INSTALLATION OF
WATER AND SANITARY SEWER
SEPARATION/PROTECTION

DRAWN BY	APPROVED BY	DATE		
CB	JW	04.07.2008		E-9-30-1

NOTES:

1. 2,000 PSI CONCRETE

2. SEPARATION DISTANCES AND/OR OTHER EXTRA PROTECTION SHALL BE REQUIRED TO PROTECT WATER MAINS FROM CONTAMINATION BY SANITARY SEWER MAINS. SEE AWC STANDARD SPECIFICATION PAGES E-8-1-9 AND E-8-1-10.

3. SEE CROSS SECTION DETAIL FOR LIMITS OF SEPARATION/EXTRA PROTECTION. ALL DISTANCES ARE MEASURED PERPENDICULARLY FROM THE OUTSIDE OF THE PIPES.

4. RECLAIMED WATER SHALL BE CONSIDERED A SANITARY SEWER WHEN PLACED NEXT TO A POTABLE WATER MAIN.

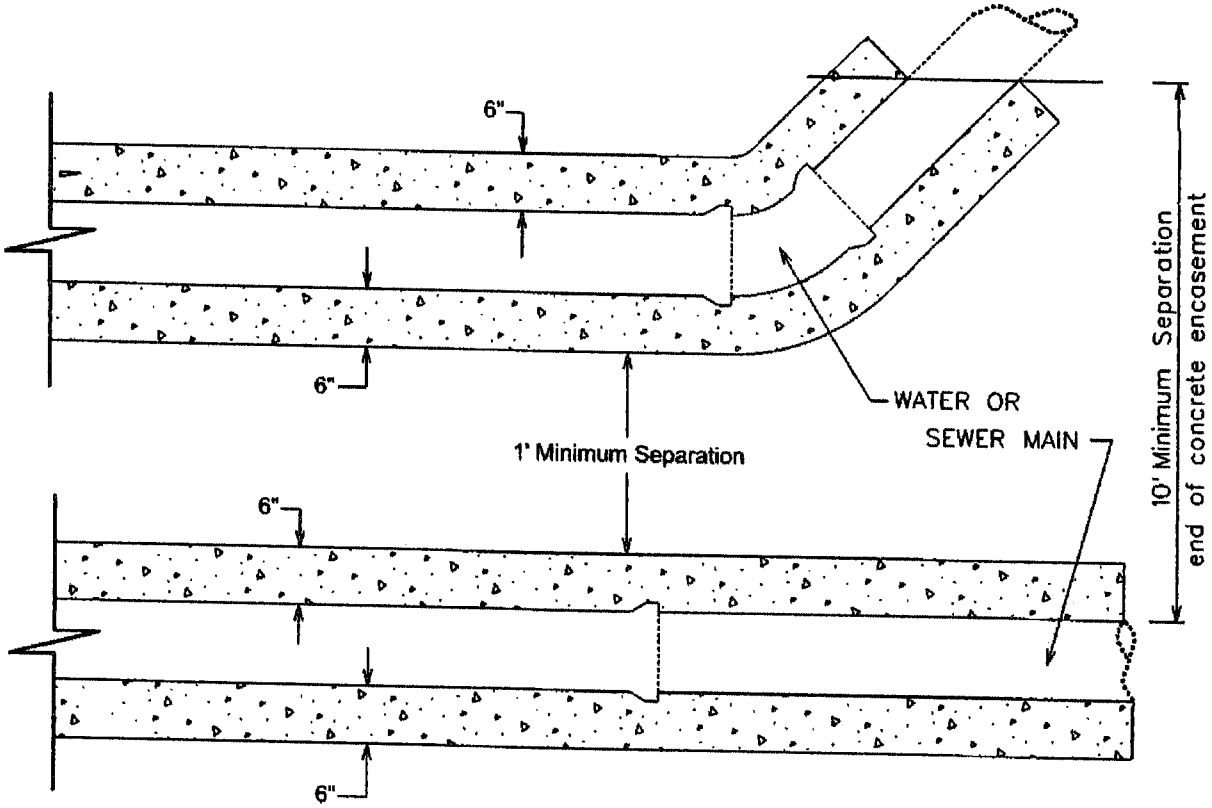

PLAN VIEW

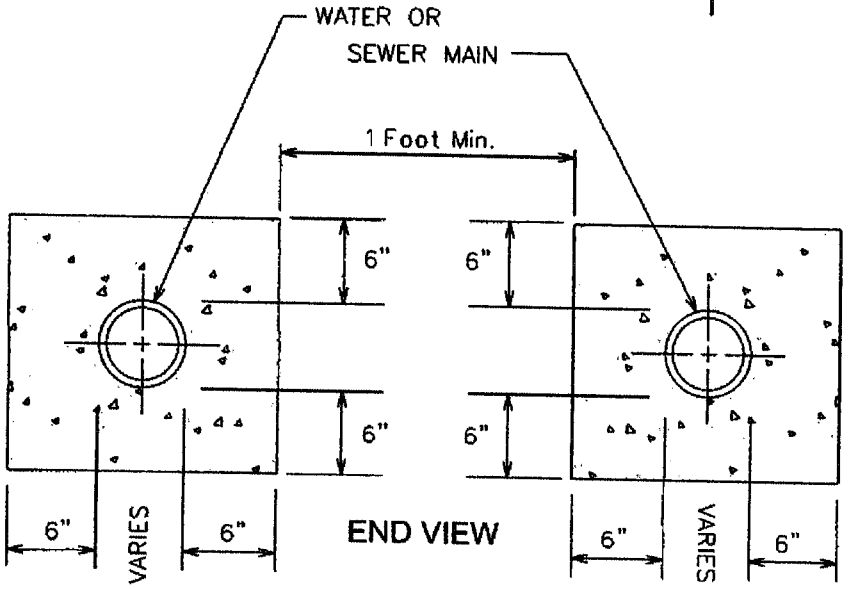

END VIEW

ENCASEMENT FOR PARALLEL PIPES

ARIZONA WATER COMPANY

STANDARD SPECIFICATION
FOR THE INSTALLATION OF
WATER AND SANITARY SEWER SEPARATION/PROTECTION

DRAWN BY	APPROVED BY	DATE		
CB	JW	04.07.2008		E-9-30-2

ARIZONA WATER COMPANY

3805 N. BLACK CANYON HIGHWAY, PHOENIX, ARIZONA 85015-5351 • P.O. BOX 29006, PHOENIX, ARIZONA 85038-9006
PHONE: (602) 240-6860 • FAX: (602) 240-6878 • WWW.AZWATER.COM

October 19, 2010

Mr. Jim Ryan
Clow Valve Company
8121 N. 10th Avenue
Phoenix, Arizona 85021

Re: Clow Medallion Fire Hydrants and Resilient Wedge Gate Valves

Dear Mr. Ryan:

Thank you for your interest in working with Arizona Water Company (the "Company") to add Clow Medallion Fire Hydrants and Resilient Wedge Gate Valves to the Company's material and equipment specifications. Based on the Clow product information you provided and your field presentations to our operations and engineering staff, the Company is pleased to inform you that the following items are approved for use in the Company's water systems in Arizona.

Medallion Fire Hydrant:

- Model F-2545
  - 5¼" MVO
  - 4½" pumper
  - 2½" hose
  - Meets AWWA C-502 standard and approval by ULFM

Resilient Wedge Gate Valves:

- Model 2639 & 2640
  - Meets AWWA C-509 Full Body Cast Iron includes 304 SS Nuts, Bolts & Low Zinc Bronze Stem
  - Size range 2½" thru 12"
- Model 2638
  - Meets AWWA C-515 Reduced Wall Ductile Iron includes 304 SS Nuts, Bolts & Low Zinc Bronze Stem
  - Size range 14" thru 48"

We look forward to developing a long-term relationship with you and the Clow products. If I can be of any assistance, please call me.

Very truly yours,

Fredrick K. Schneider
Vice President – Engineering

lar

VIA EMAIL: JIM.RYAN@CLOWVALVE.COM

ARIZONA WATER COMPANY

3805 N. BLACK CANYON HIGHWAY, PHOENIX, ARIZONA 85015-5351 • P.O. BOX 29006, PHOENIX, ARIZONA 85038-9006
PHONE: (602) 240-6860 • FAX: (602) 240-6878 • WWW.AZWATER.COM

November 24, 2010

Mr. Tony Geiger
US Pipe – Waterworks Marketing Consultants
34522 N. Scottsdale Road
Scottsdale, Arizona 85226

Re: US Pipe Sentinel Fire Hydrants and Resilient Wedge Gate Valves

Dear Mr. Geiger:

Thank you for your interest in working with Arizona Water Company (the "Company") to add US Pipe Sentinel Fire Hydrants and Resilient Wedge Gate Valves to the Company's material and equipment specifications. Based on the US Pipe product information you provided and your field presentations to our operations and engineering staff, the Company is pleased to inform you that the following items are approved for use in the Company's water systems in Arizona.

Sentinel Fire Hydrant:

- Model Sentinel 250
  - 5¼" MVO
  - 4½" pumper
  - 2½" hose
  - Meets AWWA C-502 standard and approval by ULFM

Resilient Wedge Gate Valves:

- Model US Pipe A-USP0
  - Meets AWWA C-509 Full Body Cast Iron <u>includes</u> 304 SS Nuts, Bolts & Low Zinc Bronze Stem
  - Size range 2" thru 12"
- Model US Pipe A-USP1
  - Meets AWWA C-515 Reduced Wall Ductile Iron <u>includes</u> 304 SS Nuts, Bolts & Low Zinc Bronze Stem
  - Size range 14" thru 48"

E-MAIL: mail@azwater.com

We look forward to developing a long-term relationship with you and the US Pipe products. If I can be of any assistance, please call me.

Very truly yours,

Fredrick K. Schneider
Vice President – Engineering

afh

VIA EMAIL: TGEIGER4@COX.NET

ARIZONA WATER COMPANY

SPECIFICATIONS

GENERAL CONDITIONS OF CONTRACT: E-4-1

CONSTRUCTION SPECIFICATIONS: E-8-1

STANDARD SPECIFICATION DRAWINGS: E-9-1

2007 EDITION

ARIZONA WATER COMPANY

GENERAL CONDITIONS OF CONTRACT: E-4-1

ARIZONA WATER COMPANY

E-4-1

GENERAL CONDITIONS OF CONTRACT

DEFINITIONS

A. Company. The words "Company" or "Arizona Water Company" mean Arizona Water Company, and where applicable, any division of Arizona Water Company, whose principal place of business is located at 3805 North Black Canyon Highway, Phoenix, Arizona 85015-5351 (Post Office Box 29006, Phoenix, Arizona 85038-9006).

B. Company's Authorized Representative. The words "Company's Authorized Representative" mean any officer of the Company, and any of the Company's Engineers, any Division Manager or Superintendent of the Company and/or such other person(s) designated in writing as the "Company's Authorized Representative" by the President or any Vice President of the Company.

C. Contractor. The word "Contractor" means either an individual or other entity employed to do the work as shown on the Construction Drawings and as specified herein.

D. Construction Drawings. The words "Construction Drawings" mean plans prepared by or on behalf of Arizona Water Company.

E. Invitation to Bid. The term "Invitation to Bid" means the current copy of Arizona Water Company's Form E-3-11-4 Request for Proposal/Contract or Form E-3-12-2 Invitation to Bid.

F. Contract. The word "Contract" means the written document titled "Contract" or "Proposal/Contract" when such document has been signed by an officer or other authorized representative of both the Contractor and the Company.

G. Inspector. The word "Inspector" means the Company's Authorized Representative or a person designated in writing by the Company's Authorized Representative.

GENERAL CONDITIONS OF CONTRACT

1. GENERAL

These General Conditions of Contract govern all works of installation and construction unless deviations are provided for on the Construction Drawings or in the Contract.

2. BONDS

The Contractor shall, upon request by the Company, furnish a performance bond and a material payment bond in the amount of 100% of the Contract price, in a form and from a surety acceptable to the Company.

3. LABOR AND/OR MATERIAL RELEASES

The Contractor shall supply labor and/or material releases satisfactory to the Company when requested to do so. Forms will be provided by the Company.

4. LICENSE

The Contractor shall have, as may be required by law, a valid license applicable to the work to be performed.

5. INSURANCE

The Contractor shall maintain in full force and effect insurance at no less than the following minimum amounts:

WORKER'S COMPENSATION	In accordance with requirements of the laws of the State of Arizona.
COMPREHENSIVE GENERAL LIABILITY (Including contractual liability covering death, bodily injury and property damage)	Combined single limit of not less than $1,000,000 for each occurrence.
AUTOMOTIVE LIABILITY (Including owned, non-owned and hired vehicles)	Combined single limit of not less than $1,000,000 for each occurrence.
SUBCONTRACTOR'S PUBLIC LIABILITY AND PROPERTY DAMAGE INSURANCE AND VEHICLE LIABILITY INSURANCE	Contractor shall either require each of its subcontractors to procure and to maintain Subcontractor's Public Liability and Property Damage Insurance and Vehicle Liability Insurance of the type and in the amounts specified in this Section 5 or insure the activities of its subcontractors in Contractor's own policy, in like amounts.

Such insurance shall name the Company, its officers, agents, and employees as additional insured and be primary for all purposes.

The Company will at all times have the right to require that all of such insurance be placed with insurance companies that are satisfactory to it. The Contractor shall file with the Company a certificate evidencing that each policy of insurance for the above coverages in the minimum amounts specified has been purchased and is in good standing.

Such certificate shall provide that notice be given to the Company at least thirty (30) days prior to cancellation or material change in the form of such policies or any of them. Such certificates shall be kept on file by the Company and the Company must have current certificates on file, or a certificate must accompany any bid proposal, before that proposal will be accepted by the Company.

6. CONTRACTOR UNDERSTANDS WORK AND WORKING CONDITIONS

By executing a Contract with the Company, the Contractor warrants that it has, by careful examination, satisfied itself as to the nature and location of the work, including soil conditions, the character, quality and quantity of the materials to be encountered, the character of the equipment and facilities needed preliminary to and during prosecution of the work, the general and local conditions, and all other matters which can in any way be expected to affect its work under the Contract. Verbal agreements or conversations with any officer, agent or employee of the Company, either before or after the execution of the Contract, are not binding upon the Company and shall not affect or modify any of the terms or obligations herein contained.

7. SPECIFICATIONS AND DRAWINGS

The Contractor shall keep on the job a complete copy of all drawings and specifications furnished by the Company which are applicable to the Contract with the Company. Anything mentioned in the specifications and not shown on the drawings or shown on the drawings and not mentioned in the specifications shall be of like effect as if shown or mentioned in both. In case of a discrepancy between the figures, drawings or specifications and physical conditions of the job, the matter shall be immediately submitted to the Company's Authorized Representative for decision as to adjustments, if any, because of the discrepancy; without a decision from the Company's Authorized Representative no discrepancy shall be adjusted by the Contractor, save only at its own risk and expense. Any deviation from the specifications must be approved in writing by the Company's Authorized Representative.

8. PROPERTY PROTECTION

Trees, fences, poles, underground structures and all other property shall be protected unless their removal is authorized on the Construction Drawings. Any property damaged shall be restored by the Contractor, at its expense, to the owner's satisfaction.

9. SPECIAL PERMITS, LICENSES AND INSURANCE

The Company shall obtain all permits for railroad, county, state, city and irrigation district rights-of-way as well as Forest Service, State Land Department and Bureau of Land Management permits. (Pipeline Contractors)

Whenever blasting is required, the Contractor shall obtain all permits, licenses and insurance required at its expense. (All Contractors)

The Contractor will be required to obtain, and shall certify in writing to the Company that it has obtained, all additional permits required to perform the work including, but not limited to, a National Pollution Discharge Elimination System Permit and/or an Aquifer Protection Permit as those permits relate to disposal of drilling, development and test waters and/or any other discharge or similar activity. (Well Drilling Contractors)

10. SURVEYS

The Company shall be responsible, or arrange, for all surveys required for the work covered in the Contract, unless otherwise specified.

11. BENCH MARKS, PROPERTY STAKES AND SURVEY STAKES

Bench marks, property stakes and survey stakes shall be preserved by the Contractor; in case they are destroyed or removed by Contractor or its employees, the Company will replace them at the Contractor's expense, and the Contractor and its sureties shall be liable therefore.

12. TOOLS, EQUIPMENT AND MATERIALS

The Contractor shall furnish all of the necessary tools, equipment, and pipeline materials required for the work. All material furnished by the Contractor shall be of the quality specified by the Company in its Construction Specifications (E-8-1).

13. SUPERINTENDENCE BY CONTRACTOR

The Contractor shall assure adequate superintendence of the work by a competent foreman or superintendent (with full authority to act on behalf of Contractor) satisfactory to the Company, who will be on the job at all times when work is in progress.

14. ORDER AND DISCIPLINE

The Contractor shall at all times enforce strict discipline and good order among its employees.

15. INDEPENDENT CONTRACTOR

The Contractor is an independent contractor and any provisions in the Contract, the specifications, or these General Conditions of Contract and Arizona Water Company's Construction Specifications which may appear to give the Company the right to direct the Contractor as to the details of the doing of any work to be performed by the Contractor, or to exercise a measure of control over said work, shall be deemed to mean and shall

mean, that the Contractor shall follow the desires of the Company in the results of the work only and not in the means whereby said work is to be accomplished, and the Contractor shall use its own discretion and shall have complete and authoritative control over the work and as to the details of the doing of the work.

16. PUBLIC SAFETY AND CONVENIENCE

Contractor shall at all times conduct its work so as to ensure the least possible obstruction to traffic and other inconvenience to the general public and the residents and businesses in the vicinity of the work, and to ensure the protection of persons and property.

To protect persons from injury and to avoid property damage, Contractor shall provide and maintain adequate barricades as required during the progress of the work and until it is safe to use the property for its intended purpose. The rules and regulations of the local governmental agencies and specific permit requirements respecting safety provisions shall be observed at all times.

In the case of blasting, the Contractor shall exercise extreme caution to protect the general public and personal and public property from harm or damage.

17. PROPERTY PROTECTION

Trees, fences, poles, and all other property shall be protected unless their removal is authorized by the Company. Any property damaged shall be restored by Contractor, at his expense, to Company's satisfaction.

18. RESPONSIBILITY OF CONTRACTOR

The work shall be under Contractor's responsible care and charge. Contractor shall bear all loss and damage whatsoever and from whatsoever cause, except that caused solely by the act of Company, which may occur on or to the work during the fulfillment of the Contract. If any loss or damage occurs, Contractor shall immediately make good any such loss or damage, and in the event of Contractor refusing or neglecting to do so, Company may, or by the employment of some other person, make good any such loss or damage, and the cost and expense of so doing shall be charged to Contractor.

The mention of any specific responsibility or liability imposed upon Contractor shall not be construed as a limitation or restriction of any general liability or duty imposed upon Contractor by the Contract. The reference to any specific duty or liability being made herein is merely for the purpose of explanation.

Contractor alone shall at all times be responsible for the safety of Contractor, Contractor's employees, and its subcontractors' employees, and for Contractor and its subcontractors' plant and equipment and the method of performing the work.

19. ERRORS AND OMISSIONS

If Contractor, in the course of the work, becomes aware of any errors or omissions in the Contract Documents or in the instructions, or if Contractor becomes aware of any discrepancy between the Contract Documents and the physical conditions of the site of

the work, Contractor shall immediately inform Company in writing. Any work done by Contractor after such discovery, until authorized by Company, will be done at Contractor's risk.

20. LAWS, REGULATIONS

Contractor shall give all notices required by law and comply with all laws, ordinances, rules and regulations, including, but not limited to, all applicable federal, state, local and other legally required health and safety standards, orders, rules, regulations or other laws, pertaining to the conduct of the work. Contractor shall be liable for, and shall defend and indemnify Company against and hold it harmless from, all violations of any law, ordinance, rule, regulation, standard, or order in connection with work furnished by or on behalf of Contractor. If Contractor observes that the Contract Documents are at variance with any law, ordinance, rule, regulation, standard, or order it shall promptly notify Company in writing and any necessary changes shall be adjusted as provided in the Contract for changes in the work. Contractor shall not perform any work contrary to such laws ordinances, rules, regulations, standards, or orders.

21. PERMITS, FEES AND INSPECTIONS

Permits and licenses necessary for the prosecution of the work, including, but not limited to, any National Pollution Discharge Elimination Systems (NPDES) Permits required by U.S. Environmental Protection Agency or the Arizona Department of Environmental Quality shall be secured, paid for, and complied with by Contractor.

Contractor shall be responsible for its actions and shall abide by all conditions and/or restrictions set forth in the NPDES Permit and any other permit or license required for this project.

Company shall at all times have access to the work whenever it is in preparation or in progress and Contractor shall provide proper facilities for such access and for all inspections. If the Contract Documents, the General Superintendent's instructions, laws, ordinances or any public authority require any work to be inspected or approved, Contractor shall give timely notice of its readiness for inspection.

Inspection of the work shall not relieve Contractor of any of its obligations even if defective work or unsuitable materials may have been previously overlooked by Company and accepted or estimated for payment. If any work is found not in accordance with the Contract Documents, Contractor, at its sole cost and expense, shall promptly make good such defective work.

22. CONSTRUCTION MARKING (PIPELINE ONLY)

Each job shall be marked and/or barricaded by the Contractor in such a manner that the construction is clearly visible at all times.

23. EXTRA WORK AND/OR MATERIALS

Except as otherwise herein provided, no charge for any extra work and/or material will be allowed unless the same has been ordered in writing by the Company's Authorized Representative, and the price stated in such order.

24. CHANGES

The Company shall have the right to make any changes in the work that it may determine to be necessary. If such changes affect the cost of the work, an equitable adjustment shall be negotiated. Changes shall in no way affect or void the obligations of both parties under the original Contract.

25. INSPECTION

All work and material shall be open at all times to inspection and acceptance or rejection by the Company's Inspector. Any work covered up by the Contractor prior to inspection and acceptance by the Company shall be subject to being uncovered at the expense of the Contractor for inspection by the Company. The Contractor shall give the Company reasonable notice of starting new work and shall provide, without extra charge, reasonable and necessary facilities for inspection, even to the extent of taking out portions of finished work. In case any such finished work removed is found satisfactory, however, the actual direct cost of such removal and replacement, plus 15% of such cost, will be paid by the Company; in addition, if completion of the work has been delayed thereby, the Contractor shall be granted a suitable extension of time on account of the additional work involved.

26. DEFECTIVE WORK OR MATERIAL

The Contractor shall remove, at its own expense, any work or material found defective by the Company's Inspector and shall rebuild and replace the same without extra charge; in default thereof, the same may be done by the Company at the Contractor's expense.

27. ASSIGNMENT

Neither party to the Contract may assign the Contract or sublet it in whole or in part without the written consent of the other, nor shall the Contractor assign any monies due or which may become due hereunder without the previous written consent of the Company, nor shall such consent release the Contractor from any of its obligations and liabilities under the Contract.

28. RIGHTS OF VARIOUS INTERESTS

Whenever work that is being done for the Company other than by the Contractor is contiguous to work being done by the Contractor, the respective rights of the various interests involved shall be established by the Company to secure the completion of the various portions of the work in general harmony.

29. SUSPENSION OF WORK

The Company's Authorized Representative may at any time and for any reason suspend all or any portion of the work under the Contract. This right to suspend work shall not be construed as denying the Contractor compensation for actual, reasonable and necessary expenses due to suspension to which it may be entitled.

The Company's Authorized Representative may order the Contractor to suspend any work because of certain conditions, such as inclement weather, or because the

Contractor is in violation of these General Conditions of Contract or the Construction Specifications. It is understood that compensation for expenses will not be allowed for such suspension when ordered by the Company's Authorized Representative on account of such conditions.

30. PROCEDURE OF WORK (PIPELINE ONLY)

All work under the Contract shall be planned and performed so as to cause a minimum of interference with normal vehicular and pedestrian traffic. At no time shall the Contractor completely obstruct the traffic to any business establishment during normal work hours of that business. It shall be the Contractor's responsibility to maintain facilities for ingress and egress to any business establishment. When crossing any street, not more than one-half of the street may be blocked at one time. All federal, state, county and city laws, rules and regulations relating to this subject are to be obeyed.

The Contractor shall complete any portion or portions of the work in such order of time as the Company may require. The Company shall have the right to take possession of and use any completed or partially completed portions of the work. If such prior possession or use increases the cost of or delays the work, the Contractor will be entitled to extra compensation or extension of time or both, as the Company may determine.

31. DISPUTES

All questions or controversies which arise between the Contractor and the Company, under, or in reference to, the Contract, shall be decided by the Company's Authorized Representative and a representative of the Contractor, and their decision shall be final and conclusive upon both parties.

32. CONNECTION TO EXISTING SYSTEM (PIPELINE ONLY)

Unless approved in writing by the Company's Authorized Representative, no tie-in or hot tap on the existing system shall be made unless the Company's Inspector is present. When the tie-in requires the operation of an existing valve or other control equipment, the conditions of Paragraph(s) 30 and 33 shall be complied with. The Contractor shall notify the Company twenty-four (24) hours prior to tie-in as to the exact time the Contractor plans to make tie-in so that the Company's Inspector will have sufficient time to locate valves and make necessary preliminary arrangements for shut down.

33. PLANNED INTERRUPTION OF WATER SERVICE (PIPELINE ONLY)

No valve or other control on an existing Company water system shall be operated for any purpose by the Contractor without approval of the Company's Inspector. All of the Company's water customers whose service is interrupted by a planned interruption, other than in cases of emergency, shall be notified by the Contractor at least twenty-four (24) hours before the planned interruption and advised of the probable time when the service will be restored.

34. EXISTING UTILITY FACILITIES (PIPELINE ONLY)

The Contractor shall notify all known utilities in the area of the work to be performed under the Contract and shall make arrangements to have their facilities marked in

accordance with A.R.S. ?40-360.022 ("Blue Stake Law"). The Contractor shall be responsible for locating and preserving all marked facilities. Any damages to these marked facilities shall be repaired at the expense of the Contractor.

The Company will pay the cost to relocate its or other structures when such structures are found occupying the physical space of the proposed installation. It is understood that the Contractor will be reimbursed for such work only when written authorization from the Company has been obtained in advance of such work.

35. CLEANING UP

The Contractor shall remove from the Company's property and from all public and private property, at its own expense, all temporary structures, rubbish and waste materials resulting from its operations. In the event Contractor fails to do so, the Company may remove same at the expense of the Contractor.

36. WORKING HOURS (PIPELINE ONLY)

Unless stated to the contrary in the Invitation to Bid and/or so stated on the Construction Drawings, or agreed to by the Company during a Pre-Construction Conference, the Contractor shall not be permitted to perform work on Saturdays, Sundays, or Company holidays, or commence work such as tie-ins that cannot be completed during normal working hours.

37. INDEMNITY

A. The Contractor shall indemnify the Company against, and save and hold it harmless from, any and all liability, claims, demands, loss, actions, causes of action, expense, penalties, fines, assessments, damages and costs of every kind and nature for injury to or death of any and all persons, including, without limitation, employees or representatives of the Company or of the Contractor or of any subcontractor, or any other person or persons, and for damage, destruction or loss, consequential or otherwise, to or of any and all property, real or personal, including, without limitation, property of the Company or of the Contractor or of any subcontractor, or of any other person or persons, and the violation of any law, ordinance, rule, regulation, standard, or order resulting from or in any manner arising out of or in connection with the performance of the work under the Contract, howsoever same may be caused, including, without limitation, the Company's active or passive negligence. The Contractor shall also, upon request by the Company, and at no expense to the Company, defend the Company in any and all suits, concerning such injury to or death of any and all persons, and concerning such damage, destruction or loss, consequential or otherwise, to or of any and all property, real or personal, including, without limitation, suits by employees or representatives of the Company or of the Contractor or of any subcontractor, or any other person or persons, or concerning any court or administrative proceeding concerning the violation of any law, ordinance, rule, regulation, standard, or order. Excluded from this paragraph are only those injuries to or deaths of persons and damage, destruction or loss, to or of property arising from the sole negligence or willful misconduct of the Company.

B. Contractor shall indemnify the Company against, and save and hold it harmless from, any and all liability, claims, demands, damages, costs, expenses and attorney's fees, suffered or incurred on account of any breach of any obligation, covenant or other

provision of this contract, including without limitation, breach of the indemnity provisions of subsection A of this Section 37.

C. Contractor further agrees to defend, indemnify and hold harmless the Company, its directors, officers, employees, and agents, from and against any and all costs, damages, claims, expenses, violations, notices of violations, penalties, liens, assessments, and liabilities of every kind and nature, foreseeable or unforeseeable, directly or indirectly, arising from any release, removal, generation, use, storage or disposal on, under, around, or from the well site of any material, substance, or waste, hazardous or non-hazardous, including, without limitation, drilling fluids, mud, cuttings and development and test water howsoever same may be caused, including, without limitation, the Company's active or passive negligence.

38. LIENS

If at any time there shall be evidence of any lien or claim for which the Company might become liable and which is chargeable to the Contractor, the Company shall have the right to retain out of any payment then due or thereafter to become due, an amount sufficient to completely indemnify the Company against such lien or claim. If the Company determines that such lien or claim is valid, the Company may pay and discharge the same, and deduct the amount so paid from any monies which may be or become due and payable to the Contractor.

39. PAYMENT

Upon completion of the installation or construction, the Company will, within thirty (30) days after receipt of proper invoice and labor and material releases, pay the amount due the Contractor. If the Company believes that additional work, such as clean up, is required, it may deduct the total cost of such additional work from the amount to be paid to Contractor.

40. COMPANY'S RIGHT TO TERMINATE CONTRACT: DAMAGES DUE TO DELAY

If the Company finds the Contractor to be in material violation of any section of these General Conditions of Contract, Construction Specifications or Standard Specification Drawings or if the Contractor refuses or fails to prosecute the work, or any separable part thereof, with such diligence as will insure its completion within the time specified or any extension thereof, or fails to complete said work within such time, or when any other cause exists to justify such action, the Company may, without prejudice to any other right or remedy, by written notice to the Contractor, terminate its right to proceed with the work or such part of the work as to which there has been such violation, delay or other cause.

In the event the Contractor's right to proceed is terminated, the Company may take over the work and take possession of, and utilize in completing the work, such materials as may be on the site of the work and necessary therefore and prosecute said work to completion by whatever method it may deem expedient. The Contractor and its sureties shall be liable to the Company for any excess cost caused thereby.

In the event the Contractor's right to proceed with the work is terminated, the Contractor shall not be entitled to receive any further payment until the work is completed or the job is canceled. If the unpaid balance of the Contract price exceeds the expense of finishing

the work, including compensation for additional managerial and administrative services, such excess shall be paid to the Contractor. If such expenses exceed such unpaid balance, the Contractor shall pay the difference to the Company.

41. GUARANTEE

The Contractor shall guarantee all deslabor and workmanship and any materials it installs for a period of one year following the date of completion and acceptance by the Company. If any portion of the work or any of the materials become defective within the guarantee period, the Company will notify the Contractor of such defect. The Contractor must repair any defect within fifteen (15) days of such notification. If repairs are not completed within this time period, the Company may repair the defect, or cause such defect to be repaired, and the cost of such repairs shall be paid by the Contractor. The Company reserves the right to determine which defects are the result of poor labor and workmanship and which are caused by defective materials.

42. LIQUIDATED DAMAGES FOR NON PERFORMANCE: REQUEST FOR EXTENSION(S) OF TIME

Time is of the essence in the Contract. The time period required for completion of the work will be specified in the Contract. The Contractor agrees that the Company will suffer substantial damages in the event the Contractor fails to complete the work within the agreed upon time period. The Contractor and the Company agree that since it would be impracticable or extremely difficult to precisely fix such damages, a reasonable approximation of such actual damages suffered by the Company shall be a sum equal to 0.5% of the Contract price for each working day beyond the time period for completion of the work specified in the Contract.

Request by the Contractor for extensions of the time period shall be in writing and shall not become effective until approved in writing by the Company's Authorized Representative.

43. PAYMENT FOR REQUIRED TESTING

Whenever testing is required by any governmental agency or by the Company to assure conformance of the Contractor's work with the appropriate standard, it will be paid for as follows:

a. For testing required under permits obtained by the Company or testing specifically requested by the Company, the cost of the first test will be paid for by the Company. In the event of failure of the first test, the cost of all further testing associated with the failure will be paid by the Contractor.

b. For testing required under permits obtained by the Contractor, all costs will be paid by the Contractor. Testing of the pipeline for pressure and leakage will be included in the Contract price.

44. CONTRACT DEADLINES AND BONDS REQUIREMENTS

The time limits to be allowed for the completion of any work covered in the Contract shall be established as follows: In the proposal submitted to the Company, in response to the Invitation to Bid, the Contractor shall state the number of calendar days required for completion of the work. The time required will become a part of the Contract. When the Company is ready to proceed with the work, a Commencement Notice will be issued by the Company to the Contractor by mail. The Commencement Notice will allow the time required in the Contract plus ten (10) calendar days and will indicate the final day of the time allowed. The work cannot begin until the Company has received a performance bond and materials payment bond for the Contract price unless the bonds have been waived under the special conditions section of the Contract. The additional ten (10) days is the allowance for time to deliver the Commencement Notice to the Contractor and for the Contractor to return the performance bond and materials payment bond to the Company. Time extensions will be granted if warranted, and only at the time of the delay, thus extending the final day of the time allowed.

If the Company elects not to require a performance bond and a material payment bond for the work, the cost of the bonds will be deducted from the proposed total cost and the Contract will reflect this reduced cost and the bonds requirements will be waived under special conditions of the Contract.

ARIZONA WATER COMPANY

CONSTRUCTION SPECIFICATIONS: E-8-1

CONSTRUCTION SPECIFICATIONS FOR THE INSTALLATION OF WATER DISTRIBUTION SYSTEMS DUCTILE IRON

DEFINITIONS

A. Company. The words "Company" or "Arizona Water Company" mean Arizona Water Company, and where applicable, any division of Arizona Water Company, whose principal place of business is located at 3805 North Black Canyon Highway, Phoenix, Arizona 85015-5351 (Post Office Box 29006, Phoenix, Arizona 85038-9006).

B. Company's Authorized Representative. The words "Company's Authorized Representative" mean any officer of the Company, and any of the Company's Engineers, any Division Manager or Superintendent of the Company and/or such other person(s) designated in writing as the "Company's Authorized Representative" by the President or any Vice President of the Company.

C. Contractor. The word "Contractor" means either an individual or other entity employed to do the work as shown on the Construction Drawings and as specified herein.

D. Construction Drawings. The words "Construction Drawings" mean plans prepared by or on behalf of Arizona Water Company.

E. Contract. The word "Contract" means the written document titled "Proposal/Contract" when such document has been signed by an officer or other authorized representative of both the Contractor and the Company.

CONSTRUCTION SPECIFICATIONS
FOR THE INSTALLATION OF WATER DISTRIBUTION SYSTEMS
DUCTILE IRON

1. GENERAL

All work is to be completed in a safe, workmanlike manner and in accordance with these Construction Specifications; any deviation therefrom must be approved in writing by the Company.

Installations must conform with the requirements of all governmental regulating agencies and the cost of conforming to such regulations must be included in the unit bid prices. Examples of such regulations, without attempting to be inclusive, are:

a. Special compaction and paving for street crossing.
b. Shoring when required because of the trench depth.
c. Closing a trench in those areas where no open trench is allowed overnight.
d. Barricading and traffic control as required.

2. LOCATION MARKING

Alignment stakes as required in the opinion of the Company shall be furnished by the Company to the Contractor and shall be set by the Company at agreed upon intervals and offsets. Under normal circumstances these will reference the pipeline location five feet (5') into the right-of-way measured from property pins. Grade stakes will be provided only when the Construction Drawings show a pipeline depth other than covered in these Specifications. It is the responsibility of the Contractor to preserve all survey work.

3. TRENCH EXCAVATION

The trench location is to be determined by the Construction Drawings.

FOR 8-INCH OR SMALLER PIPE: The depth of the trench prior to pipe laying shall be such that the finished pipeline shall have between thirty-six inches (36") and forty-two inches (42") of cover unless otherwise specified on the Construction Drawings.

FOR 12-INCH AND LARGER PIPE: The depth of the trench prior to pipe laying shall be such that the finished pipeline shall have between forty-eight inches (48") and sixty inches (60") of cover unless otherwise specified on the Construction Drawings.

The width of the trench at and below the level at the top of the pipe shall be a minimum of twelve inches (12") plus the outside diameter of the pipe barrel and a maximum of twenty-four inches (24") plus the outside diameter of the pipe barrel.

The bottom of the trench shall be accurately graded to provide a uniform bearing for each length of pipe for the full length of the pipe. If the native material on the trench bottom can be reasonably dug by hand, bell holes shall be dug for the joints so that the joints in no way support the pipe. When native materials such as rock are encountered during trenching that will not provide a uniform support for the pipe, the trench will be over-excavated an additional six inches (6") and suitable bedding material will be placed in the trench.

Bedding material will be placed by hand in four-inch (4") lifts and compacted to ensure uniform compaction and to eliminate any voids under the pipe. When the space between the pipe and trench bottom varies, this must be backfilled and compacted in four-inch (4") lifts to the mid-section of the pipe.

Whenever the trench is over-excavated for whatever reason, the trench bottom will be brought up to the correct depth at the Contractor's expense using either method (a) or (b) as follows:

a. A.B.C. material shall be used and compacted to a uniform density of not less than 80% of the maximum density as determined by AASHTO T-99 method A and T-191.

b. Native material 100% of which will pass through a one and one-half inch (1½") screen and at least 20% of which will pass through a number-8 screen shall be used and compacted to a uniform density of not less than 85% of the maximum density as determined by AASHTO T-99 method A and T-191.

4. MATERIALS TO BE PROVIDED BY CONTRACTOR

Unless otherwise specified on the Construction Drawings or in the Contract, the Contractor will supply all of the necessary materials which will become a permanent and integral part of the water distribution system, including concrete blocking, anchors, backfill material, paving material and supplies used during the prosecution of the work. All materials provided by the Contractor to construct the water distribution system must be NSF Standard 61 approved. All potable water pipes and fittings shall have NSF-PW seal. Construction materials used in the water system shall be lead free as defined at AAC R28-4-504 and R18-1-101. The Contractor will provide the following m aterials:

a. FIRE HYDRANTS: Mueller Super Centurion 250 Fire Hydrant, meets ANSI/AWWA C502 Standard, Model No. A-423, 5¼" main valve opening, three way, 6" Mechanical Joint Shoe, 1½" pentagon operating nut, color - yellow, drain open, open direction - left, 4' or 4'6" bury depending on application. For pumper and hose nozzle inform ation see below.

(1) 1 - 4" Pumper Nozzle, NST and 2 – 2½" Hose Nozzles, NST. (These locations only: Ajo, Casa Grande, Coolidge and San M anuel.)

(2) 1 – 4½" Pumper Nozzle, NST and 2 – 2½ " Hose Nozzles, NST. (These locations only: Apache Junction, Arizona City, Lakeside, Oracle, Overgaard, Pinewood, Rimrock, Sedona, Sierra Vista, White Tank and Winkelman.)

(3) 1 – 4½" Pumper Nozzle, NST and 2 – 2½" Hose Nozzles, NPT (Bisbee only.)

(4) 1 - 3" Pumper Nozzle GA 6-350 (6 threads per inch, 3.50 pitch diameter) and 2 – 2½" Hose Nozzles, NPT (Miami only.)

(5) 1 – 3½" Pumper Nozzle GA 6-411 (6 threads per inch, 4.11 pitch diameter) and 2 – 2½" Hose Nozzle, NST (Superior only.)

b. FITTINGS: Manufactured by Tyler or Union. Crosses, Elbows, Tees, Cap, Reducer, Adapter, Plug, Blind Flange and Tapped Flange; Ductile Iron, Class 350, SSB, Cast Iron Cement Lined.

(1) Foster Adaptors for MJ, made by Infact Corporation: Available in size 4" to 16". Part No. 4" = 4FA-BC, 6" = 6FA-BC, 8" = 8FA-BC, 10" = 10FA-BC, 12" = 12FA-BC, 16" = 16FA-BC.

c. DETECTOR CHECK VALVE: Mueller/ Hersey EDC III, iron body, including 5/8" x ¾" Trim Kit. Trim Kit Part No.: 4" = 282080, 6" = 282082, 8" = 282085, 10" = 282496.

d. GATE VALVES: Mueller Resilient Wedge Gate Valves, meets AWWA C509 specification, 250 psig, Non-rising stem, Part No. A-2360 sizes 4" through 12" ; Part No. A-2361 sizes 14" through 36", low zinc stems, epoxy coated inside and outside to meet the NSF 61 rating. The bonnet and stuffing box shall have 304 stainless steel bolts/nuts.

e. TRACER WIRE and WARNING TAPE:

1. TRACER WIRE: Shall be direct bury AWG #14 solid copper wire, Color: Blue.

2. WARNING TAPE: Reef Industries, Standard Terra Tape in 3" widths. Color: Blue and imprinted 'Arizona Water Company'.

f. AIR RELEASE VALVE: Crispin Model AR10 with 1" NPT inlet and ½" NPT outlet, cast iron body and top flange; with a 5/64" orifice with stainless steel valve sealing faces and B UNA-N rubber.

g. PRESSURE RELIEF VALVE: Watts 174A, Model M, 2" inlet, 2" outlet, Bronze Body, 30lb. to 150lb. pressure range.

h. MEGA LUG: Mechanical Joint restraint made of ductile iron conforming to ASTM 536-80, 250 psi made by EBAA Iron, Inc., series 1100 or equal.

i. METER BOXES:

(1) Concrete Box with a steel regular lid, Number 1: Tucson specification.

(2) Concrete Box with a steel regular lid, Number 2, 3, and 4: Phoenix specification.

j. PIPE, COPPER: Type K soft copper in 60 or 100-foot coils, per ASTM B88.

k. PIPE, DUCTILE IRON: Ductile Iron Pipe, Cement Lined, Push-on, conform to current ANSI/AWWA Specification A21.51/C151, Pressure Class 350 (sizes 4" through 12"), Pressure Class 250 (sizes 14" through 20"), or Pressure Class 200 for 24" through 36" pipe. Vendors:

(1) Pacific States Cast Iron Pipe Company
(2) Griffin Pipe
(3) United States Pipe and Foundry Company
(4) American Ductile Iron Pipe
(5) Clow Pipe (McWane, Inc.)

l. PIPE, PLASTIC: Plastic pipe, C-900 PVC per ANSI/AWWA C900, Class 150, sizes 6" through 12". NSF61 approved. Furnished in laying lengths of 20'. The barrel shall conform to the outside dimensions of steel pipe (IPS) or cast iron (CI) pipe equivalent and the wall thickness of dimension-ratio (DR) 18.

m. POLYETHYLENE ENCASEMENT (Polywrap): For all pipeline and related fittings installed, EXCEPT for the Coolidge Division. Minimum 8 Mil. and installed per AWWA C105/A21.5-93 and ASTM A-674-89. Manufactured by the Pacific States Cast Iron Pipe Company. The wrapping tape shall be minimum 10 mil. vinyl tape. No duct tape shall be used.

n. COUPLING: Mueller, straight three part union, tested to meet ANSI/AWWA C800, H15403, conductive com pression.

Mueller, H15428, straight coupling, conductive compression by male iron pipe, tested to meet ANSI/AWWA C800 specification. Size: 2".

Mueller, H15451, straight coupling, conductive compression by female iron pipe, tested to meet ANSI/AWWA C800 specification. Size: 2".

Viking Johnson brand, sold by Mueller: MaxiFit Straight (2"-24"), MaxiFitXtra Straight (4"-8") or MaxiStep Transition, tested to meet AWWA/ANSI C.219-91 specifications – certified to ISO 9001:1994 / Smith – Blair Quantum.

o. STOP, ANGLE METER, BALL: Mueller, valve, B24258, conductive compression by meter swivel nut, tested to meet ANSI/AWWA C800, size 5/8 " x ¾" x ¾" for a ¾" service or size 1" for a 1" service.

Mueller, valve, B24265, female pipe thread by meter swivel nut, tested to meet ANSI/AWWA C800, size 5/8" x ¾" x ¾" for a ¾" service or size 1" for a 1" service.

p. STOP, CORP: Mueller, ball valve, B25008, taper thread by conductive compression, tested to meet ANSI/AWWA C800 specification, sizes: ¾", 1" and 2".

Mueller, ball valve, B25028, iron pipe thread by conductive compression, tested to meet ANSI/AWWA C800 specification. Sizes ¾", 1", and 2".

Mueller, 300 Ball Curb Valve, B-25122, taper thread by conductive compression, tested to meet ANSI/AWWA C800 specifications, size: 2". (2" service)

q. STOP, CURB: Oriseal valve, H10291, iron pipe thread by iron pipe thread, quarter turn check, brass, tested to 300 psi working pressure, tested to meet ANSI/AWWA C800 specification, size: 2".

Mueller, B20283, Mueller 300 ball curb valve, female iron pipe by female iron pipe, quarter turn check, tested to meet ANSI/AWWA C800 specification. Size: 2". (Blow-off E-9-8-1).

r. TAPPING SADDLE: Smith Blair, Cast Bronze ASTM-B584 85-5-5-5, double strap, iron pipe threads, Models 321 and 323. Washers are silicon bronze, ASTM-B36. Gaskets are grade 60 Buna N, or Mueller bronze double strap service saddle, BR 2 B series, cast bronze, ASTM-B585, 85-5-5-5, or H16084, 200 psig, meets ANSI/AWWA C800.

s. TAPPING SLEEVE: Mueller H304 Stainless Steel Tapping Sleeve, JCM 432 18-8 Type 304 Stainless Steel Tapping Sleeve, Romac "SST" Type 304 Stainless Steel Tapping Sleeve or CASCADE-style CST-EX stainless steel pressure-rated tapping sleeve.

t. TAPPING VALVE: Mueller Resilient Wedge tapping valve, Catalog Number T-2360-16, Class 125, sizes 4" through 12"; T-2361-16, Class 125, sizes 14" to 36" all with Type 304 stainless steel fasteners; bypass valves are required on 18" – 36" valves flange by mechanical joint per ANSI/AWWA C111, iron wedge, non-rising stem. Epoxy coated interior/exterior per ANSI/AWWA C550 for NSF 61 compliance. 250 PSI range for valves 4" to 12". 150 PSI range for valves 14" to 36".

u. U-BRANCH: Mueller, H15364, 1" male iron pipe by ¾" male iron pipe, tested to meet ANSI/AWWA C800 specification. Size: 1" x ¾" x 13½", straight line.

v. VALVE BOXES: Valve Box with Cover, adjustable, Tyler 562-A or equal, made of cast iron.

w. VAULTS: Utility Vault Company, Chandler, AZ.

(1) 4484-WA concrete vault with a 3660 aluminum double torsion door with a recessed padlock hasp, two - 18" x 24" center knockouts.

(2) 575-WA concrete vault with a 4874 aluminum double torsion door with a recessed padlock hasp, two - 18" x 24" center knock outs and adjustable frame.

(3) 612-5X-WA concrete vault with a 4874 aluminum double torsion door with a recessed padlock hasp, two - 18" x 24" center knockouts.

x. VALVE, METER: Mueller, B24265-1, Mueller 300 ball angle meter valve, female iron pipe by meter nut, quarter turn check, lock wing, tested to meet ANSI/AWWA C800 specification. Size: 1".

Mueller, B25170, Mueller 300 ball straight valve, conductive compression by female iron pipe, quarter turn check, lock wing, tested to meet ANSI/AWWA C800 specification. Size: 1".

y. YOKES, METER: Relocator type copper meter yoke with horizontal inlet and outlet and meter thread ends, B24118, with lock wing Mueller 300 angle ball valve, full port, sizes: 1" x 12", 5/8" x ¾" x 7", 5/8 x ¾" x 9".

Mueller, 2" copper meter yoke with horizontal inlet and outlet and female iron pipe threads, B2423-99000, with lock wing Mueller 300 ball angle meter valves on inlet and outlet risers. Raised 1" by-pass with lock wing Mueller 300 ball valve.

The Contractor also will be required to provide the following materials, the cost of which will be included in its unit bid price:

All material and concrete for thrust blocks, other anchors, reinforcing steel; all gravel, crushed stone, A.B.C., earth, sand, or screened material which may be required; all material for bracing and shoring trenches and for construction of forms; all barricades and traffic control equipment; all material for paving replacement and any water used for compaction of backfill.

5. INSTALLATION OF MATERIALS

All materials are to be installed in accordance with manufacturers recommendations unless otherwise directed by these S pecifications.

All pipe, fittings and valves shall be laid true to the lines, grades and locations established by the Specifications and the Construction Drawings.

The ends and inside of the pipe shall be thoroughly cleaned and inspected for damage. No damaged materials shall be installed in the water distribution system .

Whenever the work ceases for any reason, all open pipeline ends shall be tightly plugged by the Contractor. Plugs shall be watertight and approved by the company.

Concrete thrust blocks of the sizes required by the plans and specifications are to be provided at all valves, changes in direction or size, or at any other point where an unbalanced thrust due to water pressure would exist. Thrust blocks are to be formed to prevent any concrete from spilling over or into a joint.

Trench curves as shown on the Construction Drawings may be made without fittings when using push on joint pipe up to twelve inches (12") in diameter, if the deflection of the pipe does not exceed five degrees (5°) or nineteen inches (19") per eighteen-foot (18') length of pipe. The minimum radius of such curves will be two hundred five feet (205').

Prior to construction, the appropriate agency(ies) will be notified as required by the permit(s).

It shall be the Contractor's responsibility to uncover all existing water lines being connected to, and to verify the location, depth and size of pipe befor e any construction begins.

Any construction performed without the knowledge of the duly authorized representative is liable for removal and replacem ent at the Contractor's expense.

All fire hydrants, frames, covers and valve boxes, etc. shall be adjusted to finished grade prior to the placing of the asphalt concrete surface course by the Contractor (where applicable).

Air release valves shall be installed at water system high points per Standard Detail E-9-8-2.

All water services shall be set a minimum of two feet (2') on the customer's property, preferably within the P.U.E. and not within right-of-way.

Unless otherwise specified on the construction drawings, all water mains shall be installed five feet (5') from the property line inside the right-of-way or easement.

Water valves shall be spaced not more than five hundred feet (500') in commercial districts and not more than eight hundred feet (800') in other districts. Variations may be required for transmission mains or special applications.

Installation of water line casing shall be per Standard Speci fication E-9-24-1.

Tracer Wire and Warning Tape are to be installed on all mains, tees, crosses, ells and fire hydrant laterals. They will not be installed on service lines. The tracer wire will be installed on the water main 45 degrees from the vertical centerline of the pipe and shall be taped to the fittings directly and on the main every 10 feet using a minimum 10 mil vinyl tape. The tracer wire shall be placed between the valve riser and box with a minimum of 12" of wire inside. The warning tape shall be installed a minimum of two feet below the surface, being measured from final grade, directly over the center of the pipe. Any splices in the tracer wire shall be joined using waterproof connectors. Any splices in the warning tape shall be joined using minimum 10 mil vinyl tape. The tracer wire shall be tested for continuity after backfill and compaction, but before paving. Any detected damages to the wire shall be repaired before paving will be allowed.

6. BACKFILL OF WATER MAIN TRENCHES

Backfill of any excavation shall conform to the requirements of any of the governmental agencies having jurisdiction over the location. If no governmental agency having such jurisdiction specifies backfill or compaction requirements, and no special requirements are shown on the Construction Drawings, the procedure set forth in this section will apply for water line trenches.

The bedding material above the pipe and backfill material shall be compacted to a minimum of 70% compaction within a utility easement and 80% compaction within a right-of-way as determined by AASHTO T-99 method A and T-191. If water settling is used for compaction, it is the responsibility of the Contractor to prevent the pipe from floating.

The bedding material shall be either native material, 100% of which will pass through a one and one-half inch (1½") screen and at least 20% of which will pass through a number-8 screen, or imported material which conforms to M.A.G. specifications for A.B.C. or type-B

select materials. Bedding material shall be used below and around the pipe and a minimum of twelve inches (12") above the pipe. Shade and bedding material to be mechanically compacted prior to remainder of trench back-fill.

The remainder of the trench shall be backfilled with native or imported material which shall be of sound earthen material free from broken concrete, wood, broken pavement, or other unsuitable substances. Except as otherwise specified, backfill may be material containing no pieces larger than six inches (6") in greatest dimension.

Where settlement occurs, additional backfill material shall be placed and compacted and the trench shall be brought to final grade.

7. HYDROSTATIC TESTING OF COMPLETED PIPELINES

Hydrostatic testing of water pipelines will be completed before the new system is connected into the existing water system so that all testing can be done against all new materials.

The completed section of water pipeline to be tested shall be slowly filled with water with care being taken to expel all air from the pipe. If necessary, the pipe will be tapped at high points to vent air.

The Contractor shall provide all equipment and labor necessary to accomplish this testing and the price shall be included in the unit prices. The Contractor shall notify the Company in advance of the testing so that the Company can schedule a duly authorized representative to be at the site during testing. The Contractor, at its own expense, shall make any necessary repairs to the system being tested in order to cause the section being tested to meet the test limits set below. The Contractor may request authorization of the Company to connect the new pipelines to the existing system prior to completion of pressure testing when, in the Company's sole opinion and judgment, conditi ons warrant such connection.

The Contractor shall assume all responsibility to complete pressure testing to Company's specifications after such connection, including, but not limited to, isolation of the new pipelines from the existing system, if necessary.

Connections prior to completion of pressure testing shall not be made unless prior Company authorization has been obtained, and any extra expenses resulting from such connections shall be the sole responsibi lity of the Contractor.

Leakage tests will be for a period of two hours at 200± 5 psi at the point of lowest elevation; leakage may not exceed 0.1 gallons per hour per one thousand feet (1,000') of pipe per inch of diameter. If dry utilities are not installed, a second pressure test is required.

8. STERILIZATION AND FLUSHING OF COMPLETED WATER PIPELINES

Sterilization and flushing will conform to recommendations of Arizona State Department of Health Services Engineering Bulletin Number 8, latest edition, or any future Arizona Department of Environmental Quality bulletins. Contractor to follow all conditions of any discharge permit.

9. NO OTHER UTILITIES ALLOWED IN OR NEAR WATER PIPELINE TRENCHES

No other utility installations will be permitted in the water pipeline trench or within five feet (5') of the Company's water pipeline when running parallel to the water pipelines.

10. PROTECTION OF WATER MAINS NEAR SEWERS

In order to protect water mains from contamination by sewers, the installation of the water mains must conform to the following requirements:

a. Horizontal - When water lines and sewers are laid parallel with each other, the horizontal distance between them shall not be less than six feet (6'). Each line shall be laid on undisturbed or bedded material in a separate trench. Where conditions prevent the minimum horizontal separation set forth above, extra protection will be required. Extra protection shall consist of constructing the sewer main with mechanical joint ductile iron pipe or with slip-joint ductile iron pipe if joint restraint is provided, or encasing the sewer main in concrete. Extra protection shall consist of constructing the water main with mechanical joint ductile iron pipe or with slip-joint ductile pipe if joint restraint is provided. The water main shall not be encased in concrete.

The Construction Drawings shall indicate the installation requirements. The drawings showing these exceptions shall have been approved by the appropriate state and/or county health department. Refer to the diagram below for clarification.

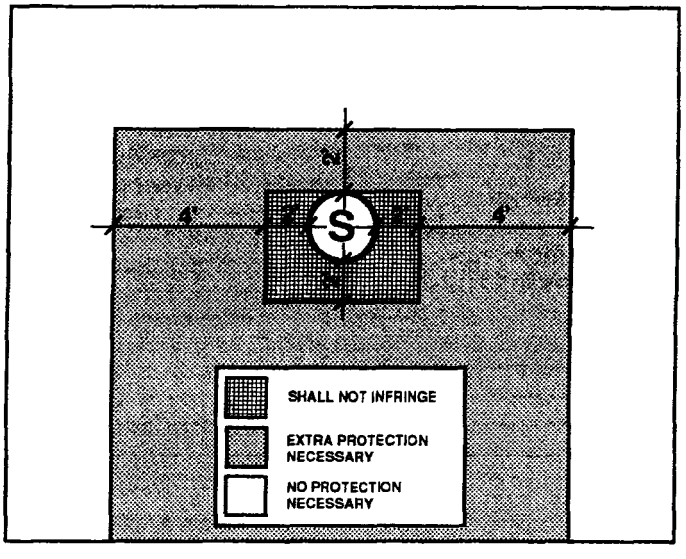

Under no circumstances will the horizontal separation between sewer mains and water mains be less than two feet (2'). All distances are to be measured from the outside of the sewer main to the outside of the water main.

b. Vertical - When a water main is parallel with or crosses a sewer main within two feet (2') above the sewer or greater than two feet (2') below the sewer, extra protection will be required. Extra protection shall consist of constructing the sewer main with mechanical joint ductile iron pipe or with slip-joint ductile iron pipe if joint restraint is provided, or encasing the sewer main in concrete. Extra protection shall consist of constructing the water main with mechanical joint ductile iron pipe or with slip-joint ductile pipe if joint restraint is provided. The water main shall not be encased in concrete.

The Construction Drawings shall indicate the installation requirements. The drawings showing these exceptions shall have been approved by the appropriate state and/or county health department.

Under no circumstances will the vertical separation of a sewer main installed above a water main be less than two feet (2'). All distances are to be measured from the outside of the sewer main to the outside of the water main. Refer to the diagram above for clarification.

c. When unusual conditions such as, but not limited to, highway or bridge crossings prevent the water and sewer main separations required from being met, the appropriate state and/or county health department will review and may approve requests for authorization to use alternate construction techniques, materials and joints on a case-by-case basis.

d. No water pipe shall pass through or come into contact with any part of a sewer manhole. The minimum horizontal separation between water mains and manholes shall be six feet (6'), measured from the center of the manhole.

e. The minimum separation between force mains or pressure sewers and water mains shall be two feet (2') vertically and six feet (6') horizontally under all conditions. Where a sewer force main crosses above, or less than six feet (6') below, a water line, the sewer main shall be encased in at least six inches (6") of concrete for ten feet (10') on either side of the water main. Refer to the diagram below for clarification.

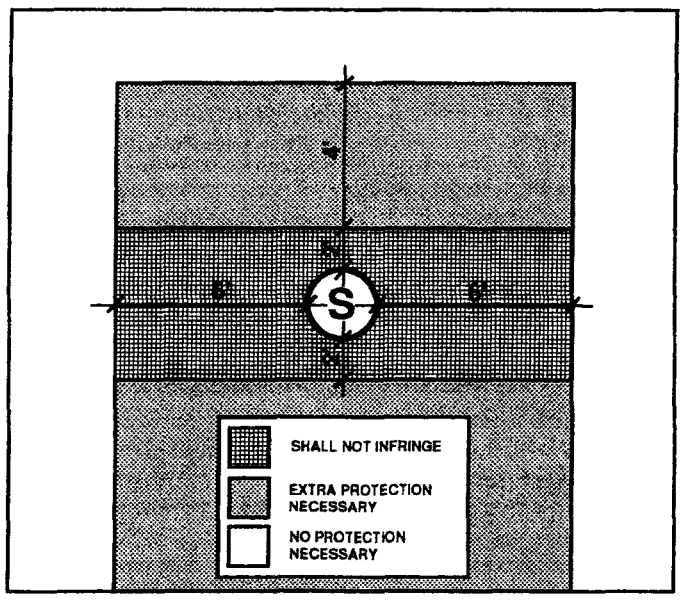

f. Sewer mains (gravity, pressure, force) shall be kept a minimum of fifty feet (50') from drinking water wells, unless the following conditions are met:

1. Water main pipe, pressure tested in place to 50 psi without excessive leakage, may be used for gravity sewers at distances greater than twenty feet (20') from drinking water wells.

2. Water main pipe, pressure tested in place to 150 psi without excessive leakage, may be used for pressure sewers and force mains at distances greater than twenty feet (20') from drinking water wells.

g. No septic tank/disposal field system shall be constructed within one hundred feet (100') of a drinking water well.

h. All distances are measured perpendicularly from the outside of the sewer main to the outside of the water main. These separation requirements do not apply to building, plumbing or individual house service connections.

i. Use Mechanical Joint ductile iron pipe with Megalug thrust restraints a minimum of ten (10') feet on each side of a sewer or storm drain crossing.

11. COMPACTION

When crossing existing water mains a minimum of 95% compaction is required to the bottom of existing mains.

Arizona Water Company requires that no slurry be permitted to contact existing cement/asbestos or ductile iron pipes, unless authorized by the company. Slurry may be poured in the bottom of the sewer trench stopping three inches (3") below the existing water main. The backfill used around the main should be AB in sufficient depth to prevent slurry from contacting existing main.

12. WATER MAIN MATERIAL SPECIFICATIONS

Ductile iron pipe (Push-on type) minimum class 350, cement lined and conform to AWWA C151.

All main line valves shall conform to AWWA C500 with a minimum working pressure of 200 psi.

All cast iron fittings to be cement lined in accordance with AWWA C104 and shall conform to AWWA C110 with a minimum working pressure of 250 psi. Except for the Coolidge System – See Note 4L.

Maximum joint deflection for 6" mechanical joint ductile iron pipe is seven degrees, seven minutes (7°, 7') or twenty-seven inches (27") per eighteen-foot (18') length pipe, for a maximum curve of one hundred forty-five feet (145').
Maximum joint deflection for 8" and 12" mechanical joint ductile iron pipe is five degrees, twenty-one minutes (5° 21') or twenty inches (20") per eighteen-foot (18') length pipe, for a maximum curve of one hundred ninety-five feet (195').

Maximum joint deflection for 6", 8" and 12" push-on joint ductile iron pipe is five degrees (5°) or nineteen inches (19") per eighteen-foot (18') length pipe for a maximum curve of two hundred five feet (205').

ARIZONA WATER COMPANY

STANDARD SPECIFICATION DRAWINGS: E-9-1

ARIZONA WATER COMPANY

STANDARD SPECIFICATION DRAWINGS

INDEX (E-9)

E-9-1	TYPICAL GATE VALVE LOCATIONS
E-9-2	INSTALLATION OF TYPICAL VERTICAL AND HORIZONTAL GATE VALVES
E-9-3	INSTALLATION OF TYPICAL TAPPING SLEEVE AND VALVE
E-9-4	INSTALLATION OF TYPICAL VALVE SUBJECT TO NON-VEHICULAR AND VEHICULAR TRAFFIC
E-9-5	INSTALLATION OF TYPICAL THRUST BLOCKING SCHEDULE, THRUST BLOCK FOR VERTICAL BENDS, AND MEGALUG THRUST RESTRAINTS
E-9-6	INSTALLATION OF TYPICAL PERPENDICULAR FIRE HYDRANT
E-9-7	INSTALLATION OF TYPICAL PARALLEL FIRE HYDRANT
E-9-8	INSTALLATION OF TYPICAL 2" BLOWOFF DEVICE, AND AIR RELEASE VALVE
E-9-9	INSTALLATION OF TYPICAL SINGLE SERVICE CONNECTION FOR A $^3/_4$" OR 1" METER
E-9-10	INSTALLATION OF TYPICAL DOUBLE SERVICE CONNECTION FOR A $^3/_4$" AND 1" METER
E-9-11	INSTALLATION OF TYPICAL 2" SERVICE CONNECTION
E-9-12	INSTALLATION OF 3" COMPOUND METER, 4" COMPOUND METER, 6" COMPOUND METER, 6" COMPOUND SERVICE, CONCRETE VAULT, AND NON-POTABLE PROPELLER METER
E-9-13	INSTALLATION OF TYPICAL 4" THRU 8" DETECTOR CHECK VALVES AND 3" THRU 10" REDUCED PRESSURE PRINCIPLE DETECTOR WITH BYPASS METER ASSEMBLY (RPDA) FOR FIRE LINE SERVICES
E-9-14	INSTALLATION OF TYPICAL PRESSURE RELIEF VALVE ASSEMBLY
E-9-15	INSTALLATION OF TYPICAL PRESSURE REDUCING STATION
E-9-16	PAINT COLOR SELECTION
E-9-17	STEEL WATER STORAGE TANK
E-9-18	HYDROPNEUMATIC TANK
E-9-19	INSTALLATION OF WELL SHELTER

E-9-20	INSTALLATION OF TYPICAL WELL WITH LINE SHAFT TURBINE PUMP
E-9-21	INSTALLATION OF TYPICAL WELL WITH SUBMERSIBLE TURBINE PUMP
E-9-22	INSTALLATION OF COLUMN PIPE, OIL TUBE AND LINE SHAFT
E-9-23	HOT TAP AND JUMPER METER CONNECTION
E-9-24	INSTALLATION OF TYPICAL WATER LINE ENCASEMENT
E-9-25	INSTALLATION OF CALCIUM HYPOCHLORITE TABLET CHLORINATOR
E-9-26	INSTALLATION OF CHAIN LINK FENCE
E-9-27	INSTALLATION OF SIDE HUNG WATER LINE SUSPENSION
E-9-28	PIPE WARNING TAPE, LOCATOR WIRE, AND LOCATOR WIRE TERMINATION
E-9-29	INSTALLATION OF A TYPICAL SAMPLING STATION

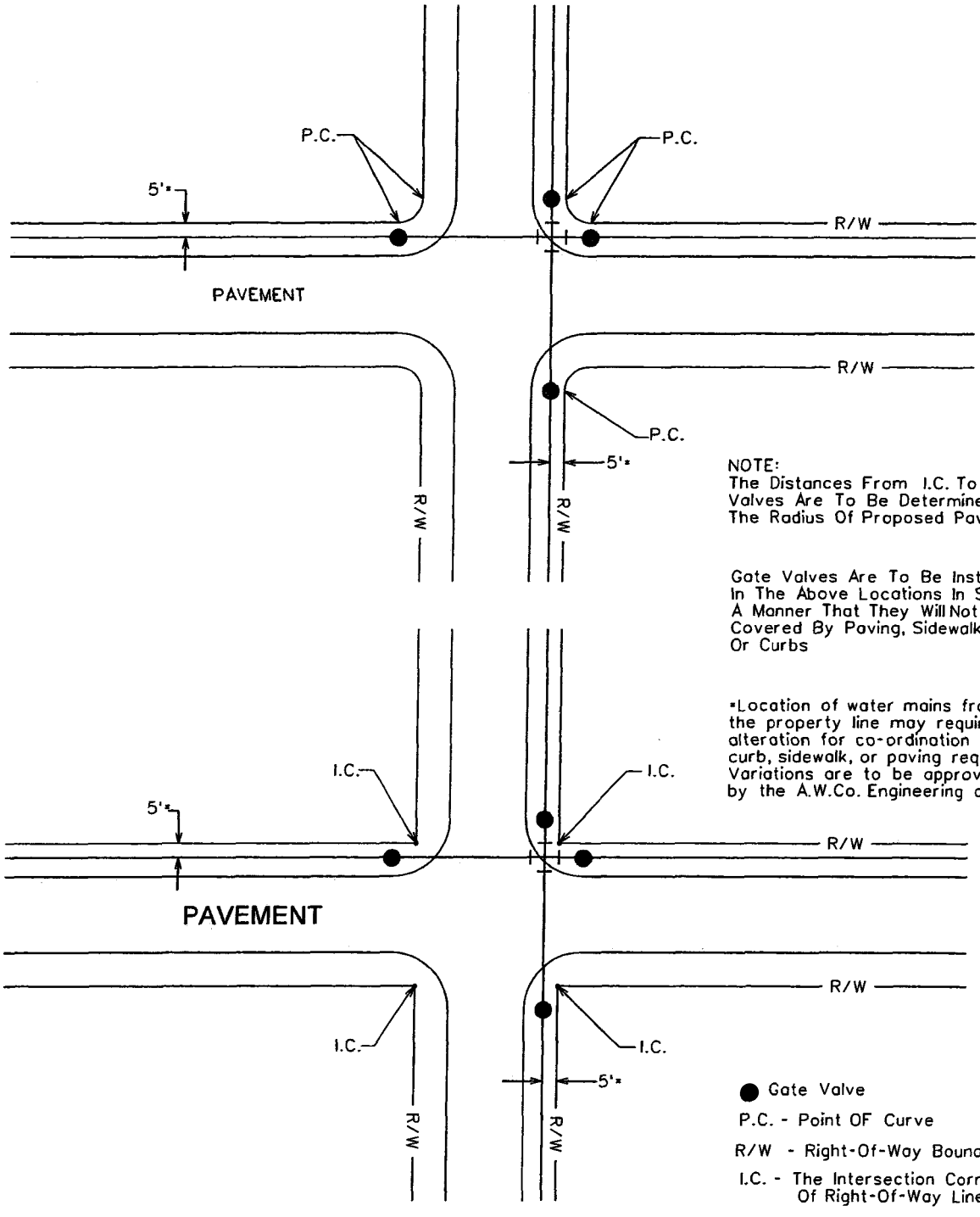

NOTE:
The Distances From I.C. To Gate Valves Are To Be Determined By The Radius Of Proposed Pavement.

Gate Valves Are To Be Installed In The Above Locations In Such A Manner That They Will Not Be Covered By Paving, Sidewalks, Or Curbs

*Location of water mains from the property line may require alteration for co-ordination with curb, sidewalk, or paving requirements. Variations are to be approved by the A.W.Co. Engineering dept.

ARIZONA WATER COMPANY

STANDARD SPECIFICATION
FOR THE INSTALLATION OF

TYPICAL GATE VALVE LOCATIONS

DRAWN BY:	APPROVED BY:	DATE:	△ 1/31/2001	
CCO	M.W.	3/20/86		E-9-1-1

FOR 6" THROUGH 12" GATE VALVES

Mueller Resiliant Wedge Gate Valves
Catalog Number A-2360-__
ANSI/AWWA C509 Compliant

FOR 14" THROUGH 16" GATE VALVES

Mueller Resiliant Wedge Gate Valves
Catalog Number A-2361-__
ANSI/AWWA C509 Compliant

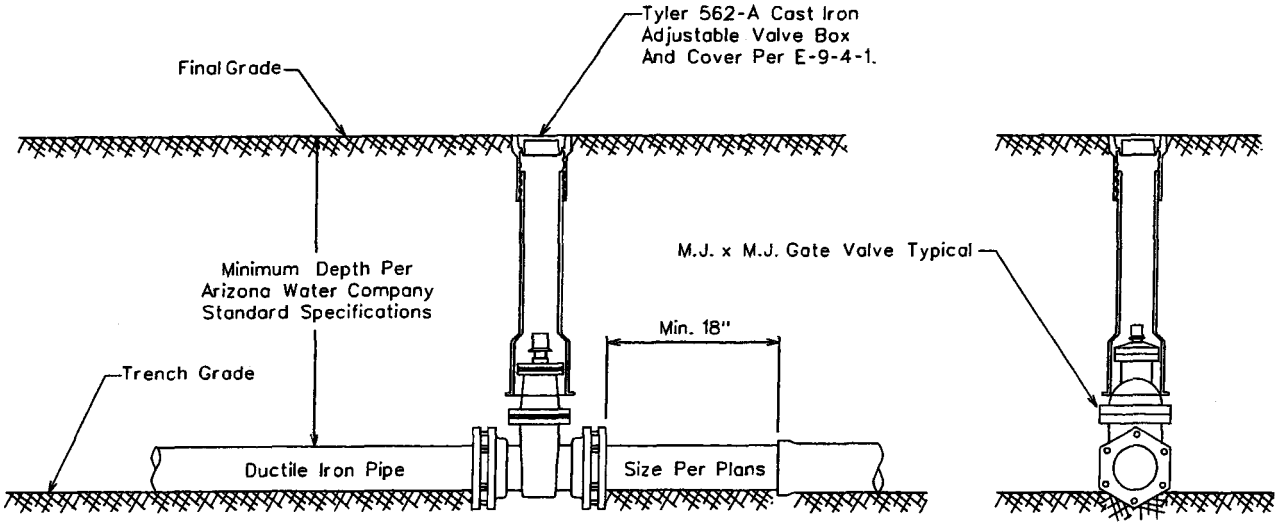

All Valves Installed On Pipe Five Feet (5') Deep And Greater Are To Be Installed With A Valve Operator Extension, Mueller Catalog No. A-26441.

ARIZONA WATER COMPANY

STANDARD SPECIFICATION
FOR THE INSTALLATION OF

TYPICAL VERTICAL GATE VALVES

DRAWN BY:	APPROVED BY:	DATE:	△	
CB	MW	03.20.1986	08.23.2006	E-9-2-1

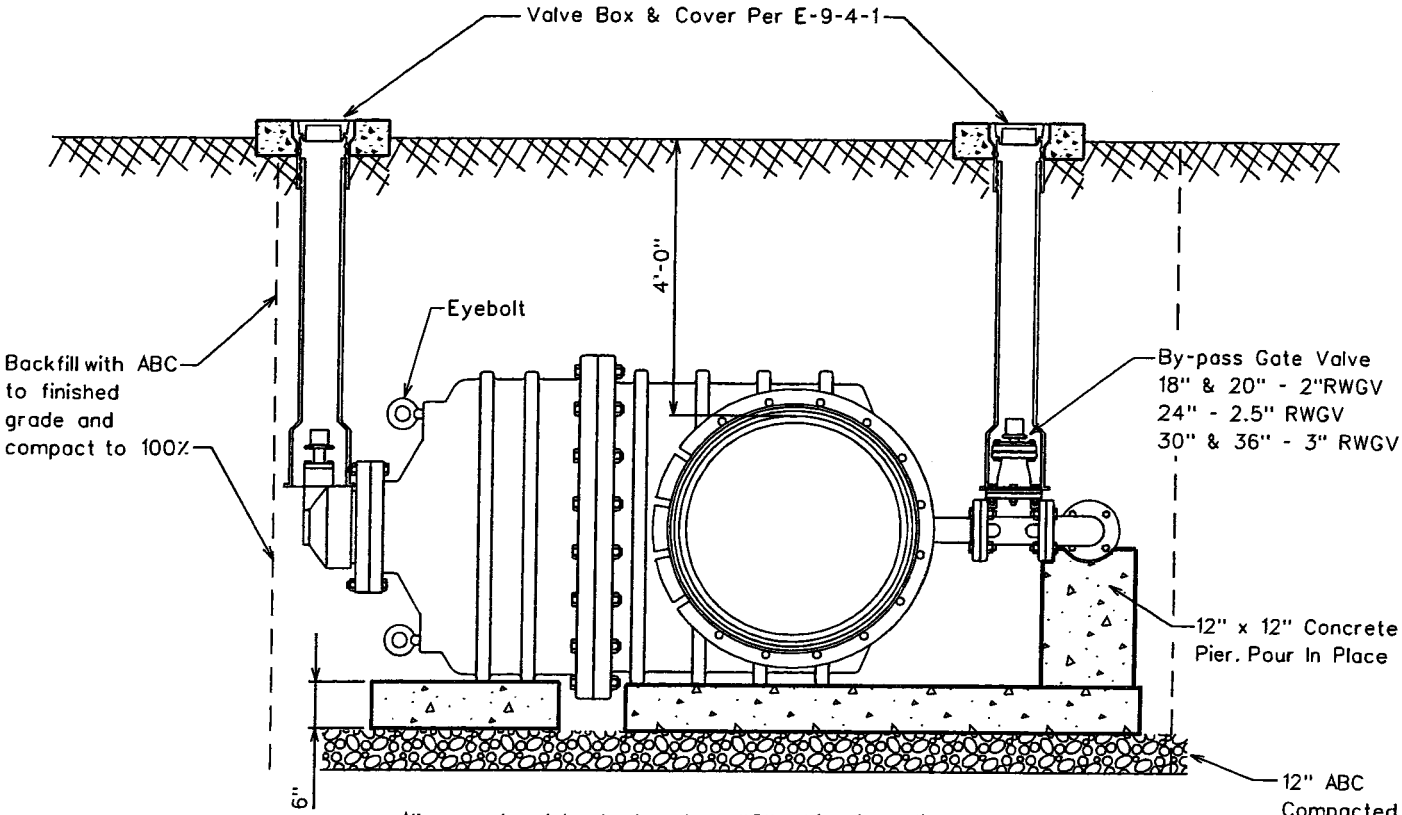

All concrete slabs to be class "C", which is defined as concrete whose minimum compressive strength at 14 days reaches 1600psi and at 28 days reaches 2000psi. per MAG Section 725, Table 725-1. Slabs to be formed and poured prior to valve installation.

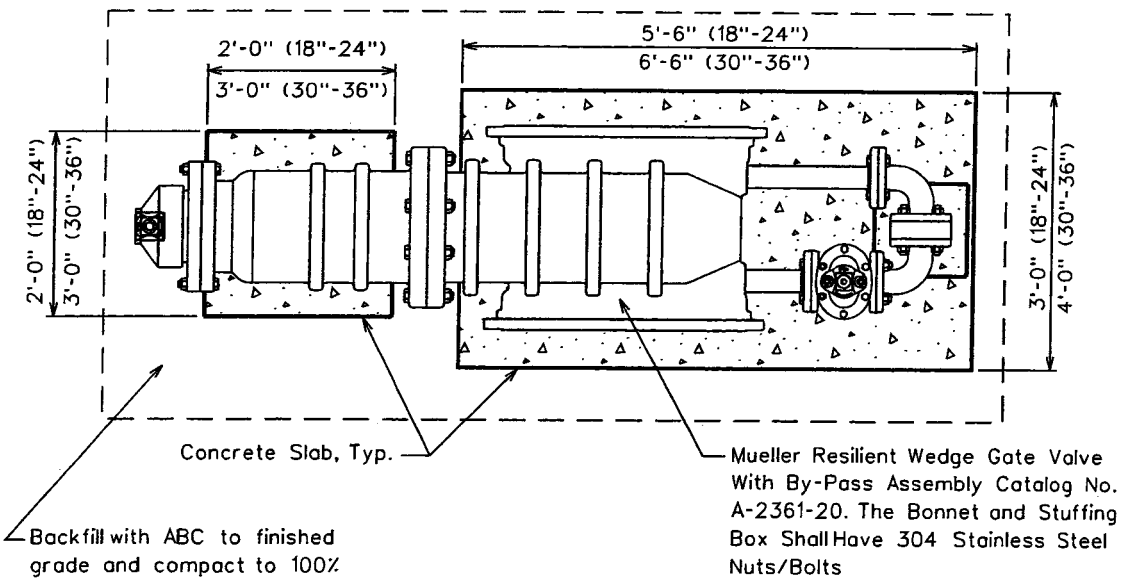

All valves installed on pipe five feet and greater are to be installed with a valve operator extension Mueller catalog No.A-26441 The distance is measured from the top of the operating nut to final grade.

ARIZONA WATER COMPANY

STANDARD SPECIFICATION

FOR THE INSTALLATION OF

INSTALLATION OF BEVEL GEARED HORIZONTAL GATE VALVES WITH BY-PASS FOR 18" AND LARGER VALVES

DRAWN BY:	APPROVED BY:	DATE:	△	
CB		12.07.2004		E-9-2-2

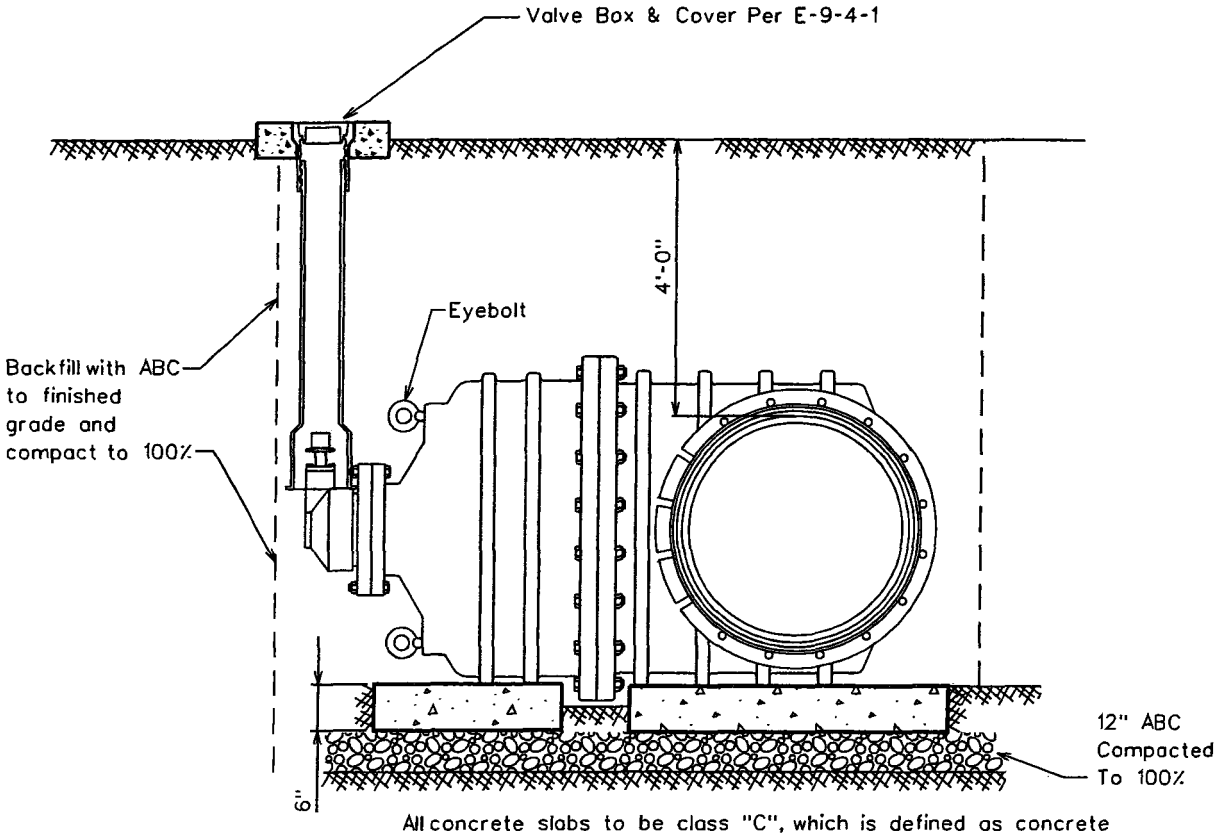

All concrete slabs to be class "C", which is defined as concrete whose minimum compressive strength at 14 days reaches 1600psi and at 28 days reaches 2000psi. per MAG Section 725, Table 725-1. Slabs to be formed and poured prior to valve installation.

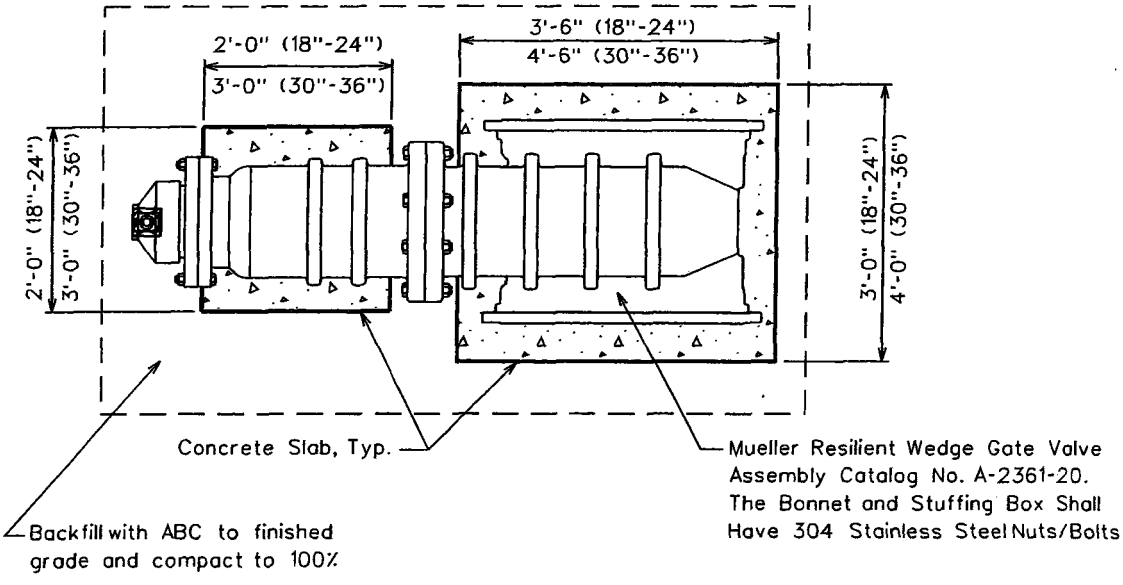

All valves installed on pipe five feet and greater are to be installed with a valve operator extension Mueller catalog No.A-26441 The distance is measured from the top of the operating nut to final grade.

ARIZONA WATER COMPANY

STANDARD SPECIFICATION

FOR THE INSTALLATION OF

INSTALLATION OF BEVEL GEARED HORIZONTAL GATE VALVES WITHOUT A BY-PASS FOR 18" AND LARGER VALVES

DRAWN BY:	APPROVED BY:	DATE:		
CB		12.07.2004	△ 5.13.2005	E-9-2-3

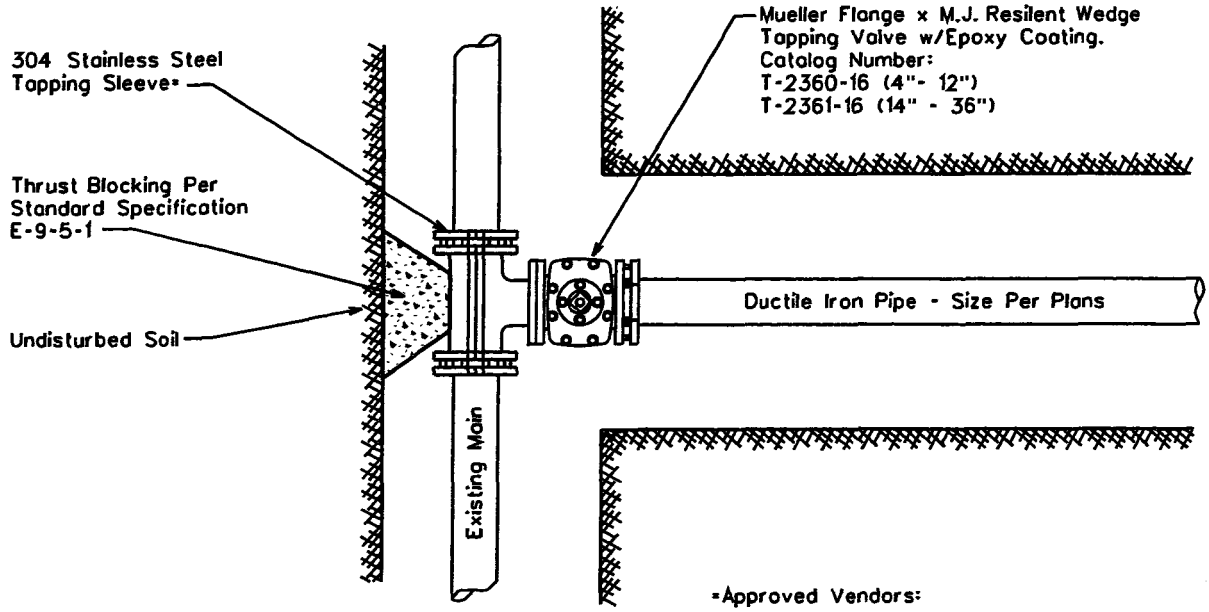

*Approved Vendors:

Mueller, Catalog No. H304, 304 Stainless Steel

JCM, Model 432, 304 Stainless Steel

Romac, 'SST', 304 Stainless Steel

Cascade, 'CST-EX', 304 Stainless Steel

NOTE:

1. All flanges, bolts, and nuts shall be kept free of concrete.
2. Air pressure test the tapping sleeve before the live tap is made.
3. Polywrap all new fittings

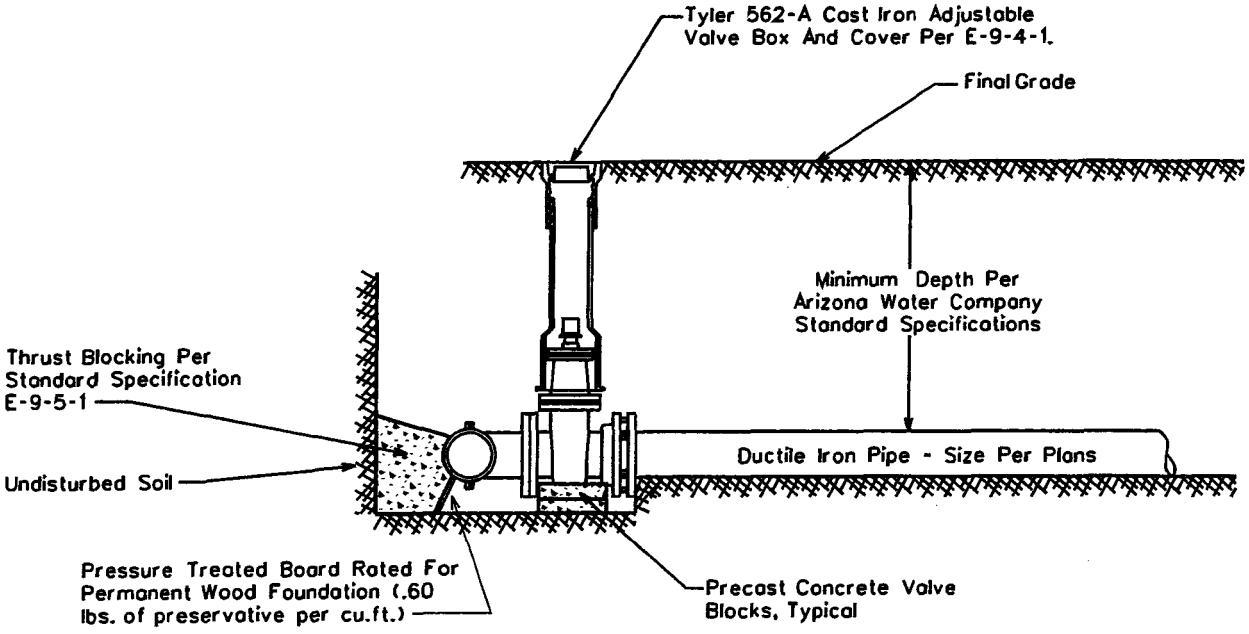

ARIZONA WATER COMPANY

STANDARD SPECIFICATION

FOR THE INSTALLATION OF

TYPICAL TAPPING SLEEVE AND VALVE

DRAWN BY:	APPROVED BY:	DATE:	△	
CB	MW	03.20.1986	△ 08.23.2006	E-9-3-1

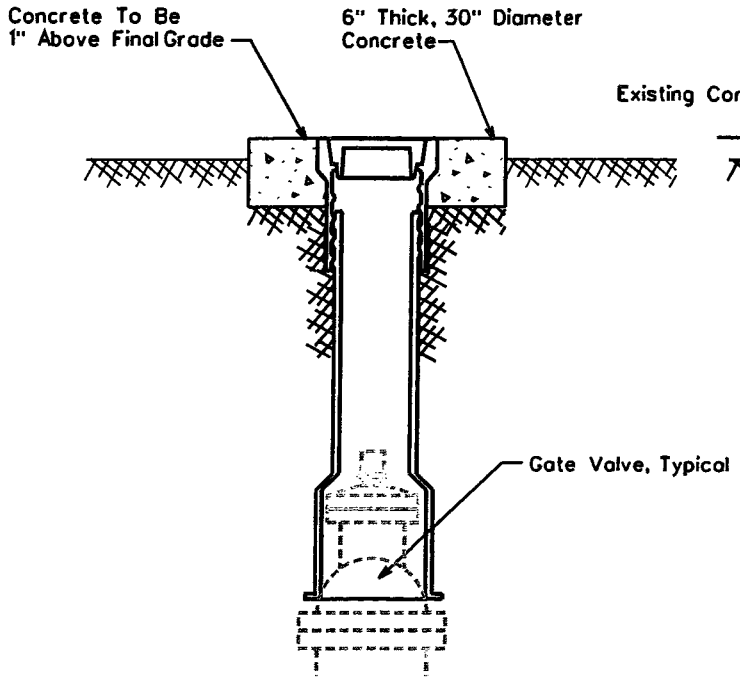

NON-VEHICULAR VALVE BOX

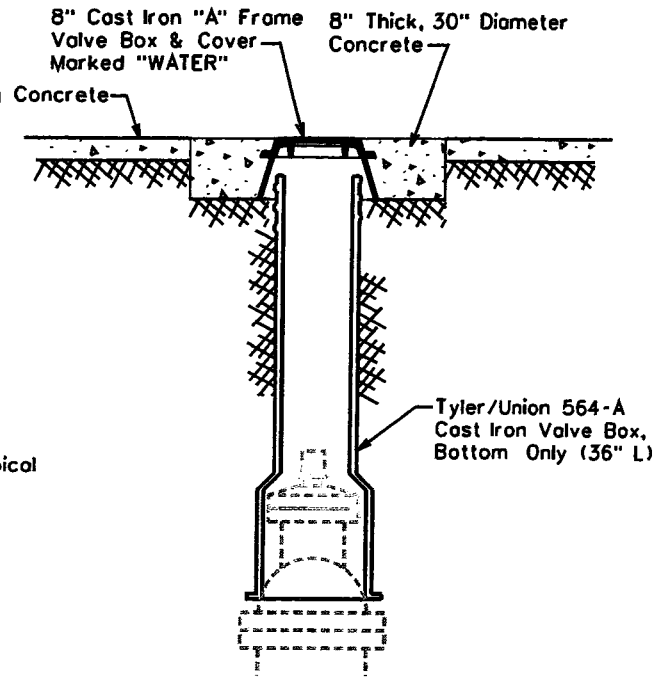

CONCRETE VALVE BOX

For Areas Subject To Vehicular Traffic

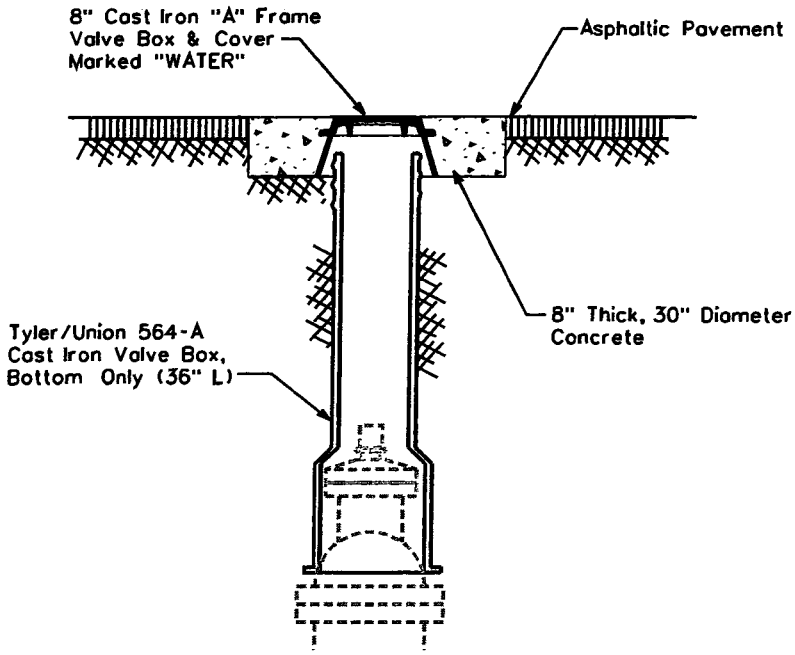

ASPHALT VALVE BOX

For Areas Subject To Vehicular Traffic

NOTE:

1. The Valve Box Shall Be Adjusted To Finished Grade Prior To Placing Of Asphalt And/Or Concrete.
2. For Non-Traffic Areas Use Tyler/Union 562-A, Two-Piece, 6855 Series Or Equivalent Adjustable Cast Iron Valve Box And Cover. Valves 4" To 12"

   For Traffic Areas, Use Tyler/Union 564-A Bottom Section Only With An 8" Cast Iron "A" Frame With Cover. Valves 4" To 12"
3. All Valves Installed Five Feet (5') Deep And Greater Are To Be Installed With A Valve Operator Extension, Mueller Catalog No. A-26441 And Shall Have A Debris Cap
4. Use Minimum Class 'C' Concrete which is defined as concrete whose minimum compressive strength at 14 days reaches 1600psi and at 28 days reaches 2000psi. per MAG Section 725, Table 725-1.

ARIZONA WATER COMPANY

STANDARD SPECIFICATION

FOR THE INSTALLATION OF

TYPICAL VALVE SUBJECT TO NON-VEHICULAR AND VEHICULAR TRAFFIC

DRAWN BY:	APPROVED BY:	DATE:	△ 8.24.2006	
CB	MW	03.20.1986		E-9-4-1

CROSSES

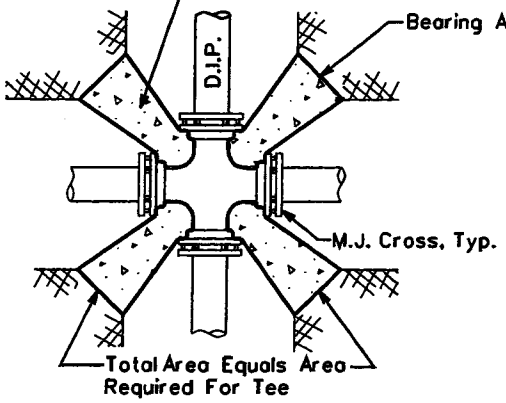

TEES

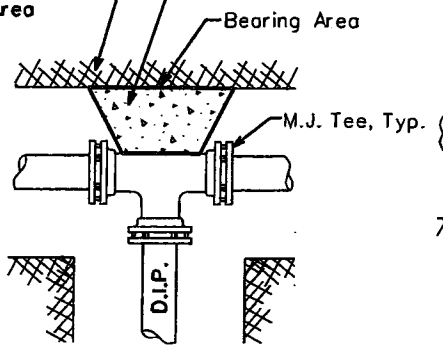

ELLS

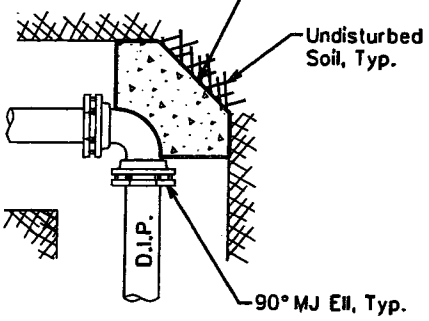

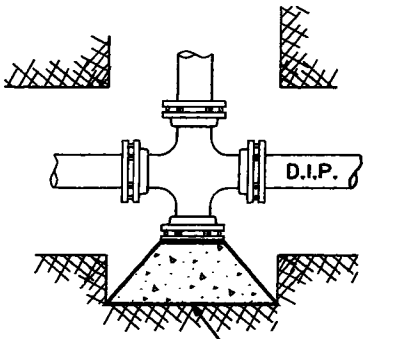

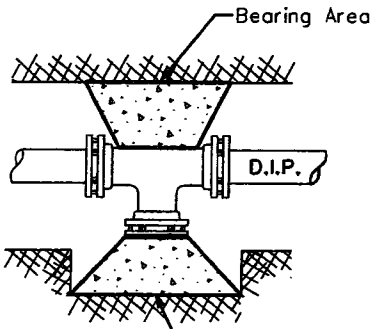

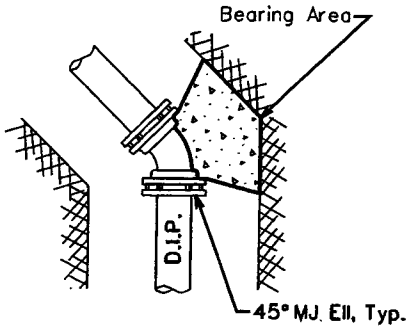

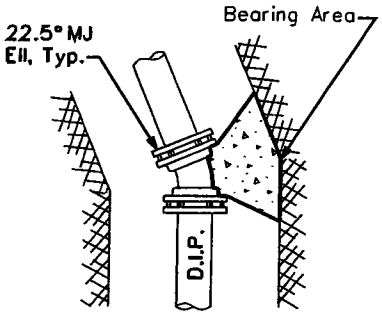

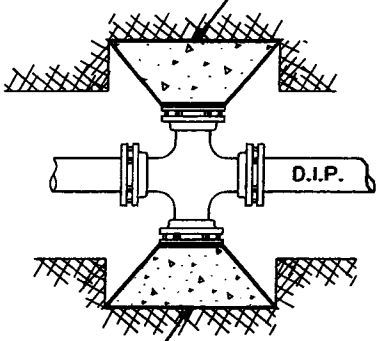

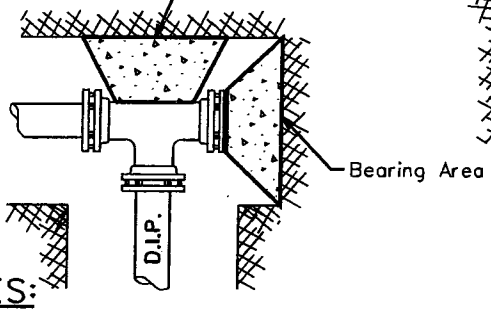

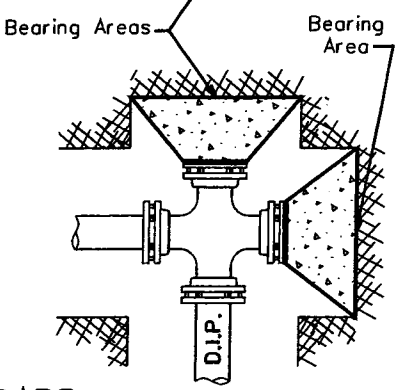

CROSS SECTION

TYPICAL

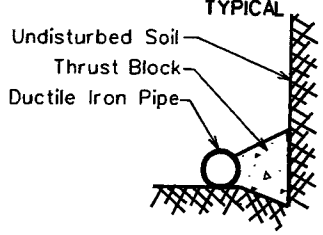

NOTES:

1. Use minimum Class 'C' concrete, which is defined as concrete whose minimum compressive strength at 14 days reaches 1600psi and at 28 days reaches 2000psi. per MAG Section 725, Table 725-1.
2. Thrust blocks are to bear on undisturbed earth with minimum bearing area as shown. If not undisturbed, areas will be increased as required.
3. Place the pressure treated form board in front of all plugs before pouring thrust blocks.
4. Form all non-bearing areas to prevent any concrete from entering any joint.
5. All flanges, bolts and nuts shall be kept free of concrete.
6. Center the bearing area on the pipe centerline and force line.
7. All pipe fittings to be wrapped with polyethylene pipe wrap prior to thrust block installation. (where applicable)

THRUST BLOCK SCHEDULE

PIPE SIZE	TEE, 45°, AND 22.5° ELLS, & PLUGS	90° ELLS
6" And Under	4 Sq.Ft.	6 Sq.Ft.
8"	6 Sq.Ft.	9 Sq.Ft.
12"	13 Sq.Ft.	20 Sq.Ft.
16"	23 Sq.Ft.	32 Sq.Ft.
18" And Larger	Calculated Per Project	

CAPS

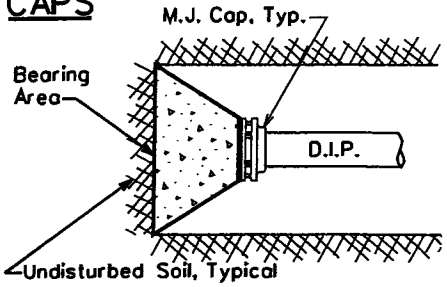

STANDARD SPECIFICATION

FOR THE INSTALLATION OF

TYPICAL THRUST BLOCKING SCHEDULE

DRAWN BY:	APPROVED BY:	DATE:	△	
CB	MW	03.20.1986	05.27.2005	E-9-5-1

NOTES

1. Bars In Conc. Thrust Block To Be Coated w/ 2 Coats Coal Tar Epoxy or by Other Approved Method.

2. Bars To Have 90° Hook @ Their Ends, As Per Table Below.

Pipe Size	Min. Bar Size	"A" Dimension (Hook)	* Min. Block Dimension (WxHxL)
6"	#6	6"	3'x3'x3'
8"	#6	9"	4'x3'x4'
12"	#8	9"	5'x4'x5'
16"	#9	12"	7'x6'x7'

* For 125 P.S.I. Working Pressure

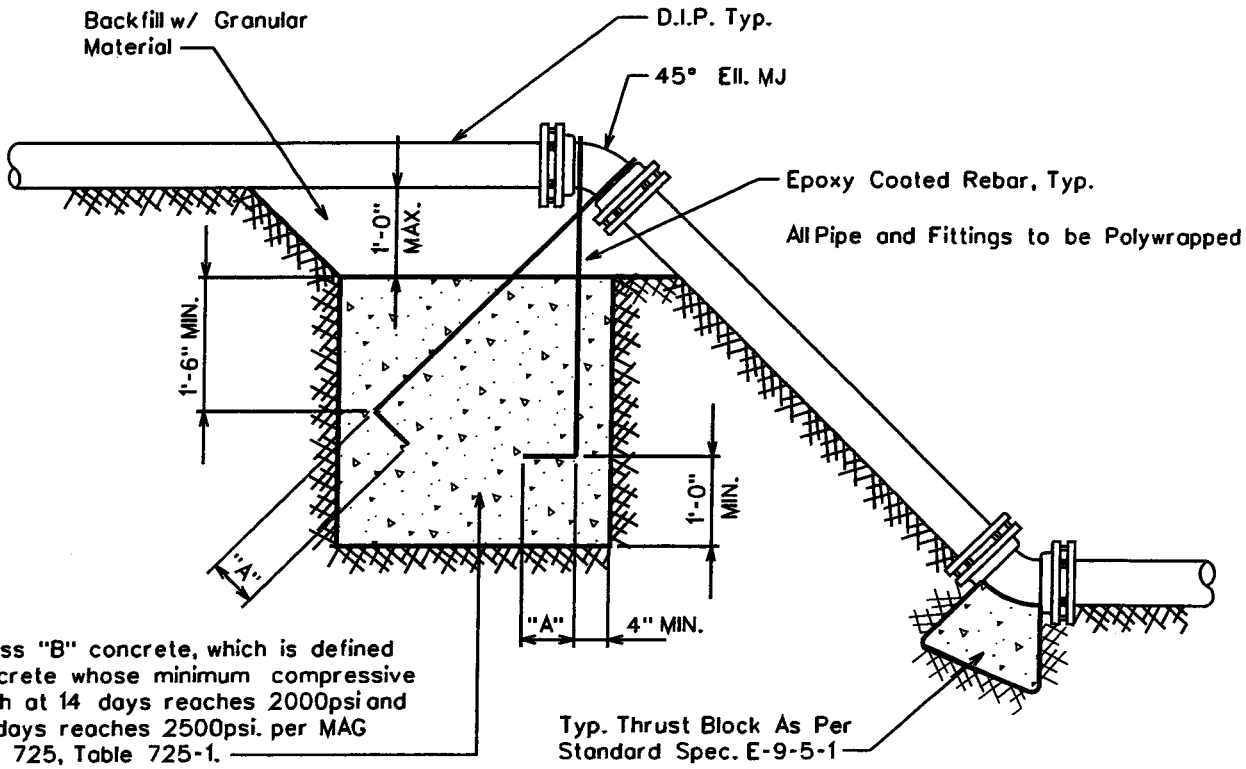

ARIZONA WATER COMPANY

STANDARD SPECIFICATION
FOR THE INSTALLATION OF

THRUST BLOCK FOR VERTICAL BENDS

DRAWN BY:	APPROVED BY:	DATE:	△ 01.16.2007	
JPK	MJW	7-5-96		E-9-5-2

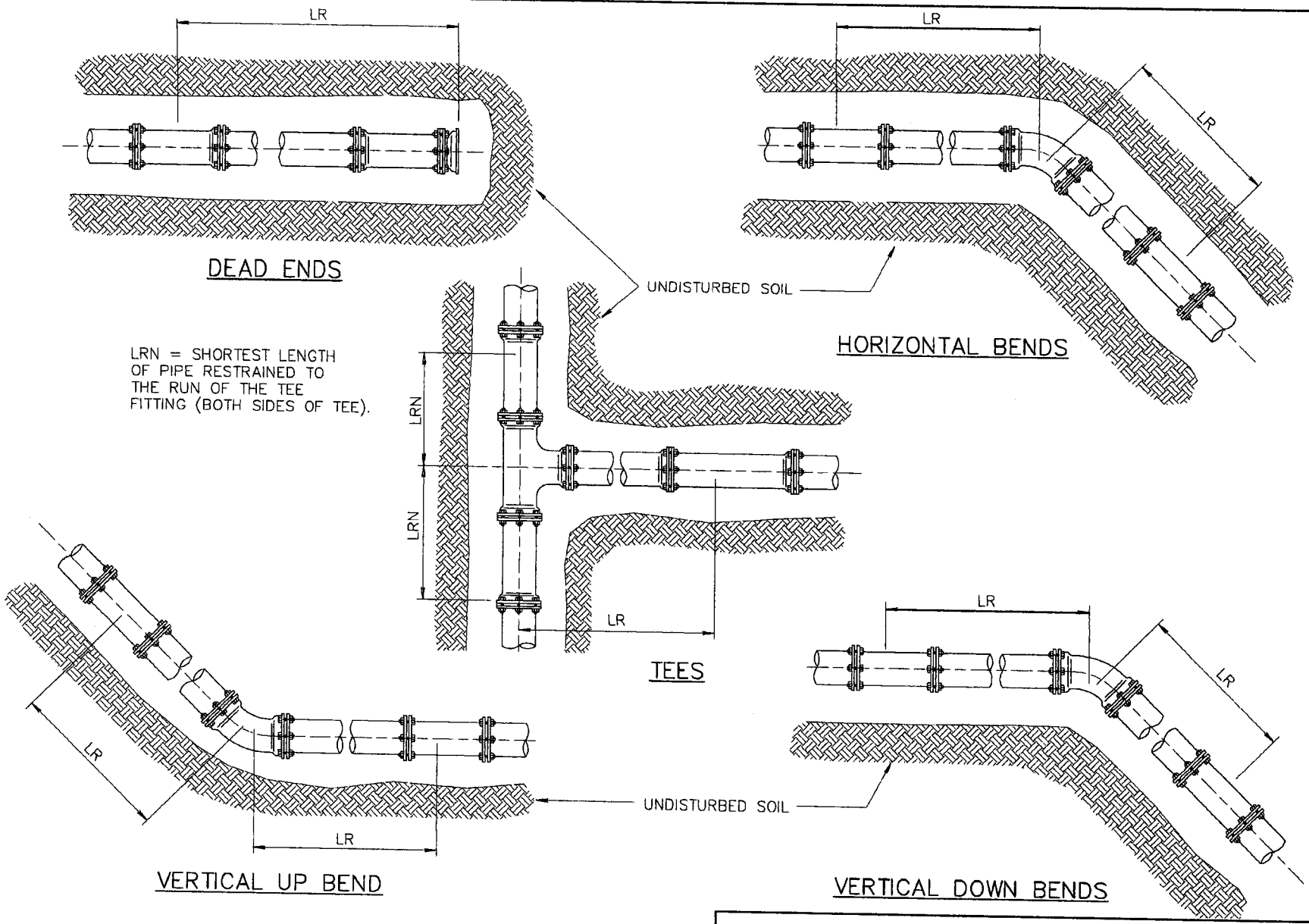

ARIZONA WATER COMPANY

STANDARD SPECIFICATION
FOR THE INSTALLATION OF

JOINT RESTRAINT FOR NEW DUCTILE IRON AND C-900 PVC MAINS

DRAWN BY:	APPROVED BY:	DATE:		
CB	MW	01.16.2007	△	E-9-5-3-1

RESTRAINED LENGTHS, LR, FOR DUCTILE IRON PIPE

NOMINAL PIPE SIZE INCHES	HORIZONTAL BENDS			TEES		VERTICAL OFFSETS						DEAD ENDS
						90° BEND FITTINGS		45° BEND FITTINGS		22-1/2° BEND FITTINGS		
	90°	45°	22-1/2°	LRN=0'	LRN=10'	DOWN BEND	UP BEND	DOWN BEND	UP BEND	DOWN BEND	UP BEND	
4	18	7	4	30	8	31	18	13	7	6	3	31
6	25	10	5	43	20	44	25	18	10	9	5	44
8	32	13	6	56	34	58	32	24	13	11	6	58
10	38	16	8	68	45	69	38	29	16	14	8	69
12	45	19	9	80	57	81	45	34	19	16	9	81
14	51	21	10	91	68	92	51	38	21	18	10	92
16	57	24	11	103	79	104	57	43	24	21	11	104
18	62	26	12	113	90	115	62	48	26	23	12	115
20	68	28	14	125	100	126	68	52	28	25	14	126
24	79	33	16	145	121	147	79	61	33	29	16	147

RESTRAINED LENGTHS, LR, FOR DUCTILE IRON PIPE WITH POLYETHYLENE WRAP

NOMINAL PIPE SIZE INCHES	HORIZONTAL BENDS			TEES		VERTICAL OFFSETS						DEAD ENDS
						90° BEND FITTINGS		45° BEND FITTINGS		22-1/2° BEND FITTINGS		
	90°	45°	22-1/2°	LRN=0'	LRN=10'	DOWN BEND	UP BEND	DOWN BEND	UP BEND	DOWN BEND	UP BEND	
4	26	11	5	69	18	72	26	30	11	14	5	72
6	36	15	7	99	47	102	36	42	15	20	7	102
8	47	19	9	130	78	133	47	55	19	26	9	133
10	56	23	11	157	103	159	56	66	23	32	11	159
12	65	27	13	185	131	187	65	77	27	37	13	187
14	74	31	15	211	156	214	74	89	31	42	15	214
16	82	34	16	238	183	241	82	100	34	48	16	241
18	90	37	18	263	207	266	90	110	38	53	18	266
20	98	41	20	289	233	292	98	121	41	58	20	292
24	113	47	22	337	280	340	113	141	47	68	22	340

NOTES:

1. ALL JOINTS WITHIN THE SPECIFIED LENGTH LR MUST BE RESTRAINED. ALL LENGTHS ARE GIVEN IN FEET.
2. THE MAXIMUM TEST PRESSURE SHALL NOT EXCEED 200 PSI
3. THE MINIMUM DEPTH OF BURY SHALL BE 3' TO TOP OF PIPE.
4. RESTRAINED LENGTHS MAY BE REDUCED WHEN SUPPORTED BY ENGINEERING CALCULATIONS.

ARIZONA WATER COMPANY

STANDARD SPECIFICATION
FOR THE INSTALLATION OF

JOINT RESTRAINT FOR NEW DUCTILE IRON AND C-900 PVC MAINS

DRAWN BY:	APPROVED BY:	DATE:		
CB	MW	01.16.2007	△	E-9-5-3-2

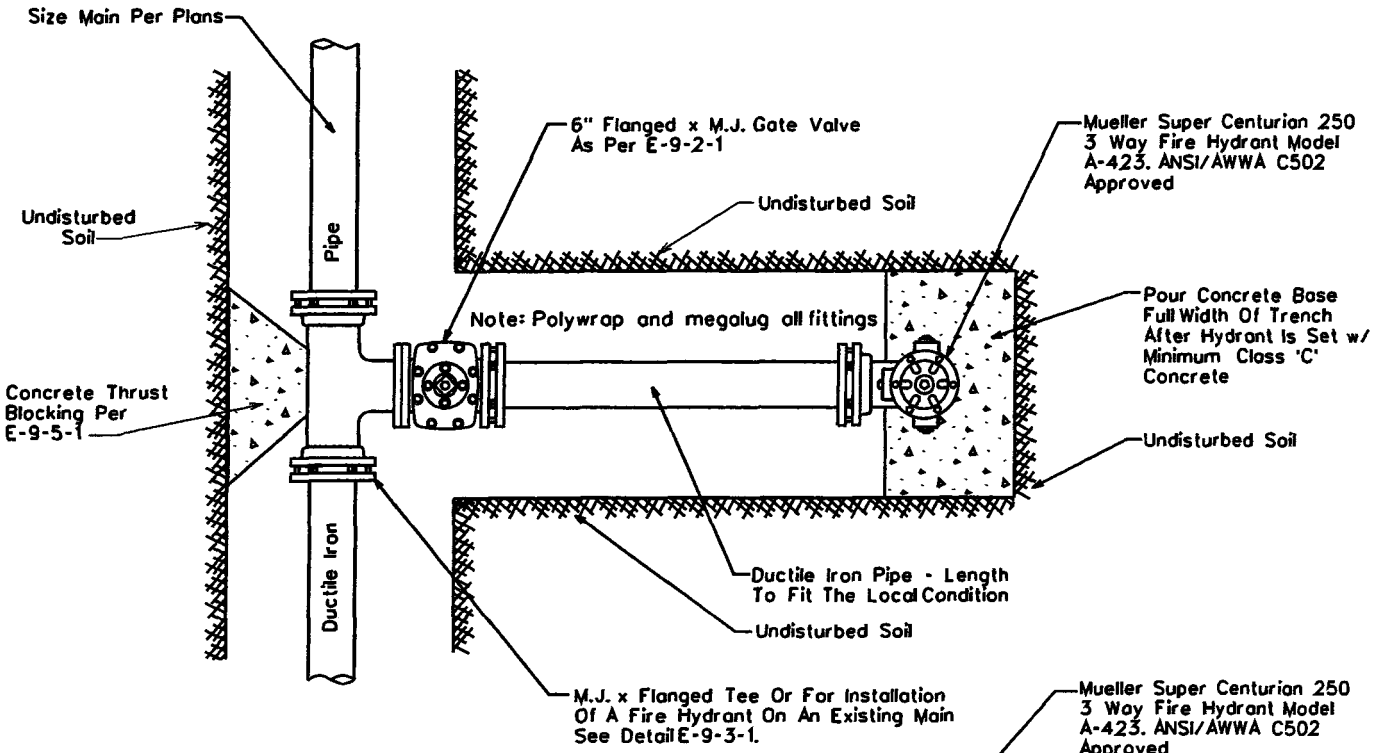

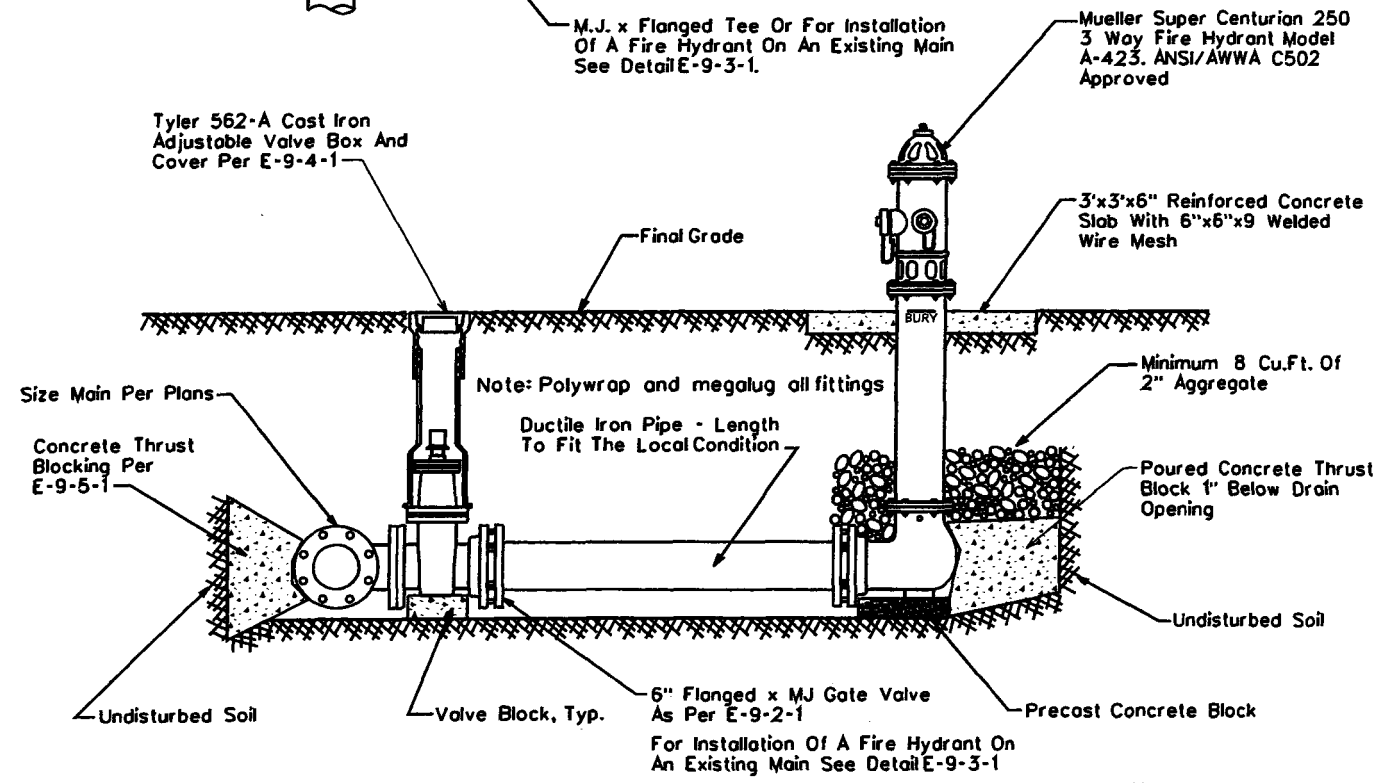

NOTE: All Flanges, Bolts, Nuts and Drain Holes Shall Be Kept Free Of Concrete

ARIZONA WATER COMPANY

STANDARD SPECIFICATION

FOR THE INSTALLATION OF

TYPICAL PERPENDICULAR FIRE HYDRANT

DRAWN BY:	APPROVED BY:	DATE:	△ 08.24.2006	
CB	MW	1-28-91		E-9-6-1

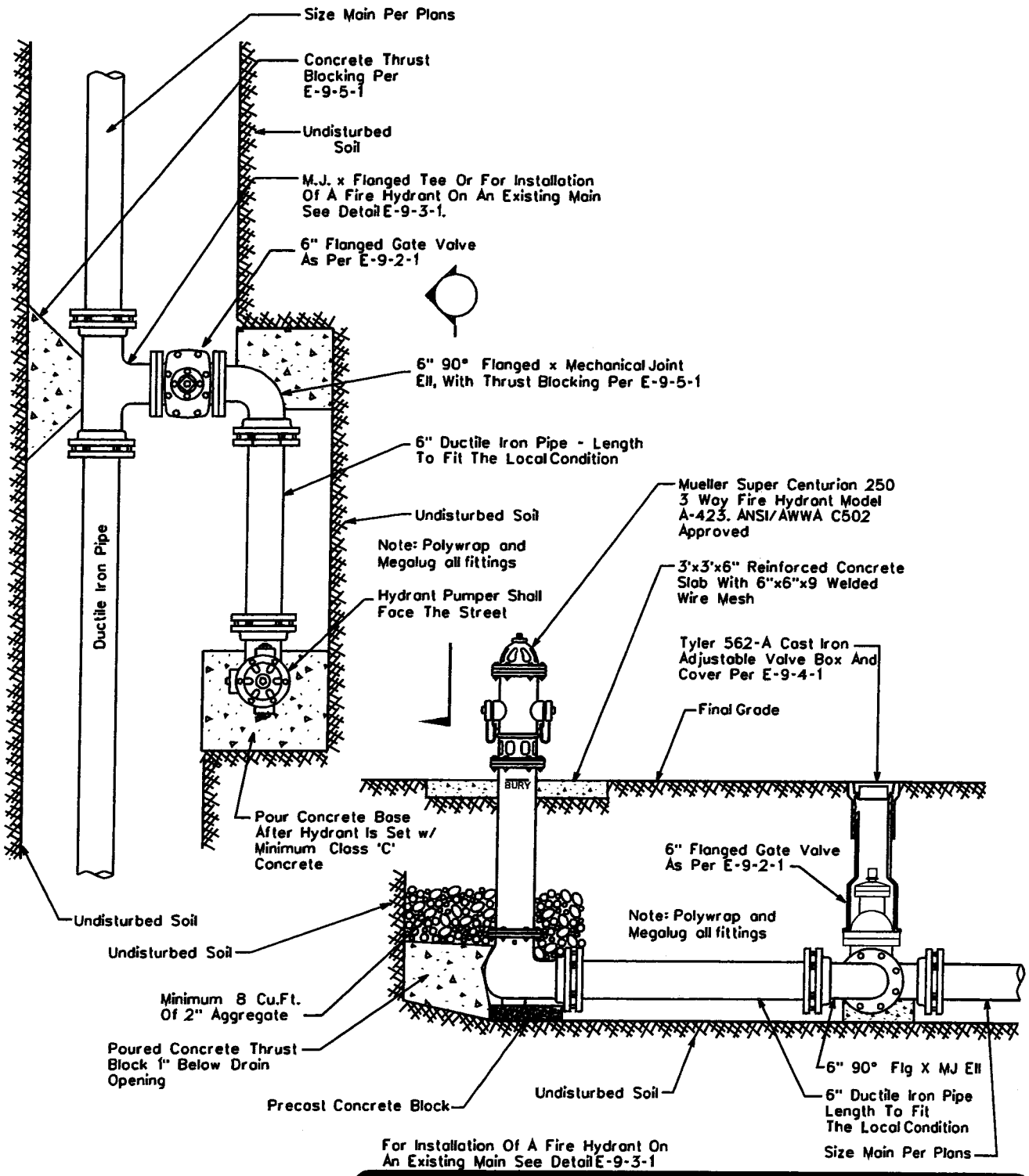

NOTE: All Flanges, Bolts, Nuts And Drain Holes Shall Be Kept Free Of Concrete.

ARIZONA WATER COMPANY

STANDARD SPECIFICATION

FOR THE INSTALLATION OF

TYPICAL PARALLEL FIRE HYDRANT

DRAWN BY:	APPROVED BY:	DATE:	△	
JW	MW	03.20.1986	08.24.2006	E-9-7-1

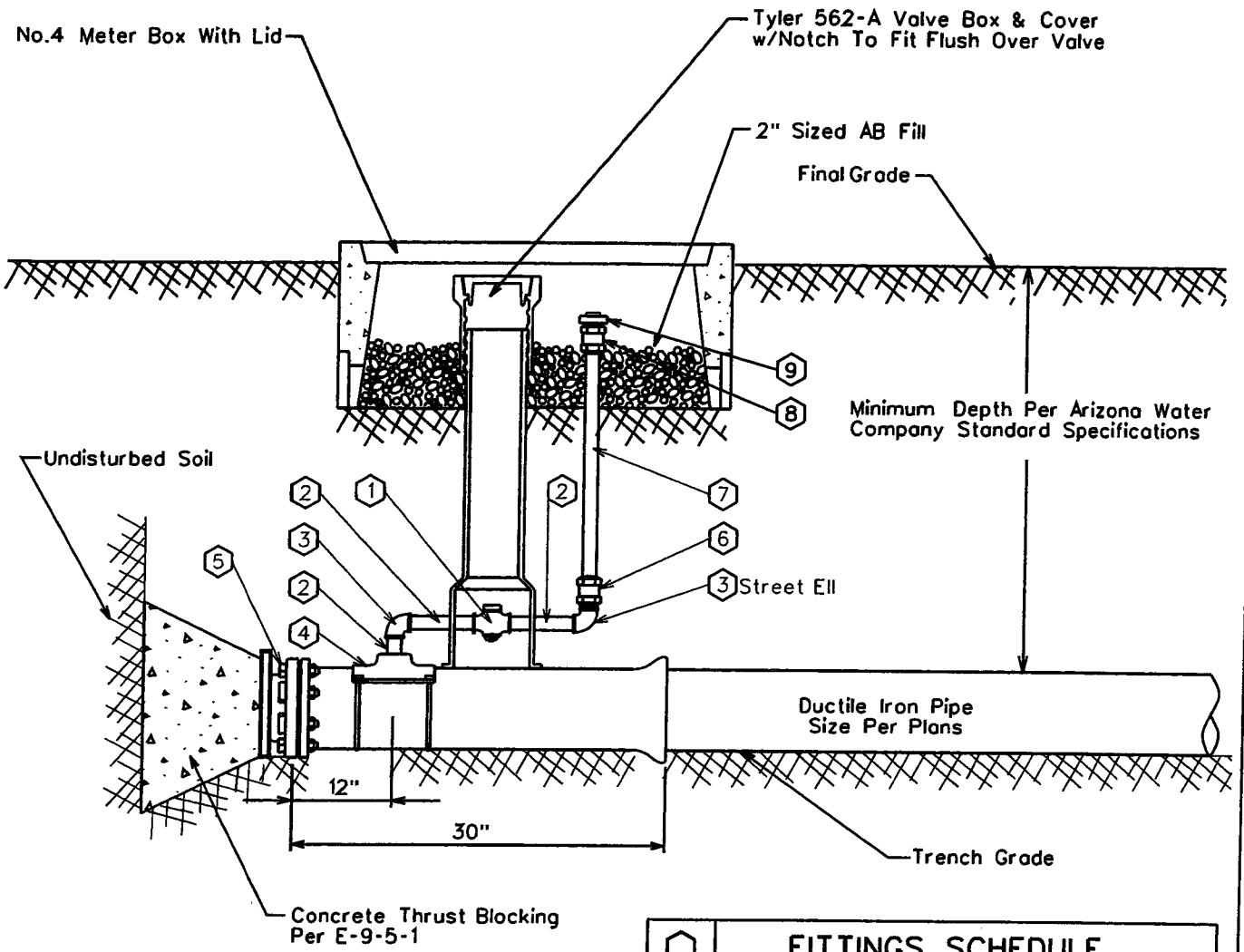

⬡	FITTINGS SCHEDULE
1.	2" Mueller 300 Ball Curb Valve B-20283 FIP x FIP W/ 2" Mueller Brass Square Wrench Nut Adapter B-20299
2.	2" Brass Nipple - Length To Fit Field Conditions
3.	2" Brass 90° Elbow, IPST
4.	Mueller Double Strap Bronze Service Saddle - BR2B
5.	M.J. Plug - Megalug Restraints May Be Required
6.	2" Straight Coupling CC x FIP H-15451
7.	2" Copper Pipe
8.	2" Straight Coupling CC x MIP H-15428
9.	2" Square Head Plug, MIP

ARIZONA WATER COMPANY

STANDARD SPECIFICATION
FOR THE INSTALLATION OF

2" BLOWOFF ASSEMBLY

DRAWN BY:	APPROVED BY:	DATE:		
CB	MW	03.20.1986	△ 03.21.2006	E-9-8-1

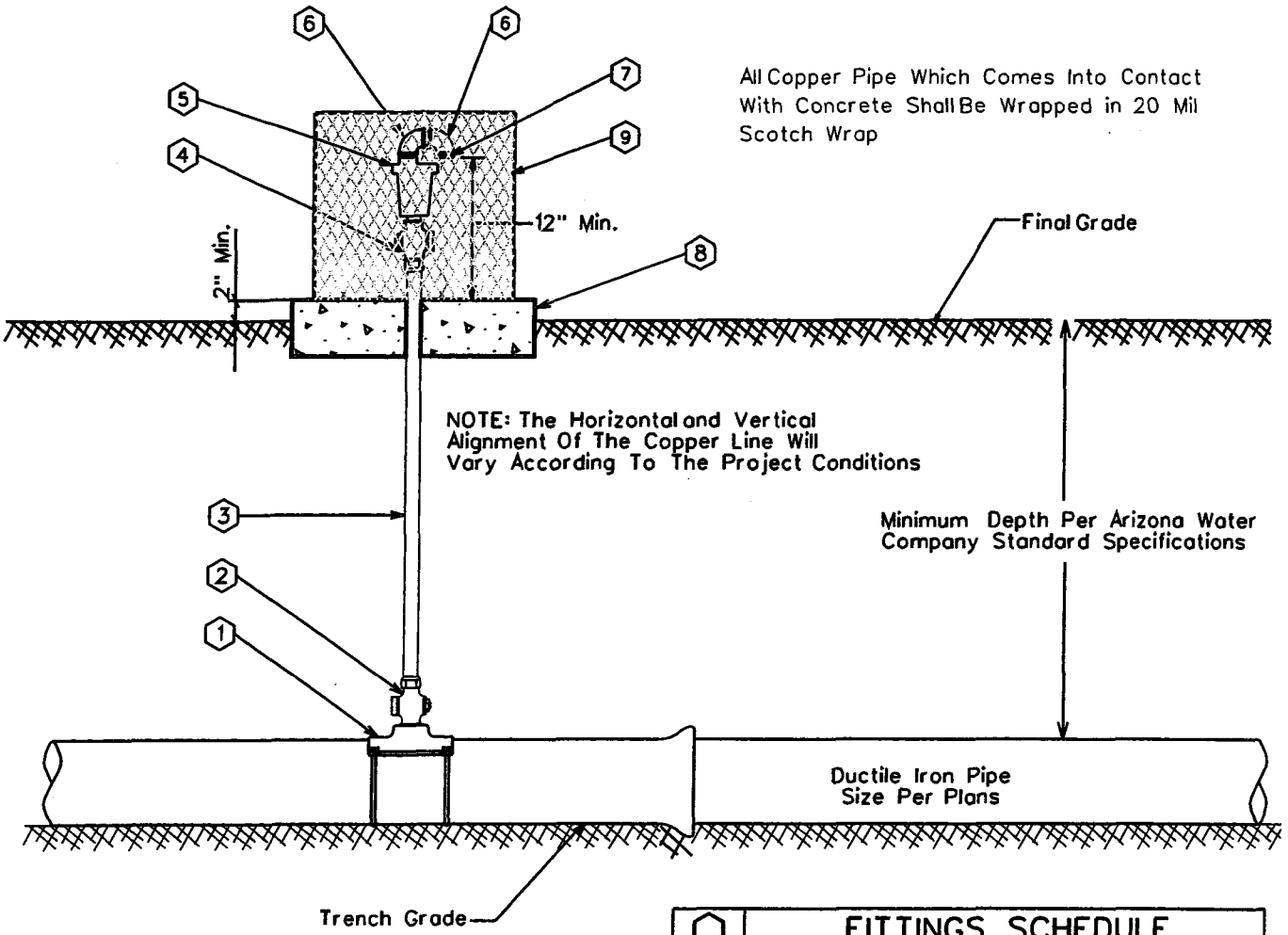

⬡	FITTINGS SCHEDULE
1.	Mueller BR2B Bronze Service Saddle - Double Strap
2.	1" Mueller B-25008 Taper x Comp. Ball Corp Stop
3.	1" Type 'K' Copper w/NO Splices - Field Fit
4.	1" Mueller B-25028 IP x Comp. Ball Corp Stop
5.	Crispin 1" Air Release Valve, Model AR10
6.	½" Brass Street Elbow
7.	No.16 Wire Mesh Screen (Non-Corrodible)
8.	4" Thick Concrete Pad - Class 'C' Concrete
9.	Guardshack, Model GS-1, Available From BPDI, Inc. Available In Leaf Green Or Desert Tan

GENERAL NOTES:

1. The valve shall be installed at high points and on long runs to vent the accumulation of air with the line under pressure- see the construction plans for specific locations.
2. The valve shall have a 5/64" orifice with valve sealing faces of stainless steel and BUNA-N rubber.
3. The valve shall be Crispin model AR10 for 6" and larger water mains.
4. Crispin model AR10 valve construction consists of a 1" IPST inlet & ½" IPST outlet, cast iron body and top flange with stainless steel float and trim.
5. The air release assembly shall be located out of the path of traffic but within right-of-way or easement.

ARIZONA WATER COMPANY

STANDARD SPECIFICATION
FOR THE INSTALLATION OF

TYPICAL AIR RELEASE VALVE

DRAWN BY:	APPROVED BY:	DATE:	△	
CB	MW	03.20.1997	△08.24.2006	E-9-8-2

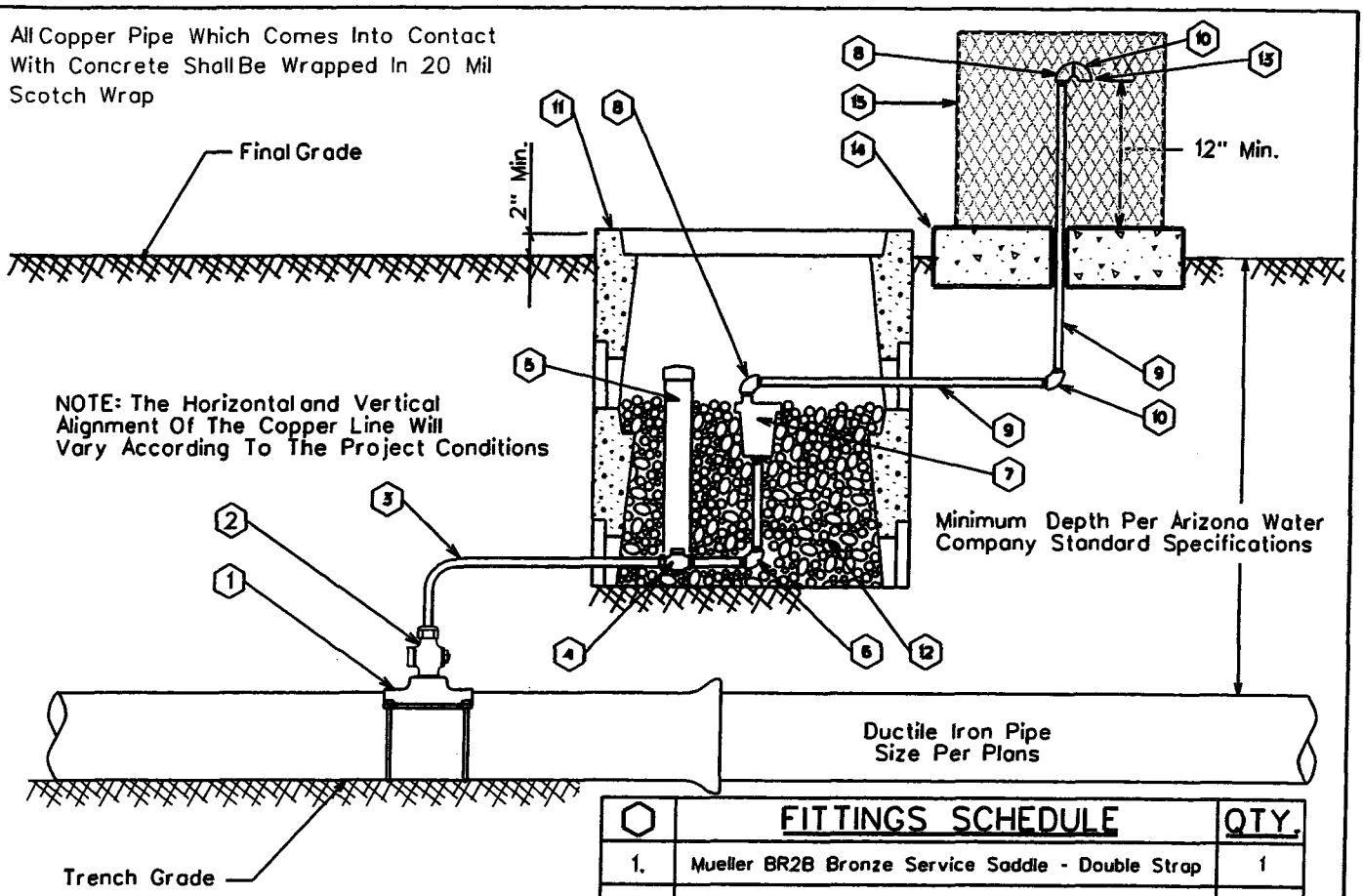

⬡	FITTINGS SCHEDULE	QTY.
1.	Mueller BR2B Bronze Service Saddle - Double Strap	1
2.	1" Mueller B-25008 Taper x Comp. Ball Corp Stop	1
3.	1" Type 'K' Copper w/NO Splices - Field Fit	As Req'd
4.	1" Mueller B-25028 IP x Comp. Ball Corp Stop	1
5.	3" PVC Pipe w/ Cap (Loose Fit)	1
6.	1" x 4" Brass Nipple w/90° Elbow	1
7.	Crispin 1" Air Release Valve, Model AR10	1
8.	½" Brass Street Elbow	2
9.	½" Galvanized Pipe - Length as req'd	2
10.	½" Galvanized 90° Ell	2
11.	Number 1 Meter Box	2
12.	2" Sized AB (Fill Meter Box To The Top Of The Air Release Valve)	As Req'd
13.	No.16 Wire Mesh Screen (Non-Corrodible)	1
14.	4" Thick Concrete Pad - Class 'C' Concrete	1
15.	Guardshack, Model GS-1, Available From BPDI, Inc. Available In Leaf Green Or Desert Tan	1

GENERAL NOTES:

1. The valve shall be installed at high points and on long runs to vent the accumulation of air with the line under pressure- see the construction plans for specific locations.
2. The valve shall have a 5/64" orifice with valve sealing faces of stainless steel and BUNA-N rubber.
3. The valve shall be Crispin model AR10 for 6" and larger water mains.
4. Crispin model AR10 valve construction consists of a 1" IPST inlet & ½" IPST outlet, cast iron body and top flange with stainless steel float and trim.
5. The air release assembly shall be located out of the path of traffic but within the right-of-way or easement.

ARIZONA WATER COMPANY

STANDARD SPECIFICATION
FOR THE INSTALLATION OF

AIR RELEASE VALVE FOR THE NORTHERN REGION

DRAWN BY:	APPROVED BY:	DATE:		
CB	MW	03.20.1997	△08.24.2006	E-9-8-3

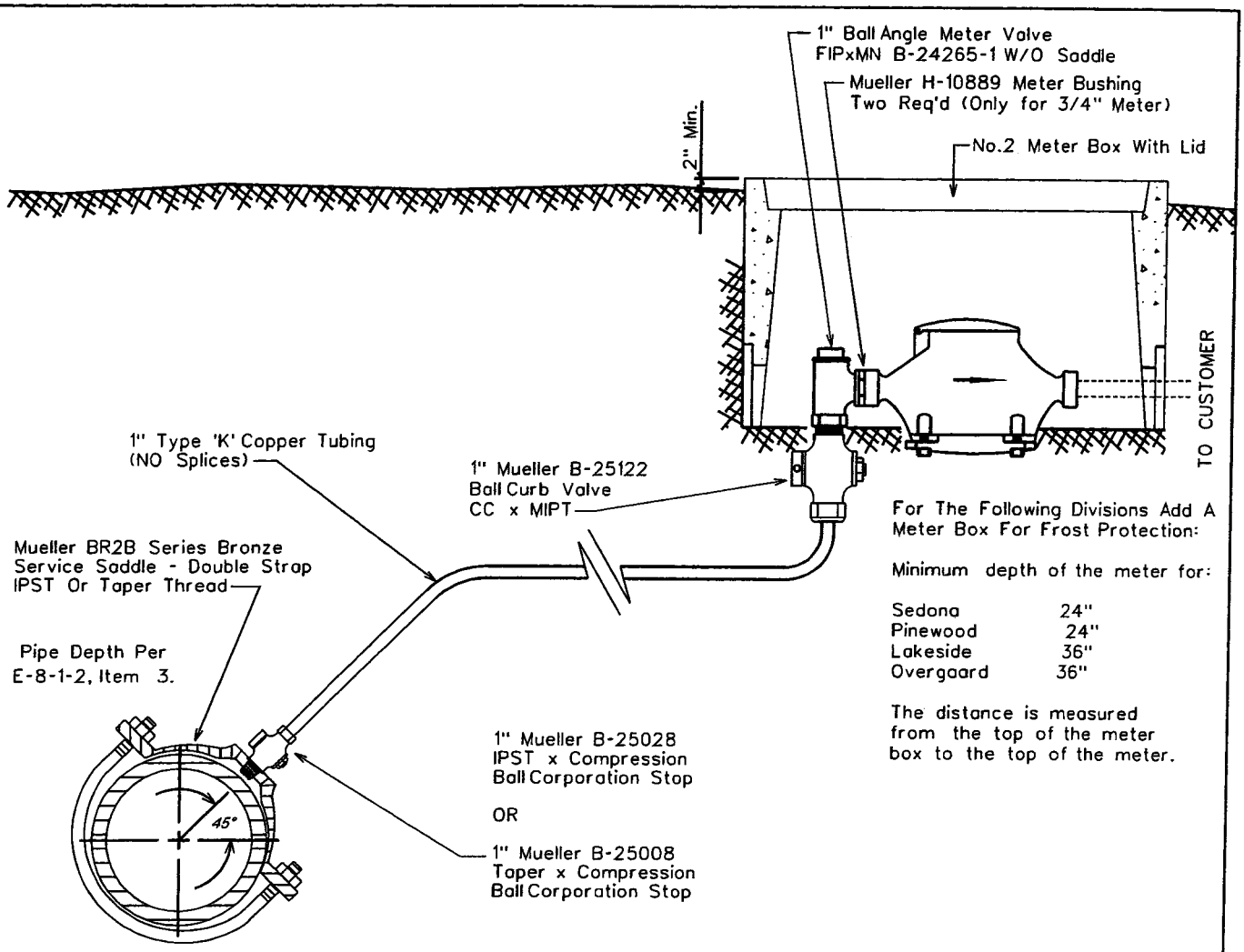

For The Following Divisions Add A Meter Box For Frost Protection:

Minimum depth of the meter for:

Sedona	24"
Pinewood	24"
Lakeside	36"
Overgaard	36"

The distance is measured from the top of the meter box to the top of the meter.

SADDLE TAP TO CA, PVC, OR DI PIPE

NOTE: The minimum distance between taps on mains other than ductile iron is 12"

NOTE:
Only the meter is supplied by Arizona Water Company

ARIZONA WATER COMPANY

STANDARD SPECIFICATION
FOR THE INSTALLATION OF

SINGLE SERVICE CONNECTION FOR A 3/4" OR 1" METER

DRAWN BY:	APPROVED BY:	DATE:	△ 03.17.2006	E-9-9-1
CCO	M.W.	3/20/86		

For The Following Divisions Add A Meter Box For Frost Protection:

Minimum depth of the meter for:

Sedona	24"
Pinewood	24"
Lakeside	36"
Overgaard	36"

The distance is measured from the top of the meter box to the top of the meter.

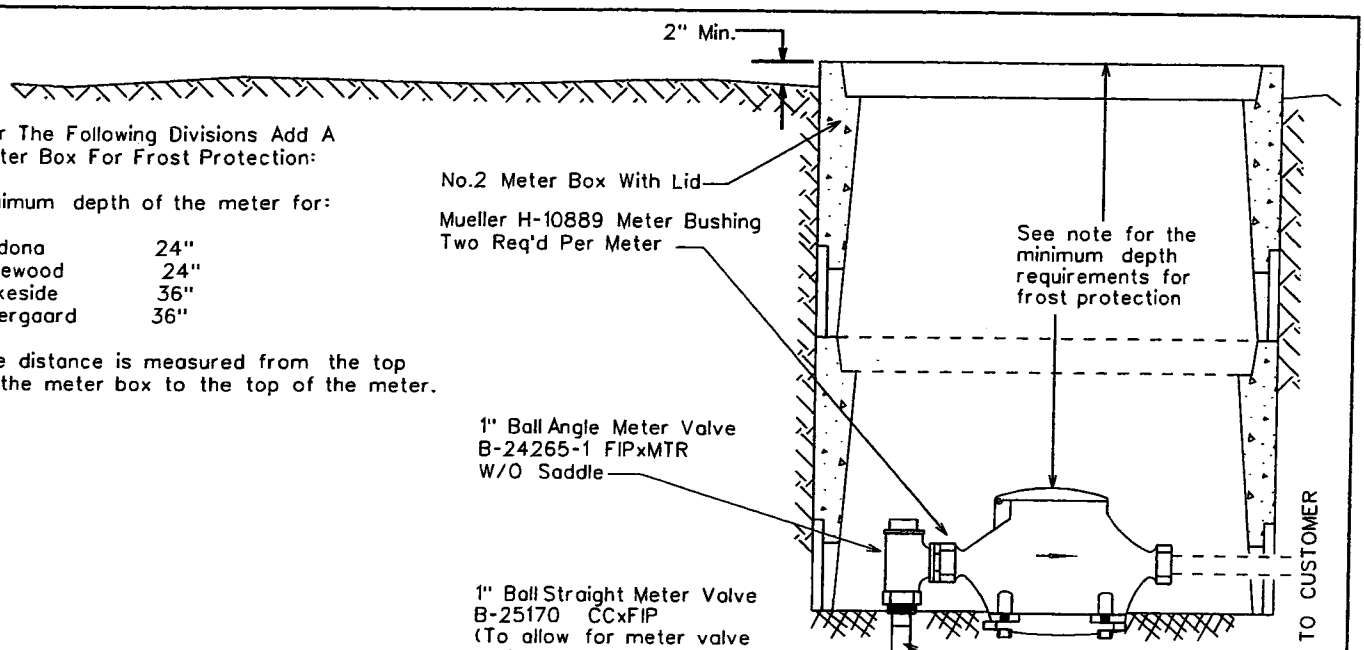

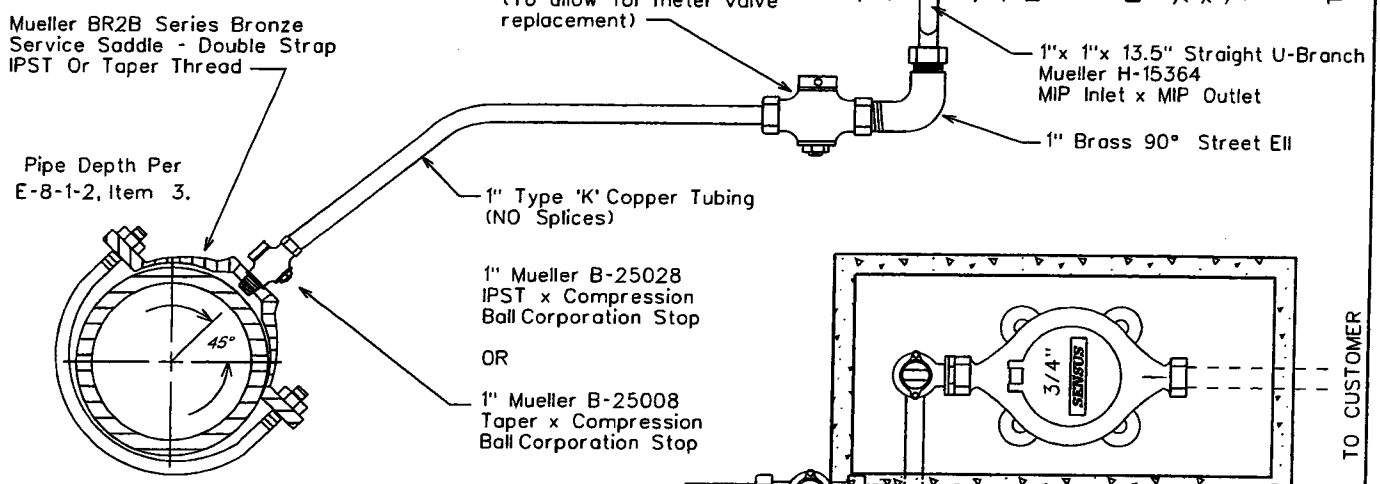

1" Mueller B-25028
IPST x Compression
Ball Corporation Stop

OR

1" Mueller B-25008
Taper x Compression
Ball Corporation Stop

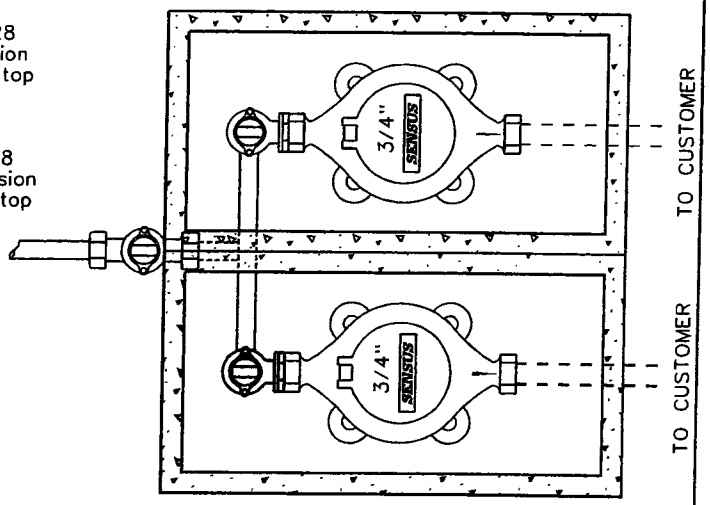

SADDLE TAP TO CA, PVC, OR DI PIPE

NOTE: The minimum distance between service taps on mains other than ductile iron is 12"

NOTE:
Only the meter is supplied by Arizona Water Company

ARIZONA WATER COMPANY

STANDARD SPECIFICATION
FOR THE INSTALLATION OF

DOUBLE SERVICE CONNECTION FOR 3/4" METERS

DRAWN BY:	APPROVED BY:	DATE:	△ 08.25.2006	
CCO	M.W.	3-20-86		E-9-10-1

For The Following Divisions Add A Meter Box For Frost Protection:

Minimum depth of the meter for:

Sedona	24"
Pinewood	24"
Lakeside	36"
Overgaard	36"

The distance is measured from the top of the meter box to the top of the meter.

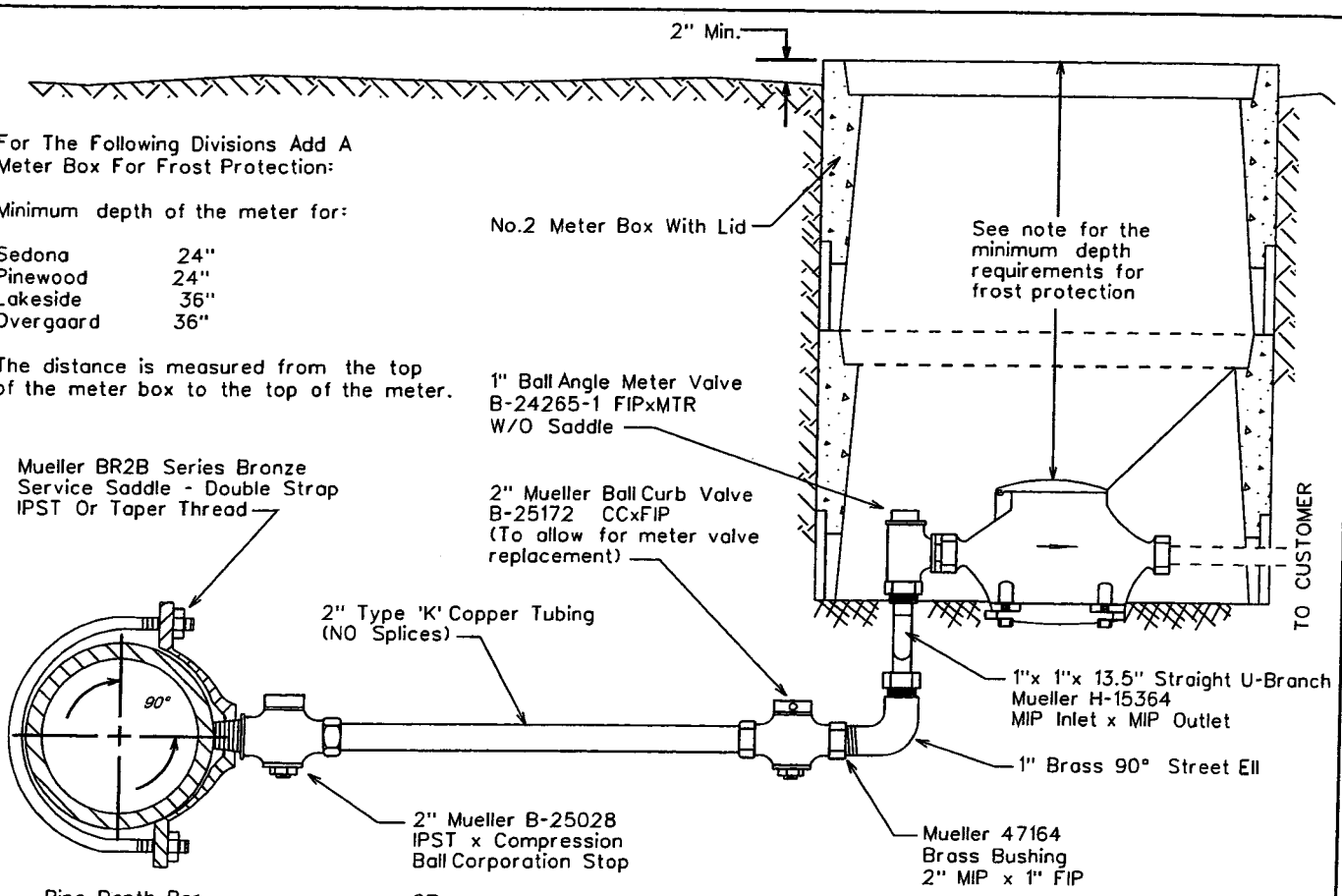

SADDLE TAP TO CA, PVC, OR DIPIPE

NOTE: The minimum distance between service taps on mains other than ductile iron is 12"

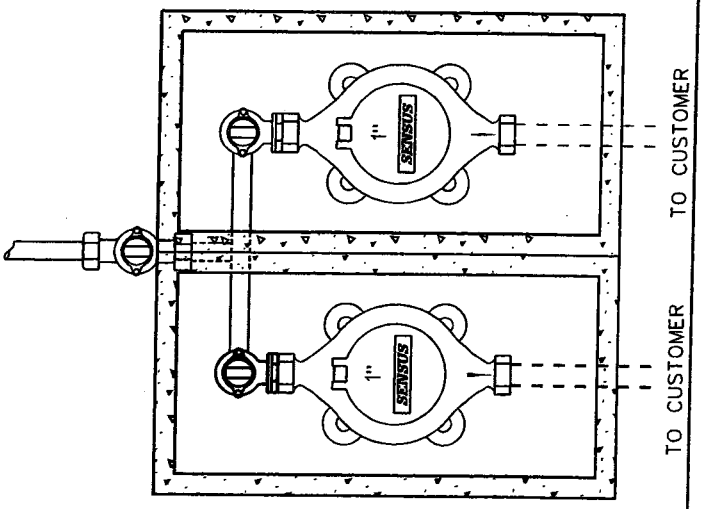

NOTE: THE LENGTH OF SERVICE IS LIMITED TO COMMERICIALLY AVAILABLE ROLLS, TYPICALLY 60 FEET

NOTE:
Only the meter is supplied by Arizona Water Company

ARIZONA WATER COMPANY

STANDARD SPECIFICATION
FOR THE INSTALLATION OF

DOUBLE SERVICE CONNECTION FOR 1" METERS

DRAWN BY:	APPROVED BY:	DATE:	△ 08.29.2006	
CB	M.W.	03.17.2006		E-9-10-2

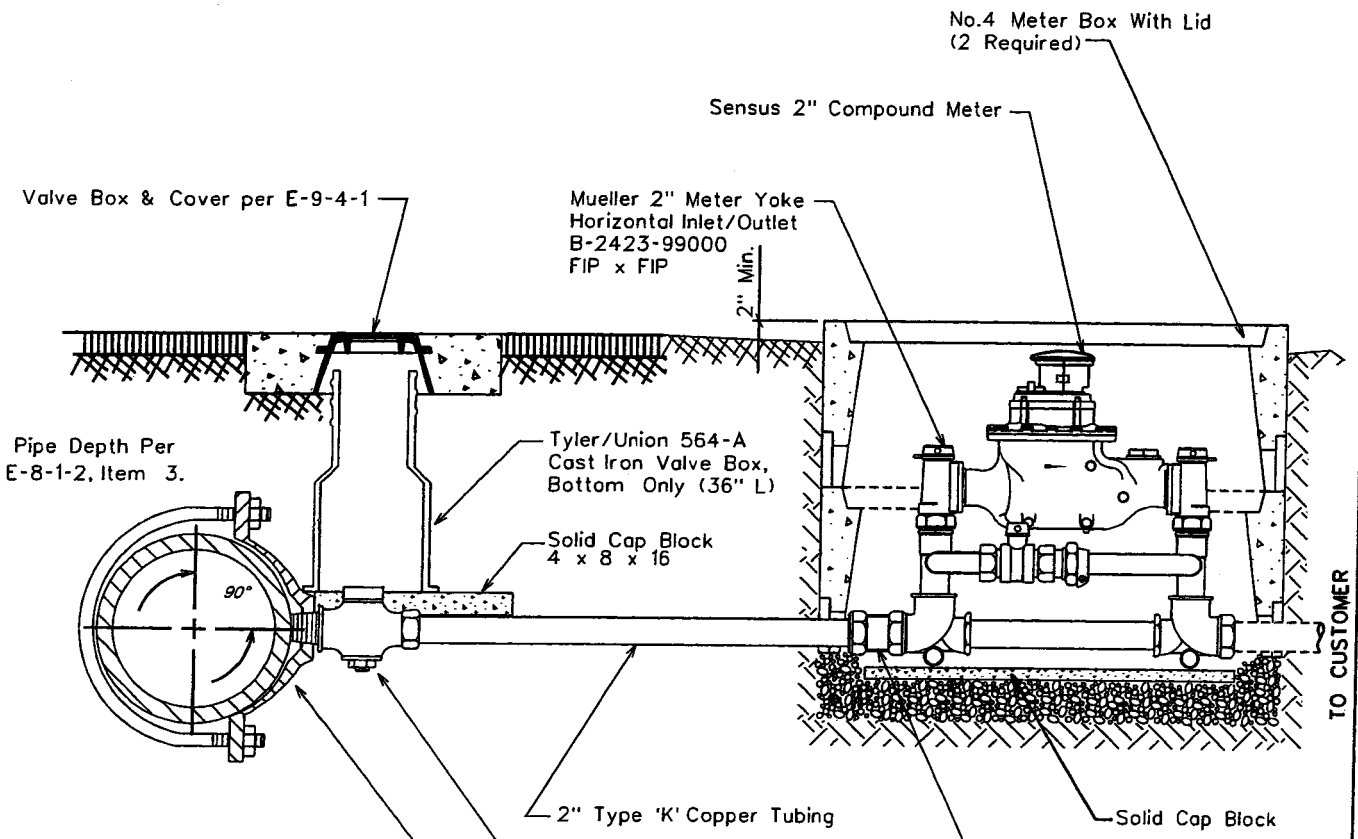

SADDLE TAP CONNECTION TO DUCTILE IRON PIPE

NOTE: The minimum distance between service taps on mains other than ductile iron is 12"

NOTE: THE LENGTH OF SERVICE IS LIMITED TO COMMERICIALLY AVAILABLE ROLLS, TYPICALLY 60 FEET

NOTE:

Only the meter is supplied by Arizona Water Company

ARIZONA WATER COMPANY

STANDARD SPECIFICATION
FOR THE INSTALLATION OF

TYPICAL 2" SERVICE CONNECTIONS

DRAWN BY:	APPROVED BY:	DATE:	△ 08.29.2006	
JW	M.W.	3/20/86		E-9-11-1

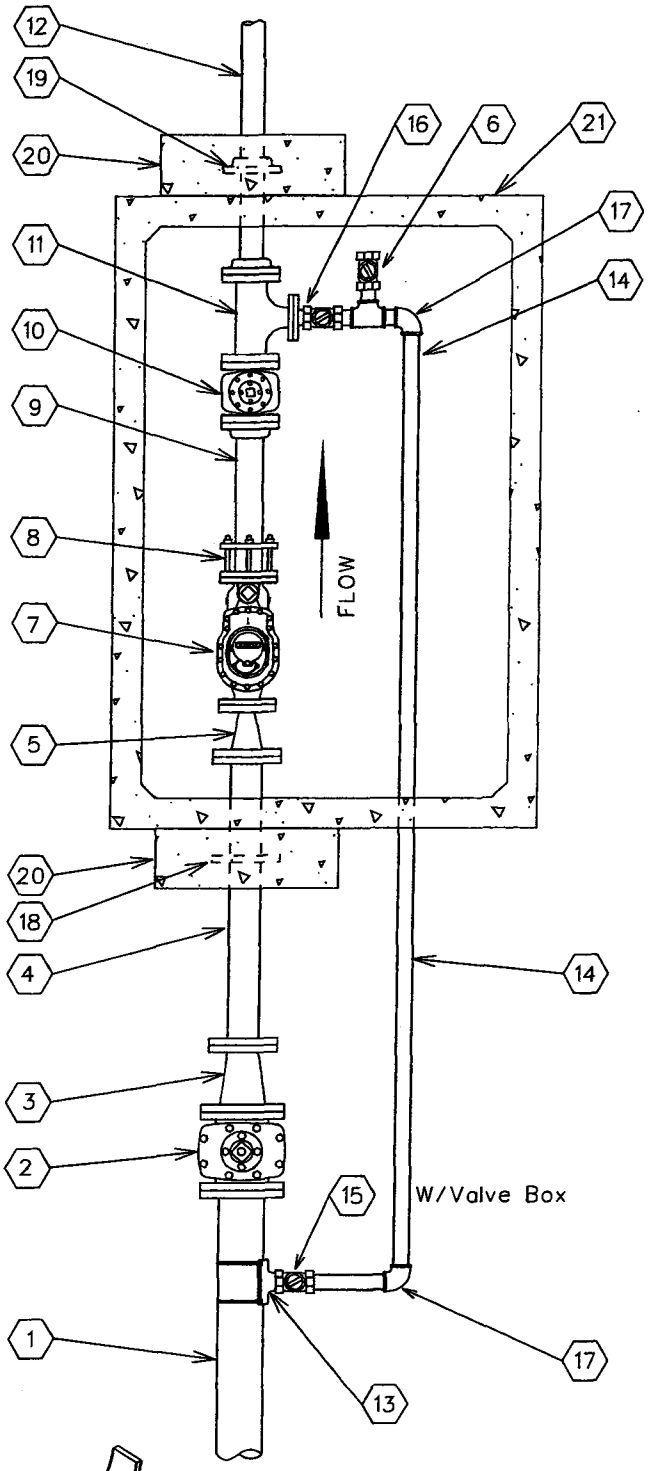

No.	FITTINGS SCHEDULE
1.	6" D.I.P.
2.	6" G.V.B.&C. mj x flng
3.	6"x4" Reducer flng x mj
4.	4"x3'-0" D.I.P. Spool flng x pe
5.	4" x 3" Reducer flng
6.	2" Test Port
7.	3" Compound Meter
8.	3" F.C.A.
9.	3"x2'-0" D.I. Spool flng x pe
10.	3" Gate Valve flng
11.	3"x2" Flg Tee w/ 2" Companion Flange
12.	3"x4'-0" D.I. Spool flng x pe
13.	6"x2" Tapping Saddle
14.	2" Copper Pipe
15.	2" Mueller B25122 Ball Valve w/B20299 Nut
16.	2" Locking Ball Valve (normally closed)
17.	2" Mueller H-15526 90° Ell CC x CC
18.	4" Megalug
19.	3" Slip-On Welding Flange
20.	24"x24"x8" Conc. Thrust Block P.I.P.
21.	575-LA Conc. Vault

NOTE:

1. Use Rowley pipe supports or equivalent as needed (See detail below).
2. Pipe support locations to be determined by field personnel.
3. All copper pipe that comes in contact with concrete to be wrapped w/10-20 Mil. Scotchwrap corrosion protection tape.
4. All mechanical joint fittings are to be megalugged.
5. Use deflection fittings (45° Ells.) to achieve necessary depths & cover as shown on the standard specification for the installation of a concrete vault (E-9-12-5).

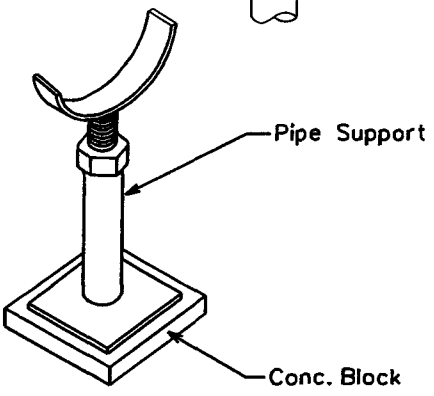

ARIZONA WATER COMPANY

STANDARD SPECIFICATION
FOR THE INSTALLATION OF

3" COMPOUND METER

DRAWN BY:	APPROVED BY:	DATE:		
CCO	MW	10/5/1993	△08.29.2006	E-9-12-1

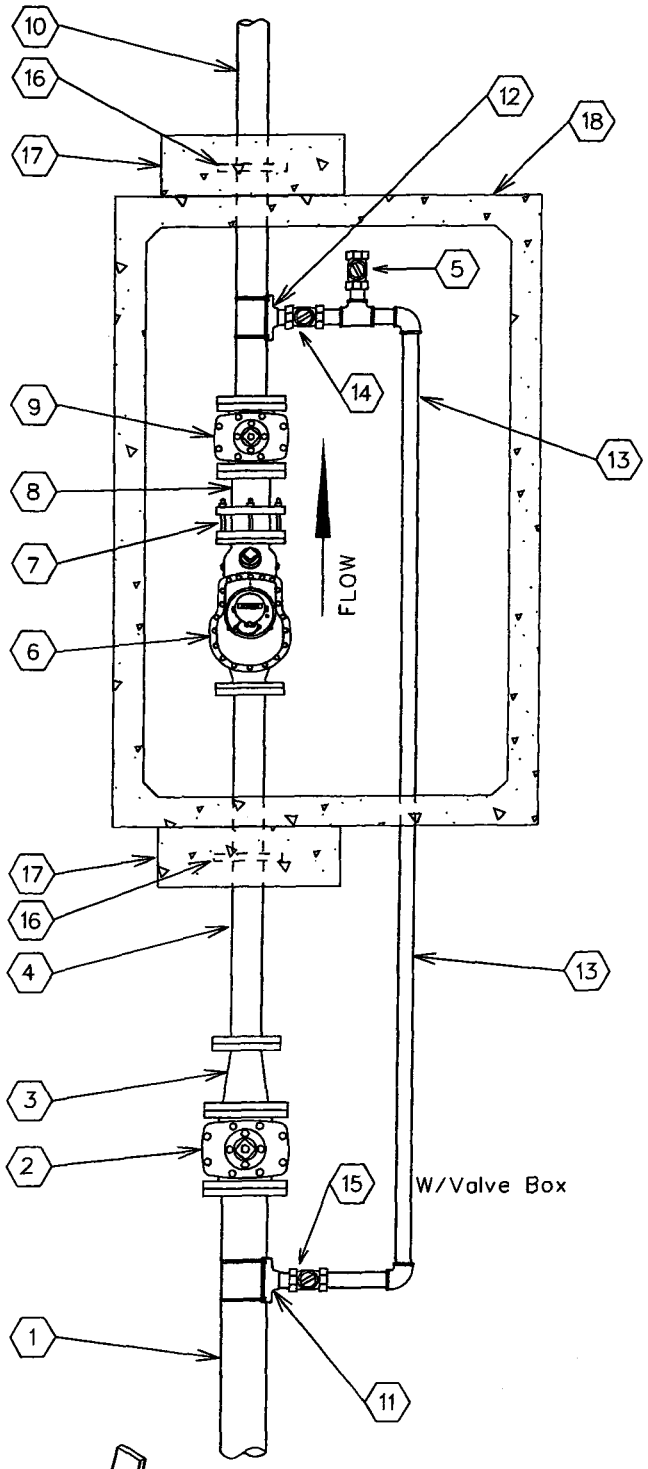

No.	FITTINGS SCHEDULE
1.	6" D.I.P.
2.	6" G.V.B.&C. mj x flng
3.	6"x4" Reducer flng x mj
4.	4"x3'-0" D.I.P. Spool flng x pe
5.	2" Test Port
6.	4" Compound Meter
7.	4" F.C.A.
8.	4"x1'-0" D.I.P. Spool flng x pe
9.	4" Gate Valve flng
10.	4"x4'-0" D.I.P. Spool flng x pe
11.	6"x2" Tapping Saddle
12.	4"x2" Tapping Saddle
13.	2" Copper Pipe
14.	2" Ball Valve / Locking (Normally Closed)
15.	2" Mueller B25122 Ball Valve w/B20299 Nut
16.	4" Megalug
17.	24"x24"x8" Conc. Thrust Block P.I.P.
18.	575-LA Conc. Vault

NOTE:

1. Use Rowley pipe supports or equivalent as needed (See detail below).
2. Pipe support locations to be determined by field personnel.
3. All copper pipe that comes in contact with concrete to be wrapped w/10-20 Mil. Scotchwrap corrosion protection tape.
4. All mechanical joint fittings are to be megalugged.
5. Use deflection fittings (45° Ells.) to achieve necessary depths & cover as shown on the standard specification for the installation of a concrete vault (E-9-12-5).

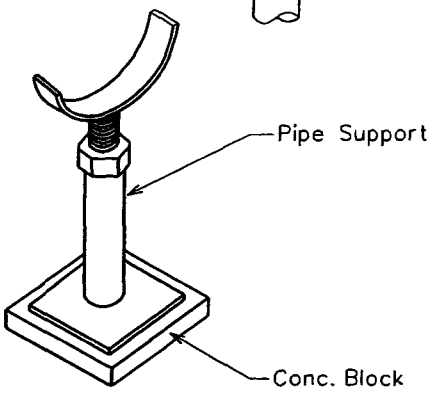

ARIZONA WATER COMPANY

STANDARD SPECIFICATION
FOR THE INSTALLATION OF

4" COMPOUND METER

DRAWN BY:	APPROVED BY:	DATE:		
CCO	MW	10/5/1993	△08.29.2006	E-9-12-2

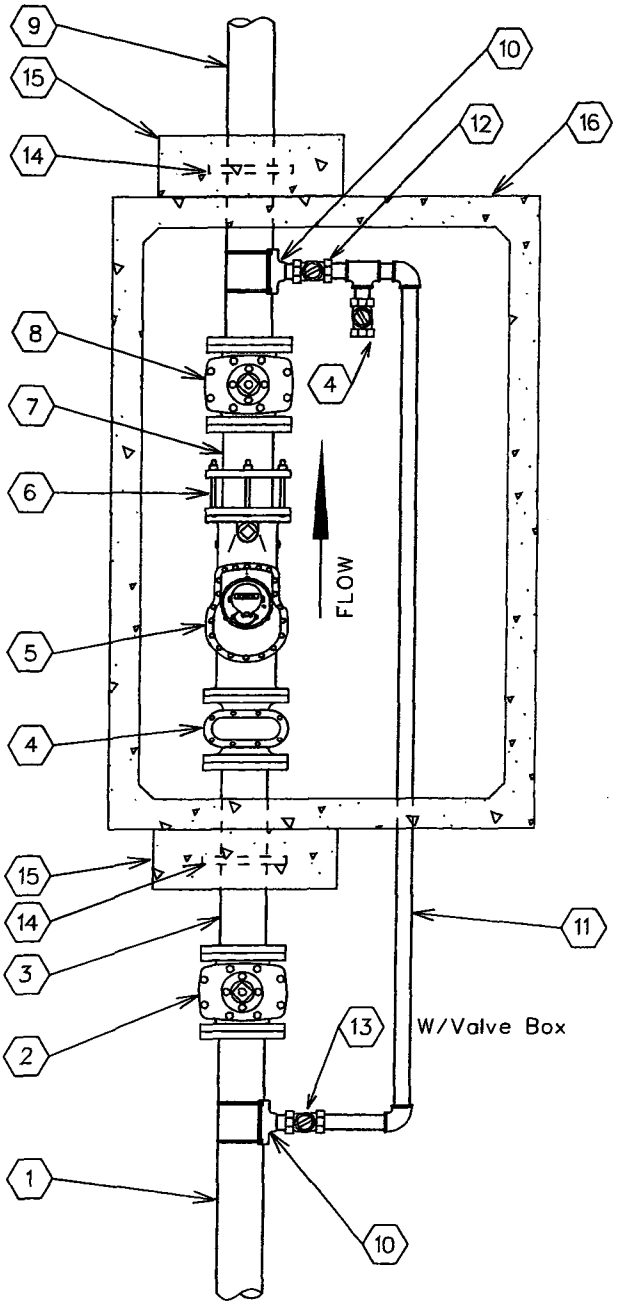

No.	FITTINGS SCHEDULE
1.	6" D.I.P.
2.	6" G.V.B.&C. mj
3.	6"x 3'-0" D.I.P. Spool flng x pe
4.	2" Test Port
5.	6" Compound Meter
6.	6" F.C.A.
7.	6"x 1'-0" D.I.P. Spool flng x pe
8.	6" Gate Valve flng
9.	6"x 4'-0" D.I.P. Spool flng x pe
10.	6"x2" Tapping Saddle
11.	2" Copper Pipe
12.	2" Ball Valve / Locking (Normally Closed)
13.	2" Mueller B25122 Ball Valve w/B20299 Nut
14.	6" Megalug
15.	24"x24"x8" Conc. Thrust Block P.I.P.
16.	575-LA Conc. Vault

NOTE:

1. Use Rowley pipe supports or equivalent as needed (See detail below).
2. Pipe support locations to be determined by field personnel.
3. All copper pipe that comes in contact with concrete to be wrapped w/10-20 Mil. Scotchwrap corrosion protection tape.
4. All mechanical joint fittings are to be megalugged.
5. Use deflection fittings (45° Ells.) to achieve necessary depths & cover as shown on the standard specification for the installation of a concrete vault (E-9-12-5).

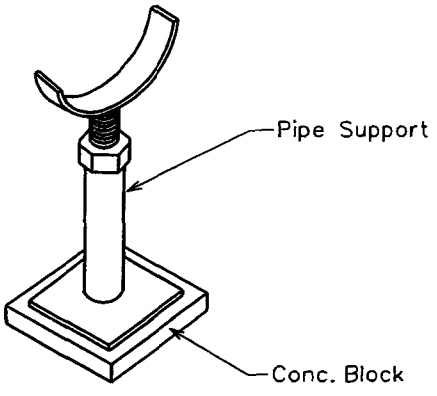

ARIZONA WATER COMPANY

STANDARD SPECIFICATION
FOR THE INSTALLATION OF

6" COMPOUND METER

DRAWN BY:	APPROVED BY:	DATE:		
CCO	MW	10/5/1993	△08.29.2006	E-9-12-3

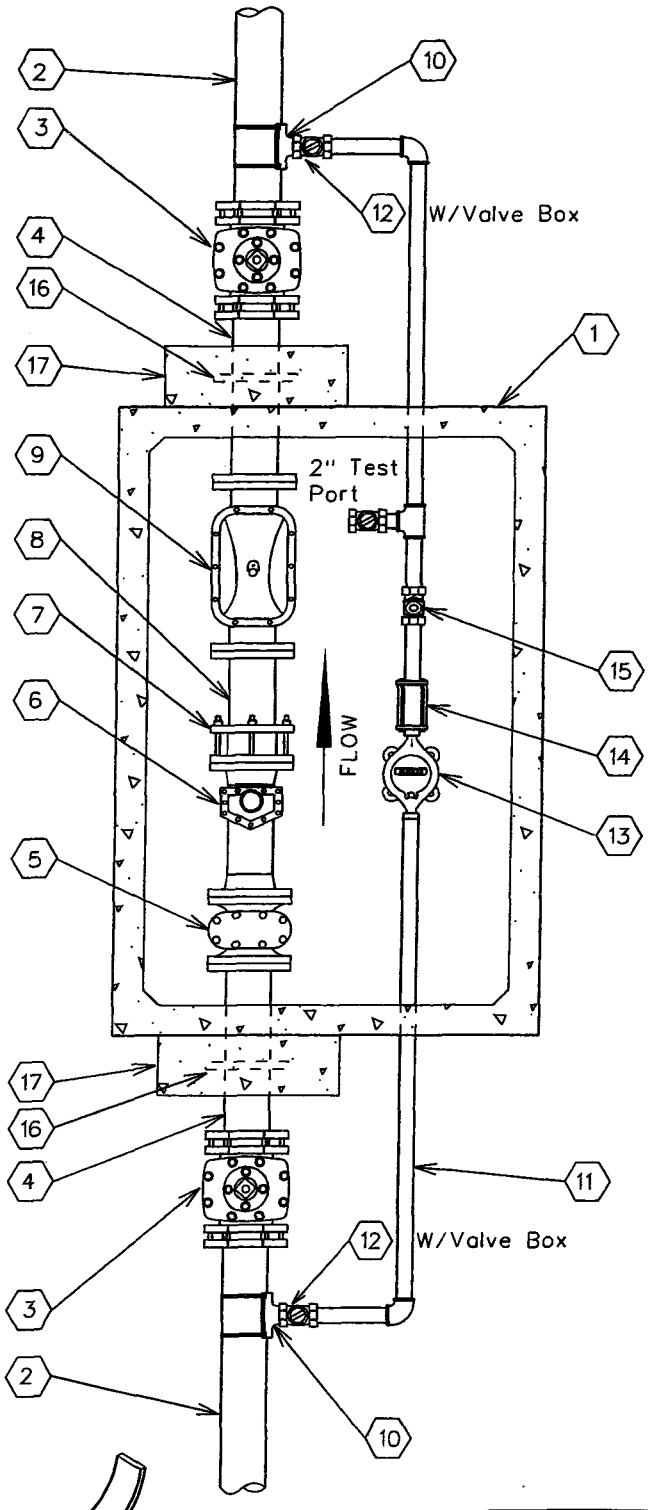

No.	FITTINGS SCHEDULE
1.	575-LA Conc. Vault
2.	6" D.I.P.
3.	6" G.V.B.&C. m.j.
4.	6" x 3'-0" D.I.P. SPool Piece flng x pe
5.	6" Strainer
6.	6" Turbo Meter
7.	6" F.C.A.
8.	6" x 2'-0" D.I.P. Spool Piece flng x pe (TRIM SPOOL PIECE TO 3x THE PIPE DIA.)
9.	6" Detector Check
10.	6"x*N" Tapping Saddle
11.	*N" Copper Pipe
12.	*N" Ball Valve (Locking)
13.	*N" Meter
14.	*N" Coup. Adapt.
15.	*N" Flapper Check Valve
16.	6" Megalug
17.	24"x24"x8" Conc. Thrust Block P.I.P.

*N - Size To Be determined By A.W.Co.

NOTE:

1. Use Rowley pipe supports or equivalent as needed (See detail below).
2. Pipe support locations to be determined by field personnel.
3. All copper pipe that comes in contact with concrete to be wrapped w/10-20 Mil. Scotchwrap corrosion protection tape.
4. All mechanical joint fittings are to be megalugged.
5. Use deflection fittings (45° Ells.) to achieve necessary depths & cover as shown on the standard specification for the installation of a concrete vault (E-9-12-5).
6. To change from a 6" service to a 4" service, change all listed 6" materials to 4" materials.

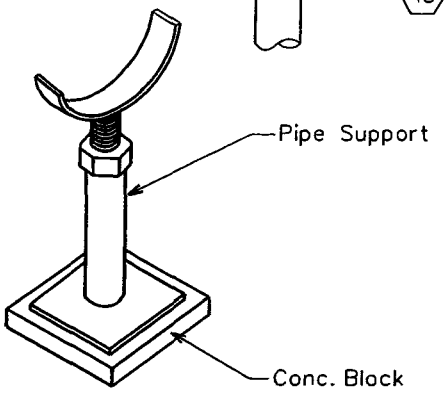

ARIZONA WATER COMPANY

STANDARD SPECIFICATION
FOR THE INSTALLATION OF

6" COMPOUND SERVICE

DRAWN BY:	APPROVED BY:	DATE:		
CCO	MW	10/05/1993	△08.29.2006	E-9-12-4

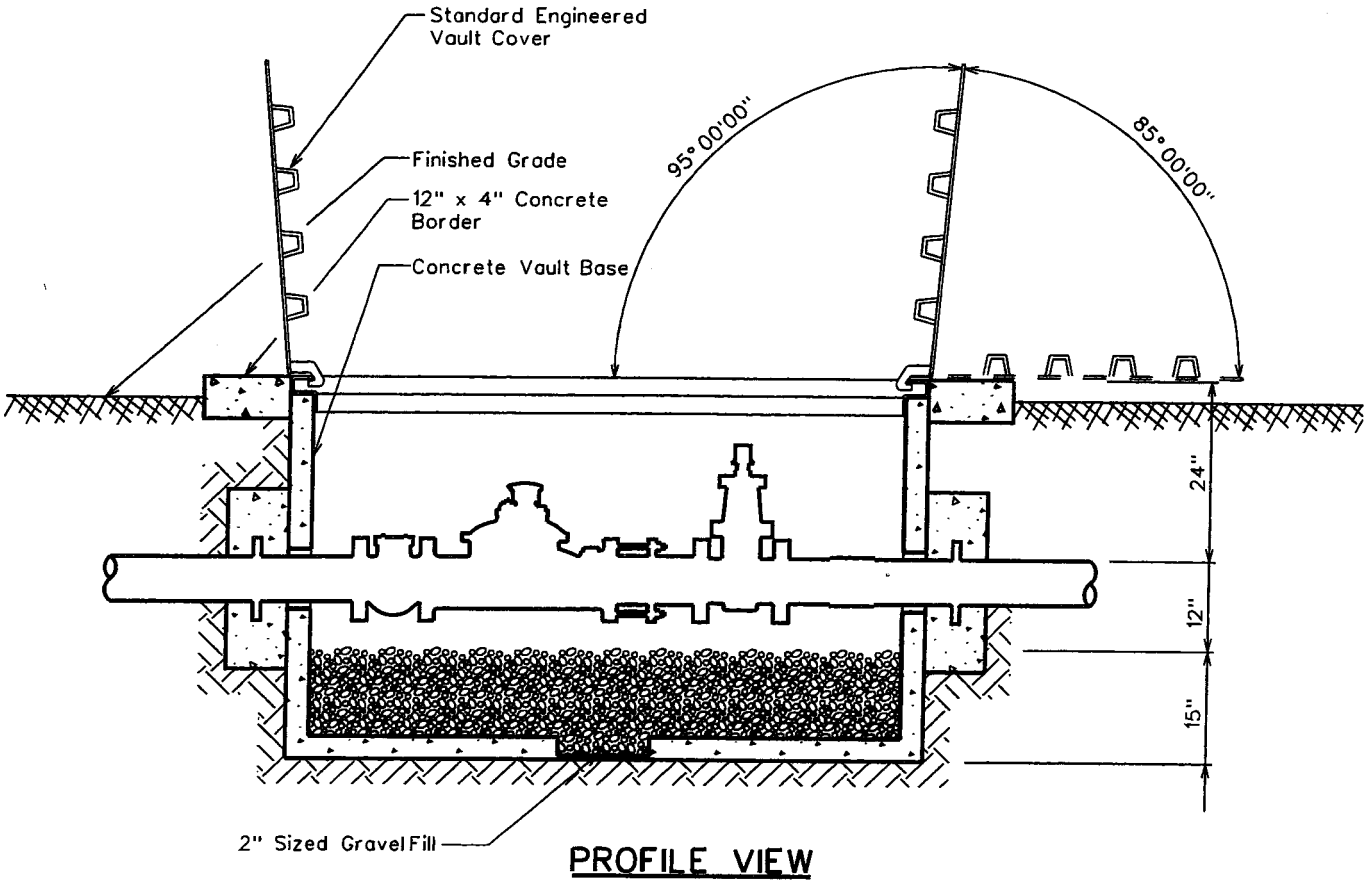

PROFILE VIEW

CONCRETE VAULT & COVER SPECIFICATIONS

Vault - Base No. 575-BL
Cover - Standard Engineered Vault Cover
- 4874 Aluminum Diamond Plate Cover For Non-Traffic Loading Areas
  Or
- 4874 Galvanized Steel Diamond Plate Cover W/ H-20 Traffic Loading
- Double Torsion Spring Assisted Doors W/ Recessed Hasp & Safety Latches

NOTES

1. Total Depth Of Concrete Vault To Be A Maximum Of 3'-0" From Top Of Vault Cover To Top Of Gravel Fill.
2. Service Connections Larger Than 6" In Diameter Will Conform To The Same Vault & Cover Specifications. Size Of Vault & Cover To Be Determined By A.W.Co. Engineers.

ARIZONA WATER COMPANY

STANDARD SPECIFICATION
FOR THE INSTALLATION OF

CONCRETE VAULT

DRAWN BY:	APPROVED BY:	DATE:		
CCO	MW	10/5/1993	△ 05.17.2001	E-9-12-5

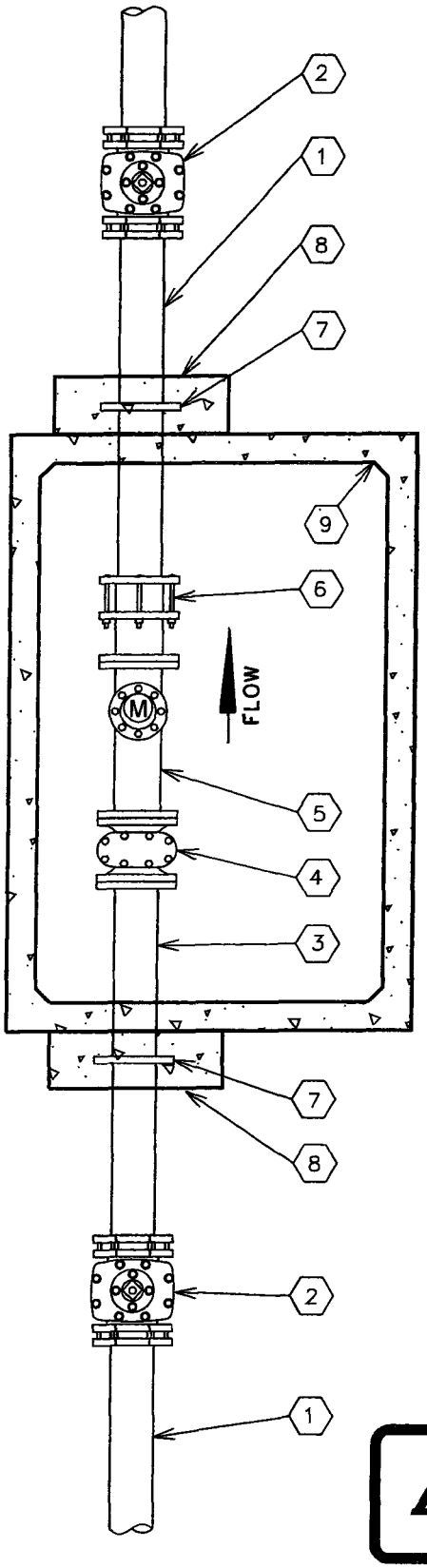

No.	FITTINGS SCHEDULE
1.	Ductile Iron Pipe
2.	Gate Valve M.J.
3.	D.I.P. Spool Piece Flg x Pe (10xDia.)
4.	Meter Strainer
5.	Propeller Meter
6.	Flanged Coupling Adapter
7.	Megalug Gland (Thrust Anchor)
8.	Concrete Thrust Block P.I.P.
9.	Concrete Vault

NOTE:

1. Use Rowley pipe supports or equivalent as needed (See E-9-12-4).
2. Pipe support locations to be determined by field personnel.
3. All Sched. 40 Stl. pipe outside of vault to be wrapped w/10-20 Mil. Scotchwrap corrosion protection tape.
4. All mechanical joint fittings to are to be megalugged.
5. Use deflection fittings (45° Ells.) to achieve necessary depths & cover as shown on the standard specification for the installation of a concrete vault (E-9-12-5).

ARIZONA WATER COMPANY

STANDARD SPECIFICATION
FOR THE INSTALLATION OF

NON-POTABLE PROPELLER METER

DRAWN BY:	APPROVED BY:	DATE:	△	
JPK	MW	7-20-95		E-9-12-6

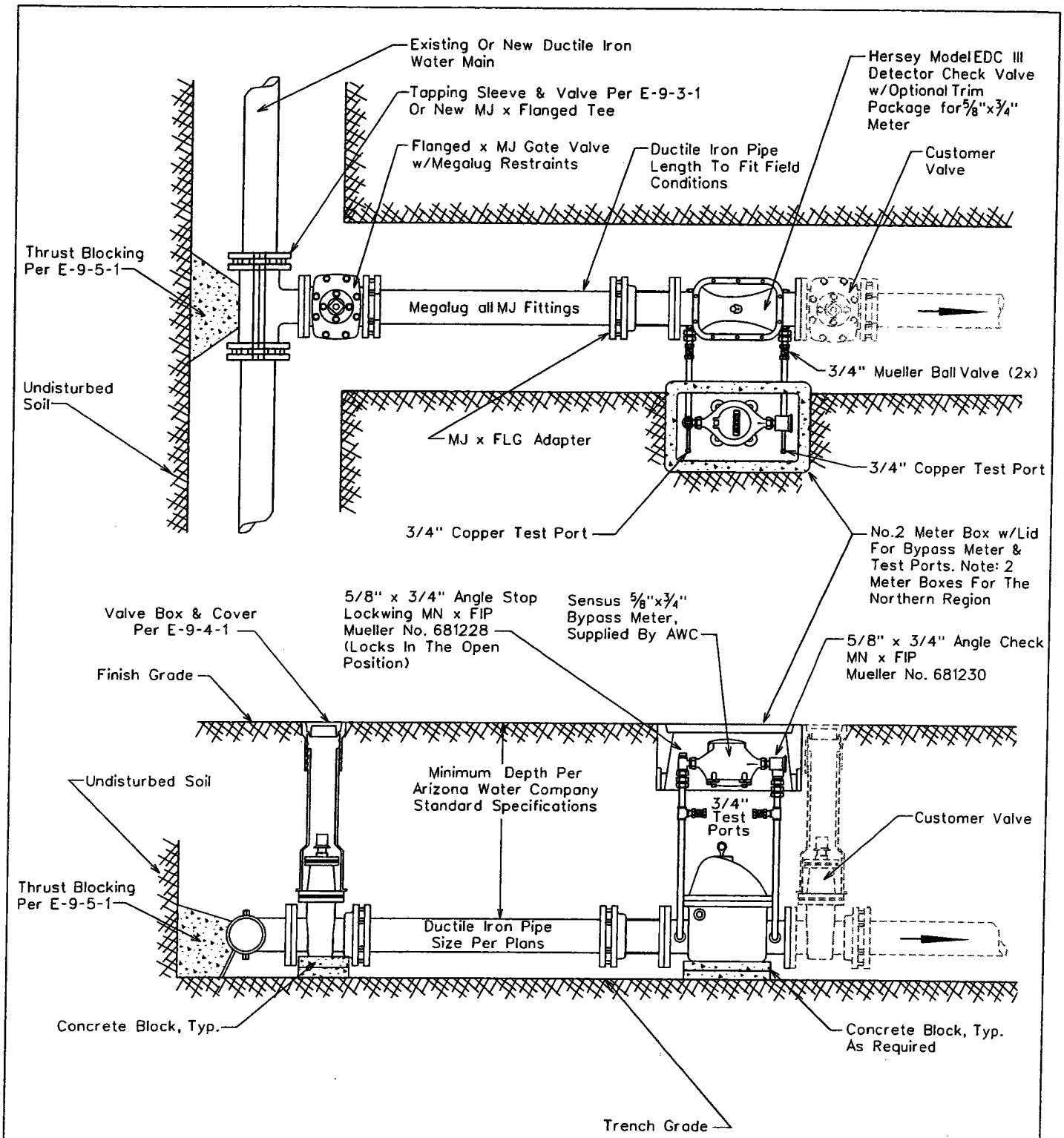

ARIZONA WATER COMPANY

STANDARD SPECIFICATION

FOR THE INSTALLATION OF

TYPICAL 4" THRU 8" DETECTOR CHECK VALVES

DRAWN BY:	APPROVED BY:	DATE:	△	
CB	MW	10.16.1990	01.16.2007	E-9-13-1

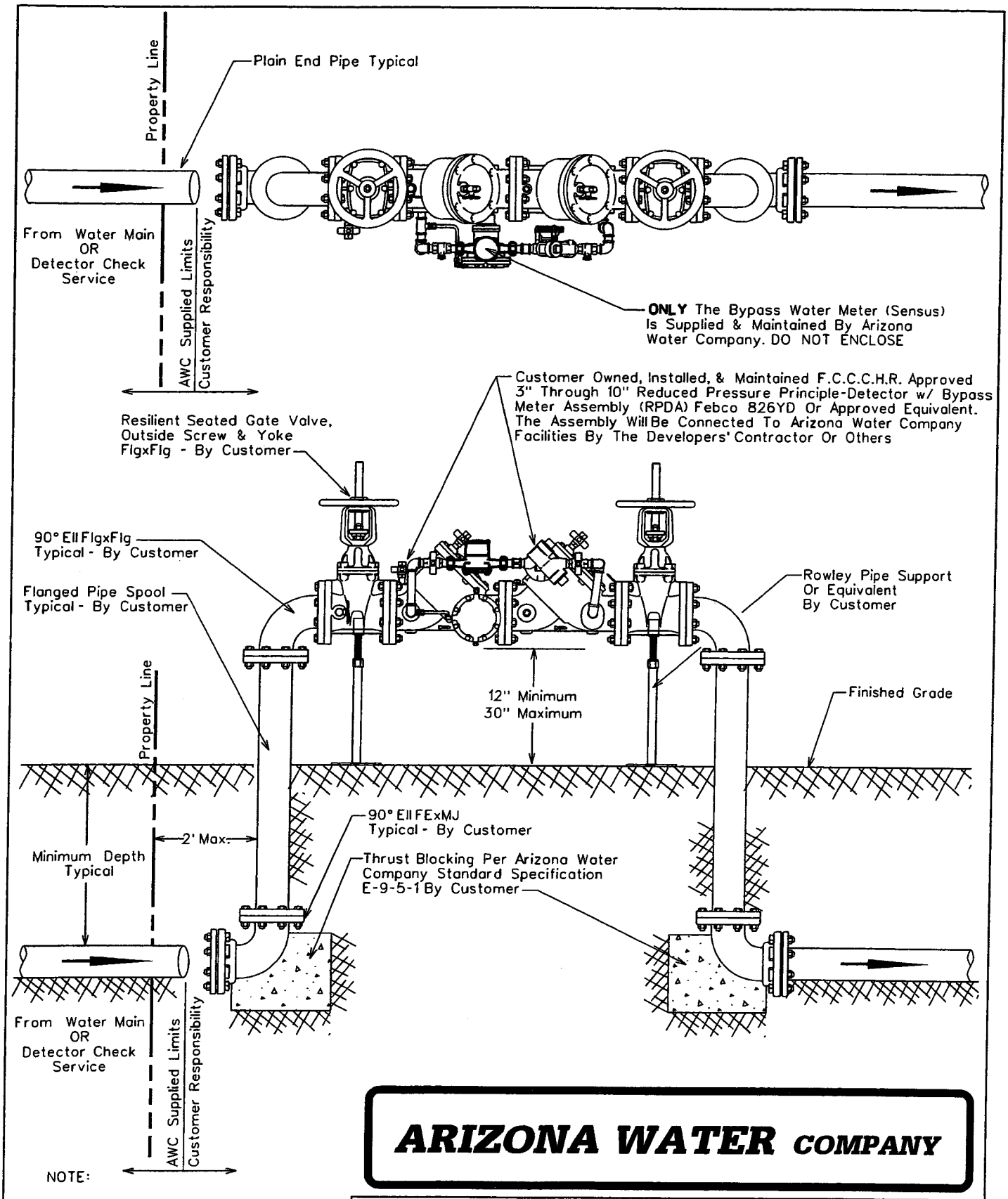

ARIZONA WATER COMPANY

NOTE:

Minimum Depth Of Cover Over
6" & 8" Mains is 36 Inches,
12" & Greater is 48 Inches
Unless Otherwise Specified

STANDARD SPECIFICATION

FOR THE INSTALLATION OF

3" THRU 10" REDUCED PRESSURE PRINCIPLE-DETECTOR
WITH BYPASS METER ASSEMBLY (RPDA) FOR FIRELINE SERVICES

DRAWN BY:	APPROVED BY:	DATE:		
CB	MW	10-13-98	△1-19-2000	E-9-13-2

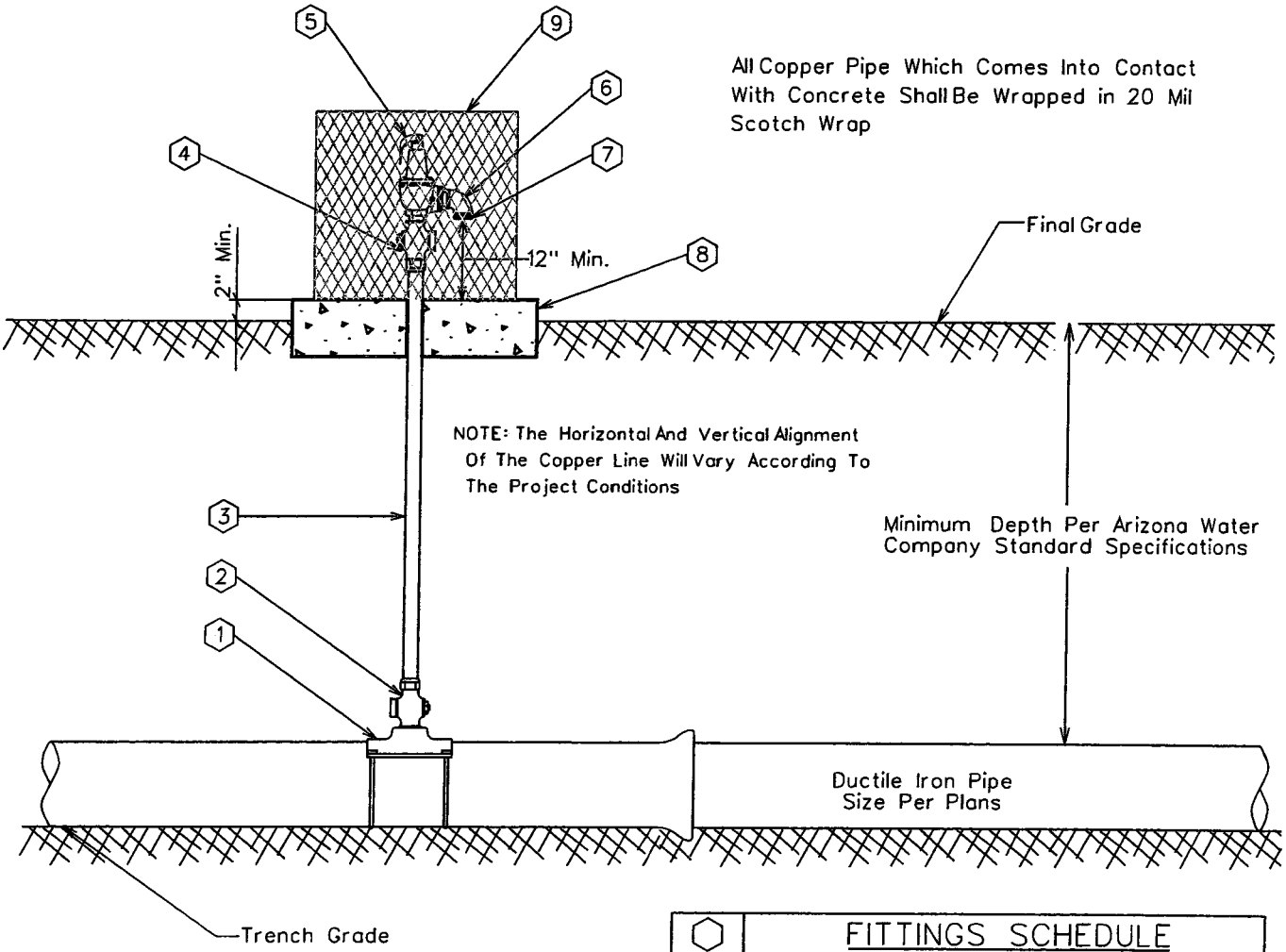

⬡	FITTINGS SCHEDULE
1.	Mueller BR2B Bronze Service Saddle - Double Strap
2.	2" Mueller B-25008 Taper x Comp. Ball Corp Stop
3.	2" Type 'K' Copper w/NO Splices - Field Fit
4.	2" Mueller B-25028 IP x Comp. Ball Corp Stop
5.	2" Pressure Relief Valve Watts 174A With A 2" Inlet / 2" Outlet 30-150 psi W/ Bronze Body
6.	2" Brass Street Elbow
7.	No.16 Wire Mesh Screen (Non-Corrodible)
8.	4" Thick Concrete Pad - Class 'C' Concrete
9.	Vandal enclosure to be centered on the concrete pad

NOTE:

1. Pressure relief valves are typically located just down stream of a pressure reducing station or where system conditions might be subject to greater than allowable pressures.
2. The relief valve assembly and vandal enclosure shall be located out of the roadway, but within the right-of-way or easement.

ARIZONA WATER COMPANY

STANDARD SPECIFICATION
FOR THE INSTALLATION OF

TYPICAL PRESSURE RELIEF VALVE ASSEMBLY

DRAWN BY:	APPROVED BY:	DATE:	△	
CCO	MW	3/20/1986	△ 08.29.2006	E-9-14-1

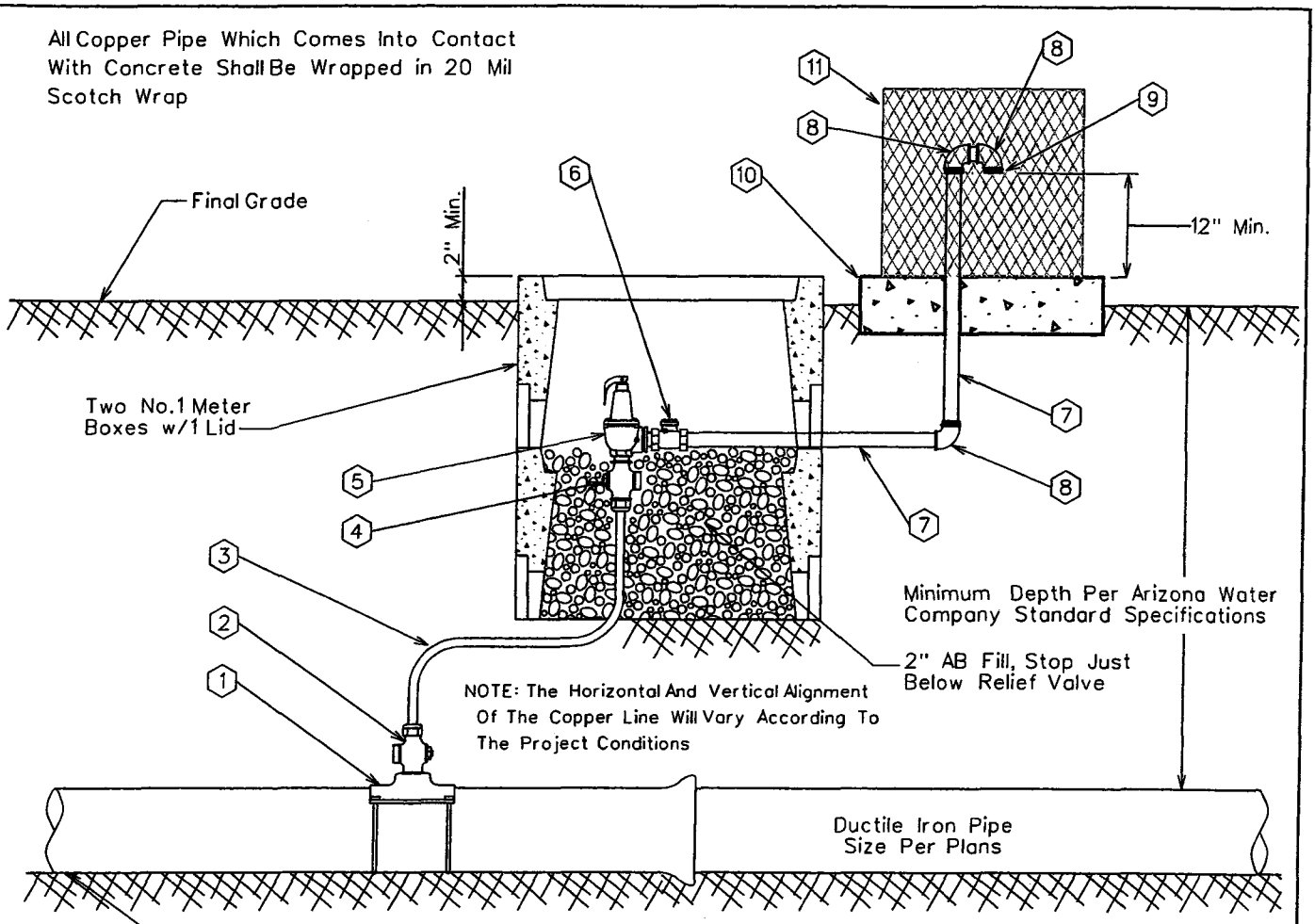

NOTE:

1. Pressure relief valves are typically located just down stream of a pressure reducing station or where system conditions might be subject to greater than allowable pressures.
2. The relief valve assembly and vandal enclosure shall be located out of the roadway, but within the right-of-way or easement.

⬡	FITTINGS SCHEDULE
1.	Mueller BR2B Bronze Service Saddle - Double Strap
2.	2" Mueller B-25008 Taper x Comp. Ball Corp Stop
3.	2" Type 'M' Rigid Copper w/NO Splices - Field Fit
4.	2" Mueller B-25028 IP x Comp. Ball Corp Stop
5.	2" Pressure Relief Valve Watts 174A With A 2" Inlet / 2" Outlet 30-150 psi W/ Bronze Body
6.	2" Bronze Check Valve Watts Series CV
7.	2" Schedule 40 Cut Pipe - Field Fit
8.	2" Brass Street Elbow
9.	No.16 Wire Mesh Screen (Non-Corrodible)
10.	4" Thick Concrete Pad - Class 'C' Concrete
11.	Guardshack, Model GS-1, Available From BPDI, Inc. Available In Leaf Green Or Desert Tan

ARIZONA WATER COMPANY

STANDARD SPECIFICATION

FOR THE INSTALLATION OF

PRESSURE RELIEF VALVE - NORTHERN REGION

DRAWN BY:	APPROVED BY:	DATE:		
CCO	MW	3/20/1986	△08.29.2006	E-9-14-2

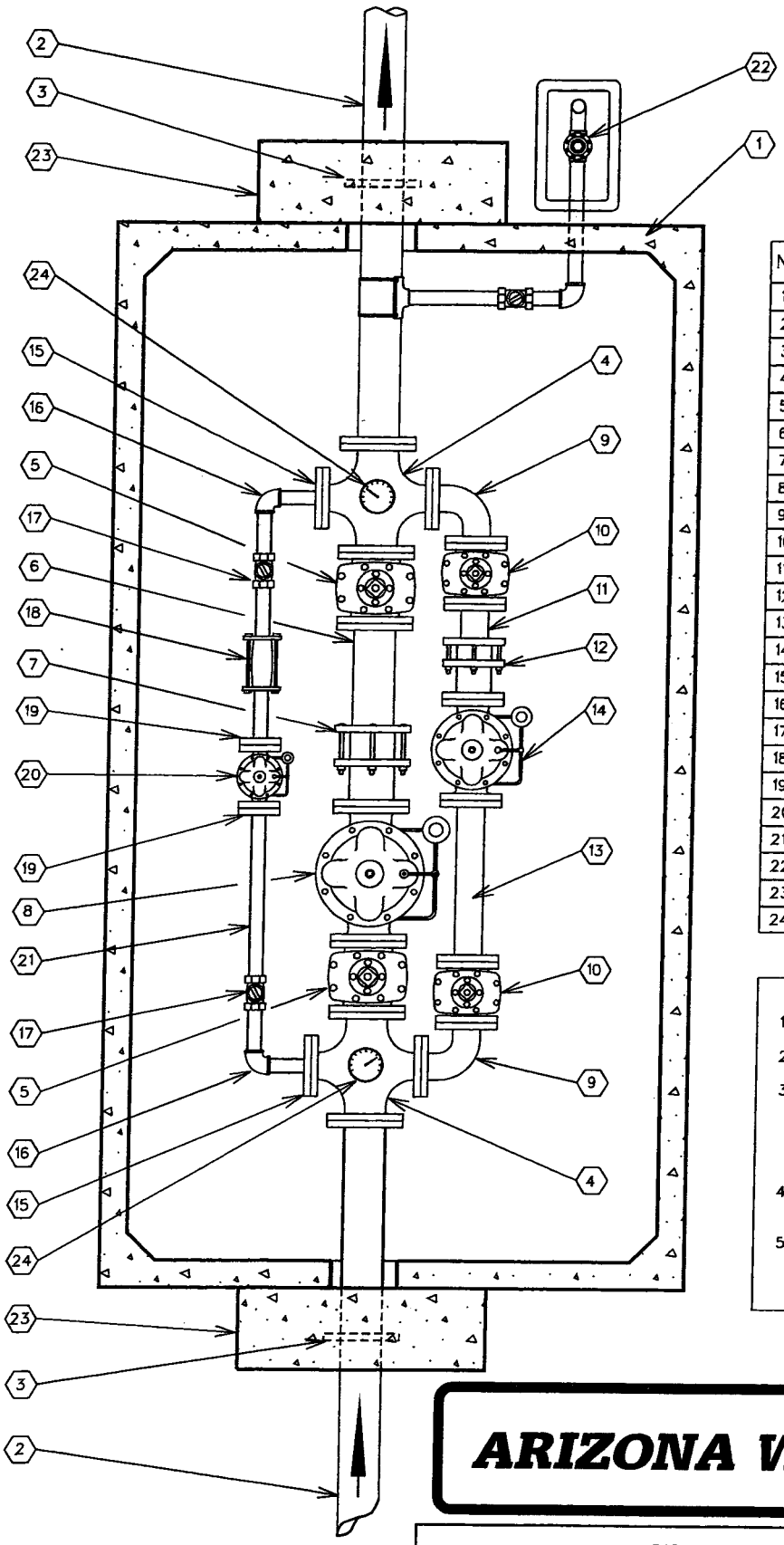

No.	FITTINGS SCHEDULE
1.	612 LA Conc. Vault (See Note 3)
2.	6"x6'-0" D.I.P. Spool Flg.xP.E.
3.	6" Megalug (Thrust Anchor)
4.	6"x4" Cross Flg.
5.	6" Gate Valve Flg.
6.	6"x2'-0" D.I.P. Spool Flg.xP.E.
7.	6" Flg. Coup. Adapt. (Rockwell 913)
8.	6" High Flow Pressure Reducing Valve Flg.
9.	4" 90° Ell. Flg.
10.	4" Gate Valve Flg.
11.	4"x1'-0" D.I.P. Spool Flg.xP.E.
12.	4" FLg. Coup. Adapt. (Rockwell 913)
13.	4"x2'-0" D.I.P. Spool Flg.
14.	4" Medium Flow Pressure Reducing Valve Flg.
15.	2"x9" O.D. Reducing Flg. (I.P.T.)
16.	2" 90° Ell. F.I.P.
17.	2" Ball Valve F.I.P.
18.	2" Comp. Coup. (Rockwell 411)
19.	2" Companion Flg. (I.P.T.)
20.	2" Low Flow Pressure Reducing Valve Flg.
21.	2" Sched. 40 Stl. Pipe
22.	2" Pressure Relief Valve (See E-9-14-1)
23.	12"x36"x36" Conc. Thrust Block P.I.P.
24.	Pressure Gauge w/shut off valve

NOTE:

1. Use Rowley pipe supports or equivalent as needed. (See E-9-12-4)
2. Pipe support locations to be determined by field personnel.
3. Vault-612 LA top section w/12" Dia. sump hole. Cover-concrete slab top w/(4) 4'-0" x2'-6" aluminum spring loaded hinged style covers for non-traffic loading areas. For areas w/low density traffic, cover is to be designed for H-20 traffic loading.
4. All Sched. 40 Stl. pipe outside of vault to be wrapped w/10-20 Mil. Scotchwrap corrosion protection tape.
5. Use deflection fittings (45° Ells.) to achieve necessary depths & cover as shown on the standard specification for the installation of a concrete vault (E-9-12-5).

ARIZONA WATER COMPANY

STANDARD SPECIFICATION

FOR THE INSTALLATION OF

PRESSURE REDUCING STATION

DRAWN BY:	APPROVED BY:	DATE:		
JPK	MW	11-16-88	△ 9-27-95	E-9-15-1

1. Specific Items To Be Painted Deer-O Pure White Enamel:

A. All Booster Pumps.
B. All Electrical Motors And Gas Engines.
C. Well Pump Discharge Heads.
D. Electrical Panel.

2. Specific Items To Be Painted Frost Cap White Or Deer-O Pure White Enamel:

A. Well Shelter.

3. Specific Items To Be Painted OSHA Orange:

A. Electrical Conduit.

4. All Other Items To Be Painted With Either:
(At Manager's Discretion)

A. Cholla Green
B. Forest Green
C. Sonora Beige
D. Red Rock
E. Rock Brown
F. Deer-O Pure White
G. Elkhorn Cactus

ARIZONA WATER COMPANY

STANDARD SPECIFICATION
FOR THE INSTALLATION OF

PAINT COLOR SELECTION

DRAWN BY:	APPROVED BY:	DATE:	△	
CCO		3/20/1986	2/13/2001	E-9-16-1

1. Tank shall conform to AWWA Specification D100-84 with exceptions noted below.

*2. 1/4" minimum shell plate.

3. Minimum of 12" diameter roof vent, screened with No. 16 non-corrodible wire mesh, to be located on a 24" diameter round hinged manhole opening at the center of the tank to provide access to the dollar plate.

4. Overflow pipe shall be the same diameter as the inlet pipe and shall terminate 12 to 24 inches above splash pad or a minimum of 2 overflow pipe diameters above weir box high water level.

5. Storage tank shall be placed upon adequately compacted base material.

6. 6" minimum floor mounted tank drain outlet to be located close to the outer shell.

7. Tank and related fittings shall be enclosed with a 6 foot chain link fence with lockable gates and anti-personnel wire on top of fence.

8. Liquid level shall be indicated by a target and target board on the outside surface of the tank.

9. 24 inch diameter manholes shall be provided on the roof and on the shell near the bottom of the tank. The roof manhole cover shall overlap the manhole by at least 2 inches to provide a rain tight closure. Roof manhole shall be hinged and equipped with a lock. Shell manhole cover to be hinged and bolted in place. *Tanks larger than a 60 foot diameter require 2 shell manholes.

10. Inside and outside ladders shall be located at the roof manhole. Outside ladder shall be caged with locking trap door. Bottom 8 feet of cage shall be enclosed to within 1/2" of shell with 10 gauge sheet steel.

11. Finished tank shall be disinfected in accordance with Arizona Department of Health Services Engineering Bulletin No. 8 before being placed into service.

12. The following information will be included with application for approval to construct:

    1. Tank location_____
    2. Tank height_____
    3. Tank diameter_____
    4. Tank capacity_____
    5. Method of water level control_____

13. The storage tank will not be constructed within the 100 year flood plain and the tank site will be graded to slope away from the tank.

14. The welded steel storage tank will be coated as per AWWA Specification D102, and N.S.F. Standard 61.

*Exceptions to AWWA Specification D100-84

FOUNDATION NOTES

1. FINISH CONCRETE SURFACE MUST SLOPE UPWARDS FROM THE STEEL BAND APPROX. 1" IN 10'-0".

2. TOP OF STEEL BAND MUST BE MAINTAINED LEVEL TO WITHIN 1/8".

3. INSTALL 8-2" DIA.x10'-0" P.V.C. WEEP LINES, EQUALLY SPACED (EVERY 45°). PERFORATE 8'-0" OF LINE WITH 1/2" DIA. HOLES @ 6" O.C. PLUG INTERIOR END OF LINE w/2" CAP.

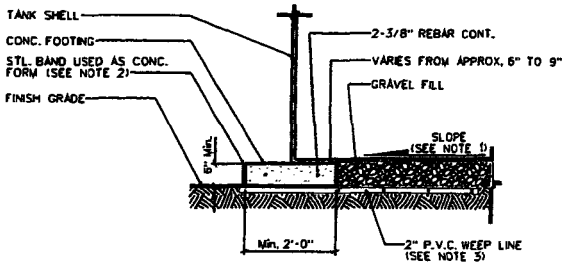

FOUNDATION DETAIL

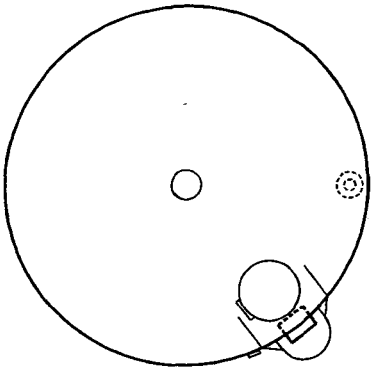

PLAN VIEW

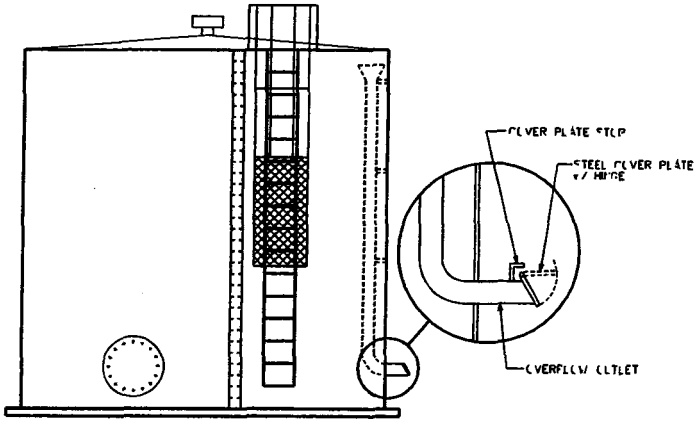

PROFILE VIEW

ARIZONA WATER COMPANY

STANDARD SPECIFICATION

FOR THE INSTALLATION OF

STEEL WATER STORAGE TANK

DRAWN BY:	APPROVED BY:	DATE:	△	
JPK	MJW	10-17-88	2-12-96	E-9-17-1

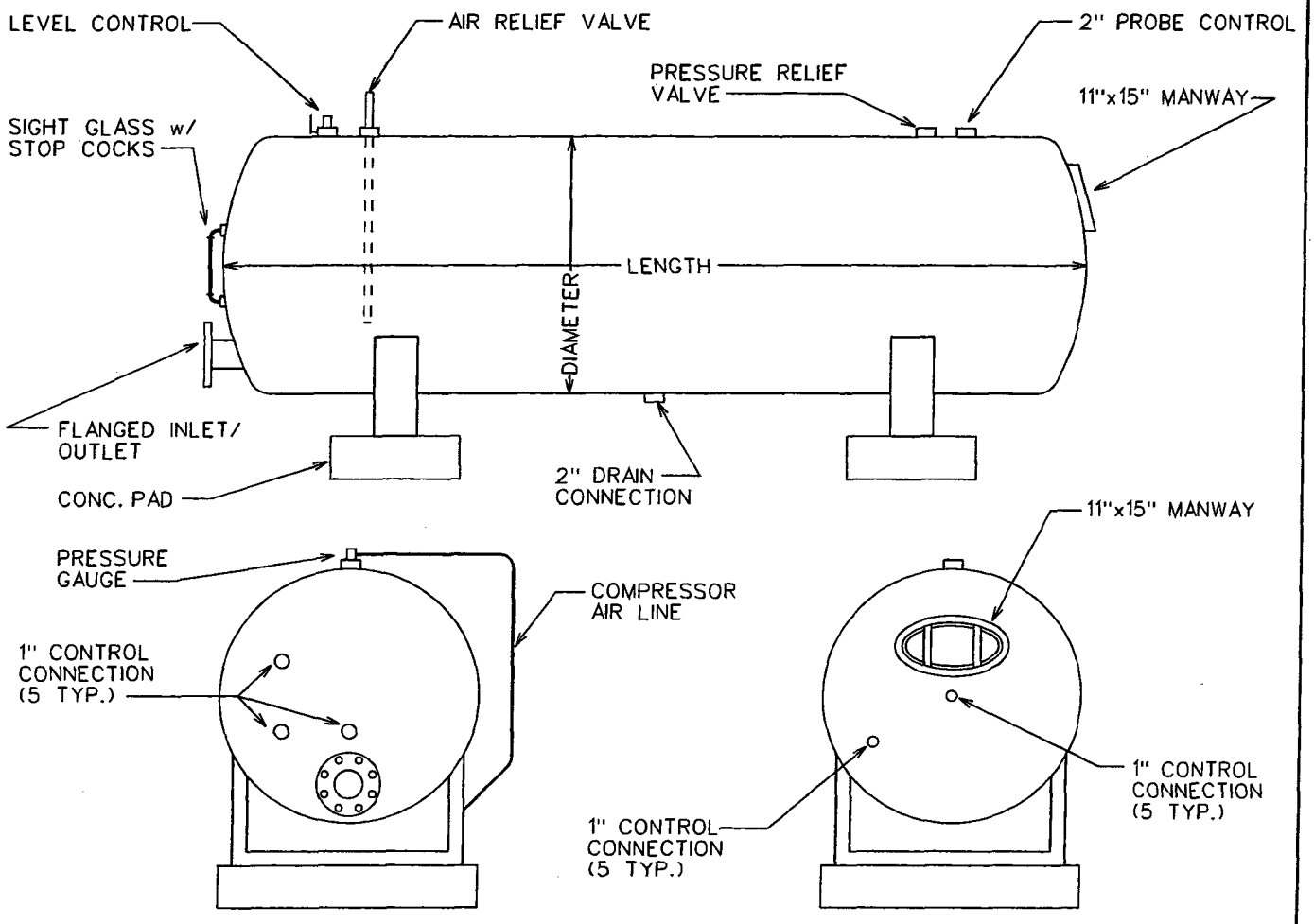

INLET/OUTLET END

MANWAY END

1. ALL HYDROPNEUMATIC TANKS SHALL BE DESIGNED & CONSTRUCTED IN ACCORDANCE WITH THE CURRENT REQUIREMENTS OF THE ASME CODE FOR UNFIRED PRESSURE VESSELS, SECTION VIII, DIVISION 1.
2. FINISHED TANK SHALL BE DISINFECTED IN ACCORDANCE WITH ADEQ BULLETIN No. 8 BEFORE BEING PLACED INTO SERVICE.
3. THE WELDED STEEL HYDROPNEUMATIC TANK WILL BE COATED AS PER AWWA SPECIFICATION D102 & NSF STANDARD 61.
4. THE FOLLOWING INFORMATION WILL BE INCLUDED WITH THE APPLICATION FOR APPROVAL TO CONSTRUCT.
   1. Tank Location _____
   2. Tank Length _____
   3. Tank Diameter _____
   4. Tank Capacity _____
   5. Maximum Working Pressure _____

ARIZONA WATER COMPANY

STANDARD SPECIFICATION
FOR THE INSTALLATION OF

HYDROPNEUMATIC TANK

DRAWN BY:	APPROVED BY:	DATE:		
JPK	MW	3-20-1986	△ 01.16.2007	E-9-18-1

NOT
CONVERTED
TO
CAD

ARIZONA WATER COMPANY

STANDARD SPECIFICATION
FOR THE INSTALLATION OF

WELL SHELTER

DRAWN BY:	APPROVED BY:	DATE:		
CB		03.20.1986	△04.03.2001	E-9-19-1

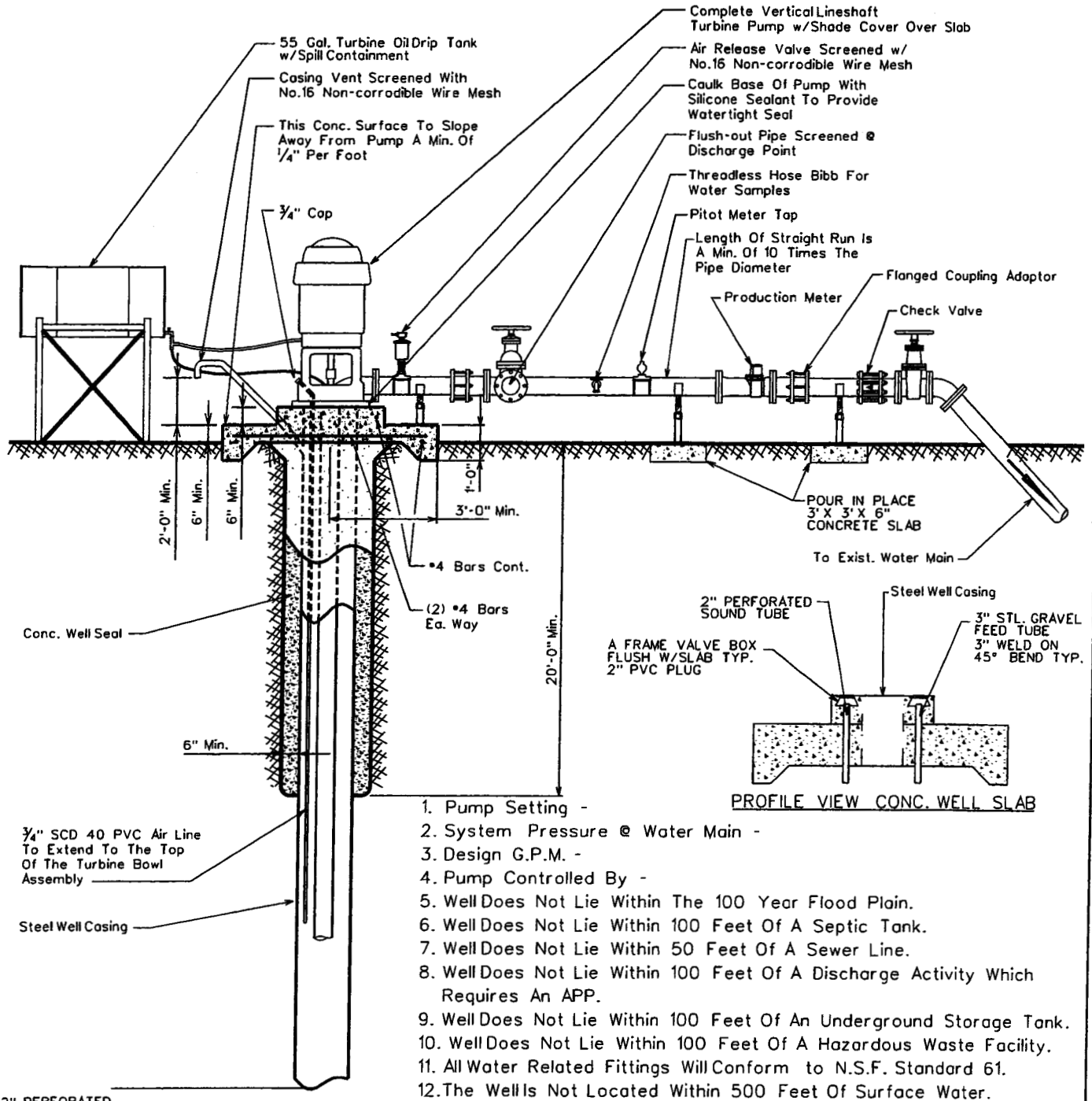

1. Pump Setting -
2. System Pressure @ Water Main -
3. Design G.P.M. -
4. Pump Controlled By -
5. Well Does Not Lie Within The 100 Year Flood Plain.
6. Well Does Not Lie Within 100 Feet Of A Septic Tank.
7. Well Does Not Lie Within 50 Feet Of A Sewer Line.
8. Well Does Not Lie Within 100 Feet Of A Discharge Activity Which Requires An APP.
9. Well Does Not Lie Within 100 Feet Of An Underground Storage Tank.
10. Well Does Not Lie Within 100 Feet Of A Hazardous Waste Facility.
11. All Water Related Fittings Will Conform to N.S.F. Standard 61.
12. The Well Is Not Located Within 500 Feet Of Surface Water.
13. The Site Will Be Graded To Provide Adequate Drainage Away From The Well.
14. 6.88 lbs. of Davis #8084 Grey Dye, Per Yard, For 2500 PSI Concrete

ARIZONA WATER COMPANY

STANDARD SPECIFICATION

FOR THE INSTALLATION OF

TYPICAL WELL W/ LINESHAFT TURBINE PUMP

DRAWN BY:	APPROVED BY:	DATE:	△	
JW	M.W.	3-20-86	9/15/04	E-9-20-1

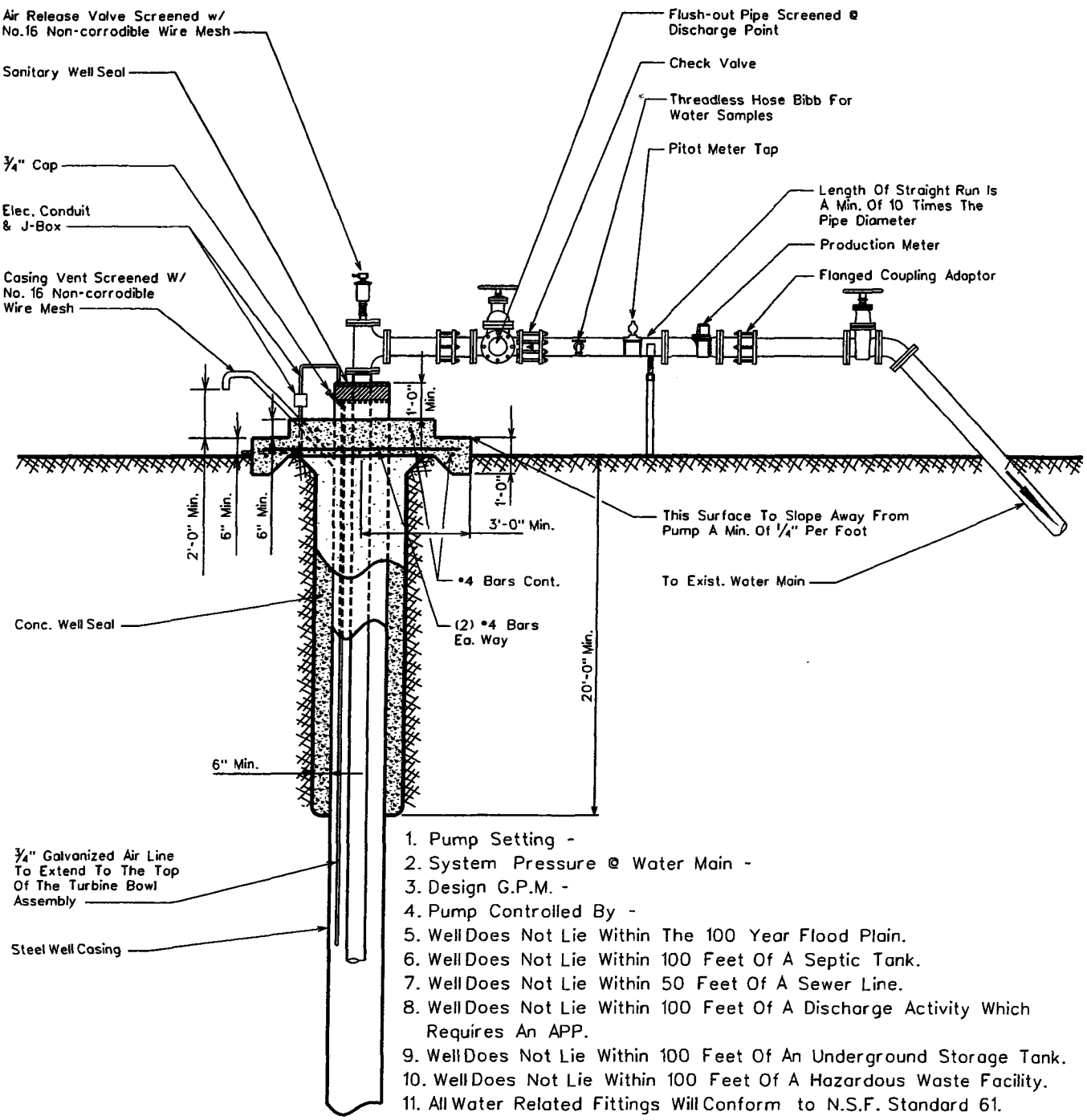

1. Pump Setting -
2. System Pressure @ Water Main -
3. Design G.P.M. -
4. Pump Controlled By -
5. Well Does Not Lie Within The 100 Year Flood Plain.
6. Well Does Not Lie Within 100 Feet Of A Septic Tank.
7. Well Does Not Lie Within 50 Feet Of A Sewer Line.
8. Well Does Not Lie Within 100 Feet Of A Discharge Activity Which Requires An APP.
9. Well Does Not Lie Within 100 Feet Of An Underground Storage Tank.
10. Well Does Not Lie Within 100 Feet Of A Hazardous Waste Facility.
11. All Water Related Fittings Will Conform to N.S.F. Standard 61.
12. The Well Is Not Located Within 500 Feet Of Surface Water.
13. The Site Will Be Graded To Provide Adequate Drainage Away From The Well.

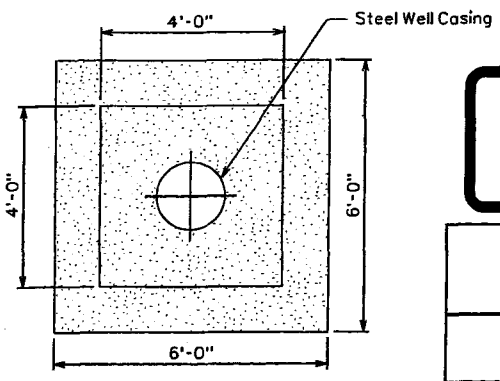

PLAN VIEW CONC. WELL SLAB

ARIZONA WATER COMPANY

STANDARD SPECIFICATION
FOR THE INSTALLATION OF

TYPICAL WELL W/ SUBMERSIBLE TURBINE PUMP

DRAWN BY:	APPROVED BY:	DATE:	△	
jpk	M.W.	3-20-86	2-16-01	E-9-21-1

All New Purchases To Conform To The Following:

Column Pipe

4" I.D. - 8	Threads	Per	Inch	Tapered	¾"	Per	Foot	Right	Hand
6" I.D. - 8	"	"	"	"	"	"	"	"	"
8" I.D. - 8	"	"	"	"	"	"	"	"	"
10" I.D.- 8	"	"	"	"	"	"	"	"	"
12" I.D.- 8	"	"	"	"	"	"	"	"	"
14" I.D.- 8	"	"	"	"	"	"	"	"	"

Oil Tube - Peerless Type

1½"	O.D. - 14	Threads	Per	Inch	Right	Hand
2"	O.D. - 12	"	"	"	"	"
2½"	O.D. - 10	"	"	"	"	"
3"	O.D. - 10	"	"	"	"	"
3½"	O.D. - 10	"	"	"	"	"
4"	O.D. - 10	"	"	"	"	"

Line Shaft

¾"	O.D. - 10	Threads	Per	Inch	Left	Hand
1"	O.D. - 14	"	"	"	"	"
1-3/16"	O.D. - 10	"	"	"	"	"
1-1/2"	O.D. - 10	"	"	"	"	"
1-11/16"	O.D. - 10	"	"	"	"	"
1-15/16"	O.D. - 10	"	"	"	"	"
2-3/16"	O.D. - 10	"	"	"	"	"
2-7/16"	O.D. - 8	"	"	"	"	"

ARIZONA WATER COMPANY

STANDARD SPECIFICATION
FOR THE INSTALLATION OF

COLUMN PIPE, OIL TUBE AND LINE SHAFT

DRAWN BY:	APPROVED BY:	DATE:	△	
CCO		3/20/1996	2/13/2001	E-9-22-1

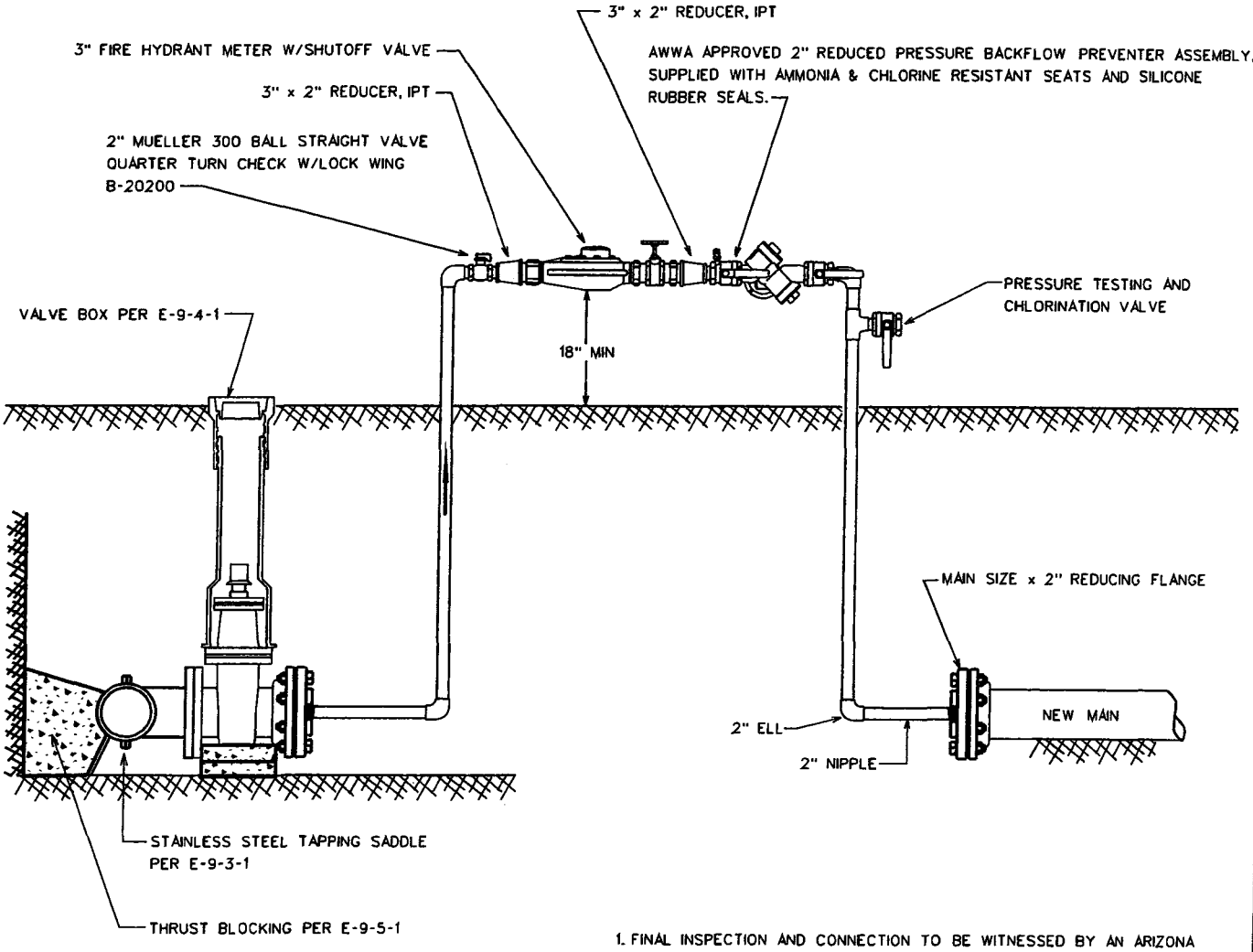

1. FINAL INSPECTION AND CONNECTION TO BE WITNESSED BY AN ARIZONA WATER COMPANY REPRESENTATIVE.
2. REDUCING FLANGES TO BE PROPERLY RESTRAINED.
3. INSTALL JUMPER TAP FOR TEMPORARY METER DOWNSTREAM OF THE REDUCING FLANGE FOR PRESSURE AND BACTEE TESTING.
4. JUMPER ASSEMBLY MUST BE A MINIMUM OF 18" ABOVE FINISHED GRADE.
5. BACKFLOW ASSEMBLY REQUIRES CERTIFICATION.
6. ASSEMBLY NOT TO BE REMOVED AND SPOOL PIECE INSTALLED FOR FINAL CONNECTION UNTIL ALL TESTING, BACTERIAL CLEARANCE AND FINAL INSPECTIONS HAVE BEEN OBTAINED.
7. ALL NEW PIPING SHALL BE PROPERLY RESTRAINED.

ARIZONA WATER COMPANY

STANDARD SPECIFICATION
FOR THE INSTALLATION OF

HOT TAP & JUMPER METER CONNECTION

DRAWN BY:	APPROVED BY:	DATE:	△	
CB	MJW	05.14.2004		E-9-23-1

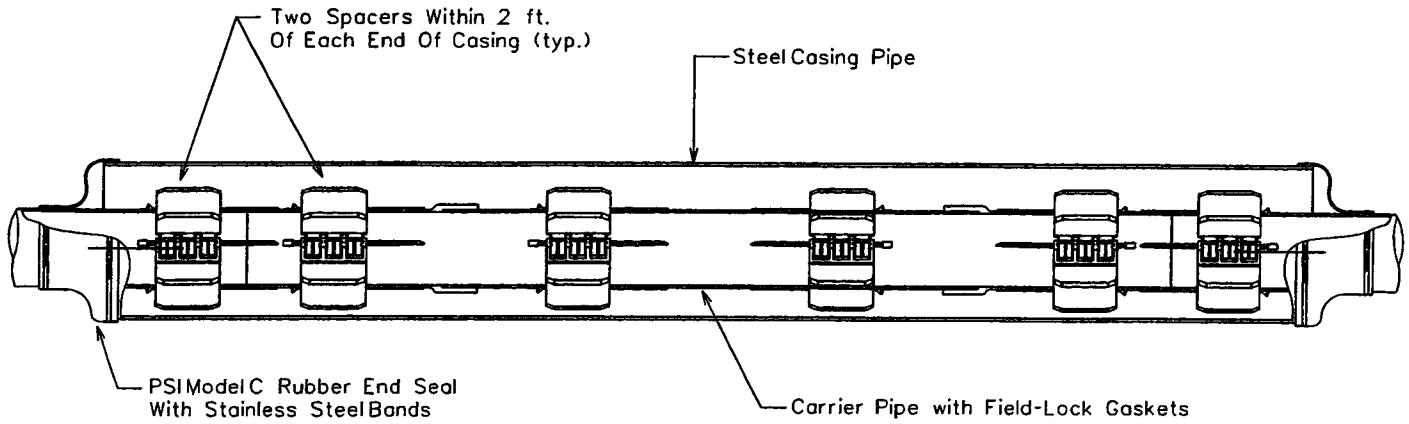

CROSS SECTION

The casing spacers shall be the PSI Ranger II Casing Spacers as manufactured by Pipeline Seal and Insulator, Inc., Houston, Texas.

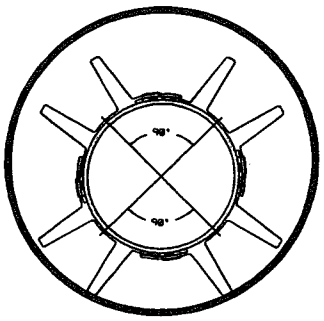

SECTION CUT

End Seals
After insertion of the carrier pipe into the casing, the ends of the casing shall be closed by installing 1/8" thick synthetic rubber end seals equal to the PSI Model "C" end seal as manufactured by Pipeline Seal and Insulator, Inc., Houston, Texas.

NOTE: The Carrier Pipe Shall Be Polywrapped Prior To The Skid Installation & Insertion Into The Carrier Casing For Divisions Requiring Polywrapped Pipe.

OD Push On Joint Bell	OD M.J. BELL
6" - 8.66"	6" - 11.12"
8" - 10.82"	8" - 13.37"
12" - 15.05"	12" - 17.94"
16" - 19.74"	16" - 22.56"
20" - 23.98"	20" - 27.08"
24" - 28.16"	24" - 31.58"
30" - 35.40"	30" - 39.12"
36" - 41.84"	36" - 46.00"
48" - 55.94"	48" - 60.00"

*Thickness Of Skid To Extend A Minimum of 1/2" Above The O.D. Of The Pipe Bell or Gland.

PIPE SIZE	CASING SIZE	CASING SIZE ID	CASING SCHEDULE	WALL THICKNESS	SKID SIZE
6"	16"	15.25"	STD.	.375	*x4x12
8"	18"	18.25"	STD.	.375	*x4x12
12"	22"	21.25"	STD.	.375	*x4x12
16"	28"	27.25"	STD.	.375	*x4x12
20"	32"	31.25"	STD.	.375	*x4x12
24"	36"	35.25"	STD.	.375	*x4x12
30"	48"	47.25"	STD.	.375	*x4x12
36"	54"	53.25"	STD.	.375	*x4x12
48"	66"	65.25"	STD.	.375	*x4x12

ARIZONA WATER COMPANY

STANDARD SPECIFICATION
FOR THE INSTALLATION OF

TYPICAL WATER LINE ENCASEMENT

DRAWN BY:	APPROVED BY:	DATE:	△	
CB		3/20/1996	09.27.2006	E-9-24-1

CALCIUM HYPOCHLORITE TABLET CHLORINATOR FEEDER SPECIFICATIONS

SCOPE - This specification describes a ARCH Chemicals Calcium Hypochlorite Tablet Chlorination System as manufactured by ARCH Chemicals, 501 Merritt Seven, P.O. Box 5204, Norwalk, CT, 06856-5204.

DESCRIPTION - The chlorination system shall be completely assembled, ready to install. The chlorination system shall be a ARCH Chemicals Calcium Hypochlorite Tablet Feeder, or its equivalent, and shall be supplied with all its components factory mounted.

COMPONENTS - The Chlorination system shall have the following components:

A. 1-¼" ARCH Chemical solid calcium hypochlorite tablet feeder
B. Polyethylene system enclosure
C. Integrated, level controlled solution tank
D. Adjustable flow control valve
E. Manual on/off valve (at inlet)
F. Chemical metering pump
G. On/off pump control switch
H. Waterproof electrical junction box
I. Corrosion resistant schedule 40 piping
J. Reverse flow check valves
K. Total solution output control valve

ELECTRICAL FIXTURES - The following electrical fixtures shall be provided:

A. Safety switch, 2 pole, fused for 30 Amps, for 120 Volts, 60 cycle, single phase power.

CHLORINATOR DESIGN - The chlorination facility shall be designed and constructed in accordance with Arizona State Department of Health Engineering Bulletin Number 8 - "Disinfection of Water Systems". Latest Revision.

CHLORINATION EQUIPMENT - The chlorination equipment shall be a ARCH Chemicals Calcium Hypochlorite tablet chlorinator, approved by NSF Standard 61.

CHLORINATOR OPERATION - The chlorination facility shall be operated in accordance with Arizona State Department of Health Engineering Bulletin Number 8, "Disinfection of Water Systems", Table 1. latest revision.

CHLORINATOR SYSTEM DESCRIPTION - ARCH Chemicals tablet chlorinator systems incorporate a patented chlorinator which is designed to utilize ARCH Chemicals 1-¼" solid calcium hypochlorite tablets (Approved NSF Standard 60). Meets AWWA Standard B-300, EPA Registration # 1258-1179.The chlorinator is mounted on a polyethylene system enclosure. The inlet water is sprayed on the calcium hypochlorite tablet and collected in a solution tank. This chlorinated solution is then pumped out of the tank through a chemical metering pump. This metering pump is then adjusted to obtain the desired CL residual.

ARCH Chemicals Calcium Hypochlorite Tablet Chlorinator

NTS

HYPOCHLORINATOR COMPONENTS:

1. Chemical Metering Pump
2. Pump Suction Connection
3. Pump Discharge Connection
4. Inlet Water Assembly
5. Inlet Water Solenoid Valve
6. Inlet Shut-Off Valve
7. Inlet Pressure Regulator
8. Inlet Water Pressure Gauge
9. Spray Nozzle Water Pressure Gauge
10. Inlet Strainer
11. Inlet Tubing Connection
12. Dry Chemical Hopper
13. Suction Line
14. Electrical Control Box With Power On/Off
15. Electric Mixer
16. Solution Discharge Connection
17. Tank Drain Valve
18. Observation Port
19. Mixed Chemical Holding Tank
20. Pressure Relief Valve
21. Pump Speed Control
22. High Level Shut-Off Float Switch
23. Water Spray Nozzles

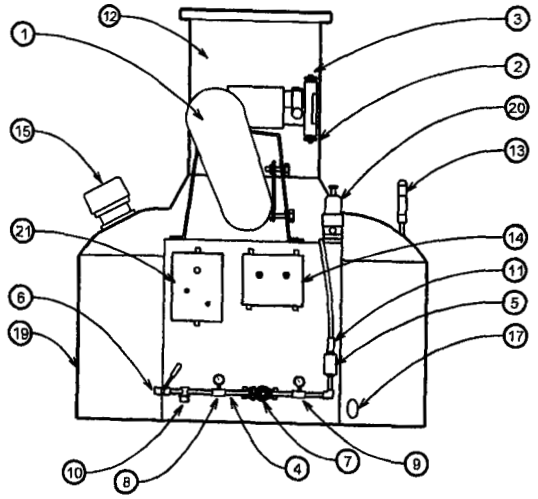

FRONT VIEW

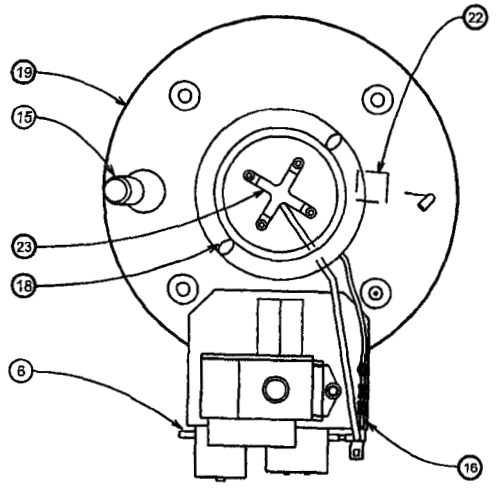

TOP VIEW

HOPPER REMOVED FOR CLARITY

Chlorinator Fluid Schematic

NTS

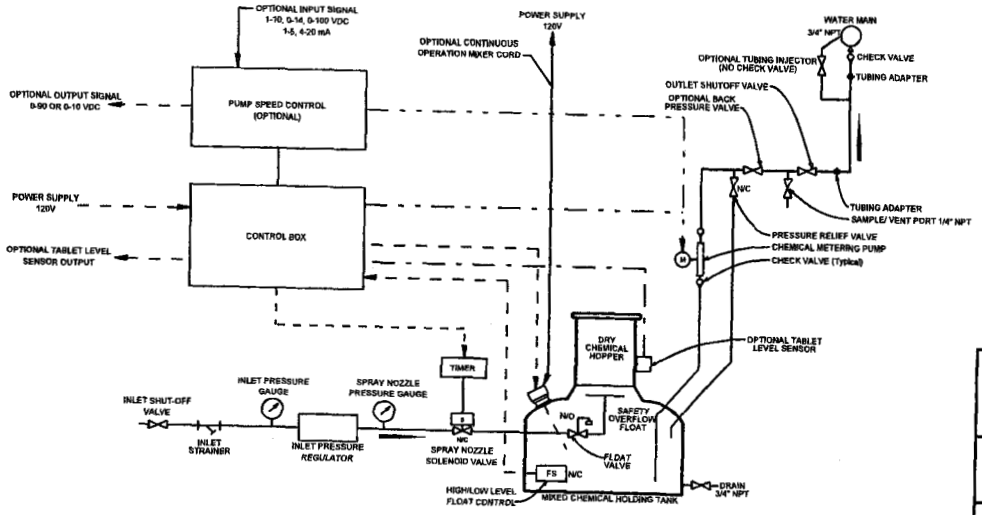

ARIZONA WATER COMPANY

STANDARD SPECIFICATION

FOR THE INSTALLATION OF

CALCIUM HYPOCHLORITE TABLET CHLORINATOR

DRAWN BY:	APPROVED BY:	DATE:		
CB	MW	02-09-2000	△	E-9-25-1

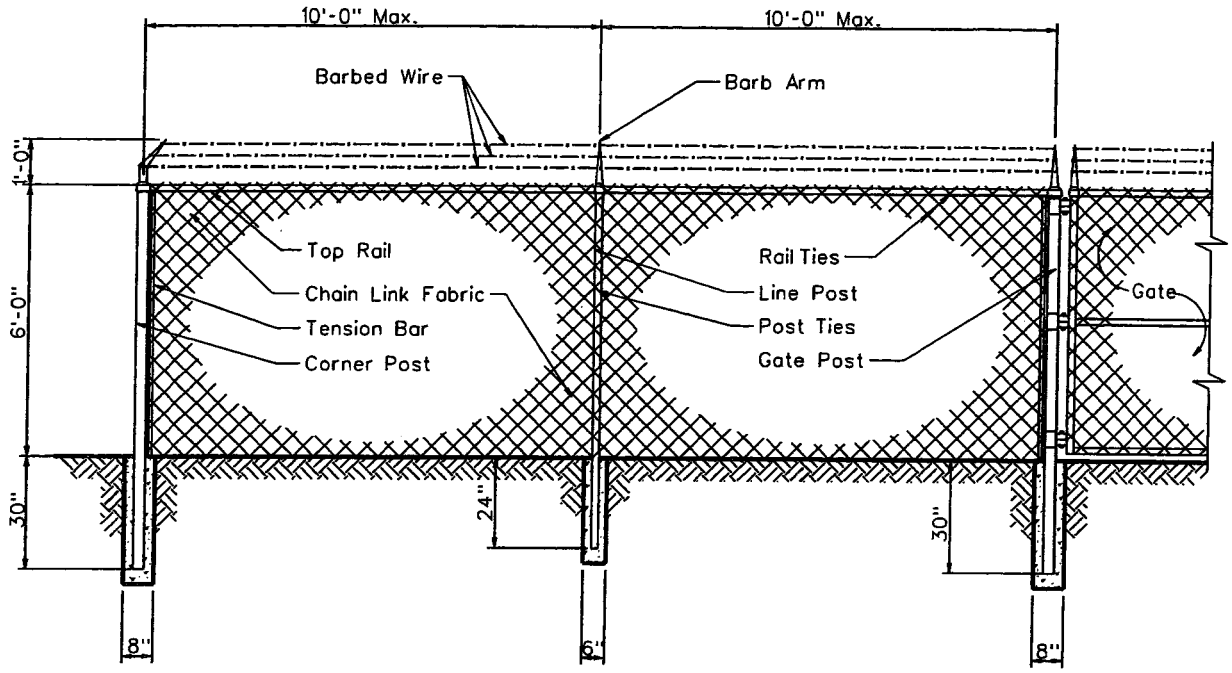

Line Post:	1-7/8" O.D.	1.74 lbs. P/L.F.	ASTM A-256
End Post:	2-7/8" O.D.	4.64 lbs. P/L.F.	ASTM A-256
Corner Post:	2-7/8" O.D.	4.64 lbs. P/L.F.	ASTM A-256
Gate Post:	2-7/8" O.D.	4.64 lbs. P/L.F.	ASTM A-256
Top Rail:	1-5/8" O.D.	4.64 lbs. P/L.F.	ASTM A-256
Chain Link Fabric:	9 Ga. 2" Mesh Galv. Before Weave		
Selvage:	Barb/Knuckle		
Fittings:	Pressed Steel		
Barb Wire:	2-1/2 Ga./2 Point		
Barb Arm:	1 Piece/45° Arm		
Tension Wire:	9 Ga./Galv.		
Line Post Set:	6"x24" In Concrete		
Terminal Post Set:	8"x30" In Concrete		

ARIZONA WATER COMPANY

STANDARD SPECIFICATION
FOR THE INSTALLATION OF

CHAIN LINK FENCE

DRAWN BY:	APPROVED BY:	DATE:	△	
CCO	MW	7/7/1992	2/9/2001	E-9-26-1

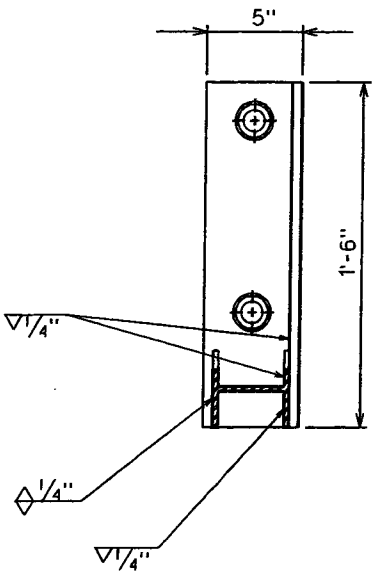

SECTION X-X

NOTES

1. Minimum 2 Supports Per Joint Of Pipe.
2. All Bolts Shall Have A Lock Washer Under The Nut.
3. All Nuts Shall Be Stainless Steel Series 304.

PIPE SIZE	A	B
8"	8"	15"
10"	9"	17"
12"	10"	19"

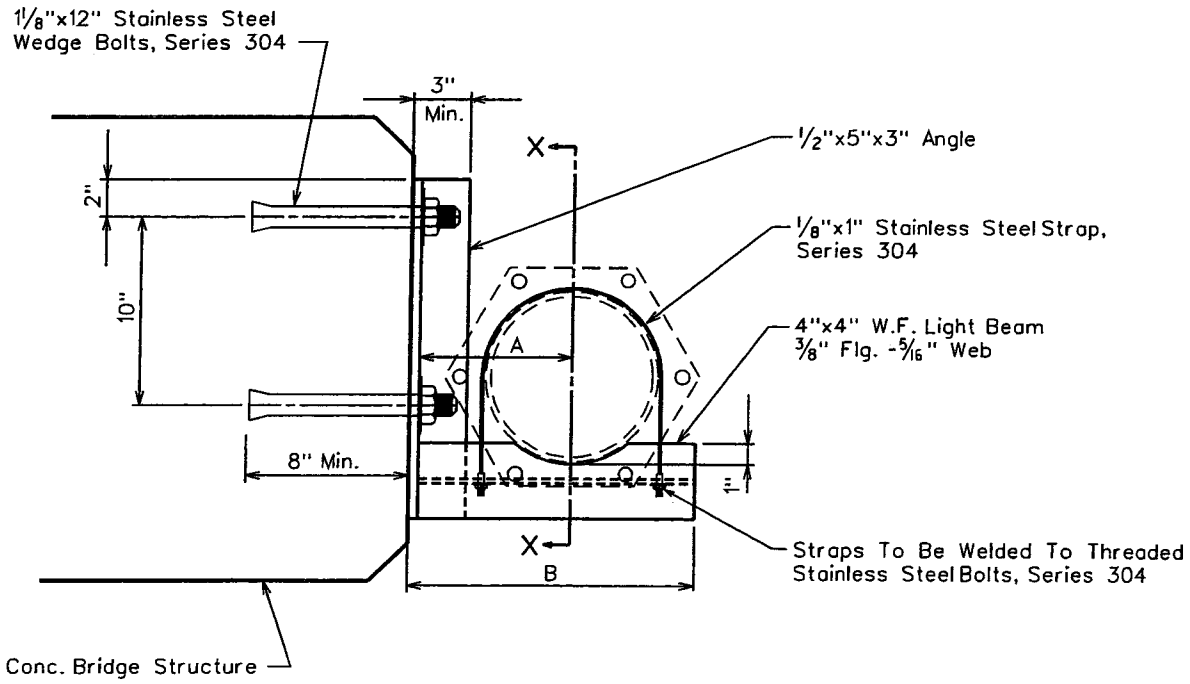

SUSPENSION DETAIL

ARIZONA WATER COMPANY

STANDARD SPECIFICATION
FOR THE INSTALLATION OF

SIDE HUNG WATER LINE SUSPENSION

DRAWN BY:	APPROVED BY:	DATE:		
JPK	MJW	7-12-96	△	E-9-27-1

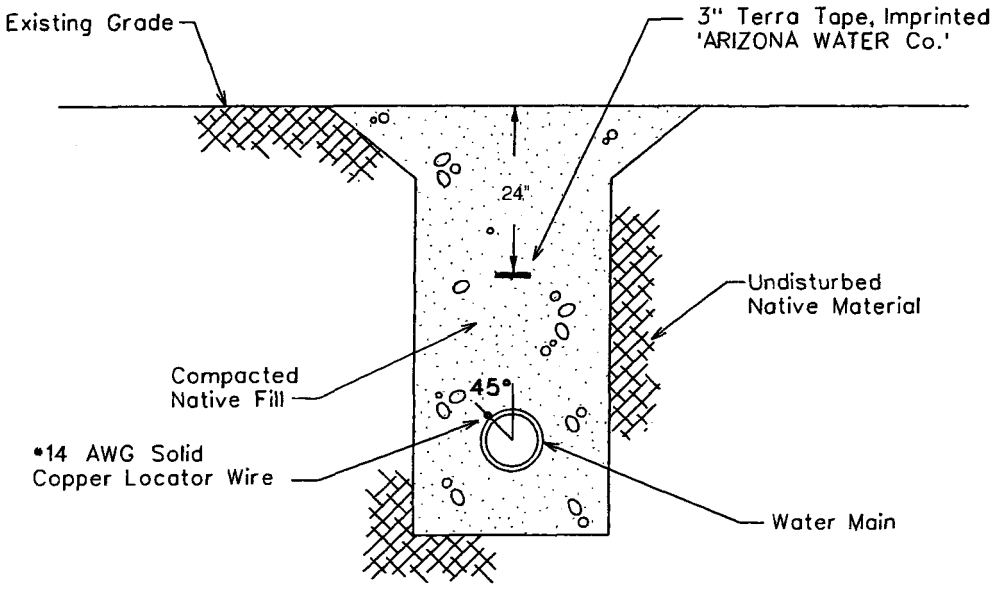

TYPICAL WATER TRENCH DETAIL

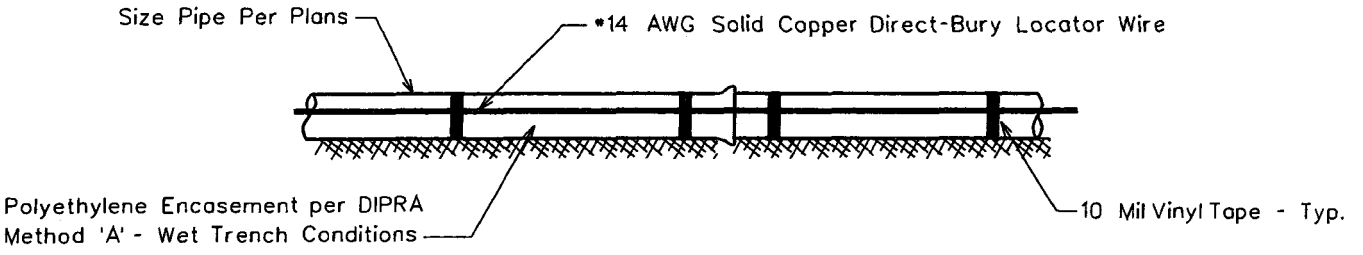

TYPICAL PROFILE VIEW

WIRE GENERAL NOTES:

1. All pipe shall have #14 AWG Solid Copper Direct-Bury Locator Wire Installed Directly To The Polywrap At 45° From The Vertical Center Of The Pipe and Shall Be Attached Using 10 Mil Vinyl Tape.
2. The Locating Wire Shall Terminate At the Top Of Each Valve Box and Be Capable of Extending 12" Above the Top Of The Box In Such A Manner So As Not To Interfere With Valve Operation.

TAPE GENERAL NOTES:

1. Use Terra Tape 3" Marking Tape As Manufactured By Reef Industries Inc. Of Houston, Texas (1-800-231-2417)
2. The Tape Is Blue & Imprinted 'ARIZONA WATER Co.'
3. INSTALLATION: The Pipe Warning Tape Shall Be Installed Over All Water Mains And Shall Be Buried 24 Inches Below The Surface Over The Center Of The Pipe.
   A) The Backfill Shall Be Sufficiently Leveled So That The Tape Is Installed On A Flat Surface.
   B) The Tape Shall Be Centered In The Trench With The Printed Side Up.
   C) Care Shall Be Exercised To Avoid Movement Of The Tape While The Remaining Backfill Is Moved Into The Trench.

ARIZONA WATER COMPANY

STANDARD SPECIFICATION
FOR THE INSTALLATION OF

PIPE WARNING TAPE AND LOCATOR WIRE

DRAWN BY:	APPROVED BY:	DATE:	△	
CB		03.24.1997	△09.27.2006	E-9-28-1

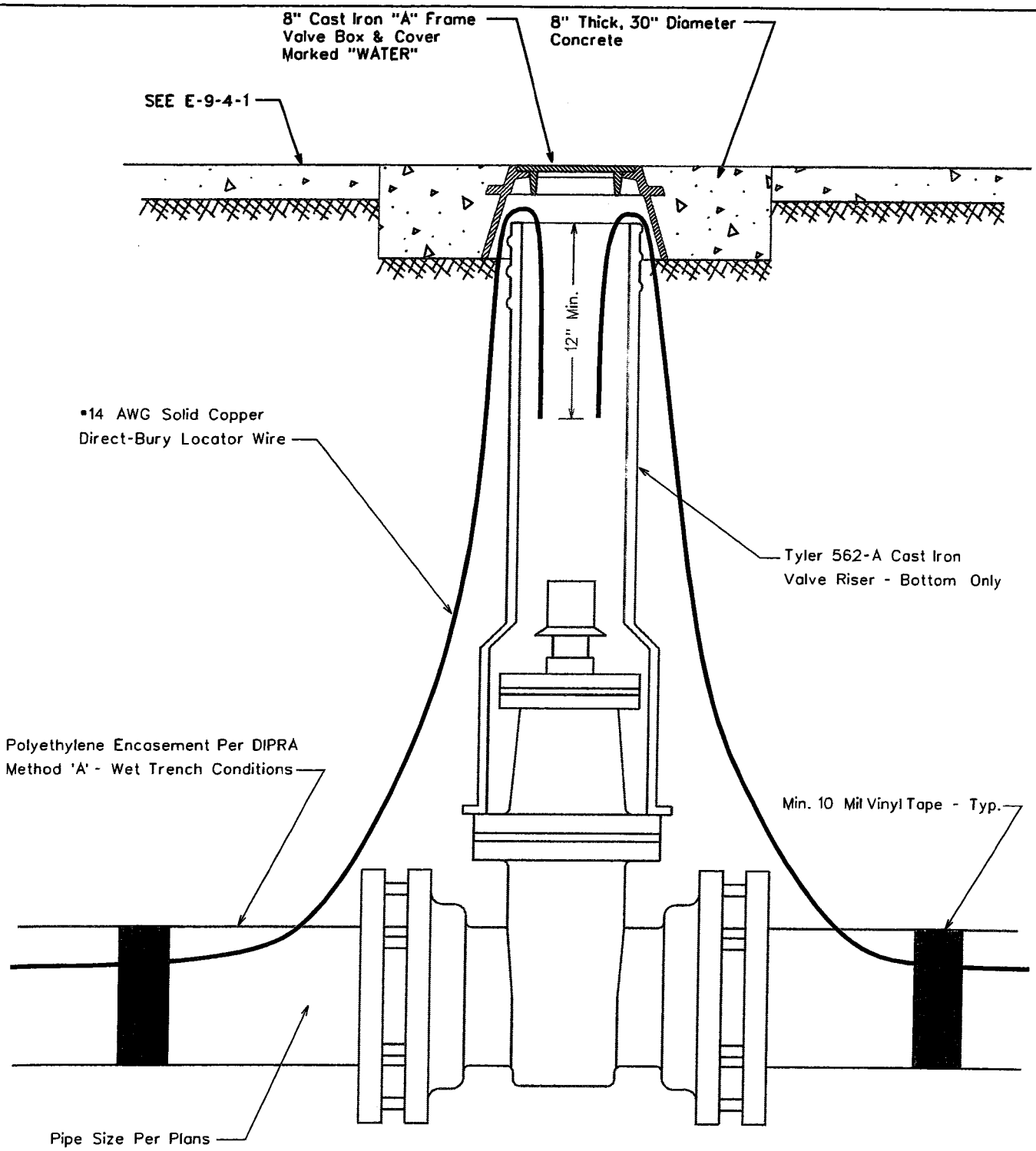

ARIZONA WATER COMPANY

STANDARD SPECIFICATION
FOR THE INSTALLATION OF

LOCATOR WIRE TERMINATION

DRAWN BY:	APPROVED BY:	DATE:	△	
CB		09.27.2006		E-9-28-2

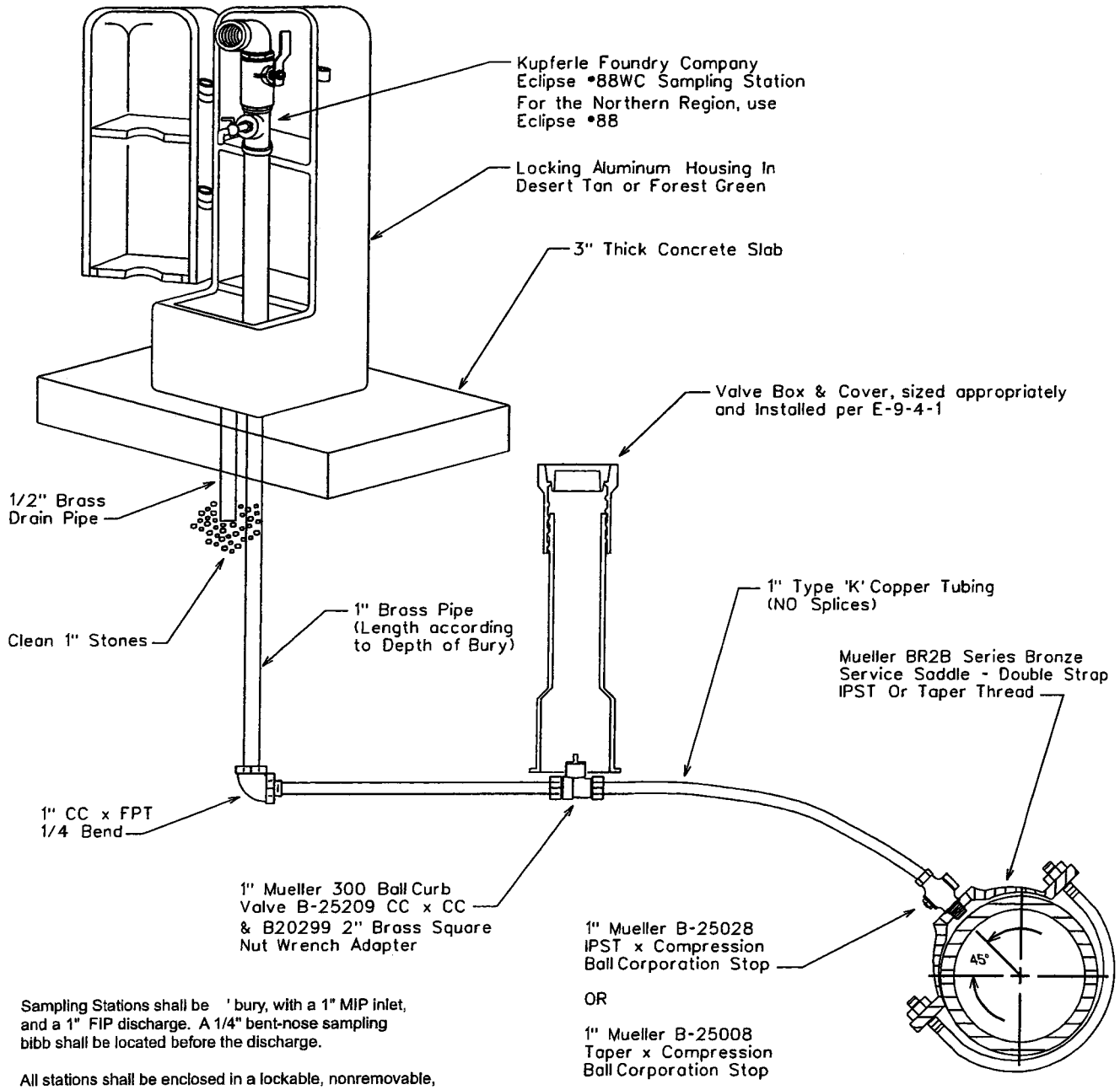

Sampling Stations shall be ' bury, with a 1" MIP inlet, and a 1" FIP discharge. A 1/4" bent-nose sampling bibb shall be located before the discharge.

All stations shall be enclosed in a lockable, nonremovable, aluminum-cast housing.

When opened, the station shall require no key for operation, and the water will flow in an all brass waterway.

All working parts will be of brass and serviceable from above ground with no digging. (OPTIONAL: if desired, a 1/2" brass drain tube will be provided within the locking cover).

A 1" ball valve will control the water flow, and be located before (or after) the sampling bibb, as manufactured by Kupferle Foundry, St. Louis, MO 63102.

SADDLE TAP TO CA, PVC, OR DI PIPE

NOTE: The minimum distance between taps on mains other than ductile iron is 12"

Pipe Depth Per
E-8-1-2, Item 3.

ARIZONA WATER COMPANY

STANDARD SPECIFICATION
FOR THE INSTALLATION OF

SAMPLING STATION

DRAWN BY:	APPROVED BY:	DATE:		
CB	MW	01.24.2007	△	E-9-29-1

ADEQ
Arizona Department of Environmental Quality

ENGINEERING REVIEW SECTION
DATA REQUIRED WITH ECC

INSTRUCTIONS

Please complete the test data and submit this form with the Engineers Certificate of Completion. An Approval of Construction cannot be issued without the data identified below in accordance with Arizona Administrative Code (A.A.C.) R18-5-508(C). Please attach all supplemental information and calculations to this form.

WA 1-4789

DATA

1.

PRESSURE TEST DATA				
Indicate Segment Tested				
Pressure and Leakage Test Results (Pass/Fail)				
Date Tested				
Time Started				
Time Finished				
Pipe Diameter				
Footage Tested				
Allowable Leakage				
Leakage Observed				
Pressure at Test Point				
Employee Observing the Test (Please Print Legibly)				
Signature of Employee Observing the Test				

N/A

2.

DISINFECTION SAMPLING					
Initial Sampling (Minimum 50 ppm available chlorine)	Date				
	Time				
	ppm Cl_2				
After 24 Hours Detention Time (Minimum 10 ppm free chlorine)	Date				
	Time				
	ppm Cl_2				
After Sufficient Flushing (Water is clear and system Cl_2 residual is measured)	Date				
	Time				
	ppm Cl_2				
Bacteriological Sampling(s):	Date				
	Time				
	Attached (Y/N)				
		Yes/No	Yes/No	Yes/No	Yes/No

N/A

3.

Certification

I, Freddy Rios, certify that I have inspected the work performed and have found it to be satisfactory and in accordance with Arizona Administrative Code, Arizona Engineering Bulletins, and the approved specifications.

Authorized Persons Signature — Date: 06-30-11

022-39721-4789

Professional Seal
As per A.A.C. R18-5-507(B)(1)

http://www.azdeq.gov/environ/water/dw/download/data.pdf
1110 WEST WASHINGTON, PHOENIX, AZ 85007
HTTP://WWW.AZDEQ.GOV/ENGINEERINGREVIEW/

WA 1-4792

ARIZONA WATER COMPANY
WORK AUTHORIZATION

W.A. NUMBER: 1-4792
P.E. NUMBER:
BUDGET ITEM NO.: B-1
SHEET NO.: 1 of 2

SYSTEM:	SUPERSTITION	WORK TO START BY:	UPON AUTHORIZATION
DIVISION:	SUPERSTITION	WORK TO BE FINISHED BY:	WITHIN 60 DAYS
TAX CODE:	4328		

DESCRIPTION OF WORK:

Pull and replace pump at Apache Junction Well #15. Construct in accordance with attached drawings and/or Arizona Water Company specifications.

FACTORS JUSTIFYING WORK:

2011 APPROVED CONSTRUCTION BUDGET ITEM ($30,000)

COST ESTIMATE		AUTHORIZATION	DATE
COST OF WORK:		PREPARED BY: Mike Loggins ML 2-23-11	2-15-11
MATERIAL	0		
LABOR	2,400	REVIEWED FOR ESMT/ROW VERIFICATION: Charles Briggs CB 02-23-2011	02-16-2011
CONTRACT PORTION	28,482		
OVERHEAD	4,632	REVIEWED BY: Andy Haas AJH 2-23-11	2-16-11
TOTAL AUTHORIZED EXPENDITURES CHARGEABLE TO THIS W.A.	$ 35,514		
FUNDS RECEIVED:		APPROVED BY ENGINEERING: Fredrick Schneider 2-24-11	2-17-11
CONTRIBUTIONS RECEIVED	0		
REFUNDABLE ADVANCES RECEIVED	0	APPROVED BY FINANCE: Joseph Harris	2/18/11
TOTAL CONTRIBUTIONS/ADVANCES	0		
NET CASH REQUIRED	$ 35,514	AUTHORIZED BY PRESIDENT: William Garfield	2-22-2011

COMMENTS:

The motor failed in 2010 and was rebuilt. While the pump crew installed the motor they noticed that the shaft was tight. A couple of days later an operator noticed a bad vibration and a knocking coming from the well. Well pump replacement required.

CONSTRUCTION RELEASE:

RELEASED TO CONSTRUCTION
Authorized by FRED SCHNEIDER
Date 2/23/2011

AFH

ARIZONA WATER COMPANY

WORK AUTHORIZATION - DETAIL SHEET

W.A. NUMBER: 1-4792
P.E. NUMBER:
BUDGET ITEM NO.: B-1
SHEET NO.: 2 of 2

RETIREMENT PROPERTY UNITS	PLANT PROPERTY ACCOUNT	UNIT DESCRIPTION	QUANTITY	YEAR INSTALLED AND W.A. NUMBER

PROJECT DESCRIPTION

Pull and replace pump at Apache Junction Well #15

	DESCRIPTION	PLANT PROP ACCT	QUANTITY	UNIT COST	TOTAL
CONTRACT WORK	Labor to pull and replace pump and motor	325	1	$ 10,000.00	$ 10,000
	American Turbine 12-H-150 13 stage ductile iron				
	Construction, 0-rings, stainless steel bolts, and 8 round thread	325	1	14,725.00	14,725
	Pressure test SS airline	325	1	100.00	100
	Misc buckles, bandits, and tape	325	1	300.00	300
	1" SCH 80 PVC	325	840	0.75	630
	Well Video	325	1	850.00	850
	Contracting Tax	325	1	1,677.45	1,677
	Performance and Payment Bond	325	1	200.00	200
	SERVICE CONNECTIONS COMPLETE: DOUBLE-LONG	345			
	SERVICE CONNECTIONS COMPLETE: DOUBLE-SHORT	345			
	SERVICE CONNECTIONS COMPLETE: SINGLE-LONG	345			
	SERVICE CONNECTIONS COMPLETE: SINGLE-SHORT	345			
TOTAL CONTRACT WORK					$ 28,482
MATERIALS					
	SERVICE CONNECTIONS: DOUBLE-LONG	345			
	SERVICE CONNECTIONS: DOUBLE-SHORT	345			
	SERVICE CONNECTIONS: SINGLE-LONG	345			
	SERVICE CONNECTIONS: SINGLE-SHORT	345			
	METERS	346			
TOTAL MATERIALS					$ -
LABOR					
	TESTING FEE	325	2	$ 100.00	200
	PERMIT FEE				
	SURVEY FEE				
	FIELD INSPECTION	325	40	55.00	2,200
	INSTALL SERVICE CONNECTIONS: DOUBLE-LONG	345			
	INSTALL SERVICE CONNECTIONS: DOUBLE-SHORT	345			
	INSTALL SERVICE CONNECTIONS: SINGLE-LONG	345			
	INSTALL SERVICE CONNECTIONS: SINGLE-SHORT	345			
TOTAL LABOR					$ 2,400
SUBTOTAL - CONTRACT WORK, MATERIALS, AND LABOR					$ 30,882
OVERHEAD					4,632
TOTAL	REFUNDABLE PORTION ☐	NON-REFUNDABLE PORTION ☐		COST ESTIMATE	$ 35,514

AFH

1-25-11

GIVEN: Q = 1250 GPM
STATIC = 621 FEET
DYNAMIC = 690 FEET
SYSTEM PRESSURE = 25 PSI ≈ 58 FEET
PUMP SETTING = 840
(ALL COLUMN PIPE AND PUMP NEED TO BE 8 ROUND THREAD BECAUSE PUMP IS SET DEEPER THAN 800')

COLUMN PIPE: 10" 8 ROUND THRE SEAMLESS, SCH 40
TUBE: 3"
SHAFT = 1 15/16"

COLUMN LOSS = 3 x 8.4 = 25.2

T.D.H = 690 + 58 + 25 + 30 = 803

EXISTING PUMP DATA
AMERICA TURBINE 12-H-150 13 STAGE
BOWL ASSEMBLY, DUCTILE IRON CONSTRUCTION,
OIL RINGS, SS BOLTING, 8 ROUND THREAD
DESIGNED FOR 1200 GPM @ 876'

THRUST DATA

FACTOR (K)	1 STG.	ADDITIONAL STAGE	BOWL STG.	LATERAL MAX
7.9	280	121	.75	

SHAFT DIA.	WR^2 WET (lbs)	EYE AREA in^2
1 11/16"	.919	23.37

SPHERE SIZE MAX	MAX NUMBER STG.	MAX ALLOWABLE PRESSURE
.775"		567'

$$HP = \frac{GPM \times TDH}{3960 \times eff.} = \frac{1250 \times 900}{3960 \times .84} = 338$$

BRAKE HORSEPOWER $= 26 \times 13_{STAGES} = 338$

PIPE & SHAFT

$$\text{STRETCH} = \frac{HL}{29}\left[KC_1 - C_2 + C_3\left(1 - \tfrac{1}{2}\tfrac{L}{H}\right)\right]$$

$$H = \frac{TDH}{1000} = \frac{900}{1000} = .9$$

$$L = \frac{\text{COLUMN}}{1000} = \frac{840}{1000} = .84$$

$K = 7.9$

$C_1 = 5.05473$ ($1\,15/16$)

$C_2 = 30.69061$

$C_3 = 19.87294$

$$\frac{(.9)(.84)}{29}\left[7.9\,(5.05473) - 30.69061 + 19.87294\left(1 - \tfrac{1}{2}\,\tfrac{.84}{.9}\right)\right]$$

$$.0260\left[39.9324 - 30.6906 + 10.5973\right]$$

$$.5158$$

TOTAL REQUIRED LATERAL = .52 + .12 (IMPELLER CLEARANCE) + .12 (ASSEMBLY LOSS) = .75

TOTAL THRUST

$$T = (k \times TDH) + (w \times S)$$

$$(7.9 \times 900) + (10.03 \times 840$$

$$7110 + 8425$$

$$15{,}535 \approx 16{,}000$$

12-H-150 1760 RPM

in

12-H-150 1760 RPM

Impeller Data						Bowl Data	
Impeller Model	12-H-150					Bowl Model	12-H
Type	Enclosed					Connection Type	Bolted
Diameter: A=	10.030"					Outside Diameter: nominal	12.750"
B=	9.330"					minimum	12.400"
C=	8.630"					Column Pipe Size: minimum	8"
Hydraulic Thrust Factor	7.9 lbs/ft of head @ peak efficiency					maximum	10"
Impeller Weight	14.7#					Suction Pipe Size	8"
Number of Vanes	8					Shaft Size: standard	1.687"
Specific Speed (Ns)	2478					maximum	Consult Factory
Effective Eye Area	23.37 in²					Lateral: standard	0.750"
W (r sq.)	0.919 lbs -ft²					maximum	Consult Factory
Eye Fluid Velocity	0.01 ft/sec/gpm					Shaft Bearing Clearance	0.010"
Peripheral Velocity	7.68 ft/sec/inch of impeller diameter					Impeller Skirt Clearance	0.015"
						Maximum Sphere Size	0.775"
Efficiency Correction for Impeller Data						*Maximum Head @ 1.0 s.g.:	
Number of Stages	1	2	3	4	5+	with nominal outside dia.	567 ft
Deduct No. Points	4	3	2	1	0	with minimum outside dia.	505 ft

Lengths		Operational	
Column Adapter	1.500"	Minimum Required Submergence	Consult Factory
Discharge Case	4.750"	**Standard Construction Materials**	
Bowl	10.750"	Bowl	A48-30 c.i. (porcelain)
Suction Case	10.125"	Impeller	C83800 br.
Suction Bell	8.500"	Bowl Shaft	416 stainless steel
Submersible Motor Adapter	Consult Factory	Shaft Coupling	C1215 steel
Approximate Shipping Weights		Lock Collet	C1215 steel
First Stage	280#	Cap Screw	grade 5
Additional Stage	121#	Bowl Bearing	C93200 br./buna-N A40
		Suction/Submersible Motor Adapter Bearing	C93200 br.
Miscellaneous		Throttle Bearing	C93200 br.
Hub Projection on Bell Suction	1.625"	Sand Collar	C93200 br.
Cable Guard Height	0.500"	Column Adapter/Discharge Case/Suction Case	A48-30 c.i.
Distance from Impeller Eye to Bottom of Bell Suction	8.438"	Submersible Motor Adapter	A48-30 c.i.
		Tube Adapter	cl. 65-45-12 ductile iron

* Not valid for submersible applications -- o-rings required if the maximum operating head will exceed 500'

AMERICAN TURBINE

Performance Curves

(per stage - standard construction)

12-H-150

1760 RPM

March '98

Number of Stages Required:

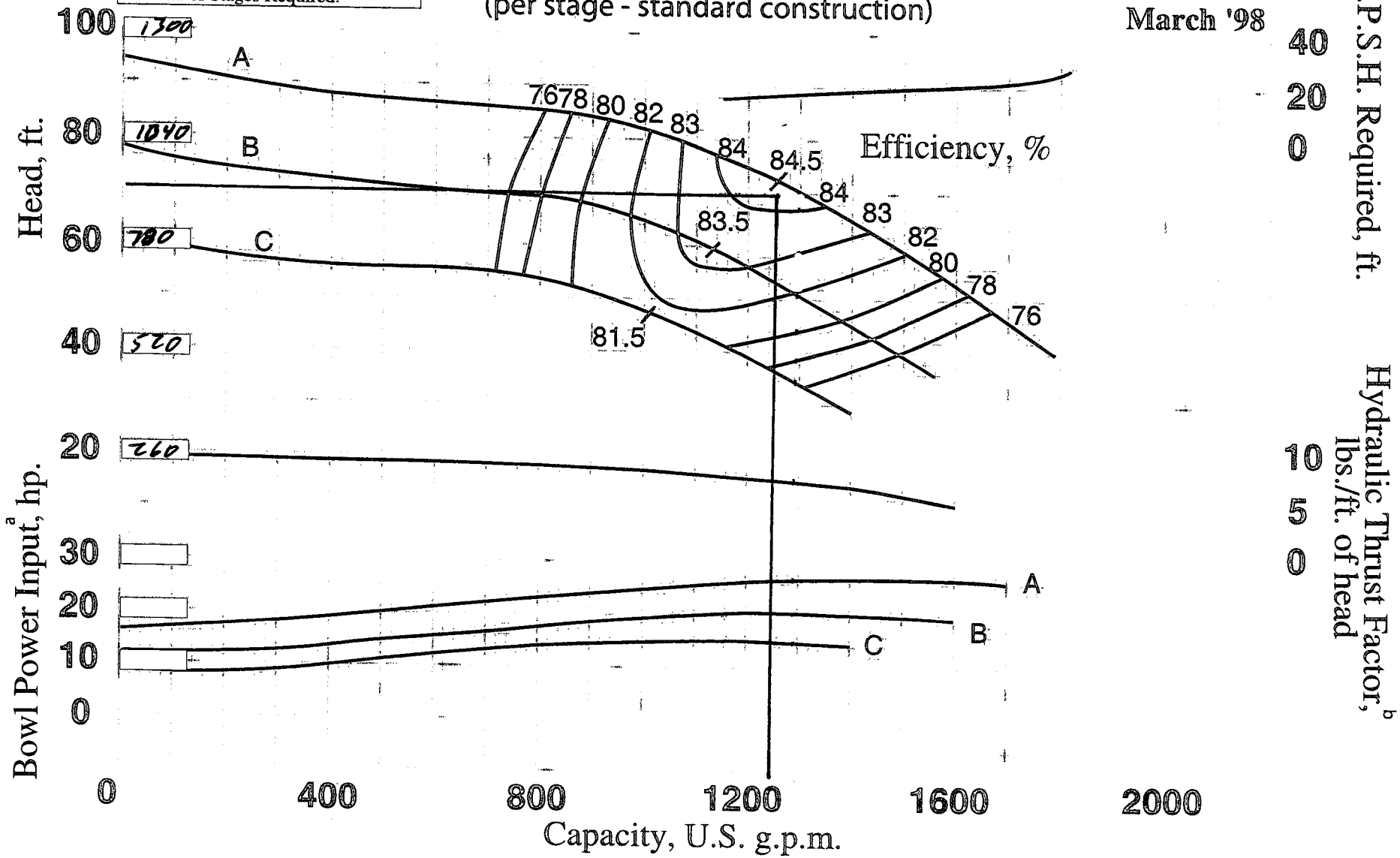

ARIZONA WATER COMPANY

APACHE JUNCTION WELL #15
EQUIPMENT SPECIFICATIONS

Existing Well Information

Location: 1200 West Southern Ave.
Casing: 16" cased 0 ft. to 1467 ft.
Drilled by: Zim Industries 1998

Design Conditions

1250 GPM @ 910 TDH
Pump setting 840 ft.
Static Water Level 621 ft.
Dynamic Water Level 690 ft.
Column Pipe 10" 8 Round Thread Seamless
Oil tube and shaft 3-0" x 1-15/16"
System Pressure 25 psi

Equipment to be Furnished and Installed by Pump Company

- 1" SCH 80 solvent weld PVC
- All miscellaneous bandits, buckles, tape, etc.
- One American Turbine 12-H-150 13-stage ductile iron bowl construction, oil rings, stainless **steel** bolts, and 8 round thread or alternate with Arizona Water Company Engineering approval
- All material subject to Arizona Water Company Standard Specification OE-11-22 (enclosed) except as noted

Bowl Assembly Construction Materials

1. No left hand to right hand adaptations will be allowed for the oil tube assembly
2. No invoice will be accepted for payment unless accompanied by a "complete" installed pump equipment data sheet
3. Alternate bowl assemblies will be considered subject to final approval by Arizona Water Company's Engineering department

Included with Each Bid Should be a List Including:

Maximum Bhp
Operating Bhp
Overall efficiency at design conditions
Total down thrust at design conditions
Maximum down thrust throughout total pump range
Differential stretch at design condition
Maximum differential stretch
Allowable lateral for bowl assembly

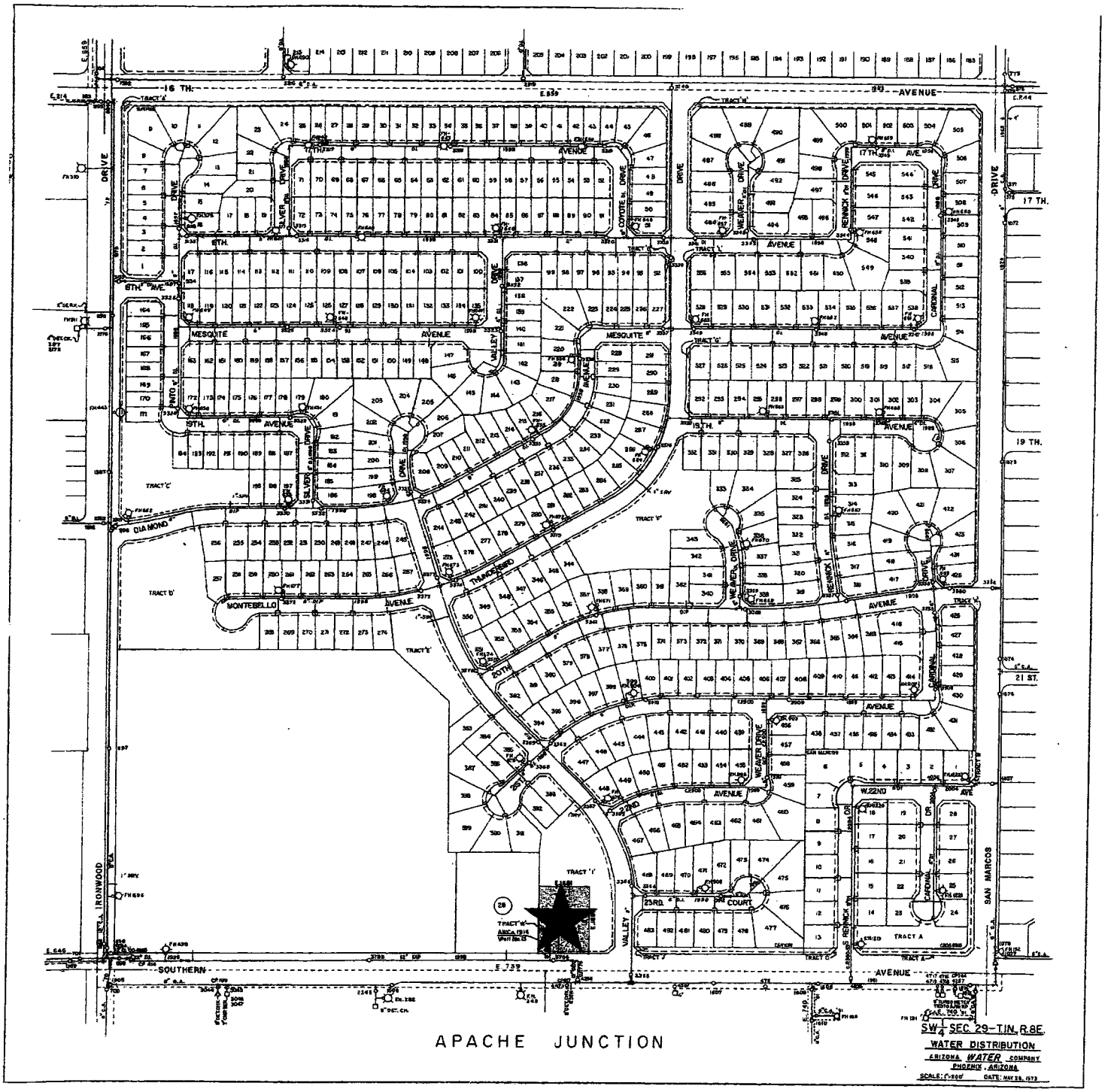

PULL & REPLACE THE PUMP IN WELL #15

ID	Task Name	Duration	Start	Finish	Predecessors
1	Finish Pump Project	82 days	Mon 1/10/11	Tue 5/3/11	
2	Pump Design	32 days	Mon 1/10/11	Tue 2/22/11	
3	Coordinate Existing Pump Conditions w/ Field	5 days	Mon 1/10/11	Fri 1/14/11	
4	Locate Existing Pump Design	5 days	Mon 1/17/11	Fri 1/21/11	3
5	Design Pump and Check Existing Materials	10 days	Mon 1/24/11	Fri 2/4/11	4
6	Preliminary Pump Design to Field for Comment	5 days	Mon 2/7/11	Fri 2/11/11	5
7	Final Pump Design	5 days	Mon 2/14/11	Fri 2/18/11	6
8	QA/ QC	2 days	Mon 2/21/11	Tue 2/22/11	7
9	Bid Pump Construction & Award Contract	20 days	Wed 2/23/11	Tue 3/22/11	8
10	Construction	30 days	Wed 3/23/11	Tue 5/3/11	9

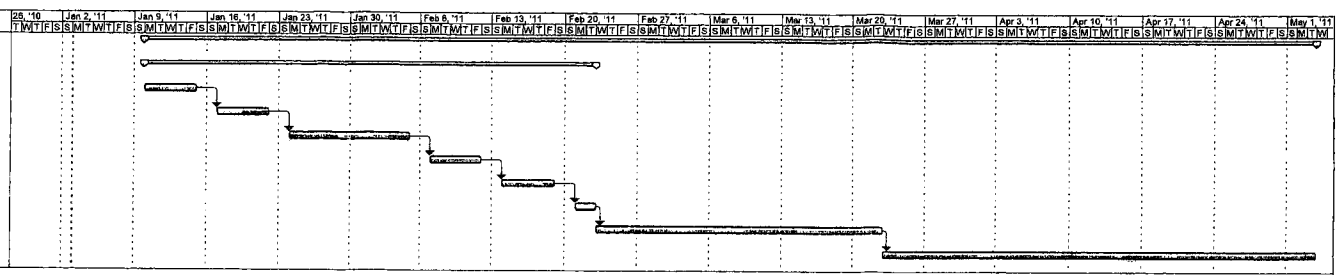

Project: SS-06 Well #15.mpp
Date: Mon 1/3/11

Task | Split | Progress | Milestone | Summary | Project Summary | External Tasks | External Milestone | Deadline

ARIZONA WATER COMPANY

SUPERSTITION DIVISION - APACHE JUNCTION
2380 W. SOUTHERN AVENUE, AJ, AZ 85120
PH: 480-982-2201 - FX: 480-983-6390

PROPOSAL/CONTRACT

CONTRACTOR: WEBER GROUP LC	SYSTEM: SUPERSTITION
ADDRESS: 16825 S. WEBER DRIVE	W.A. No(s): 1-4792
CITY ST ZIP: CHANDLER ARIZONA 85226-4112	BID DUE DATE: February 11, 2011

CONTRACTOR SUBMITS this PROPOSAL/CONTRACT to ARIZONA WATER COMPANY, an Arizona corporation (the "Company"), to perform the work and complete the project described on Page 2 (the "Project"), as an independent prime contractor.

1. Contractor certifies that it has a complete copy of, and has read, understands and accepts, the Company's General Conditions of Contract, and the Company's Construction Specifications and Standard Specification Drawings, (the "Specifications"), all of which are attached hereto. Contractor has examined the specific plans and related construction drawings for the Project (the "Drawings"), copies of which are also attached hereto. The General Conditions of Contract, Specifications and Drawings are incorporated into this Proposal/Contract. Contractor affirms that all work and materials to be furnished or purchased for the Project will be in strict conformance with the General Conditions of Contract, Specifications and Drawings.
2. Contractor represents and warrants that it has satisfied and complied with the provisions of Section 6, Contractor Understands Work and Working Conditions, of the General Conditions of Contract prior to submitting this Proposal/Contract.
3. Contractor represents that this Proposal/Contract is fair and honest in all respects, is submitted in good faith and is not submitted in collusion with any other company, entity or person.
4. Contractor acknowledges that one hundred percent (100%) Performance and Payment Bonds are required and must be provided to the Company prior to the commencement of work.
5. Prior to the commencement of work, Contractor will submit to the Company a list of all materials to be used in the Project. The materials list will include the manufacturer, part number, price and quantity included in this Proposal/Contract.
6. Contractor will furnish all labor, tools, equipment and materials required to complete the Project according to the General Conditions of Contract, Specifications and Drawings. No materials purchased by Contractor to be incorporated into the Project are subject to tax at the time of purchase and Contractor will not charge the Company for any such tax. Contractor will pay the applicable transaction privilege tax (the "Contracting Tax") on the Project after Contractor receives payment of the final Project invoice from the Company. The cost of materials incorporated into the Project which are exempt by Arizona Revised State Statues ("A.R.S.") from the Contracting Tax, for example, pipes or valves having a diameter of four (4) inches or larger, including equipment, fittings and any other related part that is used in operating the pipes or valves (A.R.S. §42-5061 B.6.), will not be included in the total cost of the labor and materials upon which the Contracting Tax is computed. Contractor retains full liability and obligation to pay the Contracting Tax and will defend and indemnify the Company against any demand or obligation to pay the Contracting Tax.
7. Contractor will maintain detailed accounting records of all materials purchased and incorporated into the Project. Such records will include all supporting original vendor invoices for all materials purchased. Following completion of the Project, Contractor will submit an itemized accounting to the Company which will include all supporting original vendor invoices and satisfactory evidence of payment thereof. The Company will not pay Contractor for materials not actually incorporated into the Project, and the disposition of such materials will remain Contractor's responsibility.
8. The Estimated Total Cost of the Project, shown on Page 2, is based on estimated labor and material quantities to be furnished. It includes an estimate of the Contracting Tax and the cost of the required Performance and Payment Bonds. Contractor will not cancel, modify or withdraw this Proposal/Contract during a ninety-day (90) period commencing on the Bid Due Date. The Company may accept this Proposal/Contract by signing and mailing, or otherwise delivering, a copy hereof to Contractor during such ninety-day (90) period. If the Company does not accept this Proposal/Contract during such ninety-day (90) period, Contractor may cancel this Proposal/Contract by giving written notice of cancellation to the Company.
9. Prior to the commencement of work, Contractor will provide the Company with a detailed construction schedule, in either Gantt or CPM form, identifying all tasks to be performed from the date of the written Commencement Notice through completion of the Project, including testing, training of Company Personnel and final Project invoicing. Contractor will provide the Company with a copy of such construction schedule documenting the progress of work on the Project at least monthly.
10. Contractor will not commence work on the Project until the Company gives Contractor a written Commencement Notice. Contractor will complete the Project within 60 calendar days after the Commencement Notice is issued.
11. Following the Company's written notice of satisfactory completion of the Project, and upon receipt of the final Project invoice from Contractor, the Company shall pay Contractor the actual total cost of the Project, which will be calculated as shown on Page 2, except that actual labor and material quantities installed/constructed will be substituted for the estimated labor and materials quantities and the Contracting Tax will be recalculated based on such actual labor and materials quantities.
12. The amount of applicable liquidated damages for Contractor's failure to deliver or perform within the time limit shown in Paragraph 10 may be deducted from the Company's payment of the final Project invoice. This provision shall not limit the Company's ability to terminate this Proposal/Contract for Contractor's unsatisfactory performance or failure to perform as provided in the General Conditions of Contract, Specifications or Drawings, or in this Proposal/Contract.

SPECIAL CONDITIONS:

CONTRACTOR	PROPOSAL/CONTRACT ACCEPTED:
WEBER GROUP LC	ARIZONA WATER COMPANY
By: Fred Tregaskes	By: Fredrick K. Schneider
Print Name: FRED TREGASKES	Print Name: Fredrick K. Schneider, PE
Title: PRESIDENT	Title: Vice President - Engineering
Date: 2-10-11	Date: 2-28-11

ARIZONA WATER COMPANY

SUPERSTITION DIVISION - APACHE JUNCTION
2380 W. SOUTHERN AVENUE, AJ, AZ 85120
PH: 480-982-2201 - FX: 480-983-6390

PROPOSAL/CONTRACT

CONTRACTOR: WEBER GROUP LC	SYSTEM: SUPERSTITION
AZ CONTRACTOR LICENSE NO: CLASSIFICATION:	W.A. No(s): 1-4792
ADDRESS: 16825 S. WEBER DRIVE	BID DUE DATE: February 11, 2011
CITY ST ZIP CHANDLER ARIZONA 85226-4112	BID BOND REQUIRED ☐ Yes ☑ No

DESCRIPTION OF PROJECT: PULL AND REPLACE PUMP AND MOTOR AT APACHE JUNCTION WELL #15.

1-2. MATERIALS EXEMPT FROM CONTRACTING TAX (per Paragraph 6)	QUANTITY	UNIT PRICE LABOR	UNIT PRICE MATERIALS		TOTAL COST LABOR		TOTAL COST MATERIALS
3. Total Labor to Install Exempt Materials (add the amounts in column 1)				3			
4. Total Exempt Materials (add the amounts in column 2)						4	

5-6. NON-EXEMPT MATERIALS		QUANTITY	LABOR	MATERIALS (4NR)		LABOR		MATERIALS
Labor to pull and replace pump and motor		1 ea	10000			10000		
American Turbine 12-H-150 13 stage ductile iron construction, o-rings, stainless steel bolts and 8 round thread		1 ea		14725				14725
Pressure test 1/4" SS airline		1 ea	100			100		
Misc buckles, bandits, and tape		Lot		300				300
1" SCH 80 PVC		840 ft		.75				630
Video Well		1 ea	850			850		
10" 8" x 20' 8 round seamless column pipe	(price only)	1 ea		1323				
3" Inner column w/bushings 20 ft	(price only)	1 ea		800				
1 15/16" shaft 20 ft	(price only)	1 ea						
Brush & Bail w/cable tool rig (remove waste)	(price only)	1 hr	235					
1/4" Stainless steel airline	(price only)	840 ft		2.00				
3" x 10" Spiders	(price only)	1 ea		5				
7. Total Labor to Install Non-Exempt Materials (add the amounts in column 5)					7	10950		
8. Total Non-Exempt Materials (add the amounts in column 6)							8	15655
9. Subtotal A (add lines 3, 7 and 8)							9	26605
10. Contracting Tax Base (multiply the amount on line 9 by 0.65)					10	17293.25		
11. Applicable Contracting Tax Rate					11	9.7		
12. Contracting Tax (multiply the amount on line 10 by line 11)							12	1677.45
13. Subtotal B (add lines 4, 9 and 12)							13	28282.45
14. 100% Performance and Payment Bonds Cost							14	—
15. Estimated Total Cost (add lines 13 and 14)							15	28282.45

NOTE: The Estimated Total Cost includes all labor and materials for backfill, pavement replacement, chip seal, and traffic control necessary for the Project.

ARIZONA WATER COMPANY

CONSTRUCTION SPECIFICATIONS: E-8-1

ERRATA 2010

10. PROTECTION OF WATER MAINS NEAR SEWERS

In order to protect water mains from contamination by sewers, the installation of the water mains must conform to the following requirements:

a. Horizontal - When water lines and sewers are laid parallel with each other, the horizontal distance between them shall not be less than six feet (6'). Each line shall be laid on undisturbed or bedded material in a separate trench. Where conditions prevent the minimum horizontal separation set forth above, extra protection will be required. Extra protection shall consist of constructing the sewer main with mechanical joint ductile iron pipe or with slip-joint ductile iron pipe if joint restraint is provided, or encasing both the water main and sewer main in concrete. See Detail E-9-30-1 and E-9-30-2

The Construction Drawings shall indicate the installation requirements. The drawings showing these exceptions shall have been approved by the appropriate state and/or county health department. Refer to the diagram below for clarification.

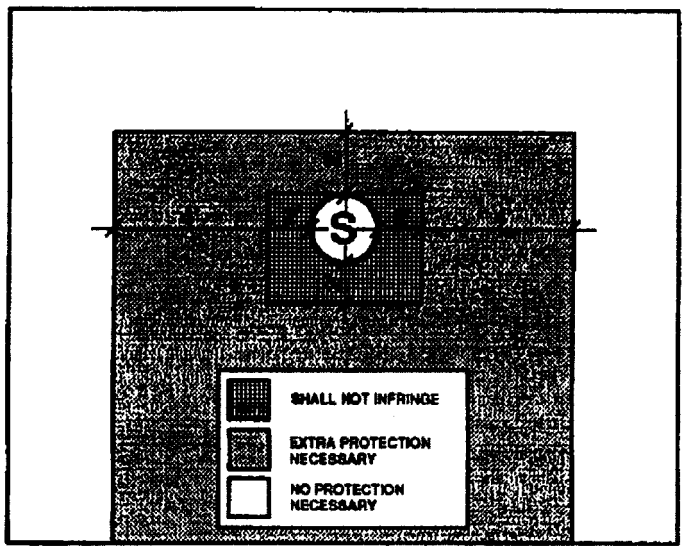

Under no circumstances will the horizontal separation between sewer mains and water mains be less than two feet (2'). All distances are to be measured from the outside of the sewer main to the outside of the water main.

b. Vertical - When a water main is parallel with or crosses a sewer main within two feet (2') above the sewer or greater than two feet (2') below the sewer, extra protection will be required. Extra protection shall consist of constructing the sewer main with mechanical joint ductile iron pipe or with slip-joint ductile iron pipe if joint restraint is provided, or encasing both the water main and sewer main in concrete. See Detail E-9-30-1 and E-9-30-2.

The Construction Drawings shall indicate the installation requirements. The drawings showing these exceptions shall have been approved by the appropriate state and/or county health department.

Under no circumstances will the vertical separation of a sewer main installed above a water main be less than two feet (2'). All distances are to be measured from the outside of the sewer main to the outside of the water main. Refer to the diagram above for clarification.

c. When unusual conditions such as, but not limited to, highway or bridge crossings prevent the water and sewer main separations required from being met, the appropriate state and/or county health department will review and may approve requests for authorization to use alternate construction techniques, materials and joints on a case-by-case basis.

d. No water pipe shall pass through or come into contact with any part of a sewer manhole. The minimum horizontal separation between water mains and manholes shall be six feet (6'), measured from the center of the manhole.

e. The minimum separation between force mains or pressure sewers and water mains shall be two feet (2') vertically and six feet (6') horizontally under all conditions. Where a sewer force main crosses above, or less than six feet (6') below, a water line, the sewer main shall be encased in at least six inches (6") of concrete for ten feet (10') on either side of the water main. Refer to the diagram below for clarification.

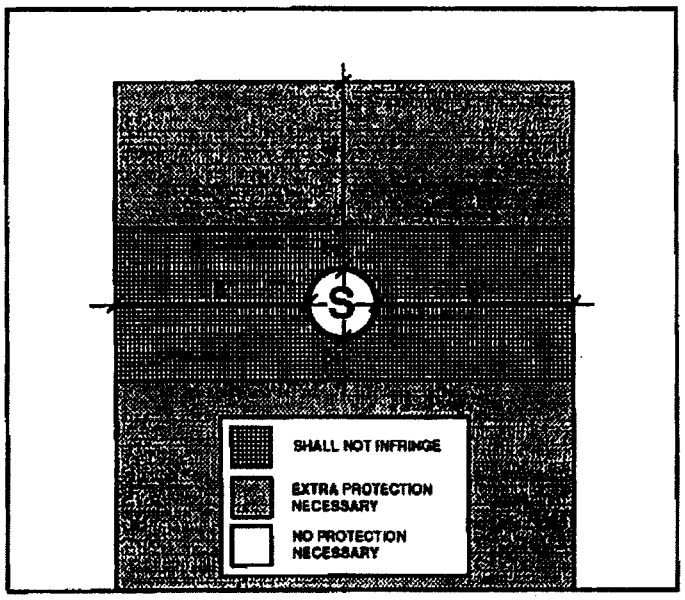

ARIZONA WATER COMPANY

STANDARD SPECIFICATION DRAWINGS: E-9-1

ERRATA 2010

E-9-20	INSTALLATION OF TYPICAL WELL WITH LINE SHAFT TURBINE PUMP
E-9-21	INSTALLATION OF TYPICAL WELL WITH SUBMERSIBLE TURBINE PUMP
E-9-22	INSTALLATION OF COLUMN PIPE, OIL TUBE AND LINE SHAFT
E-9-23	HOT TAP AND JUMPER METER CONNECTION
E-9-24	INSTALLATION OF TYPICAL WATER LINE ENCASEMENT
E-9-25	INSTALLATION OF CALCIUM HYPOCHLORITE TABLET CHLORINATOR
E-9-26	INSTALLATION OF CHAIN LINK FENCE
E-9-27	INSTALLATION OF SIDE HUNG WATER LINE SUSPENSION
E-9-28	PIPE WARNING TAPE, LOCATOR WIRE, AND LOCATOR WIRE TERMINATION
E-9-29	INSTALLATION OF A TYPICAL SAMPLING STATION
E-9-30-1	WATER AND SANITARY SEWER SEPARATION/PROTECTION PERPENDICULAR
E-9-30-2	WATER AND SANITARY SEWER SEPARATION/PROTECTION – PARALLEL

ENCASEMENT FOR PIPE CROSSING

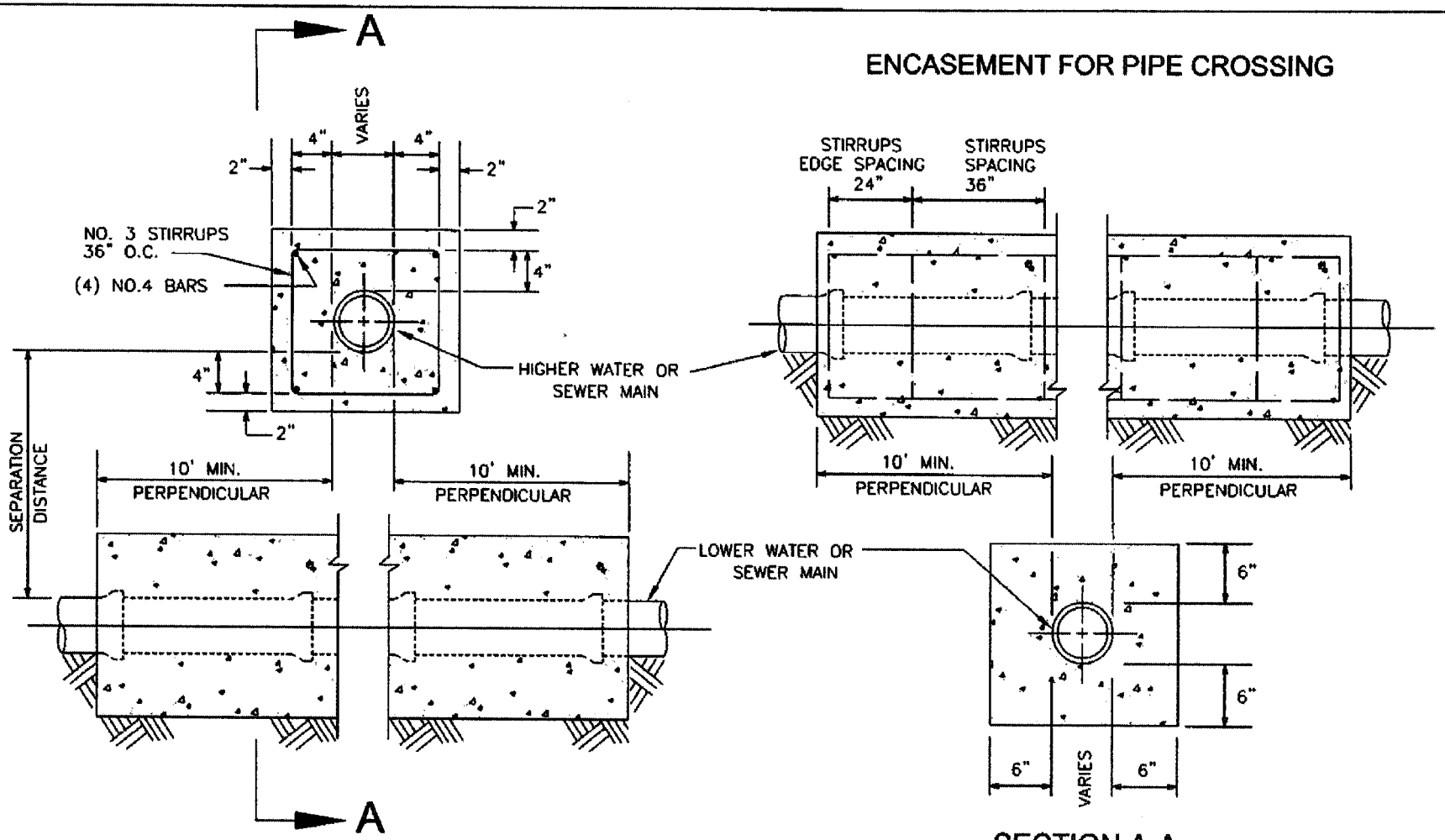

SECTION A-A

NOTES:

1. 2,000 PSI CONCRETE
2. SEPARATION DISTANCES AND/OR OTHER EXTRA PROTECTION SHALL BE REQUIRED TO PROTECT WATER MAINS FROM CONTAMINATION BY SANITARY SEWER MAINS. SEE AWC STANDARD SPECIFICATION PAGES E-8-1-9 AND E-8-1-10.
3. SEE CROSS SECTION DETAIL FOR LIMITS OF SEPARATION/EXTRA PROTECTION. ALL DISTANCES ARE MEASURED PERPENDICULARLY FROM THE OUTSIDE OF THE PIPES.
4. RECLAIMED WATER SHALL BE CONSIDERED A SANITARY SEWER WHEN PLACED NEXT TO A POTABLE WATER MAIN.

ARIZONA WATER COMPANY

STANDARD SPECIFICATION
FOR THE INSTALLATION OF
WATER AND SANITARY SEWER
SEPARATION/PROTECTION

DRAWN BY	APPROVED BY	DATE		
CB	JW	04.07.2008		E-9-30-1

NOTES:

1. 2,000 PSI CONCRETE

2. SEPARATION DISTANCES AND/OR OTHER EXTRA PROTECTION SHALL BE REQUIRED TO PROTECT WATER MAINS FROM CONTAMINATION BY SANITARY SEWER MAINS. SEE AWC STANDARD SPECIFICATION PAGES E-8-1-9 AND E-8-1-10.

3. SEE CROSS SECTION DETAIL FOR LIMITS OF SEPARATION/EXTRA PROTECTION. ALL DISTANCES ARE MEASURED PERPENDICULARLY FROM THE OUTSIDE OF THE PIPES.

4. RECLAIMED WATER SHALL BE CONSIDERED A SANITARY SEWER WHEN PLACED NEXT TO A POTABLE WATER MAIN.

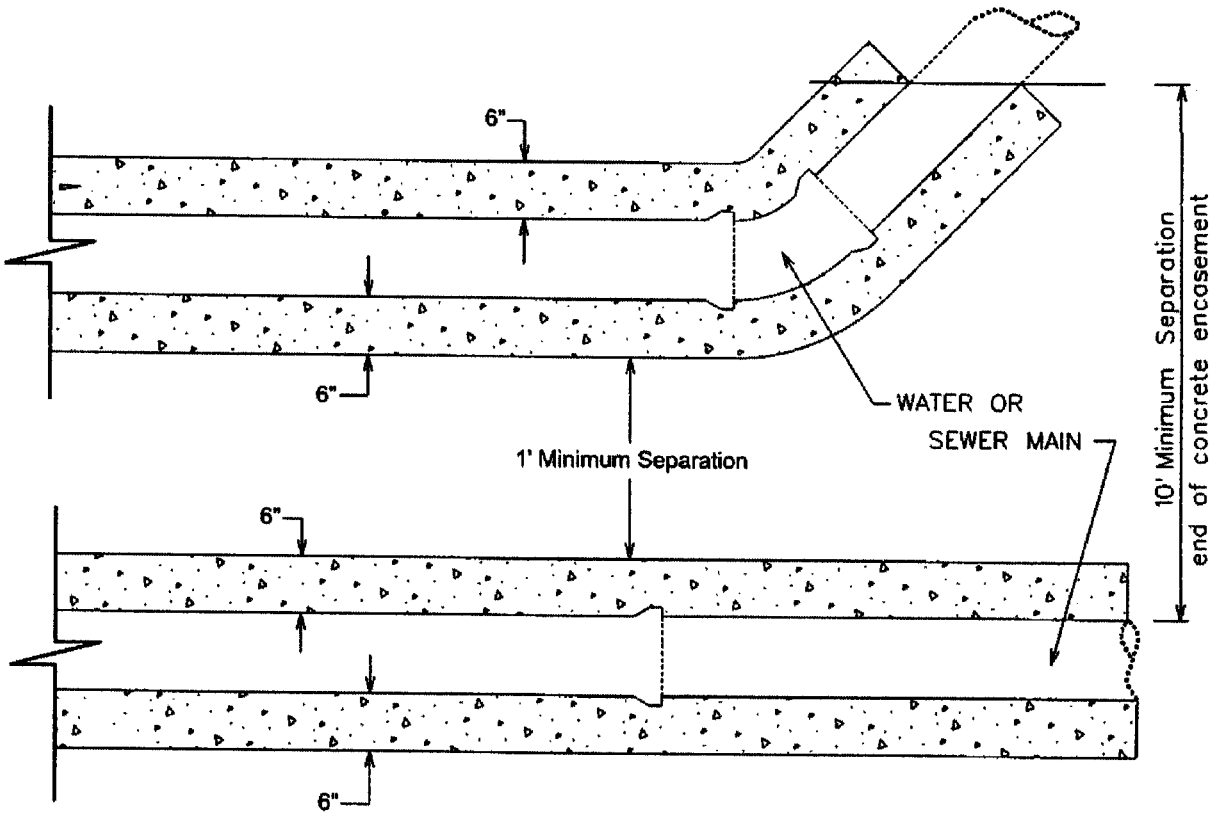

PLAN VIEW

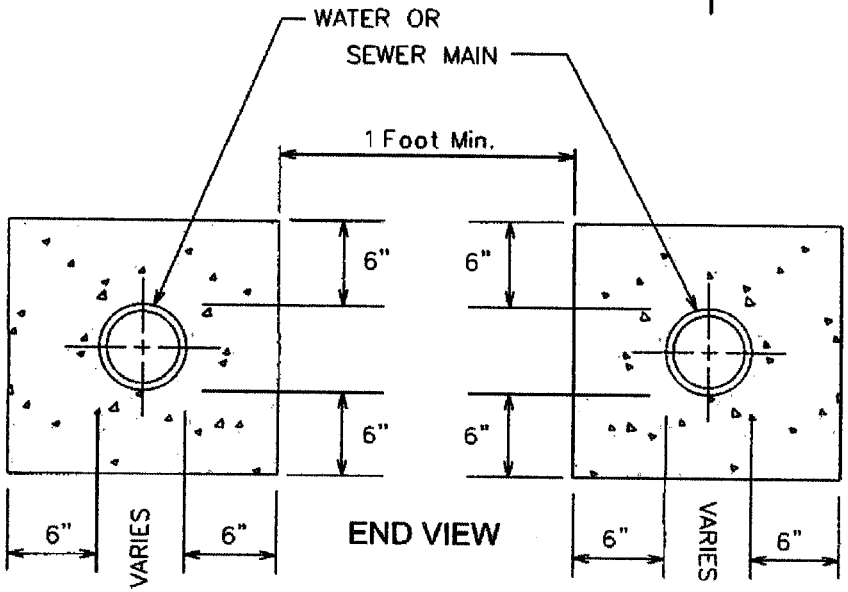

END VIEW

ENCASEMENT FOR PARALLEL PIPES

ARIZONA WATER COMPANY

STANDARD SPECIFICATION
FOR THE INSTALLATION OF
WATER AND SANITARY SEWER
SEPARATION/PROTECTION

DRAWN BY	APPROVED BY	DATE		
CB	JW	04.07.2008		E-9-30-2

ARIZONA WATER COMPANY

3805 N. BLACK CANYON HIGHWAY, PHOENIX, ARIZONA 85015-5351 • P.O. BOX 29006, PHOENIX, ARIZONA 85038-9006
PHONE: (602) 240-6860 • FAX: (602) 240-6878 • WWW.AZWATER.COM

October 19, 2010

Mr. Jim Ryan
Clow Valve Company
8121 N. 10th Avenue
Phoenix, Arizona 85021

Re: Clow Medallion Fire Hydrants and Resilient Wedge Gate Valves

Dear Mr. Ryan:

Thank you for your interest in working with Arizona Water Company (the "Company") to add Clow Medallion Fire Hydrants and Resilient Wedge Gate Valves to the Company's material and equipment specifications. Based on the Clow product information you provided and your field presentations to our operations and engineering staff, the Company is pleased to inform you that the following items are approved for use in the Company's water systems in Arizona.

Medallion Fire Hydrant:

- Model F-2545
  - 5¼" MVO
  - 4½" pumper
  - 2½" hose
  - Meets AWWA C-502 standard and approval by ULFM

Resilient Wedge Gate Valves:

- Model 2639 & 2640
  - Meets AWWA C-509 Full Body Cast Iron includes 304 SS Nuts, Bolts & Low Zinc Bronze Stem
  - Size range 2½" thru 12"
- Model 2638
  - Meets AWWA C-515 Reduced Wall Ductile Iron includes 304 SS Nuts, Bolts & Low Zinc Bronze Stem
  - Size range 14" thru 48"

We look forward to developing a long-term relationship with you and the Clow products. If I can be of any assistance, please call me.

Very truly yours,

Fredrick K. Schneider
Vice President – Engineering

lar

VIA EMAIL: JIM.RYAN@CLOWVALVE.COM

ARIZONA WATER COMPANY

3805 N. BLACK CANYON HIGHWAY, PHOENIX, ARIZONA 85015-5351 • P.O. BOX 29006, PHOENIX, ARIZONA 85038-9006
PHONE: (602) 240-6860 • FAX: (602) 240-6878 • WWW.AZWATER.COM

November 24, 2010

Mr. Tony Geiger
US Pipe – Waterworks Marketing Consultants
34522 N. Scottsdale Road
Scottsdale, Arizona 85226

Re: US Pipe Sentinel Fire Hydrants and Resilient Wedge Gate Valves

Dear Mr. Geiger:

Thank you for your interest in working with Arizona Water Company (the "Company") to add US Pipe Sentinel Fire Hydrants and Resilient Wedge Gate Valves to the Company's material and equipment specifications. Based on the US Pipe product information you provided and your field presentations to our operations and engineering staff, the Company is pleased to inform you that the following items are approved for use in the Company's water systems in Arizona.

Sentinel Fire Hydrant:

- Model Sentinel 250
  - 5¼" MVO
  - 4½" pumper
  - 2½" hose
  - Meets AWWA C-502 standard and approval by ULFM

Resilient Wedge Gate Valves:

- Model US Pipe A-USP0
  - Meets AWWA C-509 Full Body Cast Iron <u>includes</u> 304 SS Nuts, Bolts & Low Zinc Bronze Stem
  - Size range 2" thru 12"
- Model US Pipe A-USP1
  - Meets AWWA C-515 Reduced Wall Ductile Iron <u>includes</u> 304 SS Nuts, Bolts & Low Zinc Bronze Stem
  - Size range 14" thru 48"

We look forward to developing a long-term relationship with you and the US Pipe products. If I can be of any assistance, please call me.

Very truly yours,

Fredrick K. Schneider
Vice President – Engineering

afh

VIA EMAIL: TGEIGER4@COX.NET

ARIZONA WATER COMPANY

SPECIFICATIONS

GENERAL CONDITIONS OF CONTRACT: E-4-1

CONSTRUCTION SPECIFICATIONS: E-8-1

STANDARD SPECIFICATION DRAWINGS: E-9-1

2007 EDITION

ARIZONA WATER *COMPANY*

GENERAL CONDITIONS OF CONTRACT: E-4-1

ARIZONA WATER COMPANY

E-4-1

GENERAL CONDITIONS OF CONTRACT

DEFINITIONS

A. Company. The words "Company" or "Arizona Water Company" mean Arizona Water Company, and where applicable, any division of Arizona Water Company, whose principal place of business is located at 3805 North Black Canyon Highway, Phoenix, Arizona 85015-5351 (Post Office Box 29006, Phoenix, Arizona 85038-9006).

B. Company's Authorized Representative. The words "Company's Authorized Representative" mean any officer of the Company, and any of the Company's Engineers, any Division Manager or Superintendent of the Company and/or such other person(s) designated in writing as the "Company's Authorized Representative" by the President or any Vice President of the Company.

C. Contractor. The word "Contractor" means either an individual or other entity employed to do the work as shown on the Construction Drawings and as specified herein.

D. Construction Drawings. The words "Construction Drawings" mean plans prepared by or on behalf of Arizona Water Company.

E. Invitation to Bid. The term "Invitation to Bid" means the current copy of Arizona Water Company's Form E-3-11-4 Request for Proposal/Contract or Form E-3-12-2 Invitation to Bid.

F. Contract. The word "Contract" means the written document titled "Contract" or "Proposal/Contract" when such document has been signed by an officer or other authorized representative of both the Contractor and the Company.

G. Inspector. The word "Inspector" means the Company's Authorized Representative or a person designated in writing by the Company's Authorized Representative.

GENERAL CONDITIONS OF CONTRACT

1. GENERAL

These General Conditions of Contract govern all works of installation and construction unless deviations are provided for on the Construction Drawings or in the Contract.

2. BONDS

The Contractor shall, upon request by the Company, furnish a performance bond and a material payment bond in the amount of 100% of the Contract price, in a form and from a surety acceptable to the Company.

3. LABOR AND/OR MATERIAL RELEASES

The Contractor shall supply labor and/or material releases satisfactory to the Company when requested to do so. Forms will be provided by the Company.

4. LICENSE

The Contractor shall have, as may be required by law, a valid license applicable to the work to be performed.

5. INSURANCE

The Contractor shall maintain in full force and effect insurance at no less than the following minimum amounts:

WORKER'S COMPENSATION	In accordance with requirements of the laws of the State of Arizona.
COMPREHENSIVE GENERAL LIABILITY (Including contractual liability covering death, bodily injury and property damage)	Combined single limit of not less than $1,000,000 for each occurrence.
AUTOMOTIVE LIABILITY (Including owned, non-owned and hired vehicles)	Combined single limit of not less than $1,000,000 for each occurrence.
SUBCONTRACTOR'S PUBLIC LIABILITY AND PROPERTY DAMAGE INSURANCE AND VEHICLE LIABILITY INSURANCE	Contractor shall either require each of its subcontractors to procure and to maintain Subcontractor's Public Liability and Property Damage Insurance and Vehicle Liability Insurance of the type and in the amounts specified in this Section 5 or insure the activities of its subcontractors in Contractor's own policy, in like amounts.

Such insurance shall name the Company, its officers, agents, and employees as additional insured and be primary for all purposes.

The Company will at all times have the right to require that all of such insurance be placed with insurance companies that are satisfactory to it. The Contractor shall file with the Company a certificate evidencing that each policy of insurance for the above coverages in the minimum amounts specified has been purchased and is in good standing.

Such certificate shall provide that notice be given to the Company at least thirty (30) days prior to cancellation or material change in the form of such policies or any of them. Such certificates shall be kept on file by the Company and the Company must have current certificates on file, or a certificate must accompany any bid proposal, before that proposal will be accepted by the Company.

6. CONTRACTOR UNDERSTANDS WORK AND WORKING CONDITIONS

By executing a Contract with the Company, the Contractor warrants that it has, by careful examination, satisfied itself as to the nature and location of the work, including soil conditions, the character, quality and quantity of the materials to be encountered, the character of the equipment and facilities needed preliminary to and during prosecution of the work, the general and local conditions, and all other matters which can in any way be expected to affect its work under the Contract. Verbal agreements or conversations with any officer, agent or employee of the Company, either before or after the execution of the Contract, are not binding upon the Company and shall not affect or modify any of the terms or obligations herein contained.

7. SPECIFICATIONS AND DRAWINGS

The Contractor shall keep on the job a complete copy of all drawings and specifications furnished by the Company which are applicable to the Contract with the Company. Anything mentioned in the specifications and not shown on the drawings or shown on the drawings and not mentioned in the specifications shall be of like effect as if shown or mentioned in both. In case of a discrepancy between the figures, drawings or specifications and physical conditions of the job, the matter shall be immediately submitted to the Company's Authorized Representative for decision as to adjustments, if any, because of the discrepancy; without a decision from the Company's Authorized Representative no discrepancy shall be adjusted by the Contractor, save only at its own risk and expense. Any deviation from the specifications must be approved in writing by the Company's Authorized Representative.

8. PROPERTY PROTECTION

Trees, fences, poles, underground structures and all other property shall be protected unless their removal is authorized on the Construction Drawings. Any property damaged shall be restored by the Contractor, at its expense, to the owner's satisfaction.

9. SPECIAL PERMITS, LICENSES AND INSURANCE

The Company shall obtain all permits for railroad, county, state, city and irrigation district rights-of-way as well as Forest Service, State Land Department and Bureau of Land Management permits. (Pipeline Contractors)

Whenever blasting is required, the Contractor shall obtain all permits, licenses and insurance required at its expense. (All Contractors)

The Contractor will be required to obtain, and shall certify in writing to the Company that it has obtained, all additional permits required to perform the work including, but not limited to, a National Pollution Discharge Elimination System Permit and/or an Aquifer Protection Permit as those permits relate to disposal of drilling, development and test waters and/or any other discharge or similar activity. (Well Drilling Contractors)

10. SURVEYS

The Company shall be responsible, or arrange, for all surveys required for the work covered in the Contract, unless otherwise specified.

11. BENCH MARKS, PROPERTY STAKES AND SURVEY STAKES

Bench marks, property stakes and survey stakes shall be preserved by the Contractor; in case they are destroyed or removed by Contractor or its employees, the Company will replace them at the Contractor's expense, and the Contractor and its sureties shall be liable therefore.

12. TOOLS, EQUIPMENT AND MATERIALS

The Contractor shall furnish all of the necessary tools, equipment, and pipeline materials required for the work. All material furnished by the Contractor shall be of the quality specified by the Company in its Construction Specifications (E-8-1).

13. SUPERINTENDENCE BY CONTRACTOR

The Contractor shall assure adequate superintendence of the work by a competent foreman or superintendent (with full authority to act on behalf of Contractor) satisfactory to the Company, who will be on the job at all times when work is in progress.

14. ORDER AND DISCIPLINE

The Contractor shall at all times enforce strict discipline and good order among its employees.

15. INDEPENDENT CONTRACTOR

The Contractor is an independent contractor and any provisions in the Contract, the specifications, or these General Conditions of Contract and Arizona Water Company's Construction Specifications which may appear to give the Company the right to direct the Contractor as to the details of the doing of any work to be performed by the Contractor, or to exercise a measure of control over said work, shall be deemed to mean and shall

mean, that the Contractor shall follow the desires of the Company in the results of the work only and not in the means whereby said work is to be accomplished, and the Contractor shall use its own discretion and shall have complete and authoritative control over the work and as to the details of the doing of the work.

16. PUBLIC SAFETY AND CONVENIENCE

Contractor shall at all times conduct its work so as to ensure the least possible obstruction to traffic and other inconvenience to the general public and the residents and businesses in the vicinity of the work, and to ensure the protection of persons and property.

To protect persons from injury and to avoid property damage, Contractor shall provide and maintain adequate barricades as required during the progress of the work and until it is safe to use the property for its intended purpose. The rules and regulations of the local governmental agencies and specific permit requirements respecting safety provisions shall be observed at all times.

In the case of blasting, the Contractor shall exercise extreme caution to protect the general public and personal and public property from harm or damage.

17. PROPERTY PROTECTION

Trees, fences, poles, and all other property shall be protected unless their removal is authorized by the Company. Any property damaged shall be restored by Contractor, at his expense, to Company's satisfaction.

18. RESPONSIBILITY OF CONTRACTOR

The work shall be under Contractor's responsible care and charge. Contractor shall bear all loss and damage whatsoever and from whatsoever cause, except that caused solely by the act of Company, which may occur on or to the work during the fulfillment of the Contract. If any loss or damage occurs, Contractor shall immediately make good any such loss or damage, and in the event of Contractor refusing or neglecting to do so, Company may, or by the employment of some other person, make good any such loss or damage, and the cost and expense of so doing shall be charged to Contractor.

The mention of any specific responsibility or liability imposed upon Contractor shall not be construed as a limitation or restriction of any general liability or duty imposed upon Contractor by the Contract. The reference to any specific duty or liability being made herein is merely for the purpose of explanation.

Contractor alone shall at all times be responsible for the safety of Contractor, Contractor's employees, and its subcontractors' employees, and for Contractor and its subcontractors' plant and equipment and the method of performing the work.

19. ERRORS AND OMISSIONS

If Contractor, in the course of the work, becomes aware of any errors or omissions in the Contract Documents or in the instructions, or if Contractor becomes aware of any discrepancy between the Contract Documents and the physical conditions of the site of

the work, Contractor shall immediately inform Company in writing. Any work done by Contractor after such discovery, until authorized by Company, will be done at Contractor's risk.

20. LAWS, REGULATIONS

Contractor shall give all notices required by law and comply with all laws, ordinances, rules and regulations, including, but not limited to, all applicable federal, state, local and other legally required health and safety standards, orders, rules, regulations or other laws, pertaining to the conduct of the work. Contractor shall be liable for, and shall defend and indemnify Company against and hold it harmless from, all violations of any law, ordinance, rule, regulation, standard, or order in connection with work furnished by or on behalf of Contractor. If Contractor observes that the Contract Documents are at variance with any law, ordinance, rule, regulation, standard, or order it shall promptly notify Company in writing and any necessary changes shall be adjusted as provided in the Contract for changes in the work. Contractor shall not perform any work contrary to such laws ordinances, rules, regulations, standards, or orders.

21. PERMITS, FEES AND INSPECTIONS

Permits and licenses necessary for the prosecution of the work, including, but not limited to, any National Pollution Discharge Elimination Systems (NPDES) Permits required by U.S. Environmental Protection Agency or the Arizona Department of Environmental Quality shall be secured, paid for, and complied with by Contractor.

Contractor shall be responsible for its actions and shall abide by all conditions and/or restrictions set forth in the NPDES Permit and any other permit or license required for this project.

Company shall at all times have access to the work whenever it is in preparation or in progress and Contractor shall provide proper facilities for such access and for all inspections. If the Contract Documents, the General Superintendent's instructions, laws, ordinances or any public authority require any work to be inspected or approved, Contractor shall give timely notice of its readiness for inspection.

Inspection of the work shall not relieve Contractor of any of its obligations even if defective work or unsuitable materials may have been previously overlooked by Company and accepted or estimated for payment. If any work is found not in accordance with the Contract Documents, Contractor, at its sole cost and expense, shall promptly make good such defective work.

22. CONSTRUCTION MARKING (PIPELINE ONLY)

Each job shall be marked and/or barricaded by the Contractor in such a manner that the construction is clearly visible at all times.

23. EXTRA WORK AND/OR MATERIALS

Except as otherwise herein provided, no charge for any extra work and/or material will be allowed unless the same has been ordered in writing by the Company's Authorized Representative, and the price stated in such order.

24. CHANGES

The Company shall have the right to make any changes in the work that it may determine to be necessary. If such changes affect the cost of the work, an equitable adjustment shall be negotiated. Changes shall in no way affect or void the obligations of both parties under the original Contract.

25. INSPECTION

All work and material shall be open at all times to inspection and acceptance or rejection by the Company's Inspector. Any work covered up by the Contractor prior to inspection and acceptance by the Company shall be subject to being uncovered at the expense of the Contractor for inspection by the Company. The Contractor shall give the Company reasonable notice of starting new work and shall provide, without extra charge, reasonable and necessary facilities for inspection, even to the extent of taking out portions of finished work. In case any such finished work removed is found satisfactory, however, the actual direct cost of such removal and replacement, plus 15% of such cost, will be paid by the Company; in addition, if completion of the work has been delayed thereby, the Contractor shall be granted a suitable extension of time on account of the additional work involved.

26. DEFECTIVE WORK OR MATERIAL

The Contractor shall remove, at its own expense, any work or material found defective by the Company's Inspector and shall rebuild and replace the same without extra charge; in default thereof, the same may be done by the Company at the Contractor's expense.

27. ASSIGNMENT

Neither party to the Contract may assign the Contract or sublet it in whole or in part without the written consent of the other, nor shall the Contractor assign any monies due or which may become due hereunder without the previous written consent of the Company, nor shall such consent release the Contractor from any of its obligations and liabilities under the Contract.

28. RIGHTS OF VARIOUS INTERESTS

Whenever work that is being done for the Company other than by the Contractor is contiguous to work being done by the Contractor, the respective rights of the various interests involved shall be established by the Company to secure the completion of the various portions of the work in general harmony.

29. SUSPENSION OF WORK

The Company's Authorized Representative may at any time and for any reason suspend all or any portion of the work under the Contract. This right to suspend work shall not be construed as denying the Contractor compensation for actual, reasonable and necessary expenses due to suspension to which it may be entitled.

The Company's Authorized Representative may order the Contractor to suspend any work because of certain conditions, such as inclement weather, or because the

Contractor is in violation of these General Conditions of Contract or the Construction Specifications. It is understood that compensation for expenses will not be allowed for such suspension when ordered by the Company's Authorized Representative on account of such conditions.

30. PROCEDURE OF WORK (PIPELINE ONLY)

All work under the Contract shall be planned and performed so as to cause a minimum of interference with normal vehicular and pedestrian traffic. At no time shall the Contractor completely obstruct the traffic to any business establishment during normal work hours of that business. It shall be the Contractor's responsibility to maintain facilities for ingress and egress to any business establishment. When crossing any street, not more than one-half of the street may be blocked at one time. All federal, state, county and city laws, rules and regulations relating to this subject are to be obeyed.

The Contractor shall complete any portion or portions of the work in such order of time as the Company may require. The Company shall have the right to take possession of and use any completed or partially completed portions of the work. If such prior possession or use increases the cost of or delays the work, the Contractor will be entitled to extra compensation or extension of time or both, as the Company may determine.

31. DISPUTES

All questions or controversies which arise between the Contractor and the Company, under, or in reference to, the Contract, shall be decided by the Company's Authorized Representative and a representative of the Contractor, and their decision shall be final and conclusive upon both parties.

32. CONNECTION TO EXISTING SYSTEM (PIPELINE ONLY)

Unless approved in writing by the Company's Authorized Representative, no tie-in or hot tap on the existing system shall be made unless the Company's Inspector is present. When the tie-in requires the operation of an existing valve or other control equipment, the conditions of Paragraph(s) 30 and 33 shall be complied with. The Contractor shall notify the Company twenty-four (24) hours prior to tie-in as to the exact time the Contractor plans to make tie-in so that the Company's Inspector will have sufficient time to locate valves and make necessary preliminary arrangements for shut down.

33. PLANNED INTERRUPTION OF WATER SERVICE (PIPELINE ONLY)

No valve or other control on an existing Company water system shall be operated for any purpose by the Contractor without approval of the Company's Inspector. All of the Company's water customers whose service is interrupted by a planned interruption, other than in cases of emergency, shall be notified by the Contractor at least twenty-four (24) hours before the planned interruption and advised of the probable time when the service will be restored.

34. EXISTING UTILITY FACILITIES (PIPELINE ONLY)

The Contractor shall notify all known utilities in the area of the work to be performed under the Contract and shall make arrangements to have their facilities marked in

accordance with A.R.S. ?40-360.022 ("Blue Stake Law"). The Contractor shall be responsible for locating and preserving all marked facilities. Any damages to these marked facilities shall be repaired at the expense of the Contractor.

The Company will pay the cost to relocate its or other structures when such structures are found occupying the physical space of the proposed installation. It is understood that the Contractor will be reimbursed for such work only when written authorization from the Company has been obtained in advance of such work.

35. CLEANING UP

The Contractor shall remove from the Company's property and from all public and private property, at its own expense, all temporary structures, rubbish and waste materials resulting from its operations. In the event Contractor fails to do so, the Company may remove same at the expense of the Contractor.

36. WORKING HOURS (PIPELINE ONLY)

Unless stated to the contrary in the Invitation to Bid and/or so stated on the Construction Drawings, or agreed to by the Company during a Pre-Construction Conference, the Contractor shall not be permitted to perform work on Saturdays, Sundays, or Company holidays, or commence work such as tie-ins that cannot be completed during normal working hours.

37. INDEMNITY

A. The Contractor shall indemnify the Company against, and save and hold it harmless from, any and all liability, claims, demands, loss, actions, causes of action, expense, penalties, fines, assessments, damages and costs of every kind and nature for injury to or death of any and all persons, including, without limitation, employees or representatives of the Company or of the Contractor or of any subcontractor, or any other person or persons, and for damage, destruction or loss, consequential or otherwise, to or of any and all property, real or personal, including, without limitation, property of the Company or of the Contractor or of any subcontractor, or of any other person or persons, and the violation of any law, ordinance, rule, regulation, standard, or order resulting from or in any manner arising out of or in connection with the performance of the work under the Contract, howsoever same may be caused, including, without limitation, the Company's active or passive negligence. The Contractor shall also, upon request by the Company, and at no expense to the Company, defend the Company in any and all suits, concerning such injury to or death of any and all persons, and concerning such damage, destruction or loss, consequential or otherwise, to or of any and all property, real or personal, including, without limitation, suits by employees or representatives of the Company or of the Contractor or of any subcontractor, or any other person or persons, or concerning any court or administrative proceeding concerning the violation of any law, ordinance, rule, regulation, standard, or order. Excluded from this paragraph are only those injuries to or deaths of persons and damage, destruction or loss, to or of property arising from the sole negligence or willful misconduct of the Company.

B. Contractor shall indemnify the Company against, and save and hold it harmless from, any and all liability, claims, demands, damages, costs, expenses and attorney's fees, suffered or incurred on account of any breach of any obligation, covenant or other

provision of this contract, including without limitation, breach of the indemnity provisions of subsection A of this Section 37.

C. Contractor further agrees to defend, indemnify and hold harmless the Company, its directors, officers, employees, and agents, from and against any and all costs, damages, claims, expenses, violations, notices of violations, penalties, liens, assessments, and liabilities of every kind and nature, foreseeable or unforeseeable, directly or indirectly, arising from any release, removal, generation, use, storage or disposal on, under, around, or from the well site of any material, substance, or waste, hazardous or non-hazardous, including, without limitation, drilling fluids, mud, cuttings and development and test water howsoever same may be caused, including, without limitation, the Company's active or passive negligence.

38. LIENS

If at any time there shall be evidence of any lien or claim for which the Company might become liable and which is chargeable to the Contractor, the Company shall have the right to retain out of any payment then due or thereafter to become due, an amount sufficient to completely indemnify the Company against such lien or claim. If the Company determines that such lien or claim is valid, the Company may pay and discharge the same, and deduct the amount so paid from any monies which may be or become due and payable to the Contractor.

39. PAYMENT

Upon completion of the installation or construction, the Company will, within thirty (30) days after receipt of proper invoice and labor and material releases, pay the amount due the Contractor. If the Company believes that additional work, such as clean up, is required, it may deduct the total cost of such additional work from the amount to be paid to Contractor.

40. COMPANY'S RIGHT TO TERMINATE CONTRACT: DAMAGES DUE TO DELAY

If the Company finds the Contractor to be in material violation of any section of these General Conditions of Contract, Construction Specifications or Standard Specification Drawings or if the Contractor refuses or fails to prosecute the work, or any separable part thereof, with such diligence as will insure its completion within the time specified or any extension thereof, or fails to complete said work within such time, or when any other cause exists to justify such action, the Company may, without prejudice to any other right or remedy, by written notice to the Contractor, terminate its right to proceed with the work or such part of the work as to which there has been such violation, delay or other cause.

In the event the Contractor's right to proceed is terminated, the Company may take over the work and take possession of, and utilize in completing the work, such materials as may be on the site of the work and necessary therefore and prosecute said work to completion by whatever method it may deem expedient. The Contractor and its sureties shall be liable to the Company for any excess cost caused thereby.

In the event the Contractor's right to proceed with the work is terminated, the Contractor shall not be entitled to receive any further payment until the work is completed or the job is canceled. If the unpaid balance of the Contract price exceeds the expense of finishing

the work, including compensation for additional managerial and administrative services, such excess shall be paid to the Contractor. If such expenses exceed such unpaid balance, the Contractor shall pay the difference to the Company.

41. GUARANTEE

The Contractor shall guarantee all deslabor and workmanship and any materials it installs for a period of one year following the date of completion and acceptance by the Company. If any portion of the work or any of the materials become defective within the guarantee period, the Company will notify the Contractor of such defect. The Contractor must repair any defect within fifteen (15) days of such notification. If repairs are not completed within this time period, the Company may repair the defect, or cause such defect to be repaired, and the cost of such repairs shall be paid by the Contractor. The Company reserves the right to determine which defects are the result of poor labor and workmanship and which are caused by defective materials.

42. LIQUIDATED DAMAGES FOR NON PERFORMANCE: REQUEST FOR EXTENSION(S) OF TIME

Time is of the essence in the Contract. The time period required for completion of the work will be specified in the Contract. The Contractor agrees that the Company will suffer substantial damages in the event the Contractor fails to complete the work within the agreed upon time period. The Contractor and the Company agree that since it would be impracticable or extremely difficult to precisely fix such damages, a reasonable approximation of such actual damages suffered by the Company shall be a sum equal to 0.5% of the Contract price for each working day beyond the time period for completion of the work specified in the Contract.

Request by the Contractor for extensions of the time period shall be in writing and shall not become effective until approved in writing by the Company's Authorized Representative.

43. PAYMENT FOR REQUIRED TESTING

Whenever testing is required by any governmental agency or by the Company to assure conformance of the Contractor's work with the appropriate standard, it will be paid for as follows:

a. For testing required under permits obtained by the Company or testing specifically requested by the Company, the cost of the first test will be paid for by the Company. In the event of failure of the first test, the cost of all further testing associated with the failure will be paid by the Contractor.

b. For testing required under permits obtained by the Contractor, all costs will be paid by the Contractor. Testing of the pipeline for pressure and leakage will be included in the Contract price.

44. CONTRACT DEADLINES AND BONDS REQUIREMENTS

The time limits to be allowed for the completion of any work covered in the Contract shall be established as follows: In the proposal submitted to the Company, in response to the Invitation to Bid, the Contractor shall state the number of calendar days required for completion of the work. The time required will become a part of the Contract. When the Company is ready to proceed with the work, a Commencement Notice will be issued by the Company to the Contractor by mail. The Commencement Notice will allow the time required in the Contract plus ten (10) calendar days and will indicate the final day of the time allowed. The work cannot begin until the Company has received a performance bond and materials payment bond for the Contract price unless the bonds have been waived under the special conditions section of the Contract. The additional ten (10) days is the allowance for time to deliver the Commencement Notice to the Contractor and for the Contractor to return the performance bond and materials payment bond to the Company. Time extensions will be granted if warranted, and only at the time of the delay, thus extending the final day of the time allowed.

If the Company elects not to require a performance bond and a material payment bond for the work, the cost of the bonds will be deducted from the proposed total cost and the Contract will reflect this reduced cost and the bonds requirements will be waived under special conditions of the Contract.

ARIZONA WATER COMPANY

CONSTRUCTION SPECIFICATIONS: E-8-1

ARIZONA WATER COMPANY

E-8-1

CONSTRUCTION SPECIFICATIONS FOR THE INSTALLATION OF WATER DISTRIBUTION SYSTEMS DUCTILE IRON

DEFINITIONS

A. Company. The words "Company" or "Arizona Water Company" mean Arizona Water Company, and where applicable, any division of Arizona Water Company, whose principal place of business is located at 3805 North Black Canyon Highway, Phoenix, Arizona 85015-5351 (Post Office Box 29006, Phoenix, Arizona 85038-9006).

B. Company's Authorized Representative. The words "Company's Authorized Representative" mean any officer of the Company, and any of the Company's Engineers, any Division Manager or Superintendent of the Company and/or such other person(s) designated in writing as the "Company's Authorized Representative" by the President or any Vice President of the Company.

C. Contractor. The word "Contractor" means either an individual or other entity employed to do the work as shown on the Construction Drawings and as specified herein.

D. Construction Drawings. The words "Construction Drawings" mean plans prepared by or on behalf of Arizona Water Company.

E. Contract. The word "Contract" means the written document titled "Proposal/Contract" when such document has been signed by an officer or other authorized representative of both the Contractor and the Company.

CONSTRUCTION SPECIFICATIONS
FOR THE INSTALLATION OF WATER DISTRIBUTION SYSTEMS
DUCTILE IRON

1. GENERAL

All work is to be completed in a safe, workmanlike manner and in accordance with these Construction Specifications; any deviation therefrom must be approved in writing by the Company.

Installations must conform with the requirements of all governmental regulating agencies and the cost of conforming to such regulations must be included in the unit bid prices. Examples of such regulations, without attempting to be inclusive, are:

a. Special compaction and paving for street crossing.
b. Shoring when required because of the trench depth.
c. Closing a trench in those areas where no open trench is allowed overnight.
d. Barricading and traffic control as required.

2. LOCATION MARKING

Alignment stakes as required in the opinion of the Company shall be furnished by the Company to the Contractor and shall be set by the Company at agreed upon intervals and offsets. Under normal circumstances these will reference the pipeline location five feet (5') into the right-of-way measured from property pins. Grade stakes will be provided only when the Construction Drawings show a pipeline depth other than covered in these Specifications. It is the responsibility of the Contractor to preserve all survey work.

3. TRENCH EXCAVATION

The trench location is to be determined by the Construction Drawings.

FOR 8-INCH OR SMALLER PIPE: The depth of the trench prior to pipe laying shall be such that the finished pipeline shall have between thirty-six inches (36") and forty-two inches (42") of cover unless otherwise specified on the Construction Drawings.

FOR 12-INCH AND LARGER PIPE: The depth of the trench prior to pipe laying shall be such that the finished pipeline shall have between forty-eight inches (48") and sixty inches (60") of cover unless otherwise specified on the Construction Drawings.

The width of the trench at and below the level at the top of the pipe shall be a minimum of twelve inches (12") plus the outside diameter of the pipe barrel and a maximum of twenty-four inches (24") plus the outside diameter of the pipe barrel.

The bottom of the trench shall be accurately graded to provide a uniform bearing for each length of pipe for the full length of the pipe. If the native material on the trench bottom can be reasonably dug by hand, bell holes shall be dug for the joints so that the joints in no way support the pipe. When native materials such as rock are encountered during trenching that will not provide a uniform support for the pipe, the trench will be over-excavated an additional six inches (6") and suitable bedding material will be placed in the trench.

Bedding material will be placed by hand in four-inch (4") lifts and compacted to ensure uniform compaction and to eliminate any voids under the pipe. When the space between the pipe and trench bottom varies, this must be backfilled and compacted in four-inch (4") lifts to the mid-section of the pipe.

Whenever the trench is over-excavated for whatever reason, the trench bottom will be brought up to the correct depth at the Contractor's expense using either method (a) or (b) as follows:

a. A.B.C. material shall be used and compacted to a uniform density of not less than 80% of the maximum density as determined by AASHTO T-99 method A and T-191.

b. Native material 100% of which will pass through a one and one-half inch (1½") screen and at least 20% of which will pass through a number-8 screen shall be used and compacted to a uniform density of not less than 85% of the maximum density as determined by AASHTO T-99 method A and T-191.

4. MATERIALS TO BE PROVIDED BY CONTRACTOR

Unless otherwise specified on the Construction Drawings or in the Contract, the Contractor will supply all of the necessary materials which will become a permanent and integral part of the water distribution system, including concrete blocking, anchors, backfill material, paving material and supplies used during the prosecution of the work. All materials provided by the Contractor to construct the water distribution system must be NSF Standard 61 approved. All potable water pipes and fittings shall have NSF-PW seal. Construction materials used in the water system shall be lead free as defined at AAC R28-4-504 and R18-1-101. The Contractor will provide the following materials:

a. FIRE HYDRANTS: Mueller Super Centurion 250 Fire Hydrant, meets ANSI/AWWA C502 Standard, Model No. A-423, 5¼" main valve opening, three way, 6" Mechanical Joint Shoe, 1½" pentagon operating nut, color - yellow, drain open, open direction - left, 4' or 4'6" bury depending on application. For pumper and hose nozzle information see below.

(1) 1 - 4" Pumper Nozzle, NST and 2 – 2½" Hose Nozzles, NST. (These locations only: Ajo, Casa Grande, Coolidge and San Manuel.)

(2) 1 – 4½" Pumper Nozzle, NST and 2 – 2½ " Hose Nozzles, NST. (These locations only: Apache Junction, Arizona City, Lakeside, Oracle, Overgaard, Pinewood, Rimrock, Sedona, Sierra Vista, White Tank and Winkelman.)

(3) 1 – 4½" Pumper Nozzle, NST and 2 – 2½" Hose Nozzles, NPT (Bisbee only.)

(4) 1 - 3" Pumper Nozzle GA 6-350 (6 threads per inch, 3.50 pitch diameter) and 2 – 2½" Hose Nozzles, NPT (Miami only.)

(5) 1 – 3½" Pumper Nozzle GA 6-411 (6 threads per inch, 4.11 pitch diameter) and 2 – 2½" Hose Nozzle, NST (Superior only.)

b. FITTINGS: Manufactured by Tyler or Union. Crosses, Elbows, Tees, Cap, Reducer, Adapter, Plug, Blind Flange and Tapped Flange; Ductile Iron, Class 350, SSB, Cast Iron Cement Lined.

(1) Foster Adaptors for MJ, made by Infact Corporation: Available in size 4" to 16". Part No. 4" = 4FA-BC, 6" = 6FA-BC, 8" = 8FA-BC, 10" = 10FA-BC, 12" = 12FA-BC, 16" = 16FA-BC.

c. DETECTOR CHECK VALVE: Mueller/ Hersey EDC III, iron body, including 5/8" x ¾" Trim Kit. Trim Kit Part No.: 4" = 282080, 6" = 282082, 8" = 282085, 10" = 282496.

d. GATE VALVES: Mueller Resilient Wedge Gate Valves, meets AWWA C509 specification, 250 psig, Non-rising stem, Part No. A-2360 sizes 4" through 12" ; Part No. A-2361 sizes 14" through 36", low zinc stems, epoxy coated inside and outside to meet the NSF 61 rating. The bonnet and stuffing box shall have 304 stainless steel bolts/nuts.

e. TRACER WIRE and WARNING TAPE:

1. TRACER WIRE: Shall be direct bury AWG #14 solid copper wire, Color: Blue.

2. WARNING TAPE: Reef Industries, Standard Terra Tape in 3" widths. Color: Blue and imprinted 'Arizona Water Company'.

f. AIR RELEASE VALVE: Crispin Model AR10 with 1" NPT inlet and ½" NPT outlet, cast iron body and top flange; with a 5/64" orifice with stainless steel valve sealing faces and B UNA-N rubber.

g. PRESSURE RELIEF VALVE: Watts 174A, Model M, 2" inlet, 2" outlet, Bronze Body, 30lb. to 150lb. pressure range.

h. MEGA LUG: Mechanical Joint restraint made of ductile iron conforming to ASTM 536-80, 250 psi made by EBAA Iron, Inc., series 1100 or equal.

i. METER BOXES:

(1) Concrete Box with a steel regular lid, Number 1: Tucson specification.

(2) Concrete Box with a steel regular lid, Number 2, 3, and 4: Phoenix specification.

j. PIPE, COPPER: Type K soft copper in 60 or 100-foot coils, per ASTM B88.

k. PIPE, DUCTILE IRON: Ductile Iron Pipe, Cement Lined, Push-on, conform to current ANSI/AWWA Specification A21.51/C151, Pressure Class 350 (sizes 4" through 12"), Pressure Class 250 (sizes 14" through 20"), or Pressure Class 200 for 24" through 36" pipe. Vendors:

(1) Pacific States Cast Iron Pipe Company
(2) Griffin Pipe
(3) United States Pipe and Foundry Company
(4) American Ductile Iron Pipe
(5) Clow Pipe (McWane, Inc.)

l. PIPE, PLASTIC: Plastic pipe, C-900 PVC per ANSI/AWWA C900, Class 150, sizes 6" through 12". NSF61 approved. Furnished in laying lengths of 20'. The barrel shall conform to the outside dimensions of steel pipe (IPS) or cast iron (CI) pipe equivalent and the wall thickness of dimension-ratio (DR) 18.

m. POLYETHYLENE ENCASEMENT (Polywrap): For all pipeline and related fittings installed, EXCEPT for the Coolidge Division. Minimum 8 Mil. and installed per AWWA C105/A21.5-93 and ASTM A-674-89. Manufactured by the Pacific States Cast Iron Pipe Company. The wrapping tape shall be minimum 10 mil. vinyl tape. No duct tape shall be used.

n. COUPLING: Mueller, straight three part union, tested to meet ANSI/AWWA C800, H15403, conductive com pression.

Mueller, H15428, straight coupling, conductive compression by male iron pipe, tested to meet ANSI/AWWA C800 specification. Size: 2".

Mueller, H15451, straight coupling, conductive compression by female iron pipe, tested to meet ANSI/AWWA C800 specification. Size: 2".

Viking Johnson brand, sold by Mueller: MaxiFit Straight (2"-24"), MaxiFitXtra Straight (4"-8") or MaxiStep Transition, tested to meet AWWA/ANSI C.219-91 specifications – certified to ISO 9001:1994 / Smith – Blair Quantum.

o. STOP, ANGLE METER, BALL: Mueller, valve, B24258, conductive compression by meter swivel nut, tested to meet ANSI/AWWA C800, size 5/8 " x ¾" x ¾" for a ¾" service or size 1" for a 1" service.

Mueller, valve, B24265, female pipe thread by meter swivel nut, tested to meet ANSI/AWWA C800, size 5/8" x ¾" x ¾" for a ¾" service or size 1" for a 1" service.

p. STOP, CORP: Mueller, ball valve, B25008, taper thread by conductive compression, tested to meet ANSI/AWWA C800 specification, sizes: ¾", 1" and 2".

Mueller, ball valve, B25028, iron pipe thread by conductive compression, tested to meet ANSI/AWWA C800 specification. Sizes ¾", 1", and 2".

Mueller, 300 Ball Curb Valve, B-25122, taper thread by conductive compression, tested to meet ANSI/AWWA C800 specifications, size: 2". (2" service)

q. STOP, CURB: Oriseal valve, H10291, iron pipe thread by iron pipe thread, quarter turn check, brass, tested to 300 psi working pressure, tested to meet ANSI/AWWA C800 specification, size: 2".

Mueller, B20283, Mueller 300 ball curb valve, female iron pipe by female iron pipe, quarter turn check, tested to meet ANSI/AWWA C800 specification. Size: 2". (Blow-off E-9-8-1).

r. TAPPING SADDLE: Smith Blair, Cast Bronze ASTM-B584 85-5-5-5, double strap, iron pipe threads, Models 321 and 323. Washers are silicon bronze, ASTM-B36. Gaskets are grade 60 Buna N, or Mueller bronze double strap service saddle, BR 2 B series, cast bronze, ASTM-B585, 85-5-5-5, or H16084, 200 psig, meets ANSI/AWWA C800.

s. TAPPING SLEEVE: Mueller H304 Stainless Steel Tapping Sleeve, JCM 432 18-8 Type 304 Stainless Steel Tapping Sleeve, Romac "SST" Type 304 Stainless Steel Tapping Sleeve or CASCADE-style CST-EX stainless steel pressure-rated tapping sleeve.

t. TAPPING VALVE: Mueller Resilient Wedge tapping valve, Catalog Number T-2360-16, Class 125, sizes 4" through 12"; T-2361-16, Class 125, sizes 14" to 36" all with Type 304 stainless steel fasteners; bypass valves are required on 18" – 36" valves flange by mechanical joint per ANSI/AWWA C111, iron wedge, non-rising stem. Epoxy coated interior/exterior per ANSI/AWWA C550 for NSF 61 compliance. 250 PSI range for valves 4" to 12". 150 PSI range for valves 14" to 36".

u. U-BRANCH: Mueller, H15364, 1" male iron pipe by ¾" male iron pipe, tested to meet ANSI/AWWA C800 specification. Size: 1" x ¾" x 13½", straight line.

v. VALVE BOXES: Valve Box with Cover, adjustable, Tyler 562-A or equal, made of cast iron.

w. VAULTS: Utility Vault Company, Chandler, AZ.

(1) 4484-WA concrete vault with a 3660 aluminum double torsion door with a recessed padlock hasp, two - 18" x 24" center knockouts.

(2) 575-WA concrete vault with a 4874 aluminum double torsion door with a recessed padlock hasp, two - 18" x 24" center knock outs and adjustable frame.

(3) 612-5X-WA concrete vault with a 4874 aluminum double torsion door with a recessed padlock hasp, two - 18" x 24" center knockouts.

x. VALVE, METER: Mueller, B24265-1, Mueller 300 ball angle meter valve, female iron pipe by meter nut, quarter turn check, lock wing, tested to meet ANSI/AWWA C800 specification. Size: 1".

Mueller, B25170, Mueller 300 ball straight valve, conductive compression by female iron pipe, quarter turn check, lock wing, tested to meet ANSI/AWWA C800 specification. Size: 1".

y. YOKES, METER: Relocator type copper meter yoke with horizontal inlet and outlet and meter thread ends, B24118, with lock wing Mueller 300 angle ball valve, full port, sizes: 1" x 12", 5/8" x ¾" x 7", 5/8 x ¾" x 9".

Mueller, 2" copper meter yoke with horizontal inlet and outlet and female iron pipe threads, B2423-99000, with lock wing Mueller 300 ball angle meter valves on inlet and outlet risers. Raised 1" by-pass with lock wing Mueller 300 ball valve.

The Contractor also will be required to provide the following materials, the cost of which will be included in its unit bid price:

All material and concrete for thrust blocks, other anchors, reinforcing steel; all gravel, crushed stone, A.B.C., earth, sand, or screened material which may be required; all material for bracing and shoring trenches and for construction of forms; all barricades and traffic control equipment; all material for paving replacement and any water used for compaction of backfill.

5. INSTALLATION OF MATERIALS

All materials are to be installed in accordance with manufacturers recommendations unless otherwise directed by these S pecifications.

All pipe, fittings and valves shall be laid true to the lines, grades and locations established by the Specifications and the Construction Drawings.

The ends and inside of the pipe shall be thoroughly cleaned and inspected for damage. No damaged materials shall be installed in the water distribution system .

Whenever the work ceases for any reason, all open pipeline ends shall be tightly plugged by the Contractor. Plugs shall be watertight and approved by the company.

Concrete thrust blocks of the sizes required by the plans and specifications are to be provided at all valves, changes in direction or size, or at any other point where an unbalanced thrust due to water pressure would exist. Thrust blocks are to be formed to prevent any concrete from spilling over or into a joint.

Trench curves as shown on the Construction Drawings may be made without fittings when using push on joint pipe up to twelve inches (12") in diameter, if the deflection of the pipe does not exceed five degrees (5°) or nineteen inches (19") per eighteen-foot (18') length of pipe. The minimum radius of such curves will be two hundred five feet (205').

Prior to construction, the appropriate agency(ies) will be notified as required by the permit(s).

It shall be the Contractor's responsibility to uncover all existing water lines being connected to, and to verify the location, depth and size of pipe befor e any construction begins.

Any construction performed without the knowledge of the duly authorized representative is liable for removal and replacem ent at the Contractor's expense.

All fire hydrants, frames, covers and valve boxes, etc. shall be adjusted to finished grade prior to the placing of the asphalt concrete surface course by the Contractor (where applicable).

Air release valves shall be installed at water system high points per Standard Detail E-9-8-2.

All water services shall be set a minimum of two feet (2') on the customer's property, preferably within the P.U.E. and not within right-of-way.

Unless otherwise specified on the construction drawings, all water mains shall be installed five feet (5') from the property line inside the right-of-way or easement.

Water valves shall be spaced not more than five hundred feet (500') in commercial districts and not more than eight hundred feet (800') in other districts. Variations may be required for transmission mains or special applications.

Installation of water line casing shall be per Standard Speci fication E-9-24-1.

Tracer Wire and Warning Tape are to be installed on all mains, tees, crosses, ells and fire hydrant laterals. They will not be installed on service lines. The tracer wire will be installed on the water main 45 degrees from the vertical centerline of the pipe and shall be taped to the fittings directly and on the main every 10 feet using a minimum 10 mil vinyl tape. The tracer wire shall be placed between the valve riser and box with a minimum of 12" of wire inside. The warning tape shall be installed a minimum of two feet below the surface, being measured from final grade, directly over the center of the pipe. Any splices in the tracer wire shall be joined using waterproof connectors. Any splices in the warning tape shall be joined using minimum 10 mil vinyl tape. The tracer wire shall be tested for continuity after backfill and compaction, but before paving. Any detected damages to the wire shall be repaired before paving will be allowed.

6. BACKFILL OF WATER MAIN TRENCHES

Backfill of any excavation shall conform to the requirements of any of the governmental agencies having jurisdiction over the location. If no governmental agency having such jurisdiction specifies backfill or compaction requirements, and no special requirements are shown on the Construction Drawings, the procedure set forth in this section will apply for water line trenches.

The bedding material above the pipe and backfill material shall be compacted to a minimum of 70% compaction within a utility easement and 80% compaction within a right-of-way as determined by AASHTO T-99 method A and T-191. If water settling is used for compaction, it is the responsibility of the Contractor to prevent the pipe from floating.

The bedding material shall be either native material, 100% of which will pass through a one and one-half inch (1½") screen and at least 20% of which will pass through a number-8 screen, or imported material which conforms to M.A.G. specifications for A.B.C. or type-B

select materials. Bedding material shall be used below and around the pipe and a minimum of twelve inches (12") above the pipe. Shade and bedding material to be mechanically compacted prior to remainder of trench back-fill.

The remainder of the trench shall be backfilled with native or imported material which shall be of sound earthen material free from broken concrete, wood, broken pavement, or other unsuitable substances. Except as otherwise specified, backfill may be material containing no pieces larger than six inches (6") in greatest dimension.

Where settlement occurs, additional backfill material shall be placed and compacted and the trench shall be brought to final grade.

7. HYDROSTATIC TESTING OF COMPLETED PIPELINES

Hydrostatic testing of water pipelines will be completed before the new system is connected into the existing water system so that all testing can be done against all new materials.

The completed section of water pipeline to be tested shall be slowly filled with water with care being taken to expel all air from the pipe. If necessary, the pipe will be tapped at high points to vent air.

The Contractor shall provide all equipment and labor necessary to accomplish this testing and the price shall be included in the unit prices. The Contractor shall notify the Company in advance of the testing so that the Company can schedule a duly authorized representative to be at the site during testing. The Contractor, at its own expense, shall make any necessary repairs to the system being tested in order to cause the section being tested to meet the test limits set below. The Contractor may request authorization of the Company to connect the new pipelines to the existing system prior to completion of pressure testing when, in the Company's sole opinion and judgment, conditi ons warrant such connection.

The Contractor shall assume all responsibility to complete pressure testing to Company's specifications after such connection, including, but not limited to, isolation of the new pipelines from the existing system, if necessary.

Connections prior to completion of pressure testing shall not be made unless prior Company authorization has been obtained, and any extra expenses resulting from such connections shall be the sole responsibi lity of the Contractor.

Leakage tests will be for a period of two hours at 200± 5 psi at the point of lowest elevation; leakage may not exceed 0.1 gallons per hour per one thousand feet (1,000') of pipe per inch of diameter. If dry utilities are not installed, a second pressure test is required.

8. STERILIZATION AND FLUSHING OF COMPLETED WATER PIPELINES

Sterilization and flushing will conform to recommendations of Arizona State Department of Health Services Engineering Bulletin Number 8, latest edition, or any future Arizona Department of Environmental Quality bulletins. Contractor to follow all conditions of any discharge permit.

9. NO OTHER UTILITIES ALLOWED IN OR NEAR WATER PIPELINE TRENCHES

No other utility installations will be permitted in the water pipeline trench or within five feet (5') of the Company's water pipeline when running parallel to the water pipelines.

10. PROTECTION OF WATER MAINS NEAR SEWERS

In order to protect water mains from contamination by sewers, the installation of the water mains must conform to the following requirements:

a. Horizontal - When water lines and sewers are laid parallel with each other, the horizontal distance between them shall not be less than six feet (6'). Each line shall be laid on undisturbed or bedded material in a separate trench. Where conditions prevent the minimum horizontal separation set forth above, extra protection will be required. Extra protection shall consist of constructing the sewer main with mechanical joint ductile iron pipe or with slip-joint ductile iron pipe if joint restraint is provided, or encasing the sewer main in concrete. Extra protection shall consist of constructing the water main with mechanical joint ductile iron pipe or with slip-joint ductile pipe if joint restraint is provided. The water main shall not be encased in concrete.

The Construction Drawings shall indicate the installation requirements. The drawings showing these exceptions shall have been approved by the appropriate state and/or county health department. Refer to the diagram below for clarification.

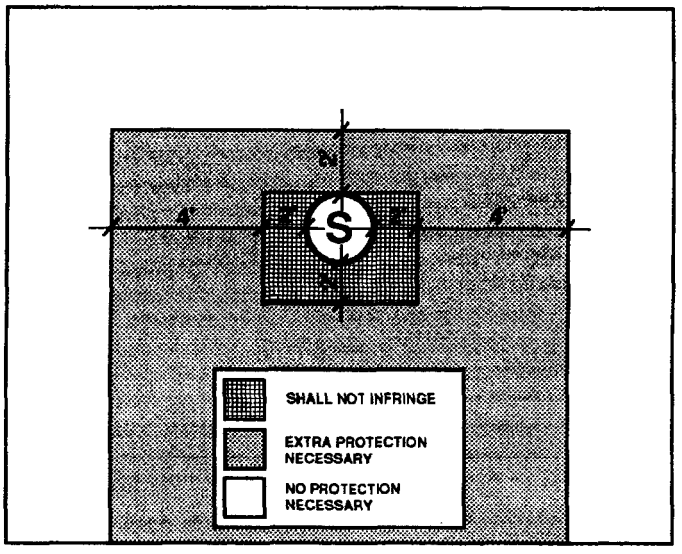

Under no circumstances will the horizontal separation between sewer mains and water mains be less than two feet (2'). All distances are to be measured from the outside of the sewer main to the outside of the water main.

b. Vertical - When a water main is parallel with or crosses a sewer main within two feet (2') above the sewer or greater than two feet (2') below the sewer, extra protection will be required. Extra protection shall consist of constructing the sewer main with mechanical joint ductile iron pipe or with slip-joint ductile iron pipe if joint restraint is provided, or encasing the sewer main in concrete. Extra protection shall consist of constructing the water main with mechanical joint ductile iron pipe or with slip-joint ductile pipe if joint restraint is provided. The water main shall not be encased in concrete.

The Construction Drawings shall indicate the installation requirements. The drawings showing these exceptions shall have been approved by the appropriate state and/or county health department.

Under no circumstances will the vertical separation of a sewer main installed above a water main be less than two feet (2'). All distances are to be measured from the outside of the sewer main to the outside of the water main. Refer to the diagram above for clarification.

c. When unusual conditions such as, but not limited to, highway or bridge crossings prevent the water and sewer main separations required from being met, the appropriate state and/or county health department will review and may approve requests for authorization to use alternate construction techniques, materials and joints on a case-by-case basis.

d. No water pipe shall pass through or come into contact with any part of a sewer manhole. The minimum horizontal separation between water mains and manholes shall be six feet (6'), measured from the center of the manhole.

e. The minimum separation between force mains or pressure sewers and water mains shall be two feet (2') vertically and six feet (6') horizontally under all conditions. Where a sewer force main crosses above, or less than six feet (6') below, a water line, the sewer main shall be encased in at least six inches (6") of concrete for ten feet (10') on either side of the water main. Refer to the diagram below for clarification.

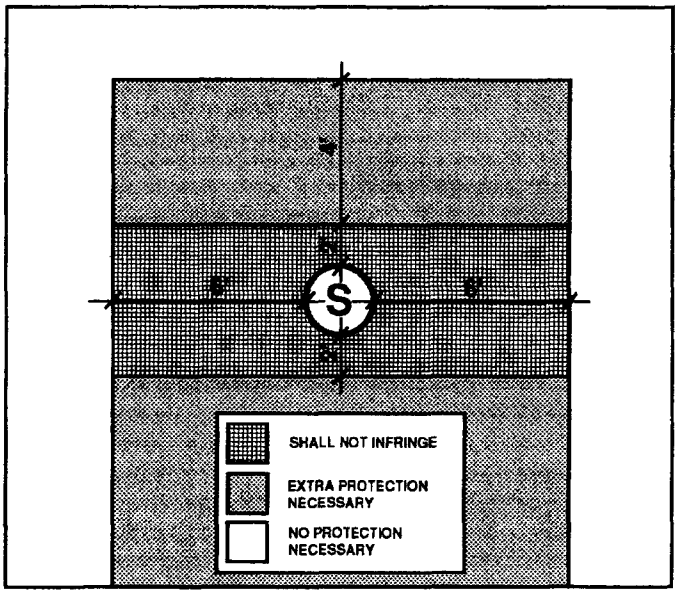

f. Sewer mains (gravity, pressure, force) shall be kept a minimum of fifty feet (50') from drinking water wells, unless the following conditions are met:

1. Water main pipe, pressure tested in place to 50 psi without excessive leakage, may be used for gravity sewers at distances greater than twenty feet (20') from drinking water wells.

2. Water main pipe, pressure tested in place to 150 psi without excessive leakage, may be used for pressure sewers and force mains at distances greater than twenty feet (20') from drinking water wells.

g. No septic tank/disposal field system shall be constructed within one hundred feet (100') of a drinking water well.

h. All distances are measured perpendicularly from the outside of the sewer main to the outside of the water main. These separation requirements do not apply to building, plumbing or individual house service connections.

i. Use Mechanical Joint ductile iron pipe with Megalug thrust restraints a minimum of ten (10') feet on each side of a sewer or storm drain crossing.

11. COMPACTION

When crossing existing water mains a minimum of 95% compaction is required to the bottom of existing mains.

Arizona Water Company requires that no slurry be permitted to contact existing cement/asbestos or ductile iron pipes, unless authorized by the company. Slurry may be poured in the bottom of the sewer trench stopping three inches (3") below the existing water main. The backfill used around the main should be AB in sufficient depth to prevent slurry from contacting existing main.

12. WATER MAIN MATERIAL SPECIFICATIONS

Ductile iron pipe (Push-on type) minimum class 350, cement lined and conform to AWWA C151.

All main line valves shall conform to AWWA C500 with a minimum working pressure of 200 psi.

All cast iron fittings to be cement lined in accordance with AWWA C104 and shall conform to AWWA C110 with a minimum working pressure of 250 psi. Except for the Coolidge System – See Note 4L.

Maximum joint deflection for 6" mechanical joint ductile iron pipe is seven degrees, seven minutes (7°, 7') or twenty-seven inches (27") per eighteen-foot (18') length pipe, for a maximum curve of one hundred forty-five feet (145').
Maximum joint deflection for 8" and 12" mechanical joint ductile iron pipe is five degrees, twenty-one minutes (5° 21') or twenty inches (20") per eighteen-foot (18') length pipe, for a maximum curve of one hundred ninety-five feet (195').

Maximum joint deflection for 6", 8" and 12" push-on joint ductile iron pipe is five degrees (5°) or nineteen inches (19") per eighteen-foot (18') length pipe for a maximum curve of two hundred five feet (205').

ARIZONA WATER COMPANY

STANDARD SPECIFICATION DRAWINGS: E-9-1

ARIZONA WATER COMPANY

STANDARD SPECIFICATION DRAWINGS

INDEX (E-9)

E-9-1	TYPICAL GATE VALVE LOCATIONS
E-9-2	INSTALLATION OF TYPICAL VERTICAL AND HORIZONTAL GATE VALVES
E-9-3	INSTALLATION OF TYPICAL TAPPING SLEEVE AND VALVE
E-9-4	INSTALLATION OF TYPICAL VALVE SUBJECT TO NON-VEHICULAR AND VEHICULAR TRAFFIC
E-9-5	INSTALLATION OF TYPICAL THRUST BLOCKING SCHEDULE, THRUST BLOCK FOR VERTICAL BENDS, AND MEGALUG THRUST RESTRAINTS
E-9-6	INSTALLATION OF TYPICAL PERPENDICULAR FIRE HYDRANT
E-9-7	INSTALLATION OF TYPICAL PARALLEL FIRE HYDRANT
E-9-8	INSTALLATION OF TYPICAL 2" BLOWOFF DEVICE, AND AIR RELEASE VALVE
E-9-9	INSTALLATION OF TYPICAL SINGLE SERVICE CONNECTION FOR A $^3/_4$" OR 1" METER
E-9-10	INSTALLATION OF TYPICAL DOUBLE SERVICE CONNECTION FOR A $^3/_4$" AND 1" METER
E-9-11	INSTALLATION OF TYPICAL 2" SERVICE CONNECTION
E-9-12	INSTALLATION OF 3" COMPOUND METER, 4" COMPOUND METER, 6" COMPOUND METER, 6" COMPOUND SERVICE, CONCRETE VAULT, AND NON-POTABLE PROPELLER METER
E-9-13	INSTALLATION OF TYPICAL 4" THRU 8" DETECTOR CHECK VALVES AND 3" THRU 10" REDUCED PRESSURE PRINCIPLE DETECTOR WITH BYPASS METER ASSEMBLY (RPDA) FOR FIRE LINE SERVICES
E-9-14	INSTALLATION OF TYPICAL PRESSURE RELIEF VALVE ASSEMBLY
E-9-15	INSTALLATION OF TYPICAL PRESSURE REDUCING STATION
E-9-16	PAINT COLOR SELECTION
E-9-17	STEEL WATER STORAGE TANK
E-9-18	HYDROPNEUMATIC TANK
E-9-19	INSTALLATION OF WELL SHELTER

E-9-20	INSTALLATION OF TYPICAL WELL WITH LINE SHAFT TURBINE PUMP
E-9-21	INSTALLATION OF TYPICAL WELL WITH SUBMERSIBLE TURBINE PUMP
E-9-22	INSTALLATION OF COLUMN PIPE, OIL TUBE AND LINE SHAFT
E-9-23	HOT TAP AND JUMPER METER CONNECTION
E-9-24	INSTALLATION OF TYPICAL WATER LINE ENCASEMENT
E-9-25	INSTALLATION OF CALCIUM HYPOCHLORITE TABLET CHLORINATOR
E-9-26	INSTALLATION OF CHAIN LINK FENCE
E-9-27	INSTALLATION OF SIDE HUNG WATER LINE SUSPENSION
E-9-28	PIPE WARNING TAPE, LOCATOR WIRE, AND LOCATOR WIRE TERMINATION
E-9-29	INSTALLATION OF A TYPICAL SAMPLING STATION

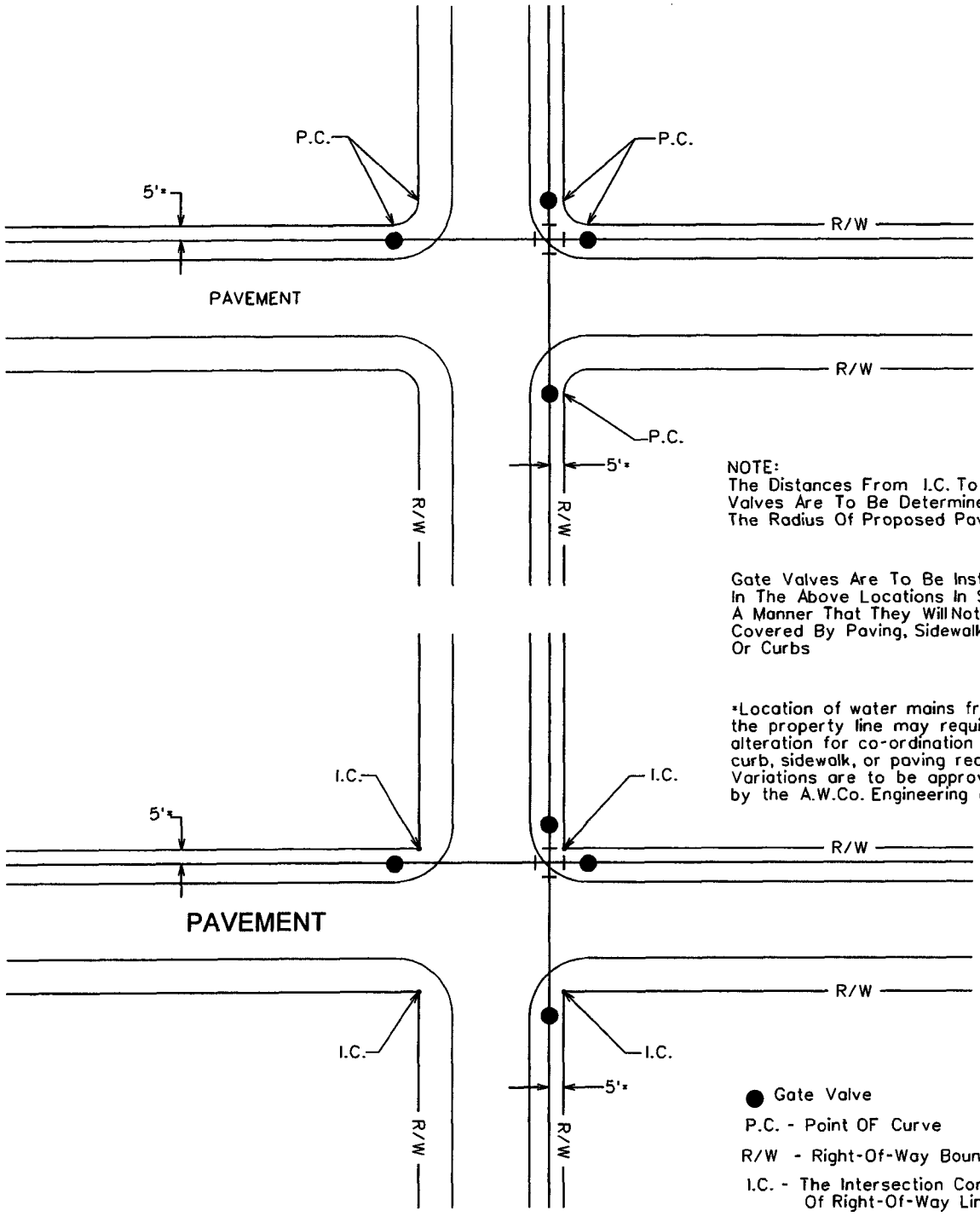

NOTE:
The Distances From I.C. To Gate Valves Are To Be Determined By The Radius Of Proposed Pavement.

Gate Valves Are To Be Installed In The Above Locations In Such A Manner That They Will Not Be Covered By Paving, Sidewalks, Or Curbs

*Location of water mains from the property line may require alteration for co-ordination with curb, sidewalk, or paving requirements. Variations are to be approved by the A.W.Co. Engineering dept.

ARIZONA WATER COMPANY

STANDARD SPECIFICATION
FOR THE INSTALLATION OF

TYPICAL GATE VALVE LOCATIONS

DRAWN BY:	APPROVED BY:	DATE:	△ 1/31/2001	
CCO	M.W.	3/20/86		E-9-1-1

FOR 6" THROUGH 12" GATE VALVES

Mueller Resiliant Wedge Gate Valves
Catalog Number A-2360-__
ANSI/AWWA C509 Compliant

FOR 14" THROUGH 16" GATE VALVES

Mueller Resiliant Wedge Gate Valves
Catalog Number A-2361-__
ANSI/AWWA C509 Compliant

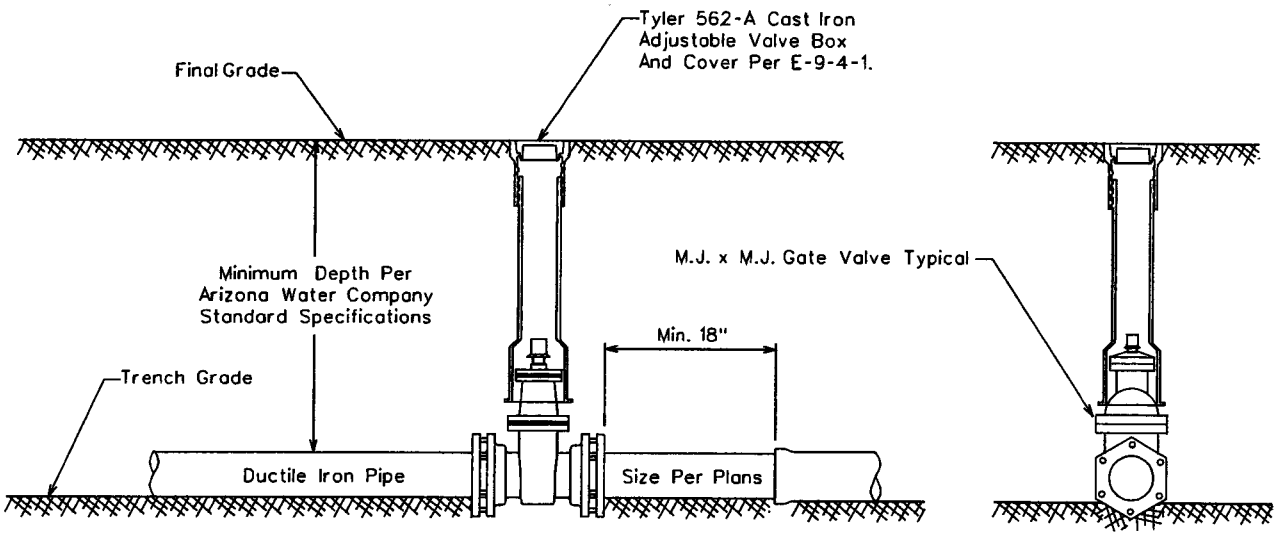

All Valves Installed On Pipe Five Feet (5') Deep And Greater Are To Be Installed With A Valve Operator Extension, Mueller Catalog No. A-26441.

ARIZONA WATER COMPANY

STANDARD SPECIFICATION
FOR THE INSTALLATION OF

TYPICAL VERTICAL GATE VALVES

DRAWN BY:	APPROVED BY:	DATE:	△	
CB	MW	03.20.1986	08.23.2006	E-9-2-1

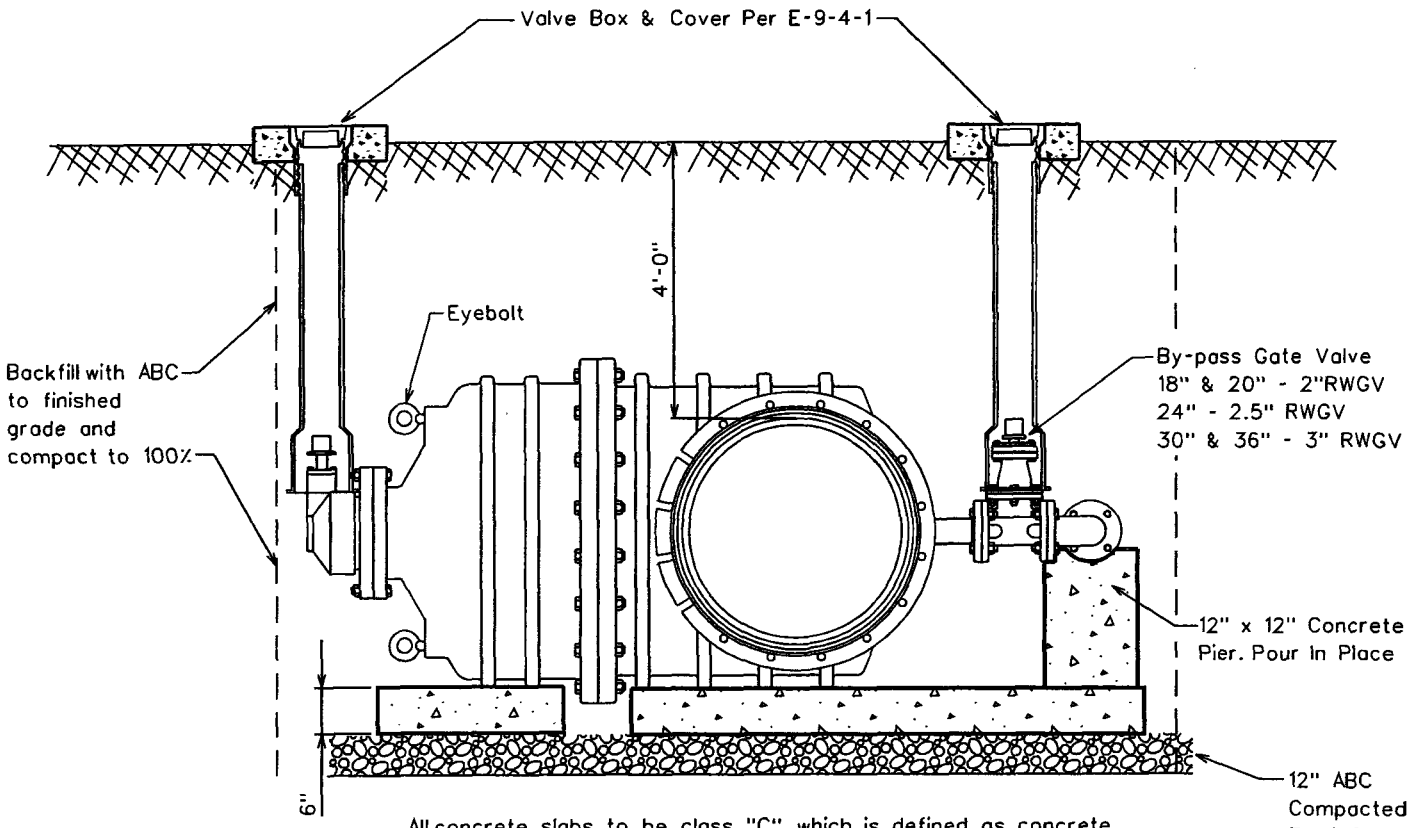

All concrete slabs to be class "C", which is defined as concrete whose minimum compressive strength at 14 days reaches 1600psi and at 28 days reaches 2000psi. per MAG Section 725, Table 725-1. Slabs to be formed and poured prior to valve installation.

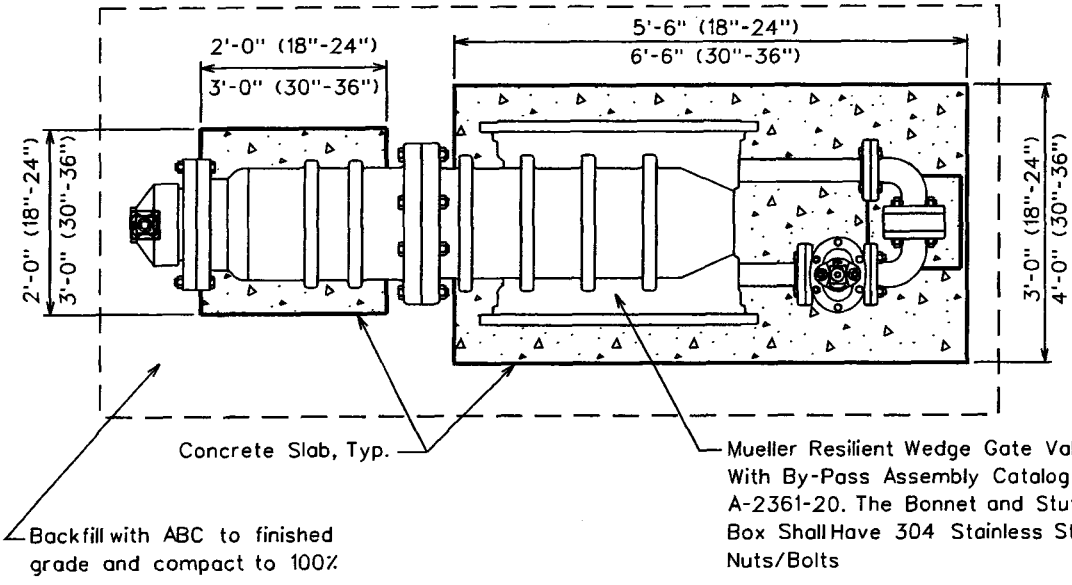

All valves installed on pipe five feet and greater are to be installed with a valve operator extension Mueller catalog No.A-26441 The distance is measured from the top of the operating nut to final grade.

ARIZONA WATER COMPANY

STANDARD SPECIFICATION

FOR THE INSTALLATION OF

INSTALLATION OF BEVEL GEARED HORIZONTAL GATE VALVES WITH BY-PASS FOR 18" AND LARGER VALVES

DRAWN BY:	APPROVED BY:	DATE:	△	
CB		12.07.2004		E-9-2-2

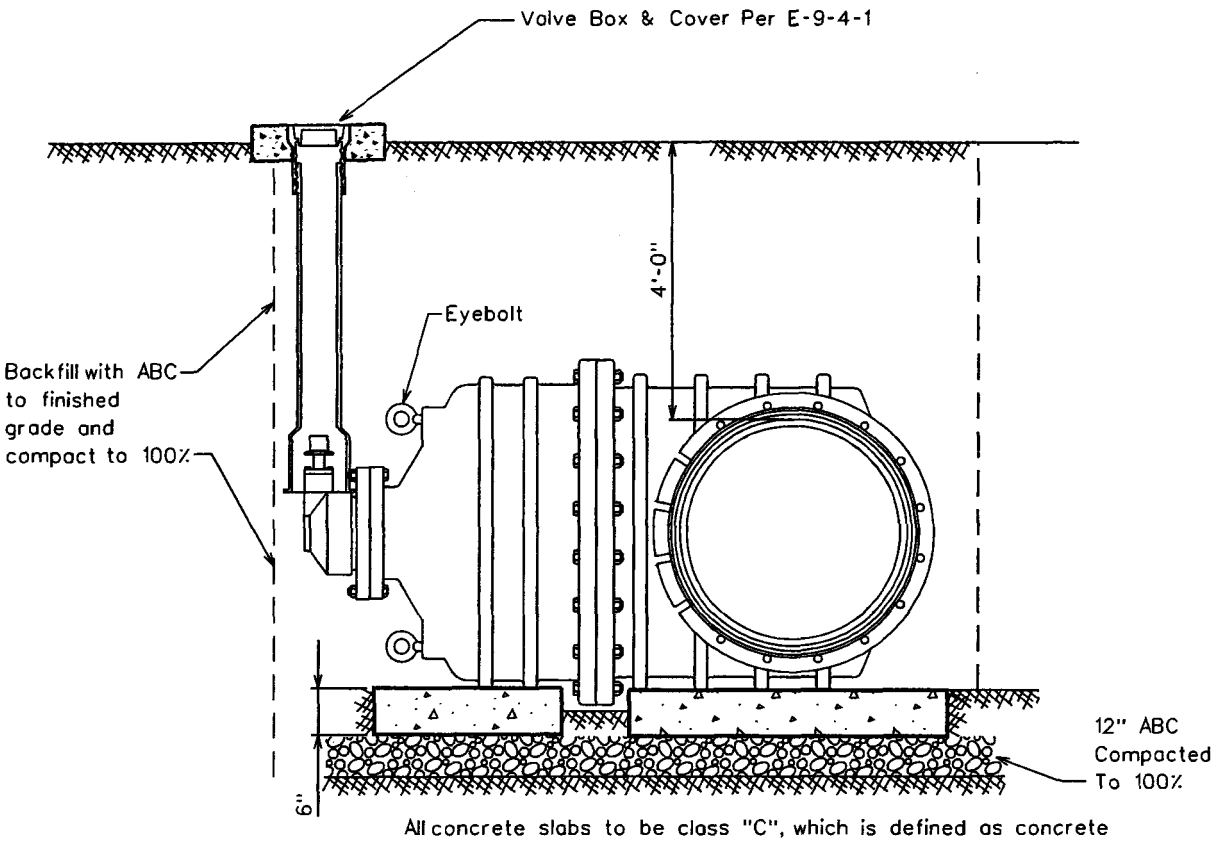

All concrete slabs to be class "C", which is defined as concrete whose minimum compressive strength at 14 days reaches 1600psi and at 28 days reaches 2000psi. per MAG Section 725, Table 725-1. Slabs to be formed and poured prior to valve installation.

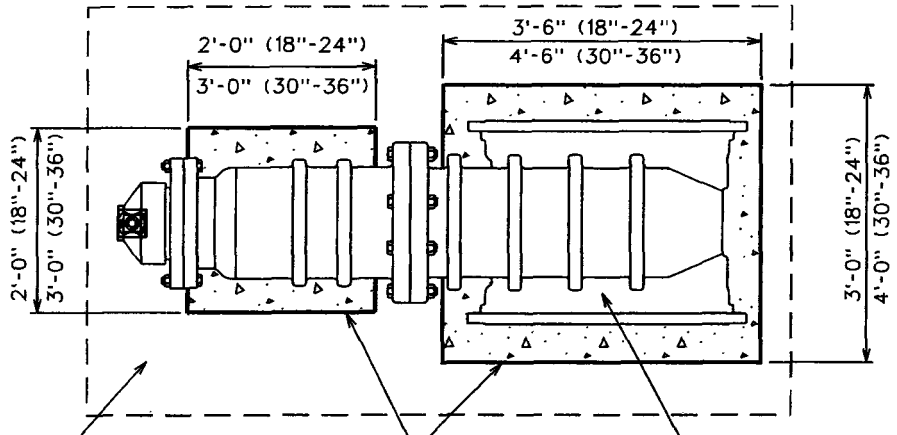

All valves installed on pipe five feet and greater are to be installed with a valve operator extension Mueller catalog No.A-26441 The distance is measured from the top of the operating nut to final grade.

ARIZONA WATER COMPANY

STANDARD SPECIFICATION

FOR THE INSTALLATION OF

INSTALLATION OF BEVEL GEARED HORIZONTAL GATE VALVES WITHOUT A BY-PASS FOR 18" AND LARGER VALVES

DRAWN BY:	APPROVED BY:	DATE:		
CB		12.07.2004	△ 5.13.2005	E-9-2-3

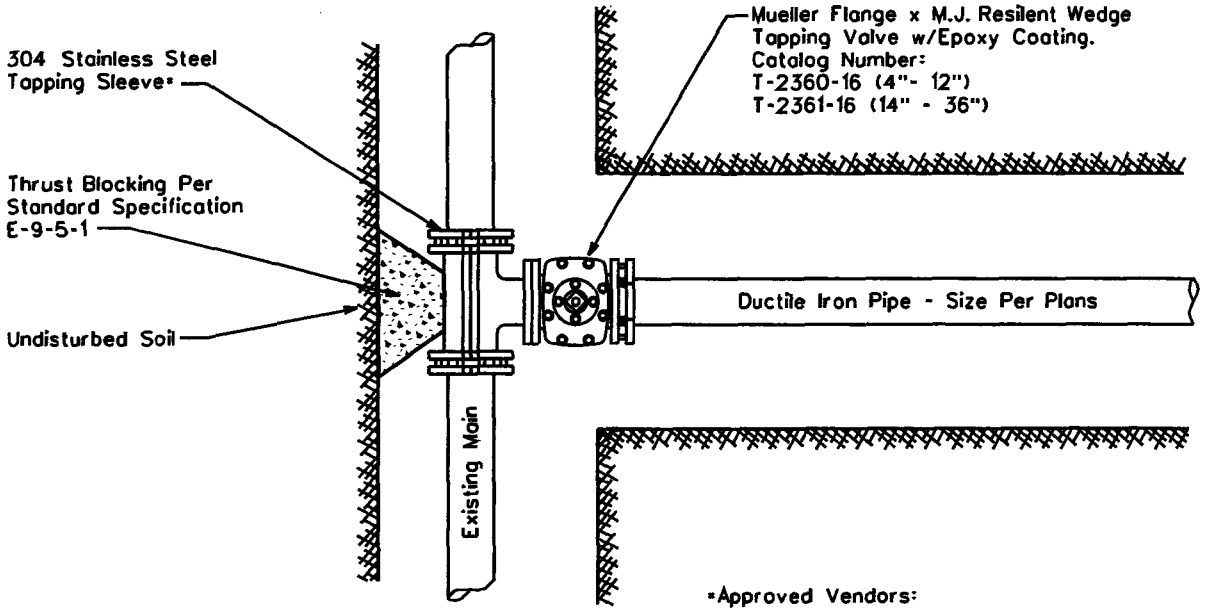

*Approved Vendors:

Mueller, Catalog No. H304, 304 Stainless Steel

JCM, Model 432, 304 Stainless Steel

Romac, 'SST', 304 Stainless Steel

Cascade, 'CST-EX', 304 Stainless Steel

NOTE:

1. All flanges, bolts, and nuts shall be kept free of concrete.
2. Air pressure test the tapping sleeve before the live tap is made.
3. Polywrap all new fittings

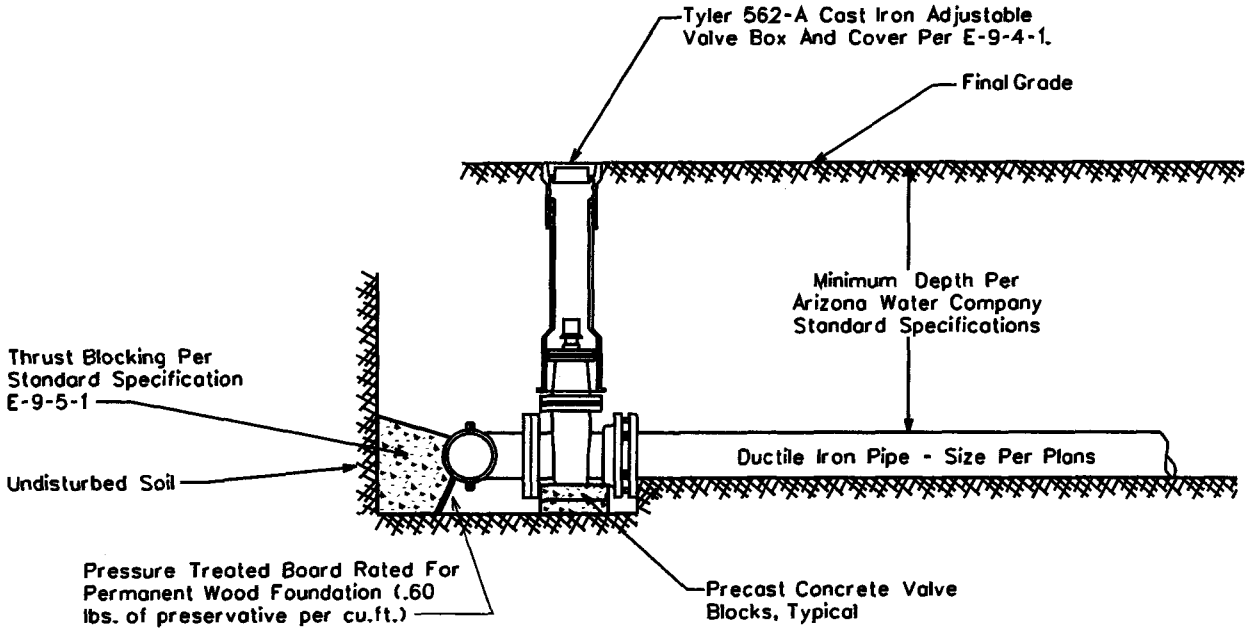

ARIZONA WATER COMPANY

STANDARD SPECIFICATION

FOR THE INSTALLATION OF

TYPICAL TAPPING SLEEVE AND VALVE

DRAWN BY:	APPROVED BY:	DATE:	△ 08.23.2006	
CB	MW	03.20.1986		E-9-3-1

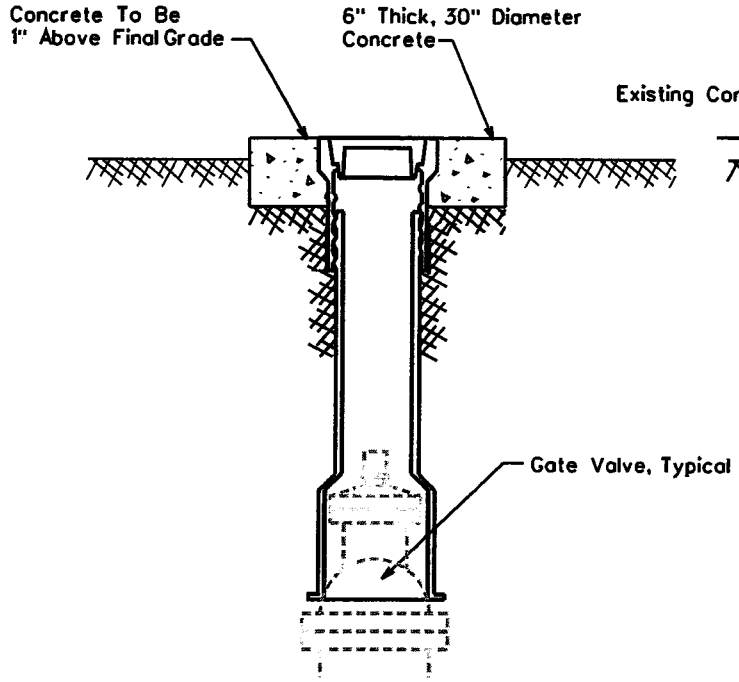

NON-VEHICULAR VALVE BOX

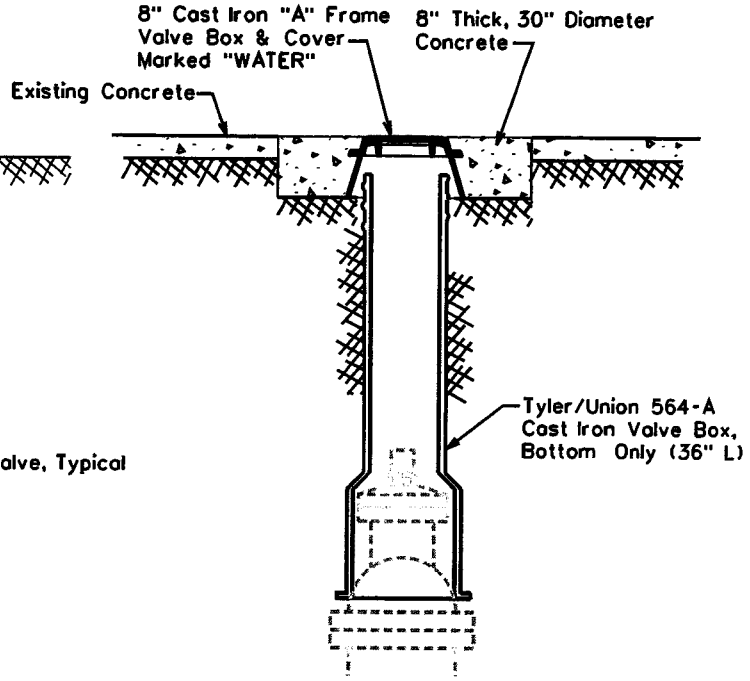

CONCRETE VALVE BOX

For Areas Subject To Vehicular Traffic

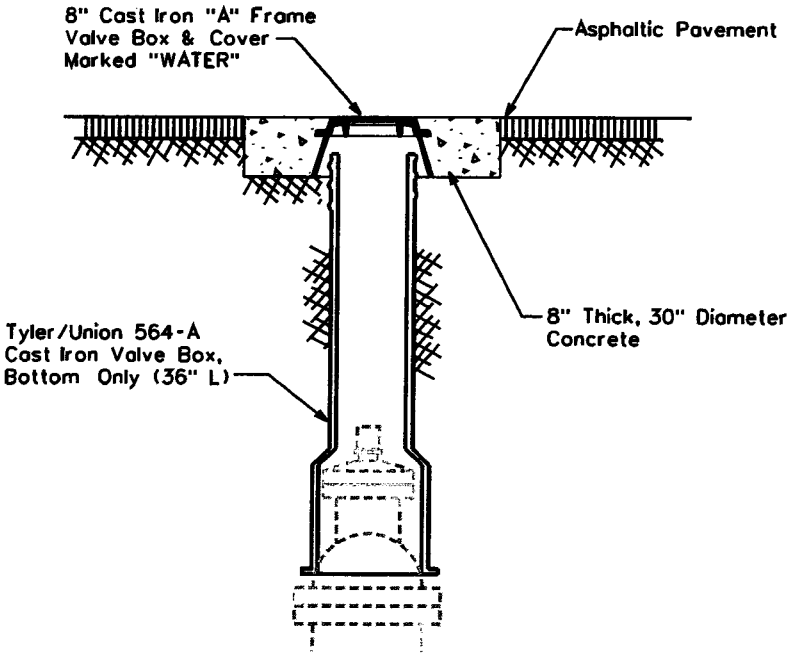

ASPHALT VALVE BOX

For Areas Subject To Vehicular Traffic

NOTE:

1. The Valve Box Shall Be Adjusted To Finished Grade Prior To Placing Of Asphalt And/Or Concrete.
2. For Non-Traffic Areas Use Tyler/Union 562-A, Two-Piece, 6855 Series Or Equivalent Adjustable Cast Iron Valve Box And Cover. Valves 4" To 12"

   For Traffic Areas, Use Tyler/Union 564-A Bottom Section Only With An 8" Cast Iron "A" Frame With Cover. Valves 4" To 12"
3. All Valves Installed Five Feet (5') Deep And Greater Are To Be Installed With A Valve Operator Extension, Mueller Catalog No. A-26441 And Shall Have A Debris Cap
4. Use Minimum Class 'C' Concrete which is defined as concrete whose minimum compressive strength at 14 days reaches 1600psi and at 28 days reaches 2000psi. per MAG Section 725, Table 725-1.

ARIZONA WATER COMPANY

STANDARD SPECIFICATION

FOR THE INSTALLATION OF

TYPICAL VALVE SUBJECT TO NON-VEHICULAR AND VEHICULAR TRAFFIC

DRAWN BY:	APPROVED BY:	DATE:	△ 8.24.2006	
CB	MW	03.20.1986		E-9-4-1

CROSSES

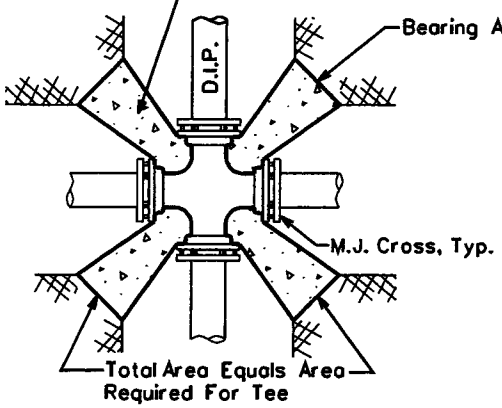

TEES

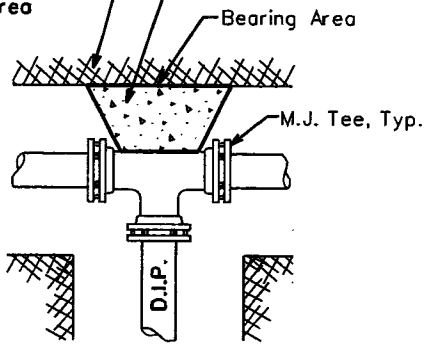

ELLS

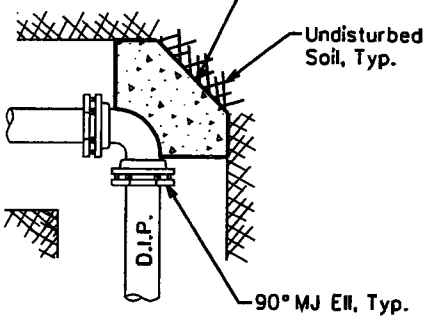

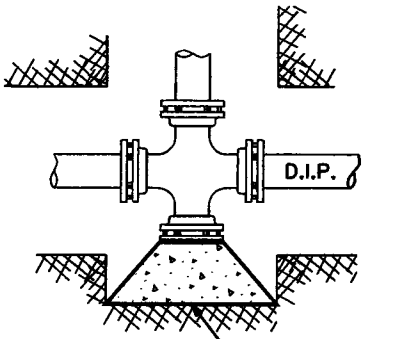

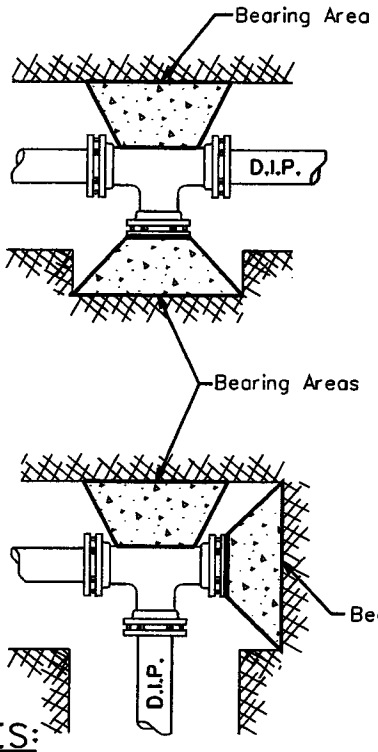

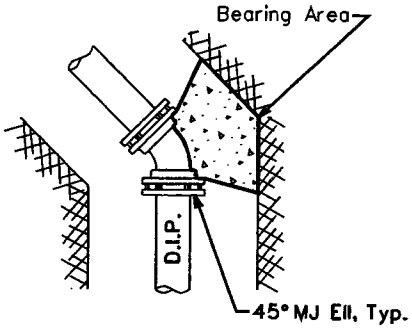

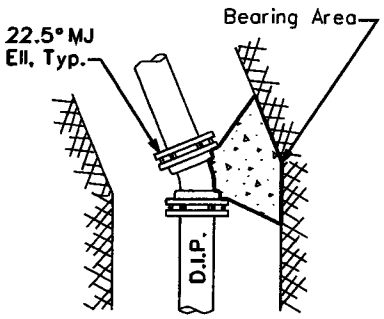

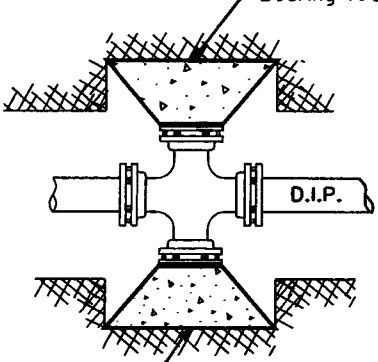

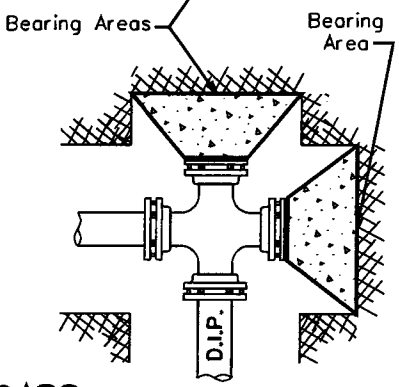

CROSS SECTION

TYPICAL

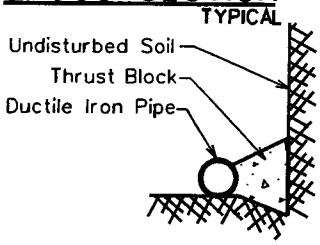

NOTES:

1. Use minimum Class 'C' concrete, which is defined as concrete whose minimum compressive strength at 14 days reaches 1600psi and at 28 days reaches 2000psi. per MAG Section 725, Table 725-1.
2. Thrust blocks are to bear on undisturbed earth with minimum bearing area as shown. If not undisturbed, areas will be increased as required.
3. Place the pressure treated form board in front of all plugs before pouring thrust blocks.
4. Form all non-bearing areas to prevent any concrete from entering any joint.
5. All flanges, bolts and nuts shall be kept free of concrete.
6. Center the bearing area on the pipe centerline and force line.
7. All pipe fittings to be wrapped with polyethylene pipe wrap prior to thrust block installation. (where applicable)

THRUST BLOCK SCHEDULE

PIPE SIZE	TEE, 45°, AND 22.5° ELLS, & PLUGS	90° ELLS
6" And Under	4 Sq.Ft.	6 Sq.Ft.
8"	6 Sq.Ft.	9 Sq.Ft.
12"	13 Sq.Ft.	20 Sq.Ft.
16"	23 Sq.Ft.	32 Sq.Ft.
18" And Larger	Calculated Per Project	

CAPS

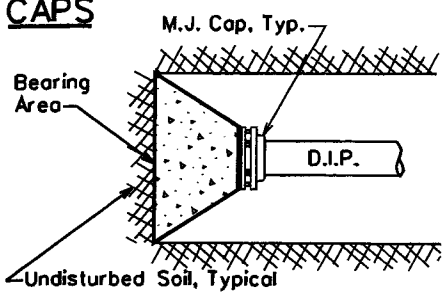

STANDARD SPECIFICATION

FOR THE INSTALLATION OF

TYPICAL THRUST BLOCKING SCHEDULE

DRAWN BY:	APPROVED BY:	DATE:	△ 05.27.2005	
CB	MW	03.20.1986		E-9-5-1

NOTES

1. Bars In Conc. Thrust Block To Be Coated w/ 2 Coats Coal Tar Epoxy or by Other Approved Method.

2. Bars To Have 90° Hook @ Their Ends, As Per Table Below.

Pipe Size	Min. Bar Size	"A" Dimension (Hook)	* Min. Block Dimension (WxHxL)
6"	#6	6"	3'x3'x3'
8"	#6	9"	4'x3'x4'
12"	#8	9"	5'x4'x5'
16"	#9	12"	7'x6'x7'

* For 125 P.S.I. Working Pressure

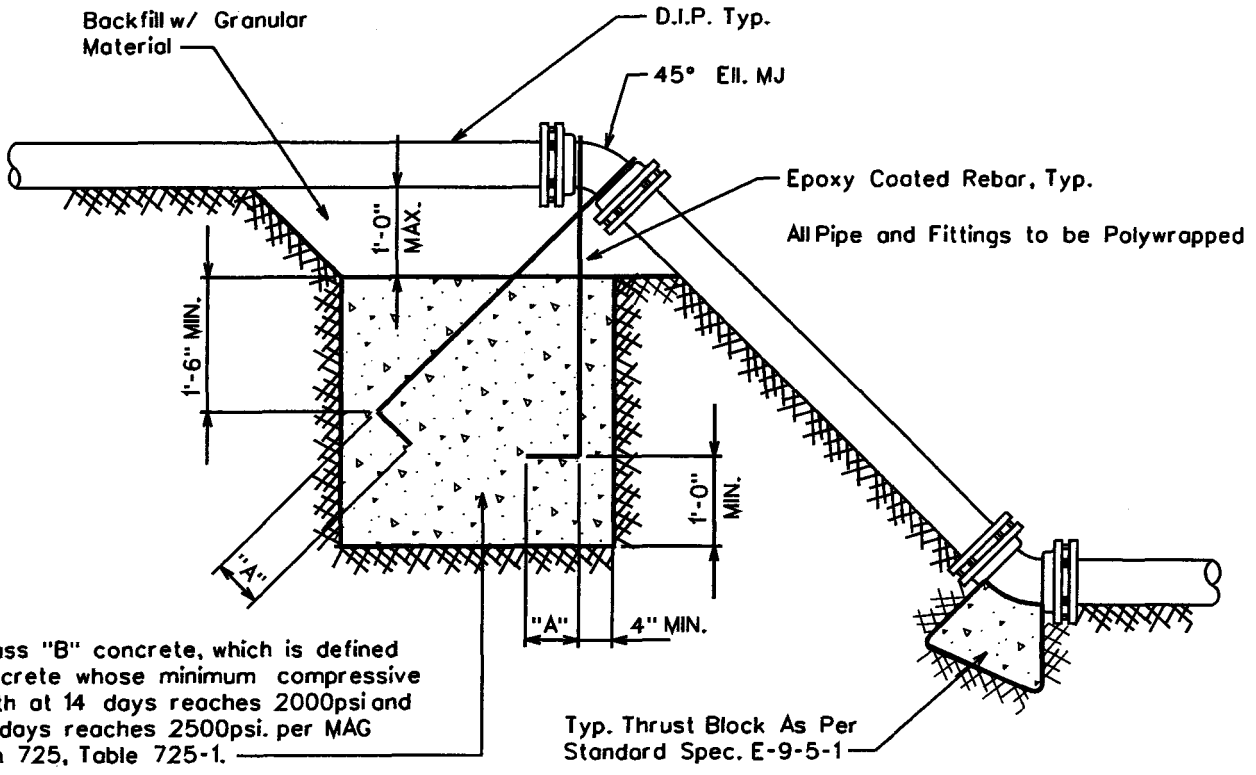

ARIZONA WATER COMPANY

STANDARD SPECIFICATION
FOR THE INSTALLATION OF

THRUST BLOCK FOR VERTICAL BENDS

DRAWN BY:	APPROVED BY:	DATE:		
JPK	MJW	7-5-96	△ 01.16.2007	E-9-5-2

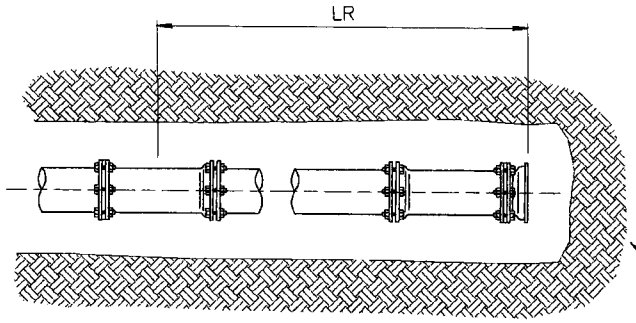

DEAD ENDS

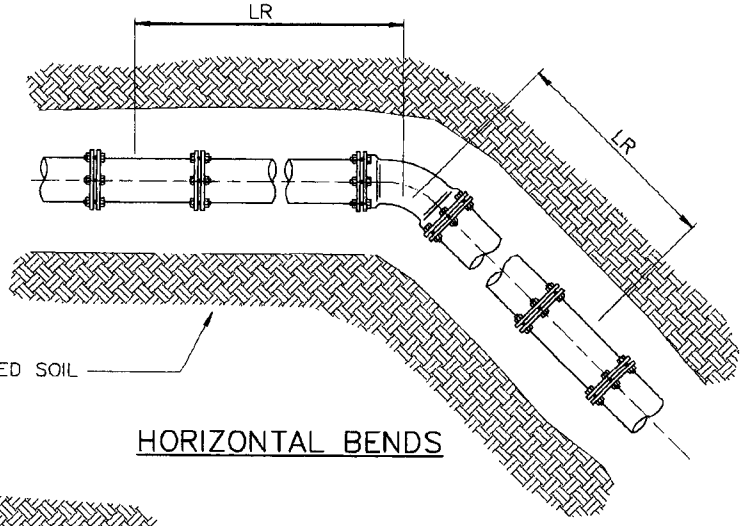

HORIZONTAL BENDS

UNDISTURBED SOIL

LRN = SHORTEST LENGTH OF PIPE RESTRAINED TO THE RUN OF THE TEE FITTING (BOTH SIDES OF TEE).

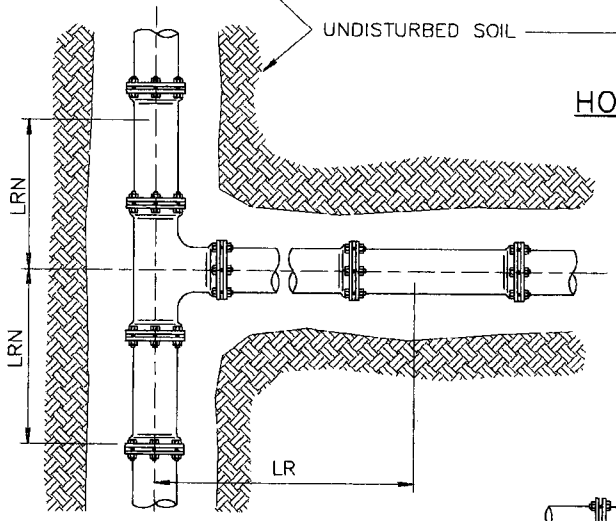

TEES

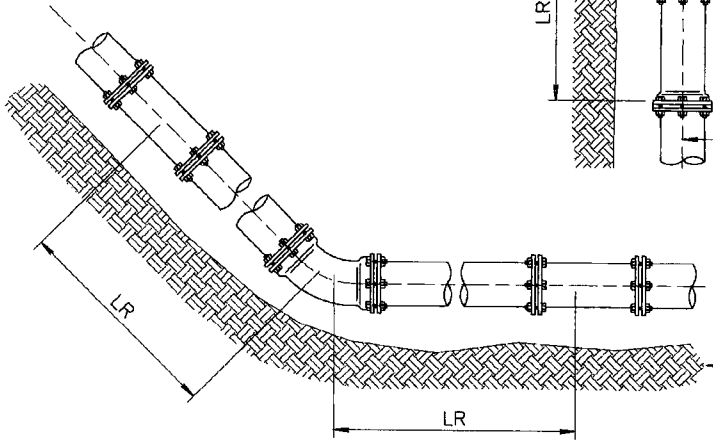

VERTICAL UP BEND

UNDISTURBED SOIL

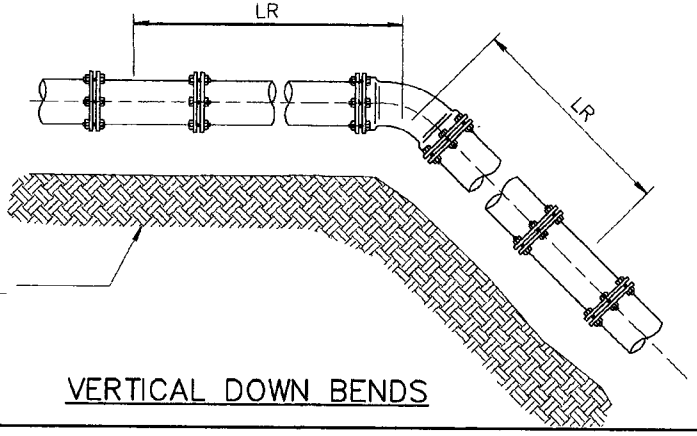

VERTICAL DOWN BENDS

ARIZONA WATER COMPANY

STANDARD SPECIFICATION
FOR THE INSTALLATION OF

JOINT RESTRAINT FOR NEW DUCTILE IRON AND C-900 PVC MAINS

DRAWN BY:	APPROVED BY:	DATE:	△	
CB	MW	01.16.2007		E-9-5-3-1

RESTRAINED LENGTHS, LR, FOR DUCTILE IRON PIPE

NOMINAL PIPE SIZE INCHES	HORIZONTAL BENDS			TEES		VERTICAL OFFSETS						DEAD ENDS
						90° BEND FITTINGS		45° BEND FITTINGS		22-1/2° BEND FITTINGS		
	90°	45°	22-1/2°	LRN=0'	LRN=10'	DOWN BEND	UP BEND	DOWN BEND	UP BEND	DOWN BEND	UP BEND	
4	18	7	4	30	8	31	18	13	7	6	3	31
6	25	10	5	43	20	44	25	18	10	9	5	44
8	32	13	6	56	34	58	32	24	13	11	6	58
10	38	16	8	68	45	69	38	29	16	14	8	69
12	45	19	9	80	57	81	45	34	19	16	9	81
14	51	21	10	91	68	92	51	38	21	18	10	92
16	57	24	11	103	79	104	57	43	24	21	11	104
18	62	26	12	113	90	115	62	48	26	23	12	115
20	68	28	14	125	100	126	68	52	28	25	14	126
24	79	33	16	145	121	147	79	61	33	29	16	147

RESTRAINED LENGTHS, LR, FOR DUCTILE IRON PIPE WITH POLYETHYLENE WRAP

NOMINAL PIPE SIZE INCHES	HORIZONTAL BENDS			TEES		VERTICAL OFFSETS						DEAD ENDS
						90° BEND FITTINGS		45° BEND FITTINGS		22-1/2° BEND FITTINGS		
	90°	45°	22-1/2°	LRN=0'	LRN=10'	DOWN BEND	UP BEND	DOWN BEND	UP BEND	DOWN BEND	UP BEND	
4	26	11	5	69	18	72	26	30	11	14	5	72
6	36	15	7	99	47	102	36	42	15	20	7	102
8	47	19	9	130	78	133	47	55	19	26	9	133
10	56	23	11	157	103	159	56	66	23	32	11	159
12	65	27	13	185	131	187	65	77	27	37	13	187
14	74	31	15	211	156	214	74	89	31	42	15	214
16	82	34	16	238	183	241	82	100	34	48	16	241
18	90	37	18	263	207	266	90	110	38	53	18	266
20	98	41	20	289	233	292	98	121	41	58	20	292
24	113	47	22	337	280	340	113	141	47	68	22	340

NOTES:

1. ALL JOINTS WITHIN THE SPECIFIED LENGTH LR MUST BE RESTRAINED. ALL LENGTHS ARE GIVEN IN FEET.
2. THE MAXIMUM TEST PRESSURE SHALL NOT EXCEED 200 PSI
3. THE MINIMUM DEPTH OF BURY SHALL BE 3' TO TOP OF PIPE.
4. RESTRAINED LENGTHS MAY BE REDUCED WHEN SUPPORTED BY ENGINEERING CALCULATIONS.

ARIZONA WATER COMPANY

STANDARD SPECIFICATION
FOR THE INSTALLATION OF

JOINT RESTRAINT FOR NEW DUCTILE IRON AND C-900 PVC MAINS

DRAWN BY:	APPROVED BY:	DATE:		
CB	MW	01.16.2007	△	E-9-5-3-2

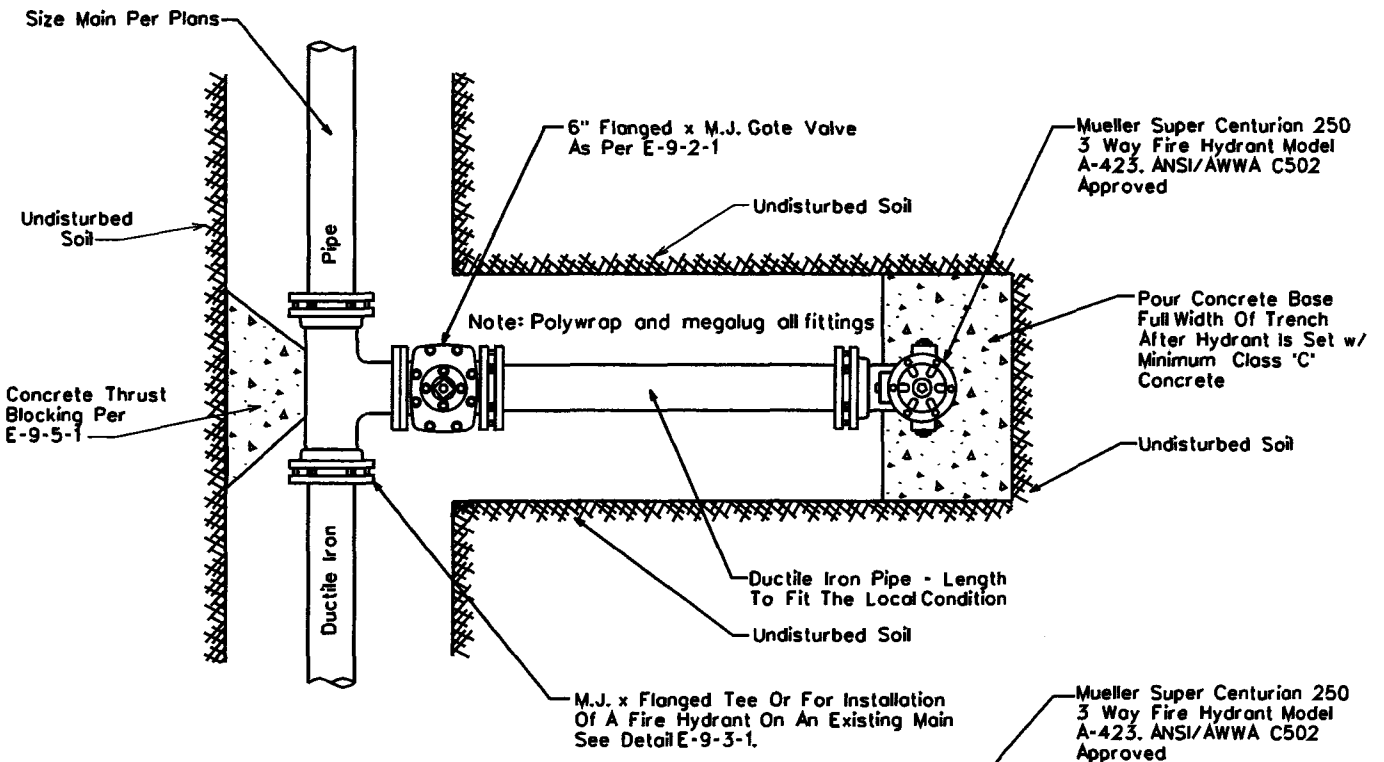

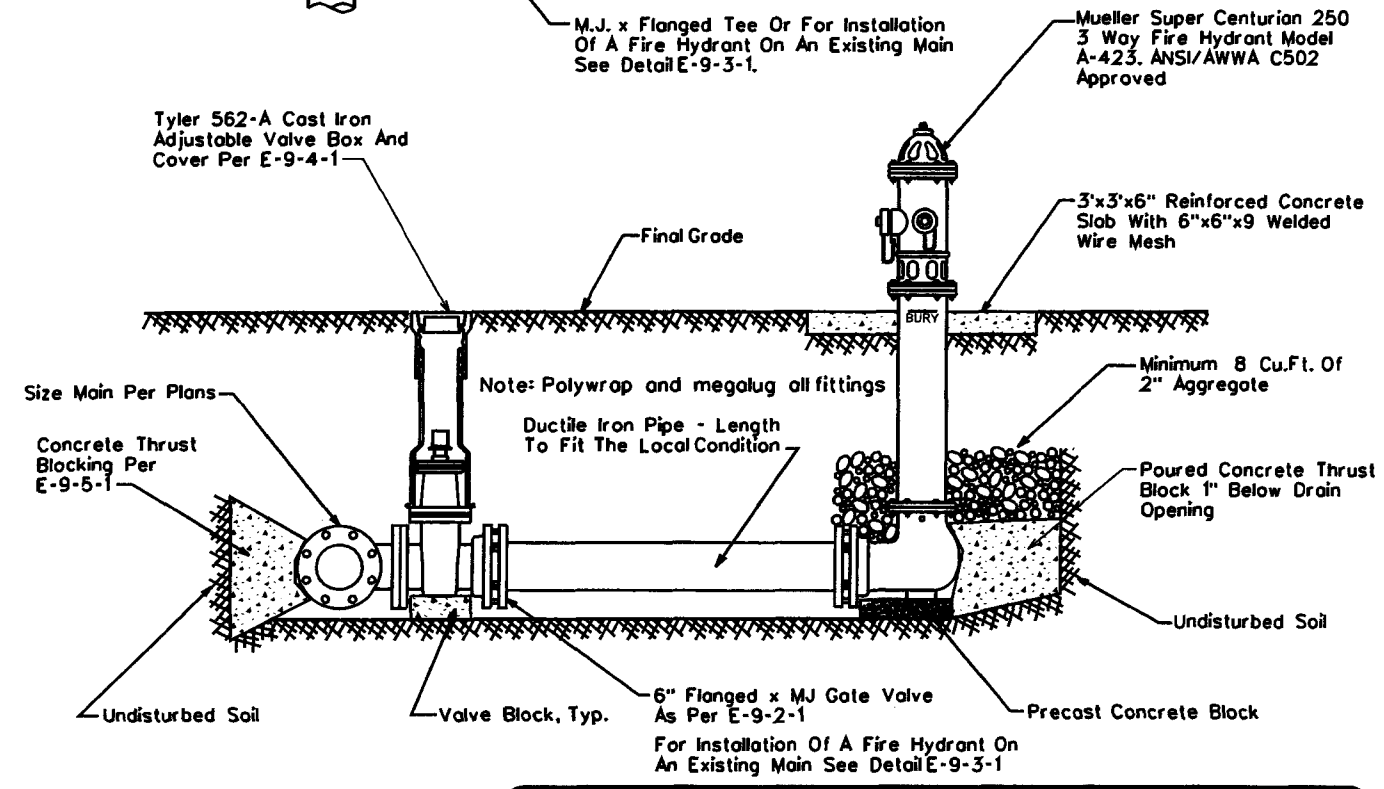

NOTE: All Flanges, Bolts, Nuts and Drain Holes Shall Be Kept Free Of Concrete

ARIZONA WATER COMPANY

STANDARD SPECIFICATION

FOR THE INSTALLATION OF

TYPICAL PERPENDICULAR FIRE HYDRANT

DRAWN BY:	APPROVED BY:	DATE:	△ 08.24.2006	
CB	MW	1-28-91		E-9-6-1

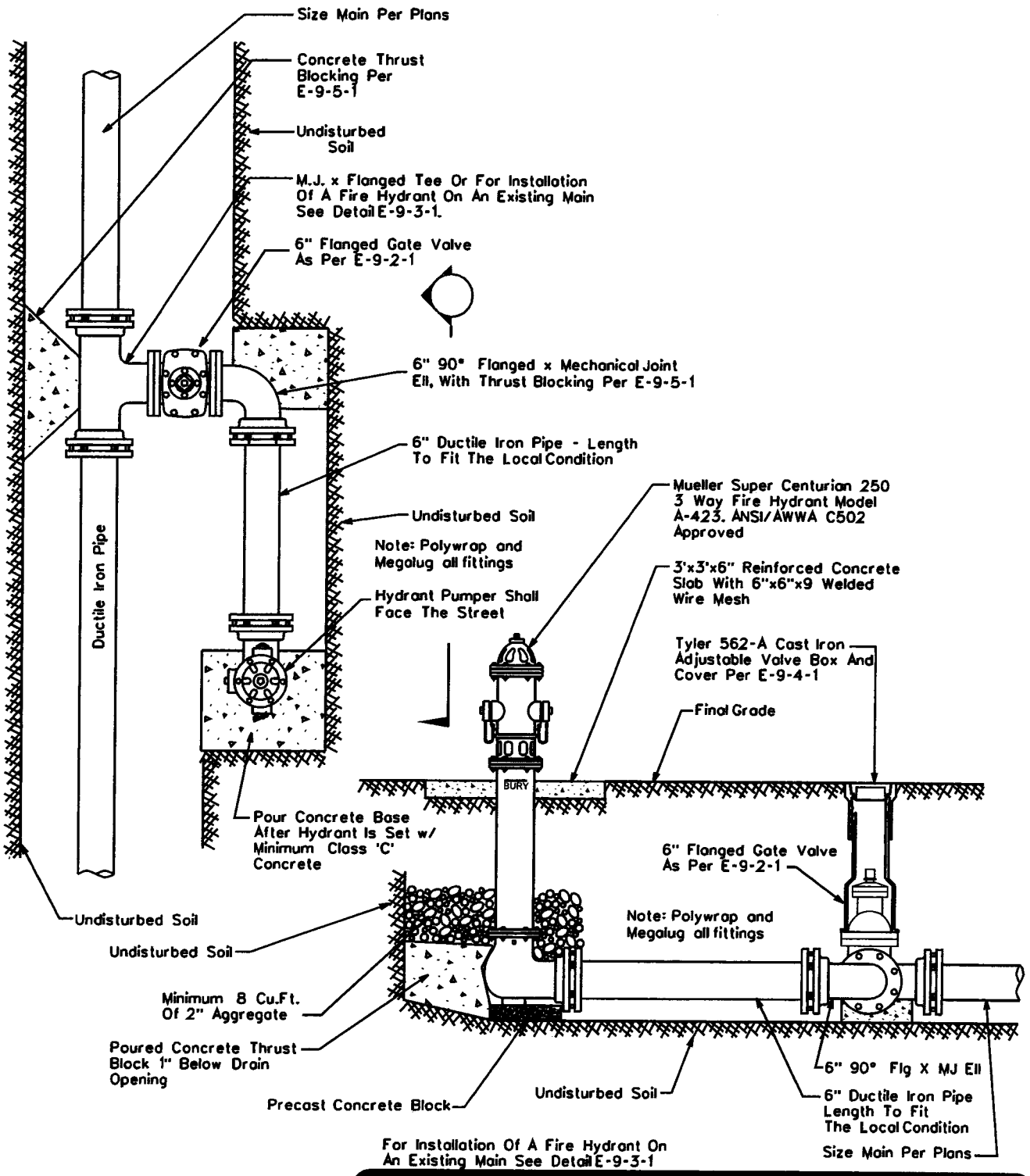

NOTE: All Flanges, Bolts, Nuts And Drain Holes Shall Be Kept Free Of Concrete.

ARIZONA WATER COMPANY

STANDARD SPECIFICATION

FOR THE INSTALLATION OF

TYPICAL PARALLEL FIRE HYDRANT

DRAWN BY:	APPROVED BY:	DATE:	△	
JW	MW	03.20.1986	08.24.2006	E-9-7-1

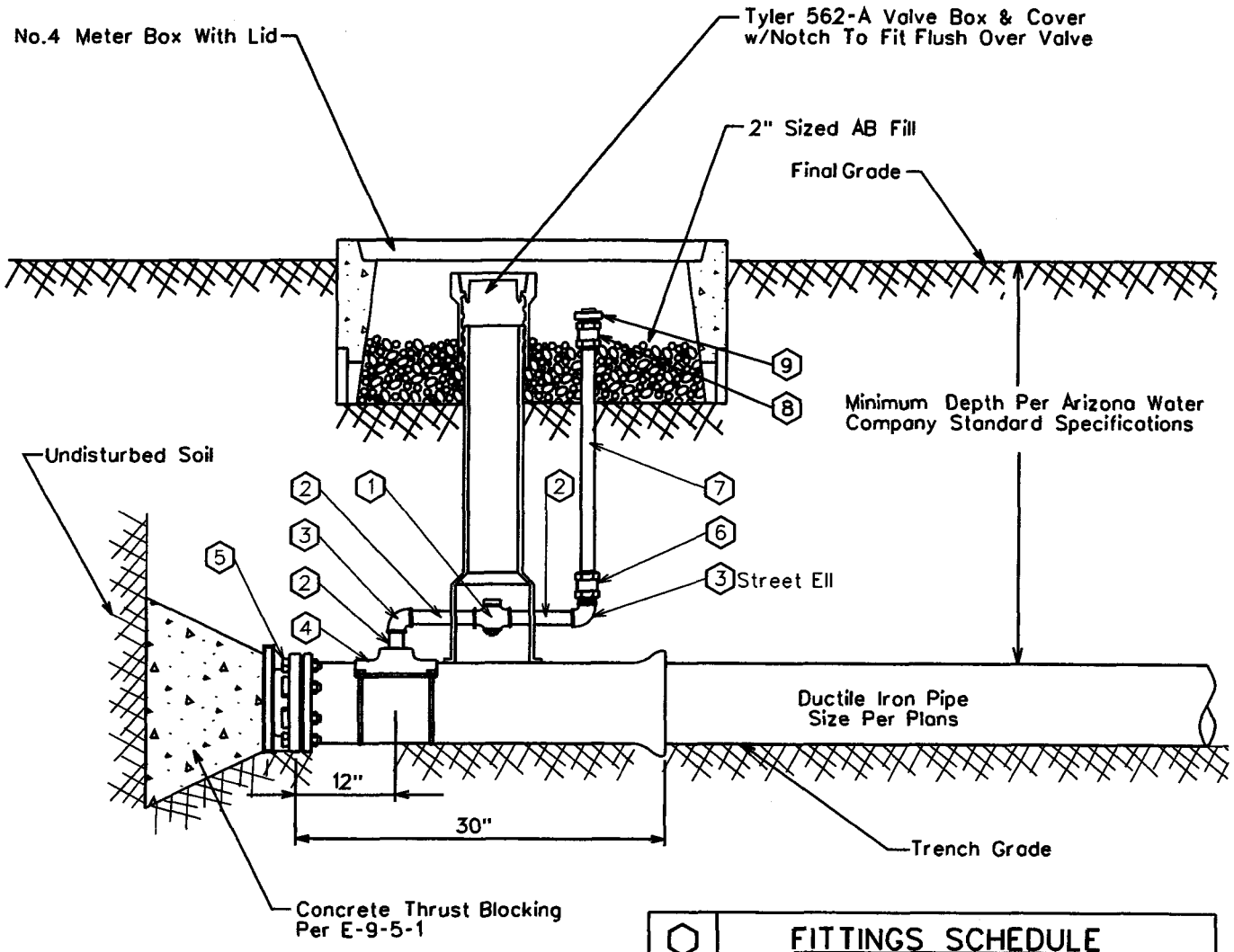

⬡	FITTINGS SCHEDULE
1.	2" Mueller 300 Ball Curb Valve B-20283 FIP x FIP W/ 2" Mueller Brass Square Wrench Nut Adapter B-20299
2.	2" Brass Nipple - Length To Fit Field Conditions
3.	2" Brass 90° Elbow, IPST
4.	Mueller Double Strap Bronze Service Saddle - BR2B
5.	M.J. Plug - Megalug Restraints May Be Required
6.	2" Straight Coupling CC x FIP H-15451
7.	2" Copper Pipe
8.	2" Straight Coupling CC x MIP H-15428
9.	2" Square Head Plug, MIP

ARIZONA WATER COMPANY

STANDARD SPECIFICATION
FOR THE INSTALLATION OF

2" BLOWOFF ASSEMBLY

DRAWN BY:	APPROVED BY:	DATE:	△	
CB	MW	03.20.1986	△ 03.21.2006	E-9-8-1

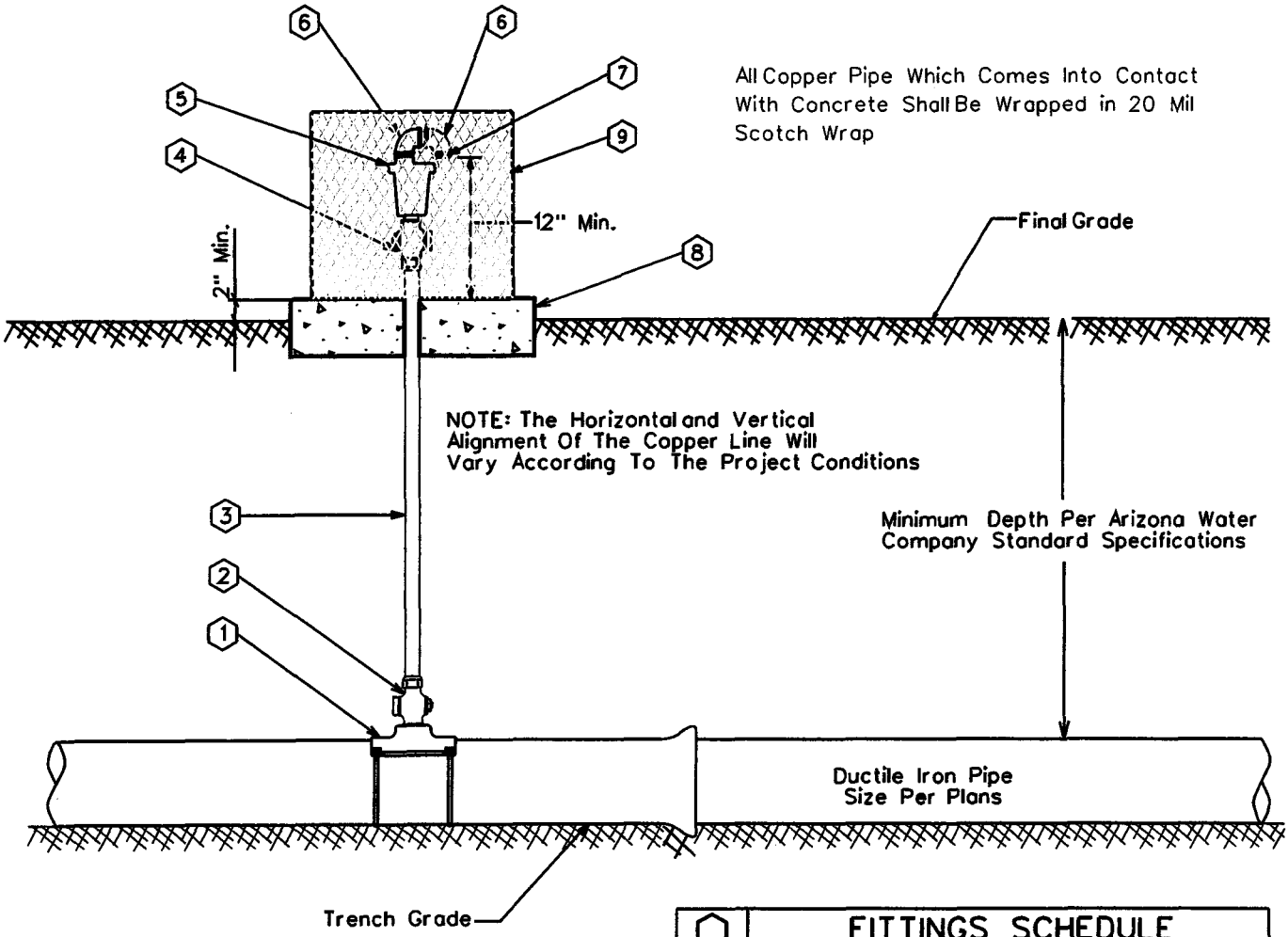

GENERAL NOTES:

1. The valve shall be installed at high points and on long runs to vent the accumulation of air with the line under pressure- see the construction plans for specific locations.
2. The valve shall have a 5/64" orifice with valve sealing faces of stainless steel and BUNA-N rubber.
3. The valve shall be Crispin model AR10 for 6" and larger water mains.
4. Crispin model AR10 valve construction consists of a 1" IPST inlet & 1/2" IPST outlet, cast iron body and top flange with stainless steel float and trim.
5. The air release assembly shall be located out of the path of traffic but within right-of-way or easement.

⬡	FITTINGS SCHEDULE
1.	Mueller BR2B Bronze Service Saddle - Double Strap
2.	1" Mueller B-25008 Taper x Comp. Ball Corp Stop
3.	1" Type 'K' Copper w/NO Splices - Field Fit
4.	1" Mueller B-25028 IP x Comp. Ball Corp Stop
5.	Crispin 1" Air Release Valve, Model AR10
6.	1/2" Brass Street Elbow
7.	No.16 Wire Mesh Screen (Non-Corrodible)
8.	4" Thick Concrete Pad - Class 'C' Concrete
9.	Guardshack, Model GS-1, Available From BPDI, Inc. Available In Leaf Green Or Desert Tan

ARIZONA WATER COMPANY

STANDARD SPECIFICATION
FOR THE INSTALLATION OF

TYPICAL AIR RELEASE VALVE

DRAWN BY:	APPROVED BY:	DATE:		
CB	MW	03.20.1997	△08.24.2006	E-9-B-2

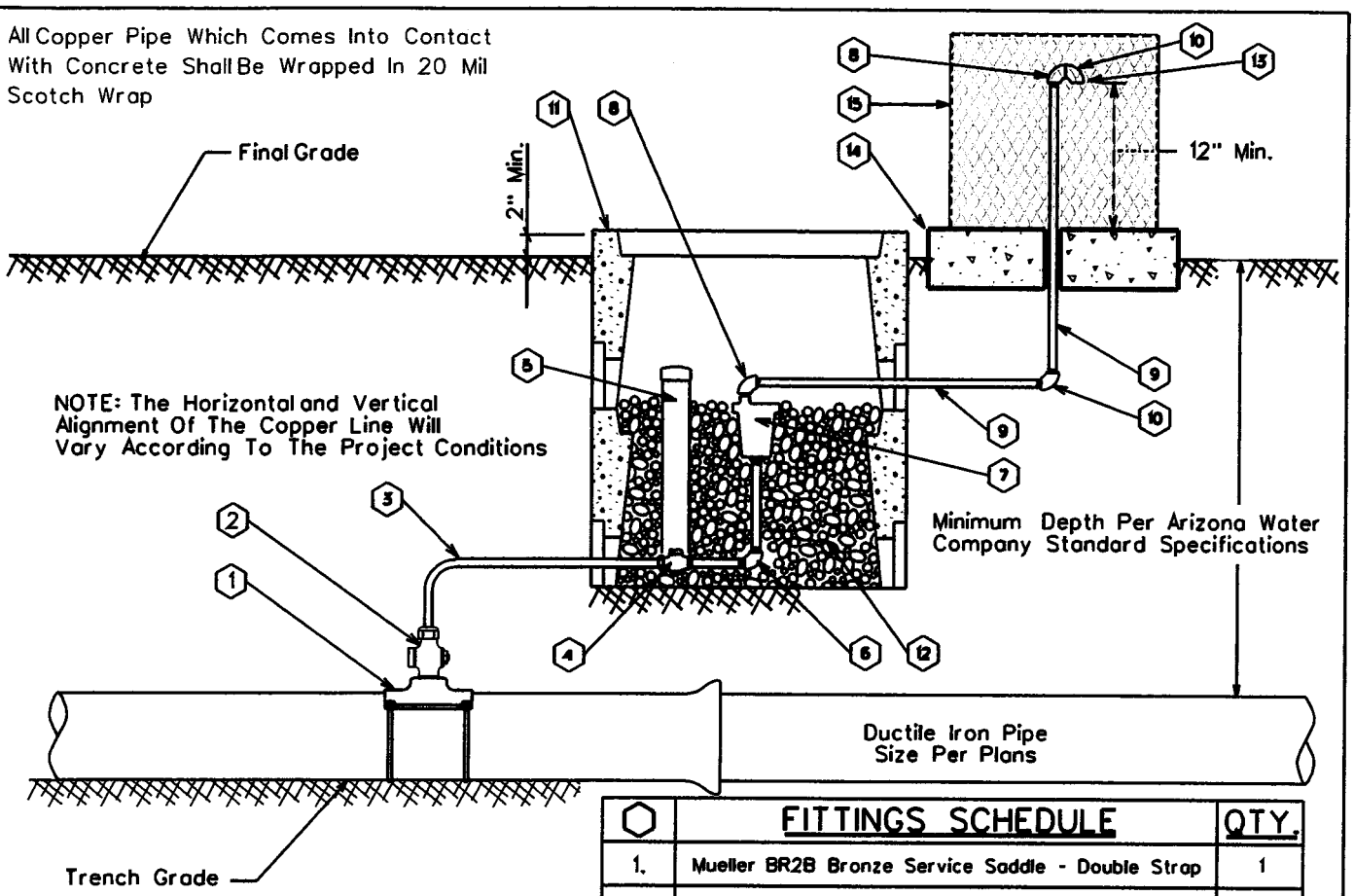

⬡	FITTINGS SCHEDULE	QTY.
1.	Mueller BR2B Bronze Service Saddle - Double Strap	1
2.	1" Mueller B-25008 Taper x Comp. Ball Corp Stop	1
3.	1" Type 'K' Copper w/NO Splices - Field Fit	As Req'd
4.	1" Mueller B-25028 IP x Comp. Ball Corp Stop	1
5.	3" PVC Pipe w/ Cap (Loose Fit)	1
6.	1" x 4" Brass Nipple w/90° Elbow	1
7.	Crispin 1" Air Release Valve, Model AR10	1
8.	½" Brass Street Elbow	2
9.	½" Galvanized Pipe - Length as req'd	2
10.	½" Galvanized 90° Ell	2
11.	Number 1 Meter Box	2
12.	2" Sized AB (Fill Meter Box To The Top Of The Air Release Valve)	As Req'd
13.	No.16 Wire Mesh Screen (Non-Corrodible)	1
14.	4" Thick Concrete Pad - Class 'C' Concrete	1
15.	Guardshack, Model GS-1, Available From BPDI, Inc. Available In Leaf Green Or Desert Tan	1

GENERAL NOTES:

1. The valve shall be installed at high points and on long runs to vent the accumulation of air with the line under pressure- see the construction plans for specific locations.
2. The valve shall have a 5/64" orifice with valve sealing faces of stainless steel and BUNA-N rubber.
3. The valve shall be Crispin model AR10 for 6" and larger water mains.
4. Crispin model AR10 valve construction consists of a 1" IPST inlet & ½" IPST outlet, cast iron body and top flange with stainless steel float and trim.
5. The air release assembly shall be located out of the path of traffic but within the right-of-way or easement.

ARIZONA WATER COMPANY

STANDARD SPECIFICATION
FOR THE INSTALLATION OF

AIR RELEASE VALVE FOR THE NORTHERN REGION

DRAWN BY:	APPROVED BY:	DATE:		
CB	MW	03.20.1997	△08.24.2006	E-9-8-3

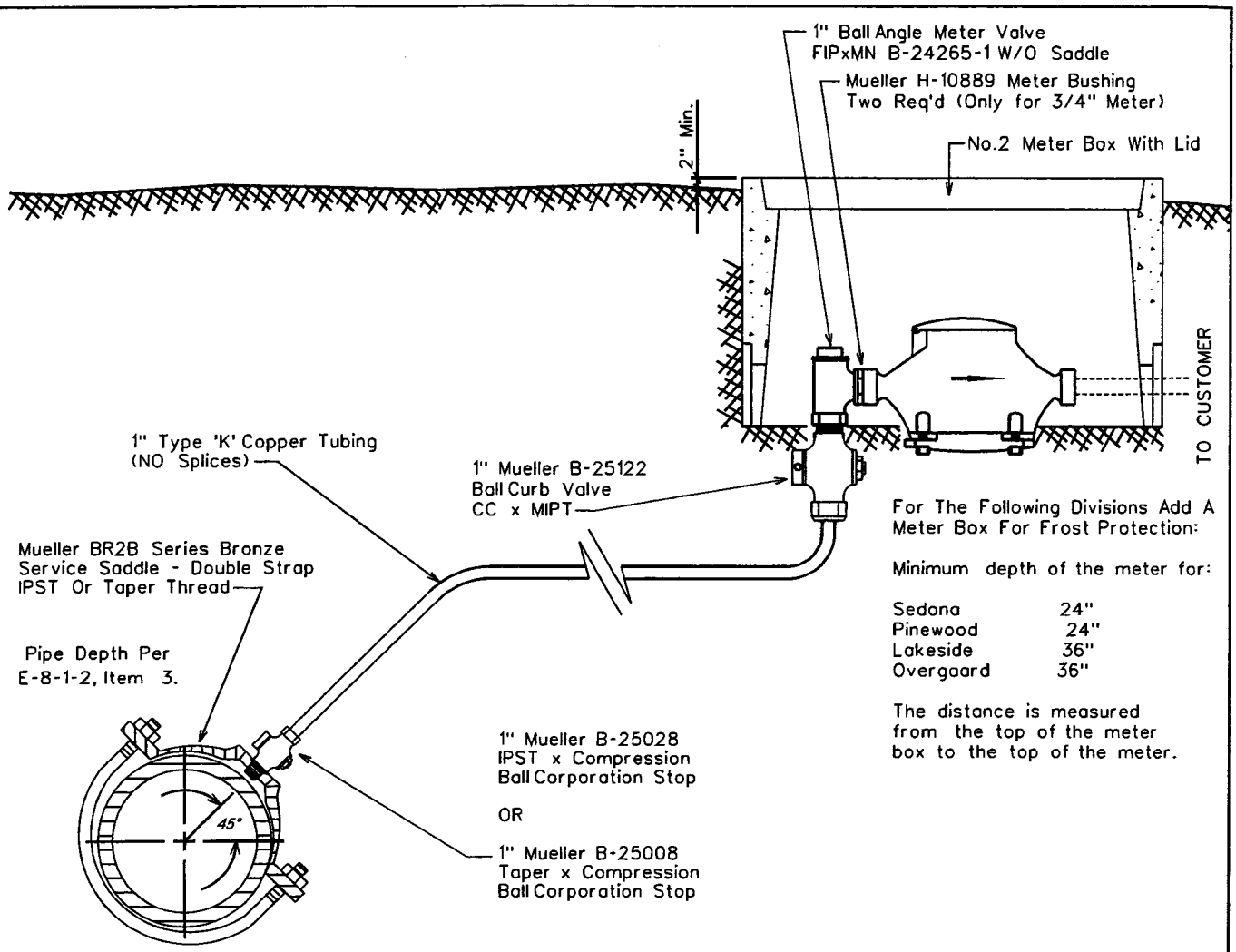

For The Following Divisions Add A Meter Box For Frost Protection:

Minimum depth of the meter for:

Sedona	24"
Pinewood	24"
Lakeside	36"
Overgaard	36"

The distance is measured from the top of the meter box to the top of the meter.

SADDLE TAP TO CA, PVC, OR DI PIPE

NOTE: The minimum distance between taps on mains other than ductile iron is 12"

NOTE:
Only the meter is supplied by Arizona Water Company

ARIZONA WATER COMPANY

STANDARD SPECIFICATION
FOR THE INSTALLATION OF

SINGLE SERVICE CONNECTION FOR A 3/4" OR 1" METER

DRAWN BY:	APPROVED BY:	DATE:	△ 03.17.2006	
CCO	M.W.	3/20/86		E-9-9-1

For The Following Divisions Add A Meter Box For Frost Protection:

Minimum depth of the meter for:

Sedona	24"
Pinewood	24"
Lakeside	36"
Overgaard	36"

The distance is measured from the top of the meter box to the top of the meter.

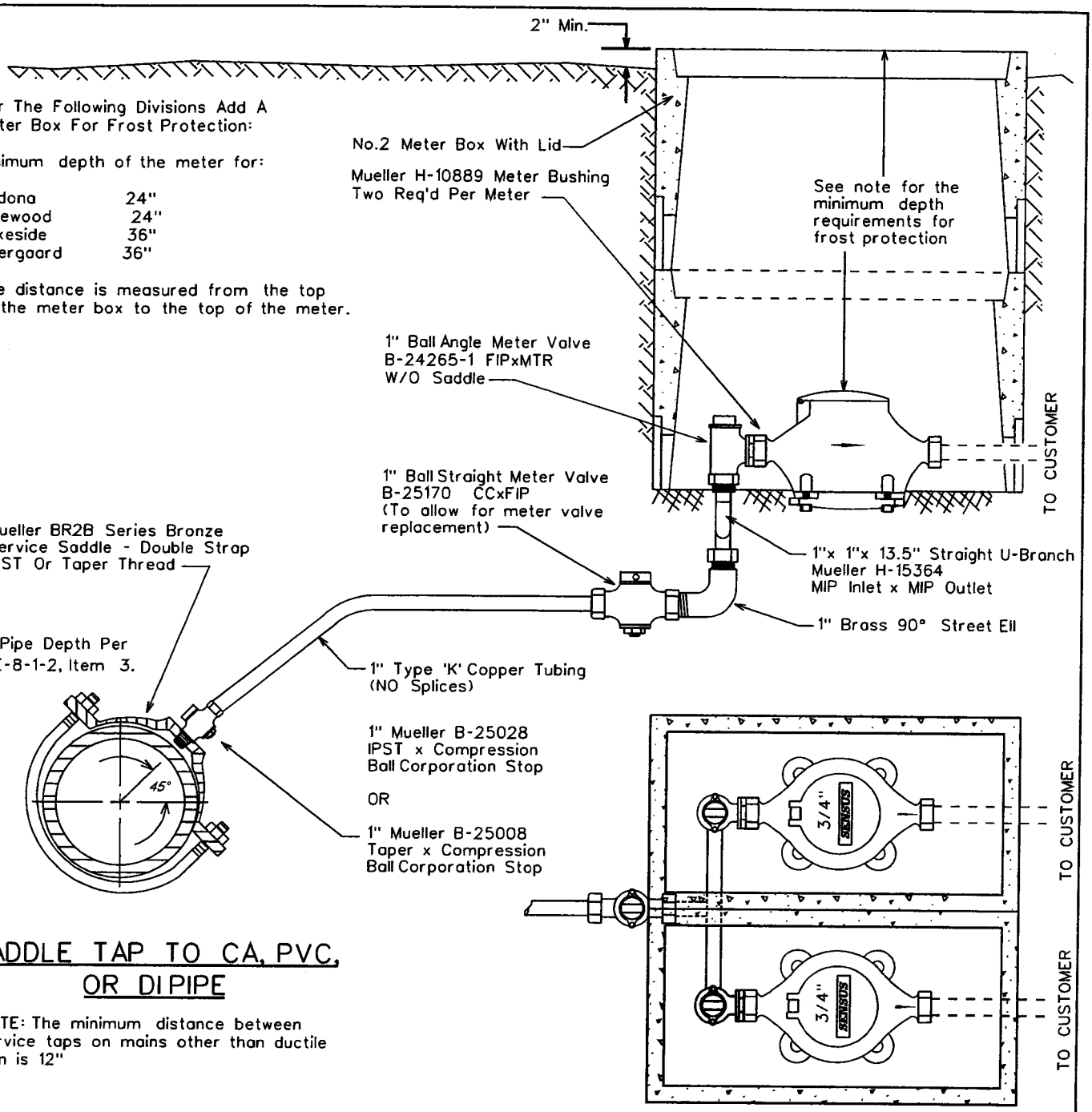

SADDLE TAP TO CA, PVC, OR DI PIPE

NOTE: The minimum distance between service taps on mains other than ductile iron is 12"

NOTE:
Only the meter is supplied by Arizona Water Company

ARIZONA WATER COMPANY

STANDARD SPECIFICATION
FOR THE INSTALLATION OF

DOUBLE SERVICE CONNECTION FOR 3/4" METERS

DRAWN BY:	APPROVED BY:	DATE:	△ 08.25.2006	E-9-10-1
CCO	M.W.	3-20-86		

For The Following Divisions Add A Meter Box For Frost Protection:

Minimum depth of the meter for:

Sedona	24"
Pinewood	24"
Lakeside	36"
Overgaard	36"

The distance is measured from the top of the meter box to the top of the meter.

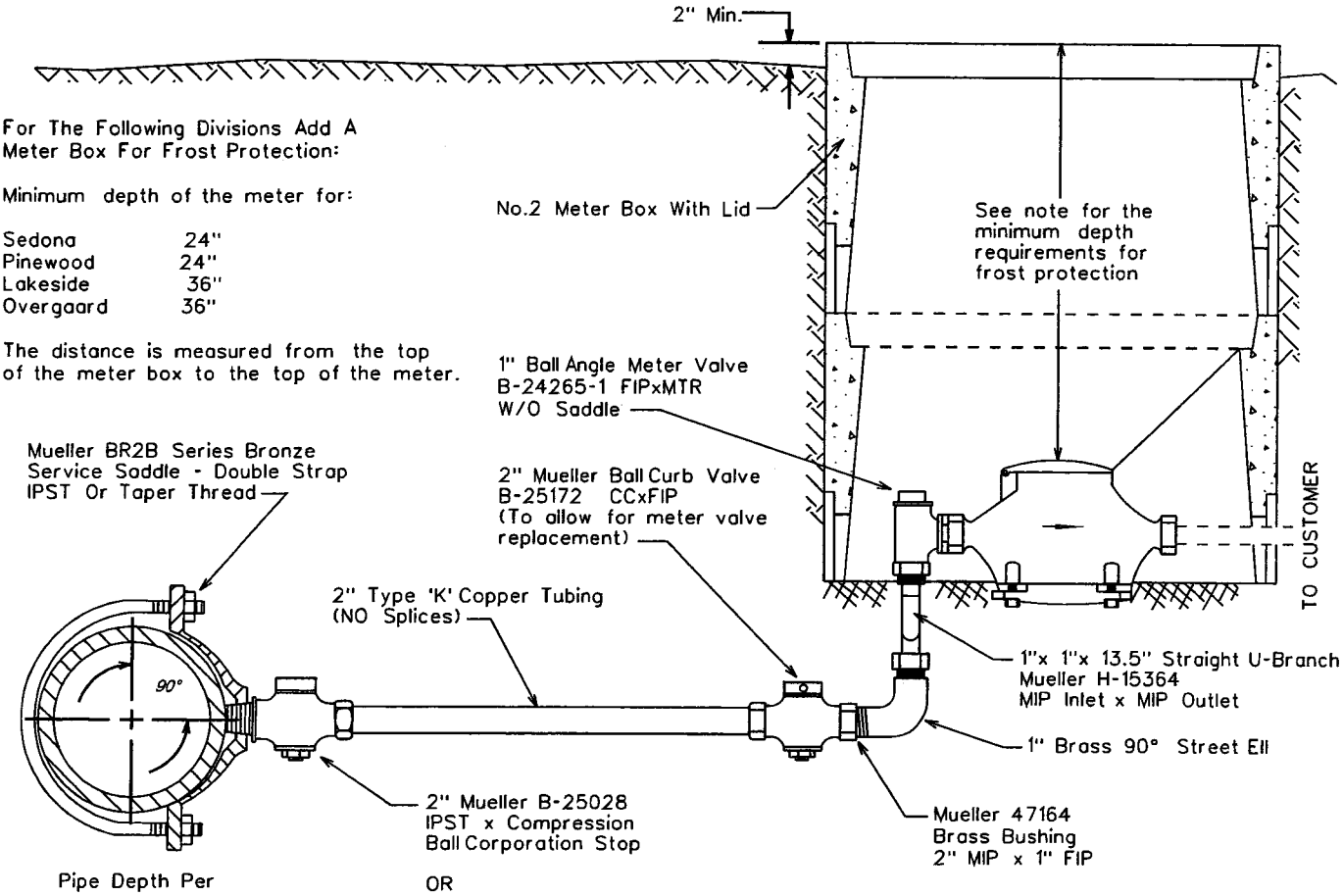

SADDLE TAP TO CA, PVC, OR DI PIPE

NOTE: The minimum distance between service taps on mains other than ductile iron is 12"

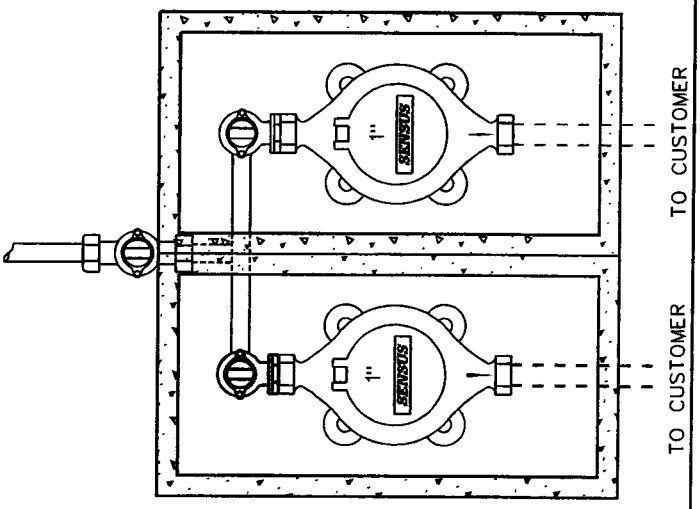

NOTE: THE LENGTH OF SERVICE IS LIMITED TO COMMERICIALLY AVAILABLE ROLLS, TYPICALLY 60 FEET

NOTE:
Only the meter is supplied by Arizona Water Company

ARIZONA WATER COMPANY

STANDARD SPECIFICATION
FOR THE INSTALLATION OF

DOUBLE SERVICE CONNECTION FOR 1" METERS

DRAWN BY:	APPROVED BY:	DATE:	△ 08.29.2006	
CB	M.W.	03.17.2006		E-9-10-2

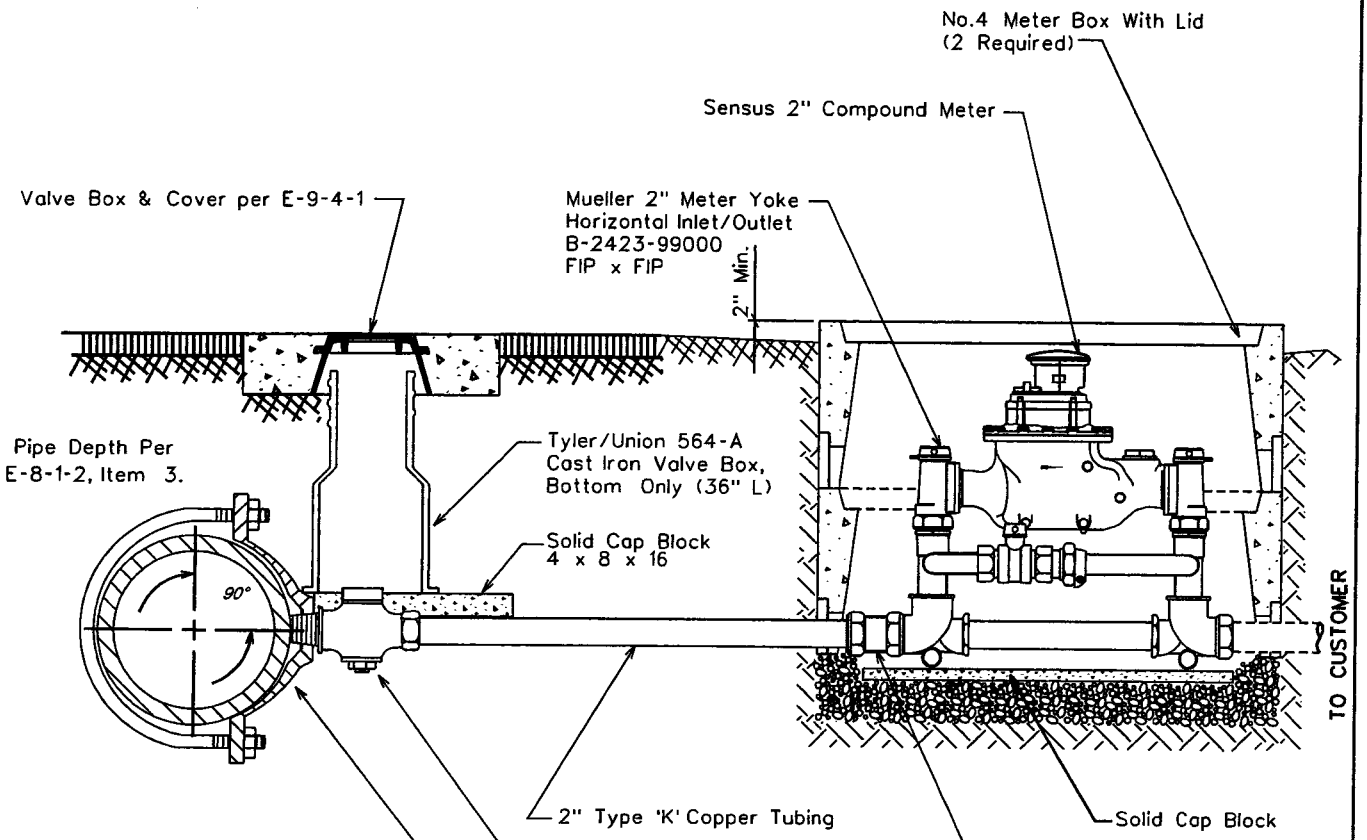

SADDLE TAP CONNECTION TO DUCTILE IRON PIPE

NOTE: The minimum distance between service taps on mains other than ductile iron is 12"

NOTE: THE LENGTH OF SERVICE IS LIMITED TO COMMERICIALLY AVAILABLE ROLLS, TYPICALLY 60 FEET

NOTE:

Only the meter is supplied by Arizona Water Company

ARIZONA WATER COMPANY

STANDARD SPECIFICATION
FOR THE INSTALLATION OF

TYPICAL 2" SERVICE CONNECTIONS

DRAWN BY:	APPROVED BY:	DATE:	△ 08.29.2006	
JW	M.W.	3/20/86		E-9-11-1

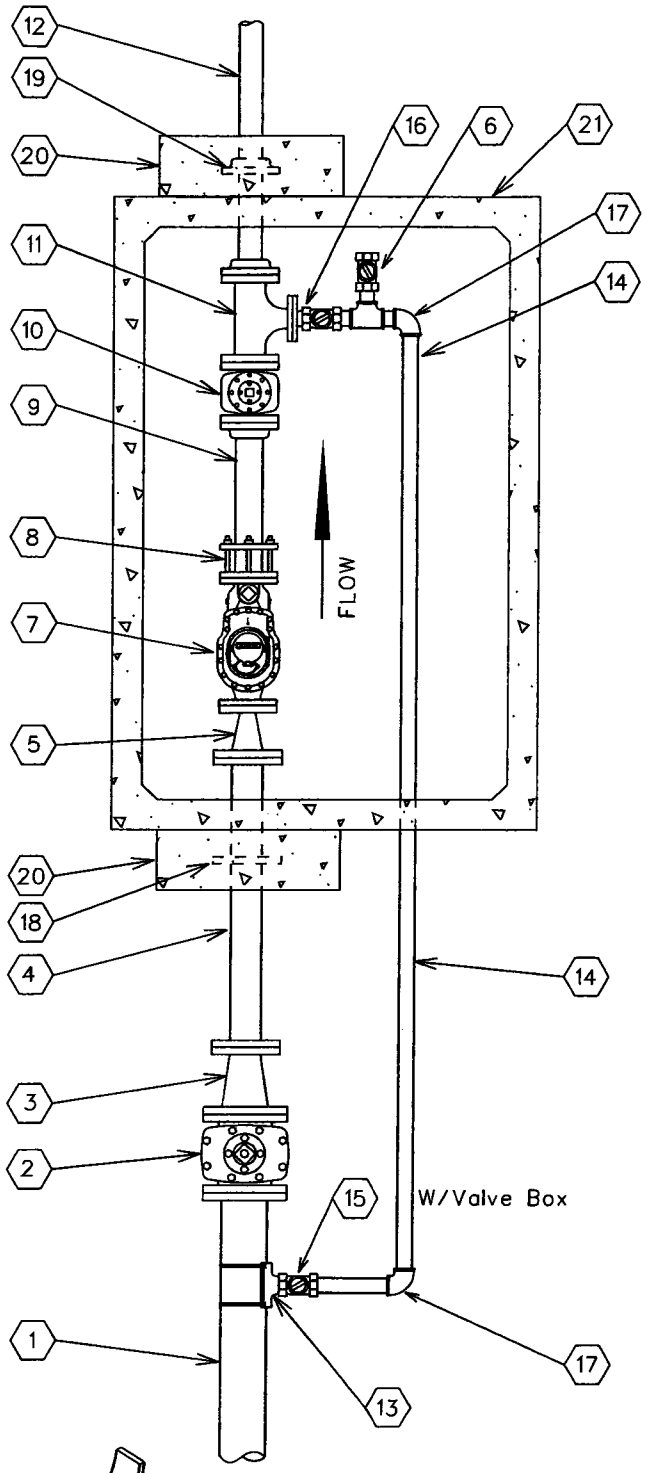

No.	FITTINGS SCHEDULE
1.	6" D.I.P.
2.	6" G.V.B.&C. mj x flng
3.	6"x4" Reducer flng x mj
4.	4"x3'-0" D.I.P. Spool flng x pe
5.	4" x 3" Reducer flng
6.	2" Test Port
7.	3" Compound Meter
8.	3" F.C.A.
9.	3"x2'-0" D.I. Spool flng x pe
10.	3" Gate Valve flng
11.	3"x2" Flg Tee w/ 2" Companion Flange
12.	3"x4'-0" D.I. Spool flng x pe
13.	6"x2" Tapping Saddle
14.	2" Copper Pipe
15.	2" Mueller B25122 Ball Valve w/B20299 Nut
16.	2" Locking Ball Valve (normally closed)
17.	2" Mueller H-15526 90° Ell CC x CC
18.	4" Megalug
19.	3" Slip-On Welding Flange
20.	24"x24"x8" Conc. Thrust Block P.I.P.
21.	575-LA Conc. Vault

NOTE:

1. Use Rowley pipe supports or equivalent as needed (See detail below).
2. Pipe support locations to be determined by field personnel.
3. All copper pipe that comes in contact with concrete to be wrapped w/10-20 Mil. Scotchwrap corrosion protection tape.
4. All mechanical joint fittings are to be megalugged.
5. Use deflection fittings (45° Ells.) to achieve necessary depths & cover as shown on the standard specification for the installation of a concrete vault (E-9-12-5).

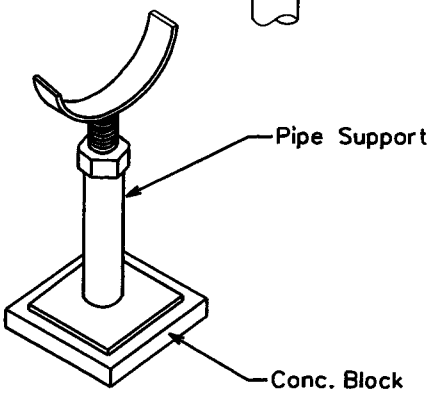

ARIZONA WATER COMPANY

STANDARD SPECIFICATION
FOR THE INSTALLATION OF

3" COMPOUND METER

DRAWN BY:	APPROVED BY:	DATE:		
CCO	MW	10/5/1993	△08.29.2006	E-9-12-1

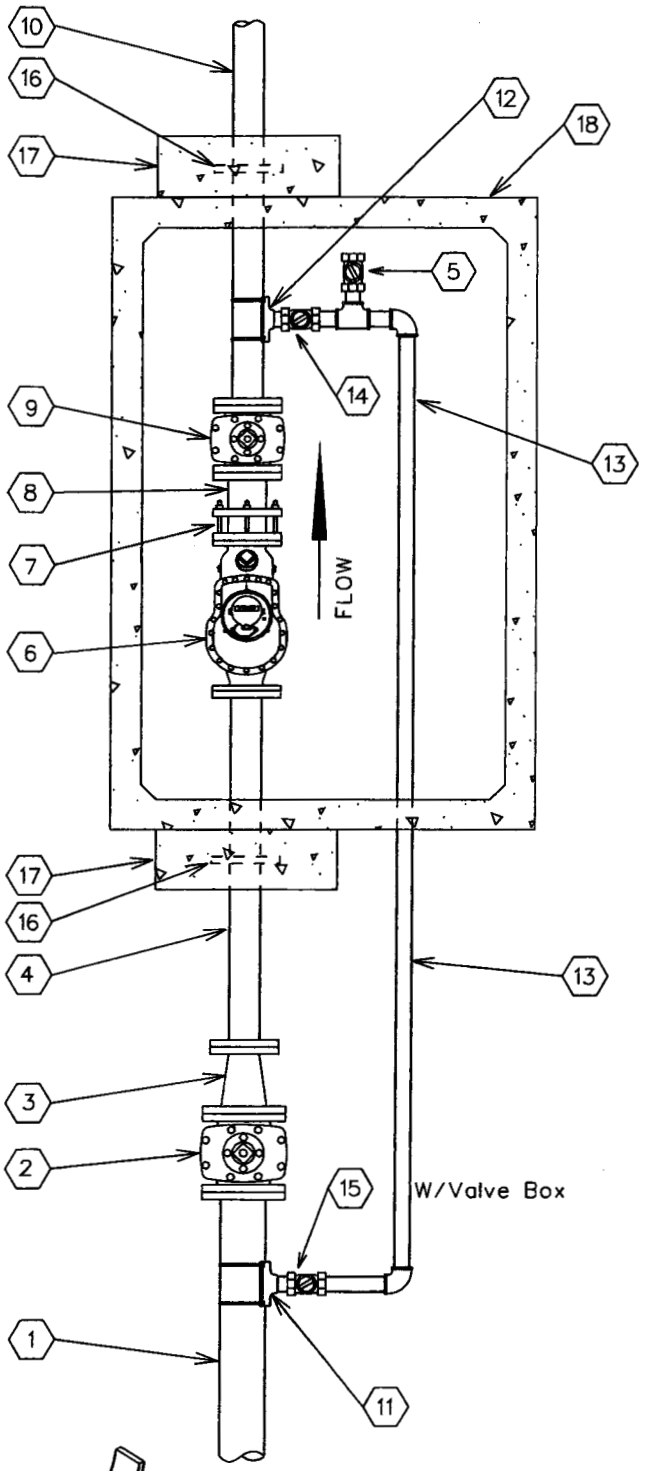

No.	FITTINGS SCHEDULE
1.	6" D.I.P.
2.	6" G.V.B.&C. mj x flng
3.	6"x4" Reducer flng x mj
4.	4"x3'-0" D.I.P. Spool flng x pe
5.	2" Test Port
6.	4" Compound Meter
7.	4" F.C.A.
8.	4"x1'-0" D.I.P. Spool flng x pe
9.	4" Gate Valve flng
10.	4"x4'-0" D.I.P. Spool flng x pe
11.	6"x2" Tapping Saddle
12.	4"x2" Tapping Saddle
13.	2" Copper Pipe
14.	2" Ball Valve / Locking (Normally Closed)
15.	2" Mueller B25122 Ball Valve w/B20299 Nut
16.	4" Megalug
17.	24"x24"x8" Conc. Thrust Block P.I.P.
18.	575-LA Conc. Vault

NOTE:

1. Use Rowley pipe supports or equivalent as needed (See detail below).
2. Pipe support locations to be determined by field personnel.
3. All copper pipe that comes in contact with concrete to be wrapped w/10-20 Mil. Scotchwrap corrosion protection tape.
4. All mechanical joint fittings are to be megalugged.
5. Use deflection fittings (45° Ells.) to achieve necessary depths & cover as shown on the standard specification for the installation of a concrete vault (E-9-12-5).

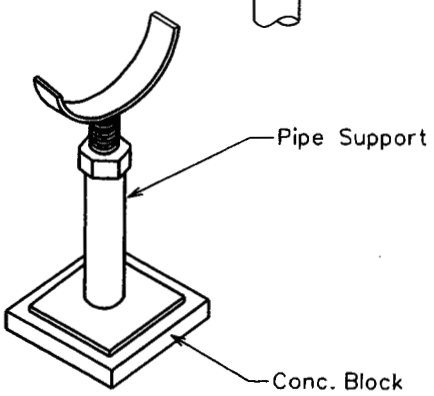

ARIZONA WATER COMPANY

STANDARD SPECIFICATION
FOR THE INSTALLATION OF

4" COMPOUND METER

DRAWN BY:	APPROVED BY:	DATE:		
CCO	MW	10/5/1993	△08.29.2006	E-9-12-2

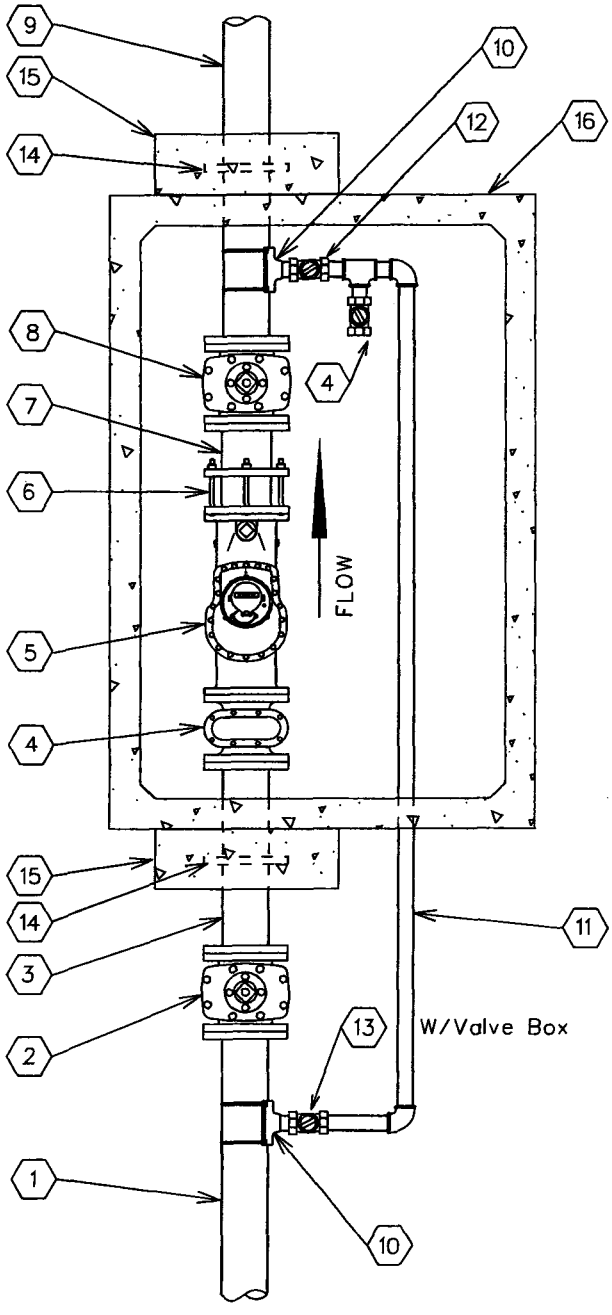

No.	FITTINGS SCHEDULE
1.	6" D.I.P.
2.	6" G.V.B.&C. mj
3.	6"x 3'-0" D.I.P. Spool flng x pe
4.	2" Test Port
5.	6" Compound Meter
6.	6" F.C.A.
7.	6"x 1'-0" D.I.P. Spool flng x pe
8.	6" Gate Valve flng
9.	6"x 4'-0" D.I.P. Spool flng x pe
10.	6"x2" Tapping Saddle
11.	2" Copper Pipe
12.	2" Ball Valve / Locking (Normally Closed)
13.	2" Mueller B25122 Ball Valve w/B20299 Nut
14.	6" Megalug
15.	24"x24"x8" Conc. Thrust Block P.I.P.
16.	575-LA Conc. Vault

NOTE:

1. Use Rowley pipe supports or equivalent as needed (See detail below).
2. Pipe support locations to be determined by field personnel.
3. All copper pipe that comes in contact with concrete to be wrapped w/10-20 Mil. Scotchwrap corrosion protection tape.
4. All mechanical joint fittings are to be megalugged.
5. Use deflection fittings (45° Ells.) to achieve necessary depths & cover as shown on the standard specification for the installation of a concrete vault (E-9-12-5).

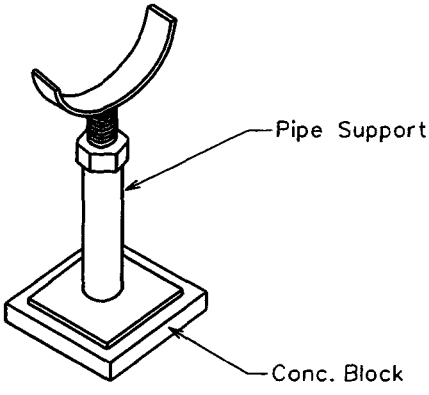

ARIZONA WATER COMPANY

STANDARD SPECIFICATION
FOR THE INSTALLATION OF

6" COMPOUND METER

DRAWN BY:	APPROVED BY:	DATE:		
CCO	MW	10/5/1993	△08.29.2006	E-9-12-3

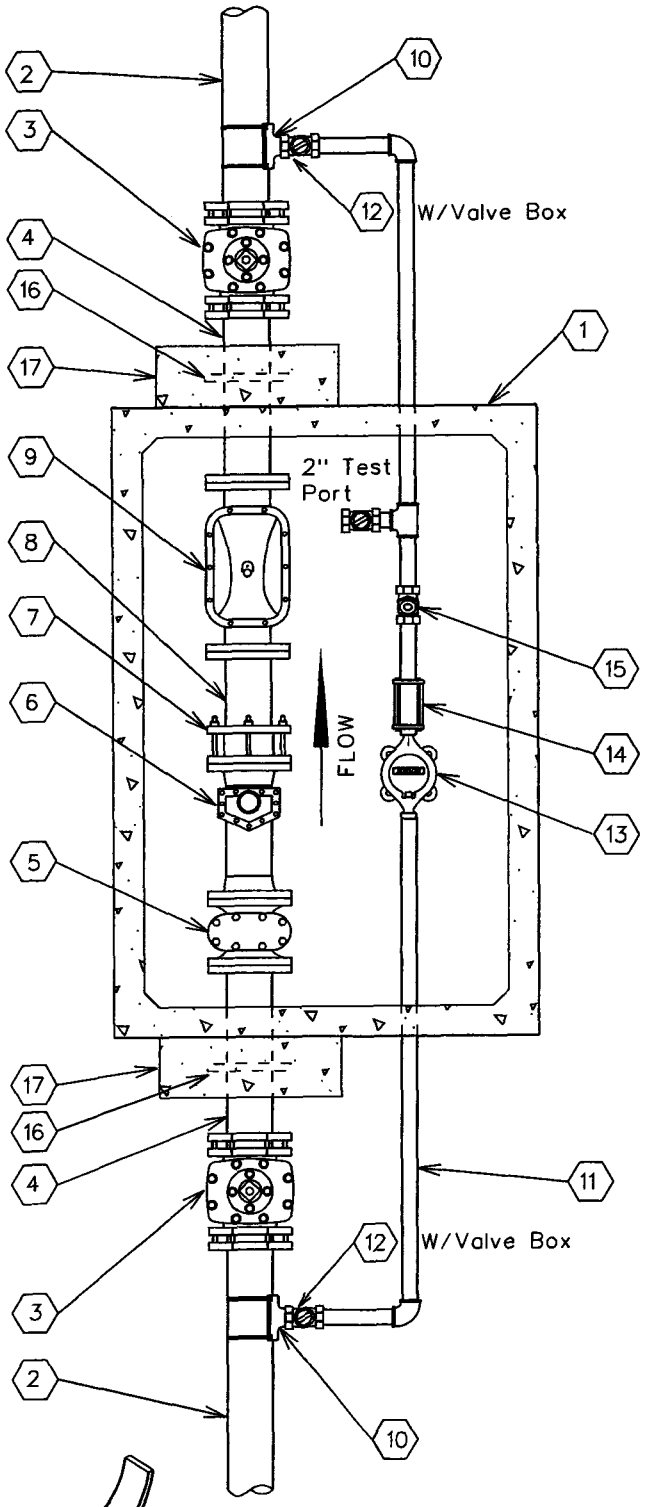

No.	FITTINGS SCHEDULE
1.	575-LA Conc. Vault
2.	6" D.I.P.
3.	6" G.V.B.&C. m.j.
4.	6" x 3'-0" D.I.P. SPool Piece flng x pe
5.	6" Strainer
6.	6" Turbo Meter
7.	6" F.C.A.
8.	6" x 2'-0" D.I.P. Spool Piece flng x pe (TRIM SPOOL PIECE TO 3x THE PIPE DIA.)
9.	6" Detector Check
10.	6"x*N" Tapping Saddle
11.	*N" Copper Pipe
12.	*N" Ball Valve (Locking)
13.	*N" Meter
14.	*N" Coup. Adapt.
15.	*N" Flapper Check Valve
16.	6" Megalug
17.	24"x24"x8" Conc. Thrust Block P.I.P.

*N - Size To Be determined By A.W.Co.

NOTE:

1. Use Rowley pipe supports or equivalent as needed (See detail below).
2. Pipe support locations to be determined by field personnel.
3. All copper pipe that comes in contact with concrete to be wrapped w/10-20 Mil. Scotchwrap corrosion protection tape.
4. All mechanical joint fittings are to be megalugged.
5. Use deflection fittings (45° Ells.) to achieve necessary depths & cover as shown on the standard specification for the installation of a concrete vault (E-9-12-5).
6. To change from a 6" service to a 4" service, change all listed 6" materials to 4" materials.

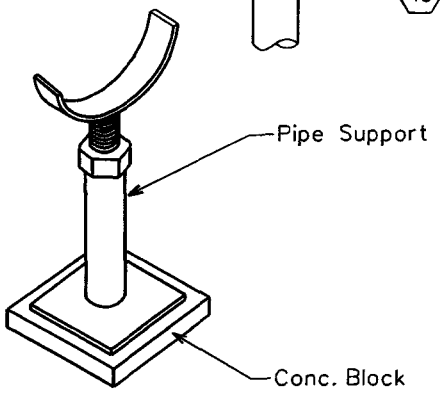

ARIZONA WATER COMPANY

STANDARD SPECIFICATION
FOR THE INSTALLATION OF

6" COMPOUND SERVICE

DRAWN BY:	APPROVED BY:	DATE:		
CCO	MW	10/05/1993	△08.29.2006	E-9-12-4

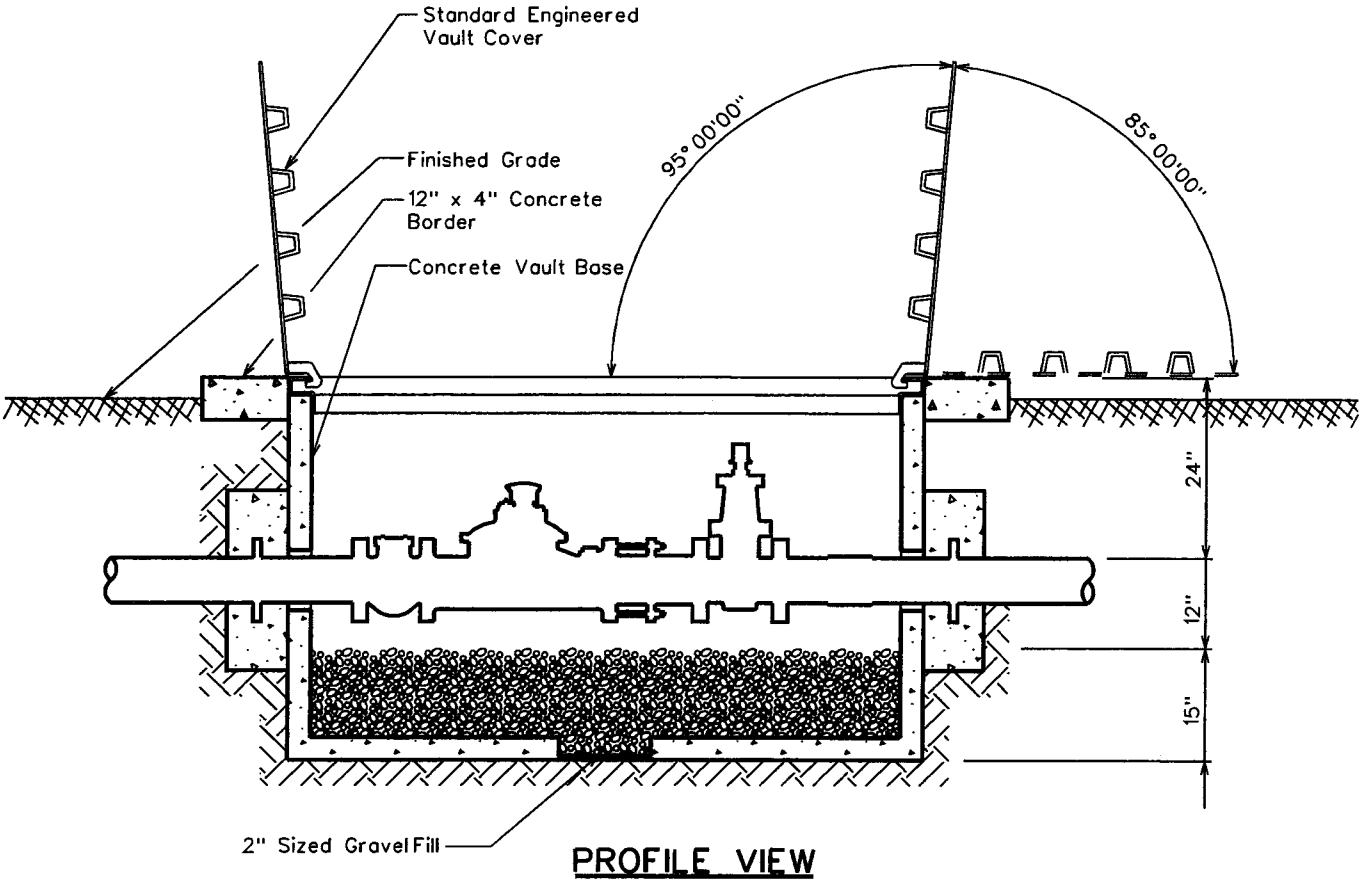

PROFILE VIEW

CONCRETE VAULT & COVER SPECIFICATIONS

Vault - Base No. 575-BL
Cover - Standard Engineered Vault Cover
- 4874 Aluminum Diamond Plate Cover For Non-Traffic Loading Areas
  Or
- 4874 Galvanized Steel Diamond Plate Cover W/ H-20 Traffic Loading
- Double Torsion Spring Assisted Doors W/ Recessed Hasp & Safety Latches

NOTES

1. Total Depth Of Concrete Vault To Be A Maximum Of 3'-0" From Top Of Vault Cover To Top Of Gravel Fill.
2. Service Connections Larger Than 6" In Diameter Will Conform To The Same Vault & Cover Specifications. Size Of Vault & Cover To Be Determined By A.W.Co. Engineers.

ARIZONA WATER COMPANY

STANDARD SPECIFICATION
FOR THE INSTALLATION OF

CONCRETE VAULT

DRAWN BY:	APPROVED BY:	DATE:	△	
CCO	MW	10/5/1993	05.17.2001	E-9-12-5

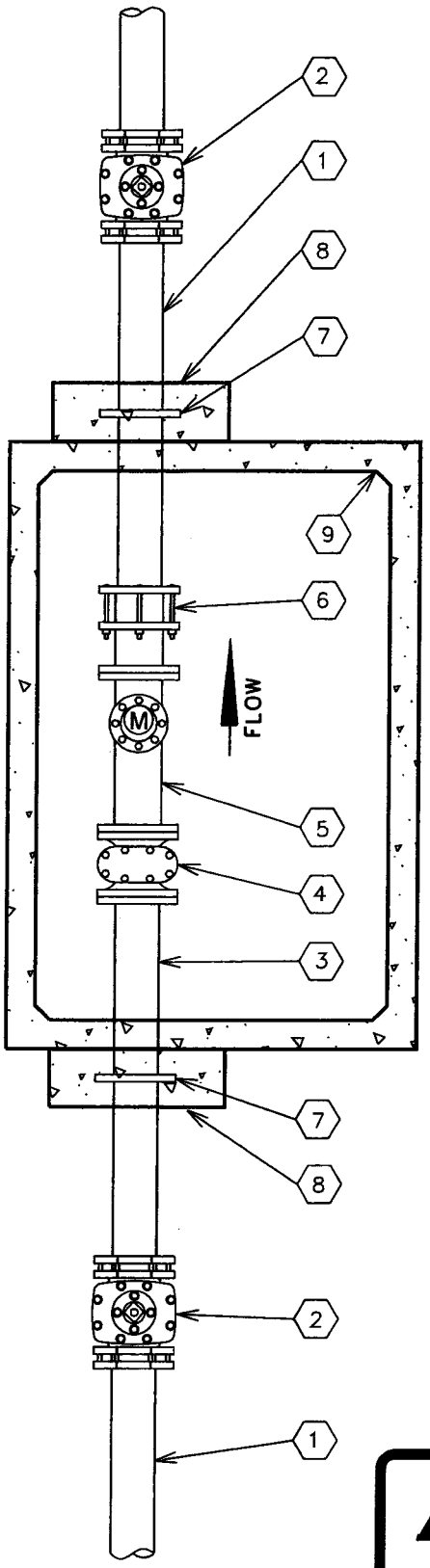

No.	FITTINGS SCHEDULE
1.	Ductile Iron Pipe
2.	Gate Valve M.J.
3.	D.I.P. Spool Piece Flg x Pe (10xDia.)
4.	Meter Strainer
5.	Propeller Meter
6.	Flanged Coupling Adapter
7.	Megalug Gland (Thrust Anchor)
8.	Concrete Thrust Block P.I.P.
9.	Concrete Vault

NOTE:

1. Use Rowley pipe supports or equivalent as needed (See E-9-12-4).
2. Pipe support locations to be determined by field personnel.
3. All Sched. 40 Stl. pipe outside of vault to be wrapped w/10-20 Mil. Scotchwrap corrosion protection tape.
4. All mechanical joint fittings to are to be megalugged.
5. Use deflection fittings (45° Ells.) to achieve necessary depths & cover as shown on the standard specification for the installation of a concrete vault (E-9-12-5).

ARIZONA WATER COMPANY

STANDARD SPECIFICATION

FOR THE INSTALLATION OF

NON-POTABLE PROPELLER METER

DRAWN BY:	APPROVED BY:	DATE:		
JPK	MW	7-20-95	△	E-9-12-6

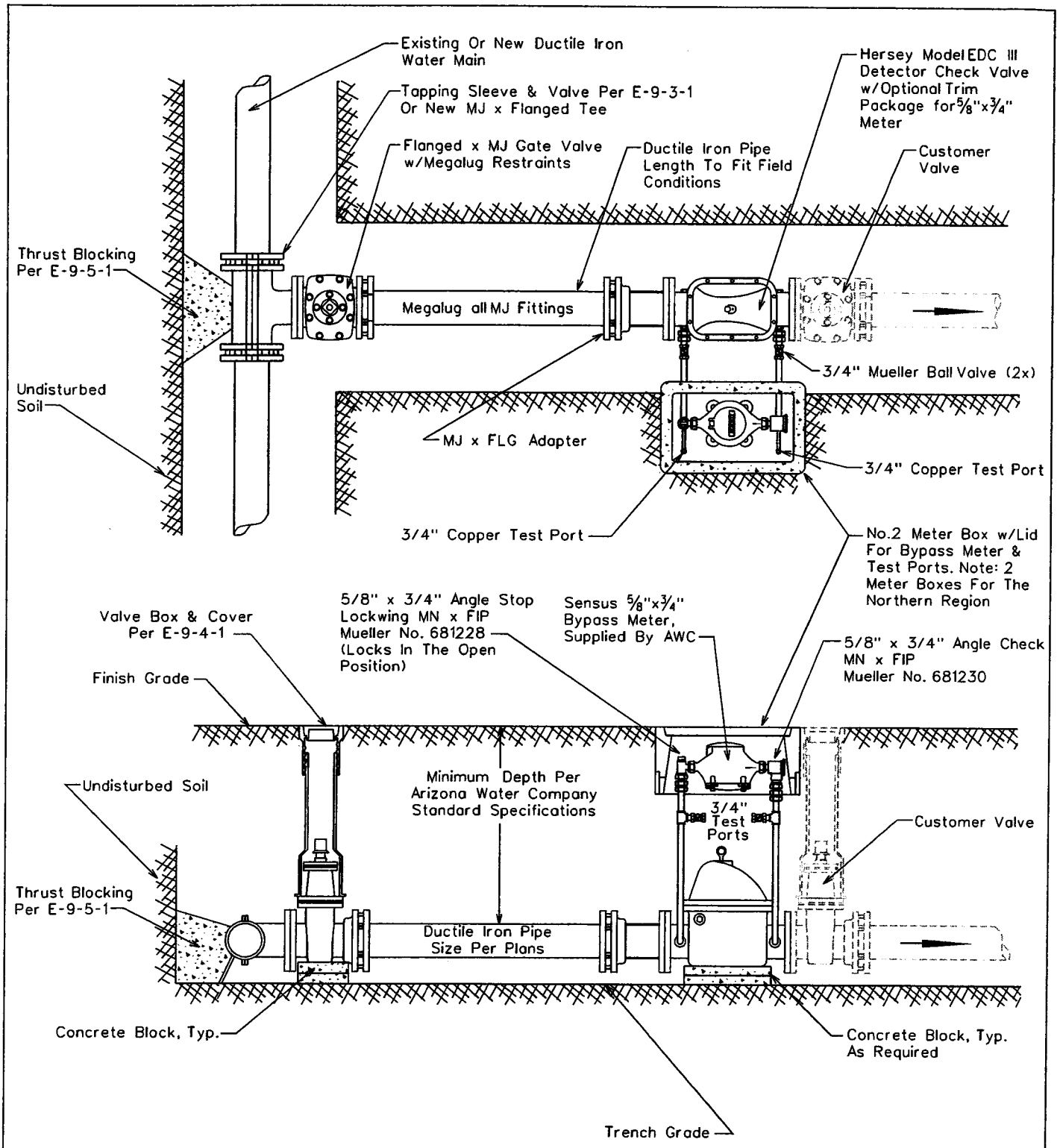

ARIZONA WATER COMPANY

STANDARD SPECIFICATION

FOR THE INSTALLATION OF

TYPICAL 4" THRU 8" DETECTOR CHECK VALVES

DRAWN BY:	APPROVED BY:	DATE:	△ 01.16.2007	
CB	MW	10.16.1990		E-9-13-1

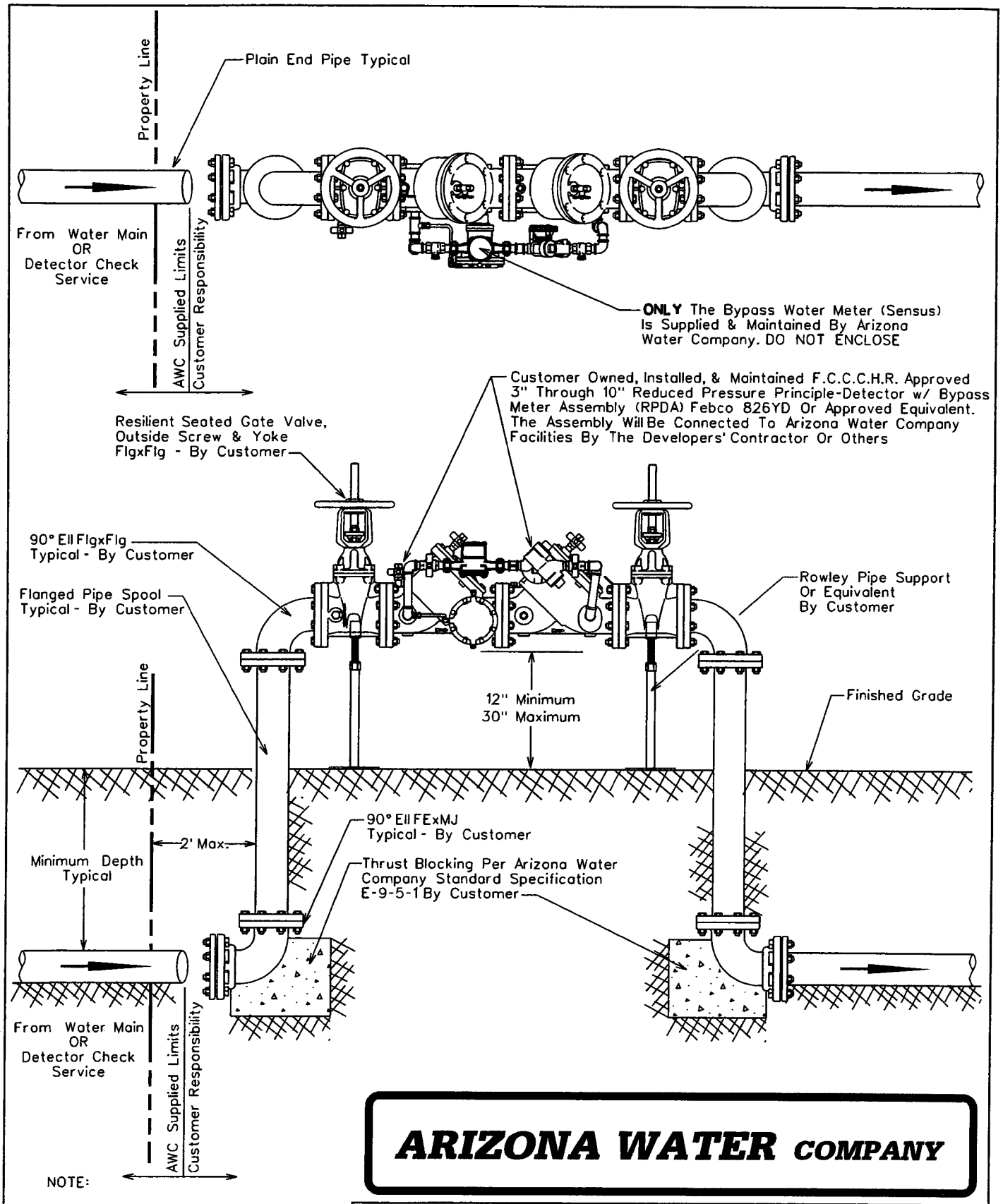

NOTE:

Minimum Depth Of Cover Over
6" & 8" Mains is 36 Inches,
12" & Greater is 48 Inches
Unless Otherwise Specified

ARIZONA WATER COMPANY

STANDARD SPECIFICATION

FOR THE INSTALLATION OF

3" THRU 10" REDUCED PRESSURE PRINCIPLE-DETECTOR
WITH BYPASS METER ASSEMBLY (RPDA) FOR FIRELINE SERVICES

DRAWN BY:	APPROVED BY:	DATE:		
CB	MW	10-13-98	△1-19-2000	E-9-13-2

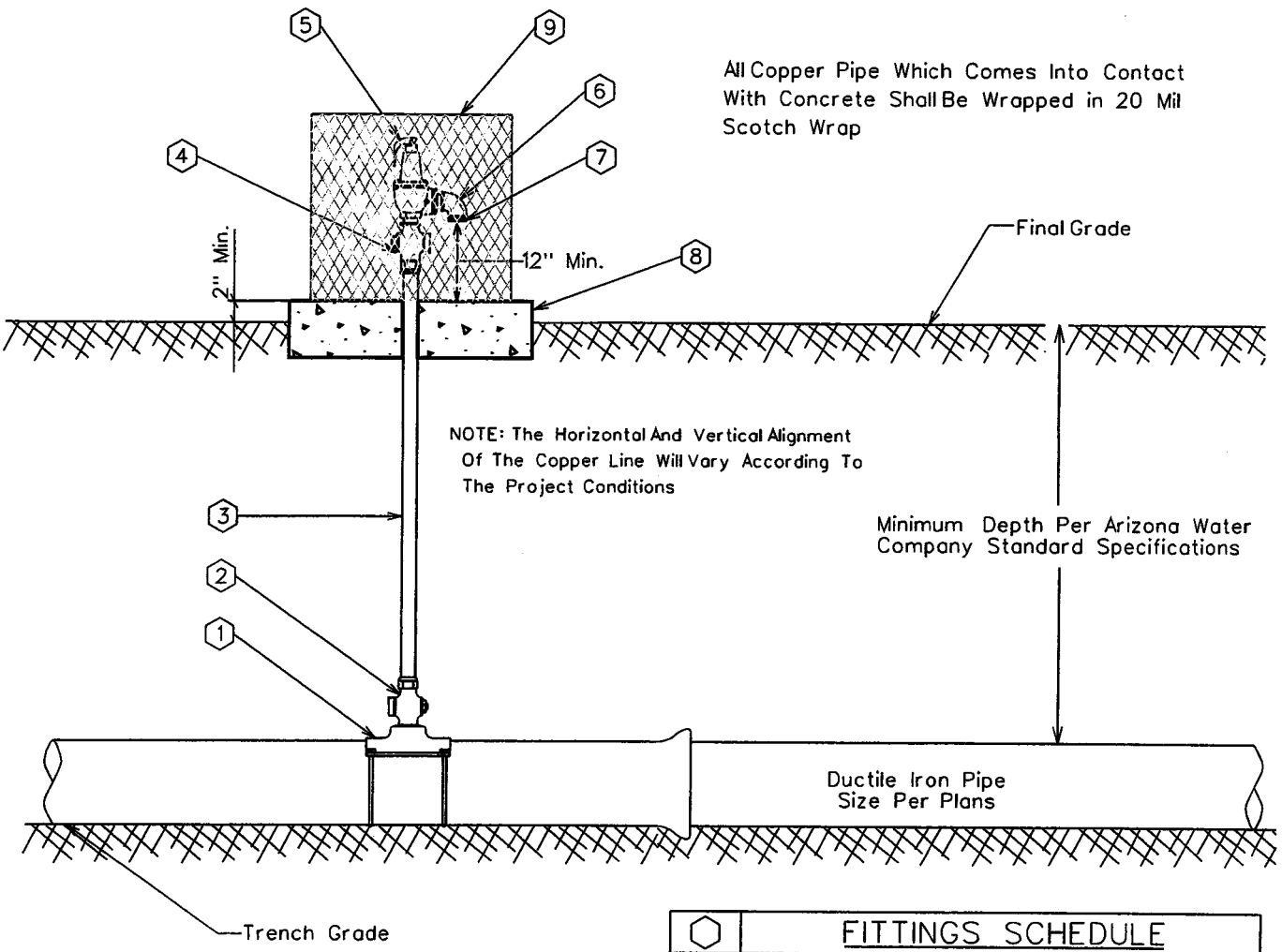

⬡	FITTINGS SCHEDULE
1.	Mueller BR2B Bronze Service Saddle - Double Strap
2.	2" Mueller B-25008 Taper x Comp. Ball Corp Stop
3.	2" Type 'K' Copper w/NO Splices - Field Fit
4.	2" Mueller B-25028 IP x Comp. Ball Corp Stop
5.	2" Pressure Relief Valve Watts 174A With A 2" Inlet / 2" Outlet 30-150 psi W/ Bronze Body
6.	2" Brass Street Elbow
7.	No.16 Wire Mesh Screen (Non-Corrodible)
8.	4" Thick Concrete Pad - Class 'C' Concrete
9.	Vandal enclosure to be centered on the concrete pad

NOTE:

1. Pressure relief valves are typically located just down stream of a pressure reducing station or where system conditions might be subject to greater than allowable pressures.
2. The relief valve assembly and vandal enclosure shall be located out of the roadway, but within the right-of-way or easement.

ARIZONA WATER COMPANY

STANDARD SPECIFICATION
FOR THE INSTALLATION OF

TYPICAL PRESSURE RELIEF VALVE ASSEMBLY

DRAWN BY:	APPROVED BY:	DATE:	△	
CCO	MW	3/20/1986	△ 08.29.2006	E-9-14-1

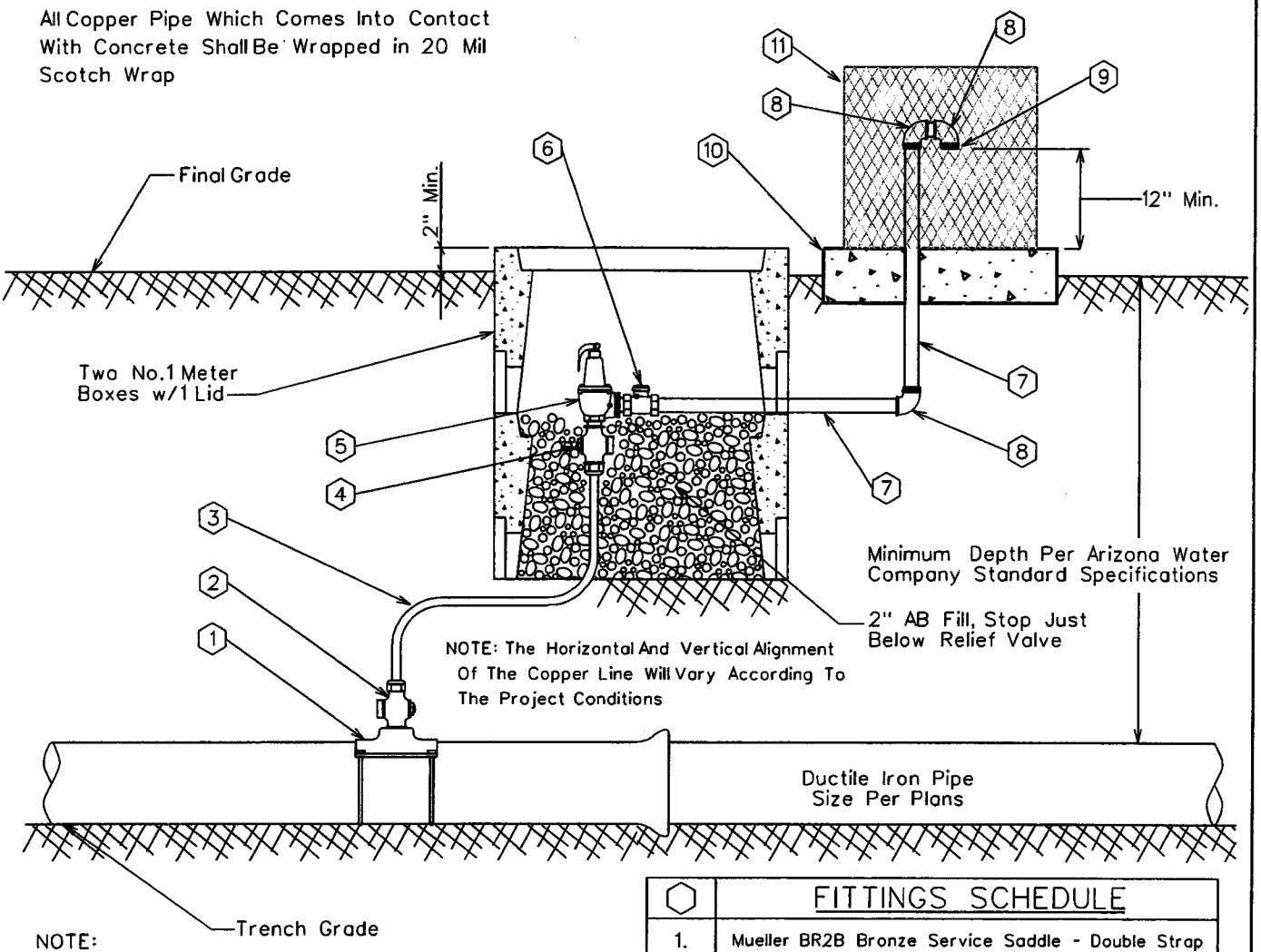

NOTE:

1. Pressure relief valves are typically located just down stream of a pressure reducing station or where system conditions might be subject to greater than allowable pressures.
2. The relief valve assembly and vandal enclosure shall be located out of the roadway, but within the right-of-way or easement.

⬡	FITTINGS SCHEDULE
1.	Mueller BR2B Bronze Service Saddle - Double Strap
2.	2" Mueller B-25008 Taper x Comp. Ball Corp Stop
3.	2" Type 'M' Rigid Copper w/NO Splices - Field Fit
4.	2" Mueller B-25028 IP x Comp. Ball Corp Stop
5.	2" Pressure Relief Valve Watts 174A With A 2" Inlet / 2" Outlet 30-150 psi W/ Bronze Body
6.	2" Bronze Check Valve Watts Series CV
7.	2" Schedule 40 Cut Pipe - Field Fit
8.	2" Brass Street Elbow
9.	No.16 Wire Mesh Screen (Non-Corrodible)
10.	4" Thick Concrete Pad - Class 'C' Concrete
11.	Guardshack, Model GS-1, Available From BPDI, Inc. Available In Leaf Green Or Desert Tan

ARIZONA WATER COMPANY

STANDARD SPECIFICATION

FOR THE INSTALLATION OF

PRESSURE RELIEF VALVE - NORTHERN REGION

DRAWN BY:	APPROVED BY:	DATE:	△08.29.2006	
CCO	MW	3/20/1986		E-9-14-2

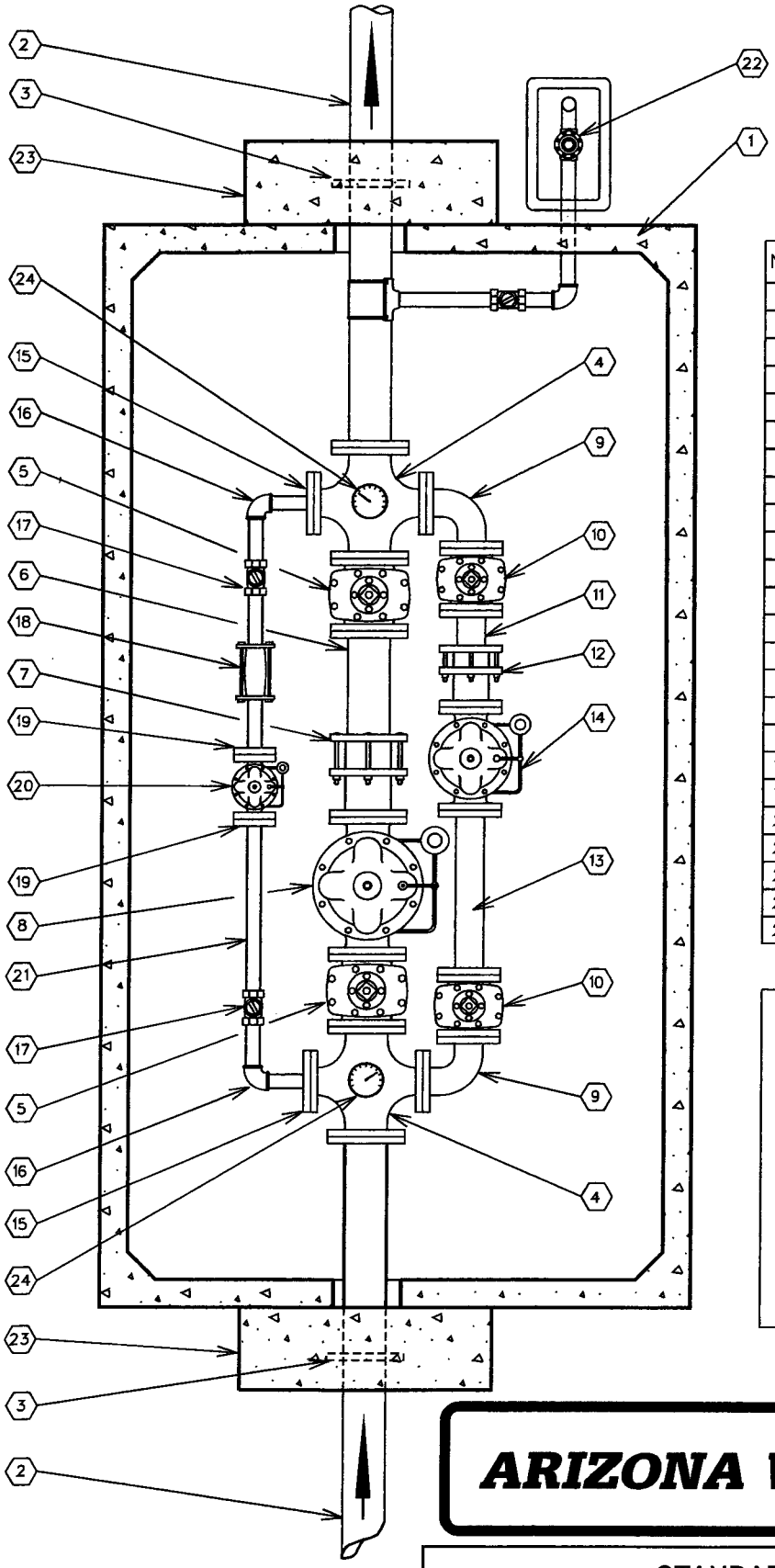

No.	FITTINGS SCHEDULE
1.	612 LA Conc. Vault (See Note 3)
2.	6"x6'-0" D.I.P. Spool Flg.xP.E.
3.	6" Megalug (Thrust Anchor)
4.	6"x4" Cross Flg.
5.	6" Gate Valve Flg.
6.	6"x2'-0" D.I.P. Spool Flg.xP.E.
7.	6" Flg. Coup. Adapt. (Rockwell 913)
8.	6" High Flow Pressure Reducing Valve Flg.
9.	4" 90° Ell. Flg.
10.	4" Gate Valve Flg.
11.	4"x1'-0" D.I.P. Spool Flg.xP.E.
12.	4" FLg. Coup. Adapt. (Rockwell 913)
13.	4"x2'-0" D.I.P. Spool Flg.
14.	4" Medium Flow Pressure Reducing Valve Flg.
15.	2"x9" O.D. Reducing Flg. (I.P.T.)
16.	2" 90° Ell. F.I.P.
17.	2" Ball Valve F.I.P.
18.	2" Comp. Coup. (Rockwell 411)
19.	2" Companion Flg. (I.P.T.)
20.	2" Low Flow Pressure Reducing Valve Flg.
21.	2" Sched. 40 Stl. Pipe
22.	2" Pressure Relief Valve (See E-9-14-1)
23.	12"x36"x36" Conc. Thrust Block P.I.P.
24.	Pressure Gauge w/shut off valve

NOTE:

1. Use Rowley pipe supports or equivalent as needed. (See E-9-12-4)
2. Pipe support locations to be determined by field personnel.
3. Vault-612 LA top section w/12" Dia. sump hole. Cover-concrete slab top w/(4) 4'-0" x2'-6" aluminum spring loaded hinged style covers for non-traffic loading areas. For areas w/low density traffic, cover is to be designed for H-20 traffic loading.
4. All Sched. 40 Stl. pipe outside of vault to be wrapped w/10-20 Mil. Scotchwrap corrosion protection tape.
5. Use deflection fittings (45° Ells.) to achieve necessary depths & cover as shown on the standard specification for the installation of a concrete vault (E-9-12-5).

ARIZONA WATER COMPANY

STANDARD SPECIFICATION

FOR THE INSTALLATION OF

PRESSURE REDUCING STATION

DRAWN BY:	APPROVED BY:	DATE:	△	
JPK	MW	11-16-88	9-27-95	E-9-15-1

1. Specific Items To Be Painted Deer-O Pure White Enamel:

   A. All Booster Pumps.
   B. All Electrical Motors And Gas Engines.
   C. Well Pump Discharge Heads.
   D. Electrical Panel.

2. Specific Items To Be Painted Frost Cap White Or Deer-O Pure White Enamel:

   A. Well Shelter.

3. Specific Items To Be Painted OSHA Orange:

   A. Electrical Conduit.

4. All Other Items To Be Painted With Either:
   (At Manager's Discretion)

   A. Cholla Green
   B. Forest Green
   C. Sonora Beige
   D. Red Rock
   E. Rock Brown
   F. Deer-O Pure White
   G. Elkhorn Cactus

ARIZONA WATER COMPANY

STANDARD SPECIFICATION
FOR THE INSTALLATION OF

PAINT COLOR SELECTION

DRAWN BY:	APPROVED BY:	DATE:	△	
CCO		3/20/1986	2/13/2001	E-9-16-1

1. Tank shall conform to AWWA Specification D100-84 with exceptions noted below.

*2. 1/4" minimum shell plate.

3. Minimum of 12" diameter roof vent, screened with No. 16 non-corrodible wire mesh, to be located on a 24" diameter round hinged manhole opening at the center of the tank to provide access to the dollar plate.

4. Overflow pipe shall be the same diameter as the inlet pipe and shall terminate 12 to 24 inches above splash pad or a minimum of 2 overflow pipe diameters above weir box high water level.

5. Storage tank shall be placed upon adequately compacted base material.

6. 6" minimum floor mounted tank drain outlet to be located close to the outer shell.

7. Tank and related fittings shall be enclosed with a 6 foot chain link fence with lockable gates and anti-personnel wire on top of fence.

8. Liquid level shall be indicated by a target and target board on the outside surface of the tank.

9. 24 inch diameter manholes shall be provided on the roof and on the shell near the bottom of the tank. The roof manhole cover shall overlap the manhole by at least 2 inches to provide a rain tight closure. Roof manhole shall be hinged and equipped with a lock. Shell manhole cover to be hinged and bolted in place. *Tanks larger than a 60 foot diameter require 2 shell manholes.

10. Inside and outside ladders shall be located at the roof manhole. Outside ladder shall be caged with locking trap door. Bottom 8 feet of cage shall be enclosed to within 1/2" of shell with 10 gauge sheet steel.

11. Finished tank shall be disinfected in accordance with Arizona Department of Health Services Engineering Bulletin No. 8 before being placed into service.

12. The following information will be included with application for approval to construct:

    1. Tank location_____
    2. Tank height_____
    3. Tank diameter_____
    4. Tank capacity_____
    5. Method of water level control_____

13. The storage tank will not be constructed within the 100 year flood plain and the tank site will be graded to slope away from the tank.

14. The welded steel storage tank will be coated as per AWWA Specification D102, and N.S.F. Standard 61.

*Exceptions to AWWA Specification D100-84

FOUNDATION NOTES

1. FINISH CONCRETE SURFACE MUST SLOPE UPWARDS FROM THE STEEL BAND APPROX. 1" IN 10'-0".

2. TOP OF STEEL BAND MUST BE MAINTAINED LEVEL TO WITHIN 1/8".

3. INSTALL 8-2" DIA.x10'-0" P.V.C. WEEP LINES, EQUALLY SPACED (EVERY 45°). PERFORATE 8'-0" OF LINE WITH 1/2" DIA. HOLES @ 6" O.C. PLUG INTERIOR END OF LINE w/2" CAP.

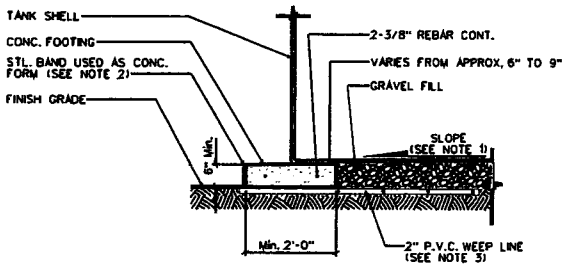

FOUNDATION DETAIL

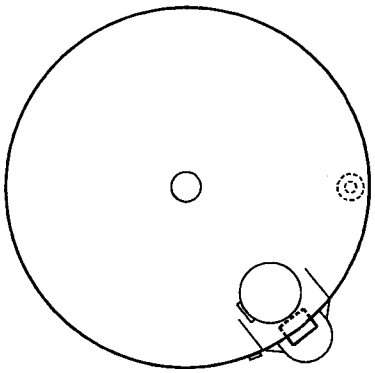

PLAN VIEW

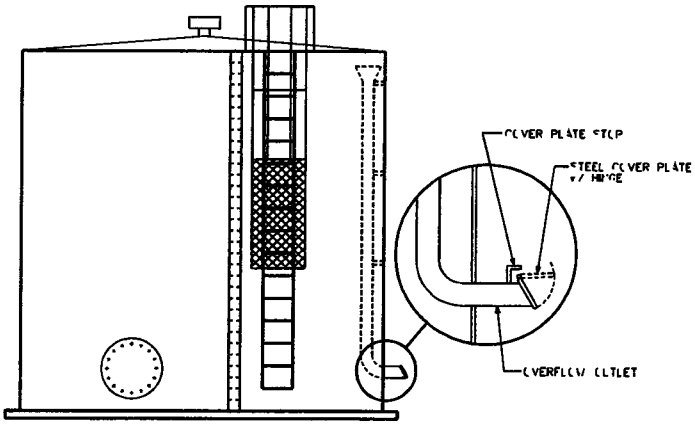

PROFILE VIEW

ARIZONA WATER COMPANY

STANDARD SPECIFICATION

FOR THE INSTALLATION OF

STEEL WATER STORAGE TANK

DRAWN BY:	APPROVED BY:	DATE:	△	
JPK	MJW	10-17-88	2-12-96	E-9-17-1

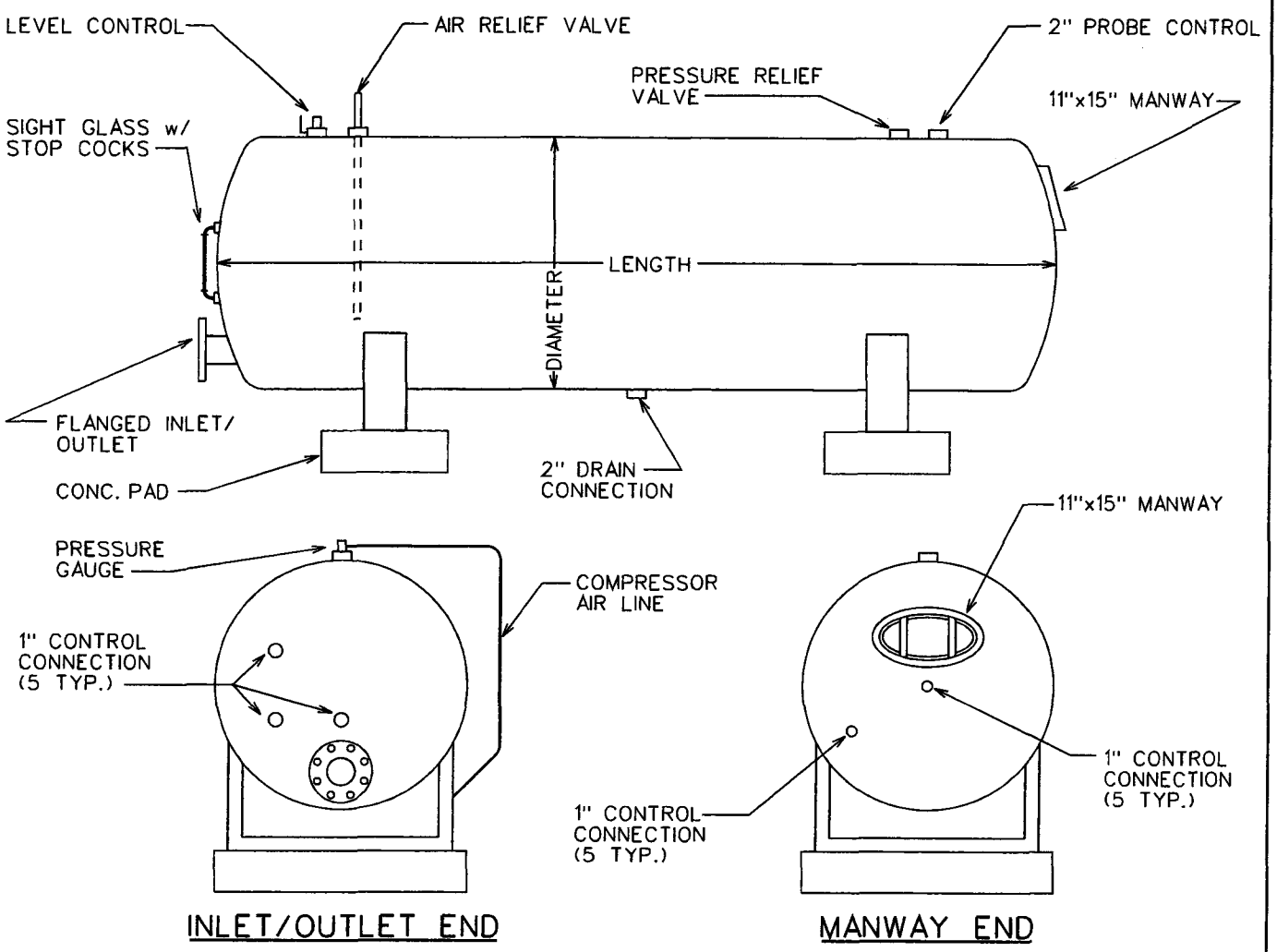

1. ALL HYDROPNEUMATIC TANKS SHALL BE DESIGNED & CONSTRUCTED IN ACCORDANCE WITH THE CURRENT REQUIREMENTS OF THE ASME CODE FOR UNFIRED PRESSURE VESSELS, SECTION VIII, DIVISION 1.
2. FINISHED TANK SHALL BE DISINFECTED IN ACCORDANCE WITH ADEQ BULLETIN No. 8 BEFORE BEING PLACED INTO SERVICE.
3. THE WELDED STEEL HYDROPNEUMATIC TANK WILL BE COATED AS PER AWWA SPECIFICATION D102 & NSF STANDARD 61.
4. THE FOLLOWING INFORMATION WILL BE INCLUDED WITH THE APPLICATION FOR APPROVAL TO CONSTRUCT.
   1. Tank Location _____
   2. Tank Length _____
   3. Tank Diameter _____
   4. Tank Capacity _____
   5. Maximum Working Pressure _____

ARIZONA WATER COMPANY

STANDARD SPECIFICATION
FOR THE INSTALLATION OF

HYDROPNEUMATIC TANK

DRAWN BY:	APPROVED BY:	DATE:	△	
JPK	MW	3-20-1986	01.16.2007	E-9-18-1

NOT
CONVERTED
TO
CAD

ARIZONA WATER COMPANY

STANDARD SPECIFICATION FOR THE INSTALLATION OF				
WELL SHELTER				
DRAWN BY: CB	APPROVED BY:	DATE: 03.20.1986	△04.03.2001	E-9-19-1

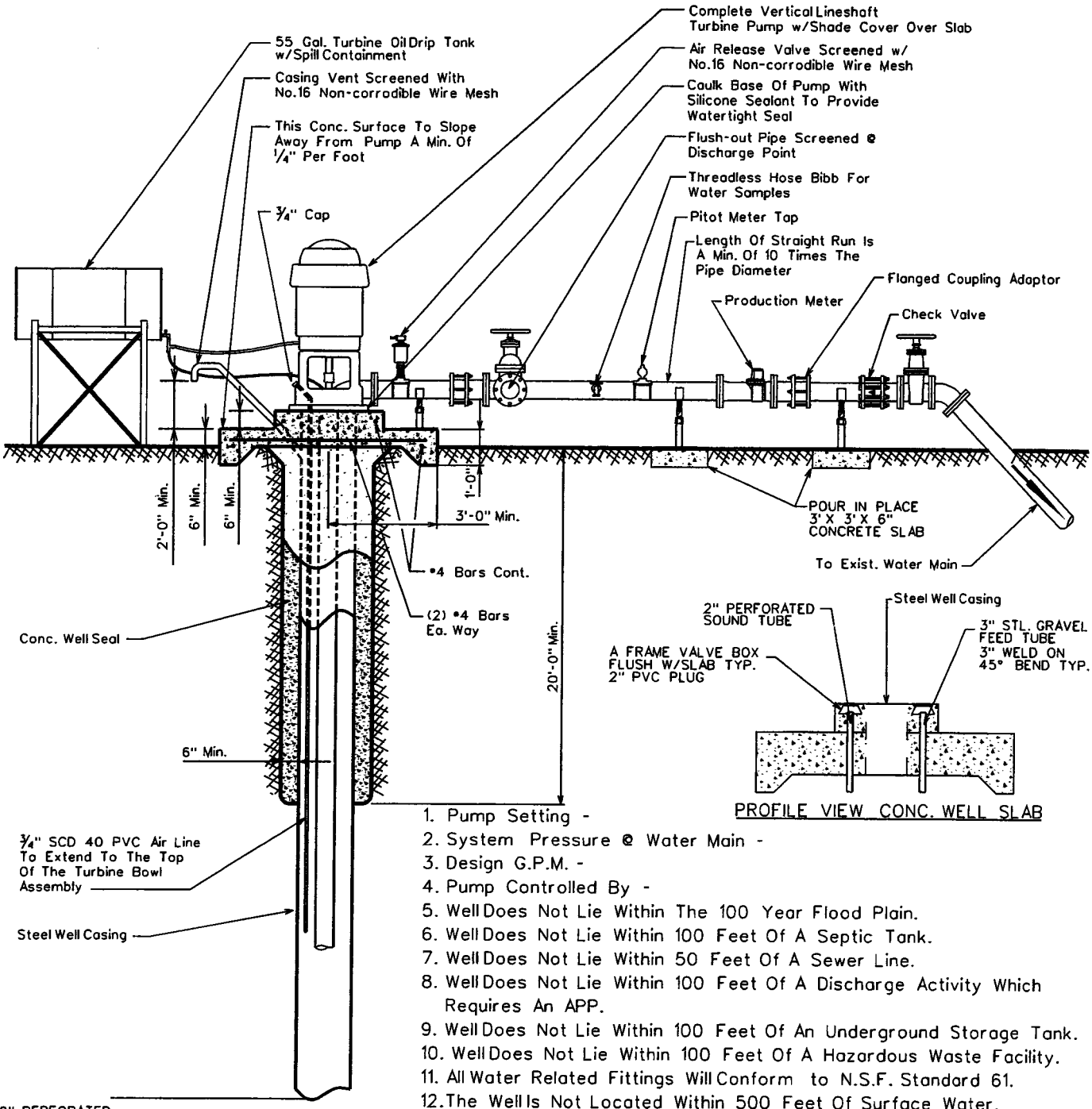

1. Pump Setting -
2. System Pressure @ Water Main -
3. Design G.P.M. -
4. Pump Controlled By -
5. Well Does Not Lie Within The 100 Year Flood Plain.
6. Well Does Not Lie Within 100 Feet Of A Septic Tank.
7. Well Does Not Lie Within 50 Feet Of A Sewer Line.
8. Well Does Not Lie Within 100 Feet Of A Discharge Activity Which Requires An APP.
9. Well Does Not Lie Within 100 Feet Of An Underground Storage Tank.
10. Well Does Not Lie Within 100 Feet Of A Hazardous Waste Facility.
11. All Water Related Fittings Will Conform to N.S.F. Standard 61.
12. The Well Is Not Located Within 500 Feet Of Surface Water.
13. The Site Will Be Graded To Provide Adequate Drainage Away From The Well.
14. 6.88 lbs. of Davis #8084 Grey Dye, Per Yard, For 2500 PSI Concrete

ARIZONA WATER COMPANY

STANDARD SPECIFICATION

FOR THE INSTALLATION OF

TYPICAL WELL W/ LINESHAFT TURBINE PUMP

DRAWN BY:	APPROVED BY:	DATE:	△	
JW	M.W.	3-20-86	9/15/04	E-9-20-1

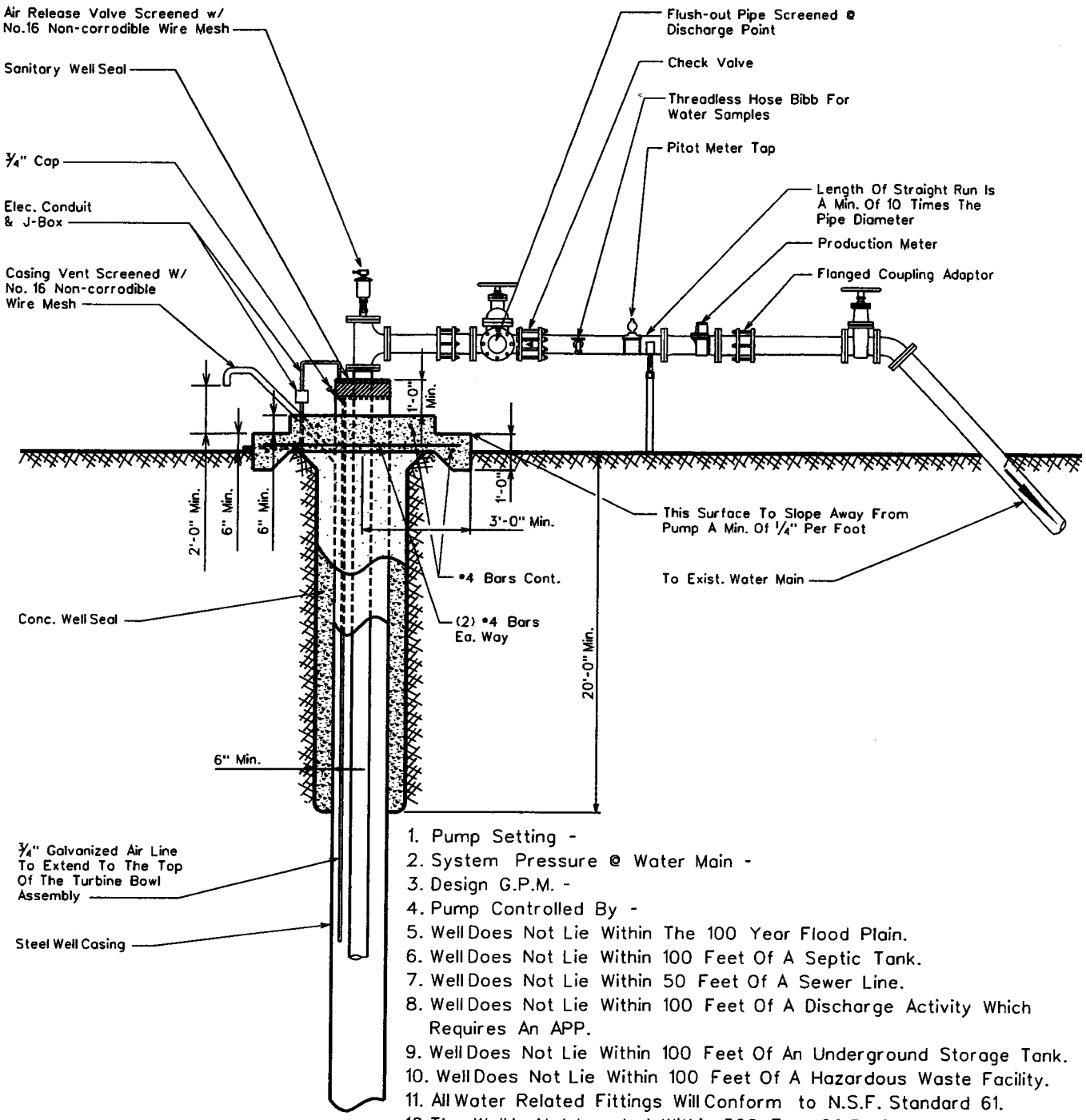

1. Pump Setting -
2. System Pressure @ Water Main -
3. Design G.P.M. -
4. Pump Controlled By -
5. Well Does Not Lie Within The 100 Year Flood Plain.
6. Well Does Not Lie Within 100 Feet Of A Septic Tank.
7. Well Does Not Lie Within 50 Feet Of A Sewer Line.
8. Well Does Not Lie Within 100 Feet Of A Discharge Activity Which Requires An APP.
9. Well Does Not Lie Within 100 Feet Of An Underground Storage Tank.
10. Well Does Not Lie Within 100 Feet Of A Hazardous Waste Facility.
11. All Water Related Fittings Will Conform to N.S.F. Standard 61.
12. The Well Is Not Located Within 500 Feet Of Surface Water.
13. The Site Will Be Graded To Provide Adequate Drainage Away From The Well.

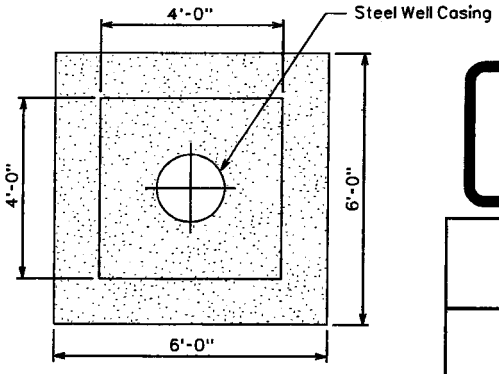

PLAN VIEW CONC. WELL SLAB

ARIZONA WATER COMPANY

STANDARD SPECIFICATION
FOR THE INSTALLATION OF

TYPICAL WELL W/ SUBMERSIBLE TURBINE PUMP

DRAWN BY:	APPROVED BY:	DATE:	△	
jpk	M.W.	3-20-86	2-16-01	E-9-21-1

All New Purchases To Conform To The Following:

Column Pipe

4" I.D. - 8	Threads	Per	Inch	Tapered	¾"	Per	Foot	Right	Hand
6" I.D. - 8	"	"	"	"	"	"	"	"	"
8" I.D. - 8	"	"	"	"	"	"	"	"	"
10" I.D.- 8	"	"	"	"	"	"	"	"	"
12" I.D.- 8	"	"	"	"	"	"	"	"	"
14" I.D.- 8	"	"	"	"	"	"	"	"	"

Oil Tube - Peerless Type

1½" O.D. - 14	Threads	Per	Inch	Right	Hand	
2" O.D. - 12	"	"	"	"	"	
2½" O.D. - 10	"	"	"	"	"	
3" O.D. - 10	"	"	"	"	"	
3½" O.D. - 10	"	"	"	"	"	
4" O.D. - 10	"	"	"	"	"	

Line Shaft

¾" O.D. - 10	Threads	Per	Inch	Left	Hand
1" O.D. - 14	"	"	"	"	"
1-3/16" O.D. - 10	"	"	"	"	"
1-1/2" O.D. - 10	"	"	"	"	"
1-11/16" O.D. - 10	"	"	"	"	"
1-15/16" O.D. - 10	"	"	"	"	"
2-3/16" O.D. - 10	"	"	"	"	"
2-7/16" O.D. - 8	"	"	"	"	"

ARIZONA WATER COMPANY

STANDARD SPECIFICATION
FOR THE INSTALLATION OF

COLUMN PIPE, OIL TUBE AND LINE SHAFT

DRAWN BY:	APPROVED BY:	DATE:	△	
CCO		3/20/1996	2/13/2001	E-9-22-1

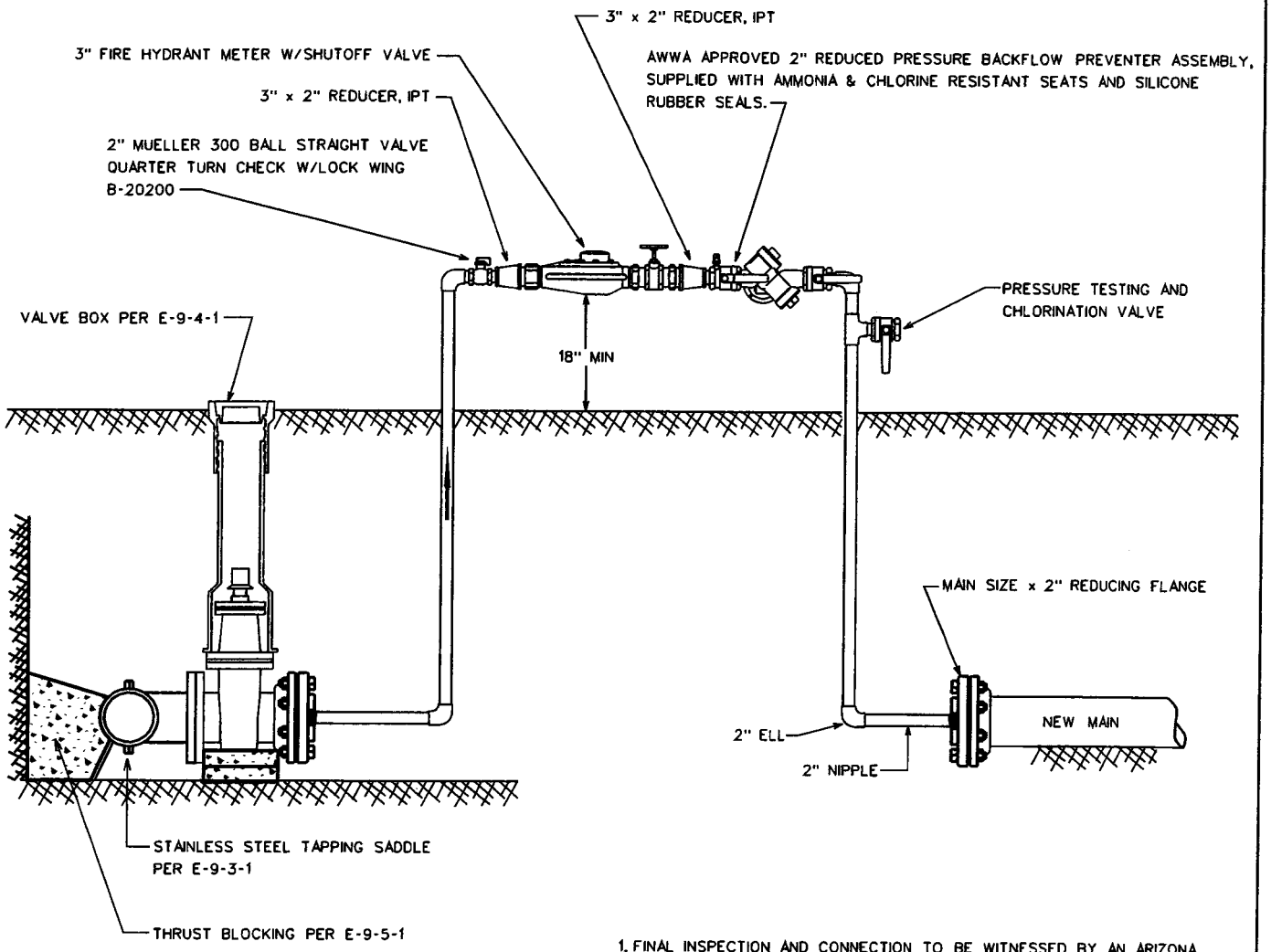

1. FINAL INSPECTION AND CONNECTION TO BE WITNESSED BY AN ARIZONA WATER COMPANY REPRESENTATIVE.
2. REDUCING FLANGES TO BE PROPERLY RESTRAINED.
3. INSTALL JUMPER TAP FOR TEMPORARY METER DOWNSTREAM OF THE REDUCING FLANGE FOR PRESSURE AND BACTEE TESTING.
4. JUMPER ASSEMBLY MUST BE A MINIMUM OF 18" ABOVE FINISHED GRADE.
5. BACKFLOW ASSEMBLY REQUIRES CERTIFICATION.
6. ASSEMBLY NOT TO BE REMOVED AND SPOOL PIECE INSTALLED FOR FINAL CONNECTION UNTIL ALL TESTING, BACTERIAL CLEARANCE AND FINAL INSPECTIONS HAVE BEEN OBTAINED.
7. ALL NEW PIPING SHALL BE PROPERLY RESTRAINED.

ARIZONA WATER COMPANY

STANDARD SPECIFICATION
FOR THE INSTALLATION OF

HOT TAP & JUMPER METER CONNECTION

DRAWN BY:	APPROVED BY:	DATE:	△	
CB	MJW	05.14.2004		E-9-23-1

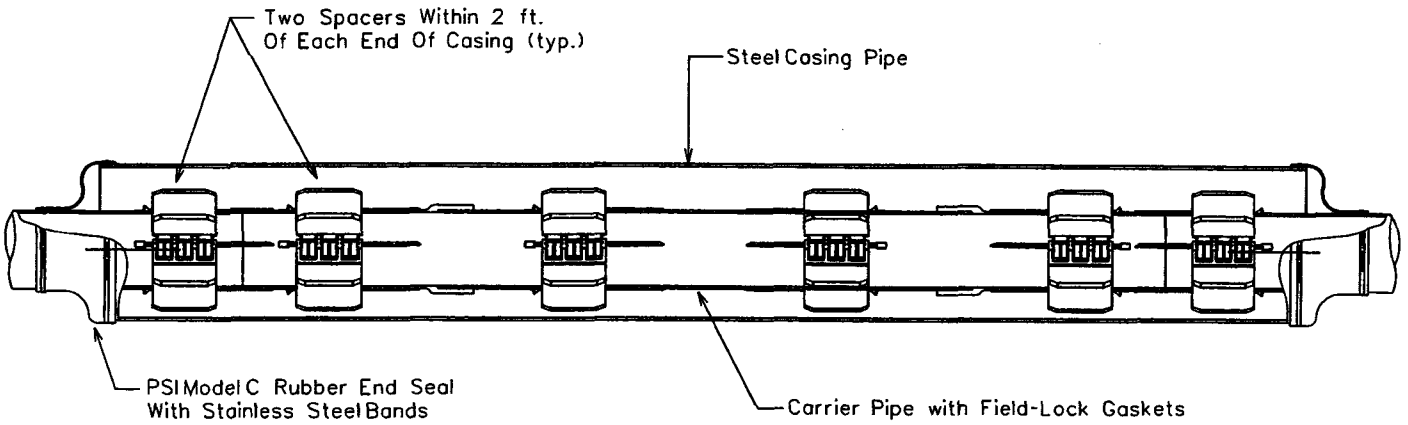

CROSS SECTION

The casing spacers shall be the PSI Ranger II Casing Spacers as manufactured by Pipeline Seal and Insulator, Inc., Houston, Texas.

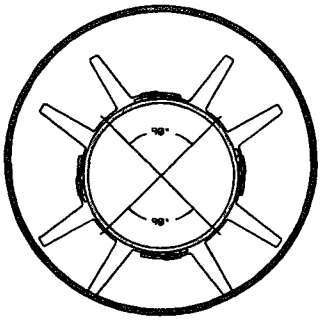

SECTION CUT

End Seals
After insertion of the carrier pipe into the casing, the ends of the casing shall be closed by installing 1/8" thick synthetic rubber end seals equal to the PSI Model "C" end seal as manufactured by Pipeline Seal and Insulator, Inc., Houston, Texas.

NOTE: The Carrier Pipe Shall Be Polywrapped Prior To The Skid Installation & Insertion Into The Carrier Casing For Divisions Requiring Polywrapped Pipe.

OD Push On Joint Bell	OD M.J. BELL
6" - 8.66"	6" - 11.12"
8" - 10.82"	8" - 13.37"
12" - 15.05"	12" - 17.94"
16" - 19.74"	16" - 22.56"
20" - 23.98"	20" - 27.08"
24" - 28.16"	24" - 31.58"
30" - 35.40"	30" - 39.12"
36" - 41.84"	36" - 46.00"
48" - 55.94"	48" - 60.00"

*Thickness Of Skid To Extend A Minimum of 1/2" Above The O.D. Of The Pipe Bell or Gland.

PIPE SIZE	CASING SIZE	CASING SIZE ID	CASING SCHEDULE	WALL THICKNESS	SKID SIZE
6"	16"	15.25"	STD.	.375	*x4x12
8"	18"	18.25"	STD.	.375	*x4x12
12"	22"	21.25"	STD.	.375	*x4x12
16"	28"	27.25"	STD.	.375	*x4x12
20"	32"	31.25"	STD.	.375	*x4x12
24"	36"	35.25"	STD.	.375	*x4x12
30"	48"	47.25"	STD.	.375	*x4x12
36"	54"	53.25"	STD.	.375	*x4x12
48"	66"	65.25"	STD.	.375	*x4x12

ARIZONA WATER COMPANY

STANDARD SPECIFICATION
FOR THE INSTALLATION OF

TYPICAL WATER LINE ENCASEMENT

DRAWN BY:	APPROVED BY:	DATE:	△ 09.27.2006	
CB		3/20/1996		E-9-24-1

CALCIUM HYPOCHLORITE TABLET CHLORINATOR FEEDER SPECIFICATIONS

SCOPE - This specification describes a ARCH Chemicals Calcium Hypochlorite Tablet Chlorination System as manufactured by ARCH Chemicals, 501 Merritt Seven, P.O. Box 5204, Norwalk, CT, 06856-5204.

DESCRIPTION - The chlorination system shall be completely assembled, ready to install. The chlorination system shall be a ARCH Chemicals Calcium Hypochlorite Tablet Feeder, or its equivalent, and shall be supplied with all its components factory mounted.

COMPONENTS - The Chlorination system shall have the following components:
- A. 1-¼" ARCH Chemical solid calcium hypochlorite tablet feeder
- B. Polyethylene system enclosure
- C. Integrated, level controlled solution tank
- D. Adjustable flow control valve
- E. Manual on/off valve (at inlet)
- F. Chemical metering pump
- G. On/off pump control switch
- H. Waterproof electrical junction box
- I. Corrosion resistant schedule 40 piping
- J. Reverse flow check valves
- K. Total solution output control valve

ELECTRICAL FIXTURES - The following electrical fixtures shall be provided:
- A. Safety switch, 2 pole, fused for 30 Amps, for 120 Volts, 60 cycle, single phase power.

CHLORINATOR DESIGN - The chlorination facility shall be designed and constructed in accordance with Arizona State Department of Health Engineering Bulletin Number 8 - "Disinfection of Water Systems". Latest Revision.

CHLORINATION EQUIPMENT - The chlorination equipment shall be a ARCH Chemicals Calcium Hypochlorite tablet chlorinator, approved by NSF Standard 61.

CHLORINATOR OPERATION - The chlorination facility shall be operated in accordance with Arizona State Department of Health Engineering Bulletin Number 8, "Disinfection of Water Systems", Table 1. latest revision.

CHLORINATOR SYSTEM DESCRIPTION - ARCH Chemicals tablet chlorinator systems incorporate a patented chlorinator which is designed to utilize ARCH Chemicals 1-¼" solid calcium hypochlorite tablets (Approved NSF Standard 60). Meets AWWA Standard B-300, EPA Registration # 1258-1179.The chlorinator is mounted on a polyethylene system enclosure. The inlet water is sprayed on the calcium hypochlorite tablet and collected in a solution tank. This chlorinated solution is then pumped out of the tank through a chemical metering pump. This metering pump is then adjusted to obtain the desired CL residual.

ARCH Chemicals Calcium Hypochlorite Tablet Chlorinator

NTS

HYPOCHLORINATOR COMPONENTS:

1. Chemical Metering Pump
2. Pump Suction Connection
3. Pump Discharge Connection
4. Inlet Water Assembly
5. Inlet Water Solenoid Valve
6. Inlet Shut-Off Valve
7. Inlet Pressure Regulator
8. Inlet Water Pressure Gauge
9. Spray Nozzle Water Pressure Gauge
10. Inlet Strainer
11. Inlet Tubing Connection
12. Dry Chemical Hopper
13. Suction Line
14. Electrical Control Box With Power On/Off
15. Electric Mixer
16. Solution Discharge Connection
17. Tank Drain Valve
18. Observation Port
19. Mixed Chemical Holding Tank
20. Pressure Relief Valve
21. Pump Speed Control
22. High Level Shut-Off Float Switch
23. Water Spray Nozzles

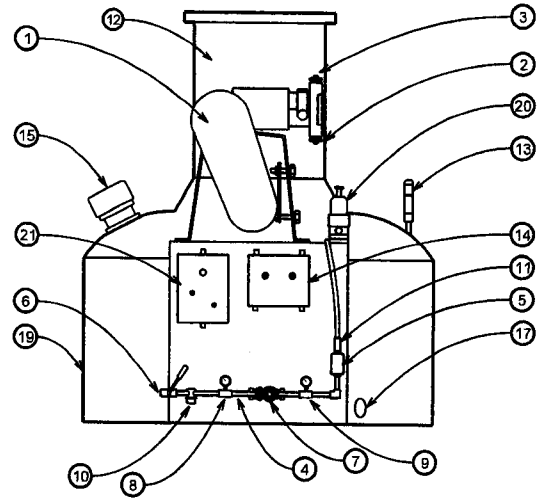

FRONT VIEW

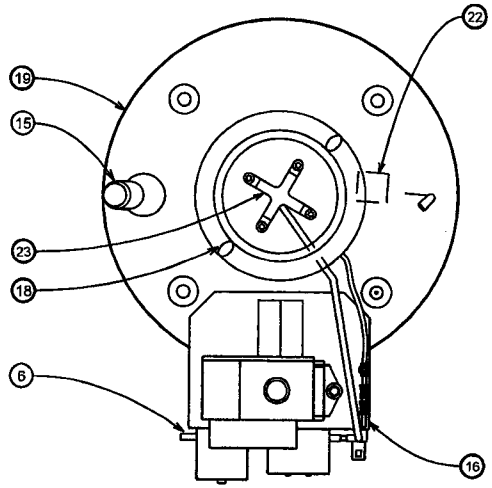

TOP VIEW

HOPPER REMOVED FOR CLARITY

Chlorinator Fluid Schematic

NTS

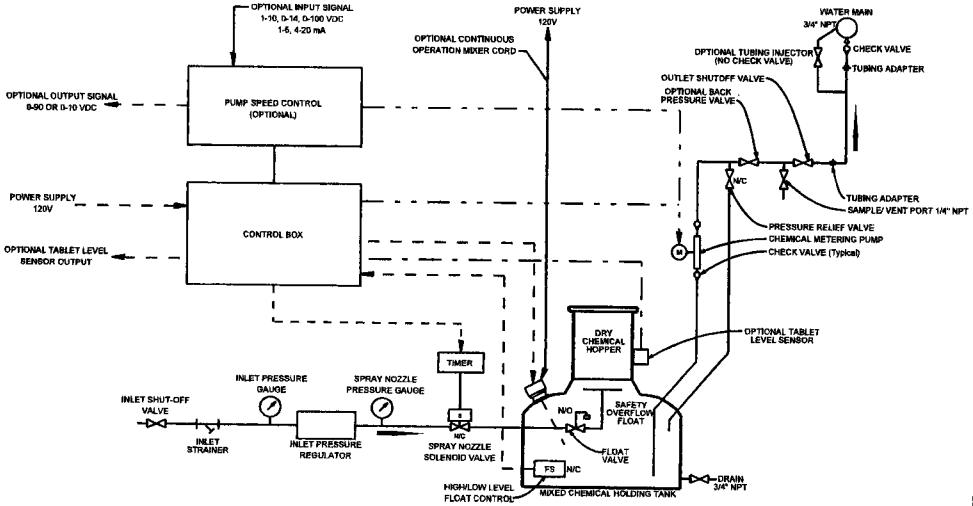

ARIZONA WATER COMPANY

STANDARD SPECIFICATION

FOR THE INSTALLATION OF

CALCIUM HYPOCHLORITE TABLET CHLORINATOR

DRAWN BY:	APPROVED BY:	DATE:		
CB	MW	02-09-2000	△	E-9-25-1

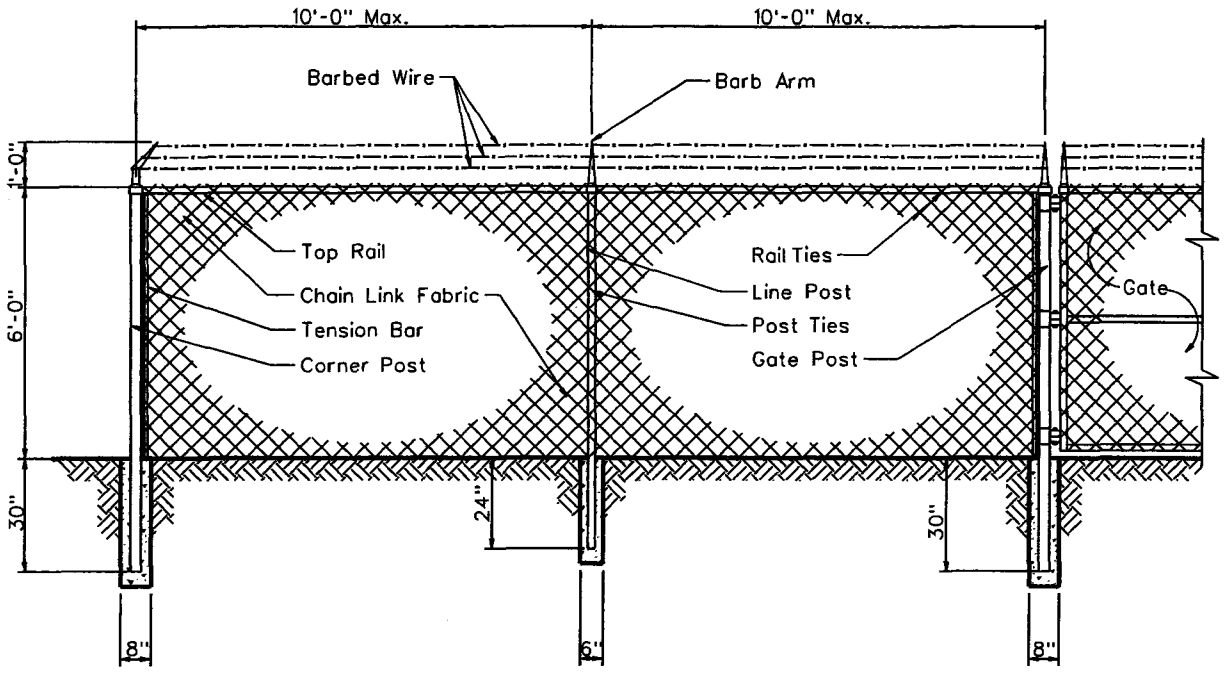

Line Post:	1-7/8" O.D.	1.74 lbs. P/L.F.	ASTM A-256
End Post:	2-7/8" O.D.	4.64 lbs. P/L.F.	ASTM A-256
Corner Post:	2-7/8" O.D.	4.64 lbs. P/L.F.	ASTM A-256
Gate Post:	2-7/8" O.D.	4.64 lbs. P/L.F.	ASTM A-256
Top Rail:	1-5/8" O.D.	4.64 lbs. P/L.F.	ASTM A-256
Chain Link Fabric:	9 Ga. 2" Mesh Galv. Before Weave		
Selvage:	Barb/Knuckle		
Fittings:	Pressed Steel		
Barb Wire:	2-1/2 Ga./2 Point		
Barb Arm:	1 Piece/45° Arm		
Tension Wire:	9 Ga./Galv.		
Line Post Set:	6"x24" In Concrete		
Terminal Post Set:	8"x30" In Concrete		

ARIZONA WATER COMPANY

STANDARD SPECIFICATION
FOR THE INSTALLATION OF

CHAIN LINK FENCE

DRAWN BY:	APPROVED BY:	DATE:	△	
CCO	MW	7/7/1992	2/9/2001	E-9-26-1

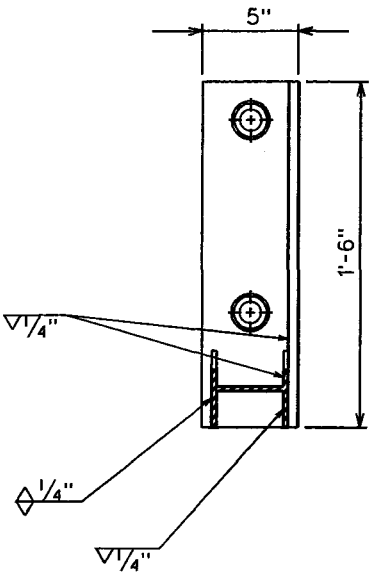

SECTION X-X

NOTES

1. Minimum 2 Supports Per Joint Of Pipe.
2. All Bolts Shall Have A Lock Washer Under The Nut.
3. All Nuts Shall Be Stainless Steel Series 304.

PIPE SIZE	A	B
8"	8"	15"
10"	9"	17"
12"	10"	19"

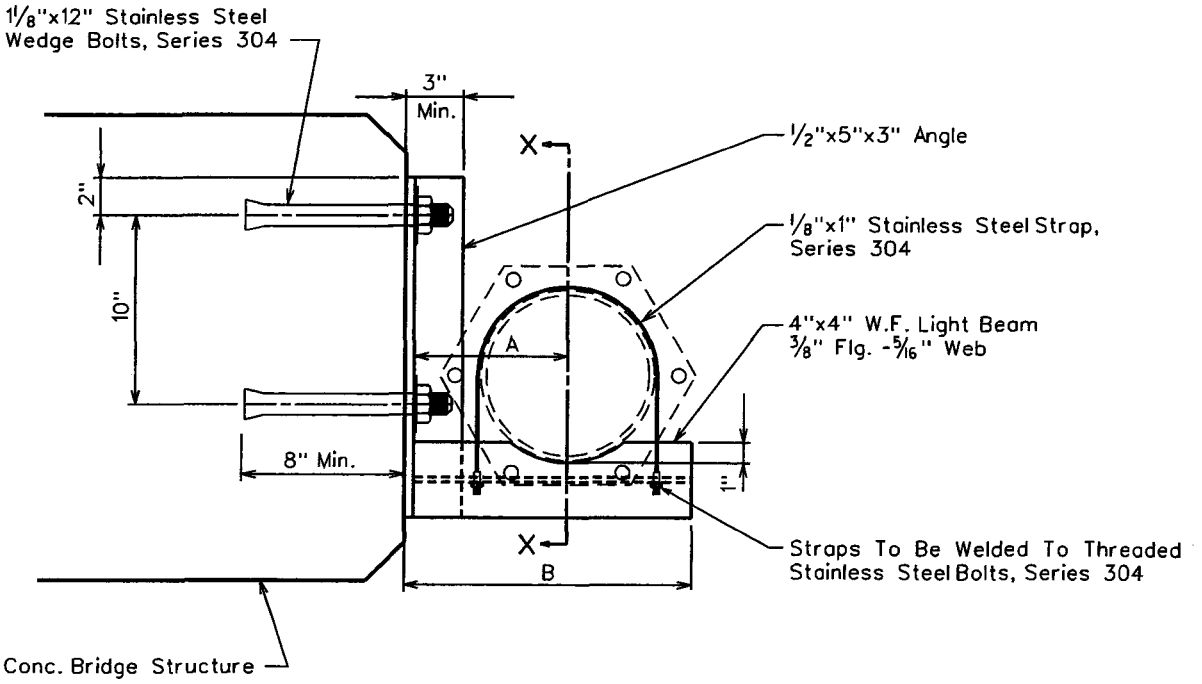

SUSPENSION DETAIL

ARIZONA WATER COMPANY

STANDARD SPECIFICATION
FOR THE INSTALLATION OF

SIDE HUNG WATER LINE SUSPENSION

DRAWN BY:	APPROVED BY:	DATE:		
JPK	MJW	7-12-96	△	E-9-27-1

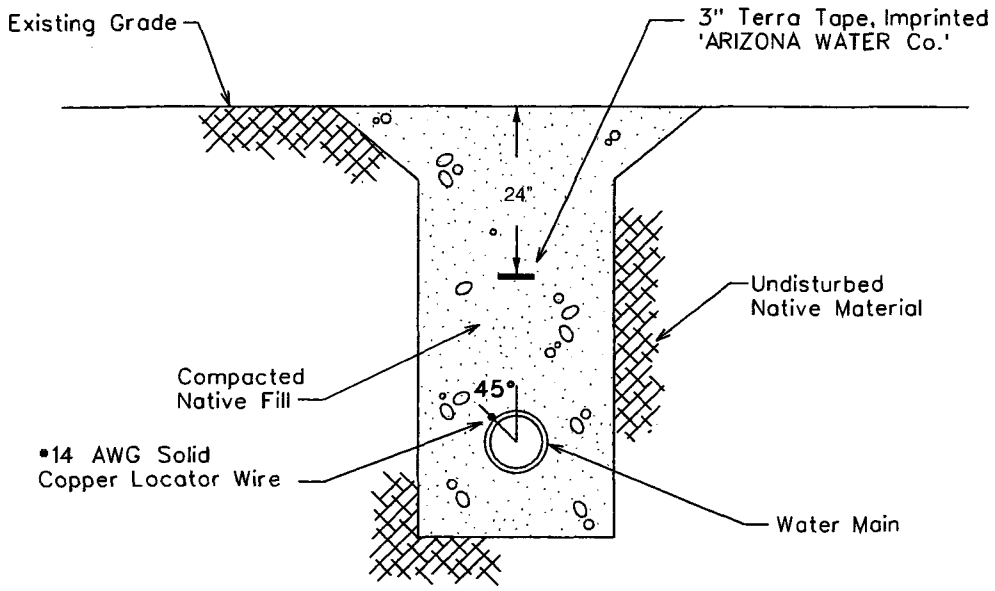

TYPICAL WATER TRENCH DETAIL

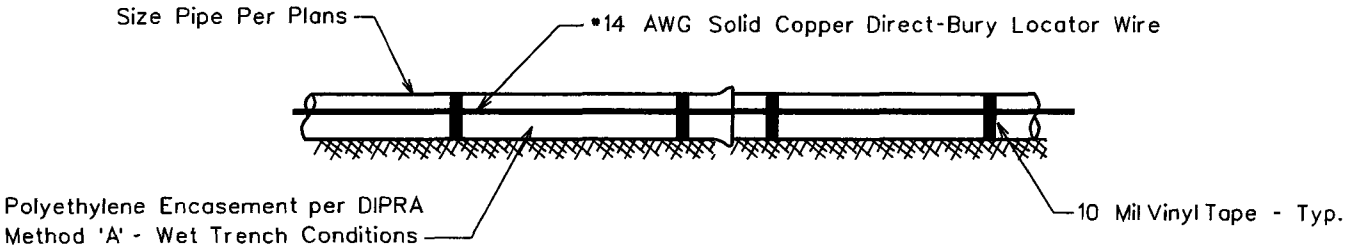

TYPICAL PROFILE VIEW

WIRE GENERAL NOTES:

1. All pipe shall have •14 AWG Solid Copper Direct-Bury Locator Wire Installed Directly To The Polywrap At 45° From The Vertical Center Of The Pipe and Shall Be Attached Using 10 Mil Vinyl Tape.
2. The Locating Wire Shall Terminate At the Top Of Each Valve Box and Be Capable of Extending 12" Above the Top Of The Box In Such A Manner So As Not To Interfere With Valve Operation.

TAPE GENERAL NOTES:

1. Use Terra Tape 3" Marking Tape As Manufactured By Reef Industries Inc. Of Houston, Texas (1-800-231-2417)
2. The Tape Is Blue & Imprinted 'ARIZONA WATER Co.'
3. INSTALLATION: The Pipe Warning Tape Shall Be Installed Over All Water Mains And Shall Be Buried 24 Inches Below The Surface Over The Center Of The Pipe.
   A) The Backfill Shall Be Sufficiently Leveled So That The Tape Is Installed On A Flat Surface.
   B) The Tape Shall Be Centered In The Trench With The Printed Side Up.
   C) Care Shall Be Exercised To Avoid Movement Of The Tape While The Remaining Backfill Is Moved Into The Trench.

ARIZONA WATER COMPANY

STANDARD SPECIFICATION
FOR THE INSTALLATION OF

PIPE WARNING TAPE AND LOCATOR WIRE

DRAWN BY:	APPROVED BY:	DATE:		
CB		03.24.1997	△09.27.2006	E-9-28-1

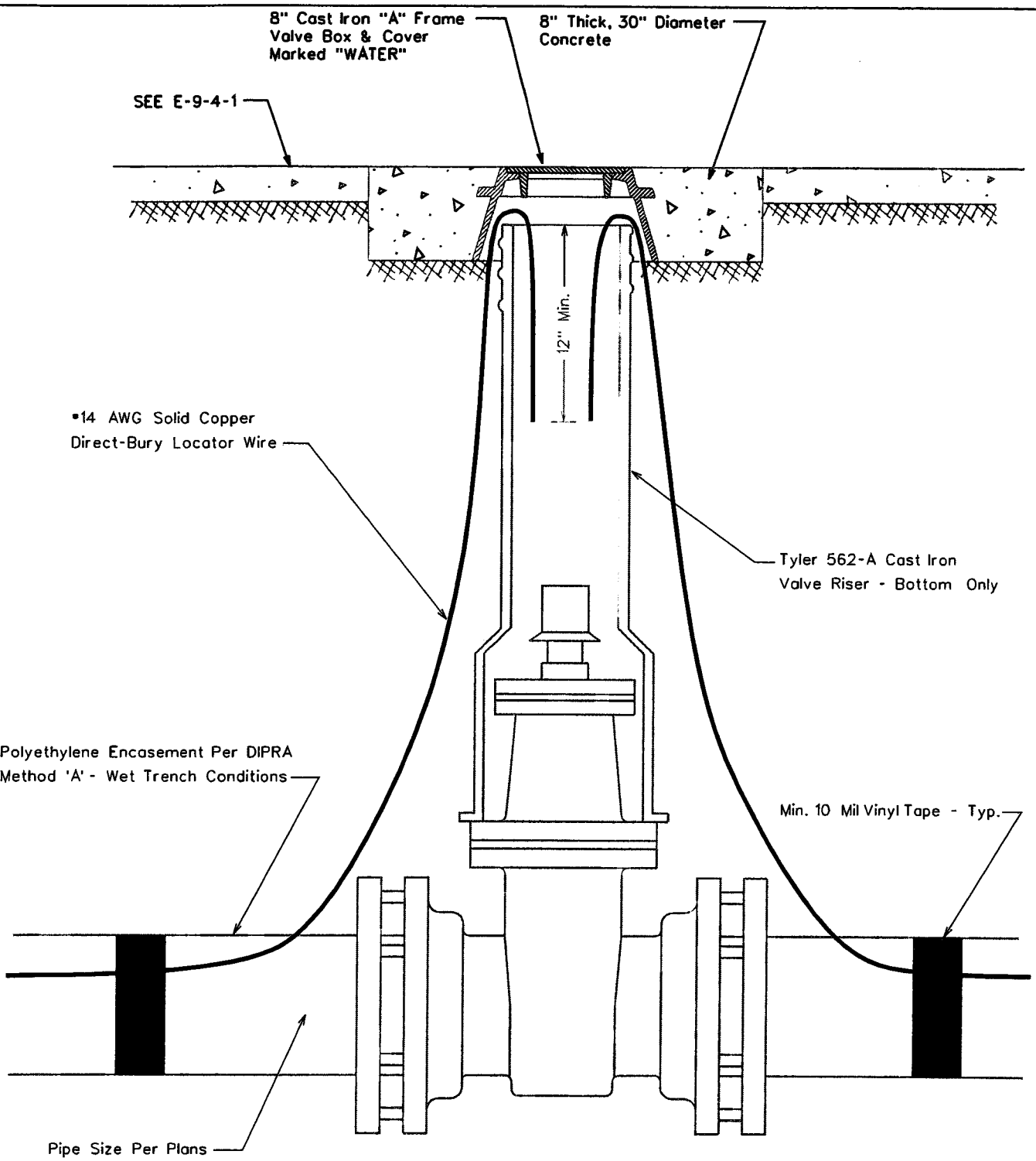

ARIZONA WATER COMPANY

STANDARD SPECIFICATION
FOR THE INSTALLATION OF

LOCATOR WIRE TERMINATION

DRAWN BY:	APPROVED BY:	DATE:		
CB		09.27.2006	△	E-9-28-2

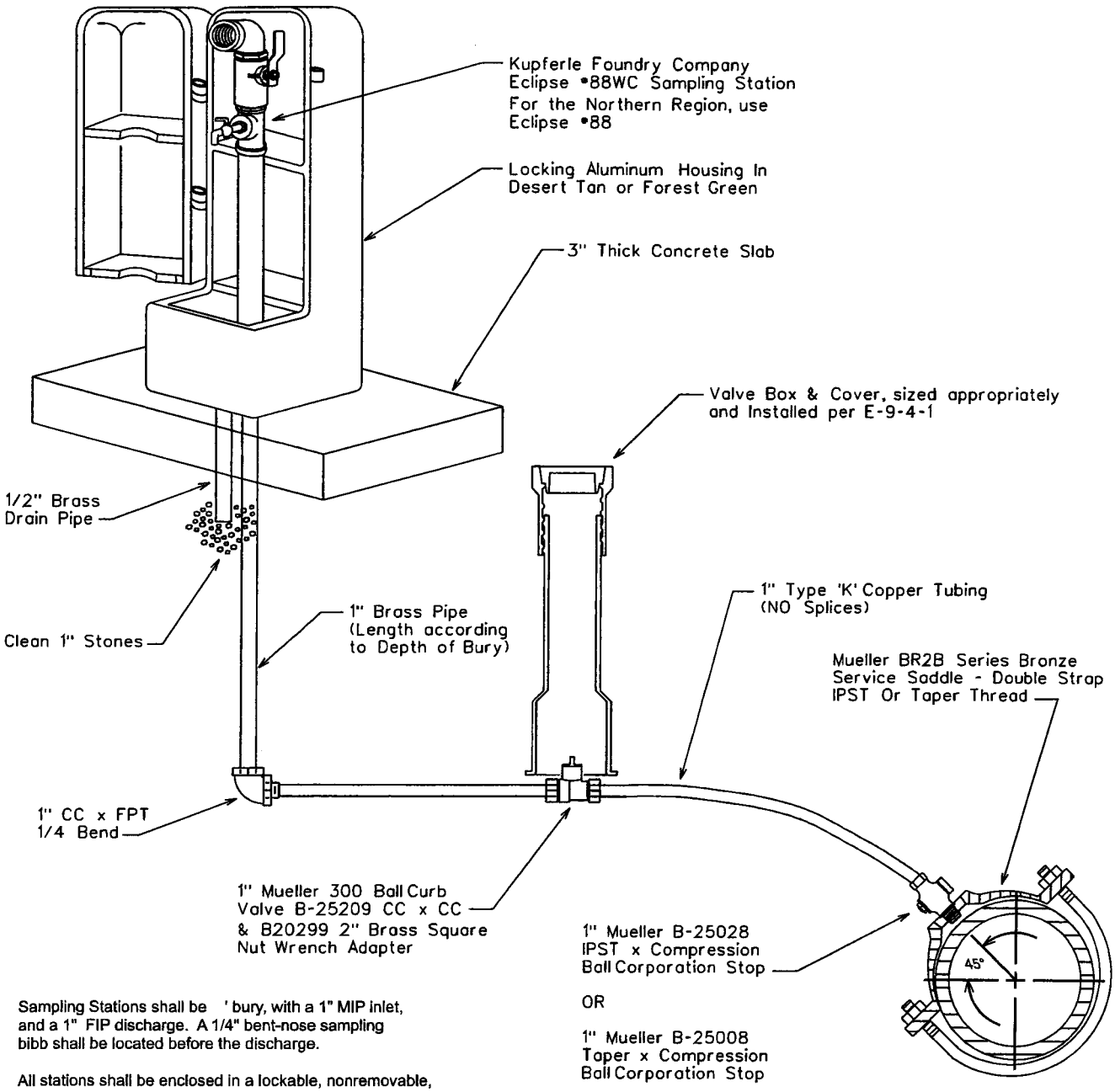

Sampling Stations shall be ' bury, with a 1" MIP inlet, and a 1" FIP discharge. A 1/4" bent-nose sampling bibb shall be located before the discharge.

All stations shall be enclosed in a lockable, nonremovable, aluminum-cast housing.

When opened, the station shall require no key for operation, and the water will flow in an all brass waterway.

All working parts will be of brass and serviceable from above ground with no digging. (OPTIONAL: if desired, a 1/2" brass drain tube will be provided within the locking cover).

A 1" ball valve will control the water flow, and be located before (or after) the sampling bibb, as manufactured by Kupferle Foundry, St. Louis, MO 63102.

SADDLE TAP TO CA, PVC, OR DI PIPE

NOTE: The minimum distance between taps on mains other than ductile iron is 12"

Pipe Depth Per
E-8-1-2, Item 3.

ARIZONA WATER COMPANY

STANDARD SPECIFICATION
FOR THE INSTALLATION OF

SAMPLING STATION

DRAWN BY:	APPROVED BY:	DATE:	△	
CB	MW	01.24.2007		E-9-29-1

TUCSON
2838 W. Ruthrauff Rd.
Tucson, AZ 85705
Ph: 520-887-2170

Weber Group L.C.

WATER RESOURCES

Corporate Headquarters 16825 South Weber Drive Chandler, AZ 85226
Ph: 480-961-1141 Fax: 480-961-0290

GOODYEAR
18403 W.McDowell Rd.
Goodyear, AZ 85338
Ph: 520-887-2170

Well Video Report

Client: Arizona Water Co. | Survey Date: March 30, 2011
Address: 1200 W. Southern | Invoice: 1011057 | Run: 1
City: Apache Junction | State: AZ | Zip: | Well Name: Apache Jct Well #15
Requested By: Fred T. | P.O.: | Well Owner: Arizona Water Co.
Copy To: Bill Staples | Camera: CCV Color Flip Camera - Long L.H.
Purpose: General Inspection | Zero Datum: Top of Casing
Location: | Depth: 1424 ft. | Vehicle: 95
Field: | Type Perfs: Full Flo Louvers
Perf Intervals: 1071-
1st Csg.O.D. 16 in. | Csg Weight: | From: 0 ft. | To: 1424 ft. | 2nd Csg.O.D. | Csg Weight: | From: | To:
Standing Water Level: 607.7 ft. | Pumping Water Level: | Pump Depth: | O.D.Ref.: Measured | Casing Buildup: Moderate, Increasing W/ Depth
Operator: Pete Noel | Lat.: | Long.: | Sec: | Twp: | Rge:
Other Information:

Wellbore Snapshots	True Depths: (DownView-Feet)	WELLBORE / CASING INFORMATION
1e Ft (See Other Side) 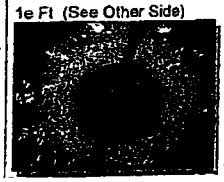 2e Ft (See Other Side) 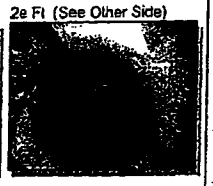	141'	Down view of scale.
	435.2'	Down view of patches of scale.
	607.7'	Static Water Level.
	846.8'	Down view, banding.
1 (See Other Side) 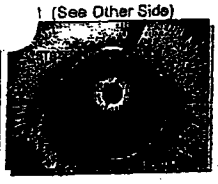 4e Ft (See Other Side) 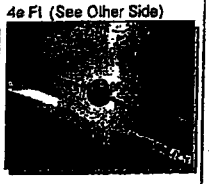	987.1'	Side view of build up.
	1004.4'	Down view of banding.
	1047.5'	Down view of large rectangle cuts.
5e Ft (See Other Side) 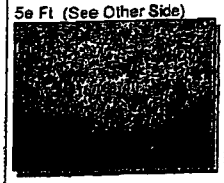 6e Ft (See Other Side) 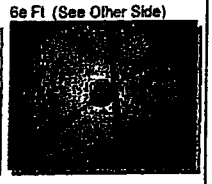	1048.7'	Side view of rectangle cuts.
	1257.8'	Down view of perfs.
	1318.6'	Side view of perfs.
	1424.1'	Fill.
7e Ft (See Other Side) 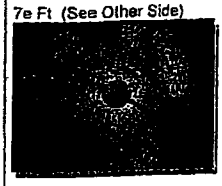 8e Ft (See Other Side) 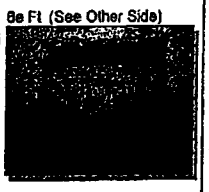		
		There are multiple peices of banding in the well.
9e Ft (See Other Side) 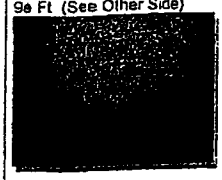 10e Ft (See Other Side)		There are large rectangle cuts from 1045' to 1065'.
11e Ft (See Other Side) 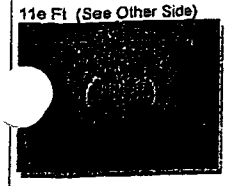 12l Ft (See Other Side) 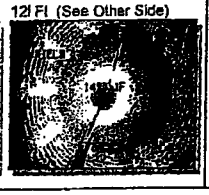		

Notes:

Page Number: 1

12 WELLBORE SHAPSHOTS

1e Ft (Enlargement)

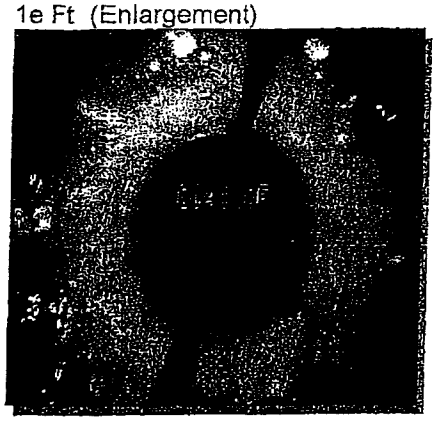

2e Ft (Enlargement)

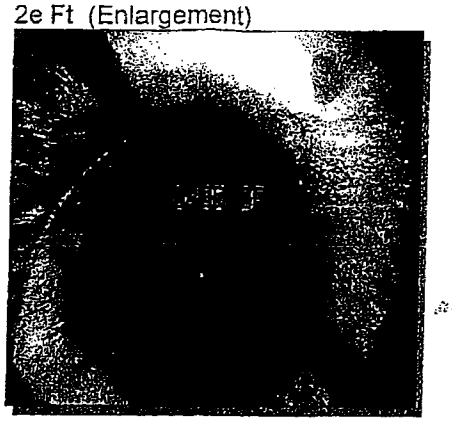

3l Ft (Enlargement)

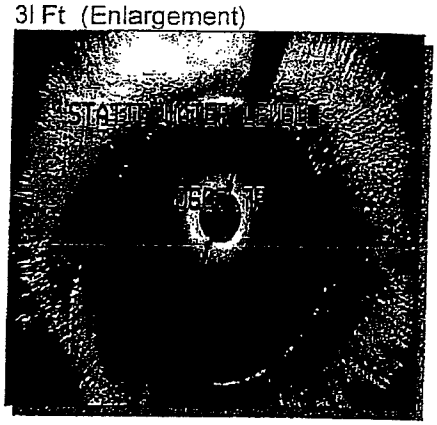

4e Ft (Enlargement)

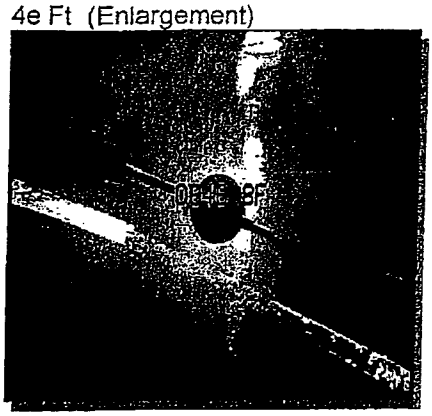

5e Ft (Enlargement)

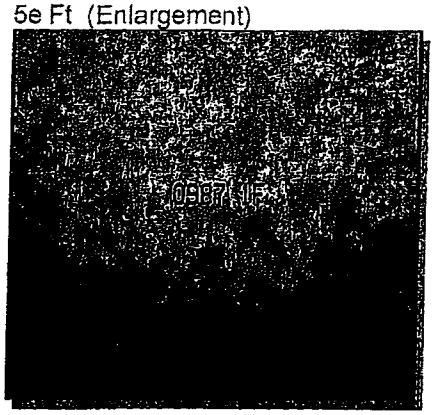

6e Ft (Enlargement)

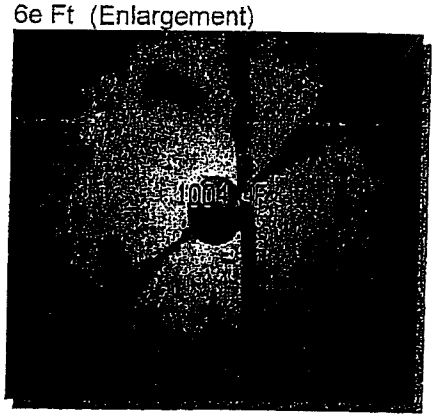

7e Ft (Enlargement)

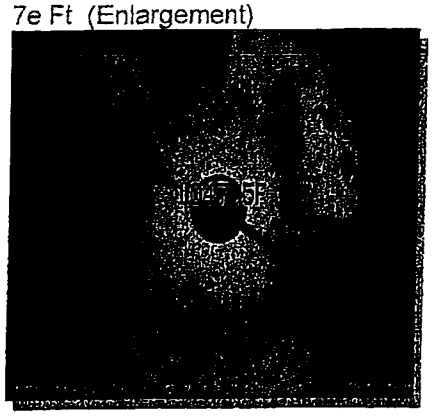

8e Ft (Enlargement)

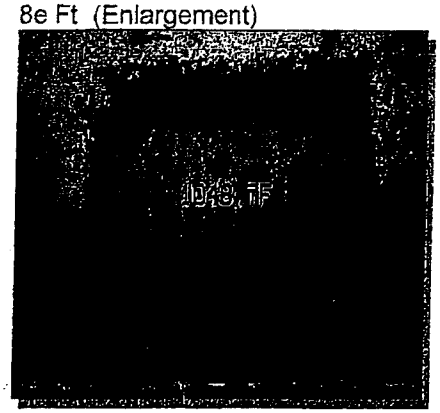

9e Ft (Enlargement)

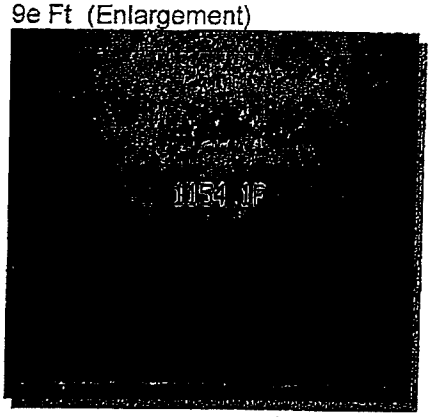

10e Ft (Enlargement)

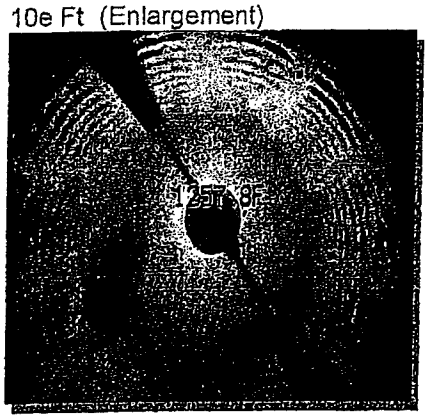

11e Ft (Enlargement)

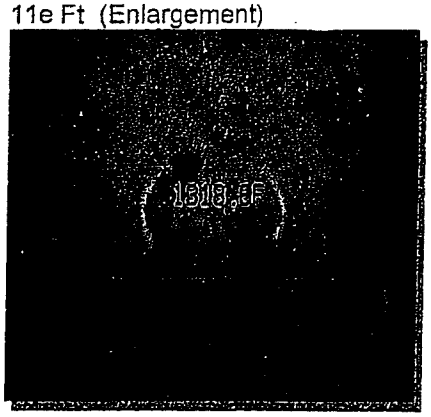

12l Ft (Enlargement)

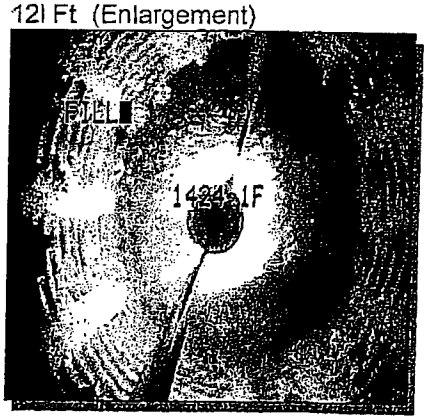

TUCSON
2633 W. Rudkauff Rd.
Tucson, AZ 85705
Ph: 520-887-2170

Weber Group L.C.

Corporate Headquarters 16925 South Weber Drive Chandler, AZ 85226
Ph: 480-961-1141 Fax: 480-961-0290

GOODYEAR
10403 W.McDowell Rd.
Goodyear, Az 85338
Ph: 520-887-2170

Well Video Report

Client: Arizona Water Company | Survey Date: April 21, 2011
Address: 1200 W. Southern | Invoice: 1011057 | Run: 2
City: Apache Junction | State: AZ | Zip: | Well Name: AJ 15
Requested By: Fred T. | P.O.: | Well Owner: Az Water
Copy To: Az Water | Camera: CCV Color Flip Camera - Long L.H.
Purpose: After Brushing | Zero Datum: Top of Casing
Location: U.S 60 east to Ironwood, north to Southern Ave, east 1/8 mi. on the north side of the road. | Depth: 1409 ft. | Vehicle: 95
Field: East Valley | Type Perfs: Full Flo Louvers
Perf Intervals: 1071-1409
1st Csg I.D.: 16 in. | Csg Weight: | From: 0 ft. | To: 1409 ft. | 2nd Csg I.D.: | Csg Weight: | From: | To:
Standing Water Level: 611 ft. | Pumping Water Level: | Pump Depth: | I.D.Ref: Measured | Casing Buildup: Light
Operator: Nathan Reveles | Lat.: | Long.: | Sec: | Twp: | Rge:
Other Information:

Wellbore Snapshots

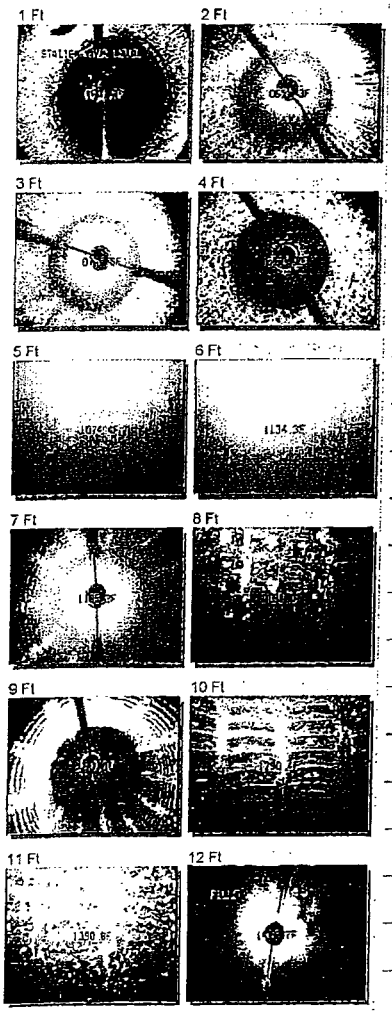

True Depths: (DownView-Feet)	WELLBORE / CASING INFORMATION
611.3'	Static Water Level
655.3'	Down view of the casing.
745.5'	Down view of the casing.
685.2'	Down view of the casing.
1074.4'	Louvered perfortions begin, water dirty.
1134.3'	Side view of the perforations, water dirty.
1185.3'	Down view of the perforations.
1191'	Side view of the perforations.
1280.3'	Down view of the perforations.
1290.4'	Side view of the perforations.
1390.8'	Side view of the perforations.
1408.7'	Fill
	There is light scale on the casing from 130' to 250'.
	There is an oil slick on top of the water.
	There is very light build up on the casing from 880' to 1000'.
	The water was cloudy/dirty from 925' to 1160'.
	The perforations appear to mostly open with light fluff on the louvers from
	1071' to 1380' and partially open to open from 1380' to 1409'.

Notes: The louvers begin at 1071'.

12 WELLBORE SHAPSHOTS

1 Ft

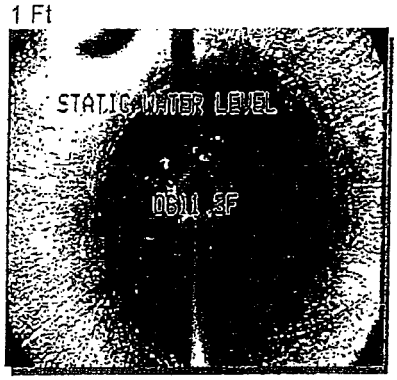

2 Ft (Enlargement)

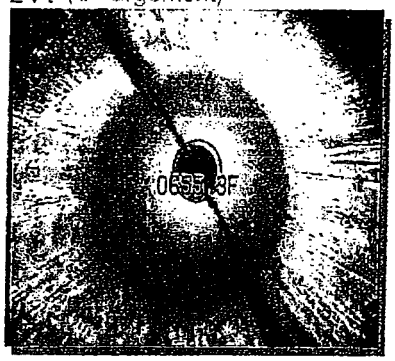

3 Ft (Enlargement)

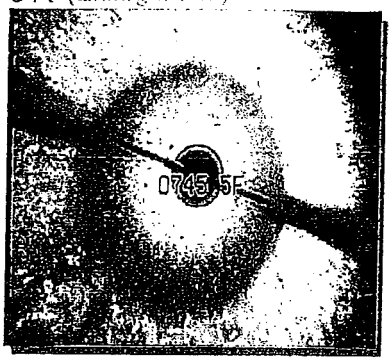

4 Ft

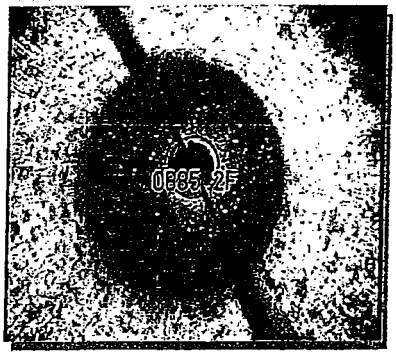

5 Ft (Enlargement)

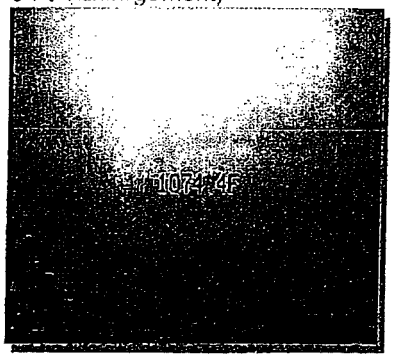

6 Ft (Enlargement)

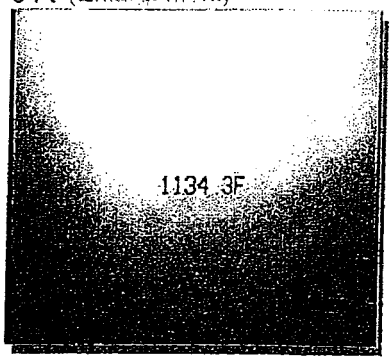

7 Ft

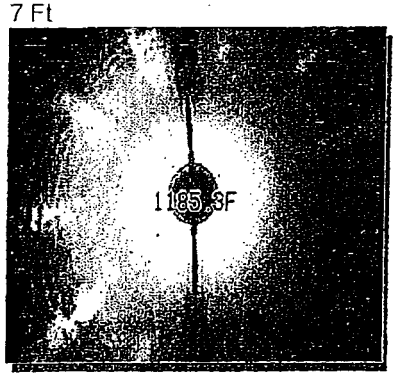

8 Ft (Enlargement)

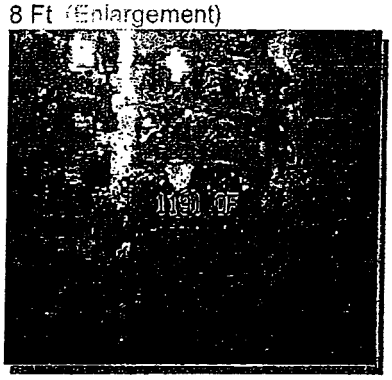

9 Ft (Enlargement)

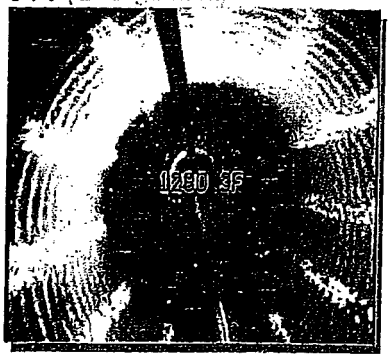

10 Ft

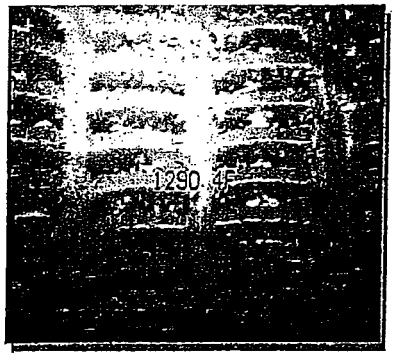

11 Ft (Enlargement)

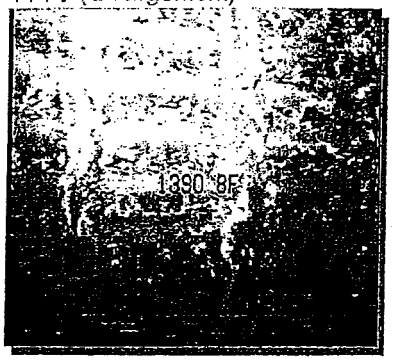

12 Ft (Enlargement)

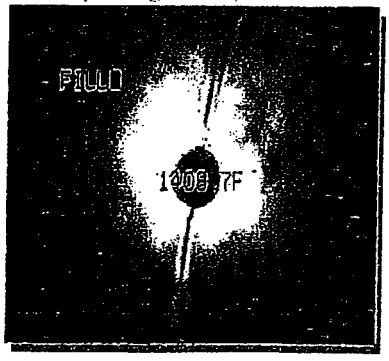

ARIZONA WATER COMPANY

WELL RECORD

System:	Map Reference (e.g. Site Name):	Well No.
SS	APACHE JUNCTION WELL 15	AJ 15

THIS SECTION TO BE COMPLETED BY AWC OR CONTRACTOR

BOWL DATA

Configuration: ☑ Lineshaft Turbine ☐ Submersible Turbine

Manufacturer:	AMERICAN TURBINE	Model No.:	12 H 150
Serial No.:	L25568L	Stages: 13	Bowl O.D. (inch): 12-750
Impeller O.D. (inch):	9-950	Thrust K Factor:	7.9
Shaft Thread O.D. (inch): 1 15/16	Threads Per Inch: 10	Thread Direction:	LH
Oil Tube Thread I.D. (inch): 3"	Threads Per Inch: 10 PEERLESS	Thread Direction:	RH
Column Thread I.D. (inch): 10	Thread Type: 3/4" 8 ROUND	Threads Per Inch:	8
Suction Thread I.D. (inch): 8	Thread Type: 3/4 TAPER	Threads Per Inch:	8
Supplier:	WEBER GROUP	Date Installed:	4-29-11

Remarks:

TOP 5 BOWLS ARE DUCTILE IRON
COMBINATION BEARINGS
"O" RINGS
1" LATERAL
1 IMPELLER TRIMMED AT 8-650"
HIGH PRESSURE BOLTING
1 11/16" X 1 15/16" JUMP COUPLING

REPLACED ALL INNER COLUMN
REPLACED 7 COLUMN PIPE –
SCHEDULE 40 SEAMLESS
REPLACED 1" SCH 80 PVC SOUNDING TUBE
AND 1/4" SS TUBING

ARIZONA WATER COMPANY

WELL RECORD

System:	Map Reference (e.g. Site Name):	Well No.
SS	APACHE JUNCTION WELL 15	AJ 15

THIS SECTION TO BE COMPLETED BY AWC OR CONTRACTOR

COLUMN PIPE DATA

Column Tread O.D. (inch):	Length (feet):	Thread Type:
10	842	3/4 - 8 ROUND
Threads Per Inch: 8	Thread Direction: RH	
Supplier: WEBER GROUP		Date Installed: 4-29-11

Remarks:
SCHEDULE 40 SEAMLESS
8 ROUND COUPLINGS

THIS SECTION TO BE COMPLETED BY AWC OR CONTRACTOR

OIL TUBE DATA

Oil Tube Thread I.D. (inch):	Threads Per Inch:	Thread Direction:
3	10	RH
Supplier: WEBER GROUP		Date Installed: 4-29-11

Remarks:
ALL NEW

THIS SECTION TO BE COMPLETED BY AWC OR CONTRACTOR

SHAFT DATA

Shaft Thread O.D. (inch):	Threads Per Inch:	Thread Direction:
1 15/16	10	LH
Supplier: WEBER GROUP		Date Installed: 4-29-11

Remarks:
ALL NEW

ARIZONA WATER COMPANY

WELL RECORD

System:	Map Reference (e.g. Site Name):	Well No.
SS	APACHE JUNCTION WELL 15	AJ 15

THIS SECTION TO BE COMPLETED BY AWC OR CONTRACTOR

AIR LINE DATA

Air Line O.D. (inch):	Length (feet):	Material:
1/4, 1"	842	SS & SCH-80 PVC
Supplier: WEBER GROUP		Date Installed: 4-29-11

Remarks:

ALL NEW

THIS SECTION TO BE COMPLETED BY AWC OR CONTRACTOR

DISCHARGE HEAD DATA

Manufacturer: NATIONAL		Model No.: FABRICATED
Serial No.:	Suction Size (inch): 10	Discharge Size (inch): 10
Motor Base Dia. (inch): 20	Surface Plate Dia. (inch) Submersible Only:	
Supplier: WEBER GROUP		Date Installed 4-29-11

Remarks:

EXISTING HEAD

ARIZONA WATER COMPANY

WELL RECORD

System:	Map Reference:	Well No.

THIS SECTION TO BE COMPLETED BY AWC OR CONTRACTOR

MOTOR DATA

Configuration: ☑ Vertical Hollowshaft ☐ Vertical Hollowshaft-Right Angle Drive ☐ Submersible

Manufacturer: US	Model No.
Catalog No.	Serial No.
Enclosure: WP-1	

Horse Power:	R.P.M.:	Motor Dia. (inch): (Sub. Only)	Type:	Frame:	Base Dia. (inch):
400	1775			5008 PH	20

Phase:	Hertz:	Poles:	Volts:	F.L. Amps:
3	60	4	460	434

Service Factor:	Thrust Rating (lbs.):	P.E. Bearing:	S.E. Bearing:
1.15			

Supplier:	Date Installed:

Remarks:

EXISTING MOTOR

ARIZONA WATER COMPANY

WELL RECORD

System:	Map Reference:	Well No.
SS	APACHE JUNCTION WELL 15	AJ 15

THIS SECTION TO BE COMPLETED BY AWC OR CONTRACTOR

WELL MAINTENANCE DATA

W.A. No.	OR	Blanket No.

Work Description:	Date of Work:
BRUSH WELL	4-14-11

Work Description:

WELL VIDEOED, DRILL RIG BRUSHED
CASING PERFORATIONS
BAILED 185 GALLONS OF DRIP OIL

Reason For Work:

PLUGGED LOUVERS

Remarks:

DOCUMENT1
FKS:afh:06/03/11

1/15/09
FKS:afh
E-5-7-11

ARIZONA WATER COMPANY

WELL RECORD

VERTICAL TURBINE AS-BUILT

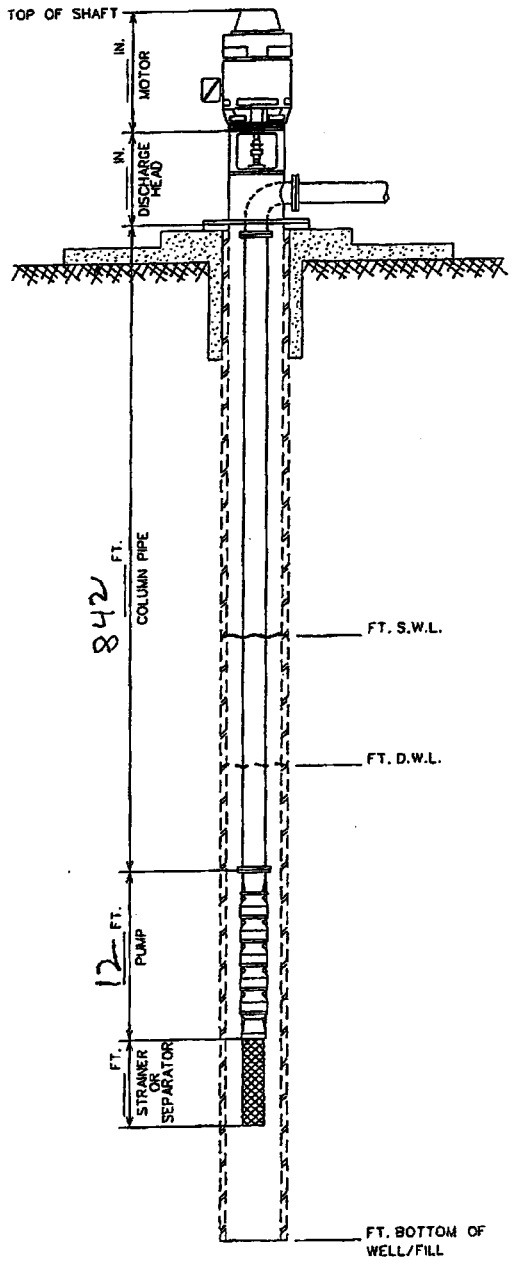

DATE: 4-29-11

INSPECTOR _____

WA NO. _____

STATIC 608 FT DYNAMIC ____ FT PUMP DISCHARGE ____ GPM

STATIC PRESSURE ____ PSI DYNAMIC PRESSURE ____ PSI

MOTOR

H. P. 400 MFGR US

R. P. M. 1775 SIZE _____

PHASE / CYCLE / VOLTS 3 / 60 / 460

DISCHARGE HEAD

TYPE FBB SIZE 10 x 20

MECHANICAL SEAL

TYPE N/A SIZE _____

COLUMN ASSEMBLY

PIPE SIZE 10"

PIPE WALL SCH 40

SHAFT SIZE 1 15/16

TUBE SIZE 3

AIR LINE SIZE / MATERIAL 1/4" / SS

SOUNDING LINE SIZE / MATERIAL 1" / SCH 80 PVC

CHEMICAL LINE SIZE / MATERIAL ____ / ____

BOWL ASSEMBLY

MODEL AMERICAN TURBINE 12H150

NO. OF STAGES 13

SERIAL NO. L25568L

STRAINER YES / NO (NO circled) SAND SEPARATOR YES / NO

NOTES: _____

DOCUMENT1
FKS:afh:06/03/11

1/15/09
FKS:afh
E-5-7-14

ARIZONA WATER COMPANY

CONSTRUCTION COMPLETION NOTICE

CONSTRUCTION COMPLETION DATE: 6/3/11 | WORK AUTHORIZATION NUMBER: 1-4792

THE FOLLOWING RECORD REQUIREMENTS ARE ATTACHED: — PREPARED BY

1. CONSTRUCTION DRAWINGS WITH "AS BUILT" LOCATION OF PIPE, FITTINGS, ETC. MARKED IN RED ..... N/A
2. VALVE CARDS ..... N/A
3. HYDRANT CARDS WITH COPY OF COVER LETTER ..... N/A
4. MATERIALS INSTALLED OR RETIRED LISTED ON THE REVERSE SIDE OF THE W.A. WITH R.O.S. AND P.D.R. NUMBERS ..... MZ
5. PRESSURE AND LEAKAGE TEST RESULTS:

DATE TESTED				
TIME STARTED				
TIME FINISHED	N/A			
PIPE DIAMETER				
FOOTAGE TESTED				
ALLOWABLE LEAKAGE				
LEAKAGE OBSERVED				
PRESSURE AT TEST POINT				
COMPANY EMPLOYEE OBSERVING TEST *(print)*				
INITIALS OF EMPLOYEE				

6. DISINFECTION SAMPLING:

INITIAL SAMPLING	DATE				
(minimum 50 ppm available chlorine)	TIME				
	PPM Cl_2				
AFTER 24 HOURS DETENTION TIME	DATE				
(minimum 10 ppm free chlorine)	TIME				
	PPM Cl_2				
AFTER SUFFICIENT FLUSHING	DATE				
(water is clear and system Cl_2 residual is measured)	TIME				
	PPM Cl_2				
BACTERIOLOGICAL SAMPLE(S)	DATE	5/5/11			
	TIME	11:15			
	ATTACHED	☒ Yes ☐ No	☐ Yes ☐ No	☐ Yes ☐ No	☐ Yes ☐ No

I certify that construction on the above Work Authorization was completed as of the date shown above and for which all materials have been accounted. I further certify that I have inspected the work done and have found it to be satisfactory and in accordance with Company specifications.

J Smith — Division Manager or Operations Superintendent *(signature)*

6-3-11 — Date of Notice

ATTACH TO CONSTRUCTION & ENGINEERING FILE COPY OF WORK AUTHORIZATION