# APPLICATION
# W-01445A-10-0517

## PART 2 OF 8
## BAR CODE # 0000122317

## To review remaining parts please see the following:

**PART 1 OF 8 BAR CODED #0000122316**
**PART 3 OF 8 BAR CODED #0000122318**
**PART 4 OF 8 BAR CODED #0000122319**
**PART 5 OF 8 BAR CODED #0000122320**
**PART 6 OF 8 BAR CODED #0000122321**
**PART 7 OF 8 BAR CODED #0000122322**
**PART 8 OF 8 BAR CODED #0000112323**

# WA1-4470

# ARIZONA WATER COMPANY
## WORK AUTHORIZATION

SCANNED

W.A. NUMBER: 1-4470
P.E. NUMBER: CG
BUDGET ITEM NO.: B-1
SHEET NO.: 1 of 2

| | | | |
|---|---|---|---|
| SYSTEM: | CASA GRANDE | WORK TO START BY: | UPON AUTHORIZATION |
| DIVISION: | CASA GRANDE | WORK TO BE FINISHED BY: | WITHIN 90 DAYS |
| TAX CODE: | 0403 | | |

DESCRIPTION OF WORK:

Construct and install Phase 3b of the SCADA System in Casa Grande (Phase 3 of 3). Construct in accordance with attached drawings and/or Arizona Water Company specifications.

FACTORS JUSTIFYING WORK:

APPROVED 2008 BUDGET ITEM $850,000 - AMOUNT SPENT IN 2008 $100,229
APPROVED 2009 BUDGET ITEM $400,000 - AMOUNT SPENT IN 2009 $344,394
APPROVED 2010 BUDGET ITEM $225,000

| COST ESTIMATE | | AUTHORIZATION | DATE |
|---|---|---|---|
| ***COST OF WORK:*** | | PREPARED BY: | |
| MATERIAL | 0 | James Wilson JW 1/26/10 | 1/25/10 |
| LABOR | 1,500 | REVIEWED BY: | |
| CONTRACT PORTION | 247,482 | Charles Briggs CB 1-26-2010 | 1-25-2010 |
| OVERHEAD | 23,155 | APPROVED BY: | |
| TOTAL AUTHORIZED EXPENDITURES CHARGEABLE TO THIS W.A. | $ 272,137 | Mike Loggins ML 1-26-10 | 1-26-10 |
| **FUNDS RECEIVED:** | | APPROVED BY: | |
| CONTRIBUTIONS RECEIVED | 0 | Fred Schneider FS 1-26-10 | 1-26-10 |
| REFUNDABLE ADVANCES RECEIVED | 0 | AUTHORIZED BY: | |
| TOTAL CONTRIBUTIONS/ADVANCES | 0 | William Garfield WM Garfield | 1-26-2010 |
| NET CASH REQUIRED | $ 272,137 | | |
| | | | |
| | | | |

COMMENTS:

The Budget is for WA 1-4617 ($800,000) will be reduced to off set the additional funds required to complete this project

FILE COPY

CONSTRUCTION RELEASE:

RELEASED TO CONSTRUCTION
Authorized by FRED SCHNEIDER
Date 1/26/10

2010 BUDGET

AFH

**ARIZONA WATER COMPANY**

# *WORK AUTHORIZATION* - DETAIL SHEET

W.A. NUMBER: 1-4470
P.E. NUMBER: CG
BUDGET ITEM NO.: B-1
SHEET NO.: 2 of 2

| RETIREMENT PROPERTY UNITS | PLANT PROPERTY ACCOUNT | UNIT DESCRIPTION | QUANTITY | YEAR INSTALLED AND W.A. NUMBER |
|---|---|---|---|---|
| | | | | |
| | | | | |
| | | | | |
| | | | | |

PROJECT DESCRIPTION:

Construct and install Phase 3b of the SCADA System in Casa Grande (Phase 3 of 3).

| | DESCRIPTION | PLANT PROP ACCT | QUANTITY | UNIT COST | TOTAL |
|---|---|---|---|---|---|
| CONTRACT WORK | Programming | 397 | 1 | $ 20,157.39 | $ 20,157 |
| | Install RTU at Well #17 | 397 | 1 | 77,844.38 | 77,844 |
| | Install RTU at Well #21 | 397 | 1 | 12,251.44 | 12,251 |
| | Install RTU at Well #30 | 397 | 1 | 46,030.86 | 46,031 |
| | Install RTU at Well #24 | 397 | 1 | 84,299.26 | 84,299 |
| | Taxes | 397 | 1 | 6,500.00 | 6,500 |
| | PC Anywhere | 397 | 2 | 200.00 | 400 |
| | | | | | |
| | | | | | |
| | | | | | |
| | | | | | |
| | | | | | |
| | SERVICE CONNECTIONS COMPLETE: DOUBLE-LONG | 345 | | | |
| | SERVICE CONNECTIONS COMPLETE: DOUBLE-SHORT | 345 | | | |
| | SERVICE CONNECTIONS COMPLETE: SINGLE-LONG | 345 | | | |
| | SERVICE CONNECTIONS COMPLETE: SINGLE-SHORT | 345 | | | |
| **TOTAL CONTRACT WORK** | | | | | $ 247,482 |
| MATERIALS | | | | | |
| | | | | | |
| | | | | | |
| | | | | | |
| | SERVICE CONNECTIONS: DOUBLE-LONG | 345 | | | |
| | SERVICE CONNECTIONS: DOUBLE-SHORT | 345 | | | |
| | SERVICE CONNECTIONS: SINGLE-LONG | 345 | | | |
| | SERVICE CONNECTIONS: SINGLE-SHORT | 345 | | | |
| | METERS | 346 | | | |
| **TOTAL MATERIALS** | | | | | $ - |
| LABOR | | | | | |
| | | | | | |
| | | | | | |
| | | | | | |
| | | | | | |
| | TESTING FEE | | | | |
| | PERMIT FEE | | | | |
| | SURVEY FEE | | | | |
| | FIELD INSPECTION | 325 | 1 | 1,500.00 | 1,500 |
| | INSTALL SERVICE CONNECTIONS: DOUBLE-LONG | 345 | | | |
| | INSTALL SERVICE CONNECTIONS: DOUBLE-SHORT | 345 | | | |
| | INSTALL SERVICE CONNECTIONS: SINGLE-LONG | 345 | | | |
| | INSTALL SERVICE CONNECTIONS: SINGLE-SHORT | 345 | | | |
| **TOTAL LABOR** | | | | | $ 1,500 |
| **SUBTOTAL - CONTRACT WORK, MATERIALS, AND LABOR** | | | | | $ 248,982 |
| OVERHEAD | | | | | 23,155 |
| **TOTAL** | REFUNDABLE PORTION ☐ | NON-REFUNDABLE PORTION ☐ | | **COST ESTIMATE** | $ 272,137 |

AFH

# ARIZONA WATER COMPANY
## WORK AUTHORIZATION

W.A. NUMBER: 1-4470
P.E. NUMBER: CG-1430
BUDGET ITEM NO.: 1-4470
SHEET NO.: 1 of 2

| | | | |
|---|---|---|---|
| SYSTEM: | Casa Grande | WORK TO START BY: | UPON AUTHORIZATION |
| DIVISION: | Casa Grande | WORK TO BE FINISHED BY: | WITHIN 60 DAYS |
| TAX CODE: | 0403 | | |

DESCRIPTION OF WORK:

Construct and install Phase 3b of the SCADA System in Casa Grande (Phase 2 of 3). Construct in accordance with attached drawings and/or Arizona Water Company specifications.

FACTORS JUSTIFYING WORK:

**APPROVED 2008 BUDGET ITEM $850,000, AMOUNT SPENT IN 2008 $100,229**
**APPROVED 2009 BUDGET ITEM $400,000**
**ANTICIPATED 2010 BUDGE ITEM $400,000**

| COST ESTIMATE | | AUTHORIZATION | DATE |
|---|---|---|---|
| COST OF WORK: | | PREPARED BY: James Wilson JW 6/12/09 | 6/11/09 |
| MATERIAL | 4,914 | REVIEWED BY: Mike Loggins ML 6-12-09 | 6-12-09 |
| LABOR | 6,900 | APPROVED BY: Fredrick Schneider FS 6-12-09 | 6-12-09 |
| CONTRACT PORTION | 315,403 | APPROVED BY: Joe Harris JH 6/12/09 | 6/12/09 |
| OVERHEAD | 30,431 | AUTHORIZED BY: William Garfield WG 6-16-09 | 6-16-09 |
| TOTAL AUTHORIZED EXPENDITURES CHARGEABLE TO THIS W.A. | $ 357,648 | | |
| FUNDS RECEIVED: | | | |
| CONTRIBUTIONS RECEIVED | 0 | | |
| REFUNDABLE ADVANCES RECEIVED | 0 | | |
| TOTAL CONTRIBUTIONS/ADVANCES | 0 | | |
| NET CASH REQUIRED | $ 357,648 | | |

COMMENTS:

Wells 17 & 31 have been excluded from this years work due to Budget limitations. If sufficient funds are available later this year a change order may be issued to complete Well 17 and/or 31.

FILE COPY

CONSTRUCTION AUTHORIZATION

RELEASED TO CONSTRUCTION
Authorized by FRED SCHNEIDER
Date 6/9/09

2009 BUDGET

AFH

**ARIZONA WATER COMPANY**

# *WORK AUTHORIZATION* - DETAIL SHEET

W.A. NUMBER: 1-4470
P.E. NUMBER: CG-1430
BUDGET ITEM NO.: 1-4470
SHEET NO.: 2 of 2

| RETIREMENT PROPERTY UNITS | PLANT PROPERTY ACCOUNT | UNIT DESCRIPTION | QUANTITY | YEAR INSTALLED AND W.A. NUMBER |
|---|---|---|---|---|
| | | | | |
| | | | | |
| | | | | |
| | | | | |

PROJECT DESCRIPTION:

Construct and install Phase 3b of the SCADA System in Casa Grande (Phase 2 of 3). Construct in accordance with attached drawings and/or Arizona Water Company specifications.

| | DESCRIPTION | PLANT PROP ACCT | QUANTITY | UNIT COST | TOTAL |
|---|---|---|---|---|---|
| CONTRACT WORK | Programing and integration | 397 | 1 | $ 20,100.17 | $ 20,100 |
| | Install SCADA equipment at Well #10 | 397 | 1 | 8,057.72 | 8,058 |
| | Install SCADA equipment at Well #20 | 397 | 1 | 19,689.88 | 19,690 |
| | Install SCADA equipment at Well #23 | 397 | 1 | 84,223.53 | 84,224 |
| | Install SCADA equipment at Well #25 | 397 | 1 | 79,033.54 | 79,034 |
| | Install SCADA equipment at Well #26 | 397 | 1 | 87,736.36 | 87,736 |
| | Install master radios at Cottonwood Ln and Henness Rd. | 397 | 2 | 6,950.00 | 13,900 |
| | Install OIT at well #10 | 397 | 1 | 2,661.00 | 2,661 |
| | | | | | |
| | | | | | |
| | | | | | |
| | | | | | |
| | SERVICE CONNECTIONS COMPLETE: DOUBLE-LONG | 345 | | | |
| | SERVICE CONNECTIONS COMPLETE: DOUBLE-SHORT | 345 | | | |
| | SERVICE CONNECTIONS COMPLETE: SINGLE-LONG | 345 | | | |
| | SERVICE CONNECTIONS COMPLETE: SINGLE-SHORT | 345 | | | |
| **TOTAL CONTRACT WORK** | | | | | $ 315,403 |
| MATERIALS | Ack Pack meter head | 325 | 6 | $ 619.00 | $ 3,714 |
| | Cla-Val solonoid switch | 325 | 8 | 150.00 | 1,200 |
| | | | | | |
| | | | | | |
| | SERVICE CONNECTIONS: DOUBLE-LONG | 345 | | | |
| | SERVICE CONNECTIONS: DOUBLE-SHORT | 345 | | | |
| | SERVICE CONNECTIONS: SINGLE-LONG | 345 | | | |
| | SERVICE CONNECTIONS: SINGLE-SHORT | 345 | | | |
| | METERS | 346 | | | |
| **TOTAL MATERIALS** | | | | | $ 4,914 |
| LABOR | Install flow switch on eye wash stations | 325 | 6 | $ 150.00 | $ 900 |
| | | | | | |
| | | | | | |
| | | | | | |
| | | | | | |
| | TESTING FEE | | | | |
| | PERMIT FEE | | | | |
| | SURVEY FEE | | | | |
| | FIELD INSPECTION | 397 | 1 | 6,000.00 | 6,000 |
| | INSTALL SERVICE CONNECTIONS: DOUBLE-LONG | 345 | | | |
| | INSTALL SERVICE CONNECTIONS: DOUBLE-SHORT | 345 | | | |
| | INSTALL SERVICE CONNECTIONS: SINGLE-LONG | 345 | | | |
| | INSTALL SERVICE CONNECTIONS: SINGLE-SHORT | 345 | | | |
| **TOTAL LABOR** | | | | | $ 6,900 |
| **SUBTOTAL - CONTRACT WORK, MATERIALS, AND LABOR** | | | | | $ 327,217 |
| OVERHEAD | | | | | 30,431 |
| **TOTAL** | REFUNDABLE PORTION ☐ | NON-REFUNDABLE PORTION ☐ | | **COST ESTIMATE** | $ 357,648 |

AFH

# ARIZONA WATER COMPANY
## *WORK AUTHORIZATION*

W.A. NUMBER: 1-4470
P.E. NUMBER: CG-1430
BUDGET ITEM NO.: 1-4470
SHEET NO.: 1 of 2

| | | | |
|---|---|---|---|
| SYSTEM: | CASA GRANDE | WORK TO START BY: | UPON AUTHORIZATION |
| DIVISION: | CASA GRANDE | WORK TO BE FINISHED BY: | WITHIN 270 DAYS |
| TAX CODE: | 0403 | | |

DESCRIPTION OF WORK:

Construct and install Phase 3 of the SCADA System in Casa Grande. Construct in accordance with attached drawings and/or Arizona Water Company specifications.

FACTORS JUSTIFYING WORK:

APPROVED 2008 BUDGET ITEM ($850,000)

| COST ESTIMATE | | AUTHORIZATION | DATE |
|---|---|---|---|
| **COST OF WORK:** | | PREPARED BY: Charles Briggs CB 6-3-08 | 5-23-08 |
| MATERIAL | 0 | | |
| LABOR | 5,200 | REVIEWED BY: James Wilson JW 6/5/08 | 5/29/08 |
| CONTRACT PORTION | 812,250 | | |
| OVERHEAD | 41,690 | APPROVED BY: Fredrick Schneider FS 6-5-08 | 5-30-08 |
| TOTAL AUTHORIZED EXPENDITURES CHARGEABLE TO THIS W.A. | $ 859,140 | | |
| **FUNDS RECEIVED:** | | AUTHORIZED BY: William Garfield | 6-3-08 |
| CONTRIBUTIONS RECEIVED | 0 | | |
| REFUNDABLE ADVANCES RECEIVED | 0 | FOR SPECIAL BUDGET ITEM UNDER $10,000 -- | |
| TOTAL CONTRIBUTIONS/ADVANCES | 0 | | |
| NET CASH REQUIRED | $ 859,140 | FOR SPECIAL BUDGET ITEM EXCEEDING $10,000 -- | |
| | | AUTHORIZED BY: | |

COMMENTS:

FILE COPY

CONSTRUCTION RELEASE:

**RELEASED TO CONSTRUCTION**
Authorized by FRED SCHNEIDER
Date 06/3/08

AFH

# ARIZONA WATER COMPANY

## WORK AUTHORIZATION - DETAIL SHEET

W.A. NUMBER: 1-4470
P.E. NUMBER: cg-1430
BUDGET ITEM NO.: 1-4470
SHEET NO.: 2 of 2

| RETIREMENT PROPERTY UNITS | PLANT PROPERTY ACCOUNT | UNIT DESCRIPTION | QUANTITY | YEAR INSTALLED AND W.A. NUMBER |
|---|---|---|---|---|
| | | | | |
| | | | | |
| | | | | |
| | | | | |

PROJECT DESCRIPTION:

Construct and install Phase 3 of the SCADA System in Casa Grande.

| | DESCRIPTION | PLANT PROP ACCT | QUANTITY | UNIT COST | TOTAL |
|---|---|---|---|---|---|
| CONTRACT WORK | Construct and Install SCADA at the following Well sites | | | | |
| | Well 10 | 325 | 1 | 75,000.00 | 75,000 |
| | Well 17 | 325 | 1 | 75,000.00 | 75,000 |
| | Well 20 | 325 | 1 | 75,000.00 | 75,000 |
| | Well 21 | 325 | 1 | 75,000.00 | 75,000 |
| | Well 23 | 325 | 1 | 75,000.00 | 75,000 |
| | Well 24 | 325 | 1 | 75,000.00 | 75,000 |
| | Well 25 | 325 | 1 | 75,000.00 | 75,000 |
| | Well 26 | 325 | 1 | 75,000.00 | 75,000 |
| | Well 30 | 325 | 1 | 75,000.00 | 75,000 |
| | Well 31 | 325 | 1 | 75,000.00 | 75,000 |
| | Tax | 325 | 1 | 62,250.00 | 62,250 |
| | SERVICE CONNECTIONS COMPLETE: DOUBLE-LONG | 345 | | | |
| | SERVICE CONNECTIONS COMPLETE: DOUBLE-SHORT | 345 | | | |
| | SERVICE CONNECTIONS COMPLETE: SINGLE-LONG | 345 | | | |
| | SERVICE CONNECTIONS COMPLETE: SINGLE-SHORT | 345 | | | |
| **TOTAL CONTRACT WORK** | | | | | $ 812,250 |
| MATERIALS | | | | | |
| | | | | | |
| | | | | | |
| | | | | | |
| | SERVICE CONNECTIONS: DOUBLE-LONG | 345 | | | |
| | SERVICE CONNECTIONS: DOUBLE-SHORT | 345 | | | |
| | SERVICE CONNECTIONS: SINGLE-LONG | 345 | | | |
| | SERVICE CONNECTIONS: SINGLE-SHORT | 345 | | | |
| | METERS | 346 | | | |
| **TOTAL MATERIALS** | | | | | $ - |
| LABOR | | | | | |
| | | | | | |
| | | | | | |
| | | | | | |
| | | | | | |
| | TESTING FEE | | | | |
| | PERMIT FEE | 325 | 1 | 2,000.00 | 2,000 |
| | SURVEY FEE | | | | |
| | FIELD INSPECTION | 325 | 80 | 40.00 | 3,200 |
| | INSTALL SERVICE CONNECTIONS: DOUBLE-LONG | 345 | | | |
| | INSTALL SERVICE CONNECTIONS: DOUBLE-SHORT | 345 | | | |
| | INSTALL SERVICE CONNECTIONS: SINGLE-LONG | 345 | | | |
| | INSTALL SERVICE CONNECTIONS: SINGLE-SHORT | 345 | | | |
| **TOTAL LABOR** | | | | | $ 5,200 |
| **SUBTOTAL - CONTRACT WORK, MATERIALS, AND LABOR** | | | | | $ 817,450 |
| OVERHEAD | | | | | 41,690 |
| **TOTAL** | REFUNDABLE PORTION ☐ | NON-REFUNDABLE PORTION ☐ | | **COST ESTIMATE** | $ 859,140 |

AFH

# CASA GRANDE WATER SYSTEM
# SCADA DESIGN - PHASE II
# WELL NO. 10 - RTU 200 DESIGN

DLT&V
SYSTEMS ENGINEERING
3550 N. CENTRAL AVE, STE. 1900
PHOENIX, AZ 85012 (602) 266-4688

Registered Professional Engineer (Electrical)
37390
MELINDA TAM
Date Signed 9.29.08
ARIZONA, U.S.A.

Expires 3/31/11

NOTES

REVISIONS

| REV. | BY | DATE | DESCRIPTION |
|---|---|---|---|
| | | | |
| | | | |
| | | | |
| | | | |

CASA GRANDE WATER SYSTEM
SCADA PHASE II - WELL #10

ARIZONA WATER COMPANY

COVER SHEET

| | |
|---|---|
| DRAWN BY: MAB | PROJECT NO. 1219.01.027 |
| DESIGNED BY: MAB | SUBMITTAL DATE: SEPT 2008 |
| CHECKED BY: BA | DRAWING NUMBER: EC1 |

DWG FILE: 1219.01.101_EC1.dwg 10:56am PLOTTED: Sep 30, 2008 slewis

# CASA GRANDE WATER SYSTEM
# SCADA DESIGN – PHASE II
# WELL NO. 10 RTU DESIGN
# PROJECT SHEET INDEX

| Drawing No. | Drawing Title |
|---|---|
| EC1 | COVER SHEET |
| EC2 | PROJECT SHEET INDEX |
| EC3 | STANDARD SYMBOLS AND ABBREVIATIONS |
| EC4 | ISA TABLE AND COMMON LEGENDS SHEET |
| EC5 | BILL OF MATERIALS |
| EC6 | RTU ENCLOSURE LAYOUT |
| EC7 | RTU SUBPANEL LAYOUT |
| EC8 | TERMINAL BLOCK DETAILS |
| EC9 | COMMUNICATIONS SYSTEM ARCHITECTURE DIAGRAM |
| EC10 | 120VAC POWER DISTRIBUTION SCHEMATIC |
| EC11 | 24VDC POWER DISTRIBUTION SCHEMATIC |
| EC12 | DISCRETE INPUT MODULE BASE WIRING DIAGRAM - SHEET 1 |
| EC13 | DISCRETE INPUT MODULE BASE WIRING DIAGRAM - SHEET 2 |
| EC14 | DISCRETE OUTPUT MODULE BASE WIRING DIAGRAM |
| EC15 | ANALOG INPUT MODULE BASE WIRING DIAGRAM |

DLT&V
SYSTEMS ENGINEERING
3550 N. CENTRAL AVE, STE. 1900
PHOENIX, AZ 85012 (602) 266-4658

Registered Professional Engineer (Electrical)
CERTIFICATE NO.
37390
MELINDA
TAM
Date Signed 9-29-08
ARIZONA, U.S.A.
Expires 3/31/11

NOTES

REVISIONS

| REV. | BY | DATE | DESCRIPTION |
|---|---|---|---|
| | | | |
| | | | |
| | | | |
| | | | |

CASA GRANDE WATER SYSTEM
SCADA PHASE II – WELL #10

ARIZONA WATER COMPANY

PROJECT SHEET INDEX

| DRAWN BY: | PROJECT NO. |
|---|---|
| MAB | 1219.01.027 |
| DESIGNED BY: | SUBMITTAL DATE: |
| MAB | SEPT 2008 |
| CHECKED BY: | DRAWING NUMBER |
| BA | EC2 |

DWG FILE: 1219.01.101_EC2.dwg 10:56am PLOTTED: Sep 30, 2008 steves

# CASA GRANDE WATER SYSTEM
# SCADA DESIGN – PHASE II
# WELL NO. 10 RTU DESIGN
# STANDARD SYMBOLS AND ABBREVIATIONS

## SCHEMATIC/WIRING DIAGRAM SYMBOLS

CIRCUIT BREAKER
*A – AMP RATING

FUSE WITH PULLER
*A – AMP RATING

SWITCH
NORMALLY OPEN

SELECTOR SWITCH
2 POSITION, NORMALLY OPEN

SELECTOR SWITCH
3 POSITION, NORMALLY OPEN

TEMPERATURE SWITCH
NORMALLY OPEN

TERMINAL BLOCK
* – TB IDENTIFICATION

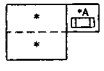


TERMINAL BLOCK W/ FUSE
PLUG AND FUSE
* – TB IDENTIFICATION
*A – AMPS

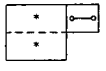


TERMINAL BLOCK W/
DISCONNECT KNIFE
* – TB IDENTIFICATION

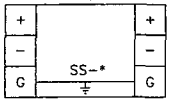


*SURGE SUPPRESSOR FOR*
FLOATING SIGNAL CIRCUITS
* – SS NUMBER IDENTIFICATION

SURGE SUPPRESSOR FOR
POWER SUPPLY
* – SS NUMBER IDENTIFICATION

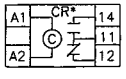


CONTROL RELAY
* – CR NUMBER IDENTIFICATION
# – TERMINAL NUMBER

## SCHEMATIC/WIRING DIAGRAM SYMBOLS

EARTH GROUND



TERMINAL BLOCK

DUPLEX RECEPTACLE

SINGLE RECEPTACLE

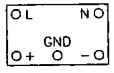


DC POWER SUPPLY
* – DC VOLTAGE RATING

## COLOR CODE CHART FOR 18 AWG BELDEN CABLES
## 12 COND. NO. 8466 AND 19 COND. NO. 8619

| | | |
|---|---|---|
| BLACK | BLK | 1st |
| WHITE | WHT | 2nd |
| RED | RED | 3rd |
| GREEN | GRN | 4th |
| ORANGE | ORN | 5th |
| BLUE | BLU | 6th |
| WHITE/BLACK | WHT/BLK | 7th |
| RED/BLACK | RED/BLK | 8th |
| GREEN/BLACK | GRN/BLK | 9th |
| ORANGE/BLACK | ORN/BLK | 10th |
| BLUE/BLACK | BLU/BLK | 11th |
| BLACK/WHITE | BLK/WHT | 12th |
| RED/WHITE | RED/WHT | 13th |
| GREEN/WHITE | GRN/WHT | 14th |
| BLUE/WHITE | BLU/WHT | 15th |
| BLACK/RED | BLK/RED | 16th |
| WHITE/RED | WHT/RED | 17th |
| ORANGE/RED | ORN/RED | 18th |
| BLUE/RED | BLU/RED | 19th |

## WIRE SIZES

**(CIRCUIT WIRING SHALL BE RATED IN ACCORDANCE WITH THE MAXIMUM PERMITTED AMPERE RATING/SETTING OF THE OVERCURRENT PROTECTION DEVICE. N.E.C. 210-3)**

120VAC / 20A POWER CIRCUIT – MIN. #12 AWG.
120VAC / 15A AND BELOW – MIN. #14 AWG.

24VDC / 20A POWER CIRCUIT – MIN. #12 AWG.
24VDC / 15A AND BELOW – MIN. #16 AWG.
24VDC I/O & SIGNAL CIRCUIT – MIN. #18 AWG.

4-20mADC I/O SIGNAL CIRCUIT – MIN. #18 AWG.

## ABBREVIATIONS

| | |
|---|---|
| A/R | AS REQUIRED |
| AC COM | NEUTRAL |
| AFF | ABOVE FINISHED FLOOR |
| AI | ANALOG INPUT |
| ANL COM | ANALOG COMMON |
| AO | ANALOG OUTPUT |
| AWG | AMERICAN WIRE GAUGE |
| BLK | BLACK |
| BLU | BLUE |
| CAP | CENTRAL ARIZONA PROJECT |
| CLR | CLEAR |
| CR | CONTROL RELAY |
| DC COM | DC COMMON |
| DC+ | DC POSITIVE POTENTIAL |
| DI | DISCRETE INPUT |
| DO | DISCRETE OUTPUT |
| DS | DOOR SWITCH |
| FOM | FIBER OPTIC MODEM |
| FOT | FIBER OPTIC TRANSCEIVER |
| GND | GROUND |
| GRN | GREEN |
| I/O | INPUT/OUTPUT |
| L | LINE |
| N | NEUTRAL |
| NC | NORMALLY CLOSED |
| NO | NORMALLY OPEN |
| NP | NAMEPLATE |
| OIT | OPERATOR INTERFACE TERMINAL |
| ORN | ORANGE |
| PDB | POWER DISTRIBUTION BLOCK |
| PLC | PROGRAMMABLE LOGIC CONTROLLER |
| PP | FIBER OPTIC PATCH PANEL |
| PS | POWER SUPPLY |
| REC | RECEPTACLE |
| RES | RESERVOIR |
| RIO | REMOTE INPUT/OUTPUT |
| RTU | REMOTE TELEMETRY UNIT |
| SLC | SMALL LOGIC CONTROLLER |
| SP | SPACE |
| SS | SURGE SUPPRESSOR |
| TB | TERMINAL BLOCK |
| UPS | UNINTERRUPTIBLE POWER SUPPLY |
| WHT | WHITE |
| WTR | WATER TREATMENT PLANT |
| WWTP | WASTE WATER TREATMENT PLANT |

## LINETYPE LEGEND

- FIELD WIRING
- INTERNAL PANEL WIRING
- RADIO COMMUNICATION LINK
- FO – FIBER OPTIC CABLE
- FOP – FIBER OPTIC PATCH CABLE
- EN – ETHERNET CAT5 CABLE
- DH+ – DATA HIGHWAY PLUS
- RIO – REMOTE INPUT OUTPUT
- AREA DIVIDER
- EQUIPMENT
- PATCH PANEL


DLT&V
SYSTEMS ENGINEERING
3550 N. CENTRAL AVE, STE. 1900
PHOENIX, AZ 85012 (602) 266-4556


Registered Professional Engineer (Electrical) CERTIFICATE NO. 37390 MELINDA TAM Date Signed 9-22-08 ARIZONA, U.S.A.

Expires 3/31/11

NOTES

REVISIONS

| REV. | BY | DATE | DESCRIPTION |
|---|---|---|---|
| | | | |
| | | | |
| | | | |
| | | | |

CASA GRANDE WATER SYSTEM
SCADA PHASE II – WELL #10

ARIZONA WATER COMPANY

STANDARD SYMBOLS AND ABBREVIATIONS

| | |
|---|---|
| DRAWN BY: MAB | PROJECT NO. 1219.01.027 |
| DESIGNED BY: MAB | SUBMITTAL DATE: SEPT 2008 |
| CHECKED BY: BA | DRAWING NUMBER EC3 |


DWG FILE: 1219.01.101_EC3.dwg 10:56am PLOTTED: Sep 30, 2008 stevis

# CASA GRANDE WATER SYSTEM
# SCADA DESIGN – PHASE II
# WELL NO. 10 RTU DESIGN
# ISA TABLE AND COMMON LEGENDS SHEET

## ISA INSTRUMENT IDENTIFICATION TABLE

| FIRST LETTERS | | | SUCCEEDING LETTERS | | |
|---|---|---|---|---|---|
| MEASURED OR INITIATING VARIABLE | | MODIFIER | READOUT OR PASSIVE FUNCTION | OUTPUT FUNCTION | MODIFIER |
| A | ANALYZER | | ALARM | | AUTO |
| B | BURNER, COMBUSTION | | | | |
| C | CONDUCTIVITY | | | CONTROL | CLOSED |
| D | DENSITY | DIFFERENTIAL | | | |
| E | VOLTAGE | | ELEMENT | | |
| F | FLOW | RATIO | | | |
| G | GAUGE | | GLASS, VIEWING DEVICE | | |
| H | HAND | | | | HIGH |
| I | CURRENT | | INDICATE | | |
| J | POWER | SCAN | | | |
| K | TIME, TIME SCHED. | TIME RATE OF CHANGE | | CONTROL STATION | |
| L | LEVEL | | LIGHT | | LOW |
| M | MOTION | | | | MIDDLE |
| N | INTRUSION | | | | NORMAL |
| O | TORQUE | | ORIFICE, RESTRICTION | | OPEN |
| P | PRESSURE | | POINT CONNECTION | | STOP |
| Q | QUANTITY | INTEGRATE, TOTALIZE | | | |
| R | RADIATION | | RECORD, OR PRINT | | REMOTE |
| S | SPEED, FREQUENCY | SAFETY | | SWITCH | START |
| T | TEMPERATURE | | | TRANSMIT | |
| U | MULTIVARIABLE | | MULTIFUNCTION | MULTIFUNCTION | MULTIFUNCTION |
| V | VIBRATION | | | VALVE, LOUVER | |
| W | WEIGHT | | WELL | | |
| X | MOTOR | X-AXIS | UNCLASSIFIED | UNCLASSIFED | UNCLASSIFED |
| Y | EVENT, STATE, OR PRESENCE | Y-AXIS | | RELAY, COMPUTE, CONVERT | |
| Z | POSITION | Z-AXIS | | DRIVER, ACTUATOR, FINAL CONTROL ELEMENT | |

### FIELD WIRES TAG LEGEND

DEVICE NAME/TBXX-00
- TERMINAL NO.
- TERMINAL STRIP NO.
- FIELD DEVICE TAG NO.

### PANEL POWER WIRES TAG LEGEND

TBXX-03/TBXX-03
- TO TERMINAL NO.
- TO TERMINAL STRIP NO.
- FROM TERMINAL NO.
- FROM TERMINAL STRIP NO.

### PANEL I/O WIRES TAG LEGEND

O:#.2/TBXX-03
- INPUT POINT NO.
- TERMINAL STRIP NO.
- CHANNEL #
- SLOT #
- O=OUTPUT I=INPUT

### COLOR CODE CHART FOR 22 AWG BELDEN PAIRED CABLE NO. 8761

| | | |
|---|---|---|
| BLACK | BLK | 1st |
| CLEAR | CLR | 2nd |

### PANEL WIRING IDENTIFICATION

BLACK – 120VAC LINE
WHITE – 120VAC NEUTRAL
GREEN – GROUND
ORANGE – DC POSITIVE
BLUE – DC COMMON

DLT&V
SYSTEMS ENGINEERING
3550 N. CENTRAL AVE, STE. 1900
PHOENIX, AZ 85012 (602) 266-4558

Registered Professional Engineer (Electrical) No. 37390 MELINDA TAM Date Signed 9-26-08 ARIZONA, U.S.A.

Expires 3/31/11

NOTES

REVISIONS

| REV. | BY | DATE | DESCRIPTION |
|---|---|---|---|
| | | | |
| | | | |
| | | | |
| | | | |

CASA GRANDE WATER SYSTEM
SCADA PHASE II – WELL #10

ARIZONA WATER COMPANY

ISA TABLE AND COMMON LEGENDS SHEET

| DRAWN BY: | PROJECT NO. |
|---|---|
| MAB | 1219.01.027 |
| DESIGNED BY: | SUBMITTAL DATE: |
| MAB | SEPT 2008 |
| CHECKED BY: | DRAWING NUMBER |
| BA | EC4 |

PLOTTED: Sep 30, 2008 slewis
10:56am
DWG FILE: 1219.01.101_EC4.dwg

| QTY | ITEM # | MANUFACTURER | PART NUMBER | DESCRIPTION |
|---|---|---|---|---|
| 1 | 100 | MODICON | 171CCC96030 | M1E PROCESSOR ADAPTER, ETHERNET AND I/O BUS PORTS, WEB PAGE ENABLED, IEC |
| 2 | 101 | MODICON | 170INT11000 | MOMENTUM INTERBUS \ I/O BUS COMMUNICATIONS ADAPTER |
| 1 | 102 | MODICON | 170ADI35000 | 24V DC - 32 PT. INPUT MODULE BASE |
| 1 | 103 | MODICON | 170ADO34000 | 24V DC / 0.5A - 16 PT. OUTPUT MODULE BASE, 0.5 A OUTPUT |
| 1 | 104 | MODICON | 170AAI03000 | MOMENTUM SERIES I/O BASE, ANALOG 8CH DIFFERENTIAL INPUT MODULE BASE |
| 1 | 105 | MODICON | 172JNN21032 | MOMENTUM SERIES OPTION ADAPTER W/ GENERAL PURPOSE SERIAL COMMUNICATION PORT, RS-232 OR RS-485 SELECTABLE |
| 1 | 106 | MODICON | XBT GT5330 | EXTERNAL DISPLAY WITH 10.4" COLOR TFT,VGA RESOLUTION (640X480 PIXELS), 24V POWER |
| 1 | 107 | WEIDMULLER | IE-SW8-ECO | INDUSTRIAL 8-PORT ETHERNET SWITCH, 10/100 Mbps, UNMANAGED |
| 2 | 108 | MODICON | 170MCI00700 | INTERBUS CABLE |
| 1 | 110 | BELDEN | 8267 | CABLE, COAXIAL, RG-213 (OR EQUAL) WITH APPROPRIATE CONNECTORS, (LENGTH AS REQUIRED) |
| 1 | 111 | MDS | iNET-II-HP | ETHERNET REMOTE RADIO TRANSCEIVER, SPREAD SPECTRUM, W/ REMOTE DIAGNOSTICS |
| 3 | 112 | MODICON | 170XTS00100 | CONNECTOR SET, SCREW-TYPE (SET OF 3) |
| A/R | 201 | ALLEN-BRADLEY | 1492-DR6 | TERMINAL MOUNTING RAIL, HI-RISE, ALUMINUM |
| 14 | 202 | ALLEN-BRADLEY | 1492-EA35 | END ANCHOR |
| 6 | 210 | ALLEN-BRADLEY | 1492-GM35 | TERMINAL BLOCK, GROUP MARKING CARRIER |
| 18 | 215 | ALLEN-BRADLEY | 1492-J4 | TERMINAL BLOCK, SINGLE CIRCUIT, 600V, GRAY |
| 1 | 218 | ALLEN-BRADLEY | 1492-JD3 | TERMINAL BLOCK, DOUBLE LEVEL |
| 67 | 219 | ALLEN-BRADLEY | 1492-JD3P | TERMINAL BLOCK, DOUBLE LEVEL W/ PLUGGABLE TOP LEVEL |
| 4 | 221 | ALLEN-BRADLEY | 1492-JG4 | TERMINAL BLOCK, SINGLE CIRCUIT, GROUNDING |
| 53 | 223 | ALLEN-BRADLEY | 1492-FPK224 | FUSE PLUG INSERT W/ BFI, 10-36VAC/DC WORKING VOLTAGE, 10A MAX @ 250V. PROVIDE FAST BLOW FUSES AS REQUIRED |
| 8 | 225 | ALLEN-BRADLEY | 1492-DPL | DISCONNECT PLUG FOR 1492-JD3 P AND 1492-JD3 |
| 2 | 230 | WEIDMULLER | 9926251001 | CIRCUIT BREAKER, 1A |
| 4 | 231 | WEIDMULLER | 9926251002 | CIRCUIT BREAKER, 2A |
| 2 | 232 | WEIDMULLER | 9926251003 | CIRCUIT BREAKER, 3A |
| 1 | 233 | WEIDMULLER | 9926251010 | CIRCUIT BREAKER, 10A |
| 3 | 234 | WEIDMULLER | 9926251015 | CIRCUIT BREAKER, 15A |
| 1 | 235 | WEIDMULLER | 9926251020 | CIRCUIT BREAKER, 20A |
| 53 | 282 | ANY | ANY | 250V, 5mmX20mm FAST BLOW GLASS FUSES (SIZE AS INDICATED ON DRAWING) |
| 1 | 304 | HOFFMAN | A72H3724FS3PT | ENCLOSURE, FREE STANDING, TYPE 4/12 W/3-POINT LATCH, 72"X37"X24" |
| 1 | 305 | HOFFMAN | A72P36F1 | SUBPANEL, WHITE PAINT, 60"X32" |
| 1 | 306 | HOFFMAN | A72SP36F4 | SWING-OUT PANEL, HALF PANEL, 30.88" X 33.81" |
| 1 | 313 | HOFFMAN | ALF16D18R | 18" FLOURESCENT LIGHTING PACKAGE W/DOOR SWITCH, 115VAC |
| 1 | 316 | HOFFMAN | A-TEMNO | TEMPERATURE CONTROL SWITCH (THERMOSTAT), N.O. CONTACTS |
| A/R | 359 | BELDEN | 7929A | CABLE, ETHERNET, 4 PR, 24 AWG, CAT 5E |
| 1 | 377 | ANY | ANY | GROUNDING BAR |
| 1 | 378 | CUSTOM | CUSTOM | CUSTOM SHELF SUPPLIED AND INSTALLED BY PANEL FABRICATOR |
| A/R | 379 | PANDUIT | F2X4LG6 C2LG6 | 2 X 4 PLASTIC WIRING DUCT TYPE "E" W/COVER STYLE "C" |
| A/R | 380 | PANDUIT | F3X4LG6 C3LG6 | 3 X 4 PLASTIC WIRING DUCT TYPE "E" W/COVER STYLE "C" |
| 1 | 398 | HUBBELL | HBL5362I | DUPLEX RECEPTACLE, IVORY, 125V/20A, W/BOX AND BRUSHED ALUMINUM COVER (HUBBELL P.N.# A8) |
| 1 | 399 | HUBBELL | HBL5361I | SIMPLEX RECEPTACLE, IVORY, 125V/20A, W/BOX AND BRUSHED ALUMINUM COVER (HUBBELL P.N.# A7) |
| 1 | 400 | HUBBELL | HBL3810R | SIMPLEX RECEPTACLE, RED, 125V/20A, W/BOX AND BRUSHED ALUMINUM COVER (HUBBELL P.N.# A7) |
| 2 | 405 | WEIDMULLER | 8708670000 (CP SNT 250W 24V 10A) | POWER SUPPLY, 24VDC, 250W, 10A, W/ STATUS RELAY |
| 1 | 406 | WEIDMULLER | 8710620000 (CP DM 10) | DIODE MODULE, 10A PER INPUT, 40VDC MAX |
| 1 | 408 | IDEC | RH2B-UL-AC120V | RELAY, 120VAC COIL, DPDT W/ INDICATOR |
| 1 | 421 | IDEC | SH2B-05C | RELAY SOCKET, DIN RAIL MOUNT, FINGERSAFE |
| 1 | 450 | MTL SURGE TECHNOLOGIES | MA15/D/1/SI | 120/240 VAC, 15A, SURGE SUPPRESSOR AND FILTER |
| 8 | 451 | WEIDMULLER | 8448920000 | SURGE SUPPRESSOR, 24VDC, 2 WIRE LOOP PROTECTION (MCZ OVP) W/ END CAP PART #8389030000 |
| 8 | 452 | WEIDMULLER | 8389030000 | END CAP FOR 24VDC SURGE SUPPRESSOR (MCZ OVP) |
| 16 | 455 | ALLEN-BRADLEY | 700-HLT1Z24 | TERMINAL BLOCK RELAY, 24VDC, 6A CONTACTS, SPDT W/ LED |
| 2 | 505 | HOFFMAN | CR29-0416-G068 | AIR CONDITIONER, 120 VAC, 4000 BTU/HR, W/OUTDOOR ENCLOSURE PACKAGE |
| 2 | 703 | APC | SUA750, AP9610 | UPS, 115 VAC, 750 VA W/ RELAY I/O SMARTSLOT CARD OPTION, MINIMUM 30 MIN. RUNTIME OF COMPLETE PLC OPERATIONS POWER |
| 2 | 811 | POLYPHASER | IS-50NX-C2 | BROADBAND COAXIAL SURGE PROTECTOR, FLANGE MOUNT, 125-1000MHZ |
| 2 | 853 | TIMES MICROWAVE SYSTEMS | EZ-900-NMC | N-MALE CONNECTOR |

DWG FILE: 1219.01.101_EC5.dwg 10:57am PLOTTED: Sep 30, 2008 slewis

DLT&V
SYSTEMS ENGINEERING
4645 E. COTTON CENTER BLVD. SUITE 100
PHOENIX, AZ 85040 | (602) 286-4588

Registered Professional Engineer (Electrical)
CERTIFICATE NO.
37390
MELINDA TAM
Date Signed 9-29-08
ARIZONA, U.S.A.

Expires 3/31/11

NOTES

REVISIONS

| REV. | BY | DATE | DESCRIPTION |
|---|---|---|---|
| | | | |
| | | | |
| | | | |
| | | | |

CASA GRANDE WATER SYSTEM
SCADA PHASE II – WELL #10

ARIZONA WATER COMPANY

BILL OF MATERIALS

| DRAWN BY: | PROJECT NO. |
|---|---|
| MAB | 1219.01.027 |
| DESIGNED BY: | SUBMITTAL DATE: |
| MAB | SEPT 2008 |
| CHECKED BY: | DRAWING NUMBER |
| BA | EC5 |

## NOTES:

1. BILL OF MATERIALS IS ON DRAWING EC5.
2. REFER TO DRAWING EC7 FOR PLC INTERIOR LAYOUT.
3. FURNISH ADDITIONAL NAMEPLATES AS REQUIRED BY UL OR BY OTHER APPLICABLE CODES.
4. MOMOUNT UPS MINIMUM 6" ABOVE GRADE LEVEL. PANEL FABRICATOR SHALL SUPPLY AND INSTALL CUSTOM SUPPORT HARDWARE IN ENCLOSURE AS REQUIRED.

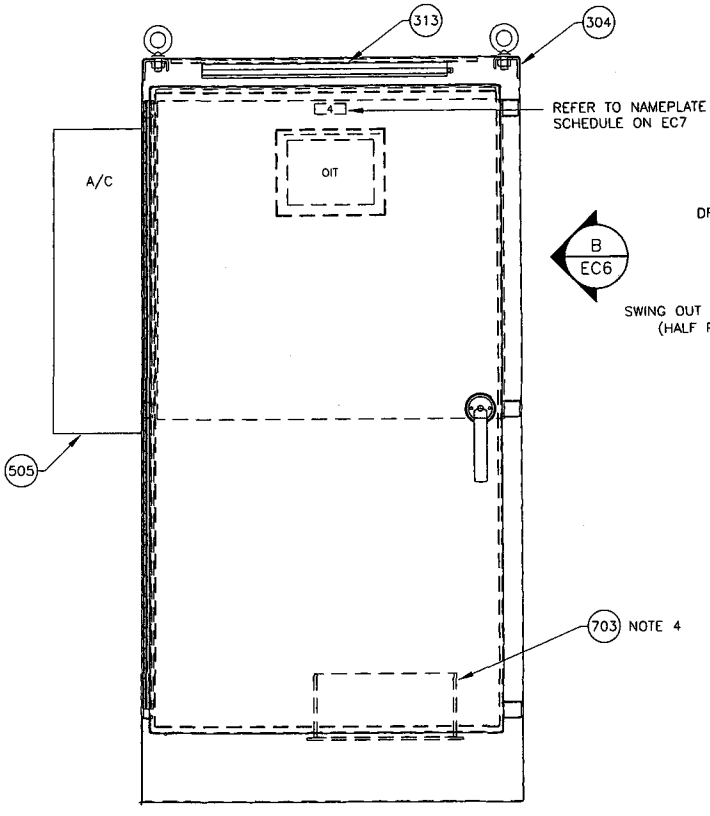


A ~ RTU ENCLOSURE, FRONT
1"=1'-0"

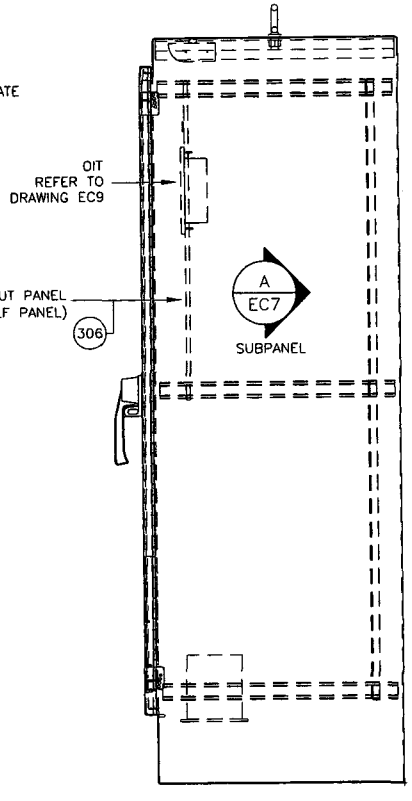


B ~ RTU ENCLOSURE, SIDE
1"=1'-0"

DLT&V SYSTEMS ENGINEERING
3550 N. CENTRAL AVE, STE. 1900
PHOENIX, AZ 85012 (602) 266-4656

Registered Professional Engineer (Electrical) No. 37390 MELINDA TAM Date Signed 9.25.08 ARIZONA, U.S.A.

Expires 3/31/11

NOTES

| REVISIONS | | | |
|---|---|---|---|
| REV. | BY | DATE | DESCRIPTION |
| | | | |
| | | | |
| | | | |
| | | | |

CASA GRANDE WATER SYSTEM
SCADA PHASE II – WELL #10

ARIZONA WATER COMPANY

RTU ENCLOSURE LAYOUT

| | |
|---|---|
| DRAWN BY: MAB | PROJECT NO. 1219.01.027 |
| DESIGNED BY: MAB | SUBMITTAL DATE: SEPT 2008 |
| CHECKED BY: BA | DRAWING NUMBER EC6 |

DWG FILE: 1219.01.101_EC6.dwg 10:58am PLOTTED: Sep 30, 2008 stewis

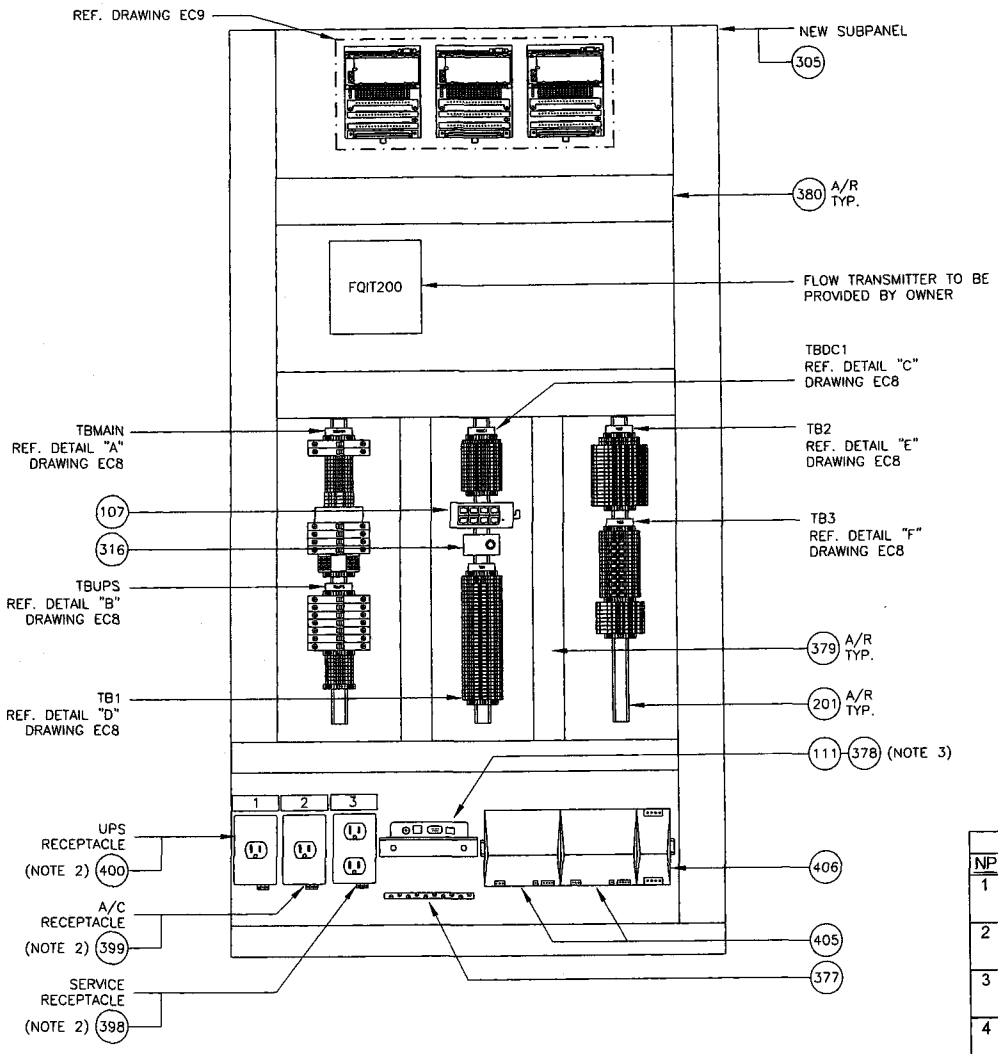


A EC6 SUBPANEL LAYOUT
1-1/2"=1'-0"

## NOTES:

1. BILL OF MATERIALS IS ON DRAWING EC5.
2. NAMEPLATE SHALL BE 3/32" THICK LAMINATED PHENOLIC TYPE BLACK WITH WHITE LETTERS. SEE BILL OF MATERIALS ON DRAWING EC5 AND NAMEPLATE SCHEDULE (DET B) ON THIS SHEET FOR ADDITIONAL INFORMATION.
3. MOUNT RADIO ON CUSTOM SHELF PROVIDED AND INSTALLED BY PANEL FABRICATOR. REFER TO DRAWING EC9 AND BILL OF MATERIALS ON EC5 FOR MORE INFORMATION.

**NAMEPLATE SCHEDULE (NOTE 2)**

| NP | HxWxLTR | FIRST LINE | SECOND LINE | LOCATION |
|---|---|---|---|---|
| 1 | 1" x 3" x 1/4" | UPS RECEPTACLE | ONLY | CENTERED ABOVE UPS RECEPTACLE |
| 2 | 1" x 3" x 1/4" | A/C RECEPTACLE | ONLY | CENTERED ABOVE A/C RECEPTACLE |
| 3 | 1" x 3" x 1/4" | SERVICE RECEPTACLE | ONLY | CENTERED ABOVE SERVICE RECEPTACLE |
| 4 | 1" x 3" x 1/4" | OIT | | CENTERED ABOVE OIT |

B NAMEPLATE SCHEDULE

DLT&V SYSTEMS ENGINEERING
3550 N. CENTRAL AVE., STE. 1900
PHOENIX, AZ 85012 (602) 264-4459

Registered Professional Engineer (Electrical) CERTIFICATE NO. 37390 MELINDA TAM Date Signed 9-29-08 ARIZONA, U.S.A.
Expires 3/31/11

NOTES

REVISIONS

| REV. | BY | DATE | DESCRIPTION |
|---|---|---|---|
| | | | |
| | | | |
| | | | |
| | | | |

CASA GRANDE WATER SYSTEM
SCADA PHASE II – WELL #10

ARIZONA WATER COMPANY

RTU SUBPANEL LAYOUT

| DRAWN BY: | PROJECT NO. |
|---|---|
| MAB | 1219.01.027 |
| DESIGNED BY: | SUBMITTAL DATE: |
| MAB | SEPT 2008 |
| CHECKED BY: | DRAWING NUMBER |
| BA | EC7 |

DWG FILE: 1219.01.101_EC7.dwg 10:58am PLOTTED: Sep 30, 2008 stevis

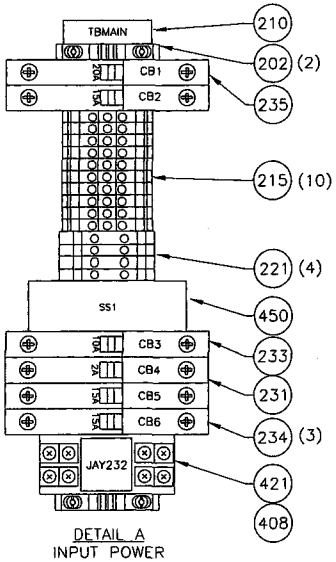


DETAIL A
INPUT POWER
TBMAIN

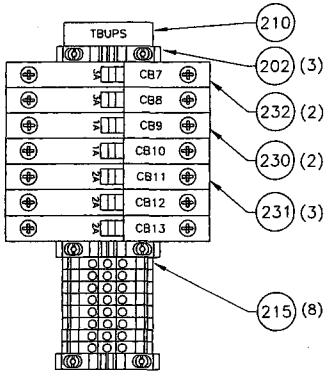


DETAIL B
PANEL POWER
TBUPS

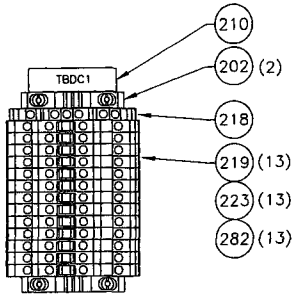


DETAIL C
24VDC POWER
DISTRIBUTION
TBDC1

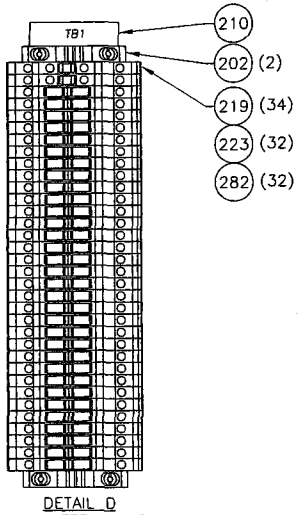


DETAIL D
DISCRETE INPUT
TB1

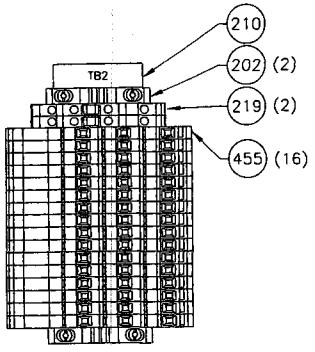


DETAIL E
DISCRETE OUTPUT
TB2

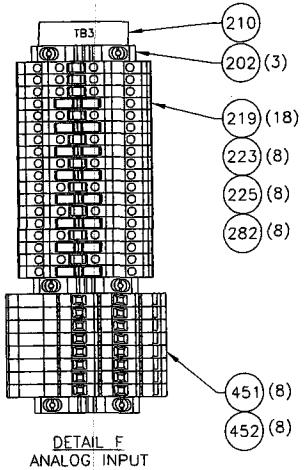


DETAIL F
ANALOG INPUT
TB3

## NOTES:

1. PROVIDE BUS BAR STYLE OR INSULATED COMB STYLE JUMPERS WHERE 2 OR MORE TERMINALS IN THE SAME TB ARE COMMONED TOGETHER. DO NOT USE DISCRETE WIRE JUMPERS.
2. BILL OF MATERIALS IS ON DRAWING EC5.
3. PANEL BUILDER TO SUPPLY AND INSTALL ALL NECESSARY AND APPROPRIATE ACCESSORIES INCLUDING TERMINAL NUMBERS, JUMPERS AND END BARRIERS.

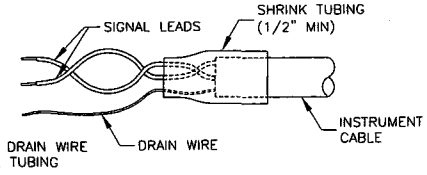


NOTE:
WRAP UNUSED DRAIN WIRE
UNDER SHRINK TUBING

DETAIL G
INSTRUMENT CABLE
TERMINATION

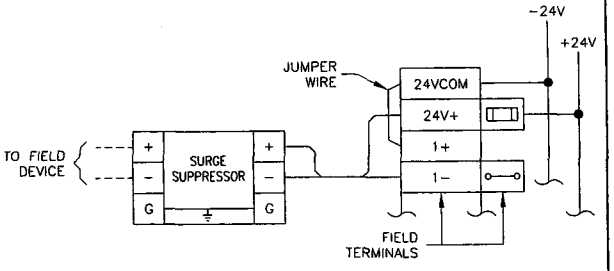


2-WIRE

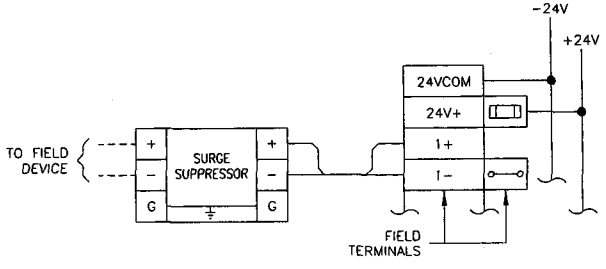


4-WIRE

DETAIL H
ANALOG INPUT TERMINALS
2 & 4-WIRE TYPICAL CONNECTIONS

DLT&V
SYSTEMS ENGINEERING
3550 N. CENTRAL AVE, STE. 1900
PHOENIX, AZ 85012 (602) 266-4658

Registered Professional Engineer (Electrical)
CERTIFICATE NO.
37390
MELINDA
TAM
Date Signed 9.29.08
ARIZONA, U.S.A.
Expires 3/31/11

NOTES

REVISIONS

| REV. | BY | DATE | DESCRIPTION |
|---|---|---|---|
| | | | |

CASA GRANDE WATER SYSTEM
SCADA PHASE II – WELL #10

ARIZONA WATER COMPANY

TERMINAL BLOCK DETAILS

| | |
|---|---|
| DRAWN BY: MAB | PROJECT NO. 1219.01.027 |
| DESIGNED BY: MAB | SUBMITTAL DATE: SEPT 2008 |
| CHECKED BY: BA | DRAWING NUMBER EC8 |

DWG FILE: 1219.01.101_EC8.dwg 10:58am PLOTTED: Sep 30, 2008 slewis

## NOTES:

1. BILL OF MATERIALS IS ON DRAWING EC5.
2. ANTENNA, ANTENNA MAST, GROUNDING KIT AND CABLE PROVIDED AND INSTALLED BY OTHERS.

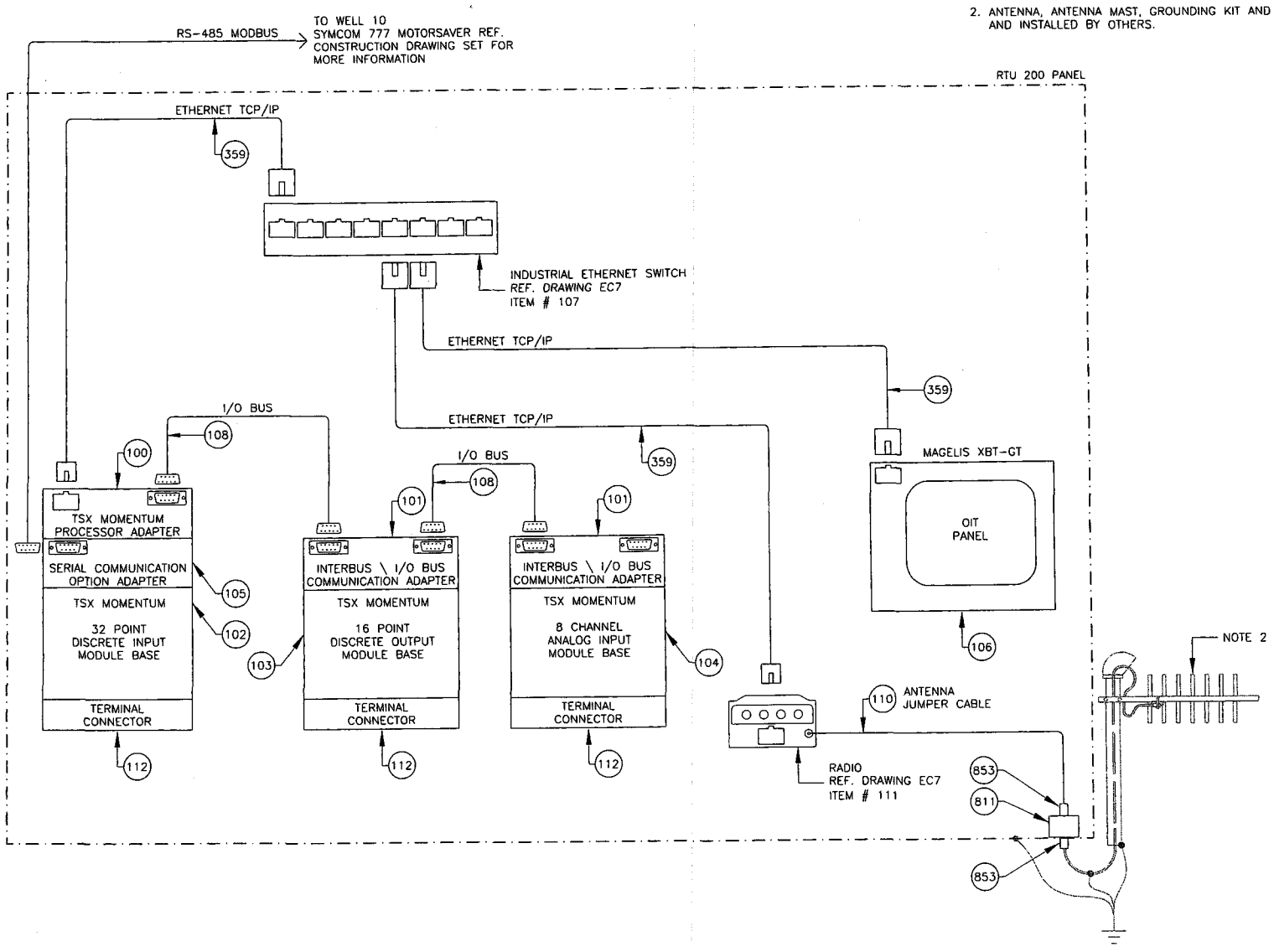


DWG FILE: 1219.01.101_EC9.dwg 10:58am PLOTTED: Sep 30, 2008 stewis

DLT&V
SYSTEMS ENGINEERING
3550 N. CENTRAL AVE. STE. 1900
PHOENIX, AZ 85012 (602) 266-4688

Registered Professional Engineer (Electrical)
No. 37390
MELINDA TAM
Date Signed 9.29.08
ARIZONA U.S.A.
Expires 3/31/11

NOTES

REVISIONS

| REV. | BY | DATE | DESCRIPTION |
|---|---|---|---|
| | | | |
| | | | |
| | | | |
| | | | |

CASA GRANDE WATER SYSTEM
SCADA PHASE II – WELL #10

ARIZONA WATER COMPANY

COMMUNICATIONS SYSTEM ARCHITECTURE DIAGRAM

| DRAWN BY: | PROJECT NO. |
|---|---|
| MAB | 1219.01.027 |
| DESIGNED BY: | SUBMITTAL DATE: |
| MAB | SEPT 2008 |
| CHECKED BY: | DRAWING NUMBER |
| BA | EC9 |

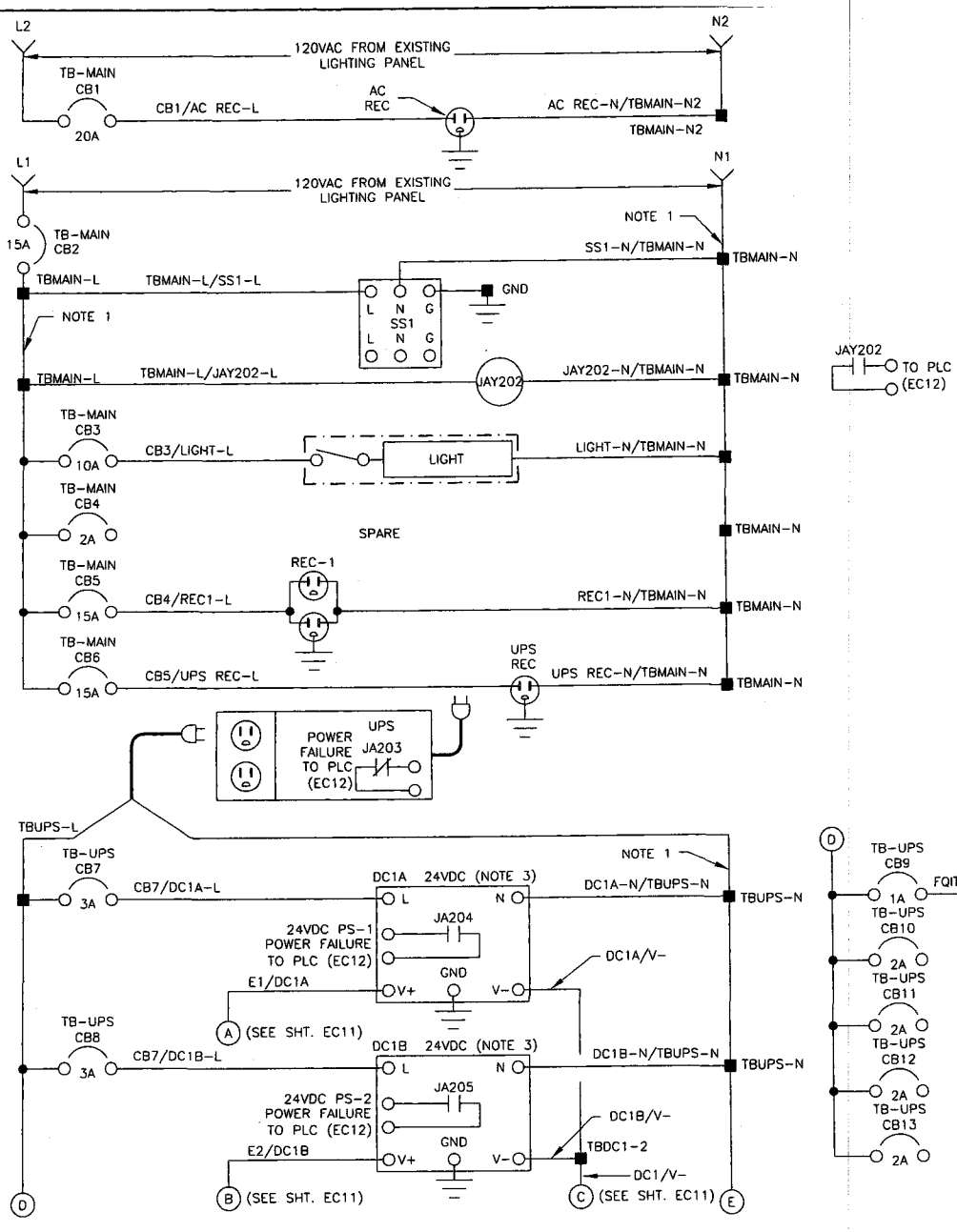


# NOTES:

1. PROVIDE BUS BAR STYLE OR INSULATED COMB STYLE JUMPERS WHERE 2 OR MORE TERMINALS IN THE SAME TB ARE COMMONED TOGETHER. DO NOT USE DISCRETE WIRE JUMPERS.
2. BILL OF MATERIALS IS ON DRAWING EC5.
3. ADJUST VOLTAGE OUTPUT SETTING ON DC1B TO BE 1.0 VOLT LESS THAN DC1A.

## 120VAC POWER DISTRIBUTION


DLT&V
SYSTEMS ENGINEERING
3550 N. CENTRAL AVE, STE. 1900
PHOENIX, AZ 85012 (602) 266-4658


Registered Professional Engineer (Electrical)
No. 37390
MELINDA TAM
Date Signed 9.26.08
ARIZONA, U.S.A.
Expires 3/31/11

NOTES

REVISIONS

| REV. | BY | DATE | DESCRIPTION |
|---|---|---|---|
| | | | |
| | | | |
| | | | |
| | | | |

CASA GRANDE WATER SYSTEM
SCADA PHASE II – WELL #10

ARIZONA WATER COMPANY

120VAC POWER DISTRIBUTION SCHEMATIC

| | |
|---|---|
| DRAWN BY: MAB | PROJECT NO. 1219.01.027 |
| DESIGNED BY: MAB | SUBMITTAL DATE: SEPT 2008 |
| CHECKED BY: BA | DRAWING NUMBER EC10 |


DWG FILE: 1219.01.101_EC10.dwg 10:38am PLOTTED: Sep 30, 2008 slewis

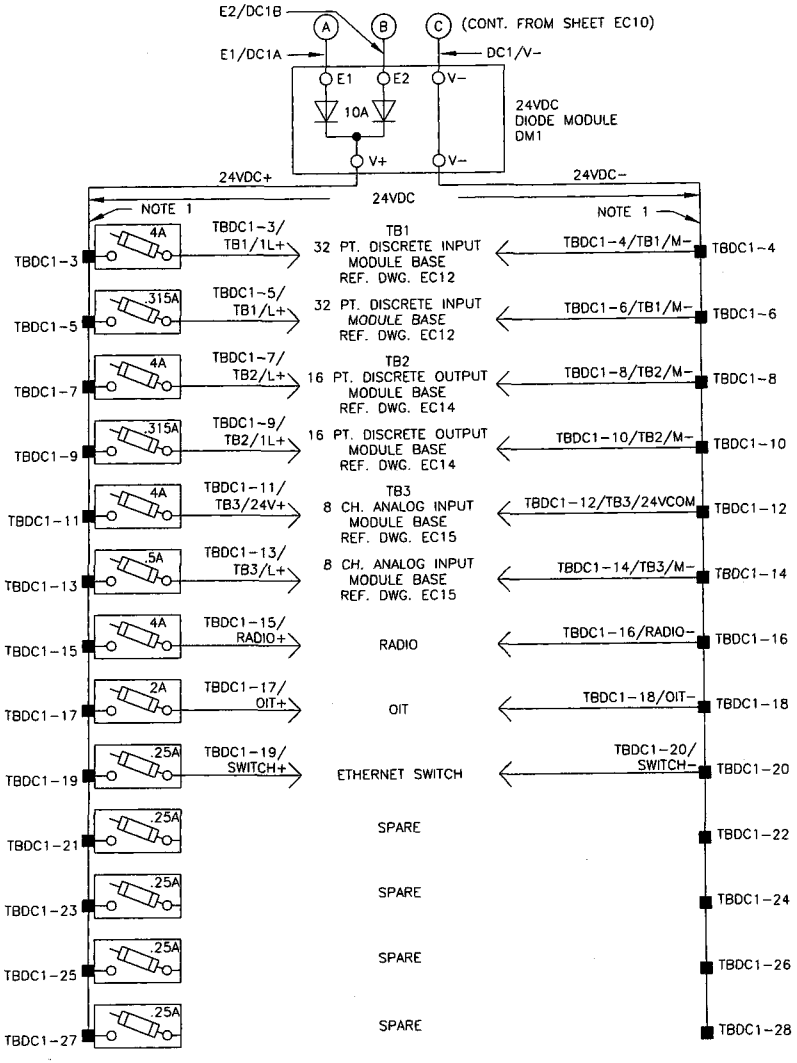


24VDC POWER DISTRIBUTION

# NOTES:

1. PROVIDE BUS BAR STYLE OR INSULATED COMB STYLE JUMPERS WHERE 2 OR MORE TERMINALS IN THE SAME TB ARE COMMONED TOGETHER. DO NOT USE DISCRETE WIRE JUMPERS.
2. BILL OF MATERIALS IS ON DRAWING EC5.
3. THE PROPER FUSE SIZE ON ANY FUTURE EQUIPMENT INSTALLATIONS UTILIZING SPARE CIRCUITS WILL BE THE RESPONSIBILITY OF THE OWNER.


DLT&V
SYSTEMS ENGINEERING
3560 N. CENTRAL AVE, STE. 1900
PHOENIX, AZ 85012 (602) 265-4658


Registered Professional Engineer (Electrical)
CERTIFICATE NO.
37390
MELINDA
TAM
Date Signed 9.29.08
ARIZONA, U.S.A.
Expires 3/31/11

NOTES

REVISIONS

| REV. | BY | DATE | DESCRIPTION |
|---|---|---|---|
| | | | |
| | | | |
| | | | |
| | | | |

CASA GRANDE WATER SYSTEM
SCADA PHASE II - WELL #10

ARIZONA WATER COMPANY

24VDC POWER DISTRIBUTION SCHEMATIC

| DRAWN BY: | PROJECT NO. |
|---|---|
| MAB | 1219.01.027 |
| DESIGNED BY: | SUBMITTAL DATE: |
| MAB | SEPT 2008 |
| CHECKED BY: | DRAWING NUMBER |
| BA | EC11 |


DWG FILE: 1219.01.101_EC11.dwg 10:59am PLOTTED: Sep 30, 2008 stevis

## NOTES:

1. WIRE MODULES AND SIZE FUSES PER MANUFACTURER'S REQUIREMENTS.
2. BUS OR INSULATED COMB STYLE JUMPER.

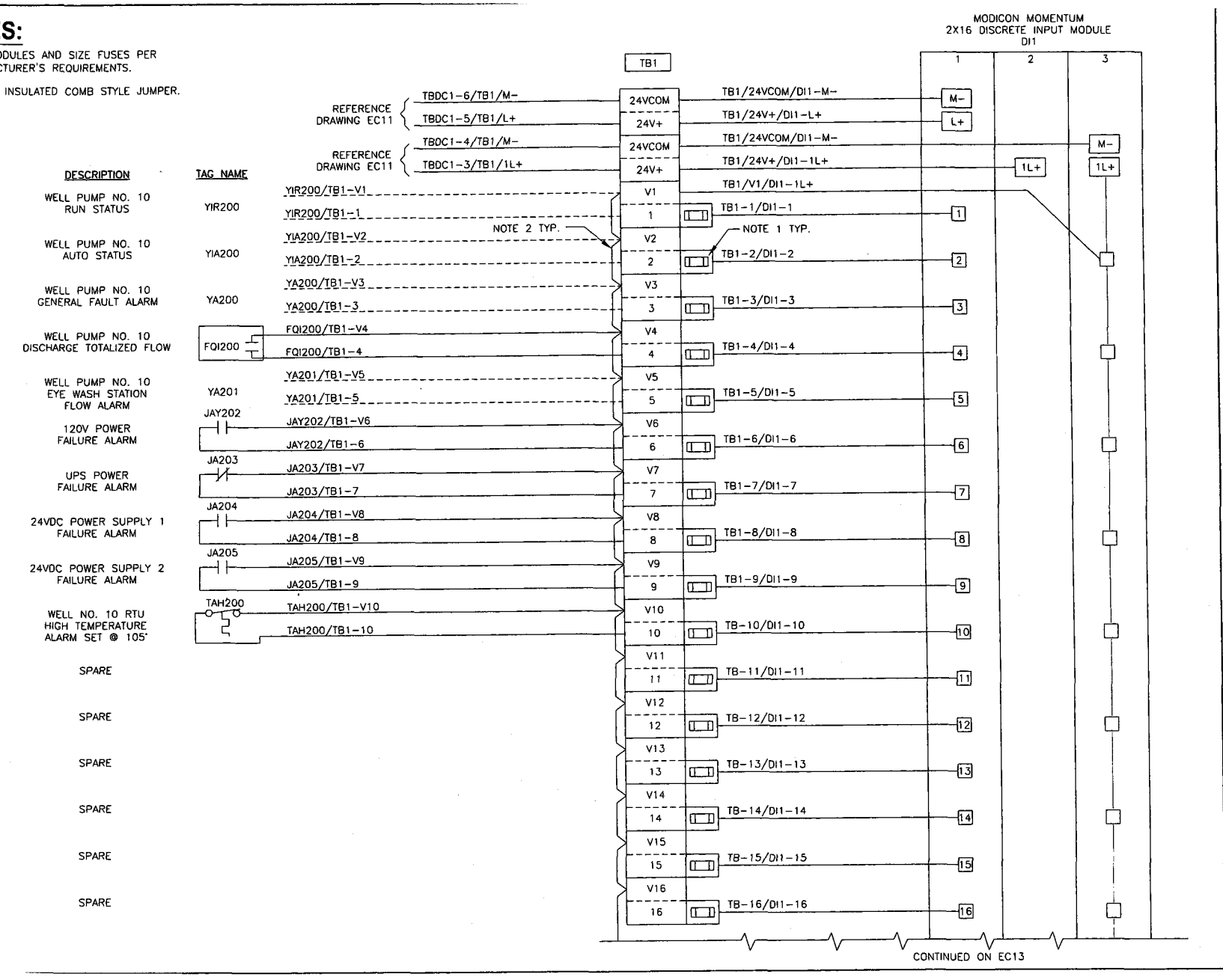



DLT&V
SYSTEMS ENGINEERING
3550 N. CENTRAL AVE, STE. 1900
PHOENIX, AZ 85012 (602) 266-4656


Registered Professional Engineer (Electrical)
MELINDA TAM
No. 37390
Date Signed 9.25.08
ARIZONA, U.S.A.
Expires 3/31/11

NOTES

REVISIONS

| REV. | BY | DATE | DESCRIPTION |
|---|---|---|---|
| | | | |
| | | | |
| | | | |
| | | | |

CASA GRANDE WATER SYSTEM
SCADA PHASE II – WELL #10

ARIZONA WATER COMPANY

DISCRETE INPUT MODULE BASE WIRING DIAGRAM – SHEET 1

| DRAWN BY: | PROJECT NO. |
|---|---|
| MAB | 1219.01.027 |
| DESIGNED BY: | SUBMITTAL DATE: |
| MAB | SEPT 2008 |
| CHECKED BY: | DRAWING NUMBER |
| BA | EC12 |

DWG FILE: 1219.01.101_EC12.dwg PLOTTED: Sep 30, 2008 steves 10:58am

# NOTES:

1. WIRE MODULES AND SIZE FUSES PER MANUFACTURER'S REQUIREMENTS.
2. BUS OR INSULATED COMB STYLE JUMPER.

| DESCRIPTION | TAG NAME |
|---|---|
| SPARE | |
| SPARE | |
| SPARE | |
| SPARE | |
| SPARE | |
| SPARE | |
| SPARE | |
| SPARE | |
| SPARE | |
| SPARE | |
| SPARE | |
| SPARE | |
| SPARE | |
| SPARE | |
| SPARE | |

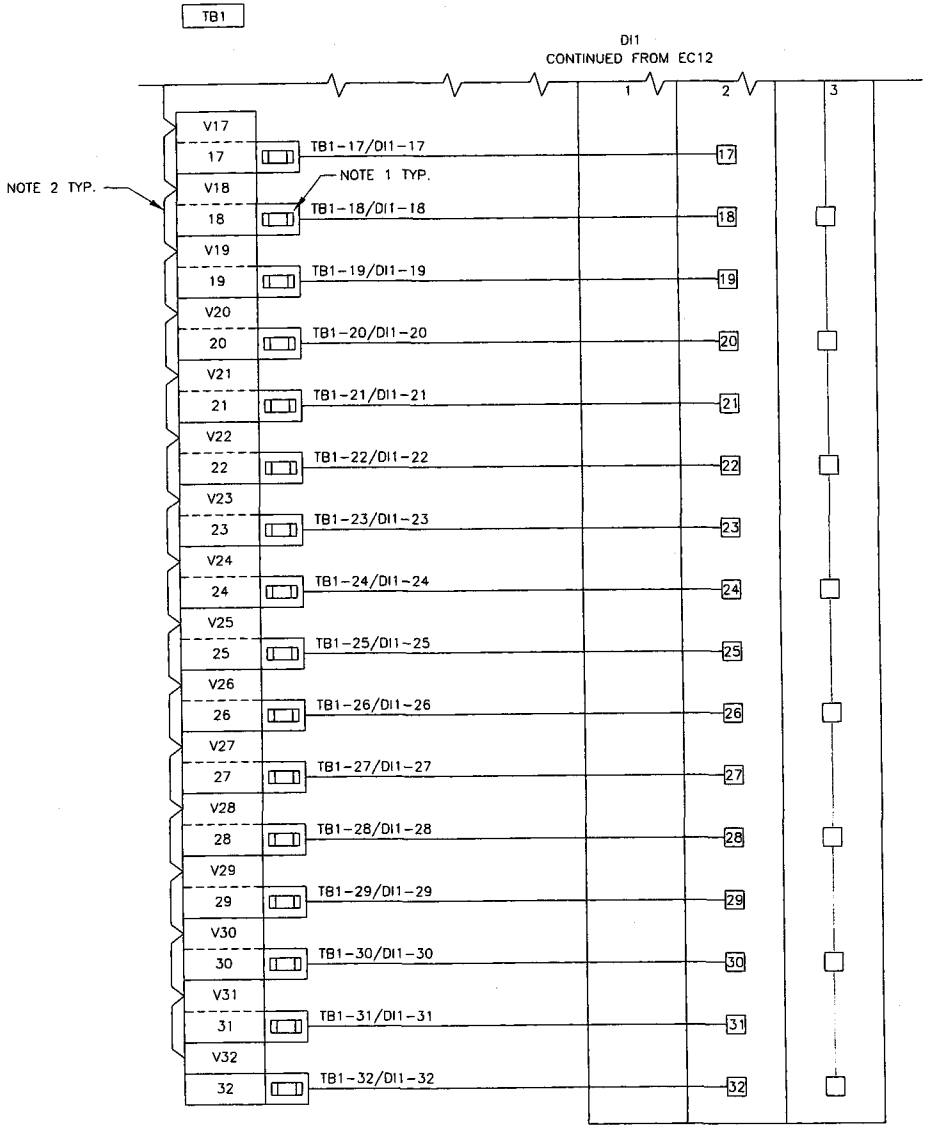


DLT&V
SYSTEMS ENGINEERING
3550 N. CENTRAL AVE, STE. 1900
PHOENIX, AZ 85012 (602) 266-4658

Registered Professional Engineer (Electrical)
CERTIFICATE NO. 37390
MELINDA TAM
Date Signed 9.29.08
ARIZONA, U.S.A.
Expires 3/31/11

NOTES

REVISIONS

| REV. | BY | DATE | DESCRIPTION |
|---|---|---|---|
| | | | |

CASA GRANDE WATER SYSTEM
SCADA PHASE II – WELL #10

ARIZONA WATER COMPANY

DISCRETE INPUT
MODULE BASE
WIRING DIAGRAM – SHEET 2

| | |
|---|---|
| DRAWN BY: MAB | PROJECT NO. 1219.01.027 |
| DESIGNED BY: MAB | SUBMITTAL DATE: SEPT 2008 |
| CHECKED BY: BA | DRAWING NUMBER EC13 |

DWG FILE: 1219.01.101_EC13.dwg 10:59am PLOTTED: Sep 30, 2008 slewis

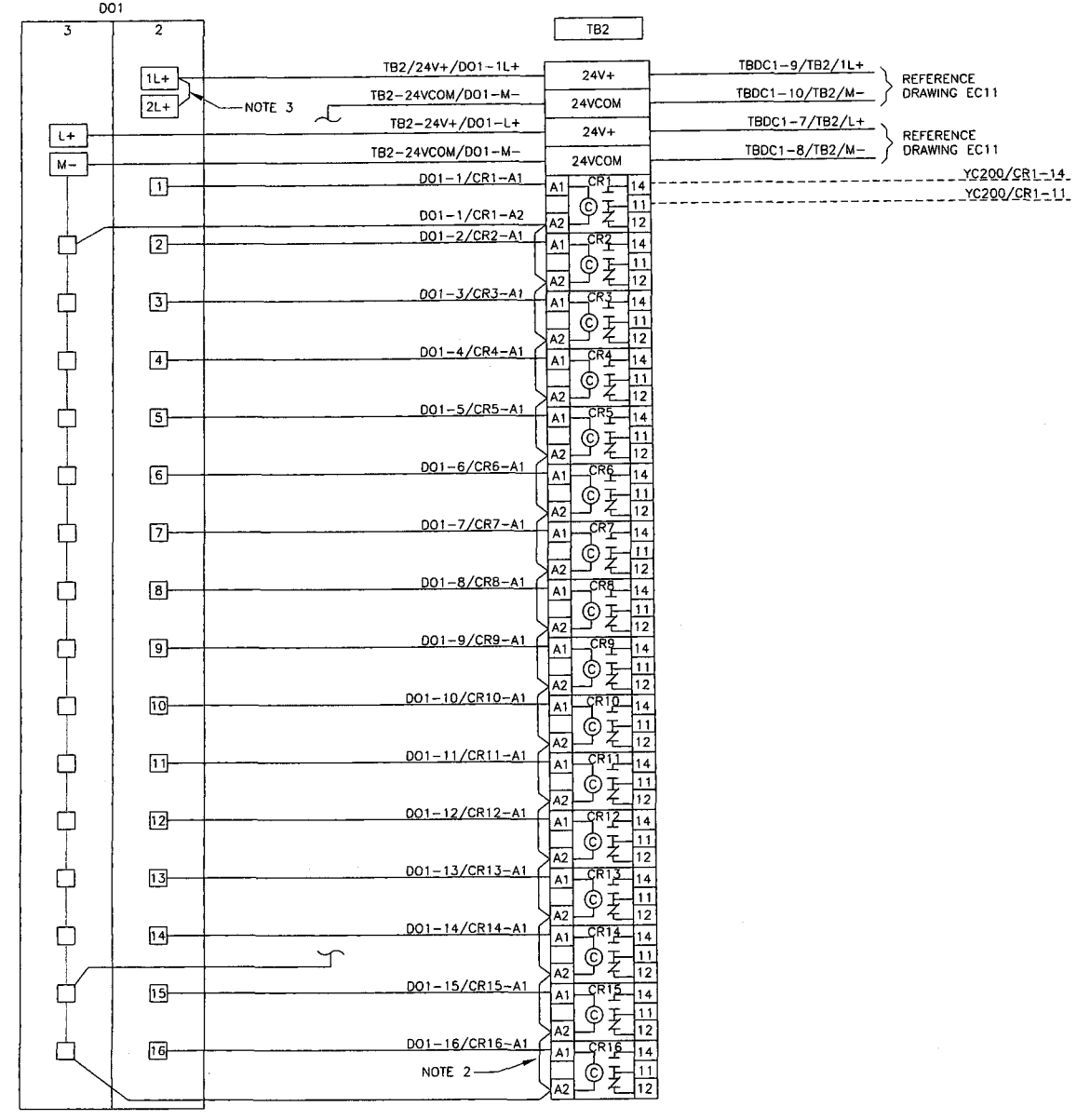


# NOTES:

1. WIRE MODULES PER MANUFACTURER'S REQUIREMENTS.
2. BUS OR INSULATED COMB STYLE JUMPER.
3. JUMPER WIRES PROVIDED BY PANEL MANUFACTURER.

| TAG NAME | DESCRIPTION |
|---|---|
| YC200 | WELL PUMP NO. 10 START/STOP COMMAND |
| | SPARE |
| | SPARE |
| | SPARE |
| | SPARE |
| | SPARE |
| | SPARE |
| | SPARE |
| | SPARE |
| | SPARE |
| | SPARE |
| | SPARE |
| | SPARE |
| | SPARE |
| | SPARE |
| | SPARE |

DLT&V
SYSTEMS ENGINEERING
3550 N. CENTRAL AVE, STE. 1900
PHOENIX, AZ 85012 (602) 266-4658

Registered Professional Engineer (Electrical)
No. 37390
MELINDA TAM
Date Signed 9.25.08
ARIZONA, U.S.A.
Expires 3/31/11

NOTES

REVISIONS

| REV. | BY | DATE | DESCRIPTION |
|---|---|---|---|
| | | | |
| | | | |
| | | | |
| | | | |

CASA GRANDE WATER SYSTEM
SCADA PHASE II – WELL #10

ARIZONA WATER COMPANY

DISCRETE OUTPUT MODULE BASE WIRING DIAGRAM

| DRAWN BY: | PROJECT NO. |
|---|---|
| MAB | 1219.01.027 |
| DESIGNED BY: | SUBMITTAL DATE: |
| MAB | SEPT 2008 |
| CHECKED BY: | DRAWING NUMBER |
| BA | EC14 |

DWG FILE: 1219.01.101_EC14.dwg 10:59am PLOTTED: Sep 30, 2008 stevis

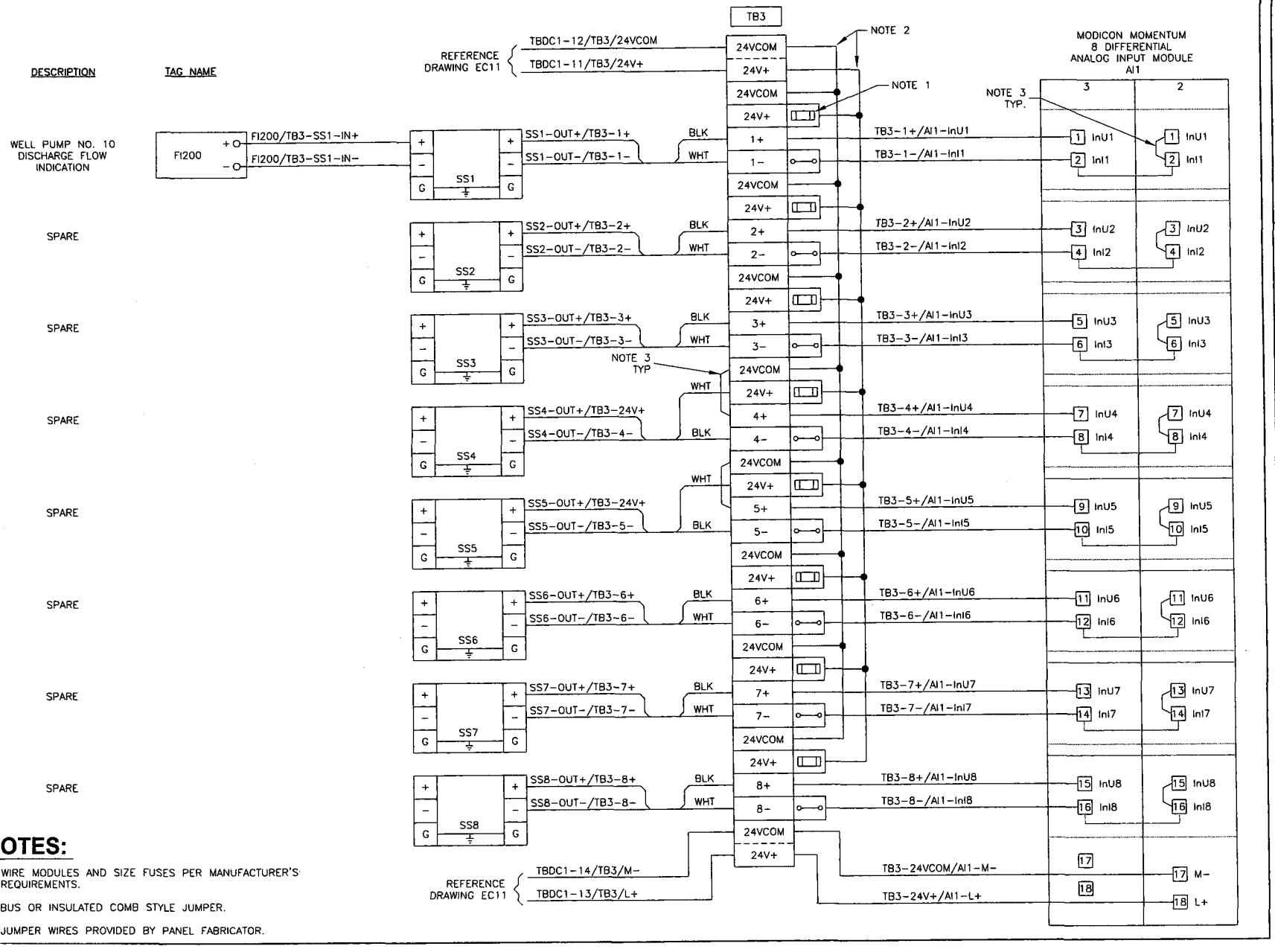


## NOTES:

1. WIRE MODULES AND SIZE FUSES PER MANUFACTURER'S REQUIREMENTS.
2. BUS OR INSULATED COMB STYLE JUMPER.
3. JUMPER WIRES PROVIDED BY PANEL FABRICATOR.

DWG FILE: 1219.01.101_EC15.dwg 10:59am PLOTTED: Sep 30, 2008 stevis

DLT&V SYSTEMS ENGINEERING
3550 N. CENTRAL AVE, STE. 1900
PHOENIX, AZ 85012 (602) 266-4658

Registered Professional Engineer (Electrical) CERTIFICATE NO. 37390 MELINDA TAM Date Signed 9.29.08 ARIZONA, U.S.A.

Expires 3/31/11

NOTES

REVISIONS

| REV. | BY | DATE | DESCRIPTION |
|---|---|---|---|
| | | | |
| | | | |
| | | | |
| | | | |

CASA GRANDE WATER SYSTEM
SCADA PHASE II - WELL #10

ARIZONA WATER COMPANY

ANALOG INPUT MODULE BASE WIRING DIAGRAM

| DRAWN BY: | PROJECT NO. |
|---|---|
| MAB | 1219.01.027 |
| DESIGNED BY: | SUBMITTAL DATE: |
| MAB | SEPT 2008 |
| CHECKED BY: | DRAWING NUMBER |
| BA | EC15 |

# CASA GRANDE WATER SYSTEM
# SCADA DESIGN - PHASE II
# WELL NO. 17 - RTU 220 DESIGN

DWG FILE: 1219.01.101_EC1.dwg 10:59am PLOTTED: Sep 30, 2008 slewis

DLT&V
SYSTEMS ENGINEERING
3550 N. CENTRAL AVE, STE. 1900
PHOENIX, AZ 85012 (602) 265-4658

Registered Professional Engineer (Electrical)
CERTIFICATE NO.
37390
MELINDA
TAM
Date Signed 9-29-08
ARIZONA, U.S.A.

Expires 3/31/11

NOTES

REVISIONS

| REV. | BY | DATE | DESCRIPTION |
|---|---|---|---|
| | | | |
| | | | |
| | | | |
| | | | |
| | | | |

CASA GRANDE WATER SYSTEM
SCADA PHASE II – WELL #17

ARIZONA WATER COMPANY

COVER SHEET

| | |
|---|---|
| DRAWN BY: MAB | PROJECT NO. 1219.01.027 |
| DESIGNED BY: MAB | SUBMITTAL DATE: SEPT 2008 |
| CHECKED BY: BA | DRAWING NUMBER EC1 |

# CASA GRANDE WATER SYSTEM
# SCADA DESIGN – PHASE II
# WELL NO. 17 RTU DESIGN
# PROJECT SHEET INDEX

| Drawing No. | Drawing Title |
|---|---|
| EC1 | COVER SHEET |
| EC2 | PROJECT SHEET INDEX |
| EC3 | STANDARD SYMBOLS AND ABBREVIATIONS |
| EC4 | ISA TABLE AND COMMON LEGENDS SHEET |
| EC5 | BILL OF MATERIALS |
| EC6 | RTU ENCLOSURE LAYOUT |
| EC7 | RTU SUBPANEL LAYOUT |
| EC8 | TERMINAL BLOCK DETAILS |
| EC9 | COMMUNICATIONS SYSTEM ARCHITECTURE DIAGRAM |
| EC10 | 120VAC POWER DISTRIBUTION SCHEMATIC |
| EC11 | 24VDC POWER DISTRIBUTION SCHEMATIC |
| EC12 | DISCRETE INPUT MODULE BASE WIRING DIAGRAM - SHEET 1 |
| EC13 | DISCRETE INPUT MODULE BASE WIRING DIAGRAM - SHEET 2 |
| EC14 | DISCRETE OUTPUT MODULE BASE WIRING DIAGRAM |
| EC15 | ANALOG INPUT MODULE BASE WIRING DIAGRAM |

DLT&V
SYSTEMS ENGINEERING
3550 N. CENTRAL AVE. STE. 1900
PHOENIX, AZ 85012 (602) 266-4656

Registered Professional Engineer (Electrical)
CERTIFICATE NO.
37390
MELINDA
TAM
Date Signed 9-22-08
ARIZONA, U.S.A.

Expires 3/31/11

NOTES

REVISIONS

| REV. | BY | DATE | DESCRIPTION |
|---|---|---|---|
| | | | |
| | | | |
| | | | |
| | | | |

CASA GRANDE WATER SYSTEM
SCADA PHASE II – WELL #17

ARIZONA WATER COMPANY

PROJECT SHEET INDEX

| DRAWN BY: | PROJECT NO. |
|---|---|
| MAB | 1219.01.027 |
| DESIGNED BY: | SUBMITTAL DATE: |
| MAB | SEPT 2008 |
| CHECKED BY: | DRAWING NUMBER |
| BA | EC2 |

DWG FILE: 1219.01.101_EC2.dwg 11:00am PLOTTED: Sep 30, 2008 slewis

# CASA GRANDE WATER SYSTEM
# SCADA DESIGN – PHASE II
# WELL NO. 17 RTU DESIGN
# STANDARD SYMBOLS AND ABBREVIATIONS

## SCHEMATIC/WIRING DIAGRAM SYMBOLS

CIRCUIT BREAKER
*A – AMP RATING

FUSE WITH PULLER
*A – AMP RATING

SWITCH
NORMALLY OPEN

SELECTOR SWITCH
2 POSITION, NORMALLY OPEN

SELECTOR SWITCH
3 POSITION, NORMALLY OPEN

TEMPERATURE SWITCH
NORMALLY OPEN

TERMINAL BLOCK
* – TB IDENTIFICATION

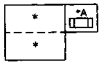


TERMINAL BLOCK W/ FUSE
PLUG AND FUSE
* – TB IDENTIFICATION
*A – AMPS

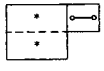


TERMINAL BLOCK W/
DISCONNECT KNIFE
* – TB IDENTIFICATION

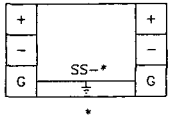


SURGE SUPPRESSOR FOR
FLOATING SIGNAL CIRCUITS
* – SS NUMBER IDENTIFICATION

SURGE SUPPRESSOR FOR
POWER SUPPLY
* – SS NUMBER IDENTIFICATION

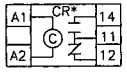


CONTROL RELAY
* – CR NUMBER IDENTIFICATION
# – TERMINAL NUMBER

## SCHEMATIC/WIRING DIAGRAM SYMBOLS

EARTH GROUND



TERMINAL BLOCK

DUPLEX RECEPTACLE

SINGLE RECEPTACLE

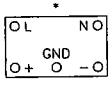


DC POWER SUPPLY
* – DC VOLTAGE RATING

## COLOR CODE CHART FOR 18 AWG BELDEN CABLES
## 12 COND. NO. 8466 AND 19 COND. NO. 8619

| | | |
|---|---|---|
| BLACK | BLK | 1st |
| WHITE | WHT | 2nd |
| RED | RED | 3rd |
| GREEN | GRN | 4th |
| ORANGE | ORN | 5th |
| BLUE | BLU | 6th |
| WHITE/BLACK | WHT/BLK | 7th |
| RED/BLACK | RED/BLK | 8th |
| GREEN/BLACK | GRN/BLK | 9th |
| ORANGE/BLACK | ORN/BLK | 10th |
| BLUE/BLACK | BLU/BLK | 11th |
| BLACK/WHITE | BLK/WHT | 12th |
| RED/WHITE | RED/WHT | 13th |
| GREEN/WHITE | GRN/WHT | 14th |
| BLUE/WHITE | BLU/WHT | 15th |
| BLACK/RED | BLK/RED | 16th |
| WHITE/RED | WHT/RED | 17th |
| ORANGE/RED | ORN/RED | 18th |
| BLUE/RED | BLU/RED | 19th |

## WIRE SIZES

**(CIRCUIT WIRING SHALL BE RATED IN ACCORDANCE WITH THE MAXIMUM PERMITTED AMPERE RATING/SETTING OF THE OVERCURRENT PROTECTION DEVICE. N.E.C. 210-3)**

120VAC / 20A POWER CIRCUIT – MIN. #12 AWG.
120VAC / 15A AND BELOW – MIN. #14 AWG.

24VDC / 20A POWER CIRCUIT – MIN. #12 AWG.
24VDC / 15A AND BELOW – MIN. #16 AWG.
24VDC I/O & SIGNAL CIRCUIT – MIN. #18 AWG.

4–20mADC I/O SIGNAL CIRCUIT – MIN. #18 AWG.

## ABBREVIATIONS

| | |
|---|---|
| A/R | AS REQUIRED |
| AC COM | NEUTRAL |
| AFF | ABOVE FINISHED FLOOR |
| AI | ANALOG INPUT |
| ANL COM | ANALOG COMMON |
| AO | ANALOG OUTPUT |
| AWG | AMERICAN WIRE GAUGE |
| BLK | BLACK |
| BLU | BLUE |
| CAP | CENTRAL ARIZONA PROJECT |
| CLR | CLEAR |
| CR | CONTROL RELAY |
| DC COM | DC COMMON |
| DC+ | DC POSITIVE POTENTIAL |
| DI | DISCRETE INPUT |
| DO | DISCRETE OUTPUT |
| DS | DOOR SWITCH |
| FOM | FIBER OPTIC MODEM |
| FOT | FIBER OPTIC TRANSCEIVER |
| GND | GROUND |
| GRN | GREEN |
| I/O | INPUT/OUTPUT |
| L | LINE |
| N | NEUTRAL |
| NC | NORMALLY CLOSED |
| NO | NORMALLY OPEN |
| NP | NAMEPLATE |
| OIT | OPERATOR INTERFACE TERMINAL |
| ORN | ORANGE |
| PDB | POWER DISTRIBUTION BLOCK |
| PLC | PROGRAMMABLE LOGIC CONTROLLER |
| PP | FIBER OPTIC PATCH PANEL |
| PS | POWER SUPPLY |
| REC | RECEPTACLE |
| RES | RESERVOIR |
| RIO | REMOTE INPUT/OUTPUT |
| RTU | REMOTE TELEMETRY UNIT |
| SLC | SMALL LOGIC CONTROLLER |
| SP | SPACE |
| SS | SURGE SUPPRESSOR |
| TB | TERMINAL BLOCK |
| UPS | UNINTERRUPTIBLE POWER SUPPLY |
| WHT | WHITE |
| WTR | WATER TREATMENT PLANT |
| WWTP | WASTE WATER TREATMENT PLANT |

## LINETYPE LEGEND

- FIELD WIRING
- INTERNAL PANEL WIRING
- RADIO COMMUNICATION LINK
- FO — FIBER OPTIC CABLE
- FOP — FIBER OPTIC PATCH CABLE
- EN — ETHERNET CAT5 CABLE
- DH+ — DATA HIGHWAY PLUS
- RIO — REMOTE INPUT OUTPUT
- AREA DIVIDER
- EQUIPMENT
- PATCH PANEL


DLT&V
SYSTEMS ENGINEERING
3550 N. CENTRAL AVE, STE. 1900
PHOENIX, AZ 85012 (602) 266-4658


Registered Professional Engineer (Electrical)
CERTIFICATE NO.
37390
MELINDA
TAM
Date Signed 9-15-08
ARIZONA, U.S.A.

Expires 3/31/11

NOTES

REVISIONS

| REV. | BY | DATE | DESCRIPTION |
|---|---|---|---|
| | | | |
| | | | |
| | | | |
| | | | |

CASA GRANDE WATER SYSTEM
SCADA PHASE II – WELL #17

ARIZONA WATER COMPANY

STANDARD SYMBOLS AND ABBREVIATIONS

| | |
|---|---|
| DRAWN BY: MAB | PROJECT NO. 1219.01.027 |
| DESIGNED BY: MAB | SUBMITTAL DATE: SEPT 2008 |
| CHECKED BY: BA | DRAWING NUMBER EC3 |


DWG FILE: 1219.01.101_EC3.dwg 11:00am PLOTTED: Sep 30, 2008 stewis

# CASA GRANDE WATER SYSTEM
# SCADA DESIGN – PHASE II
# WELL NO. 17 RTU DESIGN
# ISA TABLE AND COMMON LEGENDS SHEET

## ISA INSTRUMENT IDENTIFICATION TABLE

| FIRST LETTERS | | | SUCCEEDING LETTERS | | |
|---|---|---|---|---|---|
| MEASURED OR INITIATING VARIABLE | | MODIFIER | READOUT OR PASSIVE FUNCTION | OUTPUT FUNCTION | MODIFIER |
| A | ANALYZER | | ALARM | | AUTO |
| B | BURNER, COMBUSTION | | | | |
| C | CONDUCTIVITY | | | CONTROL | CLOSED |
| D | DENSITY | DIFFERENTIAL | | | |
| E | VOLTAGE | | ELEMENT | | |
| F | FLOW | RATIO | | | |
| G | GAUGE | | GLASS, VIEWING DEVICE | | |
| H | HAND | | | | HIGH |
| I | CURRENT | | INDICATE | | |
| J | POWER | SCAN | | | |
| K | TIME, TIME SCHED. | TIME RATE OF CHANGE | | CONTROL STATION | |
| L | LEVEL | | LIGHT | | LOW |
| M | MOTION | | | | MIDDLE |
| N | INTRUSION | | | | NORMAL |
| O | TORQUE | | ORIFICE, RESTRICTION | | OPEN |
| P | PRESSURE | | POINT CONNECTION | | STOP |
| Q | QUANTITY | INTEGRATE, TOTALIZE | | | |
| R | RADIATION | | RECORD, OR PRINT | | REMOTE |
| S | SPEED, FREQUENCY | SAFETY | | SWITCH | START |
| T | TEMPERATURE | | | TRANSMIT | |
| U | MULTIVARIABLE | | MULTIFUNCTION | MULTIFUNCTION | MULTIFUNCTION |
| V | VIBRATION | | | VALVE, LOUVER | |
| W | WEIGHT | | WELL | | |
| X | MOTOR | X-AXIS | UNCLASSIFIED | UNCLASSIFED | UNCLASSIFED |
| Y | EVENT, STATE, OR PRESENCE | Y-AXIS | | RELAY, COMPUTE, CONVERT | |
| Z | POSITION | Z-AXIS | | DRIVER, ACTUATOR, FINAL CONTROL ELEMENT | |

### FIELD WIRES TAG LEGEND

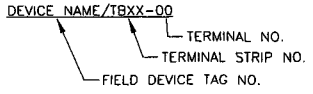


### PANEL POWER WIRES TAG LEGEND

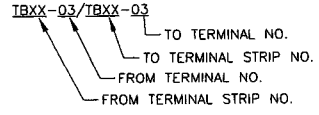


### PANEL I/O WIRES TAG LEGEND

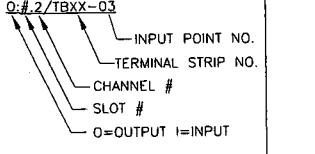


### COLOR CODE CHART FOR 22 AWG BELDEN PAIRED CABLE NO. 8761

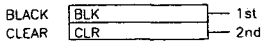


### PANEL WIRING IDENTIFICATION

BLACK – 120VAC LINE
WHITE – 120VAC NEUTRAL
GREEN – GROUND
ORANGE – DC POSITIVE
BLUE – DC COMMON


DLT&V
SYSTEMS ENGINEERING
3550 N. CENTRAL AVE, STE. 1900
PHOENIX, AZ 85012 (602) 266-4658


Registered Professional Engineer (Electrical)
No. 37390
MELINDA TAM
Date Signed 9.25.08
ARIZONA, U.S.A.
Expires 3/31/11

NOTES

REVISIONS

| REV. | BY | DATE | DESCRIPTION |
|---|---|---|---|
| | | | |
| | | | |
| | | | |
| | | | |

CASA GRANDE WATER SYSTEM
SCADA PHASE II – WELL #17

ARIZONA WATER COMPANY

ISA TABLE AND COMMON LEGENDS SHEET

| DRAWN BY: | PROJECT NO. |
|---|---|
| MAB | 1219.01.027 |
| DESIGNED BY: | SUBMITTAL DATE: |
| MAB | SEPT 2008 |
| CHECKED BY: | DRAWING NUMBER |
| BA | EC4 |


DWG FILE: 1219.01.101_EC4.dwg 11:00am PLOTTED: Sep 30, 2008 slewis

| QTY | ITEM # | MANUFACTURER | PART NUMBER | DESCRIPTION |
|---|---|---|---|---|
| 1 | 100 | MODICON | 171CCC96030 | M1E PROCESSOR ADAPTER, ETHERNET AND I/O BUS PORTS, WEB PAGE ENABLED, IEC |
| 2 | 101 | MODICON | 170INT11000 | MOMENTUM INTERBUS \ I/O BUS COMMUNICATIONS ADAPTER |
| 1 | 102 | MODICON | 170ADI35000 | 24V DC - 32 PT. INPUT MODULE BASE |
| 1 | 103 | MODICON | 170ADO34000 | 24V DC / 0.5A - 16 PT. OUTPUT MODULE BASE, 0.5 A OUTPUT |
| 1 | 104 | MODICON | 170AAI03000 | MOMENTUM SERIES I/O BASE, ANALOG 8CH DIFFERENTIAL INPUT MODULE BASE |
| 1 | 105 | MODICON | 172JNN21032 | MOMENTUM SERIES OPTION ADAPTER W/ GENERAL PURPOSE SERIAL COMMUNICATION PORT, RS-232 OR RS-485 SELECTABLE |
| 1 | 106 | MODICON | XBT GT5330 | EXTERNAL DISPLAY WITH 10.4" COLOR TFT,VGA RESOLUTION (640X480 PIXELS), 24V POWER |
| 1 | 107 | WEIDMULLER | IE-SW8-ECO | INDUSTRIAL 8-PORT ETHERNET SWITCH, 10/100 Mbps, UNMANAGED |
| 2 | 108 | MODICON | 170MCI00700 | INTERBUS CABLE |
| 1 | 110 | BELDEN | 8267 | CABLE, COAXIAL, RG-213 (OR EQUAL) WITH APPROPRIATE CONNECTORS, (LENGTH AS REQUIRED) |
| 1 | 111 | MDS | iNET-II-IP | ETHERNET REMOTE RADIO TRANSCEIVER, SPREAD SPECTRUM, W/ REMOTE DIAGNOSTICS |
| 3 | 112 | MODICON | 170XTS00100 | CONNECTOR SET, SCREW-TYPE (SET OF 3) |
| A/R | 201 | ALLEN-BRADLEY | 1492-DR6 | TERMINAL MOUNTING RAIL, HI-RISE, ALUMINUM |
| 14 | 202 | ALLEN-BRADLEY | 1492-EA35 | END ANCHOR |
| 6 | 210 | ALLEN-BRADLEY | 1492-GM35 | TERMINAL BLOCK, GROUP MARKING CARRIER |
| 18 | 215 | ALLEN-BRADLEY | 1492-J4 | TERMINAL BLOCK, SINGLE CIRCUIT, 600V, GRAY |
| 1 | 218 | ALLEN-BRADLEY | 1492-JD3 | TERMINAL BLOCK, DOUBLE LEVEL |
| 67 | 219 | ALLEN-BRADLEY | 1492-JD3P | TERMINAL BLOCK, DOUBLE LEVEL W/ PLUGGABLE TOP LEVEL |
| 4 | 221 | ALLEN-BRADLEY | 1492-JG4 | TERMINAL BLOCK, SINGLE CIRCUIT, GROUNDING |
| 53 | 223 | ALLEN-BRADLEY | 1492-FPK224 | FUSE PLUG INSERT W/ BFI, 10-36VAC/DC WORKING VOLTAGE, 10A MAX @ 250V. PROVIDE FAST BLOW FUSES AS REQUIRED |
| 8 | 225 | ALLEN-BRADLEY | 1492-DPL | DISCONNECT PLUG FOR 1492-JD3 P AND 1492-JD3 |
| 2 | 230 | WEIDMULLER | 9926251001 | CIRCUIT BREAKER, 1A |
| 4 | 231 | WEIDMULLER | 9926251002 | CIRCUIT BREAKER, 2A |
| 2 | 232 | WEIDMULLER | 9926251003 | CIRCUIT BREAKER, 3A |
| 1 | 233 | WEIDMULLER | 9926251010 | CIRCUIT BREAKER, 10A |
| 3 | 234 | WEIDMULLER | 9926251015 | CIRCUIT BREAKER, 15A |
| 1 | 235 | WEIDMULLER | 9926251020 | CIRCUIT BREAKER, 20A |
| 53 | 282 | ANY | ANY | 250V, 5mmX20mm FAST BLOW GLASS FUSES (SIZE AS INDICATED ON DRAWING) |
| 1 | 313 | HOFFMAN | ALF16D18R | 18" FLOURESCENT LIGHTING PACKAGE W/DOOR SWITCH, 115VAC |
| 1 | 316 | HOFFMAN | A-TEMNO | TEMPERATURE CONTROL SWITCH (THERMOSTAT), N.O. CONTACTS |
| A/R | 359 | BELDEN | 7929A | CABLE, ETHERNET, 4 PR, 24 AWG, CAT 5E |
| 1 | 377 | ANY | ANY | GROUNDING BAR |
| 1 | 378 | CUSTOM | CUSTOM | CUSTOM SHELF SUPPLIED AND INSTALLED BY PANEL FABRICATOR |
| A/R | 379 | PANDUIT | F2X4LG6 C2LG6 | 2 X 4 PLASTIC WIRING DUCT TYPE "E" W/COVER STYLE "C" |
| A/R | 380 | PANDUIT | F3X4LG6 C3LG6 | 3 X 4 PLASTIC WIRING DUCT TYPE "E" W/COVER STYLE "C" |
| 1 | 397 | HOFFMAN | ALFSWD | REMOTE DOOR ACTIVATED SWITCH W/MOUNTING BRACKET |
| 1 | 398 | HUBBELL | HBL5362I | DUPLEX RECEPTACLE, IVORY, 125V/20A, W/BOX AND BRUSHED ALUMINUM COVER (HUBBELL P.N.# A8) |
| 1 | 399 | HUBBELL | HBL5361I | SIMPLEX RECEPTACLE, IVORY, 125V/20A, W/BOX AND BRUSHED ALUMINUM COVER (HUBBELL P.N.# A7) |
| 1 | 400 | HUBBELL | HBL3810R | SIMPLEX RECEPTACLE, RED, 125V/20A, W/BOX AND BRUSHED ALUMINUM COVER (HUBBELL P.N.# A7) |
| 2 | 405 | WEIDMULLER | 8708670000 (CP SNT 250W 24V 10A) | POWER SUPPLY, 24VDC, 250W, 10A, W/ STATUS RELAY |
| 1 | 406 | WEIDMULLER | 8710620000 (CP DM 10) | DIODE MODULE, 10A PER INPUT, 40VDC MAX |
| 1 | 408 | IDEC | RH2B-UL-AC120V | RELAY, 120VAC COIL DPDT W/ INDICATOR |
| 1 | 421 | IDEC | SH2B-05C | RELAY SOCKET, DIN RAIL MOUNT, FINGERSAFE |
| 1 | 450 | MTL SURGE TECHNOLOGIES | MA15/D/1/SI | 120/240 VAC, 15A, SURGE SUPPRESSOR AND FILTER |
| 8 | 451 | WEIDMULLER | 8448920000 | SURGE SUPPRESSOR, 24VDC, 2 WIRE LOOP PROTECTION (MCZ OVP) W/ END CAP PART #8389030000 |
| 8 | 452 | WEIDMULLER | 8389030000 | END CAP FOR 24VDC SURGE SUPPRESSOR (MCZ OVP) |
| 16 | 455 | ALLEN-BRADLEY | 700-HLT1Z24 | TERMINAL BLOCK RELAY, 24VDC, 6A CONTACTS, SPDT W/ LED |
| 1 | 505 | HOFFMAN | CR430616031 | AIR CONDITIONER, 120 VAC, 6000 BTU/HR, W/OUTDOOR ENCLOSURE PACKAGE |
| 1 | 703 | APC | SUA750, AP9610 | UPS, 115 VAC, 750 VA W/ RELAY I/O SMARTSLOT CARD OPTION, MINIMUM 30 MIN. RUNTIME OF COMPLETE PLC OPERATIONS POWER |
| 1 | 811 | POLYPHASER | IS-50NX-C2 | BROADBAND COAXIAL SURGE PROTECTOR, FLANGE MOUNT, 125-1000MHZ |
| 2 | 853 | TIMES MICROWAVE SYSTEMS | EZ-900-NMC | N-MALE CONNECTOR |

DWG FILE: 1219.01.101_EC5.dwg 11:00am PLOTTED: Sep 30, 2008 stevis

DL T&V
SYSTEMS ENGINEERING
3550 N. CENTRAL AVE, STE. 1900
PHOENIX, AZ 85012 (602) 266-4588

Registered Professional Engineer (Electrical)
CERTIFICATE NO.
37390
MELINDA TAM
Date Signed 9-29-08
ARIZONA, U.S.A.

Expires 3/31/11

NOTES

REVISIONS

| REV. | BY | DATE | DESCRIPTION |
|---|---|---|---|
| | | | |
| | | | |
| | | | |
| | | | |

CASA GRANDE WATER SYSTEM
SCADA PHASE II – WELL #17

ARIZONA WATER COMPANY

BILL OF MATERIALS

| DRAWN BY: | PROJECT NO. |
|---|---|
| MAB | 1219.01.027 |
| DESIGNED BY: | SUBMITTAL DATE: |
| MAB | SEPT 2008 |
| CHECKED BY: | DRAWING NUMBER |
| BA | EC5 |

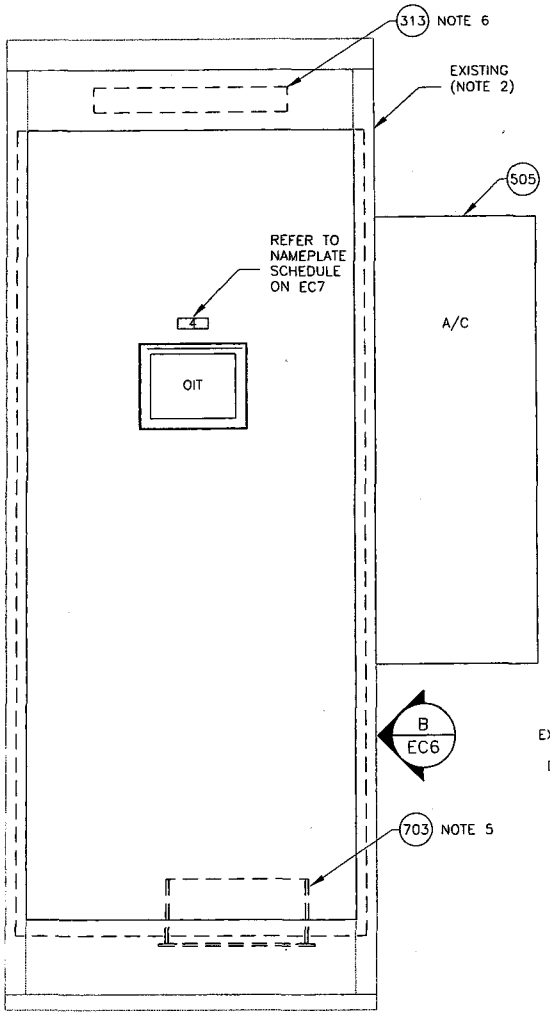


A ~ RTU ENCLOSURE, SWING OUT PANEL
1"=1'-0"

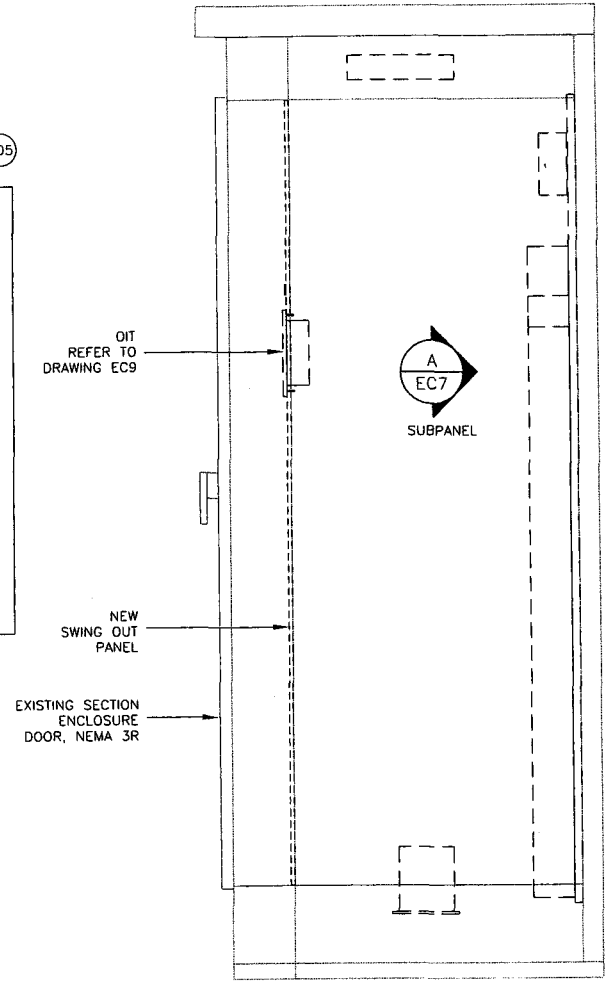


B ~ RTU ENCLOSURE, SIDE
1"=1'-0"

## NOTES:

1. BILL OF MATERIALS IS ON DRAWING EC5.
2. RTU CABINET IS PART OF THE EXISTING ELECTRICAL EQUIPMENT LINEUP.
3. REFER TO DRAWING EC7 FOR RTU INTERIOR LAYOUT.
4. FURNISH ADDITIONAL NAMEPLATES AS REQUIRED BY UL OR BY OTHER APPLICABLE CODES.
5. MOUNT UPS MINIMUM 6" ABOVE GRADE LEVEL. PANEL FABRICATOR SHALL SUPPLY AND INSTALL CUSTOM SUPPORT HARDWARE IN ENCLOSURE AS REQUIRED.
6. DOOR SWITCH ASSOCIATED WITH FLUORESCENT LIGHT FIXTURE IS SHOWN ON DRAWING EC7. REFER TO DRAWING EC10 FOR WIRING SCHEMATIC.


DLT&V
SYSTEMS ENGINEERING
3550 N. CENTRAL AVE, STE. 1900
PHOENIX, AZ 85012 (602) 266-4658


Registered Professional Engineer (Electrical)
CERTIFICATE NO. 37390
MELINDA TAM
Date Signed 9.29.08
ARIZONA, U. S. A.
Expires 3/31/11

NOTES

REVISIONS

| REV. | BY | DATE | DESCRIPTION |
|---|---|---|---|
| | | | |
| | | | |
| | | | |
| | | | |

CASA GRANDE WATER SYSTEM
SCADA PHASE II – WELL #17

ARIZONA WATER COMPANY

RTU ENCLOSURE LAYOUT

| | |
|---|---|
| DRAWN BY: MAB | PROJECT NO. 1219.01.027 |
| DESIGNED BY: MAB | SUBMITTAL DATE: SEPT 2008 |
| CHECKED BY: BA | DRAWING NUMBER EC6 |


JWG FILE: 1219.01.101_EC6.dwg 11:01am PLOTTED: Sep 30, 2008 slewis

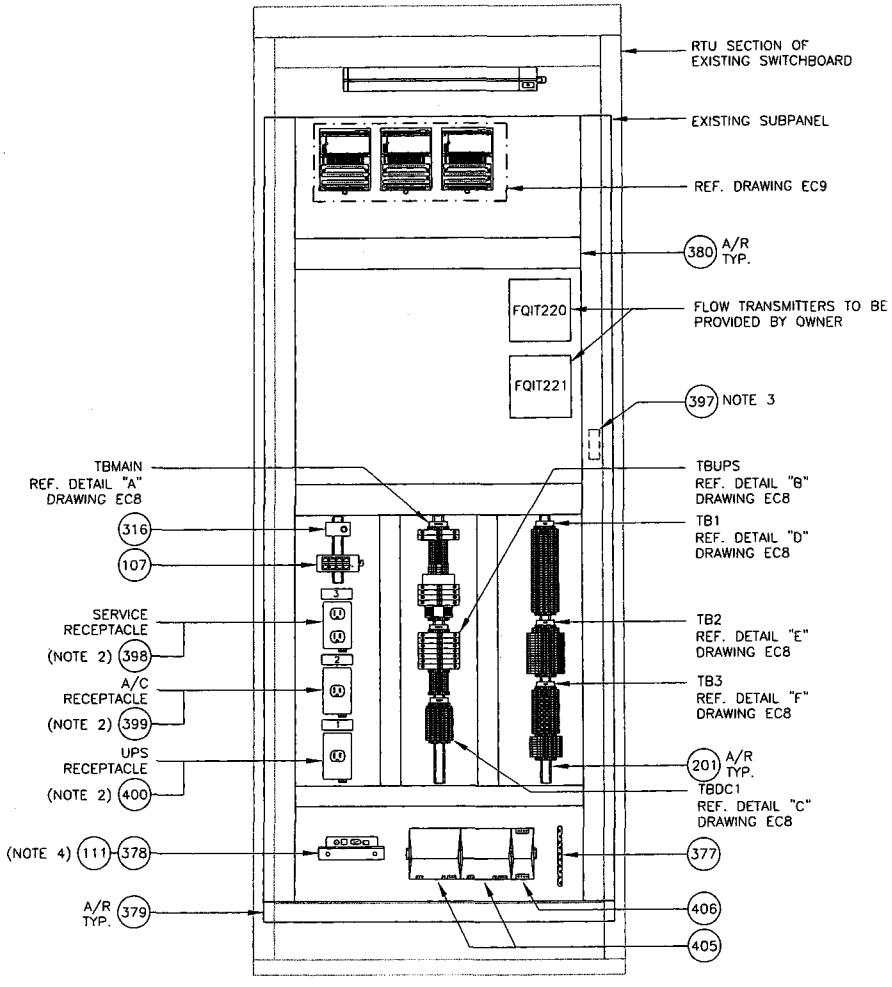


A / EC6 SUBPANEL LAYOUT
1"=1'-0"

## NOTES:

1. BILL OF MATERIALS IS ON DRAWING EC5.
2. NAMEPLATE SHALL BE 3/32" THICK LAMINATED PHENOLIC TYPE BLACK WITH WHITE LETTERS. SEE BILL OF MATERIALS ON DRAWING EC5 AND NAMEPLATE SCHEDULE (DET B) ON THIS SHEET FOR ADDITIONAL INFORMATION.
3. MOUNT DOOR SWITCH SW-1 ON SIDE PANEL, SO THAT LIGHT OPERATES WHEN DOOR IS OPENED. REFER TO 120VAC POWER DISTRIBUTION SCHEMATIC ON DRAWING EC10 FOR MORE INFORMATION.
4. MOUNT RADIO ON CUSTOM SHELF PROVIDED AND INSTALLED BY PANEL FABRICATOR. REFER TO DRAWING EC9 AND BILL OF MATERIALS ON EC5 FOR MORE INFORMATION.

**NAMEPLATE SCHEDULE (NOTE 2)**

| NP | HxWxLTR | FIRST LINE | SECOND LINE | LOCATION |
|---|---|---|---|---|
| 1 | 1" x 3" x 1/4" | UPS RECEPTACLE | ONLY | CENTERED ABOVE UPS RECEPTACLE |
| 2 | 1" x 3" x 1/4" | A/C RECEPTACLE | ONLY | CENTERED ABOVE A/C RECEPTACLE |
| 3 | 1" x 3" x 1/4" | SERVICE RECEPTACLE | ONLY | CENTERED ABOVE SERVICE RECEPTACLE |
| 4 | 1" x 3" x 1/4" | OIT | | CENTERED ABOVE OIT |

B / ~ NAMEPLATE SCHEDULE

DLT&V SYSTEMS ENGINEERING
3550 N. CENTRAL AVE, STE. 1900
PHOENIX, AZ 85012 (602) 266-4658

Registered Professional Engineer (Electrical) CERTIFICATE NO. 37390 MELINDA TAM Date Signed 9.29.08 ARIZONA, U.S.A.
Expires 3/31/11

NOTES

REVISIONS

| REV. | BY | DATE | DESCRIPTION |
|---|---|---|---|
| | | | |
| | | | |
| | | | |
| | | | |

CASA GRANDE WATER SYSTEM
SCADA PHASE II - WELL #17

ARIZONA WATER COMPANY

RTU SUBPANEL LAYOUT

| DRAWN BY: | PROJECT NO. |
|---|---|
| MAB | 1219.01.027 |
| DESIGNED BY: | SUBMITTAL DATE: |
| MAB | SEPT 2008 |
| CHECKED BY: | DRAWING NUMBER |
| BA | EC7 |

DWG FILE: 1219.01.101_EC7.dwg 11:01am PLOTTED: Sep 30, 2008 stewa

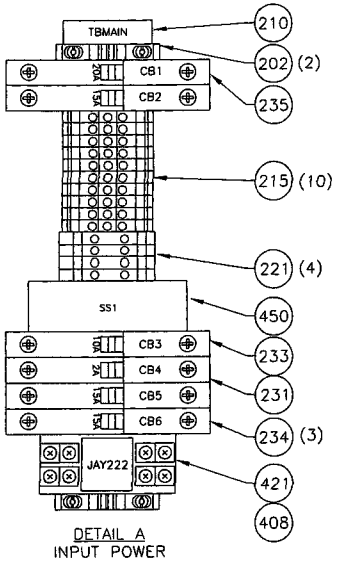


DETAIL A
INPUT POWER
TBMAIN

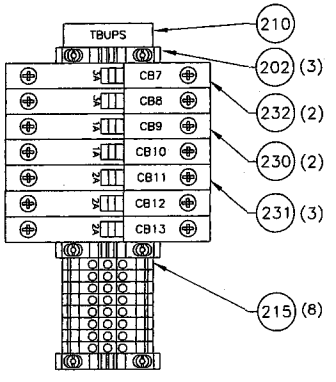


DETAIL B
PANEL POWER
TBUPS

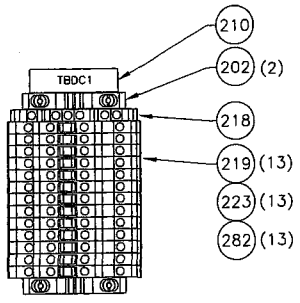


DETAIL C
24VDC POWER
DISTRIBUTION
TBDC1

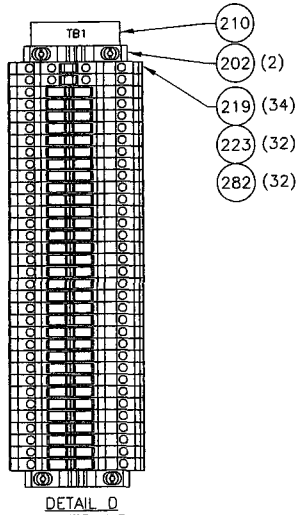


DETAIL D
DISCRETE INPUT
TB1

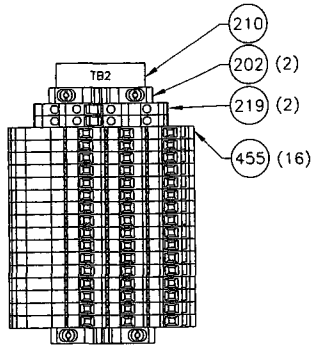


DETAIL E
DISCRETE OUTPUT
TB2

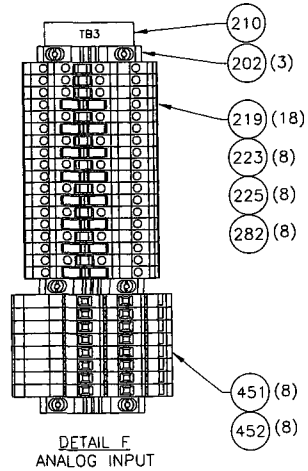


DETAIL F
ANALOG INPUT
TB3

## NOTES:

1. PROVIDE BUS BAR STYLE OR INSULATED COMB STYLE JUMPERS WHERE 2 OR MORE TERMINALS IN THE SAME TB ARE COMMONED TOGETHER. DO NOT USE DISCRETE WIRE JUMPERS.
2. BILL OF MATERIALS IS ON DRAWING EC5.
3. PANEL BUILDER TO SUPPLY AND INSTALL ALL NECESSARY AND APPROPRIATE ACCESSORIES INCLUDING TERMINAL NUMBERS, JUMPERS AND END BARRIERS.

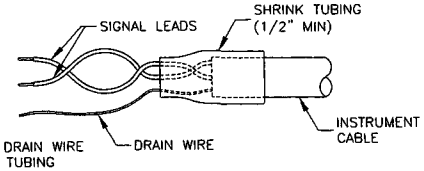


NOTE:
WRAP UNUSED DRAIN WIRE
UNDER SHRINK TUBING

DETAIL G
INSTRUMENT CABLE
TERMINATION

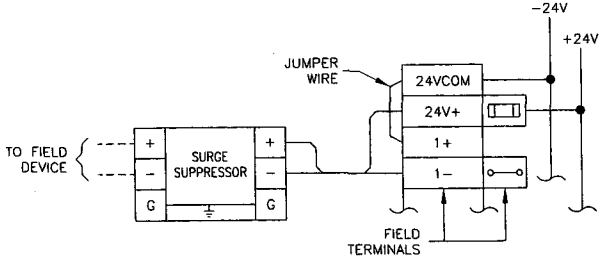


2-WIRE

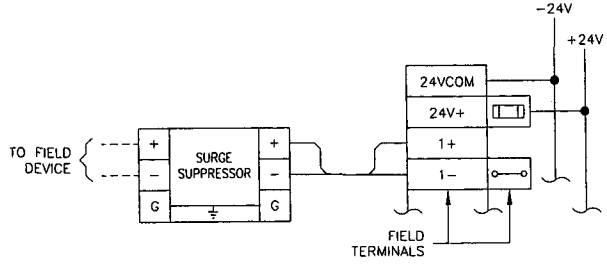


4-WIRE

DETAIL H
ANALOG INPUT TERMINALS
2 & 4-WIRE TYPICAL CONNECTIONS

DLT&V
SYSTEMS ENGINEERING
3550 N. CENTRAL AVE., STE. 1900
PHOENIX, AZ 85012 (602) 266-4958

Registered Professional Engineer (Electrical)
CERTIFICATE NO.
37390
MELINDA
TAM
Date Signed 9-22-08
ARIZONA, U.S.A.

Expires 3/31/11

NOTES

| REVISIONS | | | |
|---|---|---|---|
| REV. | BY | DATE | DESCRIPTION |
| | | | |
| | | | |
| | | | |
| | | | |
| | | | |

CASA GRANDE WATER SYSTEM
SCADA PHASE II – WELL #17

ARIZONA WATER COMPANY

TERMINAL BLOCK DETAILS

| DRAWN BY: | PROJECT NO. |
|---|---|
| MAB | 1219.01.027 |
| DESIGNED BY: | SUBMITTAL DATE: |
| MAB | SEPT 2008 |
| CHECKED BY: | DRAWING NUMBER |
| BA | EC8 |

DWG FILE: 1219.01.101_EC8.dwg 11:01am PLOTTED: Sep 30, 2008 stews

## NOTES:

1. BILL OF MATERIALS IS ON DRAWING EC5.
2. ANTENNA, ANTENNA MAST, GROUNDING KIT AND CABLE PROVIDED AND INSTALLED BY OTHERS.

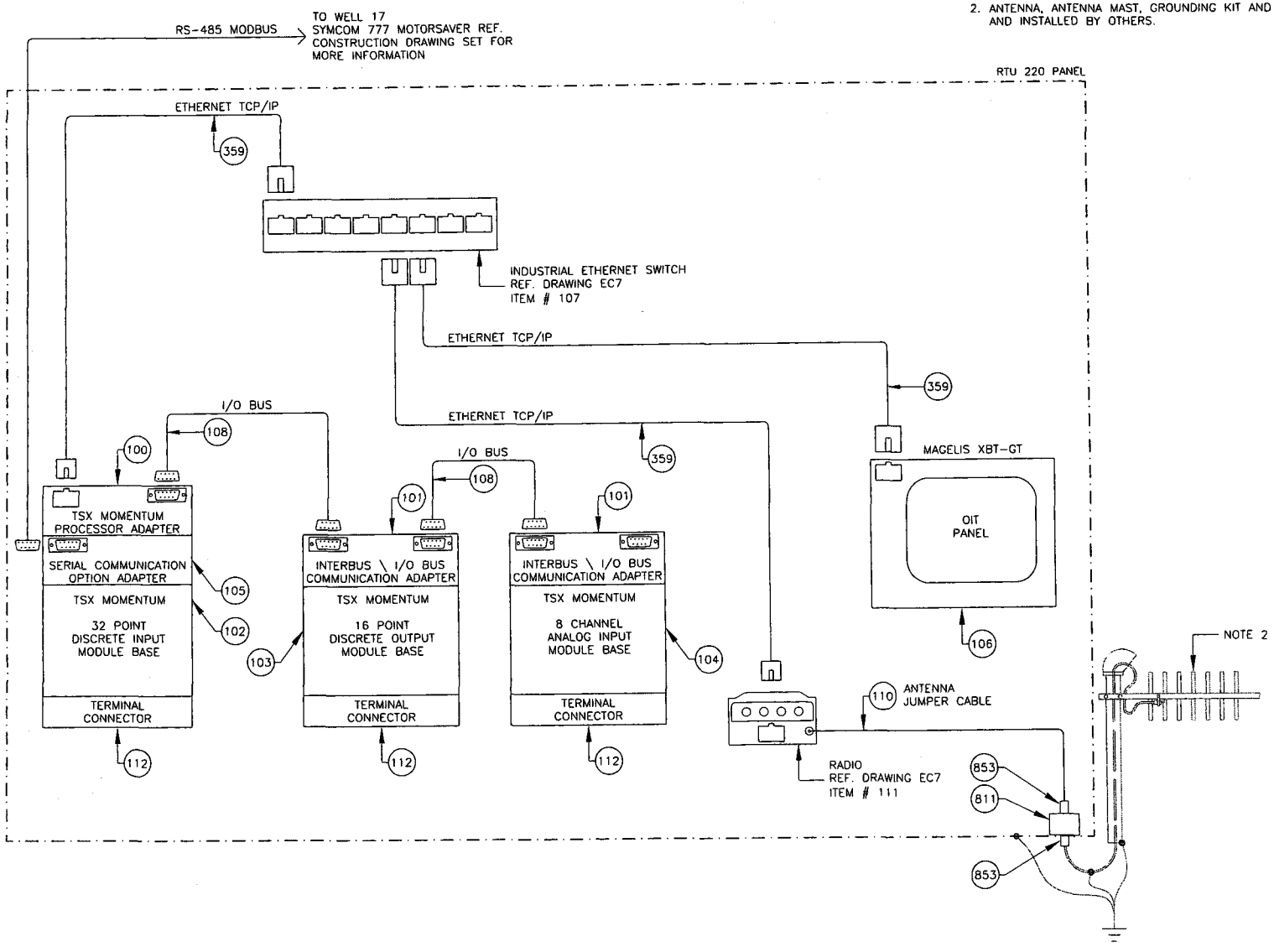


DWG FILE: 1219.01.101_EC9.dwg 11:02am PLOTTED: Sep 30, 2008 stewis

DLT&V
SYSTEMS ENGINEERING
3550 N. CENTRAL AVE, STE. 1900
PHOENIX, AZ 85012 (602) 256-4488

Registered Professional Engineer (Electrical)
No. 37390
MELINDA TAM
Date Signed 9.29.08
ARIZONA, U.S.A.
Expires 3/31/11

NOTES

| REVISIONS | | | |
|---|---|---|---|
| REV. | BY | DATE | DESCRIPTION |
| | | | |
| | | | |
| | | | |
| | | | |

CASA GRANDE WATER SYSTEM
SCADA PHASE II - WELL #17

ARIZONA WATER COMPANY

COMMUNICATIONS SYSTEM ARCHITECTURE DIAGRAM

| DRAWN BY: | PROJECT NO. |
|---|---|
| MAB | 1219.01.027 |
| DESIGNED BY: | SUBMITTAL DATE: |
| MAB | SEPT 2008 |
| CHECKED BY: | DRAWING NUMBER |
| BA | EC9 |

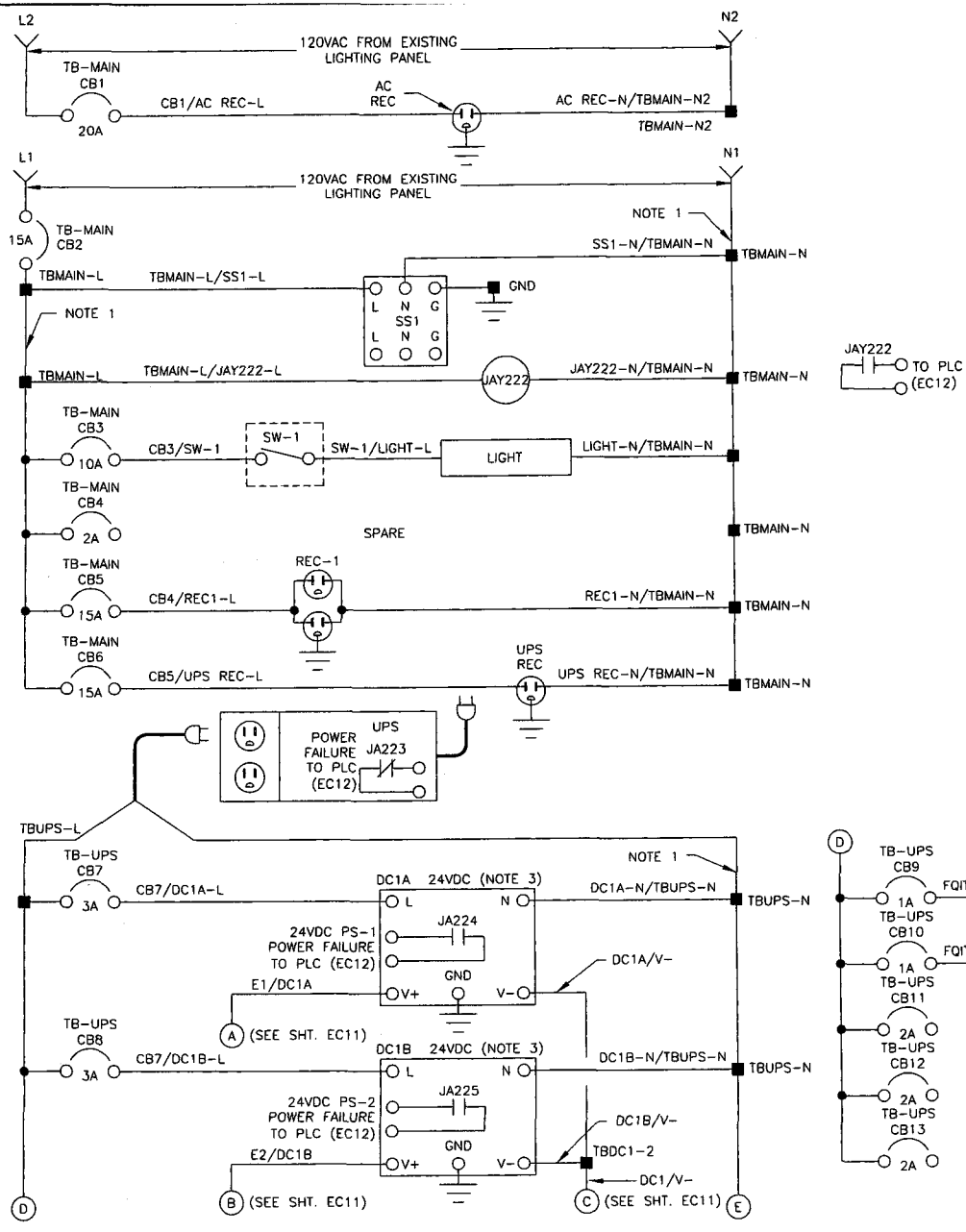





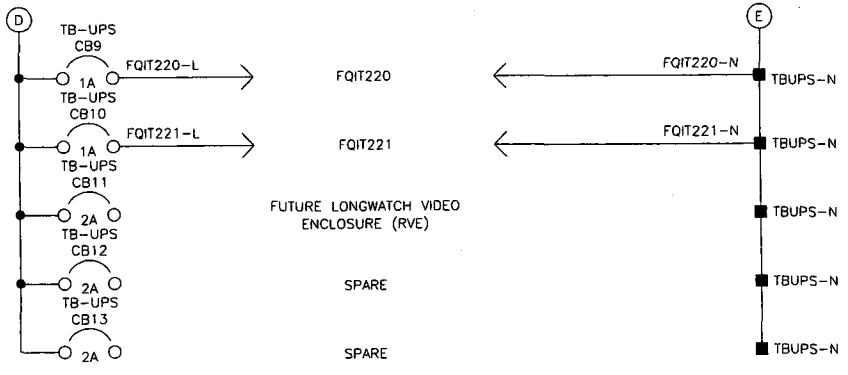


## 120VAC POWER DISTRIBUTION

## NOTES:

1. PROVIDE BUS BAR STYLE OR INSULATED COMB STYLE JUMPERS WHERE 2 OR MORE TERMINALS IN THE SAME TB ARE COMMONED TOGETHER. DO NOT USE DISCRETE WIRE JUMPERS.
2. BILL OF MATERIALS IS ON DRAWING EC5.
3. ADJUST VOLTAGE OUTPUT SETTING ON DC1B TO BE 1.0 VOLT LESS THAN DC1A.


DLT&V
SYSTEMS ENGINEERING
3550 N. CENTRAL AVE., STE. 1900
PHOENIX, AZ 85012 | (602) 266-4658


Registered Professional Engineer (Electrical) CERTIFICATE NO. 37390 MELINDA TAM Date Signed 9-29-08 ARIZONA, U.S.A.

Expires 3/31/11

NOTES

REVISIONS

| REV. | BY | DATE | DESCRIPTION |
|---|---|---|---|
| | | | |
| | | | |
| | | | |
| | | | |

CASA GRANDE WATER SYSTEM
SCADA PHASE II – WELL #17

ARIZONA WATER COMPANY

120VAC POWER DISTRIBUTION SCHEMATIC

| | |
|---|---|
| DRAWN BY: MAB | PROJECT NO. 1219.01.027 |
| DESIGNED BY: MAB | SUBMITTAL DATE: SEPT 2008 |
| CHECKED BY: BA | DRAWING NUMBER EC10 |


DWG FILE: 1219.01.101_EC10.dwg 11:02am PLOTTED: Sep 30, 2008 slewis

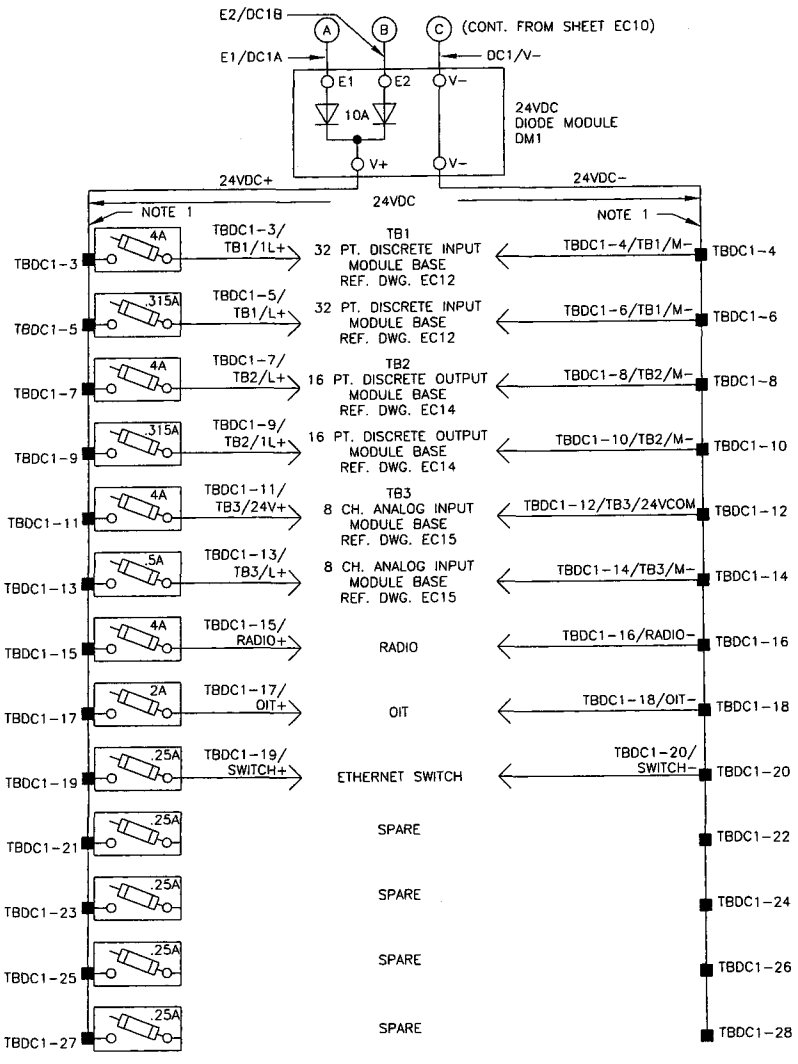


## 24VDC POWER DISTRIBUTION

# NOTES:

1. PROVIDE BUS BAR STYLE OR INSULATED COMB STYLE JUMPERS WHERE 2 OR MORE TERMINALS IN THE SAME TB ARE COMMONED TOGETHER. DO NOT USE DISCRETE WIRE JUMPERS.
2. BILL OF MATERIALS IS ON DRAWING EC5.
3. THE PROPER FUSE SIZE ON ANY FUTURE EQUIPMENT INSTALLATIONS UTILIZING SPARE CIRCUITS WILL BE THE RESPONSIBILITY OF THE OWNER.


DLT&V
SYSTEMS ENGINEERING
3550 N. CENTRAL AVE, STE. 1900
PHOENIX, AZ 85012 (602) 266-4656


Registered Professional Engineer (Electrical)
STATE OF
NO. 37390
MELINDA TAM
Date Signed 9.22.08
ARIZONA, U.S.A.

Expires 3/31/11

NOTES

REVISIONS

| REV. | BY | DATE | DESCRIPTION |
|---|---|---|---|
| | | | |
| | | | |
| | | | |
| | | | |

CASA GRANDE WATER SYSTEM
SCADA PHASE II - WELL #17

ARIZONA WATER COMPANY

24VDC POWER DISTRIBUTION SCHEMATIC

| DRAWN BY: | PROJECT NO. |
|---|---|
| MAB | 1219.01.027 |
| DESIGNED BY: | SUBMITTAL DATE: |
| MAB | SEPT 2008 |
| CHECKED BY: | DRAWING NUMBER |
| BA | EC11 |

DWG FILE: 1219.01.101_EC11.dwg 11:02am PLOTTED: Sep 30, 2008 alexis

## NOTES:

1. WIRE MODULES AND SIZE FUSES PER MANUFACTURER'S REQUIREMENTS.
2. BUS OR INSULATED COMB STYLE JUMPER.

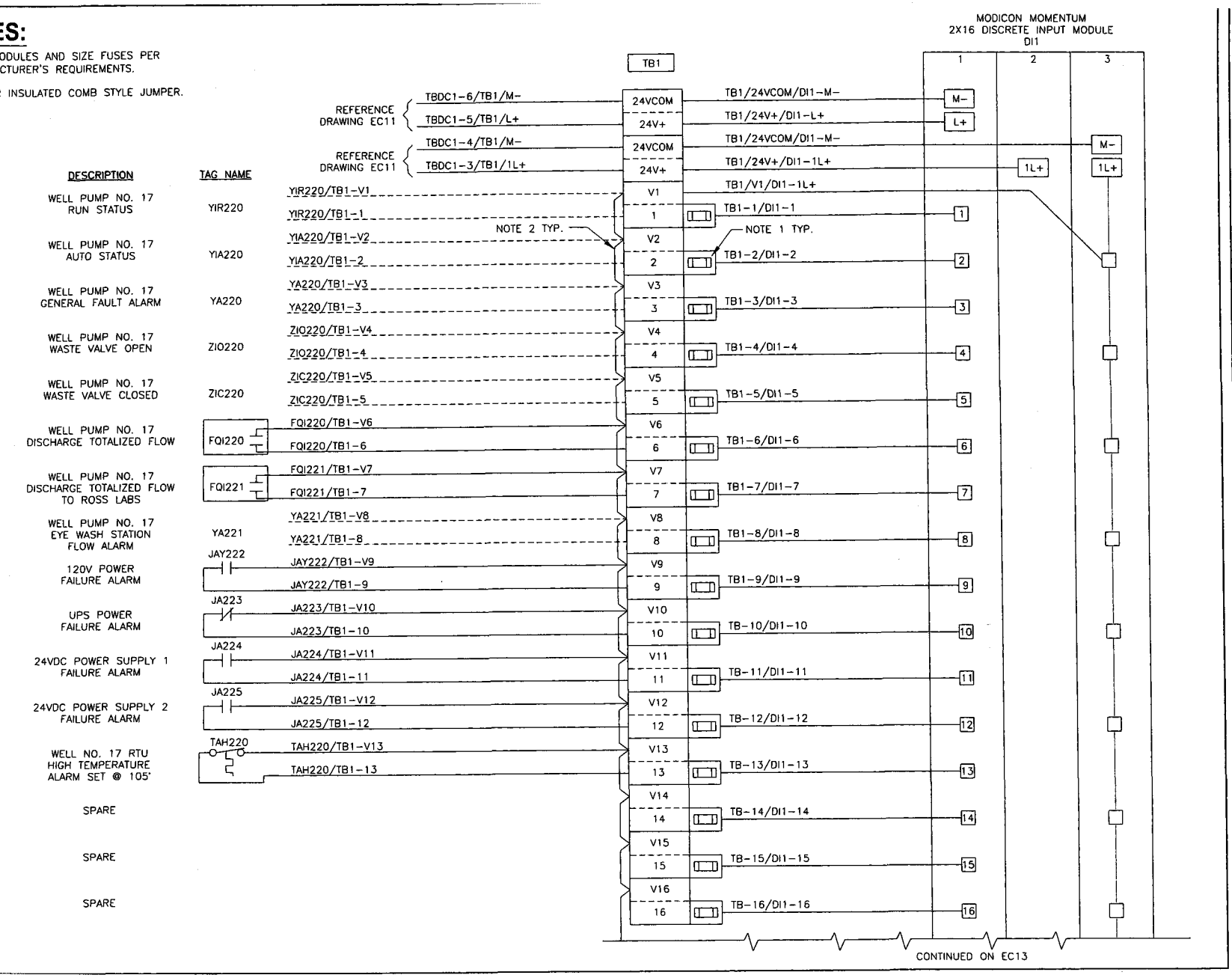


DLT&V
SYSTEMS ENGINEERING
3550 N. CENTRAL AVE, STE. 1900
PHOENIX, AZ 85012 (602) 266-4658

Registered Professional Engineer (Electrical)
No. 37390
MELINDA TAM
Date Signed 9-25-08
ARIZONA, U.S.A.

Expires 3/31/11

NOTES

| REVISIONS | | | |
|---|---|---|---|
| REV. | BY | DATE | DESCRIPTION |
| | | | |
| | | | |
| | | | |
| | | | |

CASA GRANDE WATER SYSTEM
SCADA PHASE II - WELL #17

ARIZONA WATER COMPANY

DISCRETE INPUT MODULE BASE WIRING DIAGRAM - SHEET 1

| | |
|---|---|
| DRAWN BY: MAB | PROJECT NO. 1219.01.027 |
| DESIGNED BY: MAB | SUBMITTAL DATE: SEPT 2008 |
| CHECKED BY: BA | DRAWING NUMBER EC12 |

DWG FILE: 1219.01.101_EC12.dwg 11:02am PLOTTED: Sep 30, 2008 steves

## NOTES:

1. WIRE MODULES AND SIZE FUSES PER MANUFACTURER'S REQUIREMENTS.
2. BUS OR INSULATED COMB STYLE JUMPER.

| DESCRIPTION | TAG NAME |
|---|---|
| SPARE | |
| SPARE | |
| SPARE | |
| SPARE | |
| SPARE | |
| SPARE | |
| SPARE | |
| SPARE | |
| SPARE | |
| SPARE | |
| SPARE | |
| SPARE | |
| SPARE | |
| SPARE | |
| SPARE | |
| SPARE | |

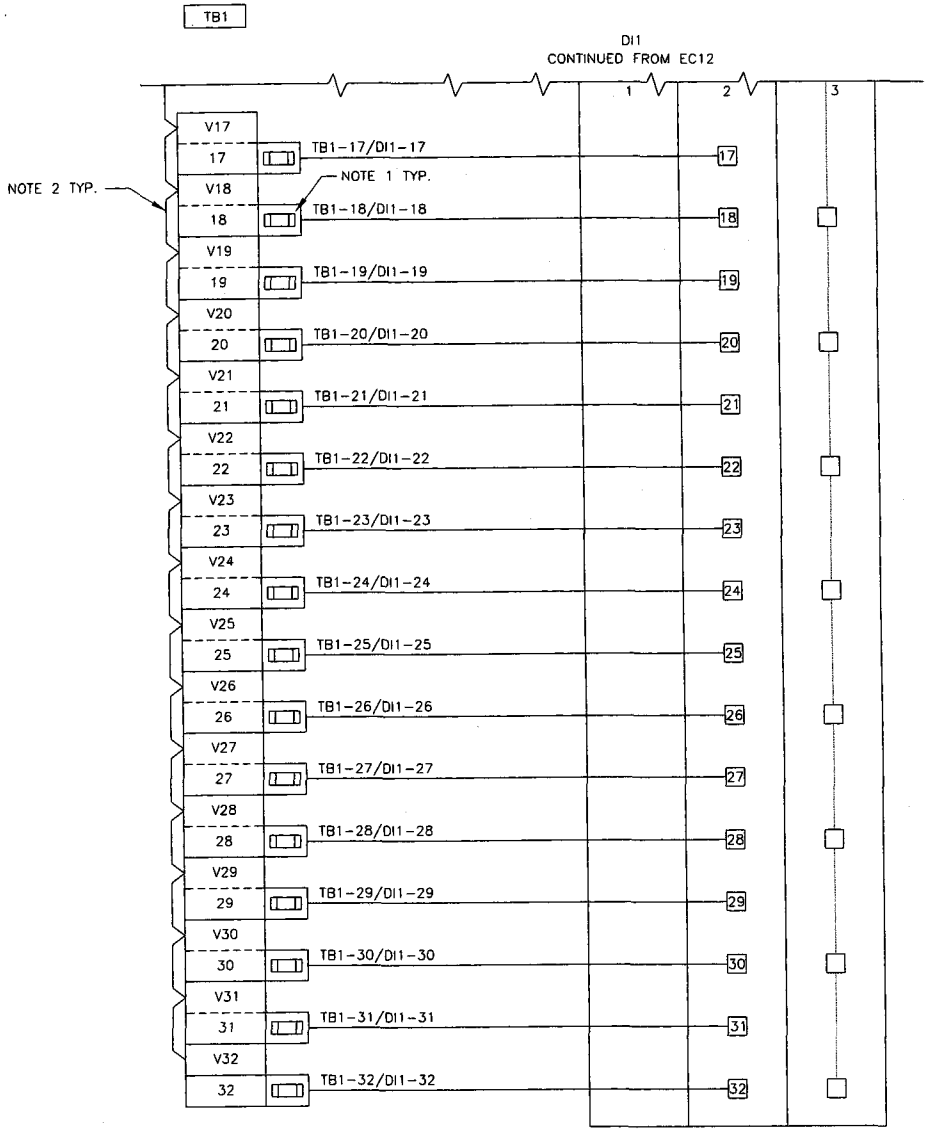


DLT&V SYSTEMS ENGINEERING
3560 N. CENTRAL AVE, STE. 1900
PHOENIX, AZ 85012 (602) 265-4458

Registered Professional Engineer (Electrical)
CERTIFICATE NO.
37390
MELINDA
TAM
Date Signed 9.25.08
ARIZONA, U.S.A.
Expires 3/31/11

NOTES

| REVISIONS | | | |
|---|---|---|---|
| REV. | BY | DATE | DESCRIPTION |
| | | | |
| | | | |
| | | | |
| | | | |

CASA GRANDE WATER SYSTEM
SCADA PHASE II - WELL #17

ARIZONA WATER COMPANY

DISCRETE INPUT MODULE BASE WIRING DIAGRAM - SHEET 2

| | |
|---|---|
| DRAWN BY: MAB | PROJECT NO. 1219.01.027 |
| DESIGNED BY: MAB | SUBMITTAL DATE: SEPT 2008 |
| CHECKED BY: BA | DRAWING NUMBER EC13 |

DWG FILE: 1219.01.101_EC13.dwg 11:02am PLOTTED: Sep 30, 2008 stevis

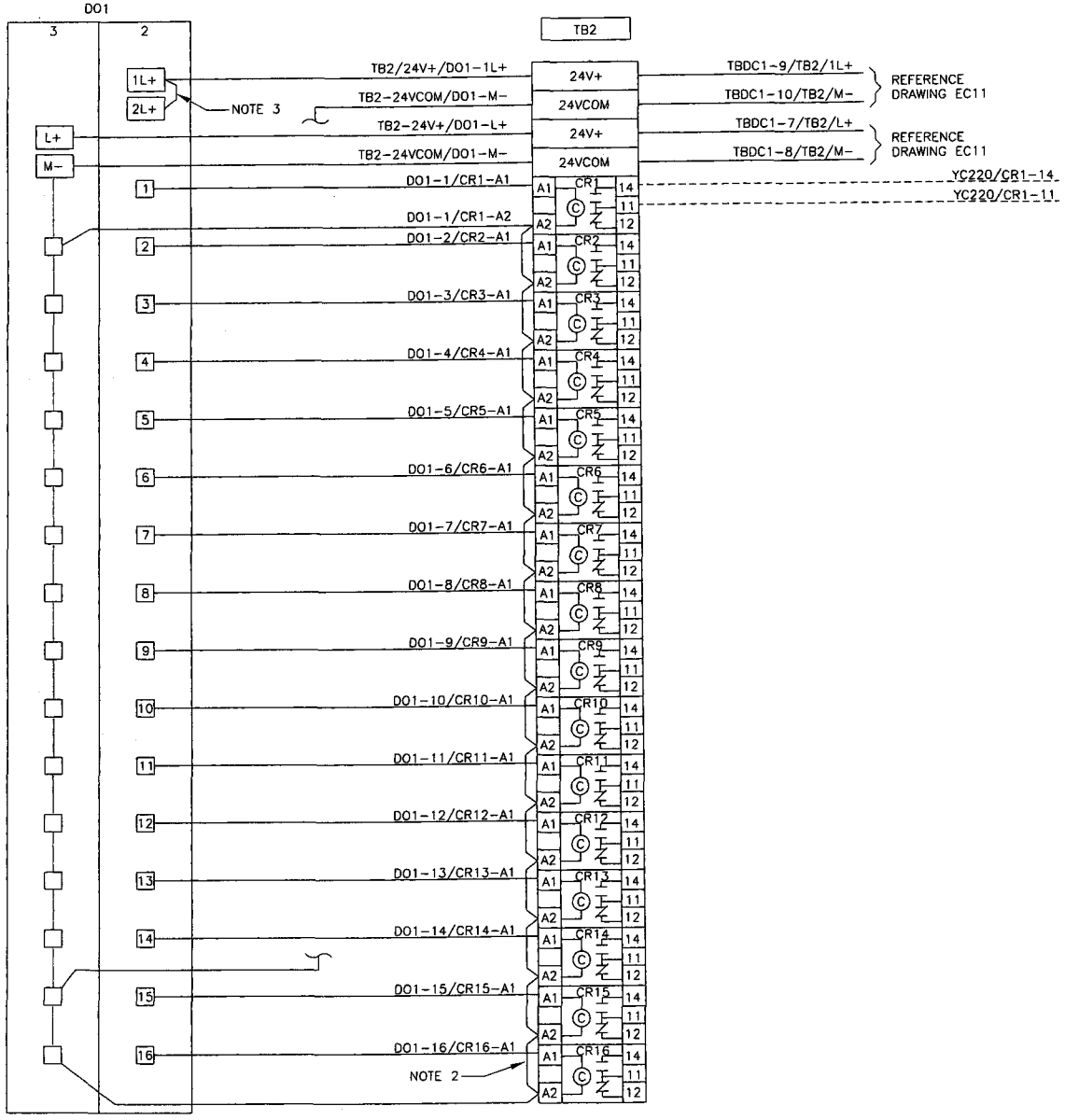


## NOTES:

1. WIRE MODULES PER MANUFACTURER'S REQUIREMENTS.
2. BUS OR INSULATED COMB STYLE JUMPER.
3. JUMPER WIRES PROVIDED BY PANEL MANUFACTURER.

| TAG NAME | DESCRIPTION |
|---|---|
| YC220 | WELL PUMP NO. 17 START/STOP COMMAND |
| | SPARE |
| | SPARE |
| | SPARE |
| | SPARE |
| | SPARE |
| | SPARE |
| | SPARE |
| | SPARE |
| | SPARE |
| | SPARE |
| | SPARE |
| | SPARE |
| | SPARE |
| | SPARE |
| | SPARE |
| | SPARE |


DLT&V
SYSTEMS ENGINEERING
3550 N. CENTRAL AVE, STE. 1900
PHOENIX, AZ 85012 (602) 266-4658


Registered Professional Engineer (Electrical) No. 37390 MELINDA TAM Date Signed 9-26-08 ARIZONA, U.S.A.

Expires 3/31/11

NOTES

| REVISIONS | | | |
|---|---|---|---|
| REV. | BY | DATE | DESCRIPTION |
| | | | |
| | | | |
| | | | |
| | | | |

CASA GRANDE WATER SYSTEM
SCADA PHASE II – WELL #17

ARIZONA WATER COMPANY

DISCRETE OUTPUT MODULE BASE WIRING DIAGRAM

| DRAWN BY: | PROJECT NO. |
|---|---|
| MAB | 1219.01.027 |
| DESIGNED BY: | SUBMITTAL DATE: |
| MAB | SEPT 2008 |
| CHECKED BY: | DRAWING NUMBER |
| BA | EC14 |

DWG FILE: 1219.01.101_EC14.dwg 11:02am PLOTTED: Sep 30, 2008 steveb

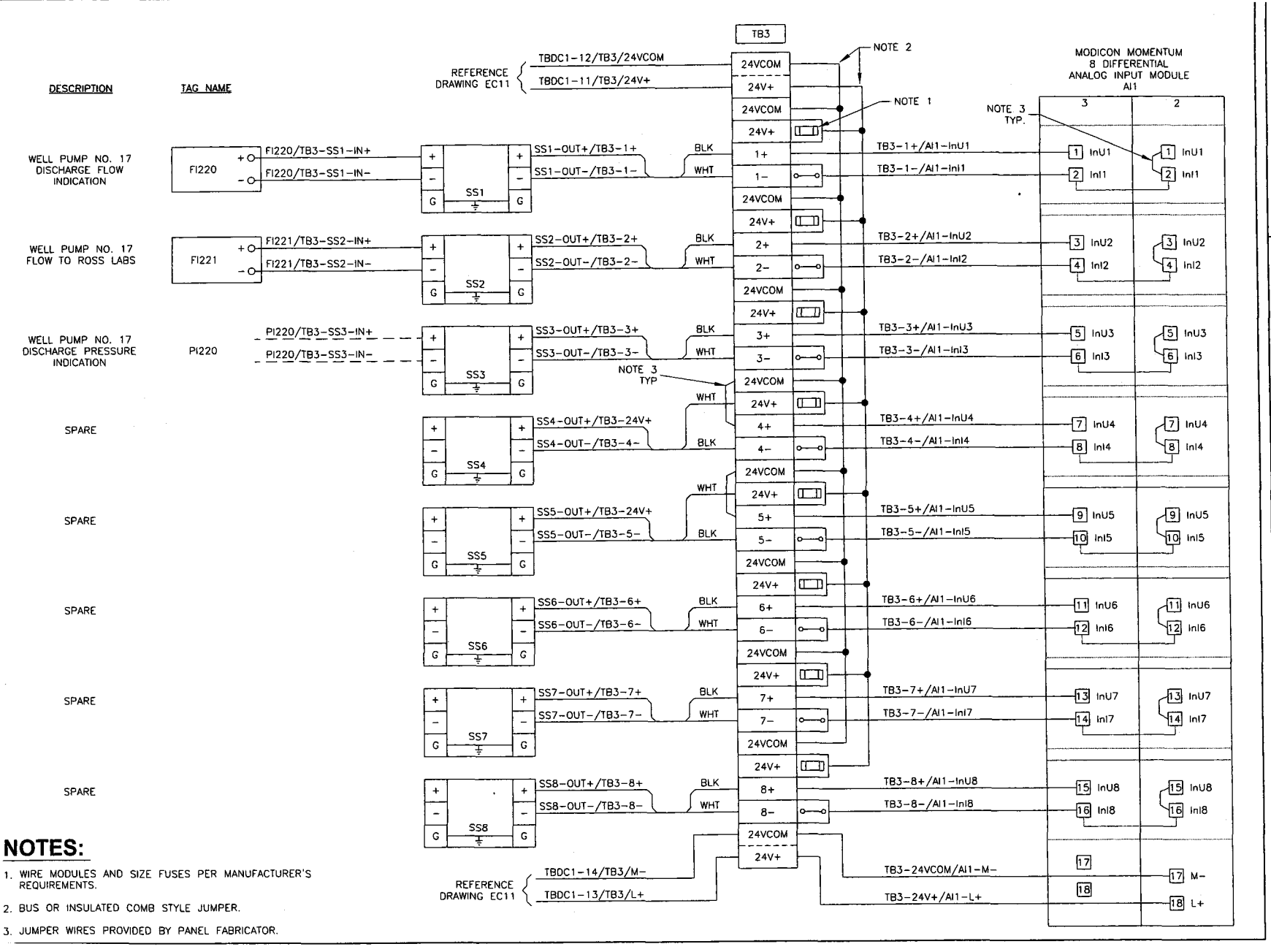


## NOTES:

1. WIRE MODULES AND SIZE FUSES PER MANUFACTURER'S REQUIREMENTS.
2. BUS OR INSULATED COMB STYLE JUMPER.
3. JUMPER WIRES PROVIDED BY PANEL FABRICATOR.

DLT&V SYSTEMS ENGINEERING
3550 N. CENTRAL AVE, STE. 1900
PHOENIX, AZ 85012 (602) 246-4558

Registered Professional Engineer (Electrical)
CERTIFICATE NO. 37390
MELINDA TAM
Date Signed 9-25-08
ARIZONA, U.S.A.
Expires 3/31/11

NOTES

| REVISIONS | | | |
|---|---|---|---|
| REV. | BY | DATE | DESCRIPTION |
| | | | |
| | | | |
| | | | |
| | | | |

CASA GRANDE WATER SYSTEM
SCADA PHASE II – WELL #17

ARIZONA WATER COMPANY

ANALOG INPUT MODULE BASE WIRING DIAGRAM

| DRAWN BY: | PROJECT NO. |
|---|---|
| MAB | 1219.01.027 |
| DESIGNED BY: | SUBMITTAL DATE: |
| MAB | SEPT 2008 |
| CHECKED BY: | DRAWING NUMBER |
| BA | EC15 |

DWG FILE: 1219.01.101_EC15.dwg 11:03am PLOTTED: Sep 30, 2008 stlewis

# CASA GRANDE WATER SYSTEM
# SCADA DESIGN - PHASE II
# WELL NO. 20 - RTU 230 DESIGN

DLT&V
SYSTEMS ENGINEERING
3550 N. CENTRAL AVE, STE. 1900
PHOENIX, AZ 85012 (602) 265-4658

Registered Professional Engineer (Electrical)
CERTIFICATE NO.
37390
MELINDA
TAM
Date Signed 9.25.08
ARIZONA, U.S.A.

Expires 3/31/11

NOTES

REVISIONS

| REV. | BY | DATE | DESCRIPTION |
|---|---|---|---|
| | | | |
| | | | |
| | | | |
| | | | |

CASA GRANDE WATER SYSTEM
SCADA PHASE II – WELL #20

ARIZONA WATER COMPANY

COVER SHEET

| DRAWN BY: | PROJECT NO. |
|---|---|
| MAB | 1219.01.027 |
| DESIGNED BY: | SUBMITTAL DATE: |
| MAB | SEPT 2008 |
| CHECKED BY: | DRAWING NUMBER |
| BA | EC1 |

XRG FILE: 1219.01.101_EC1.dwg 11:03am PLOTTED: Sep 30, 2008 dlewis

# CASA GRANDE WATER SYSTEM
# SCADA DESIGN – PHASE II
# WELL NO. 20 RTU DESIGN
# PROJECT SHEET INDEX

| Drawing No. | Drawing Title |
|---|---|
| EC1 | COVER SHEET |
| EC2 | PROJECT SHEET INDEX |
| EC3 | STANDARD SYMBOLS AND ABBREVIATIONS |
| EC4 | ISA TABLE AND COMMON LEGENDS SHEET |
| EC5 | BILL OF MATERIALS |
| EC6 | RTU ENCLOSURE LAYOUT |
| EC7 | RTU SUBPANEL LAYOUT |
| EC8 | TERMINAL BLOCK DETAILS |
| EC9 | COMMUNICATIONS SYSTEM ARCHITECTURE DIAGRAM |
| EC10 | 120VAC POWER DISTRIBUTION SCHEMATIC |
| EC11 | 24VDC POWER DISTRIBUTION SCHEMATIC |
| EC12 | DISCRETE INPUT MODULE BASE WIRING DIAGRAM - SHEET 1 |
| EC13 | DISCRETE INPUT MODULE BASE WIRING DIAGRAM - SHEET 2 |
| EC14 | DISCRETE OUTPUT MODULE BASE WIRING DIAGRAM |
| EC15 | ANALOG INPUT MODULE BASE WIRING DIAGRAM |

DLT&V
SYSTEMS ENGINEERING
2350 N. CENTRAL AVE, STE. 1900
PHOENIX, AZ 85012 (602) 266-4688

Registered Professional Engineer (Electrical)
LICENSE NO.
37390
MELINDA
TAM
Date Signed 9.29.08
ARIZONA, U.S.A.
Expires 3/31/11

NOTES

REVISIONS

| REV. | BY | DATE | DESCRIPTION |
|---|---|---|---|
| | | | |
| | | | |
| | | | |
| | | | |

CASA GRANDE WATER SYSTEM
SCADA PHASE II – WELL #20

ARIZONA WATER COMPANY

PROJECT
SHEET INDEX

| DRAWN BY: | PROJECT NO. |
|---|---|
| MAB | 1219.01.027 |
| DESIGNED BY: | SUBMITTAL DATE: |
| MAB | SEPT 2008 |
| CHECKED BY: | DRAWING NUMBER |
| BA | EC2 |

DWG FILE: 1219.01.101_EC2.dwg 11:03am PLOTTED: Sep 30, 2008 slewis

# CASA GRANDE WATER SYSTEM
# SCADA DESIGN – PHASE II
# WELL NO. 20 RTU DESIGN
# STANDARD SYMBOLS AND ABBREVIATIONS

## SCHEMATIC/WIRING DIAGRAM SYMBOLS

CIRCUIT BREAKER
*A – AMP RATING

*FUSE WITH PULLER*
*A – AMP RATING

SWITCH
NORMALLY OPEN

SELECTOR SWITCH
2 POSITION, NORMALLY OPEN

SELECTOR SWITCH
3 POSITION, NORMALLY OPEN

TEMPERATURE SWITCH
NORMALLY OPEN

TERMINAL BLOCK
* – TB IDENTIFICATION

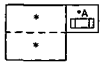


TERMINAL BLOCK W/ FUSE
PLUG AND FUSE
* – TB IDENTIFICATION
*A – AMPS

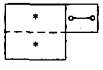


TERMINAL BLOCK W/
DISCONNECT KNIFE
* – TB IDENTIFICATION

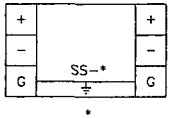


SURGE SUPPRESSOR FOR
FLOATING SIGNAL CIRCUITS
* – SS NUMBER IDENTIFICATION

SURGE SUPPRESSOR FOR
POWER SUPPLY
* – SS NUMBER IDENTIFICATION

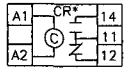


CONTROL RELAY
* – CR NUMBER IDENTIFICATION
# – TERMINAL NUMBER

## SCHEMATIC/WIRING DIAGRAM SYMBOLS

EARTH GROUND



TERMINAL BLOCK

DUPLEX RECEPTACLE

SINGLE RECEPTACLE

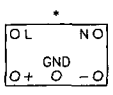


DC POWER SUPPLY
* – DC VOLTAGE RATING

## COLOR CODE CHART FOR 18 AWG BELDEN CABLES 12 COND. NO. 8466 AND 19 COND. NO. 8619

| | | |
|---|---|---|
| BLACK | BLK | 1st |
| WHITE | WHT | 2nd |
| RED | RED | 3rd |
| GREEN | GRN | 4th |
| ORANGE | ORN | 5th |
| BLUE | BLU | 6th |
| WHITE/BLACK | WHT/BLK | 7th |
| RED/BLACK | RED/BLK | 8th |
| GREEN/BLACK | GRN/BLK | 9th |
| ORANGE/BLACK | ORN/BLK | 10th |
| BLUE/BLACK | BLU/BLK | 11th |
| BLACK/WHITE | BLK/WHT | 12th |
| RED/WHITE | RED/WHT | 13th |
| GREEN/WHITE | GRN/WHT | 14th |
| BLUE/WHITE | BLU/WHT | 15th |
| BLACK/RED | BLK/RED | 16th |
| WHITE/RED | WHT/RED | 17th |
| ORANGE/RED | ORN/RED | 18th |
| BLUE/RED | BLU/RED | 19th |

## WIRE SIZES

**(CIRCUIT WIRING SHALL BE RATED IN ACCORDANCE WITH THE MAXIMUM PERMITTED AMPERE RATING/SETTING OF THE OVERCURRENT PROTECTION DEVICE. N.E.C. 210–3)**

120VAC / 20A POWER CIRCUIT – MIN. #12 AWG.
120VAC / 15A AND BELOW – MIN. #14 AWG.

24VDC / 20A POWER CIRCUIT – MIN. #12 AWG.
24VDC / 15A AND BELOW – MIN. #16 AWG.
24VDC I/O & SIGNAL CIRCUIT – MIN. #18 AWG.

4–20mADC I/O SIGNAL CIRCUIT – MIN. #18 AWG.

## ABBREVIATIONS

| | |
|---|---|
| A/R | AS REQUIRED |
| AC COM | NEUTRAL |
| AFF | ABOVE FINISHED FLOOR |
| AI | ANALOG INPUT |
| ANL COM | ANALOG COMMON |
| AO | ANALOG OUTPUT |
| AWG | AMERICAN WIRE GAUGE |
| BLK | BLACK |
| BLU | BLUE |
| CAP | CENTRAL ARIZONA PROJECT |
| CLR | CLEAR |
| CR | CONTROL RELAY |
| DC COM | DC COMMON |
| DC+ | DC POSITIVE POTENTIAL |
| DI | DISCRETE INPUT |
| DO | DISCRETE OUTPUT |
| DS | DOOR SWITCH |
| FOM | FIBER OPTIC MODEM |
| FOT | FIBER OPTIC TRANSCEIVER |
| GND | GROUND |
| GRN | GREEN |
| I/O | INPUT/OUTPUT |
| L | LINE |
| N | NEUTRAL |
| NC | NORMALLY CLOSED |
| NO | NORMALLY OPEN |
| NP | NAMEPLATE |
| OIT | OPERATOR INTERFACE TERMINAL |
| ORN | ORANGE |
| PDB | POWER DISTRIBUTION BLOCK |
| PLC | PROGRAMMABLE LOGIC CONTROLLER |
| PP | FIBER OPTIC PATCH PANEL |
| PS | POWER SUPPLY |
| REC | RECEPTACLE |
| RES | RESERVOIR |
| RIO | REMOTE INPUT/OUTPUT |
| RTU | REMOTE TELEMETRY UNIT |
| SLC | SMALL LOGIC CONTROLLER |
| SP | SPACE |
| SS | SURGE SUPPRESSOR |
| TB | TERMINAL BLOCK |
| UPS | UNINTERRUPTIBLE POWER SUPPLY |
| WHT | WHITE |
| WTR | WATER TREATMENT PLANT |
| WWTP | WASTE WATER TREATMENT PLANT |

## LINETYPE LEGEND

- FIELD WIRING
- INTERNAL PANEL WIRING
- RADIO COMMUNICATION LINK
- FO — FIBER OPTIC CABLE
- FOP — FIBER OPTIC PATCH CABLE
- EN — ETHERNET CAT5 CABLE
- DH+ — DATA HIGHWAY PLUS
- RIO — REMOTE INPUT OUTPUT
- AREA DIVIDER
- EQUIPMENT
- PATCH PANEL


DLT&V
SYSTEMS ENGINEERING
3550 N. CENTRAL AVE, STE. 1900
PHOENIX, AZ 85012 (602) 265-4658


Registered Professional Engineer (Electrical)
CERTIFICATE NO.
37390
MELINDA
TAM
Date Signed 9-25-08
ARIZONA, U.S.A.
Expires 3/31/11

NOTES

| REVISIONS | | | |
|---|---|---|---|
| REV. | BY | DATE | DESCRIPTION |
| | | | |
| | | | |
| | | | |
| | | | |

CASA GRANDE WATER SYSTEM
SCADA PHASE II – WELL #20

ARIZONA WATER COMPANY

STANDARD SYMBOLS AND ABBREVIATIONS

| | |
|---|---|
| DRAWN BY: MAB | PROJECT NO. 1219.01.027 |
| DESIGNED BY: MAB | SUBMITTAL DATE: SEPT 2008 |
| CHECKED BY: BA | DRAWING NUMBER EC3 |


DWG FILE: 1219.01.101_EC3.dwg 11:03am PLOTTED: Sep 30, 2008 steve

# CASA GRANDE WATER SYSTEM
# SCADA DESIGN – PHASE II
# WELL NO. 20 RTU DESIGN
# ISA TABLE AND COMMON LEGENDS SHEET

## ISA INSTRUMENT IDENTIFICATION TABLE

| FIRST LETTERS | | | SUCCEEDING LETTERS | | |
|---|---|---|---|---|---|
| MEASURED OR INITIATING VARIABLE | | MODIFIER | READOUT OR PASSIVE FUNCTION | OUTPUT FUNCTION | MODIFIER |
| A | ANALYZER | | ALARM | | AUTO |
| B | BURNER, COMBUSTION | | | | |
| C | CONDUCTIVITY | | | CONTROL | CLOSED |
| D | DENSITY | DIFFERENTIAL | | | |
| E | VOLTAGE | | ELEMENT | | |
| F | FLOW | RATIO | | | |
| G | GAUGE | | GLASS, VIEWING DEVICE | | |
| H | HAND | | | | HIGH |
| I | CURRENT | | INDICATE | | |
| J | POWER | SCAN | | | |
| K | TIME, TIME SCHED. | TIME RATE OF CHANGE | | CONTROL STATION | |
| L | LEVEL | | LIGHT | | LOW |
| M | MOTION | | | | MIDDLE |
| N | INTRUSION | | | | NORMAL |
| O | TORQUE | | ORIFICE, RESTRICTION | | OPEN |
| P | PRESSURE | | POINT CONNECTION | | STOP |
| Q | QUANTITY | INTEGRATE, TOTALIZE | | | |
| R | RADIATION | | RECORD, OR PRINT | | REMOTE |
| S | SPEED, FREQUENCY | SAFETY | | SWITCH | START |
| T | TEMPERATURE | | | TRANSMIT | |
| U | MULTIVARIABLE | | MULTIFUNCTION | MULTIFUNCTION | MULTIFUNCTION |
| V | VIBRATION | | | VALVE, LOUVER | |
| W | WEIGHT | | WELL | | |
| X | MOTOR | X-AXIS | UNCLASSIFIED | UNCLASSIFED | UNCLASSIFED |
| Y | EVENT, STATE, OR PRESENCE | Y-AXIS | | RELAY, COMPUTE, CONVERT | |
| Z | POSITION | Z-AXIS | | DRIVER, ACTUATOR, FINAL CONTROL ELEMENT | |

### FIELD WIRES TAG LEGEND

DEVICE_NAME/TBXX-00
- TERMINAL NO.
- TERMINAL STRIP NO.
- FIELD DEVICE TAG NO.

### PANEL POWER WIRES TAG LEGEND

TBXX-03/TBXX-03
- TO TERMINAL NO.
- TO TERMINAL STRIP NO.
- FROM TERMINAL NO.
- FROM TERMINAL STRIP NO.

### PANEL I/O WIRES TAG LEGEND

O:#.2/TBXX-03
- INPUT POINT NO.
- TERMINAL STRIP NO.
- CHANNEL #
- SLOT #
- O=OUTPUT I=INPUT

### COLOR CODE CHART FOR 22 AWG BELDEN PAIRED CABLE NO. 8761

| | | |
|---|---|---|
| BLACK | BLK | 1st |
| CLEAR | CLR | 2nd |

### PANEL WIRING IDENTIFICATION

BLACK – 120VAC LINE
WHITE – 120VAC NEUTRAL
GREEN – GROUND
ORANGE – DC POSITIVE
BLUE – DC COMMON

DLT&V SYSTEMS ENGINEERING
3550 N. CENTRAL AVE, STE. 1900
PHOENIX, AZ 85012 (602) 266-4658

Registered Professional Engineer (Electrical) CERTIFICATE NO. 37390 MELINDA TAM Date Signed 9.25.08 ARIZONA, U.S.A.

Expires 3/31/11

NOTES

REVISIONS

| REV. | BY | DATE | DESCRIPTION |
|---|---|---|---|
| | | | |
| | | | |
| | | | |
| | | | |

CASA GRANDE WATER SYSTEM
SCADA PHASE II – WELL #20

ARIZONA WATER COMPANY

ISA TABLE AND COMMON LEGENDS SHEET

| | |
|---|---|
| DRAWN BY: MAB | PROJECT NO. 1219.01.027 |
| DESIGNED BY: MAB | SUBMITTAL DATE: SEPT 2008 |
| CHECKED BY: BA | DRAWING NUMBER EC4 |

DWG FILE: 1219.01.101_EC4.dwg 11:03am PLOTTED: Sep 30, 2008 stewis

| QTY | ITEM # | MANUFACTURER | PART NUMBER | DESCRIPTION |
|---|---|---|---|---|
| 1 | 100 | MODICON | 171CCC96030 | M1E PROCESSOR ADAPTER, ETHERNET AND I/O BUS PORTS, WEB PAGE ENABLED, IEC |
| 2 | 101 | MODICON | 170INT11000 | MOMENTUM INTERBUS \ I/O BUS COMMUNICATIONS ADAPTER |
| 1 | 102 | MODICON | 170ADI35000 | 24V DC - 32 PT. INPUT MODULE BASE |
| 1 | 103 | MODICON | 170ADO34000 | 24V DC / 0.5A - 16 PT. OUTPUT MODULE BASE, 0.5 A OUTPUT |
| 1 | 104 | MODICON | 170AAI03000 | MOMENTUM SERIES I/O BASE, ANALOG 8CH DIFFERENTIAL INPUT MODULE BASE |
| 1 | 105 | MODICON | 172JNN21032 | MOMENTUM SERIES OPTION ADAPTER W/ GENERAL PURPOSE SERIAL COMMUNICATION PORT, RS-232 OR RS-485 SELECTABLE |
| 1 | 106 | MODICON | XBT GT5330 | EXTERNAL DISPLAY WITH 10.4" COLOR TFT,VGA RESOLUTION (640X480 PIXELS), 24V POWER |
| 1 | 107 | WEIDMULLER | IE-SW8-ECO | INDUSTRIAL 8-PORT ETHERNET SWITCH, 10/100 Mbps, UNMANAGED |
| 2 | 108 | MODICON | 170MCI00700 | INTERBUS CABLE |
| 1 | 110 | BELDEN | 8267 | CABLE, COAXIAL, RG-213 (OR EQUAL) WITH APPROPRIATE CONNECTORS, (LENGTH AS REQUIRED) |
| 1 | 111 | MDS | iNET-II-IP | ETHERNET REMOTE RADIO TRANSCEIVER, SPREAD SPECTRUM, W/ REMOTE DIAGNOSTICS |
| 3 | 112 | MODICON | 170XTS00100 | CONNECTOR SET, SCREW-TYPE (SET OF 3) |
| A/R | 201 | ALLEN-BRADLEY | 1492-DR6 | TERMINAL MOUNTING RAIL, HI-RISE, ALUMINUM |
| 14 | 202 | ALLEN-BRADLEY | 1492-EA35 | END ANCHOR |
| 6 | 210 | ALLEN-BRADLEY | 1492-GM35 | TERMINAL BLOCK, GROUP MARKING CARRIER |
| 18 | 215 | ALLEN-BRADLEY | 1492-J4 | TERMINAL BLOCK, SINGLE CIRCUIT, 600V, GRAY |
| 1 | 218 | ALLEN-BRADLEY | 1492-JD3 | TERMINAL BLOCK, DOUBLE LEVEL |
| 67 | 219 | ALLEN-BRADLEY | 1492-JD3P | TERMINAL BLOCK, DOUBLE LEVEL W/ PLUGGABLE TOP LEVEL |
| 4 | 221 | ALLEN-BRADLEY | 1492-JG4 | TERMINAL BLOCK, SINGLE CIRCUIT, GROUNDING |
| 53 | 223 | ALLEN-BRADLEY | 1492-FPK224 | FUSE PLUG INSERT W/ BFI, 10-36VAC/DC WORKING VOLTAGE, 10A MAX @ 250V. PROVIDE FAST BLOW FUSES AS REQUIRED |
| 8 | 225 | ALLEN-BRADLEY | 1492-DPL | DISCONNECT PLUG FOR 1492-JD3 P AND 1492-JD3 |
| 2 | 230 | WEIDMULLER | 9926251001 | CIRCUIT BREAKER, 1A |
| 4 | 231 | WEIDMULLER | 9926251002 | CIRCUIT BREAKER, 2A |
| 2 | 232 | WEIDMULLER | 9926251003 | CIRCUIT BREAKER, 3A |
| 1 | 233 | WEIDMULLER | 9926251010 | CIRCUIT BREAKER, 10A |
| 3 | 234 | WEIDMULLER | 9926251015 | CIRCUIT BREAKER, 15A |
| 1 | 235 | WEIDMULLER | 9926251020 | CIRCUIT BREAKER, 20A |
| 53 | 282 | ANY | ANY | 250V, 5mmX20mm FAST BLOW GLASS FUSES (SIZE AS INDICATED ON DRAWING) |
| 1 | 304 | HOFFMAN | A72H3724FS3PT | ENCLOSURE, FREE STANDING, TYPE 4/12 W/3-POINT LATCH, 72"X37"X24" |
| 1 | 305 | HOFFMAN | A72P36F1 | SUBPANEL, WHITE PAINT, 60"X32" |
| 1 | 306 | HOFFMAN | A72SP36F4 | SWING-OUT PANEL, HALF PANEL, 30.88" X 33.81" |
| 1 | 313 | HOFFMAN | ALF16D18R | 18" FLOURESCENT LIGHTING PACKAGE W/DOOR SWITCH, 115VAC |
| 1 | 316 | HOFFMAN | A-TEMNO | TEMPERATURE CONTROL SWITCH (THERMOSTAT), N.O. CONTACTS |
| A/R | 359 | BELDEN | 7929A | CABLE, ETHERNET, 4 PR, 24 AWG, CAT 5E |
| 1 | 377 | ANY | ANY | GROUNDING BAR |
| 1 | 378 | CUSTOM | CUSTOM | CUSTOM SHELF SUPPLIED AND INSTALLED BY PANEL FABRICATOR |
| A/R | 379 | PANDUIT | F2X4LG6 C2LG6 | 2 X 4 PLASTIC WIRING DUCT TYPE "E" W/COVER STYLE "C" |
| A/R | 380 | PANDUIT | F3X4LG6 C3LG6 | 3 X 4 PLASTIC WIRING DUCT TYPE "E" W/COVER STYLE "C" |
| 1 | 398 | HUBBELL | HBL5362I | DUPLEX RECEPTACLE, IVORY, 125V/20A, W/BOX AND BRUSHED ALUMINUM COVER (HUBBELL P.N.# A8) |
| 1 | 399 | HUBBELL | HBL5361I | SIMPLEX RECEPTACLE, IVORY, 125V/20A, W/BOX AND BRUSHED ALUMINUM COVER (HUBBELL P.N.# A7) |
| 1 | 400 | HUBBELL | HBL3810R | SIMPLEX RECEPTACLE, RED, 125V/20A, W/BOX AND BRUSHED ALUMINUM COVER (HUBBELL P.N.# A7) |
| 2 | 405 | WEIDMULLER | 8708670000 (CP SNT 250W 24V 10A) | POWER SUPPLY, 24VDC, 250W, 10A, W/ STATUS RELAY |
| 1 | 406 | WEIDMULLER | 8710620000 (CP DM 10) | DIODE MODULE, 10A PER INPUT, 40VDC MAX |
| 1 | 408 | IDEC | RH2B-UL-AC120V | RELAY, 120VAC COIL, DPDT W/ INDICATOR |
| 1 | 421 | IDEC | SH2B-05C | RELAY SOCKET, DIN RAIL MOUNT, FINGERSAFE |
| 1 | 450 | MTL SURGE TECHNOLOGIES | MA15/D/1/SI | 120/240 VAC, 15A, SURGE SUPPRESSOR AND FILTER |
| 8 | 451 | WEIDMULLER | 8448920000 | SURGE SUPPRESSOR, 24VDC, 2 WIRE LOOP PROTECTION (MCZ OVP) W/ END CAP PART #8389030000 |
| 8 | 452 | WEIDMULLER | 8389030000 | END CAP FOR 24VDC SURGE SUPPRESSOR (MCZ OVP) |
| 16 | 455 | ALLEN-BRADLEY | 700-HLT1Z24 | TERMINAL BLOCK RELAY, 24VDC, 6A CONTACTS, SPDT W/ LED |
| 1 | 505 | HOFFMAN | CR29-0416-G068 | AIR CONDITIONER, 120 VAC, 4000 BTU/HR, W/OUTDOOR ENCLOSURE PACKAGE |
| 1 | 703 | APC | SUA750, AP9610 | UPS, 115 VAC, 750 VA W/ RELAY I/O SMARTSLOT CARD OPTION, MINIMUM 30 MIN. RUNTIME OF COMPLETE PLC OPERATIONS POWER |
| 1 | 811 | POLYPHASER | IS-50NX-C2 | BROADBAND COAXIAL SURGE PROTECTOR, FLANGE MOUNT, 125-1000MHZ |
| 2 | 853 | TIMES MICROWAVE SYSTEMS | EZ-900-NMC | N-MALE CONNECTOR |

DLT&V
SYSTEMS ENGINEERING
3550 N. CENTRAL AVE, STE. 1900
PHOENIX, AZ 85012 (602) 266-4656

Registered Professional Engineer (Electrical)
CERTIFICATE NO.
37390
MELINDA
TAM
Date Signed 9-25-08
ARIZONA, U.S.A.

Expires 3/31/11

NOTES

REVISIONS

| REV. | BY | DATE | DESCRIPTION |
|---|---|---|---|
| | | | |
| | | | |
| | | | |
| | | | |

CASA GRANDE WATER SYSTEM
SCADA PHASE II - WELL #20

ARIZONA WATER COMPANY

BILL OF MATERIALS

| DRAWN BY: | PROJECT NO. |
|---|---|
| MAB | 1219.01.027 |
| DESIGNED BY: | SUBMITTAL DATE: |
| MAB | SEPT 2008 |
| CHECKED BY: | DRAWING NUMBER |
| BA | EC5 |

DWG FILE: 1219.01.101_EC5.dwg 11:03am PLOTTED: Sep 30, 2008 slewis

## NOTES:

1. BILL OF MATERIALS IS ON DRAWING EC5.
2. REFER TO DRAWING EC7 FOR PLC INTERIOR LAYOUT.
3. FURNISH ADDITIONAL NAMEPLATES AS REQUIRED BY UL OR BY OTHER APPLICABLE CODES.
4. MOMOUNT UPS MINIMUM 6" ABOVE GRADE LEVEL. PANEL FABRICATOR SHALL SUPPLY AND INSTALL CUSTOM SUPPORT HARDWARE IN ENCLOSURE AS REQUIRED.

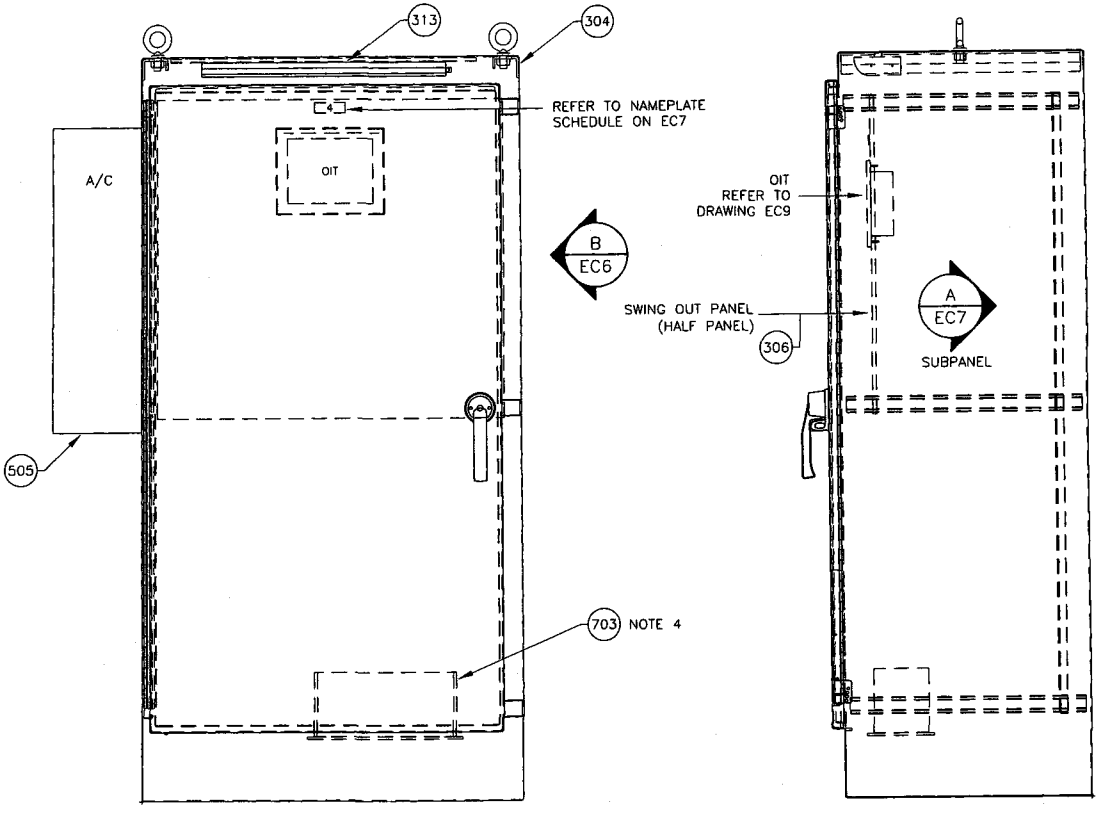


A ~ RTU ENCLOSURE, FRONT
1"=1'-0"

B ~ RTU ENCLOSURE, SIDE
1"=1'-0"

DLT&V SYSTEMS ENGINEERING
3550 N. CENTRAL AVE, STE. 1900
PHOENIX, AZ 85012 (602) 266-4656

Registered Professional Engineer (Electrical)
CERTIFICATE NO.
37390
MELINDA
TAM
Date Signed 9.29.08
ARIZONA, U.S.A.
Expires 3/31/11

NOTES

REVISIONS

| REV. | BY | DATE | DESCRIPTION |
|---|---|---|---|
| | | | |
| | | | |
| | | | |
| | | | |

CASA GRANDE WATER SYSTEM
SCADA PHASE II – WELL #20

ARIZONA WATER COMPANY

RTU ENCLOSURE LAYOUT

| DRAWN BY: | PROJECT NO. |
|---|---|
| MAB | 1219.01.027 |
| DESIGNED BY: | SUBMITTAL DATE: |
| MAB | SEPT 2008 |
| CHECKED BY: | DRAWING NUMBER |
| BA | EC6 |

DWG FILE: 1219.01.101_EC6.dwg 11:04am PLOTTED: Sep 30, 2008 stewis

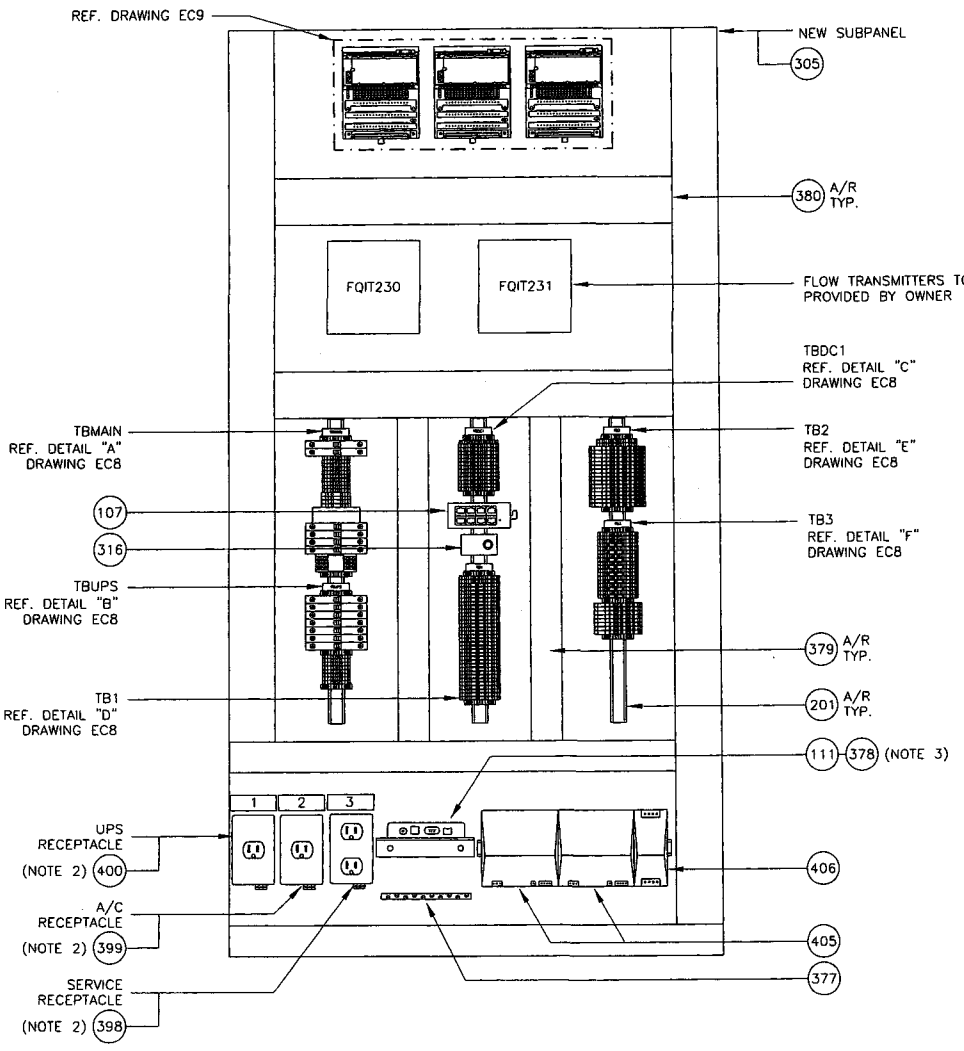


A / EC6 SUBPANEL LAYOUT
1-1/2"=1'-0"

## NOTES:

1. BILL OF MATERIALS IS ON DRAWING EC5.
2. NAMEPLATE SHALL BE 3/32" THICK LAMINATED PHENOLIC TYPE BLACK WITH WHITE LETTERS. SEE BILL OF MATERIALS ON DRAWING EC5 AND NAMEPLATE SCHEDULE (DET B) ON THIS SHEET FOR ADDITIONAL INFORMATION.
3. MOUNT RADIO ON CUSTOM SHELF PROVIDED AND INSTALLED BY PANEL FABRICATOR. REFER TO DRAWING EC9 AND BILL OF MATERIALS ON EC5 FOR MORE INFORMATION.

**NAMEPLATE SCHEDULE (NOTE 2)**

| NP | HxWxLTR | FIRST LINE | SECOND LINE | LOCATION |
|---|---|---|---|---|
| 1 | 1" x 3" x 1/4" | UPS RECEPTACLE | ONLY | CENTERED ABOVE UPS RECEPTACLE |
| 2 | 1" x 3" x 1/4" | A/C RECEPTACLE | ONLY | CENTERED ABOVE A/C RECEPTACLE |
| 3 | 1" x 3" x 1/4" | SERVICE RECEPTACLE | ONLY | CENTERED ABOVE SERVICE RECEPTACLE |
| 4 | 1" x 3" x 1/4" | OIT | | CENTERED ABOVE OIT |

B / ~ NAMEPLATE SCHEDULE

DLT&V SYSTEMS ENGINEERING
3550 N. CENTRAL AVE, STE. 1900
PHOENIX, AZ 85012 (602) 266-4658

Registered Professional Engineer (Electrical)
CERTIFICATE NO. 37390
MELINDA TAM
Date Signed 9.29.08
ARIZONA, U.S.A.
Expires 3/31/11

NOTES

REVISIONS

| REV. | BY | DATE | DESCRIPTION |
|---|---|---|---|
| | | | |

CASA GRANDE WATER SYSTEM
SCADA PHASE II – WELL #20

ARIZONA WATER COMPANY

RTU SUBPANEL LAYOUT

| | |
|---|---|
| DRAWN BY: MAB | PROJECT NO. 1219.01.027 |
| DESIGNED BY: MAB | SUBMITTAL DATE: SEPT 2008 |
| CHECKED BY: BA | DRAWING NUMBER EC7 |

DWG FILE: 1219.01.101_EC7.dwg 11:05am PLOTTED: Sep 30, 2008 slewis

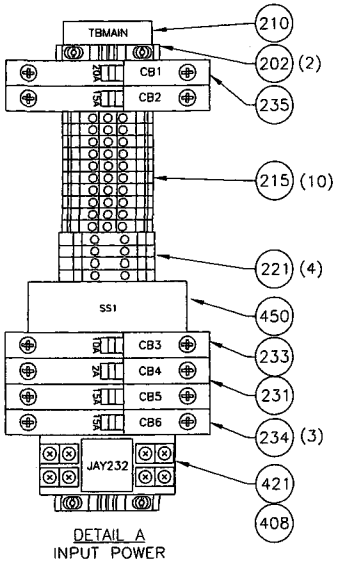


DETAIL A
INPUT POWER
TBMAIN

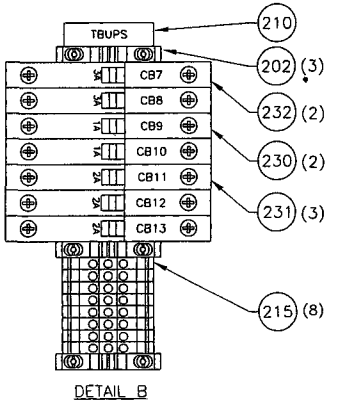


DETAIL B
PANEL POWER
TBUPS

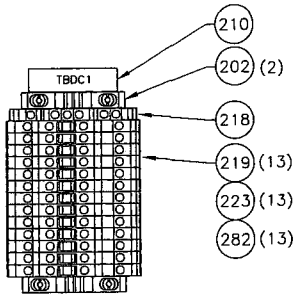


DETAIL C
24VDC POWER
DISTRIBUTION
TBDC1

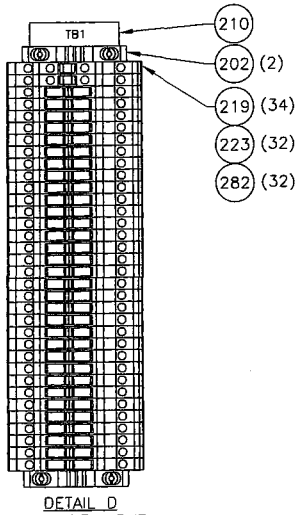


DETAIL D
DISCRETE INPUT
TB1

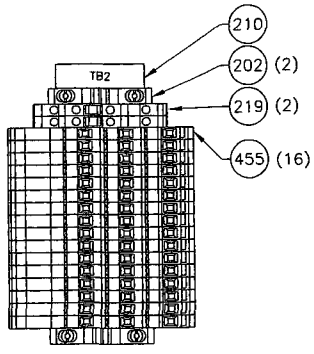


DETAIL E
DISCRETE OUTPUT
TB2

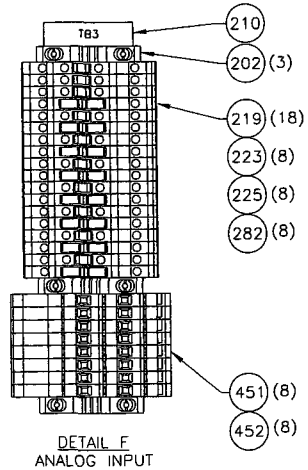


DETAIL F
ANALOG INPUT
TB3

## NOTES:

1. PROVIDE BUS BAR STYLE OR INSULATED COMB STYLE JUMPERS WHERE 2 OR MORE TERMINALS IN THE SAME TB ARE COMMONED TOGETHER. DO NOT USE DISCRETE WIRE JUMPERS.
2. BILL OF MATERIALS IS ON DRAWING EC5.
3. PANEL BUILDER TO SUPPLY AND INSTALL ALL NECESSARY AND APPROPRIATE ACCESSORIES INCLUDING TERMINAL NUMBERS, JUMPERS AND END BARRIERS.

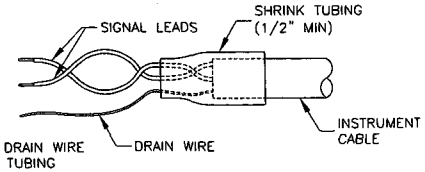


NOTE:
WRAP UNUSED DRAIN WIRE
UNDER SHRINK TUBING

DETAIL G
INSTRUMENT CABLE
TERMINATION

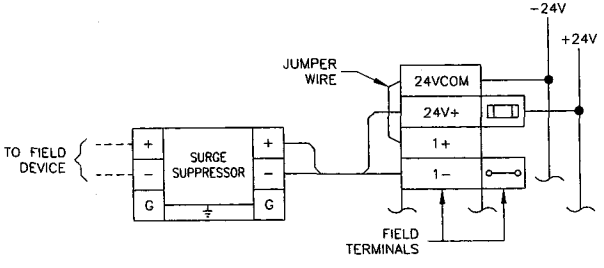


2-WIRE

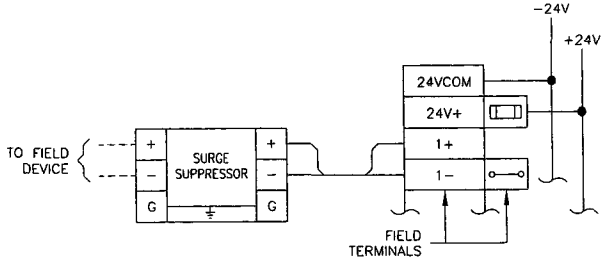


4-WIRE

DETAIL H
ANALOG INPUT TERMINALS
2 & 4-WIRE TYPICAL CONNECTIONS

DLT&V
SYSTEMS ENGINEERING
3550 N. CENTRAL AVE, STE. 1900
PHOENIX, AZ 85012 (602) 266-4656

Registered Professional Engineer (Electrical)
CERTIFICATE NO.
37390
MELINDA
TAM
Date Signed 9-29-08
ARIZONA, U.S.A.

Expires 3/31/11

NOTES

REVISIONS

| REV. | BY | DATE | DESCRIPTION |
|---|---|---|---|
| | | | |
| | | | |
| | | | |
| | | | |

CASA GRANDE WATER SYSTEM
SCADA PHASE II - WELL #20

ARIZONA WATER COMPANY

TERMINAL BLOCK DETAILS

| DRAWN BY: | PROJECT NO. |
|---|---|
| MAB | 1219.01.027 |
| DESIGNED BY: | SUBMITTAL DATE: |
| MAB | SEPT 2008 |
| CHECKED BY: | DRAWING NUMBER |
| BA | EC8 |

DWG FILE: 1219.01.101_EC8.dwg 11:05am PLOTTED: Sep 30, 2008 slewis

## NOTES:

1. BILL OF MATERIALS IS ON DRAWING EC5.
2. ANTENNA, ANTENNA MAST, GROUNDING KIT AND CABLE PROVIDED AND INSTALLED BY OTHERS.

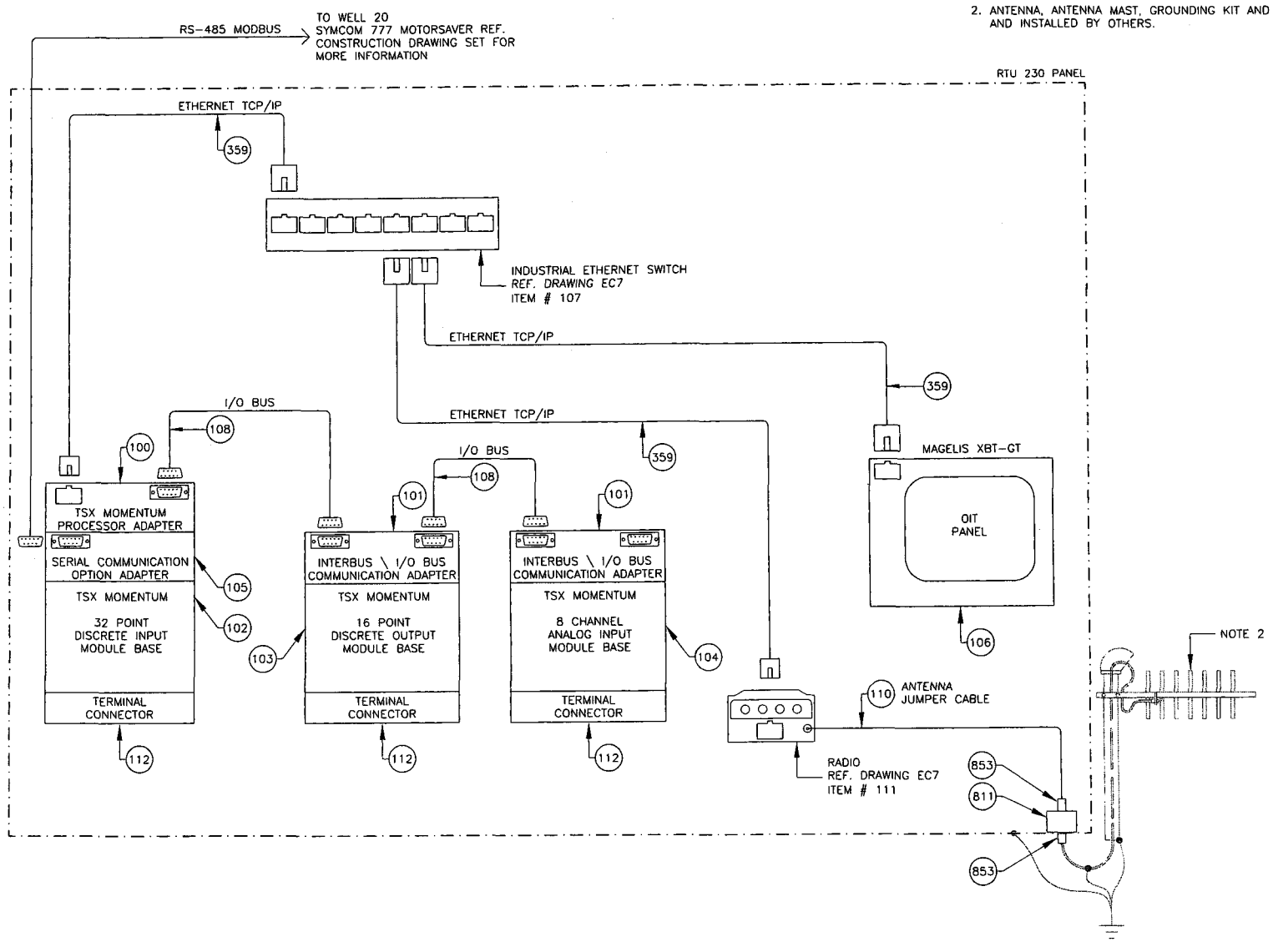


DWG FILE: 1219.01.101_EC9.dwg 11:05am PLOTTED: Sep 30, 2008 stevis

DLT&V SYSTEMS ENGINEERING
3550 N. CENTRAL AVE, STE. 1900
PHOENIX, AZ 85012 (602) 266-4656

Registered Professional Engineer (Electrical) CERTIFICATE NO. 37390 MELINDA TAM Date Signed 9-29-08 ARIZONA, U.S.A.

Expires 3/31/11

NOTES

REVISIONS

| REV. | BY | DATE | DESCRIPTION |
|---|---|---|---|
| | | | |
| | | | |
| | | | |
| | | | |

CASA GRANDE WATER SYSTEM
SCADA PHASE II - WELL #20

ARIZONA WATER COMPANY

COMMUNICATIONS SYSTEM ARCHITECTURE DIAGRAM

| DRAWN BY: | PROJECT NO. |
|---|---|
| MAB | 1219.01.027 |
| DESIGNED BY: | SUBMITTAL DATE: |
| MAB | SEPT 2008 |
| CHECKED BY: | DRAWING NUMBER |
| BA | EC9 |

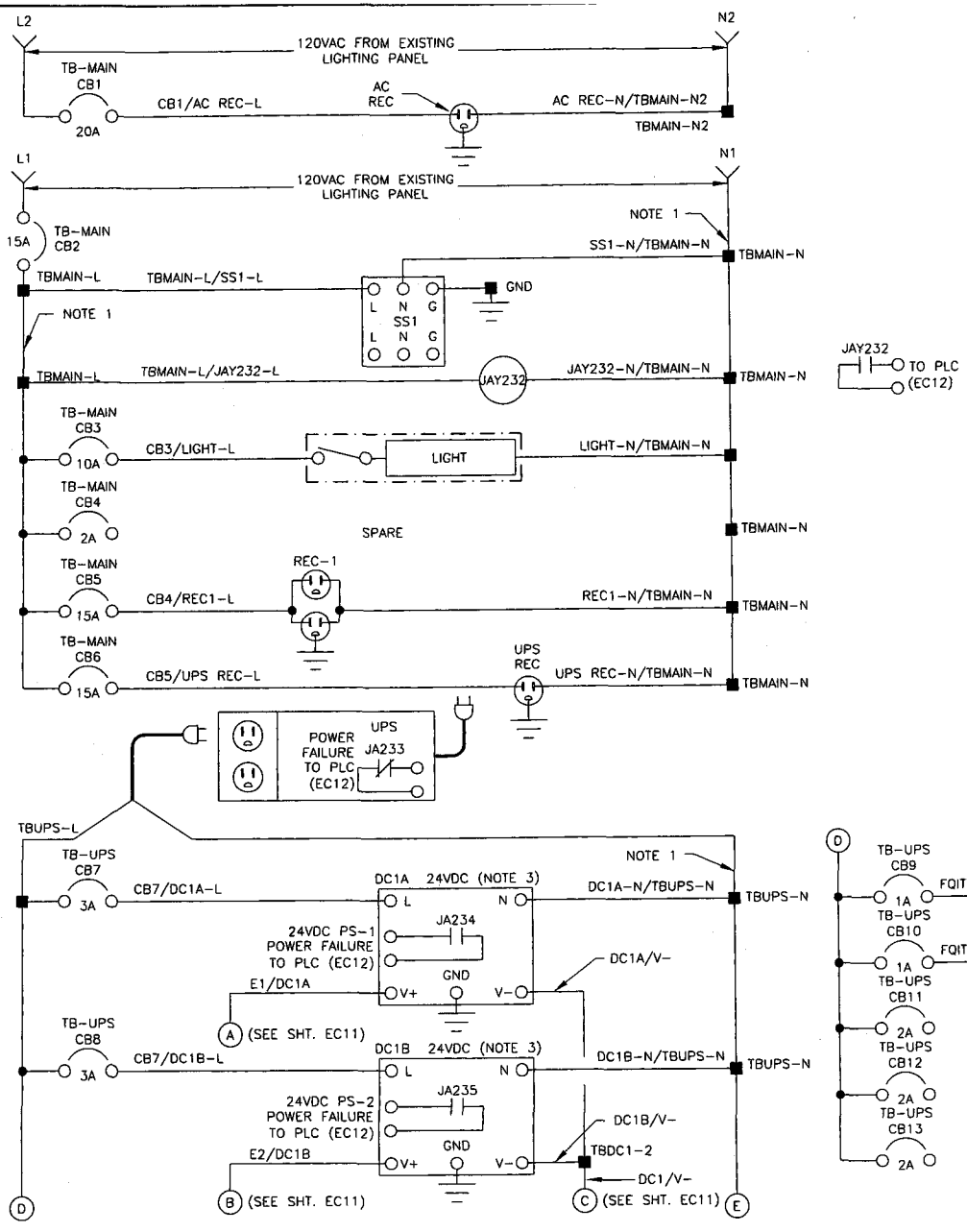


## NOTES:

1. PROVIDE BUS BAR STYLE OR INSULATED COMB STYLE JUMPERS WHERE 2 OR MORE TERMINALS IN THE SAME TB ARE COMMONED TOGETHER. DO NOT USE DISCRETE WIRE JUMPERS.
2. BILL OF MATERIALS IS ON DRAWING EC5.
3. ADJUST VOLTAGE OUTPUT SETTING ON DC1B TO BE 1.0 VOLT LESS THAN DC1A.

# 120VAC POWER DISTRIBUTION


DLT&V
SYSTEMS ENGINEERING
3950 N. CENTRAL AVE, STE. 1900
PHOENIX, AZ 85012 (602) 266-4656


Registered Professional Engineer (Electrical)
CERTIFICATE NO.
37390
MELINDA
TAM
Date Signed 9-29-08
ARIZONA, U.S.A.
Expires 3/31/11

NOTES

REVISIONS

| REV. | BY | DATE | DESCRIPTION |
|---|---|---|---|
| | | | |
| | | | |
| | | | |
| | | | |

CASA GRANDE WATER SYSTEM
SCADA PHASE II - WELL #20

ARIZONA WATER COMPANY

120VAC POWER DISTRIBUTION SCHEMATIC

| DRAWN BY: | PROJECT NO. |
|---|---|
| MAB | 1219.01.027 |
| DESIGNED BY: | SUBMITTAL DATE: |
| MAB | SEPT 2008 |
| CHECKED BY: | DRAWING NUMBER |
| BA | EC10 |

DWG FILE: 1219.01.101_EC10.dwg 11:05am PLOTTED: Sep 30, 2008 dlewis

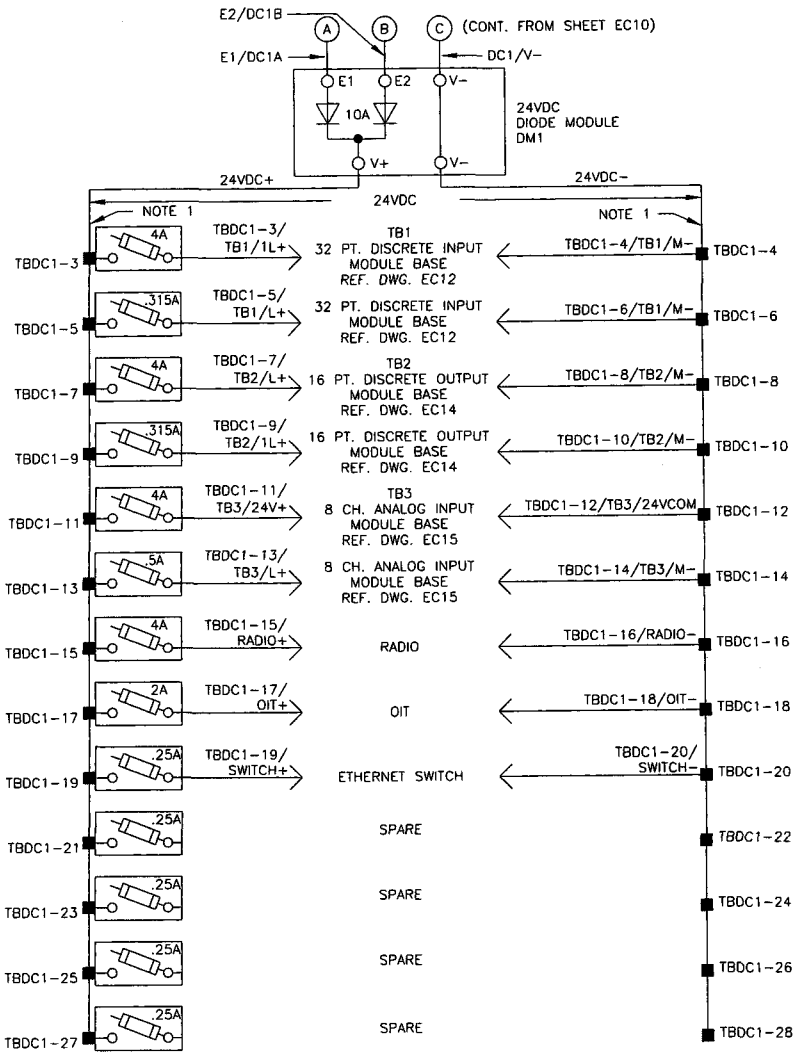


## 24VDC POWER DISTRIBUTION

## NOTES:

1. PROVIDE BUS BAR STYLE OR INSULATED COMB STYLE JUMPERS WHERE 2 OR MORE TERMINALS IN THE SAME TB ARE COMMONED TOGETHER. DO NOT USE DISCRETE WIRE JUMPERS.
2. BILL OF MATERIALS IS ON DRAWING EC5.
3. THE PROPER FUSE SIZE ON ANY FUTURE EQUIPMENT INSTALLATIONS UTILIZING SPARE CIRCUITS WILL BE THE RESPONSIBILITY OF THE OWNER.


DLT&V
SYSTEMS ENGINEERING
3550 N. CENTRAL AVE, STE. 1900
PHOENIX, AZ 85012 (602) 266-4688


Registered Professional Engineer (Electrical)
CERTIFICATE NO.
37390
MELINDA
TAM
Date Signed 9-25-08
ARIZONA, U.S.A.
Expires 3/31/11

NOTES

REVISIONS

| REV. | BY | DATE | DESCRIPTION |
|---|---|---|---|
| | | | |
| | | | |
| | | | |
| | | | |

CASA GRANDE WATER SYSTEM
SCADA PHASE II - WELL #20

ARIZONA WATER COMPANY

24VDC POWER DISTRIBUTION SCHEMATIC

| DRAWN BY: | PROJECT NO. |
|---|---|
| MAB | 1219.01.027 |
| DESIGNED BY: | SUBMITTAL DATE: |
| MAB | SEPT 2008 |
| CHECKED BY: | DRAWING NUMBER |
| BA | EC11 |

DWG FILE: 1219.01.101_EC11.dwg 11:05am PLOTTED: Sep 30, 2008 Stevis

## NOTES:

1. WIRE MODULES AND SIZE FUSES PER MANUFACTURER'S REQUIREMENTS.
2. BUS OR INSULATED COMB STYLE JUMPER.

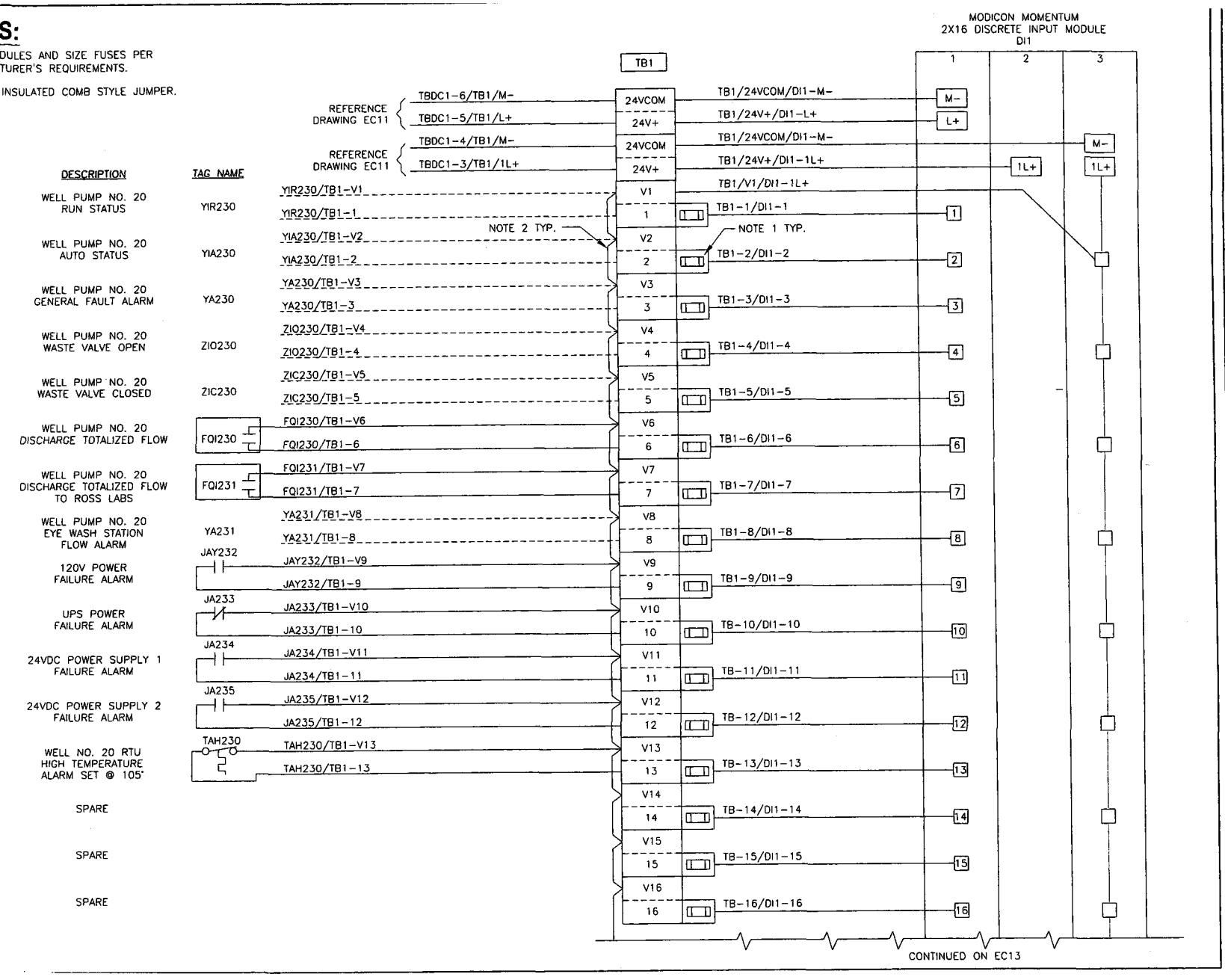



DLT&V
SYSTEMS ENGINEERING
3550 N. CENTRAL AVE, STE. 1900
PHOENIX, AZ 85012 (602) 265-4688


Registered Professional Engineer (Electrical)
No. 37390
MELINDA TAM
Date Signed 9-26-08
ARIZONA, U.S.A.
Expires 3/31/11

NOTES

REVISIONS

| REV. | BY | DATE | DESCRIPTION |
|---|---|---|---|
| | | | |
| | | | |
| | | | |
| | | | |

CASA GRANDE WATER SYSTEM
SCADA PHASE II - WELL #20

ARIZONA WATER COMPANY

DISCRETE INPUT MODULE BASE WIRING DIAGRAM - SHEET 1

| DRAWN BY: | PROJECT NO. |
|---|---|
| MAB | 1219.01.027 |
| DESIGNED BY: | SUBMITTAL DATE: |
| MAB | SEPT 2008 |
| CHECKED BY: | DRAWING NUMBER |
| BA | EC12 |


DWG FILE: 1219.01.101_EC12.dwg 11:05am PLOTTED: Sep 30, 2008 stevis

## NOTES:

1. WIRE MODULES AND SIZE FUSES PER MANUFACTURER'S REQUIREMENTS.
2. BUS OR INSULATED COMB STYLE JUMPER.

| DESCRIPTION | TAG NAME |
|---|---|
| SPARE | |
| SPARE | |
| SPARE | |
| SPARE | |
| SPARE | |
| SPARE | |
| SPARE | |
| SPARE | |
| SPARE | |
| SPARE | |
| SPARE | |
| SPARE | |
| SPARE | |
| SPARE | |
| SPARE | |
| SPARE | |

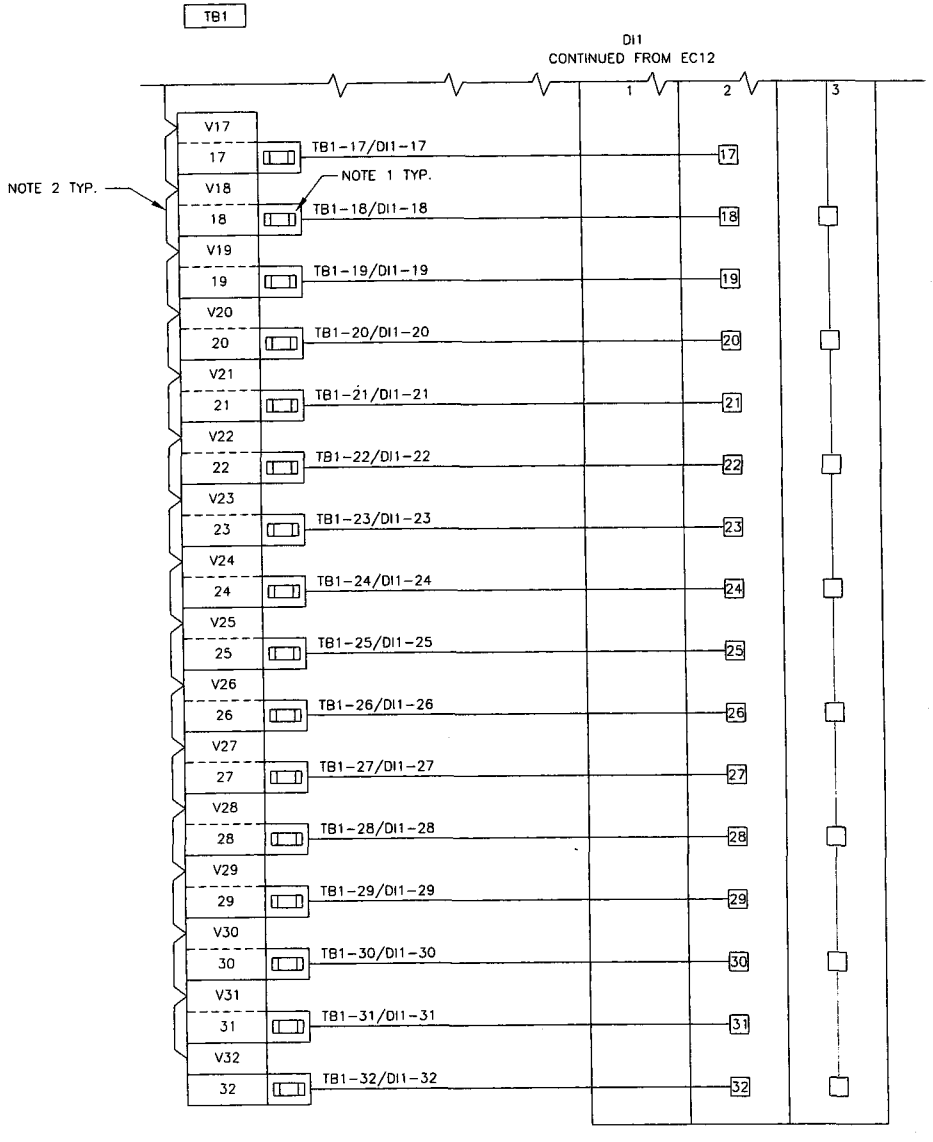


DLT&V SYSTEMS ENGINEERING
3550 N. CENTRAL AVE, STE. 1900
PHOENIX, AZ 85012 (602) 266-4658

Registered Professional Engineer (Electrical)
No. 37390
MELINDA TAM
Date Signed 9.25.08
ARIZONA, U.S.A.

Expires 3/31/11

NOTES

| REVISIONS | | | |
|---|---|---|---|
| REV. | BY | DATE | DESCRIPTION |
| | | | |
| | | | |
| | | | |
| | | | |

CASA GRANDE WATER SYSTEM
SCADA PHASE II - WELL #20

ARIZONA WATER COMPANY

DISCRETE INPUT MODULE BASE WIRING DIAGRAM - SHEET 2

| DRAWN BY: | PROJECT NO. |
|---|---|
| MAB | 1219.01.027 |
| DESIGNED BY: | SUBMITTAL DATE: |
| MAB | SEPT 2008 |
| CHECKED BY: | DRAWING NUMBER |
| BA | EC13 |

DWG FILE: 1219.01.101_EC13.dwg 11:06am PLOTTED: Sep 30, 2008 slewis

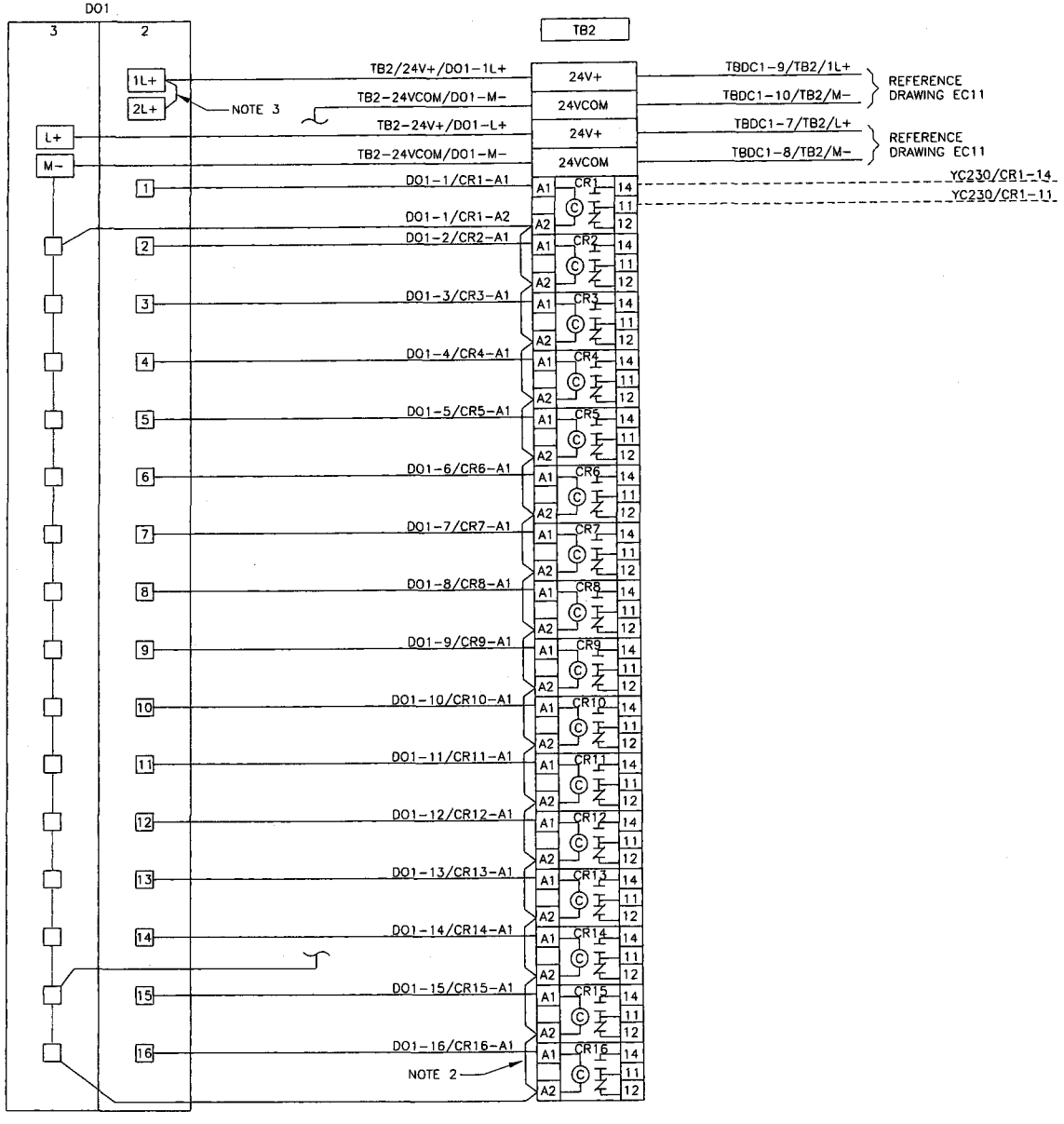


## NOTES:

1. WIRE MODULES PER MANUFACTURER'S REQUIREMENTS.
2. BUS OR INSULATED COMB STYLE JUMPER.
3. JUMPER WIRES PROVIDED BY PANEL MANUFACTURER.

| TAG NAME | DESCRIPTION |
|---|---|
| YC230 | WELL PUMP NO. 20 START/STOP COMMAND |
| | SPARE |
| | SPARE |
| | SPARE |
| | SPARE |
| | SPARE |
| | SPARE |
| | SPARE |
| | SPARE |
| | SPARE |
| | SPARE |
| | SPARE |
| | SPARE |
| | SPARE |
| | SPARE |
| | SPARE |


DLT&V
SYSTEMS ENGINEERING
3560 N. CENTRAL AVE, STE. 1900
PHOENIX, AZ 85012 (602) 264-4558


Registered Professional Engineer (Electrical)
CERTIFICATE NO.
37390
MELINDA TAM
Date Signed 9.25.08
ARIZONA, U.S.A.

Expires 3/31/11

NOTES

REVISIONS

| REV. | BY | DATE | DESCRIPTION |
|---|---|---|---|
| | | | |
| | | | |
| | | | |
| | | | |

CASA GRANDE WATER SYSTEM
SCADA PHASE II - WELL #20

ARIZONA WATER COMPANY

DISCRETE OUTPUT MODULE BASE WIRING DIAGRAM

| DRAWN BY: | PROJECT NO. |
|---|---|
| MAB | 1219.01.027 |
| DESIGNED BY: | SUBMITTAL DATE: |
| MAB | SEPT 2008 |
| CHECKED BY: | DRAWING NUMBER |
| BA | EC14 |

DWG FILE: 1219.01.101_EC14.dwg 11:08am PLOTTED: Sep 30, 2008 steves

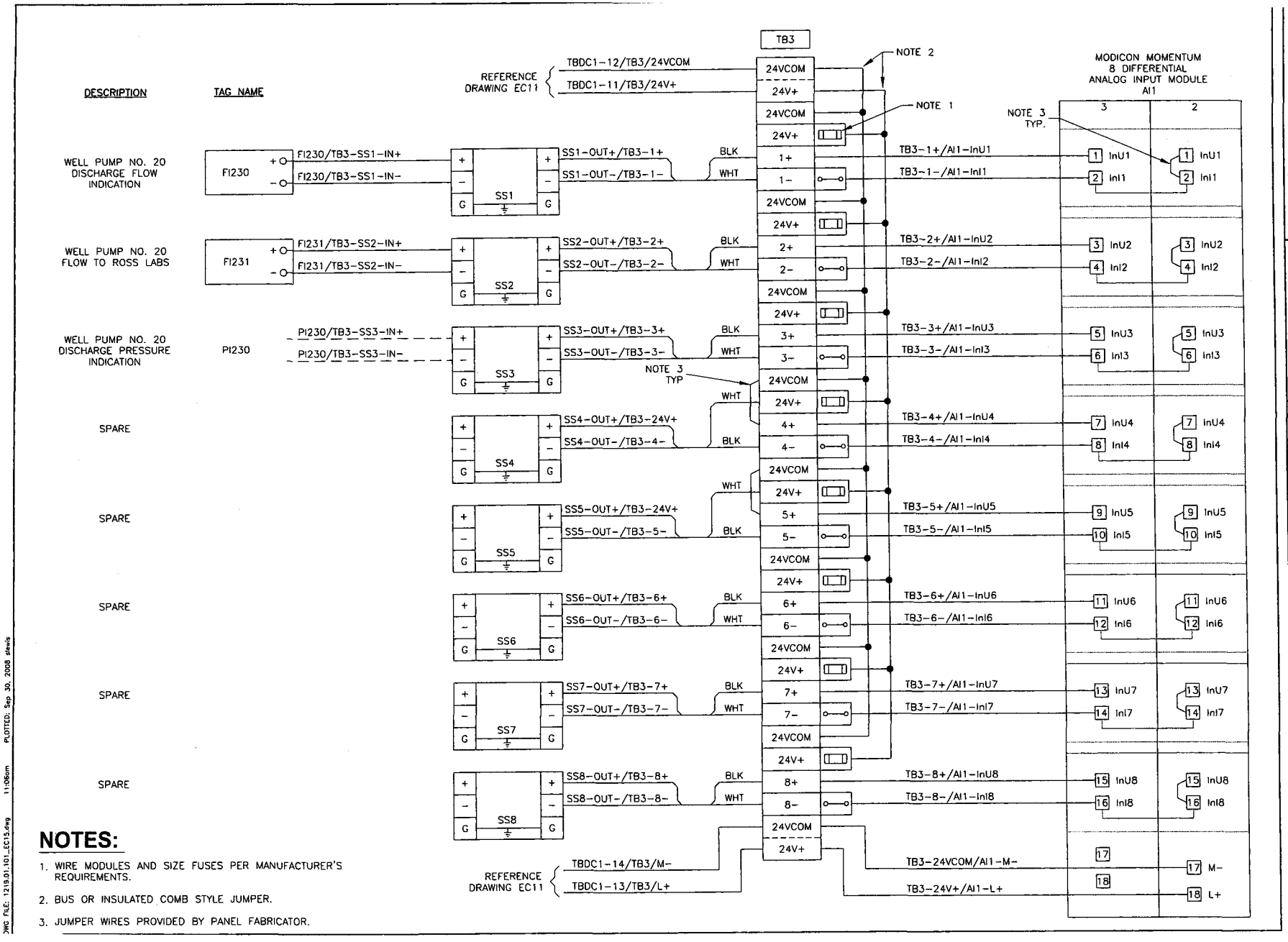


## NOTES:

1. WIRE MODULES AND SIZE FUSES PER MANUFACTURER'S REQUIREMENTS.
2. BUS OR INSULATED COMB STYLE JUMPER.
3. JUMPER WIRES PROVIDED BY PANEL FABRICATOR.

DWG FILE: 1219.01.101_EC15.dwg 11:06am PLOTTED: Sep 30, 2008 stevis

DLT&V SYSTEMS ENGINEERING
3550 N. CENTRAL AVE, STE. 1900
PHOENIX, AZ 85012 (602) 266-4688

Registered Professional Engineer (Electrical)
LICENSE NO. 37390
MELINDA TAM
Date Signed 9-29-08
ARIZONA, U.S.A.
Expires 3/31/11

NOTES

REVISIONS

| REV. | BY | DATE | DESCRIPTION |
|---|---|---|---|
| | | | |
| | | | |
| | | | |
| | | | |

CASA GRANDE WATER SYSTEM
SCADA PHASE II - WELL #20

ARIZONA WATER COMPANY

ANALOG INPUT MODULE BASE WIRING DIAGRAM

| DRAWN BY: | PROJECT NO. |
|---|---|
| MAB | 1219.01.027 |
| DESIGNED BY: | SUBMITTAL DATE: |
| MAB | SEPT 2008 |
| CHECKED BY: | DRAWING NUMBER |
| BA | EC15 |

# CASA GRANDE WATER SYSTEM
# SCADA DESIGN - PHASE II
# WELL NO. 21 - RTU 240 DESIGN

DWG FILE: 1219.01.101_EC1.dwg 11:06am PLOTTED: Sep 30, 2008 slewis

DLT&V
SYSTEMS ENGINEERING
3550 N. CENTRAL AVE, STE. 1900
PHOENIX, AZ 85012 (602) 266-4888

Registered Professional Engineer (Electrical)
CERTIFICATE NO.
37390
MELINDA
TAM
Date Signed 9.29.08
ARIZONA, U.S.A.
Expires 3/31/11

NOTES

REVISIONS

| REV. | BY | DATE | DESCRIPTION |
|---|---|---|---|
| | | | |
| | | | |
| | | | |
| | | | |

CASA GRANDE WATER SYSTEM
SCADA PHASE II – WELL #21

ARIZONA WATER COMPANY

COVER SHEET

| DRAWN BY: | PROJECT NO. |
|---|---|
| MAB | 1219.01.027 |
| DESIGNED BY: | SUBMITTAL DATE: |
| MAB | SEPT 2008 |
| CHECKED BY: | DRAWING NUMBER |
| BA | EC1 |

# CASA GRANDE WATER SYSTEM
# SCADA DESIGN – PHASE II
# WELL NO. 21 RTU DESIGN
# PROJECT SHEET INDEX

| Drawing No. | Drawing Title |
|---|---|
| EC1 | COVER SHEET |
| EC2 | PROJECT SHEET INDEX |
| EC3 | STANDARD SYMBOLS AND ABBREVIATIONS |
| EC4 | ISA TABLE AND COMMON LEGENDS SHEET |
| EC5 | BILL OF MATERIALS |
| EC6 | RTU ENCLOSURE LAYOUT |
| EC7 | RTU SUBPANEL LAYOUT |
| EC8 | TERMINAL BLOCK DETAILS |
| EC9 | COMMUNICATIONS SYSTEM ARCHITECTURE DIAGRAM |
| EC10 | 120VAC POWER DISTRIBUTION SCHEMATIC |
| EC11 | 24VDC POWER DISTRIBUTION SCHEMATIC |
| EC12 | DISCRETE INPUT MODULE BASE WIRING DIAGRAM - SHEET 1 |
| EC13 | DISCRETE INPUT MODULE BASE WIRING DIAGRAM - SHEET 2 |
| EC14 | DISCRETE OUTPUT MODULE BASE WIRING DIAGRAM |
| EC15 | ANALOG INPUT MODULE BASE WIRING DIAGRAM |

DLT&V
SYSTEMS ENGINEERING
3550 N. CENTRAL AVE., SUITE 1155
PHOENIX, ARIZONA 85012 (602) 266-4656

Registered Professional Engineer (Electrical)
CERTIFICATE NO.
37390
MELINDA TAM
Date Signed 9-29-08
ARIZONA, U.S.A.
Expires 3/31/11

NOTES

REVISIONS

| REV. | BY | DATE | DESCRIPTION |
|---|---|---|---|
| | | | |
| | | | |
| | | | |
| | | | |

CASA GRANDE WATER SYSTEM
SCADA PHASE II – WELL #21

ARIZONA WATER COMPANY

PROJECT SHEET INDEX

| | |
|---|---|
| DRAWN BY: MAB | PROJECT NO. 1219.01.027 |
| DESIGNED BY: MAB | SUBMITTAL DATE: SEPT 2008 |
| CHECKED BY: BA | DRAWING NUMBER EC2 |

DWG FILE: 1219.01.101_EC2.dwg 11:05am PLOTTED: Sep 30, 2008 steris

# CASA GRANDE WATER SYSTEM
# SCADA DESIGN – PHASE II
# WELL NO. 21 RTU DESIGN
# STANDARD SYMBOLS AND ABBREVIATIONS

## SCHEMATIC/WIRING DIAGRAM SYMBOLS

CIRCUIT BREAKER
*A – AMP RATING

FUSE WITH PULLER
*A – AMP RATING

SWITCH
NORMALLY OPEN

SELECTOR SWITCH
2 POSITION, NORMALLY OPEN

SELECTOR SWITCH
3 POSITION, NORMALLY OPEN

TEMPERATURE SWITCH
NORMALLY OPEN

TERMINAL BLOCK
* – TB IDENTIFICATION

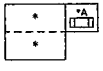


TERMINAL BLOCK W/ FUSE
PLUG AND FUSE
* – TB IDENTIFICATION
*A – AMPS

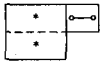


TERMINAL BLOCK W/
DISCONNECT KNIFE
* – TB IDENTIFICATION

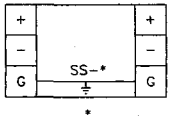


SURGE SUPPRESSOR FOR
FLOATING SIGNAL CIRCUITS
* – SS NUMBER IDENTIFICATION

SURGE SUPPRESSOR FOR
POWER SUPPLY
* – SS NUMBER IDENTIFICATION

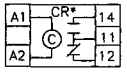


CONTROL RELAY
* – CR NUMBER IDENTIFICATION
# – TERMINAL NUMBER

## SCHEMATIC/WIRING DIAGRAM SYMBOLS

EARTH GROUND



TERMINAL BLOCK

DUPLEX RECEPTACLE

SINGLE RECEPTACLE

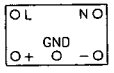


DC POWER SUPPLY
* – DC VOLTAGE RATING

## COLOR CODE CHART FOR 18 AWG BELDEN CABLES
## 12 COND. NO. 8466 AND 19 COND. NO. 8619

| | | |
|---|---|---|
| BLACK | BLK | 1st |
| WHITE | WHT | 2nd |
| RED | RED | 3rd |
| GREEN | GRN | 4th |
| ORANGE | ORN | 5th |
| BLUE | BLU | 6th |
| WHITE/BLACK | WHT/BLK | 7th |
| RED/BLACK | RED/BLK | 8th |
| GREEN/BLACK | GRN/BLK | 9th |
| ORANGE/BLACK | ORN/BLK | 10th |
| BLUE/BLACK | BLU/BLK | 11th |
| BLACK/WHITE | BLK/WHT | 12th |
| RED/WHITE | RED/WHT | 13th |
| GREEN/WHITE | GRN/WHT | 14th |
| BLUE/WHITE | BLU/WHT | 15th |
| BLACK/RED | BLK/RED | 16th |
| WHITE/RED | WHT/RED | 17th |
| ORANGE/RED | ORN/RED | 18th |
| BLUE/RED | BLU/RED | 19th |

## WIRE SIZES

(CIRCUIT WIRING SHALL BE RATED IN ACCORDANCE WITH THE MAXIMUM PERMITTED AMPERE RATING/SETTING OF THE OVERCURRENT PROTECTION DEVICE. N.E.C. 210–3)

120VAC / 20A POWER CIRCUIT – MIN. #12 AWG.
120VAC / 15A AND BELOW – MIN. #14 AWG.

24VDC / 20A POWER CIRCUIT – MIN. #12 AWG.
24VDC / 15A AND BELOW – MIN. #16 AWG.
24VDC I/O & SIGNAL CIRCUIT – MIN. #18 AWG.

4–20mADC I/O SIGNAL CIRCUIT – MIN. #18 AWG.

## ABBREVIATIONS

| | |
|---|---|
| A/R | AS REQUIRED |
| AC COM | NEUTRAL |
| AFF | ABOVE FINISHED FLOOR |
| AI | ANALOG INPUT |
| ANL COM | ANALOG COMMON |
| AO | ANALOG OUTPUT |
| AWG | AMERICAN WIRE GAUGE |
| BLK | BLACK |
| BLU | BLUE |
| CAP | CENTRAL ARIZONA PROJECT |
| CLR | CLEAR |
| CR | CONTROL RELAY |
| DC COM | DC COMMON |
| DC+ | DC POSITIVE POTENTIAL |
| DI | DISCRETE INPUT |
| DO | DISCRETE OUTPUT |
| DS | DOOR SWITCH |
| FOM | FIBER OPTIC MODEM |
| FOT | FIBER OPTIC TRANSCEIVER |
| GND | GROUND |
| GRN | GREEN |
| I/O | INPUT/OUTPUT |
| L | LINE |
| N | NEUTRAL |
| NC | NORMALLY CLOSED |
| NO | NORMALLY OPEN |
| NP | NAMEPLATE |
| OIT | OPERATOR INTERFACE TERMINAL |
| ORN | ORANGE |
| PDB | POWER DISTRIBUTION BLOCK |
| PLC | PROGRAMMABLE LOGIC CONTROLLER |
| PP | FIBER OPTIC PATCH PANEL |
| PS | POWER SUPPLY |
| REC | RECEPTACLE |
| RES | RESERVOIR |
| RIO | REMOTE INPUT/OUTPUT |
| RTU | REMOTE TELEMETRY UNIT |
| SLC | SMALL LOGIC CONTROLLER |
| SP | SPACE |
| SS | SURGE SUPPRESSOR |
| TB | TERMINAL BLOCK |
| UPS | UNINTERRUPTIBLE POWER SUPPLY |
| WHT | WHITE |
| WTR | WATER TREATMENT PLANT |
| WWTP | WASTE WATER TREATMENT PLANT |

## LINETYPE LEGEND

- FIELD WIRING
- INTERNAL PANEL WIRING
- RADIO COMMUNICATION LINK
- FO — FIBER OPTIC CABLE
- FOP — FIBER OPTIC PATCH CABLE
- EN — ETHERNET CAT5 CABLE
- DH+ — DATA HIGHWAY PLUS
- RIO — REMOTE INPUT OUTPUT
- AREA DIVIDER
- EQUIPMENT
- PATCH PANEL

DLT&V SYSTEMS ENGINEERING
3550 N. CENTRAL AVE, STE. 1900
PHOENIX, AZ 85012 (602) 266-4688

Registered Professional Engineer (Electrical) CERTIFICATE NO. 37390 MELINDA TAM Date Signed 9.25.08 ARIZONA, U.S.A.

Expires 3/31/11

NOTES

REVISIONS

| REV. | BY | DATE | DESCRIPTION |
|---|---|---|---|
| | | | |
| | | | |
| | | | |
| | | | |

CASA GRANDE WATER SYSTEM
SCADA PHASE II – WELL #21

ARIZONA WATER COMPANY

STANDARD SYMBOLS AND ABBREVIATIONS

| | |
|---|---|
| DRAWN BY: MAB | PROJECT NO. 1219.01.027 |
| DESIGNED BY: MAB | SUBMITTAL DATE: SEPT 2008 |
| CHECKED BY: BA | DRAWING NUMBER EC3 |

DWG FILE: 1219.01.101_EC3.dwg 11:06am PLOTTED: Sep 30, 2008 stevis

# CASA GRANDE WATER SYSTEM
# SCADA DESIGN – PHASE II
# WELL NO. 21 RTU DESIGN
# ISA TABLE AND COMMON LEGENDS SHEET

## ISA INSTRUMENT IDENTIFICATION TABLE

| FIRST LETTERS | | | SUCCEEDING LETTERS | | |
|---|---|---|---|---|---|
| MEASURED OR INITIATING VARIABLE | | MODIFIER | READOUT OR PASSIVE FUNCTION | OUTPUT FUNCTION | MODIFIER |
| A | ANALYZER | | ALARM | | AUTO |
| B | BURNER, COMBUSTION | | | | |
| C | CONDUCTIVITY | | | CONTROL | CLOSED |
| D | DENSITY | DIFFERENTIAL | | | |
| E | VOLTAGE | | ELEMENT | | |
| F | FLOW | RATIO | | | |
| G | GAUGE | | GLASS, VIEWING DEVICE | | |
| H | HAND | | | | HIGH |
| I | CURRENT | | INDICATE | | |
| J | POWER | SCAN | | | |
| K | TIME, TIME SCHED. | TIME RATE OF CHANGE | | CONTROL STATION | |
| L | LEVEL | | LIGHT | | LOW |
| M | MOTION | | | | MIDDLE |
| N | INTRUSION | | | | NORMAL |
| O | TORQUE | | ORIFICE, RESTRICTION | | OPEN |
| P | PRESSURE | | POINT CONNECTION | | STOP |
| Q | QUANTITY | INTEGRATE, TOTALIZE | | | |
| R | RADIATION | | RECORD, OR PRINT | | REMOTE |
| S | SPEED, FREQUENCY | SAFETY | | SWITCH | START |
| T | TEMPERATURE | | | TRANSMIT | |
| U | MULTIVARIABLE | | MULTIFUNCTION | MULTIFUNCTION | MULTIFUNCTION |
| V | VIBRATION | | | VALVE, LOUVER | |
| W | WEIGHT | | WELL | | |
| X | MOTOR | X-AXIS | UNCLASSIFIED | UNCLASSIFED | UNCLASSIFED |
| Y | EVENT, STATE, OR PRESENCE | Y-AXIS | | RELAY, COMPUTE, CONVERT | |
| Z | POSITION | Z-AXIS | | DRIVER, ACTUATOR, FINAL CONTROL ELEMENT | |

### FIELD WIRES TAG LEGEND

DEVICE NAME/TBXX-00
- TERMINAL NO.
- TERMINAL STRIP NO.
- FIELD DEVICE TAG NO.

### PANEL POWER WIRES TAG LEGEND

TBXX-03/TBXX-03
- TO TERMINAL NO.
- TO TERMINAL STRIP NO.
- FROM TERMINAL NO.
- FROM TERMINAL STRIP NO.

### PANEL I/O WIRES TAG LEGEND

O:#.2/TBXX-03
- INPUT POINT NO.
- TERMINAL STRIP NO.
- CHANNEL #
- SLOT #
- O=OUTPUT I=INPUT

### COLOR CODE CHART FOR 22 AWG BELDEN PAIRED CABLE NO. 8761

| | | |
|---|---|---|
| BLACK | BLK | 1st |
| CLEAR | CLR | 2nd |

### PANEL WIRING IDENTIFICATION

BLACK – 120VAC LINE
WHITE – 120VAC NEUTRAL
GREEN – GROUND
ORANGE – DC POSITIVE
BLUE – DC COMMON

DLT&V
SYSTEMS ENGINEERING
3550 N. CENTRAL AVE, STE. 1900
PHOENIX, AZ 85012 (602) 266-4558

Registered Professional Engineer (Electrical)
CERTIFICATE NO.
37390
MELINDA TAM
Date Signed 9.29.08
ARIZONA, U.S.A.

Expires 3/31/11

NOTES

REVISIONS

| REV. | BY | DATE | DESCRIPTION |
|---|---|---|---|
| | | | |
| | | | |
| | | | |
| | | | |

CASA GRANDE WATER SYSTEM
SCADA PHASE II – WELL #21

ARIZONA WATER COMPANY

ISA TABLE AND COMMON LEGENDS SHEET

| DRAWN BY: | PROJECT NO. |
|---|---|
| MAB | 1219.01.027 |
| DESIGNED BY: | SUBMITTAL DATE: |
| MAB | SEPT 2008 |
| CHECKED BY: | DRAWING NUMBER |
| BA | EC4 |

DWG FILE: 1219.01.101_EC4.dwg 11:08am PLOTTED: Sep 30, 2008 stevis

| QTY | ITEM # | MANUFACTURER | PART NUMBER | DESCRIPTION |
|---|---|---|---|---|
| 1 | 100 | MODICON | 171CCC96030 | M1E PROCESSOR ADAPTER, ETHERNET AND I/O BUS PORTS, WEB PAGE ENABLED, IEC |
| 2 | 101 | MODICON | 170INT11000 | MOMENTUM INTERBUS \ I/O BUS COMMUNICATIONS ADAPTER |
| 1 | 102 | MODICON | 170ADI35000 | 24V DC - 32 PT. INPUT MODULE BASE |
| 1 | 103 | MODICON | 170ADO34000 | 24V DC / 0.5A - 16 PT. OUTPUT MODULE BASE, 0.5 A OUTPUT |
| 1 | 104 | MODICON | 170AAI03000 | MOMENTUM SERIES I/O BASE, ANALOG 8CH DIFFERENTIAL INPUT MODULE BASE |
| 1 | 105 | MODICON | 172JNN21032 | MOMENTUM SERIES OPTION ADAPTER W/ GENERAL PURPOSE SERIAL COMMUNICATION PORT, RS-232 OR RS-485 SELECTABLE |
| 1 | 106 | MODICON | XBT GT5330 | EXTERNAL DISPLAY WITH 10.4" COLOR TFT,VGA RESOLUTION (640X480 PIXELS), 24V POWER |
| 1 | 107 | WEIDMULLER | IE-SW8-ECO | INDUSTRIAL 8-PORT ETHERNET SWITCH, 10/100 Mbps, UNMANAGED |
| 2 | 108 | MODICON | 170MCI00700 | INTERBUS CABLE |
| 1 | 110 | BELDEN | 8267 | CABLE, COAXIAL, RG-213 (OR EQUAL) WITH APPROPRIATE CONNECTORS, (LENGTH AS REQUIRED) |
| 1 | 111 | MDS | iNET-II-IP | ETHERNET REMOTE RADIO TRANSCEIVER, SPREAD SPECTRUM, W/ REMOTE DIAGNOSTICS |
| 3 | 112 | MODICON | 170XTS00100 | CONNECTOR SET, SCREW-TYPE (SET OF 3) |
| A/R | 201 | ALLEN-BRADLEY | 1492-DR6 | TERMINAL MOUNTING RAIL, HI-RISE, ALUMINUM |
| 14 | 202 | ALLEN-BRADLEY | 1492-EA35 | END ANCHOR |
| 6 | 210 | ALLEN-BRADLEY | 1492-GM35 | TERMINAL BLOCK, GROUP MARKING CARRIER |
| 18 | 215 | ALLEN-BRADLEY | 1492-J4 | TERMINAL BLOCK, SINGLE CIRCUIT, 600V, GRAY |
| 1 | 218 | ALLEN-BRADLEY | 1492-JD3 | TERMINAL BLOCK, DOUBLE LEVEL |
| 67 | 219 | ALLEN-BRADLEY | 1492-JD3P | TERMINAL BLOCK, DOUBLE LEVEL W/ PLUGGABLE TOP LEVEL |
| 4 | 221 | ALLEN-BRADLEY | 1492-JG4 | TERMINAL BLOCK, SINGLE CIRCUIT, GROUNDING |
| 53 | 223 | ALLEN-BRADLEY | 1492-FPK224 | FUSE PLUG INSERT W/ BFI, 10-36VAC/DC WORKING VOLTAGE, 10A MAX @ 250V. PROVIDE FAST BLOW FUSES AS REQUIRED |
| 8 | 225 | ALLEN-BRADLEY | 1492-DPL | DISCONNECT PLUG FOR 1492-JD3 P AND 1492-JD3 |
| 2 | 230 | WEIDMULLER | 9926251001 | CIRCUIT BREAKER, 1A |
| 4 | 231 | WEIDMULLER | 9926251002 | CIRCUIT BREAKER, 2A |
| 2 | 232 | WEIDMULLER | 9926251003 | CIRCUIT BREAKER, 3A |
| 1 | 233 | WEIDMULLER | 9926251010 | CIRCUIT BREAKER, 10A |
| 3 | 234 | WEIDMULLER | 9926251015 | CIRCUIT BREAKER, 15A |
| 1 | 235 | WEIDMULLER | 9926251020 | CIRCUIT BREAKER, 20A |
| 53 | 282 | ANY | ANY | 250V, 5mmX20mm FAST BLOW GLASS FUSES (SIZE AS INDICATED ON DRAWING) |
| 1 | 304 | HOFFMAN | A72H3724FS3PT | ENCLOSURE, FREE STANDING, TYPE 4/12 W/3-POINT LATCH, 72"X37"X24" |
| 1 | 305 | HOFFMAN | A72P36F1 | SUBPANEL, WHITE PAINT, 60"X32" |
| 1 | 306 | HOFFMAN | A72SP36F4 | SWING-OUT PANEL, HALF PANEL, 30.88" X 33.81" |
| 1 | 313 | HOFFMAN | ALF16D18R | 18" FLOURESCENT LIGHTING PACKAGE W/DOOR SWITCH, 115VAC |
| 1 | 316 | HOFFMAN | A-TEMNO | TEMPERATURE CONTROL SWITCH (THERMOSTAT), N.O. CONTACTS |
| A/R | 359 | BELDEN | 7929A | CABLE, ETHERNET, 4 PR, 24 AWG, CAT 5E |
| 1 | 377 | ANY | ANY | GROUNDING BAR |
| 1 | 378 | CUSTOM | CUSTOM | CUSTOM SHELF SUPPLIED AND INSTALLED BY PANEL FABRICATOR |
| A/R | 379 | PANDUIT | F2X4LG6 C2LG6 | 2 X 4 PLASTIC WIRING DUCT TYPE "E" W/COVER STYLE "C" |
| A/R | 380 | PANDUIT | F3X4LG6 C3LG6 | 3 X 4 PLASTIC WIRING DUCT TYPE "E" W/COVER STYLE "C" |
| 1 | 398 | HUBBELL | HBL5362I | DUPLEX RECEPTACLE, IVORY, 125V/20A, W/BOX AND BRUSHED ALUMINUM COVER (HUBBELL P.N.# A8) |
| 1 | 399 | HUBBELL | HBL5361I | SIMPLEX RECEPTACLE, IVORY, 125V/20A, W/BOX AND BRUSHED ALUMINUM COVER (HUBBELL P.N.# A7) |
| 1 | 400 | HUBBELL | HBL3810R | SIMPLEX RECEPTACLE, RED, 125V/20A, W/BOX AND BRUSHED ALUMINUM COVER (HUBBELL P.N.# A7) |
| 2 | 405 | WEIDMULLER | 8708670000 (CP SNT 250W 24V 10A) | POWER SUPPLY, 24VDC, 250W, 10A, W/ STATUS RELAY |
| 1 | 406 | WEIDMULLER | 8710620000 (CP DM 10) | DIODE MODULE, 10A PER INPUT, 40VDC MAX |
| 1 | 408 | IDEC | RH2B-UL-AC120V | RELAY, 120VAC COIL, DPDT W/ INDICATOR |
| 1 | 421 | IDEC | SH2B-05C | RELAY SOCKET, DIN RAIL MOUNT, FINGERSAFE |
| 1 | 450 | MTL SURGE TECHNOLOGIES | MA15/D/1/SI | 120/240 VAC, 15A, SURGE SUPPRESSOR AND FILTER |
| 8 | 451 | WEIDMULLER | 8448920000 | SURGE SUPPRESSOR, 24VDC, 2 WIRE LOOP PROTECTION (MCZ OVP) W/ END CAP PART #8389030000 |
| 8 | 452 | WEIDMULLER | 8389030000 | END CAP FOR 24VDC SURGE SUPPRESSOR (MCZ OVP) |
| 16 | 455 | ALLEN-BRADLEY | 700-HLT1Z24 | TERMINAL BLOCK RELAY, 24VDC, 6A CONTACTS, SPDT W/ LED |
| 1 | 505 | HOFFMAN | CR29-0416-G068 | AIR CONDITIONER, 120 VAC, 4000 BTU/HR, W/OUTDOOR ENCLOSURE PACKAGE |
| 1 | 703 | APC | SUA750, AP9610 | UPS, 115 VAC, 750 VA W/ RELAY I/O SMARTSLOT CARD OPTION, MINIMUM 30 MIN. RUNTIME OF COMPLETE PLC OPERATIONS POWER |
| 1 | 811 | POLYPHASER | IS-50NX-C2 | BROADBAND COAXIAL SURGE PROTECTOR, FLANGE MOUNT, 125-1000MHZ |
| 2 | 853 | TIMES MICROWAVE SYSTEMS | EZ-900-NMC | N-MALE CONNECTOR |

DWG FILE: 1219.01.101_EC5.dwg PLOTTED: Sep 30, 2008 11:07am stewis

DLT&V
SYSTEMS ENGINEERING
2550 N. CENTRAL AVE, STE. 1900
PHOENIX, AZ 85012 (602) 266-4659

Registered Professional Engineer (Electrical)
CERTIFICATE NO.
37390
MELINDA
TAM
Date Signed 9.25.08
ARIZONA, U.S.A.
Expires 3/31/11

NOTES

REVISIONS

| REV. | BY | DATE | DESCRIPTION |
|---|---|---|---|
| | | | |
| | | | |
| | | | |
| | | | |

CASA GRANDE WATER SYSTEM
SCADA PHASE II – WELL #21

ARIZONA WATER COMPANY

BILL OF MATERIALS

| DRAWN BY: | PROJECT NO. |
|---|---|
| MAB | 1219.01.027 |
| DESIGNED BY: | SUBMITTAL DATE: |
| MAB | SEPT 2008 |
| CHECKED BY: | DRAWING NUMBER |
| BA | EC5 |

## NOTES:

1. BILL OF MATERIALS IS ON DRAWING EC5.
2. REFER TO DRAWING EC7 FOR PLC INTERIOR LAYOUT.
3. FURNISH ADDITIONAL NAMEPLATES AS REQUIRED BY UL OR BY OTHER APPLICABLE CODES.
4. MOMOUNT UPS MINIMUM 6" ABOVE GRADE LEVEL. PANEL FABRICATOR SHALL SUPPLY AND INSTALL CUSTOM SUPPORT HARDWARE IN ENCLOSURE AS REQUIRED.

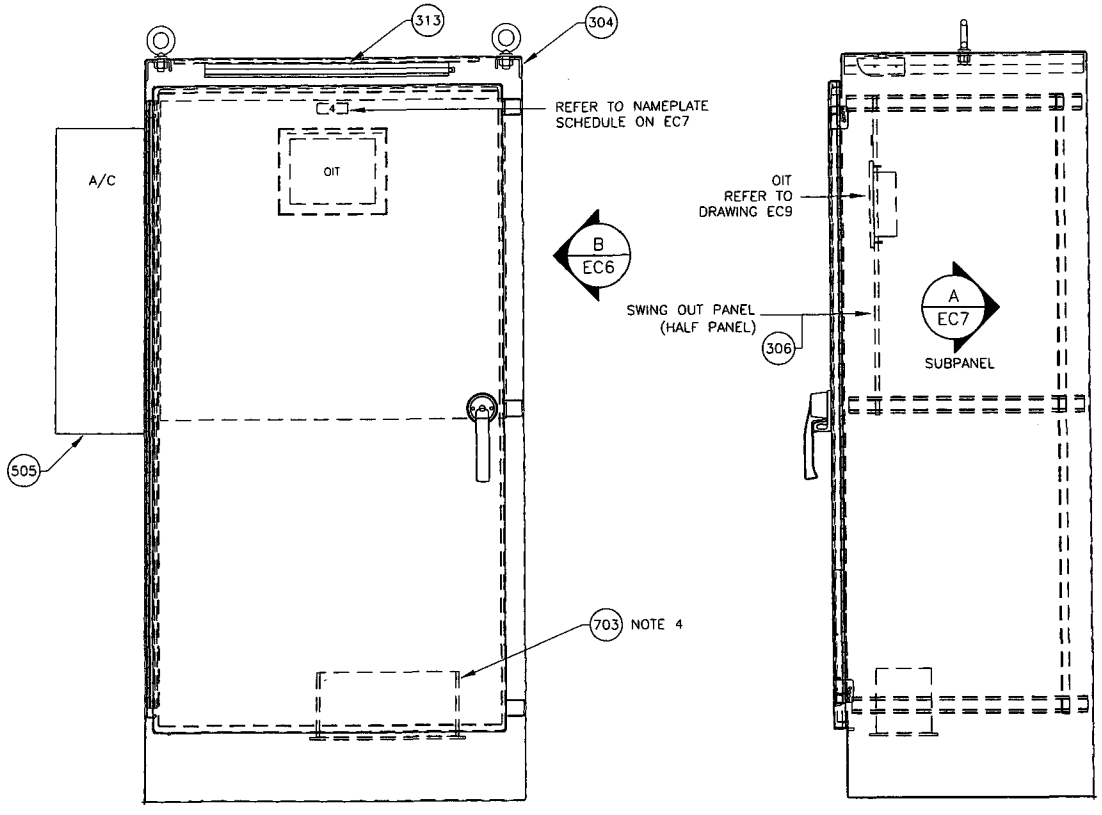


A ~ RTU ENCLOSURE, FRONT
1"=1'-0"

B ~ RTU ENCLOSURE, SIDE
1"=1'-0"

DLT&V SYSTEMS ENGINEERING
3550 N. CENTRAL AVE, STE. 1900
PHOENIX, AZ 85012 (602) 265-4488

Registered Professional Engineer (Electrical)
CERTIFICATE NO.
37390
MELINDA TAM
Date Signed 9-29-08
ARIZONA, U.S.A.
Expires 3/31/11

NOTES

| REVISIONS | | | |
|---|---|---|---|
| REV. | BY | DATE | DESCRIPTION |
| | | | |
| | | | |
| | | | |
| | | | |

CASA GRANDE WATER SYSTEM
SCADA PHASE II - WELL #21

ARIZONA WATER COMPANY

RTU ENCLOSURE LAYOUT

| DRAWN BY: | PROJECT NO. |
|---|---|
| MAB | 1219.01.027 |
| DESIGNED BY: | SUBMITTAL DATE: |
| MAB | SEPT 2008 |
| CHECKED BY: | DRAWING NUMBER |
| BA | EC6 |

DWG FILE: 1219.01.101_EC6.dwg 11:08am PLOTTED: Sep 30, 2008 stewis

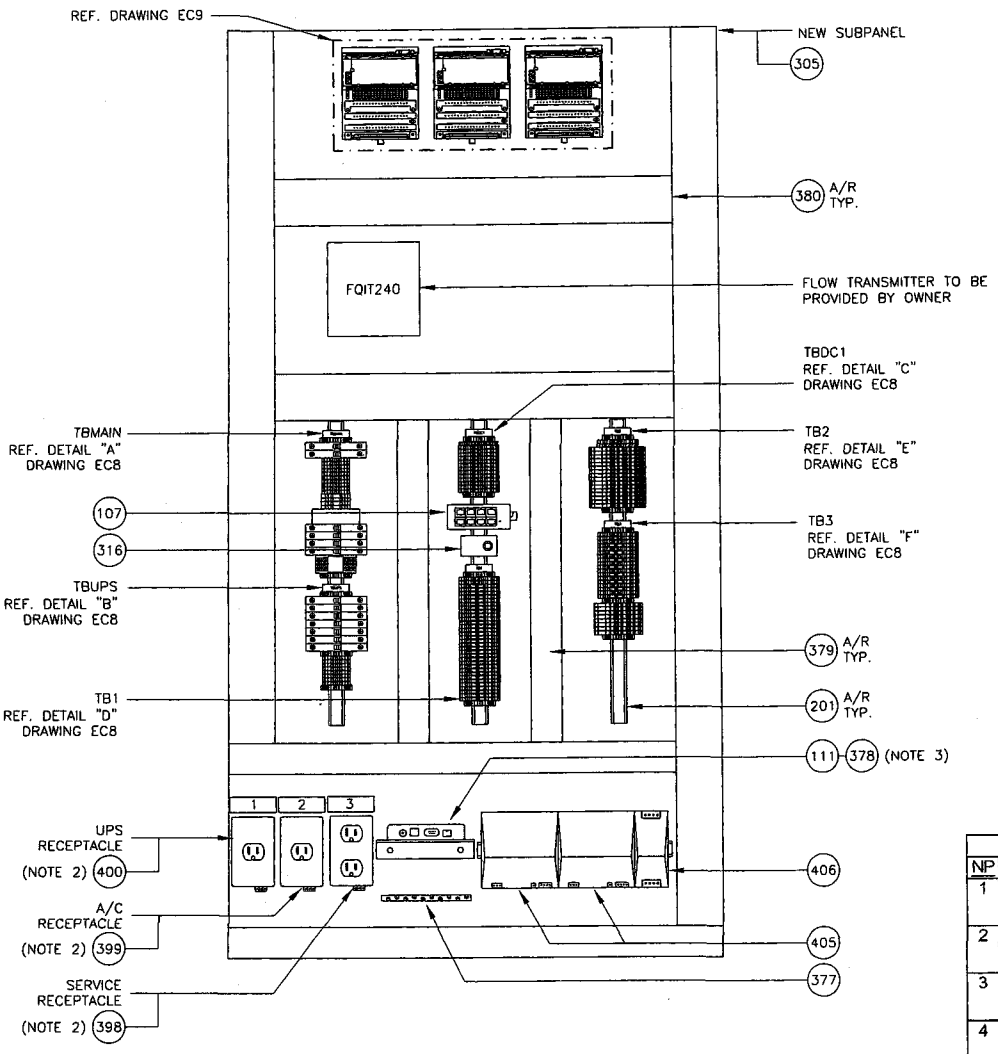


A / EC6 SUBPANEL LAYOUT
1-1/2"=1'-0"

## NOTES:

1. BILL OF MATERIALS IS ON DRAWING EC5.
2. NAMEPLATE SHALL BE 3/32" THICK LAMINATED PHENOLIC TYPE BLACK WITH WHITE LETTERS. SEE BILL OF MATERIALS ON DRAWING EC5 AND NAMEPLATE SCHEDULE (DET B) ON THIS SHEET FOR ADDITIONAL INFORMATION.
3. MOUNT RADIO ON CUSTOM SHELF PROVIDED AND INSTALLED BY PANEL FABRICATOR. REFER TO DRAWING EC9 AND BILL OF MATERIALS ON EC5 FOR MORE INFORMATION.

**NAMEPLATE SCHEDULE (NOTE 2)**

| NP | HxWxLTR | FIRST LINE | SECOND LINE | LOCATION |
|---|---|---|---|---|
| 1 | 1" x 3" x 1/4" | UPS RECEPTACLE | ONLY | CENTERED ABOVE UPS RECEPTACLE |
| 2 | 1" x 3" x 1/4" | A/C RECEPTACLE | ONLY | CENTERED ABOVE A/C RECEPTACLE |
| 3 | 1" x 3" x 1/4" | SERVICE RECEPTACLE | ONLY | CENTERED ABOVE SERVICE RECEPTACLE |
| 4 | 1" x 3" x 1/4" | OIT | | CENTERED ABOVE OIT |

B / ~ NAMEPLATE SCHEDULE

DLT&V
SYSTEMS ENGINEERING
3560 N. CENTRAL AVE, STE. 1900
PHOENIX, AZ 85012 (602) 266-4658

Registered Professional Engineer (Electrical)
CERTIFICATE NO.
37390
MELINDA TAM
Date Signed 9-25-08
ARIZONA, U.S.A.
Expires 3/31/11

NOTES

REVISIONS

| REV. | BY | DATE | DESCRIPTION |
|---|---|---|---|
| | | | |
| | | | |
| | | | |
| | | | |

CASA GRANDE WATER SYSTEM
SCADA PHASE II – WELL #21

ARIZONA WATER COMPANY

RTU SUBPANEL LAYOUT

| DRAWN BY: | PROJECT NO. |
|---|---|
| MAB | 1219.01.027 |
| DESIGNED BY: | SUBMITTAL DATE: |
| MAB | SEPT 2008 |
| CHECKED BY: | DRAWING NUMBER |
| BA | EC7 |

DWG FILE: 1219.01.101_EC7.dwg 11:08am PLOTTED: Sep 30, 2008 slewis

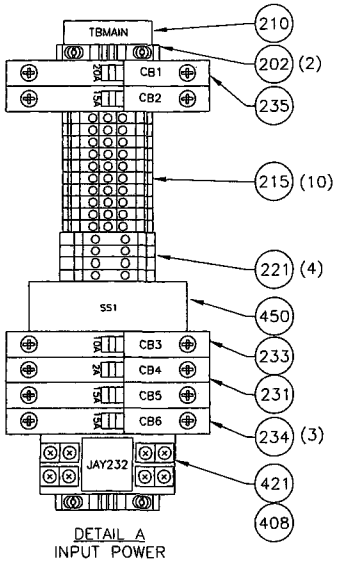


DETAIL A
INPUT POWER
TBMAIN

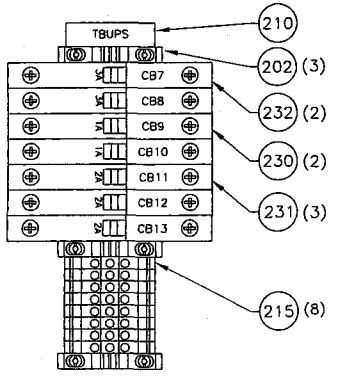


DETAIL B
PANEL POWER
TBUPS

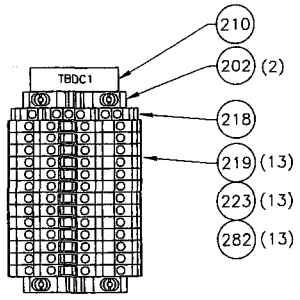


DETAIL C
24VDC POWER
DISTRIBUTION
TBDC1

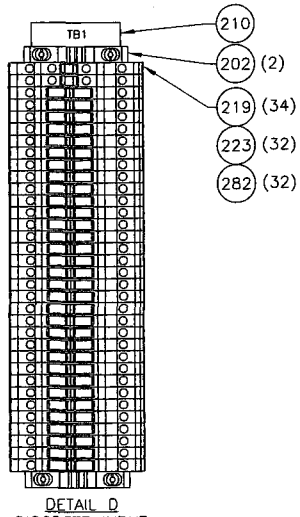


DETAIL D
DISCRETE INPUT
TB1

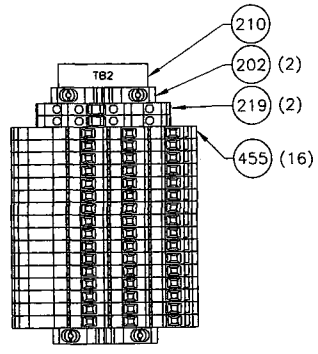


DETAIL E
DISCRETE OUTPUT
TB2

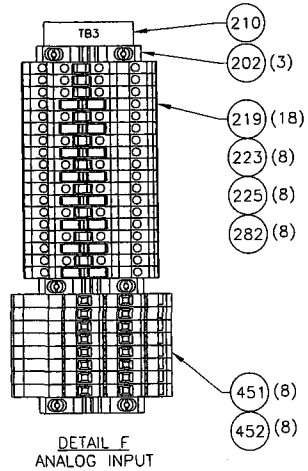


DETAIL F
ANALOG INPUT
TB3

## NOTES:

1. PROVIDE BUS BAR STYLE OR INSULATED COMB STYLE JUMPERS WHERE 2 OR MORE TERMINALS IN THE SAME TB ARE COMMONED TOGETHER. DO NOT USE DISCRETE WIRE JUMPERS.
2. BILL OF MATERIALS IS ON DRAWING EC5.
3. PANEL BUILDER TO SUPPLY AND INSTALL ALL NECESSARY AND APPROPRIATE ACCESSORIES INCLUDING TERMINAL NUMBERS, JUMPERS AND END BARRIERS.

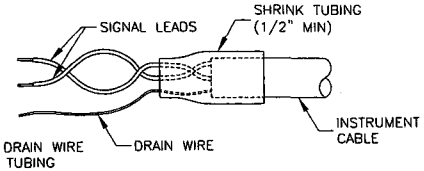


NOTE:
WRAP UNUSED DRAIN WIRE
UNDER SHRINK TUBING

DETAIL G
INSTRUMENT CABLE
TERMINATION

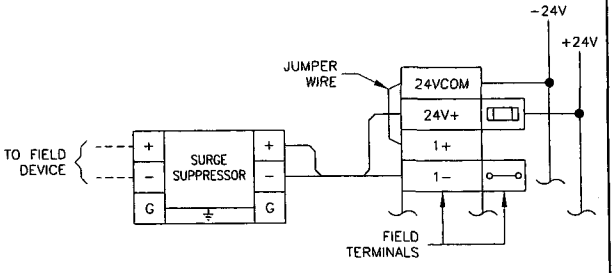


2-WIRE

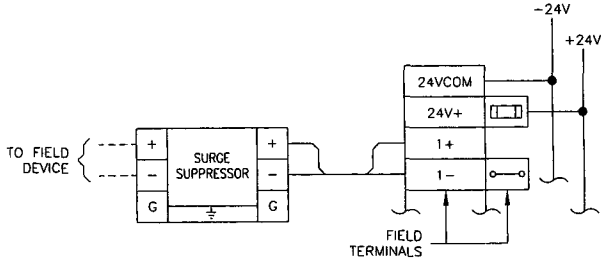


4-WIRE

DETAIL H
ANALOG INPUT TERMINALS
2 & 4-WIRE TYPICAL CONNECTIONS

DLT&V
SYSTEMS ENGINEERING
3550 N. CENTRAL AVE, STE. 1900
PHOENIX, AZ 85012 (602) 265-4658

Registered Professional Engineer (Electrical)
CERTIFICATE NO.
37390
MELINDA
TAM
Date Signed 9.25.08
ARIZONA, U.S.A.

Expires 3/31/11

NOTES

| REVISIONS | | | |
|---|---|---|---|
| REV. | BY | DATE | DESCRIPTION |
| | | | |
| | | | |
| | | | |
| | | | |

CASA GRANDE WATER SYSTEM
SCADA PHASE II - WELL #21

ARIZONA WATER COMPANY

TERMINAL BLOCK DETAILS

| | |
|---|---|
| DRAWN BY: MAB | PROJECT NO. 1219.01.027 |
| DESIGNED BY: MAB | SUBMITTAL DATE: SEPT 2008 |
| CHECKED BY: BA | DRAWING NUMBER EC8 |

DWG FILE: 1219.01.101_EC8.dwg 11:08am PLOTTED: Sep 30, 2008 slewis

## NOTES:

1. BILL OF MATERIALS IS ON DRAWING EC5.
2. ANTENNA, ANTENNA MAST, GROUNDING KIT AND CABLE PROVIDED AND INSTALLED BY OTHERS.

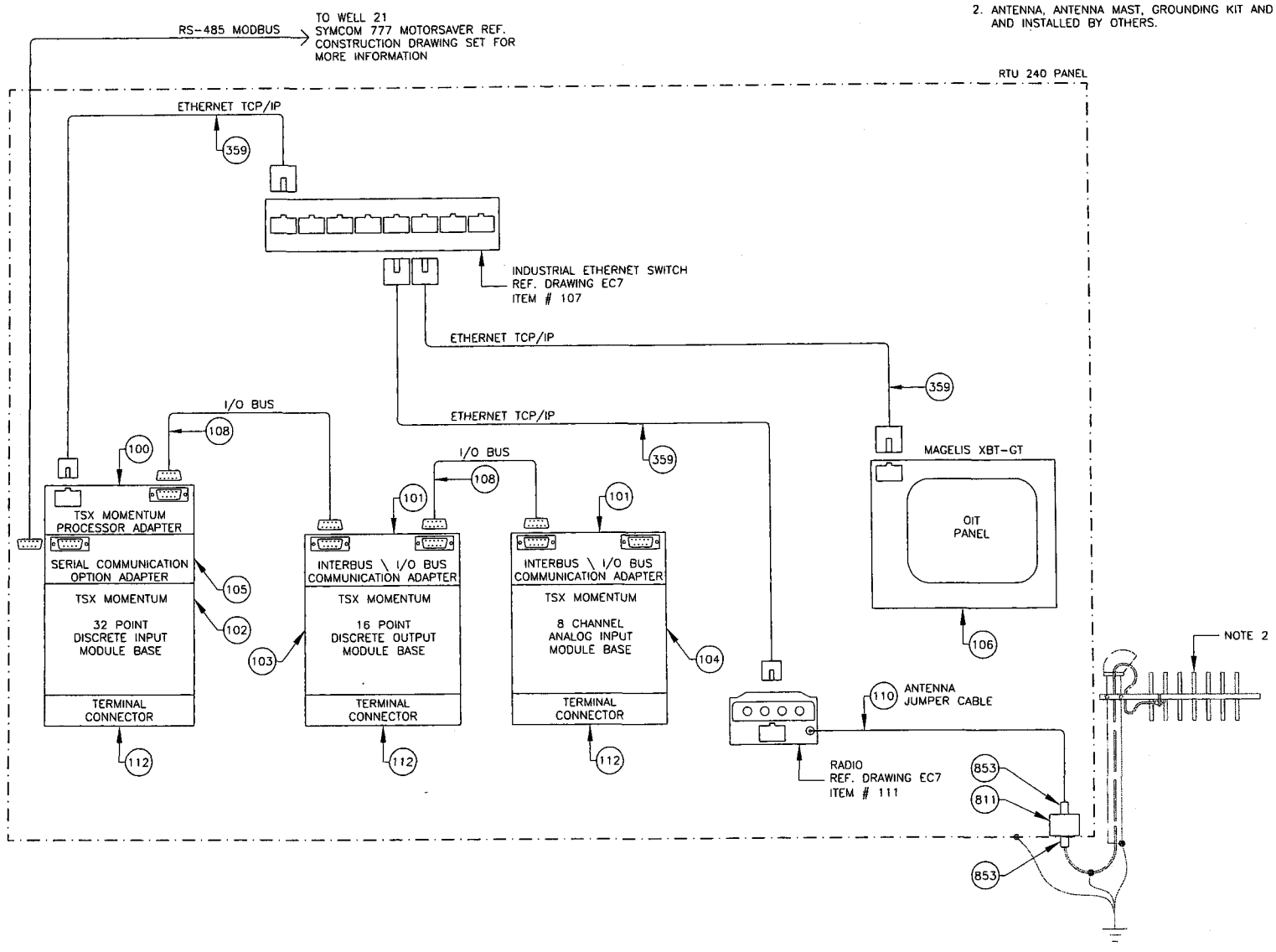


DWG FILE: 121.101_EC9.dwg 11:08am PLOTTED: Sep 30, 2008 slewis

DLT&V SYSTEMS ENGINEERING
3550 N. CENTRAL AVE, STE. 1900
PHOENIX, AZ 85012 (602) 266-4656

Registered Professional Engineer (Electrical)
CERTIFICATE NO.
37390
MELINDA
TAM
Date Signed 9.25.08
ARIZONA, U.S.A.

Expires 3/31/11

NOTES

REVISIONS

| REV. | BY | DATE | DESCRIPTION |
|---|---|---|---|
| | | | |
| | | | |
| | | | |
| | | | |

CASA GRANDE WATER SYSTEM
SCADA PHASE II - WELL #21

ARIZONA WATER COMPANY

COMMUNICATIONS SYSTEM ARCHITECTURE DIAGRAM

| DRAWN BY: | PROJECT NO. |
|---|---|
| MAB | 1219.01.027 |
| DESIGNED BY: | SUBMITTAL DATE: |
| MAB | SEPT 2008 |
| CHECKED BY: | DRAWING NUMBER |
| BA | EC9 |

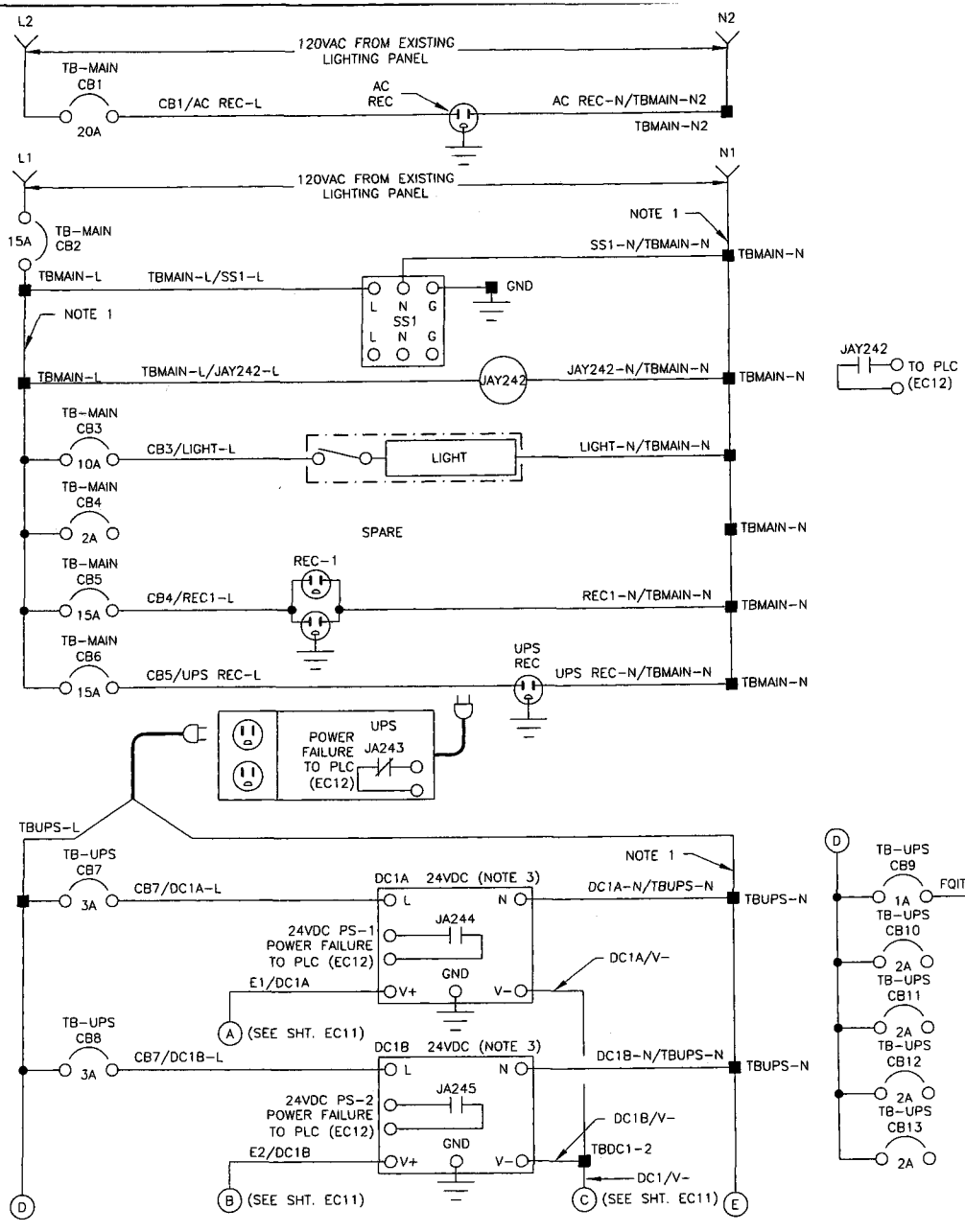


## 120VAC POWER DISTRIBUTION

## NOTES:

1. PROVIDE BUS BAR STYLE OR INSULATED COMB STYLE JUMPERS WHERE 2 OR MORE TERMINALS IN THE SAME TB ARE COMMONED TOGETHER. DO NOT USE DISCRETE WIRE JUMPERS.
2. BILL OF MATERIALS IS ON DRAWING EC5.
3. ADJUST VOLTAGE OUTPUT SETTING ON DC1B TO BE 1.0 VOLT LESS THAN DC1A.


DLT&V
SYSTEMS ENGINEERING
3550 N. CENTRAL AVE, STE. 1900
PHOENIX, AZ 85012 (602) 265-4655


Registered Professional Engineer (Electrical) CERTIFICATE NO. 37390 MELINDA TAM Date Signed 9.25.08 ARIZONA, U.S.A.

Expires 3/31/11

NOTES

| REVISIONS | | | |
|---|---|---|---|
| REV. | BY | DATE | DESCRIPTION |
| | | | |
| | | | |
| | | | |
| | | | |

CASA GRANDE WATER SYSTEM
SCADA PHASE II – WELL #21

ARIZONA WATER COMPANY

120VAC POWER DISTRIBUTION SCHEMATIC

| | |
|---|---|
| DRAWN BY: MAB | PROJECT NO. 1219.01.027 |
| DESIGNED BY: MAB | SUBMITTAL DATE: SEPT 2008 |
| CHECKED BY: BA | DRAWING NUMBER EC10 |


DWG FILE: 1219.01.101_EC10.dwg 11:08am PLOTTED: Sep 30, 2008 stewis

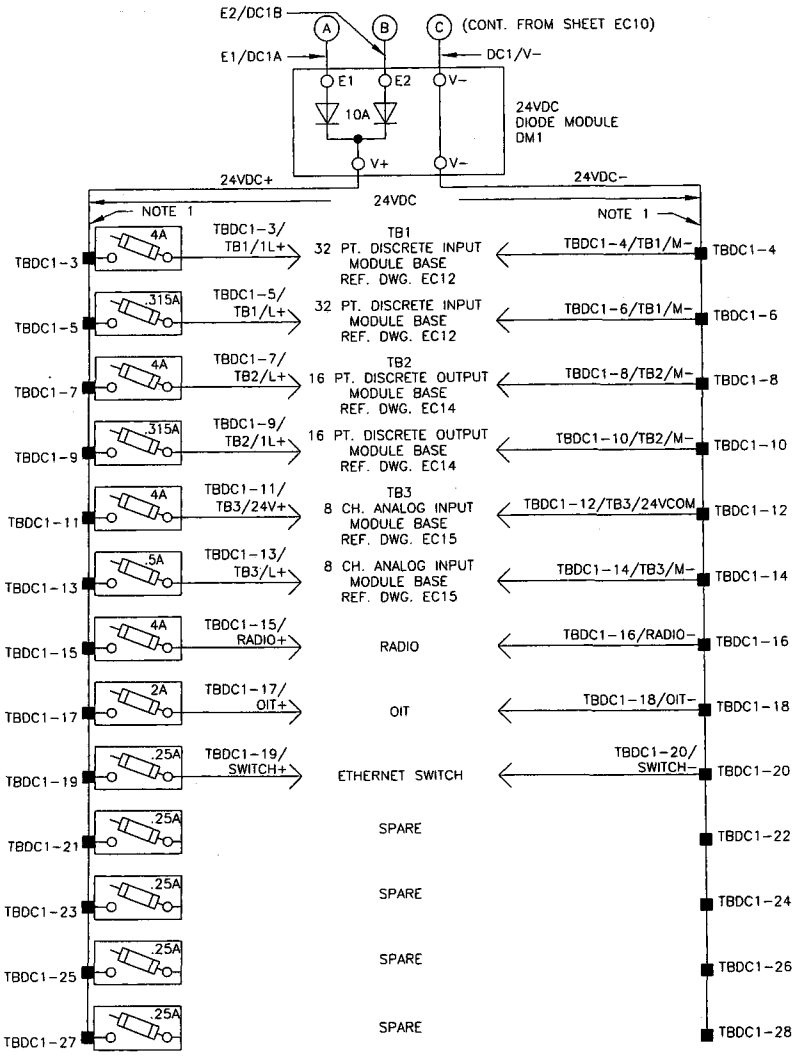


24VDC POWER DISTRIBUTION

# NOTES:

1. PROVIDE BUS BAR STYLE OR INSULATED COMB STYLE JUMPERS WHERE 2 OR MORE TERMINALS IN THE SAME TB ARE COMMONED TOGETHER. DO NOT USE DISCRETE WIRE JUMPERS.
2. BILL OF MATERIALS IS ON DRAWING EC5.
3. THE PROPER FUSE SIZE ON ANY FUTURE EQUIPMENT INSTALLATIONS UTILIZING SPARE CIRCUITS WILL BE THE RESPONSIBILITY OF THE OWNER.


DLT&V
SYSTEMS ENGINEERING
3550 N. CENTRAL AVE, STE. 1900
PHOENIX, AZ 85012 (602) 266-4688


Registered Professional Engineer (Electrical)
CERTIFICATE NO.
37390
MELINDA
TAM
Date Signed 9.25.08
ARIZONA, U.S.A.

Expires 3/31/11

NOTES

REVISIONS

| REV. | BY | DATE | DESCRIPTION |
|---|---|---|---|
| | | | |
| | | | |
| | | | |
| | | | |

CASA GRANDE WATER SYSTEM
SCADA PHASE II – WELL #21

ARIZONA WATER COMPANY

24VDC POWER DISTRIBUTION SCHEMATIC

| DRAWN BY: | PROJECT NO. |
|---|---|
| MAB | 1219.01.027 |
| DESIGNED BY: | SUBMITTAL DATE: |
| MAB | SEPT 2008 |
| CHECKED BY: | DRAWING NUMBER |
| BA | EC11 |


DWG FILE: 1219.01.101_EC11.dwg 11:08am PLOTTED: Sep 30, 2008 steve

## NOTES:

1. WIRE MODULES AND SIZE FUSES PER MANUFACTURER'S REQUIREMENTS.
2. BUS OR INSULATED COMB STYLE JUMPER.

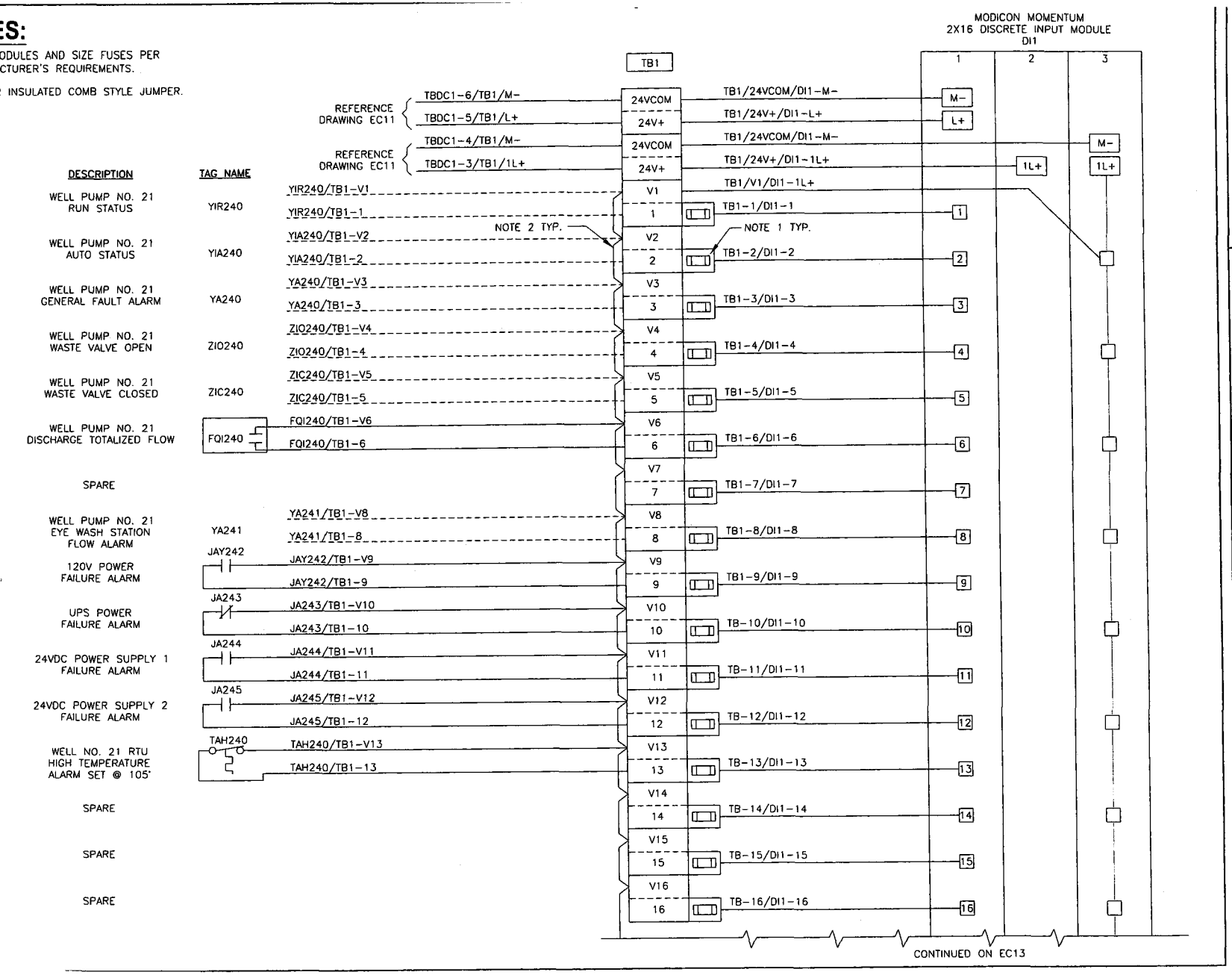



DLT&V
SYSTEMS ENGINEERING
3838 N. CENTRAL AVE., SUITE 2400
PHOENIX, AZ 85012 (602) 266-4558


Registered Professional Engineer (Electrical)
CERTIFICATE NO.
37390
MELINDA TAM
Date Signed 9-29-08
ARIZONA, U.S.A.

Expires 3/31/11

NOTES

| REVISIONS | | | |
|---|---|---|---|
| REV. | BY | DATE | DESCRIPTION |
| | | | |
| | | | |
| | | | |
| | | | |

CASA GRANDE WATER SYSTEM
SCADA PHASE II – WELL #21

ARIZONA WATER COMPANY

DISCRETE INPUT MODULE BASE WIRING DIAGRAM – SHEET 1

| DRAWN BY: | PROJECT NO. |
|---|---|
| MAB | 1219.01.027 |
| DESIGNED BY: | SUBMITTAL DATE: |
| MAB | SEPT 2008 |
| CHECKED BY: | DRAWING NUMBER |
| BA | EC12 |


DWG FILE: 1219.01.101_EC12.dwg 11:09am PLOTTED: Sep 30, 2008 stewis

## NOTES:

1. WIRE MODULES AND SIZE FUSES PER MANUFACTURER'S REQUIREMENTS.
2. BUS OR INSULATED COMB STYLE JUMPER.

| DESCRIPTION | TAG NAME |
|---|---|
| SPARE | |
| SPARE | |
| SPARE | |
| SPARE | |
| SPARE | |
| SPARE | |
| SPARE | |
| SPARE | |
| SPARE | |
| SPARE | |
| SPARE | |
| SPARE | |
| SPARE | |
| SPARE | |
| SPARE | |
| SPARE | |

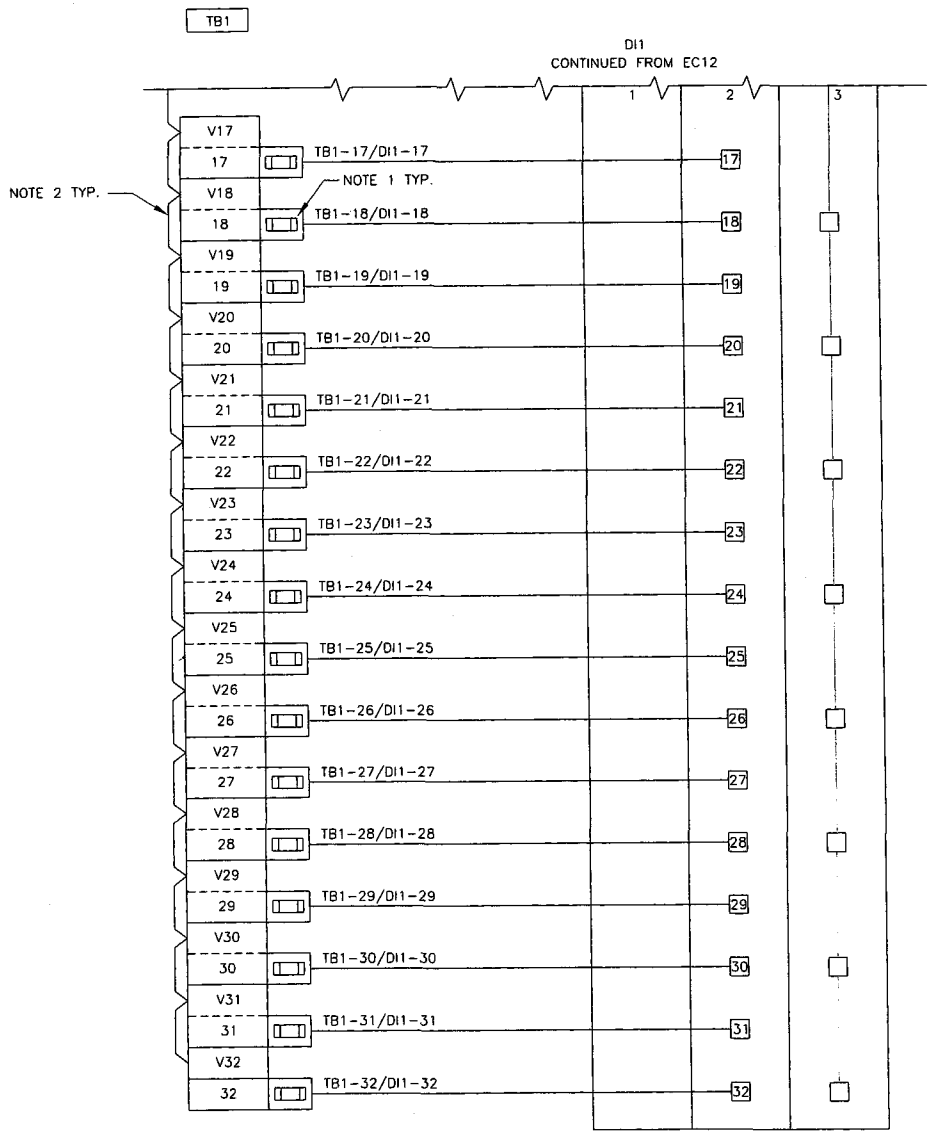


DLT&V SYSTEMS ENGINEERING
3550 N. CENTRAL AVE, STE. 1900
PHOENIX, AZ 85012 (602) 265-4658

Registered Professional Engineer (Electrical)
CERTIFICATE NO.
37390
MELINDA TAM
Date Signed 9-29-08
ARIZONA, U.S.A.

Expires 3/31/11

NOTES

| REVISIONS | | | |
|---|---|---|---|
| REV. | BY | DATE | DESCRIPTION |
| | | | |
| | | | |
| | | | |
| | | | |

CASA GRANDE WATER SYSTEM
SCADA PHASE II - WELL #21

ARIZONA WATER COMPANY

DISCRETE INPUT MODULE BASE WIRING DIAGRAM - SHEET 2

| DRAWN BY: | PROJECT NO. |
|---|---|
| MAB | 1219.01.027 |
| DESIGNED BY: | SUBMITTAL DATE: |
| MAB | SEPT 2008 |
| CHECKED BY: | DRAWING NUMBER |
| BA | EC13 |

DWG FILE: 1219.01.101_EC13.dwg 11:09am PLOTTED: Sep 30, 2008 stews

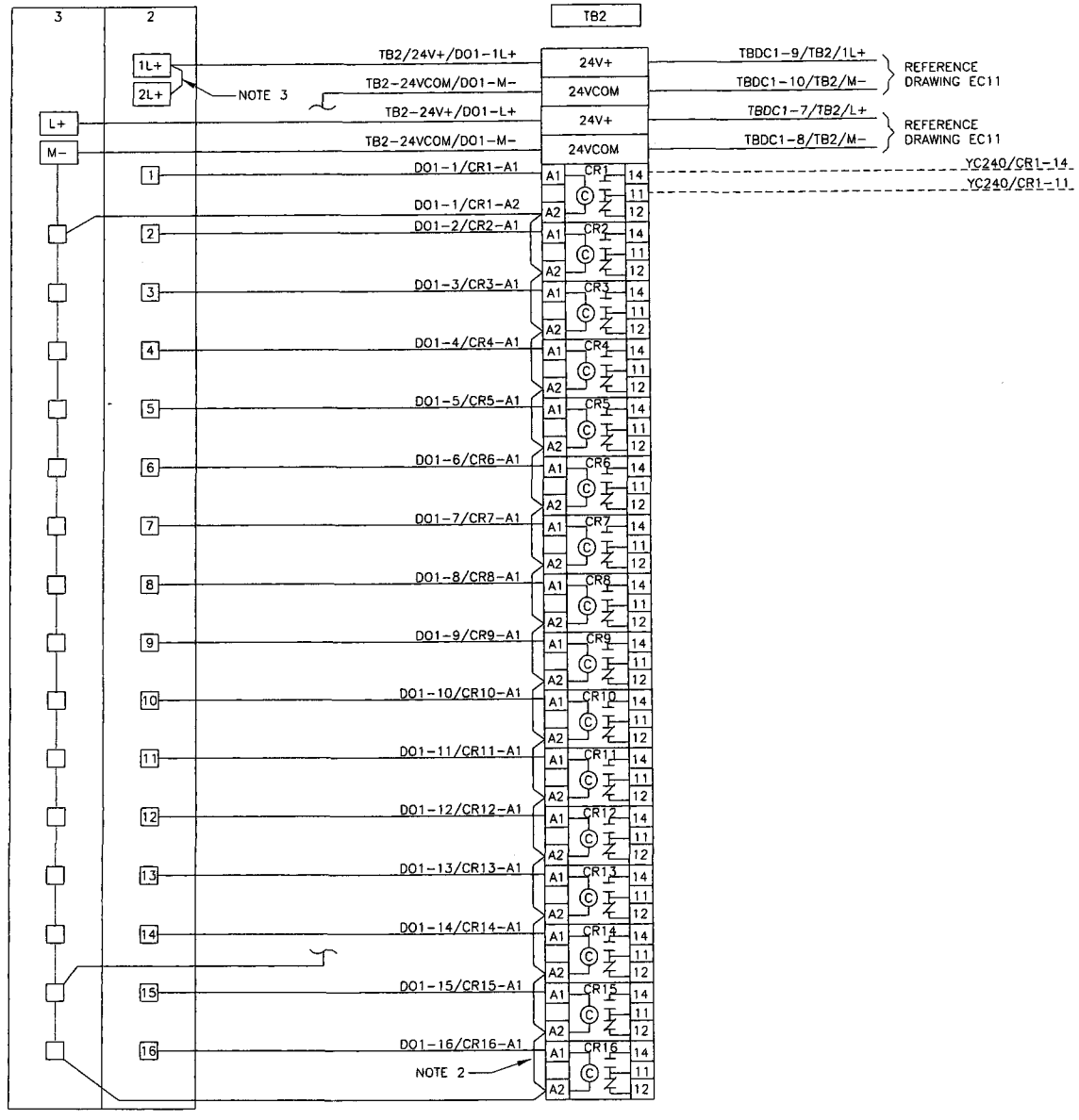


## NOTES:

1. WIRE MODULES PER MANUFACTURER'S REQUIREMENTS.
2. BUS OR INSULATED COMB STYLE JUMPER.
3. JUMPER WIRES PROVIDED BY PANEL MANUFACTURER.

| TAG NAME | DESCRIPTION |
|---|---|
| YC240 | WELL PUMP NO. 21 START/STOP COMMAND |
| | SPARE |
| | SPARE |
| | SPARE |
| | SPARE |
| | SPARE |
| | SPARE |
| | SPARE |
| | SPARE |
| | SPARE |
| | SPARE |
| | SPARE |
| | SPARE |
| | SPARE |
| | SPARE |
| | SPARE |

DLT&V SYSTEMS ENGINEERING
3550 N. CENTRAL AVE, STE. 1900
PHOENIX, AZ 85012 (602) 266-4998

Registered Professional Engineer (Electrical)
CERTIFICATE NO.
37390
MELINDA TAM
Date Signed 9.29.08
ARIZONA, U.S.A.
Expires 3/31/11

NOTES

REVISIONS

| REV. | BY | DATE | DESCRIPTION |
|---|---|---|---|
| | | | |
| | | | |
| | | | |
| | | | |

CASA GRANDE WATER SYSTEM
SCADA PHASE II – WELL #21

ARIZONA WATER COMPANY

DISCRETE OUTPUT MODULE BASE WIRING DIAGRAM

| DRAWN BY: | PROJECT NO. |
|---|---|
| MAB | 1219.01.027 |
| DESIGNED BY: | SUBMITTAL DATE: |
| MAB | SEPT 2008 |
| CHECKED BY: | DRAWING NUMBER |
| BA | EC14 |

DWG FILE: 1219.01.101_EC14.dwg 11:09am PLOTTED: Sep 30, 2008 alexis

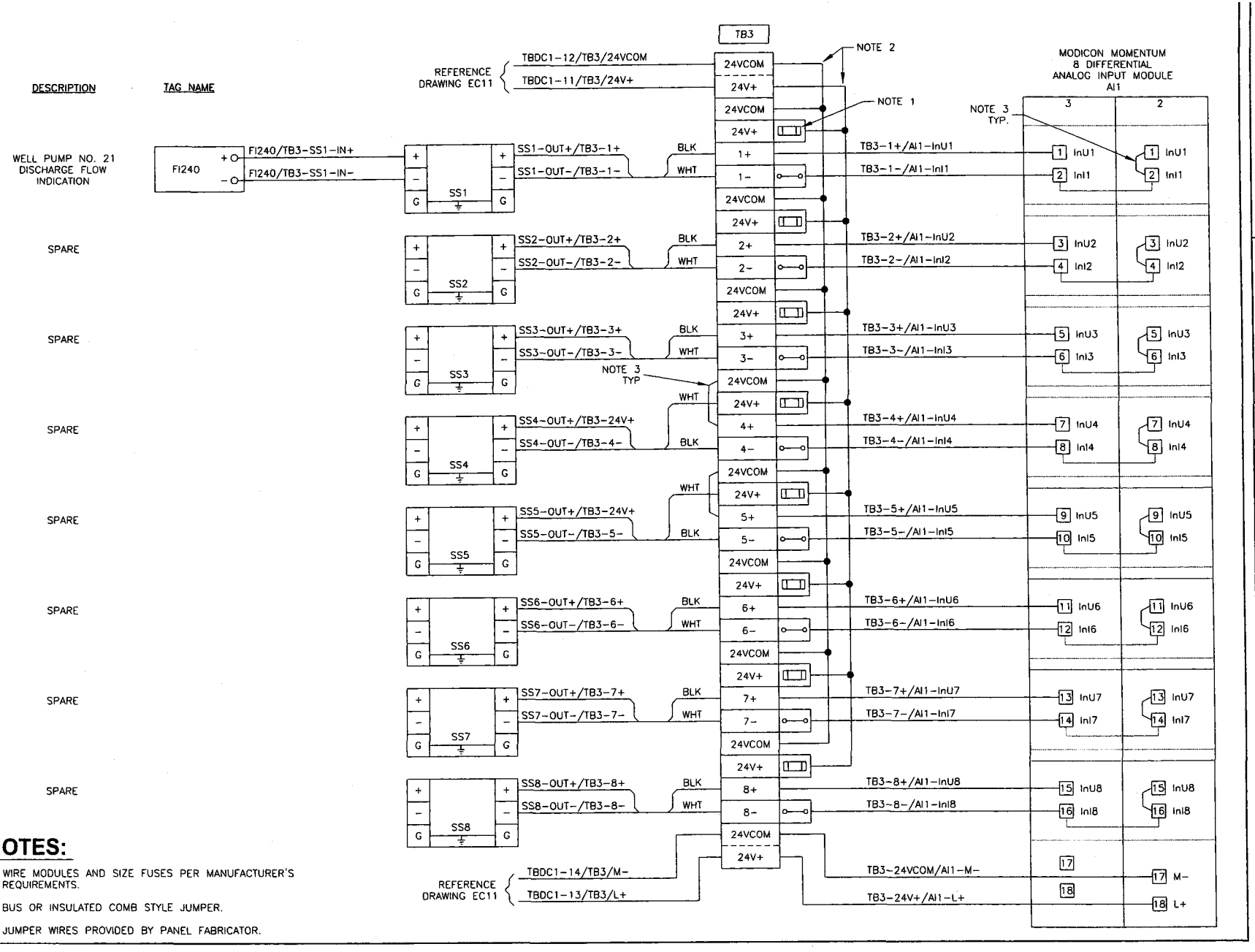


## NOTES:

1. WIRE MODULES AND SIZE FUSES PER MANUFACTURER'S REQUIREMENTS.
2. BUS OR INSULATED COMB STYLE JUMPER.
3. JUMPER WIRES PROVIDED BY PANEL FABRICATOR.

DWG FILE: 1219.01.101_EC15.dwg 11:09am PLOTTED: Sep 30, 2008 stevis

DLT&V SYSTEMS ENGINEERING
3550 N. CENTRAL AVE, STE. 1900
PHOENIX, AZ 85012 (602) 266-4650

Registered Professional Engineer (Electrical) CERTIFICATE NO. 37390 MELINDA TAM Date Signed 9.29.08 ARIZONA, U.S.A.

Expires 3/31/11

NOTES

| REVISIONS | | | |
|---|---|---|---|
| REV. | BY | DATE | DESCRIPTION |
| | | | |
| | | | |
| | | | |
| | | | |

CASA GRANDE WATER SYSTEM
SCADA PHASE II - WELL #21

ARIZONA WATER COMPANY

ANALOG INPUT MODULE BASE WIRING DIAGRAM

| | |
|---|---|
| DRAWN BY: MAB | PROJECT NO. 1219.01.027 |
| DESIGNED BY: MAB | SUBMITTAL DATE: SEPT 2008 |
| CHECKED BY: BA | DRAWING NUMBER EC15 |

# CASA GRANDE WATER SYSTEM
# SCADA DESIGN - PHASE II
# WELL NO. 23 - RTU 250 DESIGN

DLT&V
SYSTEMS ENGINEERING
3550 N. CENTRAL AVE, STE. 1900
PHOENIX, AZ 85012 (602) 266-4658

Registered Professional Engineer (Electrical)
CERTIFICATE NO.
37390
MELINDA
TAM
Date Signed 9-29-08
ARIZONA, U.S.A.

Expires 3/31/11

NOTES

REVISIONS

| REV. | BY | DATE | DESCRIPTION |
|---|---|---|---|
| | | | |
| | | | |
| | | | |
| | | | |

CASA GRANDE WATER SYSTEM
SCADA PHASE II – WELL #23

ARIZONA WATER COMPANY

COVER SHEET

| DRAWN BY: | PROJECT NO. |
|---|---|
| MAB | 1219.01.027 |
| DESIGNED BY: | SUBMITTAL DATE: |
| MAB | SEPT 2008 |
| CHECKED BY: | DRAWING NUMBER |
| BA | EC1 |

DWG FILE: 1219.01.101_EC1.dwg 11:09am PLOTTED: Sep 30, 2008 slewis

# CASA GRANDE WATER SYSTEM
# SCADA DESIGN – PHASE II
# WELL NO. 23 RTU DESIGN
# PROJECT SHEET INDEX

| Drawing No. | Drawing Title |
|---|---|
| EC1 | COVER SHEET |
| EC2 | PROJECT SHEET INDEX |
| EC3 | STANDARD SYMBOLS AND ABBREVIATIONS |
| EC4 | ISA TABLE AND COMMON LEGENDS SHEET |
| EC5 | BILL OF MATERIALS |
| EC6 | RTU ENCLOSURE LAYOUT |
| EC7 | RTU SUBPANEL LAYOUT |
| EC8 | TERMINAL BLOCK DETAILS |
| EC9 | COMMUNICATIONS SYSTEM ARCHITECTURE DIAGRAM |
| EC10 | 120VAC POWER DISTRIBUTION SCHEMATIC |
| EC11 | 24VDC POWER DISTRIBUTION SCHEMATIC |
| EC12 | DISCRETE INPUT MODULE BASE WIRING DIAGRAM - SHEET 1 |
| EC13 | DISCRETE INPUT MODULE BASE WIRING DIAGRAM - SHEET 2 |
| EC14 | DISCRETE OUTPUT MODULE BASE WIRING DIAGRAM |
| EC15 | ANALOG INPUT MODULE BASE WIRING DIAGRAM |

DLT&V
SYSTEMS ENGINEERING
3550 N. CENTRAL AVE, STE. 1900
PHOENIX, AZ 85012 (602) 266-4658

Registered Professional Engineer (Electrical)
CERTIFICATE NO.
37390
MELINDA
TAM
Date Signed 9.25.08
ARIZONA, U.S.A.

Expires 3/31/11

NOTES

REVISIONS

| REV. | BY | DATE | DESCRIPTION |
|---|---|---|---|
| | | | |
| | | | |
| | | | |
| | | | |

CASA GRANDE WATER SYSTEM
SCADA PHASE II – WELL #23

ARIZONA WATER COMPANY

PROJECT
SHEET INDEX

| DRAWN BY: | PROJECT NO. |
|---|---|
| MAB | 1219.01.027 |
| DESIGNED BY: | SUBMITTAL DATE: |
| MAB | SEPT 2008 |
| CHECKED BY: | DRAWING NUMBER |
| BA | EC2 |

DWG FILE: 1219.01.101_EC2.dwg 11:10am PLOTTED: Sep 30, 2008 stewis

# CASA GRANDE WATER SYSTEM
# SCADA DESIGN – PHASE II
# WELL NO. 23 RTU DESIGN
# STANDARD SYMBOLS AND ABBREVIATIONS

## SCHEMATIC/WIRING DIAGRAM SYMBOLS

CIRCUIT BREAKER
*A – AMP RATING

FUSE WITH PULLER
*A – AMP RATING

SWITCH
NORMALLY OPEN

SELECTOR SWITCH
2 POSITION, NORMALLY OPEN

SELECTOR SWITCH
3 POSITION, NORMALLY OPEN

TEMPERATURE SWITCH
NORMALLY OPEN

TERMINAL BLOCK
* – TB IDENTIFICATION

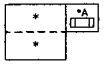


TERMINAL BLOCK W/ FUSE
PLUG AND FUSE
* – TB IDENTIFICATION
*A – AMPS

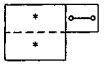


TERMINAL BLOCK W/
DISCONNECT KNIFE
* – TB IDENTIFICATION

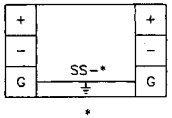


SURGE SUPPRESSOR FOR
FLOATING SIGNAL CIRCUITS
* – SS NUMBER IDENTIFICATION

SURGE SUPPRESSOR FOR
POWER SUPPLY
* – SS NUMBER IDENTIFICATION

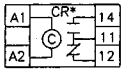


CONTROL RELAY
* – CR NUMBER IDENTIFICATION
# – TERMINAL NUMBER

## SCHEMATIC/WIRING DIAGRAM SYMBOLS

EARTH GROUND



TERMINAL BLOCK

DUPLEX RECEPTACLE

SINGLE RECEPTACLE

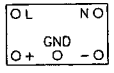


DC POWER SUPPLY
* – DC VOLTAGE RATING

## COLOR CODE CHART FOR 18 AWG BELDEN CABLES
## 12 COND. NO. 8466 AND 19 COND. NO. 8619

| | | |
|---|---|---|
| BLACK | BLK | 1st |
| WHITE | WHT | 2nd |
| RED | RED | 3rd |
| GREEN | GRN | 4th |
| ORANGE | ORN | 5th |
| BLUE | BLU | 6th |
| WHITE/BLACK | WHT/BLK | 7th |
| RED/BLACK | RED/BLK | 8th |
| GREEN/BLACK | GRN/BLK | 9th |
| ORANGE/BLACK | ORN/BLK | 10th |
| BLUE/BLACK | BLU/BLK | 11th |
| BLACK/WHITE | BLK/WHT | 12th |
| RED/WHITE | RED/WHT | 13th |
| GREEN/WHITE | GRN/WHT | 14th |
| BLUE/WHITE | BLU/WHT | 15th |
| BLACK/RED | BLK/RED | 16th |
| WHITE/RED | WHT/RED | 17th |
| ORANGE/RED | ORN/RED | 18th |
| BLUE/RED | BLU/RED | 19th |

## WIRE SIZES

(CIRCUIT WIRING SHALL BE RATED IN ACCORDANCE WITH THE MAXIMUM PERMITTED AMPERE RATING/SETTING OF THE OVERCURRENT PROTECTION DEVICE. N.E.C. 210–3)

120VAC / 20A POWER CIRCUIT – MIN. #12 AWG.
120VAC / 15A AND BELOW – MIN. #14 AWG.

24VDC / 20A POWER CIRCUIT – MIN. #12 AWG.
24VDC / 15A AND BELOW – MIN. #16 AWG.
24VDC I/O & SIGNAL CIRCUIT – MIN. #18 AWG.

4–20mADC I/O SIGNAL CIRCUIT – MIN. #18 AWG.

## ABBREVIATIONS

| | |
|---|---|
| A/R | AS REQUIRED |
| AC COM | NEUTRAL |
| AFF | ABOVE FINISHED FLOOR |
| AI | ANALOG INPUT |
| ANL COM | ANALOG COMMON |
| AO | ANALOG OUTPUT |
| AWG | AMERICAN WIRE GAUGE |
| BLK | BLACK |
| BLU | BLUE |
| CAP | CENTRAL ARIZONA PROJECT |
| CLR | CLEAR |
| CR | CONTROL RELAY |
| DC COM | DC COMMON |
| DC+ | DC POSITIVE POTENTIAL |
| DI | DISCRETE INPUT |
| DO | DISCRETE OUTPUT |
| DS | DOOR SWITCH |
| FOM | FIBER OPTIC MODEM |
| FOT | FIBER OPTIC TRANSCEIVER |
| GND | GROUND |
| GRN | GREEN |
| I/O | INPUT/OUTPUT |
| L | LINE |
| N | NEUTRAL |
| NC | NORMALLY CLOSED |
| NO | NORMALLY OPEN |
| NP | NAMEPLATE |
| OIT | OPERATOR INTERFACE TERMINAL |
| ORN | ORANGE |
| PDB | POWER DISTRIBUTION BLOCK |
| PLC | PROGRAMMABLE LOGIC CONTROLLER |
| PP | FIBER OPTIC PATCH PANEL |
| PS | POWER SUPPLY |
| REC | RECEPTACLE |
| RES | RESERVOIR |
| RIO | REMOTE INPUT/OUTPUT |
| RTU | REMOTE TELEMETRY UNIT |
| SLC | SMALL LOGIC CONTROLLER |
| SP | SPACE |
| SS | SURGE SUPPRESSOR |
| TB | TERMINAL BLOCK |
| UPS | UNINTERRUPTIBLE POWER SUPPLY |
| WHT | WHITE |
| WTR | WATER TREATMENT PLANT |
| WWTP | WASTE WATER TREATMENT PLANT |

## LINETYPE LEGEND

- FIELD WIRING
- INTERNAL PANEL WIRING
- RADIO COMMUNICATION LINK
- FO — FIBER OPTIC CABLE
- FOP — FIBER OPTIC PATCH CABLE
- EN — ETHERNET CAT5 CABLE
- DH+ — DATA HIGHWAY PLUS
- RIO — REMOTE INPUT OUTPUT
- AREA DIVIDER
- EQUIPMENT
- PATCH PANEL

DLT&V
SYSTEMS ENGINEERING
3550 N. CENTRAL AVE, STE. 1500
PHOENIX, AZ 85012 (602) 264-6831

Registered Professional Engineer (Electrical)
CERTIFICATE NO.
57390
MELINDA TAM
Date Signed 9-29-08
ARIZONA, U.S.A.
Expires 3/31/11

NOTES

REVISIONS

| REV. | BY | DATE | DESCRIPTION |
|---|---|---|---|
| | | | |
| | | | |
| | | | |
| | | | |

CASA GRANDE WATER SYSTEM
SCADA PHASE II – WELL #23

ARIZONA WATER COMPANY

STANDARD SYMBOLS AND ABBREVIATIONS

| | |
|---|---|
| DRAWN BY: MAB | PROJECT NO. 1219.01.027 |
| DESIGNED BY: MAB | SUBMITTAL DATE: SEPT 2008 |
| CHECKED BY: BA | DRAWING NUMBER EC3 |

DWG FILE: 1219.01.101_EC3.dwg 11:10am PLOTTED: Sep 30, 2008 slewis

# CASA GRANDE WATER SYSTEM
# SCADA DESIGN – PHASE II
# WELL NO. 23 RTU DESIGN
# ISA TABLE AND COMMON LEGENDS SHEET

## ISA INSTRUMENT IDENTIFICATION TABLE

| FIRST LETTERS | | | SUCCEEDING LETTERS | | |
|---|---|---|---|---|---|
| MEASURED OR INITIATING VARIABLE | | MODIFIER | READOUT OR PASSIVE FUNCTION | OUTPUT FUNCTION | MODIFIER |
| A | ANALYZER | | ALARM | | AUTO |
| B | BURNER, COMBUSTION | | | | |
| C | CONDUCTIVITY | | | CONTROL | CLOSED |
| D | DENSITY | DIFFERENTIAL | | | |
| E | VOLTAGE | | ELEMENT | | |
| F | FLOW | RATIO | | | |
| G | GAUGE | | GLASS, VIEWING DEVICE | | |
| H | HAND | | | | HIGH |
| I | CURRENT | | INDICATE | | |
| J | POWER | SCAN | | | |
| K | TIME, TIME SCHED. | TIME RATE OF CHANGE | | CONTROL STATION | |
| L | LEVEL | | LIGHT | | LOW |
| M | MOTION | | | | MIDDLE |
| N | INTRUSION | | | | NORMAL |
| O | TORQUE | | ORIFICE, RESTRICTION | | OPEN |
| P | PRESSURE | | POINT CONNECTION | | STOP |
| Q | QUANTITY | INTEGRATE, TOTALIZE | | | |
| R | RADIATION | | RECORD, OR PRINT | | REMOTE |
| S | SPEED, FREQUENCY | SAFETY | | SWITCH | START |
| T | TEMPERATURE | | | TRANSMIT | |
| U | MULTIVARIABLE | | MULTIFUNCTION | MULTIFUNCTION | MULTIFUNCTION |
| V | VIBRATION | | | VALVE, LOUVER | |
| W | WEIGHT | | WELL | | |
| X | MOTOR | X-AXIS | UNCLASSIFIED | UNCLASSIFED | UNCLASSIFED |
| Y | EVENT, STATE, OR PRESENCE | Y-AXIS | | RELAY, COMPUTE, CONVERT | |
| Z | POSITION | Z-AXIS | | DRIVER, ACTUATOR, FINAL CONTROL ELEMENT | |

### FIELD WIRES TAG LEGEND

DEVICE_NAME/TBXX-00
- TERMINAL NO.
- TERMINAL STRIP NO.
- FIELD DEVICE TAG NO.

### PANEL POWER WIRES TAG LEGEND

TBXX-03/TBXX-03
- TO TERMINAL NO.
- TO TERMINAL STRIP NO.
- FROM TERMINAL NO.
- FROM TERMINAL STRIP NO.

### PANEL I/O WIRES TAG LEGEND

O:#.2/TBXX-03
- INPUT POINT NO.
- TERMINAL STRIP NO.
- CHANNEL #
- SLOT #
- O=OUTPUT I=INPUT

### COLOR CODE CHART FOR 22 AWG BELDEN PAIRED CABLE NO. 8761

| | | |
|---|---|---|
| BLACK | BLK | 1st |
| CLEAR | CLR | 2nd |

### PANEL WIRING IDENTIFICATION

BLACK – 120VAC LINE
WHITE – 120VAC NEUTRAL
GREEN – GROUND
ORANGE – DC POSITIVE
BLUE – DC COMMON

DLT&V SYSTEMS ENGINEERING
3550 N. CENTRAL AVE, STE. 1900
PHOENIX, AZ 85012 (602) 266-4658

Registered Professional Engineer (Electrical)
No. 37390
MELINDA TAM
Date Signed 9.25.08
ARIZONA, U.S.A.
Expires 3/31/11

NOTES

REVISIONS

| REV. | BY | DATE | DESCRIPTION |
|---|---|---|---|
| | | | |
| | | | |
| | | | |
| | | | |

CASA GRANDE WATER SYSTEM
SCADA PHASE II – WELL #23

ARIZONA WATER COMPANY

ISA TABLE AND COMMON LEGENDS SHEET

| | |
|---|---|
| DRAWN BY: MAB | PROJECT NO. 1219.01.027 |
| DESIGNED BY: MAB | SUBMITTAL DATE: SEPT 2008 |
| CHECKED BY: BA | DRAWING NUMBER EC4 |

DWG FILE: 1219.01.101_EC4.dwg 11:10am PLOTTED: Sep 30, 2008 stevis

| QTY | ITEM # | MANUFACTURER | PART NUMBER | DESCRIPTION |
|---|---|---|---|---|
| 1 | 100 | MODICON | 171CCC96030 | M1E PROCESSOR ADAPTER, ETHERNET AND I/O BUS PORTS, WEB PAGE ENABLED, IEC |
| 2 | 101 | MODICON | 170INT11000 | MOMENTUM INTERBUS \ I/O BUS COMMUNICATIONS ADAPTER |
| 1 | 102 | MODICON | 170ADI35000 | 24V DC - 32 PT. INPUT MODULE BASE |
| 1 | 103 | MODICON | 170ADO34000 | 24V DC / 0.5A - 16 PT. OUTPUT MODULE BASE, 0.5 A OUTPUT |
| 1 | 104 | MODICON | 170AAI03000 | MOMENTUM SERIES I/O BASE, ANALOG 8CH DIFFERENTIAL INPUT MODULE BASE |
| 0 | 105 | MODICON | 172JNN21032 | MOMENTUM SERIES OPTION ADAPTER W/ GENERAL PURPOSE SERIAL COMMUNICATION PORT, RS-232 OR RS-485 SELECTABLE |
| 1 | 106 | MODICON | XBT GT5330 | EXTERNAL DISPLAY WITH 10.4" COLOR TFT,VGA RESOLUTION (640X480 PIXELS), 24V POWER |
| 1 | 107 | WEIDMULLER | IE-SW8-ECO | INDUSTRIAL 8-PORT ETHERNET SWITCH, 10/100 Mbps, UNMANAGED |
| 3 | 108 | MODICON | 170MCI00700 | INTERBUS CABLE |
| 1 | 110 | BELDEN | 8267 | CABLE, COAXIAL, RG-213 (OR EQUAL) WITH APPROPRIATE CONNECTORS, (LENGTH AS REQUIRED) |
| 1 | 111 | MDS | iNET-II-IP | ETHERNET REMOTE RADIO TRANSCEIVER, SPREAD SPECTRUM, W/ REMOTE DIAGNOSTICS |
| 3 | 112 | MODICON | 170XTS00100 | CONNECTOR SET, SCREW-TYPE (SET OF 3) |
| A/R | 201 | ALLEN-BRADLEY | 1492-DR6 | TERMINAL MOUNTING RAIL, HI-RISE, ALUMINUM |
| 14 | 202 | ALLEN-BRADLEY | 1492-EA35 | END ANCHOR |
| 6 | 210 | ALLEN-BRADLEY | 1492-GM35 | TERMINAL BLOCK, GROUP MARKING CARRIER |
| 18 | 215 | ALLEN-BRADLEY | 1492-J4 | TERMINAL BLOCK, SINGLE CIRCUIT, 600V, GRAY |
| 1 | 218 | ALLEN-BRADLEY | 1492-JD3 | TERMINAL BLOCK, DOUBLE LEVEL |
| 67 | 219 | ALLEN-BRADLEY | 1492-JD3P | TERMINAL BLOCK, DOUBLE LEVEL W/ PLUGGABLE TOP LEVEL |
| 4 | 221 | ALLEN-BRADLEY | 1492-JG4 | TERMINAL BLOCK, SINGLE CIRCUIT, GROUNDING |
| 53 | 223 | ALLEN-BRADLEY | 1492-FPK224 | FUSE PLUG INSERT W/ BFI, 10-36VAC/DC WORKING VOLTAGE, 10A MAX @ 250V. PROVIDE FAST BLOW FUSES AS REQUIRED |
| 8 | 225 | ALLEN-BRADLEY | 1492-DPL | DISCONNECT PLUG FOR 1492-JD3 P AND 1492-JD3 |
| 2 | 230 | WEIDMULLER | 9926251001 | CIRCUIT BREAKER, 1A |
| 4 | 231 | WEIDMULLER | 9926251002 | CIRCUIT BREAKER, 2A |
| 2 | 232 | WEIDMULLER | 9926251003 | CIRCUIT BREAKER, 3A |
| 1 | 233 | WEIDMULLER | 9926251010 | CIRCUIT BREAKER, 10A |
| 3 | 234 | WEIDMULLER | 9926251015 | CIRCUIT BREAKER, 15A |
| 1 | 235 | WEIDMULLER | 9926251020 | CIRCUIT BREAKER, 20A |
| 53 | 282 | ANY | ANY | 250V, 5mmX20mm FAST BLOW GLASS FUSES (SIZE AS INDICATED ON DRAWING) |
| 1 | 304 | HOFFMAN | A72H3724FS3PT | ENCLOSURE, FREE STANDING, TYPE 4/12 W/3-POINT LATCH, 72"X37"X24" |
| 1 | 305 | HOFFMAN | A72P36F1 | SUBPANEL, WHITE PAINT, 60"X32" |
| 1 | 306 | HOFFMAN | A72SP36F4 | SWING-OUT PANEL, HALF PANEL, 30.88" X 33.81" |
| 1 | 313 | HOFFMAN | ALF16D18R | 18" FLOURESCENT LIGHTING PACKAGE W/DOOR SWITCH, 115VAC |
| 1 | 316 | HOFFMAN | A-TEMNO | TEMPERATURE CONTROL SWITCH (THERMOSTAT), N.O. CONTACTS |
| A/R | 359 | BELDEN | 7929A | CABLE, ETHERNET, 4 PR, 24 AWG, CAT 5E |
| 1 | 377 | ANY | ANY | GROUNDING BAR |
| 1 | 378 | CUSTOM | CUSTOM | CUSTOM SHELF SUPPLIED AND INSTALLED BY PANEL FABRICATOR |
| A/R | 379 | PANDUIT | F2X4LG6 C2LG6 | 2 X 4 PLASTIC WIRING DUCT TYPE "E" W/COVER STYLE "C" |
| A/R | 380 | PANDUIT | F3X4LG6 C3LG6 | 3 X 4 PLASTIC WIRING DUCT TYPE "E" W/COVER STYLE "C" |
| 1 | 398 | HUBBELL | HBL5362I | DUPLEX RECEPTACLE, IVORY, 125V/20A, W/BOX AND BRUSHED ALUMINUM COVER (HUBBELL P.N.# A8) |
| 1 | 399 | HUBBELL | HBL5361I | SIMPLEX RECEPTACLE, IVORY, 125V/20A, W/BOX AND BRUSHED ALUMINUM COVER (HUBBELL P.N.# A7) |
| 1 | 400 | HUBBELL | HBL3810R | SIMPLEX RECEPTACLE, RED, 125V/20A, W/BOX AND BRUSHED ALUMINUM COVER (HUBBELL P.N.# A7) |
| 2 | 405 | WEIDMULLER | 8708670000 (CP SNT 250W 24V 10A) | POWER SUPPLY, 24VDC, 250W, 10A, W/ STATUS RELAY |
| 1 | 406 | WEIDMULLER | 8710620000 (CP DM 10) | DIODE MODULE, 10A PER INPUT, 40VDC MAX |
| 1 | 408 | IDEC | RH2B-UL-AC120V | RELAY, 120VAC COIL, DPDT W/ INDICATOR |
| 1 | 421 | IDEC | SH2B-05C | RELAY SOCKET, DIN RAIL MOUNT, FINGERSAFE |
| 1 | 450 | MTL SURGE TECHNOLOGIES | MA15/D/1/SI | 120/240 VAC, 15A, SURGE SUPPRESSOR AND FILTER |
| 8 | 451 | WEIDMULLER | 8448920000 | SURGE SUPPRESSOR, 24VDC, 2 WIRE LOOP PROTECTION (MCZ OVP) W/ END CAP PART #8389030000 |
| 8 | 452 | WEIDMULLER | 8389030000 | END CAP FOR 24VDC SURGE SUPPRESSOR (MCZ OVP) |
| 16 | 455 | ALLEN-BRADLEY | 700-HLT1Z24 | TERMINAL BLOCK RELAY, 24VDC, 6A CONTACTS, SPDT W/ LED |
| 1 | 505 | HOFFMAN | CR29-0416-G068 | AIR CONDITIONER, 120 VAC, 4000 BTU/HR, W/OUTDOOR ENCLOSURE PACKAGE |
| 1 | 703 | APC | SUA750, AP9610 | UPS, 115 VAC, 750 VA W/ RELAY I/O SMARTSLOT CARD OPTION, MINIMUM 30 MIN. RUNTIME OF COMPLETE PLC OPERATIONS POWER |
| 1 | 811 | POLYPHASER | IS-50NX-C2 | BROADBAND COAXIAL SURGE PROTECTOR, FLANGE MOUNT, 125-1000MHZ |
| 2 | 853 | TIMES MICROWAVE SYSTEMS | EZ-900-NMC | N-MALE CONNECTOR |

DWG FILE: 1219.01.01_EC5.dwg 11:10am PLOTTED: Sep 30, 2008 stewis

DLT&V
SYSTEMS ENGINEERING
2550 E. STATION D. #124
PHOENIX, AZ 85032 (602) 266-4688

Registered Professional Engineer (Electrical)
STATE OF ARIZONA
No. 37390
MELINDA TAM
Date Signed 9-29-08
Expires 3/31/11

NOTES

REVISIONS

| REV. | BY | DATE | DESCRIPTION |
|---|---|---|---|
| | | | |
| | | | |
| | | | |
| | | | |

CASA GRANDE WATER SYSTEM
SCADA PHASE II – WELL #23

ARIZONA WATER COMPANY

BILL OF MATERIALS

| DRAWN BY: | PROJECT NO. |
|---|---|
| MAB | 1219.01.027 |
| DESIGNED BY: | SUBMITTAL DATE: |
| MAB | SEPT 2008 |
| CHECKED BY: | DRAWING NUMBER |
| BA | EC5 |

# NOTES:

1. BILL OF MATERIALS IS ON DRAWING EC5.
2. REFER TO DRAWING EC7 FOR PLC INTERIOR LAYOUT.
3. FURNISH ADDITIONAL NAMEPLATES AS REQUIRED BY UL OR BY OTHER APPLICABLE CODES.
4. MOMOUNT UPS MINIMUM 6" ABOVE GRADE LEVEL. PANEL FABRICATOR SHALL SUPPLY AND INSTALL CUSTOM SUPPORT HARDWARE IN ENCLOSURE AS REQUIRED.

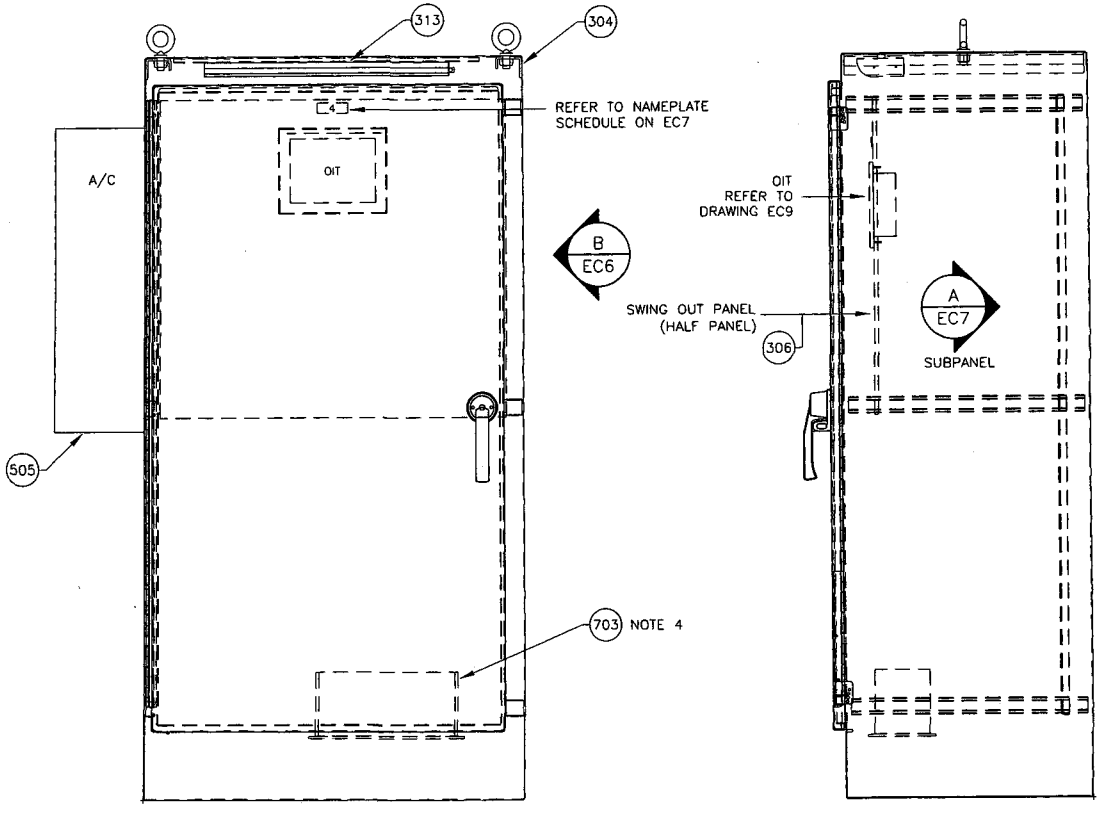


A ~ RTU ENCLOSURE, FRONT
1"=1'-0"

B ~ RTU ENCLOSURE, SIDE
1"=1'-0"

DLT&V
SYSTEMS ENGINEERING
3550 N. CENTRAL AVE, STE. 1900
PHOENIX, AZ 85012 (602) 266-4658

Registered Professional Engineer (Electrical)
CERTIFICATE NO.
37390
MELINDA
TAM
Date Signed 9.29.08
ARIZONA, U.S.A.
Expires 3/31/11

NOTES

REVISIONS

| REV. | BY | DATE | DESCRIPTION |
|---|---|---|---|
| | | | |
| | | | |
| | | | |
| | | | |

CASA GRANDE WATER SYSTEM
SCADA PHASE II – WELL #23

ARIZONA WATER COMPANY

RTU ENCLOSURE LAYOUT

| | |
|---|---|
| DRAWN BY: MAB | PROJECT NO. 1219.01.027 |
| DESIGNED BY: MAB | SUBMITTAL DATE: SEPT 2008 |
| CHECKED BY: BA | DRAWING NUMBER EC6 |

DWG FILE: 1219.01.101_EC6.dwg 11:11am PLOTTED: Sep 30, 2008 slewis

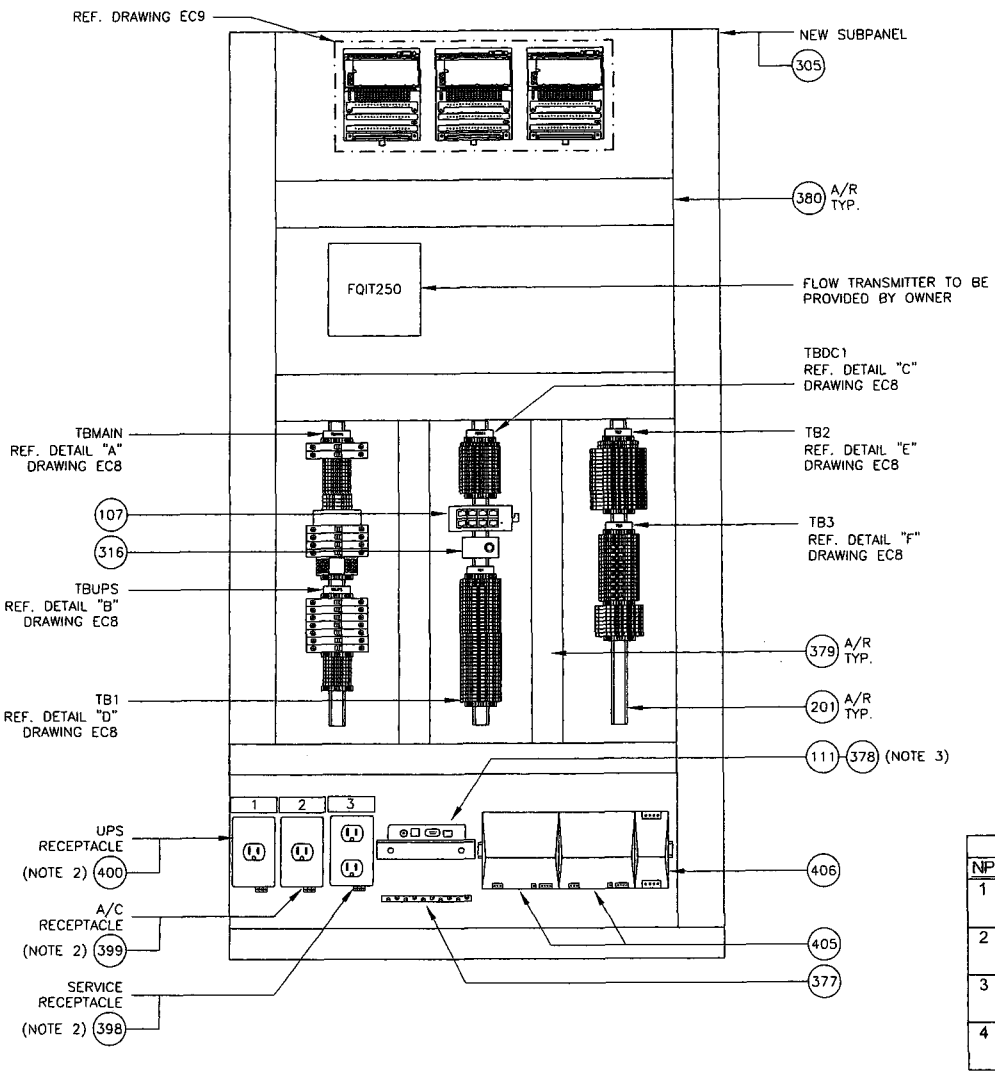


A EC6 SUBPANEL LAYOUT
1-1/2"=1'-0"

## NOTES:

1. BILL OF MATERIALS IS ON DRAWING EC5.
2. NAMEPLATE SHALL BE 3/32" THICK LAMINATED PHENOLIC TYPE BLACK WITH WHITE LETTERS. SEE BILL OF MATERIALS ON DRAWING EC5 AND NAMEPLATE SCHEDULE (DET B) ON THIS SHEET FOR ADDITIONAL INFORMATION.
3. MOUNT RADIO ON CUSTOM SHELF PROVIDED AND INSTALLED BY PANEL FABRICATOR. REFER TO DRAWING EC9 AND BILL OF MATERIALS ON EC5 FOR MORE INFORMATION.

**NAMEPLATE SCHEDULE (NOTE 2)**

| NP | HxWxLTR | FIRST LINE | SECOND LINE | LOCATION |
|---|---|---|---|---|
| 1 | 1" x 3" x 1/4" | UPS RECEPTACLE | ONLY | CENTERED ABOVE UPS RECEPTACLE |
| 2 | 1" x 3" x 1/4" | A/C RECEPTACLE | ONLY | CENTERED ABOVE A/C RECEPTACLE |
| 3 | 1" x 3" x 1/4" | SERVICE RECEPTACLE | ONLY | CENTERED ABOVE SERVICE RECEPTACLE |
| 4 | 1" x 3" x 1/4" | OIT | | CENTERED ABOVE OIT |

B NAMEPLATE SCHEDULE

DLT&V
SYSTEMS ENGINEERING
2550 N. CENTRAL AVE, STE. 1900
PHOENIX, AZ 85012 (602) 266-4668

Registered Professional Engineer (Electrical)
CERTIFICATE NO.
37390
MELINDA TAM
Date Signed 9.25.08
ARIZONA, U.S.A.
Expires 3/31/11

NOTES

REVISIONS

| REV. | BY | DATE | DESCRIPTION |
|---|---|---|---|
| | | | |
| | | | |
| | | | |
| | | | |

CASA GRANDE WATER SYSTEM
SCADA PHASE II - WELL #23

ARIZONA WATER COMPANY

RTU SUBPANEL LAYOUT

| | |
|---|---|
| DRAWN BY: MAB | PROJECT NO. 1219.01.027 |
| DESIGNED BY: MAB | SUBMITTAL DATE: SEPT 2008 |
| CHECKED BY: BA | DRAWING NUMBER EC7 |

DWG FILE: 1219.01.101_EC7.dwg 11:11am PLOTTED: Sep 30, 2008 slewis

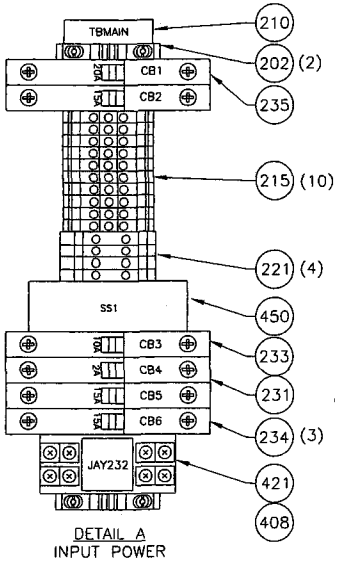


DETAIL A
INPUT POWER
TBMAIN

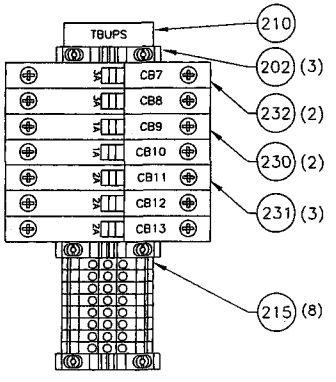


DETAIL B
PANEL POWER
TBUPS

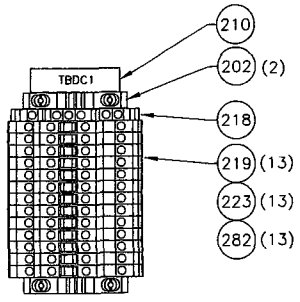


DETAIL C
24VDC POWER
DISTRIBUTION
TBDC1

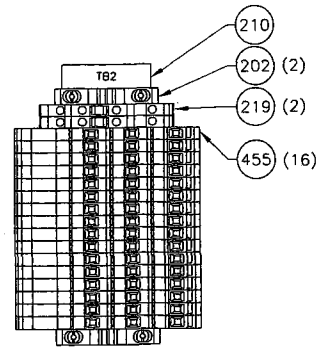


DETAIL E
DISCRETE OUTPUT
TB2

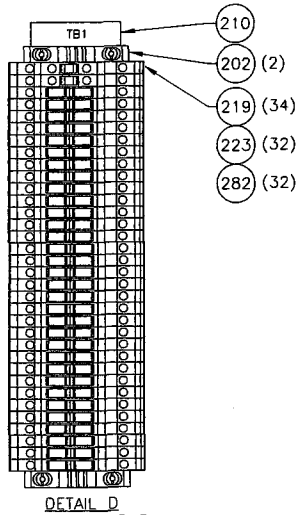


DETAIL D
DISCRETE INPUT
TB1

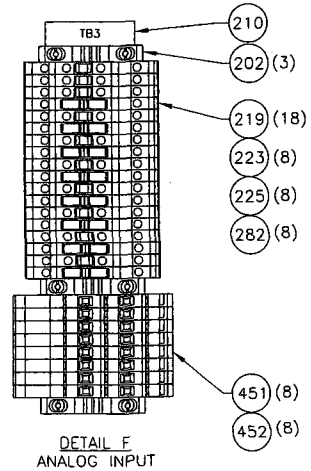


DETAIL F
ANALOG INPUT
TB3

## NOTES:

1. PROVIDE BUS BAR STYLE OR INSULATED COMB STYLE JUMPERS WHERE 2 OR MORE TERMINALS IN THE SAME TB ARE COMMONED TOGETHER. DO NOT USE DISCRETE WIRE JUMPERS.
2. BILL OF MATERIALS IS ON DRAWING EC5.
3. PANEL BUILDER TO SUPPLY AND INSTALL ALL NECESSARY AND APPROPRIATE ACCESSORIES INCLUDING TERMINAL NUMBERS, JUMPERS AND END BARRIERS.

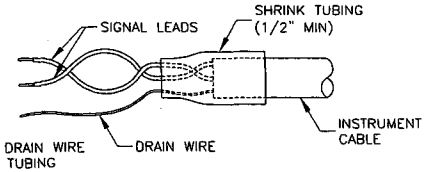


NOTE:
WRAP UNUSED DRAIN WIRE
UNDER SHRINK TUBING

DETAIL G
INSTRUMENT CABLE
TERMINATION

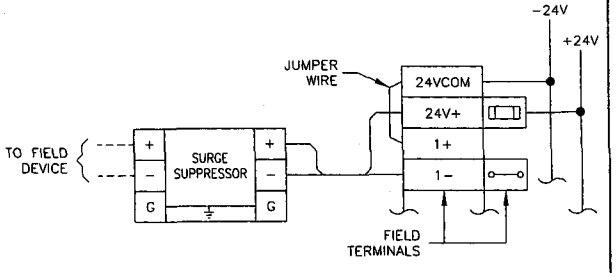


2-WIRE

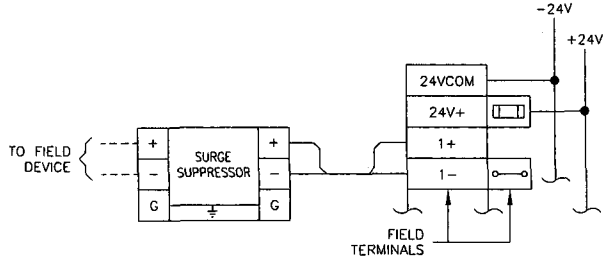


4-WIRE

DETAIL H
ANALOG INPUT TERMINALS
2 & 4-WIRE TYPICAL CONNECTIONS

DLT&V
SYSTEMS ENGINEERING
3550 N. CENTRAL AVE, STE. 1900
PHOENIX, AZ 85012 (602) 266-4558

Registered Professional Engineer (Electrical)
CERTIFICATE NO.
37390
MELINDA
TAM
Date Signed 9-25-08
ARIZONA, U.S.A.

Expires 3/31/11

NOTES

| REVISIONS | | | |
|---|---|---|---|
| REV. | BY | DATE | DESCRIPTION |
| | | | |
| | | | |
| | | | |
| | | | |

CASA GRANDE WATER SYSTEM
SCADA PHASE II – WELL #23

ARIZONA WATER COMPANY

TERMINAL BLOCK DETAILS

| DRAWN BY: | PROJECT NO. |
|---|---|
| MAB | 1219.01.027 |
| DESIGNED BY: | SUBMITTAL DATE: |
| MAB | SEPT 2008 |
| CHECKED BY: | DRAWING NUMBER |
| BA | EC8 |

DWG FILE: 1219.01.101_EC8.dwg 11:11am PLOTTED: Sep 30, 2008 slewis

## NOTES:

1. BILL OF MATERIALS IS ON DRAWING EC5.
2. ANTENNA, ANTENNA MAST, GROUNDING KIT AND CABLE PROVIDED AND INSTALLED BY OTHERS.

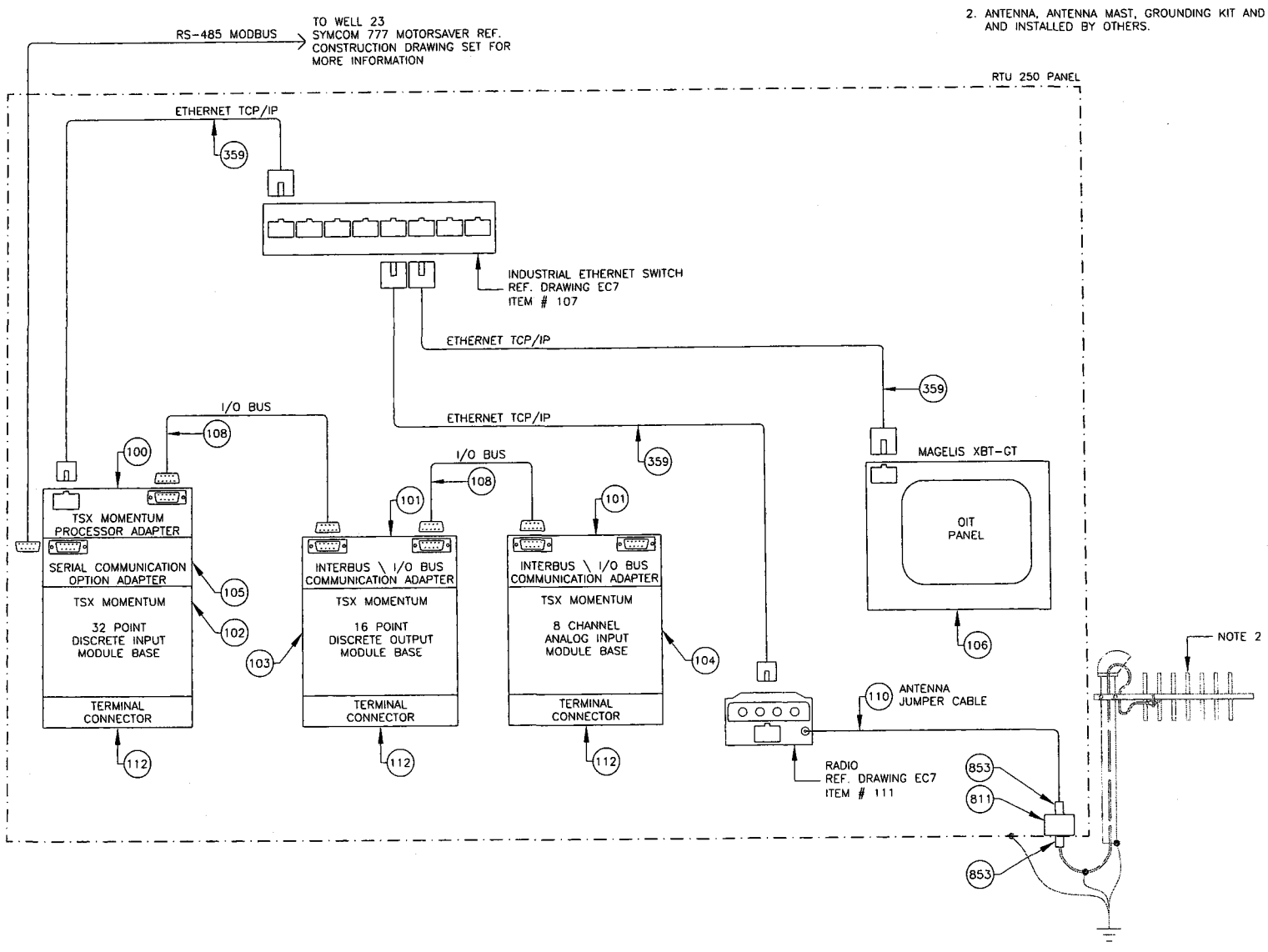


DWG FILE: 1219.01.101_EC9.dwg 11:12am PLOTTED: Sep 30, 2008 stewis

DLT&V
SYSTEMS ENGINEERING
3550 N. CENTRAL AVE, STE. 1900
PHOENIX, AZ 85012 (602) 266-4588

Registered Professional Engineer (Electrical)
CERTIFICATE NO.
37390
MELINDA
TAM
Date Signed 9-29-08
ARIZONA, U.S.A.

Expires 3/31/11

NOTES

| REVISIONS | | | |
|---|---|---|---|
| REV. | BY | DATE | DESCRIPTION |
| | | | |
| | | | |
| | | | |
| | | | |

CASA GRANDE WATER SYSTEM
SCADA PHASE II - WELL #23

ARIZONA WATER COMPANY

COMMUNICATIONS SYSTEM ARCHITECTURE DIAGRAM

| DRAWN BY: | PROJECT NO. |
|---|---|
| MAB | 1219.01.027 |
| DESIGNED BY: | SUBMITTAL DATE: |
| MAB | SEPT 2008 |
| CHECKED BY: | DRAWING NUMBER |
| BA | EC9 |

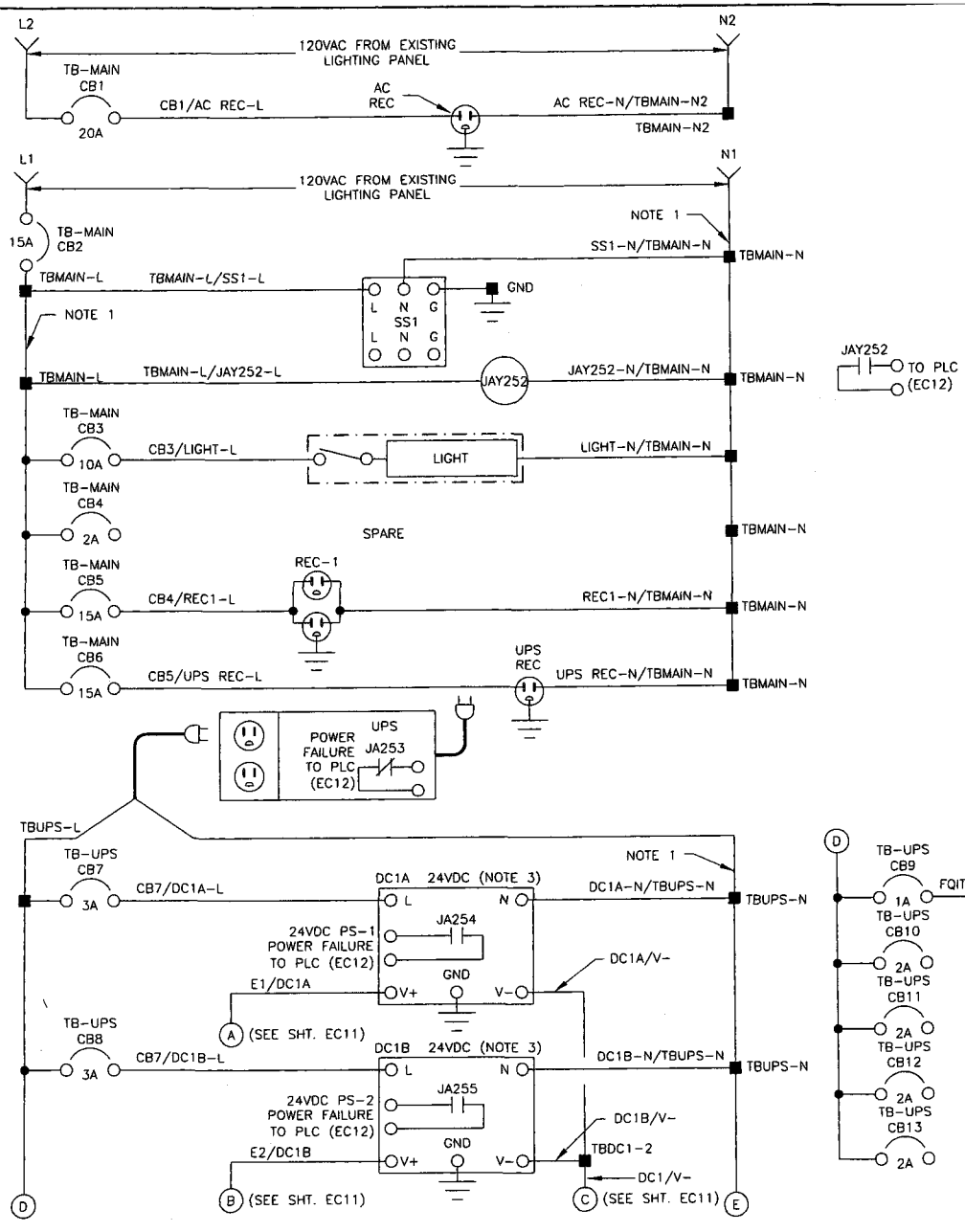


# NOTES:

1. PROVIDE BUS BAR STYLE OR INSULATED COMB STYLE JUMPERS WHERE 2 OR MORE TERMINALS IN THE SAME TB ARE COMMONED TOGETHER. DO NOT USE DISCRETE WIRE JUMPERS.
2. BILL OF MATERIALS IS ON DRAWING EC5.
3. ADJUST VOLTAGE OUTPUT SETTING ON DC1B TO BE 1.0 VOLT LESS THAN DC1A.

## 120VAC POWER DISTRIBUTION


DLT&V
SYSTEMS ENGINEERING
3550 N. CENTRAL AVE., STE. 1900
PHOENIX, AZ 85012 (602) 266-4658


Registered Professional Engineer (Electrical)
CERTIFICATE NO.
37390
MELINDA TAM
Date Signed 9.25.08
ARIZONA, U.S.A.
Expires 3/31/11

NOTES

REVISIONS

| REV. | BY | DATE | DESCRIPTION |
|---|---|---|---|
| | | | |
| | | | |
| | | | |
| | | | |

CASA GRANDE WATER SYSTEM
SCADA PHASE II - WELL #23

ARIZONA WATER COMPANY

120VAC POWER DISTRIBUTION SCHEMATIC

| | |
|---|---|
| DRAWN BY: MAB | PROJECT NO. 1219.01.027 |
| DESIGNED BY: MAB | SUBMITTAL DATE: SEPT 2008 |
| CHECKED BY: BA | DRAWING NUMBER EC10 |


DWG FILE: 1219.01.101-EC10.dwg 11:12am PLOTTED: Sep 30, 2008 steves

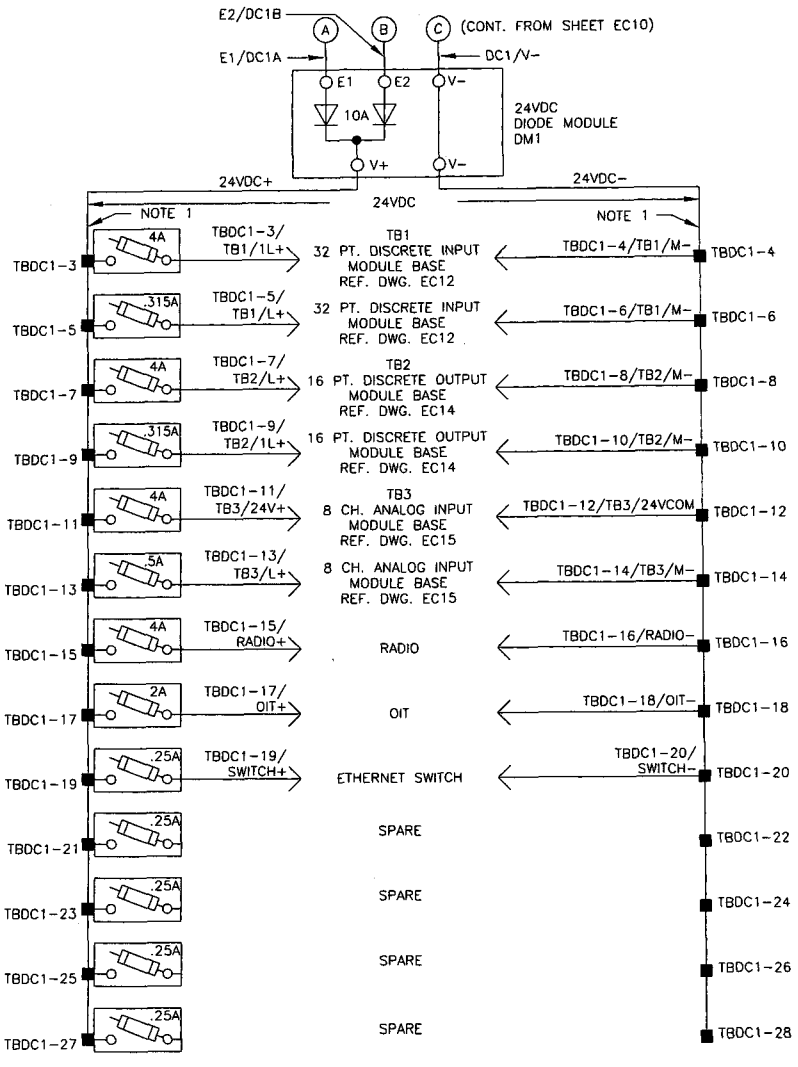


24VDC POWER DISTRIBUTION

# NOTES:

1. PROVIDE BUS BAR STYLE OR INSULATED COMB STYLE JUMPERS WHERE 2 OR MORE TERMINALS IN THE SAME TB ARE COMMONED TOGETHER. DO NOT USE DISCRETE WIRE JUMPERS.
2. BILL OF MATERIALS IS ON DRAWING EC5.
3. THE PROPER FUSE SIZE ON ANY FUTURE EQUIPMENT INSTALLATIONS UTILIZING SPARE CIRCUITS WILL BE THE RESPONSIBILITY OF THE OWNER.


DLT&V
SYSTEMS ENGINEERING
3550 N. CENTRAL AVE, STE. 1900
PHOENIX, AZ 85012 (602) 266-4668


Registered Professional Engineer (Electrical)
CERTIFICATE NO.
37390
MELINDA
TAM
Date Signed 9.26.08
ARIZONA, U.S.A.

Expires 3/31/11

NOTES

REVISIONS

| REV. | BY | DATE | DESCRIPTION |
|---|---|---|---|
| | | | |
| | | | |
| | | | |
| | | | |

CASA GRANDE WATER SYSTEM
SCADA PHASE II - WELL #23

ARIZONA WATER COMPANY

24VDC POWER DISTRIBUTION SCHEMATIC

| DRAWN BY: | PROJECT NO. |
|---|---|
| MAB | 1219.01.027 |
| DESIGNED BY: | SUBMITTAL DATE: |
| MAB | SEPT 2008 |
| CHECKED BY: | DRAWING NUMBER |
| BA | EC11 |

DWG FILE: 1219.01.101_EC11.dwg 11:12am PLOTTED: Sep 30, 2008 slewis

## NOTES:

1. WIRE MODULES AND SIZE FUSES PER MANUFACTURER'S REQUIREMENTS.
2. BUS OR INSULATED COMB STYLE JUMPER.

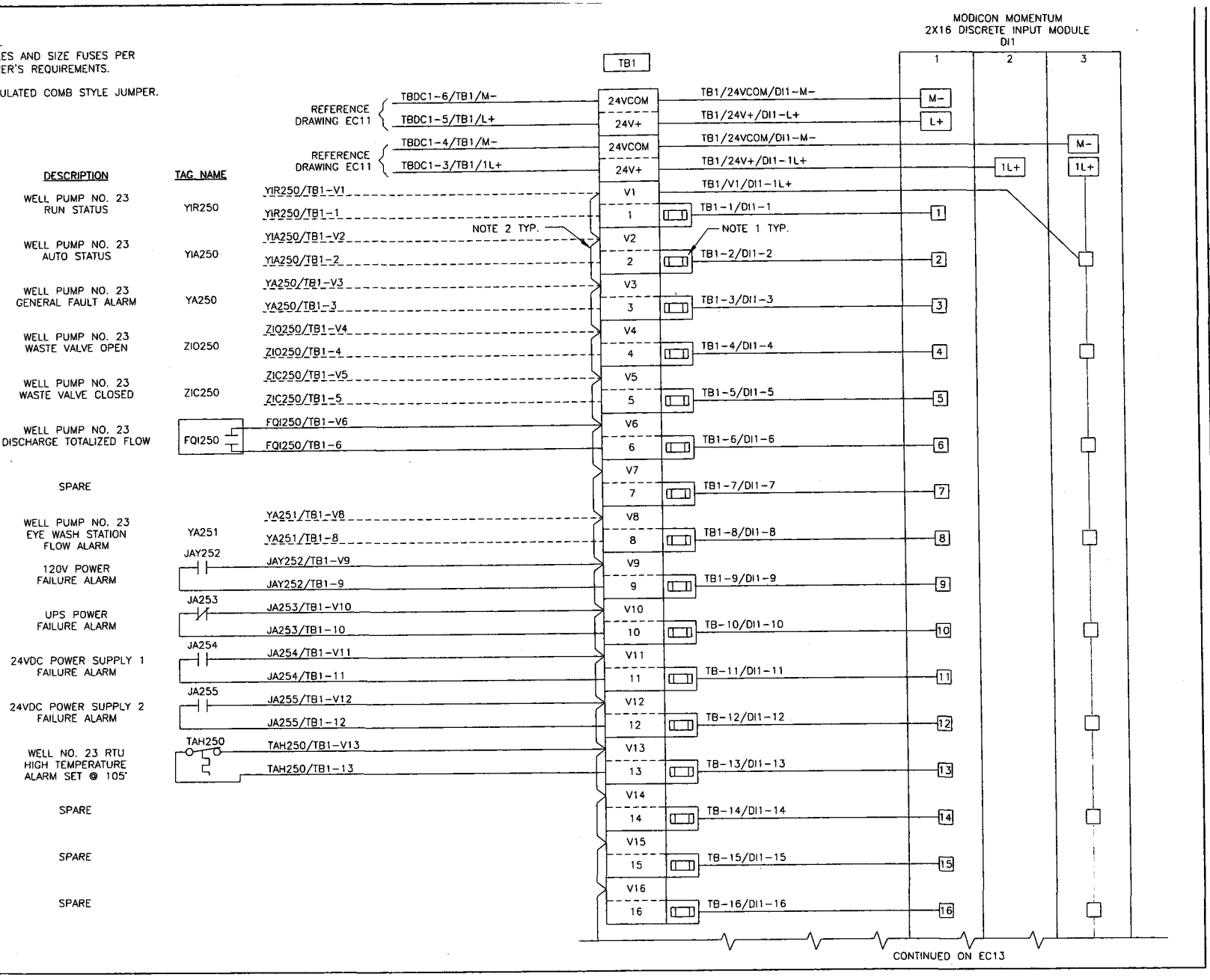


DWG FILE: 1219.01.101_EC12.dwg 11:12am PLOTTED: Sep 30, 2008 stewis

DLT&V SYSTEMS ENGINEERING
3550 N. CENTRAL AVE, STE. 1900
PHOENIX, AZ 85012 (602) 265-4655

Registered Professional Engineer (Electrical) CERTIFICATE NO. 37390 MELINDA TAM Date Signed 9-25-08 ARIZONA, U.S.A.

Expires 3/31/11

NOTES

REVISIONS

| REV. | BY | DATE | DESCRIPTION |
|---|---|---|---|
| | | | |
| | | | |
| | | | |
| | | | |

CASA GRANDE WATER SYSTEM
SCADA PHASE II - WELL #23

ARIZONA WATER COMPANY

DISCRETE INPUT MODULE BASE WIRING DIAGRAM - SHEET 1

| DRAWN BY: | PROJECT NO. |
|---|---|
| MAB | 1219.01.027 |
| DESIGNED BY: | SUBMITTAL DATE: |
| MAB | SEPT 2008 |
| CHECKED BY: | DRAWING NUMBER |
| BA | EC12 |

## NOTES:

1. WIRE MODULES AND SIZE FUSES PER MANUFACTURER'S REQUIREMENTS.
2. BUS OR INSULATED COMB STYLE JUMPER.

| DESCRIPTION | TAG NAME |
|---|---|
| SPARE | |
| SPARE | |
| SPARE | |
| SPARE | |
| SPARE | |
| SPARE | |
| SPARE | |
| SPARE | |
| SPARE | |
| SPARE | |
| SPARE | |
| SPARE | |
| SPARE | |
| SPARE | |
| SPARE | |
| SPARE | |

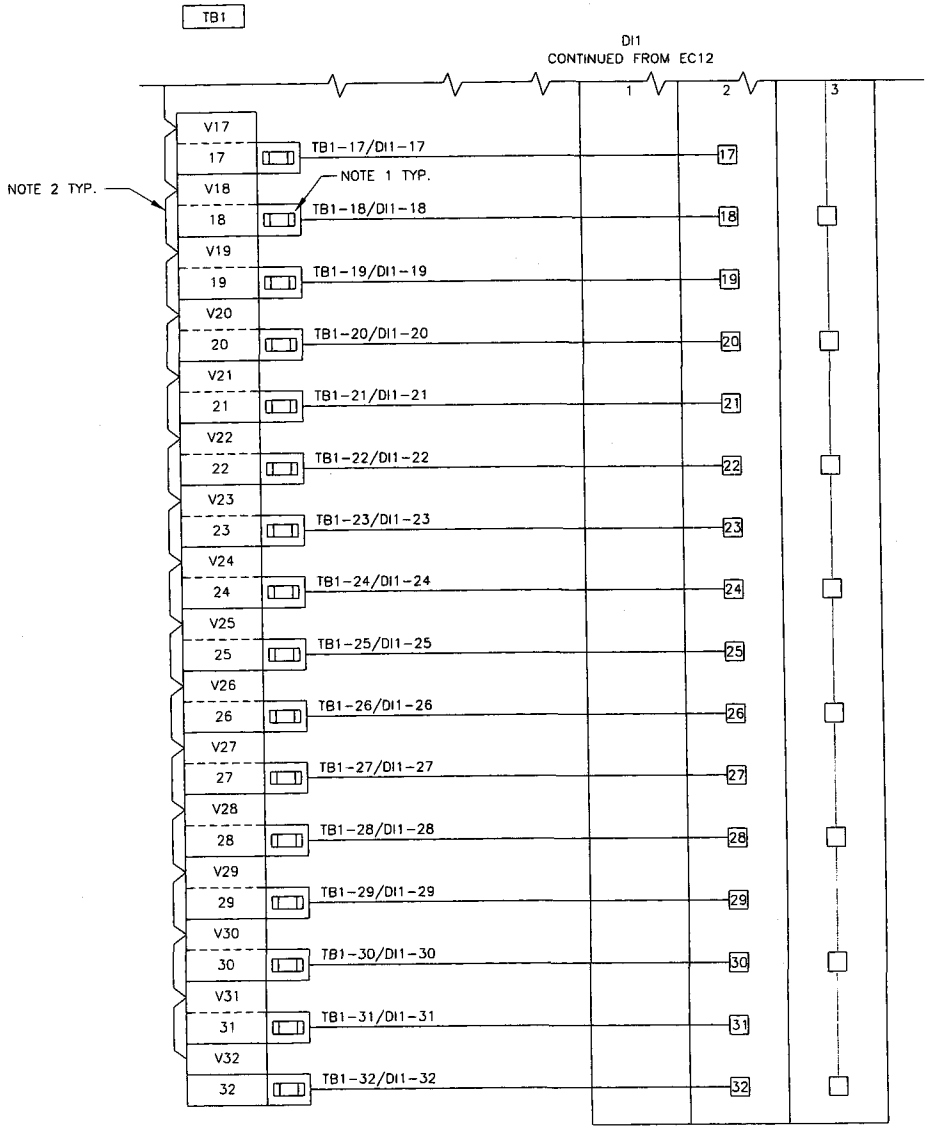


DLT&V
SYSTEMS ENGINEERING
3550 N. CENTRAL AVE, STE. 1900
PHOENIX, AZ 85012 (602) 266-4656

Registered Professional Engineer (Electrical)
CERTIFICATE NO.
37390
MELINDA
TAM
Date Signed 9-29-08
ARIZONA, U.S.A.

Expires 3/31/11

NOTES

| REVISIONS | | | |
|---|---|---|---|
| REV. | BY | DATE | DESCRIPTION |
| | | | |
| | | | |
| | | | |
| | | | |

CASA GRANDE WATER SYSTEM
SCADA PHASE II - WELL #23

ARIZONA WATER COMPANY

DISCRETE INPUT MODULE BASE WIRING DIAGRAM - SHEET 2

| DRAWN BY: | PROJECT NO. |
|---|---|
| MAB | 1219.01.027 |
| DESIGNED BY: | SUBMITTAL DATE: |
| MAB | SEPT 2008 |
| CHECKED BY: | DRAWING NUMBER |
| BA | EC13 |

DWG FILE: 1219.01.101_EC13.dwg 11:12am PLOTTED: Sep 30, 2008 stevis

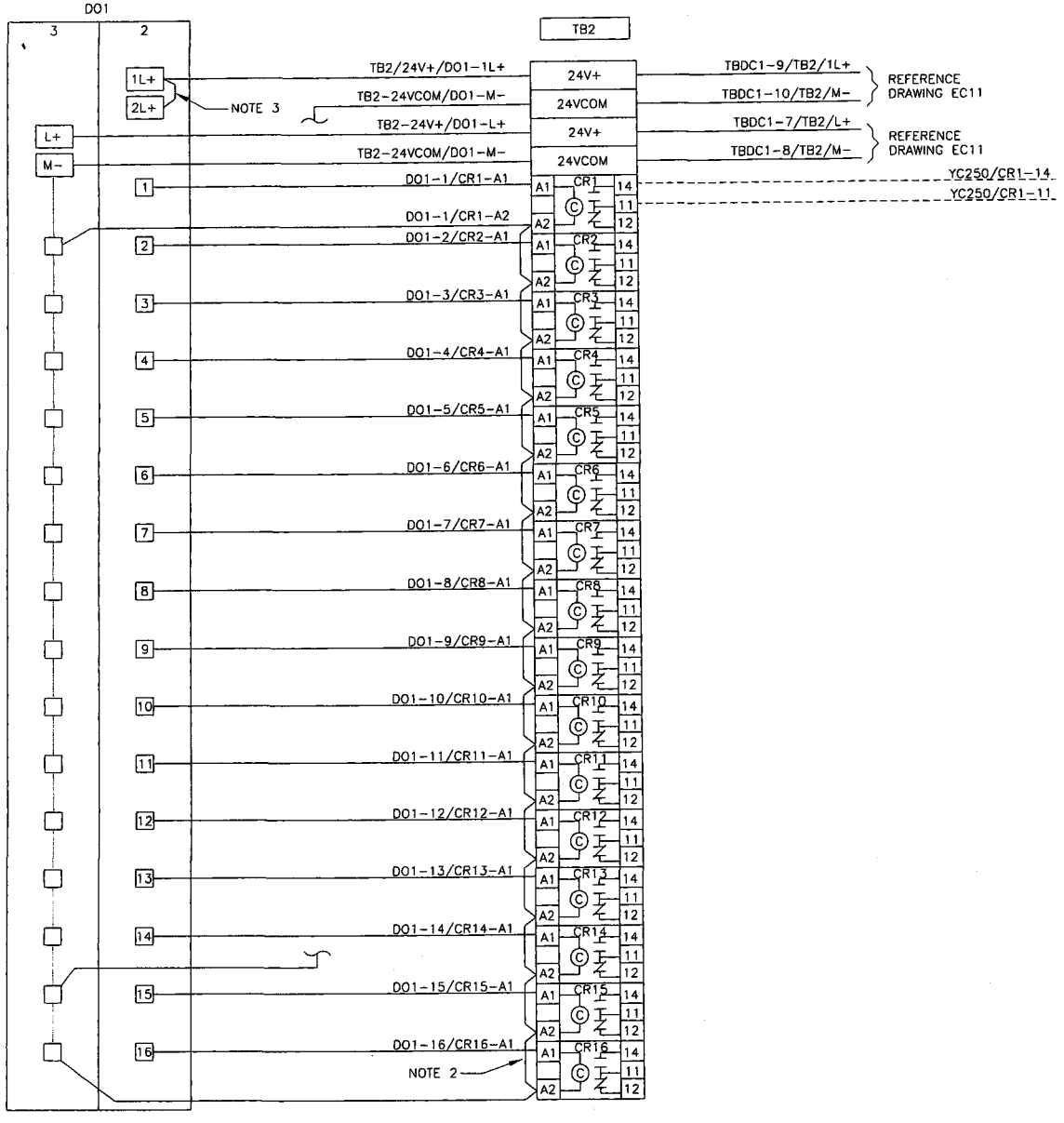


## NOTES:

1. WIRE MODULES PER MANUFACTURER'S REQUIREMENTS.
2. BUS OR INSULATED COMB STYLE JUMPER.
3. JUMPER WIRES PROVIDED BY PANEL MANUFACTURER.

| TAG NAME | DESCRIPTION |
|---|---|
| YC250 | WELL PUMP NO. 23 START/STOP COMMAND |
| | SPARE |
| | SPARE |
| | SPARE |
| | SPARE |
| | SPARE |
| | SPARE |
| | SPARE |
| | SPARE |
| | SPARE |
| | SPARE |
| | SPARE |
| | SPARE |
| | SPARE |
| | SPARE |
| | SPARE |

DLT&V
SYSTEMS ENGINEERING
3550 N. CENTRAL AVE, STE. 1900
PHOENIX, AZ 85012 (602) 266-4656

Registered Professional Engineer (Electrical)
CERTIFICATE NO.
37390
MELINDA
TAM
Date Signed 9.25.08
ARIZONA, U.S.A.
Expires 3/31/11

NOTES

REVISIONS

| REV. | BY | DATE | DESCRIPTION |
|---|---|---|---|
| | | | |
| | | | |
| | | | |
| | | | |

CASA GRANDE WATER SYSTEM
SCADA PHASE II - WELL #23

ARIZONA WATER COMPANY

DISCRETE OUTPUT MODULE BASE WIRING DIAGRAM

| DRAWN BY: | PROJECT NO. |
|---|---|
| MAB | 1219.01.027 |
| DESIGNED BY: | SUBMITTAL DATE: |
| MAB | SEPT 2008 |
| CHECKED BY: | DRAWING NUMBER |
| BA | EC14 |

DWG FILE: 1219.01.101_EC14.dwg 11:12am PLOTTED: Sep 30, 2008 slewis

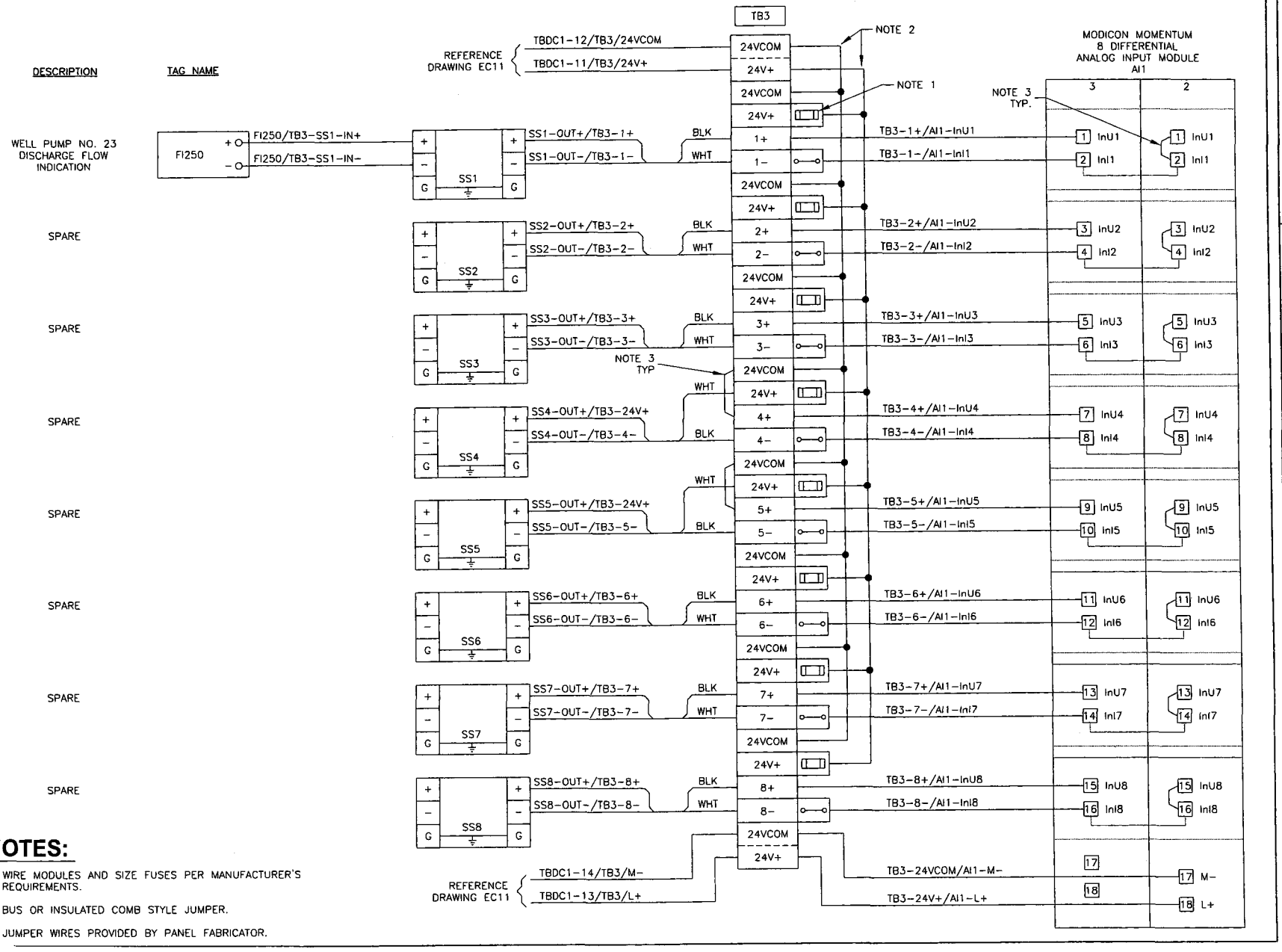


## NOTES:

1. WIRE MODULES AND SIZE FUSES PER MANUFACTURER'S REQUIREMENTS.
2. BUS OR INSULATED COMB STYLE JUMPER.
3. JUMPER WIRES PROVIDED BY PANEL FABRICATOR.


DLT&V SYSTEMS ENGINEERING
3550 N. CENTRAL AVE, STE. 1900
PHOENIX, AZ 85012 (602) 266-4668


Registered Professional Engineer (Electrical) No. 37390 MELINDA TAM Date Signed 9.25.08 ARIZONA, U.S.A.

Expires 3/31/11

NOTES

REVISIONS

| REV. | BY | DATE | DESCRIPTION |
|---|---|---|---|
| | | | |
| | | | |
| | | | |
| | | | |

CASA GRANDE WATER SYSTEM
SCADA PHASE II - WELL #23

ARIZONA WATER COMPANY

ANALOG INPUT MODULE BASE WIRING DIAGRAM

| | |
|---|---|
| DRAWN BY: MAB | PROJECT NO. 1219.01.027 |
| DESIGNED BY: MAB | SUBMITTAL DATE: SEPT 2008 |
| CHECKED BY: BA | DRAWING NUMBER EC15 |


DWG FILE: 1219.01.101_EC15.dwg 11:13am PLOTTED: Sep 30, 2008 stews

# CASA GRANDE WATER SYSTEM
# SCADA DESIGN - PHASE II
# WELL NO. 24 - RTU 260 DESIGN

DLT&V
SYSTEMS ENGINEERING
2630 N. CENTRAL AVE, STE. 1900
PHOENIX, AZ 85012 (602) 266-4698

Registered Professional Engineer (Electrical)
CERTIFICATE NO.
37390
MELINDA
TAM
Date Signed 9-29-08
ARIZONA, U.S.A.

Expires 3/31/11

NOTES

REVISIONS

| REV. | BY | DATE | DESCRIPTION |
|---|---|---|---|
| | | | |
| | | | |
| | | | |
| | | | |

CASA GRANDE WATER SYSTEM
SCADA PHASE II – WELL #24

ARIZONA WATER COMPANY

COVER SHEET

| | |
|---|---|
| DRAWN BY: MAB | PROJECT NO. 1219.01.027 |
| DESIGNED BY: MAB | SUBMITTAL DATE: SEPT 2008 |
| CHECKED BY: BA | DRAWING NUMBER EC1 |

DWG FILE: 1219.01.xx_EC1.dwg 11:13am PLOTTED: Sep 30, 2008 stevis

CASA GRANDE WATER SYSTEM
SCADA DESIGN – PHASE II
WELL NO. 24 RTU DESIGN
PROJECT SHEET INDEX

| Drawing No. | Drawing Title |
|---|---|
| EC1 | COVER SHEET |
| EC2 | PROJECT SHEET INDEX |
| EC3 | STANDARD SYMBOLS AND ABBREVIATIONS |
| EC4 | ISA TABLE AND COMMON LEGENDS SHEET |
| EC5 | BILL OF MATERIALS |
| EC6 | RTU ENCLOSURE LAYOUT |
| EC7 | RTU SUBPANEL LAYOUT |
| EC8 | TERMINAL BLOCK DETAILS |
| EC9 | COMMUNICATIONS SYSTEM ARCHITECTURE DIAGRAM |
| EC10 | 120VAC POWER DISTRIBUTION SCHEMATIC |
| EC11 | 24VDC POWER DISTRIBUTION SCHEMATIC |
| EC12 | DISCRETE INPUT MODULE BASE WIRING DIAGRAM - SHEET 1 |
| EC13 | DISCRETE INPUT MODULE BASE WIRING DIAGRAM - SHEET 2 |
| EC14 | DISCRETE OUTPUT MODULE BASE WIRING DIAGRAM |
| EC15 | ANALOG INPUT MODULE BASE WIRING DIAGRAM |

DLT&V
SYSTEMS ENGINEERING
3550 N. CENTRAL AVE, STE. 1900
PHOENIX, AZ 85012 (602) 266-4658

Registered Professional Engineer (Electrical)
CERTIFICATE NO.
37390
MELINDA
TAM
Date Signed 9-29-08
ARIZONA, U. S. A.
Expires 3/31/11

NOTES

REVISIONS

| REV. | BY | DATE | DESCRIPTION |
|---|---|---|---|
| | | | |
| | | | |
| | | | |
| | | | |

CASA GRANDE WATER SYSTEM
SCADA PHASE II – WELL #24

ARIZONA WATER COMPANY

PROJECT
SHEET INDEX

| | |
|---|---|
| DRAWN BY: MAB | PROJECT NO. 1219.01.027 |
| DESIGNED BY: MAB | SUBMITTAL DATE: SEPT 2008 |
| CHECKED BY: BA | DRAWING NUMBER EC2 |

DWG FILE: 1219.01.101_EC2.dwg 11:13am PLOTTED: Sep 30, 2008 slewis

# CASA GRANDE WATER SYSTEM
# SCADA DESIGN – PHASE II
# WELL NO. 24 RTU DESIGN
# STANDARD SYMBOLS AND ABBREVIATIONS

## SCHEMATIC/WIRING DIAGRAM SYMBOLS

CIRCUIT BREAKER
*A – AMP RATING

FUSE WITH PULLER
*A – AMP RATING

SWITCH
NORMALLY OPEN

SELECTOR SWITCH
2 POSITION, NORMALLY OPEN

SELECTOR SWITCH
3 POSITION, NORMALLY OPEN

TEMPERATURE SWITCH
NORMALLY OPEN

TERMINAL BLOCK
* – TB IDENTIFICATION

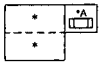


TERMINAL BLOCK W/ FUSE
PLUG AND FUSE
* – TB IDENTIFICATION
*A – AMPS

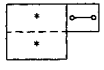


TERMINAL BLOCK W/
DISCONNECT KNIFE
* – TB IDENTIFICATION

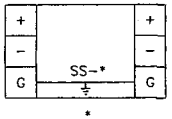


SURGE SUPPRESSOR FOR
FLOATING SIGNAL CIRCUITS
* – SS NUMBER IDENTIFICATION

SURGE SUPPRESSOR FOR
POWER SUPPLY
* – SS NUMBER IDENTIFICATION

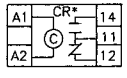


CONTROL RELAY
* – CR NUMBER IDENTIFICATION
# – TERMINAL NUMBER

## SCHEMATIC/WIRING DIAGRAM SYMBOLS

EARTH GROUND



TERMINAL BLOCK

DUPLEX RECEPTACLE

SINGLE RECEPTACLE

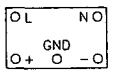


DC POWER SUPPLY
* – DC VOLTAGE RATING

## COLOR CODE CHART FOR 18 AWG BELDEN CABLES
## 12 COND. NO. 8466 AND 19 COND. NO. 8619

| | | |
|---|---|---|
| BLACK | BLK | 1st |
| WHITE | WHT | 2nd |
| RED | RED | 3rd |
| GREEN | GRN | 4th |
| ORANGE | ORN | 5th |
| BLUE | BLU | 6th |
| WHITE/BLACK | WHT/BLK | 7th |
| RED/BLACK | RED/BLK | 8th |
| GREEN/BLACK | GRN/BLK | 9th |
| ORANGE/BLACK | ORN/BLK | 10th |
| BLUE/BLACK | BLU/BLK | 11th |
| BLACK/WHITE | BLK/WHT | 12th |
| RED/WHITE | RED/WHT | 13th |
| GREEN/WHITE | GRN/WHT | 14th |
| BLUE/WHITE | BLU/WHT | 15th |
| BLACK/RED | BLK/RED | 16th |
| WHITE/RED | WHT/RED | 17th |
| ORANGE/RED | ORN/RED | 18th |
| BLUE/RED | BLU/RED | 19th |

## WIRE SIZES

(CIRCUIT WIRING SHALL BE RATED IN ACCORDANCE WITH THE MAXIMUM PERMITTED AMPERE RATING/SETTING OF THE OVERCURRENT PROTECTION DEVICE. N.EC. 210–3)

120VAC / 20A POWER CIRCUIT – MIN. #12 AWG.
120VAC / 15A AND BELOW – MIN. #14 AWG.

24VDC / 20A POWER CIRCUIT – MIN. #12 AWG.
24VDC / 15A AND BELOW – MIN. #16 AWG.
24VDC I/O & SIGNAL CIRCUIT – MIN. #18 AWG.

4–20mADC I/O SIGNAL CIRCUIT – MIN. #18 AWG.

## ABBREVIATIONS

| | |
|---|---|
| A/R | AS REQUIRED |
| AC COM | NEUTRAL |
| AFF | ABOVE FINISHED FLOOR |
| AI | ANALOG INPUT |
| ANL COM | ANALOG COMMON |
| AO | ANALOG OUTPUT |
| AWG | AMERICAN WIRE GAUGE |
| BLK | BLACK |
| BLU | BLUE |
| CAP | CENTRAL ARIZONA PROJECT |
| CLR | CLEAR |
| CR | CONTROL RELAY |
| DC COM | DC COMMON |
| DC+ | DC POSITIVE POTENTIAL |
| DI | DISCRETE INPUT |
| DO | DISCRETE OUTPUT |
| DS | DOOR SWITCH |
| FOM | FIBER OPTIC MODEM |
| FOT | FIBER OPTIC TRANSCEIVER |
| GND | GROUND |
| GRN | GREEN |
| I/O | INPUT/OUTPUT |
| L | LINE |
| N | NEUTRAL |
| NC | NORMALLY CLOSED |
| NO | NORMALLY OPEN |
| NP | NAMEPLATE |
| OIT | OPERATOR INTERFACE TERMINAL |
| ORN | ORANGE |
| PDB | POWER DISTRIBUTION BLOCK |
| PLC | PROGRAMMABLE LOGIC CONTROLLER |
| PP | FIBER OPTIC PATCH PANEL |
| PS | POWER SUPPLY |
| REC | RECEPTACLE |
| RES | RESERVOIR |
| RIO | REMOTE INPUT/OUTPUT |
| RTU | REMOTE TELEMETRY UNIT |
| SLC | SMALL LOGIC CONTROLLER |
| SP | SPACE |
| SS | SURGE SUPPRESSOR |
| TB | TERMINAL BLOCK |
| UPS | UNINTERRUPTIBLE POWER SUPPLY |
| WHT | WHITE |
| WTR | WATER TREATMENT PLANT |
| WWTP | WASTE WATER TREATMENT PLANT |

## LINETYPE LEGEND

- FIELD WIRING
- INTERNAL PANEL WIRING
- RADIO COMMUNICATION LINK
- FO — FIBER OPTIC CABLE
- FOP — FIBER OPTIC PATCH CABLE
- EN — ETHERNET CAT5 CABLE
- DH+ — DATA HIGHWAY PLUS
- RIO — REMOTE INPUT OUTPUT
- AREA DIVIDER
- EQUIPMENT
- PATCH PANEL


DLT&V
SYSTEMS ENGINEERING
3560 N. CENTRAL AVE., STE. 1900
PHOENIX, AZ 85012 (602) 366-4458


Registered Professional Engineer (Electrical)
CERTIFICATE NO.
37390
MELINDA
TAM
Date Signed 9-29-08
ARIZONA, U.S.A.

Expires 3/31/11

NOTES

REVISIONS

| REV. | BY | DATE | DESCRIPTION |
|---|---|---|---|
| | | | |
| | | | |
| | | | |
| | | | |

CASA GRANDE WATER SYSTEM
SCADA PHASE II – WELL #24

ARIZONA WATER COMPANY

STANDARD SYMBOLS AND ABBREVIATIONS

| | |
|---|---|
| DRAWN BY: MAB | PROJECT NO. 1219.01.027 |
| DESIGNED BY: MAB | SUBMITTAL DATE: SEPT 2008 |
| CHECKED BY: BA | DRAWING NUMBER EC3 |


IWG FILE: 1219.01.101_EC3.dwg 11:13am PLOTTED: Sep 30, 2008 steves

# CASA GRANDE WATER SYSTEM
# SCADA DESIGN – PHASE II
# WELL NO. 24 RTU DESIGN
# ISA TABLE AND COMMON LEGENDS SHEET

## ISA INSTRUMENT IDENTIFICATION TABLE

| FIRST LETTERS | | | SUCCEEDING LETTERS | | |
|---|---|---|---|---|---|
| MEASURED OR INITIATING VARIABLE | | MODIFIER | READOUT OR PASSIVE FUNCTION | OUTPUT FUNCTION | MODIFIER |
| A | ANALYZER | | ALARM | | AUTO |
| B | BURNER, COMBUSTION | | | | |
| C | CONDUCTIVITY | | | CONTROL | CLOSED |
| D | DENSITY | DIFFERENTIAL | | | |
| E | VOLTAGE | | ELEMENT | | |
| F | FLOW | RATIO | | | |
| G | GAUGE | | GLASS, VIEWING DEVICE | | |
| H | HAND | | | | HIGH |
| I | CURRENT | | INDICATE | | |
| J | POWER | SCAN | | | |
| K | TIME, TIME SCHED. | TIME RATE OF CHANGE | | CONTROL STATION | |
| L | LEVEL | | LIGHT | | LOW |
| M | MOTION | | | | MIDDLE |
| N | INTRUSION | | | | NORMAL |
| O | TORQUE | | ORIFICE, RESTRICTION | | OPEN |
| P | PRESSURE | | POINT CONNECTION | | STOP |
| Q | QUANTITY | INTEGRATE, TOTALIZE | | | |
| R | RADIATION | | RECORD, OR PRINT | | REMOTE |
| S | SPEED, FREQUENCY | SAFETY | | SWITCH | START |
| T | TEMPERATURE | | | TRANSMIT | |
| U | MULTIVARIABLE | | MULTIFUNCTION | MULTIFUNCTION | MULTIFUNCTION |
| V | VIBRATION | | | VALVE, LOUVER | |
| W | WEIGHT | | WELL | | |
| X | MOTOR | X-AXIS | UNCLASSIFIED | UNCLASSIFED | UNCLASSIFED |
| Y | EVENT, STATE, OR PRESENCE | Y-AXIS | | RELAY, COMPUTE, CONVERT | |
| Z | POSITION | Z-AXIS | | DRIVER, ACTUATOR, FINAL CONTROL ELEMENT | |

### FIELD WIRES TAG LEGEND

DEVICE_NAME/TBXX-00
- TERMINAL NO.
- TERMINAL STRIP NO.
- FIELD DEVICE TAG NO.

### PANEL POWER WIRES TAG LEGEND

TBXX-03/TBXX-03
- TO TERMINAL NO.
- TO TERMINAL STRIP NO.
- FROM TERMINAL NO.
- FROM TERMINAL STRIP NO.

### PANEL I/O WIRES TAG LEGEND

O:#.2/TBXX-03
- INPUT POINT NO.
- TERMINAL STRIP NO.
- CHANNEL #
- SLOT #
- O=OUTPUT I=INPUT

### COLOR CODE CHART FOR 22 AWG BELDEN PAIRED CABLE NO. 8761

| | | |
|---|---|---|
| BLACK | BLK | 1st |
| CLEAR | CLR | 2nd |

### PANEL WIRING IDENTIFICATION

BLACK – 120VAC LINE
WHITE – 120VAC NEUTRAL
GREEN – GROUND
ORANGE – DC POSITIVE
BLUE – DC COMMON

DLT&V
SYSTEMS ENGINEERING
3550 N. CENTRAL AVE, STE. 1900
PHOENIX, AZ 85012 (602) 266-4658

Registered Professional Engineer (Electrical) CERTIFICATE NO. 37390 MELINDA TAM Date Signed 9-29-08 ARIZONA, U.S.A.

Expires 3/31/11

NOTES

REVISIONS

| REV. | BY | DATE | DESCRIPTION |
|---|---|---|---|
| | | | |
| | | | |
| | | | |
| | | | |

CASA GRANDE WATER SYSTEM
SCADA PHASE II – WELL #24

ARIZONA WATER COMPANY

ISA TABLE AND COMMON LEGENDS SHEET

| DRAWN BY: | PROJECT NO. |
|---|---|
| MAB | 1219.01.027 |
| DESIGNED BY: | SUBMITTAL DATE: |
| MAB | SEPT 2008 |
| CHECKED BY: | DRAWING NUMBER |
| BA | EC4 |

WG FILE: 1219.01.101_EC4.dwg PLOTTED: Sep 30, 2008 11:13am stevis

| QTY | ITEM # | MANUFACTURER | PART NUMBER | DESCRIPTION |
|---|---|---|---|---|
| 1 | 100 | MODICON | 171CCC96030 | M1E PROCESSOR ADAPTER, ETHERNET AND I/O BUS PORTS, WEB PAGE ENABLED, IEC |
| 2 | 101 | MODICON | 170INT11000 | MOMENTUM INTERBUS \ I/O BUS COMMUNICATIONS ADAPTER |
| 1 | 102 | MODICON | 170ADI35000 | 24V DC - 32 PT. INPUT MODULE BASE |
| 1 | 103 | MODICON | 170ADO34000 | 24V DC / 0.5A - 16 PT. OUTPUT MODULE BASE, 0.5 A OUTPUT |
| 1 | 104 | MODICON | 170AAI03000 | MOMENTUM SERIES I/O BASE, ANALOG 8CH DIFFERENTIAL INPUT MODULE BASE |
| 1 | 105 | MODICON | 172JNN21032 | MOMENTUM SERIES OPTION ADAPTER W/ GENERAL PURPOSE SERIAL COMMUNICATION PORT, RS-232 OR RS-485 SELECTABLE |
| 1 | 106 | MODICON | XBT GT5330 | EXTERNAL DISPLAY WITH 10.4" COLOR TFT,VGA RESOLUTION (640X480 PIXELS), 24V POWER |
| 1 | 107 | WEIDMULLER | IE-SW8-ECO | INDUSTRIAL 8-PORT ETHERNET SWITCH, 10/100 Mbps, UNMANAGED |
| 2 | 108 | MODICON | 170MCI00700 | INTERBUS CABLE |
| 1 | 110 | BELDEN | 8267 | CABLE, COAXIAL, RG-213 (OR EQUAL) WITH APPROPRIATE CONNECTORS, (LENGTH AS REQUIRED) |
| 1 | 111 | MDS | iNET-II-IP | ETHERNET REMOTE RADIO TRANSCEIVER, SPREAD SPECTRUM, W/ REMOTE DIAGNOSTICS |
| 3 | 112 | MODICON | 170XTS00100 | CONNECTOR SET, SCREW-TYPE (SET OF 3) |
| A/R | 201 | ALLEN-BRADLEY | 1492-DR6 | TERMINAL MOUNTING RAIL, HI-RISE, ALUMINUM |
| 14 | 202 | ALLEN-BRADLEY | 1492-EA35 | END ANCHOR |
| 6 | 210 | ALLEN-BRADLEY | 1492-GM35 | TERMINAL BLOCK, GROUP MARKING CARRIER |
| 18 | 215 | ALLEN-BRADLEY | 1492-J4 | TERMINAL BLOCK, SINGLE CIRCUIT, 600V, GRAY |
| 1 | 218 | ALLEN-BRADLEY | 1492-JD3 | TERMINAL BLOCK, DOUBLE LEVEL |
| 67 | 219 | ALLEN-BRADLEY | 1492-JD3P | TERMINAL BLOCK, DOUBLE LEVEL W/ PLUGGABLE TOP LEVEL |
| 4 | 221 | ALLEN-BRADLEY | 1492-JG4 | TERMINAL BLOCK, SINGLE CIRCUIT, GROUNDING |
| 53 | 223 | ALLEN-BRADLEY | 1492-FPK224 | FUSE PLUG INSERT W/ BFI, 10-36VAC/DC WORKING VOLTAGE, 10A MAX @ 250V. PROVIDE FAST BLOW FUSES AS REQUIRED |
| 8 | 225 | ALLEN-BRADLEY | 1492-DPL | DISCONNECT PLUG FOR 1492-JD3 P AND 1492-JD3 |
| 2 | 230 | WEIDMULLER | 9926251001 | CIRCUIT BREAKER, 1A |
| 4 | 231 | WEIDMULLER | 9926251002 | CIRCUIT BREAKER, 2A |
| 2 | 232 | WEIDMULLER | 9926251003 | CIRCUIT BREAKER, 3A |
| 1 | 233 | WEIDMULLER | 9926251010 | CIRCUIT BREAKER, 10A |
| 3 | 234 | WEIDMULLER | 9926251015 | CIRCUIT BREAKER, 15A |
| 1 | 235 | WEIDMULLER | 9926251020 | CIRCUIT BREAKER, 20A |
| 53 | 282 | ANY | ANY | 250V, 5mmX20mm FAST BLOW GLASS FUSES (SIZE AS INDICATED ON DRAWING) |
| 1 | 304 | HOFFMAN | A72H3724FS3PT | ENCLOSURE, FREE STANDING, TYPE 4/12 W/3-POINT LATCH, 72"X37"X24" |
| 1 | 305 | HOFFMAN | A72P36F1 | SUBPANEL, WHITE PAINT, 60"X32" |
| 1 | 306 | HOFFMAN | A72SP36F4 | SWING-OUT PANEL, HALF PANEL, 30.88" X 33.81" |
| 1 | 313 | HOFFMAN | ALF16D18R | 18" FLOURESCENT LIGHTING PACKAGE W/DOOR SWITCH, 115VAC |
| 1 | 316 | HOFFMAN | A-TEMNO | TEMPERATURE CONTROL SWITCH (THERMOSTAT), N.O. CONTACTS |
| A/R | 359 | BELDEN | 7929A | CABLE, ETHERNET, 4 PR, 24 AWG, CAT 5E |
| 1 | 377 | ANY | ANY | GROUNDING BAR |
| 1 | 378 | CUSTOM | CUSTOM | CUSTOM SHELF SUPPLIED AND INSTALLED BY PANEL FABRICATOR |
| A/R | 379 | PANDUIT | F2X4LG6 C2LG6 | 2 X 4 PLASTIC WIRING DUCT TYPE "E" W/COVER STYLE "C" |
| A/R | 380 | PANDUIT | F3X4LG6 C3LG6 | 3 X 4 PLASTIC WIRING DUCT TYPE "E" W/COVER STYLE "C" |
| 1 | 398 | HUBBELL | HBL5362I | DUPLEX RECEPTACLE, IVORY, 125V/20A, W/BOX AND BRUSHED ALUMINUM COVER (HUBBELL P.N.# A8) |
| 1 | 399 | HUBBELL | HBL5361I | SIMPLEX RECEPTACLE, IVORY, 125V/20A, W/BOX AND BRUSHED ALUMINUM COVER (HUBBELL P.N.# A7) |
| 1 | 400 | HUBBELL | HBL3810R | SIMPLEX RECEPTACLE, RED, 125V/20A, W/BOX AND BRUSHED ALUMINUM COVER (HUBBELL P.N.# A7) |
| 2 | 405 | WEIDMULLER | 8708670000 (CP SNT 250W 24V 10A) | POWER SUPPLY, 24VDC, 250W, 10A, W/ STATUS RELAY |
| 1 | 406 | WEIDMULLER | 8710620000 (CP DM 10) | DIODE MODULE, 10A PER INPUT, 40VDC MAX. |
| 1 | 408 | IDEC | RH2B-UL-AC120V | RELAY, 120VAC COIL, DPDT W/ INDICATOR |
| 1 | 421 | IDEC | SH2B-05C | RELAY SOCKET, DIN RAIL MOUNT, FINGERSAFE |
| 1 | 450 | MTL SURGE TECHNOLOGIES | MA15/D/1/SI | 120/240 VAC, 15A, SURGE SUPPRESSOR AND FILTER |
| 8 | 451 | WEIDMULLER | 8448920000 | SURGE SUPPRESSOR, 24VDC, 2 WIRE LOOP PROTECTION (MCZ OVP) W/ END CAP PART #8389030000 |
| 8 | 452 | WEIDMULLER | 8389030000 | END CAP FOR 24VDC SURGE SUPPRESSOR (MCZ OVP) |
| 16 | 455 | ALLEN-BRADLEY | 700-HLT1Z24 | TERMINAL BLOCK RELAY, 24VDC, 6A CONTACTS, SPDT W/ LED |
| 1 | 505 | HOFFMAN | CR29-0416-G068 | AIR CONDITIONER, 120 VAC, 4000 BTU/HR, W/OUTDOOR ENCLOSURE PACKAGE |
| 1 | 703 | APC | SUA750, AP9610 | UPS, 115 VAC, 750 VA W/ RELAY I/O SMARTSLOT CARD OPTION, MINIMUM 30 MIN. RUNTIME OF COMPLETE PLC OPERATIONS POWER |
| 1 | 811 | POLYPHASER | IS-50NX-C2 | BROADBAND COAXIAL SURGE PROTECTOR, FLANGE MOUNT, 125-1000MHZ |
| 2 | 853 | TIMES MICROWAVE SYSTEMS | EZ-900-NMC | N-MALE CONNECTOR |

DLT&V
SYSTEMS ENGINEERING
3550 N. CENTRAL AVE., STE. 1900
PHOENIX, AZ 85012 (602) 266-4998

Registered Professional Engineer (Electrical)
LICENSE NO.
37390
MELINDA TAM
Date Signed 9.25.08
ARIZONA, U.S.A.

Expires 3/31/11

NOTES

REVISIONS

| REV. | BY | DATE | DESCRIPTION |
|---|---|---|---|
| | | | |
| | | | |
| | | | |
| | | | |

CASA GRANDE WATER SYSTEM
SCADA PHASE II – WELL #24

ARIZONA WATER COMPANY

BILL OF MATERIALS

| DRAWN BY: | PROJECT NO. |
|---|---|
| MAB | 1219.01.027 |
| DESIGNED BY: | SUBMITTAL DATE: |
| MAB | SEPT 2008 |
| CHECKED BY: | DRAWING NUMBER |
| BA | EC5 |

PLOTTED: Sep 30, 2008 stewis
11:14am
IWG FILE: 1219.01.101_EC5.dwg

## NOTES:

1. BILL OF MATERIALS IS ON DRAWING EC5.
2. REFER TO DRAWING EC7 FOR PLC INTERIOR LAYOUT.
3. FURNISH ADDITIONAL NAMEPLATES AS REQUIRED BY UL OR BY OTHER APPLICABLE CODES.
4. MOMOUNT UPS MINIMUM 6" ABOVE GRADE LEVEL. PANEL FABRICATOR SHALL SUPPLY AND INSTALL CUSTOM SUPPORT HARDWARE IN ENCLOSURE AS REQUIRED.

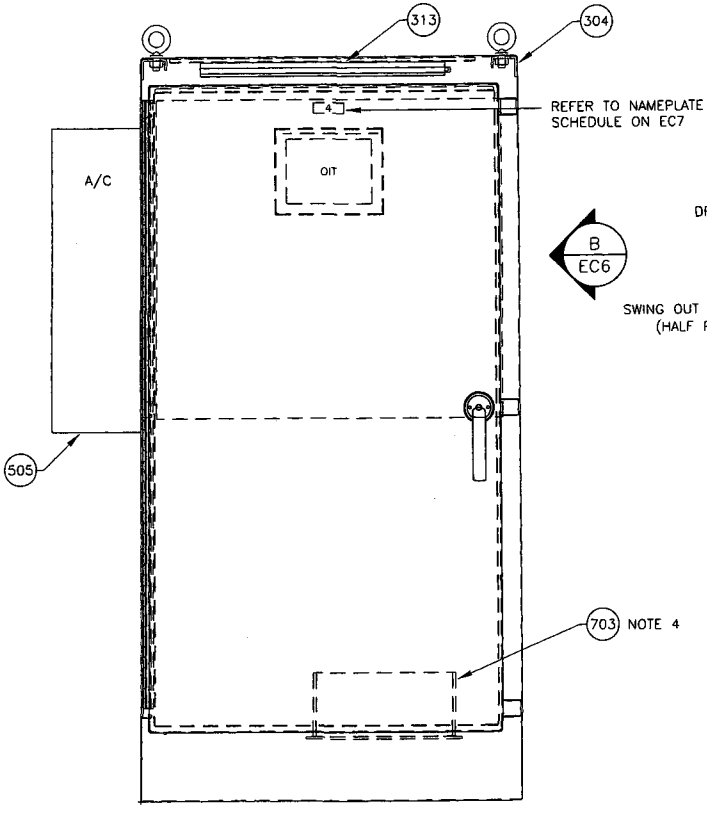


A ~ RTU ENCLOSURE, FRONT
1"=1'-0"

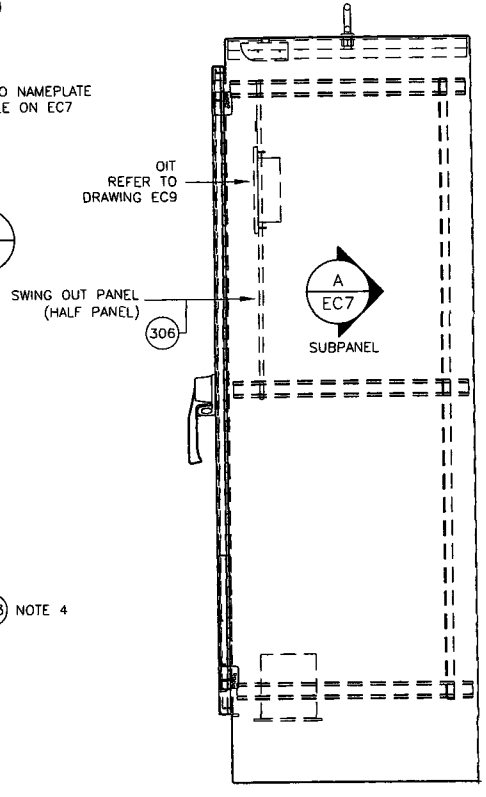


B ~ RTU ENCLOSURE, SIDE
1"=1'-0"

DLT&V
SYSTEMS ENGINEERING
3550 N. CENTRAL AVE, STE. 1900
PHOENIX, AZ 85012 (602) 266-4668

Registered Professional Engineer (Electrical)
CERTIFICATE NO.
37390
MELINDA TAM
Date Signed 9-29-08
ARIZONA, U.S.A.
Expires 3/31/11

NOTES

| REVISIONS | | | |
|---|---|---|---|
| REV. | BY | DATE | DESCRIPTION |
| | | | |
| | | | |
| | | | |
| | | | |

CASA GRANDE WATER SYSTEM
SCADA PHASE II – WELL #24

ARIZONA WATER COMPANY

RTU ENCLOSURE LAYOUT

| DRAWN BY: | PROJECT NO. |
|---|---|
| MAB | 1219.01.027 |
| DESIGNED BY: | SUBMITTAL DATE: |
| MAB | SEPT 2008 |
| CHECKED BY: | DRAWING NUMBER |
| BA | EC6 |

DWG FILE: 1219.01.101_EC6.dwg 11:15am PLOTTED: Sep 30, 2008 slewis

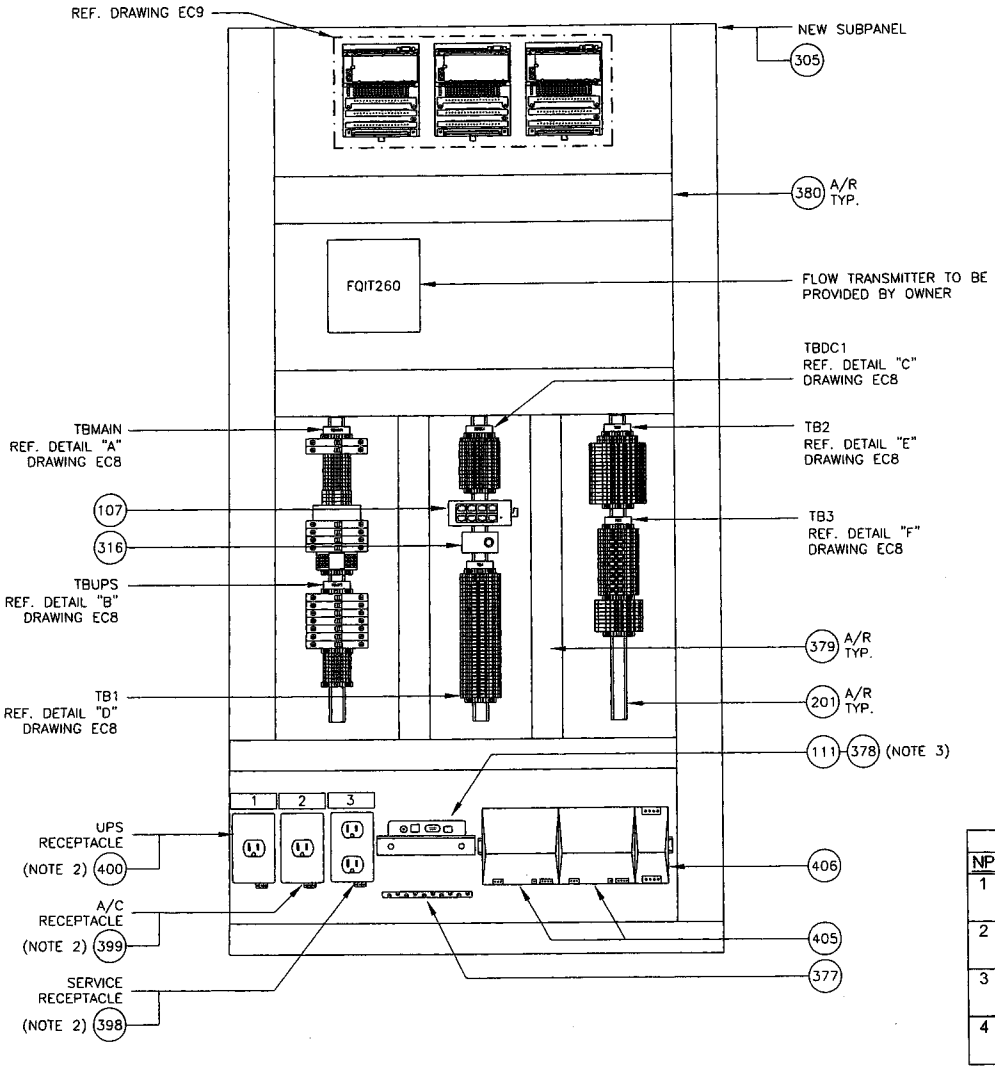


A EC6 SUBPANEL LAYOUT
1-1/2"=1'-0"

## NOTES:

1. BILL OF MATERIALS IS ON DRAWING EC5.
2. NAMEPLATE SHALL BE 3/32" THICK LAMINATED PHENOLIC TYPE BLACK WITH WHITE LETTERS. SEE BILL OF MATERIALS ON DRAWING EC5 AND NAMEPLATE SCHEDULE (DET B) ON THIS SHEET FOR ADDITIONAL INFORMATION.
3. MOUNT RADIO ON CUSTOM SHELF PROVIDED AND INSTALLED BY PANEL FABRICATOR. REFER TO DRAWING EC9 AND BILL OF MATERIALS ON EC5 FOR MORE INFORMATION.

**NAMEPLATE SCHEDULE (NOTE 2)**

| NP | HxWxLTR | FIRST LINE | SECOND LINE | LOCATION |
|---|---|---|---|---|
| 1 | 1" x 3" x 1/4" | UPS RECEPTACLE | ONLY | CENTERED ABOVE UPS RECEPTACLE |
| 2 | 1" x 3" x 1/4" | A/C RECEPTACLE | ONLY | CENTERED ABOVE A/C RECEPTACLE |
| 3 | 1" x 3" x 1/4" | SERVICE RECEPTACLE | ONLY | CENTERED ABOVE SERVICE RECEPTACLE |
| 4 | 1" x 3" x 1/4" | OIT | | CENTERED ABOVE OIT |

B ~ NAMEPLATE SCHEDULE


DLT&V SYSTEMS ENGINEERING
3550 N. CENTRAL AVE, STE. 1900
PHOENIX, AZ 85012 (602) 266-6668


Registered Professional Engineer (Electrical) CERTIFICATE NO. 37390 MELINDA TAM Date Signed 9-29-08 ARIZONA, U.S.A.

Expires 3/31/11

NOTES

REVISIONS

| REV. | BY | DATE | DESCRIPTION |
|---|---|---|---|
| | | | |
| | | | |
| | | | |
| | | | |

CASA GRANDE WATER SYSTEM
SCADA PHASE II - WELL #24

ARIZONA WATER COMPANY

RTU SUBPANEL LAYOUT

| DRAWN BY: | PROJECT NO. |
|---|---|
| MAB | 1219.01.027 |
| DESIGNED BY: | SUBMITTAL DATE: |
| MAB | SEPT 2008 |
| CHECKED BY: | DRAWING NUMBER |
| BA | EC7 |


DWG FILE: 1219.01.101_EC7.dwg 11:15am PLOTTED: Sep 30, 2008 alewis

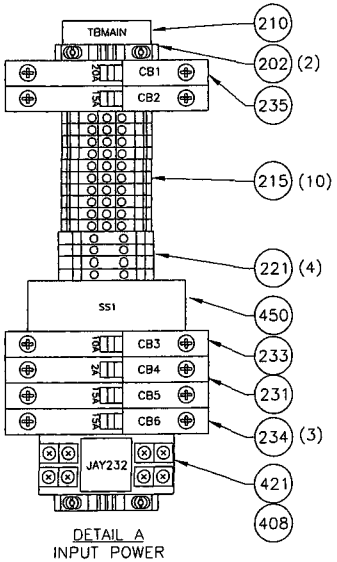


DETAIL A
INPUT POWER
TBMAIN

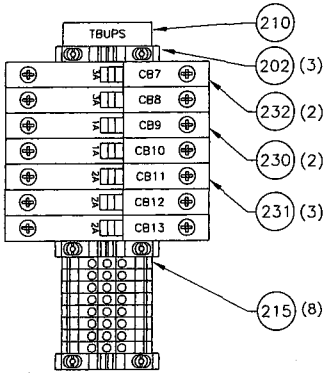


DETAIL B
PANEL POWER
TBUPS

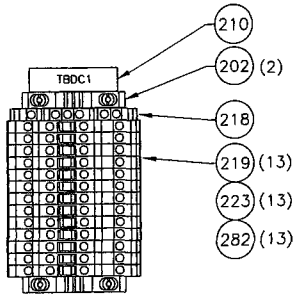


DETAIL C
24VDC POWER
DISTRIBUTION
TBDC1

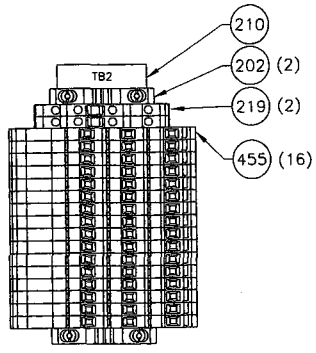


DETAIL E
DISCRETE OUTPUT
TB2

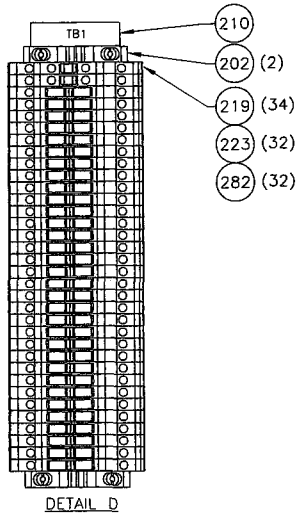


DETAIL D
DISCRETE INPUT
TB1

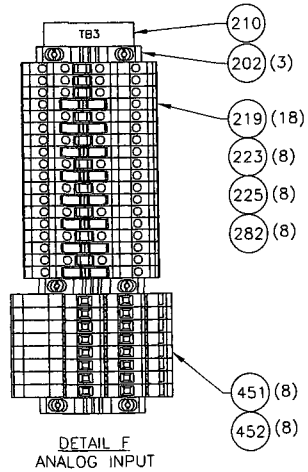


DETAIL F
ANALOG INPUT
TB3

## NOTES:

1. PROVIDE BUS BAR STYLE OR INSULATED COMB STYLE JUMPERS WHERE 2 OR MORE TERMINALS IN THE SAME TB ARE COMMONED TOGETHER. DO NOT USE DISCRETE WIRE JUMPERS.
2. BILL OF MATERIALS IS ON DRAWING EC5.
3. PANEL BUILDER TO SUPPLY AND INSTALL ALL NECESSARY AND APPROPRIATE ACCESSORIES INCLUDING TERMINAL NUMBERS, JUMPERS AND END BARRIERS.

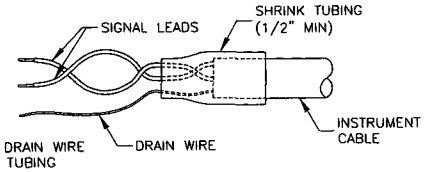


NOTE:
WRAP UNUSED DRAIN WIRE
UNDER SHRINK TUBING

DETAIL G
INSTRUMENT CABLE
TERMINATION

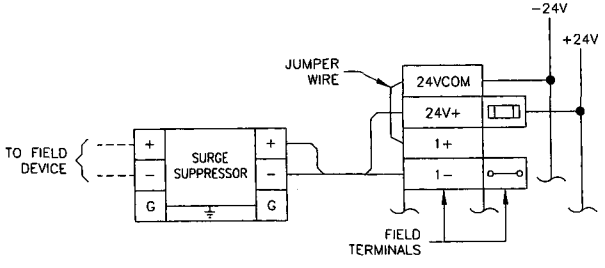


2-WIRE

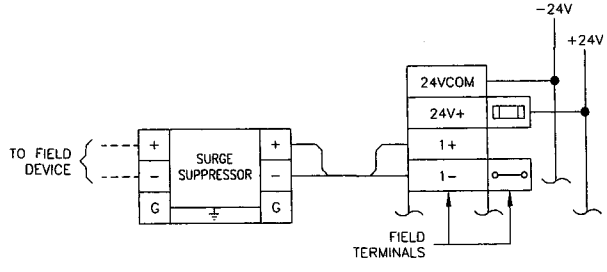


4-WIRE

DETAIL H
ANALOG INPUT TERMINALS
2 & 4-WIRE TYPICAL CONNECTIONS

DLT&V
SYSTEMS ENGINEERING
3550 N. CENTRAL AVE, STE. 1900
PHOENIX, AZ 85012 (602) 266-4558

Registered Professional Engineer (Electrical)
CERTIFICATE NO.
37390
MELINDA
TAM
Date Signed 9.22.08
ARIZONA, U.S.A.

Expires 3/31/11

NOTES

| REVISIONS | | | |
|---|---|---|---|
| REV. | BY | DATE | DESCRIPTION |
| | | | |
| | | | |
| | | | |
| | | | |

CASA GRANDE WATER SYSTEM
SCADA PHASE II - WELL #24

ARIZONA WATER COMPANY

TERMINAL BLOCK DETAILS

| | |
|---|---|
| DRAWN BY: MAB | PROJECT NO. 1219.01.027 |
| DESIGNED BY: MAB | SUBMITTAL DATE: SEPT 2008 |
| CHECKED BY: BA | DRAWING NUMBER EC8 |

DWG FILE: 1219.01.101_EC8.dwg 11:15am PLOTTED: Sep 90, 2008 stevis

## NOTES:

1. BILL OF MATERIALS IS ON DRAWING EC5.
2. ANTENNA, ANTENNA MAST, GROUNDING KIT AND CABLE PROVIDED AND INSTALLED BY OTHERS.

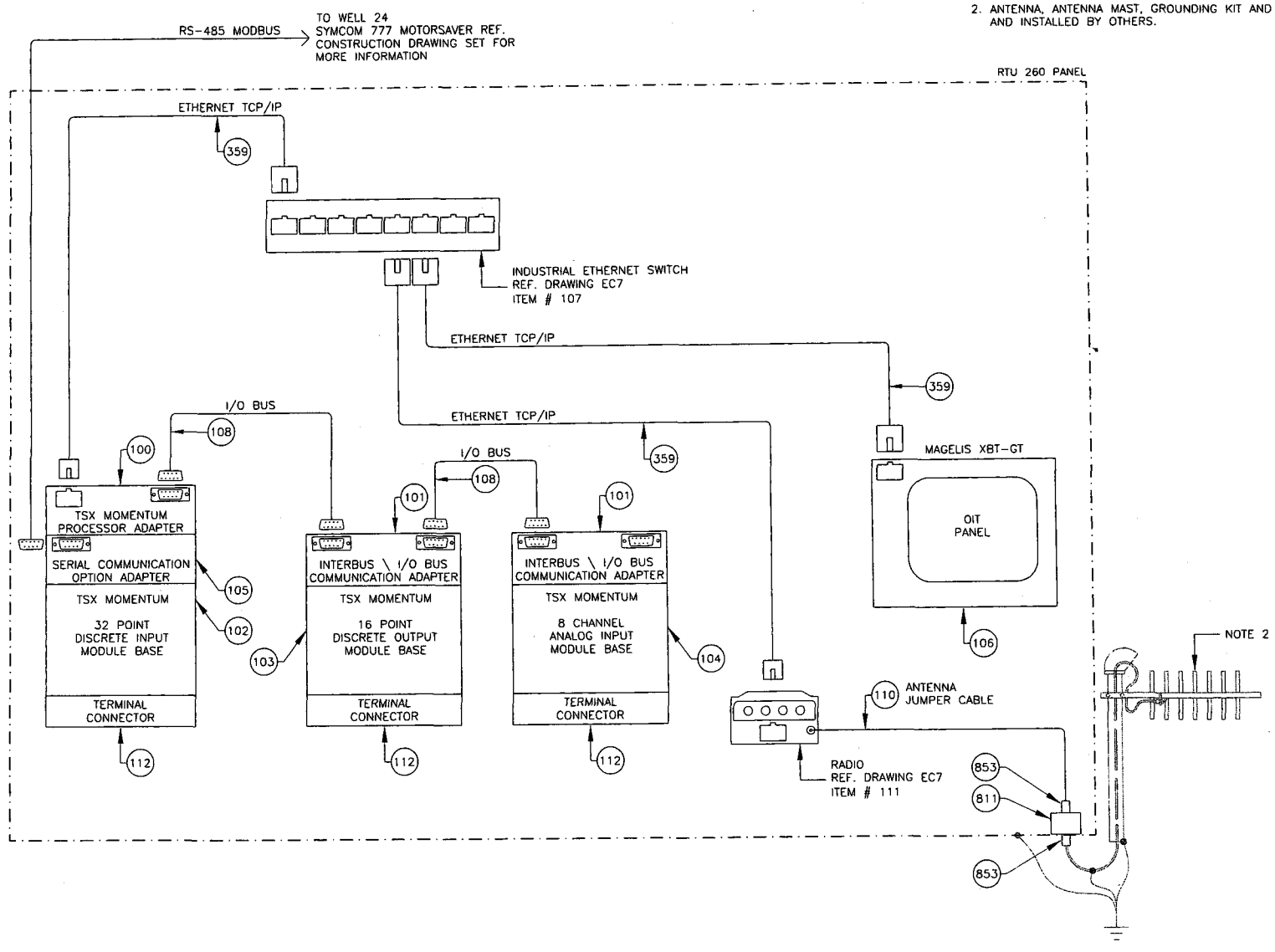


DLT&V SYSTEMS ENGINEERING
3560 N. CENTRAL AVE. STE. 1900
PHOENIX, AZ 85012 (602) 266-4658

Registered Professional Engineer (Electrical)
CERTIFICATE NO
37390
MELINDA
TAM
Date Signed 9-29-08
ARIZONA, U.S.A.
Expires 3/31/11

NOTES

| REVISIONS | | | |
|---|---|---|---|
| REV. | BY | DATE | DESCRIPTION |
| | | | |
| | | | |
| | | | |
| | | | |

CASA GRANDE WATER SYSTEM
SCADA PHASE II - WELL #24

ARIZONA WATER COMPANY

COMMUNICATIONS
SYSTEM ARCHITECTURE
DIAGRAM

| DRAWN BY: | PROJECT NO. |
|---|---|
| MAB | 1219.01.027 |
| DESIGNED BY: | SUBMITTAL DATE: |
| MAB | SEPT 2008 |
| CHECKED BY: | DRAWING NUMBER |
| BA | EC9 |

DWG FILE: 1219.01.101_EC9.dwg 11:15am PLOTTED: Sep 30, 2008 steve

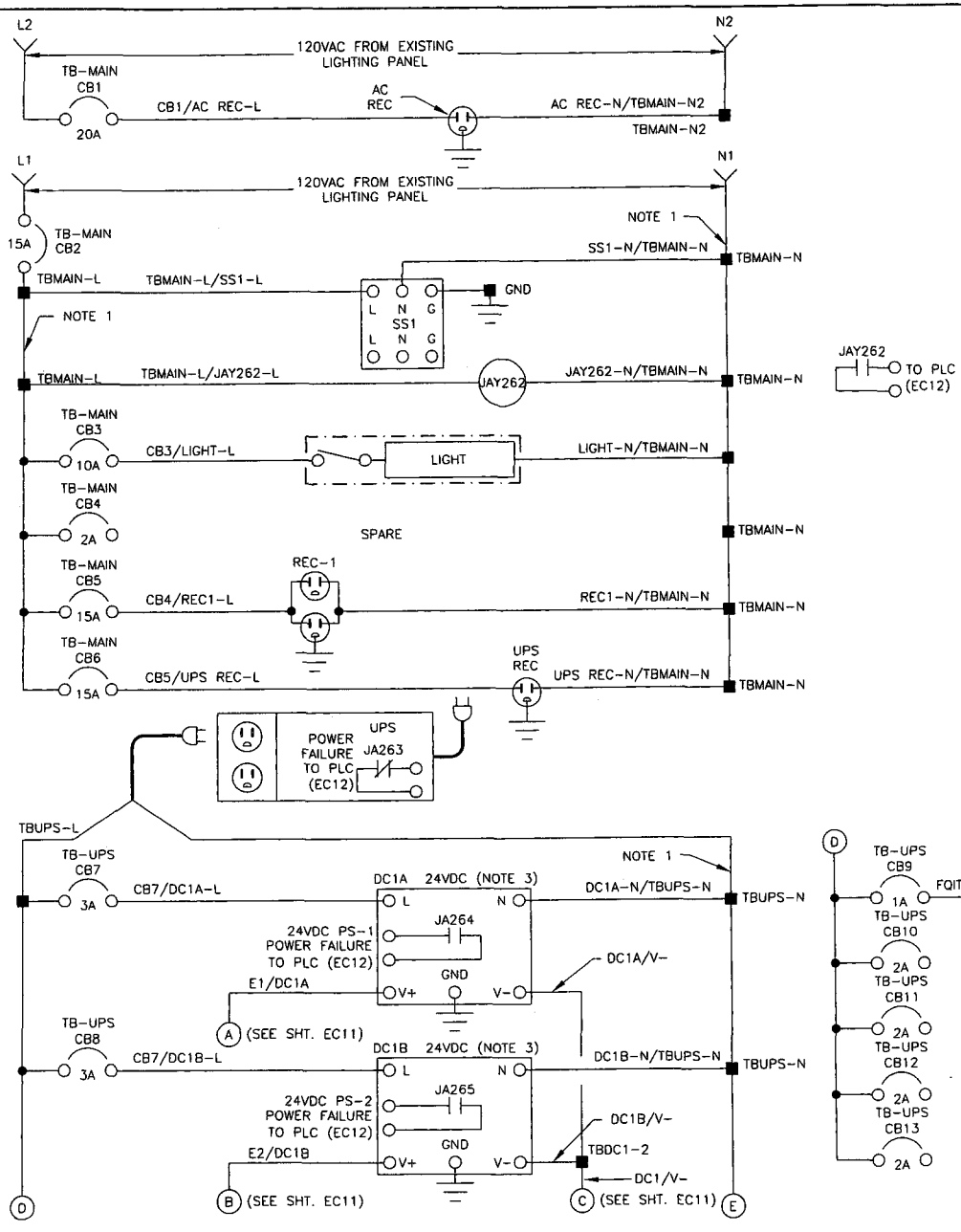


## NOTES:

1. PROVIDE BUS BAR STYLE OR INSULATED COMB STYLE JUMPERS WHERE 2 OR MORE TERMINALS IN THE SAME TB ARE COMMONED TOGETHER. DO NOT USE DISCRETE WIRE JUMPERS.
2. BILL OF MATERIALS IS ON DRAWING EC5.
3. ADJUST VOLTAGE OUTPUT SETTING ON DC1B TO BE 1.0 VOLT LESS THAN DC1A.

## 120VAC POWER DISTRIBUTION


DLT&V
SYSTEMS ENGINEERING
3550 N. CENTRAL AVE., STE. 1900
PHOENIX, AZ 85012 (602) 266-4668


Registered Professional Engineer (Electrical)
CERTIFICATE NO. 37390
MELINDA TAM
Date Signed 9-29-08
ARIZONA, U.S.A.
Expires 3/31/11

NOTES

REVISIONS

| REV. | BY | DATE | DESCRIPTION |
|---|---|---|---|
| | | | |
| | | | |
| | | | |
| | | | |

CASA GRANDE WATER SYSTEM
SCADA PHASE II – WELL #24

ARIZONA WATER COMPANY

120VAC POWER DISTRIBUTION SCHEMATIC

| | |
|---|---|
| DRAWN BY: MAB | PROJECT NO. 1219.01.027 |
| DESIGNED BY: MAB | SUBMITTAL DATE: SEPT 2008 |
| CHECKED BY: BA | DRAWING NUMBER EC10 |


DWG FILE: 1219.01.101_EC10.dwg 11:15am PLOTTED: Sep 30, 2008 steves

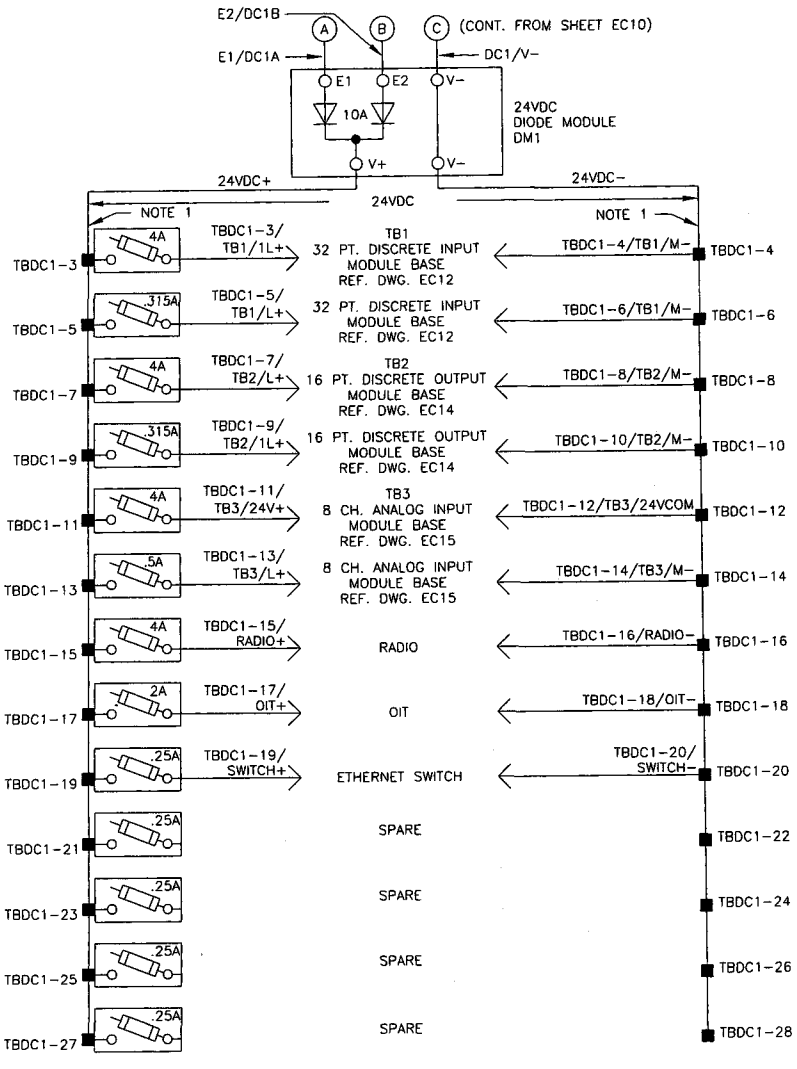


24VDC POWER DISTRIBUTION

## NOTES:

1. PROVIDE BUS BAR STYLE OR INSULATED COMB STYLE JUMPERS WHERE 2 OR MORE TERMINALS IN THE SAME TB ARE COMMONED TOGETHER. DO NOT USE DISCRETE WIRE JUMPERS.
2. BILL OF MATERIALS IS ON DRAWING EC5.
3. THE PROPER FUSE SIZE ON ANY FUTURE EQUIPMENT INSTALLATIONS UTILIZING SPARE CIRCUITS WILL BE THE RESPONSIBILITY OF THE OWNER.


DLT&V
SYSTEMS ENGINEERING
3550 N. CENTRAL AVE., STE. 1900
PHOENIX, AZ 85012 (602) 266-4458


Registered Professional Engineer (Electrical)
CERTIFICATE NO.
37390
MELINDA
TAM
Date Signed 9-29-08
ARIZONA, U.S.A.

Expires 3/31/11

NOTES

REVISIONS

| REV. | BY | DATE | DESCRIPTION |
|---|---|---|---|
| | | | |
| | | | |
| | | | |
| | | | |

CASA GRANDE WATER SYSTEM
SCADA PHASE II - WELL #24

ARIZONA WATER COMPANY

24VDC POWER DISTRIBUTION SCHEMATIC

| DRAWN BY: | PROJECT NO. |
|---|---|
| MAB | 1219.01.027 |
| DESIGNED BY: | SUBMITTAL DATE: |
| MAB | SEPT 2008 |
| CHECKED BY: | DRAWING NUMBER |
| BA | EC11 |


MG FILE: 1219.01.101_EC11.dwg 11:16am PLOTTED: Sep 30, 2008 slewis

## NOTES:

1. WIRE MODULES AND SIZE FUSES PER MANUFACTURER'S REQUIREMENTS.
2. BUS OR INSULATED COMB STYLE JUMPER.

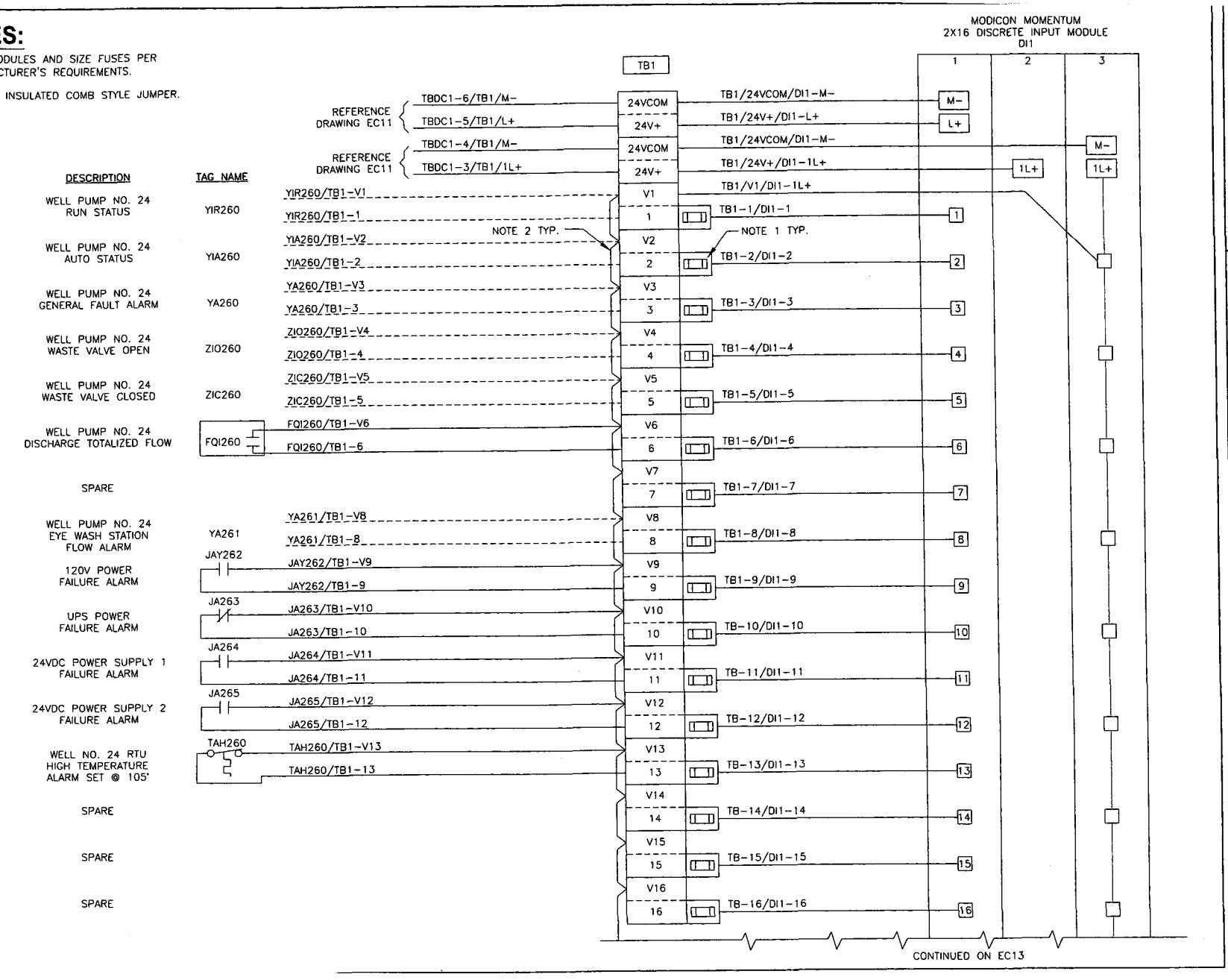


DLT&V SYSTEMS ENGINEERING
3550 N. CENTRAL AVE, STE. 1900
PHOENIX, AZ 85012 (602) 266-4458

Registered Professional Engineer (Electrical) CERTIFICATE NO. 37390 MELINDA TAM Date Signed 9.25.08 ARIZONA, U.S.A.

Expires 3/31/11

NOTES

| REVISIONS | | | |
|---|---|---|---|
| REV. | BY | DATE | DESCRIPTION |
| | | | |
| | | | |
| | | | |
| | | | |
| | | | |

CASA GRANDE WATER SYSTEM
SCADA PHASE II - WELL #24

ARIZONA WATER COMPANY

DISCRETE INPUT MODULE BASE WIRING DIAGRAM - SHEET 1

| DRAWN BY: | PROJECT NO. |
|---|---|
| MAB | 1219.01.027 |
| DESIGNED BY: | SUBMITTAL DATE: |
| MAB | SEPT 2008 |
| CHECKED BY: | DRAWING NUMBER |
| BA | EC12 |

WG FILE: 1219.01.101_EC12.dwg 11:16am PLOTTED: Sep 30, 2008 slewis

## NOTES:

1. WIRE MODULES AND SIZE FUSES PER MANUFACTURER'S REQUIREMENTS.
2. BUS OR INSULATED COMB STYLE JUMPER.

| DESCRIPTION | TAG NAME |
|---|---|
| SPARE | |
| SPARE | |
| SPARE | |
| SPARE | |
| SPARE | |
| SPARE | |
| SPARE | |
| SPARE | |
| SPARE | |
| SPARE | |
| SPARE | |
| SPARE | |
| SPARE | |
| SPARE | |
| SPARE | |
| SPARE | |

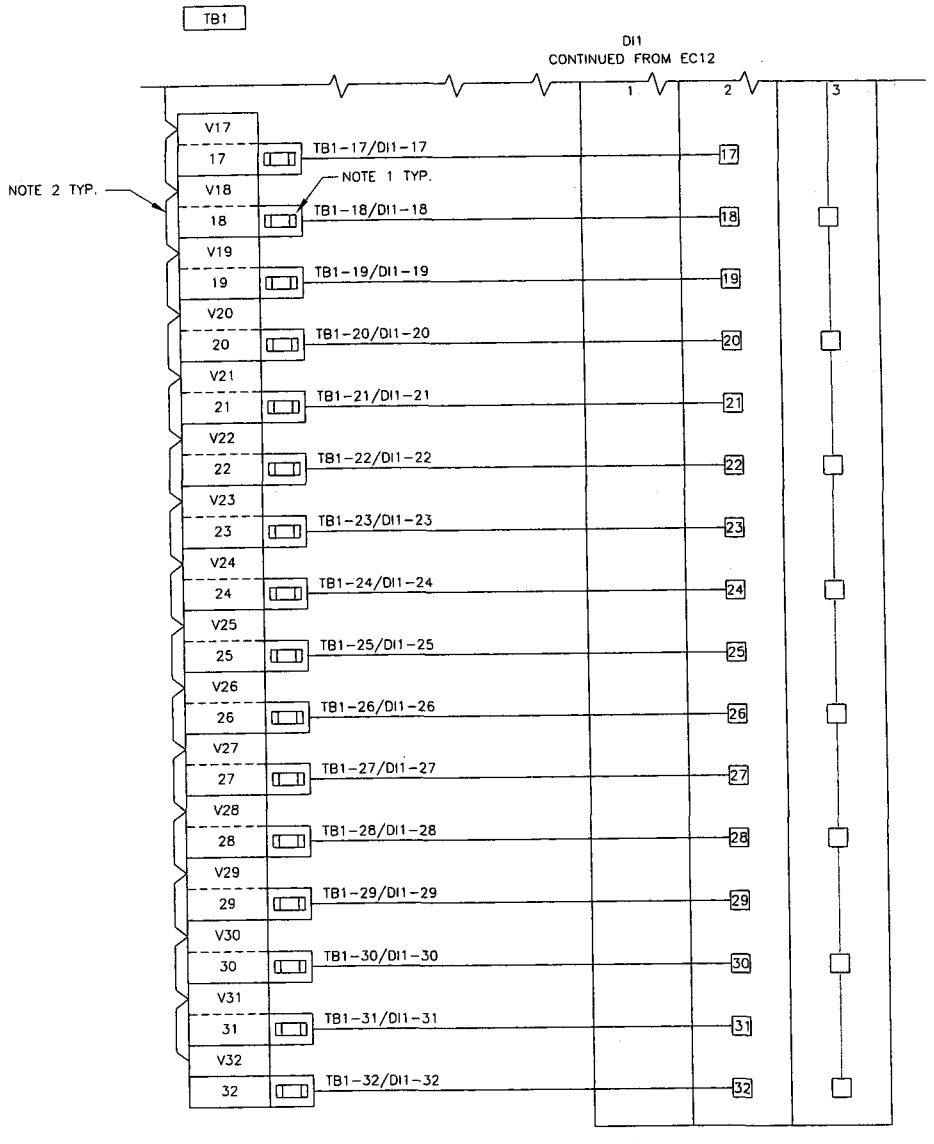


DLT&V SYSTEMS ENGINEERING
3550 N. CENTRAL AVE. STE. 1900
PHOENIX, AZ 85012 (602) 266-4558

Registered Professional Engineer (Electrical)
CERTIFICATE NO.
37390
MELINDA
TAM
Date Signed 9-29-08
ARIZONA, U.S.A.
Expires 3/31/11

NOTES

| REVISIONS | | | |
|---|---|---|---|
| REV. | BY | DATE | DESCRIPTION |
| | | | |
| | | | |
| | | | |
| | | | |
| | | | |

CASA GRANDE WATER SYSTEM
SCADA PHASE II – WELL #24

ARIZONA WATER COMPANY

DISCRETE INPUT
MODULE BASE
WIRING DIAGRAM – SHEET 2

| DRAWN BY: | PROJECT NO. |
|---|---|
| MAB | 1219.01.027 |
| DESIGNED BY: | SUBMITTAL DATE: |
| MAB | SEPT 2008 |
| CHECKED BY: | DRAWING NUMBER |
| BA | EC13 |

WG FILE: 1219.01.101_EC13.dwg 11:16am PLOTTED: Sep 30, 2008 slewis

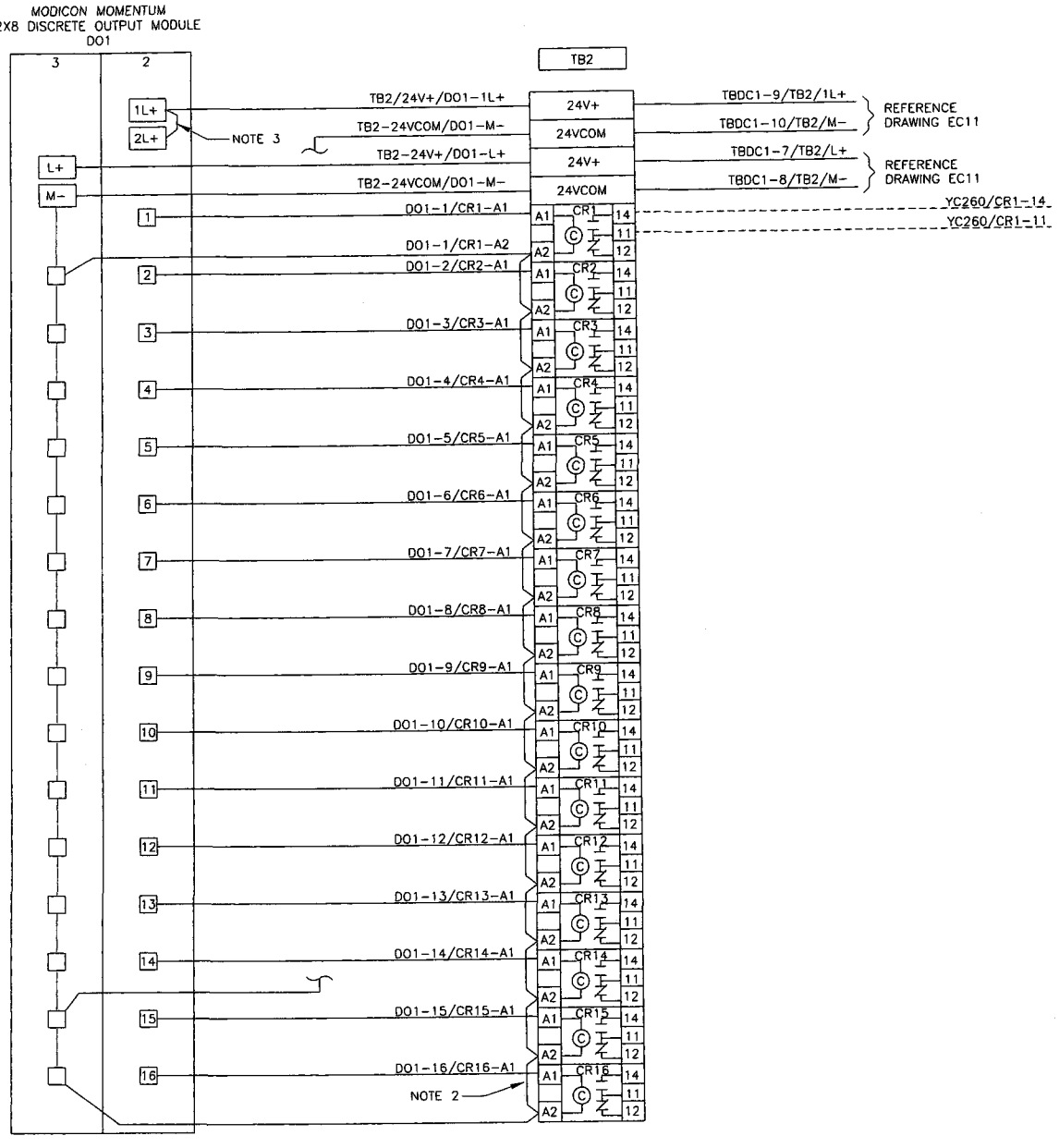


# NOTES:

1. WIRE MODULES PER MANUFACTURER'S REQUIREMENTS.
2. BUS OR INSULATED COMB STYLE JUMPER.
3. JUMPER WIRES PROVIDED BY PANEL MANUFACTURER.

| TAG NAME | DESCRIPTION |
|---|---|
| YC260 | WELL PUMP NO. 24 START/STOP COMMAND |
| | SPARE |
| | SPARE |
| | SPARE |
| | SPARE |
| | SPARE |
| | SPARE |
| | SPARE |
| | SPARE |
| | SPARE |
| | SPARE |
| | SPARE |
| | SPARE |
| | SPARE |
| | SPARE |
| | SPARE |
| | SPARE |


DLT&V
SYSTEMS ENGINEERING
3550 N. CENTRAL AVE, STE. 1900
PHOENIX, AZ 85012 (602) 266-4668


Registered Professional Engineer (Electrical)
CERTIFICATE NO.
37390
MELINDA
TAM
Date Signed 9.25.08
ARIZONA, U.S.A.
Expires 3/31/11

NOTES

| REVISIONS | | | |
|---|---|---|---|
| REV. | BY | DATE | DESCRIPTION |
| | | | |
| | | | |
| | | | |
| | | | |

CASA GRANDE WATER SYSTEM
SCADA PHASE II – WELL #24

ARIZONA WATER COMPANY

DISCRETE OUTPUT MODULE BASE WIRING DIAGRAM

| DRAWN BY: | PROJECT NO. |
|---|---|
| MAB | 1219.01.027 |
| DESIGNED BY: | SUBMITTAL DATE: |
| MAB | SEPT 2008 |
| CHECKED BY: | DRAWING NUMBER |
| BA | EC14 |


WG FILE: 1219.01.101_EC14.dwg 11:18am PLOTTED: Sep 30, 2008 slewis

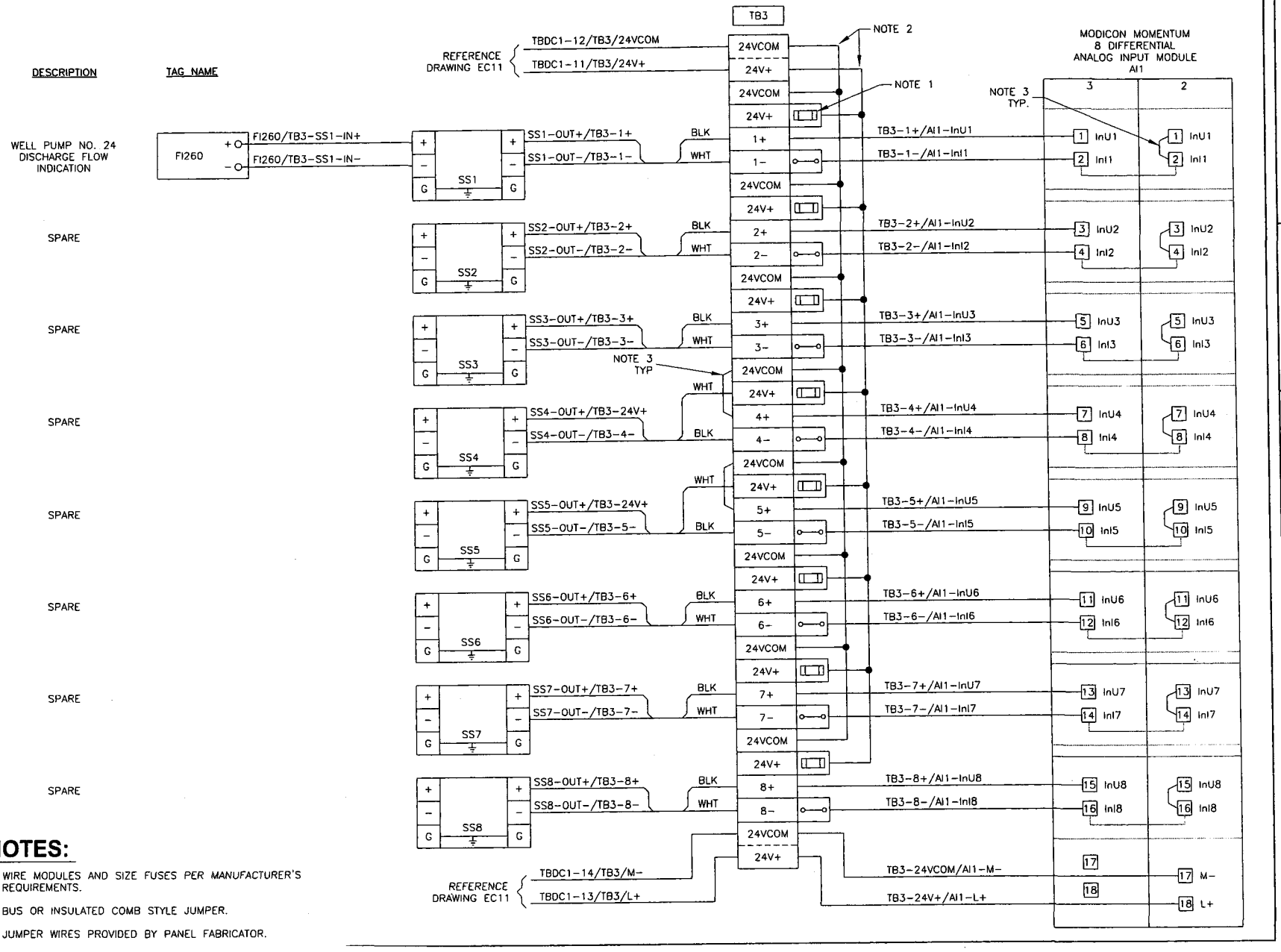


## NOTES:

1. WIRE MODULES AND SIZE FUSES PER MANUFACTURER'S REQUIREMENTS.
2. BUS OR INSULATED COMB STYLE JUMPER.
3. JUMPER WIRES PROVIDED BY PANEL FABRICATOR.

DLT&V SYSTEMS ENGINEERING
3550 N. CENTRAL AVE, STE. 1900
PHOENIX, AZ 85012 (602) 266-4656

Registered Professional Engineer (Electrical)
CERTIFICATE NO. 37390
MELINDA TAM
Date Signed 9-29-08
ARIZONA, U.S.A.
Expires 3/31/11

NOTES

| REVISIONS | | | |
|---|---|---|---|
| REV. | BY | DATE | DESCRIPTION |
| | | | |
| | | | |
| | | | |
| | | | |

CASA GRANDE WATER SYSTEM
SCADA PHASE II - WELL #24

ARIZONA WATER COMPANY

ANALOG INPUT MODULE BASE WIRING DIAGRAM

| DRAWN BY: | PROJECT NO. |
|---|---|
| MAB | 1219.01.027 |
| DESIGNED BY: | SUBMITTAL DATE: |
| MAB | SEPT 2008 |
| CHECKED BY: | DRAWING NUMBER |
| BA | EC15 |

WG FILE: 1219.01.101_EC15.dwg 11:16am PLOTTED: Sep 30, 2008 steve

# CASA GRANDE WATER SYSTEM
# SCADA DESIGN - PHASE II
# WELL NO. 25 - RTU 270 DESIGN

DLT&V
SYSTEMS ENGINEERING
3550 N. CENTRAL AVE., STE. 1900
PHOENIX, AZ 85012 (602) 266-4564

Registered Professional Engineer (Electrical)
CERTIFICATE NO.
37390
MELINDA
TAM
Date Signed 9-29-08
ARIZONA, U.S.A.

Expires 3/31/11

NOTES

| REVISIONS | | | |
|---|---|---|---|
| REV. | BY | DATE | DESCRIPTION |
| | | | |
| | | | |
| | | | |
| | | | |
| | | | |

CASA GRANDE WATER SYSTEM
SCADA PHASE II – WELL #25

ARIZONA WATER COMPANY

COVER SHEET

| | |
|---|---|
| DRAWN BY: MAB | PROJECT NO. 1219.01.027 |
| DESIGNED BY: MAB | SUBMITTAL DATE: SEPT 2008 |
| CHECKED BY: BA | DRAWING NUMBER EC1 |

DWG FILE: 1219.01.101_EC1.dwg 11:18am PLOTTED: Sep 30, 2008 stevis

# CASA GRANDE WATER SYSTEM
# SCADA DESIGN – PHASE II
# WELL NO. 25 RTU DESIGN
# PROJECT SHEET INDEX

| Drawing No. | Drawing Title |
|---|---|
| EC1 | COVER SHEET |
| EC2 | PROJECT SHEET INDEX |
| EC3 | STANDARD SYMBOLS AND ABBREVIATIONS |
| EC4 | ISA TABLE AND COMMON LEGENDS SHEET |
| EC5 | BILL OF MATERIALS |
| EC6 | RTU ENCLOSURE LAYOUT |
| EC7 | RTU SUBPANEL LAYOUT |
| EC8 | TERMINAL BLOCK DETAILS |
| EC9 | COMMUNICATIONS SYSTEM ARCHITECTURE DIAGRAM |
| EC10 | 120VAC POWER DISTRIBUTION SCHEMATIC |
| EC11 | 24VDC POWER DISTRIBUTION SCHEMATIC |
| EC12 | DISCRETE INPUT MODULE BASE WIRING DIAGRAM - SHEET 1 |
| EC13 | DISCRETE INPUT MODULE BASE WIRING DIAGRAM - SHEET 2 |
| EC14 | DISCRETE OUTPUT MODULE BASE WIRING DIAGRAM |
| EC15 | ANALOG INPUT MODULE BASE WIRING DIAGRAM |

DLT&V
SYSTEMS ENGINEERING
3550 N. CENTRAL AVE, STE. 1900
PHOENIX, AZ 85012 (602) 266-4558

Registered Professional Engineer (Electrical)
CERTIFICATE NO.
37390
MELINDA
TAM
Date Signed 9-29-08
ARIZONA, U.S.A.

Expires 3/31/11

NOTES

REVISIONS

| REV. | BY | DATE | DESCRIPTION |
|---|---|---|---|
| | | | |
| | | | |
| | | | |
| | | | |

CASA GRANDE WATER SYSTEM
SCADA PHASE II – WELL #25

ARIZONA WATER COMPANY

PROJECT
SHEET INDEX

| | |
|---|---|
| DRAWN BY: MAB | PROJECT NO. 1219.01.027 |
| DESIGNED BY: MAB | SUBMITTAL DATE: SEPT 2008 |
| CHECKED BY: BA | DRAWING NUMBER EC2 |

DWG FILE: 1219.01.101_EC2.dwg 11:17am PLOTTED: Sep 30, 2008 steve

# CASA GRANDE WATER SYSTEM
# SCADA DESIGN – PHASE II
# WELL NO. 25 RTU DESIGN
# STANDARD SYMBOLS AND ABBREVIATIONS

## SCHEMATIC/WIRING DIAGRAM SYMBOLS

CIRCUIT BREAKER
*A – AMP RATING

FUSE WITH PULLER
*A – AMP RATING

SWITCH
NORMALLY OPEN

SELECTOR SWITCH
2 POSITION, NORMALLY OPEN

SELECTOR SWITCH
3 POSITION, NORMALLY OPEN

TEMPERATURE SWITCH
NORMALLY OPEN

TERMINAL BLOCK
* – TB IDENTIFICATION

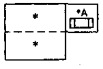


TERMINAL BLOCK W/ FUSE
PLUG AND FUSE
* – TB IDENTIFICATION
*A – AMPS

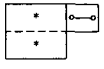


TERMINAL BLOCK W/
DISCONNECT KNIFE
* – TB IDENTIFICATION

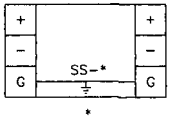


SURGE SUPPRESSOR FOR
FLOATING SIGNAL CIRCUITS
* – SS NUMBER IDENTIFICATION

SURGE SUPPRESSOR FOR
POWER SUPPLY
* – SS NUMBER IDENTIFICATION

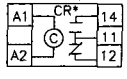


CONTROL RELAY
* – CR NUMBER IDENTIFICATION
# – TERMINAL NUMBER

## SCHEMATIC/WIRING DIAGRAM SYMBOLS

EARTH GROUND



TERMINAL BLOCK

DUPLEX RECEPTACLE

SINGLE RECEPTACLE

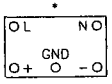


DC POWER SUPPLY
* – DC VOLTAGE RATING

## COLOR CODE CHART FOR 18 AWG BELDEN CABLES
## 12 COND. NO. 8466 AND 19 COND. NO. 8619

| | | |
|---|---|---|
| BLACK | BLK | 1st |
| WHITE | WHT | 2nd |
| RED | RED | 3rd |
| GREEN | GRN | 4th |
| ORANGE | ORN | 5th |
| BLUE | BLU | 6th |
| WHITE/BLACK | WHT/BLK | 7th |
| RED/BLACK | RED/BLK | 8th |
| GREEN/BLACK | GRN/BLK | 9th |
| ORANGE/BLACK | ORN/BLK | 10th |
| BLUE/BLACK | BLU/BLK | 11th |
| BLACK/WHITE | BLK/WHT | 12th |
| RED/WHITE | RED/WHT | 13th |
| GREEN/WHITE | GRN/WHT | 14th |
| BLUE/WHITE | BLU/WHT | 15th |
| BLACK/RED | BLK/RED | 16th |
| WHITE/RED | WHT/RED | 17th |
| ORANGE/RED | ORN/RED | 18th |
| BLUE/RED | BLU/RED | 19th |

## WIRE SIZES

(CIRCUIT WIRING SHALL BE RATED IN ACCORDANCE WITH THE MAXIMUM PERMITTED AMPERE RATING/SETTING OF THE OVERCURRENT PROTECTION DEVICE. N.EC. 210–3)

120VAC / 20A POWER CIRCUIT – MIN. #12 AWG.
120VAC / 15A AND BELOW – MIN. #14 AWG.

24VDC / 20A POWER CIRCUIT – MIN. #12 AWG.
24VDC / 15A AND BELOW – MIN. #16 AWG.
24VDC I/O & SIGNAL CIRCUIT – MIN. #18 AWG.

4–20mADC I/O SIGNAL CIRCUIT – MIN. #18 AWG.

## ABBREVIATIONS

| | |
|---|---|
| A/R | AS REQUIRED |
| AC COM | NEUTRAL |
| AFF | ABOVE FINISHED FLOOR |
| AI | ANALOG INPUT |
| ANL COM | ANALOG COMMON |
| AO | ANALOG OUTPUT |
| AWG | AMERICAN WIRE GAUGE |
| BLK | BLACK |
| BLU | BLUE |
| CAP | CENTRAL ARIZONA PROJECT |
| CLR | CLEAR |
| CR | CONTROL RELAY |
| DC COM | DC COMMON |
| DC+ | DC POSITIVE POTENTIAL |
| DI | DISCRETE INPUT |
| DO | DISCRETE OUTPUT |
| DS | DOOR SWITCH |
| FOM | FIBER OPTIC MODEM |
| FOT | FIBER OPTIC TRANSCEIVER |
| GND | GROUND |
| GRN | GREEN |
| I/O | INPUT/OUTPUT |
| L | LINE |
| N | NEUTRAL |
| NC | NORMALLY CLOSED |
| NO | NORMALLY OPEN |
| NP | NAMEPLATE |
| OIT | OPERATOR INTERFACE TERMINAL |
| ORN | ORANGE |
| PDB | POWER DISTRIBUTION BLOCK |
| PLC | PROGRAMMABLE LOGIC CONTROLLER |
| PP | FIBER OPTIC PATCH PANEL |
| PS | POWER SUPPLY |
| REC | RECEPTACLE |
| RES | RESERVOIR |
| RIO | REMOTE INPUT/OUTPUT |
| RTU | REMOTE TELEMETRY UNIT |
| SLC | SMALL LOGIC CONTROLLER |
| SP | SPACE |
| SS | SURGE SUPPRESSOR |
| TB | TERMINAL BLOCK |
| UPS | UNINTERRUPTIBLE POWER SUPPLY |
| WHT | WHITE |
| WTR | WATER TREATMENT PLANT |
| WWTP | WASTE WATER TREATMENT PLANT |

## LINETYPE LEGEND

- FIELD WIRING
- INTERNAL PANEL WIRING
- RADIO COMMUNICATION LINK
- FO — FIBER OPTIC CABLE
- FOP — FIBER OPTIC PATCH CABLE
- EN — ETHERNET CAT5 CABLE
- DH+ — DATA HIGHWAY PLUS
- RIO — REMOTE INPUT OUTPUT
- AREA DIVIDER
- EQUIPMENT
- PATCH PANEL


DLT&V
SYSTEMS ENGINEERING
3838 N. CENTRAL AVE, STE. 1900
PHOENIX, AZ 85012 (602) 264-4555


Registered Professional Engineer (Electrical)
CERTIFICATE NO.
37390
MELINDA TAM
Date Signed 9-29-08
ARIZONA, U.S.A.
Expires 3/31/11

NOTES

REVISIONS

| REV. | BY | DATE | DESCRIPTION |
|---|---|---|---|
| | | | |
| | | | |
| | | | |
| | | | |

CASA GRANDE WATER SYSTEM
SCADA PHASE II – WELL #25

ARIZONA WATER COMPANY

STANDARD SYMBOLS AND ABBREVIATIONS

| | |
|---|---|
| DRAWN BY: MAB | PROJECT NO. 1219.01.027 |
| DESIGNED BY: MAB | SUBMITTAL DATE: SEPT 2008 |
| CHECKED BY: BA | DRAWING NUMBER EC3 |

DWG FILE: 1219.01.101_EC3.dwg 11:17am PLOTTED: Sep 30, 2008 alewis

# CASA GRANDE WATER SYSTEM
# SCADA DESIGN – PHASE II
# WELL NO. 25 RTU DESIGN
# ISA TABLE AND COMMON LEGENDS SHEET

## ISA INSTRUMENT IDENTIFICATION TABLE

| FIRST LETTERS | | | SUCCEEDING LETTERS | | |
|---|---|---|---|---|---|
| MEASURED OR INITIATING VARIABLE | | MODIFIER | READOUT OR PASSIVE FUNCTION | OUTPUT FUNCTION | MODIFIER |
| A | ANALYZER | | ALARM | | AUTO |
| B | BURNER, COMBUSTION | | | | |
| C | CONDUCTIVITY | | | CONTROL | CLOSED |
| D | DENSITY | DIFFERENTIAL | | | |
| E | VOLTAGE | | ELEMENT | | |
| F | FLOW | RATIO | | | |
| G | GAUGE | | GLASS, VIEWING DEVICE | | |
| H | HAND | | | | HIGH |
| I | CURRENT | | INDICATE | | |
| J | POWER | SCAN | | | |
| K | TIME, TIME SCHED. | TIME RATE OF CHANGE | | CONTROL STATION | |
| L | LEVEL | | LIGHT | | LOW |
| M | MOTION | | | | MIDDLE |
| N | INTRUSION | | | | NORMAL |
| O | TORQUE | | ORIFICE, RESTRICTION | | OPEN |
| P | PRESSURE | | POINT CONNECTION | | STOP |
| Q | QUANTITY | INTEGRATE, TOTALIZE | | | |
| R | RADIATION | | RECORD, OR PRINT | | REMOTE |
| S | SPEED, FREQUENCY | SAFETY | | SWITCH | START |
| T | TEMPERATURE | | | TRANSMIT | |
| U | MULTIVARIABLE | | MULTIFUNCTION | MULTIFUNCTION | MULTIFUNCTION |
| V | VIBRATION | | | VALVE, LOUVER | |
| W | WEIGHT | | WELL | | |
| X | MOTOR | X-AXIS | UNCLASSIFIED | UNCLASSIFED | UNCLASSIFED |
| Y | EVENT, STATE, OR PRESENCE | Y-AXIS | | RELAY, COMPUTE, CONVERT | |
| Z | POSITION | Z-AXIS | | DRIVER, ACTUATOR, FINAL CONTROL ELEMENT | |

### FIELD WIRES TAG LEGEND

DEVICE NAME/TBXX-00
- TERMINAL NO.
- TERMINAL STRIP NO.
- FIELD DEVICE TAG NO.

### PANEL POWER WIRES TAG LEGEND

TBXX-03/TBXX-03
- TO TERMINAL NO.
- TO TERMINAL STRIP NO.
- FROM TERMINAL NO.
- FROM TERMINAL STRIP NO.

### PANEL I/O WIRES TAG LEGEND

0:#.2/TBXX-03
- INPUT POINT NO.
- TERMINAL STRIP NO.
- CHANNEL #
- SLOT #
- 0=OUTPUT I=INPUT

### COLOR CODE CHART FOR 22 AWG BELDEN PAIRED CABLE NO. 8761

| | | |
|---|---|---|
| BLACK | BLK | 1st |
| CLEAR | CLR | 2nd |

### PANEL WIRING IDENTIFICATION

BLACK – 120VAC LINE
WHITE – 120VAC NEUTRAL
GREEN – GROUND
ORANGE – DC POSITIVE
BLUE – DC COMMON

DLT&V
SYSTEMS ENGINEERING
3550 N. CENTRAL AVE, STE. 1900
PHOENIX, AZ 85012 (602) 266-4658

Registered Professional Engineer (Electrical)
CERTIFICATE NO.
37390
MELINDA TAM
Date Signed 9.29.08
ARIZONA, U.S.A.
Expires 3/31/11

NOTES

REVISIONS

| REV. | BY | DATE | DESCRIPTION |
|---|---|---|---|
| | | | |
| | | | |
| | | | |
| | | | |

CASA GRANDE WATER SYSTEM
SCADA PHASE II – WELL #25

ARIZONA WATER COMPANY

ISA TABLE AND COMMON LEGENDS SHEET

| DRAWN BY: | PROJECT NO. |
|---|---|
| MAB | 1219.01.027 |
| DESIGNED BY: | SUBMITTAL DATE: |
| MAB | SEPT 2008 |
| CHECKED BY: | DRAWING NUMBER |
| BA | EC4 |

DWG FILE: 1219.01.101_EC4.dwg PLOTTED: Sep 30, 2008 steveis 11:17am

| QTY | ITEM # | MANUFACTURER | PART NUMBER | DESCRIPTION |
|---|---|---|---|---|
| 1 | 100 | MODICON | 171CCC96030 | M1E PROCESSOR ADAPTER, ETHERNET AND I/O BUS PORTS, WEB PAGE ENABLED, IEC |
| 2 | 101 | MODICON | 170INT11000 | MOMENTUM INTERBUS \ I/O BUS COMMUNICATIONS ADAPTER |
| 1 | 102 | MODICON | 170ADI35000 | 24V DC - 32 PT. INPUT MODULE BASE |
| 1 | 103 | MODICON | 170ADO34000 | 24V DC / 0.5A - 16 PT. OUTPUT MODULE BASE, 0.5 A OUTPUT |
| 1 | 104 | MODICON | 170AAI03000 | MOMENTUM SERIES I/O BASE, ANALOG 8CH DIFFERENTIAL INPUT MODULE BASE |
| 1 | 105 | MODICON | 172JNN21032 | MOMENTUM SERIES OPTION ADAPTER W/ GENERAL PURPOSE SERIAL COMMUNICATION PORT, RS-232 OR RS-485 SELECTABLE |
| 1 | 106 | MODICON | XBT GT5330 | EXTERNAL DISPLAY WITH 10.4" COLOR TFT,VGA RESOLUTION (640X480 PIXELS), 24V POWER |
| 1 | 107 | WEIDMULLER | IE-SW8-ECO | INDUSTRIAL 8-PORT ETHERNET SWITCH, 10/100 Mbps, UNMANAGED |
| 2 | 108 | MODICON | 170MCI00700 | INTERBUS CABLE |
| 1 | 110 | BELDEN | 8267 | CABLE, COAXIAL, RG-213 (OR EQUAL) WITH APPROPRIATE CONNECTORS, (LENGTH AS REQUIRED) |
| 1 | 111 | MDS | iNET-II-IP | ETHERNET REMOTE RADIO TRANSCEIVER, SPREAD SPECTRUM, W/ REMOTE DIAGNOSTICS |
| 3 | 112 | MODICON | 170XTS00100 | CONNECTOR SET, SCREW-TYPE (SET OF 3) |
| A/R | 201 | ALLEN-BRADLEY | 1492-DR6 | TERMINAL MOUNTING RAIL, HI-RISE, ALUMINUM |
| 14 | 202 | ALLEN-BRADLEY | 1492-EA35 | END ANCHOR |
| 6 | 210 | ALLEN-BRADLEY | 1492-GM35 | TERMINAL BLOCK, GROUP MARKING CARRIER |
| 18 | 215 | ALLEN-BRADLEY | 1492-J4 | TERMINAL BLOCK, SINGLE CIRCUIT, 600V, GRAY |
| 1 | 218 | ALLEN-BRADLEY | 1492-JD3 | TERMINAL BLOCK, DOUBLE LEVEL |
| 67 | 219 | ALLEN-BRADLEY | 1492-JD3P | TERMINAL BLOCK, DOUBLE LEVEL W/ PLUGGABLE TOP LEVEL |
| 4 | 221 | ALLEN-BRADLEY | 1492-JG4 | TERMINAL BLOCK, SINGLE CIRCUIT, GROUNDING |
| 53 | 223 | ALLEN-BRADLEY | 1492-FPK224 | FUSE PLUG INSERT W/ BFI, 10-36VAC/DC WORKING VOLTAGE, 10A MAX @ 250V. PROVIDE FAST BLOW FUSES AS REQUIRED |
| 8 | 225 | ALLEN-BRADLEY | 1492-DPL | DISCONNECT PLUG FOR 1492-JD3 P AND 1492-JD3 |
| 2 | 230 | WEIDMULLER | 9926251001 | CIRCUIT BREAKER, 1A |
| 4 | 231 | WEIDMULLER | 9926251002 | CIRCUIT BREAKER, 2A |
| 2 | 232 | WEIDMULLER | 9926251003 | CIRCUIT BREAKER, 3A |
| 1 | 233 | WEIDMULLER | 9926251010 | CIRCUIT BREAKER, 10A |
| 3 | 234 | WEIDMULLER | 9926251015 | CIRCUIT BREAKER, 15A |
| 1 | 235 | WEIDMULLER | 9926251020 | CIRCUIT BREAKER, 20A |
| 53 | 282 | ANY | ANY | 250V, 5mmX20mm FAST BLOW GLASS FUSES (SIZE AS INDICATED ON DRAWING) |
| 1 | 304 | HOFFMAN | A72H3724FS3PT | ENCLOSURE, FREE STANDING, TYPE 4/12 W/3-POINT LATCH, 72"X37"X24" |
| 1 | 305 | HOFFMAN | A72P36F1 | SUBPANEL, WHITE PAINT, 60"X32" |
| 1 | 306 | HOFFMAN | A72SP36F4 | SWING-OUT PANEL, HALF PANEL, 30.88" X 33.81" |
| 1 | 313 | HOFFMAN | ALF16D18R | 18" FLOURESCENT LIGHTING PACKAGE W/DOOR SWITCH, 115VAC |
| 1 | 316 | HOFFMAN | A-TEMNO | TEMPERATURE CONTROL SWITCH (THERMOSTAT), N.O. CONTACTS |
| A/R | 359 | BELDEN | 7929A | CABLE, ETHERNET, 4 PR, 24 AWG, CAT 5E |
| 1 | 377 | ANY | ANY | GROUNDING BAR |
| 1 | 378 | CUSTOM | CUSTOM | CUSTOM SHELF SUPPLIED AND INSTALLED BY PANEL FABRICATOR |
| A/R | 379 | PANDUIT | F2X4LG6 C2LG6 | 2 X 4 PLASTIC WIRING DUCT TYPE "E" W/COVER STYLE "C" |
| A/R | 380 | PANDUIT | F3X4LG6 C3LG6 | 3 X 4 PLASTIC WIRING DUCT TYPE "E" W/COVER STYLE "C" |
| 1 | 398 | HUBBELL | HBL5362I | DUPLEX RECEPTACLE, IVORY, 125V/20A, W/BOX AND BRUSHED ALUMINUM COVER (HUBBELL P.N.# A8) |
| 1 | 399 | HUBBELL | HBL5361I | SIMPLEX RECEPTACLE, IVORY, 125V/20A, W/BOX AND BRUSHED ALUMINUM COVER (HUBBELL P.N.# A7) |
| 1 | 400 | HUBBELL | HBL3810R | SIMPLEX RECEPTACLE, RED, 125V/20A, W/BOX AND BRUSHED ALUMINUM COVER (HUBBELL P.N.# A7) |
| 2 | 405 | WEIDMULLER | 8708670000 (CP SNT 250W 24V 10A) | POWER SUPPLY, 24VDC, 250W, 10A, W/ STATUS RELAY |
| 1 | 406 | WEIDMULLER | 8710620000 (CP DM 10) | DIODE MODULE, 10A PER INPUT, 40VDC MAX |
| 1 | 408 | IDEC | RH2B-UL-AC120V | RELAY, 120VAC COIL, DPDT W/ INDICATOR |
| 1 | 421 | IDEC | SH2B-05C | RELAY SOCKET, DIN RAIL MOUNT, FINGERSAFE |
| 1 | 450 | MTL SURGE TECHNOLOGIES | MA15/D/1/SI | 120/240 VAC, 15A, SURGE SUPPRESSOR AND FILTER |
| 8 | 451 | WEIDMULLER | 8448920000 | SURGE SUPPRESSOR, 24VDC, 2 WIRE LOOP PROTECTION (MCZ OVP) W/ END CAP PART #8389030000 |
| 8 | 452 | WEIDMULLER | 8389030000 | END CAP FOR 24VDC SURGE SUPPRESSOR (MCZ OVP) |
| 16 | 455 | ALLEN-BRADLEY | 700-HLT1Z24 | TERMINAL BLOCK RELAY, 24VDC, 6A CONTACTS, SPDT W/ LED |
| 1 | 505 | HOFFMAN | CR29-0416-G068 | AIR CONDITIONER, 120 VAC, 4000 BTU/HR. W/OUTDOOR ENCLOSURE PACKAGE |
| 1 | 703 | APC | SUA750, AP9610 | UPS, 115 VAC, 750 VA W/ RELAY I/O SMARTSLOT CARD OPTION, MINIMUM 30 MIN. RUNTIME OF COMPLETE PLC OPERATIONS POWER |
| 1 | 811 | POLYPHASER | IS-50NX-C2 | BROADBAND COAXIAL SURGE PROTECTOR, FLANGE MOUNT, 125-1000MHZ |
| 2 | 853 | TIMES MICROWAVE SYSTEMS | EZ-900-NMC | N-MALE CONNECTOR |

DLT&V
SYSTEMS ENGINEERING
3146 N. CENTRAL AVE, STE. 1900
PHOENIX, AZ 85012 (602) 266-4658

Registered Professional Engineer (Electrical)
CERTIFICATE NO.
37390
MELINDA TAM
Date Signed 9-29-08
ARIZONA, U.S.A.

Expires 3/31/11

NOTES

REVISIONS

| REV. | BY | DATE | DESCRIPTION |
|---|---|---|---|
| | | | |
| | | | |
| | | | |
| | | | |

CASA GRANDE WATER SYSTEM
SCADA PHASE II – WELL #25

ARIZONA WATER COMPANY

BILL OF MATERIALS

| DRAWN BY: | PROJECT NO. |
|---|---|
| MAB | 1219.01.027 |
| DESIGNED BY: | SUBMITTAL DATE: |
| MAB | SEPT 2008 |
| CHECKED BY: | DRAWING NUMBER |
| BA | EC5 |

DWG FILE: 1219.01.101_EC5.dwg 11:17am PLOTTED: Sep 30, 2008 steve

# NOTES:

1. BILL OF MATERIALS IS ON DRAWING EC5.
2. REFER TO DRAWING EC7 FOR PLC INTERIOR LAYOUT.
3. FURNISH ADDITIONAL NAMEPLATES AS REQUIRED BY UL OR BY OTHER APPLICABLE CODES.
4. MOMOUNT UPS MINIMUM 6" ABOVE GRADE LEVEL. PANEL FABRICATOR SHALL SUPPLY AND INSTALL CUSTOM SUPPORT HARDWARE IN ENCLOSURE AS REQUIRED.

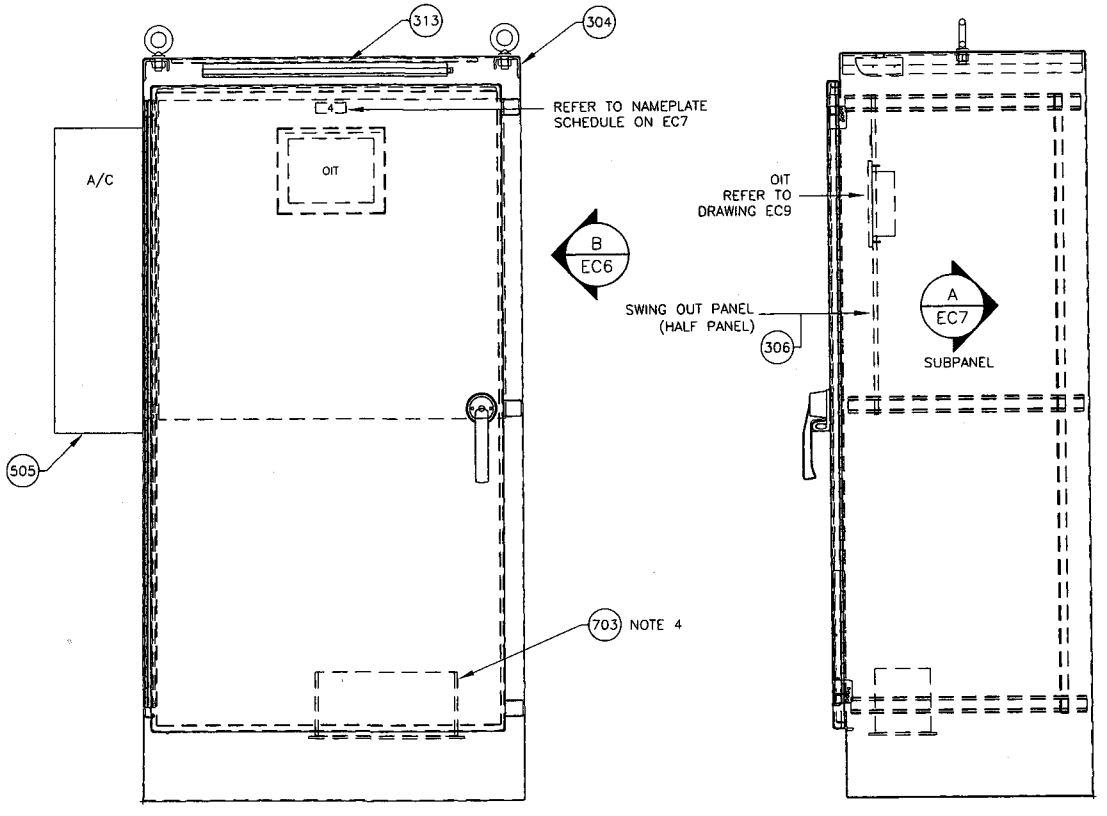


A ~ RTU ENCLOSURE, FRONT
1"=1'-0"

B ~ RTU ENCLOSURE, SIDE
1"=1'-0"

DLT&V
SYSTEMS ENGINEERING
3550 N. CENTRAL AVE, STE. 1900
PHOENIX, AZ 85012 (602) 266-4658

Registered Professional Engineer (Electrical)
CERTIFICATE NO.
37390
MELINDA
TAM
Date Signed 9.29.08
ARIZONA, U.S.A.
Expires 3/31/11

NOTES

REVISIONS

| REV. | BY | DATE | DESCRIPTION |
|---|---|---|---|
| | | | |
| | | | |
| | | | |
| | | | |

CASA GRANDE WATER SYSTEM
SCADA PHASE II – WELL #25

ARIZONA WATER COMPANY

RTU ENCLOSURE LAYOUT

| | |
|---|---|
| DRAWN BY: MAB | PROJECT NO. 1219.01.027 |
| DESIGNED BY: MAB | SUBMITTAL DATE: SEPT 2008 |
| CHECKED BY: BA | DRAWING NUMBER EC6 |

DWG FILE: 1219.01.101_EC6.dwg 11:18am PLOTTED: Sep 30, 2008 slewis

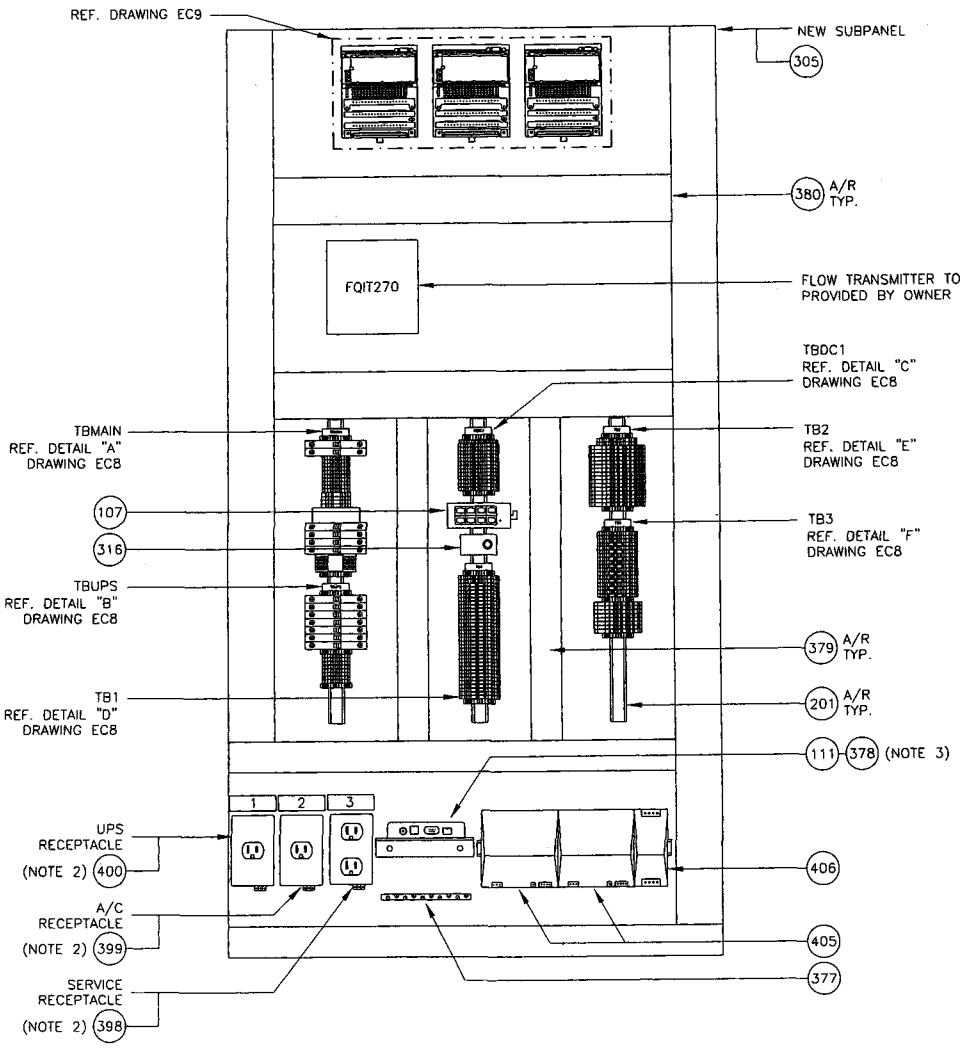


A / EC6 SUBPANEL LAYOUT
1-1/2"=1'-0"

## NOTES:

1. BILL OF MATERIALS IS ON DRAWING EC5.
2. NAMEPLATE SHALL BE 3/32" THICK LAMINATED PHENOLIC TYPE BLACK WITH WHITE LETTERS. SEE BILL OF MATERIALS ON DRAWING EC5 AND NAMEPLATE SCHEDULE (DET B) ON THIS SHEET FOR ADDITIONAL INFORMATION.
3. MOUNT RADIO ON CUSTOM SHELF PROVIDED AND INSTALLED BY PANEL FABRICATOR. REFER TO DRAWING EC9 AND BILL OF MATERIALS ON EC5 FOR MORE INFORMATION.

**NAMEPLATE SCHEDULE (NOTE 2)**

| NP | HxWxLTR | FIRST LINE | SECOND LINE | LOCATION |
|---|---|---|---|---|
| 1 | 1" x 3" x 1/4" | UPS RECEPTACLE | ONLY | CENTERED ABOVE UPS RECEPTACLE |
| 2 | 1" x 3" x 1/4" | A/C RECEPTACLE | ONLY | CENTERED ABOVE A/C RECEPTACLE |
| 3 | 1" x 3" x 1/4" | SERVICE RECEPTACLE | ONLY | CENTERED ABOVE SERVICE RECEPTACLE |
| 4 | 1" x 3" x 1/4" | OIT | | CENTERED ABOVE OIT |

B / ~ NAMEPLATE SCHEDULE

DLT&V SYSTEMS ENGINEERING
3550 N. CENTRAL AVE, STE. 1900
PHOENIX, AZ 85012 (602) 266-4658

Registered Professional Engineer (Electrical) CERTIFICATE NO. 37390 MELINDA TAM Date Signed 9-29-08 ARIZONA, U.S.A.
Expires 3/31/11

NOTES

REVISIONS

| REV. | BY | DATE | DESCRIPTION |
|---|---|---|---|
| | | | |
| | | | |
| | | | |
| | | | |

CASA GRANDE WATER SYSTEM
SCADA PHASE II – WELL #25

ARIZONA WATER COMPANY

RTU SUBPANEL LAYOUT

| | |
|---|---|
| DRAWN BY: MAB | PROJECT NO. 1219.01.027 |
| DESIGNED BY: MAB | SUBMITTAL DATE: SEPT 2008 |
| CHECKED BY: BA | DRAWING NUMBER EC7 |

DWG FILE: 1219.01.101_EC7.dwg 11:19am PLOTTED: Sep 30, 2008 stevis

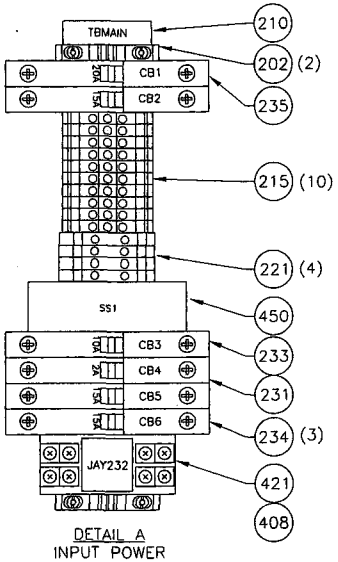


DETAIL A
INPUT POWER
TBMAIN

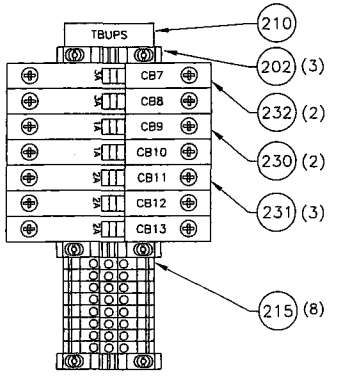


DETAIL B
PANEL POWER
TBUPS

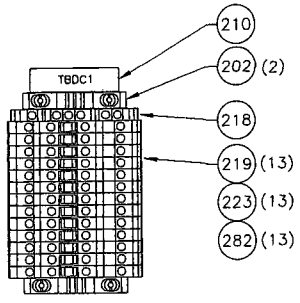


DETAIL C
24VDC POWER
DISTRIBUTION
TBDC1

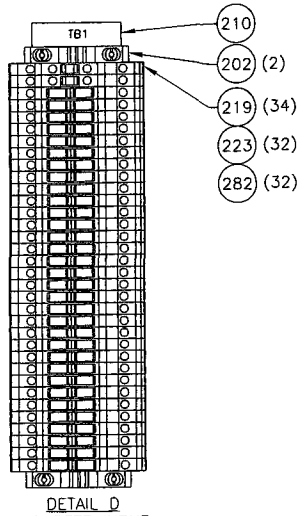


DETAIL D
DISCRETE INPUT
TB1

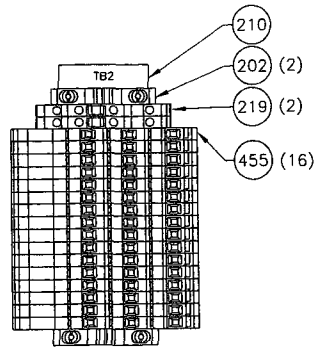


DETAIL E
DISCRETE OUTPUT
TB2

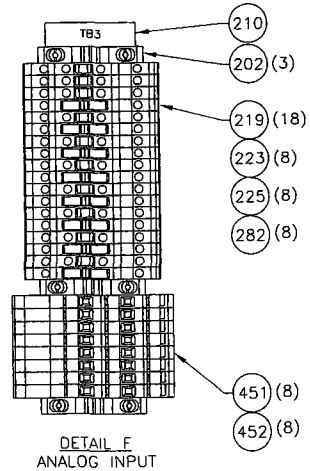


DETAIL F
ANALOG INPUT
TB3

## NOTES:

1. PROVIDE BUS BAR STYLE OR INSULATED COMB STYLE JUMPERS WHERE 2 OR MORE TERMINALS IN THE SAME TB ARE COMMONED TOGETHER. DO NOT USE DISCRETE WIRE JUMPERS.
2. BILL OF MATERIALS IS ON DRAWING EC5.
3. PANEL BUILDER TO SUPPLY AND INSTALL ALL NECESSARY AND APPROPRIATE ACCESSORIES INCLUDING TERMINAL NUMBERS, JUMPERS AND END BARRIERS.

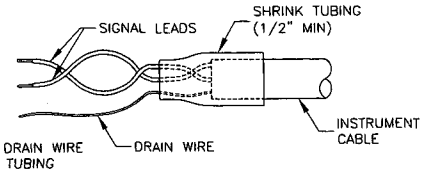


NOTE:
WRAP UNUSED DRAIN WIRE
UNDER SHRINK TUBING

DETAIL G
INSTRUMENT CABLE
TERMINATION

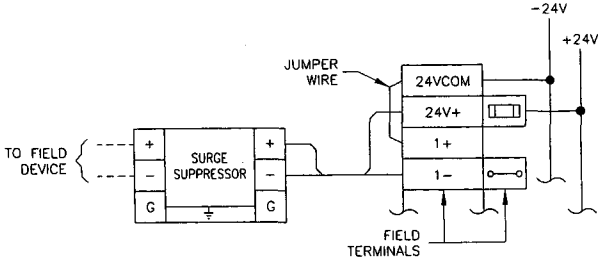


2-WIRE

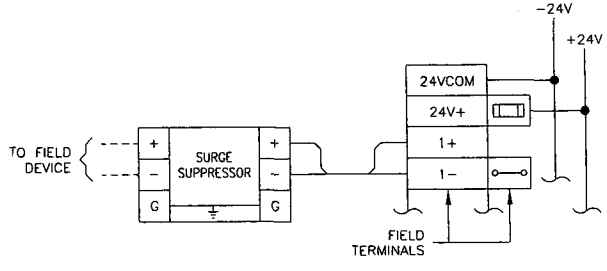


4-WIRE

DETAIL H
ANALOG INPUT TERMINALS
2 & 4-WIRE TYPICAL CONNECTIONS

DLT&V
SYSTEMS ENGINEERING
3550 N. CENTRAL AVE, STE. 1900
PHOENIX, AZ 85012 (602) 265-4688

Registered Professional Engineer (Electrical)
CERTIFICATE NO.
37390
MELINDA
TAM
Date Signed 9-23-08
ARIZONA, U.S.A.

Expires 3/31/11

NOTES

| REVISIONS | | | |
|---|---|---|---|
| REV. | BY | DATE | DESCRIPTION |
| | | | |
| | | | |
| | | | |
| | | | |

CASA GRANDE WATER SYSTEM
SCADA PHASE II - WELL #25

ARIZONA WATER COMPANY

TERMINAL BLOCK DETAILS

| | |
|---|---|
| DRAWN BY: MAB | PROJECT NO. 1219.01.027 |
| DESIGNED BY: MAB | SUBMITAL DATE: SEPT 2008 |
| CHECKED BY: BA | DRAWING NUMBER EC8 |

DWG FILE: 1219.01.101_EC8.dwg 11:19am PLOTTED: Sep 30, 2008 stevis

## NOTES:

1. BILL OF MATERIALS IS ON DRAWING EC5.
2. ANTENNA, ANTENNA MAST, GROUNDING KIT AND CABLE PROVIDED AND INSTALLED BY OTHERS.

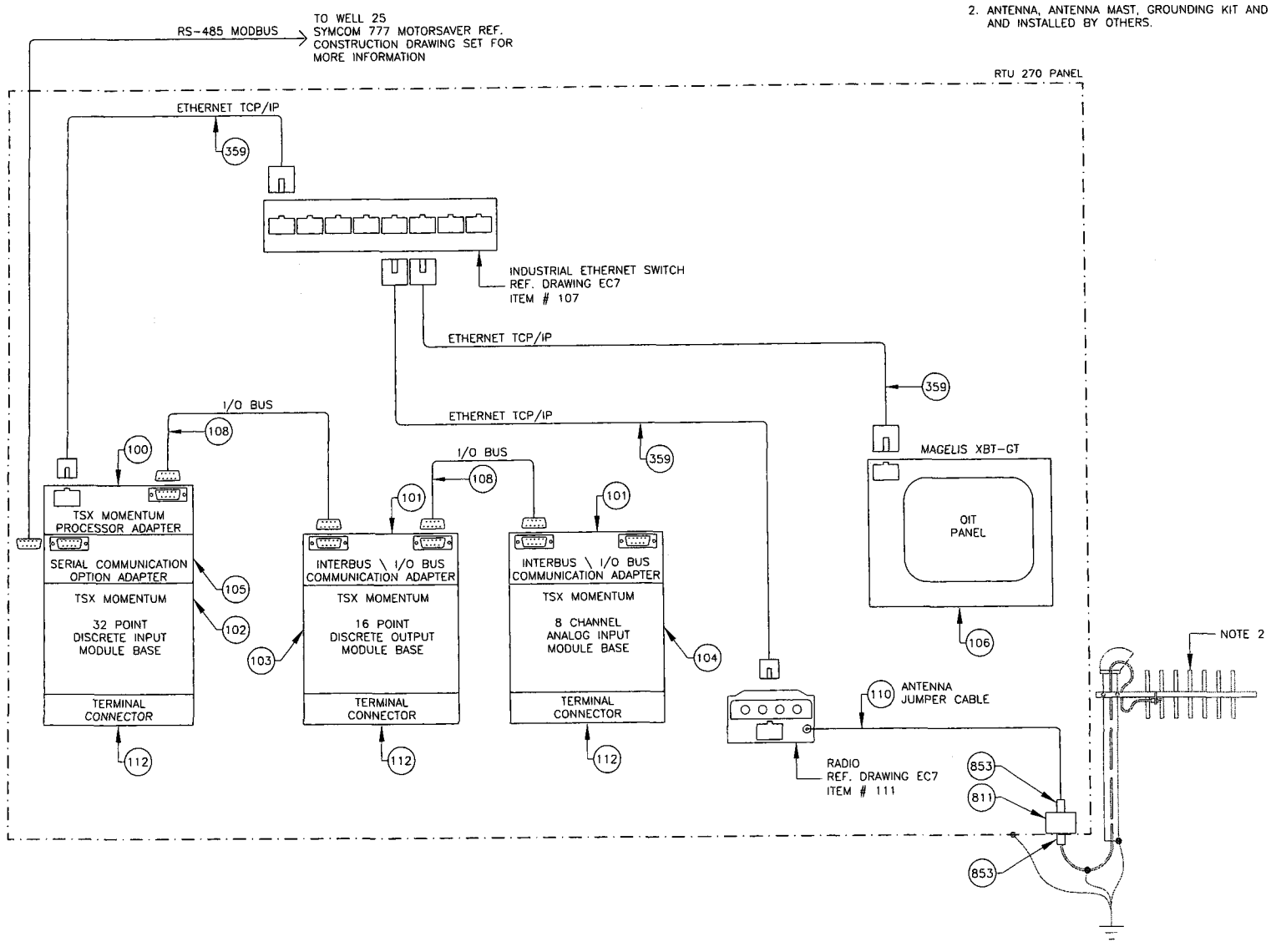


DLT&V
SYSTEMS ENGINEERING
3550 N. CENTRAL AVE, STE. 1900
PHOENIX, AZ 85012 (602) 266-4658

Registered Professional Engineer (Electrical)
CERTIFICATE NO. 37390
MELINDA TAM
Date Signed 9.29.08
ARIZONA, U.S.A.
Expires 3/31/11

NOTES

REVISIONS

| REV. | BY | DATE | DESCRIPTION |
|---|---|---|---|
| | | | |

CASA GRANDE WATER SYSTEM
SCADA PHASE II – WELL #25

ARIZONA WATER COMPANY

COMMUNICATIONS
SYSTEM ARCHITECTURE
DIAGRAM

| | |
|---|---|
| DRAWN BY: MAB | PROJECT NO. 1219.01.027 |
| DESIGNED BY: MAB | SUBMITTAL DATE: SEPT 2008 |
| CHECKED BY: BA | DRAWING NUMBER EC9 |

DWG FILE: 1219.01.101_EC9.dwg 11:19am PLOTTED: Sep 30, 2008 slewis

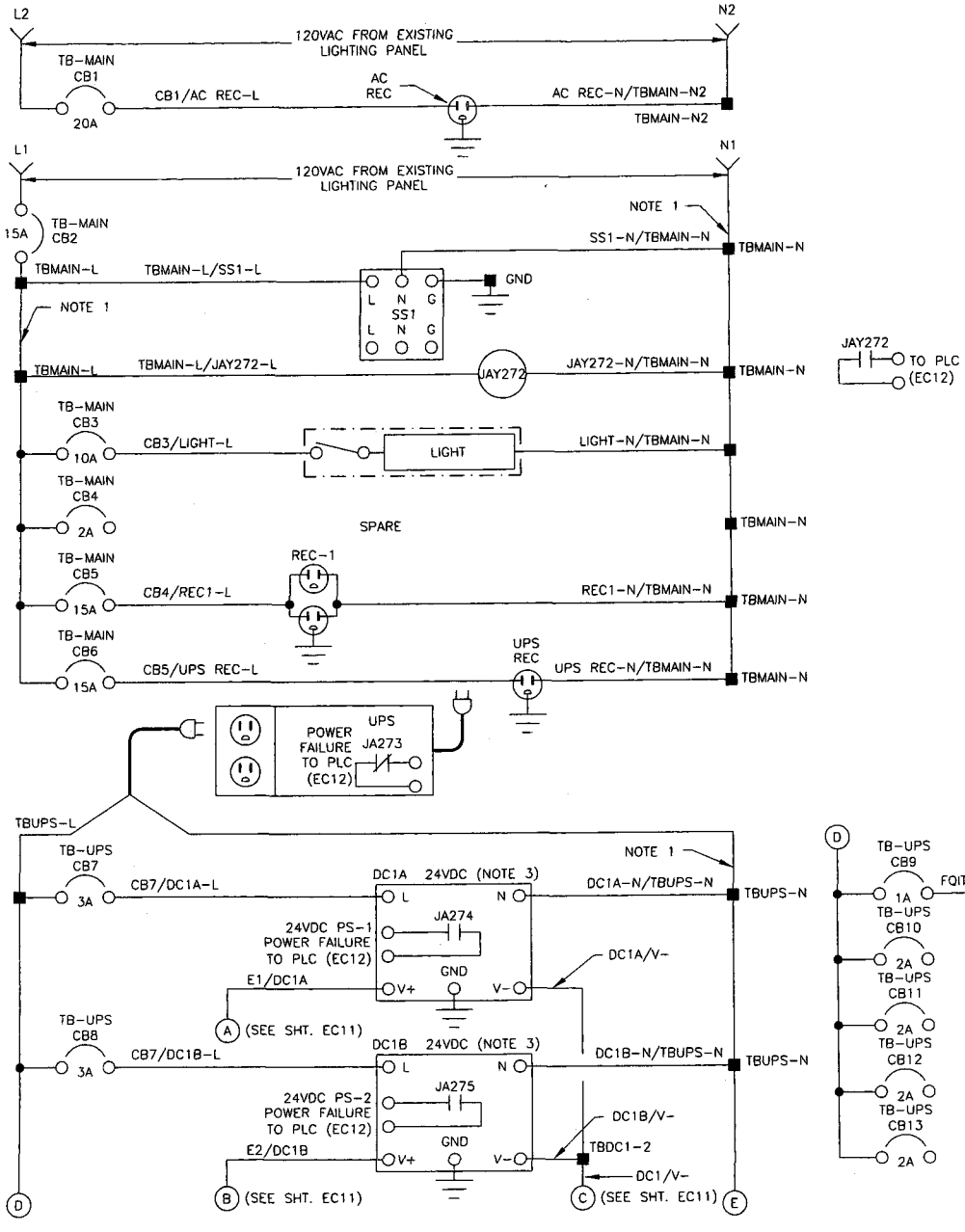


120VAC POWER DISTRIBUTION

# NOTES:

1. PROVIDE BUS BAR STYLE OR INSULATED COMB STYLE JUMPERS WHERE 2 OR MORE TERMINALS IN THE SAME TB ARE COMMONED TOGETHER. DO NOT USE DISCRETE WIRE JUMPERS.
2. BILL OF MATERIALS IS ON DRAWING EC5.
3. ADJUST VOLTAGE OUTPUT SETTING ON DC1B TO BE 1.0 VOLT LESS THAN DC1A.

DLT&V SYSTEMS ENGINEERING 3510 N. CENTRAL AVE, STE. 1900 PHOENIX, AZ 85012 (602) 264-4458

Registered Professional Engineer (Electrical) CERTIFICATE NO 37390 MELINDA TAM Date Signed 9-29-08 ARIZONA, U.S.A.

Expires 3/31/11

NOTES

| REVISIONS | | | |
|---|---|---|---|
| REV. | BY | DATE | DESCRIPTION |
| | | | |
| | | | |
| | | | |
| | | | |

CASA GRANDE WATER SYSTEM
SCADA PHASE II - WELL #25

ARIZONA WATER COMPANY

120VAC POWER DISTRIBUTION SCHEMATIC

| | |
|---|---|
| DRAWN BY: MAB | PROJECT NO. 1219.01.027 |
| DESIGNED BY: MAB | SUBMITTAL DATE: SEPT 2008 |
| CHECKED BY: BA | DRAWING NUMBER EC10 |

DWG FILE: 1219.01.101_EC10.dwg 11:19am PLOTTED: Sep 30, 2008 slewis

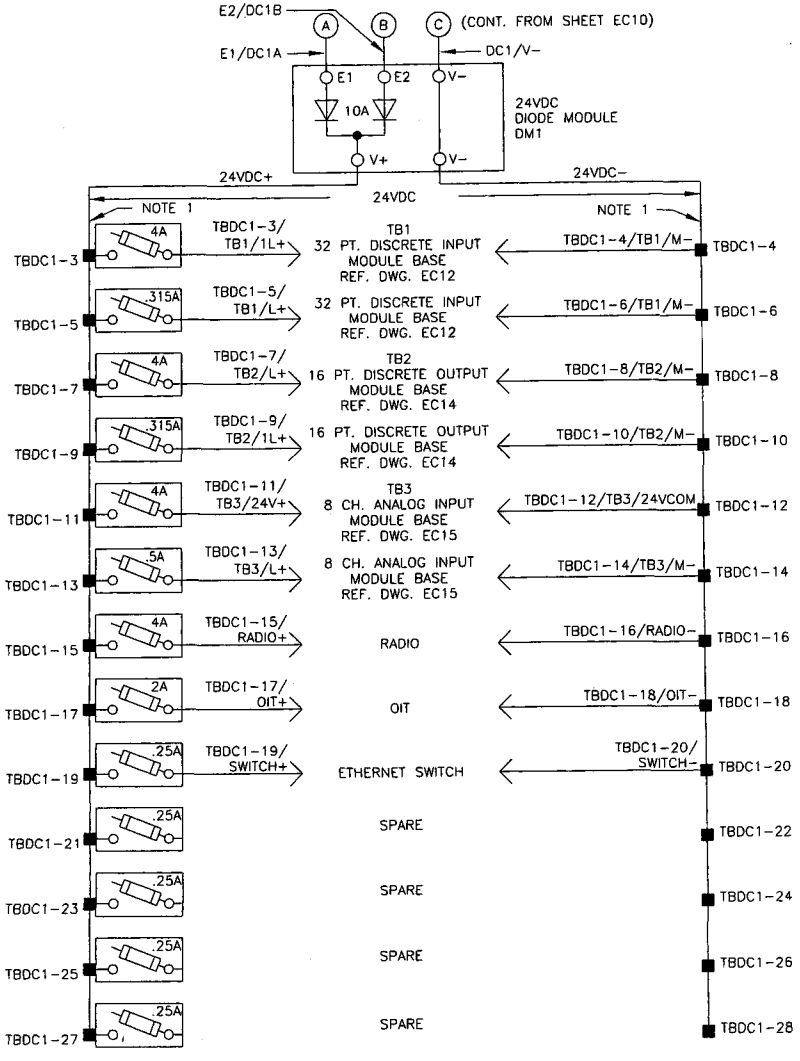


## 24VDC POWER DISTRIBUTION

# NOTES:

1. PROVIDE BUS BAR STYLE OR INSULATED COMB STYLE JUMPERS WHERE 2 OR MORE TERMINALS IN THE SAME TB ARE COMMONED TOGETHER. DO NOT USE DISCRETE WIRE JUMPERS.
2. BILL OF MATERIALS IS ON DRAWING EC5.
3. THE PROPER FUSE SIZE ON ANY FUTURE EQUIPMENT INSTALLATIONS UTILIZING SPARE CIRCUITS WILL BE THE RESPONSIBILITY OF THE OWNER.


DLT&V
SYSTEMS ENGINEERING
3550 N. CENTRAL AVE, STE. 1900
PHOENIX, AZ 85012 (602) 266-4558


Registered Professional Engineer (Electrical)
CERTIFICATE NO.
37390
MELINDA
TAM
Date Signed 9-29-08
ARIZONA, U.S.A.

Expires 3/31/11

NOTES

REVISIONS

| REV. | BY | DATE | DESCRIPTION |
|---|---|---|---|
| | | | |
| | | | |
| | | | |
| | | | |

CASA GRANDE WATER SYSTEM
SCADA PHASE II – WELL #25

ARIZONA WATER COMPANY

24VDC POWER DISTRIBUTION SCHEMATIC

| DRAWN BY: | PROJECT NO. |
|---|---|
| MAB | 1219.01.027 |
| DESIGNED BY: | SUBMITTAL DATE: |
| MAB | SEPT 2008 |
| CHECKED BY: | DRAWING NUMBER |
| BA | EC11 |


DWG FILE: 1219.01.101_EC11.dwg 11:19am PLOTTED: Sep 30, 2008 alewis

## NOTES:

1. WIRE MODULES AND SIZE FUSES PER MANUFACTURER'S REQUIREMENTS.
2. BUS OR INSULATED COMB STYLE JUMPER.

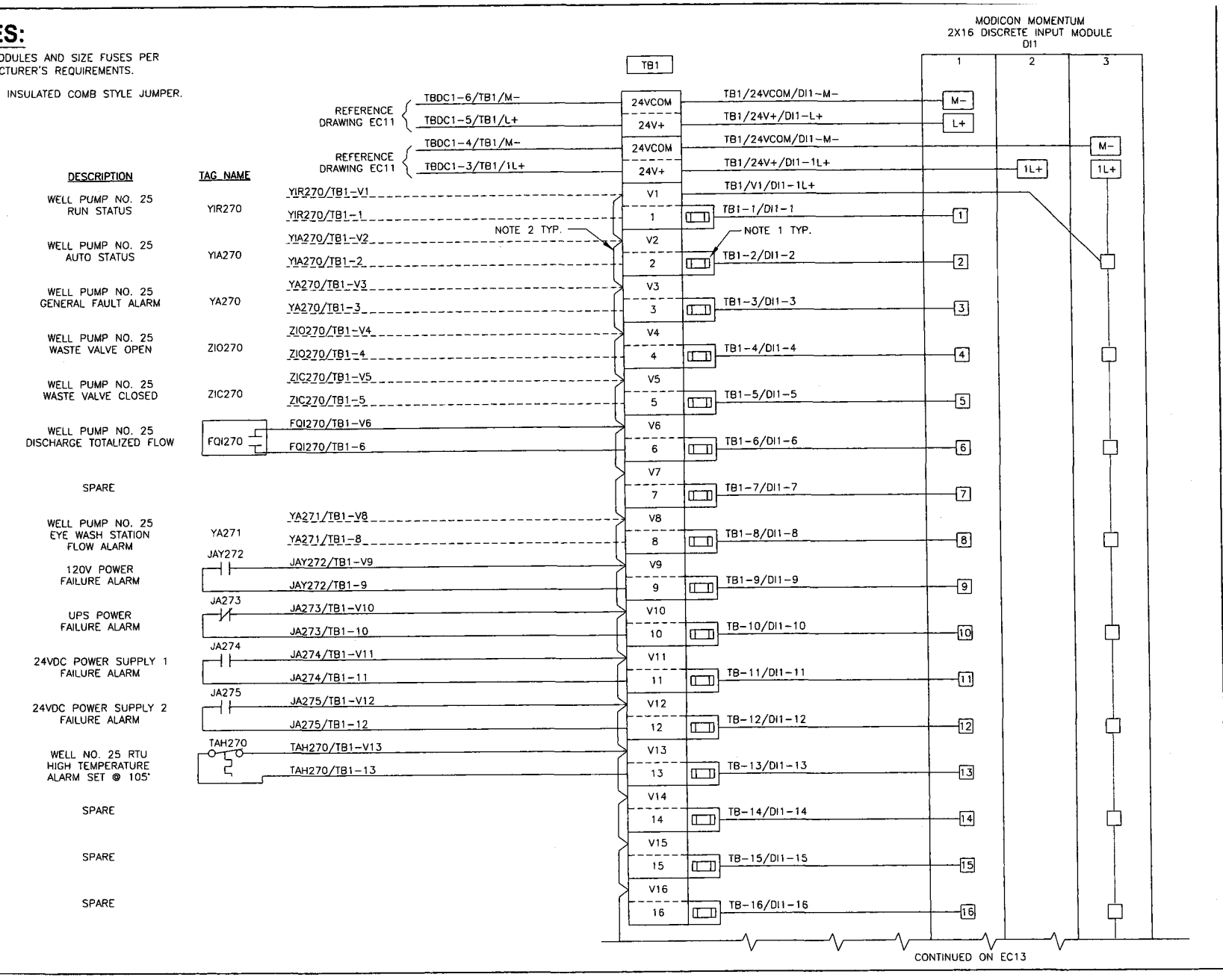


DWG FILE: 1219.01.101_EC12.dwg 11:19am PLOTTED: Sep 30, 2008 steves

DLT&V SYSTEMS ENGINEERING
3550 N. CENTRAL AVE. STE. 1900
PHOENIX, AZ 85012 (602) 266-4658

Registered Professional Engineer (Electrical) CERTIFICATE NO. 37390 MELINDA TAM Date Signed 9-29-08 ARIZONA U.S.A.

Expires 3/31/11

NOTES

| REVISIONS | | | |
|---|---|---|---|
| REV. | BY | DATE | DESCRIPTION |
| | | | |
| | | | |
| | | | |
| | | | |

CASA GRANDE WATER SYSTEM
SCADA PHASE II – WELL #25

ARIZONA WATER COMPANY

DISCRETE INPUT MODULE BASE WIRING DIAGRAM – SHEET 1

| DRAWN BY: | PROJECT NO. |
|---|---|
| MAB | 1219.01.027 |
| DESIGNED BY: | SUBMITTAL DATE: |
| MAB | SEPT 2008 |
| CHECKED BY: | DRAWING NUMBER |
| BA | EC12 |

## NOTES:

1. WIRE MODULES AND SIZE FUSES PER MANUFACTURER'S REQUIREMENTS.
2. BUS OR INSULATED COMB STYLE JUMPER.

| DESCRIPTION | TAG NAME |
|---|---|
| SPARE | |
| SPARE | |
| SPARE | |
| SPARE | |
| SPARE | |
| SPARE | |
| SPARE | |
| SPARE | |
| SPARE | |
| SPARE | |
| SPARE | |
| SPARE | |
| SPARE | |
| SPARE | |
| SPARE | |
| SPARE | |

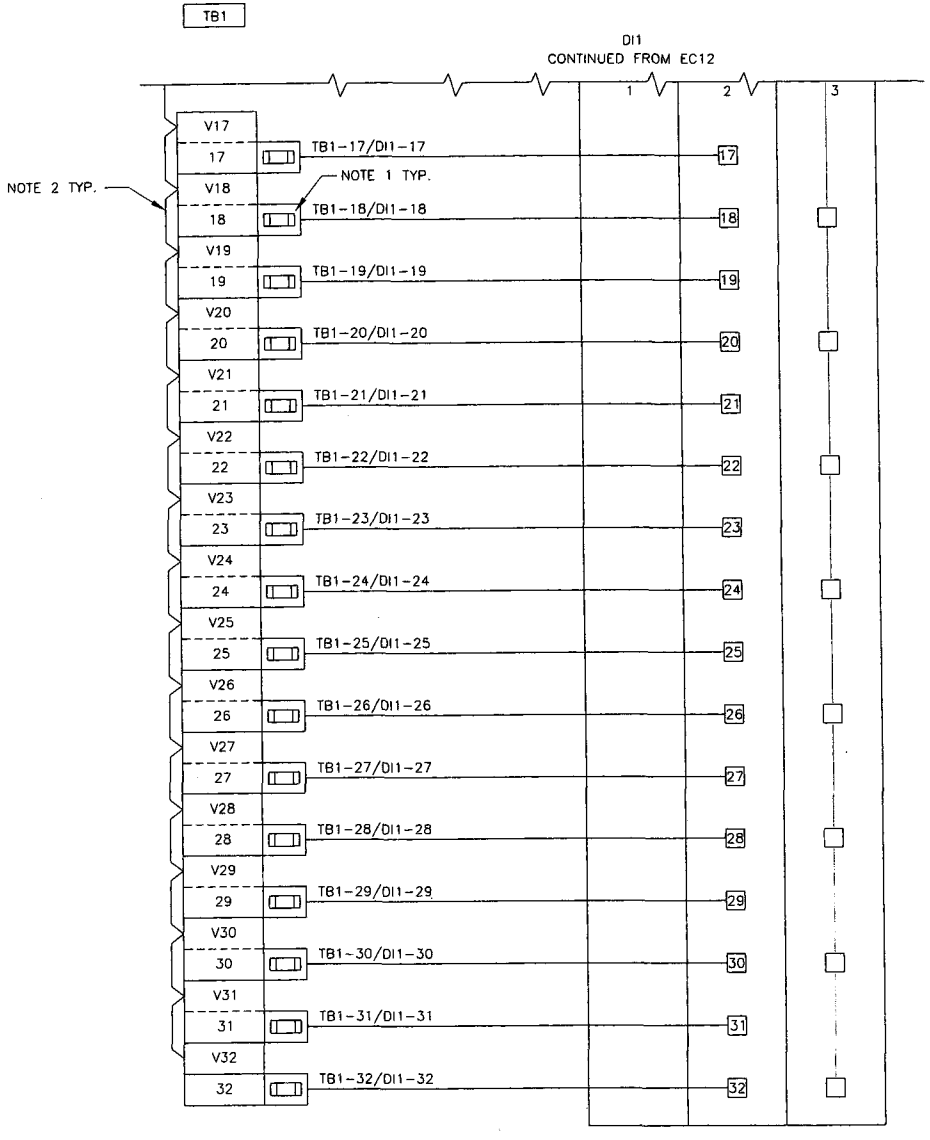


DLT&V SYSTEMS ENGINEERING

Registered Professional Engineer (Electrical) MELINDA TAM No. 37390 Date Signed 9-29-08 ARIZONA, U.S.A.

Expires 3/31/11

NOTES

REVISIONS

| REV. | BY | DATE | DESCRIPTION |
|---|---|---|---|
| | | | |
| | | | |
| | | | |
| | | | |

CASA GRANDE WATER SYSTEM
SCADA PHASE II - WELL #25

ARIZONA WATER COMPANY

DISCRETE INPUT
MODULE BASE
WIRING DIAGRAM - SHEET 2

| DRAWN BY: | PROJECT NO. |
|---|---|
| MAB | 1219.01.027 |
| DESIGNED BY: | SUBMITTAL DATE: |
| MAB | SEPT 2008 |
| CHECKED BY: | DRAWING NUMBER |
| BA | EC13 |

DWG FILE: 1219.01.101_EC13.dwg 11:20am PLOTTED: Sep 30, 2008 slewis

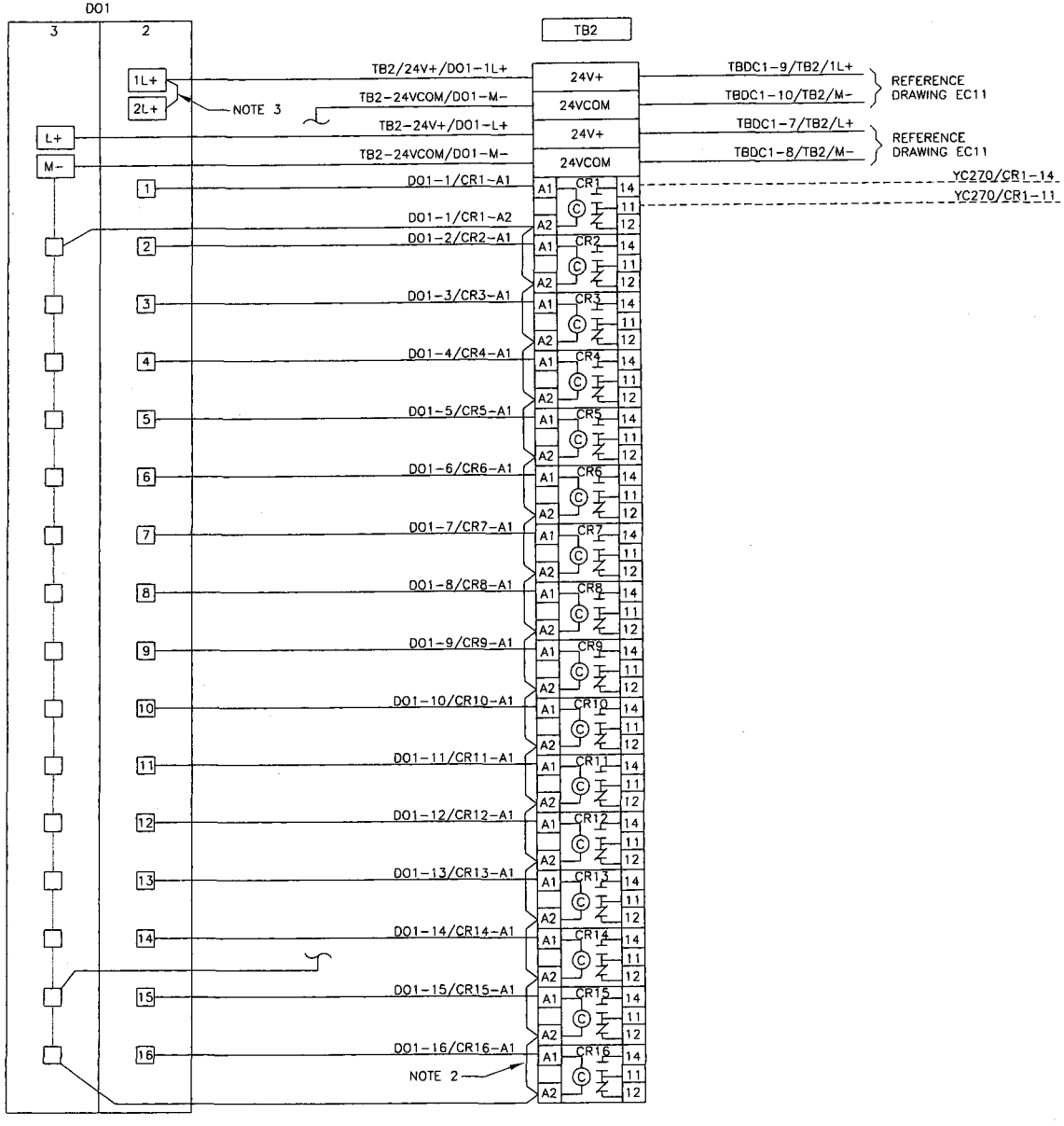


## NOTES:

1. WIRE MODULES PER MANUFACTURER'S REQUIREMENTS.
2. BUS OR INSULATED COMB STYLE JUMPER.
3. JUMPER WIRES PROVIDED BY PANEL MANUFACTURER.

| TAG NAME | DESCRIPTION |
|---|---|
| YC270 | WELL PUMP NO. 25 START/STOP COMMAND |
| | SPARE |
| | SPARE |
| | SPARE |
| | SPARE |
| | SPARE |
| | SPARE |
| | SPARE |
| | SPARE |
| | SPARE |
| | SPARE |
| | SPARE |
| | SPARE |
| | SPARE |
| | SPARE |
| | SPARE |

DLT&V SYSTEMS ENGINEERING
3560 N. CENTRAL AVE., STE. 1900
PHOENIX, AZ 85012 (602) 266-4658

Registered Professional Engineer (Electrical)
CERTIFICATE NO.
37390
MELINDA
TAM
Date Signed 9-29-08
ARIZONA, U.S.A.
Expires 3/31/11

NOTES

| REVISIONS | | | |
|---|---|---|---|
| REV. | BY | DATE | DESCRIPTION |
| | | | |
| | | | |
| | | | |
| | | | |

CASA GRANDE WATER SYSTEM
SCADA PHASE II – WELL #25

ARIZONA WATER COMPANY

DISCRETE OUTPUT MODULE BASE WIRING DIAGRAM

| DRAWN BY: | PROJECT NO. |
|---|---|
| MAB | 1219.01.027 |
| DESIGNED BY: MAB | SUBMITTAL DATE: SEPT 2008 |
| CHECKED BY: BA | DRAWING NUMBER: EC14 |

DWG FILE: 1219.01.101_EC14.dwg 11:20am PLOTTED: Sep 30, 2008 stewis

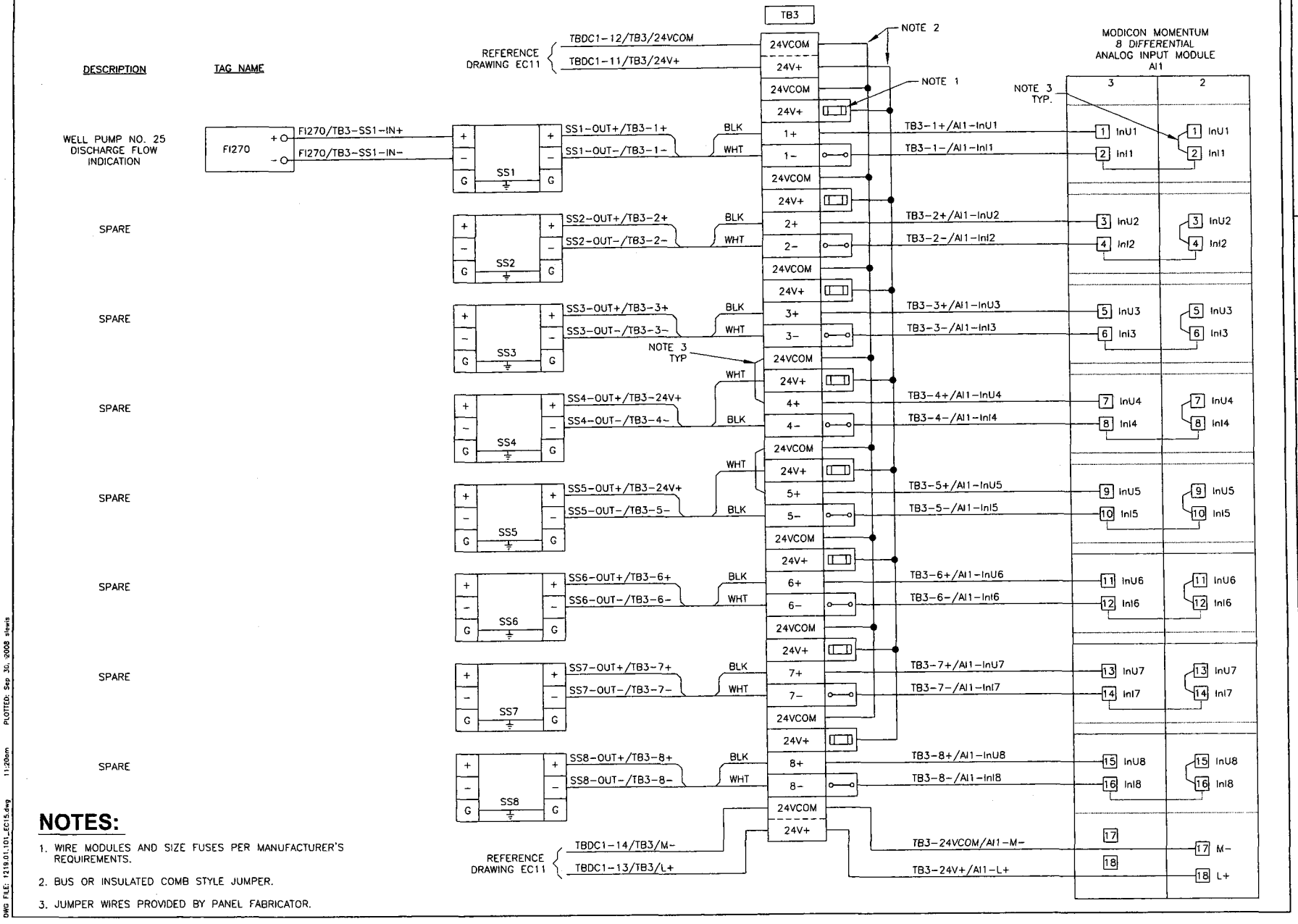


## NOTES:

1. WIRE MODULES AND SIZE FUSES PER MANUFACTURER'S REQUIREMENTS.
2. BUS OR INSULATED COMB STYLE JUMPER.
3. JUMPER WIRES PROVIDED BY PANEL FABRICATOR.

DWG FILE: 1219.01.101_EC15.dwg 11:20am PLOTTED: Sep 30, 2008 stewis

DLT&V SYSTEMS ENGINEERING
3550 N. CENTRAL AVE, STE. 1900
PHOENIX, AZ 85012 (602) 266-4658

Registered Professional Engineer (Electrical)
APPLICANT NO. 37390
MELINDA TAM
Date Signed 9-29-08
ARIZONA, U.S.A.
Expires 3/31/11

NOTES

REVISIONS

| REV. | BY | DATE | DESCRIPTION |
|---|---|---|---|
| | | | |
| | | | |
| | | | |
| | | | |

CASA GRANDE WATER SYSTEM
SCADA PHASE II - WELL #25

ARIZONA WATER COMPANY

ANALOG INPUT MODULE BASE WIRING DIAGRAM

| | |
|---|---|
| DRAWN BY: MAB | PROJECT NO. 1219.01.027 |
| DESIGNED BY: MAB | SUBMITTAL DATE: SEPT 2008 |
| CHECKED BY: BA | DRAWING NUMBER EC15 |

# CASA GRANDE WATER SYSTEM
# SCADA DESIGN - PHASE II
# WELL NO. 26 - RTU 280 DESIGN

DLT&V
SYSTEMS ENGINEERING
3560 N. CENTRAL AVE, STE. 1900
PHOENIX, AZ 85012 (602) 266-4668

Registered Professional Engineer (Electrical)
CERTIFICATE NO.
37390
MELINDA
TAM
Date Signed 9-29-08
ARIZONA, U.S.A.

Expires 3/31/11

NOTES

REVISIONS

| REV. | BY | DATE | DESCRIPTION |
|---|---|---|---|
| | | | |
| | | | |
| | | | |
| | | | |

CASA GRANDE WATER SYSTEM
SCADA PHASE II – WELL #26

ARIZONA WATER COMPANY

COVER SHEET

| | |
|---|---|
| DRAWN BY: MAB | PROJECT NO. 1219.01.027 |
| DESIGNED BY: MAB | SUBMITTAL DATE: SEPT 2008 |
| CHECKED BY: BA | DRAWING NUMBER EC1 |

DWG FILE: 1219.01.101_EC1.dwg 11:20am PLOTTED: Sep 30, 2008 slewis

# CASA GRANDE WATER SYSTEM
# SCADA DESIGN – PHASE II
# WELL NO. 26 RTU DESIGN
# PROJECT SHEET INDEX

| Drawing No. | Drawing Title |
|---|---|
| EC1 | COVER SHEET |
| EC2 | PROJECT SHEET INDEX |
| EC3 | STANDARD SYMBOLS AND ABBREVIATIONS |
| EC4 | ISA TABLE AND COMMON LEGENDS SHEET |
| EC5 | BILL OF MATERIALS |
| EC6 | RTU ENCLOSURE LAYOUT |
| EC7 | RTU SUBPANEL LAYOUT |
| EC8 | TERMINAL BLOCK DETAILS |
| EC9 | COMMUNICATIONS SYSTEM ARCHITECTURE DIAGRAM |
| EC10 | 120VAC POWER DISTRIBUTION SCHEMATIC |
| EC11 | 24VDC POWER DISTRIBUTION SCHEMATIC |
| EC12 | DISCRETE INPUT MODULE BASE WIRING DIAGRAM - SHEET 1 |
| EC13 | DISCRETE INPUT MODULE BASE WIRING DIAGRAM - SHEET 2 |
| EC14 | DISCRETE OUTPUT MODULE BASE WIRING DIAGRAM |
| EC15 | ANALOG INPUT MODULE BASE WIRING DIAGRAM |

DLT&V
SYSTEMS ENGINEERING
3550 N. CENTRAL AVE. STE. 1900
PHOENIX, AZ 85012 (602) 266-4658

Registered Professional Engineer (Electrical)
CERTIFICATE NO.
37390
MELINDA
TAM
Date Signed 9-29-08
ARIZONA, U.S.A.
Expires 3/31/11

NOTES

REVISIONS

| REV. | BY | DATE | DESCRIPTION |
|---|---|---|---|
| | | | |
| | | | |
| | | | |
| | | | |

CASA GRANDE WATER SYSTEM
SCADA PHASE II – WELL #26

ARIZONA WATER COMPANY

PROJECT
SHEET INDEX

| DRAWN BY: | PROJECT NO. |
|---|---|
| MAB | 1219.01.027 |
| DESIGNED BY: | SUBMITTAL DATE: |
| MAB | SEPT 2008 |
| CHECKED BY: | DRAWING NUMBER |
| BA | EC2 |

DWG FILE: 1219.01.101_EC2.dwg 11:20am PLOTTED: Sep 30, 2008 stevis

# CASA GRANDE WATER SYSTEM
# SCADA DESIGN – PHASE II
# WELL NO. 26 RTU DESIGN
# STANDARD SYMBOLS AND ABBREVIATIONS

## SCHEMATIC/WIRING DIAGRAM SYMBOLS

CIRCUIT BREAKER
*A – AMP RATING

FUSE WITH PULLER
*A – AMP RATING

SWITCH
NORMALLY OPEN

SELECTOR SWITCH
2 POSITION, NORMALLY OPEN

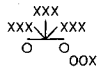


SELECTOR SWITCH
3 POSITION, NORMALLY OPEN

TEMPERATURE SWITCH
NORMALLY OPEN

TERMINAL BLOCK
* – TB IDENTIFICATION

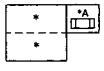


TERMINAL BLOCK W/ FUSE
PLUG AND FUSE
* – TB IDENTIFICATION
*A – AMPS

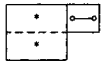


TERMINAL BLOCK W/
DISCONNECT KNIFE
* – TB IDENTIFICATION

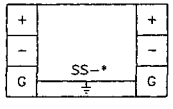


SURGE SUPPRESSOR FOR
FLOATING SIGNAL CIRCUITS
* – SS NUMBER IDENTIFICATION

SURGE SUPPRESSOR FOR
POWER SUPPLY
* – SS NUMBER IDENTIFICATION

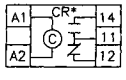


CONTROL RELAY
* – CR NUMBER IDENTIFICATION
# – TERMINAL NUMBER

## SCHEMATIC/WIRING DIAGRAM SYMBOLS

EARTH GROUND



TERMINAL BLOCK

DUPLEX RECEPTACLE

SINGLE RECEPTACLE

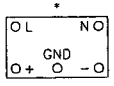


DC POWER SUPPLY
* – DC VOLTAGE RATING

## COLOR CODE CHART FOR 18 AWG BELDEN CABLES
## 12 COND. NO. 8466 AND 19 COND. NO. 8619

| | | |
|---|---|---|
| BLACK | BLK | 1st |
| WHITE | WHT | 2nd |
| RED | RED | 3rd |
| GREEN | GRN | 4th |
| ORANGE | ORN | 5th |
| BLUE | BLU | 6th |
| WHITE/BLACK | WHT/BLK | 7th |
| RED/BLACK | RED/BLK | 8th |
| GREEN/BLACK | GRN/BLK | 9th |
| ORANGE/BLACK | ORN/BLK | 10th |
| BLUE/BLACK | BLU/BLK | 11th |
| BLACK/WHITE | BLK/WHT | 12th |
| RED/WHITE | RED/WHT | 13th |
| GREEN/WHITE | GRN/WHT | 14th |
| BLUE/WHITE | BLU/WHT | 15th |
| BLACK/RED | BLK/RED | 16th |
| WHITE/RED | WHT/RED | 17th |
| ORANGE/RED | ORN/RED | 18th |
| BLUE/RED | BLU/RED | 19th |

## WIRE SIZES

(CIRCUIT WIRING SHALL BE RATED IN ACCORDANCE WITH THE MAXIMUM PERMITTED AMPERE RATING/SETTING OF THE OVERCURRENT PROTECTION DEVICE. N.EC. 210-3)

120VAC / 20A POWER CIRCUIT – MIN. #12 AWG.
120VAC / 15A AND BELOW – MIN. #14 AWG.

24VDC / 20A POWER CIRCUIT – MIN. #12 AWG.
24VDC / 15A AND BELOW – MIN. #16 AWG.
24VDC I/O & SIGNAL CIRCUIT – MIN. #18 AWG.

4–20mADC I/O SIGNAL CIRCUIT – MIN. #18 AWG.

## ABBREVIATIONS

| | |
|---|---|
| A/R | AS REQUIRED |
| AC COM | NEUTRAL |
| AFF | ABOVE FINISHED FLOOR |
| AI | ANALOG INPUT |
| ANL COM | ANALOG COMMON |
| AO | ANALOG OUTPUT |
| AWG | AMERICAN WIRE GAUGE |
| BLK | BLACK |
| BLU | BLUE |
| CAP | CENTRAL ARIZONA PROJECT |
| CLR | CLEAR |
| CR | CONTROL RELAY |
| DC COM | DC COMMON |
| DC+ | DC POSITIVE POTENTIAL |
| DI | DISCRETE INPUT |
| DO | DISCRETE OUTPUT |
| DS | DOOR SWITCH |
| FOM | FIBER OPTIC MODEM |
| FOT | FIBER OPTIC TRANSCEIVER |
| GND | GROUND |
| GRN | GREEN |
| I/O | INPUT/OUTPUT |
| L | LINE |
| N | NEUTRAL |
| NC | NORMALLY CLOSED |
| NO | NORMALLY OPEN |
| NP | NAMEPLATE |
| OIT | OPERATOR INTERFACE TERMINAL |
| ORN | ORANGE |
| PDB | POWER DISTRIBUTION BLOCK |
| PLC | PROGRAMMABLE LOGIC CONTROLLER |
| PP | FIBER OPTIC PATCH PANEL |
| PS | POWER SUPPLY |
| REC | RECEPTACLE |
| RES | RESERVOIR |
| RIO | REMOTE INPUT/OUTPUT |
| RTU | REMOTE TELEMETRY UNIT |
| SLC | SMALL LOGIC CONTROLLER |
| SP | SPACE |
| SS | SURGE SUPPRESSOR |
| TB | TERMINAL BLOCK |
| UPS | UNINTERRUPTIBLE POWER SUPPLY |
| WHT | WHITE |
| WTR | WATER TREATMENT PLANT |
| WWTP | WASTE WATER TREATMENT PLANT |

## LINETYPE LEGEND

- FIELD WIRING
- INTERNAL PANEL WIRING
- RADIO COMMUNICATION LINK
- FO — FIBER OPTIC CABLE
- FOP — FIBER OPTIC PATCH CABLE
- EN — ETHERNET CAT5 CABLE
- DH+ — DATA HIGHWAY PLUS
- RIO — REMOTE INPUT OUTPUT
- AREA DIVIDER
- EQUIPMENT
- PATCH PANEL

DLT&V
SYSTEMS ENGINEERING
4545 E. PARADISE MILL RD. #100
PHOENIX, AZ 85044 (602) 256-4658

Expires 3/31/11

NOTES

REVISIONS

| REV. | BY | DATE | DESCRIPTION |
|---|---|---|---|
| | | | |
| | | | |
| | | | |
| | | | |

CASA GRANDE WATER SYSTEM
SCADA PHASE II – WELL #26

ARIZONA WATER COMPANY

STANDARD SYMBOLS AND ABBREVIATIONS

| | |
|---|---|
| DRAWN BY: MAB | PROJECT NO. 1219.01.027 |
| DESIGNED BY: MAB | SUBMITTAL DATE: SEPT 2008 |
| CHECKED BY: BA | DRAWING NUMBER EC3 |

DWG FILE: 1219.01.101_EC3.dwg 11:20am PLOTTED: Sep 30, 2008 stewis

# CASA GRANDE WATER SYSTEM
# SCADA DESIGN – PHASE II
# WELL NO. 26 RTU DESIGN
# ISA TABLE AND COMMON LEGENDS SHEET

## ISA INSTRUMENT IDENTIFICATION TABLE

| FIRST LETTERS | | | SUCCEEDING LETTERS | | |
|---|---|---|---|---|---|
| MEASURED OR INITIATING VARIABLE | | MODIFIER | READOUT OR PASSIVE FUNCTION | OUTPUT FUNCTION | MODIFIER |
| A | ANALYZER | | ALARM | | AUTO |
| B | BURNER, COMBUSTION | | | | |
| C | CONDUCTIVITY | | | CONTROL | CLOSED |
| D | DENSITY | DIFFERENTIAL | | | |
| E | VOLTAGE | | ELEMENT | | |
| F | FLOW | RATIO | | | |
| G | GAUGE | | GLASS, VIEWING DEVICE | | |
| H | HAND | | | | HIGH |
| I | CURRENT | | INDICATE | | |
| J | POWER | SCAN | | | |
| K | TIME, TIME SCHED. | TIME RATE OF CHANGE | | CONTROL STATION | |
| L | LEVEL | | LIGHT | | LOW |
| M | MOTION | | | | MIDDLE |
| N | INTRUSION | | | | NORMAL |
| O | TORQUE | | ORIFICE, RESTRICTION | | OPEN |
| P | PRESSURE | | POINT CONNECTION | | STOP. |
| Q | QUANTITY | INTEGRATE, TOTALIZE | | | |
| R | RADIATION | | RECORD, OR PRINT | | REMOTE |
| S | SPEED, FREQUENCY | SAFETY | | SWITCH | START |
| T | TEMPERATURE | | | TRANSMIT | |
| U | MULTIVARIABLE | | MULTIFUNCTION | MULTIFUNCTION | MULTIFUNCTION |
| V | VIBRATION | | | VALVE, LOUVER | |
| W | WEIGHT | | WELL | | |
| X | MOTOR | X–AXIS | UNCLASSIFIED | UNCLASSIFED | UNCLASSIFED |
| Y | EVENT, STATE, OR PRESENCE | Y–AXIS | | RELAY, COMPUTE, CONVERT | |
| Z | POSITION | Z–AXIS | | DRIVER, ACTUATOR, FINAL CONTROL ELEMENT | |

### FIELD WIRES TAG LEGEND

DEVICE NAME/TBXX–00

- TERMINAL NO.
- TERMINAL STRIP NO.
- FIELD DEVICE TAG NO.

### PANEL POWER WIRES TAG LEGEND

TBXX–03/TBXX–03

- TO TERMINAL NO.
- TO TERMINAL STRIP NO.
- FROM TERMINAL NO.
- FROM TERMINAL STRIP NO.

### PANEL I/O WIRES TAG LEGEND

O:#.2/TBXX–03

- INPUT POINT NO.
- TERMINAL STRIP NO.
- CHANNEL #
- SLOT #
- O=OUTPUT I=INPUT

### COLOR CODE CHART FOR 22 AWG BELDEN PAIRED CABLE NO. 8761

| | | |
|---|---|---|
| BLACK | BLK | 1st |
| CLEAR | CLR | 2nd |

### PANEL WIRING IDENTIFICATION

BLACK – 120VAC LINE
WHITE – 120VAC NEUTRAL
GREEN – GROUND
ORANGE – DC POSITIVE
BLUE – DC COMMON

DLT&V
SYSTEMS ENGINEERING
3560 N. CENTRAL AVE, STE. 1900
PHOENIX, AZ 85012 (602) 264-4558

Registered Professional Engineer (Electrical)
APPLICANT NO.
37390
MELINDA TAM
Date Signed 9-29-08
ARIZONA, U.S.A.
Expires 3/31/11

NOTES

REVISIONS

| REV. | BY | DATE | DESCRIPTION |
|---|---|---|---|
| | | | |
| | | | |
| | | | |
| | | | |

CASA GRANDE WATER SYSTEM
SCADA PHASE II – WELL #26

ARIZONA WATER COMPANY

ISA TABLE AND COMMON LEGENDS SHEET

| DRAWN BY: | PROJECT NO. |
|---|---|
| MAB | 1219.01.027 |
| DESIGNED BY: | SUBMITTAL DATE: |
| MAB | SEPT 2008 |
| CHECKED BY: | DRAWING NUMBER |
| BA | EC4 |

DWG FILE: 1219.01.101_EC4.dwg 11:20am PLOTTED: Sep 30, 2008 stewis

| QTY | ITEM # | MANUFACTURER | PART NUMBER | DESCRIPTION |
|---|---|---|---|---|
| 1 | 100 | MODICON | 171CCC96030 | M1E PROCESSOR ADAPTER, ETHERNET AND I/O BUS PORTS, WEB PAGE ENABLED, IEC |
| 2 | 101 | MODICON | 170INT11000 | MOMENTUM INTERBUS \ I/O BUS COMMUNICATIONS ADAPTER |
| 1 | 102 | MODICON | 170ADI35000 | 24V DC - 32 PT. INPUT MODULE BASE |
| 1 | 103 | MODICON | 170ADO34000 | 24V DC / 0.5A - 16 PT. OUTPUT MODULE BASE, 0.5 A OUTPUT |
| 1 | 104 | MODICON | 170AAI03000 | MOMENTUM SERIES I/O BASE, ANALOG 8CH DIFFERENTIAL INPUT MODULE BASE |
| 1 | 105 | MODICON | 172JNN21032 | MOMENTUM SERIES OPTION ADAPTER W/ GENERAL PURPOSE SERIAL COMMUNICATION PORT, RS-232 OR RS-485 SELECTABLE |
| 1 | 106 | MODICON | XBT GT5330 | EXTERNAL DISPLAY WITH 10.4" COLOR TFT,VGA RESOLUTION (640X480 PIXELS), 24V POWER |
| 1 | 107 | WEIDMULLER | IE-SW8-ECO | INDUSTRIAL 8-PORT ETHERNET SWITCH, 10/100 Mbps, UNMANAGED |
| 2 | 108 | MODICON | 170MCI00700 | INTERBUS CABLE |
| 1 | 110 | BELDEN | 8267 | CABLE, COAXIAL, RG-213 (OR EQUAL) WITH APPROPRIATE CONNECTORS, (LENGTH AS REQUIRED) |
| 1 | 111 | MDS | iNET-II-IP | ETHERNET REMOTE RADIO TRANSCEIVER, SPREAD SPECTRUM, W/ REMOTE DIAGNOSTICS |
| 3 | 112 | MODICON | 170XTS00100 | CONNECTOR SET, SCREW-TYPE (SET OF 3) |
| A/R | 201 | ALLEN-BRADLEY | 1492-DR6 | TERMINAL MOUNTING RAIL, HI-RISE, ALUMINUM |
| 14 | 202 | ALLEN-BRADLEY | 1492-EA35 | END ANCHOR |
| 6 | 210 | ALLEN-BRADLEY | 1492-GM35 | TERMINAL BLOCK, GROUP MARKING CARRIER |
| 18 | 215 | ALLEN-BRADLEY | 1492-J4 | TERMINAL BLOCK, SINGLE CIRCUIT, 600V, GRAY |
| 1 | 218 | ALLEN-BRADLEY | 1492-JD3 | TERMINAL BLOCK, DOUBLE LEVEL |
| 67 | 219 | ALLEN-BRADLEY | 1492-JD3P | TERMINAL BLOCK, DOUBLE LEVEL W/ PLUGGABLE TOP LEVEL |
| 4 | 221 | ALLEN-BRADLEY | 1492-JG4 | TERMINAL BLOCK, SINGLE CIRCUIT, GROUNDING |
| 53 | 223 | ALLEN-BRADLEY | 1492-FPK224 | FUSE PLUG INSERT W/ BFI, 10-36VAC/DC WORKING VOLTAGE, 10A MAX @ 250V. PROVIDE FAST BLOW FUSES AS REQUIRED |
| 8 | 225 | ALLEN-BRADLEY | 1492-DPL | DISCONNECT PLUG FOR 1492-JD3 P AND 1492-JD3 |
| 2 | 230 | WEIDMULLER | 9926251001 | CIRCUIT BREAKER, 1A |
| 4 | 231 | WEIDMULLER | 9926251002 | CIRCUIT BREAKER, 2A |
| 2 | 232 | WEIDMULLER | 9926251003 | CIRCUIT BREAKER, 3A |
| 1 | 233 | WEIDMULLER | 9926251010 | CIRCUIT BREAKER, 10A |
| 3 | 234 | WEIDMULLER | 9926251015 | CIRCUIT BREAKER, 15A |
| 1 | 235 | WEIDMULLER | 9926251020 | CIRCUIT BREAKER, 20A |
| 53 | 282 | ANY | ANY | 250V, 5mmX20mm FAST BLOW GLASS FUSES (SIZE AS INDICATED ON DRAWING) |
| 1 | 304 | HOFFMAN | A72H3724FS3PT | ENCLOSURE, FREE STANDING, TYPE 4/12 W/3-POINT LATCH, 72"X37"X24" |
| 1 | 305 | HOFFMAN | A72P36F1 | SUBPANEL, WHITE PAINT, 60"X32" |
| 1 | 306 | HOFFMAN | A72SP36F4 | SWING-OUT PANEL, HALF PANEL, 30.88" X 33.81" |
| 1 | 313 | HOFFMAN | ALF16D18R | 18" FLOURESCENT LIGHTING PACKAGE W/DOOR SWITCH, 115VAC |
| 1 | 316 | HOFFMAN | A-TEMNO | TEMPERATURE CONTROL SWITCH (THERMOSTAT), N.O. CONTACTS |
| A/R | 359 | BELDEN | 7929A | CABLE, ETHERNET, 4 PR, 24 AWG, CAT 5E |
| 1 | 377 | ANY | ANY | GROUNDING BAR |
| 1 | 378 | CUSTOM | CUSTOM | CUSTOM SHELF SUPPLIED AND INSTALLED BY PANEL FABRICATOR |
| A/R | 379 | PANDUIT | F2X4LG6 C2LG6 | 2 X 4 PLASTIC WIRING DUCT TYPE "E" W/COVER STYLE "C" |
| A/R | 380 | PANDUIT | F3X4LG6 C3LG6 | 3 X 4 PLASTIC WIRING DUCT TYPE "E" W/COVER STYLE "C" |
| 1 | 398 | HUBBELL | HBL5362I | DUPLEX RECEPTACLE, IVORY, 125V/20A, W/BOX AND BRUSHED ALUMINUM COVER (HUBBELL P.N.# A8) |
| 1 | 399 | HUBBELL | HBL5361I | SIMPLEX RECEPTACLE, IVORY, 125V/20A, W/BOX AND BRUSHED ALUMINUM COVER (HUBBELL P.N.# A7) |
| 1 | 400 | HUBBELL | HBL3810R | SIMPLEX RECEPTACLE, RED, 125V/20A, W/BOX AND BRUSHED ALUMINUM COVER (HUBBELL P.N.# A7) |
| 2 | 405 | WEIDMULLER | 8708670000 (CP SNT 250W 24V 10A) | POWER SUPPLY, 24VDC, 250W, 10A, W/ STATUS RELAY |
| 1 | 406 | WEIDMULLER | 8710620000 (CP DM 10) | DIODE MODULE, 10A PER INPUT, 40VDC MAX |
| 1 | 408 | IDEC | RH2B-UL-AC120V | RELAY, 120VAC COIL, DPDT W/ INDICATOR |
| 1 | 421 | IDEC | SH2B-05C | RELAY SOCKET, DIN RAIL MOUNT, FINGERSAFE |
| 1 | 450 | MTL SURGE TECHNOLOGIES | MA15/D/1/SI | 120/240 VAC, 15A, SURGE SUPPRESSOR AND FILTER |
| 8 | 451 | WEIDMULLER | 8448920000 | SURGE SUPPRESSOR, 24VDC, 2 WIRE LOOP PROTECTION (MCZ OVP) W/ END CAP PART #8389030000 |
| 8 | 452 | WEIDMULLER | 8389030000 | END CAP FOR 24VDC SURGE SUPPRESSOR (MCZ OVP) |
| 16 | 455 | ALLEN-BRADLEY | 700-HLT1Z24 | TERMINAL BLOCK RELAY, 24VDC, 6A CONTACTS, SPDT W/ LED |
| 1 | 505 | HOFFMAN | CR29-0416-G068 | AIR CONDITIONER, 120 VAC, 4000 BTU/HR, W/OUTDOOR ENCLOSURE PACKAGE |
| 1 | 703 | APC | SUA750, AP9610 | UPS, 115 VAC, 750 VA W/ RELAY I/O SMARTSLOT CARD OPTION, MINIMUM 30 MIN. RUNTIME OF COMPLETE PLC OPERATIONS POWER |
| 1 | 811 | POLYPHASER | IS-50NX-C2 | BROADBAND COAXIAL SURGE PROTECTOR, FLANGE MOUNT, 125-1000MHZ |
| 2 | 853 | TIMES MICROWAVE SYSTEMS | EZ-900-NMC | N-MALE CONNECTOR |

DLT&V
SYSTEMS ENGINEERING
3550 N. CENTRAL AVE., STE. 1900
PHOENIX, AZ 85012 (602) 266-4558

Registered Professional Engineer
ELECTRICAL
NO. 37390
MELINDA TAM
Date Signed 9-22-08
ARIZONA, U.S.A.

Expires 3/31/11

NOTES

REVISIONS

| REV. | BY | DATE | DESCRIPTION |
|---|---|---|---|
| | | | |
| | | | |
| | | | |
| | | | |

CASA GRANDE WATER SYSTEM
SCADA PHASE II – WELL #26

ARIZONA WATER COMPANY

BILL OF MATERIALS

| | |
|---|---|
| DRAWN BY: MAB | PROJECT NO. 1219.01.027 |
| DESIGNED BY: MAB | SUBMITTAL DATE: SEPT 2008 |
| CHECKED BY: BA | DRAWING NUMBER EC5 |

XWG FILE: 1219.01.101_EC5.dwg 11:21am PLOTTED: Sep 30, 2008 slewis

## NOTES:

1. BILL OF MATERIALS IS ON DRAWING EC5.
2. REFER TO DRAWING EC7 FOR PLC INTERIOR LAYOUT.
3. FURNISH ADDITIONAL NAMEPLATES AS REQUIRED BY UL OR BY OTHER APPLICABLE CODES.
4. MOMOUNT UPS MINIMUM 6" ABOVE GRADE LEVEL. PANEL FABRICATOR SHALL SUPPLY AND INSTALL CUSTOM SUPPORT HARDWARE IN ENCLOSURE AS REQUIRED.

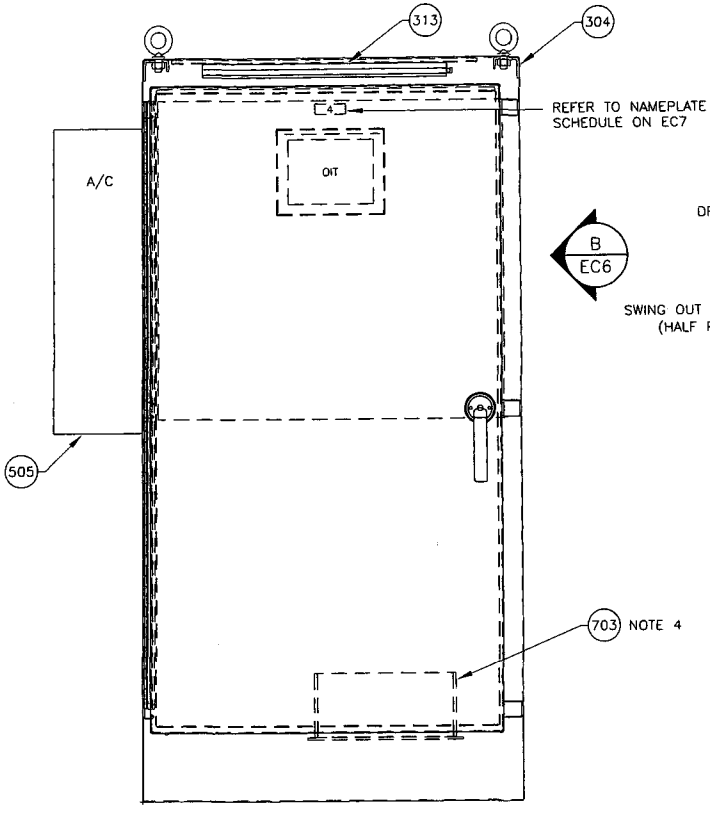


A ~ RTU ENCLOSURE, FRONT
1"=1'-0"

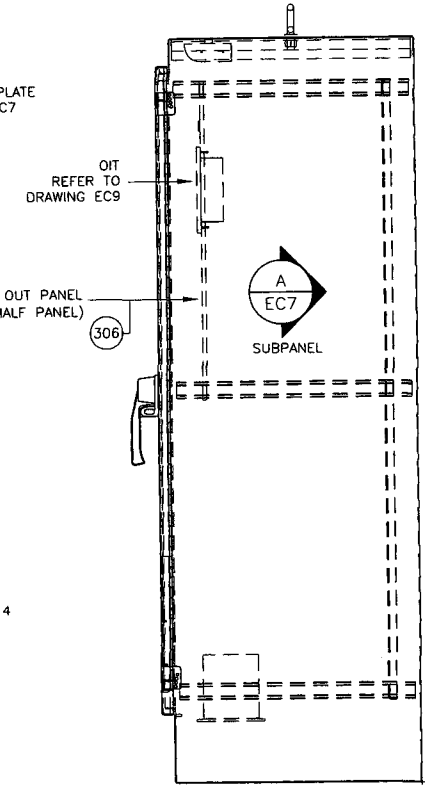


B ~ RTU ENCLOSURE, SIDE
1"=1'-0"

DLT&V SYSTEMS ENGINEERING
3550 N. CENTRAL AVE, STE. 1900
PHOENIX, AZ 85012 (602) 265-4688

Registered Professional Engineer (Electrical) CERTIFICATE NO 37390 MELINDA TAM Date Signed 9-29-08 ARIZONA, U.S.A.
Expires 3/31/11

NOTES

REVISIONS

| REV. | BY | DATE | DESCRIPTION |
|---|---|---|---|
| | | | |
| | | | |
| | | | |
| | | | |

CASA GRANDE WATER SYSTEM
SCADA PHASE II – WELL #26

ARIZONA WATER COMPANY

RTU ENCLOSURE LAYOUT

| | |
|---|---|
| DRAWN BY: MAB | PROJECT NO. 1219.01.027 |
| DESIGNED BY: MAB | SUBMITTAL DATE: SEPT 2008 |
| CHECKED BY: BA | DRAWING NUMBER EC6 |

DWG FILE: 1219.01.101_EC6.dwg 11:22am PLOTTED: Sep 30, 2008 stevis

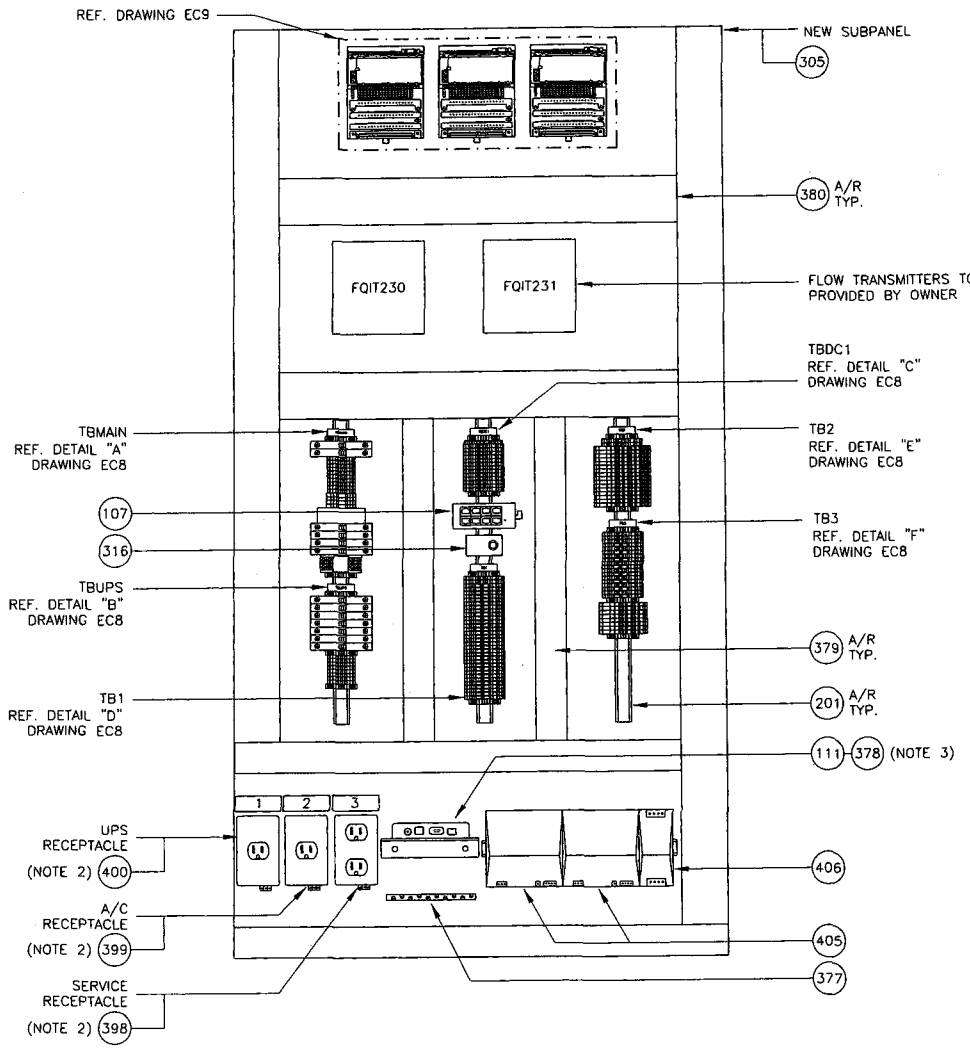


A EC6 SUBPANEL LAYOUT
1-1/2"=1'-0"

## NOTES:

1. BILL OF MATERIALS IS ON DRAWING EC5.
2. NAMEPLATE SHALL BE 3/32" THICK LAMINATED PHENOLIC TYPE BLACK WITH WHITE LETTERS. SEE BILL OF MATERIALS ON DRAWING EC5 AND NAMEPLATE SCHEDULE (DET B) ON THIS SHEET FOR ADDITIONAL INFORMATION.
3. MOUNT RADIO ON CUSTOM SHELF PROVIDED AND INSTALLED BY PANEL FABRICATOR. REFER TO DRAWING EC9 AND BILL OF MATERIALS ON EC5 FOR MORE INFORMATION.

**NAMEPLATE SCHEDULE (NOTE 2)**

| NP | HxWxLTR | FIRST LINE | SECOND LINE | LOCATION |
|---|---|---|---|---|
| 1 | 1" x 3" x 1/4" | UPS RECEPTACLE | ONLY | CENTERED ABOVE UPS RECEPTACLE |
| 2 | 1" x 3" x 1/4" | A/C RECEPTACLE | ONLY | CENTERED ABOVE A/C RECEPTACLE |
| 3 | 1" x 3" x 1/4" | SERVICE RECEPTACLE | ONLY | CENTERED ABOVE SERVICE RECEPTACLE |
| 4 | 1" x 3" x 1/4" | OIT | | CENTERED ABOVE OIT |

B ~ NAMEPLATE SCHEDULE


DLT&V
SYSTEMS ENGINEERING
3550 N. CENTRAL AVE. STE. 1900
PHOENIX, AZ 85012 (602) 265-4658


Registered Professional Engineer (Electrical) APPLICANT No. 37390 MELINDA TAM Date Signed 9-25-08 ARIZONA, U.S.A.

Expires 3/31/11

NOTES

REVISIONS

| REV. | BY | DATE | DESCRIPTION |
|---|---|---|---|
| | | | |
| | | | |
| | | | |
| | | | |

CASA GRANDE WATER SYSTEM
SCADA PHASE II ~ WELL #26

ARIZONA WATER COMPANY

RTU SUBPANEL LAYOUT

| | |
|---|---|
| DRAWN BY: MAB | PROJECT NO. 1219.01.027 |
| DESIGNED BY: MAB | SUBMITTAL DATE: SEPT 2008 |
| CHECKED BY: BA | DRAWING NUMBER EC7 |


DWG FILE: 1219.01.101_EC7.dwg 11:22am PLOTTED: Sep 30, 2008 alewis

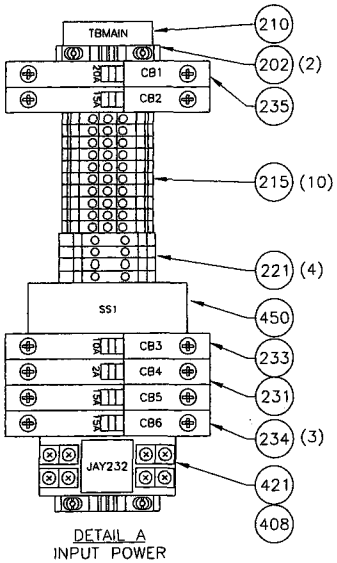


DETAIL A
INPUT POWER
TBMAIN

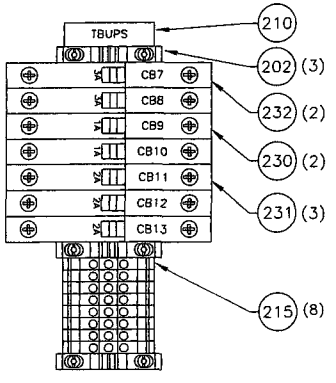


DETAIL B
PANEL POWER
TBUPS

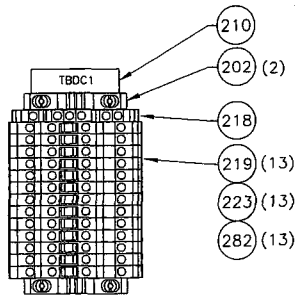


DETAIL C
24VDC POWER
DISTRIBUTION
TBDC1

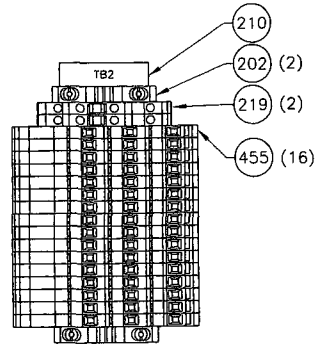


DETAIL E
DISCRETE OUTPUT
TB2

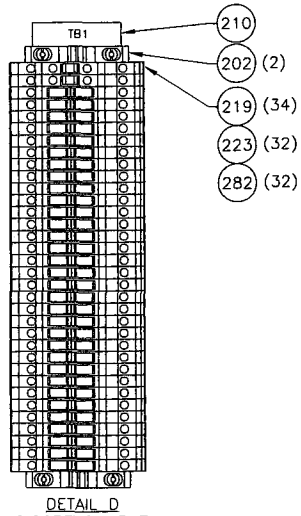


DETAIL D
DISCRETE INPUT
TB1

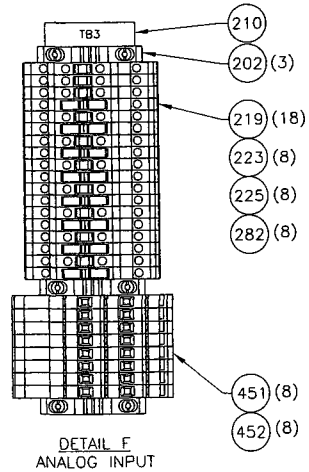


DETAIL F
ANALOG INPUT
TB3

## NOTES:

1. PROVIDE BUS BAR STYLE OR INSULATED COMB STYLE JUMPERS WHERE 2 OR MORE TERMINALS IN THE SAME TB ARE COMMONED TOGETHER. DO NOT USE DISCRETE WIRE JUMPERS.
2. BILL OF MATERIALS IS ON DRAWING EC5.
3. PANEL BUILDER TO SUPPLY AND INSTALL ALL NECESSARY AND APPROPRIATE ACCESSORIES INCLUDING TERMINAL NUMBERS, JUMPERS AND END BARRIERS.

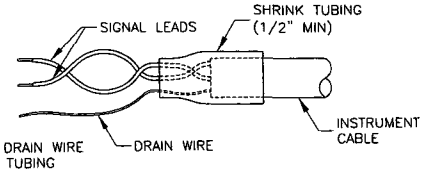


NOTE:
WRAP UNUSED DRAIN WIRE
UNDER SHRINK TUBING

DETAIL G
INSTRUMENT CABLE
TERMINATION

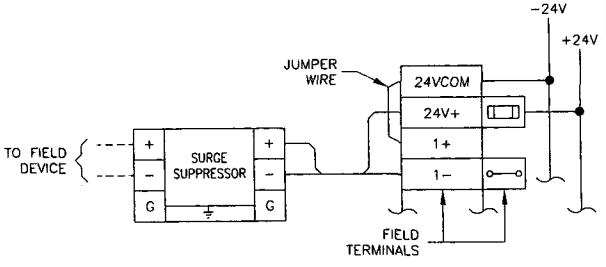


2-WIRE

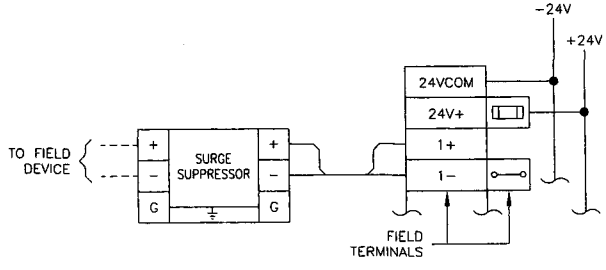


4-WIRE

DETAIL H
ANALOG INPUT TERMINALS
2 & 4-WIRE TYPICAL CONNECTIONS

DLT&V
SYSTEMS ENGINEERING
3550 N. CENTRAL AVE, STE. 1900
PHOENIX, AZ 85012 (602) 266-4558

Registered Professional Engineer (Electrical)
CERTIFICATE NO.
37390
MELINDA
TAM
Date Signed 9-25-08
ARIZONA, U.S.A.

Expires 3/31/11

NOTES

| REVISIONS | | | |
|---|---|---|---|
| REV. | BY | DATE | DESCRIPTION |
| | | | |
| | | | |
| | | | |
| | | | |
| | | | |

CASA GRANDE WATER SYSTEM
SCADA PHASE II - WELL #26

ARIZONA WATER COMPANY

TERMINAL BLOCK DETAILS

| DRAWN BY: | PROJECT NO. |
|---|---|
| MAB | 1219.01.027 |
| DESIGNED BY: | SUBMITTAL DATE: |
| MAB | SEPT 2008 |
| CHECKED BY: | DRAWING NUMBER |
| BA | EC8 |

DWG FILE: 1219.01.101_EC8.dwg 11:22am PLOTTED: Sep 30, 2008 stevis

## NOTES:

1. BILL OF MATERIALS IS ON DRAWING EC5.
2. ANTENNA, ANTENNA MAST, GROUNDING KIT AND CABLE PROVIDED AND INSTALLED BY OTHERS.

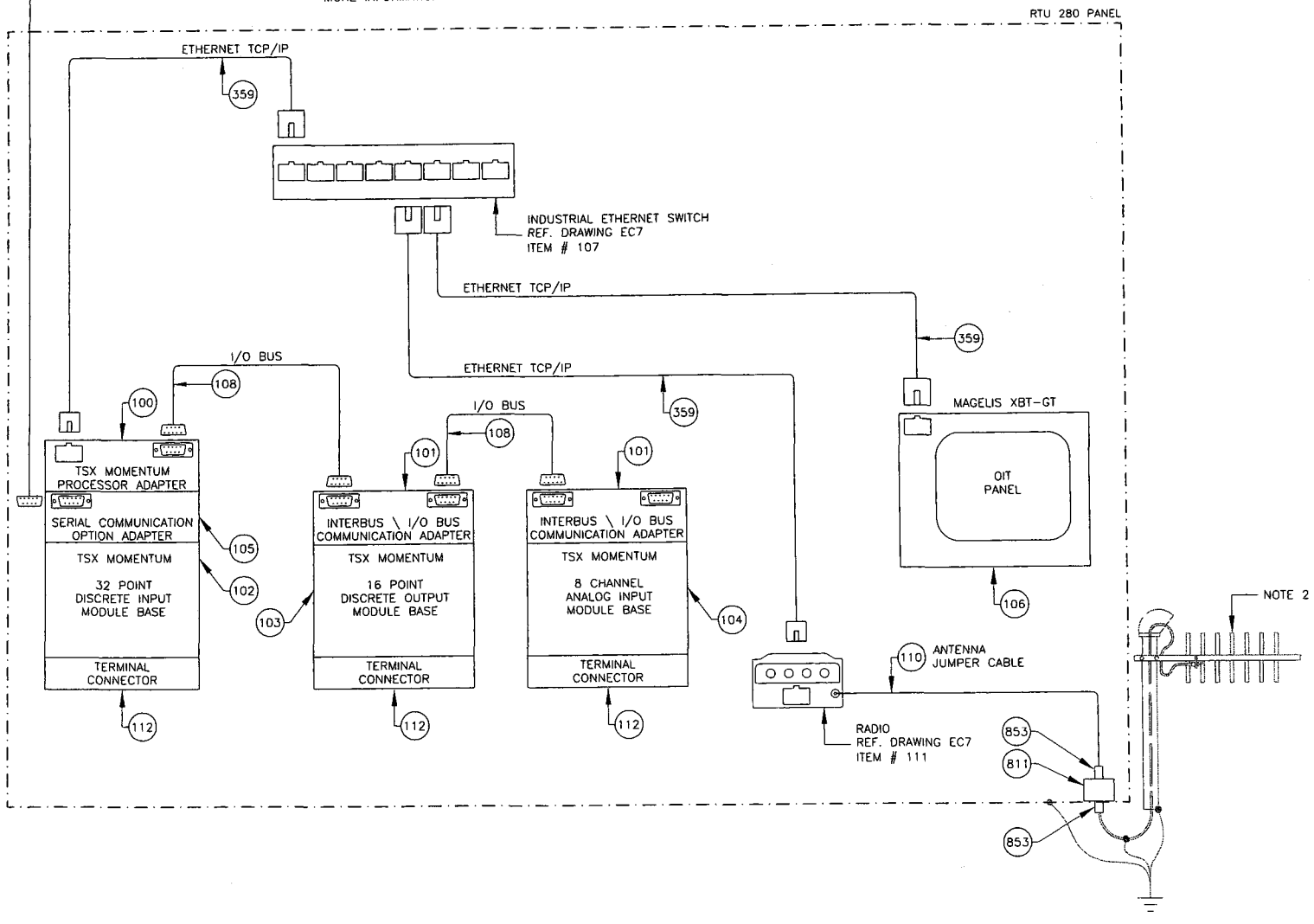


DLT&V
SYSTEMS ENGINEERING
3560 N. CENTRAL AVE., STE. 1900
PHOENIX, AZ 85012 (602) 266-4658

Registered Professional Engineer (Electrical)
No. 37390
MELINDA TAM
Date Signed 9.27.08
ARIZONA, U.S.A.
Expires 3/31/11

NOTES

| REVISIONS | | | |
|---|---|---|---|
| REV. | BY | DATE | DESCRIPTION |
| | | | |
| | | | |
| | | | |
| | | | |
| | | | |

CASA GRANDE WATER SYSTEM
SCADA PHASE II – WELL #26

ARIZONA WATER COMPANY

COMMUNICATIONS
SYSTEM ARCHITECTURE
DIAGRAM

| DRAWN BY: | PROJECT NO. |
|---|---|
| MAB | 1219.01.027 |
| DESIGNED BY: | SUBMITTAL DATE: |
| MAB | SEPT 2008 |
| CHECKED BY: | DRAWING NUMBER |
| BA | EC9 |

DWG FILE: 1219.01.101_EC9.dwg 11:23am PLOTTED: Sep 30, 2008 steves

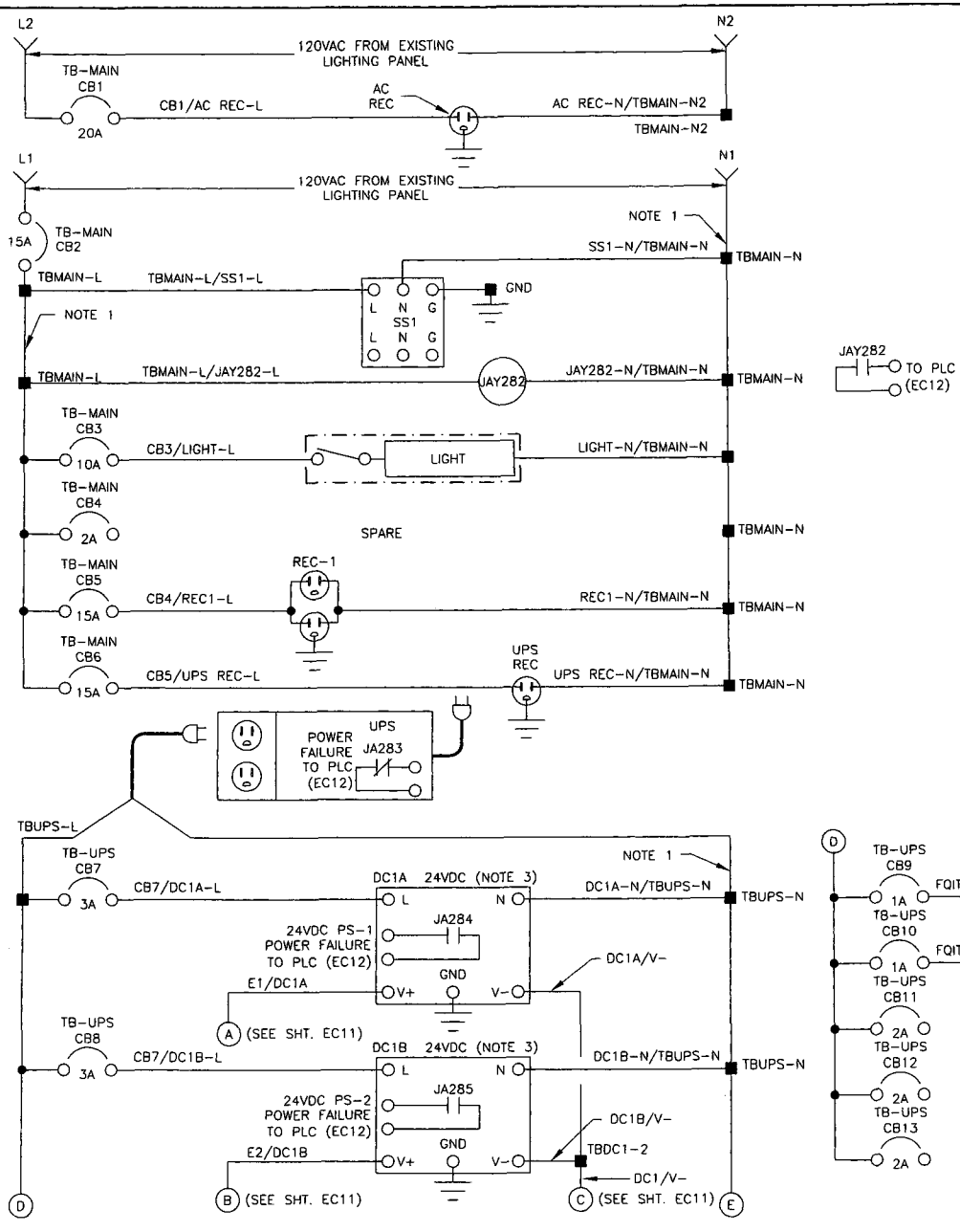


## NOTES:

1. PROVIDE BUS BAR STYLE OR INSULATED COMB STYLE JUMPERS WHERE 2 OR MORE TERMINALS IN THE SAME TB ARE COMMONED TOGETHER. DO NOT USE DISCRETE WIRE JUMPERS.
2. BILL OF MATERIALS IS ON DRAWING EC5.
3. ADJUST VOLTAGE OUTPUT SETTING ON DC1B TO BE 1.0 VOLT LESS THAN DC1A.

# 120VAC POWER DISTRIBUTION

DLT&V SYSTEMS ENGINEERING
3550 N. CENTRAL AVE, STE. 1900
PHOENIX, AZ 85012 (602) 266-4656

Registered Professional Engineer (Electrical)
CERTIFICATE NO.
37390
MELINDA TAM
Date Signed 9-25-08
ARIZONA, U.S.A.
Expires 3/31/11

NOTES

REVISIONS

| REV. | BY | DATE | DESCRIPTION |
|---|---|---|---|
| | | | |
| | | | |
| | | | |
| | | | |

CASA GRANDE WATER SYSTEM
SCADA PHASE II - WELL #26

ARIZONA WATER COMPANY

120VAC POWER DISTRIBUTION SCHEMATIC

| DRAWN BY: | PROJECT NO. |
|---|---|
| MAB | 1219.01.027 |
| DESIGNED BY: | SUBMITTAL DATE: |
| MAB | SEPT 2008 |
| CHECKED BY: | DRAWING NUMBER |
| BA | EC10 |

DWG FILE: 1219.01.101_EC10.dwg 11:23am PLOTTED: Sep. 30, 2008 stewis

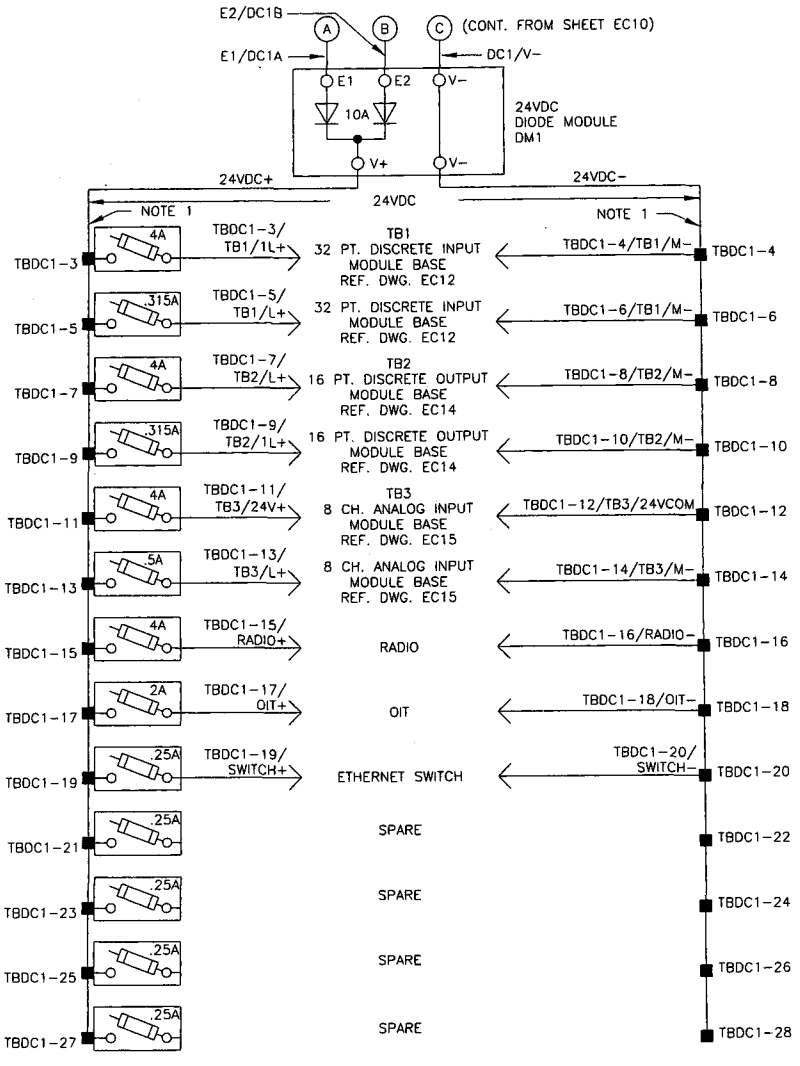


## 24VDC POWER DISTRIBUTION

## NOTES:

1. PROVIDE BUS BAR STYLE OR INSULATED COMB STYLE JUMPERS WHERE 2 OR MORE TERMINALS IN THE SAME TB ARE COMMONED TOGETHER. DO NOT USE DISCRETE WIRE JUMPERS.
2. BILL OF MATERIALS IS ON DRAWING EC5.
3. THE PROPER FUSE SIZE ON ANY FUTURE EQUIPMENT INSTALLATIONS UTILIZING SPARE CIRCUITS WILL BE THE RESPONSIBILITY OF THE OWNER.


DLT&V
SYSTEMS ENGINEERING
3550 N. CENTRAL AVE. STE. 1900
PHOENIX, AZ 85012 (602) 266-6558


Registered Professional Engineer (Electrical) CERTIFICATE NO. 37390 MELINDA TAM Date Signed 9.26.08 ARIZONA, U.S.A.

Expires 3/31/11

NOTES

REVISIONS

| REV. | BY | DATE | DESCRIPTION |
|---|---|---|---|
| | | | |
| | | | |
| | | | |
| | | | |

CASA GRANDE WATER SYSTEM
SCADA PHASE II - WELL #26

ARIZONA WATER COMPANY

24VDC POWER DISTRIBUTION SCHEMATIC

| DRAWN BY: | PROJECT NO. |
|---|---|
| MAB | 1219.01.027 |
| DESIGNED BY: | SUBMITTAL DATE: |
| MAB | SEPT 2008 |
| CHECKED BY: | DRAWING NUMBER |
| BA | EC11 |


DWG FILE: 1219.01.101_EC11.dwg 11:23am PLOTTED: Sep 30, 2008 steve

## NOTES:

1. WIRE MODULES AND SIZE FUSES PER MANUFACTURER'S REQUIREMENTS.
2. BUS OR INSULATED COMB STYLE JUMPER.

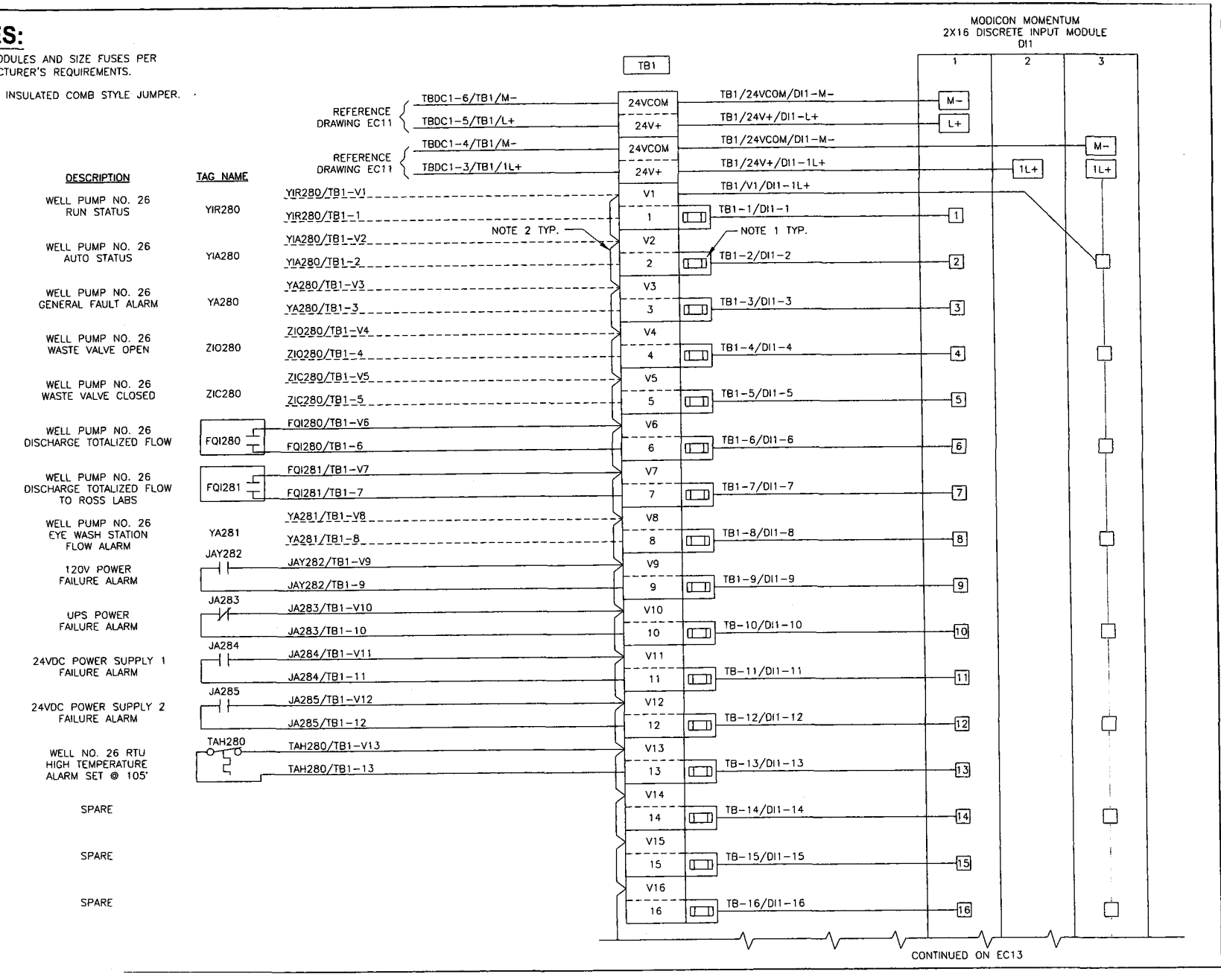


DLT&V SYSTEMS ENGINEERING
3550 N. CENTRAL AVE., STE. 1900
PHOENIX, AZ 85012 (602) 266-4858

Registered Professional Engineer (Electrical)
CERTIFICATE NO.
37390
MELINDA TAM
Date Signed 9-25-08
ARIZONA, U.S.A.
Expires 3/31/11

NOTES

| REVISIONS | | | |
|---|---|---|---|
| REV. | BY | DATE | DESCRIPTION |
| | | | |
| | | | |
| | | | |
| | | | |

CASA GRANDE WATER SYSTEM
SCADA PHASE II - WELL #26

ARIZONA WATER COMPANY

DISCRETE INPUT MODULE BASE WIRING DIAGRAM - SHEET 1

| DRAWN BY: | PROJECT NO. |
|---|---|
| MAB | 1219.01.027 |
| DESIGNED BY: | SUBMITTAL DATE: |
| MAB | SEPT 2008 |
| CHECKED BY: | DRAWING NUMBER |
| BA | EC12 |

DWG FILE: 1219.01.101_EC12.dwg 11:23am PLOTTED: Sep 30, 2008 steve

## NOTES:

1. WIRE MODULES AND SIZE FUSES PER MANUFACTURER'S REQUIREMENTS.
2. BUS OR INSULATED COMB STYLE JUMPER.

| DESCRIPTION | TAG NAME |
|---|---|
| SPARE | |
| SPARE | |
| SPARE | |
| SPARE | |
| SPARE | |
| SPARE | |
| SPARE | |
| SPARE | |
| SPARE | |
| SPARE | |
| SPARE | |
| SPARE | |
| SPARE | |
| SPARE | |
| SPARE | |
| SPARE | |

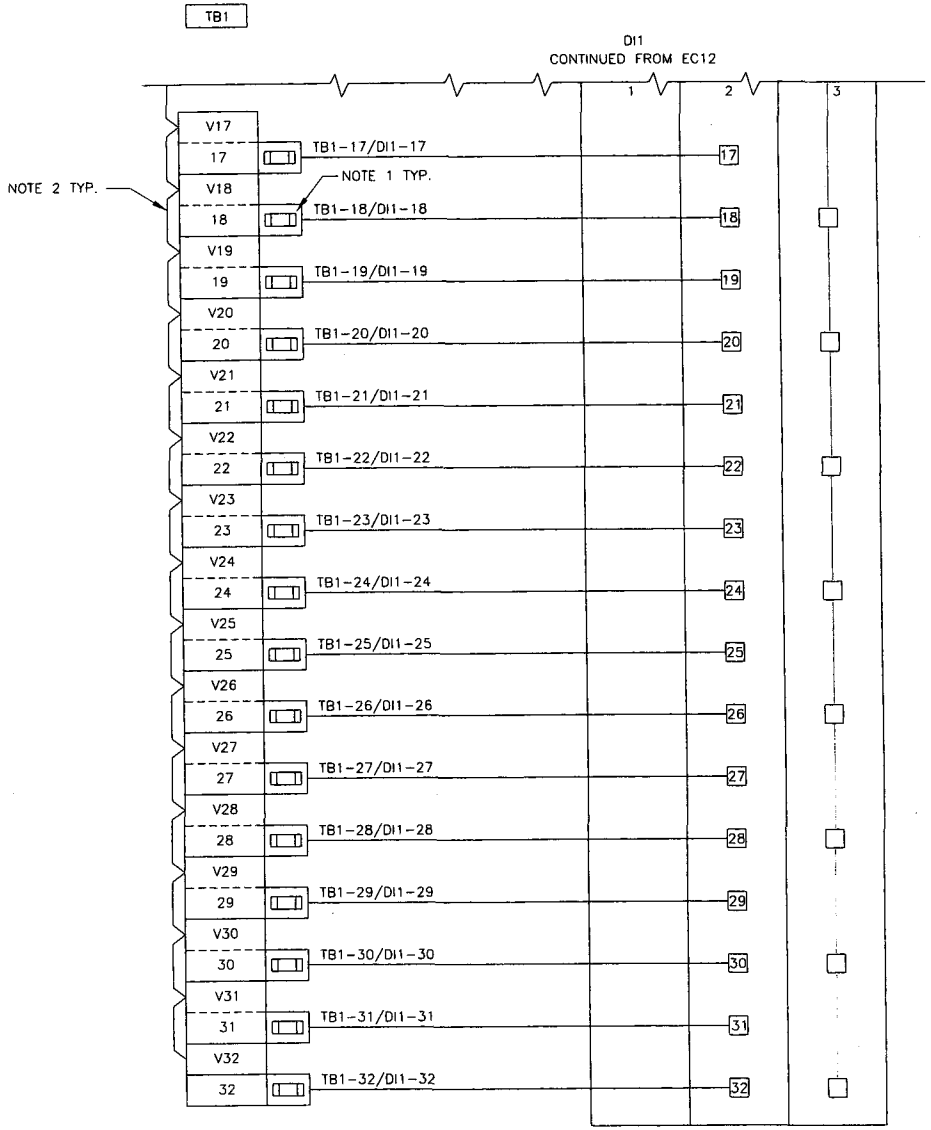


DLT&V
SYSTEMS ENGINEERING
3550 N. CENTRAL AVE, STE. 1900
PHOENIX, AZ 85012 (602) 266-4658

Registered Professional Engineer (Electrical)
No. 37390
MELINDA TAM
Date Signed 9.29.08
ARIZONA, U.S.A.
Expires 3/31/11

NOTES

| REVISIONS | | | |
|---|---|---|---|
| REV. | BY | DATE | DESCRIPTION |
| | | | |
| | | | |
| | | | |
| | | | |

CASA GRANDE WATER SYSTEM
SCADA PHASE II – WELL #26

ARIZONA WATER COMPANY

DISCRETE INPUT
MODULE BASE
WIRING DIAGRAM – SHEET 2

| DRAWN BY: | PROJECT NO. |
|---|---|
| MAB | 1219.01.027 |
| DESIGNED BY: | SUBMITTAL DATE: |
| MAB | SEPT 2008 |
| CHECKED BY: | DRAWING NUMBER |
| BA | EC13 |

DWG FILE: 1219.01.101_EC13.dwg 11:23am PLOTTED: Sep 30, 2008 steve

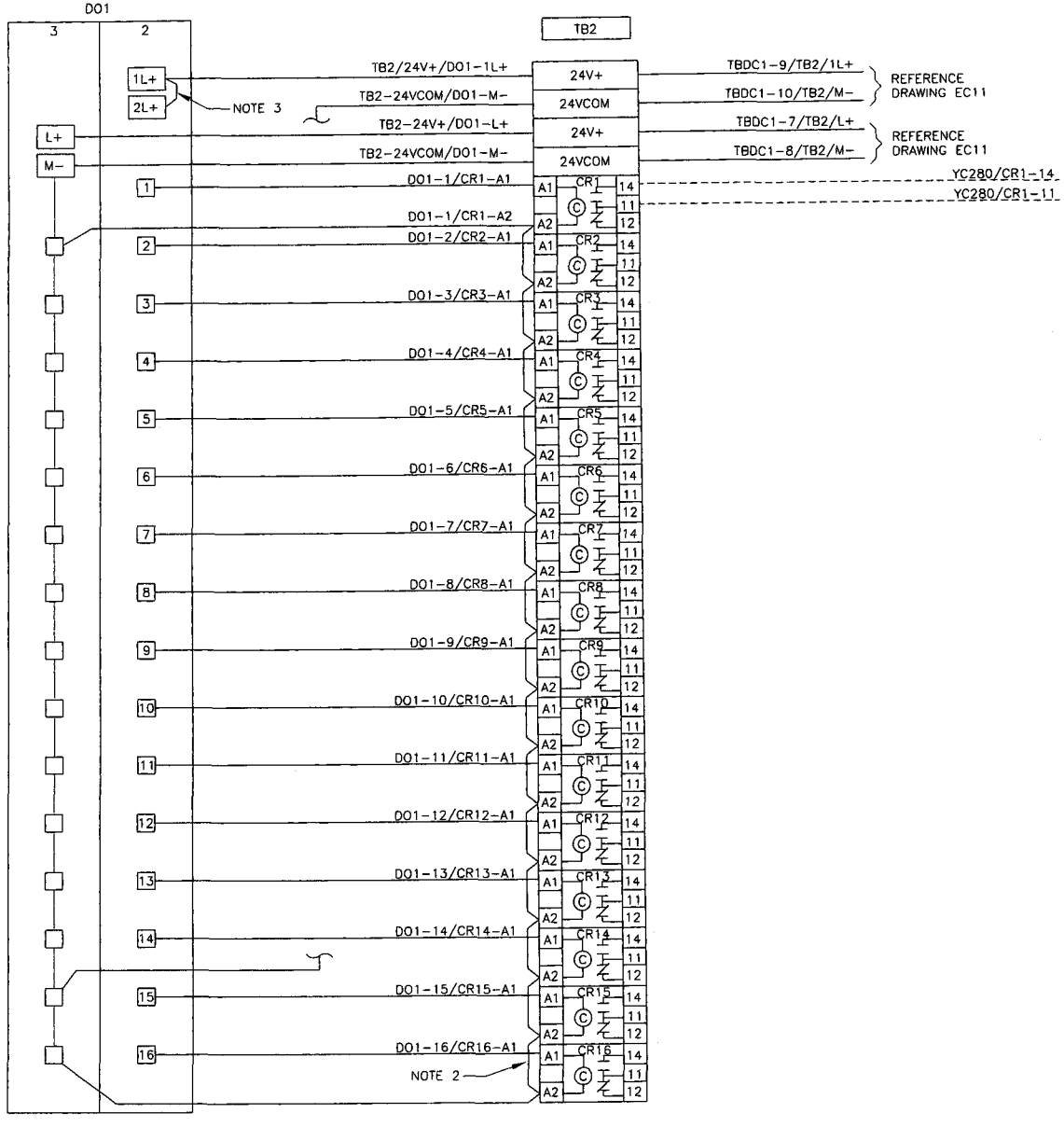


## NOTES:

1. WIRE MODULES PER MANUFACTURER'S REQUIREMENTS.
2. BUS OR INSULATED COMB STYLE JUMPER.
3. JUMPER WIRES PROVIDED BY PANEL MANUFACTURER.

| TAG NAME | DESCRIPTION |
|---|---|
| YC280 | WELL PUMP NO. 26 START/STOP COMMAND |
| | SPARE |
| | SPARE |
| | SPARE |
| | SPARE |
| | SPARE |
| | SPARE |
| | SPARE |
| | SPARE |
| | SPARE |
| | SPARE |
| | SPARE |
| | SPARE |
| | SPARE |
| | SPARE |
| | SPARE |

DLT&V SYSTEMS ENGINEERING
3550 N. CENTRAL AVE., STE. 1900
PHOENIX, AZ 85012 (602) 266-4558

Registered Professional Engineer (Electrical) CERTIFICATE NO. 37390 MELINDA TAM Date Signed 9-29-08 ARIZONA, U.S.A.

Expires 3/31/11

NOTES

| REVISIONS | | | |
|---|---|---|---|
| REV. | BY | DATE | DESCRIPTION |
| | | | |
| | | | |
| | | | |
| | | | |

CASA GRANDE WATER SYSTEM
SCADA PHASE II - WELL #26

ARIZONA WATER COMPANY

DISCRETE OUTPUT MODULE BASE WIRING DIAGRAM

| DRAWN BY: | PROJECT NO. |
|---|---|
| MAB | 1219.01.027 |
| DESIGNED BY: MAB | SUBMITTAL DATE: SEPT 2008 |
| CHECKED BY: BA | DRAWING NUMBER: EC14 |

IWG FILE: 1219.01.101_EC14.dwg 11:23am PLOTTED: Sep 30, 2008 jlewis

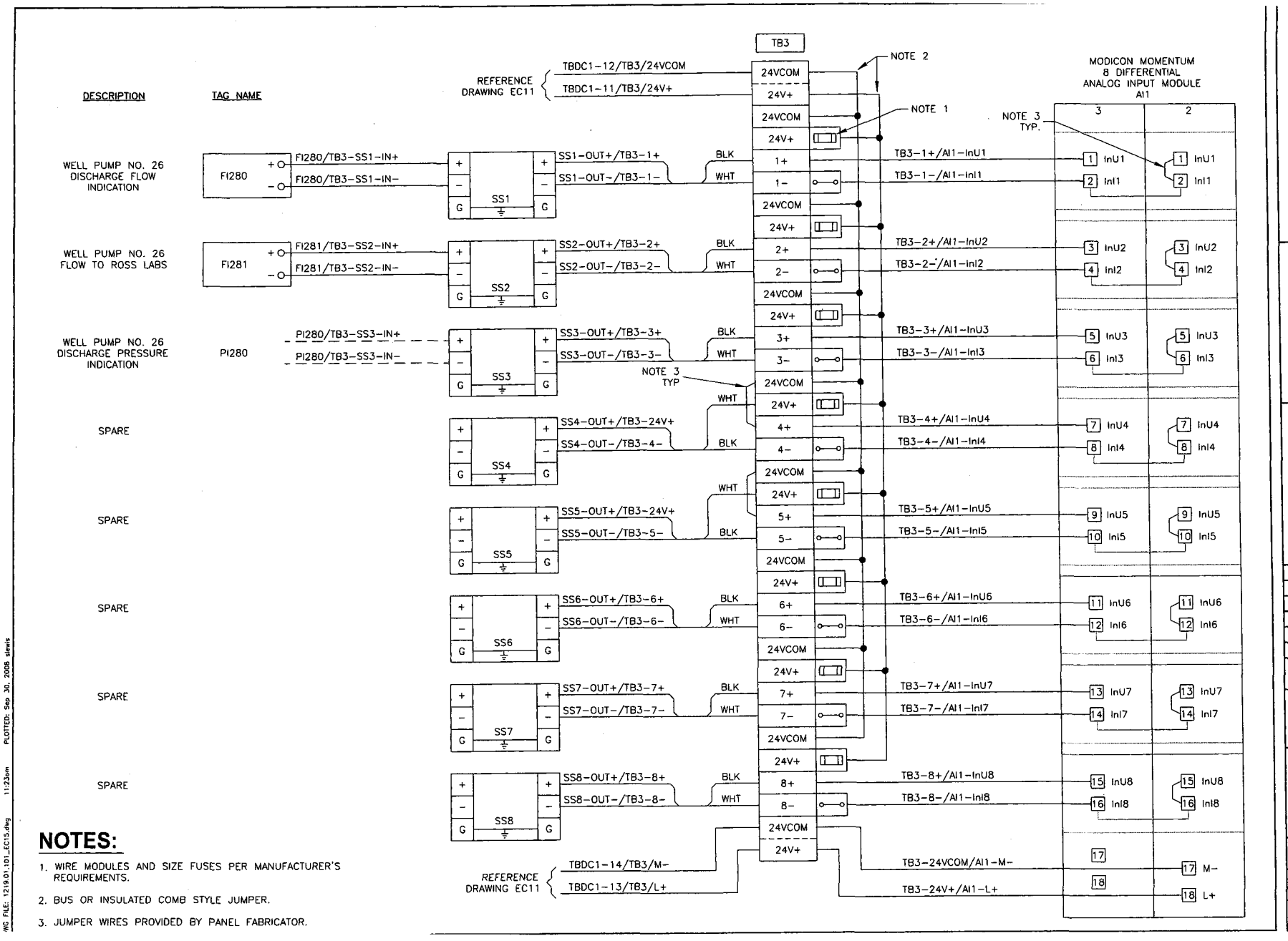


## NOTES:

1. WIRE MODULES AND SIZE FUSES PER MANUFACTURER'S REQUIREMENTS.
2. BUS OR INSULATED COMB STYLE JUMPER.
3. JUMPER WIRES PROVIDED BY PANEL FABRICATOR.

DLT&V SYSTEMS ENGINEERING
3550 N. CENTRAL AVE., STE. 1900
PHOENIX, AZ 85012 (602) 266-4658

Registered Professional Engineer (Electrical)
CERTIFICATE NO. 37390
MELINDA TAM
Date Signed 9-29-08
ARIZONA, U. S. A.
Expires 3/31/11

NOTES

REVISIONS

| REV. | BY | DATE | DESCRIPTION |
|---|---|---|---|
| | | | |

CASA GRANDE WATER SYSTEM
SCADA PHASE II - WELL #26

ARIZONA WATER COMPANY

ANALOG INPUT MODULE BASE WIRING DIAGRAM

| | |
|---|---|
| DRAWN BY: MAB | PROJECT NO. 1219.01.027 |
| DESIGNED BY: MAB | SUBMITTAL DATE: SEPT 2008 |
| CHECKED BY: BA | DRAWING NUMBER EC15 |

WG FILE: 1219.01.101_EC15.dwg 11:23am PLOTTED: Sep 30, 2008 slewis

# CASA GRANDE WATER SYSTEM
# SCADA DESIGN - PHASE II
# WELL NO. 30 - RTU 290 DESIGN

DLT&V
SYSTEMS ENGINEERING
3300 N. CENTRAL AVE, STE. 1900
PHOENIX, AZ 85012 (602) 266-4658

Registered Professional Engineer (Electrical)
CERTIFICATE NO.
37390
MELINDA
TAM
Date Signed 9-29-08
ARIZONA, U.S.A.

Expires 3/31/11

NOTES

REVISIONS

| REV. | BY | DATE | DESCRIPTION |
|---|---|---|---|
| | | | |
| | | | |
| | | | |
| | | | |

CASA GRANDE WATER SYSTEM
SCADA PHASE II – WELL #30

ARIZONA WATER COMPANY

COVER SHEET

| | |
|---|---|
| DRAWN BY: MAB | PROJECT NO. 1219.01.027 |
| DESIGNED BY: MAB | SUBMITTAL DATE: SEPT 2008 |
| CHECKED BY: BA | DRAWING NUMBER EC1 |

DWG FILE: 1219.01-101_EC1.dwg 11:24am PLOTTED: Sep 30, 2008 steels

CASA GRANDE WATER SYSTEM
SCADA DESIGN – PHASE II
WELL NO. 30 RTU DESIGN
PROJECT SHEET INDEX

| Drawing No. | Drawing Title |
|---|---|
| EC1 | COVER SHEET |
| EC2 | PROJECT SHEET INDEX |
| EC3 | STANDARD SYMBOLS AND ABBREVIATIONS |
| EC4 | ISA TABLE AND COMMON LEGENDS SHEET |
| EC5 | BILL OF MATERIALS |
| EC6 | RTU ENCLOSURE LAYOUT |
| EC7 | RTU SUBPANEL LAYOUT |
| EC8 | TERMINAL BLOCK DETAILS |
| EC9 | COMMUNICATIONS SYSTEM ARCHITECTURE DIAGRAM |
| EC10 | 120VAC POWER DISTRIBUTION SCHEMATIC |
| EC11 | 24VDC POWER DISTRIBUTION SCHEMATIC |
| EC12 | DISCRETE INPUT MODULE BASE WIRING DIAGRAM - SHEET 1 |
| EC13 | DISCRETE INPUT MODULE BASE WIRING DIAGRAM - SHEET 2 |
| EC14 | DISCRETE OUTPUT MODULE BASE WIRING DIAGRAM |
| EC15 | ANALOG INPUT MODULE BASE WIRING DIAGRAM |

DLT&V
SYSTEMS ENGINEERING
3550 N. CENTRAL AVE, STE. 1900
PHOENIX, AZ 85012 (602) 266-4658

Registered Professional Engineer (Electrical)
CERTIFICATE NO. 37390
MELINDA TAM
Date Signed 9.29.08
ARIZONA, U.S.A.
Expires 3/31/11

NOTES

REVISIONS

| REV. | BY | DATE | DESCRIPTION |
|---|---|---|---|
| | | | |
| | | | |
| | | | |
| | | | |

CASA GRANDE WATER SYSTEM
SCADA PHASE II – WELL #30

ARIZONA WATER COMPANY

PROJECT SHEET INDEX

| | |
|---|---|
| DRAWN BY: MAB | PROJECT NO. 1219.01.027 |
| DESIGNED BY: MAB | SUBMITTAL DATE: SEPT 2008 |
| CHECKED BY: BA | DRAWING NUMBER EC2 |

DWG FILE: 1219.01.101_EC2.dwg 11:24am PLOTTED: Sep 30, 2008 slewis

# CASA GRANDE WATER SYSTEM
# SCADA DESIGN – PHASE II
# WELL NO. 30 RTU DESIGN
# STANDARD SYMBOLS AND ABBREVIATIONS

## SCHEMATIC/WIRING DIAGRAM SYMBOLS

CIRCUIT BREAKER
*A – AMP RATING

FUSE WITH PULLER
*A – AMP RATING

SWITCH
NORMALLY OPEN

SELECTOR SWITCH
2 POSITION, NORMALLY OPEN

SELECTOR SWITCH
3 POSITION, NORMALLY OPEN

TEMPERATURE SWITCH
NORMALLY OPEN

TERMINAL BLOCK
* – TB IDENTIFICATION

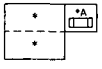


TERMINAL BLOCK W/ FUSE
PLUG AND FUSE
* – TB IDENTIFICATION
*A – AMPS

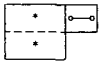


TERMINAL BLOCK W/
DISCONNECT KNIFE
* – TB IDENTIFICATION

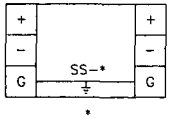


SURGE SUPPRESSOR FOR
FLOATING SIGNAL CIRCUITS
* – SS NUMBER IDENTIFICATION

SURGE SUPPRESSOR FOR
POWER SUPPLY
* – SS NUMBER IDENTIFICATION

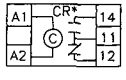


CONTROL RELAY
* – CR NUMBER IDENTIFICATION
# – TERMINAL NUMBER

## SCHEMATIC/WIRING DIAGRAM SYMBOLS

EARTH GROUND



TERMINAL BLOCK

DUPLEX RECEPTACLE

SINGLE RECEPTACLE

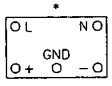


DC POWER SUPPLY
* – DC VOLTAGE RATING

## COLOR CODE CHART FOR 18 AWG BELDEN CABLES
## 12 COND. NO. 8466 AND 19 COND. NO. 8619

| | | |
|---|---|---|
| BLACK | BLK | 1st |
| WHITE | WHT | 2nd |
| RED | RED | 3rd |
| GREEN | GRN | 4th |
| ORANGE | ORN | 5th |
| BLUE | BLU | 6th |
| WHITE/BLACK | WHT/BLK | 7th |
| RED/BLACK | RED/BLK | 8th |
| GREEN/BLACK | GRN/BLK | 9th |
| ORANGE/BLACK | ORN/BLK | 10th |
| BLUE/BLACK | BLU/BLK | 11th |
| BLACK/WHITE | BLK/WHT | 12th |
| RED/WHITE | RED/WHT | 13th |
| GREEN/WHITE | GRN/WHT | 14th |
| BLUE/WHITE | BLU/WHT | 15th |
| BLACK/RED | BLK/RED | 16th |
| WHITE/RED | WHT/RED | 17th |
| ORANGE/RED | ORN/RED | 18th |
| BLUE/RED | BLU/RED | 19th |

## WIRE SIZES

(CIRCUIT WIRING SHALL BE RATED IN ACCORDANCE WITH THE MAXIMUM PERMITTED AMPERE RATING/SETTING OF THE OVERCURRENT PROTECTION DEVICE. N.EC. 210–3)

120VAC / 20A POWER CIRCUIT – MIN. #12 AWG.
120VAC / 15A AND BELOW – MIN. #14 AWG.

24VDC / 20A POWER CIRCUIT – MIN. #12 AWG.
24VDC / 15A AND BELOW – MIN. #16 AWG.
24VDC I/O & SIGNAL CIRCUIT – MIN. #18 AWG.

4–20mADC I/O SIGNAL CIRCUIT – MIN. #18 AWG.

## ABBREVIATIONS

| | |
|---|---|
| A/R | AS REQUIRED |
| AC COM | NEUTRAL |
| AFF | ABOVE FINISHED FLOOR |
| AI | ANALOG INPUT |
| ANL COM | ANALOG COMMON |
| AO | ANALOG OUTPUT |
| AWG | AMERICAN WIRE GAUGE |
| BLK | BLACK |
| BLU | BLUE |
| CAP | CENTRAL ARIZONA PROJECT |
| CLR | CLEAR |
| CR | CONTROL RELAY |
| DC COM | DC COMMON |
| DC+ | DC POSITIVE POTENTIAL |
| DI | DISCRETE INPUT |
| DO | DISCRETE OUTPUT |
| DS | DOOR SWITCH |
| FOM | FIBER OPTIC MODEM |
| FOT | FIBER OPTIC TRANSCEIVER |
| GND | GROUND |
| GRN | GREEN |
| I/O | INPUT/OUTPUT |
| L | LINE |
| N | NEUTRAL |
| NC | NORMALLY CLOSED |
| NO | NORMALLY OPEN |
| NP | NAMEPLATE |
| OIT | OPERATOR INTERFACE TERMINAL |
| ORN | ORANGE |
| PDB | POWER DISTRIBUTION BLOCK |
| PLC | PROGRAMMABLE LOGIC CONTROLLER |
| PP | FIBER OPTIC PATCH PANEL |
| PS | POWER SUPPLY |
| REC | RECEPTACLE |
| RES | RESERVOIR |
| RIO | REMOTE INPUT/OUTPUT |
| RTU | REMOTE TELEMETRY UNIT |
| SLC | SMALL LOGIC CONTROLLER |
| SP | SPACE |
| SS | SURGE SUPPRESSOR |
| TB | TERMINAL BLOCK |
| UPS | UNINTERRUPTIBLE POWER SUPPLY |
| WHT | WHITE |
| WTR | WATER TREATMENT PLANT |
| WWTP | WASTE WATER TREATMENT PLANT |

## LINETYPE LEGEND

| | |
|---|---|
| ---------- | FIELD WIRING |
| ———— | INTERNAL PANEL WIRING |
| ———— | RADIO COMMUNICATION LINK |
| —— FO —— | FIBER OPTIC CABLE |
| —— FOP —— | FIBER OPTIC PATCH CABLE |
| —— EN —— | ETHERNET CAT5 CABLE |
| —— DH+ —— | DATA HIGHWAY PLUS |
| —— RIO —— | REMOTE INPUT OUTPUT |
| — · — · — | AREA DIVIDER |
| ———— | EQUIPMENT |
| — — — — | PATCH PANEL |

DLT&V SYSTEMS ENGINEERING
4550 N. 12TH STREET, 85014
PHOENIX, AZ 85014 (602) 266-4458

Registered Professional Engineer (Electrical)
CERTIFICATE NO.
37390
MELINDA TAM
Date Signed 9-29-08
ARIZONA, U.S.A.
Expires 3/31/11

NOTES

REVISIONS

| REV. | BY | DATE | DESCRIPTION |
|---|---|---|---|
| | | | |
| | | | |
| | | | |
| | | | |

CASA GRANDE WATER SYSTEM
SCADA PHASE II – WELL #30

ARIZONA WATER COMPANY

STANDARD SYMBOLS AND ABBREVIATIONS

| | |
|---|---|
| DRAWN BY: MAB | PROJECT NO. 1219.01.027 |
| DESIGNED BY: MAB | SUBMITTAL DATE: SEPT 2008 |
| CHECKED BY: BA | DRAWING NUMBER EC3 |

DWG FILE: 1219.01.101_EC3.dwg 11:24am PLOTTED: Sep 30, 2008 steveb

# CASA GRANDE WATER SYSTEM
# SCADA DESIGN – PHASE II
# WELL NO. 30 RTU DESIGN
# ISA TABLE AND COMMON LEGENDS SHEET

## ISA INSTRUMENT IDENTIFICATION TABLE

| FIRST LETTERS | | | SUCCEEDING LETTERS | | |
|---|---|---|---|---|---|
| MEASURED OR INITIATING VARIABLE | | MODIFIER | READOUT OR PASSIVE FUNCTION | OUTPUT FUNCTION | MODIFIER |
| A | ANALYZER | | ALARM | | AUTO |
| B | BURNER, COMBUSTION | | | | |
| C | CONDUCTIVITY | | | CONTROL | CLOSED |
| D | DENSITY | DIFFERENTIAL | | | |
| E | VOLTAGE | | ELEMENT | | |
| F | FLOW | RATIO | | | |
| G | GAUGE | | GLASS, VIEWING DEVICE | | |
| H | HAND | | | | HIGH |
| I | CURRENT | | INDICATE | | |
| J | POWER | SCAN | | | |
| K | TIME, TIME SCHED. | TIME RATE OF CHANGE | | CONTROL STATION | |
| L | LEVEL | | LIGHT | | LOW |
| M | MOTION | | | | MIDDLE |
| N | INTRUSION | | | | NORMAL |
| O | TORQUE | | ORIFICE, RESTRICTION | | OPEN |
| P | PRESSURE | | POINT CONNECTION | | STOP |
| Q | QUANTITY | INTEGRATE, TOTALIZE | | | |
| R | RADIATION | | RECORD, OR PRINT | | REMOTE |
| S | SPEED, FREQUENCY | SAFETY | | SWITCH | START |
| T | TEMPERATURE | | | TRANSMIT | |
| U | MULTIVARIABLE | | MULTIFUNCTION | MULTIFUNCTION | MULTIFUNCTION |
| V | VIBRATION | | | VALVE, LOUVER | |
| W | WEIGHT | | WELL | | |
| X | MOTOR | X-AXIS | UNCLASSIFIED | UNCLASSIFED | UNCLASSIFED |
| Y | EVENT, STATE, OR PRESENCE | Y-AXIS | | RELAY, COMPUTE, CONVERT | |
| Z | POSITION | Z-AXIS | | DRIVER, ACTUATOR, FINAL CONTROL ELEMENT | |

## FIELD WIRES TAG LEGEND

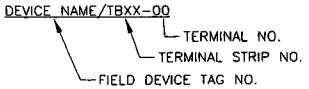


## PANEL POWER WIRES TAG LEGEND

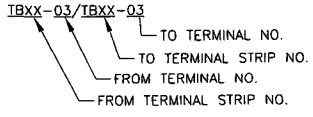


## PANEL I/O WIRES TAG LEGEND

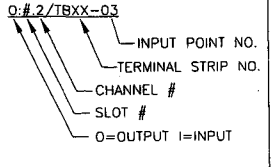


## COLOR CODE CHART FOR 22 AWG BELDEN PAIRED CABLE NO. 8761

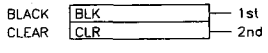


## PANEL WIRING IDENTIFICATION

BLACK – 120VAC LINE
WHITE – 120VAC NEUTRAL
GREEN – GROUND
ORANGE – DC POSITIVE
BLUE – DC COMMON

DLT&V
SYSTEMS ENGINEERING
3550 N. CENTRAL AVE, STE. 1900
PHOENIX, AZ 85012 (602) 266-4658

Registered Professional Engineer (Electrical)
CERTIFICATE NO.
37390
MELINDA
TAM
Date Signed 9.25.08
ARIZONA U.S.A.

Expires 3/31/11

NOTES

REVISIONS

| REV. | BY | DATE | DESCRIPTION |
|---|---|---|---|
| | | | |
| | | | |
| | | | |
| | | | |

CASA GRANDE WATER SYSTEM
SCADA PHASE II – WELL #30

ARIZONA WATER COMPANY

ISA TABLE AND COMMON LEGENDS SHEET

| DRAWN BY: | PROJECT NO. |
|---|---|
| MAB | 1219.01.027 |
| DESIGNED BY: | SUBMITTAL DATE: |
| MAB | SEPT 2008 |
| CHECKED BY: | DRAWING NUMBER |
| BA | EC4 |

DWG FILE: 1219.01.101_EC4.dwg PLOTTED: Sep 30, 2008 11:24am stewis

| QTY | ITEM # | MANUFACTURER | PART NUMBER | DESCRIPTION |
|---|---|---|---|---|
| 1 | 100 | MODICON | 171CCC96030 | M1E PROCESSOR ADAPTER, ETHERNET AND I/O BUS PORTS, WEB PAGE ENABLED, IEC |
| 2 | 101 | MODICON | 170INT11000 | MOMENTUM INTERBUS \ I/O BUS COMMUNICATIONS ADAPTER |
| 1 | 102 | MODICON | 170ADI35000 | 24V DC - 32 PT. INPUT MODULE BASE |
| 1 | 103 | MODICON | 170ADO34000 | 24V DC / 0.5A - 16 PT. OUTPUT MODULE BASE, 0.5 A OUTPUT |
| 1 | 104 | MODICON | 170AAI03000 | MOMENTUM SERIES I/O BASE, ANALOG 8CH DIFFERENTIAL INPUT MODULE BASE |
| 1 | 105 | MODICON | 172JNN21032 | MOMENTUM SERIES OPTION ADAPTER W/ GENERAL PURPOSE SERIAL COMMUNICATION PORT, RS-232 OR RS-485 SELECTABLE |
| 1 | 106 | MODICON | XBT GT5330 | EXTERNAL DISPLAY WITH 10.4" COLOR TFT,VGA RESOLUTION (640X480 PIXELS), 24V POWER |
| 1 | 107 | WEIDMULLER | IE-SW8-ECO | INDUSTRIAL 8-PORT ETHERNET SWITCH, 10/100 Mbps, UNMANAGED |
| 2 | 108 | MODICON | 170MCI00700 | INTERBUS CABLE |
| 1 | 110 | BELDEN | 8267 | CABLE, COAXIAL, RG-213 (OR EQUAL) WITH APPROPRIATE CONNECTORS, (LENGTH AS REQUIRED) |
| 1 | 111 | MDS | iNET-II-IP | ETHERNET REMOTE RADIO TRANSCEIVER, SPREAD SPECTRUM, W/ REMOTE DIAGNOSTICS |
| 3 | 112 | MODICON | 170XTS00100 | CONNECTOR SET, SCREW-TYPE (SET OF 3) |
| A/R | 201 | ALLEN-BRADLEY | 1492-DR6 | TERMINAL MOUNTING RAIL, HI-RISE, ALUMINUM |
| 14 | 202 | ALLEN-BRADLEY | 1492-EA35 | END ANCHOR |
| 6 | 210 | ALLEN-BRADLEY | 1492-GM35 | TERMINAL BLOCK, GROUP MARKING CARRIER |
| 18 | 215 | ALLEN-BRADLEY | 1492-J4 | TERMINAL BLOCK, SINGLE CIRCUIT, 600V, GRAY |
| 1 | 218 | ALLEN-BRADLEY | 1492-JD3 | TERMINAL BLOCK, DOUBLE LEVEL |
| 67 | 219 | ALLEN-BRADLEY | 1492-JD3P | TERMINAL BLOCK, DOUBLE LEVEL W/ PLUGGABLE TOP LEVEL |
| 4 | 221 | ALLEN-BRADLEY | 1492-JG4 | TERMINAL BLOCK, SINGLE CIRCUIT, GROUNDING |
| 53 | 223 | ALLEN-BRADLEY | 1492-FPK224 | FUSE PLUG INSERT W/ BFI, 10-36VAC/DC WORKING VOLTAGE, 10A MAX @ 250V. PROVIDE FAST BLOW FUSES AS REQUIRED |
| 8 | 225 | ALLEN-BRADLEY | 1492-DPL | DISCONNECT PLUG FOR 1492-JD3 P AND 1492-JD3 |
| 2 | 230 | WEIDMULLER | 9926251001 | CIRCUIT BREAKER, 1A |
| 4 | 231 | WEIDMULLER | 9926251002 | CIRCUIT BREAKER, 2A |
| 2 | 232 | WEIDMULLER | 9926251003 | CIRCUIT BREAKER, 3A |
| 1 | 233 | WEIDMULLER | 9926251010 | CIRCUIT BREAKER, 10A |
| 3 | 234 | WEIDMULLER | 9926251015 | CIRCUIT BREAKER, 15A |
| 1 | 235 | WEIDMULLER | 9926251020 | CIRCUIT BREAKER, 20A |
| 53 | 282 | ANY | ANY | 250V, 5mmX20mm FAST BLOW GLASS FUSES (SIZE AS INDICATED ON DRAWING) |
| 1 | 306 | HOFFMAN | A72SP36F4 | SWING-OUT PANEL, HALF PANEL, 30.88" X 33.81" |
| 1 | 313 | HOFFMAN | ALF16D18R | 18" FLOURESCENT LIGHTING PACKAGE W/DOOR SWITCH, 115VAC |
| 1 | 316 | HOFFMAN | A-TEMNO | TEMPERATURE CONTROL SWITCH (THERMOSTAT), N.O. CONTACTS |
| A/R | 359 | BELDEN | 7929A | CABLE, ETHERNET, 4 PR, 24 AWG, CAT 5E |
| 1 | 377 | ANY | ANY | GROUNDING BAR |
| 1 | 378 | CUSTOM | CUSTOM | CUSTOM SHELF SUPPLIED AND INSTALLED BY PANEL FABRICATOR |
| A/R | 379 | PANDUIT | F2X4LG6 C2LG6 | 2 X 4 PLASTIC WIRING DUCT TYPE "E" W/COVER STYLE "C" |
| A/R | 380 | PANDUIT | F3X4LG6 C3LG6 | 3 X 4 PLASTIC WIRING DUCT TYPE "E" W/COVER STYLE "C" |
| 1 | 398 | HUBBELL | HBL5362I | DUPLEX RECEPTACLE, IVORY, 125V/20A, W/BOX AND BRUSHED ALUMINUM COVER (HUBBELL P.N.# A8) |
| 1 | 399 | HUBBELL | HBL5361I | SIMPLEX RECEPTACLE, IVORY, 125V/20A, W/BOX AND BRUSHED ALUMINUM COVER (HUBBELL P.N.# A7) |
| 1 | 400 | HUBBELL | HBL3810R | SIMPLEX RECEPTACLE, RED, 125V/20A, W/BOX AND BRUSHED ALUMINUM COVER (HUBBELL P.N.# A7) |
| 2 | 405 | WEIDMULLER | 8708670000 (CP SNT 250W 24V 10A) | POWER SUPPLY, 24VDC, 250W, 10A, W/ STATUS RELAY |
| 1 | 406 | WEIDMULLER | 8710620000 (CP DM 10) | DIODE MODULE, 10A PER INPUT, 40VDC MAX |
| 1 | 408 | IDEC | RH2B-UL-AC120V | RELAY, 120VAC COIL, DPDT W/ INDICATOR |
| 1 | 421 | IDEC | SH2B-05C | RELAY SOCKET, DIN RAIL MOUNT, FINGERSAFE |
| 1 | 450 | MTL SURGE TECHNOLOGIES | MA15/D/1/SI | 120/240 VAC, 15A, SURGE SUPPRESSOR AND FILTER |
| 8 | 451 | WEIDMULLER | 8448920000 | SURGE SUPPRESSOR, 24VDC, 2 WIRE LOOP PROTECTION (MCZ OVP) W/ END CAP PART #8389030000 |
| 8 | 452 | WEIDMULLER | 8389030000 | END CAP FOR 24VDC SURGE SUPPRESSOR (MCZ OVP) |
| 16 | 455 | ALLEN-BRADLEY | 700-HLT1Z24 | TERMINAL BLOCK RELAY, 24VDC, 6A CONTACTS, SPDT W/ LED |
| 1 | 505 | HOFFMAN | CR29-0416-G068 | AIR CONDITIONER, 120 VAC, 4000 BTU/HR, W/OUTDOOR ENCLOSURE PACKAGE |
| 1 | 703 | APC | SUA750, AP9610 | UPS, 115 VAC, 750 VA W/ RELAY I/O SMARTSLOT CARD OPTION, MINIMUM 30 MIN. RUNTIME OF COMPLETE PLC OPERATIONS POWER |
| 1 | 811 | POLYPHASER | IS-50NX-C2 | BROADBAND COAXIAL SURGE PROTECTOR, FLANGE MOUNT, 125-1000MHZ |
| 2 | 853 | TIMES MICROWAVE SYSTEMS | EZ-900-NMC | N-MALE CONNECTOR |

DLT&V
SYSTEMS ENGINEERING
3550 N. CENTRAL AVE, STE. 1900
PHOENIX, AZ 85012 (602) 266-4488

Registered Professional Engineer (Electrical)
CERTIFICATE NO.
37390
MELINDA TAM
Date Signed 9-25-08
ARIZONA, U.S.A.
Expires 3/31/11

NOTES

REVISIONS

| REV. | BY | DATE | DESCRIPTION |
|---|---|---|---|
| | | | |
| | | | |
| | | | |
| | | | |

CASA GRANDE WATER SYSTEM
SCADA PHASE II – WELL #30

ARIZONA WATER COMPANY

BILL OF MATERIALS

| | |
|---|---|
| DRAWN BY: MAB | PROJECT NO. 1219.01.027 |
| DESIGNED BY: MAB | SUBMITTAL DATE: SEPT 2008 |
| CHECKED BY: BA | DRAWING NUMBER EC5 |

DWG FILE: 1219.01.101_EC5.dwg 11:24am PLOTTED: Sep 30, 2008 slewis

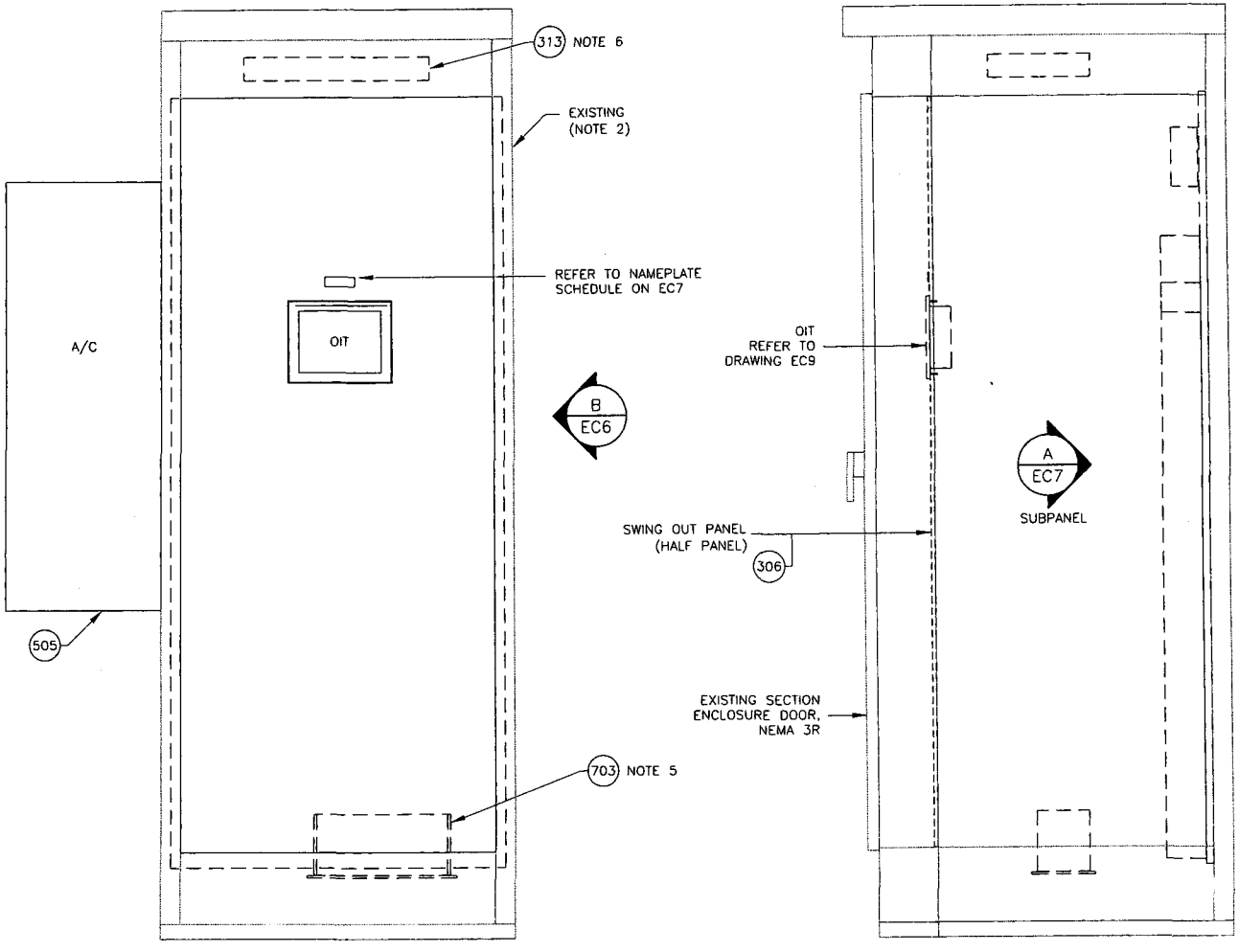


A ~ RTU ENCLOSURE, FRONT
1"=1'-0"

B ~ RTU ENCLOSURE, SIDE
1"=1'-0"

## NOTES:

1. BILL OF MATERIALS IS ON DRAWING EC5.
2. RTU CABINET IS PART OF THE EXISTING ELECTRICAL EQUIPMENT LINEUP.
3. REFER TO DRAWING EC7 FOR PLC INTERIOR LAYOUT.
4. FURNISH ADDITIONAL NAMEPLATES AS REQUIRED BY UL OR BY OTHER APPLICABLE CODES.
5. MOMOUNT UPS MINIMUM 6" ABOVE GRADE LEVEL. PANEL FABRICATOR SHALL SUPPLY AND INSTALL CUSTOM SUPPORT HARDWARE IN ENCLOSURE AS REQUIRED.
6. DOOR SWITCH ASSOCIATED WITH FLOURESCENT LIGHT FIXTURE IS SHOWN ON DRAWING EC7. REFER TO DRAWING EC10 FOR WIRING SCHEMATIC.

DLT&V
SYSTEMS ENGINEERING
3550 N. CENTRAL AVE, STE. 1900
PHOENIX, AZ 85012 (602) 266-4658

Registered Professional Engineer (Electrical)
CERTIFICATE NO.
37390
MELINDA TAM
Date Signed 9-29-08
ARIZONA, U.S.A.
Expires 3/31/11

NOTES

REVISIONS

| REV. | BY | DATE | DESCRIPTION |
|---|---|---|---|
| | | | |
| | | | |
| | | | |
| | | | |

CASA GRANDE WATER SYSTEM
SCADA PHASE II – WELL #30

ARIZONA WATER COMPANY

RTU ENCLOSURE LAYOUT

| | |
|---|---|
| DRAWN BY: MAB | PROJECT NO. 1219.01.027 |
| DESIGNED BY: MAB | SUBMITTAL DATE: SEPT 2008 |
| CHECKED BY: BA | DRAWING NUMBER EC6 |

DWG FILE: 1219.01.101_EC6.dwg 11:25am PLOTTED: Sep 30, 2008 slewis

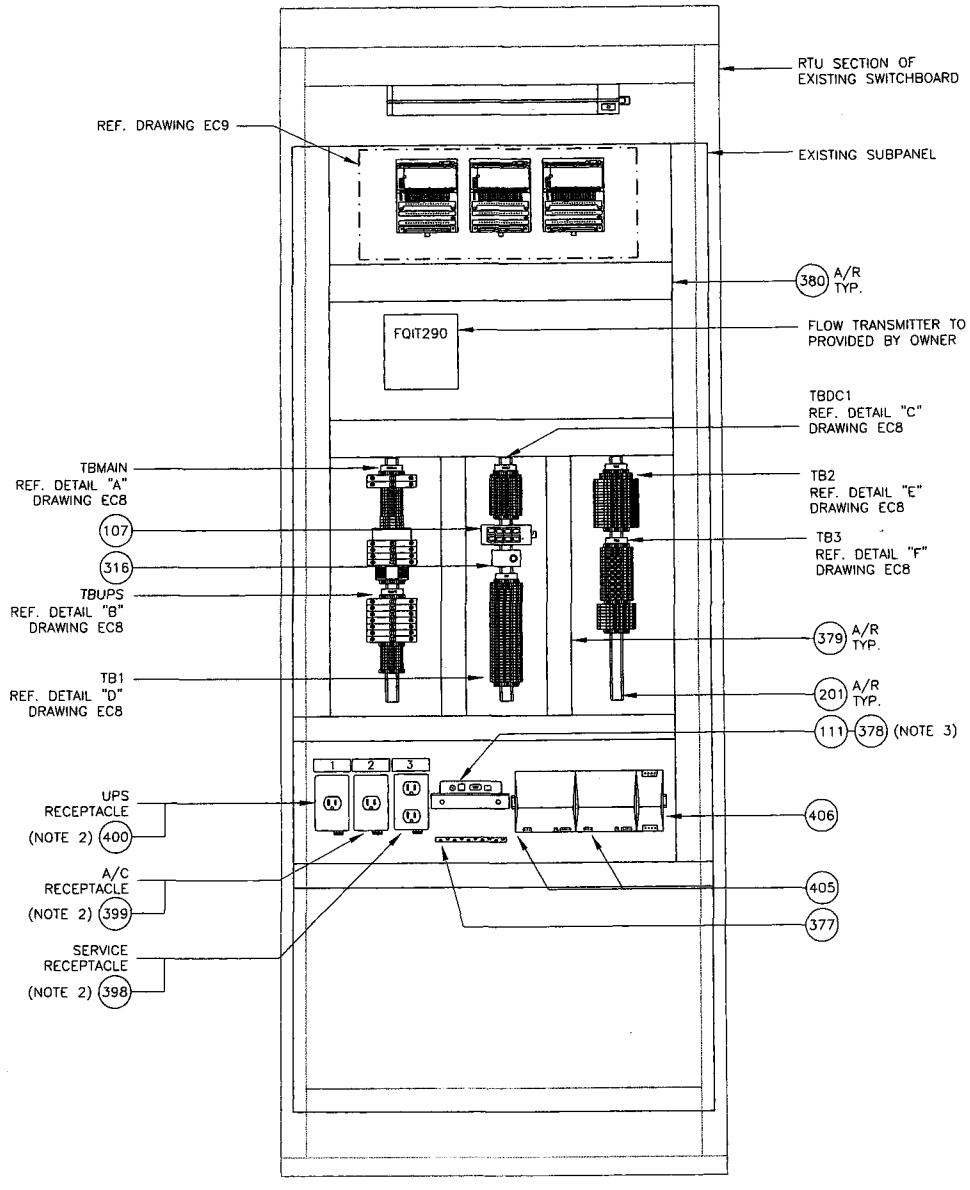


A EC6 SUBPANEL LAYOUT
1"=10"

## NOTES:

1. BILL OF MATERIALS IS ON DRAWING EC5.
2. NAMEPLATE SHALL BE 3/32" THICK LAMINATED PHENOLIC TYPE BLACK WITH WHITE LETTERS. SEE BILL OF MATERIALS ON DRAWING EC5 AND NAMEPLATE SCHEDULE (DET B) ON THIS SHEET FOR ADDITIONAL INFORMATION.
3. MOUNT RADIO ON CUSTOM SHELF PROVIDED AND INSTALLED BY PANEL FABRICATOR. REFER TO DRAWING EC9 AND BILL OF MATERIALS ON EC5 FOR MORE INFORMATION.

**NAMEPLATE SCHEDULE (NOTE 2)**

| NP | HxWxLTR | FIRST LINE | SECOND LINE | LOCATION |
|---|---|---|---|---|
| 1 | 1" x 3" x 1/4" | UPS RECEPTACLE | ONLY | CENTERED ABOVE UPS RECEPTACLE |
| 2 | 1" x 3" x 1/4" | A/C RECEPTACLE | ONLY | CENTERED ABOVE A/C RECEPTACLE |
| 3 | 1" x 3" x 1/4" | SERVICE RECEPTACLE | ONLY | CENTERED ABOVE SERVICE RECEPTACLE |
| 4 | 1" x 3" x 1/4" | OIT | | CENTERED ABOVE OIT |

B NAMEPLATE SCHEDULE

DLT&V SYSTEMS ENGINEERING
3560 N. CENTRAL AVE., STE. 1900
PHOENIX, AZ 85012 (602) 266-4658

Registered Professional Engineer (Electrical) APPLICANT NO. 37390 MELINDA TAM Date Signed 9-29-08 ARIZONA, U.S.A.
Expires 3/31/11

NOTES

REVISIONS

| REV. | BY | DATE | DESCRIPTION |
|---|---|---|---|
| | | | |
| | | | |
| | | | |
| | | | |

CASA GRANDE WATER SYSTEM
SCADA PHASE II - WELL #30

ARIZONA WATER COMPANY

RTU SUBPANEL LAYOUT

| DRAWN BY: | PROJECT NO. |
|---|---|
| MAB | 1219.01.027 |
| DESIGNED BY: | SUBMITTAL DATE: |
| MAB | SEPT 2008 |
| CHECKED BY: | DRAWING NUMBER |
| BA | EC7 |

DWG FILE: 1219.01.101_EC7.dwg 11:26am PLOTTED: Sep 30, 2008 alewis

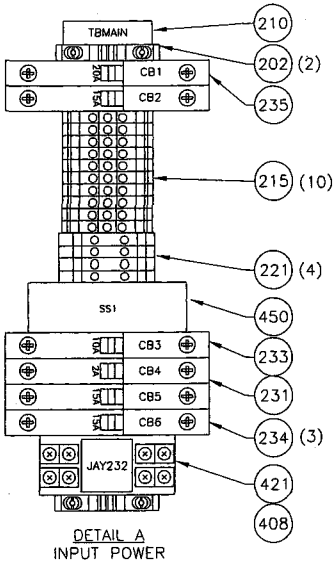


DETAIL A
INPUT POWER
TBMAIN

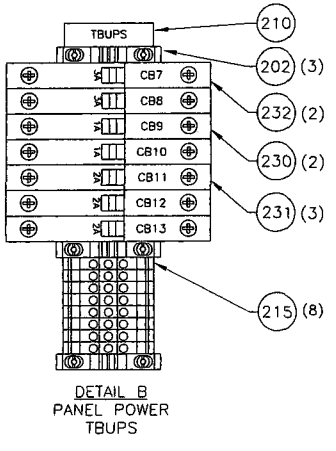


DETAIL B
PANEL POWER
TBUPS

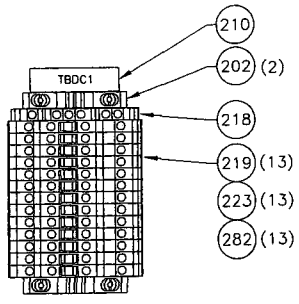


DETAIL C
24VDC POWER
DISTRIBUTION
TBDC1

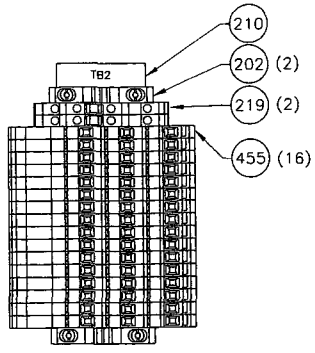


DETAIL E
DISCRETE OUTPUT
TB2

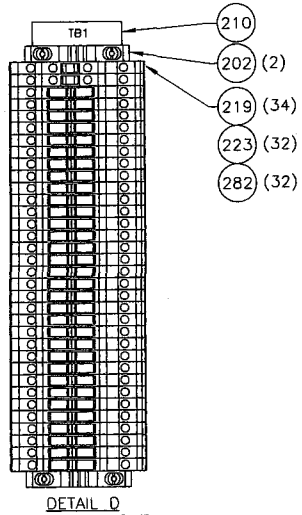


DETAIL D
DISCRETE INPUT
TB1

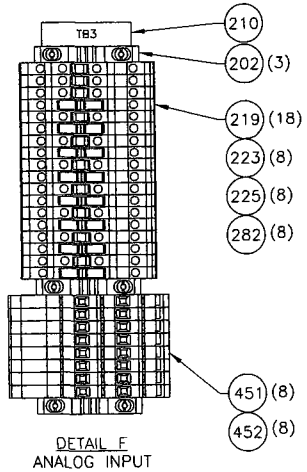


DETAIL F
ANALOG INPUT
TB3

## NOTES:

1. PROVIDE BUS BAR STYLE OR INSULATED COMB STYLE JUMPERS WHERE 2 OR MORE TERMINALS IN THE SAME TB ARE COMMONED TOGETHER. DO NOT USE DISCRETE WIRE JUMPERS.
2. BILL OF MATERIALS IS ON DRAWING EC5.
3. PANEL BUILDER TO SUPPLY AND INSTALL ALL NECESSARY AND APPROPRIATE ACCESSORIES INCLUDING TERMINAL NUMBERS, JUMPERS AND END BARRIERS.

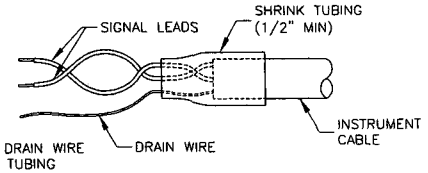


NOTE:
WRAP UNUSED DRAIN WIRE
UNDER SHRINK TUBING

DETAIL G
INSTRUMENT CABLE
TERMINATION

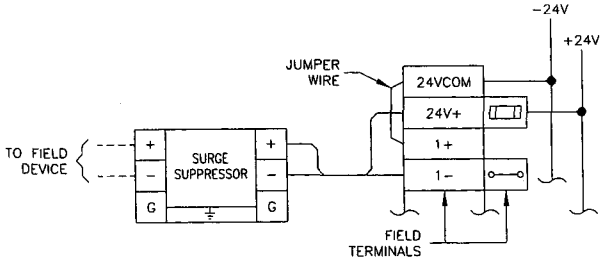


2-WIRE

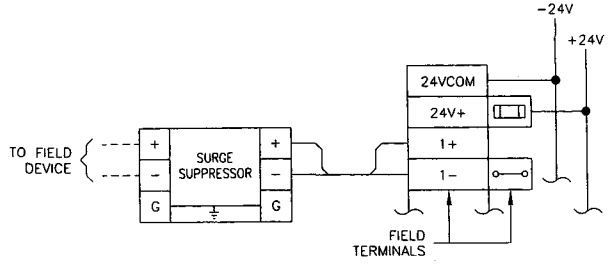


4-WIRE

DETAIL H
ANALOG INPUT TERMINALS
2 & 4-WIRE TYPICAL CONNECTIONS

DLT&V
SYSTEMS ENGINEERING
1530 N. CENTRAL AVE, STE. 1930
PHOENIX, AZ 85012 (602) 266-4658

Registered Professional Engineer (Electrical)
CERTIFICATE NO.
37390
MELINDA
TAM
Date Signed 9-29-08
ARIZONA, U.S.A.
Expires 3/31/11

NOTES

| REVISIONS | | | |
|---|---|---|---|
| REV. | BY | DATE | DESCRIPTION |
| | | | |
| | | | |
| | | | |
| | | | |

CASA GRANDE WATER SYSTEM
SCADA PHASE II - WELL #30

ARIZONA WATER COMPANY

TERMINAL BLOCK DETAILS

| | |
|---|---|
| DRAWN BY: MAB | PROJECT NO. 1219.01.027 |
| DESIGNED BY: MAB | SUBMITTAL DATE: SEPT 2008 |
| CHECKED BY: BA | DRAWING NUMBER EC8 |

DWG FILE: 1219.01.101_EC8.dwg 11:26am PLOTTED: Sep 30, 2008 stewis

# NOTES:

1. BILL OF MATERIALS IS ON DRAWING EC5.
2. ANTENNA, ANTENNA MAST, GROUNDING KIT AND CABLE PROVIDED AND INSTALLED BY OTHERS.

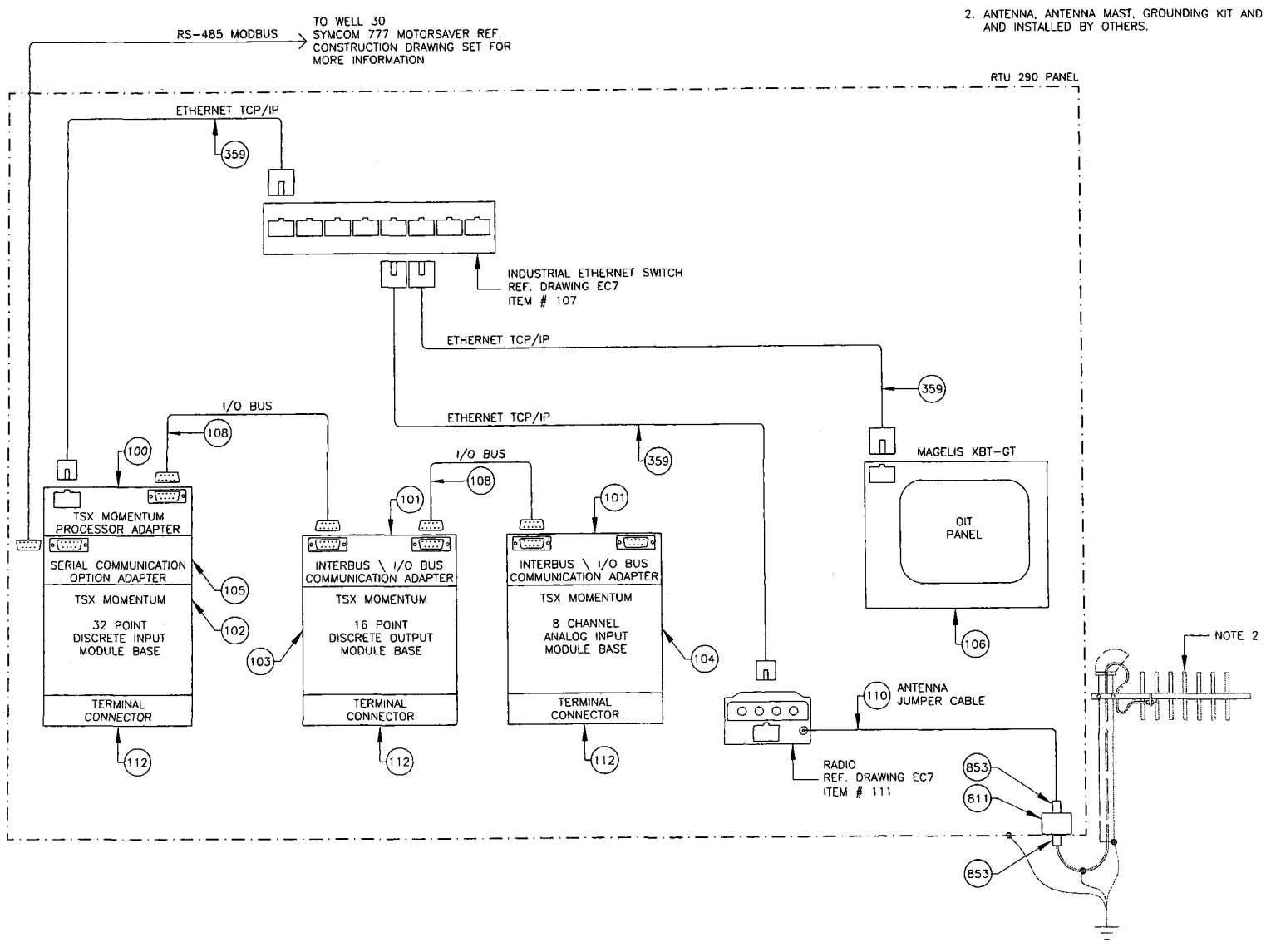


DLT&V
SYSTEMS ENGINEERING
3550 N. CENTRAL AVE, STE. 1900
PHOENIX, AZ 85012 (602) 266-4658

Registered Professional Engineer (Electrical)
CERTIFICATE NO.
37390
MELINDA
TAM
Date Signed 9.29.08
ARIZONA, U.S.A.
Expires 3/31/11

NOTES

REVISIONS

| REV. | BY | DATE | DESCRIPTION |
|---|---|---|---|
| | | | |

CASA GRANDE WATER SYSTEM
SCADA PHASE II - WELL #30

ARIZONA WATER COMPANY

COMMUNICATIONS
SYSTEM ARCHITECTURE
DIAGRAM

| | |
|---|---|
| DRAWN BY: MAB | PROJECT NO. 1219.01.027 |
| DESIGNED BY: MAB | SUBMITTAL DATE: SEPT 2008 |
| CHECKED BY: BA | DRAWING NUMBER EC9 |

DWG FILE: 1219.01.101_EC9.dwg 11:26am PLOTTED: Sep 30, 2008 slewis

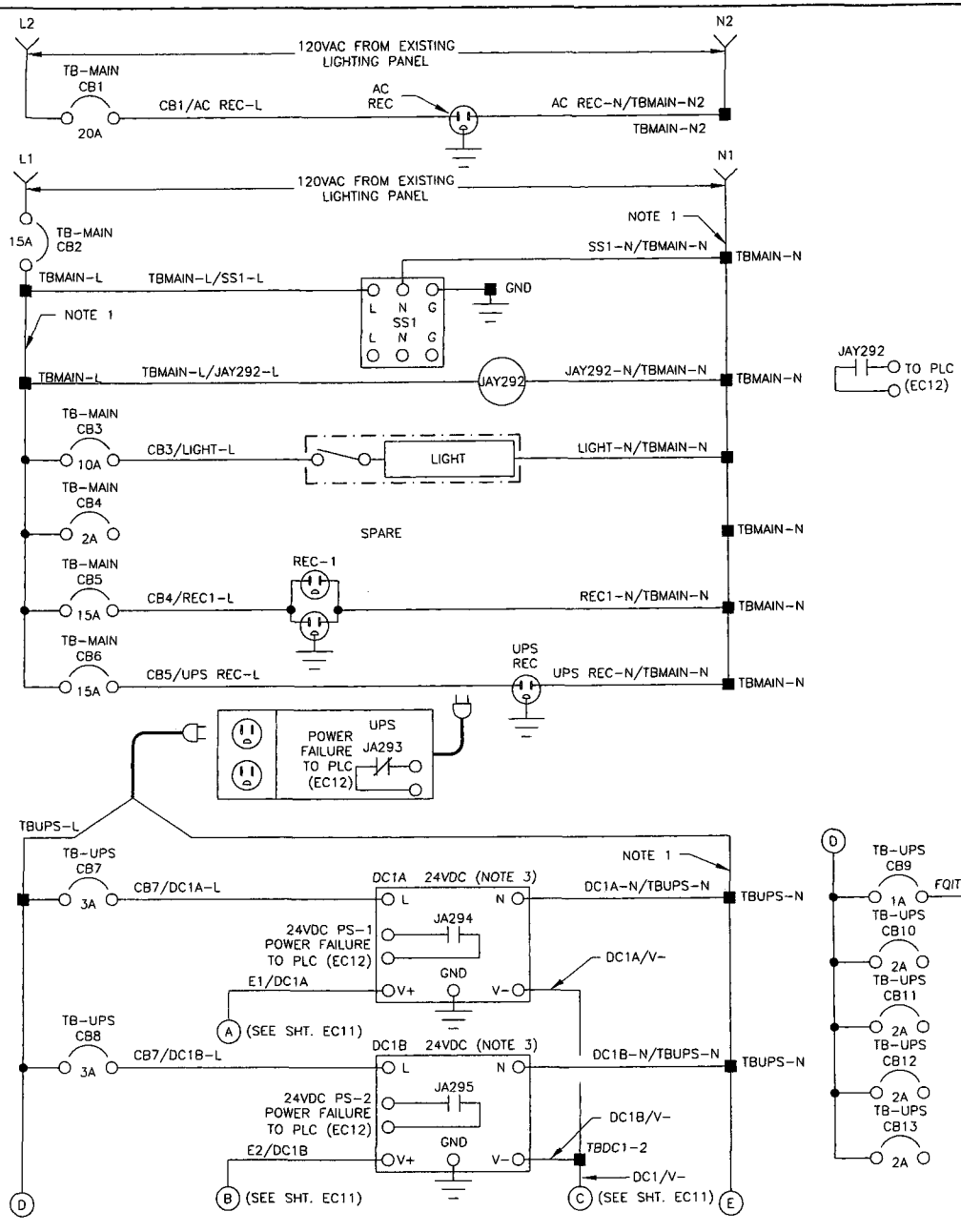


## 120VAC POWER DISTRIBUTION

## NOTES:

1. PROVIDE BUS BAR STYLE OR INSULATED COMB STYLE JUMPERS WHERE 2 OR MORE TERMINALS IN THE SAME TB ARE COMMONED TOGETHER. DO NOT USE DISCRETE WIRE JUMPERS.
2. BILL OF MATERIALS IS ON DRAWING EC5.
3. ADJUST VOLTAGE OUTPUT SETTING ON DC1B TO BE 1.0 VOLT LESS THAN DC1A.


DLT&V
SYSTEMS ENGINEERING
3580 N. CENTRAL AVE. STE. 1900
PHOENIX, AZ 85012 (602) 266-4658


Registered Professional Engineer (Electrical)
CERTIFICATE NO.
37390
MELINDA TAM
Date Signed 9-25-08
ARIZONA, U.S.A.
Expires 3/31/11

NOTES

REVISIONS

| REV. | BY | DATE | DESCRIPTION |
|---|---|---|---|
| | | | |
| | | | |
| | | | |
| | | | |

CASA GRANDE WATER SYSTEM
SCADA PHASE II – WELL #30

ARIZONA WATER COMPANY

120VAC POWER DISTRIBUTION SCHEMATIC

| DRAWN BY: | PROJECT NO. |
|---|---|
| MAB | 1219.01.027 |
| DESIGNED BY: | SUBMITTAL DATE: |
| MAB | SEPT 2008 |
| CHECKED BY: | DRAWING NUMBER |
| BA | EC10 |


DWG FILE: 1219.01.101_EC10.dwg PLOTTED: Sep. 30, 2008 11:28am steve

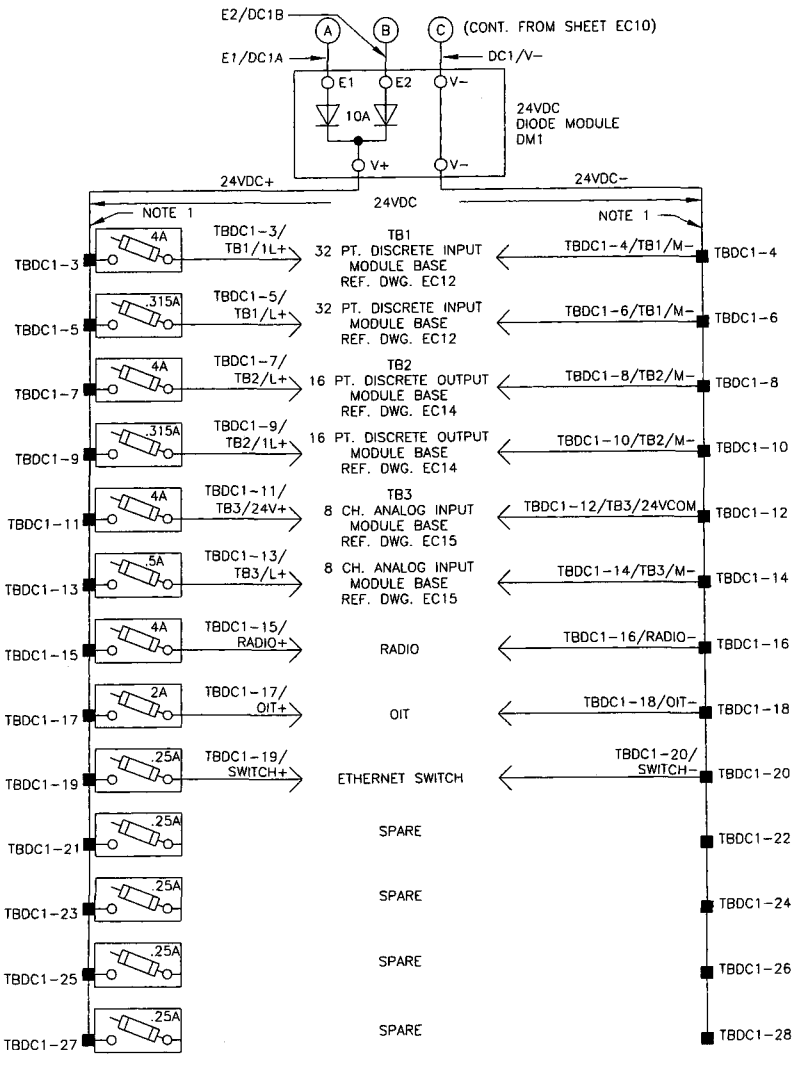


24VDC POWER DISTRIBUTION

# NOTES:

1. PROVIDE BUS BAR STYLE OR INSULATED COMB STYLE JUMPERS WHERE 2 OR MORE TERMINALS IN THE SAME TB ARE COMMONED TOGETHER. DO NOT USE DISCRETE WIRE JUMPERS.
2. BILL OF MATERIALS IS ON DRAWING EC5.
3. THE PROPER FUSE SIZE ON ANY FUTURE EQUIPMENT INSTALLATIONS UTILIZING SPARE CIRCUITS WILL BE THE RESPONSIBILITY OF THE OWNER.


DLT&V
SYSTEMS ENGINEERING
3550 N. CENTRAL AVE., STE. 1900
PHOENIX, AZ 85012 (602) 266-4658


Registered Professional Engineer (Electrical)
CERTIFICATE NO.
37390
MELINDA
TAM
Date Signed 9-29-08
ARIZONA, U.S.A.

Expires 3/31/11

NOTES

REVISIONS

| REV. | BY | DATE | DESCRIPTION |
|---|---|---|---|
| | | | |
| | | | |
| | | | |
| | | | |

CASA GRANDE WATER SYSTEM
SCADA PHASE II - WELL #30

ARIZONA WATER COMPANY

24VDC POWER DISTRIBUTION SCHEMATIC

| DRAWN BY: | PROJECT NO. |
|---|---|
| MAB | 1219.01.027 |
| DESIGNED BY: | SUBMITTAL DATE: |
| MAB | SEPT 2008 |
| CHECKED BY: | DRAWING NUMBER |
| BA | EC11 |


DWG FILE: 1219.01.101_EC11.dwg 11:26am PLOTTED: Sep 30, 2008 slewis

## NOTES:

1. WIRE MODULES AND SIZE FUSES PER MANUFACTURER'S REQUIREMENTS.
2. BUS OR INSULATED COMB STYLE JUMPER.

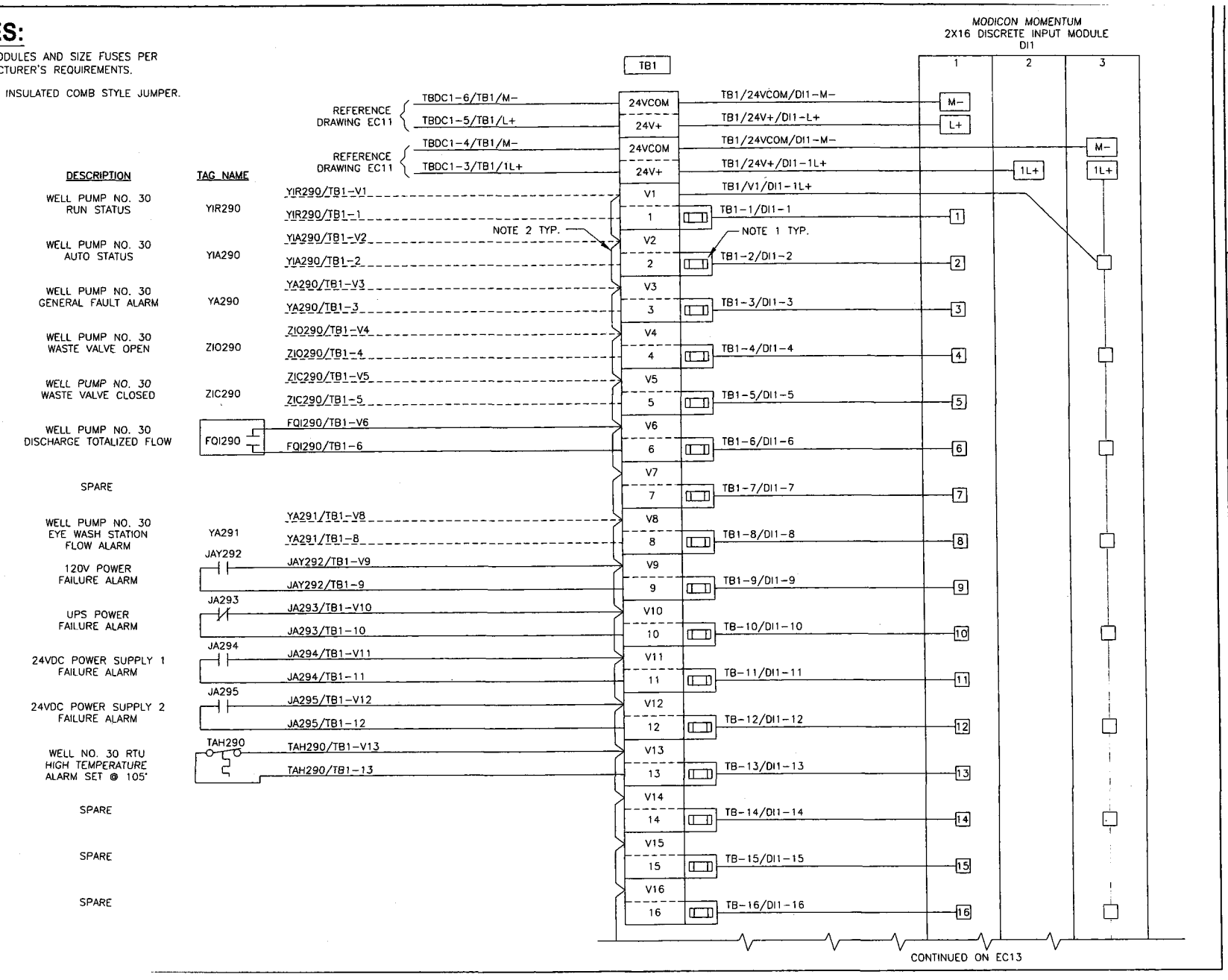


DLT&V SYSTEMS ENGINEERING

Registered Professional Engineer (Electrical)
OFFICIAL NO. 37390
MELINDA TAM
Date Signed 9-29-08
ARIZONA, U.S.A.

Expires 3/31/11

NOTES

| REVISIONS | | | |
|---|---|---|---|
| REV. | BY | DATE | DESCRIPTION |
| | | | |
| | | | |
| | | | |
| | | | |

CASA GRANDE WATER SYSTEM
SCADA PHASE II – WELL #30

ARIZONA WATER COMPANY

DISCRETE INPUT MODULE BASE WIRING DIAGRAM – SHEET 1

| DRAWN BY: | PROJECT NO. |
|---|---|
| MAB | 1219.01.027 |
| DESIGNED BY: | SUBMITTAL DATE: |
| MAB | SEPT 2008 |
| CHECKED BY: | DRAWING NUMBER |
| BA | EC12 |

DWG FILE: 1219.01.101_EC12.dwg PLOTTED: Sep 30, 2008 11:26am alewis

## NOTES:

1. WIRE MODULES AND SIZE FUSES PER MANUFACTURER'S REQUIREMENTS.
2. BUS OR INSULATED COMB STYLE JUMPER.

| DESCRIPTION | TAG NAME |
|---|---|
| SPARE | |
| SPARE | |
| SPARE | |
| SPARE | |
| SPARE | |
| SPARE | |
| SPARE | |
| SPARE | |
| SPARE | |
| SPARE | |
| SPARE | |
| SPARE | |
| SPARE | |
| SPARE | |
| SPARE | |
| SPARE | |

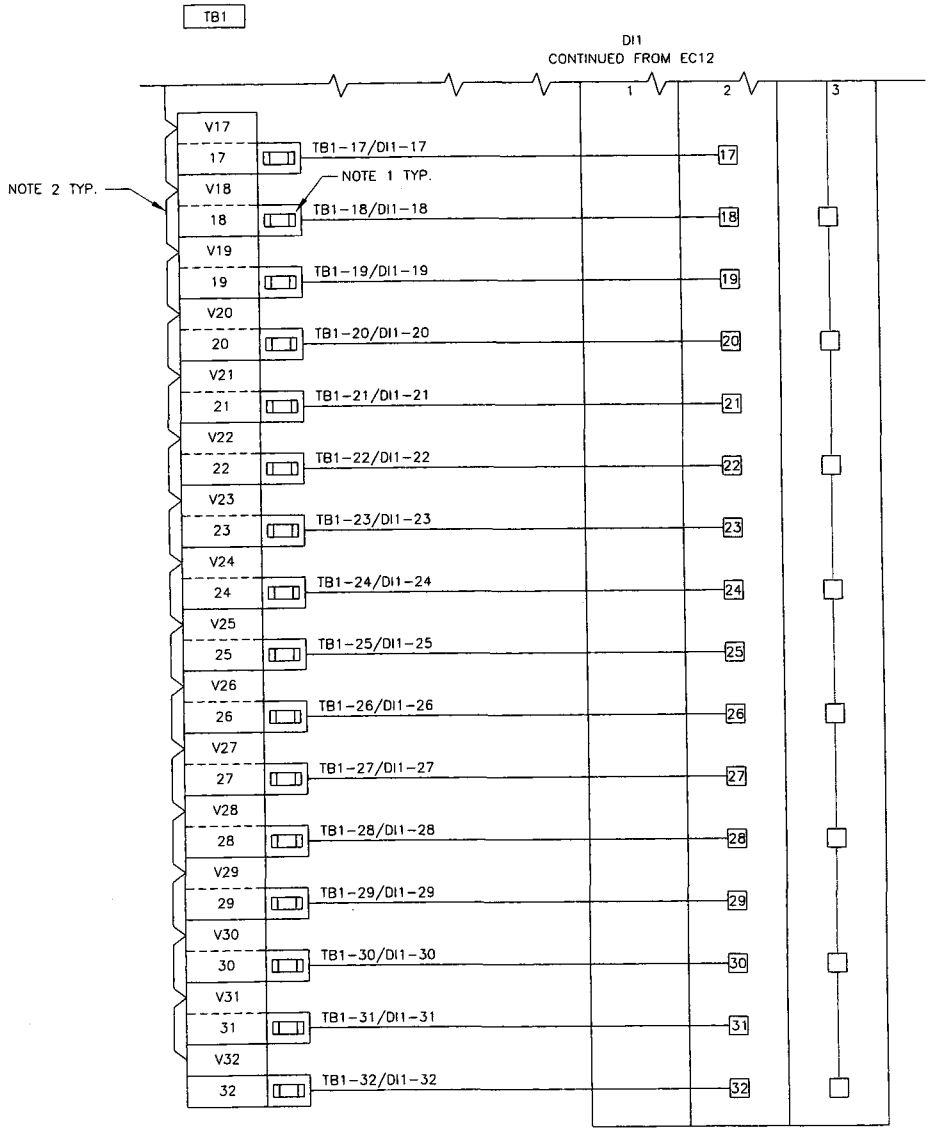


DLT&V SYSTEMS ENGINEERING
3550 N. CENTRAL AVE. STE. 1900
PHOENIX, AZ 85012 (602) 266-4656

Registered Professional Engineer (Electrical)
APPLICANT NO.
37390
MELINDA TAM
Date Signed 9-23-08
ARIZONA, U.S.A.
Expires 3/31/11

NOTES

| REVISIONS | | | |
|---|---|---|---|
| REV. | BY | DATE | DESCRIPTION |
| | | | |
| | | | |
| | | | |
| | | | |

CASA GRANDE WATER SYSTEM
SCADA PHASE II – WELL #30

ARIZONA WATER COMPANY

DISCRETE INPUT
MODULE BASE
WIRING DIAGRAM – SHEET 2

| DRAWN BY: | PROJECT NO. |
|---|---|
| MAB | 1219.01.027 |
| DESIGNED BY: | SUBMITTAL DATE: |
| MAB | SEPT 2008 |
| CHECKED BY: | DRAWING NUMBER |
| BA | EC13 |

WG FILE: 1219.01.101_EC13.dwg 11:27am PLOTTED: Sep 30, 2008 slewis

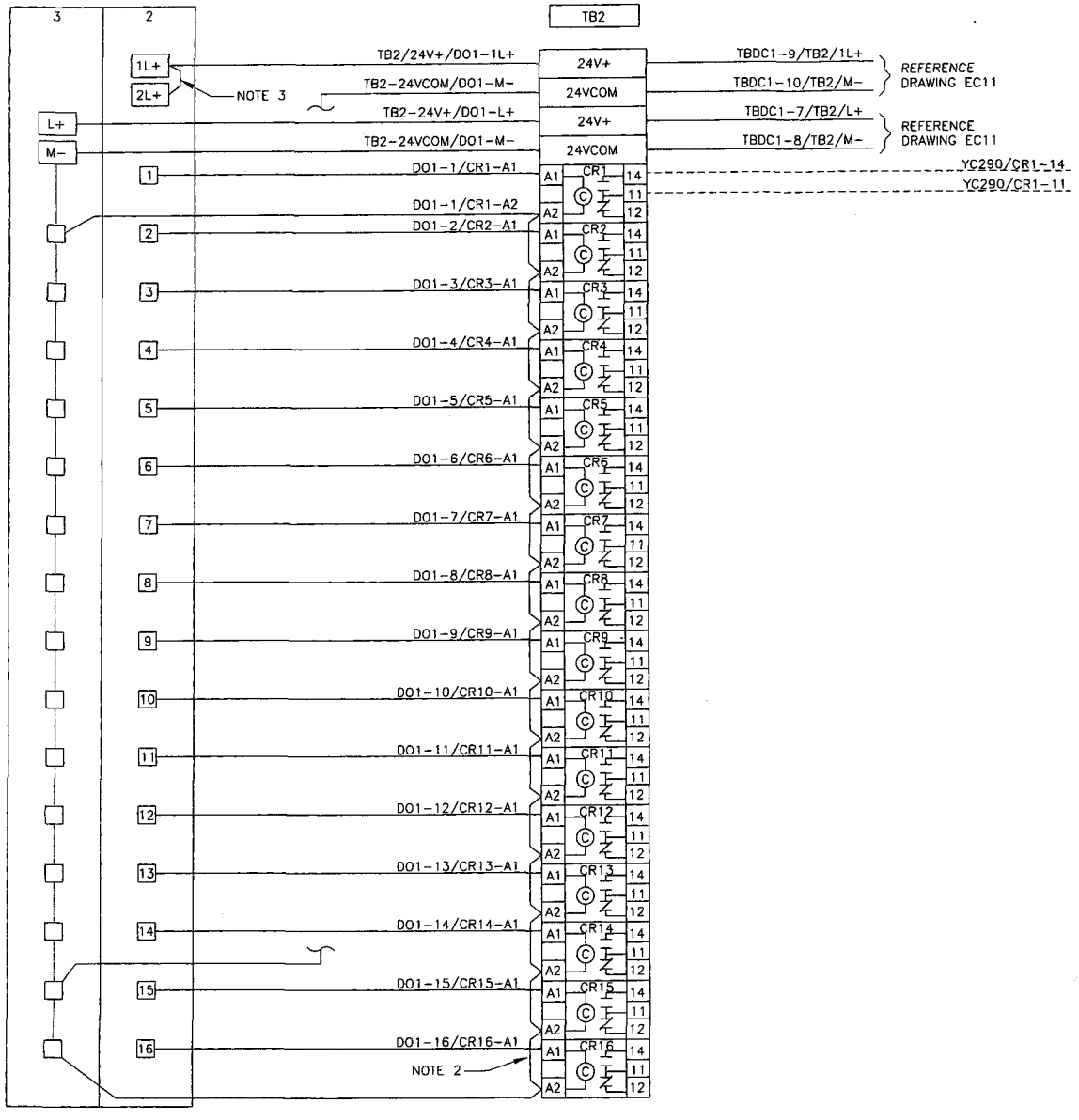


## NOTES:

1. WIRE MODULES PER MANUFACTURER'S REQUIREMENTS.
2. BUS OR INSULATED COMB STYLE JUMPER.
3. JUMPER WIRES PROVIDED BY PANEL MANUFACTURER.

| TAG NAME | DESCRIPTION |
|---|---|
| YC290 | WELL PUMP NO. 30 START/STOP COMMAND |
| | SPARE |
| | SPARE |
| | SPARE |
| | SPARE |
| | SPARE |
| | SPARE |
| | SPARE |
| | SPARE |
| | SPARE |
| | SPARE |
| | SPARE |
| | SPARE |
| | SPARE |
| | SPARE |
| | SPARE |


DLT&V
SYSTEMS ENGINEERING
3550 N. CENTRAL AVE., STE. 1900
PHOENIX, AZ 85012 (602) 266-4658


Registered Professional Engineer (Electrical)
CERTIFICATE NO.
37390
MELINDA TAM
Date Signed 9-29-08
ARIZONA, U.S.A.
Expires 3/31/11

NOTES

REVISIONS

| REV. | BY | DATE | DESCRIPTION |
|---|---|---|---|
| | | | |
| | | | |
| | | | |
| | | | |

CASA GRANDE WATER SYSTEM
SCADA PHASE II – WELL #30

ARIZONA WATER COMPANY

DISCRETE OUTPUT MODULE BASE WIRING DIAGRAM

| DRAWN BY: | PROJECT NO. |
|---|---|
| MAB | 1219.01.027 |
| DESIGNED BY: | SUBMITTAL DATE: |
| MAB | SEPT 2008 |
| CHECKED BY: | DRAWING NUMBER |
| BA | EC14 |

DWG FILE: 1219.01.101_EC14.dwg 11:27am PLOTTED: Sep 30, 2008 steves

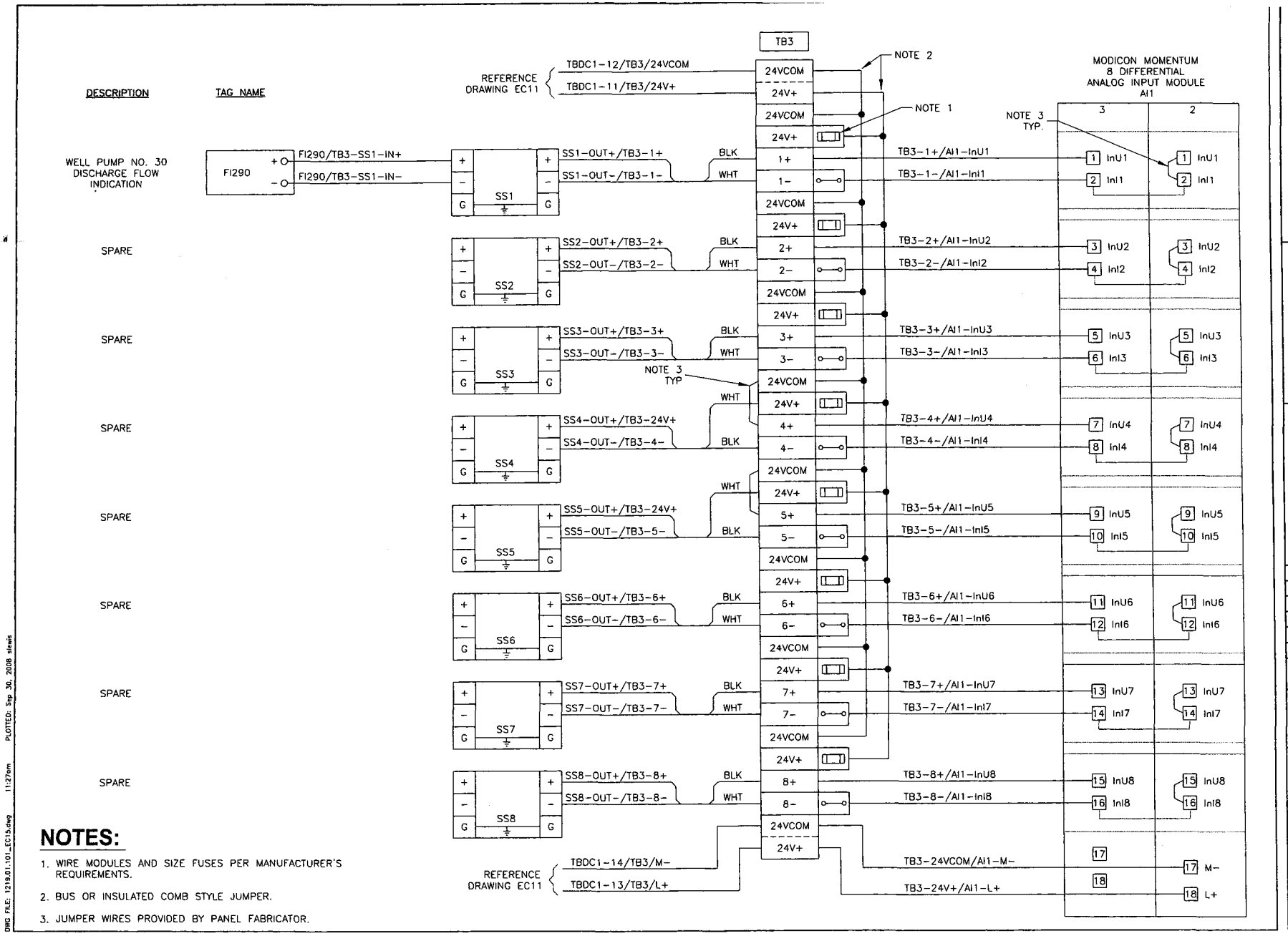


## NOTES:

1. WIRE MODULES AND SIZE FUSES PER MANUFACTURER'S REQUIREMENTS.
2. BUS OR INSULATED COMB STYLE JUMPER.
3. JUMPER WIRES PROVIDED BY PANEL FABRICATOR.

DWG FILE: 1219.01.101_EC15.dwg 11:27am PLOTTED: Sep 30, 2008 stewis

DLT&V SYSTEMS ENGINEERING
3550 N. CENTRAL AVE., STE. 1900
PHOENIX, AZ 85012 (602) 264-4648

Registered Professional Engineer (Electrical)
CERTIFICATE NO. 37390
MELINDA TAM
Date Signed 9-26-08
ARIZONA, U.S.A.
Expires 3/31/11

NOTES

| REVISIONS | | | |
|---|---|---|---|
| REV. | BY | DATE | DESCRIPTION |
| | | | |
| | | | |
| | | | |
| | | | |

CASA GRANDE WATER SYSTEM
SCADA PHASE II - WELL #30

ARIZONA WATER COMPANY

ANALOG INPUT MODULE BASE WIRING DIAGRAM

| DRAWN BY: | PROJECT NO. |
|---|---|
| MAB | 1219.01.027 |
| DESIGNED BY: | SUBMITTAL DATE: |
| MAB | SEPT 2008 |
| CHECKED BY: | DRAWING NUMBER |
| BA | EC15 |

# CASA GRANDE WATER SYSTEM
# SCADA DESIGN - PHASE II
# WELL NO. 31 - RTU 300 DESIGN

DLT&V
SYSTEMS ENGINEERING
2600 E. CAMELBACK, SUITE 190
PHOENIX, AZ 85012 | (602) 266-4668

Registered Professional Engineer (Electrical)
CERTIFICATE NO.
37390
MELINDA
TAM
Date Signed 9-29-08
ARIZONA, U.S.A.
Expires 3/31/11

NOTES

REVISIONS

| REV. | BY | DATE | DESCRIPTION |
|---|---|---|---|
| | | | |
| | | | |
| | | | |
| | | | |

CASA GRANDE WATER SYSTEM
SCADA PHASE II – WELL #31

ARIZONA WATER COMPANY

COVER SHEET

| DRAWN BY: | PROJECT NO. |
|---|---|
| MAB | 1219.01.027 |
| DESIGNED BY: | SUBMITTAL DATE: |
| MAB | SEPT 2008 |
| CHECKED BY: | DRAWING NUMBER |
| BA | EC1 |

DWG FILE: 1219.01.101_EC1.dwg 11:27am PLOTTED: Sep 30, 2008 slewis

CASA GRANDE WATER SYSTEM
SCADA DESIGN – PHASE II
WELL NO. 31 RTU DESIGN
PROJECT SHEET INDEX

| Drawing No. | Drawing Title |
|---|---|
| EC1 | COVER SHEET |
| EC2 | PROJECT SHEET INDEX |
| EC3 | STANDARD SYMBOLS AND ABBREVIATIONS |
| EC4 | ISA TABLE AND COMMON LEGENDS SHEET |
| EC5 | BILL OF MATERIALS |
| EC6 | RTU ENCLOSURE LAYOUT |
| EC7 | RTU SUBPANEL LAYOUT |
| EC8 | TERMINAL BLOCK DETAILS |
| EC9 | COMMUNICATIONS SYSTEM ARCHITECTURE DIAGRAM |
| EC10 | 120VAC POWER DISTRIBUTION SCHEMATIC |
| EC11 | 24VDC POWER DISTRIBUTION SCHEMATIC |
| EC12 | DISCRETE INPUT MODULE BASE WIRING DIAGRAM - SHEET 1 |
| EC13 | DISCRETE INPUT MODULE BASE WIRING DIAGRAM - SHEET 2 |
| EC14 | DISCRETE OUTPUT MODULE BASE WIRING DIAGRAM |
| EC15 | ANALOG INPUT MODULE BASE WIRING DIAGRAM |

DLT&V
SYSTEMS ENGINEERING
3550 N. CENTRAL AVE, STE. 1900
PHOENIX, AZ 85012 (602) 266-4658

Registered Professional Engineer (Electrical)
CERTIFICATE NO. 37390
MELINDA TAM
Date Signed 9-29-08
ARIZONA, U.S.A.
Expires 3/31/11

NOTES

REVISIONS

| REV. | BY | DATE | DESCRIPTION |
|---|---|---|---|
| | | | |
| | | | |
| | | | |
| | | | |

CASA GRANDE WATER SYSTEM
SCADA PHASE II – WELL #31

ARIZONA WATER COMPANY

PROJECT SHEET INDEX

| | |
|---|---|
| DRAWN BY: MAB | PROJECT NO. 1219.01.027 |
| DESIGNED BY: MAB | SUBMITTAL DATE: SEPT 2008 |
| CHECKED BY: BA | DRAWING NUMBER EC2 |

DWG FILE: 1219.01.101_EC2.dwg 11:27am PLOTTED: Sep 30, 2008 slewis

# CASA GRANDE WATER SYSTEM
# SCADA DESIGN – PHASE II
# WELL NO. 31 RTU DESIGN
# STANDARD SYMBOLS AND ABBREVIATIONS

## SCHEMATIC/WIRING DIAGRAM SYMBOLS

CIRCUIT BREAKER
*A – AMP RATING

FUSE WITH PULLER
*A – AMP RATING

SWITCH
NORMALLY OPEN

SELECTOR SWITCH
2 POSITION, NORMALLY OPEN

SELECTOR SWITCH
3 POSITION, NORMALLY OPEN

TEMPERATURE SWITCH
NORMALLY OPEN

TERMINAL BLOCK
* – TB IDENTIFICATION

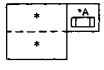


TERMINAL BLOCK W/ FUSE
PLUG AND FUSE
* – TB IDENTIFICATION
*A – AMPS

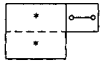


TERMINAL BLOCK W/
DISCONNECT KNIFE
* – TB IDENTIFICATION

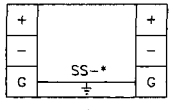


SURGE SUPPRESSOR FOR
FLOATING SIGNAL CIRCUITS
* – SS NUMBER IDENTIFICATION

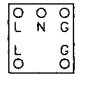


SURGE SUPPRESSOR FOR
POWER SUPPLY
* – SS NUMBER IDENTIFICATION

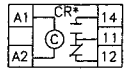


CONTROL RELAY
* – CR NUMBER IDENTIFICATION
# – TERMINAL NUMBER

## SCHEMATIC/WIRING DIAGRAM SYMBOLS

EARTH GROUND



TERMINAL BLOCK

DUPLEX RECEPTACLE

SINGLE RECEPTACLE

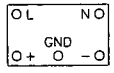


DC POWER SUPPLY
* – DC VOLTAGE RATING

## COLOR CODE CHART FOR 18 AWG BELDEN CABLES
## 12 COND. NO. 8466 AND 19 COND. NO. 8619

| | | |
|---|---|---|
| BLACK | BLK | 1st |
| WHITE | WHT | 2nd |
| RED | RED | 3rd |
| GREEN | GRN | 4th |
| ORANGE | ORN | 5th |
| BLUE | BLU | 6th |
| WHITE/BLACK | WHT/BLK | 7th |
| RED/BLACK | RED/BLK | 8th |
| GREEN/BLACK | GRN/BLK | 9th |
| ORANGE/BLACK | ORN/BLK | 10th |
| BLUE/BLACK | BLU/BLK | 11th |
| BLACK/WHITE | BLK/WHT | 12th |
| RED/WHITE | RED/WHT | 13th |
| GREEN/WHITE | GRN/WHT | 14th |
| BLUE/WHITE | BLU/WHT | 15th |
| BLACK/RED | BLK/RED | 16th |
| WHITE/RED | WHT/RED | 17th |
| ORANGE/RED | ORN/RED | 18th |
| BLUE/RED | BLU/RED | 19th |

## WIRE SIZES

(CIRCUIT WIRING SHALL BE RATED IN ACCORDANCE WITH THE MAXIMUM PERMITTED AMPERE RATING/SETTING OF THE OVERCURRENT PROTECTION DEVICE. N.E.C. 210-3)

120VAC / 20A POWER CIRCUIT – MIN. #12 AWG.
120VAC / 15A AND BELOW – MIN. #14 AWG.

24VDC / 20A POWER CIRCUIT – MIN. #12 AWG.
24VDC / 15A AND BELOW – MIN. #16 AWG.
24VDC I/O & SIGNAL CIRCUIT – MIN. #18 AWG.

4–20mADC I/O SIGNAL CIRCUIT – MIN. #18 AWG.

## ABBREVIATIONS

| | |
|---|---|
| A/R | AS REQUIRED |
| AC COM | NEUTRAL |
| AFF | ABOVE FINISHED FLOOR |
| AI | ANALOG INPUT |
| ANL COM | ANALOG COMMON |
| AO | ANALOG OUTPUT |
| AWG | AMERICAN WIRE GAUGE |
| BLK | BLACK |
| BLU | BLUE |
| CAP | CENTRAL ARIZONA PROJECT |
| CLR | CLEAR |
| CR | CONTROL RELAY |
| DC COM | DC COMMON |
| DC+ | DC POSITIVE POTENTIAL |
| DI | DISCRETE INPUT |
| DO | DISCRETE OUTPUT |
| DS | DOOR SWITCH |
| FOM | FIBER OPTIC MODEM |
| FOT | FIBER OPTIC TRANSCEIVER |
| GND | GROUND |
| GRN | GREEN |
| I/O | INPUT/OUTPUT |
| L | LINE |
| N | NEUTRAL |
| NC | NORMALLY CLOSED |
| NO | NORMALLY OPEN |
| NP | NAMEPLATE |
| OIT | OPERATOR INTERFACE TERMINAL |
| ORN | ORANGE |
| PDB | POWER DISTRIBUTION BLOCK |
| PLC | PROGRAMMABLE LOGIC CONTROLLER |
| PP | FIBER OPTIC PATCH PANEL |
| PS | POWER SUPPLY |
| REC | RECEPTACLE |
| RES | RESERVOIR |
| RIO | REMOTE INPUT/OUTPUT |
| RTU | REMOTE TELEMETRY UNIT |
| SLC | SMALL LOGIC CONTROLLER |
| SP | SPACE |
| SS | SURGE SUPPRESSOR |
| TB | TERMINAL BLOCK |
| UPS | UNINTERRUPTIBLE POWER SUPPLY |
| WHT | WHITE |
| WTR | WATER TREATMENT PLANT |
| WWTP | WASTE WATER TREATMENT PLANT |

## LINETYPE LEGEND

- FIELD WIRING
- INTERNAL PANEL WIRING
- RADIO COMMUNICATION LINK
- FO — FIBER OPTIC CABLE
- FOP — FIBER OPTIC PATCH CABLE
- EN — ETHERNET CAT5 CABLE
- DH+ — DATA HIGHWAY PLUS
- RIO — REMOTE INPUT OUTPUT
- AREA DIVIDER
- EQUIPMENT
- PATCH PANEL

DLT&V SYSTEMS ENGINEERING
4747 N. 22nd STREET, SUITE 250
PHOENIX, AZ 85016 (602) 956-4558

Registered Professional Engineer (Electrical)
CERTIFICATE NO.
37390
MELINDA
TAM
Date Signed 9-29-08
ARIZONA, U.S.A.
Expires 3/31/11

NOTES

REVISIONS

| REV. | BY | DATE | DESCRIPTION |
|---|---|---|---|
| | | | |
| | | | |
| | | | |
| | | | |

CASA GRANDE WATER SYSTEM
SCADA PHASE II – WELL #31

ARIZONA WATER COMPANY

STANDARD SYMBOLS AND ABBREVIATIONS

| | |
|---|---|
| DRAWN BY: MAB | PROJECT NO. 1219.01.027 |
| DESIGNED BY: MAB | SUBMITTAL DATE: SEPT 2008 |
| CHECKED BY: BA | DRAWING NUMBER EC3 |

DWG FILE: 1219.01.101_EC3.dwg 11:27am PLOTTED: Sep 30, 2008 slewis

# CASA GRANDE WATER SYSTEM
# SCADA DESIGN – PHASE II
# WELL NO. 31 RTU DESIGN
# ISA TABLE AND COMMON LEGENDS SHEET

## ISA INSTRUMENT IDENTIFICATION TABLE

| FIRST LETTERS | | | SUCCEEDING LETTERS | | |
|---|---|---|---|---|---|
| | MEASURED OR INITIATING VARIABLE | MODIFIER | READOUT OR PASSIVE FUNCTION | OUTPUT FUNCTION | MODIFIER |
| A | ANALYZER | | ALARM | | AUTO |
| B | BURNER, COMBUSTION | | | | |
| C | CONDUCTIVITY | | | CONTROL | CLOSED |
| D | DENSITY | DIFFERENTIAL | | | |
| E | VOLTAGE | | ELEMENT | | |
| F | FLOW | RATIO | | | |
| G | GAUGE | | GLASS, VIEWING DEVICE | | |
| H | HAND | | | | HIGH |
| I | CURRENT | | INDICATE | | |
| J | POWER | SCAN | | | |
| K | TIME, TIME SCHED. | TIME RATE OF CHANGE | | CONTROL STATION | |
| L | LEVEL | | LIGHT | | LOW |
| M | MOTION | | | | MIDDLE |
| N | INTRUSION | | | | NORMAL |
| O | TORQUE | | ORIFICE, RESTRICTION | | OPEN |
| P | PRESSURE | | POINT CONNECTION | | STOP |
| Q | QUANTITY | INTEGRATE, TOTALIZE | | | |
| R | RADIATION | | RECORD, OR PRINT | | REMOTE |
| S | SPEED, FREQUENCY | SAFETY | | SWITCH | START |
| T | TEMPERATURE | | | TRANSMIT | |
| U | MULTIVARIABLE | | MULTIFUNCTION | MULTIFUNCTION | MULTIFUNCTION |
| V | VIBRATION | | | VALVE, LOUVER | |
| W | WEIGHT | | WELL | | |
| X | MOTOR | X-AXIS | UNCLASSIFIED | UNCLASSIFED | UNCLASSIFED |
| Y | EVENT, STATE, OR PRESENCE | Y-AXIS | | RELAY, COMPUTE, CONVERT | |
| Z | POSITION | Z-AXIS | | DRIVER, ACTUATOR, FINAL CONTROL ELEMENT | |

### FIELD WIRES TAG LEGEND

DEVICE NAME/TBXX-00
- TERMINAL NO.
- TERMINAL STRIP NO.
- FIELD DEVICE TAG NO.

### PANEL POWER WIRES TAG LEGEND

TBXX-03/TBXX-03
- TO TERMINAL NO.
- TO TERMINAL STRIP NO.
- FROM TERMINAL NO.
- FROM TERMINAL STRIP NO.

### PANEL I/O WIRES TAG LEGEND

0:#.2/TBXX-03
- INPUT POINT NO.
- TERMINAL STRIP NO.
- CHANNEL #
- SLOT #
- 0=OUTPUT 1=INPUT

### COLOR CODE CHART FOR 22 AWG BELDEN PAIRED CABLE NO. 8761

| | | |
|---|---|---|
| BLACK | BLK | 1st |
| CLEAR | CLR | 2nd |

### PANEL WIRING IDENTIFICATION

BLACK – 120VAC LINE
WHITE – 120VAC NEUTRAL
GREEN – GROUND
ORANGE – DC POSITIVE
BLUE – DC COMMON

DL&V SYSTEMS ENGINEERING
3550 N. CENTRAL AVE. STE. 1900
PHOENIX, AZ 85012 (602) 266-4658

Registered Professional Engineer (Electrical)
CERTIFICATE NO.
37390
MELINDA TAM
Date Signed 9-29-08
ARIZONA, U.S.A.

Expires 3/31/11

NOTES

REVISIONS

| REV. | BY | DATE | DESCRIPTION |
|---|---|---|---|
| | | | |
| | | | |
| | | | |
| | | | |

CASA GRANDE WATER SYSTEM
SCADA PHASE II – WELL #31

ARIZONA WATER COMPANY

ISA TABLE AND COMMON LEGENDS SHEET

| | |
|---|---|
| DRAWN BY: MAB | PROJECT NO. 1219.01.027 |
| DESIGNED BY: MAB | SUBMITTAL DATE: SEPT 2008 |
| CHECKED BY: BA | DRAWING NUMBER EC4 |

DWG FILE: 1219.01.101_EC4.dwg 11:28am PLOTTED: Sep 30, 2008 stevis

| QTY | ITEM # | MANUFACTURER | PART NUMBER | DESCRIPTION |
|---|---|---|---|---|
| 1 | 100 | MODICON | 171CCC96030 | M1E PROCESSOR ADAPTER, ETHERNET AND I/O BUS PORTS, WEB PAGE ENABLED, IEC |
| 2 | 101 | MODICON | 170INT11000 | MOMENTUM INTERBUS \ I/O BUS COMMUNICATIONS ADAPTER |
| 1 | 102 | MODICON | 170ADI35000 | 24V DC - 32 PT. INPUT MODULE BASE |
| 1 | 103 | MODICON | 170ADO34000 | 24V DC / 0.5A - 16 PT. OUTPUT MODULE BASE, 0.5 A OUTPUT |
| 1 | 104 | MODICON | 170AAI03000 | MOMENTUM SERIES I/O BASE, ANALOG 8CH DIFFERENTIAL INPUT MODULE BASE |
| 0 | 105 | MODICON | 172JNN21032 | MOMENTUM SERIES OPTION ADAPTER W/ GENERAL PURPOSE SERIAL COMMUNICATION PORT, RS-232 OR RS-485 SELECTABLE |
| 1 | 106 | MODICON | XBT GT5330 | EXTERNAL DISPLAY WITH 10.4" COLOR TFT,VGA RESOLUTION (640X480 PIXELS), 24V POWER |
| 1 | 107 | WEIDMULLER | IE-SW8-ECO | INDUSTRIAL 8-PORT ETHERNET SWITCH, 10/100 Mbps, UNMANAGED |
| 0 | 108 | MODICON | 170MCI00700 | INTERBUS CABLE |
| 1 | 110 | BELDEN | 8267 | CABLE, COAXIAL, RG-213 (OR EQUAL) WITH APPROPRIATE CONNECTORS, (LENGTH AS REQUIRED) |
| 1 | 111 | MDS | iNET-II-IP | ETHERNET REMOTE RADIO TRANSCEIVER, SPREAD SPECTRUM, W/ REMOTE DIAGNOSTICS |
| 3 | 112 | MODICON | 170XTS00100 | CONNECTOR SET, SCREW-TYPE (SET OF 3) |
| A/R | 201 | ALLEN-BRADLEY | 1492-DR6 | TERMINAL MOUNTING RAIL, HI-RISE, ALUMINUM |
| 14 | 202 | ALLEN-BRADLEY | 1492-EA35 | END ANCHOR |
| 6 | 210 | ALLEN-BRADLEY | 1492-GM35 | TERMINAL BLOCK, GROUP MARKING CARRIER |
| 18 | 215 | ALLEN-BRADLEY | 1492-J4 | TERMINAL BLOCK, SINGLE CIRCUIT, 600V, GRAY |
| 1 | 218 | ALLEN-BRADLEY | 1492-JD3 | TERMINAL BLOCK, DOUBLE LEVEL |
| 67 | 219 | ALLEN-BRADLEY | 1492-JD3P | TERMINAL BLOCK, DOUBLE LEVEL W/ PLUGGABLE TOP LEVEL |
| 4 | 221 | ALLEN-BRADLEY | 1492-JG4 | TERMINAL BLOCK, SINGLE CIRCUIT, GROUNDING |
| 53 | 223 | ALLEN-BRADLEY | 1492-FPK224 | FUSE PLUG INSERT W/ BFI, 10-36VAC/DC WORKING VOLTAGE, 10A MAX @ 250V. PROVIDE FAST BLOW FUSES AS REQUIRED |
| 8 | 225 | ALLEN-BRADLEY | 1492-DPL | DISCONNECT PLUG FOR 1492-JD3 P AND 1492-JD3 |
| 2 | 230 | WEIDMULLER | 9926251001 | CIRCUIT BREAKER, 1A |
| 4 | 231 | WEIDMULLER | 9926251002 | CIRCUIT BREAKER, 2A |
| 2 | 232 | WEIDMULLER | 9926251003 | CIRCUIT BREAKER, 3A |
| 1 | 233 | WEIDMULLER | 9926251010 | CIRCUIT BREAKER, 10A |
| 3 | 234 | WEIDMULLER | 9926251015 | CIRCUIT BREAKER, 15A |
| 1 | 235 | WEIDMULLER | 9926251020 | CIRCUIT BREAKER, 20A |
| 53 | 282 | ANY | ANY | 250V, 5mmX20mm FAST BLOW GLASS FUSES (SIZE AS INDICATED ON DRAWING) |
| 1 | 306 | HOFFMAN | A72SP36F4 | SWING-OUT PANEL, HALF PANEL, 30.88" X 33.81" |
| 1 | 313 | HOFFMAN | ALF16D18R | 18" FLOURESCENT LIGHTING PACKAGE W/DOOR SWITCH, 115VAC |
| 1 | 316 | HOFFMAN | A-TEMNO | TEMPERATURE CONTROL SWITCH (THERMOSTAT), N.O. CONTACTS |
| A/R | 359 | BELDEN | 7929A | CABLE, ETHERNET, 4 PR, 24 AWG, CAT 5E |
| 1 | 377 | ANY | ANY | GROUNDING BAR |
| 1 | 378 | CUSTOM | CUSTOM | CUSTOM SHELF SUPPLIED AND INSTALLED BY PANEL FABRICATOR |
| A/R | 379 | PANDUIT | F2X4LG6 C2LG6 | 2 X 4 PLASTIC WIRING DUCT TYPE "E" W/COVER STYLE "C" |
| A/R | 380 | PANDUIT | F3X4LG6 C3LG6 | 3 X 4 PLASTIC WIRING DUCT TYPE "E" W/COVER STYLE "C" |
| 1 | 398 | HUBBELL | HBL5362I | DUPLEX RECEPTACLE, IVORY, 125V/20A, W/BOX AND BRUSHED ALUMINUM COVER (HUBBELL P.N.# A8) |
| 1 | 399 | HUBBELL | HBL5361I | SIMPLEX RECEPTACLE, IVORY, 125V/20A, W/BOX AND BRUSHED ALUMINUM COVER (HUBBELL P.N.# A7) |
| 1 | 400 | HUBBELL | HBL3810R | SIMPLEX RECEPTACLE, RED, 125V/20A, W/BOX AND BRUSHED ALUMINUM COVER (HUBBELL P.N.# A7) |
| 2 | 405 | WEIDMULLER | 8708670000 (CP SNT 250W 24V 10A) | POWER SUPPLY, 24VDC, 250W, 10A, W/ STATUS RELAY |
| 1 | 406 | WEIDMULLER | 8710620000 (CP DM 10) | DIODE MODULE, 10A PER INPUT, 40VDC MAX |
| 1 | 408 | IDEC | RH2B-UL-AC120V | RELAY, 120VAC COIL, DPDT W/ INDICATOR |
| 1 | 421 | IDEC | SH2B-05C | RELAY SOCKET, DIN RAIL MOUNT, FINGERSAFE |
| 1 | 450 | MTL SURGE TECHNOLOGIES | MA15/D/1/SI | 120/240 VAC, 15A, SURGE SUPPRESSOR AND FILTER |
| 8 | 451 | WEIDMULLER | 8448920000 | SURGE SUPPRESSOR, 24VDC, 2 WIRE LOOP PROTECTION (MCZ OVP) W/ END CAP PART #8389030000 |
| 8 | 452 | WEIDMULLER | 8389030000 | END CAP FOR 24VDC SURGE SUPPRESSOR (MCZ OVP) |
| 16 | 455 | ALLEN-BRADLEY | 700-HLT1Z24 | TERMINAL BLOCK RELAY, 24VDC, 6A CONTACTS, SPDT W/ LED |
| 1 | 505 | HOFFMAN | CR29-0416-G068 | AIR CONDITIONER, 120 VAC, 4000 BTU/HR, W/OUTDOOR ENCLOSURE PACKAGE |
| 1 | 703 | APC | SUA750, AP9610 | UPS. 115 VAC, 750 VA W/ RELAY I/O SMARTSLOT CARD OPTION, MINIMUM 30 MIN. RUNTIME OF COMPLETE PLC OPERATIONS POWER |
| 1 | 811 | POLYPHASER | IS-50NX-C2 | BROADBAND COAXIAL SURGE PROTECTOR, FLANGE MOUNT, 125-1000MHZ |
| 2 | 853 | TIMES MICROWAVE SYSTEMS | EZ-900-NMC | N-MALE CONNECTOR |

DLT&V
SYSTEMS ENGINEERING
4550 E. BROADWAY, STE 1005
PHOENIX, AZ 85040 | (602) 366-4658

Registered Professional Engineer (Electrical)
CERTIFICATE NO.
37390
MELINDA
TAM
Date Signed 9-29-08
ARIZONA, U.S.A.
Expires 3/31/11

NOTES

REVISIONS

| REV. | BY | DATE | DESCRIPTION |
|---|---|---|---|
| | | | |
| | | | |
| | | | |
| | | | |

CASA GRANDE WATER SYSTEM
SCADA PHASE II – WELL #31

ARIZONA WATER COMPANY

BILL OF MATERIALS

| DRAWN BY: | PROJECT NO. |
|---|---|
| MAB | 1219.01.027 |
| DESIGNED BY: | SUBMITTAL DATE: |
| MAB | SEPT 2008 |
| CHECKED BY: | DRAWING NUMBER |
| BA | EC5 |

DWG FILE: 1219.01.101_EC5.dwg 11:28am PLOTTED: Sep 30, 2008 stewis

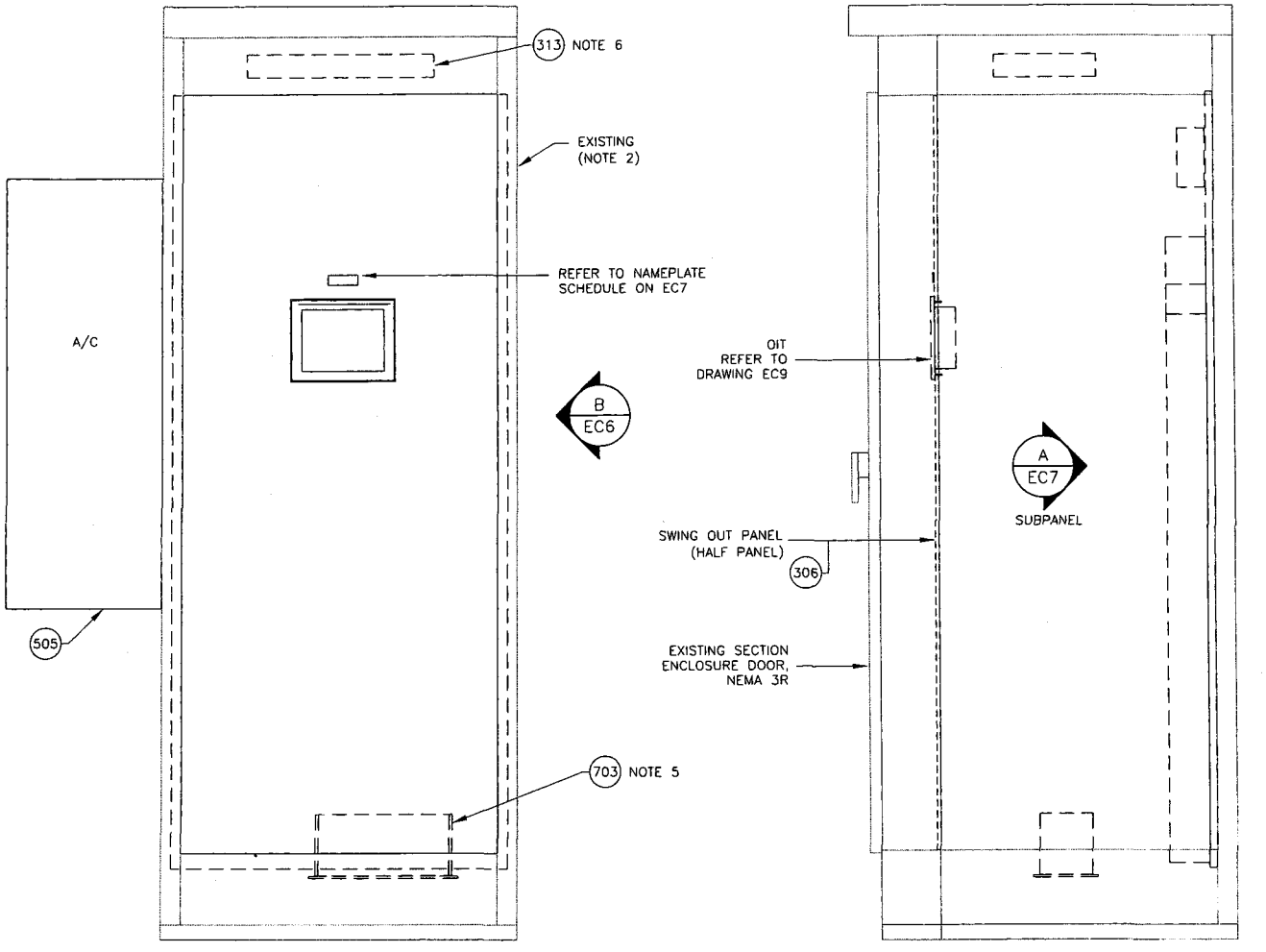


A ~ RTU ENCLOSURE, FRONT
1"=1'-0"

B ~ RTU ENCLOSURE, SIDE
1"=1'-0"

## NOTES:

1. BILL OF MATERIALS IS ON DRAWING EC5.
2. RTU CABINET IS PART OF THE EXISTING ELECTRICAL EQUIPMENT LINEUP.
3. REFER TO DRAWING EC7 FOR PLC INTERIOR LAYOUT.
4. FURNISH ADDITIONAL NAMEPLATES AS REQUIRED BY UL OR BY OTHER APPLICABLE CODES.
5. MOMOUNT UPS MINIMUM 6" ABOVE GRADE LEVEL. PANEL FABRICATOR SHALL SUPPLY AND INSTALL CUSTOM SUPPORT HARDWARE IN ENCLOSURE AS REQUIRED.
6. DOOR SWITCH ASSOCIATED WITH FLOURESCENT LIGHT FIXTURE IS SHOWN ON DRAWING EC7. REFER TO DRAWING EC10 FOR WIRING SCHEMATIC.

DLT&V
SYSTEMS ENGINEERING
PHOENIX, AZ 85013 (602) 266-4658

Registered Professional Engineer (Electrical)
CERTIFICATE NO.
37390
MELINDA TAM
Date Signed 9-29-08
ARIZONA, U.S.A.
Expires 3/31/11

NOTES

REVISIONS

| REV. | BY | DATE | DESCRIPTION |
|---|---|---|---|
| | | | |
| | | | |
| | | | |
| | | | |

CASA GRANDE WATER SYSTEM
SCADA PHASE II - WELL #31

ARIZONA WATER COMPANY

RTU ENCLOSURE LAYOUT

| DRAWN BY: | PROJECT NO. |
|---|---|
| MAB | 1219.01.027 |
| DESIGNED BY: | SUBMITTAL DATE: |
| MAB | SEPT 2008 |
| CHECKED BY: | DRAWING NUMBER |
| BA | EC6 |

DWG FILE: 1219.01.101_EC6.dwg 11:29am PLOTTED: Sep 30, 2008 slewis

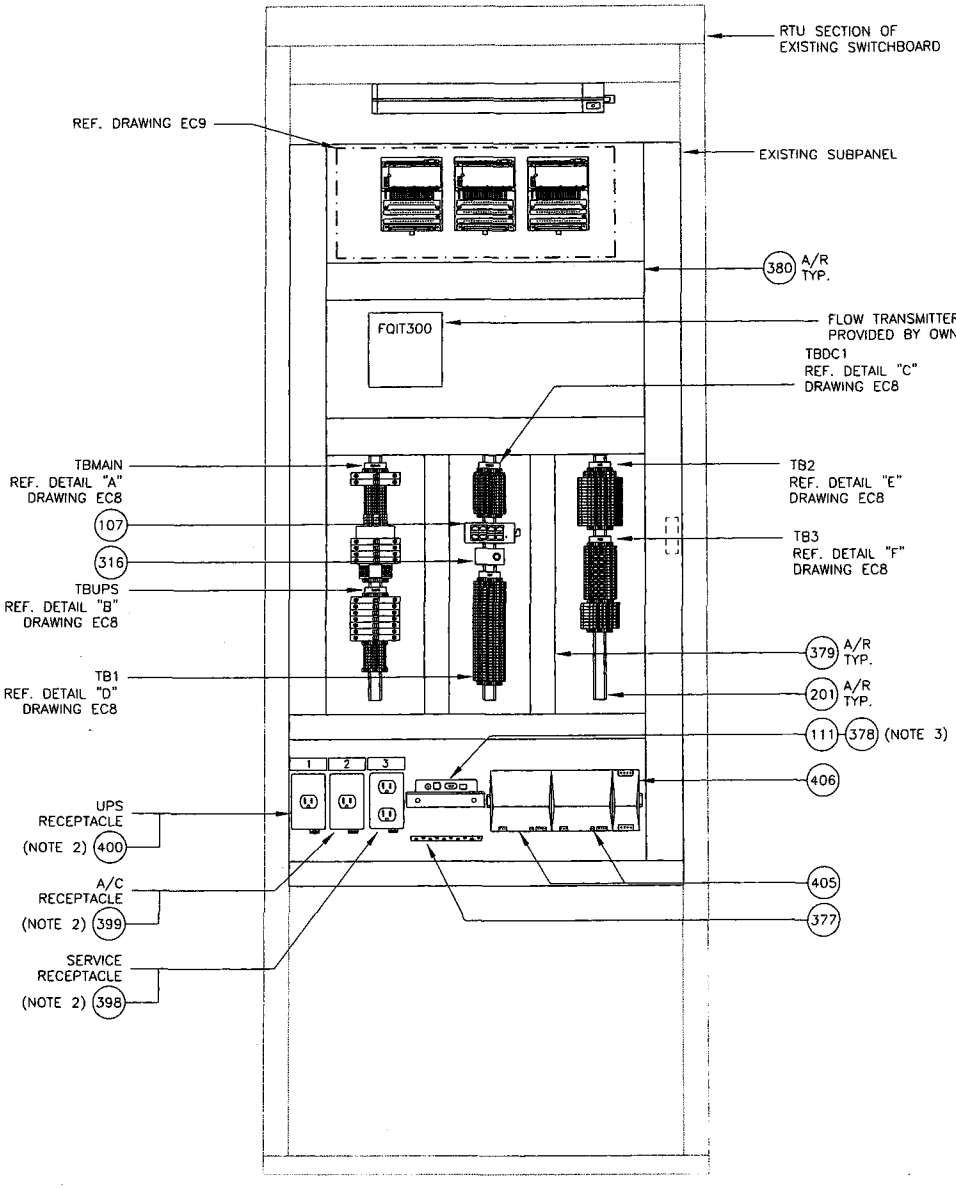


A / EC6 SUBPANEL LAYOUT
1"=10"

## NOTES:

1. BILL OF MATERIALS IS ON DRAWING EC5.
2. NAMEPLATE SHALL BE 3/32" THICK LAMINATED PHENOLIC TYPE BLACK WITH WHITE LETTERS. SEE BILL OF MATERIALS ON DRAWING EC5 AND NAMEPLATE SCHEDULE (DET B) ON THIS SHEET FOR ADDITIONAL INFORMATION.
3. MOUNT RADIO ON CUSTOM SHELF PROVIDED AND INSTALLED BY PANEL FABRICATOR. REFER TO DRAWING EC9 AND BILL OF MATERIALS ON EC5 FOR MORE INFORMATION.

**NAMEPLATE SCHEDULE (NOTE 2)**

| NP | HxWxLTR | FIRST LINE | SECOND LINE | LOCATION |
|---|---|---|---|---|
| 1 | 1" x 3" x 1/4" | UPS RECEPTACLE | ONLY | CENTERED ABOVE UPS RECEPTACLE |
| 2 | 1" x 3" x 1/4" | A/C RECEPTACLE | ONLY | CENTERED ABOVE A/C RECEPTACLE |
| 3 | 1" x 3" x 1/4" | SERVICE RECEPTACLE | ONLY | CENTERED ABOVE SERVICE RECEPTACLE |
| 4 | 1" x 3" x 1/4" | OIT | | CENTERED ABOVE OIT |

B / ~ NAMEPLATE SCHEDULE

DLT&V SYSTEMS ENGINEERING
3560 N. CENTRAL AVE., STE. 1900
PHOENIX, AZ 85012 (602) 266-4658

Registered Professional Engineer (Electrical)
CERTIFICATE NO. 37390
MELINDA TAM
Date Signed 9.29.08
ARIZONA, U.S.A.
Expires 3/31/11

NOTES

REVISIONS

| REV. | BY | DATE | DESCRIPTION |
|---|---|---|---|
| | | | |

CASA GRANDE WATER SYSTEM
SCADA PHASE II – WELL #31

ARIZONA WATER COMPANY

RTU SUBPANEL LAYOUT

| | |
|---|---|
| DRAWN BY: MAB | PROJECT NO. 1219.01.027 |
| DESIGNED BY: MAB | SUBMITTAL DATE: SEPT 2008 |
| CHECKED BY: BA | DRAWING NUMBER EC7 |

DWG FILE: 1219.01.101_EC7.dwg 11:29am PLOTTED: Sep 30, 2008 slewis

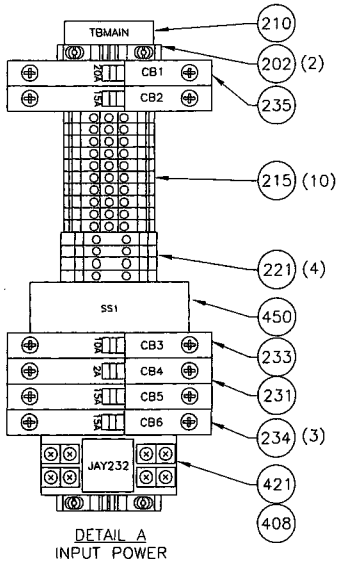


DETAIL A
INPUT POWER
TBMAIN

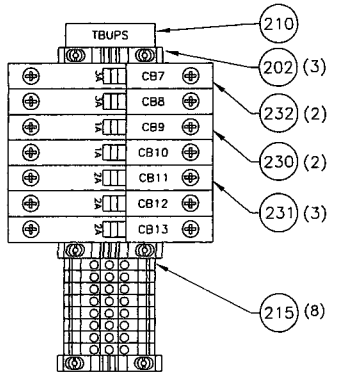


DETAIL B
PANEL POWER
TBUPS

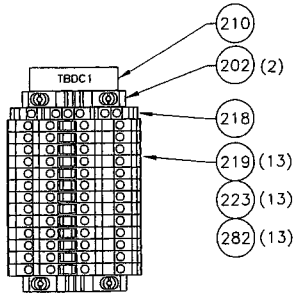


DETAIL C
24VDC POWER
DISTRIBUTION
TBDC1

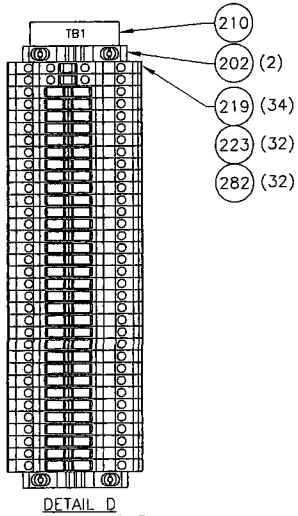


DETAIL D
DISCRETE INPUT
TB1

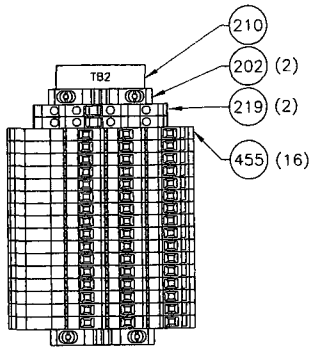


DETAIL E
DISCRETE OUTPUT
TB2

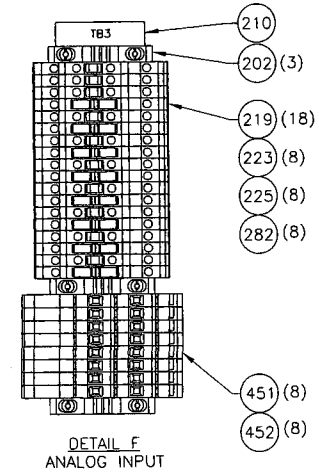


DETAIL F
ANALOG INPUT
TB3

## NOTES:

1. PROVIDE BUS BAR STYLE OR INSULATED COMB STYLE JUMPERS WHERE 2 OR MORE TERMINALS IN THE SAME TB ARE COMMONED TOGETHER. DO NOT USE DISCRETE WIRE JUMPERS.
2. BILL OF MATERIALS IS ON DRAWING EC5.
3. PANEL BUILDER TO SUPPLY AND INSTALL ALL NECESSARY AND APPROPRIATE ACCESSORIES INCLUDING TERMINAL NUMBERS, JUMPERS AND END BARRIERS.

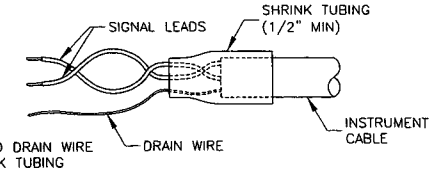


NOTE:
WRAP UNUSED DRAIN WIRE
UNDER SHRINK TUBING

DETAIL G
INSTRUMENT CABLE
TERMINATION

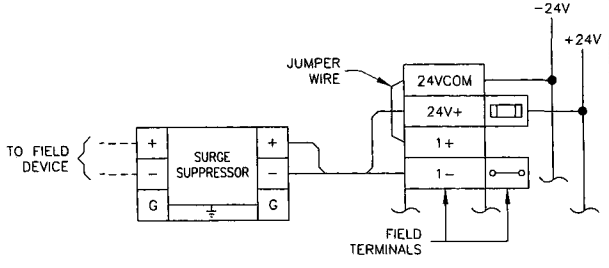


2-WIRE

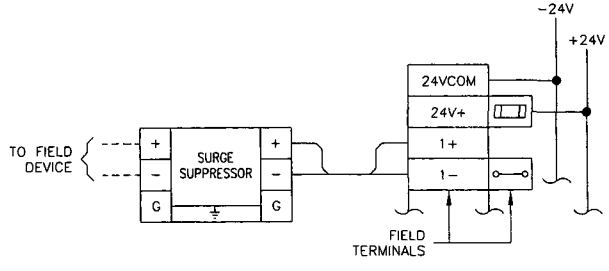


4-WIRE

DETAIL H
ANALOG INPUT TERMINALS
2 & 4-WIRE TYPICAL CONNECTIONS

DLT&V
SYSTEMS ENGINEERING
3550 N. CENTRAL AVE, STE. 1900
PHOENIX, AZ 85012 (602) 266-4658

Registered Professional Engineer (Electrical)
CERTIFICATE NO. 37390
MELINDA TAM
Date Signed 9-29-08
ARIZONA, U.S.A.
Expires 3/31/11

NOTES

REVISIONS

| REV. | BY | DATE | DESCRIPTION |
|---|---|---|---|
| | | | |

CASA GRANDE WATER SYSTEM
SCADA PHASE II - WELL #31

ARIZONA WATER COMPANY

TERMINAL BLOCK DETAILS

| | |
|---|---|
| DRAWN BY: MAB | PROJECT NO. 1219.01.027 |
| DESIGNED BY: MAB | SUBMITTAL DATE: SEPT 2008 |
| CHECKED BY: BA | DRAWING NUMBER EC8 |

DWG FILE: 1219.01.101_EC8.dwg 11:29am PLOTTED: Sep 30, 2008 slewis

## NOTES:

1. BILL OF MATERIALS IS ON DRAWING EC5.
2. ANTENNA, ANTENNA MAST, GROUNDING KIT AND CABLE PROVIDED AND INSTALLED BY OTHERS.

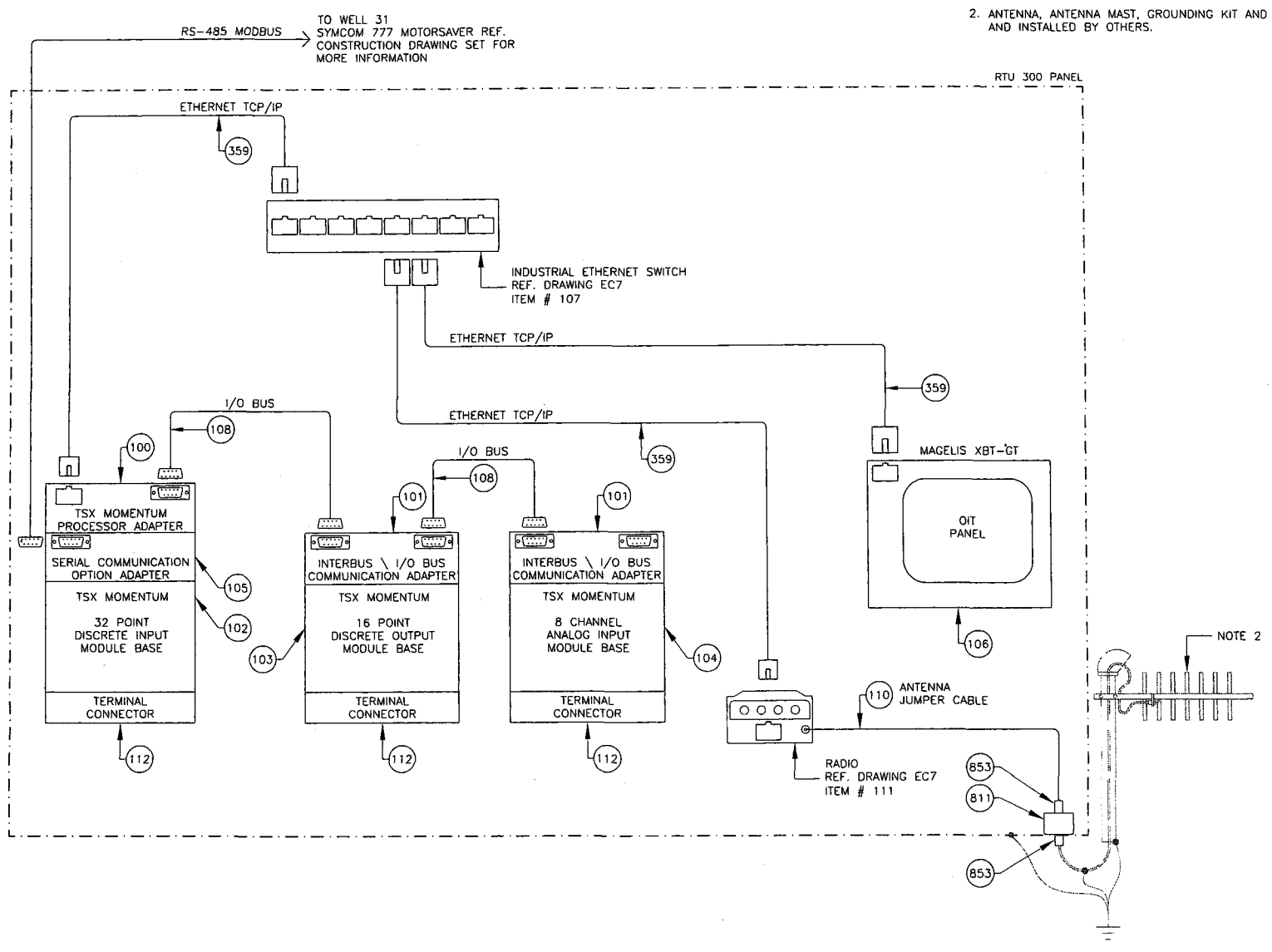


DWG FILE: 1219.01.101_EC9.dwg PLOTTED: Sep 30, 2008 11:29am stewis

DLT&V SYSTEMS ENGINEERING
3550 N. CENTRAL AVE., STE. 1900
PHOENIX, AZ 85012 P (602) 264-6831

Registered Professional Engineer (Electrical)
CERTIFICATE NO.
37390
MELINDA
TAM
Date Signed 9-29-08
ARIZONA, U.S.A.
Expires 3/31/11

NOTES

| REVISIONS | | | |
|---|---|---|---|
| REV. | BY | DATE | DESCRIPTION |
| | | | |
| | | | |
| | | | |
| | | | |

CASA GRANDE WATER SYSTEM
SCADA PHASE II – WELL #31

ARIZONA WATER COMPANY

COMMUNICATIONS
SYSTEM ARCHITECTURE
DIAGRAM

| | |
|---|---|
| DRAWN BY: MAB | PROJECT NO. 1219.01.027 |
| DESIGNED BY: MAB | SUBMITTAL DATE: SEPT 2008 |
| CHECKED BY: BA | DRAWING NUMBER EC9 |

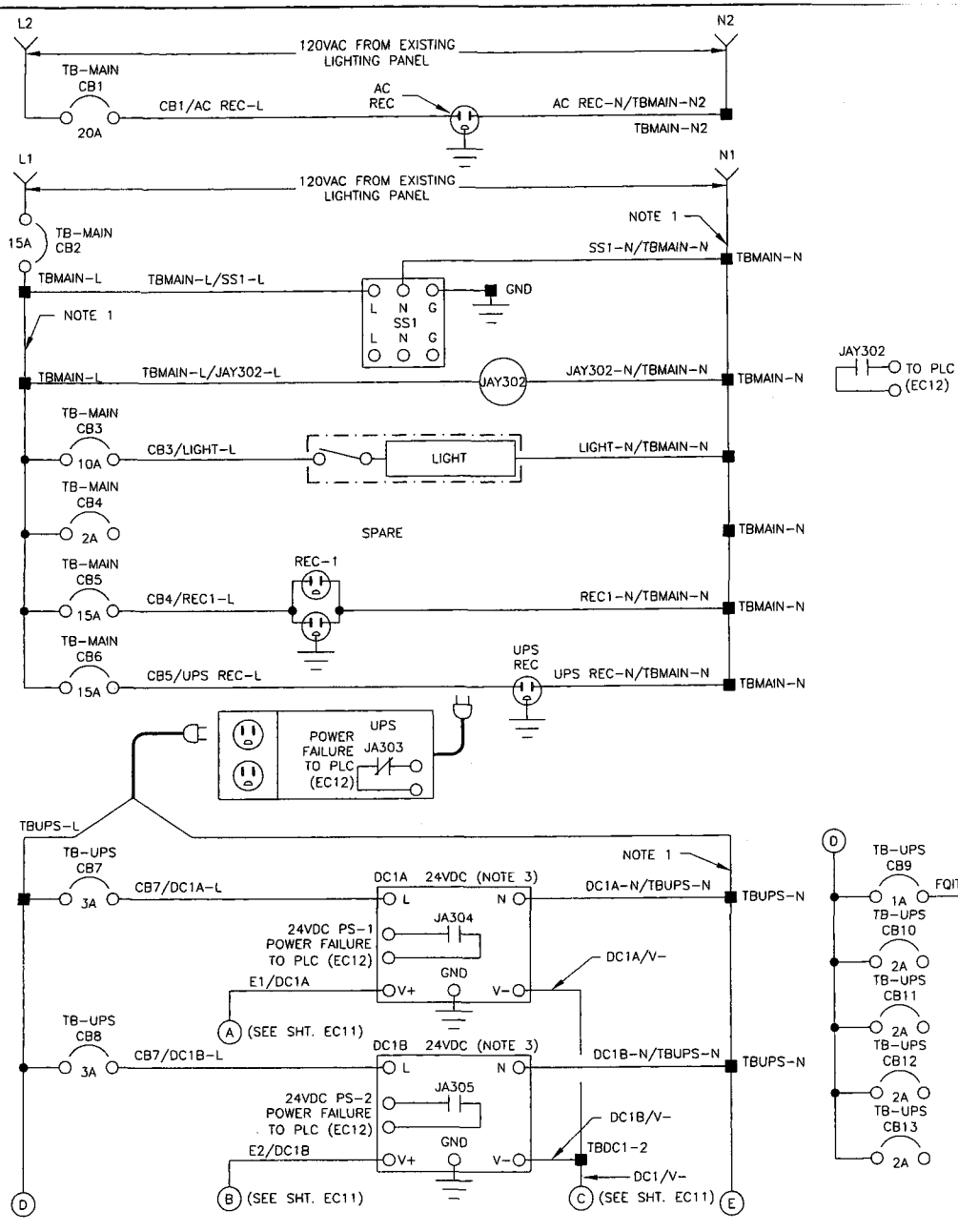


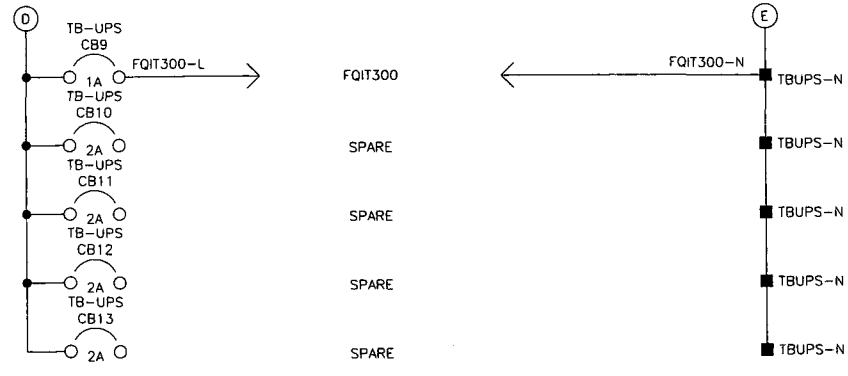


120VAC POWER DISTRIBUTION

## NOTES:

1. PROVIDE BUS BAR STYLE OR INSULATED COMB STYLE JUMPERS WHERE 2 OR MORE TERMINALS IN THE SAME TB ARE COMMONED TOGETHER. DO NOT USE DISCRETE WIRE JUMPERS.
2. BILL OF MATERIALS IS ON DRAWING EC5.
3. ADJUST VOLTAGE OUTPUT SETTING ON DC1B TO BE 1.0 VOLT LESS THAN DC1A.

DLT&V
SYSTEMS ENGINEERING
3550 N. CENTRAL AVE, STE. 1900
PHOENIX, AZ 85012 (602) 266-4658

Registered Professional Engineer (Electrical)
CERTIFICATE NO. 37390
MELINDA TAM
Date Signed 9.29.08
ARIZONA, U.S.A.
Expires 3/31/11

NOTES

REVISIONS

| REV. | BY | DATE | DESCRIPTION |
|---|---|---|---|
| | | | |

CASA GRANDE WATER SYSTEM
SCADA PHASE II - WELL #31

ARIZONA WATER COMPANY

120VAC POWER DISTRIBUTION SCHEMATIC

| | |
|---|---|
| DRAWN BY: MAB | PROJECT NO. 1219.01.027 |
| DESIGNED BY: MAB | SUBMITTAL DATE: SEPT 2008 |
| CHECKED BY: BA | DRAWING NUMBER EC10 |

DWG FILE: 1219.01.101_EC10.dwg 11:30am PLOTTED: Sep 30, 2008 slewis

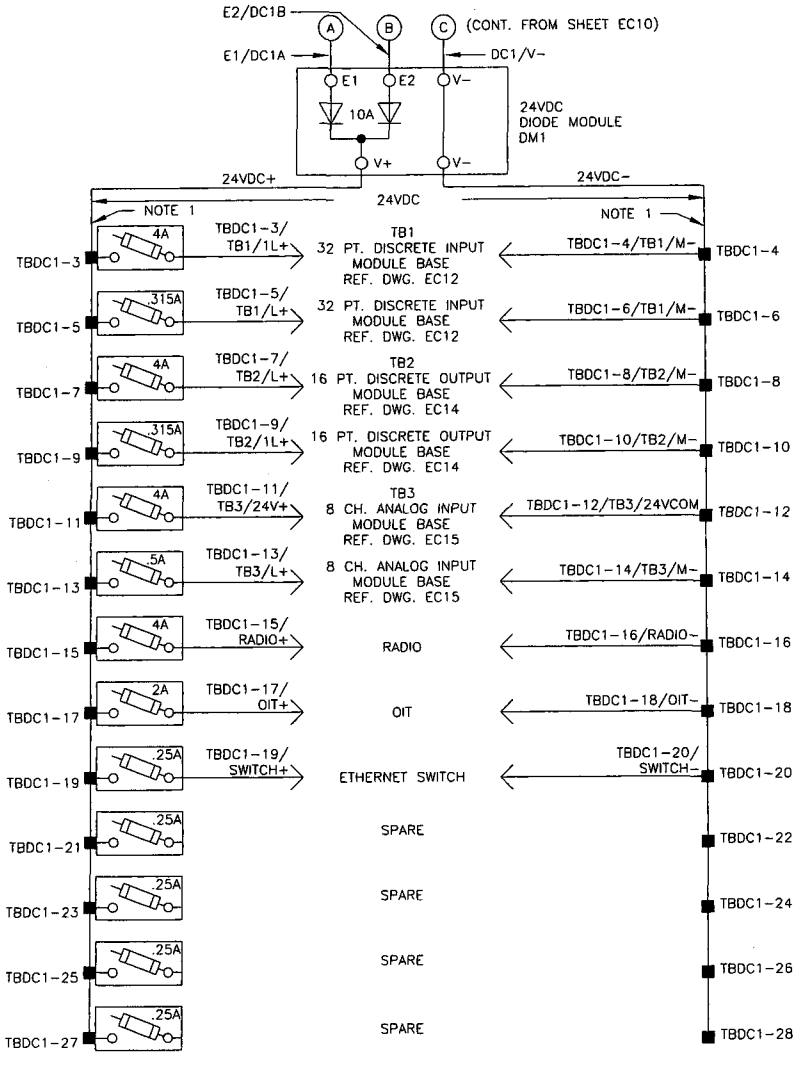


## 24VDC POWER DISTRIBUTION

## NOTES:

1. PROVIDE BUS BAR STYLE OR INSULATED COMB STYLE JUMPERS WHERE 2 OR MORE TERMINALS IN THE SAME TB ARE COMMONED TOGETHER. DO NOT USE DISCRETE WIRE JUMPERS.
2. BILL OF MATERIALS IS ON DRAWING EC5.
3. THE PROPER FUSE SIZE ON ANY FUTURE EQUIPMENT INSTALLATIONS UTILIZING SPARE CIRCUITS WILL BE THE RESPONSIBILITY OF THE OWNER.


DLT&V
SYSTEMS ENGINEERING


Registered Professional Engineer (Electrical)
CERTIFICATE NO.
37390
MELINDA
TAM
Date Signed 9-29-08
ARIZONA, U.S.A.

Expires 3/31/11

NOTES

| REVISIONS | | | |
|---|---|---|---|
| REV. | BY | DATE | DESCRIPTION |
| | | | |
| | | | |
| | | | |
| | | | |

CASA GRANDE WATER SYSTEM
SCADA PHASE II – WELL #31

ARIZONA WATER COMPANY

24VDC POWER DISTRIBUTION SCHEMATIC

| | |
|---|---|
| DRAWN BY: MAB | PROJECT NO. 1219.01.027 |
| DESIGNED BY: MAB | SUBMITTAL DATE: SEPT 2008 |
| CHECKED BY: BA | DRAWING NUMBER EC11 |


DWG FILE: 1219.01.101_EC11.dwg 11:30am PLOTTED: Sep 30, 2008 stewis

## NOTES:

1. WIRE MODULES AND SIZE FUSES PER MANUFACTURER'S REQUIREMENTS.
2. BUS OR INSULATED COMB STYLE JUMPER.

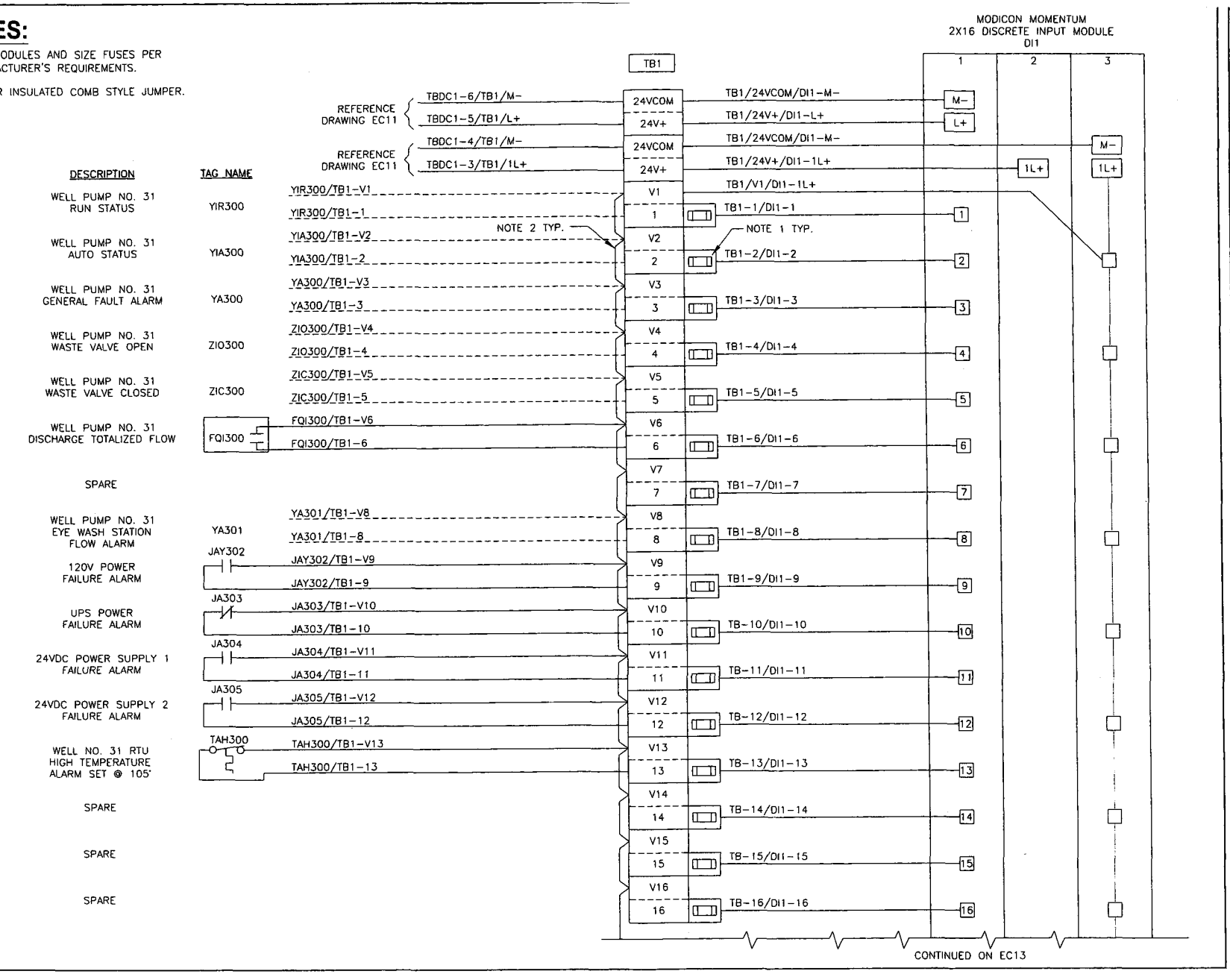


DWG FILE: 1219.01.101_EC12.dwg 11:30am PLOTTED: Sep 30, 2008 slewis

DLT&V SYSTEMS ENGINEERING

Registered Professional Engineer (Electrical) CERTIFICATE NO. 37390 MELINDA TAM Date Signed 9-29-08 ARIZONA, U.S.A.

Expires 3/31/11

NOTES

REVISIONS

| REV. | BY | DATE | DESCRIPTION |
|---|---|---|---|
| | | | |
| | | | |
| | | | |
| | | | |

CASA GRANDE WATER SYSTEM
SCADA PHASE II – WELL #31

ARIZONA WATER COMPANY

DISCRETE INPUT MODULE BASE WIRING DIAGRAM – SHEET 1

| DRAWN BY: | PROJECT NO. |
|---|---|
| MAB | 1219.01.027 |
| DESIGNED BY: | SUBMITTAL DATE: |
| MAB | SEPT 2008 |
| CHECKED BY: | DRAWING NUMBER |
| BA | EC12 |

# NOTES:

1. WIRE MODULES AND SIZE FUSES PER MANUFACTURER'S REQUIREMENTS.
2. BUS OR INSULATED COMB STYLE JUMPER.

| DESCRIPTION | TAG NAME |
|---|---|
| SPARE | |
| SPARE | |
| SPARE | |
| SPARE | |
| SPARE | |
| SPARE | |
| SPARE | |
| SPARE | |
| SPARE | |
| SPARE | |
| SPARE | |
| SPARE | |
| SPARE | |
| SPARE | |
| SPARE | |
| SPARE | |

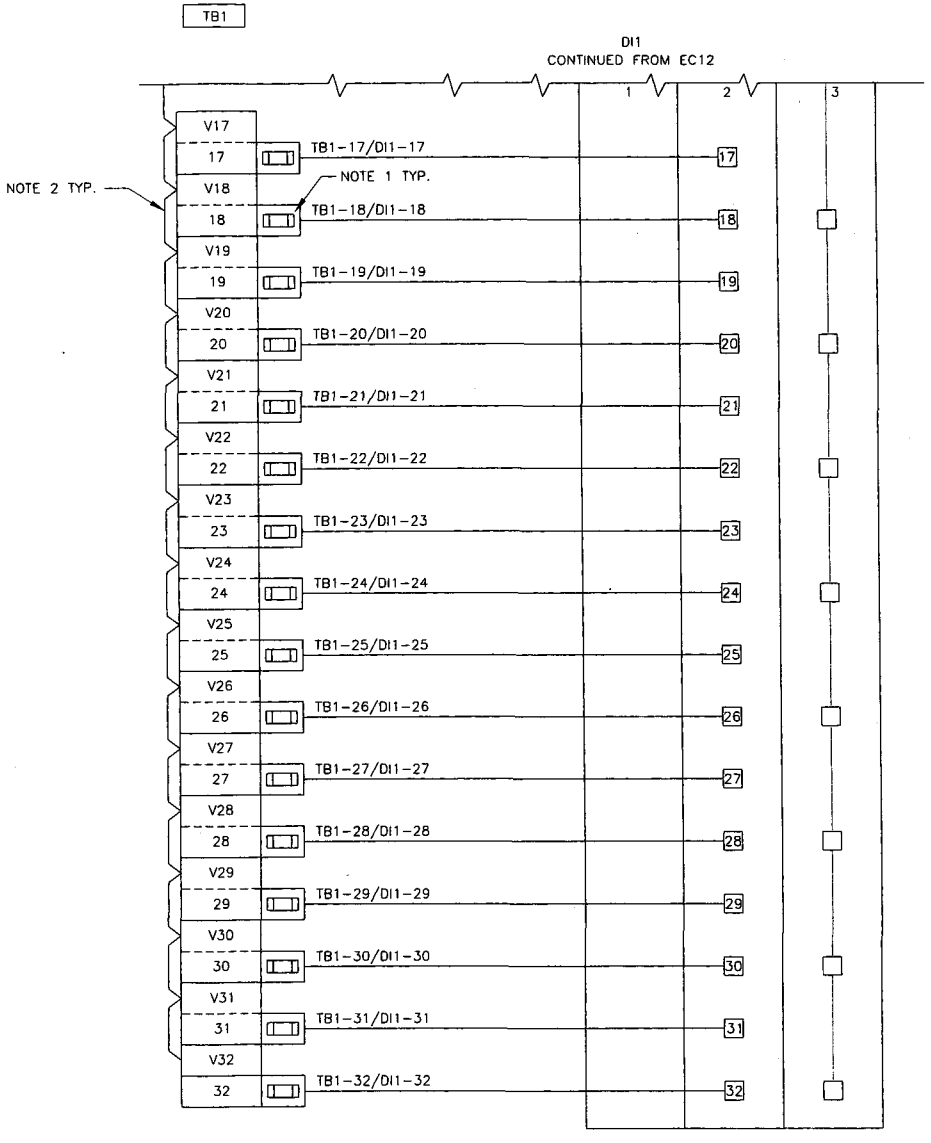


DLT&V
SYSTEMS ENGINEERING
3550 N. CENTRAL AVE, STE. 1900
PHOENIX, AZ 85012 (602) 266-4658

Registered Professional Engineer (Electrical)
CERTIFICATE NO. 37390
MELINDA TAM
Date Signed 9.29.08
ARIZONA, U.S.A.
Expires 3/31/11

NOTES

REVISIONS

| REV. | BY | DATE | DESCRIPTION |
|---|---|---|---|
| | | | |

CASA GRANDE WATER SYSTEM
SCADA PHASE II – WELL #31

ARIZONA WATER COMPANY

DISCRETE INPUT
MODULE BASE
WIRING DIAGRAM – SHEET 2

| | |
|---|---|
| DRAWN BY: MAB | PROJECT NO. 1219.01.027 |
| DESIGNED BY: MAB | SUBMITTAL DATE: SEPT 2008 |
| CHECKED BY: BA | DRAWING NUMBER EC13 |

DWG FILE: 1219.01.101_EC13.dwg 11:30am PLOTTED: Sep 30, 2008 slewis

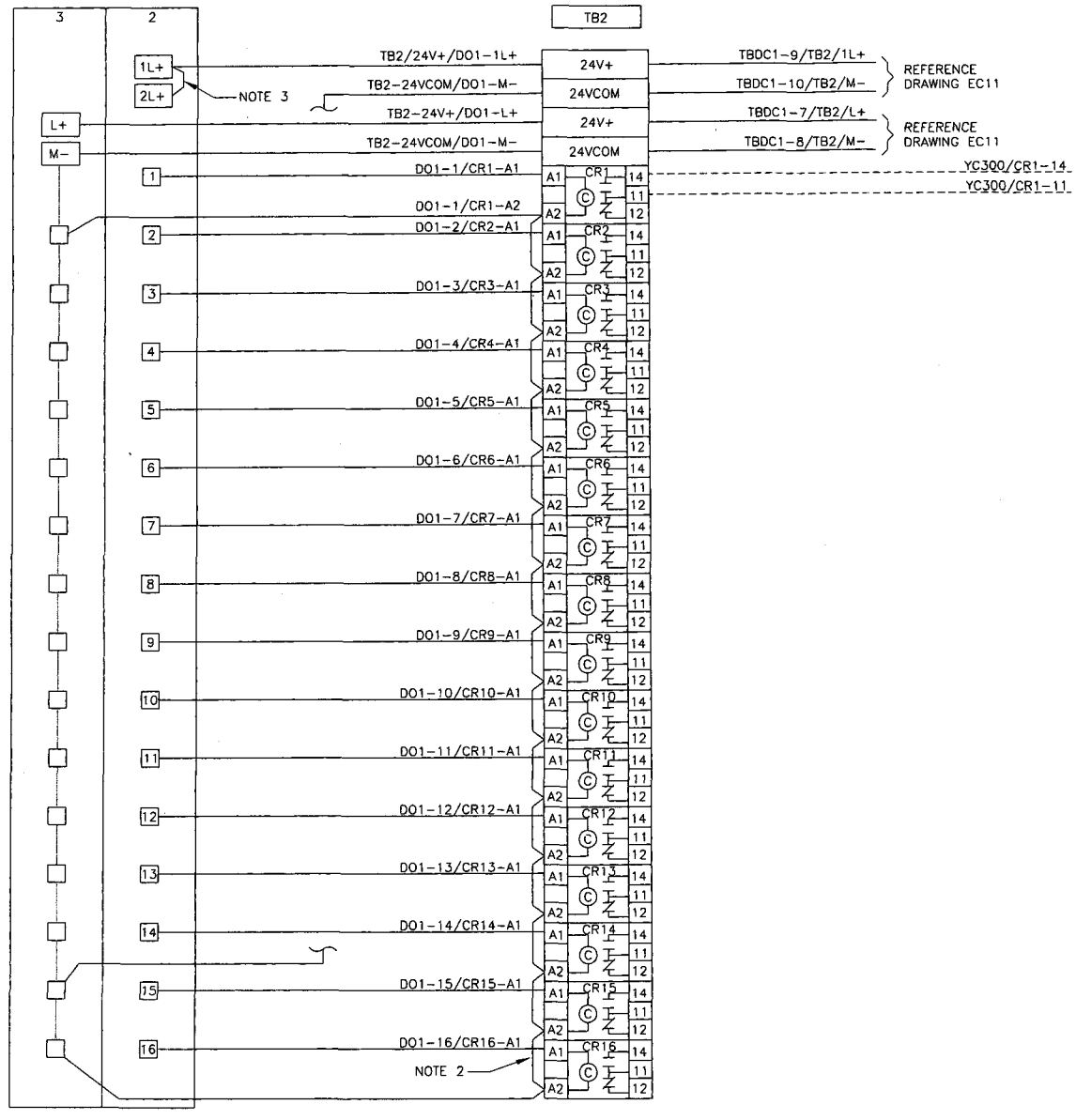


# NOTES:

1. WIRE MODULES PER MANUFACTURER'S REQUIREMENTS.
2. BUS OR INSULATED COMB STYLE JUMPER.
3. JUMPER WIRES PROVIDED BY PANEL MANUFACTURER.

| TAG NAME | DESCRIPTION |
|---|---|
| YC300 | WELL PUMP NO. 31 START/STOP COMMAND |
| | SPARE |
| | SPARE |
| | SPARE |
| | SPARE |
| | SPARE |
| | SPARE |
| | SPARE |
| | SPARE |
| | SPARE |
| | SPARE |
| | SPARE |
| | SPARE |
| | SPARE |
| | SPARE |

DLT&V
SYSTEMS ENGINEERING
3550 N. CENTRAL AVE, STE. 1900
PHOENIX, AZ 85012 (602) 266-4658

Registered Professional Engineer (Electrical)
CERTIFICATE NO. 37390
MELINDA TAM
Date Signed 9-29-08
ARIZONA, U.S.A.
Expires 3/31/11

NOTES

REVISIONS

| REV. | BY | DATE | DESCRIPTION |
|---|---|---|---|
| | | | |

CASA GRANDE WATER SYSTEM
SCADA PHASE II - WELL #31

ARIZONA WATER COMPANY

DISCRETE OUTPUT MODULE BASE WIRING DIAGRAM

| | |
|---|---|
| DRAWN BY: MAB | PROJECT NO. 1219.01.027 |
| DESIGNED BY: MAB | SUBMITTAL DATE: SEPT 2008 |
| CHECKED BY: BA | DRAWING NUMBER EC14 |

DWG FILE: 1219.01.101_EC14.dwg 11:30am PLOTTED: Sep 30, 2008 stewis

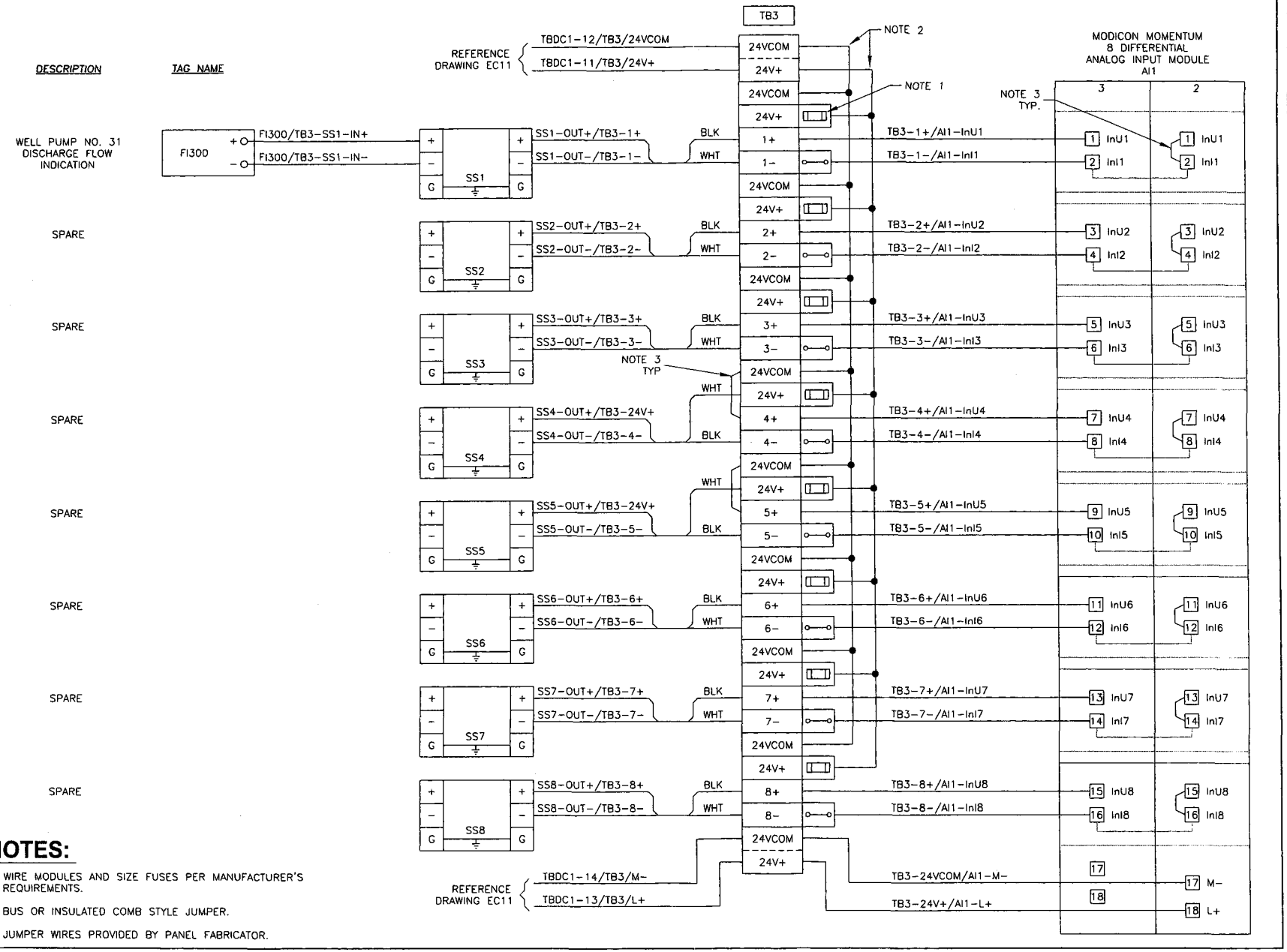


## NOTES:

1. WIRE MODULES AND SIZE FUSES PER MANUFACTURER'S REQUIREMENTS.
2. BUS OR INSULATED COMB STYLE JUMPER.
3. JUMPER WIRES PROVIDED BY PANEL FABRICATOR.

DWG FILE: 1219.01.101_EC15.dwg 11:30am PLOTTED: Sep 30, 2008 stevis

DLT&V SYSTEMS ENGINEERING

Registered Professional Engineer (Electrical) CERTIFICATE NO. 37390 MELINDA TAM Date Signed 9-29-08 ARIZONA U.S.A.

Expires 3/31/11

NOTES

| REVISIONS | | | |
|---|---|---|---|
| REV. | BY | DATE | DESCRIPTION |
| | | | |
| | | | |
| | | | |
| | | | |

CASA GRANDE WATER SYSTEM
SCADA PHASE II – WELL #31

ARIZONA WATER COMPANY

ANALOG INPUT MODULE BASE WIRING DIAGRAM

| DRAWN BY: | PROJECT NO. |
|---|---|
| MAB | 1219.01.027 |
| DESIGNED BY: | SUBMITTAL DATE: |
| MAB | SEPT 2008 |
| CHECKED BY: | DRAWING NUMBER |
| BA | EC15 |

# CASA GRANDE WATER SYSTEM
# SCADA DESIGN - PHASE II
# WELL NO. 30 - RTU 290 DESIGN

DLT&V
SYSTEMS ENGINEERING
2415 N. CENTRAL AVE, STE. 1900
PHOENIX, AZ 85012 (602) 266-4938

Registered Professional Engineer (Electrical)
CERTIFICATE NO.
37390
MELINDA
TAM
Date Signed 9-29-08
ARIZONA, U.S.A.
Expires 3/31/11

NOTES

REVISIONS

| REV. | BY | DATE | DESCRIPTION |
|---|---|---|---|
| | | | |
| | | | |
| | | | |
| | | | |

CASA GRANDE WATER SYSTEM
SCADA PHASE II - WELL #30

ARIZONA WATER COMPANY

COVER SHEET

| | |
|---|---|
| DRAWN BY: MAB | PROJECT NO. 1219.01.027 |
| DESIGNED BY: MAB | SUBMITTAL DATE: SEPT 2008 |
| CHECKED BY: BA | DRAWING NUMBER EC1 |

DWG FILE: 1219.01.101_EC1.dwg 11:24am PLOTTED: Sep 30, 2008 stewis

# CASA GRANDE WATER SYSTEM
# SCADA DESIGN – PHASE II
# WELL NO. 30 RTU DESIGN
# PROJECT SHEET INDEX

| Drawing No. | Drawing Title |
|---|---|
| EC1 | COVER SHEET |
| EC2 | PROJECT SHEET INDEX |
| EC3 | STANDARD SYMBOLS AND ABBREVIATIONS |
| EC4 | ISA TABLE AND COMMON LEGENDS SHEET |
| EC5 | BILL OF MATERIALS |
| EC6 | RTU ENCLOSURE LAYOUT |
| EC7 | RTU SUBPANEL LAYOUT |
| EC8 | TERMINAL BLOCK DETAILS |
| EC9 | COMMUNICATIONS SYSTEM ARCHITECTURE DIAGRAM |
| EC10 | 120VAC POWER DISTRIBUTION SCHEMATIC |
| EC11 | 24VDC POWER DISTRIBUTION SCHEMATIC |
| EC12 | DISCRETE INPUT MODULE BASE WIRING DIAGRAM - SHEET 1 |
| EC13 | DISCRETE INPUT MODULE BASE WIRING DIAGRAM - SHEET 2 |
| EC14 | DISCRETE OUTPUT MODULE BASE WIRING DIAGRAM |
| EC15 | ANALOG INPUT MODULE BASE WIRING DIAGRAM |

DLT&V
SYSTEMS ENGINEERING
3838 N. CENTRAL AVE., SUITE 1500
PHOENIX, AZ 85012 (602) 266-4688

Registered Professional Engineer (Electrical)
CERTIFICATE NO.
37390
MELINDA TAM
Date Signed 9.29.08
ARIZONA, U.S.A.
Expires 3/31/11

NOTES

REVISIONS

| REV. | BY | DATE | DESCRIPTION |
|---|---|---|---|
| | | | |
| | | | |
| | | | |
| | | | |

CASA GRANDE WATER SYSTEM
SCADA PHASE II – WELL #30

ARIZONA WATER COMPANY

PROJECT SHEET INDEX

| DRAWN BY: | PROJECT NO. |
|---|---|
| MAB | 1219.01.027 |
| DESIGNED BY: | SUBMITTAL DATE: |
| MAB | SEPT 2008 |
| CHECKED BY: | DRAWING NUMBER |
| BA | EC2 |

DWG FILE: 1219.01.101_EC2.dwg 11:24am PLOTTED: Sep 30, 2008 stewis

# CASA GRANDE WATER SYSTEM
# SCADA DESIGN – PHASE II
# WELL NO. 30 RTU DESIGN
# STANDARD SYMBOLS AND ABBREVIATIONS

## SCHEMATIC/WIRING DIAGRAM SYMBOLS

CIRCUIT BREAKER
*A – AMP RATING

FUSE WITH PULLER
*A – AMP RATING

*SWITCH*
NORMALLY OPEN

SELECTOR SWITCH
2 POSITION, NORMALLY OPEN

SELECTOR SWITCH
3 POSITION, NORMALLY OPEN

TEMPERATURE SWITCH
NORMALLY OPEN

TERMINAL BLOCK
* – TB IDENTIFICATION

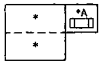


TERMINAL BLOCK W/ FUSE
PLUG AND FUSE
* – TB IDENTIFICATION
*A – AMPS

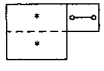


TERMINAL BLOCK W/
DISCONNECT KNIFE
* – TB IDENTIFICATION

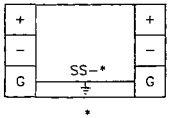


SURGE SUPPRESSOR FOR
FLOATING SIGNAL CIRCUITS
* – SS NUMBER IDENTIFICATION

SURGE SUPPRESSOR FOR
POWER SUPPLY
* – SS NUMBER IDENTIFICATION

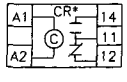


CONTROL RELAY
* – CR NUMBER IDENTIFICATION
# – TERMINAL NUMBER

## SCHEMATIC/WIRING DIAGRAM SYMBOLS

EARTH GROUND



TERMINAL BLOCK

DUPLEX RECEPTACLE

SINGLE RECEPTACLE

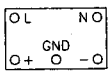


DC POWER SUPPLY
* – DC VOLTAGE RATING

## COLOR CODE CHART FOR 18 AWG BELDEN CABLES
## 12 COND. NO. 8466 AND 19 COND. NO. 8619

| | | |
|---|---|---|
| BLACK | BLK | 1st |
| WHITE | WHT | 2nd |
| RED | RED | 3rd |
| GREEN | GRN | 4th |
| ORANGE | ORN | 5th |
| BLUE | BLU | 6th |
| WHITE/BLACK | WHT/BLK | 7th |
| RED/BLACK | RED/BLK | 8th |
| GREEN/BLACK | GRN/BLK | 9th |
| ORANGE/BLACK | ORN/BLK | 10th |
| BLUE/BLACK | BLU/BLK | 11th |
| BLACK/WHITE | BLK/WHT | 12th |
| RED/WHITE | RED/WHT | 13th |
| GREEN/WHITE | GRN/WHT | 14th |
| BLUE/WHITE | BLU/WHT | 15th |
| BLACK/RED | BLK/RED | 16th |
| WHITE/RED | WHT/RED | 17th |
| ORANGE/RED | ORN/RED | 18th |
| BLUE/RED | BLU/RED | 19th |

## WIRE SIZES

(CIRCUIT WIRING SHALL BE RATED IN ACCORDANCE WITH THE MAXIMUM PERMITTED AMPERE RATING/SETTING OF THE OVERCURRENT PROTECTION DEVICE. N.EC. 210–3)

120VAC / 20A POWER CIRCUIT – MIN. #12 AWG.
120VAC / 15A AND BELOW – MIN. #14 AWG.

24VDC / 20A POWER CIRCUIT – MIN. #12 AWG.
24VDC / 15A AND BELOW – MIN. #16 AWG.
24VDC I/O & SIGNAL CIRCUIT – MIN. #18 AWG.

4–20mADC I/O SIGNAL CIRCUIT – MIN. #18 AWG.

## ABBREVIATIONS

| | |
|---|---|
| A/R | AS REQUIRED |
| AC COM | NEUTRAL |
| AFF | ABOVE FINISHED FLOOR |
| AI | ANALOG INPUT |
| ANL COM | ANALOG COMMON |
| AO | ANALOG OUTPUT |
| AWG | AMERICAN WIRE GAUGE |
| BLK | BLACK |
| BLU | BLUE |
| CAP | CENTRAL ARIZONA PROJECT |
| CLR | CLEAR |
| CR | CONTROL RELAY |
| DC COM | DC COMMON |
| DC+ | DC POSITIVE POTENTIAL |
| DI | DISCRETE INPUT |
| DO | DISCRETE OUTPUT |
| DS | DOOR SWITCH |
| FOM | FIBER OPTIC MODEM |
| FOT | FIBER OPTIC TRANSCEIVER |
| GND | GROUND |
| GRN | GREEN |
| I/O | INPUT/OUTPUT |
| L | LINE |
| N | NEUTRAL |
| NC | NORMALLY CLOSED |
| NO | NORMALLY OPEN |
| NP | NAMEPLATE |
| OIT | OPERATOR INTERFACE TERMINAL |
| ORN | ORANGE |
| POB | POWER DISTRIBUTION BLOCK |
| PLC | PROGRAMMABLE LOGIC CONTROLLER |
| PP | FIBER OPTIC PATCH PANEL |
| PS | POWER SUPPLY |
| REC | RECEPTACLE |
| RES | RESERVOIR |
| RIO | REMOTE INPUT/OUTPUT |
| RTU | REMOTE TELEMETRY UNIT |
| SLC | SMALL LOGIC CONTROLLER |
| SP | SPACE |
| SS | SURGE SUPPRESSOR |
| TB | TERMINAL BLOCK |
| UPS | UNINTERRUPTIBLE POWER SUPPLY |
| WHT | WHITE |
| WTR | WATER TREATMENT PLANT |
| WWTP | WASTE WATER TREATMENT PLANT |

## LINETYPE LEGEND

- FIELD WIRING
- INTERNAL PANEL WIRING
- RADIO COMMUNICATION LINK
- FO — FIBER OPTIC CABLE
- FOP — FIBER OPTIC PATCH CABLE
- EN — ETHERNET CAT5 CABLE
- DH+ — DATA HIGHWAY PLUS
- RIO — REMOTE INPUT OUTPUT
- AREA DIVIDER
- EQUIPMENT
- PATCH PANEL


DLT&V SYSTEMS ENGINEERING
3550 N. CENTRAL AVE, STE. 1900
PHOENIX, AZ 85012 (602) 266-4658


Registered Professional Engineer (Electrical)
APPLICANT NO.
37390
MELINDA TAM
Date Signed 9-25-08
ARIZONA, U.S.A.

Expires 3/31/11

NOTES

REVISIONS

| REV. | BY | DATE | DESCRIPTION |
|---|---|---|---|
| | | | |
| | | | |
| | | | |
| | | | |

CASA GRANDE WATER SYSTEM
SCADA PHASE II – WELL #30

ARIZONA WATER COMPANY

STANDARD SYMBOLS AND ABBREVIATIONS

| | |
|---|---|
| DRAWN BY: MAB | PROJECT NO. 1219.01.027 |
| DESIGNED BY: MAB | SUBMITTAL DATE: SEPT 2008 |
| CHECKED BY: BA | DRAWING NUMBER EC3 |

DWG FILE: 1219.01.101_EC3.dwg 11:24am PLOTTED: Sep 30, 2008 stewis

# CASA GRANDE WATER SYSTEM
# SCADA DESIGN – PHASE II
# WELL NO. 30 RTU DESIGN
# ISA TABLE AND COMMON LEGENDS SHEET

## ISA INSTRUMENT IDENTIFICATION TABLE

| FIRST LETTERS | | | SUCCEEDING LETTERS | | |
|---|---|---|---|---|---|
| MEASURED OR INITIATING VARIABLE | | MODIFIER | READOUT OR PASSIVE FUNCTION | OUTPUT FUNCTION | MODIFIER |
| A | ANALYZER | | ALARM | | AUTO |
| B | BURNER, COMBUSTION | | | | |
| C | CONDUCTIVITY | | | CONTROL | CLOSED |
| D | DENSITY | DIFFERENTIAL | | | |
| E | VOLTAGE | | ELEMENT | | |
| F | FLOW | RATIO | | | |
| G | GAUGE | | GLASS, VIEWING DEVICE | | |
| H | HAND | | | | HIGH |
| I | CURRENT | | INDICATE | | |
| J | POWER | SCAN | | | |
| K | TIME, TIME SCHED. | TIME RATE OF CHANGE | | CONTROL STATION | |
| L | LEVEL | | LIGHT | | LOW |
| M | MOTION | | | | MIDDLE |
| N | INTRUSION | | | | NORMAL |
| O | TORQUE | | ORIFICE, RESTRICTION | | OPEN |
| P | PRESSURE | | POINT CONNECTION | | STOP |
| Q | QUANTITY | INTEGRATE, TOTALIZE | | | |
| R | RADIATION | | RECORD, OR PRINT | | REMOTE |
| S | SPEED, FREQUENCY | SAFETY | | SWITCH | START |
| T | TEMPERATURE | | | TRANSMIT | |
| U | MULTIVARIABLE | | MULTIFUNCTION | MULTIFUNCTION | MULTIFUNCTION |
| V | VIBRATION | | | VALVE, LOUVER | |
| W | WEIGHT | | WELL | | |
| X | MOTOR | X–AXIS | UNCLASSIFIED | UNCLASSIFED | UNCLASSIFED |
| Y | EVENT, STATE, OR PRESENCE | Y–AXIS | | RELAY, COMPUTE, CONVERT | |
| Z | POSITION | Z–AXIS | . | DRIVER, ACTUATOR, FINAL CONTROL ELEMENT | |

## FIELD WIRES TAG LEGEND

DEVICE NAME/TBXX–00
- TERMINAL NO.
- TERMINAL STRIP NO.
- FIELD DEVICE TAG NO.

## PANEL POWER WIRES TAG LEGEND

TBXX–03/TBXX–03
- TO TERMINAL NO.
- TO TERMINAL STRIP NO.
- FROM TERMINAL NO.
- FROM TERMINAL STRIP NO.

## PANEL I/O WIRES TAG LEGEND

O:#.2/TBXX–03
- INPUT POINT NO.
- TERMINAL STRIP NO.
- CHANNEL #
- SLOT #
- O=OUTPUT I=INPUT

## COLOR CODE CHART FOR 22 AWG BELDEN PAIRED CABLE NO. 8761

| | | |
|---|---|---|
| BLACK | BLK | 1st |
| CLEAR | CLR | 2nd |

## PANEL WIRING IDENTIFICATION

BLACK – 120VAC LINE
WHITE – 120VAC NEUTRAL
GREEN – GROUND
ORANGE – DC POSITIVE
BLUE – DC COMMON

DLT&V
SYSTEMS ENGINEERING
3550 N. CENTRAL AVE, STE. 1900
PHOENIX, AZ 85012 (602) 266-4658

Registered Professional Engineer (Electrical)
CERTIFICATE NO. 37390
MELINDA TAM
Date Signed 9.29.08
ARIZONA, U.S.A.
Expires 3/31/11

NOTES

REVISIONS

| REV. | BY | DATE | DESCRIPTION |
|---|---|---|---|
| | | | |

CASA GRANDE WATER SYSTEM
SCADA PHASE II – WELL #30

ARIZONA WATER COMPANY

ISA TABLE AND COMMON LEGENDS SHEET

| | |
|---|---|
| DRAWN BY: MAB | PROJECT NO. 1219.01.027 |
| DESIGNED BY: MAB | SUBMITTAL DATE: SEPT 2008 |
| CHECKED BY: BA | DRAWING NUMBER EC4 |

DWG FILE: 1219.01.101_EC4.dwg 11:24am PLOTTED: Sep 30, 2008 stewis

| QTY | ITEM # | MANUFACTURER | PART NUMBER | DESCRIPTION |
|---|---|---|---|---|
| 1 | 100 | MODICON | 171CCC96030 | M1E PROCESSOR ADAPTER, ETHERNET AND I/O BUS PORTS, WEB PAGE ENABLED, IEC |
| 2 | 101 | MODICON | 170INT11000 | MOMENTUM INTERBUS \ I/O BUS COMMUNICATIONS ADAPTER |
| 1 | 102 | MODICON | 170ADI35000 | 24V DC - 32 PT. INPUT MODULE BASE |
| 1 | 103 | MODICON | 170ADO34000 | 24V DC / 0.5A - 16 PT. OUTPUT MODULE BASE, 0.5 A OUTPUT |
| 1 | 104 | MODICON | 170AAI03000 | MOMENTUM SERIES I/O BASE, ANALOG 8CH DIFFERENTIAL INPUT MODULE BASE |
| 1 | 105 | MODICON | 172JNN21032 | MOMENTUM SERIES OPTION ADAPTER W/ GENERAL PURPOSE SERIAL COMMUNICATION PORT, RS-232 OR RS-485 SELECTABLE |
| 1 | 106 | MODICON | XBT GT5330 | EXTERNAL DISPLAY WITH 10.4" COLOR TFT,VGA RESOLUTION (640X480 PIXELS), 24V POWER |
| 1 | 107 | WEIDMULLER | IE-SW8-ECO | INDUSTRIAL 8-PORT ETHERNET SWITCH, 10/100 Mbps, UNMANAGED |
| 2 | 108 | MODICON | 170MCI00700 | INTERBUS CABLE |
| 1 | 110 | BELDEN | 8267 | CABLE, COAXIAL, RG-213 (OR EQUAL) WITH APPROPRIATE CONNECTORS, (LENGTH AS REQUIRED) |
| 1 | 111 | MDS | iNET-II-IP | ETHERNET REMOTE RADIO TRANSCEIVER, SPREAD SPECTRUM, W/ REMOTE DIAGNOSTICS |
| 3 | 112 | MODICON | 170XTS00100 | CONNECTOR SET, SCREW-TYPE (SET OF 3) |
| A/R | 201 | ALLEN-BRADLEY | 1492-DR6 | TERMINAL MOUNTING RAIL, HI-RISE, ALUMINUM |
| 14 | 202 | ALLEN-BRADLEY | 1492-EA35 | END ANCHOR |
| 6 | 210 | ALLEN-BRADLEY | 1492-GM35 | TERMINAL BLOCK, GROUP MARKING CARRIER |
| 18 | 215 | ALLEN-BRADLEY | 1492-J4 | TERMINAL BLOCK, SINGLE CIRCUIT, 600V, GRAY |
| 1 | 218 | ALLEN-BRADLEY | 1492-JD3 | TERMINAL BLOCK, DOUBLE LEVEL |
| 67 | 219 | ALLEN-BRADLEY | 1492-JD3P | TERMINAL BLOCK, DOUBLE LEVEL W/ PLUGGABLE TOP LEVEL |
| 4 | 221 | ALLEN-BRADLEY | 1492-JG4 | TERMINAL BLOCK, SINGLE CIRCUIT, GROUNDING |
| 53 | 223 | ALLEN-BRADLEY | 1492-FPK224 | FUSE PLUG INSERT W/ BFI, 10-36VAC/DC WORKING VOLTAGE, 10A MAX @ 250V. PROVIDE FAST BLOW FUSES AS REQUIRED |
| 8 | 225 | ALLEN-BRADLEY | 1492-DPL | DISCONNECT PLUG FOR 1492-JD3 P AND 1492-JD3 |
| 2 | 230 | WEIDMULLER | 9926251001 | CIRCUIT BREAKER, 1A |
| 4 | 231 | WEIDMULLER | 9926251002 | CIRCUIT BREAKER, 2A |
| 2 | 232 | WEIDMULLER | 9926251003 | CIRCUIT BREAKER, 3A |
| 1 | 233 | WEIDMULLER | 9926251010 | CIRCUIT BREAKER, 10A |
| 3 | 234 | WEIDMULLER | 9926251015 | CIRCUIT BREAKER, 15A |
| 1 | 235 | WEIDMULLER | 9926251020 | CIRCUIT BREAKER, 20A |
| 53 | 282 | ANY | ANY | 250V, 5mmX20mm FAST BLOW GLASS FUSES (SIZE AS INDICATED ON DRAWING) |
| 1 | 306 | HOFFMAN | A72SP36F4 | SWING-OUT PANEL, HALF PANEL, 30.88" X 33.81" |
| 1 | 313 | HOFFMAN | ALF16D18R | 18" FLOURESCENT LIGHTING PACKAGE W/DOOR SWITCH, 115VAC |
| 1 | 316 | HOFFMAN | A-TEMNO | TEMPERATURE CONTROL SWITCH (THERMOSTAT), N.O. CONTACTS |
| A/R | 359 | BELDEN | 7929A | CABLE, ETHERNET, 4 PR, 24 AWG, CAT 5E |
| 1 | 377 | ANY | ANY | GROUNDING BAR |
| 1 | 378 | CUSTOM | CUSTOM | CUSTOM SHELF SUPPLIED AND INSTALLED BY PANEL FABRICATOR |
| A/R | 379 | PANDUIT | F2X4LG6 C2LG6 | 2 X 4 PLASTIC WIRING DUCT TYPE "E" W/COVER STYLE "C" |
| A/R | 380 | PANDUIT | F3X4LG6 C3LG6 | 3 X 4 PLASTIC WIRING DUCT TYPE "E" W/COVER STYLE "C" |
| 1 | 398 | HUBBELL | HBL5362I | DUPLEX RECEPTACLE, IVORY, 125V/20A, W/BOX AND BRUSHED ALUMINUM COVER (HUBBELL P.N.# A8) |
| 1 | 399 | HUBBELL | HBL5361I | SIMPLEX RECEPTACLE, IVORY, 125V/20A, W/BOX AND BRUSHED ALUMINUM COVER (HUBBELL P.N.# A7) |
| 1 | 400 | HUBBELL | HBL3810R | SIMPLEX RECEPTACLE, RED, 125V/20A, W/BOX AND BRUSHED ALUMINUM COVER (HUBBELL P.N.# A7) |
| 2 | 405 | WEIDMULLER | 8708670000 (CP SNT 250W 24V 10A) | POWER SUPPLY, 24VDC, 250W, 10A, W/ STATUS RELAY |
| 1 | 406 | WEIDMULLER | 8710620000 (CP DM 10) | DIODE MODULE, 10A PER INPUT, 40VDC MAX. |
| 1 | 408 | IDEC | RH2B-UL-AC120V | RELAY, 120VAC COIL, DPDT W/ INDICATOR |
| 1 | 421 | IDEC | SH2B-05C | RELAY SOCKET, DIN RAIL MOUNT, FINGERSAFE |
| 1 | 450 | MTL SURGE TECHNOLOGIES | MA15/D/1/SI | 120/240 VAC, 15A, SURGE SUPPRESSOR AND FILTER |
| 8 | 451 | WEIDMULLER | 8448920000 | SURGE SUPPRESSOR, 24VDC, 2 WIRE LOOP PROTECTION (MCZ OVP) W/ END CAP PART #8389030000 |
| 8 | 452 | WEIDMULLER | 8389030000 | END CAP FOR 24VDC SURGE SUPPRESSOR (MCZ OVP) |
| 16 | 455 | ALLEN-BRADLEY | 700-HLT1Z24 | TERMINAL BLOCK RELAY, 24VDC, 6A CONTACTS, SPDT W/ LED |
| 1 | 505 | HOFFMAN | CR29-0416-G068 | AIR CONDITIONER, 120 VAC, 4000 BTU/HR, W/OUTDOOR ENCLOSURE PACKAGE |
| 1 | 703 | APC | SUA750, AP9610 | UPS, 115 VAC, 750 VA W/ RELAY I/O SMARTSLOT CARD OPTION, MINIMUM 30 MIN. RUNTIME OF COMPLETE PLC OPERATIONS POWER |
| 1 | 811 | POLYPHASER | IS-50NX-C2 | BROADBAND COAXIAL SURGE PROTECTOR, FLANGE MOUNT, 125-1000MHZ |
| 2 | 853 | TIMES MICROWAVE SYSTEMS | EZ-900-NMC | N-MALE CONNECTOR |

DLT&V
SYSTEMS ENGINEERING
3550 N. CENTRAL AVE, STE. 1900
PHOENIX, AZ 85012 (602) 264-6455

Registered Professional Engineer (Electrical)
CERTIFICATE NO.
37390
MELINDA TAM
Date Signed 9-29-08
ARIZONA, U.S.A.

Expires 3/31/11

NOTES

REVISIONS

| REV. | BY | DATE | DESCRIPTION |
|---|---|---|---|
| | | | |
| | | | |
| | | | |
| | | | |

CASA GRANDE WATER SYSTEM
SCADA PHASE II – WELL #30

ARIZONA WATER COMPANY

BILL OF MATERIALS

| DRAWN BY: | PROJECT NO. |
|---|---|
| MAB | 1219.01.027 |
| DESIGNED BY: | SUBMITTAL DATE: |
| MAB | SEPT 2008 |
| CHECKED BY: | DRAWING NUMBER |
| BA | EC5 |

DWG FILE: 1219.01.101_EC5.dwg 11:24am PLOTTED: Sep 30, 2008 stevis

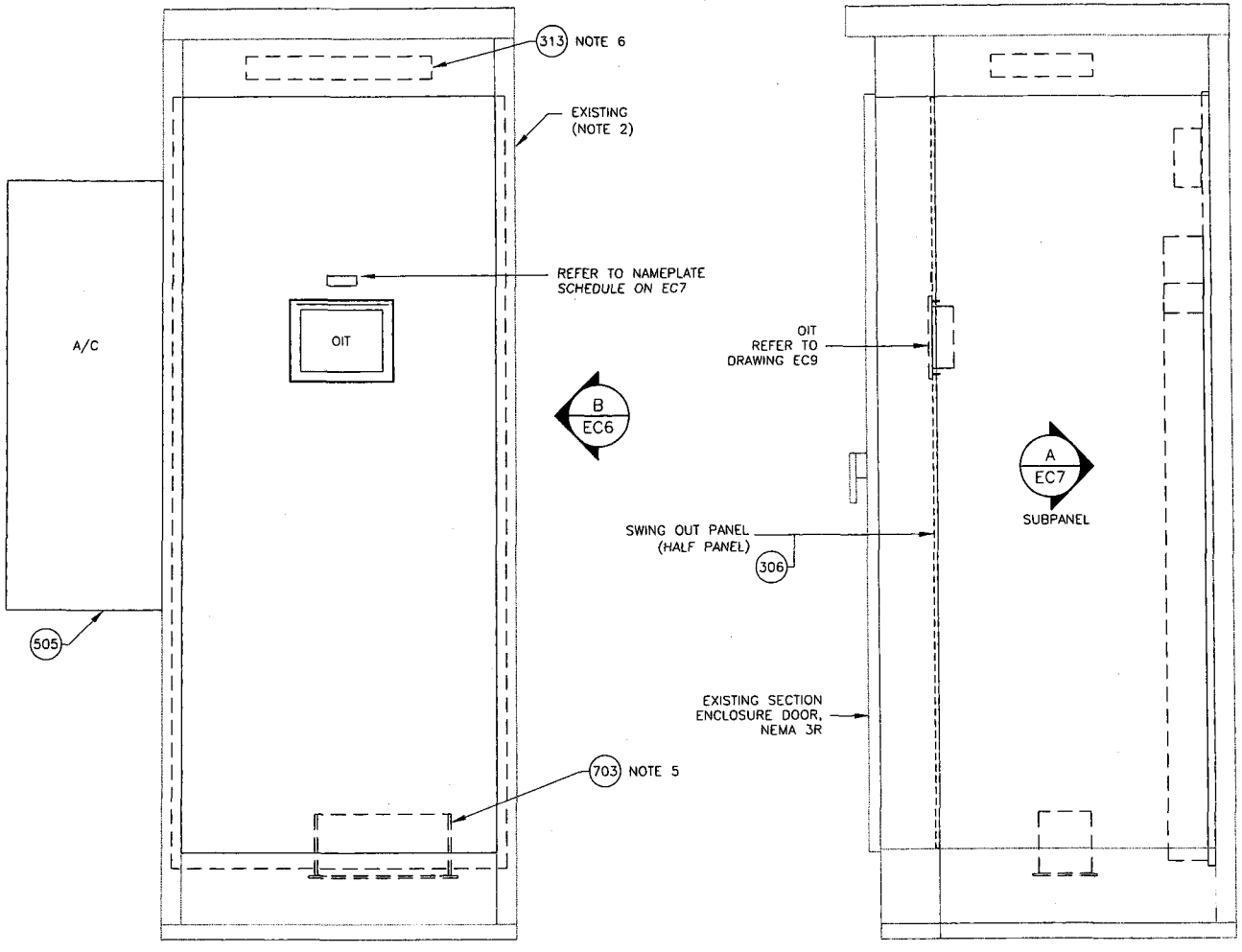


A ~ RTU ENCLOSURE, FRONT
1"=1'-0"

B ~ RTU ENCLOSURE, SIDE
1"=1'-0"

## NOTES:

1. BILL OF MATERIALS IS ON DRAWING EC5.
2. RTU CABINET IS PART OF THE EXISTING ELECTRICAL EQUIPMENT LINEUP.
3. REFER TO DRAWING EC7 FOR PLC INTERIOR LAYOUT.
4. FURNISH ADDITIONAL NAMEPLATES AS REQUIRED BY UL OR BY OTHER APPLICABLE CODES.
5. MOMOUNT UPS MINIMUM 6" ABOVE GRADE LEVEL. PANEL FABRICATOR SHALL SUPPLY AND INSTALL CUSTOM SUPPORT HARDWARE IN ENCLOSURE AS REQUIRED.
6. DOOR SWITCH ASSOCIATED WITH FLOURESCENT LIGHT FIXTURE IS SHOWN ON DRAWING EC7. REFER TO DRAWING EC10 FOR WIRING SCHEMATIC.

DLT&V
SYSTEMS ENGINEERING
3550 N. CENTRAL AVE., STE. 1300
PHOENIX, AZ 85012 (602) 264-4536

Registered Professional Engineer (Electrical) CERTIFICATE NO. 37390 MELINDA TAM Date Signed 9-29-08 ARIZONA, U. S. A.

Expires 3/31/11

NOTES

REVISIONS

| REV. | BY | DATE | DESCRIPTION |
|---|---|---|---|
| | | | |
| | | | |
| | | | |
| | | | |
| | | | |

CASA GRANDE WATER SYSTEM
SCADA PHASE II – WELL #30

ARIZONA WATER COMPANY

RTU ENCLOSURE LAYOUT

| DRAWN BY: | PROJECT NO. |
|---|---|
| MAB | 1219.01.027 |
| DESIGNED BY: | SUBMITTAL DATE: |
| MAB | SEPT 2008 |
| CHECKED BY: | DRAWING NUMBER |
| BA | EC6 |

DWG FILE: 1219.01.101_EC6.dwg 11:25am PLOTTED: Sep 30, 2008 stewis

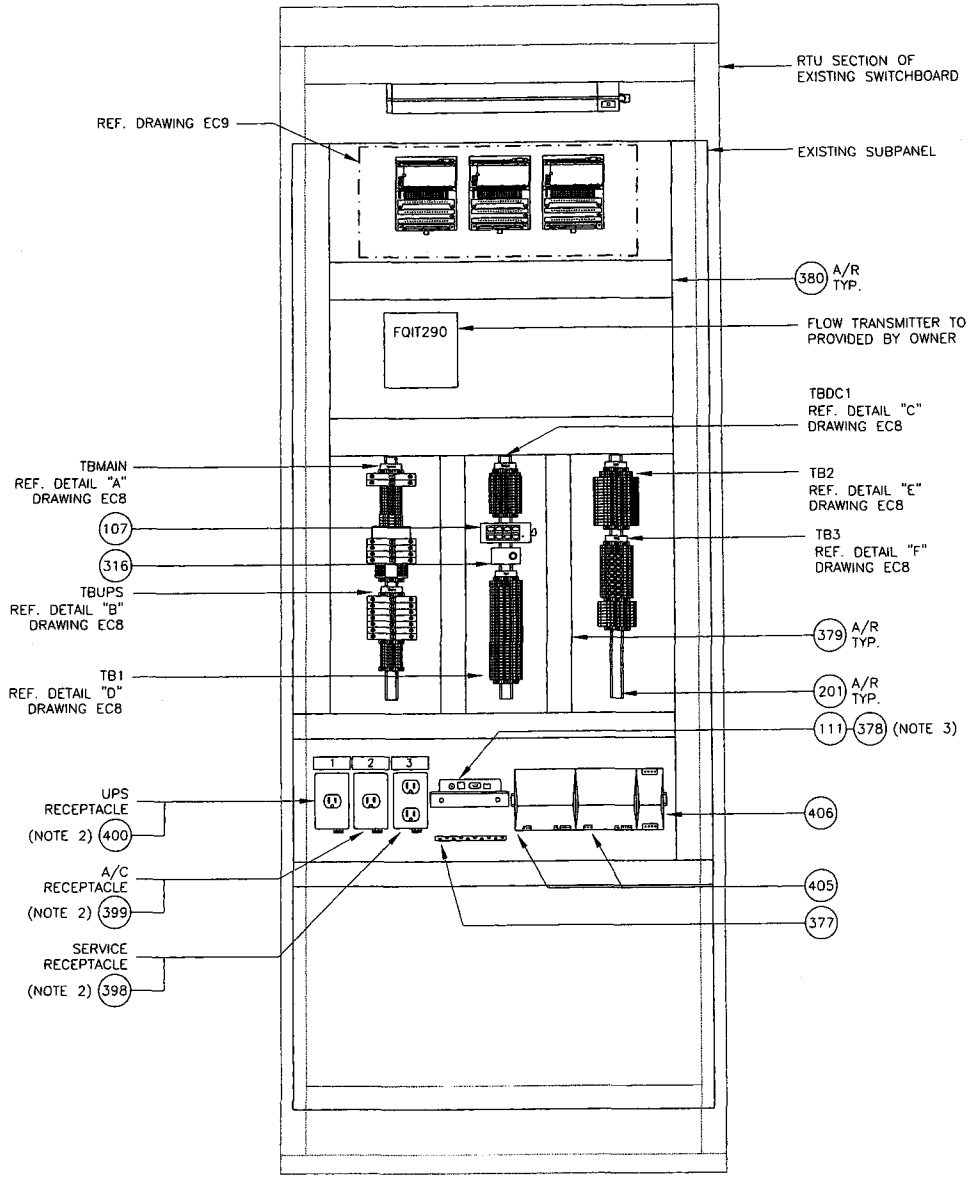


A EC6 SUBPANEL LAYOUT
1"=10"

## NOTES:

1. BILL OF MATERIALS IS ON DRAWING EC5.
2. NAMEPLATE SHALL BE 3/32" THICK LAMINATED PHENOLIC TYPE BLACK WITH WHITE LETTERS, SEE BILL OF MATERIALS ON DRAWING EC5 AND NAMEPLATE SCHEDULE (DET B) ON THIS SHEET FOR ADDITIONAL INFORMATION.
3. MOUNT RADIO ON CUSTOM SHELF PROVIDED AND INSTALLED BY PANEL FABRICATOR. REFER TO DRAWING EC9 AND BILL OF MATERIALS ON EC5 FOR MORE INFORMATION.

**NAMEPLATE SCHEDULE (NOTE 2)**

| NP | HxWxLTR | FIRST LINE | SECOND LINE | LOCATION |
|---|---|---|---|---|
| 1 | 1" x 3" x 1/4" | UPS RECEPTACLE | ONLY | CENTERED ABOVE UPS RECEPTACLE |
| 2 | 1" x 3" x 1/4" | A/C RECEPTACLE | ONLY | CENTERED ABOVE A/C RECEPTACLE |
| 3 | 1" x 3" x 1/4" | SERVICE RECEPTACLE | ONLY | CENTERED ABOVE SERVICE RECEPTACLE |
| 4 | 1" x 3" x 1/4" | OIT | | CENTERED ABOVE OIT |

B ~ NAMEPLATE SCHEDULE

DLT&V SYSTEMS ENGINEERING
3550 N. CENTRAL AVE., STE. 1900
PHOENIX, AZ 85012 (602) 266-4668

Registered Professional Engineer (Electrical) CERTIFICATE NO. 37390 MELINDA TAM Date Signed 9-29-08 ARIZONA, U.S.A.
Expires 3/31/11

NOTES

REVISIONS

| REV. | BY | DATE | DESCRIPTION |
|---|---|---|---|
| | | | |
| | | | |
| | | | |
| | | | |

CASA GRANDE WATER SYSTEM
SCADA PHASE II - WELL #30

ARIZONA WATER COMPANY

RTU SUBPANEL LAYOUT

| DRAWN BY: | PROJECT NO. |
|---|---|
| MAB | 1219.01.027 |
| DESIGNED BY: | SUBMITTAL DATE: |
| MAB | SEPT 2008 |
| CHECKED BY: | DRAWING NUMBER |
| BA | EC7 |

DWG FILE: 1219.01.101_EC7.dwg 11:26am PLOTTED: Sep 30, 2008 slewis

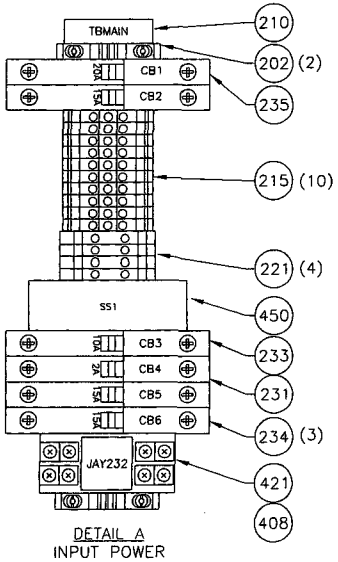


DETAIL A
INPUT POWER
TBMAIN

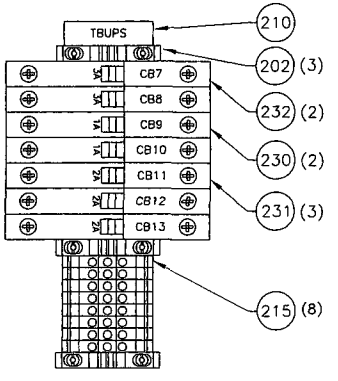


DETAIL B
PANEL POWER
TBUPS

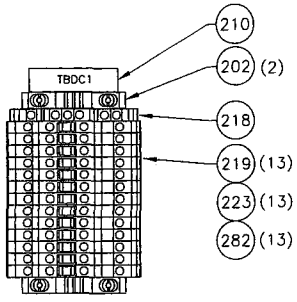


DETAIL C
24VDC POWER
DISTRIBUTION
TBDC1

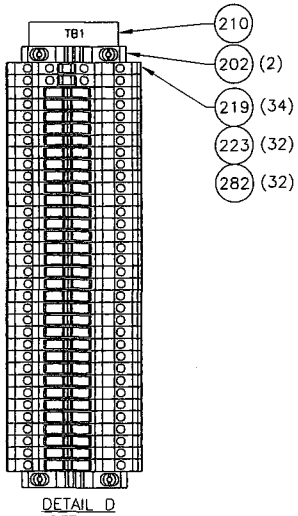


DETAIL D
DISCRETE INPUT
TB1

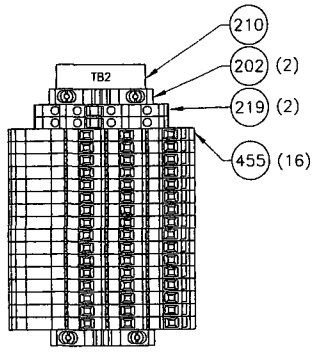


DETAIL E
DISCRETE OUTPUT
TB2

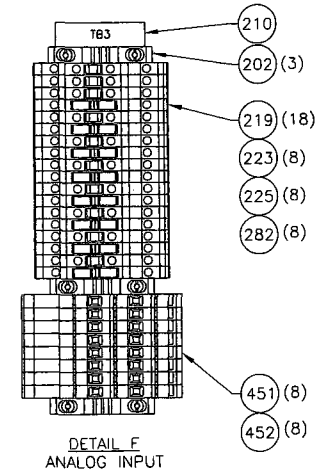


DETAIL F
ANALOG INPUT
TB3

## NOTES:

1. PROVIDE BUS BAR STYLE OR INSULATED COMB STYLE JUMPERS WHERE 2 OR MORE TERMINALS IN THE SAME TB ARE COMMONED TOGETHER. DO NOT USE DISCRETE WIRE JUMPERS.
2. BILL OF MATERIALS IS ON DRAWING EC5.
3. PANEL BUILDER TO SUPPLY AND INSTALL ALL NECESSARY AND APPROPRIATE ACCESSORIES INCLUDING TERMINAL NUMBERS, JUMPERS AND END BARRIERS.

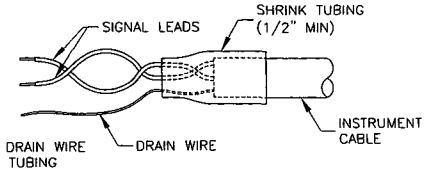


NOTE:
WRAP UNUSED DRAIN WIRE
UNDER SHRINK TUBING

DETAIL G
INSTRUMENT CABLE
TERMINATION

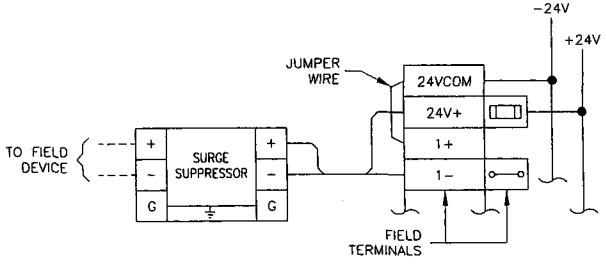


2-WIRE

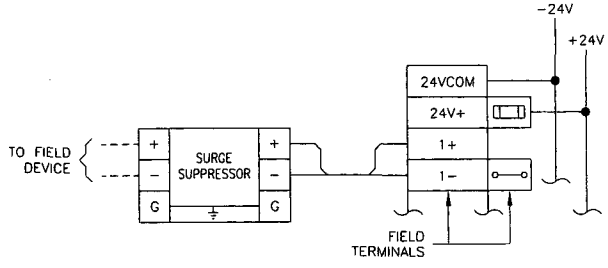


4-WIRE

DETAIL H
ANALOG INPUT TERMINALS
2 & 4-WIRE TYPICAL CONNECTIONS

DLT&V
SYSTEMS ENGINEERING
3550 N. CENTRAL AVE, STE. 1900
PHOENIX, AZ 85012 (602) 266-4658

Registered Professional Engineer (Electrical)
CERTIFICATE NO.
37390
MELINDA
TAM
Date Signed 9.29.08
ARIZONA, U.S.A.
Expires 3/31/11

NOTES

REVISIONS

| REV. | BY | DATE | DESCRIPTION |
|---|---|---|---|
| | | | |

CASA GRANDE WATER SYSTEM
SCADA PHASE II - WELL #30

ARIZONA WATER COMPANY

TERMINAL BLOCK DETAILS

| | |
|---|---|
| DRAWN BY: MAB | PROJECT NO. 1219.01.027 |
| DESIGNED BY: MAB | SUBMITTAL DATE: SEPT 2008 |
| CHECKED BY: BA | DRAWING NUMBER EC8 |

DWG FILE: 1219.01.101_EC8.dwg 11:26am PLOTTED: Sep 30, 2008 slewis

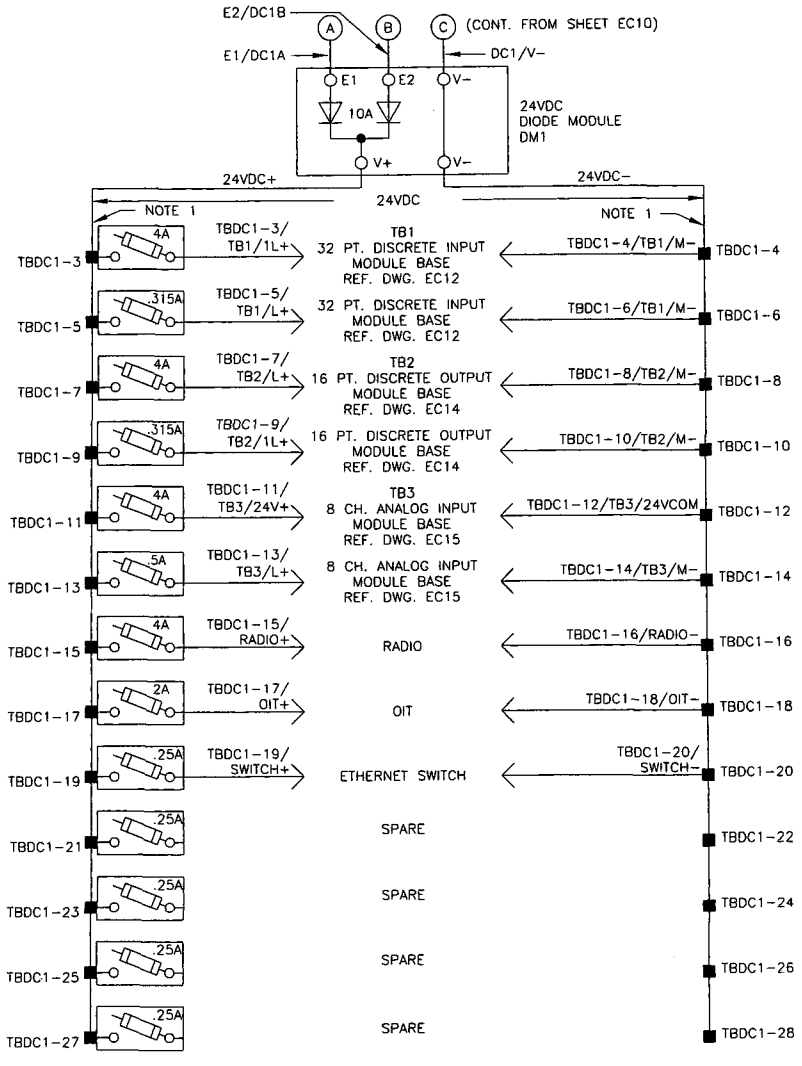


24VDC POWER DISTRIBUTION

## NOTES:

1. PROVIDE BUS BAR STYLE OR INSULATED COMB STYLE JUMPERS WHERE 2 OR MORE TERMINALS IN THE SAME TB ARE COMMONED TOGETHER. DO NOT USE DISCRETE WIRE JUMPERS.
2. BILL OF MATERIALS IS ON DRAWING EC5.
3. THE PROPER FUSE SIZE ON ANY FUTURE EQUIPMENT INSTALLATIONS UTILIZING SPARE CIRCUITS WILL BE THE RESPONSIBILITY OF THE OWNER.

DLT&V
SYSTEMS ENGINEERING
3550 N. CENTRAL AVE, STE. 1900
PHOENIX, AZ 85012 (602) 266-4658

Registered Professional Engineer (Electrical)
CERTIFICATE NO.
37390
MELINDA
TAM
Date Signed 9-29-08
ARIZONA, U.S.A.
Expires 3/31/11

NOTES

REVISIONS

| REV. | BY | DATE | DESCRIPTION |
|---|---|---|---|
| | | | |

CASA GRANDE WATER SYSTEM
SCADA PHASE II – WELL #30

ARIZONA WATER COMPANY

24VDC POWER DISTRIBUTION SCHEMATIC

| | |
|---|---|
| DRAWN BY: MAB | PROJECT NO. 1219.01.027 |
| DESIGNED BY: MAB | SUBMITTAL DATE: SEPT 2008 |
| CHECKED BY: BA | DRAWING NUMBER EC11 |

WG FILE: 1219.01.101_EC11.dwg 11:26am PLOTTED: Sep 30, 2008 slewis

## NOTES:

1. WIRE MODULES AND SIZE FUSES PER MANUFACTURER'S REQUIREMENTS.
2. BUS OR INSULATED COMB STYLE JUMPER.

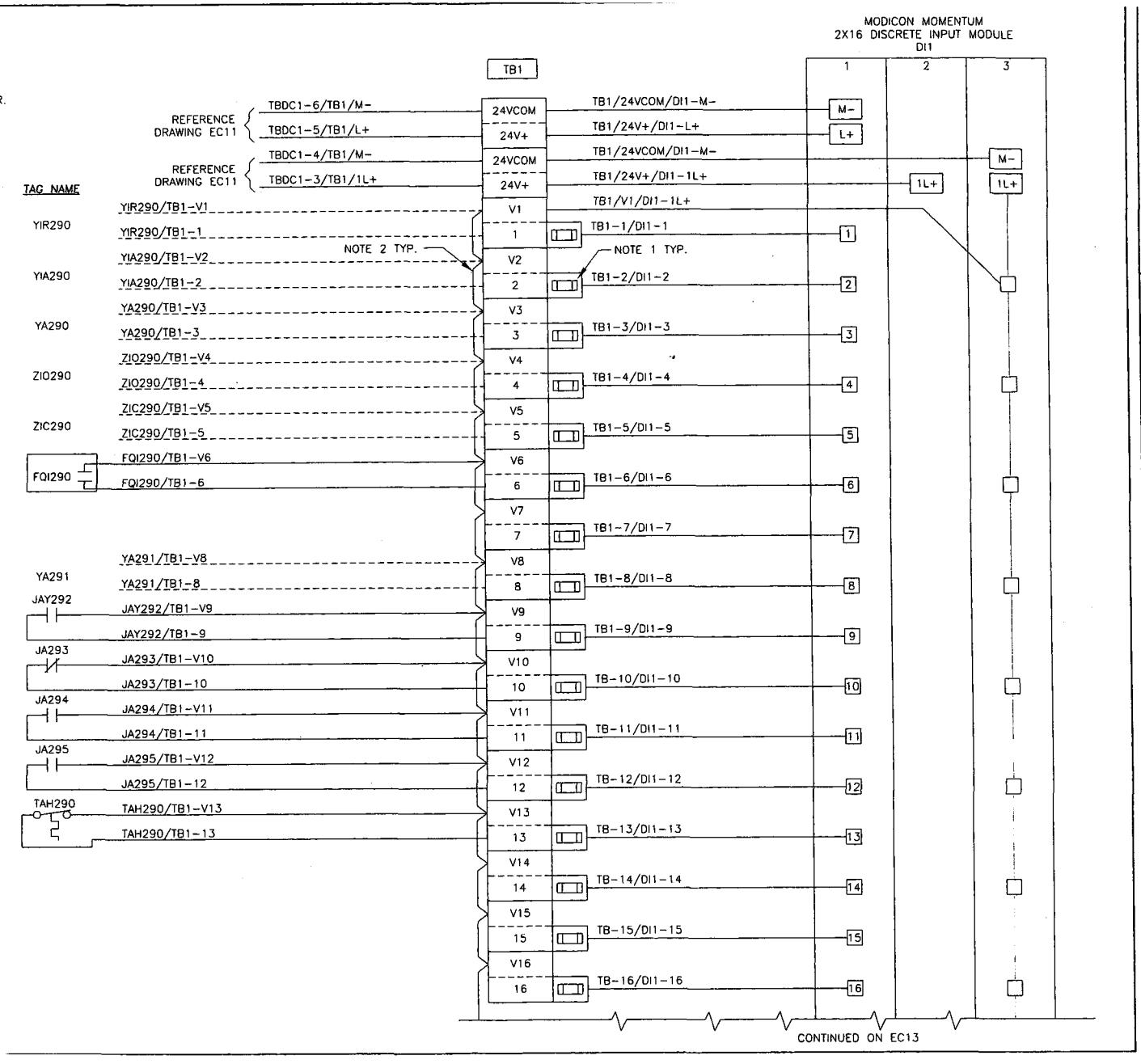



DLT&V
SYSTEMS ENGINEERING
3550 N. CENTRAL AVE, STE. 1900
PHOENIX, AZ 85012 (602) 266-4658


Registered Professional Engineer (Electrical)
CERTIFICATE NO.
37390
MELINDA TAM
Date Signed 9-29-08
ARIZONA, U.S.A.
Expires 3/31/11

NOTES

| REVISIONS | | | |
|---|---|---|---|
| REV. | BY | DATE | DESCRIPTION |
| | | | |
| | | | |
| | | | |
| | | | |

CASA GRANDE WATER SYSTEM
SCADA PHASE II – WELL #30

ARIZONA WATER COMPANY

DISCRETE INPUT MODULE BASE WIRING DIAGRAM – SHEET 1

| DRAWN BY: | PROJECT NO. |
|---|---|
| MAB | 1219.01.027 |
| DESIGNED BY: | SUBMITTAL DATE: |
| MAB | SEPT 2008 |
| CHECKED BY: | DRAWING NUMBER |
| BA | EC12 |


DWG FILE: 1219.01.101_EC12.dwg 11:26am PLOTTED: Sep 30, 2008 slewis

# NOTES:

1. WIRE MODULES AND SIZE FUSES PER MANUFACTURER'S REQUIREMENTS.
2. BUS OR INSULATED COMB STYLE JUMPER.

| DESCRIPTION | TAG NAME |
|---|---|
| SPARE | |
| SPARE | |
| SPARE | |
| SPARE | |
| SPARE | |
| SPARE | |
| SPARE | |
| SPARE | |
| SPARE | |
| SPARE | |
| SPARE | |
| SPARE | |
| SPARE | |
| SPARE | |
| SPARE | |

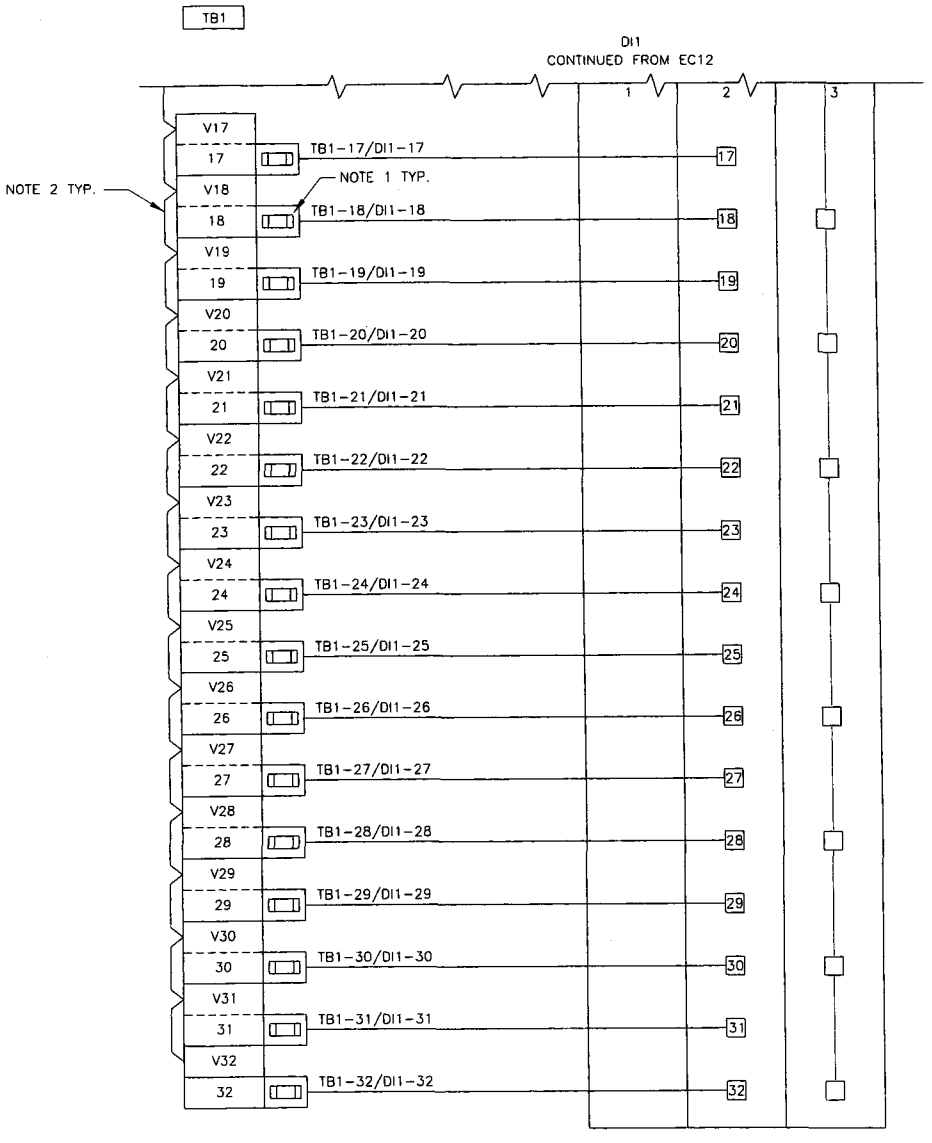


DLT&V
SYSTEMS ENGINEERING
3550 N. CENTRAL AVE, STE. 1900
PHOENIX, AZ 85012 (602) 266-4658

Registered Professional Engineer (Electrical)
CERTIFICATE NO. 37390
MELINDA TAM
Date Signed 9.29.08
ARIZONA, U.S.A.
Expires 3/31/11

NOTES

REVISIONS

| REV. | BY | DATE | DESCRIPTION |
|---|---|---|---|
| | | | |

CASA GRANDE WATER SYSTEM
SCADA PHASE II – WELL #30

ARIZONA WATER COMPANY

DISCRETE INPUT
MODULE BASE
WIRING DIAGRAM – SHEET 2

| | |
|---|---|
| DRAWN BY: MAB | PROJECT NO. 1219.01.027 |
| DESIGNED BY: MAB | SUBMITTAL DATE: SEPT 2008 |
| CHECKED BY: BA | DRAWING NUMBER EC13 |

DWG FILE: 1219.01.101_EC13.dwg 11:27am PLOTTED: Sep 30, 2008 stewis

## NOTES:

1. BILL OF MATERIALS IS ON DRAWING EC5.
2. ANTENNA, ANTENNA MAST, GROUNDING KIT AND CABLE PROVIDED AND INSTALLED BY OTHERS.

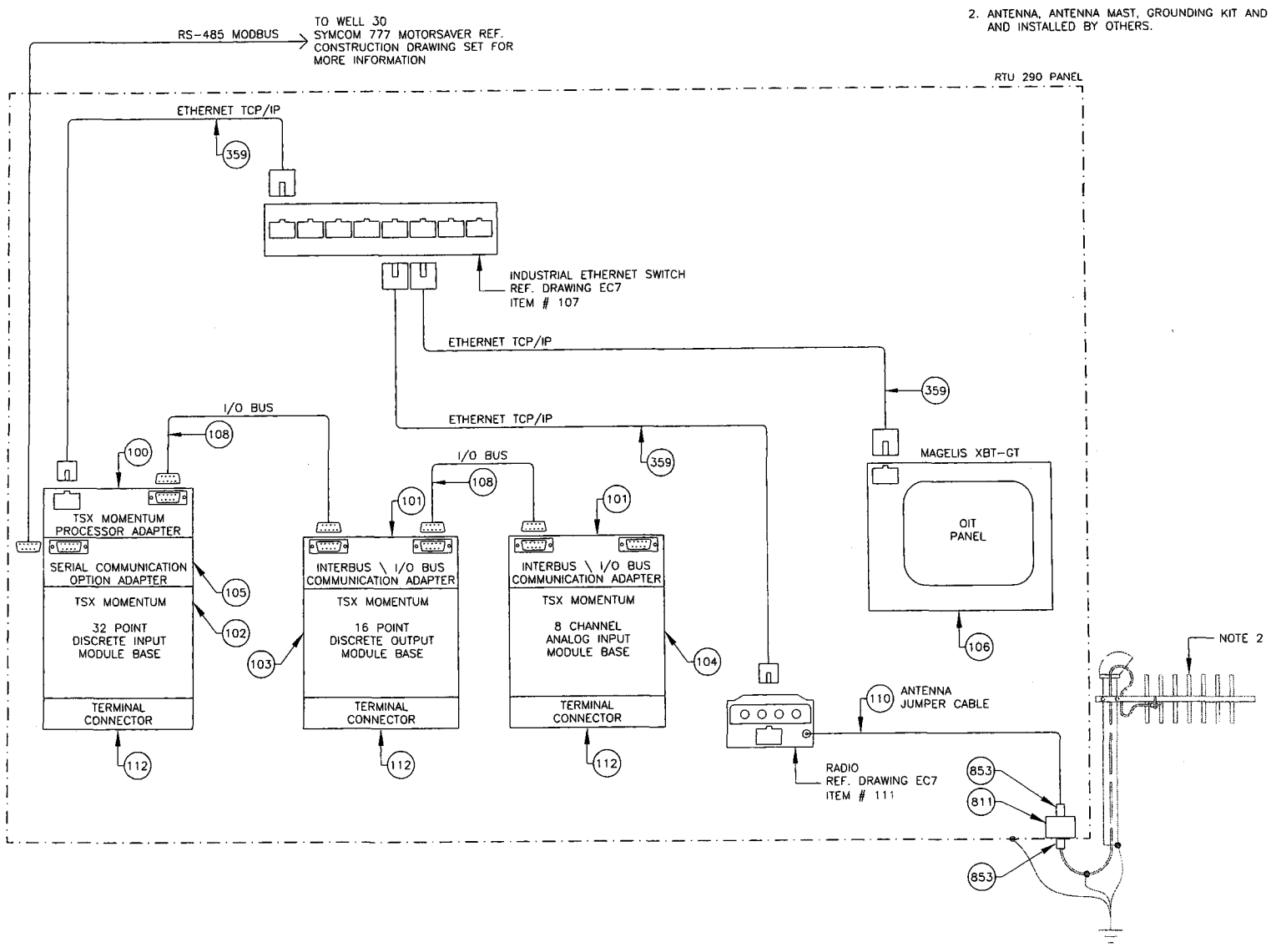


DLT&V SYSTEMS ENGINEERING
3443 N. CENTRAL AVE, STE. 1900
PHOENIX, AZ 85012 (602) 266-4556

Registered Professional Engineer (Electrical)
CERTIFICATE NO.
37390
MELINDA
TAM
Date Signed 9-29-08
ARIZONA, U.S.A.
Expires 3/31/11

NOTES

| REVISIONS | | | |
|---|---|---|---|
| REV. | BY | DATE | DESCRIPTION |
| | | | |
| | | | |
| | | | |
| | | | |

CASA GRANDE WATER SYSTEM
SCADA PHASE II – WELL #30

ARIZONA WATER COMPANY

COMMUNICATIONS
SYSTEM ARCHITECTURE
DIAGRAM

| DRAWN BY: | PROJECT NO. |
|---|---|
| MAB | 1219.01.027 |
| DESIGNED BY: | SUBMITTAL DATE: |
| MAB | SEPT 2008 |
| CHECKED BY: | DRAWING NUMBER |
| BA | EC9 |

WG FILE: 1219.01.101_EC9.dwg 11:26am PLOTTED: Sep 30, 2008 steveb

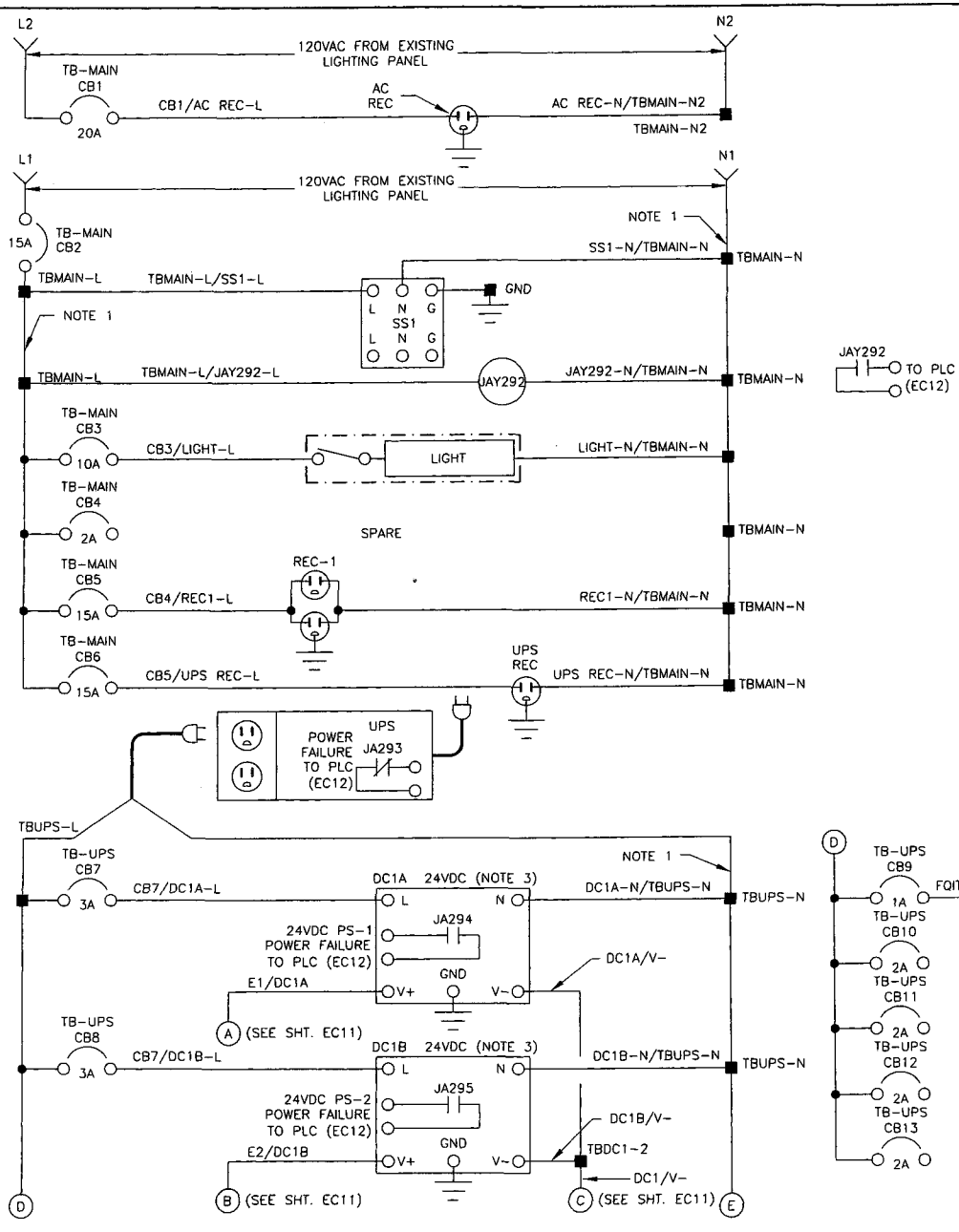


## NOTES:

1. PROVIDE BUS BAR STYLE OR INSULATED COMB STYLE JUMPERS WHERE 2 OR MORE TERMINALS IN THE SAME TB ARE COMMONED TOGETHER. DO NOT USE DISCRETE WIRE JUMPERS.
2. BILL OF MATERIALS IS ON DRAWING EC5.
3. ADJUST VOLTAGE OUTPUT SETTING ON DC1B TO BE 1.0 VOLT LESS THAN DC1A.

# 120VAC POWER DISTRIBUTION


DLT&V
SYSTEMS ENGINEERING
3550 N. CENTRAL AVE. STE. 1900
PHOENIX, AZ 85012 (602) 386-4558


Registered Professional Engineer (Electrical)
CERTIFICATE NO.
37390
MELINDA TAM
Date Signed 9-29-08
ARIZONA, U.S.A.
Expires 3/31/11

NOTES

| REVISIONS | | | |
|---|---|---|---|
| REV. | BY | DATE | DESCRIPTION |
| | | | |
| | | | |
| | | | |
| | | | |

CASA GRANDE WATER SYSTEM
SCADA PHASE II – WELL #30

ARIZONA WATER COMPANY

120VAC POWER DISTRIBUTION SCHEMATIC

| | |
|---|---|
| DRAWN BY: MAB | PROJECT NO. 1219.01.027 |
| DESIGNED BY: MAB | SUBMITTAL DATE: SEPT 2008 |
| CHECKED BY: BA | DRAWING NUMBER EC10 |


WG FILE: 1219.01.101_EC10.dwg 11:28am PLOTTED: Sep 30, 2008 stewis

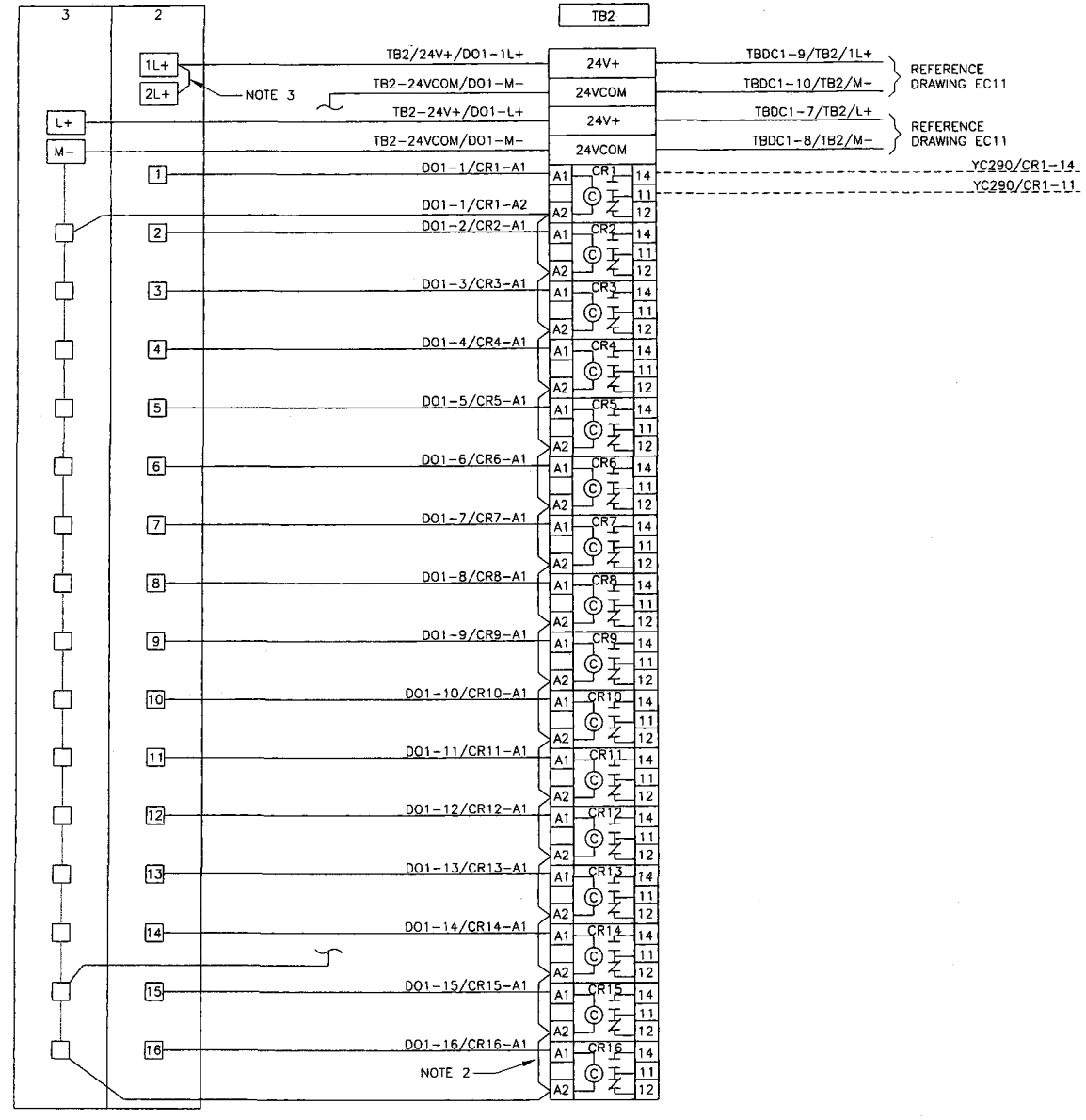


## NOTES:

1. WIRE MODULES PER MANUFACTURER'S REQUIREMENTS.
2. BUS OR INSULATED COMB STYLE JUMPER.
3. JUMPER WIRES PROVIDED BY PANEL MANUFACTURER.

| TAG NAME | DESCRIPTION |
|---|---|
| YC290 | WELL PUMP NO. 30 START/STOP COMMAND |
| | SPARE |
| | SPARE |
| | SPARE |
| | SPARE |
| | SPARE |
| | SPARE |
| | SPARE |
| | SPARE |
| | SPARE |
| | SPARE |
| | SPARE |
| | SPARE |
| | SPARE |
| | SPARE |
| | SPARE |

DLT&V
SYSTEMS ENGINEERING
3550 N. CENTRAL AVE, STE. 1900
PHOENIX, AZ 85012 (602) 266-4658

Registered Professional Engineer (Electrical)
CERTIFICATE NO. 37390
MELINDA TAM
Date Signed 9-27-08
ARIZONA, U.S.A.
Expires 3/31/11

NOTES

REVISIONS

| REV. | BY | DATE | DESCRIPTION |
|---|---|---|---|
| | | | |

CASA GRANDE WATER SYSTEM
SCADA PHASE II - WELL #30

ARIZONA WATER COMPANY

DISCRETE OUTPUT MODULE BASE WIRING DIAGRAM

| | |
|---|---|
| DRAWN BY: MAB | PROJECT NO. 1219.01.027 |
| DESIGNED BY: MAB | SUBMITTAL DATE: SEPT 2008 |
| CHECKED BY: BA | DRAWING NUMBER EC14 |

DWG FILE: 1219.01.101_EC14.dwg 11:27am PLOTTED: Sep 30, 2008 stewis

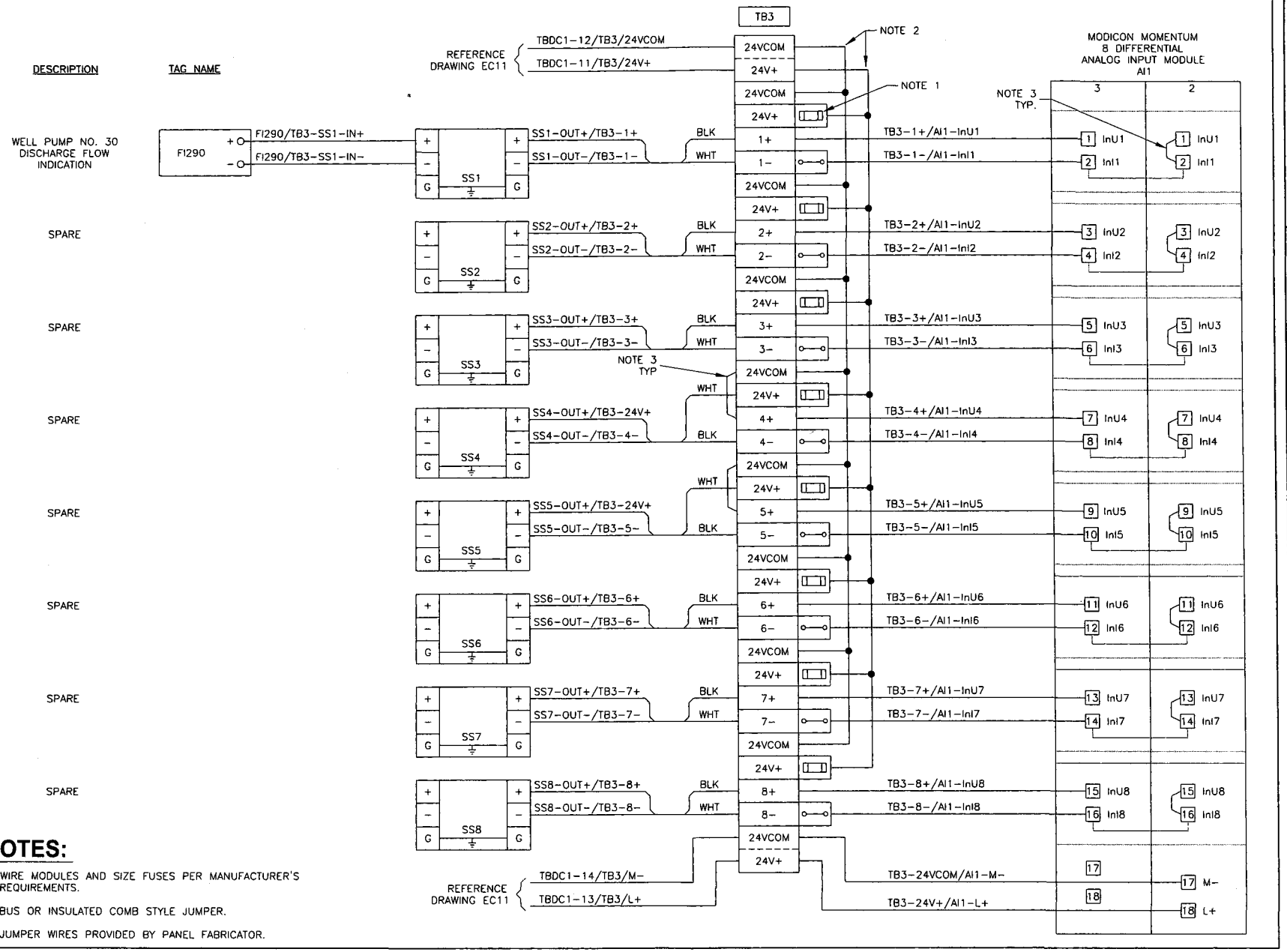


## NOTES:

1. WIRE MODULES AND SIZE FUSES PER MANUFACTURER'S REQUIREMENTS.
2. BUS OR INSULATED COMB STYLE JUMPER.
3. JUMPER WIRES PROVIDED BY PANEL FABRICATOR.

DWG FILE: 1219.01.101_EC15.dwg 11:27am PLOTTED: Sep 30, 2008 slewis

DLT&V
SYSTEMS ENGINEERING
3550 N. CENTRAL AVE, STE. 1900
PHOENIX, AZ 85012 (602) 266-4658

Registered Professional Engineer (Electrical)
CERTIFICATE NO. 37390
MELINDA TAM
Date Signed 9.29.08
ARIZONA, U.S.A.
Expires 3/31/11

NOTES

REVISIONS

| REV. | BY | DATE | DESCRIPTION |
|---|---|---|---|
| | | | |

CASA GRANDE WATER SYSTEM
SCADA PHASE II - WELL #30

ARIZONA WATER COMPANY

ANALOG INPUT MODULE BASE WIRING DIAGRAM

| | |
|---|---|
| DRAWN BY: MAB | PROJECT NO. 1219.01.027 |
| DESIGNED BY: MAB | SUBMITTAL DATE: SEPT 2008 |
| CHECKED BY: BA | DRAWING NUMBER EC15 |

# CASA GRANDE - COOLIDGE
# SCADA SYSTEM DESIGN
# COTTONWOOD LANE RTU DESIGN

DLT&V
SYSTEMS ENGINEERING
3550 N. CENTRAL AVE, STE. 1900
PHOENIX, AZ 85012 (602) 266-4588

Registered Professional Engineer (Electrical)
40253
BRENT-
ALEKSICH
Date Signed 10-19-07
ARIZONA U.S.A.

NOTES

REVISIONS

| REV. | BY | DATE | DESCRIPTION |
|---|---|---|---|
| | | | |
| | | | |
| | | | |
| | | | |

CASA GRANDE – COOLIDGE
SCADA SYSTEM - COTTONWOOD LN

ARIZONA WATER COMPANY

COVER SHEET

| | |
|---|---|
| DRAWN BY: JHA | PROJECT NO. 1219.0.101 |
| DESIGNED BY: JHA | SUBMITTAL DATE: OCT 2007 |
| CHECKED BY: DN | DRAWING NUMBER EC1 |

XG FILE: 1219.00.101_EC1.dwg 2:38pm PLOTTED: Oct. 19, 2007 johnsons

CASA GRANDE – COOLIDGE
SCADA SYSTEM DESIGN
COTTONWOOD LANE RTU DESIGN
PROJECT SHEET INDEX

| Drawing No. | Drawing Title |
|---|---|
| EC1 | COVER SHEET |
| EC2 | PROJECT SHEET INDEX |
| EC3 | STANDARD SYMBOLS AND ABBREVIATIONS |
| EC4 | ISA TABLE AND COMMON LEGENDS SHEET |
| EC5 | BILL OF MATERIALS |
| EC6 | RTU ENCLOSURE LAYOUT |
| EC7 | RTU SUBPANEL LAYOUT |
| EC8 | TERMINAL BLOCK DETAILS |
| EC9 | COMMUNICATIONS SYSTEM ARCHITECTURE DIAGRAM |
| EC10 | 120VAC POWER DISTRIBUTION SCHEMATIC |
| EC11 | 24VDC POWER DISTRIBUTION SCHEMATIC |
| EC12 | DISCRETE INPUT 1 MODULE BASE WIRING DIAGRAM - SHEET 1 |
| EC13 | DISCRETE INPUT 1 MODULE BASE WIRING DIAGRAM - SHEET 2 |
| EC14 | DISCRETE INPUT 2 MODULE BASE WIRING DIAGRAM - SHEET 1 |
| EC15 | DISCRETE INPUT 2 MODULE BASE WIRING DIAGRAM - SHEET 2 |
| EC16 | DISCRETE OUTPUT MODULE BASE WIRING DIAGRAM |
| EC17 | ANALOG INPUT 1 MODULE BASE WIRING DIAGRAM |
| EC18 | ANALOG INPUT 2 MODULE BASE WIRING DIAGRAM |

DLT&V
SYSTEMS ENGINEERING
3550 N. CENTRAL AVE, STE. 1900
PHOENIX, AZ 85012 (602) 266-4658

Registered Professional Engineer (Electrical)
CERTIFICATE NO.
40253
BRENT
ALEKSICH
Date Signed 10-19-07
ARIZONA U.S.A.

NOTES

REVISIONS

| REV. | BY | DATE | DESCRIPTION |
|---|---|---|---|
| | | | |
| | | | |
| | | | |
| | | | |

CASA GRANDE – COOLIDGE
SCADA SYSTEM – COTTONWOOD LN

ARIZONA WATER COMPANY

PROJECT
SHEET INDEX

| | |
|---|---|
| DRAWN BY: JHA | PROJECT NO. 1219.0.101 |
| DESIGNED BY: JHA | SUBMITTAL DATE: OCT 2007 |
| CHECKED BY: DN | DRAWING NUMBER EC2 |

JG FILE: 1219.00.101_EC2.dwg 2:38pm PLOTTED: Oct 19, 2007 jahrens

# CASA GRANDE – COOLIDGE
# SCADA SYSTEM DESIGN
# COTTONWOOD LANE RTU DESIGN
# STANDARD SYMBOLS AND ABBREVIATIONS

## SCHEMATIC/WIRING DIAGRAM SYMBOLS

CIRCUIT BREAKER
*A – AMP RATING

FUSE WITH PULLER
*A – AMP RATING

SWITCH
NORMALLY OPEN

SELECTOR SWITCH
2 POSITION, NORMALLY OPEN

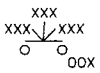


SELECTOR SWITCH
3 POSITION, NORMALLY OPEN

TEMPERATURE SWITCH
NORMALLY OPEN

TERMINAL BLOCK
* – TB IDENTIFICATION

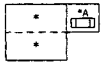


TERMINAL BLOCK W/ FUSE
PLUG AND FUSE
* – TB IDENTIFICATION
*A – AMPS

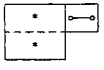


TERMINAL BLOCK W/
DISCONNECT KNIFE
* – TB IDENTIFICATION

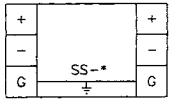


SURGE SUPPRESSOR FOR
FLOATING SIGNAL CIRCUITS
* – SS NUMBER IDENTIFICATION

SURGE SUPPRESSOR FOR
POWER SUPPLY
* – SS NUMBER IDENTIFICATION

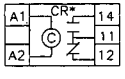


CONTROL RELAY
* – CR NUMBER IDENTIFICATION
# – TERMINAL NUMBER

## SCHEMATIC/WIRING DIAGRAM SYMBOLS

EARTH GROUND



TERMINAL BLOCK

DUPLEX RECEPTACLE

SINGLE RECEPTACLE

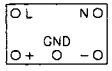


DC POWER SUPPLY
* – DC VOLTAGE RATING

## COLOR CODE CHART FOR 18 AWG BELDEN CABLES
## 12 COND. NO. 8466 AND 19 COND. NO. 8619

| | | |
|---|---|---|
| BLACK | BLK | 1st |
| WHITE | WHT | 2nd |
| RED | RED | 3rd |
| GREEN | GRN | 4th |
| ORANGE | ORN | 5th |
| BLUE | BLU | 6th |
| WHITE/BLACK | WHT/BLK | 7th |
| RED/BLACK | RED/BLK | 8th |
| GREEN/BLACK | GRN/BLK | 9th |
| ORANGE/BLACK | ORN/BLK | 10th |
| BLUE/BLACK | BLU/BLK | 11th |
| BLACK/WHITE | BLK/WHT | 12th |
| RED/WHITE | RED/WHT | 13th |
| GREEN/WHITE | GRN/WHT | 14th |
| BLUE/WHITE | BLU/WHT | 15th |
| BLACK/RED | BLK/RED | 16th |
| WHITE/RED | WHT/RED | 17th |
| ORANGE/RED | ORN/RED | 18th |
| BLUE/RED | BLU/RED | 19th |

## WIRE SIZES

(CIRCUIT WIRING SHALL BE RATED IN ACCORDANCE WITH THE MAXIMUM PERMITTED AMPERE RATING/SETTING OF THE OVERCURRENT PROTECTION DEVICE. N.EC. 210–3)

120VAC / 20A POWER CIRCUIT – MIN. #12 AWG.
120VAC / 15A AND BELOW – MIN. #14 AWG.

24VDC / 20A POWER CIRCUIT – MIN. #12 AWG.
24VDC / 15A AND BELOW – MIN. #16 AWG.
24VDC I/O & SIGNAL CIRCUIT – MIN. #18 AWG.

4–20mADC I/O SIGNAL CIRCUIT – MIN. #18 AWG.

## ABBREVIATIONS

| | |
|---|---|
| A/R | AS REQUIRED |
| AC COM | NEUTRAL |
| AFF | ABOVE FINISHED FLOOR |
| AI | ANALOG INPUT |
| ANL COM | ANALOG COMMON |
| AO | ANALOG OUTPUT |
| AWG | AMERICAN WIRE GAUGE |
| BLK | BLACK |
| BLU | BLUE |
| CAP | CENTRAL ARIZONA PROJECT |
| CLR | CLEAR |
| CR | CONTROL RELAY |
| DC COM | DC COMMON |
| DC+ | DC POSITIVE POTENTIAL |
| DI | DISCRETE INPUT |
| DO | DISCRETE OUTPUT |
| DS | DOOR SWITCH |
| FOM | FIBER OPTIC MODEM |
| FOT | FIBER OPTIC TRANSCEIVER |
| GND | GROUND |
| GRN | GREEN |
| I/O | INPUT/OUTPUT |
| L | LINE |
| N | NEUTRAL |
| NC | NORMALLY CLOSED |
| NO | NORMALLY OPEN |
| NP | NAMEPLATE |
| OIT | OPERATOR INTERFACE TERMINAL |
| ORN | ORANGE |
| PDB | POWER DISTRIBUTION BLOCK |
| PLC | PROGRAMMABLE LOGIC CONTROLLER |
| PP | FIBER OPTIC PATCH PANEL |
| PS | POWER SUPPLY |
| REC | RECEPTACLE |
| RES | RESERVOIR |
| RIO | REMOTE INPUT/OUTPUT |
| RTU | REMOTE TELEMETRY UNIT |
| SLC | SMALL LOGIC CONTROLLER |
| SP | SPACE |
| SS | SURGE SUPPRESSOR |
| TB | TERMINAL BLOCK |
| UPS | UNINTERRUPTIBLE POWER SUPPLY |
| WHT | WHITE |
| WTR | WATER TREATMENT PLANT |
| WWTP | WASTE WATER TREATMENT PLANT |

## LINETYPE LEGEND

- FIELD WIRING
- INTERNAL PANEL WIRING
- RADIO COMMUNICATION LINK
- FO – FIBER OPTIC CABLE
- FOP – FIBER OPTIC PATCH CABLE
- EN – ETHERNET CAT5 CABLE
- DH+ – DATA HIGHWAY PLUS
- RIO – REMOTE INPUT OUTPUT
- AREA DIVIDER
- EQUIPMENT
- PATCH PANEL

DLT&V
SYSTEMS ENGINEERING
3500 N. CENTRAL AVE, STE. 1900
PHOENIX, AZ 85012 (602) 366-4558

Registered Professional Engineer (Electrical)
40253
BRENT
ALEKSICH
Date Signed 10/9/07
ARIZONA U.S.A.

NOTES

REVISIONS

| REV. | BY | DATE | DESCRIPTION |
|---|---|---|---|
| | | | |
| | | | |
| | | | |
| | | | |

CASA GRANDE – COOLIDGE
SCADA SYSTEM – COTTONWOOD LN

ARIZONA WATER COMPANY

STANDARD SYMBOLS AND ABBREVIATIONS

| | |
|---|---|
| DRAWN BY: JHA | PROJECT NO. 1219.0.101 |
| DESIGNED BY: JHA | SUBMITTAL DATE: OCT 2007 |
| CHECKED BY: DN | DRAWING NUMBER EC3 |


DWG FILE: 1219.00.101_EC3.dwg 2:38pm PLOTTED: Oct 19, 2007 johvens

# CASA GRANDE – COOLIDGE
# SCADA SYSTEM DESIGN
# COTTONWOOD LANE RTU DESIGN
# ISA TABLE AND COMMON LEGENDS SHEET

## ISA INSTRUMENT IDENTIFICATION TABLE

| FIRST LETTERS | | | SUCCEEDING LETTERS | | |
|---|---|---|---|---|---|
| MEASURED OR INITIATING VARIABLE | | MODIFIER | READOUT OR PASSIVE FUNCTION | OUTPUT FUNCTION | MODIFIER |
| A | ANALYZER | | ALARM | | AUTO |
| B | BURNER, COMBUSTION | | | | |
| C | CONDUCTIVITY | | | CONTROL | CLOSED |
| D | DENSITY | DIFFERENTIAL | | | |
| E | VOLTAGE | | ELEMENT | | |
| F | FLOW | RATIO | | | |
| G | GAUGE | | GLASS, VIEWING DEVICE | | |
| H | HAND | | | | HIGH |
| I | CURRENT | | INDICATE | | |
| J | POWER | SCAN | | | |
| K | TIME, TIME SCHED. | TIME RATE OF CHANGE | | CONTROL STATION | |
| L | LEVEL | | LIGHT | | LOW |
| M | MOTION | | | | MIDDLE |
| N | INTRUSION | | | | NORMAL |
| O | TORQUE | | ORIFICE, RESTRICTION | | OPEN |
| P | PRESSURE | | POINT CONNECTION | | STOP |
| Q | QUANTITY | INTEGRATE, TOTALIZE | | | |
| R | RADIATION | | RECORD, OR PRINT | | REMOTE |
| S | SPEED, FREQUENCY | SAFETY | | SWITCH | START |
| T | TEMPERATURE | | | TRANSMIT | |
| U | MULTIVARIABLE | | MULTIFUNCTION | MULTIFUNCTION | MULTIFUNCTION |
| V | VIBRATION | | | VALVE, LOUVER | |
| W | WEIGHT | | WELL | | |
| X | MOTOR | X-AXIS | UNCLASSIFIED | UNCLASSIFED | UNCLASSIFED |
| Y | EVENT, STATE, OR PRESENCE | Y-AXIS | | RELAY, COMPUTE, CONVERT | |
| Z | POSITION | Z-AXIS | | DRIVER, ACTUATOR, FINAL CONTROL ELEMENT | |

## FIELD WIRES TAG LEGEND

DEVICE NAME/TBXX-00
- TERMINAL NO.
- TERMINAL STRIP NO.
- FIELD DEVICE TAG NO.

## PANEL POWER WIRES TAG LEGEND

TBXX-03/TBXX-03
- TO TERMINAL NO.
- TO TERMINAL STRIP NO.
- FROM TERMINAL NO.
- FROM TERMINAL STRIP NO.

## PANEL I/O WIRES TAG LEGEND

O:#.2/TBXX-03
- INPUT POINT NO.
- TERMINAL STRIP NO.
- CHANNEL #
- SLOT #
- O=OUTPUT I=INPUT

## COLOR CODE CHART FOR 22 AWG BELDEN PAIRED CABLE NO. 8761

| | | |
|---|---|---|
| BLACK | BLK | 1st |
| CLEAR | CLR | 2nd |

## PANEL WIRING IDENTIFICATION

BLACK – 120VAC LINE
WHITE – 120VAC NEUTRAL
GREEN – GROUND
ORANGE – DC POSITIVE
BLUE – DC COMMON

DLT&V
SYSTEMS ENGINEERING
3550 N. CENTRAL AVE, STE. 1900
PHOENIX, AZ 85012 (602) 266-4658

Registered Professional Engineer (Electrical)
CERTIFICATE NO. 40253
BRENT ALEKSICH
Date Signed 10-19-07
ARIZONA U.S.A.

NOTES

REVISIONS

| REV. | BY | DATE | DESCRIPTION |
|---|---|---|---|
| | | | |

CASA GRANDE – COOLIDGE
SCADA SYSTEM – COTTONWOOD LN

ARIZONA WATER COMPANY

ISA TABLE AND COMMON LEGENDS SHEET

| | |
|---|---|
| DRAWN BY: JHA | PROJECT NO. 1219.0.101 |
| DESIGNED BY: JHA | SUBMITTAL DATE: OCT 2007 |
| CHECKED BY: DN | DRAWING NUMBER EC4 |

VG FILE: 1219.00.101_EC4.dwg 2:36pm PLOTTED: Oct 19, 2007 jahrens

| QTY | ITEM # | MANUFACTURER | PART NUMBER | DESCRIPTION |
|---|---|---|---|---|
| 1 | 100 | MODICON | 171CCC98030 | M1E PROCESSOR ADAPTER, ETHERNET AND RS-485 PORTS, WEB PAGE ENABLED, IEC |
| 4 | 101 | MODICON | 170ENT11002 | MOMENTUM ETHERNET COMMUNICATIONS ADAPTER |
| 2 | 102 | MODICON | 170ADI35000 | 24V DC - 32 PT. INPUT MODULE BASE |
| 1 | 103 | MODICON | 170ADO34000 | 24V DC / 0.5A - 16 PT. OUTPUT MODULE BASE, 0.5 A OUTPUT |
| 2 | 104 | MODICON | 170AAI03000 | MOMENTUM SERIES I/O BASE, ANALOG 8CH DIFFERENTIAL INPUT MODULE BASE |
| 1 | 106 | MODICON | XBT GT5330 | EXTERNAL DISPLAY WITH 10.4" COLOR TFT,VGA RESOLUTION (640X480 PIXELS), 24V POWER |
| 1 | 107 | WEIDMULLER | 8808270000 (IE-SW16) | INDUSTRIAL ETHERNET SWITCH, 16-PORT |
| 1 | 110 | BELDEN | 8267 | CABLE, COAXIAL, RG-213 (OR EQUAL) WITH APPROPRIATE CONNECTORS, (LENGTH AS REQUIRED) |
| 1 | 111 | MDS | iNET-II-IP | ETHERNET REMOTE RADIO TRANSCEIVER, SPREAD SPECTRUM, W/ REMOTE DIAGNOSTICS |
| 2 | 112 | MODICON | 170XTS00100 | CONNECTOR SET, SCREW-TYPE (SET OF 3) |
| A/R | 201 | ALLEN-BRADLEY | 1492-DR6 | TERMINAL MOUNTING RAIL, HI-RISE, ALUMINUM |
| 19 | 202 | ALLEN-BRADLEY | 1492-EA35 | END ANCHOR |
| 8 | 210 | ALLEN-BRADLEY | 1492-GM35 | TERMINAL BLOCK, GROUP MARKING CARRIER |
| 20 | 215 | ALLEN-BRADLEY | 1492-J4 | TERMINAL BLOCK, SINGLE CIRCUIT, 600V, GRAY |
| 1 | 218 | ALLEN-BRADLEY | 1492-JD3 | TERMINAL BLOCK, DOUBLE LEVEL |
| 123 | 219 | ALLEN-BRADLEY | 1492-JD3P | TERMINAL BLOCK, DOUBLE LEVEL W/ PLUGGABLE TOP LEVEL |
| 4 | 221 | ALLEN-BRADLEY | 1492-JG4 | TERMINAL BLOCK, SINGLE CIRCUIT, GROUNDING |
| 97 | 223 | ALLEN-BRADLEY | 1492-FPK224 | FUSE PLUG INSERT W/ BFI, 10-36VAC/DC WORKING VOLTAGE, 10A MAX @ 250V. PROVIDE FAST BLOW FUSES AS REQUIRED |
| 16 | 225 | ALLEN-BRADLEY | 1492-DPL | DISCONNECT PLUG FOR 1492-JD3 P AND 1492-JD3 |
| 8 | 231 | WEIDMULLER | 9926251002 | CIRCUIT BREAKER, 2A |
| 3 | 233 | WEIDMULLER | 9926251010 | CIRCUIT BREAKER, 10A |
| 3 | 234 | WEIDMULLER | 9926251015 | CIRCUIT BREAKER, 15A |
| 1 | 235 | WEIDMULLER | 9926251020 | CIRCUIT BREAKER, 20A |
| A/R | 282 | ANY | ANY | 250V, 5mmX20mm FAST BLOW GLASS FUSES (SIZE AS INDICATED ON DRAWING) |
| 1 | 304 | HOFFMAN | A72H3724FS3PT | ENCLOSURE, FREE STANDING, TYPE 4/12 W/3-POINT LATCH, 72"X37"X24" |
| 1 | 305 | HOFFMAN | A72P36F1 | SUBPANEL, WHITE PAINT, 60"X32" |
| 1 | 306 | HOFFMAN | A72SP36F4 | SWING-OUT PANEL, HALF PANEL, 30.88" X 33.81" |
| 1 | 313 | HOFFMAN | ALF16D24R | 24" FLUORESCENT LIGHTING PACKAGE W/ DOOR SWITCH, 115VAC |
| 1 | 316 | HOFFMAN | A-TEMNO | TEMPERATURE CONTROL SWITCH (THERMOSTAT), N.O. CONTACTS |
| A/R | 359 | BELDEN | 7929A | CABLE, ETHERNET, 4 PR, 24 AWG, CAT 5E |
| 1 | 377 | ANY | ANY | GROUNDING BAR |
| A/R | 379 | PANDUIT | F2X4LG6 C2LG6 | 2 X 4 PLASTIC WIRING DUCT TYPE "E" W/COVER STYLE "C" |
| A/R | 380 | PANDUIT | F3X4LG6 C3LG6 | 3 X 4 PLASTIC WIRING DUCT TYPE "E" W/COVER STYLE "C" |
| 1 | 398 | HUBBELL | HBL5262I | DUPLEX RECEPTACLE, IVORY, 125V/15A, W/BOX AND BRUSHED ALUMINUM COVER (HUBBELL P.N.# A8) |
| 2 | 399 | HUBBELL | HBL5358 | SIMPLEX RECEPTACLE, BROWN, 125V/20A, W/BOX AND BRUSHED ALUMINUM COVER (HUBBELL P.N.# A7) |
| 2 | 405 | WEIDMULLER | 8708680000 (CP SNT 250W 24V 10A) | POWER SUPPLY, 24VDC, 250W, 10A, W/ STATUS RELAY |
| 1 | 406 | WEIDMULLER | 8710620000 (CP DM 10) | DIODE MODULE, 10A PER INPUT, 40VDC MAX |
| 1 | 408 | IDEC | RH2B-UL-AC120V | RELAY, 120VAC COIL, DPDT W/ INDICATOR |
| 1 | 421 | IDEC | SH2B-05C | RELAY SOCKET, DIN RAIL MOUNT, FINGERSAFE |
| 1 | 450 | MTL SURGE TECHNOLOGIES | MA15/D/1/SI | 120/240 VAC, 15A, SURGE SUPPRESSOR AND FILTER |
| 16 | 451 | WEIDMULLER | 8448920000 | SURGE SUPPRESSOR, 24VDC, 2 WIRE LOOP PROTECTION (MCZ OVP) W/ END CAP PART #8389030000 |
| 16 | 452 | WEIDMULLER | 8389030000 | END CAP FOR 24VDC SURGE SUPPRESSOR (MCZ OVP) |
| 16 | 455 | ALLEN-BRADLEY | 700-HLT1Z24 | TERMINAL BLOCK RELAY, 24VDC, 6A CONTACTS, SPDT W/ LED |
| 1 | 505 | HOFFMAN | CR29-0416-G068 | AIR CONDITIONER, 120 VAC, 4000 BTU/HR, W/OUTDOOR ENCLOSURE PACKAGE |
| 1 | 703 | APC | SUA750, AP9610 | UPS, 115 VAC, 750 VA W/ RELAY I/O SMARTSLOT CARD OPTION, MINIMUM 30 MIN. RUNTIME OF COMPLETE PLC OPERATIONS POWER |
| 1 | 811 | POLYPHASER | IS-50NX-C2 | BROADBAND COAXIAL SURGE PROTECTOR, FLANGE MOUNT, 125-1000MHZ |
| 2 | 853 | TIMES MICROWAVE SYSTEMS | EZ-900-NMC | N-MALE CONNECTOR |

DLT&V
SYSTEMS ENGINEERING
3550 N. CENTRAL AVE, STE. 1900
PHOENIX, AZ 85012 (602) 266-4666

Registered Professional Engineer (Electrical)
40253
BRENT
ALEKSICH
Date Signed 10-19-07
ARIZONA U.S.A.

NOTES

REVISIONS

| REV. | BY | DATE | DESCRIPTION |
|---|---|---|---|
| | | | |
| | | | |
| | | | |
| | | | |

CASA GRANDE – COOLIDGE
SCADA SYSTEM – COTTONWOOD LN

ARIZONA WATER COMPANY

BILL OF MATERIALS

| DRAWN BY: | PROJECT NO. |
|---|---|
| JHA | 1219.0.101 |
| DESIGNED BY: JHA | SUBMITTAL DATE: OCT 2007 |
| CHECKED BY: DN | DRAWING NUMBER: EC5 |

WG FILE: 1219.00.101_EC5.dwg 2:39pm PLOTTED: Oct. 19, 2007 johness

## NOTES:

1. BILL OF MATERIALS IS ON DRAWING EC5.
2. REFER TO DRAWING EC7 FOR PLC INTERIOR LAYOUT.
3. FURNISH ADDITIONAL NAMEPLATES AS REQUIRED BY UL OR BY OTHER APPLICABLE CODES.
4. MOUNT UPS MINIMUM 6" ABOVE GRADE LEVEL.

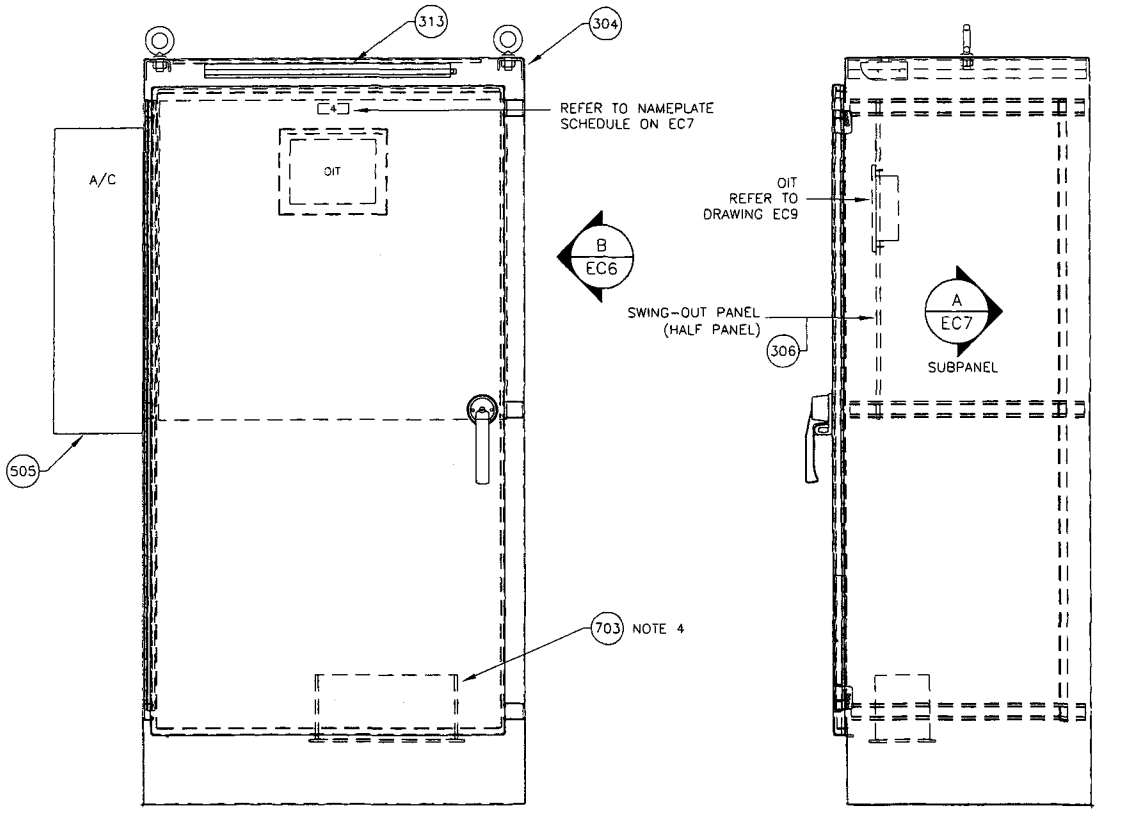


A ~ RTU ENCLOSURE, FRONT
1"=1'-0"

B ~ RTU ENCLOSURE, SIDE
1"=1'-0"

DLT&V
SYSTEMS ENGINEERING
3550 N. CENTRAL AVE, STE. 1900
PHOENIX, AZ 85012 (602) 266-4658

Registered Professional Engineer (Electrical)
CERTIFICATE NO. 40253
BRENT ALEKSICH
Date Signed 10-19-07
ARIZONA U.S.A.

NOTES

REVISIONS

| REV. | BY | DATE | DESCRIPTION |
|---|---|---|---|
| | | | |
| | | | |
| | | | |
| | | | |

CASA GRANDE – COOLIDGE
SCADA SYSTEM – COTTONWOOD LN

ARIZONA WATER COMPANY

RTU ENCLOSURE LAYOUT

| | |
|---|---|
| DRAWN BY: JHA | PROJECT NO. 1219.0.101 |
| DESIGNED BY: JHA | SUBMITTAL DATE: OCT 2007 |
| CHECKED BY: DN | DRAWING NUMBER EC6 |

FILE: 1219.00.101_EC6.dwg 2:30pm PLOTTED: OCT 19, 2007 jamesha

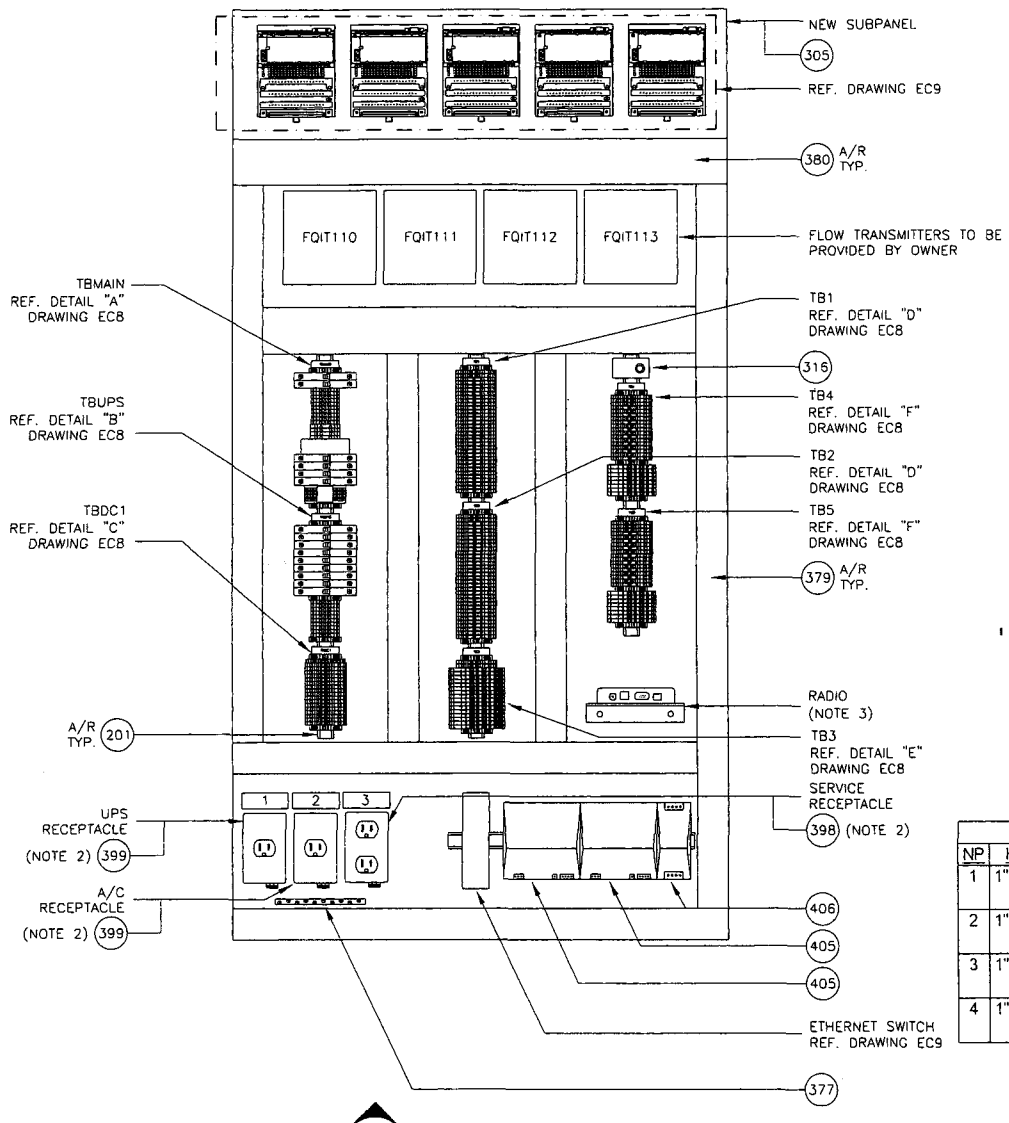


A / EC6 SUBPANEL LAYOUT
1-1/2"=1'-0"

## NOTES:

1. BILL OF MATERIALS IS ON DRAWING EC5.
2. NAMEPLATE SHALL BE 3/32" THICK LAMINATED PHENOLIC TYPE BLACK WITH WHITE LETTERS. SEE BILL OF MATERIALS ON DRAWING EC5 AND NAMEPLATE SCHEDULE (DET B) ON THIS SHEET FOR ADDITIONAL INFORMATION.
3. MOUNT RADIO ON CUSTOM SHELF PROVIDED AND INSTALLED BY PANEL FABRICATOR. REFER TO DRAWING EC9 AND BILL OF MATERIALS ON EC5 FOR MORE INFORMATION.

**NAMEPLATE SCHEDULE (NOTE 2)**

| NP | HxWxLTR | FIRST LINE | SECOND LINE | LOCATION |
|---|---|---|---|---|
| 1 | 1" x 3" x 1/4" | UPS RECEPTACLE | ONLY | CENTERED ABOVE UPS RECEPTACLE |
| 2 | 1" x 3" x 1/4" | A/C RECEPTACLE | ONLY | CENTERED ABOVE A/C RECEPTACLE |
| 3 | 1" x 3" x 1/4" | SERVICE RECEPTACLE | ONLY | CENTERED ABOVE SERVICE RECEPTACLE |
| 4 | 1" x 3" x 1/4" | OIT | | CENTERED ABOVE OIT |

B / ~ NAMEPLATE SCHEDULE

DLT&V
SYSTEMS ENGINEERING
3550 N. CENTRAL AVE, STE. 1900
PHOENIX, AZ 85012 (602) 266-4658

Registered Professional Engineer (Electrical)
CERTIFICATE NO. 40253
BRENT ALEKSICH
Date Signed 10-19-07
ARIZONA U.S.A.

NOTES

REVISIONS

| REV. | BY | DATE | DESCRIPTION |
|---|---|---|---|
| | | | |

CASA GRANDE – COOLIDGE
SCADA SYSTEM – COTTONWOOD LN

ARIZONA WATER COMPANY

RTU
SUBPANEL
LAYOUT

| | |
|---|---|
| DRAWN BY: JHA | PROJECT NO. 1219.0.101 |
| DESIGNED BY: JHA | SUBMITTAL DATE: OCT 2007 |
| CHECKED BY: DN | DRAWING NUMBER EC7 |

WG FILE: 1219.00.101_EC7.dwg 2:39pm PLOTTED: Oct 19, 2007 jahrens

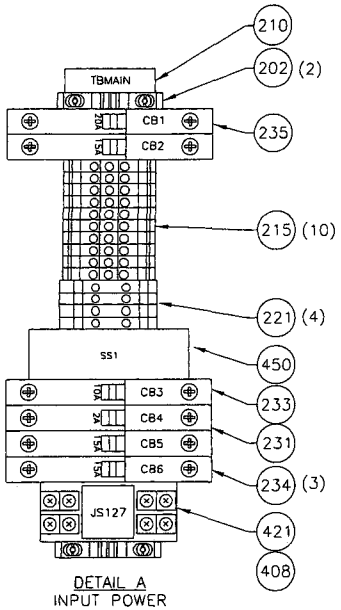


DETAIL A
INPUT POWER
TBMAIN

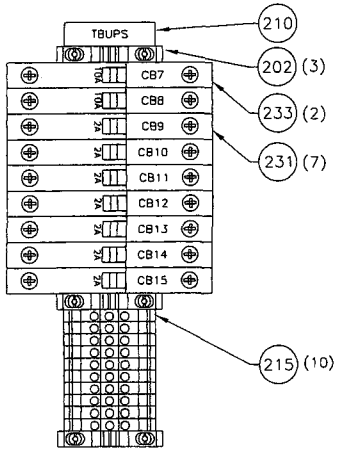


DETAIL B
PANEL POWER
TBUPS

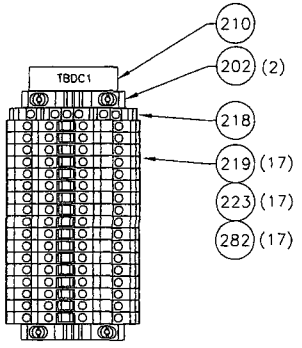


DETAIL C
24VDC POWER
DISTRIBUTION
TBDC1

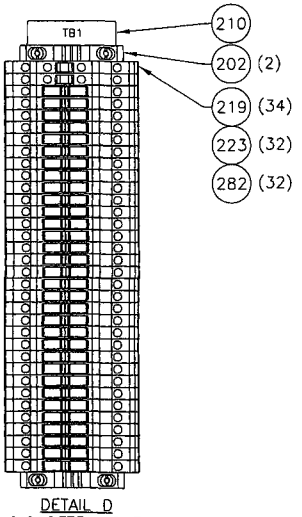


DETAIL D
DISCRETE INPUT
TB1 & TB2

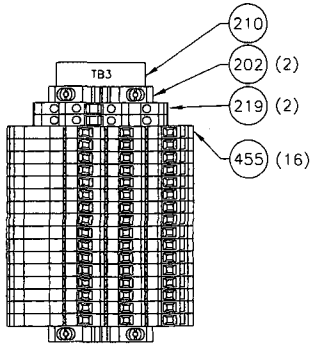


DETAIL E
DISCRETE OUTPUT
TB3

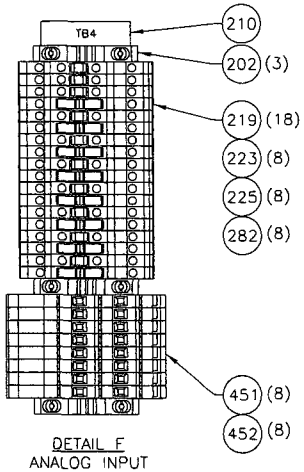


DETAIL F
ANALOG INPUT
TB4 & TB5

## NOTES:

1. PROVIDE BUS BAR STYLE OR INSULATED COMB STYLE JUMPERS WHERE 2 OR MORE TERMINALS IN THE SAME TB ARE COMMONED TOGETHER. DO NOT USE DISCRETE WIRE JUMPERS.
2. BILL OF MATERIALS IS ON DRAWING EC5.
3. PANEL BUILDER TO SUPPLY AND INSTALL ALL NECESSARY AND APPROPRIATE ACCESSORIES INCLUDING TERMINAL NUMBERS, JUMPERS AND END BARRIERS.

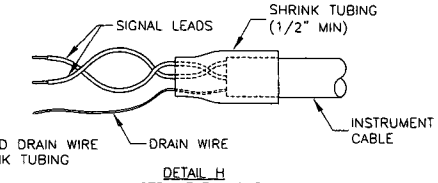


NOTE:
WRAP UNUSED DRAIN WIRE UNDER SHRINK TUBING

DETAIL H
INSTRUMENT CABLE
TERMINATION

DLT&V
SYSTEMS ENGINEERING
3550 N. CENTRAL AVE, STE. 1900
PHOENIX, AZ 85012 (602) 266-4658

Registered Professional Engineer (Electrical)
CERTIFICATE NO.
40253
BRENT
ALEKSICH
Date Signed 10-19-07
ARIZONA U.S.A.

NOTES

REVISIONS

| REV. | BY | DATE | DESCRIPTION |
|---|---|---|---|
| | | | |
| | | | |
| | | | |
| | | | |

CASA GRANDE – COOLIDGE
SCADA SYSTEM – COTTONWOOD LN

ARIZONA WATER COMPANY

TERMINAL BLOCK DETAILS

| | |
|---|---|
| DRAWN BY: JHA | PROJECT NO. 1219.0.101 |
| DESIGNED BY: JHA | SUBMITTAL DATE: OCT 2007 |
| CHECKED BY: DN | DRAWING NUMBER EC8 |

WG FILE: 1219.00.101_EC8.dwg 2:39pm PLOTTED: Oct 19, 2007 jahrens

## NOTES:

1. BILL OF MATERIALS IS ON DRAWING EC5.

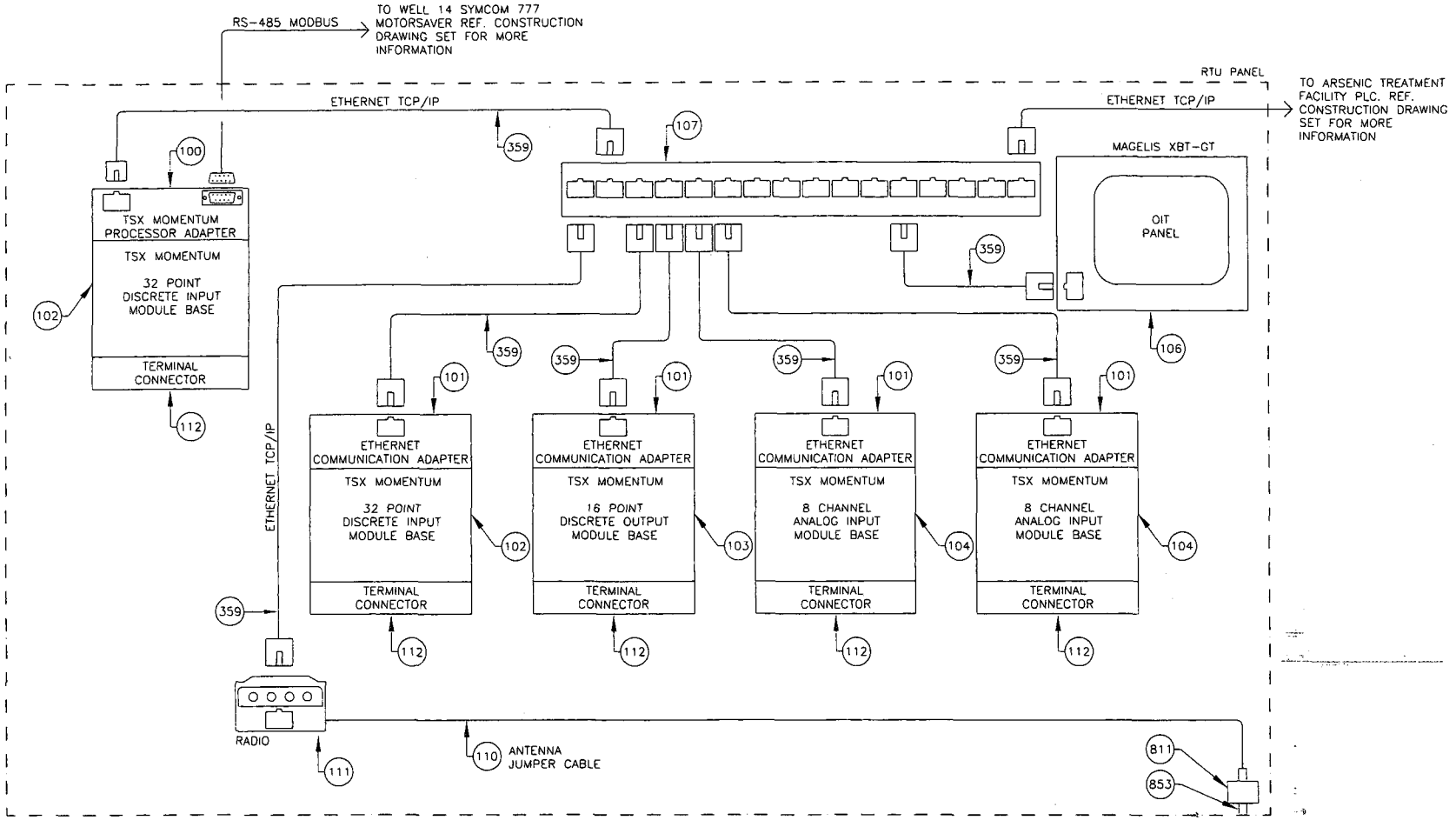


DLT&V
SYSTEMS ENGINEERING
3550 N. CENTRAL AVE, STE. 1900
PHOENIX, AZ 85012 (602) 266-4638

Registered Professional Engineer (Electrical)
CERTIFICATE NO. 40253
BRENT ALEKSICH
Date Signed 10-19-07
ARIZONA U.S.A.

NOTES

REVISIONS

| REV. | BY | DATE | DESCRIPTION |
|---|---|---|---|
| | | | |

CASA GRANDE – COOLIDGE
SCADA SYSTEM – COTTONWOOD LN

ARIZONA WATER COMPANY

COMMUNICATIONS SYSTEM ARCHITECTURE DIAGRAM

| | |
|---|---|
| DRAWN BY: JHA | PROJECT NO. 1219.0.101 |
| DESIGNED BY: JHA | SUBMITTAL DATE: OCT 2007 |
| CHECKED BY: DN | DRAWING NUMBER EC9 |

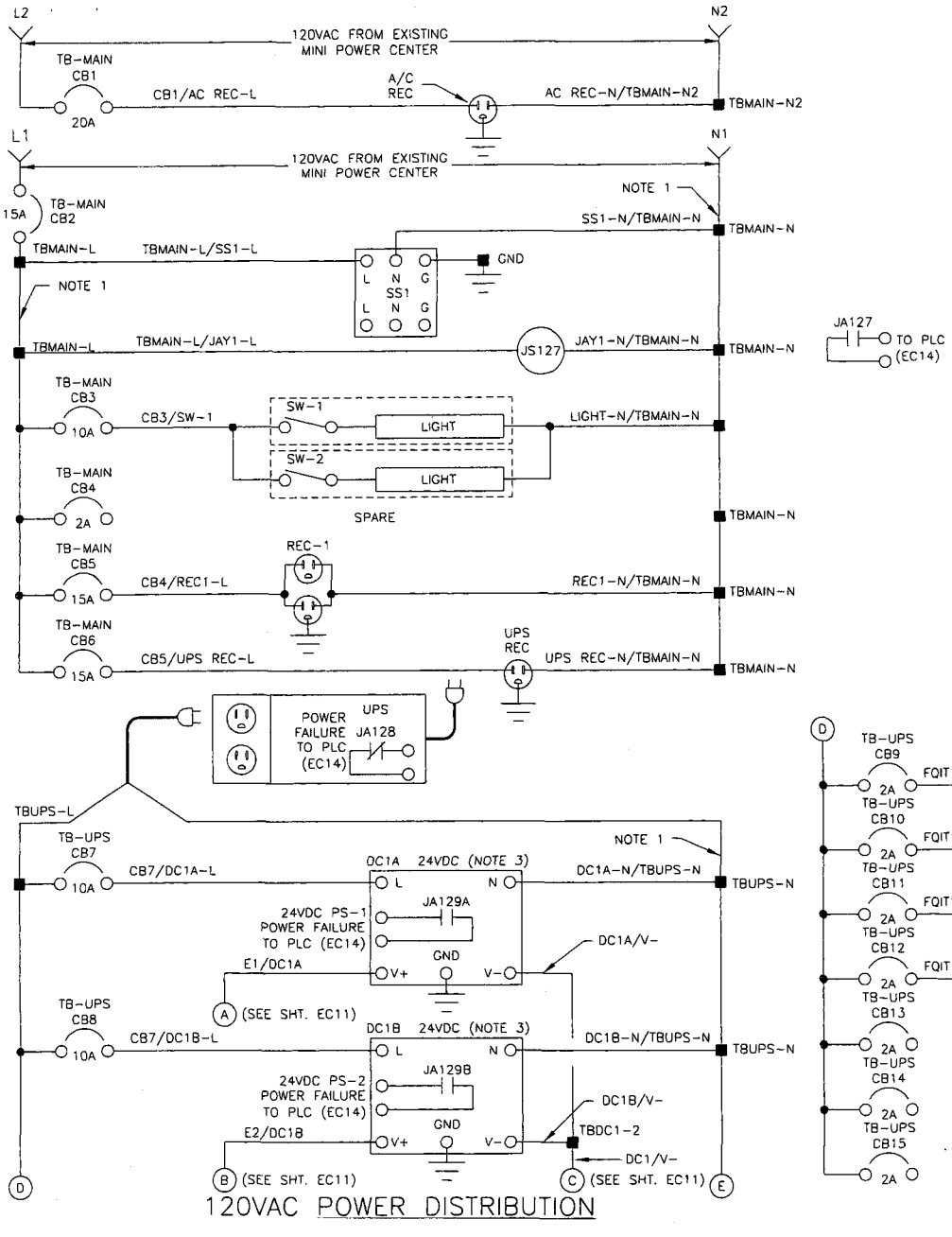


120VAC POWER DISTRIBUTION

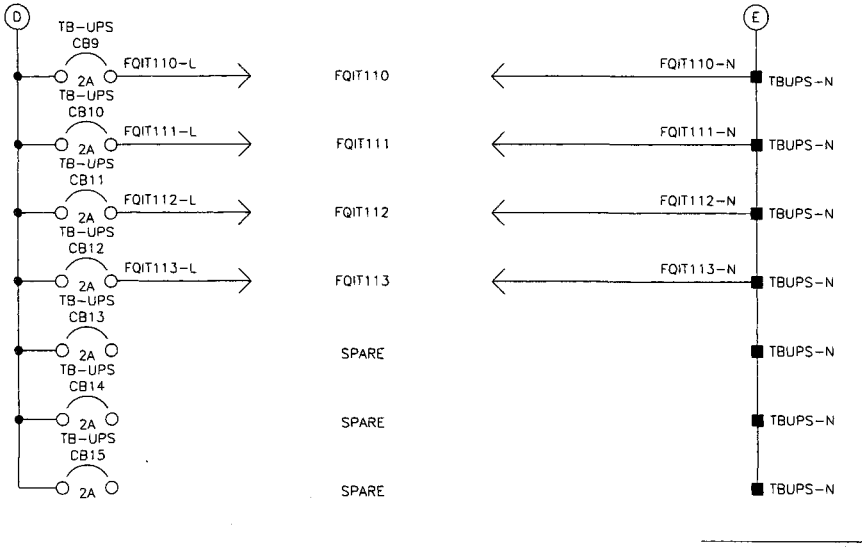


## NOTES:

1. PROVIDE BUS BAR STYLE OR INSULATED COMB STYLE JUMPERS WHERE 2 OR MORE TERMINALS IN THE SAME TB ARE COMMONED TOGETHER. DO NOT USE DISCRETE WIRE JUMPERS.
2. BILL OF MATERIALS IS ON DRAWING EC5.
3. ADJUST VOLTAGE OUTPUT SETTING ON DC1B TO BE 1.0 VOLT LESS THAN DC1A.


DLT&V
BYSTEMS ENGINEERING
3550 N. CENTRAL AVE, STE. 1900
PHOENIX, AZ 85012 (602) 264-4388


Registered Professional Engineer (Electrical)
40253
BRENT
ALEKSICH
Date Signed 10/9/07
ARIZONA U.S.A.

NOTES

REVISIONS

| REV. | BY | DATE | DESCRIPTION |
|---|---|---|---|
| | | | |
| | | | |
| | | | |
| | | | |

CASA GRANDE – COOLIDGE
SCADA SYSTEM – COTTONWOOD LN

ARIZONA WATER COMPANY

120VAC POWER DISTRIBUTION SCHEMATIC

| | |
|---|---|
| DRAWN BY: JHA | PROJECT NO. 1219.0.101 |
| DESIGNED BY: JHA | SUBMITTAL DATE: OCT 2007 |
| CHECKED BY: DN | DRAWING NUMBER EC10 |


IG FILE: 1219.00.101_EC10.dwg PLOTTED: Oct 19, 2007 johnsn 2:39pm

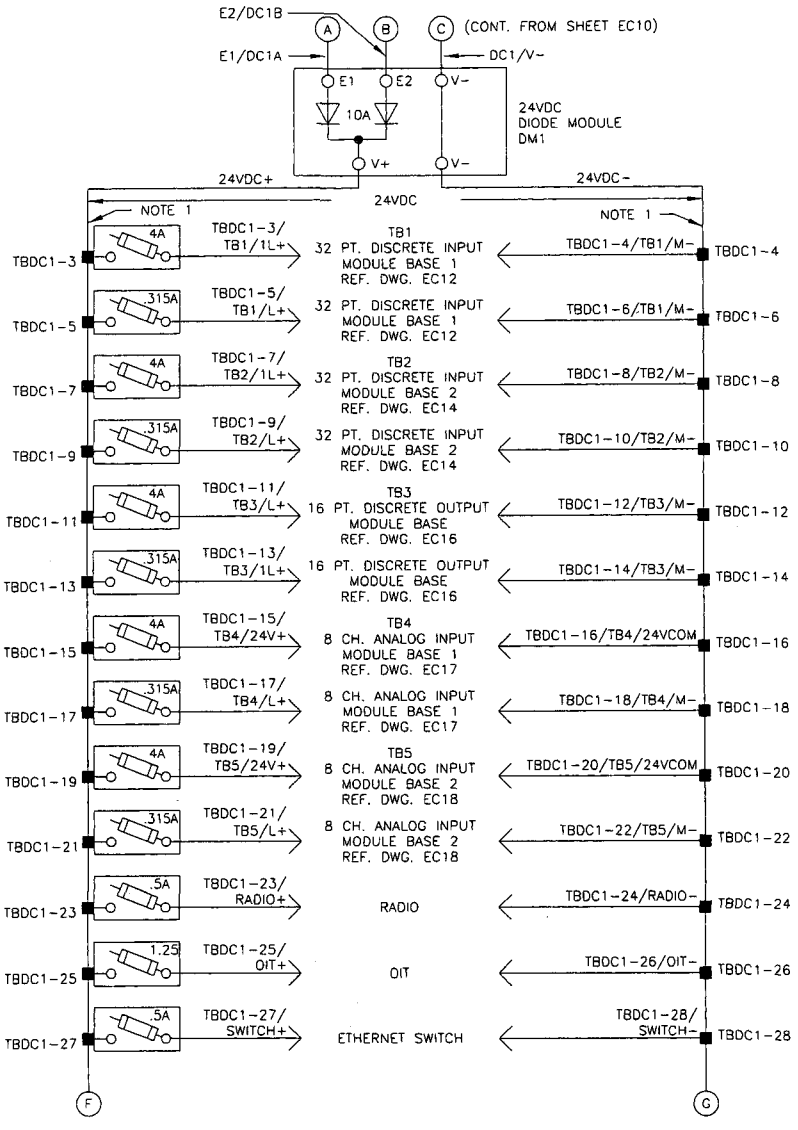


24VDC POWER DISTRIBUTION

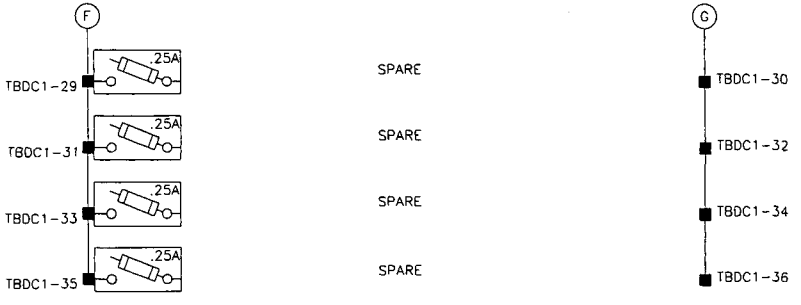


## NOTES:

1. PROVIDE BUS BAR STYLE OR INSULATED COMB STYLE JUMPERS WHERE 2 OR MORE TERMINALS IN THE SAME TB ARE COMMONED TOGETHER. DO NOT USE DISCRETE WIRE JUMPERS.
2. BILL OF MATERIALS IS ON DRAWING EC5.
3. THE PROPER FUSE SIZE ON ANY FUTURE EQUIPMENT INSTALLATIONS UTILIZING SPARE CIRCUITS WILL BE THE RESPONSIBILITY OF THE OWNER.


DLT&V
SYSTEMS ENGINEERING
3550 N. CENTRAL AVE., SUITE 1100
PHOENIX, AZ 85012 (602) 264-4888


Registered Professional Engineer (Electrical)
40253
BRENT
ALEKSICH
Date Signed 10/9/07
ARIZONA U.S.A.

NOTES

| REVISIONS | | | |
|---|---|---|---|
| REV. | BY | DATE | DESCRIPTION |
| | | | |
| | | | |
| | | | |
| | | | |

CASA GRANDE – COOLIDGE
SCADA SYSTEM – COTTONWOOD LN

ARIZONA WATER COMPANY

24VDC POWER DISTRIBUTION SCHEMATIC

| | |
|---|---|
| DRAWN BY: JHA | PROJECT NO. 1219.0.101 |
| DESIGNED BY: JHA | SUBMITTAL DATE: OCT 2007 |
| CHECKED BY: DN | DRAWING NUMBER EC11 |


XG FILE: 1219.00.101_EC11.dwg 2:39pm PLOTTED: OCT 19, 2007 jperkins

# NOTES:

1. WIRE MODULES AND SIZE FUSES PER MANUFACTURER'S REQUIREMENTS.
2. BUS OR INSULATED COMB STYLE JUMPER.

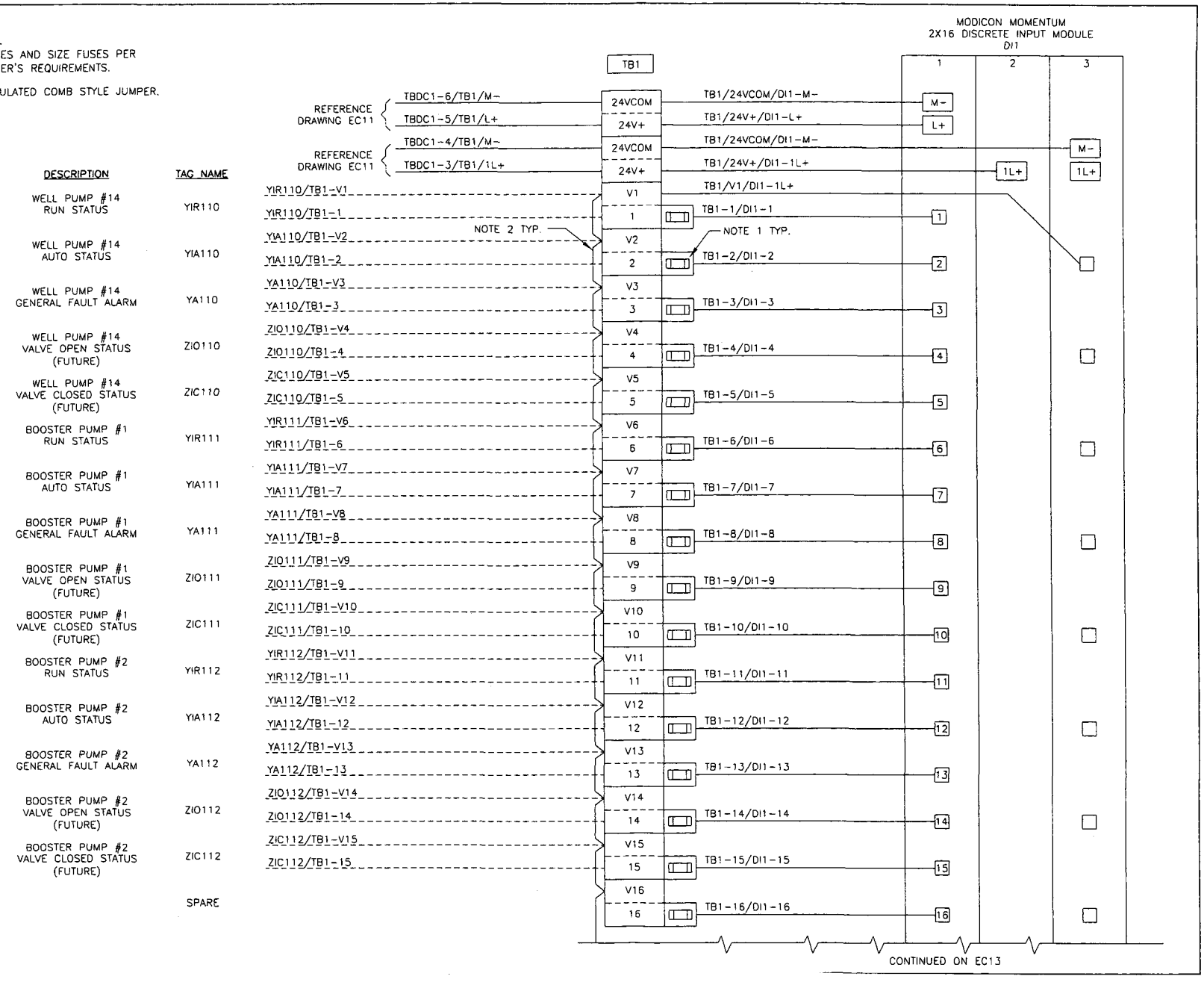


DLT&V
SYSTEMS ENGINEERING
3550 N. CENTRAL AVE, STE. 1900
PHOENIX, AZ 85012 (602) 266-4658

Registered Professional Engineer (Electrical)
CERTIFICATE NO. 40253
BRENT ALEKSICH
Date Signed 10-19-07
ARIZONA U.S.A.

NOTES

REVISIONS

| REV. | BY | DATE | DESCRIPTION |
|---|---|---|---|
| | | | |

CASA GRANDE - COOLIDGE
SCADA SYSTEM - COTTONWOOD LN

ARIZONA WATER COMPANY

DISCRETE INPUT 1
MODULE BASE
WIRING DIAGRAM - SHEET 1

| | |
|---|---|
| DRAWN BY: JHA | PROJECT NO. 1219.0.101 |
| DESIGNED BY: JHA | SUBMITTAL DATE: OCT 2007 |
| CHECKED BY: DN | DRAWING NUMBER EC12 |

NG FILE: 1219.00.101_EC12.dwg 2:39pm PLOTTED: Oct 19, 2007 jahrer

# NOTES:

1. WIRE MODULES AND SIZE FUSES PER MANUFACTURER'S REQUIREMENTS.
2. BUS OR INSULATED COMB STYLE JUMPER.

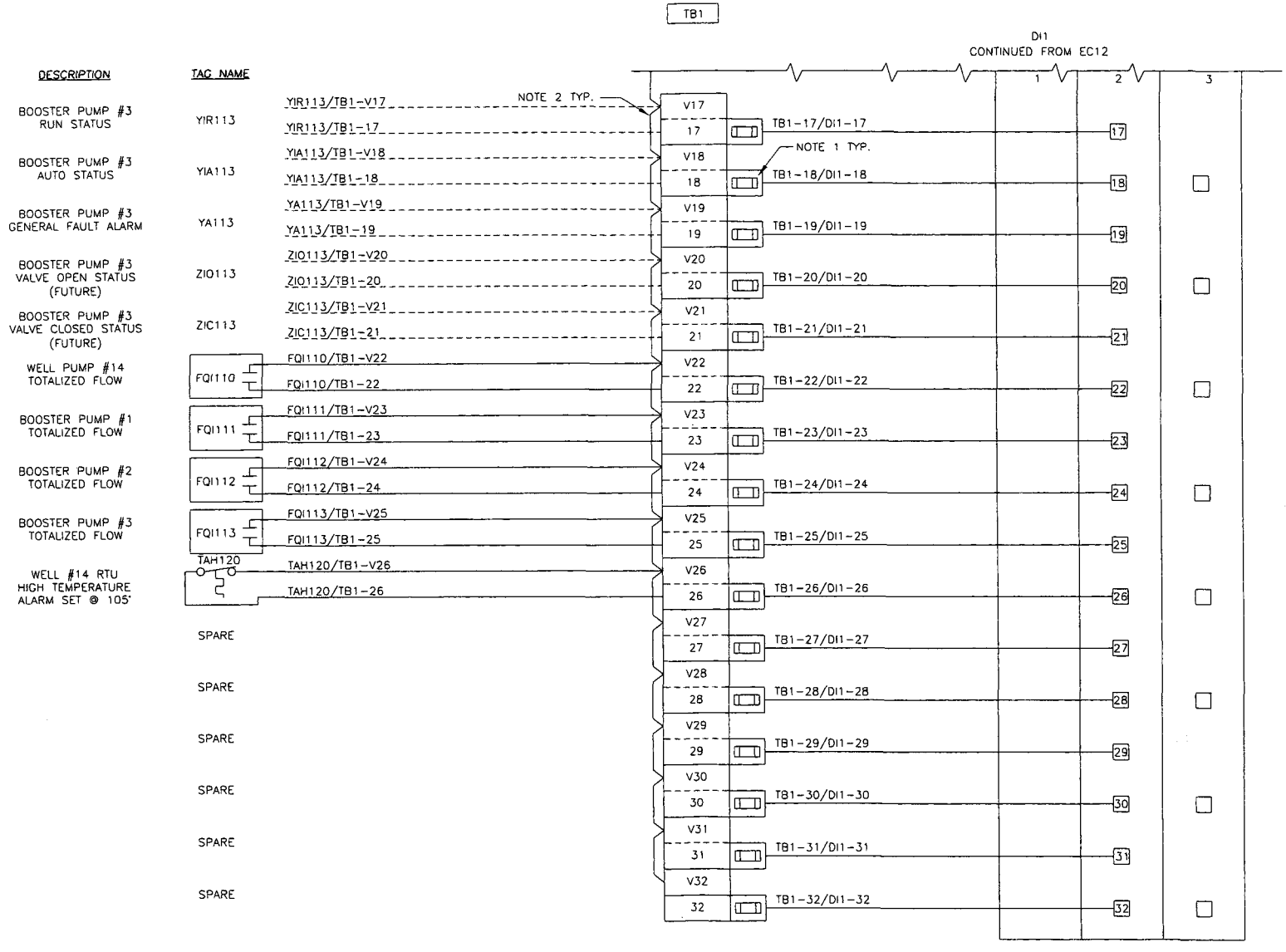


DLT&V
SYSTEMS ENGINEERING
3550 N. CENTRAL AVE, STE. 1900
PHOENIX, AZ 85012 (602) 266-4658

Registered Professional Engineer (Electrical)
CERTIFICATE NO. 40253
BRENT ALEKSICH
Date Signed 10-19-07
ARIZONA U.S.A.

NOTES

REVISIONS

| REV. | BY | DATE | DESCRIPTION |
|---|---|---|---|
| | | | |

CASA GRANDE - COOLIDGE
SCADA SYSTEM - COTTONWOOD LN

ARIZONA WATER COMPANY

DISCRETE INPUT 1
MODULE BASE
WIRING DIAGRAM - SHEET 2

| | |
|---|---|
| DRAWN BY: JHA | PROJECT NO. 1219.0.101 |
| DESIGNED BY: JHA | SUBMITTAL DATE: OCT 2007 |
| CHECKED BY: DN | DRAWING NUMBER EC13 |

VG FILE: 1219.00.101_EC13.dwg 2:39pm PLOTTED: Oct 19, 2007 johrens

## NOTES:

1. WIRE MODULES AND SIZE FUSES PER MANUFACTURER'S REQUIREMENTS.
2. BUS OR INSULATED COMB STYLE JUMPER.

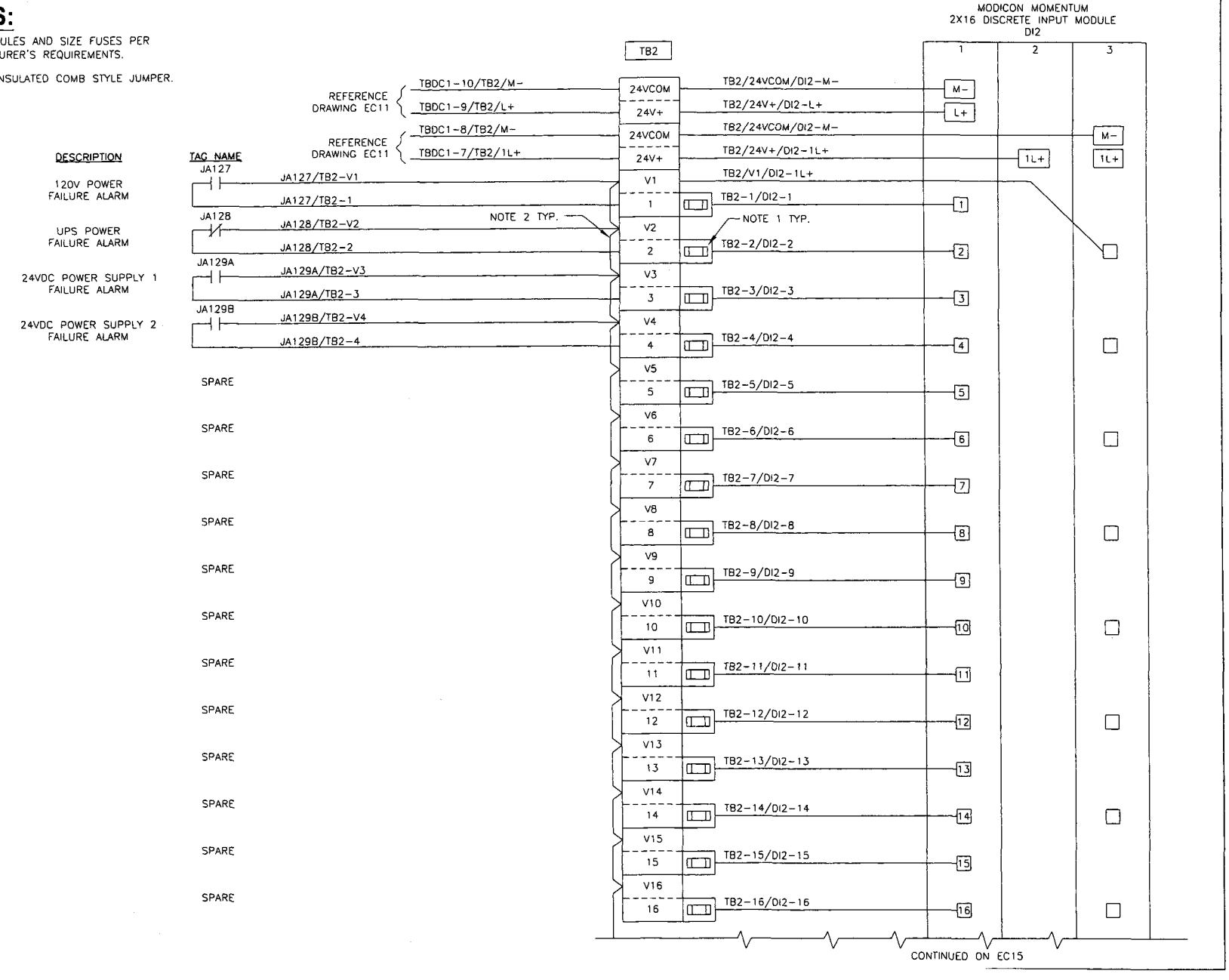


DLT&V SYSTEMS ENGINEERING
3550 N. CENTRAL AVE, STE. 1900
PHOENIX, AZ 85012 (602) 956-4555

40253
BRENT
ALEKSICH
10-9-07
Date Signed
Registered Professional Engineer (Electrical)
ARIZONA U.S.A.

NOTES

REVISIONS

| REV. | BY | DATE | DESCRIPTION |
|---|---|---|---|
| | | | |
| | | | |
| | | | |
| | | | |

CASA GRANDE – COOLIDGE
SCADA SYSTEM – COTTONWOOD LN

ARIZONA WATER COMPANY

DISCRETE INPUT 2
MODULE BASE
WIRING DIAGRAM – SHEET 1

| DRAWN BY: | PROJECT NO. |
|---|---|
| JHA | 1219.0.101 |
| DESIGNED BY: | SUBMITTAL DATE: |
| JHA | OCT 2007 |
| CHECKED BY: | DRAWING NUMBER |
| DN | EC14 |

IG FILE: 1219.00.101_EC14.dwg 2:39pm PLOTTED: Oct 19, 2007 jahreas

## NOTES:

1. WIRE MODULES AND SIZE FUSES PER MANUFACTURER'S REQUIREMENTS.
2. BUS OR INSULATED COMB STYLE JUMPER.

| DESCRIPTION | TAG NAME |
|---|---|
| | SPARE |
| | SPARE |
| | SPARE |
| | SPARE |
| | SPARE |
| | SPARE |
| | SPARE |
| | SPARE |
| | SPARE |
| | SPARE |
| | SPARE |
| | SPARE |
| | SPARE |
| | SPARE |
| | SPARE |
| | SPARE |

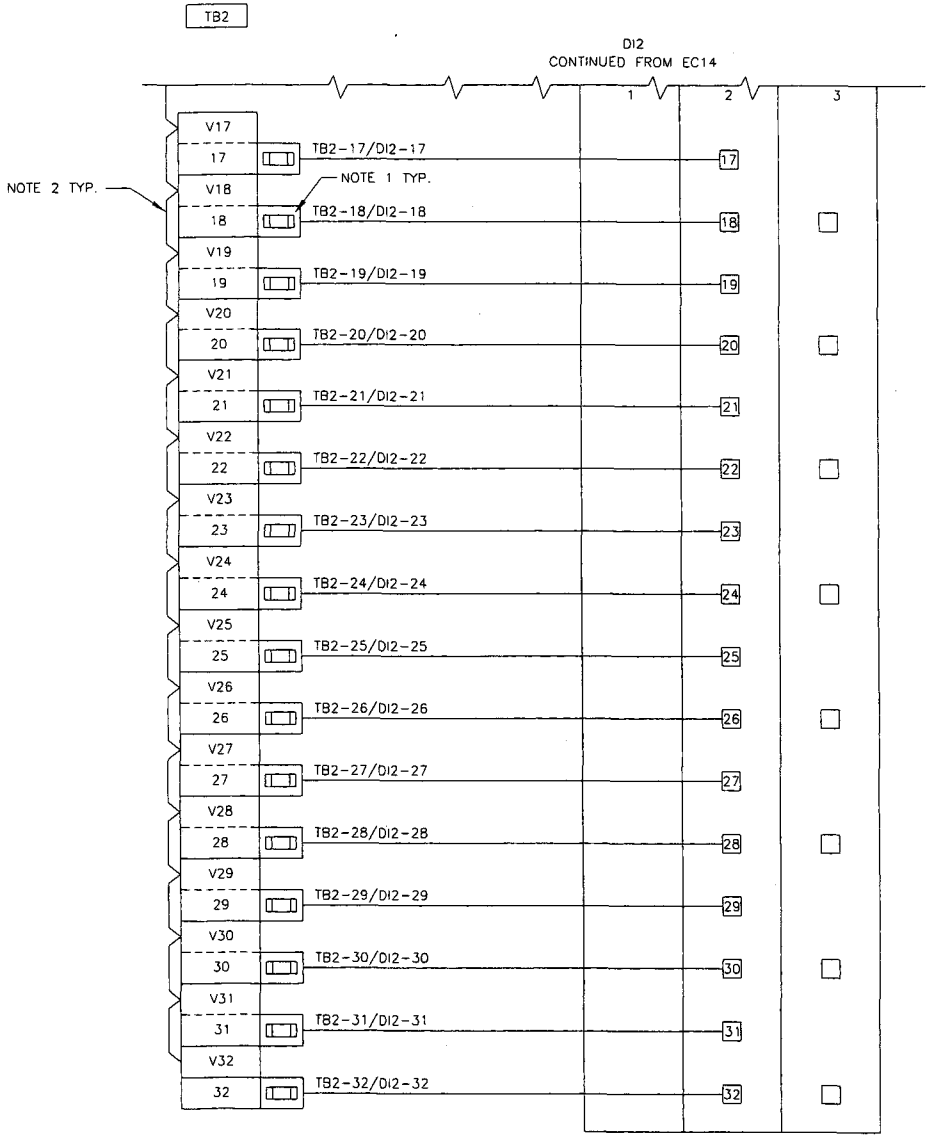


DLT&V
SYSTEMS ENGINEERING
3550 N. CENTRAL AVE, STE. 1900
PHOENIX, AZ 85012 (602) 265-4568

40253
BRENT
ALEKSICH
10-19-07
Date Signed
Registered Professional Engineer (Electrical)
ARIZONA U.S.A.

NOTES

| REVISIONS | | | |
|---|---|---|---|
| REV. | BY | DATE | DESCRIPTION |
| | | | |
| | | | |
| | | | |
| | | | |

CASA GRANDE – COOLIDGE
SCADA SYSTEM – COTTONWOOD LN

ARIZONA WATER COMPANY

DISCRETE INPUT 2
MODULE BASE
WIRING DIAGRAM – SHEET 2

| DRAWN BY: | PROJECT NO. |
|---|---|
| JHA | 1219.0.101 |
| DESIGNED BY: | SUBMITTAL DATE: |
| JHA | OCT 2007 |
| CHECKED BY: | DRAWING NUMBER |
| DN | EC15 |

G FILE: 1219.00.101_EC15.dwg 2:39pm PLOTTED: Oct 19, 2007 jonrans

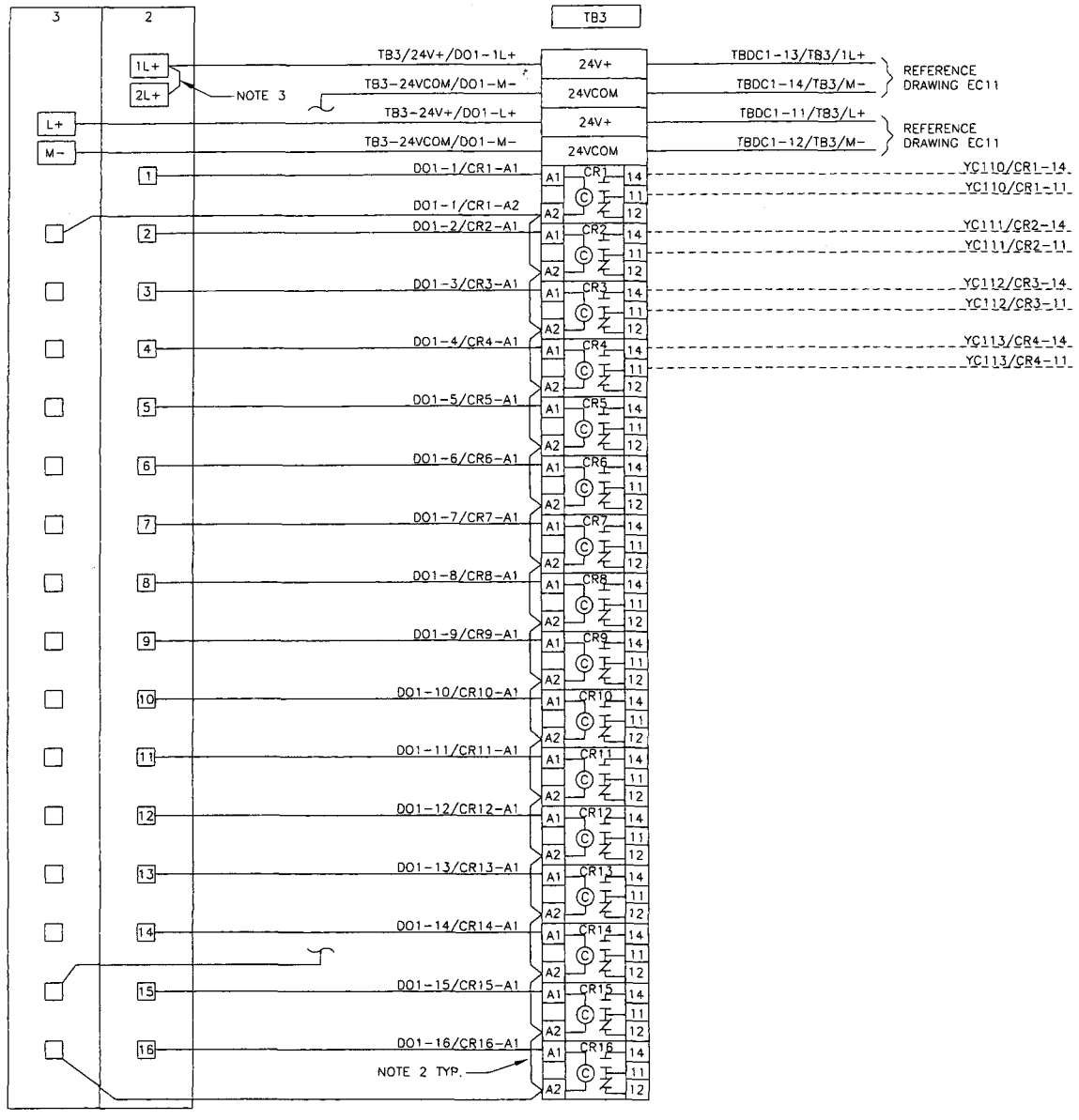


# NOTES:

1. WIRE MODULES PER MANUFACTURER'S REQUIREMENTS.
2. BUS OR INSULATED COMB STYLE JUMPER.
3. JUMPER WIRES PROVIDED BY PANEL MANUFACTURER.

| TAG NAME | DESCRIPTION |
|---|---|
| YC110 | WELL PUMP #14 START/STOP COMMAND |
| YC111 | BOOSTER PUMP #1 START/STOP COMMAND |
| YC112 | BOOSTER PUMP #2 START/STOP COMMAND |
| YC113 | BOOSTER PUMP #3 START/STOP COMMAND |
| | SPARE |
| | SPARE |
| | SPARE |
| | SPARE |
| | SPARE |
| | SPARE |
| | SPARE |
| | SPARE |
| | SPARE |
| | SPARE |
| | SPARE |
| | SPARE |
| | SPARE |

DLT&V
SYSTEMS ENGINEERING
3550 N. CENTRAL AVE, STE. 1900
PHOENIX, AZ 85012 (602) 266-4658

Registered Professional Engineer (Electrical)
CERTIFICATE NO. 40253
BRENT ALEKSICH
Date Signed 10-19-07
ARIZONA U.S.A.

NOTES

REVISIONS

| REV. | BY | DATE | DESCRIPTION |
|---|---|---|---|
| | | | |

CASA GRANDE - COOLIDGE
SCADA SYSTEM - COTTONWOOD LN

ARIZONA WATER COMPANY

DISCRETE OUTPUT MODULE BASE WIRING DIAGRAM

| | |
|---|---|
| DRAWN BY: JHA | PROJECT NO. 1219.0.101 |
| DESIGNED BY: JHA | SUBMITTAL DATE: OCT 2007 |
| CHECKED BY: DN | DRAWING NUMBER EC16 |

G FILE: 1219.00.101_EC16.dwg 2:39pm PLOTTED: Oct 19, 2007 jahrens

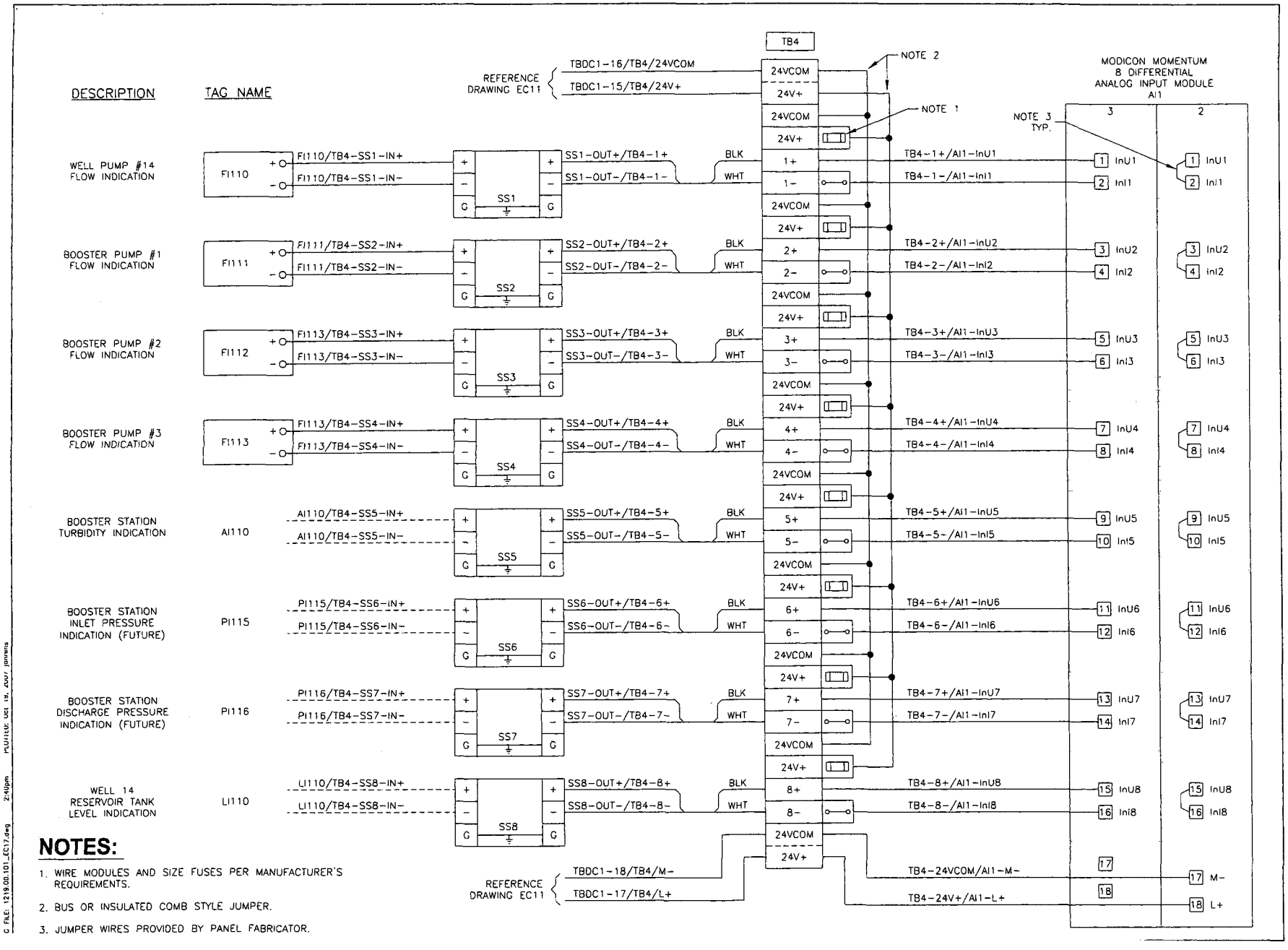


## NOTES:

1. WIRE MODULES AND SIZE FUSES PER MANUFACTURER'S REQUIREMENTS.
2. BUS OR INSULATED COMB STYLE JUMPER.
3. JUMPER WIRES PROVIDED BY PANEL FABRICATOR.


DLT&V
SYSTEMS ENGINEERING
3636 E. SOUTHERN AVE. SUITE 1
PHOENIX, AZ 85040 (602) 268-4558


Registered Professional Engineer (Electrical)
CERTIFICATE NO.
40253
BRENT ALEKSICH
Date Signed 10-19-07
ARIZONA U.S.A.

NOTES

REVISIONS

| REV. | BY | DATE | DESCRIPTION |
|---|---|---|---|
| | | | |
| | | | |
| | | | |
| | | | |

CASA GRANDE – COOLIDGE
SCADA SYSTEM – COTTONWOOD LN

ARIZONA WATER COMPANY

ANALOG INPUT 1
MODULE BASE
WIRING DIAGRAM

| DRAWN BY: | PROJECT NO. |
|---|---|
| JHA | 1219.0.101 |
| DESIGNED BY: | SUBMITTAL DATE: |
| JHA | OCT 2007 |
| CHECKED BY: | DRAWING NUMBER |
| DN | EC17 |

G FILE: 1219.00.101_EC17.dwg 2:40pm PLOTTED: OCT 19, 2007 jpmorris

| DESCRIPTION | TAG NAME |
|---|---|
| SPARE | |
| SPARE | |
| SPARE | |
| SPARE | |
| SPARE | |
| SPARE | |
| SPARE | |
| SPARE | |

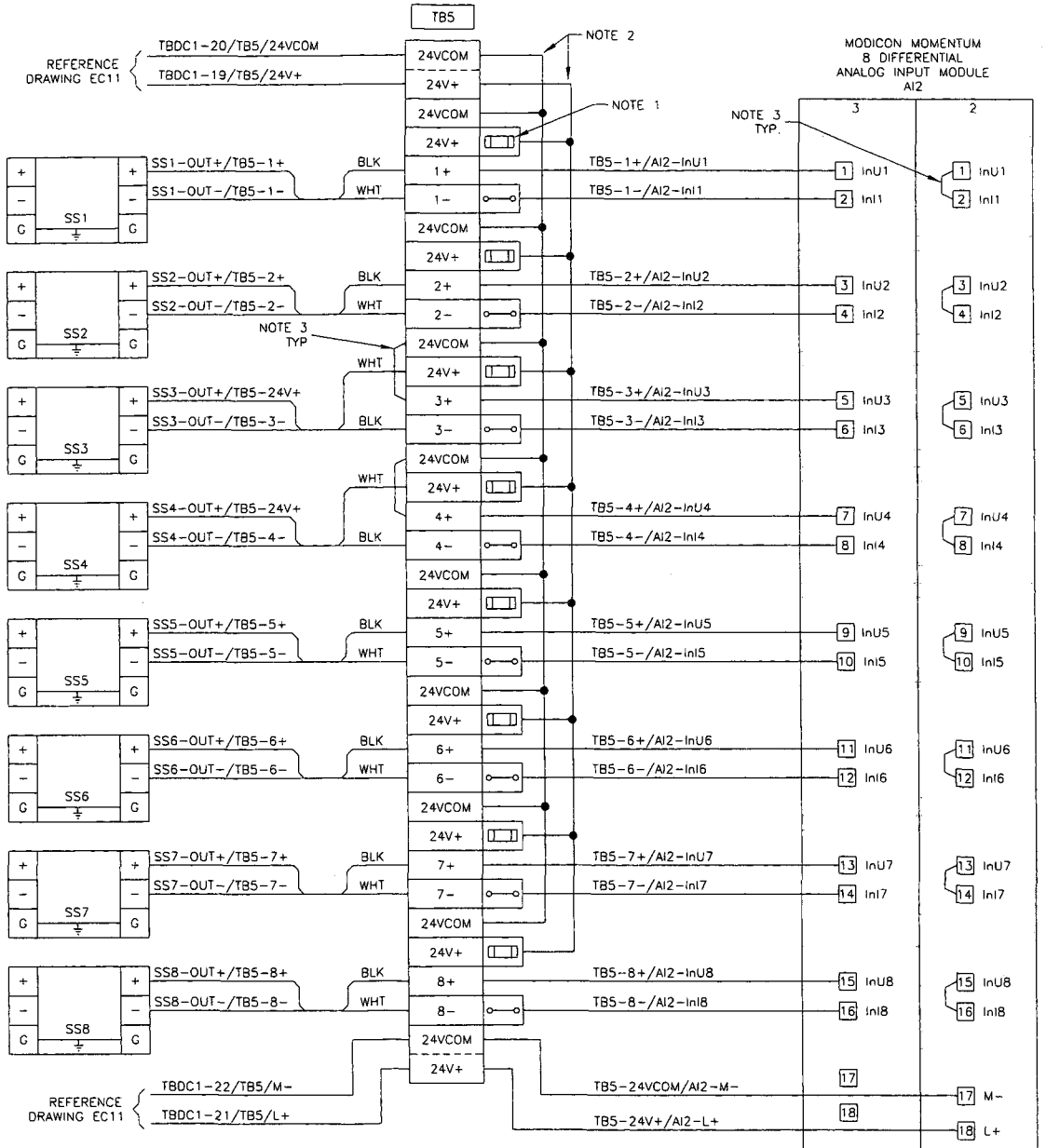


## NOTES:

1. WIRE MODULES AND SIZE FUSES PER MANUFACTURER'S REQUIREMENTS.
2. BUS OR INSULATED COMB STYLE JUMPER.
3. JUMPER WIRES PROVIDED BY PANEL FABRICATOR.


DLT&V
SYSTEMS ENGINEERING
3550 N. CENTRAL AVE, STE. 1900
PHOENIX, AZ 85012 (602) 366-4658


Registered Professional Engineer (Electrical)
40253
BRENT ALEKSICH
Date Signed 10-19-07
ARIZONA U.S.A.

NOTES

| REVISIONS | | | |
|---|---|---|---|
| REV. | BY | DATE | DESCRIPTION |
| | | | |
| | | | |
| | | | |
| | | | |

CASA GRANDE - COOLIDGE
SCADA SYSTEM - COTTONWOOD LN

ARIZONA WATER COMPANY

ANALOG INPUT 2
MODULE BASE
WIRING DIAGRAM

| DRAWN BY: | PROJECT NO. |
|---|---|
| JHA | 1219.0.101 |
| DESIGNED BY: | SUBMITTAL DATE: |
| JHA | OCT 2007 |
| CHECKED BY: | DRAWING NUMBER |
| DN | EC18 |


G:\FILE\ 1219.00.101_EC18.dwg 2:40pm PLOTTED: Oct. 19, 2007 jeffens

# CASA GRANDE - COOLIDGE
# SCADA SYSTEM DESIGN
# WELL NO. 19 RTU DESIGN

DLT&V
SYSTEMS ENGINEERING
3550 N. CENTRAL AVE. STE. 1900
PHOENIX, AZ 85012 (602) 266-4658

Registered Professional Engineer (Electrical)
40253
BRENT
ALEKSICH
Date Signed 10-19-07
ARIZONA U.S.A.

NOTES

REVISIONS

| REV. | BY | DATE | DESCRIPTION |
|---|---|---|---|
| | | | |
| | | | |
| | | | |
| | | | |

CASA GRANDE - COOLIDGE
SCADA SYSTEM - WELL #19

ARIZONA WATER COMPANY

COVER SHEET

| DRAWN BY: | PROJECT NO. |
|---|---|
| JHA | 1219.0.101 |
| DESIGNED BY: JHA | SUBMITTAL DATE: OCT 2007 |
| CHECKED BY: DN | DRAWING NUMBER: EC1 |

J: FILE: 1219.00.101_EC1.dwg 3:03pm PLOTTED: Oct 19, 2007 johnsons

CASA GRANDE – COOLIDGE
SCADA SYSTEM DESIGN
WELL NO. 19 RTU DESIGN
PROJECT SHEET INDEX

| Drawing No. | Drawing Title |
|---|---|
| EC1 | COVER SHEET |
| EC2 | PROJECT SHEET INDEX |
| EC3 | STANDARD SYMBOLS AND ABBREVIATIONS |
| EC4 | ISA TABLE AND COMMON LEGENDS SHEET |
| EC5 | BILL OF MATERIALS |
| EC6 | RTU ENCLOSURE LAYOUT |
| EC7 | RTU SUBPANEL LAYOUT |
| EC8 | TERMINAL BLOCK DETAILS |
| EC9 | COMMUNICATIONS SYSTEM ARCHITECTURE DIAGRAM |
| EC10 | 120VAC POWER DISTRIBUTION SCHEMATIC |
| EC11 | 24VDC POWER DISTRIBUTION SCHEMATIC |
| EC12 | DISCRETE INPUT 1 MODULE BASE WIRING DIAGRAM - SHEET 1 |
| EC13 | DISCRETE INPUT 1 MODULE BASE WIRING DIAGRAM - SHEET 2 |
| EC14 | DISCRETE INPUT 2 MODULE BASE WIRING DIAGRAM - SHEET 1 |
| EC15 | DISCRETE INPUT 2 MODULE BASE WIRING DIAGRAM - SHEET 2 |
| EC16 | DISCRETE OUTPUT MODULE BASE WIRING DIAGRAM |
| EC17 | ANALOG INPUT 1 MODULE BASE WIRING DIAGRAM |
| EC18 | ANALOG INPUT 2 MODULE BASE WIRING DIAGRAM |

DLT&V
SYSTEMS ENGINEERING
3550 N. CENTRAL AVE, STE. 1900
PHOENIX, AZ 85012 (602) 266-4658

Registered Professional Engineer (Electrical)
CERTIFICATE NO.
40253
BRENT
ALEKSICH
Date Signed 10-19-07
ARIZONA U.S.A.

NOTES

REVISIONS

| REV. | BY | DATE | DESCRIPTION |
|---|---|---|---|
| | | | |
| | | | |
| | | | |
| | | | |

CASA GRANDE – COOLIDGE
SCADA SYSTEM – WELL #19

ARIZONA WATER COMPANY

PROJECT
SHEET INDEX

| | |
|---|---|
| DRAWN BY: JHA | PROJECT NO. 1219.0.101 |
| DESIGNED BY: JHA | SUBMITTAL DATE: OCT 2007 |
| CHECKED BY: DN | DRAWING NUMBER EC2 |

FILE: 1219.00.101_EC2.dwg 3:04pm PLOTTED: Oct 19, 2007 jahnelis

# CASA GRANDE – COOLIDGE
# SCADA SYSTEM DESIGN
# WELL NO. 19 RTU DESIGN
# STANDARD SYMBOLS AND ABBREVIATIONS

## SCHEMATIC/WIRING DIAGRAM SYMBOLS

CIRCUIT BREAKER
*A – AMP RATING

FUSE WITH PULLER
*A – AMP RATING

SWITCH
NORMALLY OPEN

SELECTOR SWITCH
2 POSITION, NORMALLY OPEN

SELECTOR SWITCH
3 POSITION, NORMALLY OPEN

TEMPERATURE SWITCH
NORMALLY OPEN

TERMINAL BLOCK
* – TB IDENTIFICATION

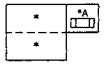


TERMINAL BLOCK W/ FUSE
PLUG AND FUSE
* – TB IDENTIFICATION
*A – AMPS

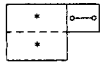


TERMINAL BLOCK W/
DISCONNECT KNIFE
* – TB IDENTIFICATION

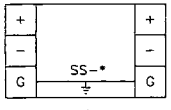


SURGE SUPPRESSOR FOR
FLOATING SIGNAL CIRCUITS
* – SS NUMBER IDENTIFICATION

SURGE SUPPRESSOR FOR
POWER SUPPLY
* – SS NUMBER IDENTIFICATION

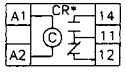


CONTROL RELAY
* – CR NUMBER IDENTIFICATION
# – TERMINAL NUMBER

## SCHEMATIC/WIRING DIAGRAM SYMBOLS

EARTH GROUND



TERMINAL BLOCK

DUPLEX RECEPTACLE

SINGLE RECEPTACLE

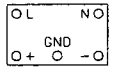


DC POWER SUPPLY
* – DC VOLTAGE RATING

## COLOR CODE CHART FOR 18 AWG BELDEN CABLES
## 12 COND. NO. 8466 AND 19 COND. NO. 8619

| | | |
|---|---|---|
| BLACK | BLK | 1st |
| WHITE | WHT | 2nd |
| RED | RED | 3rd |
| GREEN | GRN | 4th |
| ORANGE | ORN | 5th |
| BLUE | BLU | 6th |
| WHITE/BLACK | WHT/BLK | 7th |
| RED/BLACK | RED/BLK | 8th |
| GREEN/BLACK | GRN/BLK | 9th |
| ORANGE/BLACK | ORN/BLK | 10th |
| BLUE/BLACK | BLU/BLK | 11th |
| BLACK/WHITE | BLK/WHT | 12th |
| RED/WHITE | RED/WHT | 13th |
| GREEN/WHITE | GRN/WHT | 14th |
| BLUE/WHITE | BLU/WHT | 15th |
| BLACK/RED | BLK/RED | 16th |
| WHITE/RED | WHT/RED | 17th |
| ORANGE/RED | ORN/RED | 18th |
| BLUE/RED | BLU/RED | 19th |

## WIRE SIZES

(CIRCUIT WIRING SHALL BE RATED IN ACCORDANCE WITH THE MAXIMUM PERMITTED AMPERE RATING/SETTING OF THE OVERCURRENT PROTECTION DEVICE. N.E.C. 210-3)

120VAC / 20A POWER CIRCUIT – MIN. #12 AWG.
120VAC / 15A AND BELOW – MIN. #14 AWG.

24VDC / 20A POWER CIRCUIT – MIN. #12 AWG.
24VDC / 15A AND BELOW – MIN. #16 AWG.
24VDC I/O & SIGNAL CIRCUIT – MIN. #18 AWG.

4–20mADC I/O SIGNAL CIRCUIT – MIN. #18 AWG.

## ABBREVIATIONS

| | |
|---|---|
| A/R | AS REQUIRED |
| AC COM | NEUTRAL |
| AFF | ABOVE FINISHED FLOOR |
| AI | ANALOG INPUT |
| ANL COM | ANALOG COMMON |
| AO | ANALOG OUTPUT |
| AWG | AMERICAN WIRE GAUGE |
| BLK | BLACK |
| BLU | BLUE |
| CAP | CENTRAL ARIZONA PROJECT |
| CLR | CLEAR |
| CR | CONTROL RELAY |
| DC COM | DC COMMON |
| DC+ | DC POSITIVE POTENTIAL |
| DI | DISCRETE INPUT |
| DO | DISCRETE OUTPUT |
| DS | DOOR SWITCH |
| FOM | FIBER OPTIC MODEM |
| FOT | FIBER OPTIC TRANSCEIVER |
| GND | GROUND |
| GRN | GREEN |
| I/O | INPUT/OUTPUT |
| L | LINE |
| N | NEUTRAL |
| NC | NORMALLY CLOSED |
| NO | NORMALLY OPEN |
| NP | NAMEPLATE |
| OIT | OPERATOR INTERFACE TERMINAL |
| ORN | ORANGE |
| PDB | POWER DISTRIBUTION BLOCK |
| PLC | PROGRAMMABLE LOGIC CONTROLLER |
| PP | FIBER OPTIC PATCH PANEL |
| PS | POWER SUPPLY |
| REC | RECEPTACLE |
| RES | RESERVOIR |
| RIO | REMOTE INPUT/OUTPUT |
| RTU | REMOTE TELEMETRY UNIT |
| SLC | SMALL LOGIC CONTROLLER |
| SP | SPACE |
| SS | SURGE SUPPRESSOR |
| TB | TERMINAL BLOCK |
| UPS | UNINTERRUPTIBLE POWER SUPPLY |
| WHT | WHITE |
| WTR | WATER TREATMENT PLANT |
| WWTP | WASTE WATER TREATMENT PLANT |

## LINETYPE LEGEND

- FIELD WIRING
- INTERNAL PANEL WIRING
- RADIO COMMUNICATION LINK
- FO — FIBER OPTIC CABLE
- FOP — FIBER OPTIC PATCH CABLE
- EN — ETHERNET CAT5 CABLE
- DH+ — DATA HIGHWAY PLUS
- RIO — REMOTE INPUT OUTPUT
- AREA DIVIDER
- EQUIPMENT
- PATCH PANEL

DLT&V
BYTEMS ENGINEERING
3550 N. CENTRAL AVE, STE. 1900
PHOENIX, AZ 85012 (602) 266-4666

Registered Professional Engineer (Electrical)
40253
BRENT
ALEKSICH
Date Signed 10-19-07
ARIZONA U.S.A.

NOTES

REVISIONS

| REV. | BY | DATE | DESCRIPTION |
|---|---|---|---|
| | | | |
| | | | |
| | | | |
| | | | |

CASA GRANDE – COOLIDGE
SCADA SYSTEM – WELL #19

ARIZONA WATER COMPANY

STANDARD SYMBOLS
AND ABBREVIATIONS

| | |
|---|---|
| DRAWN BY: JHA | PROJECT NO. 1219.0.101 |
| DESIGNED BY: JHA | SUBMITTAL DATE: OCT 2007 |
| CHECKED BY: DN | DRAWING NUMBER EC3 |


PLOTTED: Oct 19, 2007 jphrans 3:04pm
I:\FILE: 1219.00.101_EC3.dwg

# CASA GRANDE – COOLIDGE
# SCADA SYSTEM DESIGN
# WELL NO. 19 RTU DESIGN
# ISA TABLE AND COMMON LEGENDS SHEET

## ISA INSTRUMENT IDENTIFICATION TABLE

| FIRST LETTERS | | | SUCCEEDING LETTERS | | |
|---|---|---|---|---|---|
| MEASURED OR INITIATING VARIABLE | | MODIFIER | READOUT OR PASSIVE FUNCTION | OUTPUT FUNCTION | MODIFIER |
| A | ANALYZER | | ALARM | | AUTO |
| B | BURNER, COMBUSTION | | | | |
| C | CONDUCTIVITY | | | CONTROL | CLOSED |
| D | DENSITY | DIFFERENTIAL | | | |
| E | VOLTAGE | | ELEMENT | | |
| F | FLOW | RATIO | | | |
| G | GAUGE | | GLASS, VIEWING DEVICE | | |
| H | HAND | | | | HIGH |
| I | CURRENT | | INDICATE | | |
| J | POWER | SCAN | | | |
| K | TIME, TIME SCHED. | TIME RATE OF CHANGE | | CONTROL STATION | |
| L | LEVEL | | LIGHT | | LOW |
| M | MOTION | | | | MIDDLE |
| N | INTRUSION | | | | NORMAL |
| O | TORQUE | | ORIFICE, RESTRICTION | | OPEN |
| P | PRESSURE | | POINT CONNECTION | | STOP |
| Q | QUANTITY | INTEGRATE, TOTALIZE | | | |
| R | RADIATION | | RECORD, OR PRINT | | REMOTE |
| S | SPEED, FREQUENCY | SAFETY | | SWITCH | START |
| T | TEMPERATURE | | | TRANSMIT | |
| U | MULTIVARIABLE | | MULTIFUNCTION | MULTIFUNCTION | MULTIFUNCTION |
| V | VIBRATION | | | VALVE, LOUVER | |
| W | WEIGHT | | WELL | | |
| X | MOTOR | X-AXIS | UNCLASSIFIED | UNCLASSIFED | UNCLASSIFED |
| Y | EVENT, STATE, OR PRESENCE | Y-AXIS | | RELAY, COMPUTE, CONVERT | |
| Z | POSITION | Z-AXIS | | DRIVER, ACTUATOR, FINAL CONTROL ELEMENT | |

### FIELD WIRES TAG LEGEND

DEVICE NAME/TBXX-00
- TERMINAL NO.
- TERMINAL STRIP NO.
- FIELD DEVICE TAG NO.

### PANEL POWER WIRES TAG LEGEND

TBXX-03/TBXX-03
- TO TERMINAL NO.
- TO TERMINAL STRIP NO.
- FROM TERMINAL NO.
- FROM TERMINAL STRIP NO.

### PANEL I/O WIRES TAG LEGEND

0:#.2/TBXX-03
- INPUT POINT NO.
- TERMINAL STRIP NO.
- CHANNEL #
- SLOT #
- 0=OUTPUT 1=INPUT

### COLOR CODE CHART FOR 22 AWG BELDEN PAIRED CABLE NO. 8761

| | | |
|---|---|---|
| BLACK | BLK | 1st |
| CLEAR | CLR | 2nd |

### PANEL WIRING IDENTIFICATION

BLACK – 120VAC LINE
WHITE – 120VAC NEUTRAL
GREEN – GROUND
ORANGE – DC POSITIVE
BLUE – DC COMMON


DLT&V
SYSTEMS ENGINEERING
3550 N. CENTRAL AVE., STE. 1900
PHOENIX, AZ 85012 (602) 266-4656


Professional Engineer (Electrical)
40253
BRENT
ALEKSICH
10-19-07
Date Signed
ARIZONA U.S.A.

NOTES

REVISIONS

| REV. | BY | DATE | DESCRIPTION |
|---|---|---|---|
| | | | |
| | | | |
| | | | |
| | | | |

CASA GRANDE – COOLIDGE
SCADA SYSTEM – WELL #19

ARIZONA WATER COMPANY

ISA TABLE AND COMMON LEGENDS SHEET

| DRAWN BY: | PROJECT NO. |
|---|---|
| JHA | 1219.0.101 |
| DESIGNED BY: | SUBMITTAL DATE: |
| JHA | OCT 2007 |
| CHECKED BY: | DRAWING NUMBER |
| DN | EC4 |


FILE: 1219.00.101_EC4.dwg 3:54pm PLOTTED: OCT 19, 2007 johnens

| QTY | ITEM # | MANUFACTURER | PART NUMBER | DESCRIPTION |
|---|---|---|---|---|
| 1 | 100 | MODICON | 171CCC98030 | M1E PROCESSOR ADAPTER, ETHERNET AND RS-485 PORTS, WEB PAGE ENABLED, IEC |
| 4 | 101 | MODICON | 170ENT11002 | MOMENTUM ETHERNET COMMUNICATIONS ADAPTER |
| 2 | 102 | MODICON | 170ADI35000 | 24V DC - 32 PT. INPUT MODULE BASE |
| 1 | 103 | MODICON | 170ADO34000 | 24V DC / 0.5A - 16 PT. OUTPUT MODULE BASE, 0.5 A OUTPUT |
| 2 | 104 | MODICON | 170AAI03000 | MOMENTUM SERIES I/O BASE, ANALOG 8CH DIFFERENTIAL INPUT MODULE BASE |
| 1 | 106 | MODICON | XBT GT5330 | EXTERNAL DISPLAY WITH 10.4" COLOR TFT,VGA RESOLUTION (640X480 PIXELS), 24V POWER |
| 1 | 107 | WEIDMULLER | 8808270000 (IE-SW16) | INDUSTRIAL ETHERNET SWITCH, 16-PORT |
| 1 | 110 | BELDEN | 8267 | CABLE, COAXIAL, RG-213 (OR EQUAL) WITH APPROPRIATE CONNECTORS, (LENGTH AS REQUIRED) |
| 1 | 111 | MDS | iNET-II-IP | ETHERNET REMOTE RADIO TRANSCEIVER, SPREAD SPECTRUM, W/ REMOTE DIAGNOSTICS |
| 2 | 112 | MODICON | 170XTS00100 | CONNECTOR SET, SCREW-TYPE (SET OF 3) |
| A/R | 201 | ALLEN-BRADLEY | 1492-DR6 | TERMINAL MOUNTING RAIL, HI-RISE, ALUMINUM |
| 19 | 202 | ALLEN-BRADLEY | 1492-EA35 | END ANCHOR |
| 8 | 210 | ALLEN-BRADLEY | 1492-GM35 | TERMINAL BLOCK, GROUP MARKING CARRIER |
| 20 | 215 | ALLEN-BRADLEY | 1492-J4 | TERMINAL BLOCK, SINGLE CIRCUIT, 600V, GRAY |
| 1 | 218 | ALLEN-BRADLEY | 1492-JD3 | TERMINAL BLOCK, DOUBLE LEVEL |
| 123 | 219 | ALLEN-BRADLEY | 1492-JD3P | TERMINAL BLOCK, DOUBLE LEVEL W/ PLUGGABLE TOP LEVEL |
| 4 | 221 | ALLEN-BRADLEY | 1492-JG4 | TERMINAL BLOCK, SINGLE CIRCUIT, GROUNDING |
| 97 | 223 | ALLEN-BRADLEY | 1492-FPK224 | FUSE PLUG INSERT W/ BFI, 10-36VAC/DC WORKING VOLTAGE, 10A MAX @ 250V. PROVIDE FAST BLOW FUSES AS REQUIRED |
| 16 | 225 | ALLEN-BRADLEY | 1492-DPL | DISCONNECT PLUG FOR 1492-JD3 P AND 1492-JD3 |
| 8 | 231 | WEIDMULLER | 9926251002 | CIRCUIT BREAKER, 2A |
| 3 | 233 | WEIDMULLER | 9926251010 | CIRCUIT BREAKER, 10A |
| 3 | 234 | WEIDMULLER | 9926251015 | CIRCUIT BREAKER, 15A |
| A/R | 282 | ANY | ANY | 250V, 5mmX20mm FAST BLOW GLASS FUSES (SIZE AS INDICATED ON DRAWING) |
| 1 | 316 | HOFFMAN | A-TEMNO | TEMPERATURE CONTROL SWITCH (THERMOSTAT), N.O. CONTACTS |
| A/R | 359 | BELDEN | 7929A | CABLE, ETHERNET, 4 PR, 24 AWG, CAT 5E |
| 1 | 377 | ANY | ANY | GROUNDING BAR |
| A/R | 379 | PANDUIT | F2X4LG6 C2LG6 | 2 X 4 PLASTIC WIRING DUCT TYPE "E" W/COVER STYLE "C" |
| A/R | 380 | PANDUIT | F3X4LG6 C3LG6 | 3 X 4 PLASTIC WIRING DUCT TYPE "E" W/COVER STYLE "C" |
| 1 | 398 | HUBBELL | HBL5262I | DUPLEX RECEPTACLE, IVORY, 125V/15A, W/BOX AND BRUSHED ALUMINUM COVER (HUBBELL P.N.# A8) |
| 1 | 399 | HUBBELL | HBL5358 | SIMPLEX RECEPTACLE, BROWN, 125V/20A, W/BOX AND BRUSHED ALUMINUM COVER (HUBBELL P.N.# A7) |
| 2 | 405 | WEIDMULLER | 8708680000 (CP SNT 250W 24V 10A) | POWER SUPPLY, 24VDC, 250W, 10A, W/ STATUS RELAY |
| 1 | 406 | WEIDMULLER | 8710620000 (CP DM 10) | DIODE MODULE, 10A PER INPUT, 40VDC MAX |
| 1 | 408 | IDEC | RH2B-UL-AC120V | RELAY, 120VAC COIL, DPDT W/ INDICATOR |
| 1 | 421 | IDEC | SH2B-05C | RELAY SOCKET, DIN RAIL MOUNT, FINGERSAFE |
| 1 | 450 | MTL SURGE TECHNOLOGIES | MA15/D/1/SI | 120/240 VAC, 15A, SURGE SUPPRESSOR AND FILTER |
| 16 | 451 | WEIDMULLER | 8448920000 | SURGE SUPPRESSOR, 24VDC, 2 WIRE LOOP PROTECTION (MCZ OVP) W/ END CAP PART #8389030000 |
| 16 | 452 | WEIDMULLER | 8389030000 | END CAP FOR 24VDC SURGE SUPPRESSOR (MCZ OVP) |
| 16 | 455 | ALLEN-BRADLEY | 700-HLT1Z24 | TERMINAL BLOCK RELAY, 24VDC, 6A CONTACTS, SPDT W/ LED |
| 1 | 703 | APC | SUA750, AP9610 | UPS, 115 VAC, 750 VA W/ RELAY I/O SMARTSLOT CARD OPTION, MINIMUM 30 MIN. RUNTIME OF COMPLETE PLC OPERATIONS POWER |
| 1 | 811 | POLYPHASER | IS-50NX-C2 | BROADBAND COAXIAL SURGE PROTECTOR, FLANGE MOUNT, 125-1000MHZ |
| 2 | 853 | TIMES MICROWAVE SYSTEMS | EZ-900-NMC | N-MALE CONNECTOR |

DLT&V
SYSTEMS ENGINEERING
3550 N. CENTRAL AVE, STE. 1900
PHOENIX, AZ 85012 (602) 266-4668

Registered Professional Engineer (Electrical)
40253
BRENT
ALEKSICH
Date Signed 10-19-07
ARIZONA U.S.A.

NOTES

REVISIONS

| REV. | BY | DATE | DESCRIPTION |
|---|---|---|---|
| | | | |
| | | | |
| | | | |
| | | | |

CASA GRANDE – COOLIDGE
SCADA SYSTEM – WELL #19

ARIZONA WATER COMPANY

BILL OF MATERIALS

| DRAWN BY: | PROJECT NO. |
|---|---|
| JHA | 1219.0.101 |
| DESIGNED BY: | SUBMITTAL DATE: |
| JHA | OCT 2007 |
| CHECKED BY: | DRAWING NUMBER |
| DN | EC5 |

FILE: 1219.00.101_EC5.dwg 10:49pm PLOTTED: OCT 19, 2007 jamesma

## NOTES:

1. BILL OF MATERIALS IS ON DRAWING EC5.
2. REFER TO DRAWING EC7 FOR PLC INTERIOR LAYOUT.
3. FURNISH ADDITIONAL NAMEPLATES AS REQUIRED BY UL OR BY OTHER APPLICABLE CODES.
4. MOUNT UPS MINIMUM 6" ABOVE GRADE LEVEL.

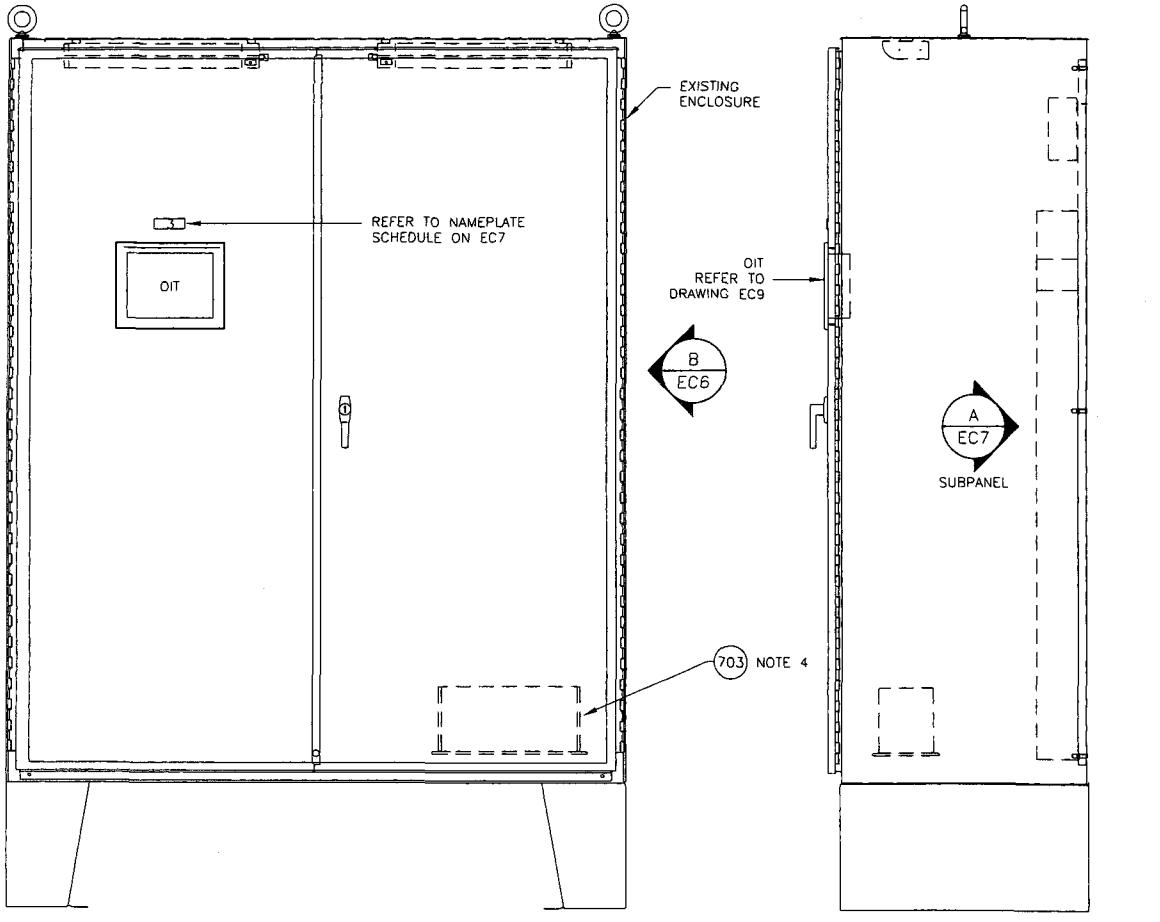


A ~ RTU ENCLOSURE, FRONT
1"=1'-0"

B ~ RTU ENCLOSURE, SIDE
1"=1'-0"

DLT&V SYSTEMS ENGINEERING
3550 N. CENTRAL AVE, STE. 1900
PHOENIX, AZ 85012 (602) 266-4656

Professional Engineer (Electrical)
40253
BRENT ALEKSICH
Date Signed 10-19-07
ARIZONA U.S.A.

NOTES

REVISIONS

| REV. | BY | DATE | DESCRIPTION |
|---|---|---|---|
| | | | |
| | | | |
| | | | |
| | | | |

CASA GRANDE – COOLIDGE
SCADA SYSTEM – WELL #19

ARIZONA WATER COMPANY

RTU ENCLOSURE LAYOUT

| DRAWN BY: | PROJECT NO. |
|---|---|
| JHA | 1219.0.101 |
| DESIGNED BY: JHA | SUBMITTAL DATE: OCT 2007 |
| CHECKED BY: DN | DRAWING NUMBER: EC6 |

FILE: 1219.00.101_EC6.dwg 3:04pm PLOTTED: Oct 19, 2007 jahrens

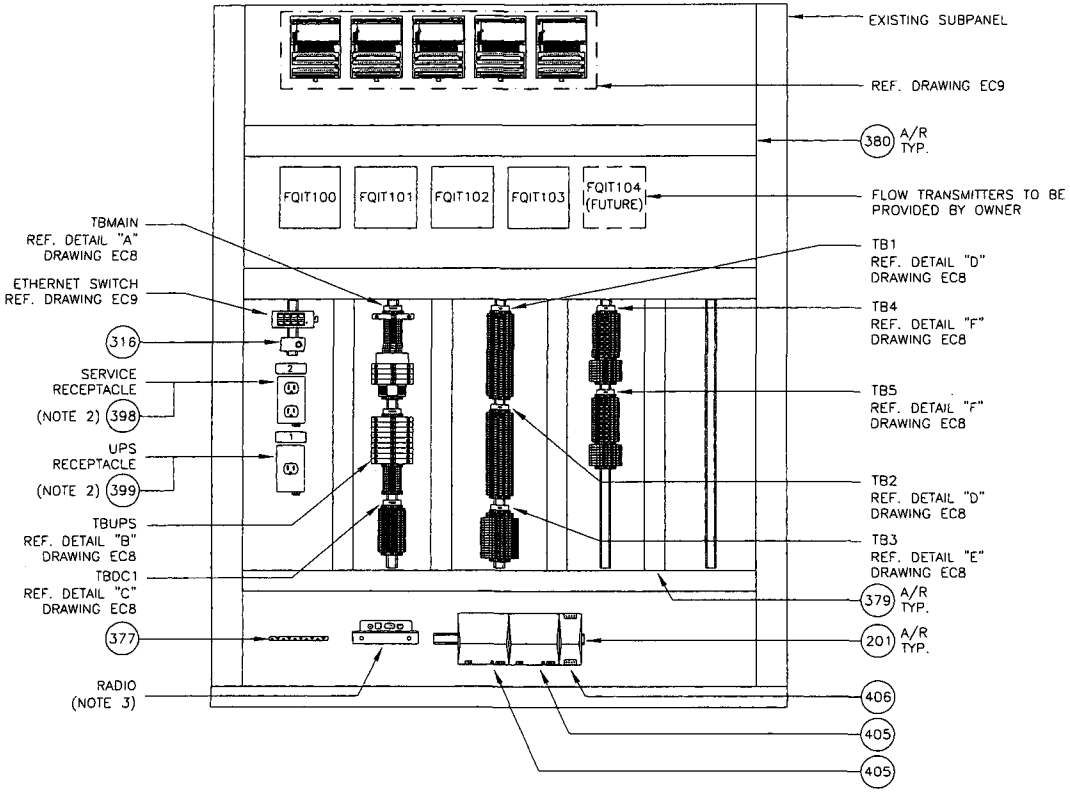


A / EC6 SUBPANEL LAYOUT
1-1/2"=1'-0"

## NOTES:

1. BILL OF MATERIALS IS ON DRAWING EC5.
2. NAMEPLATE SHALL BE 3/32" THICK LAMINATED PHENOLIC TYPE BLACK WITH WHITE LETTERS. SEE BILL OF MATERIALS ON DRAWING EC-5 AND NAMEPLATE SCHEDULE (DET B) ON THIS SHEET FOR ADDITIONAL INFORMATION.
3. MOUNT RADIO ON CUSTOM SHELF PROVIDED AND INSTALLED BY PANEL FABRICATOR. REFER TO DRAWING EC9 AND BILL OF MATERIALS ON EC5 FOR MORE INFORMATION.

**NAMEPLATE SCHEDULE (NOTE 2)**

| NP | HxWxLTR | FIRST LINE | SECOND LINE | LOCATION |
|---|---|---|---|---|
| 1 | 1" x 3" x 1/4" | UPS RECEPTACLE | ONLY | CENTERED ABOVE UPS RECEPTACLE |
| 2 | 1" x 3" x 1/4" | SERVICE RECEPTACLE | ONLY | CENTERED ABOVE SERVICE RECEPTACLE |
| 3 | 1" x 3" x 1/4" | OIT | | CENTERED ABOVE OIT |

B / ~ NAMEPLATE SCHEDULE

DLT&V
SYSTEMS ENGINEERING
3550 N. CENTRAL AVE, STE. 1900
PHOENIX, AZ 85012 (602) 266-4658

Registered Professional Engineer (Electrical)
CERTIFICATE NO. 40253
BRENT ALEKSICH
Date Signed 10-19-07
ARIZONA U.S.A.

NOTES

REVISIONS

| REV. | BY | DATE | DESCRIPTION |
|---|---|---|---|
| | | | |

CASA GRANDE - COOLIDGE
SCADA SYSTEM - WELL #19

ARIZONA WATER COMPANY

RTU SUBPANEL LAYOUT

| | |
|---|---|
| DRAWN BY: JHA | PROJECT NO. 1219.0.101 |
| DESIGNED BY: JHA | SUBMITTAL DATE: OCT 2007 |
| CHECKED BY: DN | DRAWING NUMBER EC7 |

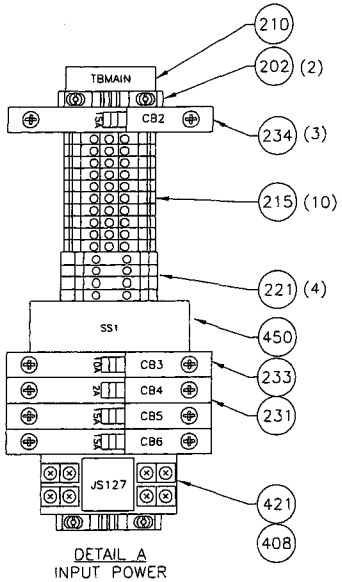


DETAIL A
INPUT POWER
TBMAIN

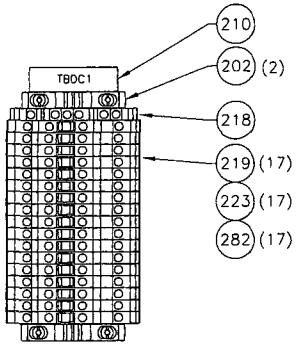


DETAIL C
24VDC POWER
DISTRIBUTION
TBDC1

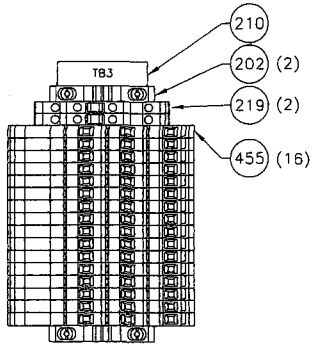


DETAIL E
DISCRETE OUTPUT
TB3

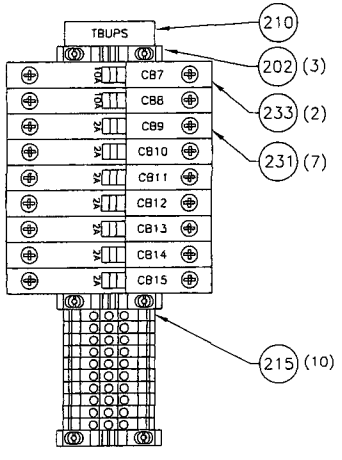


DETAIL B
PANEL POWER
TBUPS

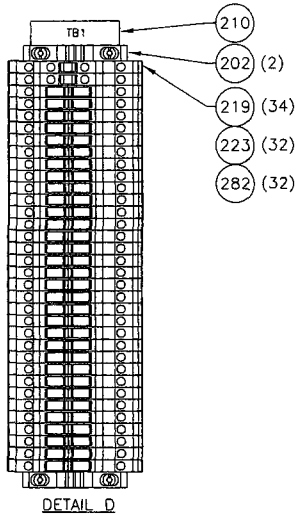


DETAIL D
DISCRETE INPUT
TB1 & TB2

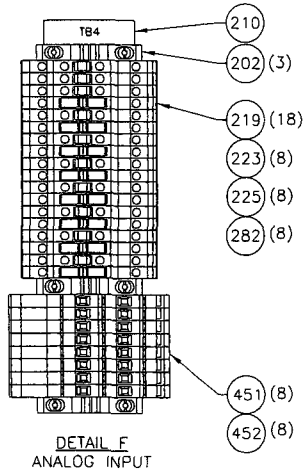


DETAIL F
ANALOG INPUT
TB4 & TB5

## NOTES:

1. PROVIDE BUS BAR STYLE OR INSULATED COMB STYLE JUMPERS WHERE 2 OR MORE TERMINALS IN THE SAME TB ARE COMMONED TOGETHER. DO NOT USE DISCRETE WIRE JUMPERS.
2. BILL OF MATERIALS IS ON DRAWING EC5.
3. PANEL BUILDER TO SUPPLY AND INSTALL ALL NECESSARY AND APPROPRIATE ACCESSORIES INCLUDING TERMINAL NUMBERS, JUMPERS AND END BARRIERS.

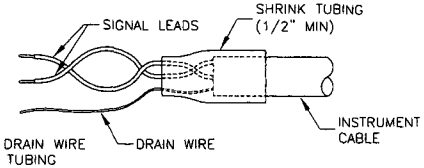


NOTE:
WRAP UNUSED DRAIN WIRE
UNDER SHRINK TUBING

DETAIL H
INSTRUMENT CABLE
TERMINATION

DLT&V
SYSTEMS ENGINEERING
3550 N. CENTRAL AVE, STE. 1900
PHOENIX, AZ 85012 (602) 266-4588

Registered Professional Engineer (Electrical)
40253
BRENT
ALEKSICH
Date Signed 10-19-07
ARIZONA U.S.A.

NOTES

REVISIONS

| REV. | BY | DATE | DESCRIPTION |
|---|---|---|---|
| | | | |
| | | | |
| | | | |
| | | | |

CASA GRANDE - COOLIDGE
SCADA SYSTEM - WELL #19

ARIZONA WATER COMPANY

TERMINAL BLOCK
DETAILS

| DRAWN BY: | PROJECT NO. |
|---|---|
| JHA | 1219.0.101 |
| DESIGNED BY: | SUBMITTAL DATE: |
| JHA | OCT 2007 |
| CHECKED BY: | DRAWING NUMBER |
| DAL | EC8 |

FILE: 1219.0.101_EC8.dwg

## NOTES:

1. BILL OF MATERIALS IS ON DRAWING EC5.

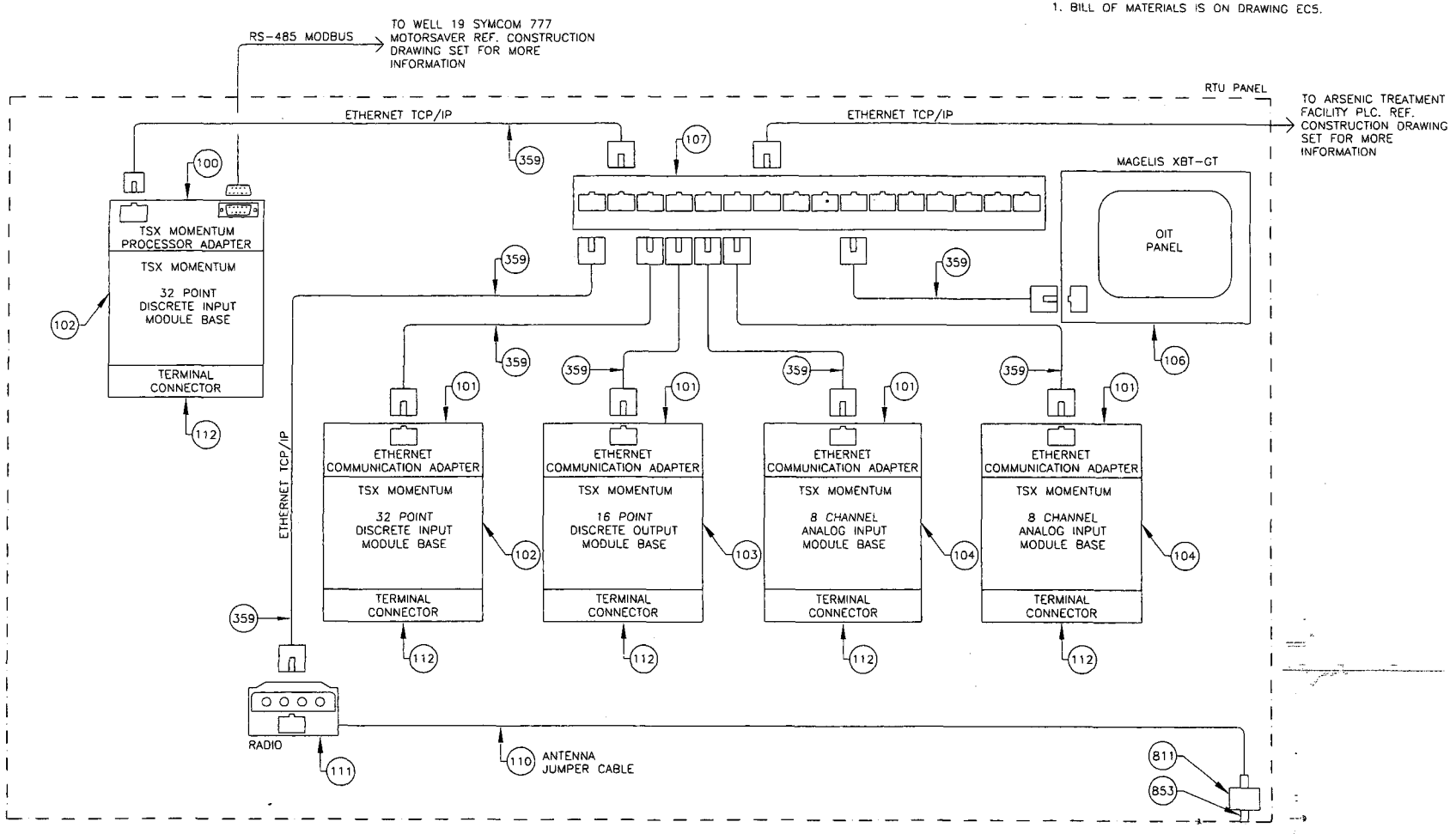



DLT&V
SYSTEMS ENGINEERING
3550 N. CENTRAL AVE., STE. 1900
PHOENIX, AZ 85012 (602) 266-4588


Registered Professional Engineer (Electrical)
40253
BRENT ALEKSICH
Date Signed 10/19/07
ARIZONA U.S.A.

NOTES

| REVISIONS | | | |
|---|---|---|---|
| REV. | BY | DATE | DESCRIPTION |
| | | | |
| | | | |
| | | | |
| | | | |

CASA GRANDE – COOLIDGE
SCADA SYSTEM – WELL #19

ARIZONA WATER COMPANY

COMMUNICATIONS SYSTEM ARCHITECTURE DIAGRAM

| DRAWN BY: | PROJECT NO. |
|---|---|
| JHA | 1219.0.101 |
| DESIGNED BY: | SUBMITTAL DATE: |
| JHA | OCT 2007 |
| CHECKED BY: | DRAWING NUMBER |
| BN | EC9 |


PLOT: 12/19/2007 7:57:27 AM Login: brentaleksich Drawing: C:\Projects\1219.0\Drawings\EC9.dwg Layout: Model Xrefs: None

# NOTES:

1. PROVIDE BUS BAR STYLE OR INSULATED COMB STYLE JUMPERS WHERE 2 OR MORE TERMINALS IN THE SAME TB ARE COMMONED TOGETHER. DO NOT USE DISCRETE WIRE JUMPERS.
2. BILL OF MATERIALS IS ON DRAWING EC5.
3. ADJUST VOLTAGE OUTPUT SETTING ON DC1B TO BE 1.0 VOLT LESS THAN DC1A.

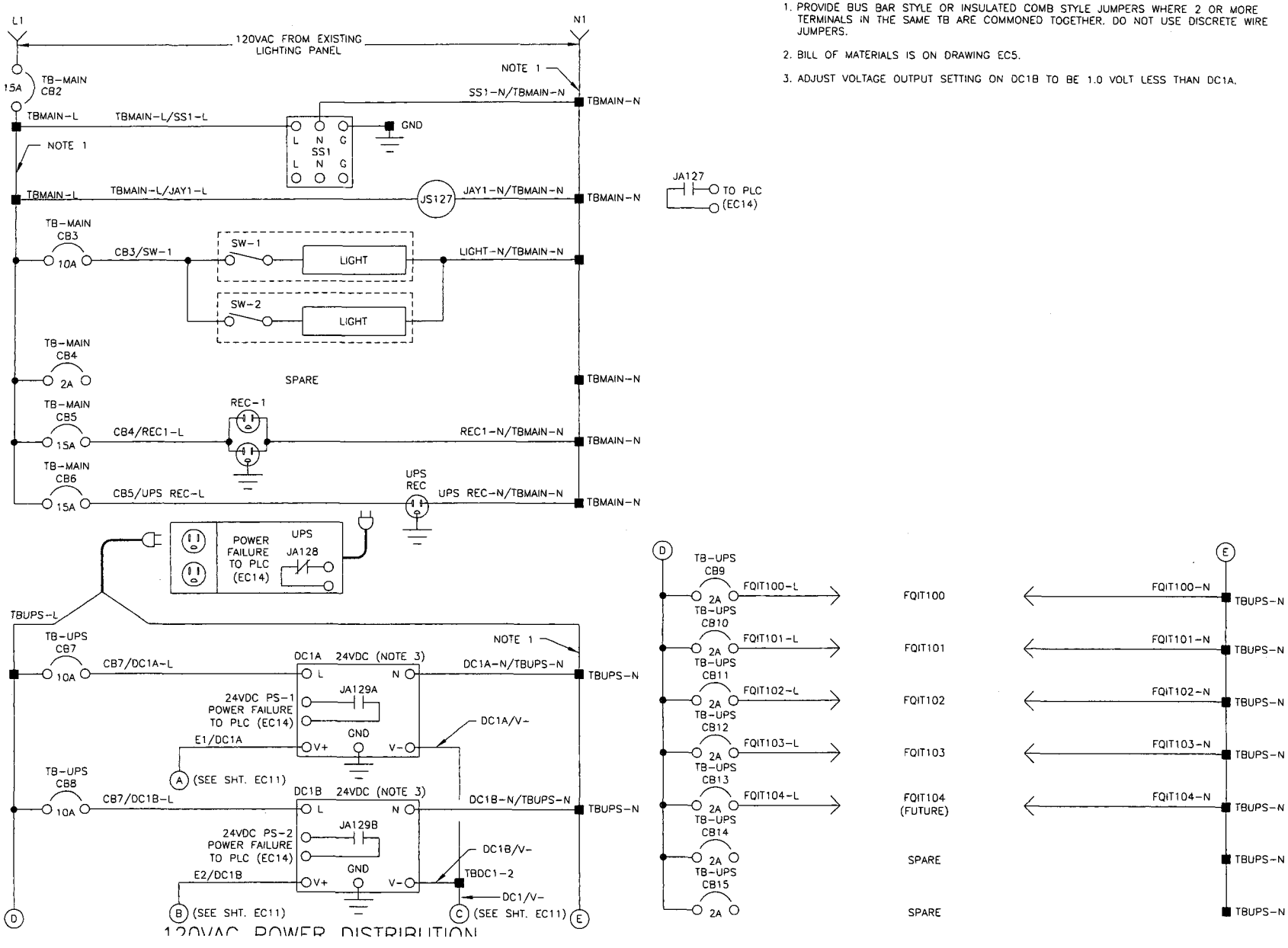


120VAC POWER DISTRIBUTION

DLT&V
SYSTEMS ENGINEERING
3550 N. CENTRAL AVE, STE. 1900
PHOENIX, AZ 85012 (602) 266-4650

Registered Professional Engineer (Electrical)
CERTIFICATE NO. 40253
BRENT ALEKSICH
Date Signed 10-19-07
ARIZONA U.S.A.

NOTES

REVISIONS

| REV. | BY | DATE | DESCRIPTION |
|---|---|---|---|
| | | | |

CASA GRANDE - COOLIDGE
SCADA SYSTEM - WELL #19

ARIZONA WATER COMPANY

120VAC POWER DISTRIBUTION SCHEMATIC

| | |
|---|---|
| DRAWN BY: JHA | PROJECT NO. 1219.0.101 |
| DESIGNED BY: JHA | SUBMITTAL DATE: OCT 2007 |
| CHECKED BY: DN | DRAWING NUMBER EC10 |

FILE: 1219.00.101_EC10.dwg 3:04pm PLOTTED: Oct 19, 2007 jonrens

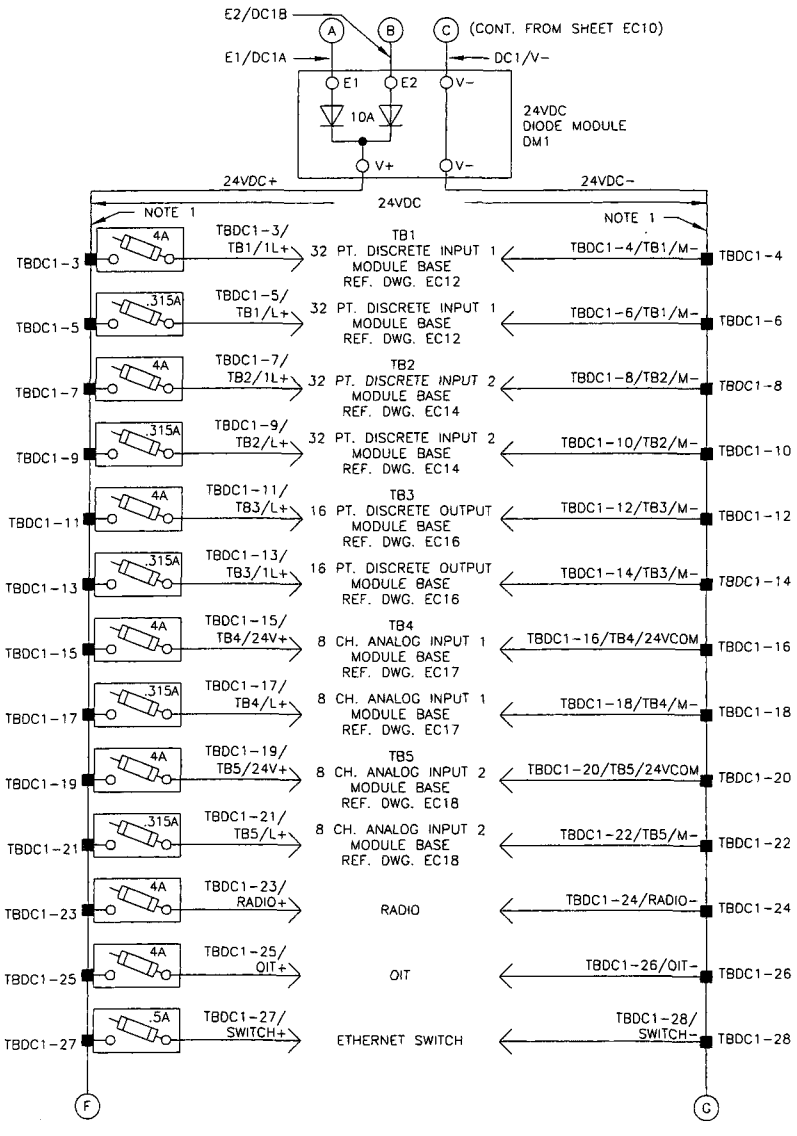


24VDC POWER DISTRIBUTION

## NOTES:

1. PROVIDE BUS BAR STYLE OR INSULATED COMB STYLE JUMPERS WHERE 2 OR MORE TERMINALS IN THE SAME TB ARE COMMONED TOGETHER. DO NOT USE DISCRETE WIRE JUMPERS.
2. BILL OF MATERIALS IS ON DRAWING EC5.
3. THE PROPER FUSE SIZE ON ANY FUTURE EQUIPMENT INSTALLATIONS UTILIZING SPARE CIRCUITS WILL BE THE RESPONSIBILITY OF THE OWNER.


DLT&V
SYSTEMS ENGINEERING
3550 N. CENTRAL AVE., STE. 1900
PHOENIX, AZ 85012 (602) 266-4658


Registered Professional Engineer (Electrical)
40253
BRENT
ALEKSICH
Date Signed 10-19-07
ARIZONA U.S.A.

NOTES

REVISIONS

| REV. | BY | DATE | DESCRIPTION |
|---|---|---|---|
| | | | |
| | | | |
| | | | |
| | | | |

CASA GRANDE - COOLIDGE
SCADA SYSTEM - WELL #19

ARIZONA WATER COMPANY

24VDC POWER DISTRIBUTION SCHEMATIC

| DRAWN BY: | PROJECT NO. |
|---|---|
| JHA | 1219.0.101 |
| DESIGNED BY: | SUBMITTAL DATE: |
| JHA | OCT 2007 |
| CHECKED BY: | DRAWING NUMBER |
| DN | EC11 |


FILE: 1219.00.101_EC11.dwg 3:04pm PLOTTED: Oct 19, 2007 jahrens

## NOTES:

1. WIRE MODULES AND SIZE FUSES PER MANUFACTURER'S REQUIREMENTS.
2. BUS OR INSULATED COMB STYLE JUMPER.

| DESCRIPTION | TAG NAME |
|---|---|
| WELL PUMP #19 RUN STATUS | YIR100 |
| WELL PUMP #19 AUTO STATUS | YIA100 |
| WELL PUMP #19 GENERAL FAULT ALARM | YA100 |
| WELL PUMP #19 VALVE OPEN STATUS | ZIO100 |
| WELL PUMP #19 VALVE CLOSED STATUS | ZIC100 |
| BOOSTER PUMP #1 PUMP RUN STATUS | YIR101 |
| BOOSTER PUMP #1 PUMP AUTO STATUS | YIA101 |
| BOOSTER PUMP #1 GENERAL FAULT ALARM | YA101 |
| BOOSTER PUMP #1 VALVE OPEN STATUS | ZIO101 |
| BOOSTER PUMP #1 VALVE CLOSED STATUS | ZIC101 |
| BOOSTER PUMP #2 PUMP RUN STATUS | YIR102 |
| BOOSTER PUMP #2 PUMP AUTO STATUS | YIA102 |
| BOOSTER PUMP #2 GENERAL FAULT ALARM | YA102 |
| BOOSTER PUMP #2 VALVE OPEN STATUS | ZIO102 |
| BOOSTER PUMP #2 VALVE CLOSED STATUS | ZIC102 |
| SPARE | |

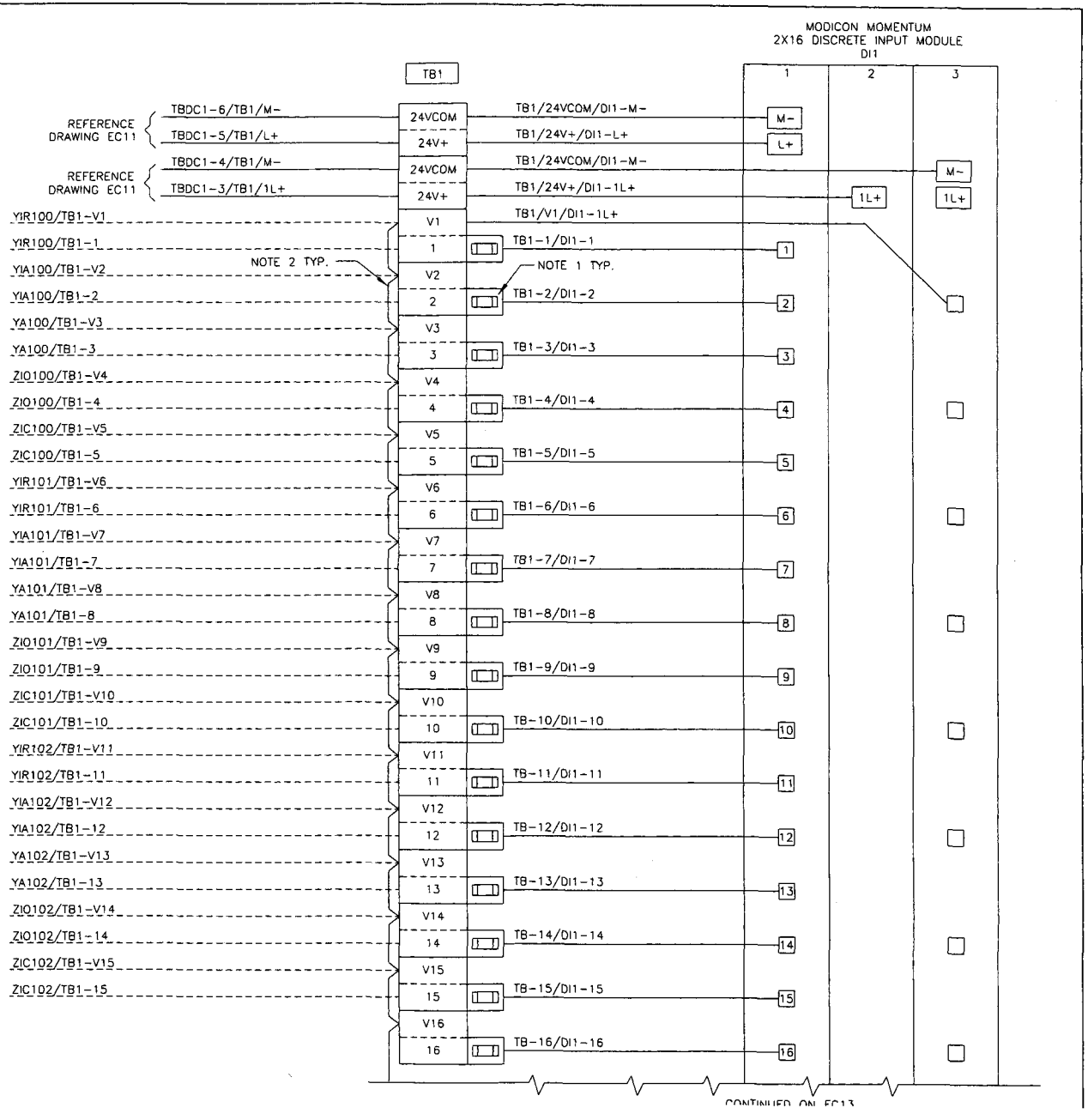



DLT&V
BYBTEMB ENGINEERING
3550 N. CENTRAL AVE, STE. 1900
PHOENIX, AZ 85012 (602) 266-4556


Registered Professional Engineer (Electrical)
40253
BRENT
ALEKSICH
Date Signed 10-19-07
ARIZONA U.S.A.

NOTES

REVISIONS

| REV. | BY | DATE | DESCRIPTION |
|---|---|---|---|
| | | | |
| | | | |
| | | | |
| | | | |

CASA GRANDE - COOLIDGE
SCADA SYSTEM - WELL #19

ARIZONA WATER COMPANY

DISCRETE INPUT 1
MODULE BASE
WIRING DIAGRAM - SHEET 1

| DRAWN BY: | PROJECT NO. |
|---|---|
| JHA | 1219.0.101 |
| DESIGNED BY: JHA | SUBMITTAL DATE: OCT 2007 |
| CHECKED BY: | DRAWING NUMBER EC12 |


FILE: 1219.00.101_EC12.dwg 3:04pm PLOTTED: Oct 19, 2007 jahrens

# NOTES:

1. WIRE MODULES AND SIZE FUSES PER MANUFACTURER'S REQUIREMENTS.
2. BUS OR INSULATED COMB STYLE JUMPER.

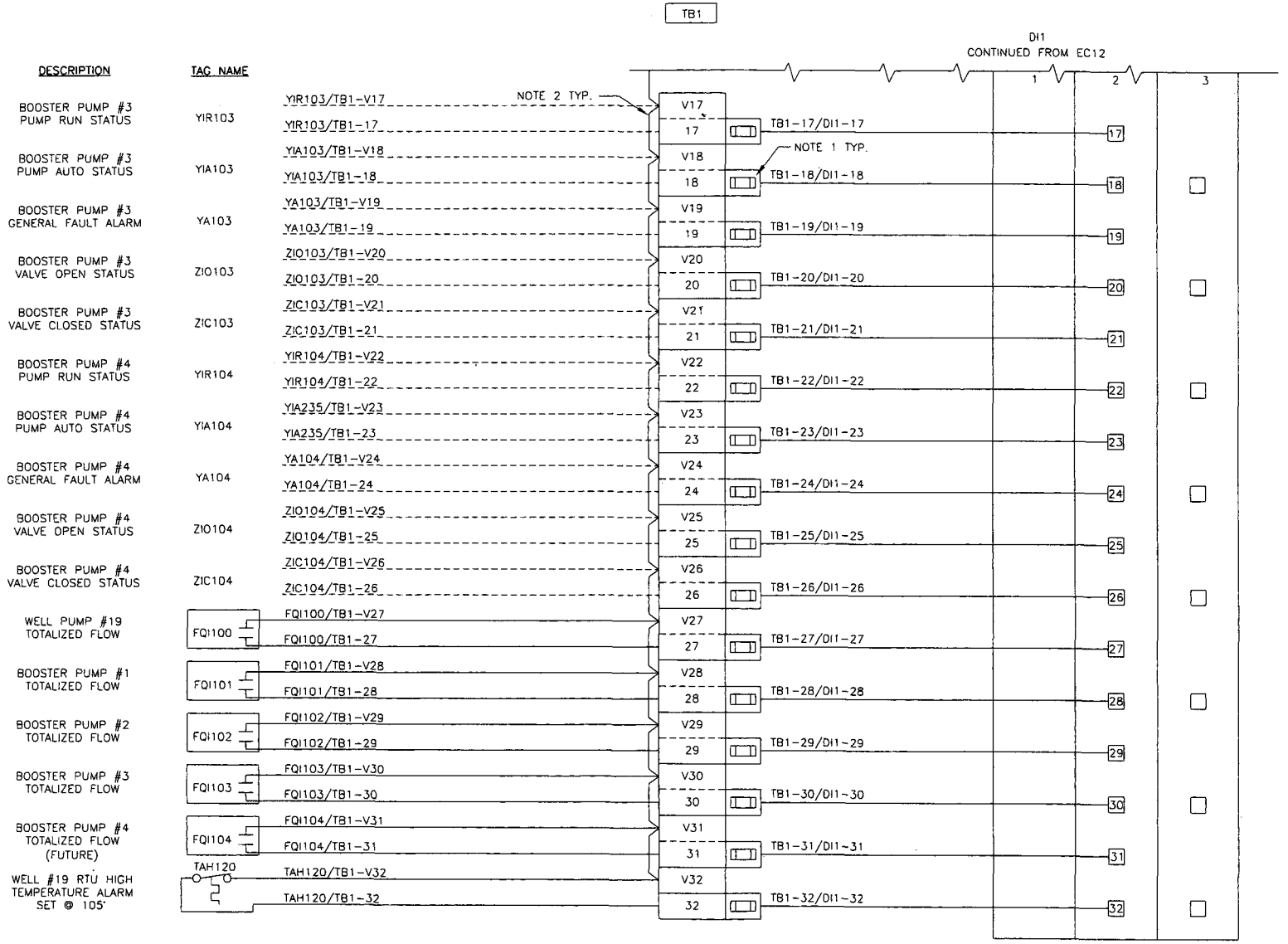


DLT&V
SYSTEMS ENGINEERING
3550 N. CENTRAL AVE, STE. 1900
PHOENIX, AZ 85012 (602) 266-4688

Registered Professional Engineer (Electrical)
CERTIFICATE NO. 40253
BRENT ALEKSICH
Date Signed 10-19-07
ARIZONA U.S.A.

NOTES

REVISIONS

| REV. | BY | DATE | DESCRIPTION |
|---|---|---|---|
| | | | |

CASA GRANDE – COOLIDGE
SCADA SYSTEM – WELL #19

ARIZONA WATER COMPANY

DISCRETE INPUT 1
MODULE BASE
WIRING DIAGRAM – SHEET 2

| | |
|---|---|
| DRAWN BY: JHA | PROJECT NO. 1219.0.101 |
| DESIGNED BY: JHA | SUBMITTAL DATE: OCT 2007 |
| CHECKED BY: | DRAWING NUMBER EC13 |

FILE: 1219.00.101_EC13.dwg 3:05pm PLOTTED: Oct 19, 2007 jahrens

## NOTES:

1. WIRE MODULES AND SIZE FUSES PER MANUFACTURER'S REQUIREMENTS.
2. BUS OR INSULATED COMB STYLE JUMPER.

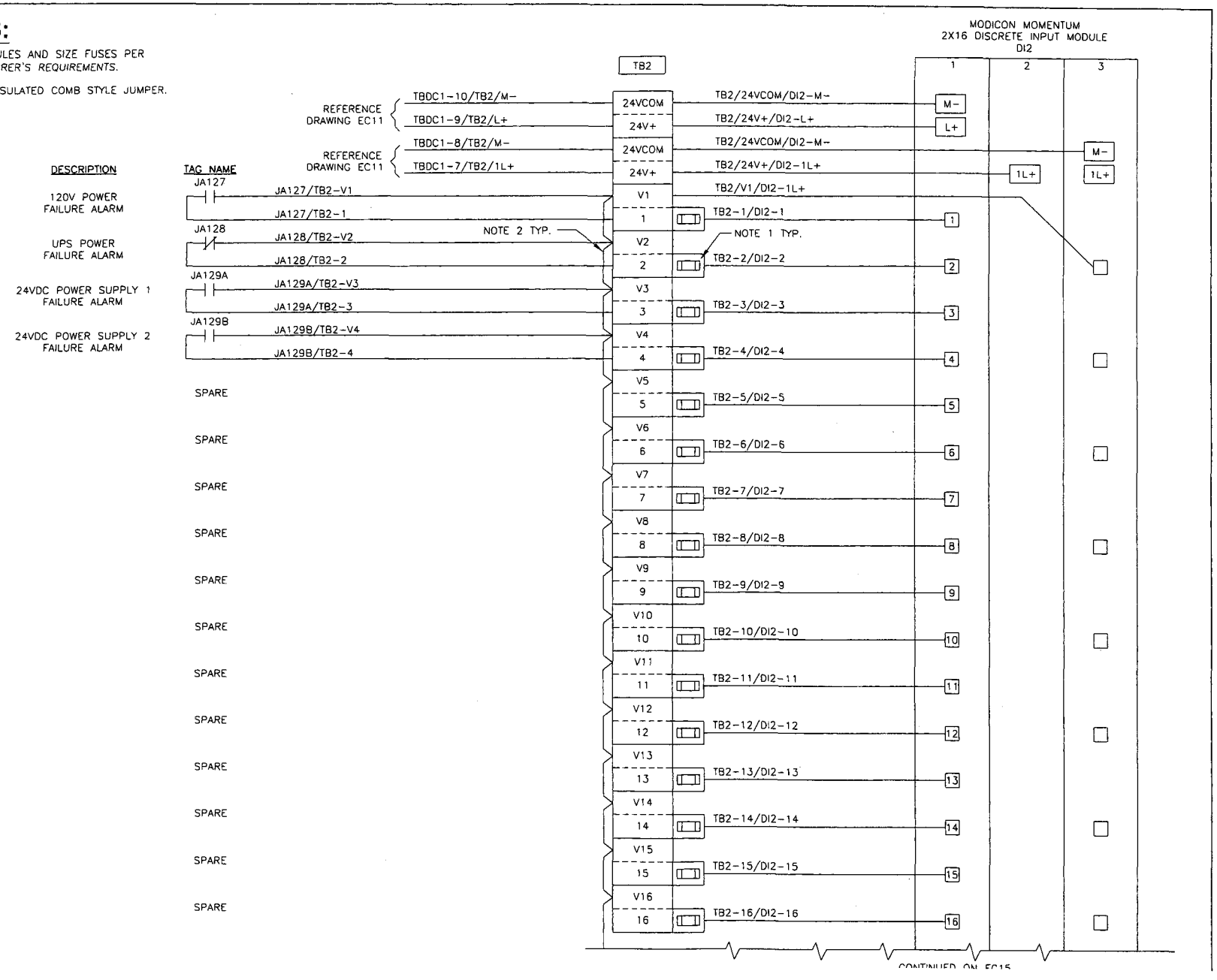


DLT&V SYSTEMS ENGINEERING

40253 BRENT ALEKSICH Date Signed 10/9/07 ARIZONA U.S.A.

NOTES

REVISIONS

| REV. | BY | DATE | DESCRIPTION |
|---|---|---|---|
| | | | |
| | | | |
| | | | |
| | | | |

CASA GRANDE - COOLIDGE
SCADA SYSTEM - WELL #19

ARIZONA WATER COMPANY

DISCRETE INPUT 2
MODULE BASE
WIRING DIAGRAM - SHEET 1

| | |
|---|---|
| DRAWN BY: JHA | PROJECT NO. 1219.0.101 |
| DESIGNED BY: JHA | SUBMITTAL DATE: OCT 2007 |
| CHECKED BY: | DRAWING NUMBER EC14 |

## NOTES:

1. WIRE MODULES AND SIZE FUSES PER MANUFACTURER'S REQUIREMENTS.
2. BUS OR INSULATED COMB STYLE JUMPER.

| DESCRIPTION | TAG NAME |
|---|---|
| | SPARE |
| | SPARE |
| | SPARE |
| | SPARE |
| | SPARE |
| | SPARE |
| | SPARE |
| | SPARE |
| | SPARE |
| | SPARE |
| | SPARE |
| | SPARE |
| | SPARE |
| | SPARE |
| | SPARE |
| | SPARE |

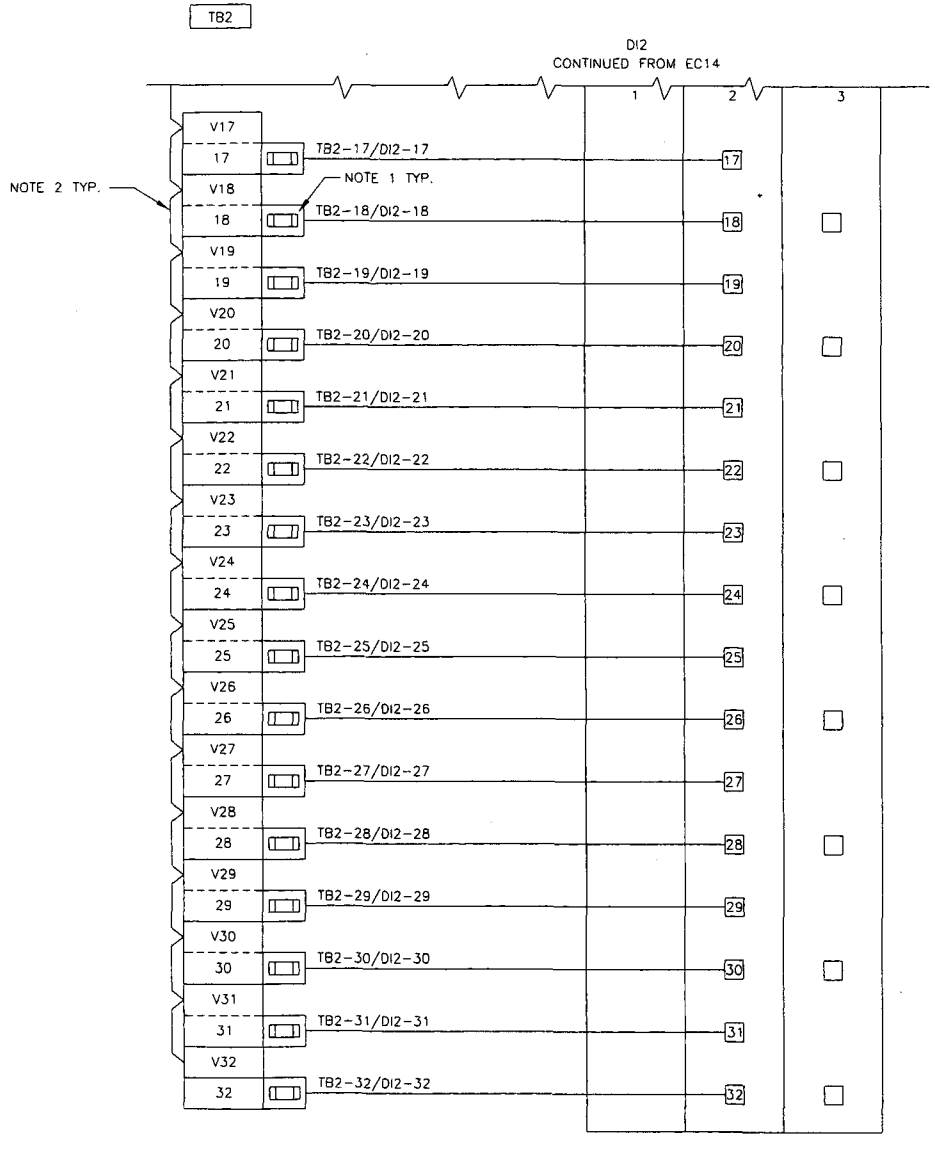


DLT&V
BYSTEMS ENGINEERING
3550 N. CENTRAL AVE., STE. 1900
PHOENIX, AZ 85012 (602) 265-4558

Professional Engineer (Electrical)
CERTIFICATE NO.
40253
BRENT
ALEKSICH
Date Signed 10-19-07
ARIZONA U.S.A.

NOTES

REVISIONS

| REV. | BY | DATE | DESCRIPTION |
|---|---|---|---|
| | | | |
| | | | |
| | | | |
| | | | |

CASA GRANDE - COOLIDGE
SCADA SYSTEM - WELL #19

ARIZONA WATER COMPANY

DISCRETE INPUT
MODULE BASE 2
WIRING DIAGRAM - SHEET 2

| DRAWN BY: | PROJECT NO. |
|---|---|
| JHA | 1219.0.101 |
| DESIGNED BY: | SUBMITTAL DATE: |
| JHA | OCT 2007 |
| CHECKED BY: | DRAWING NUMBER |
| | EC15 |

FILE: 1219.00.101_EC15.dwg 3:05pm PLOTTED: Oct 19, 2007 jahrens

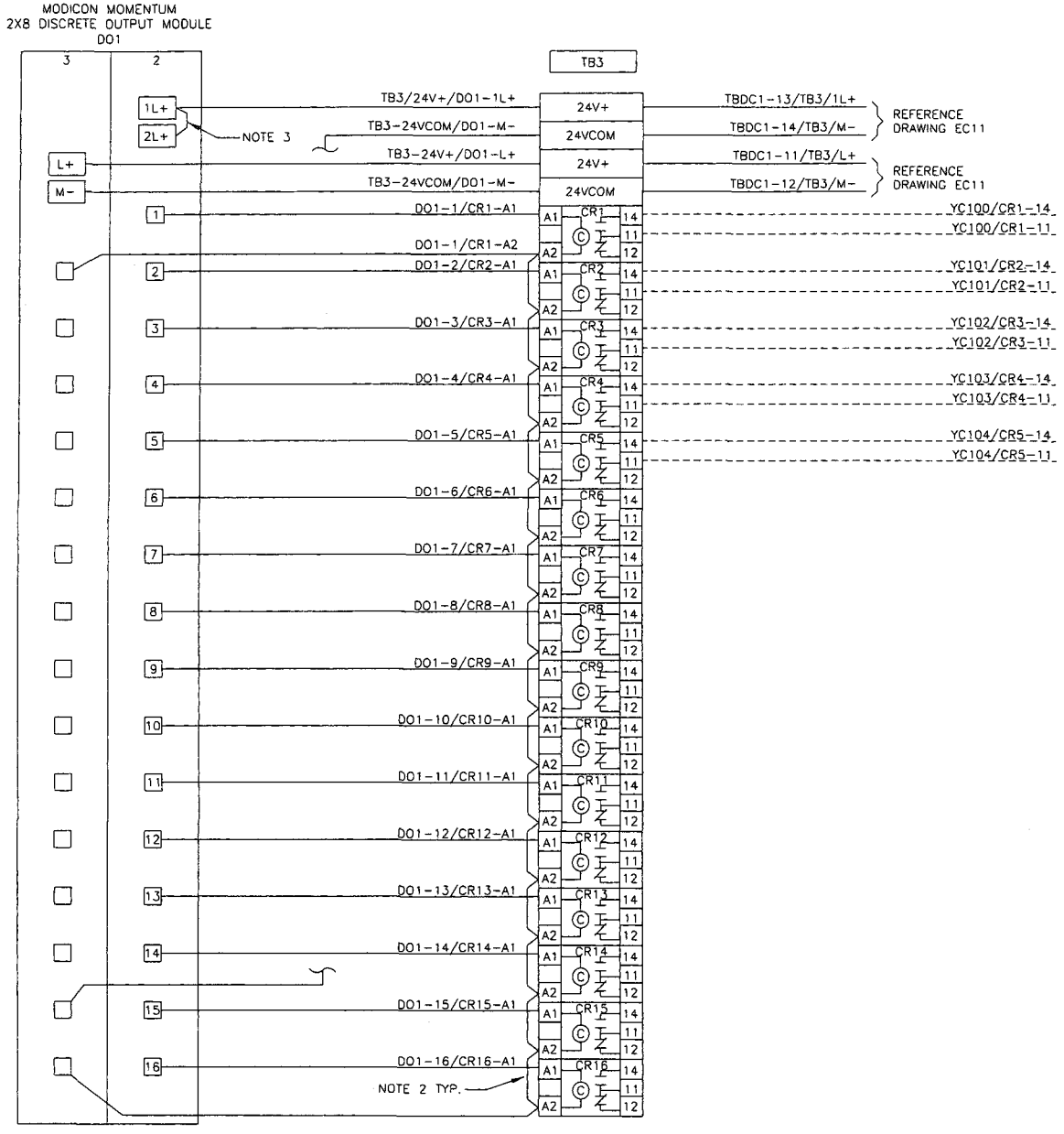


## NOTES:

1. WIRE MODULES PER MANUFACTURER'S REQUIREMENTS.
2. BUS OR INSULATED COMB STYLE JUMPER.
3. JUMPER WIRES PROVIDED BY PANEL MANUFACTURER.

| TAG NAME | DESCRIPTION |
|---|---|
| YC100 | WELL PUMP #19 START/STOP COMMAND |
| YC101 | BOOSTER PUMP #1 START/STOP COMMAND |
| YC102 | BOOSTER PUMP #2 START/STOP COMMAND |
| YC103 | BOOSTER PUMP #3 START/STOP COMMAND |
| YC104 | BOOSTER PUMP #4 START/STOP COMMAND (FUTURE) |
| | SPARE |
| | SPARE |
| | SPARE |
| | SPARE |
| | SPARE |
| | SPARE |
| | SPARE |
| | SPARE |
| | SPARE |
| | SPARE |
| | SPARE |
| | SPARE |

DLT&V
SYSTEMS ENGINEERING
3550 N. CENTRAL AVE. STE. 1900
PHOENIX, AZ 85012 (602) 366-4558

Registered Professional Engineer (Electrical)
40253
BRENT
ALEKSICH
Date Signed 10-19-07
ARIZONA U.S.A.

NOTES

| REVISIONS | | | |
|---|---|---|---|
| REV. | BY | DATE | DESCRIPTION |
| | | | |
| | | | |
| | | | |
| | | | |

CASA GRANDE – COOLIDGE
SCADA SYSTEM – WELL #19

ARIZONA WATER COMPANY

DISCRETE OUTPUT MODULE BASE WIRING DIAGRAM

| DRAWN BY: | PROJECT NO. |
|---|---|
| JHA | 1219.0.101 |
| DESIGNED BY: | SUBMITTAL DATE: |
| JHA | OCT 2007 |
| CHECKED BY: | DRAWING NUMBER |
| | EC16 |

FILE: 1219.00.101_EC16.dwg 3:05pm PLOTTED: Oct 19, 2007 johrens

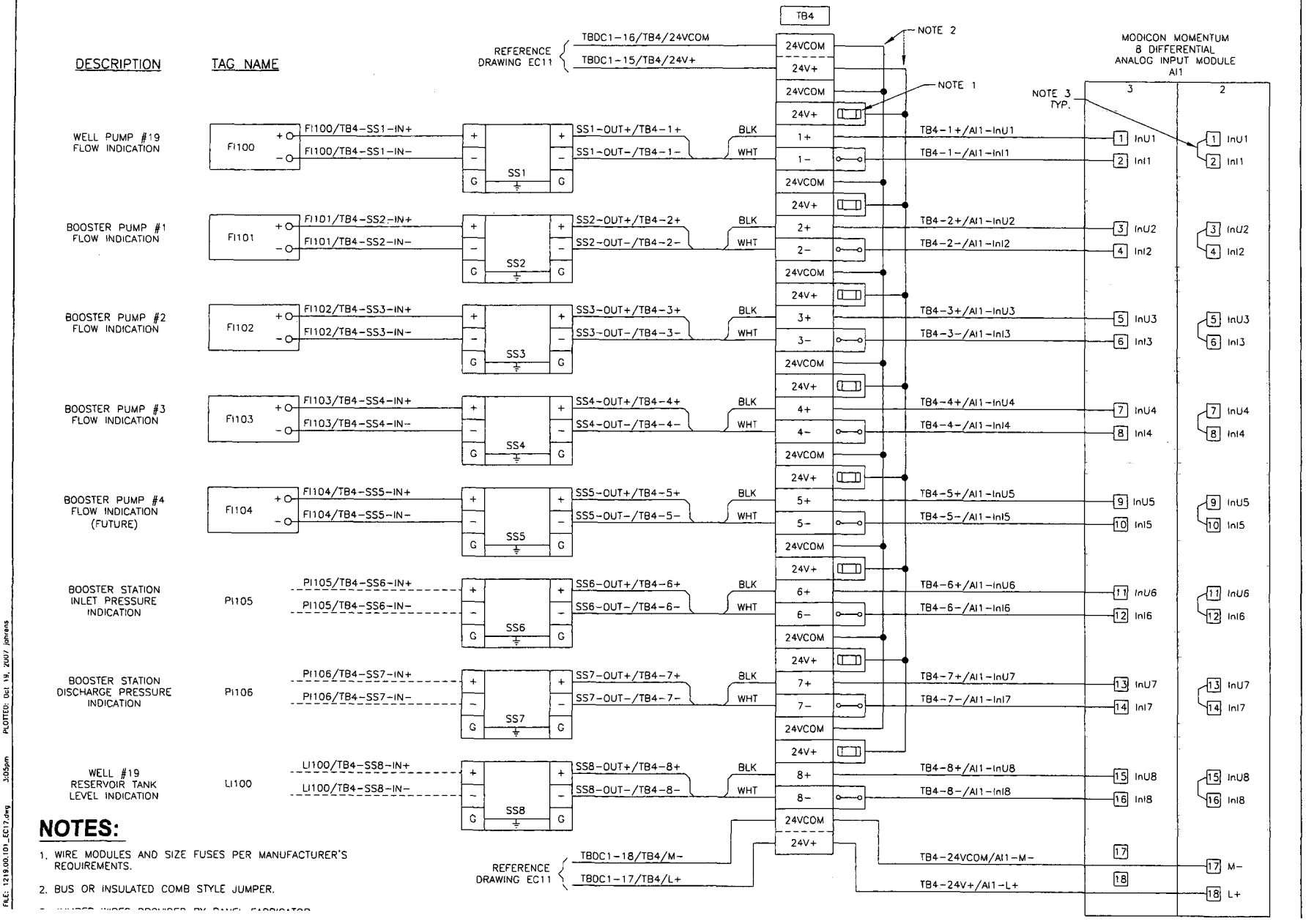


## NOTES:

1. WIRE MODULES AND SIZE FUSES PER MANUFACTURER'S REQUIREMENTS.
2. BUS OR INSULATED COMB STYLE JUMPER.


DLT&V
SYSTEMS ENGINEERING
3550 N. CENTRAL AVE, STE. 1900
PHOENIX, AZ 85012 (602) 266-4688


Registered Professional Engineer (Electrical)
40253
BRENT
ALEKSICH
Date Signed 10-19-07
ARIZONA U.S.A.

NOTES

| REVISIONS | | | |
|---|---|---|---|
| REV. | BY | DATE | DESCRIPTION |
| | | | |
| | | | |
| | | | |
| | | | |

CASA GRANDE - COOLIDGE
SCADA SYSTEM - WELL #19

ARIZONA WATER COMPANY

ANALOG INPUT 1
MODULE BASE
WIRING DIAGRAM

| | |
|---|---|
| DRAWN BY: JHA | PROJECT NO. 1219.0.101 |
| DESIGNED BY: JHA | SUBMITTAL DATE: OCT 2007 |
| CHECKED BY: - | DRAWING NUMBER EC17 |


FILE: 1219.00.101_EC17.dwg 3:05pm PLOTTED: Oct 19, 2007 johnsns

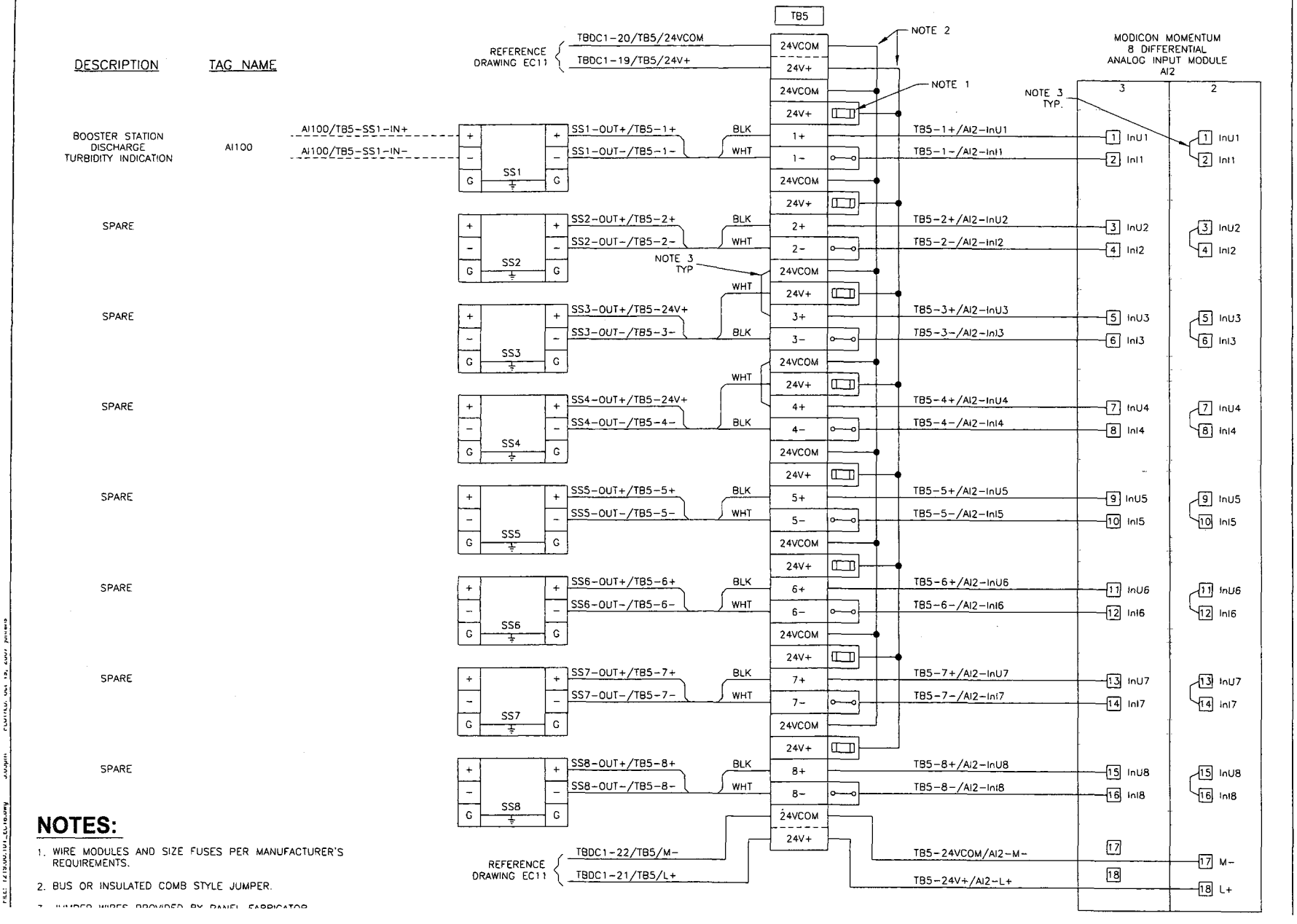


## NOTES:

1. WIRE MODULES AND SIZE FUSES PER MANUFACTURER'S REQUIREMENTS.
2. BUS OR INSULATED COMB STYLE JUMPER.
3. JUMPER WIRES PROVIDED BY PANEL FABRICATOR.

DLT&V SYSTEMS ENGINEERING

40253 BRENT ALEKSICH Date Signed 10-9-07 ARIZONA U.S.A.

NOTES

| REVISIONS | | | |
|---|---|---|---|
| REV. | BY | DATE | DESCRIPTION |
| | | | |
| | | | |
| | | | |
| | | | |

CASA GRANDE - COOLIDGE SCADA SYSTEM - WELL #19

ARIZONA WATER COMPANY

ANALOG INPUT 2 MODULE BASE WIRING DIAGRAM

| DRAWN BY: | PROJECT NO. |
|---|---|
| JHA | 1219.0.101 |
| DESIGNED BY: | SUBMITTAL DATE: |
| JHA | OCT 2007 |
| CHECKED BY: | DRAWING NUMBER |
| | EC18 |

**PLC MEMORY MAP**

*LAYNE CHRISTENSEN COMPANY*
*WATER TREATMENT DIVISION - FONTANA, CA*

| PROJECT NO | PROJECT NAME | TITLE | DOCUMENT NUMBER | PLC MAKE/MODEL | SHEET |
|---|---|---|---|---|---|
| 27-0188 | AWC CASA GRANDE WELLS 19, 21, 22 & 24 | MEMORY MAP FOR SCADA MONITORING | 550A111-059 | ALLEN BRADLEY SLC 5/05 1747-L551 | 1 OF 2 |

| REV | BY | CHK | APVD | DATE | REVISIONS | COPY CERTIFIED BY | DATE |
|---|---|---|---|---|---|---|---|
| 0 | DNS | | | 7/11/2008 | INITIAL RELEASE | | |
| | | | | | | | |
| | | | | | | | |
| | | | | | | | |

| ITEM | DESCRIPTION | TAG NUMBER | DATA TYPE | PLC ADDRESS | ENG UNITS | UNIT RANGE |
|---|---|---|---|---|---|---|
| 1 | TREATED WATER FLOW RATE | FT-500 | INTEGER | N7:6 | GPM | 0-2500 |
| 2 | TREATED WATER FLOW SINCE LAST BW | --- | INTEGER | N7:175 | GALLON X 1000 | 0-32768 |
| 3 | TREATED WATER FLOW TOTAL | --- | FLOAT | F8:31 | GALLON X 1000000 | 0-999999.9 |
| 4 | BYPASS WATER FLOW RATE | FT-400 | INTEGER | N7:7 | GPM | 0-2000 |
| 5 | BACKWASH WATER FLOW RATE | FT-600 | INTEGER | N7:4 | GPM | 0-1500 |
| 6 | DECANT FLOW RATE | FT-700 | INTEGER | N7:5 | GPM | 0-500 |
| 7 | INLET PRESSURE | PT-400 | FLOAT | F8:25 | PSIG | 0-75 |
| 8 | OUTLET PRESSURE | PT-500 | FLOAT | F8:26 | PSIG | 0-75 |
| 9 | MEDIA TRAP DP HIGH | PDIS-401 | BIT | B3:1.14 | NONE | 0=NOT HIGH<br>1= HIGH |
| 10 | FREE CHLORINE RESIDUAL | AIT-800 | FLOAT | F8:14 | MG/L | 0-5 |
| 11 | EFFLUENT pH | AIT-950 | FLOAT | F8:8 | PH STD UNITS | 0-13.9 |
| 12 | BACKWASH TANK LEVEL | PT-700 | FLOAT | F8:0 | FEET | 1-24.07 |
| 13 | FERRIC TANK LEVEL | LT-900 | FLOAT | F8:2 | FEET | 0-5.8 |
| 14 | SODIUM HYPOCHLORITE TANK LEVEL | LT-800 | FLOAT | F8:1 | FEET | 0-7 |
| 15 | ACID TANK LEVEL | LT-950 | FLOAT | F8:12 | FEET | 0-6.2 |
| 16 | FERRIC PUMP SPEED | P-900 | INTEGER | O:9.1 | mA x 1000 | 4000-20000 |
| 17 | SODIUM HYPOCHLORITE PUMP SPEED | P-800 | INTEGER | O:9.0 | mA x 1000 | 4000-20000 |
| 18 | ACID PUMP SPEED | P-950 | INTEGER | O:9.2 | mA x 1000 | 4000-20000 |
| 19 | DECANT PUMP RUNNING | P-701 | BIT | B3:2.4 | NONE | 0=NOT RUNNING<br>1=RUNNING |

**PLC MEMORY MAP**

*LAYNE CHRISTENSEN COMPANY*
*WATER TREATMENT DIVISION - FONTANA, CA*

| PROJECT NO | PROJECT NAME | TITLE | DOCUMENT NUMBER | PLC MAKE/MODEL | SHEET |
|---|---|---|---|---|---|
| 27-0188 | AWC CASA GRANDE WELLS 19, 21, 22 & 24 | MEMORY MAP FOR SCADA MONITORING | 550A111-059 | ALLEN BRADLEY SLC 5/05 1747-L551 | 2 OF 2 |

| REV | BY | CHK | APVD | DATE | REVISIONS | COPY CERTIFIED BY | DATE |
|---|---|---|---|---|---|---|---|
| 0 | DNS | | | 7/11/2008 | INITIAL RELEASE | | |
| | | | | | | | |
| | | | | | | | |
| | | | | | | | |

| ITEM | DESCRIPTION | TAG NUMBER | DATA TYPE | PLC ADDRESS | ENG UNITS | UNIT RANGE |
|---|---|---|---|---|---|---|
| 20 | SUPERNATE PUMP RUNNING | P-751 | BIT | B3:2.6 | NONE | 0=NOT RUNNING<br>1=RUNNING |
| 21 | GENERAL FAILURE ALARM | --- | BIT | O:5/4 | NONE | 0=NO GENERAL FAILURE<br>1=GENERAL FAILURE |
| 22 | FILTER 1 IN SERVICE | --- | BIT | B3:5/1 | NONE | 0=NOT IN SERVICE<br>1=IN SERVICE |
| 23 | FILTER 1 IN BACKWASH | --- | BIT | B3:7/1 | NONE | 0=NOT IN BACKWASH<br>1=IN BACKWASH |
| 24 | FILTER 2 IN SERVICE | --- | BIT | B3:5/2 | NONE | 0=NOT IN SERVICE<br>1=IN SERVICE |
| 25 | FILTER 2 IN BACKWASH | --- | BIT | B3:7/2 | NONE | 0=NOT IN BACKWASH<br>1=IN BACKWASH |
| 26 | FILTER 3 IN SERVICE | --- | BIT | B3:5/3 | NONE | 0=NOT IN SERVICE<br>1=IN SERVICE |
| 27 | FILTER 3 IN BACKWASH | --- | BIT | B3:7/3 | NONE | 0=NOT IN BACKWASH<br>1=IN BACKWASH |
| 28 | FILTER 4 IN SERVICE | --- | BIT | B3:5/4 | NONE | 0=NOT IN SERVICE<br>1=IN SERVICE |
| 29 | FILTER 4 IN BACKWASH | --- | BIT | B3:7/4 | NONE | 0=NOT IN BACKWASH<br>1=IN BACKWASH |
| 30 | FILTER 5 IN SERVICE | --- | BIT | B3:5/5 | NONE | 0=NOT IN SERVICE<br>1=IN SERVICE |
| 31 | FILTER 5 IN BACKWASH | --- | BIT | B3:7/5 | NONE | 0=NOT IN BACKWASH<br>1=IN BACKWASH |
| 32 | FILTER 6 IN SERVICE | --- | BIT | B3:5/6 | NONE | 0=NOT IN SERVICE<br>1=IN SERVICE |
| 33 | FILTER 6 IN BACKWASH | --- | BIT | B3:7/6 | NONE | 0=NOT IN BACKWASH<br>1=IN BACKWASH |
| | | | | | | |
| | | | | | | |
| | | | | | | |
| | | | | | | |
| | | | | | | |

**PLC MEMORY MAP**

*LAYNE CHRISTENSEN COMPANY*
*WATER TREATMENT DIVISION - FONTANA, CA*

| PROJECT NO | PROJECT NAME | TITLE | DOCUMENT NUMBER | PLC MAKE/MODEL | SHEET |
|---|---|---|---|---|---|
| 27-9568 | AWC COTTONWOOD | MEMORY MAP FOR SCADA MONITORING | 550A106-059 | AUTOMATION DIRECT DL-450 | 1 OF 2 |

| REV | BY | CHK | APVD | DATE | REVISIONS | COPY CERTIFIED BY | DATE |
|---|---|---|---|---|---|---|---|
| 0 | DNS | | | 7/21/2008 | INITIAL RELEASE | | |
| | | | | | | | |
| | | | | | | | |
| | | | | | | | |

| ITEM | DESCRIPTION | TAG NUMBER | DATA TYPE | PLC ADDRESS | ENG UNITS | UNIT RANGE |
|---|---|---|---|---|---|---|
| 1 | TREATED WATER FLOW RATE | FT-500 | BCD INTEGER | V10041 | GPM | 0-5800 |
| 2 | TREATED WATER FLOW SINCE LAST BW | --- | BCD INTEGER | V10135 | GALLON X 1000 | 0-32768 |
| 3 | TREATED WATER FLOW TOTAL | --- | BCD INTEGER | V1760 | GALLON X 1000000 | 0-32768 |
| 4 | EFFLUENT TURBIDITY | AIT-901 | BCD INTEGER | V10057 | NTU x 0.01 | 0-1000 |
| 5 | BACKWASH WATER FLOW RATE | FT-600 | BCD INTEGER | V10044 | GPM | 0-5000 |
| 6 | DECANT FLOW RATE | FT-700 | BCD INTEGER | V10043 | GPM | 0-500 |
| 7 | INLET PRESSURE | PT-060 | BCD INTEGER | V10040 | PSIG x 0.1 | 0-3600 |
| 8 | DIFFERENTIAL PRESSURE | PDT-400 | BCD INTEGER | V10042 | PSID x 0.1 | 0-300 |
| 9 | MEDIA TRAP DP HIGH | PDIS-401 | BIT | C1065 | --- | 0=NOT HIGH<br>1= HIGH |
| 10 | FREE CHLORINE RESIDUAL | AIT-800 | BCD INTEGER | V10045 | MG/L x 0.01 | 0-500 |
| 11 | EFFLUENT pH | AIT-950 | BCD INTEGER | V10077 | PH STD UNITS x 0.01 | 0-1400 |
| 12 | BACKWASH TANK LEVEL | PT-700 | BCD INTEGER | V10053 | FEET x 0.1 | 0-346 |
| 13 | FERRIC TANK LEVEL | LT-800 | BCD INTEGER | V10047 | FEET x 0.1 | 0-140 |
| 14 | SODIUM HYPOCHLORITE TANK LEVEL | LT-900 | BCD INTEGER | V10046 | FEET x 0.1 | 0-140 |
| 15 | ACID TANK LEVEL | LT-950 | BCD INTEGER | V10067 | FEET x 0.1 | 0-80 |
| 16 | FERRIC PUMP SPEED | P-800 | BCD INTEGER | V10200 | PULSES PER MINUTE | 0-74 |
| 17 | SODIUM HYPOCHLORITE PUMP SPEED | P-900 | BCD INTEGER | V10201 | PULSES PER MINUTE | 0-74 |
| 18 | ACID PUMP SPEED | P-950 | BCD INTEGER | V10253 | RAW VALUE | 0-4095 |
| 19 | DECANT PUMP RUNNING | P-701 | BIT | X102 | --- | 0=NOT RUNNING<br>1=RUNNING |

**PLC MEMORY MAP**

*LAYNE CHRISTENSEN COMPANY*
*WATER TREATMENT DIVISION - FONTANA, CA*

| PROJECT NO | PROJECT NAME | TITLE | DOCUMENT NUMBER | PLC MAKE/MODEL | SHEET |
|---|---|---|---|---|---|
| 27-9568 | AWC COTTONWOOD | MEMORY MAP FOR SCADA MONITORING | 550A106-059 | AUTOMATION DIRECT DL-450 | 2 OF 2 |

| REV | BY | CHK | APVD | DATE | REVISIONS |
|---|---|---|---|---|---|
| 0 | DNS | | | 7/21/2008 | INITIAL RELEASE |
| | | | | | |
| | | | | | |
| | | | | | |

COPY CERTIFIED BY DATE

| ITEM | DESCRIPTION | TAG NUMBER | DATA TYPE | PLC ADDRESS | ENG UNITS | UNIT RANGE |
|---|---|---|---|---|---|---|
| 20 | SUPERNATE PUMP RUNNING | P-751 | BIT | X104 | --- | 0=NOT RUNNING<br>1=RUNNING |
| 21 | GENERAL FAILURE ALARM | --- | BIT | Y43 | --- | 0=NO GENERAL FAILURE<br>1=GENERAL FAILURE |
| 22 | FILTER 1 IN SERVICE | --- | BIT | V10001 | --- | 0=NOT IN SERVICE<br>1=IN SERVICE |
| 23 | FILTER 1A IN BACKWASH | --- | BIT | C334 | --- | 0=NOT IN BACKWASH<br>1=IN BACKWASH |
| 24 | FILTER 1B IN BACKWASH | --- | BIT | C335 | --- | 0=NOT IN BACKWASH<br>1=IN BACKWASH |
| 25 | FILTER 2 IN SERVICE | --- | BIT | V10011 | --- | 0=NOT IN SERVICE<br>1=IN SERVICE |
| 26 | FILTER 2A IN BACKWASH | --- | BIT | C341 | --- | 0=NOT IN BACKWASH<br>1=IN BACKWASH |
| 27 | FILTER 2B IN BACKWASH | --- | BIT | C342 | --- | 0=NOT IN BACKWASH<br>1=IN BACKWASH |
| 28 | FILTER 3 IN SERVICE | --- | BIT | V10021 | --- | 0=NOT IN SERVICE<br>1=IN SERVICE |
| 29 | FILTER 3A IN BACKWASH | --- | BIT | C343 | --- | 0=NOT IN BACKWASH<br>1=IN BACKWASH |
| 30 | FILTER 3B IN BACKWASH | --- | BIT | C344 | --- | 0=NOT IN BACKWASH<br>1=IN BACKWASH |
| 31 | SLUDGE TRANSFER IN PROGRESS | --- | BIT | C257 | --- | 0=NOT IN PROGRESS<br>1=IN PROGRESS |
| | | | | | | |
| | | | | | | |
| | | | | | | |
| | | | | | | |
| | | | | | | |
| | | | | | | |
| | | | | | | |

# ARIZONA WATER COMPANY

# Casa Grande Water System: Telemetry Upgrade Preliminary Design Report

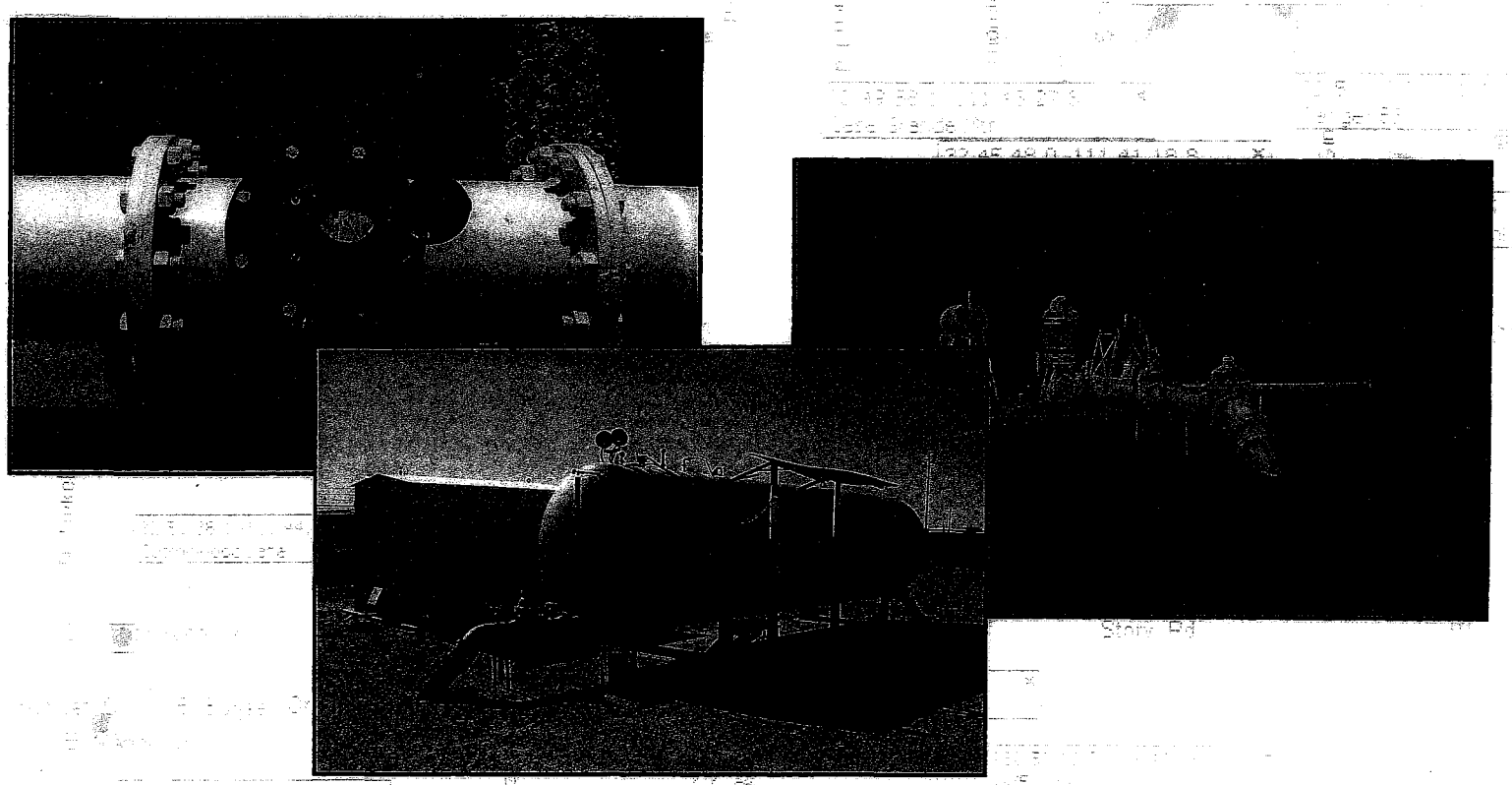

DL engineering &controls, inc.
2005 North Central Avenue, Suite 500, Phoenix, AZ 85004
voice 602.266.4658, fax 602.266.4953

CONTENTS

**1.0 Executive Summary** ..... **2**

**2.0 System Requirements** ..... **3**

**3.0 Radio Survey** ..... **3**

**4.0 Methods of Analysis** ..... **7**

**5.0 Recommended System** ..... **12**

5.1 Path Recommendations ..... 12

5.2 Options for Paths with a TFM of Less than 30dB ..... 12

5.3 Proposed System Overview ..... 13

**6.0 Equipment Recommendations** ..... **13**

6.1 Antenna Feed Cable, Connectors, and Protective Devices ..... 13

6.2 Antenna ..... 13

6.3 Radios ..... 14

**7.0 Opinion of Probable Cost** ..... **17**

**8.0 Path Study Data** ..... **19**

LIST OF TABLES

Table 1. Site Coordinates Table ..... 4

Table 2. Received Signal Strength (RSL) and Total Fade Margin (TFM) Table ..... 8

Table 3. Path Study Results ..... 10

Table 4. Antenna Types and Heights ..... 14

Table 5. Site Specific Equipment Recommendations Table ..... 15

Table 6. Opinion of Probable Cost ..... 18

LIST OF FIGURES

Figure 1. Overall Sitemap ..... 5

Figure 2. Detail Map of Local Wells ..... 6

Figure 3. Recommended Radio Communication Path ..... 12

## 1.0 Executive Summary

DL Engineering & Controls, Inc. (DLEC) has prepared this report at Arizona Water Company's (AWC) request in order to evaluate the Casa Grande water system for the purpose of upgrading the existing telemetry system. Our scope of work was to perform a radio path survey, and prepare an opinion of probable cost for the construction of the new radio telemetry system in Casa Grande. Additionally, we inventoried the existing instrumentation and control components at each site and included an estimate of the material cost for adding new instruments for monitoring pressures, flows, and levels. Working with the AWC staff in Casa Grande, we visited each of the sites and gathered the field data necessary to verify the feasibility of upgrading the radio telemetry system similar to the Apache Junction water system. The data contained in this report is based on direct field observations, input from AWC staff, and radio path survey calculations performed using the SoftWright, LLC Terrain Analysis Package (TAP).

The recommended radio communication paths are the result of individual path profile studies and the microwave link budget analysis. Other considerations leading to this recommendation include a cost effective implementation and the flexibility required for future expansion. The recommended radio communication paths are illustrated on Figure 3. The results of this study indicate that the recommended paths with a Total Fade Margin (TFM) of 30dB or greater should provide reliable radio communication. A radio signal strength test should be conducted on all paths with a TFM of less than 30 dB prior to design. The TFM values are shown on Table 2.

The Opinion of Probable Cost includes all sites studied in the radio survey except Well 22, Well 29, Ranches at Maricopa, and Tierra Grande West. Well 22 runs only in case of emergency. The other three well sites have not yet been equipped, therefore SCADA requirements can not be determined. The Opinion of Probable Cost is shown on Table 6.

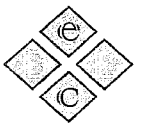



## 2.0 System Requirements

The Arizona Water Company, City of Casa Grande requires the ability to monitor and control operations at remote well, reservoir, and booster pump station sites. This monitoring can be achieved by installing a Remote Telemetry Unit (RTU) at each remote site. Each RTU will contain a Programmable Logic Controller (PLC), and radio equipment and uninterruptible power supply (UPS). The PLC will monitor and control the facility. The PLC will receive command and setpoint instructions from a Master Telemetry Unit (MTU) via the radio-modem. The PLC will then control the facility based on the command setpoints received from the MTU. In addition, the PLC will pass the status of local operating parameters to the radio, which will then transmit this information back to the MTU.

## 3.0 Radio Survey

A field survey of 28 sites was conducted on November 5$^{th}$ and 13$^{th}$. The longitude and latitude coordinates of each site were recorded using a global positioning system receiver based on NAD83 datum. A table of these sites and coordinates is shown on Table 2: Site Coordinates Table. A map of these sites is shown in Figures 1 and 2. Sites that are not currently in operation, such as Ranches at Maricopa (potential purchase), Tierra Grande West, and Well 29, have been included in the Radio Path Study. A preliminary study of input/output requirements was conducted at all sites.

**Table 1. Site Coordinates Table**

| Site Description | Latitude | Longitude |
|---|---|---|
| Arizona City Storage Tank & Booster Station | 32 45 02.5 N | 111 39 50.0 W |
| Burgess Peak | 32 54 02.6 N | 111 46 19.2 W |
| Casa Grande Mountain | 32 49 58.1 N | 111 43 27.8 W |
| Cottonwood Lane | 32 53 38.1 N | 111 44 16.5 W |
| Indian Hills Tank | 32 58 55.5 N | 111 47 24.6 W |
| Master (Office) | 32 52 36.2 N | 111 45 07.3 W |
| North Park Tank | 32 59 31.5 N | 111 41 17.2 W |
| Pinal Booster Station | 32 56 44.3 N | 111 45 25.7 W |
| Ranches at Maricopa (potential purchase) | 32 57 49.1 N | 112 04 59.3 W |
| Scott Drive Tanks & Booster Station | 32 58 17.0 N | 111 46 26.7 W |
| Stanfield Well | 32 52 49.9 N | 111 57 45.5 W |
| Tabletop Well & Booster Station | 32 52 56.1 N | 111 58 26.4 W |
| Tanger Booster Station | 32 50 07.3 N | 111 41 19.8 W |
| Tierra Grande Well & Booster Station | 32 51 27.6 N | 111 34 04.7 W |
| Tierra Grande West(Well W/O Pump) | 32 51 27.8 N | 111 34 18.5 W |
| WELL 10 | 32 53 28.8 N | 111 44 19.7 W |
| WELL 17 | 32 53 49.7 N | 111 43 21.3 W |
| WELL 19 | 32 53 12.0 N | 111 42 18.9 W |
| WELL 20 | 32 53 27.5 N | 111 42 50.2 W |
| WELL 21 | 32 52 52.1 N | 111 43 06.0 W |
| WELL 22 | 32 52 47.4 N | 111 42 22.2 W |
| WELL 23 | 32 53 32.8 N | 111 42 50.2 W |
| WELL 24 | 32 52 52.4 N | 111 42 52.4 W |
| WELL 25 | 32 53 20.8 N | 111 42 50.3 W |
| WELL 26 | 32 53 40.1 N | 111 42 56.8 W |
| WELL 27 | 32 56 17.6 N | 111 38 46.0 W |
| WELL 28 | 32 45 48.0 N | 111 41 18.8 W |
| WELL 29 - New Well Site | 32 52 04.2 N | 111 44 23.2 W |

**Figure 1. Overall Sitemap**

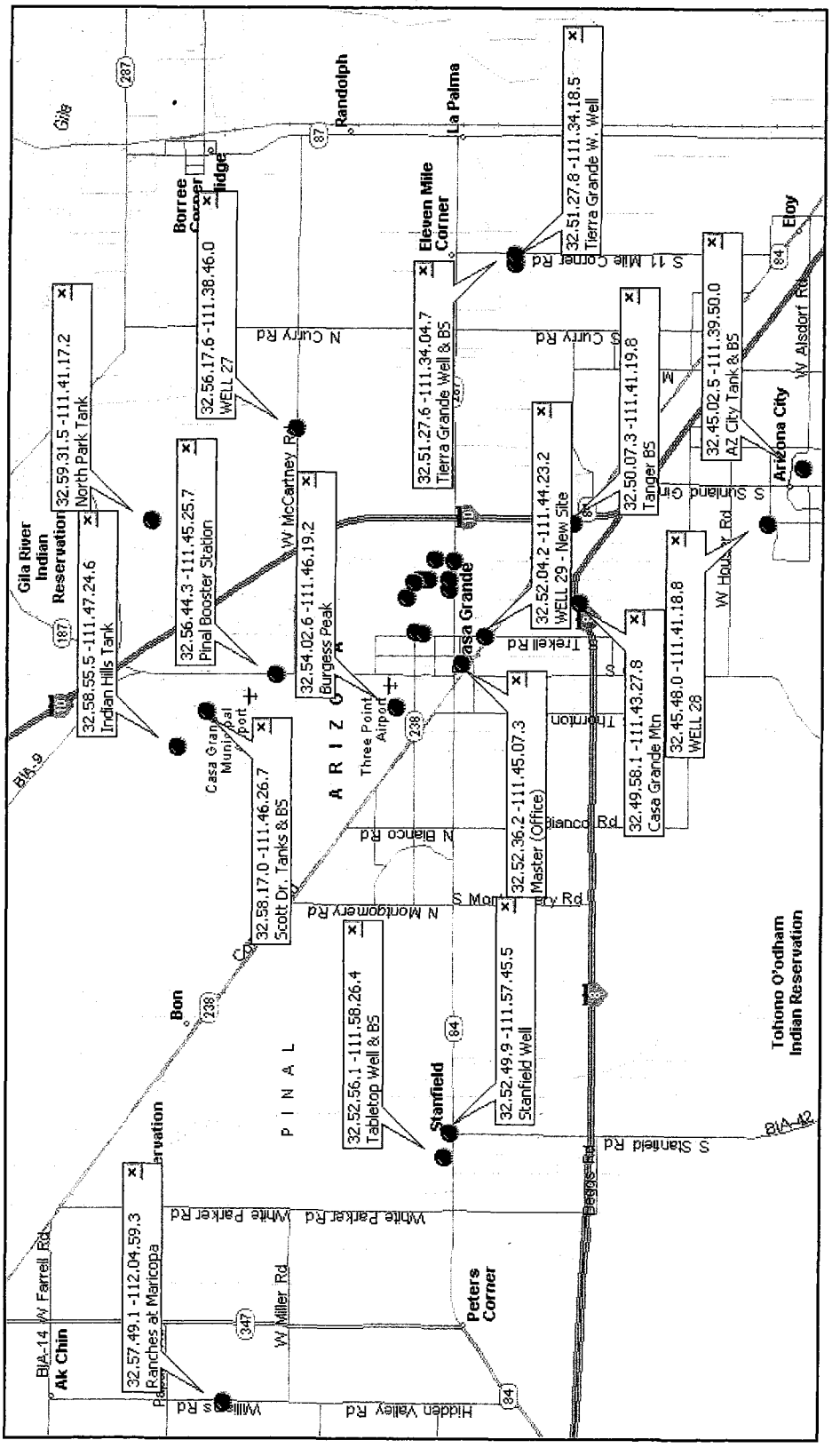

**Figure 2. Detail Map of Local Wells**

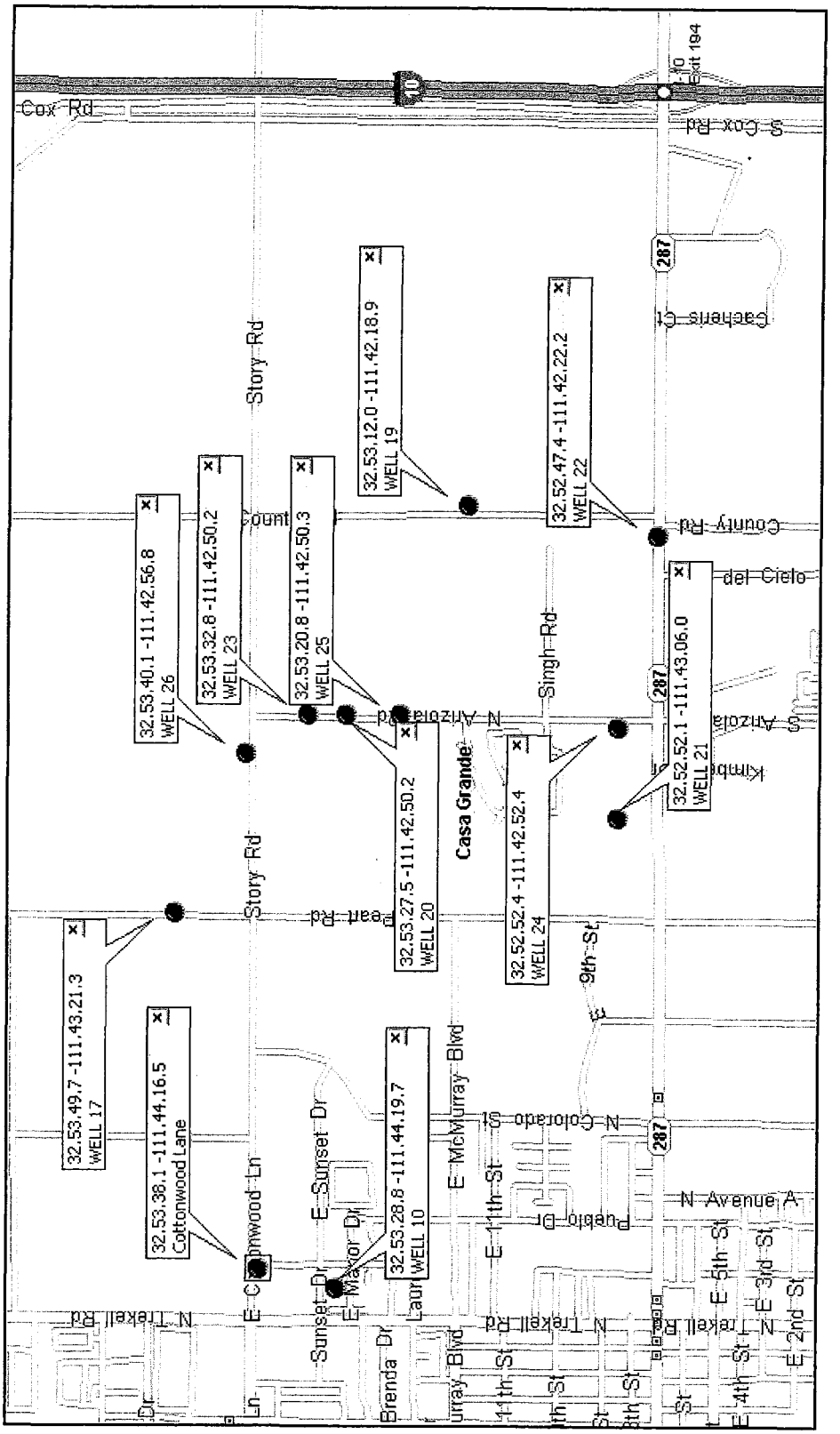

## 4.0 Methods of Analysis

Software generated Path Profiles are included for 36 paths considered for the licensed, 173 MHz band, Multiple Address System (MAS) radio network. The path profiles were generated using a US Geological Survey (USGS) 30-meter point elevation digitized terrain database. The path profiles were displayed and then plotted. The path profile provides a visual means for determining if line-of-sight is practical for a given path. The path profiles provide a convenient means for determining if the viability of a particular path warrants further analysis of that path.

The Propagation Loss is the loss in signal strength due to the knife edge effect created from terrain in close proximity to the line of sight. On paths where the line of sight is close to the terrain, the propagation loss can be several dB. The propagation losses in this study were calculated using the Longly-Rice Model.

Microwave Link Budget Analysis provides the capability for studying the complete radio system of each path including the transmitter power output, the passive elements of the transmitter antenna feed system, the transmit antenna, free-space loss, propagation loss, receive antenna, the passive elements in the receive antenna feed system, and the receiver sensitivity so that a reliability prediction can be calculated. The free-space path loss is calculated using a selected prediction model (e.g. –Lenkurt or Vigants) and climate and terrain factors.

The Microwave Link Budget Analysis produces two values that determine the viability of the path being studied. The Received Signal Strength (RSL) is the strength of the signal at the receiving station in dBm. The Total Fade Margin (TFM) is the margin above the minimum received signal strength required for a reliable radio path. For example, if a radio had a minimum received signal strength of –101 dBm, and the RSL was –71dBm, the TFM would be 30dB. The Microwave Budget Link Analysis can be applied to reduce the total amount of actual on-the-air testing required.

The minimum fade margin allowance for constructed systems is 15 dBm after allowing for field level correction. The expected additional losses due to obstructions, foliage, and alignment error are 10 to 15 dBm. Therefore, the minimum fade margin allowance for predicted paths is 30 dBm. In all but 3 cases, the proposed system resulted in a predicted total fade margin of greater than 30dBm.

The following table is a summary of Received Signal Strength (RSL) and total fade margin (TFM) for each path. Plots of the Path Profiles, Propagation Loss, and Microwave Link Budget Analysis can be found in the Path Study Data section of this report.

**Table 2. Received Signal Strength (RSL) and Total Fade Margin (TFM) Table**

| Radio Path Endpoints | | Distance | Propagation | RSL | TFM |
|---|---|---|---|---|---|
| From | To | Miles | Loss (LR) | dBm | dB |
| Master (Office) | Cottonwood Lane | 1.4 | 12.54 | -48.41 | 52.59 |
| Master (Office) | Well 19 | 2.8 | 22.46 | -64.10 | 36.90 |
| Master (Office) | Well 22 | 2.7 | 22.12 | -63.38 | 37.62 |
| Master (Office) | Well 21 | 2.0 | 19.87 | -58.50 | 42.50 |
| Master (Office) | Well 29 | 0.9 | 11.92 | -44.08 | 56.92 |
| Master (Office) | Casa Grande Mountain | 3.4 | 6.57 | -51.98 | 49.02 |
| Master (Office) | Burgess Peak | 2.0 | 1.38 | -42.19 | 58.81 |
| | | | | | |
| Burgess Peak | Well 27 | 7.8 | 14.41 | -64.91 | 36.09 |
| Burgess Peak | North Park Tank | 8.0 | 0.50 | -53.22 | 47.78 |
| Burgess Peak | Pinal Booster Station | 3.2 | 4.72 | -49.55 | 51.45 |
| Burgess Peak | Well 23 | 3.4 | 7.55 | -52.93 | 48.07 |
| Burgess Peak | Well 20 | 3.4 | 7.60 | -53.03 | 47.97 |
| Burgess Peak | Well 25 | 3.5 | 6.70 | -52.21 | 48.79 |
| Burgess Peak | Tierra Grande | 12.2 | 15.55 | -70.00 | 31.00 |
| Burgess Peak | Tierra Grande West | 12.0 | 19.83 | -74.12 | 26.88 |
| Burgess Peak | Stanfield | 11.2 | 9.43 | -65.09 | 35.91 |
| Burgess Peak | Tanger Booster Station | 6.6 | 12.58 | -63.68 | 37.32 |
| | | | | | |
| Cottonwood Lane | Burgess Peak | 2.0 | 0.02 | -40.91 | 60.09 |
| Cottonwood Lane | Well 10 | 0.2 | 0.00 | -18.28 | 82.72 |
| Cottonwood Lane | Well 17 | 0.9 | 11.15 | -45.13 | 55.87 |
| Cottonwood Lane | Well 26 | 1.3 | 13.33 | -48.24 | 52.76 |
| Cottonwood Lane | Well 23 | 1.4 | 14.25 | -51.87 | 49.13 |
| Cottonwood Lane | Well 20 | 1.4 | 14.74 | -52.43 | 48.57 |
| Cottonwood Lane | Well 25 | 1.4 | 14.58 | -52.39 | 48.61 |
| Cottonwood Lane | Well 24 | 1.6 | 15.63 | -54.52 | 46.48 |
| | | | | | |
| Casa Grande Mountain | Well 21 | 3.3 | 10.48 | -55.68 | 45.32 |
| Casa Grande Mountain | Well 24 | 3.4 | 9.33 | -54.63 | 46.37 |
| Casa Grande Mountain | Well 19 | 3.9 | 10.69 | -57.15 | 43.85 |
| | | | | | |

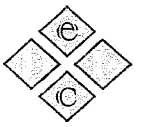



| Radio Path Endpoints | | Distance | Propagation | RSL | TFM |
|---|---|---|---|---|---|
| **From** | **To** | **Miles** | **Loss (LR)** | **dBm** | **dB** |
| Pinal Booster Station | North Park Tank | 5.1 | 11.97 | -60.87 | 40.13 |
| Pinal Booster Station | Scott Drive | 2.0 | 9.86 | -47.81 | 53.19 |
| | | | | | |
| Scott Drive | North Park Tank | 5.2 | 6.02 | -55.02 | 45.98 |
| Scott Drive | Indian Hills Tank | 1.2 | 0.01 | -34.22 | 66.78 |
| | | | | | |
| Stanfield | Tabletop | 0.7 | 6.67 | -35.89 | 65.11 |
| Stanfield | Ranches at Maricopa | 9.1 | 20.38 | -72.21 | 28.79 |
| | | | | | |
| Tanger Booster Station | Well 28 | 5.0 | 25.85 | -74.46 | 26.54 |
| | | | | | |
| Well 28 | Arizona City | 1.7 | 13.07 | -52.28 | 48.72 |

**Table 3. Path Study Results**

| Path Definition | Line of Site | Total Fade Margin (dBm) | Comments |
|---|---|---|---|
| Master to Cottonwood Lane | Yes | 52.59 | This is a viable path |
| Master to Well 19 | Yes | 36.90 | This is a viable path |
| Master to Well 22 | Yes | 37.62 | This is a viable path |
| Master to Well 21 | Yes | 42.50 | This is a viable path |
| Master to Well 29 | Yes | 56.92 | This is a viable path |
| Master to Casa Grande Mountain | Yes | 49.02 | This is a viable path |
| Master to Burgess Peak | Yes | 58.81 | This is a viable path |
| Burgess Peak to Well 27 | Yes | 36.09 | This is a viable path |
| Burgess Peak to North Park Tank | Yes | 47.78 | This is a viable path |
| Burgess Peak to Pinal Booster Sta. | Yes | 51.45 | This is a viable path |
| Burgess Peak to Well 23 | Yes | 48.07 | This is a viable path |
| Burgess Peak to Well 20 | Yes | 47.97 | This is a viable path |
| Burgess Peak to Well 25 | Yes | 48.79 | This is a viable path |
| Burgess Peak to Tierra Grande | Yes | 31.00 | This is a viable path |
| Burgess Peak to Tierra Grande West | Yes | 26.88 | The propagation loss is 19.83 dB. The TFM is less than the desired value of 30.00 dBm. The lesser value is probably due to the combination of a 12.0 mile path length and the high propagation loss. |
| Burgess Peak to Stanfield | Yes | 35.91 | This is a viable path |
| Burgess Peak to Tanger | Yes | 37.32 | This is a viable path |
| Cottonwood to Burgess Peak | Yes | 60.09 | This is a viable path |
| Cottonwood to Well 10 | Yes | 82.72 | This is a viable path |
| Cottonwood to Well 17 | Yes | 55.87 | This is a viable path |
| Cottonwood to Well 26 | Yes | 52.76 | This is a viable path |
| Cottonwood to Well 23 | Yes | 49.13 | This is a viable path |
| Cottonwood to Well 20 | Yes | 48.57 | This is a viable path |
| Cottonwood to Well 25 | Yes | 48.61 | This is a viable path |
| Cottonwood to Well 24 | Yes | 46.48 | This is a viable path |
| Casa Grande Mountain to Well 21 | Yes | 45.32 | This is a viable path |
| Casa Grande Mountain to Well 24 | Yes | 46.37 | This is a viable path |
| Casa Grande Mountain to Well 19 | Yes | 43.85 | This is a viable path |
| Pinal Booster Sta. to North Park | Yes | 40.13 | This is a viable path |

| Path Definition | Line of Site | Total Fade Margin (dBm) | Comments |
|---|---|---|---|
| Tank | | | |
| Pinal Booster Sta. to Scott Drive | Yes | 53.19 | This is a viable path |
| Scott Drive to North Park Tank | Yes | 45.98 | This is a viable path |
| Scott Drive to Indian Hills Tank | Yes | 66.78 | This is a viable path |
| Stanfield Well to Tabletop Well | Yes | 65.11 | This is a viable path |
| Stanfield Well to Ranches at Maricopa | Yes | 28.79 | The propagation loss is 20.38 dB. The TFM is less than the desired value of 30.00 dBm. The lesser value is probably due to the combination of a 9.1 mile path length and the high propagation loss. |
| Tanger to Well 28 | Yes | 26.54 | The propagation loss is 25.85 dB. The TFM is less than the desired value of 30.00 dBm. The lesser value is probably due to the high propagation loss resulting from substantial terrain penetration into the fresnel zone. |
| Well 28 to Arizona City Storage and Booster | Yes | 48.72 | This is a viable path |

# 5.0 Recommended System

## 5.1 Path Recommendations

The recommended radio communication paths are the result of individual path profile studies and the microwave budget link analysis. Other considerations leading to this recommendation include a cost effective implementation and the flexibility required for future expansion. The results of this study indicate that the recommended paths with a TFM of 30dB or greater should provide reliable radio communication.

## 5.2 Options for Paths with a TFM of Less than 30dB

A radio signal strength test should be conducted on all paths with a TFM of less than 30 dB prior to design.

### Burgess Peak to Tierra Grande West

Increasing the antenna height at Tierra Grande West to 30 feet may improve the TFM. This option would require that the licensing for this site include an allowance for a 30-foot antenna. Another option would be to raise the antenna at Burgess Peak. A third option would be to repeat the radio signal from Tierra Grande to Tierra Grande West, a short distance of 0.2 miles.

### Stanfield Well to Ranches at Maricopa

Increasing the antenna height at Ranches at Maricopa to 30 feet may improve the TFM. This option would require that the licensing for this site include an allowance for a 30-foot antenna. Another option would be to raise the antenna at Stanfield Well. If either of these options fail to produce favorable results, a cellular system could be used.

### Tanger to Well 28

Increasing the antenna height at Tanger to 30 feet may improve the TFM. This option would require that the licensing for this site include an allowance for a 30 foot antenna.

Figure 3 illustrates the recommended radio communication paths and major hardware items required to achieve these paths.

**Figure 3. Recommended Radio Communication Path**

*Figure 3 inserted in a foldout on the following page.*

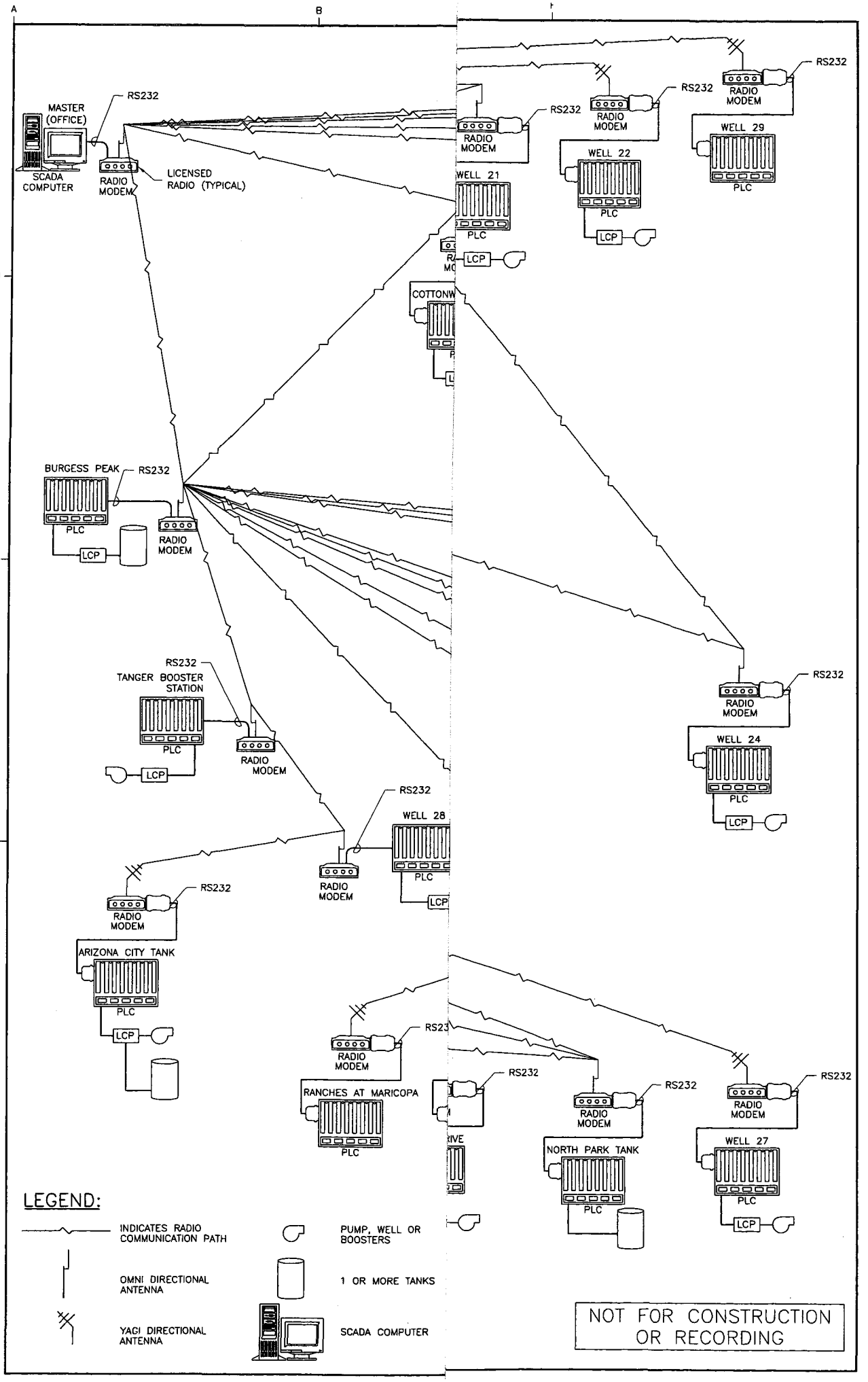


| Rev'd | By | Date |
|---|---|---|
| | | |

DL engineering & controls, llc.
2005 N. Central Ave., Ste. 500, Phx., AZ 85004

# ARIZONA WATER COMPANY
# CITY OF CASA GRANDE
# RECOMMENDED RADIO COMMUNICATION PATH SCHEMATIC

| | |
|---|---|
| Scale | NA |
| Job No. | D632 |
| CADD File No. | CAD FILE |
| Designed | CG |
| Drawn | WRW |
| Checked | BDD |
| Date | JAN 2002 |
| Sheet | |

DCC DATE: 02/08/02 9:10 AM D632_SK-1A.DWG

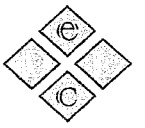



### 5.3 Proposed System Overview

A PC workstation running Human-Machine Interface (HMI) software and alarm dialer software will poll or communicate with each remote site to monitor status, alarms, and collect data. If alarm conditions occur, the PLCs report the alarm condition to the HMI during the next poll cycle, and update all other data in the HMI database. Automatic control of wells and booster stations shall be performed locally by the PLCs, or remotely by the operator using the HMI at the master station. PLC ladder logic programs will start and stop pumps based on tank level setpoints, and pressures at each site. Booster pumps will be staged on starting with the lowest horsepower required to maintain the pressure setpoints. Additionally, the system should monitor all PLC Input/Output (I/O) points and alarm conditions such as pump operation, tank level, system pressures and flows, and power status.

The MTU computer collects the remote site data by polling the well, reservoir, and booster pump sites sequentially. An operator can issue start and stop commands, override the PLC logic, and change setpoints remotely from the MTU workstation at the office.

## 6.0 Equipment Recommendations

### 6.1 Antenna Feed Cable, Connectors, and Protective Devices

Antenna feed cables for the radios should be Andrew Heliax LDF4-50A with Type N connectors and Andrew standard grounding kit. The cable assembly should include a factory prepared 3-foot section of Sureflex F1-PMNSM jumper cable with Type N connectors, and a Polyphaser Series IS50MDLNZ lightning protector. Grounding should be provided at the antenna mast and RTU enclosures.

### 6.2 Antenna

The licensed 173 MHz band radios at the remote site should utilize broadband Yagi-type Scala Model CL7-150/HCM antennas with 7.3 dBm gain. The master station and repeater sites should utilize omni-directional Scala Model OGB4-170 antennas with 4 dBm gain, or Maxrad MFB series antennas. Antenna masts should be manufactured by CEM-TEC Corporation, or equal.

**Table 4. Antenna Types and Heights**

| Site Description | Tank Height | Antenna | | | | |
|---|---|---|---|---|---|---|
| | | Type | | Length | Total Height | FCC Max See Note |
| | | Existing | Required | | | |
| Arizona City Storage Tank & Booster Station | 16 | Yagi | Yagi | 4 | 20 | |
| Burgess Peak | 40 | None | Omni | 2 | 42 | 49.2 |
| Casa Grande Mountain | 40 | None | Omni | 2 | 42 | |
| Cottonwood Lane | 32 | Yagi | Omni | 2 | 34 | 39.4 |
| Indian Hills Tank | 27 | Yagi | Yagi | 2 | 29 | 32.8 |
| Master (Office) | | Omni | Omni | 25 | 25 | |
| North Park Tank | 30 | Yagi | Omni | 4 | 34 | 39.4 |
| Pinal Booster Station | | Omni | Omni | 20 | 20 | |
| Ranches at Maricopa (potential purchase) | | None | | 20 | 20 | |
| Scott Drive Tanks & Booster Station | 52 | Omni | Omni | 2 | 54 | |
| Stanfield Well | 32 | Yagi | Omni | 8 | 40 | |
| Tabletop Well & Booster Station | 18 | None | Yagi | 2 | 20 | |
| Tanger Booster Station | | Omni | Omni | 20 | 20 | |
| Tierra Grande Well & Booster Station | 24 | Yagi | Yagi | 10 | 34 | 32.8 |
| Tierra Grande West(Well W/O Pump) | | None | | 20 | 20 | |
| WELL 10 | | Omni | Omni | 20 | 20 | 19.7 |
| WELL 17 | | Omni | Omni | 20 | 20 | 19.7 |
| WELL 19 | | Omni | Omni | 20 | 20 | 19.7 |
| WELL 20 | | Omni | Omni | 20 | 20 | 19.7 |
| WELL 21 | | Omni | Omni | 20 | 20 | 19.7 |
| WELL 22 | | None | | 20 | 20 | 19.7 |
| WELL 23 | | Omni | Omni | 20 | 20 | 19.7 |
| WELL 24 | | Omni | Omni | 20 | 20 | 19.7 |
| WELL 25 | | Omni | Omni | 20 | 20 | 6.6 |
| WELL 26 | | Omni | Omni | 20 | 20 | |
| WELL 27 | | Omni | Omni | 20 | 20 | |
| WELL 28 | | Omni | Omni | 30 | 30 | 19.7 |
| WELL 29 - New Well Site | | None | | 20 | 20 | |

**Note:**
The FCC max. antenna height is the distance above ground or above the structure that the antenna is mounted upon.

### 6.3 Radios

The Esteem 192M radios being recommended allows three radio repeaters to be used between the endpoints of a transmission route. This system would allow the signal from the Master to be repeated at Burgess Peak to Tierra Grande. The Tierra Grande radio could then act as a repeater sending a signal to a

new site. From the new site the signal could be repeated to one additional new site. Additionally, the Esteem 192M radios will allow a greater flexibility for future expansion.

The Remote Telemetry Units (RTU) being recommended are comprised of a Modicon 984 Compact PLC, an Esteem 192M radio, an uninterruptable power supply (UPS), antenna cable surge suppressor, and necessary terminal blocks, wiring and power supplies.

**Table 5. Site Specific Equipment Recommendations Table**

| Site | Recommendation |
|---|---|
| Arizona City Storage Tank & Booster Station | Install new RTU and use existing Yagi antenna. |
| Burgess Peak | Install new RTU, install new Omni antenna 2 feet above tank. |
| Casa Grande Mountain | Install new RTU, install new Omni antenna 2 feet above tank. |
| Cottonwood Lane | Install new RTU, replace existing Yagi antenna with new Omni antenna mounted 2 feet above tank. |
| Indian Hills Tank | Install new RTU and solar power source, use existing Yagi antenna. The Yagi antenna should be aligned with the Scott Drive site. |
| Master (Office) | Install new SCADA computer, radio, and UPS. Install omni antenna 25 feet above ground. The existing system should remain in operation until all sites have been converted to the new SCADA system and are fully operational. |
| North Park Tank | Install new RTU, replace existing Yagi antenna with new Omni antenna mounted 4 feet above tank. |
| Pinal Booster Station | Install new RTU, install new Omni antenna on a mast at a total height of 19.2 feet. |
| Ranches at Maricopa (potential purchase) | This site is not operational. There are no SCADA equipment recommendations at this time. |
| Scott Drive Tanks & Booster Station | Install new RTU, remove existing Omni antenna from the building mount and re-mount antenna 2 feet above tank. |
| Stanfield Well | Install new RTU, install new Omni antenna mounted 8 feet above tank. |
| Tabletop Well & Booster Station | Install new RTU, install new Yagi antenna 2 feet above tank. |
| Tanger Booster Station | Install new RTU, install existing Omni antenna on a mast at a total height of 19.2 feet. |
| Tierra Grande Well & Booster Station | Install new RTU, increase height of existing Yagi antenna to 10 feet above tank. |
| Tierra Grande West(Well W/O Pump) | This site is not operational. There are no SCADA equipment recommendations at this time. |
| Well 10 | Install new RTU, install existing Omni antenna on a mast at a total height of 19.2 feet. |
| Well 17 | Install new RTU, install new Omni antenna on a mast at a total |

| Site | Recommendation |
|---|---|
| | height of 19.2 feet. |
| Well 19 | Install new RTU, install new Omni antenna on a mast at a total height of 19.2 feet. |
| Well 20 | Install new RTU, install new Omni antenna on a mast at a total height of 19.2 feet. |
| Well 21 | Install new RTU, install existing Omni antenna on a mast at a total height of 19.2 feet. |
| Well 22 | This well runs only in an emergency. There are no SCADA equipment recommendations at this time. |
| Well 23 | Install new RTU, install new Omni antenna on a mast at a total height of 19.2 feet. |
| Well 24 | Install new RTU, install existing Omni antenna on a mast at a total height of 19.2 feet. |
| Well 25 | Install new RTU, install existing Omni antenna on a mast at a total height of 19.2 feet. |
| Well 26 | Install new RTU, install new Omni antenna on a mast at a total height of 19.2 feet. |
| Well 27 | Install new RTU, use existing Omni antenna |
| Well 28 | Install new RTU, install new Omni antenna on a mast at a total height of 30 feet. This antenna height is necessary to maintain a line of sight with Tanger Booster Station. Using a 30 foot height antenna at this site exceeds the FCC maximum height listed on the license. A modification to the license height requirements may be necessary. |
| Well 29 | This site is not operational. There are no SCADA equipment recommendations at this time. |

## 7.0 Opinion of Probable Cost

All sites studied in the radio survey have been included in the Opinion of Probable Cost except Well 22, Well 29, Ranches at Maricopa, and Tierra Grande West. Well 22 runs only in case of emergency. The other three well sites have not yet been equipped, therefore SCADA requirements can not be determined.

The Opinion of Probable Cost includes the cost of new antennas and masts where required, radios and related hardware, a UPS, a Modicon 984 Compact PLC, RTU hardware, well level transducers (for sites with sounding tubes), and pressure transducers for 6 sites. Included for the Master site is a SCADA computer, a UPS, and required SCADA software and licensing.

**Table 6. Opinion of Probable Cost**

| Site Name | Hardware Cost |
|---|---|
| Arizona City Storage Tank & Booster Station | $ 7,615 |
| Burgess Peak | $ 7,289 |
| Casa Grande Mountain | $ 7,289 |
| Cottonwood Lane | $ 14,396 |
| Indian Hills Tank | $ 9,228 |
| Master (Office) | $ 20,747 |
| North Park Tank | $ 7,704 |
| Pinal Booster Station | $ 10,207 |
| Ranches at Maricopa (potential purchase) | $ - |
| Scott Drive Tanks & Booster Station | $ 7,663 |
| Stanfield Well | $ 11,148 |
| Tabletop Well & Booster Station | $ 7,933 |
| Tanger Booster Station | $ 8,830 |
| Tierra Grande Well & Booster Station | $ 8,698 |
| Tierra Grande West(Well W/O Pump) | $ - |
| WELL 10 | $ 9,137 |
| WELL 17 | $ 9,759 |
| WELL 19 | $ 7,730 |
| WELL 20 | $ 11,476 |
| WELL 21 | $ 9,447 |
| WELL 22 | $ - |
| WELL 23 | $ 10,476 |
| WELL 24 | $ 8,040 |
| WELL 25 | $ 9,137 |
| WELL 26 | $ 8,730 |
| WELL 27 | $ 9,137 |
| WELL 28 | $ 12,191 |
| WELL 29 - New Well Site | $ - |
| Hardware Subtotal | $ 234,001 |
| Installation Labor | $ 51,840 |
| Programming | $ 149,850 |
| Engineering | $ 78,200 |
| 20% Contingency | $ 102,778 |
| **Grand Total** | $ 616,669 |

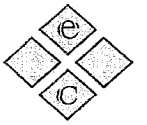



## 8.0 Path Study Data

Each of the 36 paths in the Path Study Data contains the following information:

- Path Profile Plots
- Propagation Loss Calculations
- Link Budget Calculations

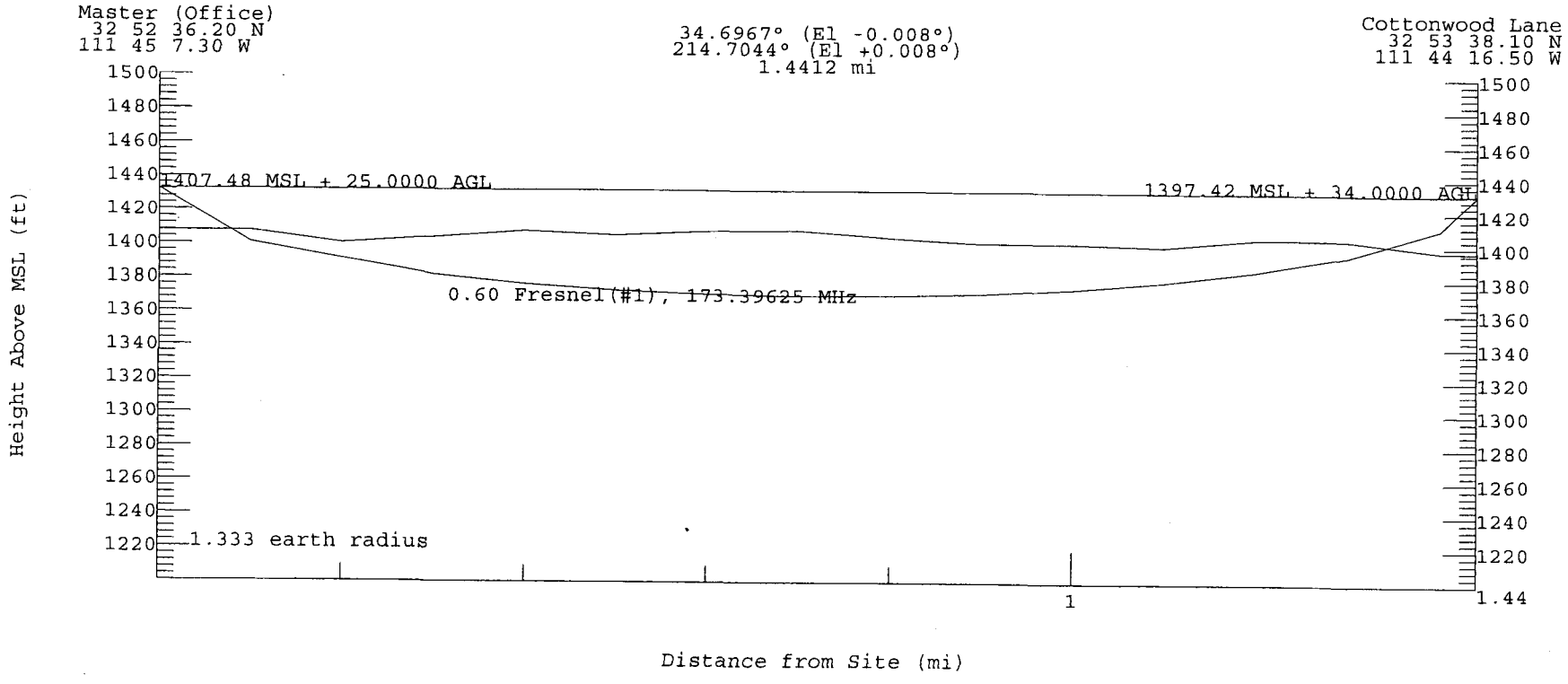
Master (Office)
32 52 36.20 N
111 45 7.30 W
34.6967° (El -0.008°)
214.7044° (El +0.008°)
1.4412 mi
Cottonwood Lane
32 53 38.10 N
111 44 16.50 W
1407.48 MSL + 25.0000 AGL
1397.42 MSL + 34.0000 AGL
0.60 Fresnel(#1), 173.39625 MHz
1.333 earth radius
Height Above MSL (ft)
Distance from Site (mi)
1500
1480
1460
1440
1420
1400
1380
1360
1340
1320
1300
1280
1260
1240
1220
1
1.44

TAP Single Point Field Calculation Parameters
January 23, 2002 13:24

Master (Office): 32 52 36.20 N 111 45 7.30 W
Frequency: 173.39625 MHz ERP: 8.3188 W
Cottonwood Lane: 32 53 38.10 N 111 44 16.50 W
Path: 1.4412 mi; Azimuth 34.6967
Step: 0.1000 mi; Effective Earth Curvature: 1.333
Topo Data: 30-meter
Interpolation: Weighted Interpolation (12 points)

Longley-Rice: LR Defaults
TX Site MSL adjusted to: 1407.48 ft
TX Ant: 1432.48ft MSL (Site 1407.48ft + 25.00ftAGL)
Ant: DLEC Scala Omni
Orientation: 0.00
RX Site MSL adjusted to: 1397.42 ft
RX Ant: 1431.42ft MSL (Site 1397.42ft + 34.00ftAGL)
Azimuth: 34.698
TX Antenna Gain: Az 0.00 dB; El 0.00 dB (angle = -0.008)
Free Space Field: (8.319 W @ 1.441 mi) 78.81 dBu
Free Space Loss: 80.26 dB (between dipoles)
Additional Estimated transmission loss :12.54 dB
Line-of-sight path
LR Mode: 31
Polarization: V
Surface Refrac: 0.00(301.00)
Permittivity: 15.00 Conductivity: 0.0050
Climate: Continental Temperate
Variability:
Situation: 94.00% Time: 94.00% Location: 90.00%
Path terrain Delta-H: 25.07 ft
Effective antenna heights: 26.00 ft 34.00 ft
Net received field: 66.28 dBu

RX Gain: 6.00 dBd
RX Loss: 0.00 dB
RX Input: -47.55 dBm

Microwave System Summary

| | |
|---|---|
| Transmitter | Master (Office) |
| Receiver | Cottonwood Lane |

| NAME | TRANSMIT | RECEIVE |
|---|---|---|
| Freq(MHz) | 173.39625 | 173.39625 |
| Latitude | 32 52 36.20 N | 32 53 38.10 N |
| Longitude | 111 45 7.30 W | 111 44 16.50 W |
| Elv (ft AMSL) | 1407.4800 | 1397.6400 |
| Ant Ht(ft AGL) | 25.0000 | 34.0000 |
| Bearing (deg T) | 34.70° | 214.70° |
| Orien (deg T) | 0.00° | 309.55° |
| Tilt (deg) | -0.01° | 0.01° |
| Line #1 Ls (dB) | 0.82 | 0.82 |
| Line #2 Ls (dB) | 0.00 | 0.00 |
| Other Ls (dB) | 0.00 | 0.00 |
| Antenna Gn | 4.00 dBd | 6.00 dBd |
| Polarization | ver | ver |
| Other Gn (dB) | 0.00 | 0.00 |

| PATH DATA | SYSTEM |
|---|---|
| Distance (mi) | 1.44 |
| Free Sp Ls (dB) | 84.55 |
| Other Ls (dB) | 12.54 |

| SYSTEM SUMMARY | SYSTEM |
|---|---|
| Total Gn (dB) | 14.30 |
| Total Ls (dB) | -98.73 |
| TX Power (dBm) | 36.02 |
| RX Thresh (dBm) | -101.00 |
| RSL (dBm) | -48.41 |
| TFM (dB) | 52.59 |
| Reliability(%) | 100.000000000 |
| Outage(sec/yr) | 0.00 |

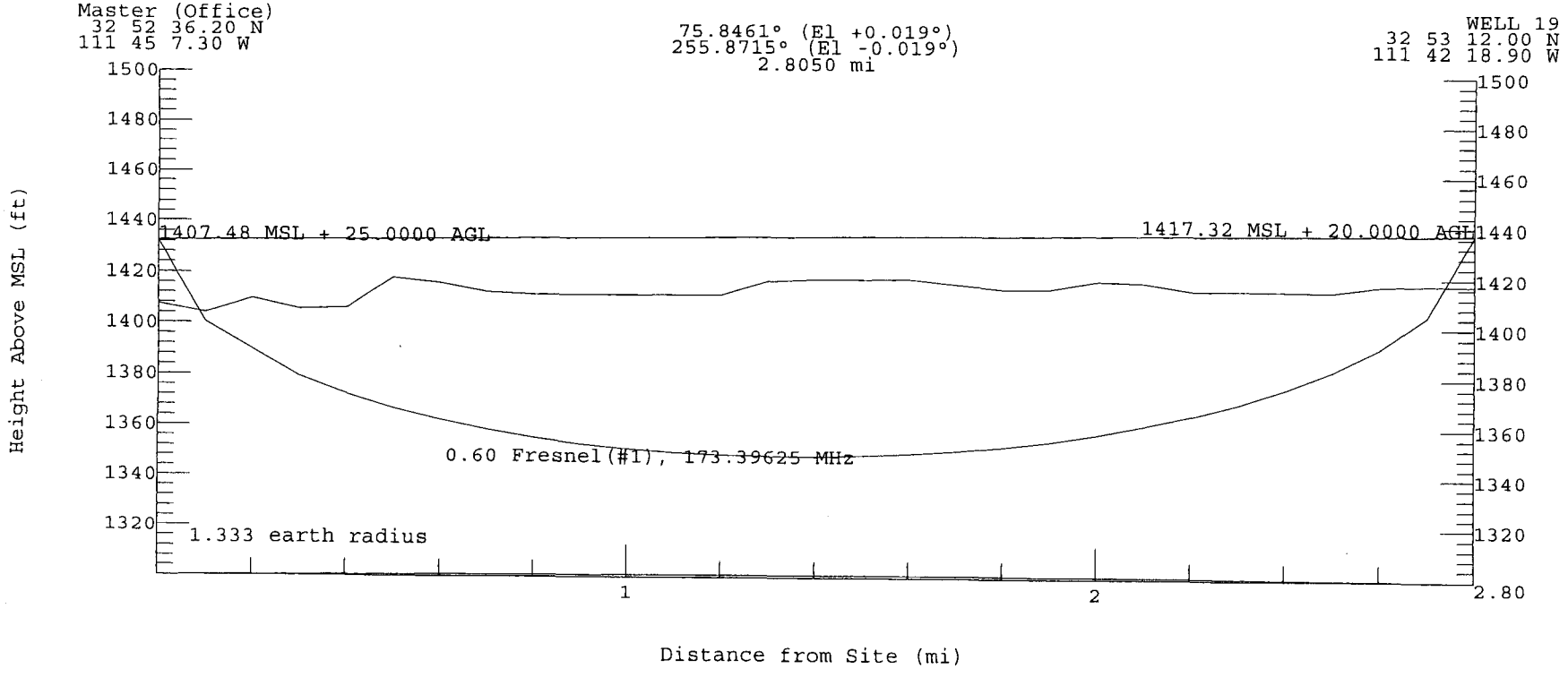
Master (Office)
32 52 36.20 N
111 45 7.30 W
75.8461° (El +0.019°)
255.8715° (El -0.019°)
2.8050 mi
WELL 19
32 53 12.00 N
111 42 18.90 W
1407.48 MSL + 25.0000 AGL
1417.32 MSL + 20.0000 AGL
0.60 Fresnel(#1), 173.39625 MHz
1.333 earth radius
Height Above MSL (ft)
Distance from Site (mi)
1500
1480
1460
1440
1420
1400
1380
1360
1340
1320
1
2
2.80

TAP Single Point Field Calculation Parameters
January 23, 2002 14:28

Master (Office): 32 52 36.20 N 111 45 7.30 W
Frequency: 173.39625 MHz ERP: 8.3188 W
WELL 19: 32 53 12.00 N 111 42 18.90 W
Path: 2.8050 mi; Azimuth 75.8461
Step: 0.1000 mi; Effective Earth Curvature: 1.333
Topo Data: 30-meter
Interpolation: Weighted Interpolation (12 points)

Longley-Rice: LR Defaults
TX Site MSL adjusted to: 1407.48 ft
TX Ant: 1432.48ft MSL (Site 1407.48ft + 25.00ftAGL)
Ant: DLEC Scala Omni
Orientation: 0.00
RX Site MSL adjusted to: 1417.32 ft
RX Ant: 1437.32ft MSL (Site 1417.32ft + 20.00ftAGL)
Azimuth: 75.847
TX Antenna Gain: Az 0.00 dB; El 0.00 dB (angle = 0.019)
Free Space Field: (8.319 W @ 2.805 mi) 73.03 dBu
Free Space Loss: 86.04 dB (between dipoles)
Additional Estimated transmission loss :22.46 dB
Line-of-sight path
LR Mode: 31
Polarization: V
Surface Refrac: 0.00(301.00)
Permittivity: 15.00 Conductivity: 0.0050
Climate: Continental Temperate
Variability:
Situation: 94.00% Time: 94.00% Location: 90.00%
Path terrain Delta-H: 24.47 ft
Effective antenna heights: 25.00 ft 20.00 ft
Net received field: 50.57 dBu

RX Gain: 6.00 dBd
RX Loss: 0.00 dB
RX Input: -63.26 dBm

Microwave System Summary

| | |
|---|---|
| Transmitter | Master (Office) |
| Receiver | WELL 19 |

| NAME | TRANSMIT | RECEIVE |
|---|---|---|
| Freq(MHz) | 173.39625 | 173.39625 |
| Latitude | 32 52 36.20 N | 32 53 12.00 N |
| Longitude | 111 45 7.30 W | 111 42 18.90 W |
| Elv (ft AMSL) | 1407.4800 | 1417.3200 |
| Ant Ht(ft AGL) | 25.0000 | 20.0000 |
| Bearing (deg T) | 75.85° | 255.87° |
| Orien (deg T) | 0.00° | 309.55° |
| Tilt (deg) | 0.02° | -0.02° |
| Line #1 Ls (dB) | 0.82 | 0.82 |
| Line #2 Ls (dB) | 0.00 | 0.00 |
| Other Ls (dB) | 0.00 | 0.00 |
| Antenna Gn | 4.00 dBd | 6.00 dBd |
| Polarization | ver | ver |
| Other Gn (dB) | 0.00 | 0.00 |

| PATH DATA | SYSTEM |
|---|---|
| Distance (mi) | 2.80 |
| Free Sp Ls (dB) | 90.32 |
| Other Ls (dB) | 22.46 |

| SYSTEM SUMMARY | SYSTEM |
|---|---|
| Total Gn (dB) | 14.30 |
| Total Ls (dB) | -114.42 |
| TX Power (dBm) | 36.02 |
| RX Thresh (dBm) | -101.00 |
| RSL (dBm) | -64.10 |
| TFM (dB) | 36.90 |
| Reliability(%) | 99.999999951 |
| Outage(sec/yr) | 0.02 |

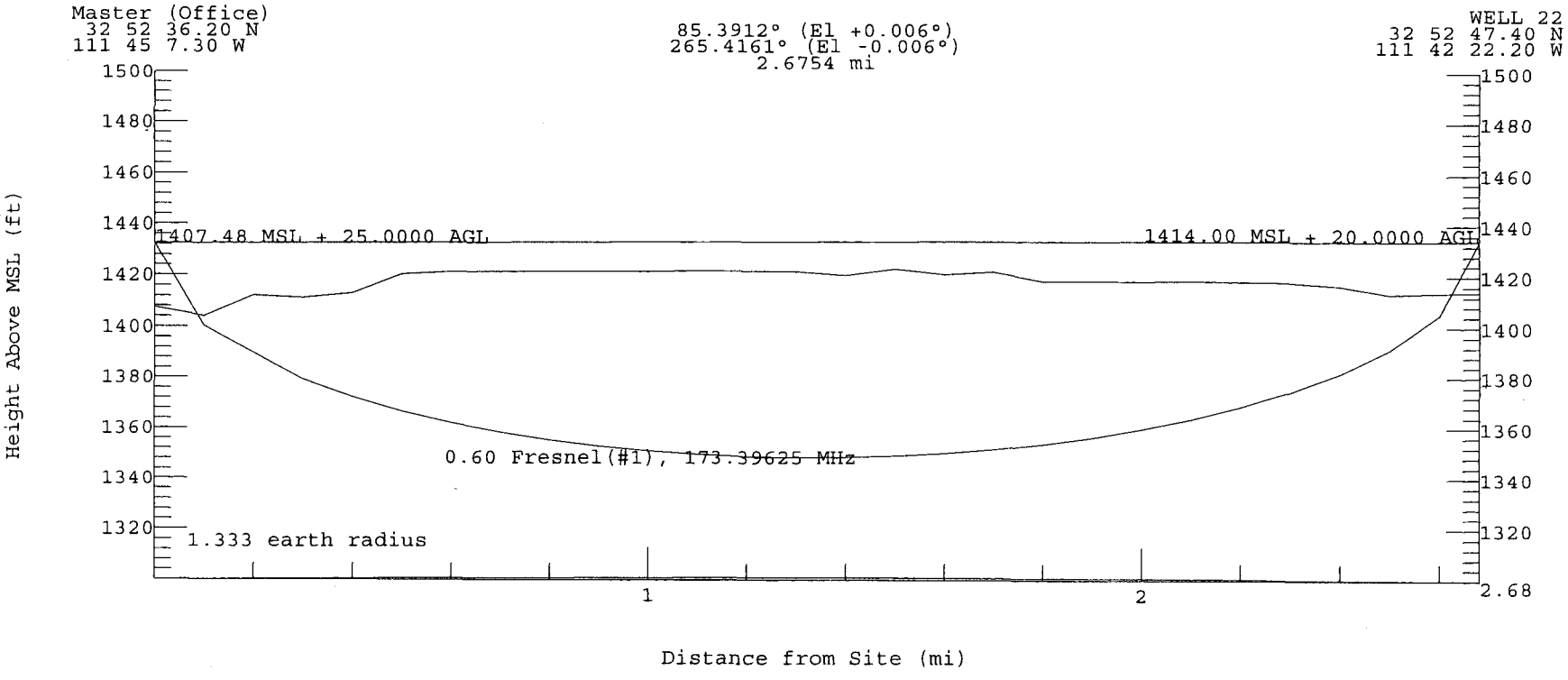
Master (Office)
32 52 36.20 N
111 45 7.30 W
85.3912° (El +0.006°)
265.4161° (El -0.006°)
2.6754 mi
WELL 22
32 52 47.40 N
111 42 22.20 W
1407.48 MSL + 25.0000 AGL
1414.00 MSL + 20.0000 AGL
0.60 Fresnel(#1), 173.39625 MHz
1.333 earth radius
Height Above MSL (ft)
Distance from Site (mi)
1500
1480
1460
1440
1420
1400
1380
1360
1340
1320
1
2
2.68

TAP Single Point Field Calculation Parameters
January 23, 2002 14:35

Master (Office): 32 52 36.20 N 111 45 7.30 W
Frequency: 173.39625 MHz ERP: 8.3188 W
WELL 22: 32 52 47.40 N 111 42 22.20 W
Path: 2.6754 mi; Azimuth 85.3912
Step: 0.1000 mi; Effective Earth Curvature: 1.333
Topo Data: 30-meter
Interpolation: Weighted Interpolation (12 points)

Longley-Rice: LR Defaults
TX Site MSL adjusted to: 1407.48 ft
TX Ant: 1432.48ft MSL (Site 1407.48ft + 25.00ftAGL)
Ant: DLEC Scala Omni
Orientation: 0.00
RX Site MSL adjusted to: 1414.00 ft
RX Ant: 1434.00ft MSL (Site 1414.00ft + 20.00ftAGL)
Azimuth: 85.392
TX Antenna Gain: Az 0.00 dB; El 0.00 dB (angle = 0.006)
Free Space Field: (8.319 W @ 2.675 mi) 73.44 dBu
Free Space Loss: 85.63 dB (between dipoles)
Additional Estimated transmission loss :22.12 dB
Line-of-sight path
LR Mode: 31
Polarization: V
Surface Refrac: 0.00(301.00)
Permittivity: 15.00 Conductivity: 0.0050
Climate: Continental Temperate
Variability:
Situation: 94.00% Time: 94.00% Location: 90.00%
Path terrain Delta-H: 32.54 ft
Effective antenna heights: 25.00 ft 20.00 ft
Net received field: 51.32 dBu

RX Gain: 6.00 dBd
RX Loss: 0.00 dB
RX Input: -62.51 dBm

Microwave System Summary

| | |
|---|---|
| Transmitter | Master (Office) |
| Receiver | WELL 22 |

| NAME | TRANSMIT | RECEIVE |
|---|---|---|
| Freq(MHz) | 173.39625 | 173.39625 |
| Latitude | 32 52 36.20 N | 32 52 47.40 N |
| Longitude | 111 45 7.30 W | 111 42 22.20 W |
| Elv (ft AMSL) | 1407.4800 | 1414.0400 |
| Ant Ht(ft AGL) | 25.0000 | 20.0000 |
| Bearing (deg T) | 85.39° | 265.42° |
| Orien (deg T) | 0.00° | 309.55° |
| Tilt (deg) | 0.01° | -0.01° |
| Line #1 Ls (dB) | 0.82 | 0.82 |
| Line #2 Ls (dB) | 0.00 | 0.00 |
| Other Ls (dB) | 0.00 | 0.00 |
| Antenna Gn | 4.00 dBd | 6.00 dBd |
| Polarization | ver | ver |
| Other Gn (dB) | 0.00 | 0.00 |

| PATH DATA | SYSTEM |
|---|---|
| Distance (mi) | 2.68 |
| Free Sp Ls (dB) | 89.94 |
| Other Ls (dB) | 22.12 |

| SYSTEM SUMMARY | SYSTEM |
|---|---|
| Total Gn (dB) | 14.30 |
| Total Ls (dB) | -113.70 |
| TX Power (dBm) | 36.02 |
| RX Thresh (dBm) | -101.00 |
| RSL (dBm) | -63.38 |
| TFM (dB) | 37.62 |
| Reliability(%) | 99.999999964 |
| Outage(sec/yr) | 0.01 |

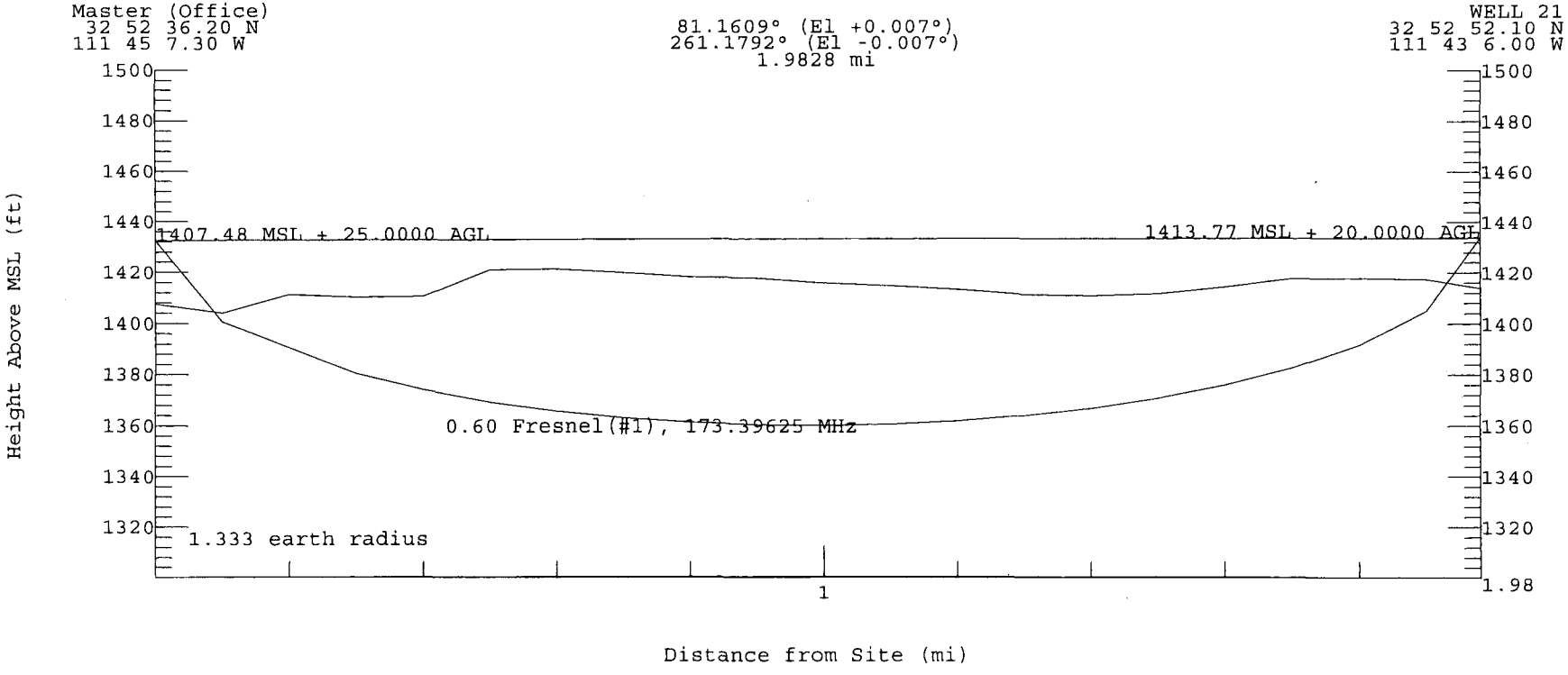
Master (Office)
32 52 36.20 N
111 45 7.30 W
81.1609° (El +0.007°)
261.1792° (El -0.007°)
1.9828 mi
WELL 21
32 52 52.10 N
111 43 6.00 W
1500
1480
1460
1440
1420
1400
1380
1360
1340
1320
1407.48 MSL + 25.0000 AGL
1413.77 MSL + 20.0000 AGL
0.60 Fresnel(#1), 173.39625 MHz
1.333 earth radius
1
1.98
Height Above MSL (ft)
Distance from Site (mi)

TAP Single Point Field Calculation Parameters
January 23, 2002 14:45

Master (Office): 32 52 36.20 N 111 45 7.30 W
Frequency: 173.39625 MHz ERP: 8.3188 W
WELL 21: 32 52 52.10 N 111 43 6.00 W
Path: 1.9828 mi; Azimuth 81.1609
Step: 0.1000 mi; Effective Earth Curvature: 1.333
Topo Data: 30-meter
Interpolation: Weighted Interpolation (12 points)

Longley-Rice: LR Defaults
TX Site MSL adjusted to: 1407.48 ft
TX Ant: 1432.48ft MSL (Site 1407.48ft + 25.00ftAGL)
Ant: DLEC Scala Omni
Orientation: 0.00
RX Site MSL adjusted to: 1413.77 ft
RX Ant: 1433.77ft MSL (Site 1413.77ft + 20.00ftAGL)
Azimuth: 81.162
TX Antenna Gain: Az 0.00 dB; El 0.00 dB (angle = 0.007)
Free Space Field: (8.319 W @ 1.983 mi) 76.04 dBu
Free Space Loss: 83.03 dB (between dipoles)
Additional Estimated transmission loss :19.87 dB
Line-of-sight path
LR Mode: 31
Polarization: V
Surface Refrac: 0.00(301.00)
Permittivity: 15.00 Conductivity: 0.0050
Climate: Continental Temperate
Variability:
Situation: 94.00% Time: 94.00% Location: 90.00%
Path terrain Delta-H: 41.26 ft
Effective antenna heights: 25.00 ft 20.00 ft
Net received field: 56.17 dBu

RX Gain: 6.00 dBd
RX Loss: 0.00 dB
RX Input: -57.66 dBm

Microwave System Summary

Transmitter Master (Office)
Receiver WELL 21

| NAME | TRANSMIT | RECEIVE |
|---|---|---|
| Freq(MHz) | 173.39625 | 173.39625 |
| Latitude | 32 52 36.20 N | 32 52 52.10 N |
| Longitude | 111 45 7.30 W | 111 43 6.00 W |
| Elv (ft AMSL) | 1407.4800 | 1414.0400 |
| Ant Ht(ft AGL) | 25.0000 | 20.0000 |
| Bearing (deg T) | 81.16° | 261.18° |
| Orien (deg T) | 0.00° | 309.55° |
| Tilt (deg) | 0.01° | -0.01° |
| Line #1 Ls (dB) | 0.82 | 0.82 |
| Line #2 Ls (dB) | 0.00 | 0.00 |
| Other Ls (dB) | 0.00 | 0.00 |
| Antenna Gn | 4.00 dBd | 6.00 dBd |
| Polarization | ver | ver |
| Other Gn (dB) | 0.00 | 0.00 |

| PATH DATA | SYSTEM |
|---|---|
| Distance (mi) | 1.98 |
| Free Sp Ls (dB) | 87.31 |
| Other Ls (dB) | 19.87 |

| SYSTEM SUMMARY | SYSTEM |
|---|---|
| Total Gn (dB) | 14.30 |
| Total Ls (dB) | -108.82 |
| TX Power (dBm) | 36.02 |
| RX Thresh (dBm) | -101.00 |
| RSL (dBm) | -58.50 |
| TFM (dB) | 42.50 |
| Reliability(%) | 99.999999995 |
| Outage(sec/yr) | 0.00 |

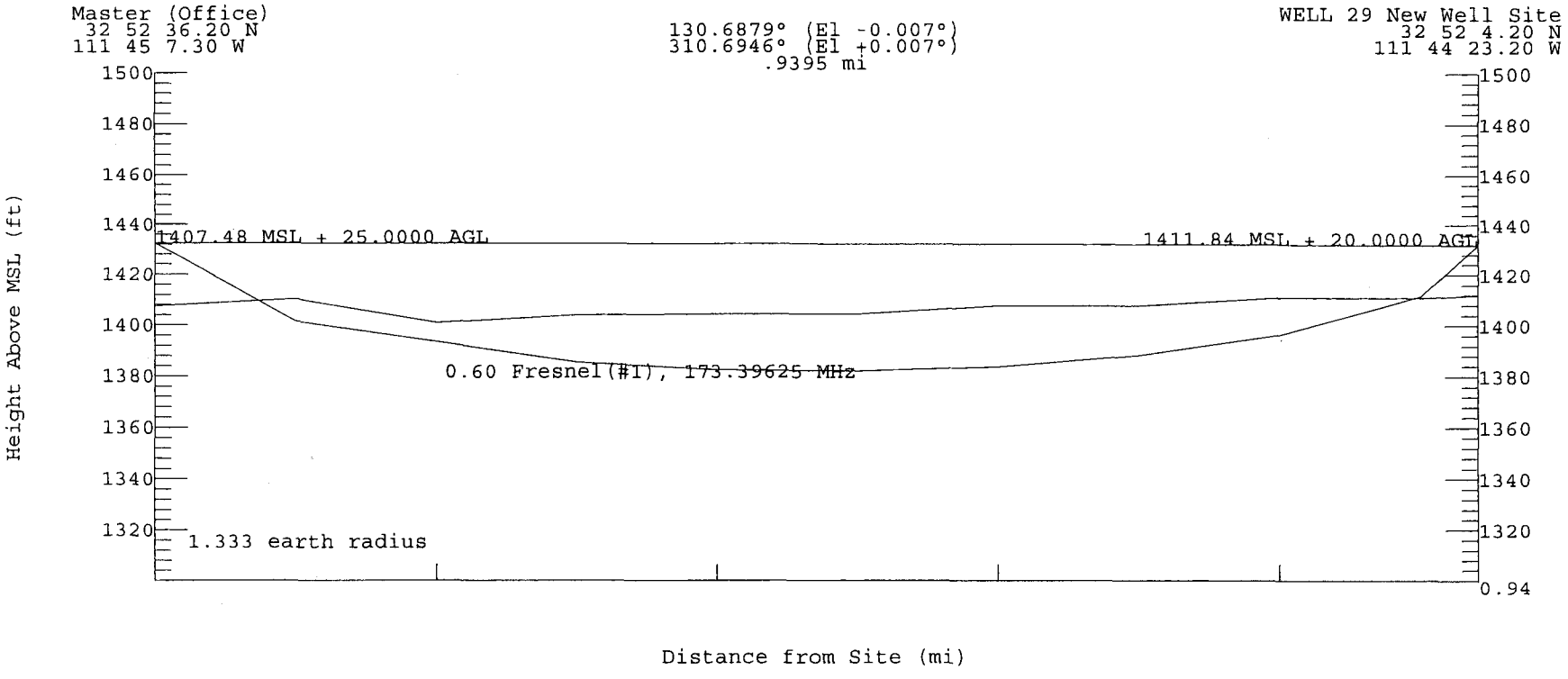
Master (Office)
32 52 36.20 N
111 45 7.30 W
130.6879° (El -0.007°)
310.6946° (El +0.007°)
.9395 mi
WELL 29 New Well Site
32 52 4.20 N
111 44 23.20 W
1500
1480
1460
1440
1420
1400
1380
1360
1340
1320
1407.48 MSL + 25.0000 AGL
1411.84 MSL + 20.0000 AGL
0.60 Fresnel(#1), 173.39625 MHz
1.333 earth radius
0.94
Height Above MSL (ft)
Distance from Site (mi)

TAP Single Point Field Calculation Parameters
January 23, 2002 14:50

Master (Office): 32 52 36.20 N 111 45 7.30 W
Frequency: 173.39625 MHz ERP: 8.3188 W
WELL 29 New Well Site: 32 52 4.20 N 111 44 23.20 W
Path: 0.9395 mi; Azimuth 130.6879
Step: 0.1000 mi; Effective Earth Curvature: 1.333
Topo Data: 30-meter
Interpolation: Weighted Interpolation (12 points)

Longley-Rice: LR Defaults
TX Site MSL adjusted to: 1407.48 ft
TX Ant: 1432.48ft MSL (Site 1407.48ft + 25.00ftAGL)
Ant: DLEC Scala Omni
Orientation: 0.00
RX Site MSL adjusted to: 1411.84 ft
RX Ant: 1431.84ft MSL (Site 1411.84ft + 20.00ftAGL)
Azimuth: 130.686
TX Antenna Gain: Az 0.00 dB; El 0.00 dB (angle = -0.008)
Free Space Field: (8.319 W @ 0.940 mi) 82.53 dBu
Free Space Loss: 76.54 dB (between dipoles)
Additional Estimated transmission loss :11.92 dB
Line-of-sight path
LR Mode: 31
Polarization: V
Surface Refrac: 0.00(301.00)
Permittivity: 15.00 Conductivity: 0.0050
Climate: Continental Temperate
Variability:
Situation: 94.00% Time: 94.00% Location: 90.00%
Path terrain Delta-H: 17.75 ft
Effective antenna heights: 28.73 ft 21.74 ft
Net received field: 70.61 dBu

RX Gain: 6.00 dBd
RX Loss: 0.00 dB
RX Input: -43.22 dBm

Microwave System Summary

Transmitter Master (Office)
Receiver WELL 29 New Well Site

| NAME | TRANSMIT | RECEIVE |
|---|---|---|
| Freq(MHz) | 173.39625 | 173.39625 |
| Latitude | 32 52 36.20 N | 32 52 4.20 N |
| Longitude | 111 45 7.30 W | 111 44 23.20 W |
| Elv (ft AMSL) | 1407.4800 | 1411.8600 |
| Ant Ht(ft AGL) | 25.0000 | 20.0000 |
| Bearing (deg T) | 130.69° | 310.69° |
| Orien (deg T) | 0.00° | 309.55° |
| Tilt (deg) | -0.01° | 0.01° |
| Line #1 Ls (dB) | 0.82 | 0.82 |
| Line #2 Ls (dB) | 0.00 | 0.00 |
| Other Ls (dB) | 0.00 | 0.00 |
| Antenna Gn | 4.00 dBd | 6.00 dBd |
| Polarization | ver | ver |
| Other Gn (dB) | 0.00 | 0.00 |

| PATH DATA | SYSTEM |
|---|---|
| Distance (mi) | .94 |
| Free Sp Ls (dB) | 80.84 |
| Other Ls (dB) | 11.92 |

| SYSTEM SUMMARY | SYSTEM |
|---|---|
| Total Gn (dB) | 14.30 |
| Total Ls (dB) | -94.40 |
| TX Power (dBm) | 36.02 |
| RX Thresh (dBm) | -101.00 |
| RSL (dBm) | -44.08 |
| TFM (dB) | 56.92 |
| Reliability(%) | 100.000000000 |
| Outage(sec/yr) | 0.00 |

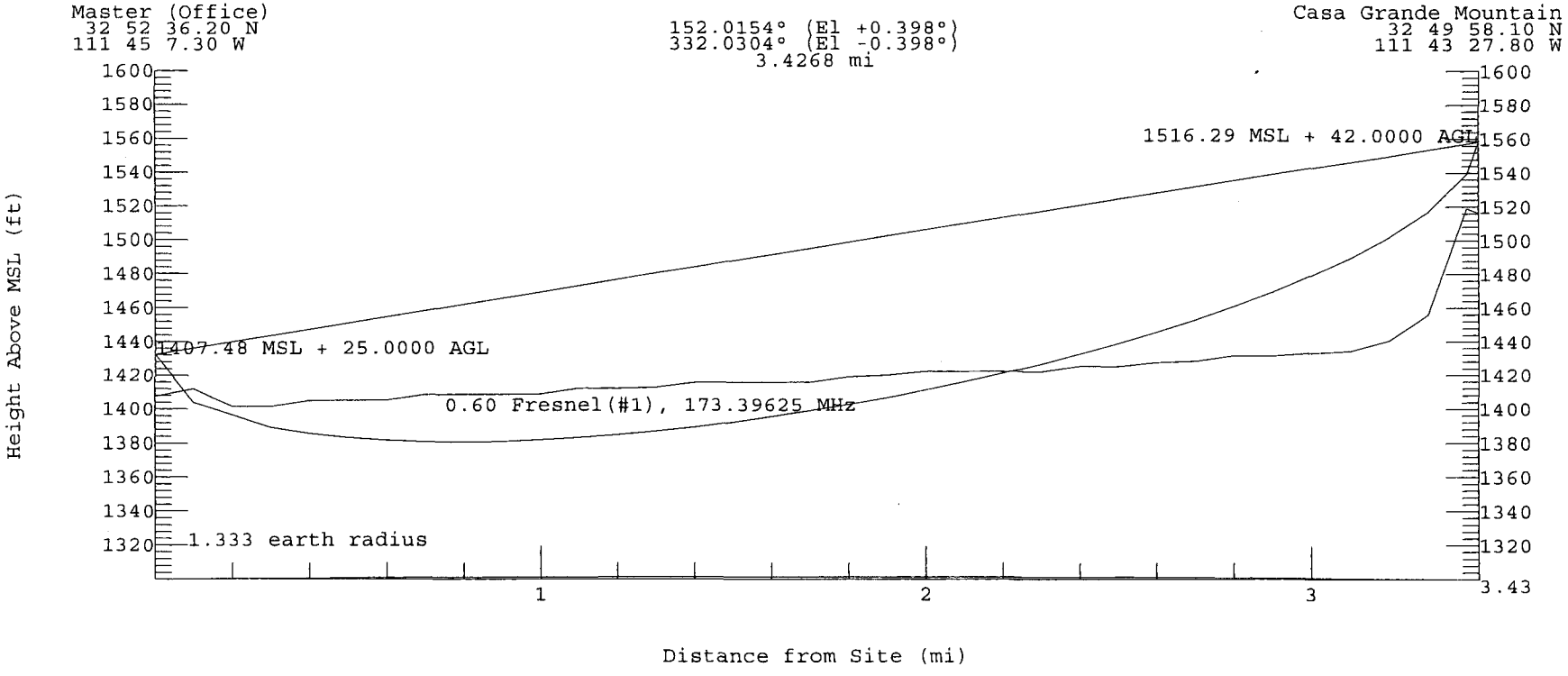
Master (Office)
32 52 36.20 N
111 45 7.30 W
152.0154° (El +0.398°)
332.0304° (El -0.398°)
3.4268 mi
Casa Grande Mountain
32 49 58.10 N
111 43 27.80 W
1516.29 MSL + 42.0000 AGL
1407.48 MSL + 25.0000 AGL
0.60 Fresnel(#1), 173.39625 MHz
1.333 earth radius
Height Above MSL (ft)
Distance from Site (mi)
1600
1580
1560
1540
1520
1500
1480
1460
1440
1420
1400
1380
1360
1340
1320
1
2
3
3.43

TAP Single Point Field Calculation Parameters
January 23, 2002 14:54

Master (Office): 32 52 36.20 N 111 45 7.30 W
Frequency: 173.39625 MHz ERP: 8.3188 W
Casa Grande Mountain: 32 49 58.10 N 111 43 27.80 W
Path: 3.4268 mi; Azimuth 152.0154
Step: 0.1000 mi; Effective Earth Curvature: 1.333
Topo Data: 30-meter
Interpolation: Weighted Interpolation (12 points)

Longley-Rice: LR Defaults
TX Site MSL adjusted to: 1407.48 ft
TX Ant: 1432.48ft MSL (Site 1407.48ft + 25.00ftAGL)
Ant: DLEC Scala Omni
Orientation: 0.00
RX Site MSL adjusted to: 1516.29 ft
RX Ant: 1558.29ft MSL (Site 1516.29ft + 42.00ftAGL)
Azimuth: 152.014
TX Antenna Gain: Az 0.00 dB; El 0.00 dB (angle = 0.399)
Free Space Field: (8.319 W @ 3.427 mi) 71.29 dBu
Free Space Loss: 87.78 dB (between dipoles)
Additional Estimated transmission loss :6.57 dB
Line-of-sight path
LR Mode: 31
Polarization: V
Surface Refrac: 0.00(301.00)
Permittivity: 15.00 Conductivity: 0.0050
Climate: Continental Temperate
Variability:
Situation: 94.00% Time: 94.00% Location: 90.00%
Path terrain Delta-H: 39.88 ft
Effective antenna heights: 36.45 ft 114.71 ft
Net received field: 64.72 dBu

RX Gain: 6.00 dBd
RX Loss: 0.00 dB
RX Input: -49.11 dBm

Microwave System Summary

| | |
|---|---|
| Transmitter | Master (Office) |
| Receiver | Casa Grande Mountain |

| NAME | TRANSMIT | RECEIVE |
|---|---|---|
| Freq(MHz) | 173.39625 | 173.39625 |
| Latitude | 32 52 36.20 N | 32 49 58.10 N |
| Longitude | 111 45 7.30 W | 111 43 27.80 W |
| Elv (ft AMSL) | 1407.4800 | 1519.0200 |
| Ant Ht(ft AGL) | 25.0000 | 42.0000 |
| Bearing (deg T) | 152.02° | 332.03° |
| Orien (deg T) | 0.00° | 309.55° |
| Tilt (deg) | 0.41° | -0.41° |
| Line #1 Ls (dB) | 0.82 | 0.82 |
| Line #2 Ls (dB) | 0.00 | 0.00 |
| Other Ls (dB) | 0.00 | 0.00 |
| Antenna Gn | 4.00 dBd | 4.00 dBd |
| Polarization | ver | ver |
| Other Gn (dB) | 0.00 | 0.00 |

| PATH DATA | SYSTEM |
|---|---|
| Distance (mi) | 3.43 |
| Free Sp Ls (dB) | 92.09 |
| Other Ls (dB) | 6.57 |

| SYSTEM SUMMARY | SYSTEM |
|---|---|
| Total Gn (dB) | 12.30 |
| Total Ls (dB) | -100.30 |
| TX Power (dBm) | 36.02 |
| RX Thresh (dBm) | -101.00 |
| RSL (dBm) | -51.98 |
| TFM (dB) | 49.02 |
| Reliability(%) | 99.999999995 |
| Outage(sec/yr) | 0.00 |

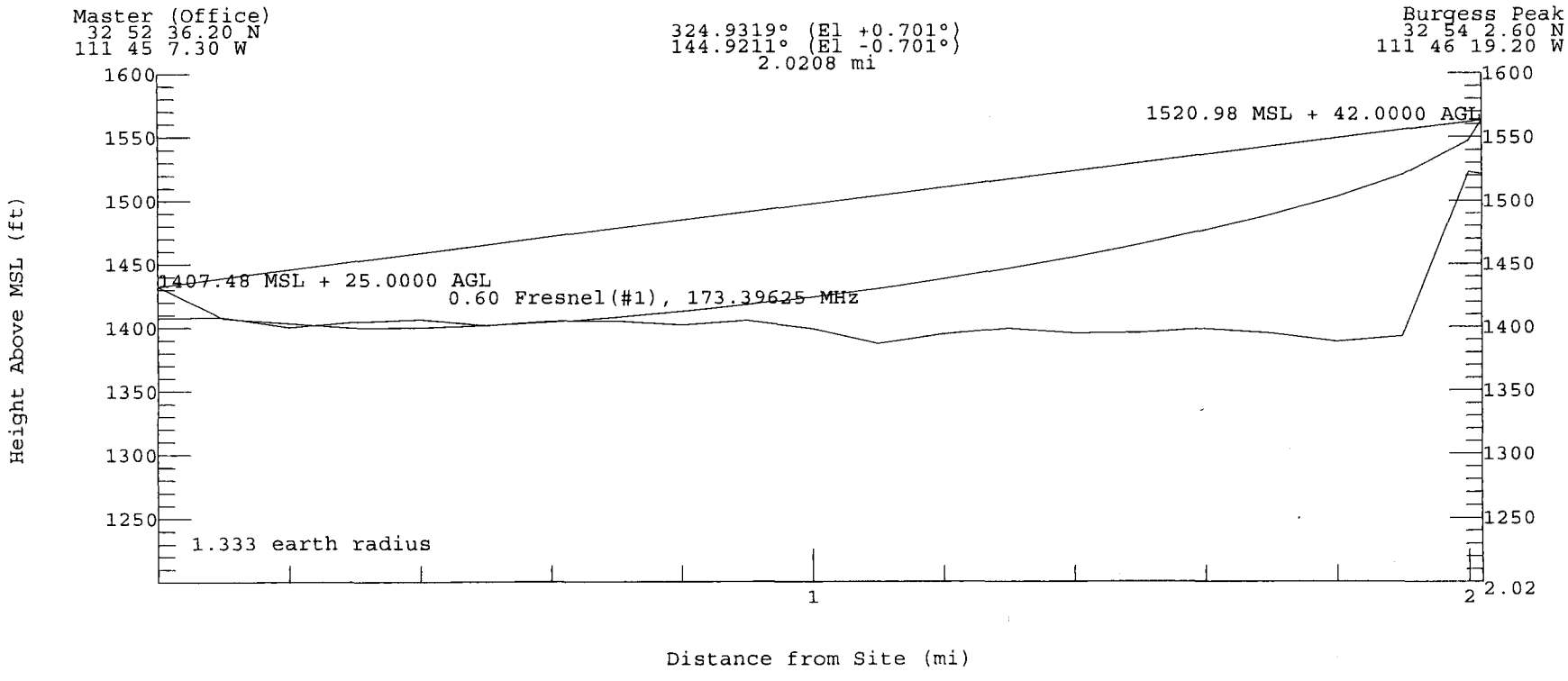
Master (Office)
32 52 36.20 N
111 45 7.30 W
324.9319° (El +0.701°)
144.9211° (El -0.701°)
2.0208 mi
Burgess Peak
32 54 2.60 N
111 46 19.20 W
1520.98 MSL + 42.0000 AGL
1407.48 MSL + 25.0000 AGL
0.60 Fresnel(#1), 173.39625 MHz
1.333 earth radius
Height Above MSL (ft)
Distance from Site (mi)
1600
1550
1500
1450
1400
1350
1300
1250
1
2
2.02

TAP Single Point Field Calculation Parameters
January 23, 2002 15:00

Master (Office): 32 52 36.20 N 111 45 7.30 W
Frequency: 173.39625 MHz ERP: 8.3188 W
Burgess Peak: 32 54 2.60 N 111 46 19.20 W
Path: 2.0208 mi; Azimuth 324.9319
Step: 0.1000 mi; Effective Earth Curvature: 1.333
Topo Data: 30-meter
Interpolation: Weighted Interpolation (12 points)

Longley-Rice: LR Defaults
TX Site MSL adjusted to: 1407.48 ft
TX Ant: 1432.48ft MSL (Site 1407.48ft + 25.00ftAGL)
Ant: DLEC Scala Omni
Orientation: 0.00
RX Site MSL adjusted to: 1520.98 ft
RX Ant: 1562.98ft MSL (Site 1520.98ft + 42.00ftAGL)
Azimuth: 324.930
TX Antenna Gain: Az 0.00 dB; El 0.00 dB (angle = 0.701)
Free Space Field: (8.319 W @ 2.021 mi) 75.88 dBu
Free Space Loss: 83.19 dB (between dipoles)
Additional Estimated transmission loss :1.38 dB
Line-of-sight path
LR Mode: 31
Polarization: V
Surface Refrac: 0.00(301.00)
Permittivity: 15.00 Conductivity: 0.0050
Climate: Continental Temperate
Variability:
Situation: 94.00% Time: 94.00% Location: 90.00%
Path terrain Delta-H: 52.32 ft
Effective antenna heights: 32.40 ft 159.53 ft
Net received field: 74.50 dBu

RX Gain: 6.00 dBd
RX Loss: 0.00 dB
RX Input: -39.33 dBm

Microwave System Summary

| | |
|---|---|
| Transmitter | Master (Office) |
| Receiver | Burgess Peak |

| NAME | TRANSMIT | RECEIVE |
|---|---|---|
| Freq(MHz) | 173.39625 | 173.39625 |
| Latitude | 32 52 36.20 N | 32 54 2.60 N |
| Longitude | 111 45 7.30 W | 111 46 19.20 W |
| Elv (ft AMSL) | 1407.4800 | 1517.7600 |
| Ant Ht(ft AGL) | 25.0000 | 42.0000 |
| Bearing (deg T) | 324.93° | 144.92° |
| Orien (deg T) | 0.00° | 309.55° |
| Tilt (deg) | 0.69° | -0.69° |
| Line #1 Ls (dB) | 0.82 | 0.82 |
| Line #2 Ls (dB) | 0.00 | 0.00 |
| Other Ls (dB) | 0.00 | 0.00 |
| Antenna Gn | 4.00 dBd | 4.00 dBd |
| Polarization | ver | ver |
| Other Gn (dB) | 0.00 | 0.00 |

| PATH DATA | | SYSTEM |
|---|---|---|
| Distance (mi) | 2.02 | |
| Free Sp Ls (dB) | 87.49 | |
| Other Ls (dB) | 1.38 | |

| SYSTEM SUMMARY | | SYSTEM |
|---|---|---|
| Total Gn (dB) | 12.30 | |
| Total Ls (dB) | -90.51 | |
| TX Power (dBm) | | 36.02 |
| RX Thresh (dBm) | | -101.00 |
| RSL (dBm) | -42.19 | |
| TFM (dB) | 58.81 | |
| Reliability(%) | 100.000000000 | |
| Outage(sec/yr) | 0.00 | |

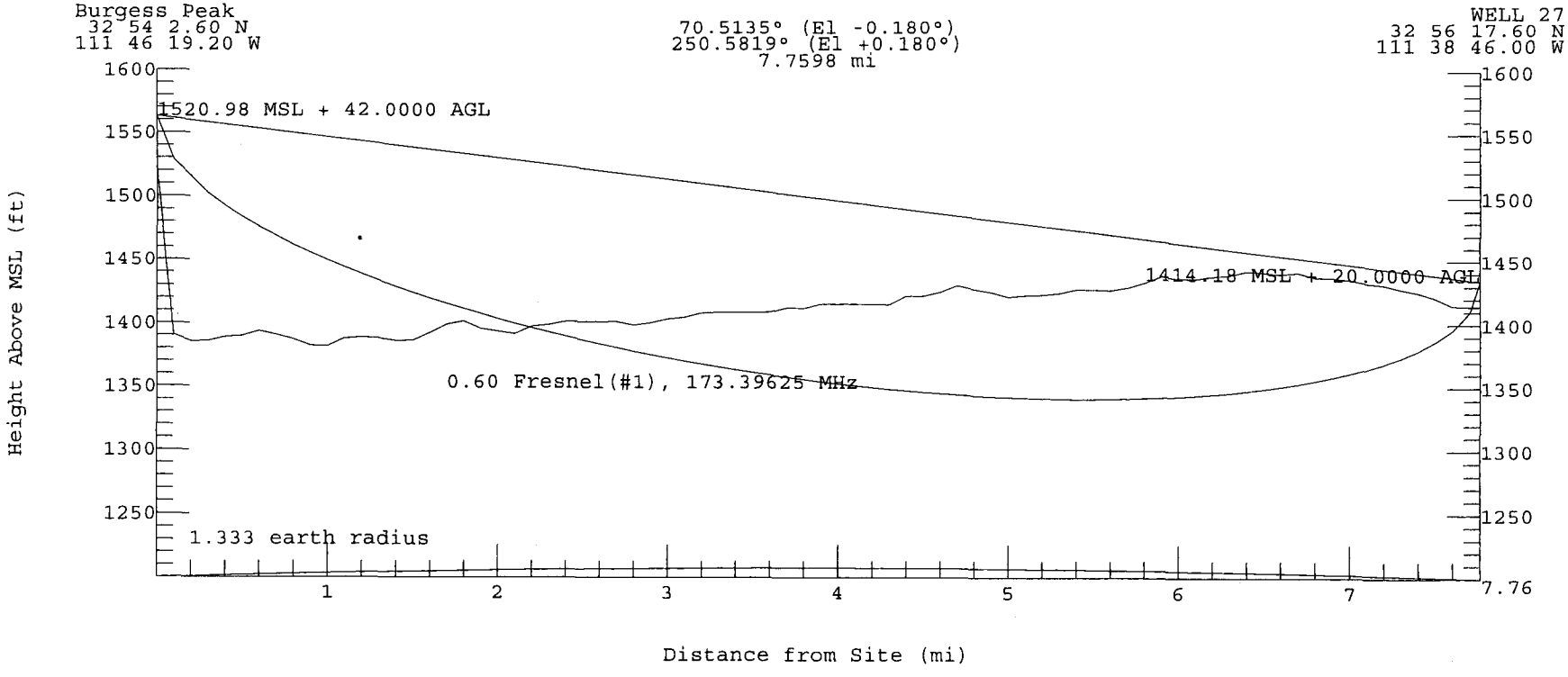
Burgess Peak
32 54 2.60 N
111 46 19.20 W
70.5135° (El -0.180°)
250.5819° (El +0.180°)
7.7598 mi
WELL 27
32 56 17.60 N
111 38 46.00 W
1520.98 MSL + 42.0000 AGL
1414.18 MSL + 20.0000 AGL
0.60 Fresnel(#1), 173.39625 MHz
1.333 earth radius
Height Above MSL (ft)
Distance from Site (mi)
1600
1550
1500
1450
1400
1350
1300
1250
1
2
3
4
5
6
7
7.76

TAP Single Point Field Calculation Parameters
January 23, 2002 15:45

Burgess Peak: 32 54 2.60 N 111 46 19.20 W
Frequency: 173.39625 MHz ERP: 8.3188 W
WELL 27: 32 56 17.60 N 111 38 46.00 W
Path: 7.7598 mi; Azimuth 70.5135
Step: 0.1000 mi; Effective Earth Curvature: 1.333
Topo Data: 30-meter
Interpolation: Weighted Interpolation (12 points)

Longley-Rice: LR Defaults
TX Site MSL adjusted to: 1520.98 ft
TX Ant: 1562.98ft MSL (Site 1520.98ft + 42.00ftAGL)
Ant: DLEC Scala Omni
Orientation: 0.00
RX Site MSL adjusted to: 1414.18 ft
RX Ant: 1434.18ft MSL (Site 1414.18ft + 20.00ftAGL)
Azimuth: 70.515
TX Antenna Gain: Az 0.00 dB; El 0.00 dB (angle = -0.180)
Free Space Field: (8.319 W @ 7.760 mi) 64.19 dBu
Free Space Loss: 94.88 dB (between dipoles)
Additional Estimated transmission loss :14.41 dB
Line-of-sight path
LR Mode: 31
Polarization: V
Surface Refrac: 0.00(301.00)
Permittivity: 15.00 Conductivity: 0.0050
Climate: Continental Temperate
Variability:
Situation: 94.00% Time: 94.00% Location: 90.00%
Path terrain Delta-H: 40.97 ft
Effective antenna heights: 185.06 ft 20.00 ft
Net received field: 49.78 dBu

RX Gain: 6.00 dBd
RX Loss: 0.00 dB
RX Input: -64.05 dBm

Microwave System Summary

Transmitter Burgess Peak
Receiver WELL 27

| NAME | TRANSMIT | RECEIVE |
|---|---|---|
| Freq(MHz) | 173.39625 | 173.39625 |
| Latitude | 32 54 2.60 N | 32 56 17.60 N |
| Longitude | 111 46 19.20 W | 111 38 46.00 W |
| Elv (ft AMSL) | 1517.7600 | 1414.0400 |
| Ant Ht(ft AGL) | 42.0000 | 20.0000 |
| Bearing (deg T) | 70.51° | 250.58° |
| Orien (deg T) | 0.00° | 309.55° |
| Tilt (deg) | -0.18° | 0.18° |
| Line #1 Ls (dB) | 0.82 | 0.82 |
| Line #2 Ls (dB) | 0.00 | 0.00 |
| Other Ls (dB) | 0.00 | 0.00 |
| Antenna Gn | 4.00 dBd | 6.00 dBd |
| Polarization | ver | ver |
| Other Gn (dB) | 0.00 | 0.00 |

| PATH DATA | SYSTEM |
|---|---|
| Distance (mi) | 7.76 |
| Free Sp Ls (dB) | 99.18 |
| Other Ls (dB) | 14.41 |

| SYSTEM SUMMARY | SYSTEM |
|---|---|
| Total Gn (dB) | 14.30 |
| Total Ls (dB) | -115.23 |
| TX Power (dBm) | 36.02 |
| RX Thresh (dBm) | -101.00 |
| RSL (dBm) | -64.91 |
| TFM (dB) | 36.09 |
| Reliability(%) | 99.999998754 |
| Outage(sec/yr) | 0.39 |

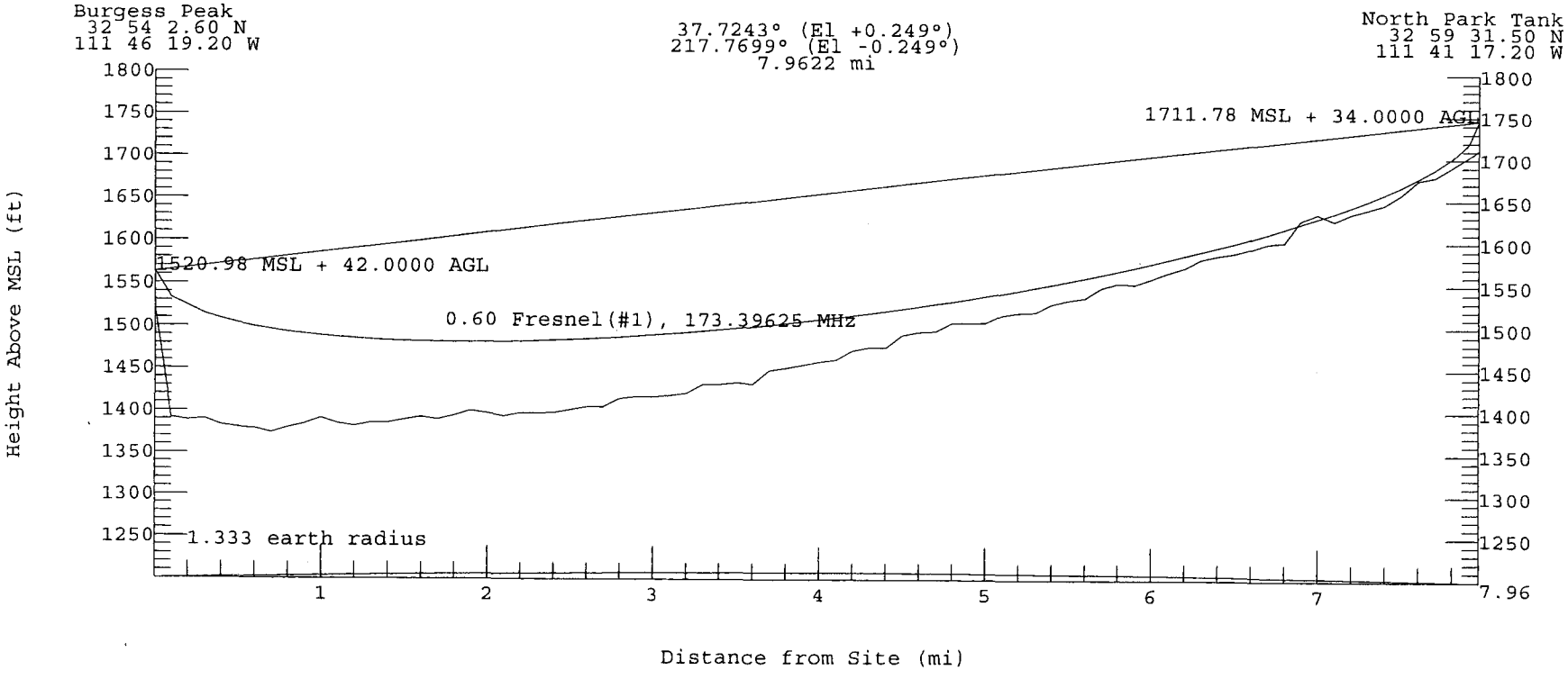
Burgess Peak
32 54 2.60 N
111 46 19.20 W
37.7243° (El +0.249°)
217.7699° (El -0.249°)
7.9622 mi
North Park Tank
32 59 31.50 N
111 41 17.20 W
1711.78 MSL + 34.0000 AGL
1520.98 MSL + 42.0000 AGL
0.60 Fresnel(#1), 173.39625 MHz
1.333 earth radius
Height Above MSL (ft)
Distance from Site (mi)
1800
1750
1700
1650
1600
1550
1500
1450
1400
1350
1300
1250
1
2
3
4
5
6
7
7.96

TAP Single Point Field Calculation Parameters
January 29, 2002 15:34

Burgess Peak: 32 54 2.60 N 111 46 19.20 W
Frequency: 173.39625 MHz ERP: 8.3188 W
North Park Tank: 32 59 31.50 N 111 41 17.20 W
Path: 7.9622 mi; Azimuth 37.7243
Step: 0.1000 mi; Effective Earth Curvature: 1.333
Topo Data: 30-meter
Interpolation: Weighted Interpolation (12 points)

Longley-Rice: LR Defaults
TX Site MSL adjusted to: 1520.98 ft
TX Ant: 1562.98ft MSL (Site 1520.98ft + 42.00ftAGL)
Ant: DLEC Scala Omni
Orientation: 0.00
RX Site MSL adjusted to: 1711.78 ft
RX Ant: 1745.78ft MSL (Site 1711.78ft + 34.00ftAGL)
Azimuth: 37.726
TX Antenna Gain: Az 0.00 dB; El 0.00 dB (angle = 0.249)
Free Space Field: (8.319 W @ 7.962 mi) 63.97 dBu
Free Space Loss: 95.10 dB (between dipoles)
Additional Estimated transmission loss :0.50 dB
Line-of-sight path
LR Mode: 31
Polarization: V
Surface Refrac: 0.00(301.00)
Permittivity: 15.00 Conductivity: 0.0050
Climate: Continental Temperate
Variability:
Situation: 94.00% Time: 94.00% Location: 90.00%
Path terrain Delta-H: 195.72 ft
Effective antenna heights: 247.71 ft 102.56 ft
Net received field: 63.47 dBu

RX Gain: 6.00 dBd
RX Loss: 0.00 dB
RX Input: -50.36 dBm

Microwave System Summary

Transmitter Burgess Peak
Receiver North Park Tank

| NAME | TRANSMIT | RECEIVE |
|---|---|---|
| Freq(MHz) | 173.39625 | 173.39625 |
| Latitude | 32 54 2.60 N | 32 59 31.50 N |
| Longitude | 111 46 19.20 W | 111 41 17.20 W |
| Elv (ft AMSL) | 1517.7600 | 1711.6700 |
| Ant Ht(ft AGL) | 42.0000 | 34.0000 |
| Bearing (deg T) | 37.72° | 217.77° |
| Orien (deg T) | 0.00° | 0.00° |
| Tilt (deg) | 0.25° | -0.25° |
| Line #1 Ls (dB) | 0.82 | 0.82 |
| Line #2 Ls (dB) | 0.00 | 0.00 |
| Other Ls (dB) | 0.00 | 0.00 |
| Antenna Gn | 4.00 dBd | 4.00 dBd |
| Polarization | ver | ver |
| Other Gn (dB) | 0.00 | 0.00 |

| PATH DATA | SYSTEM |
|---|---|
| Distance (mi) | 7.96 |
| Free Sp Ls (dB) | 99.40 |
| Other Ls (dB) | 0.50 |

| SYSTEM SUMMARY | SYSTEM |
|---|---|
| Total Gn (dB) | 12.30 |
| Total Ls (dB) | -101.54 |
| TX Power (dBm) | 36.02 |
| RX Thresh (dBm) | -101.00 |
| RSL (dBm) | -53.22 |
| TFM (dB) | 47.78 |
| Reliability(%) | 99.999999909 |
| Outage(sec/yr) | 0.03 |

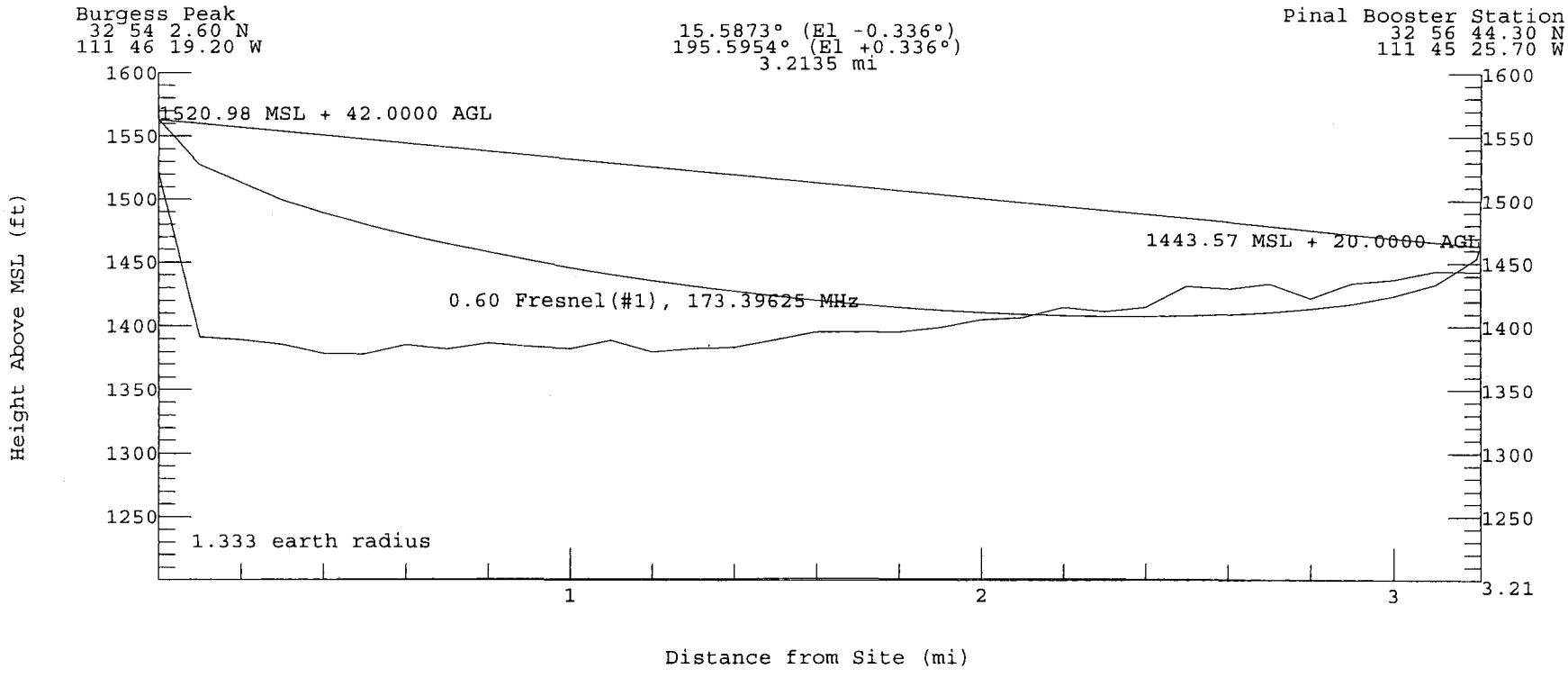
Burgess Peak
32 54 2.60 N
111 46 19.20 W
15.5873° (El -0.336°)
195.5954° (El +0.336°)
3.2135 mi
Pinal Booster Station
32 56 44.30 N
111 45 25.70 W
1520.98 MSL + 42.0000 AGL
1443.57 MSL + 20.0000 AGL
0.60 Fresnel(#1), 173.39625 MHz
1.333 earth radius
Height Above MSL (ft)
Distance from Site (mi)
1600
1550
1500
1450
1400
1350
1300
1250
1
2
3
3.21

TAP Single Point Field Calculation Parameters
January 29, 2002 15:41

Burgess Peak: 32 54 2.60 N 111 46 19.20 W
Frequency: 173.39625 MHz ERP: 8.3188 W
Pinal Booster Station: 32 56 44.30 N 111 45 25.70 W
Path: 3.2135 mi; Azimuth 15.5873
Step: 0.1000 mi; Effective Earth Curvature: 1.333
Topo Data: 30-meter
Interpolation: Weighted Interpolation (12 points)

Longley-Rice: LR Defaults
TX Site MSL adjusted to: 1520.98 ft
TX Ant: 1562.98ft MSL (Site 1520.98ft + 42.00ftAGL)
Ant: DLEC Scala Omni
Orientation: 0.00
RX Site MSL adjusted to: 1443.57 ft
RX Ant: 1463.57ft MSL (Site 1443.57ft + 20.00ftAGL)
Azimuth: 15.588
TX Antenna Gain: Az 0.00 dB; El 0.00 dB (angle = -0.336)
Free Space Field: (8.319 W @ 3.213 mi) 71.85 dBu
Free Space Loss: 87.22 dB (between dipoles)
Additional Estimated transmission loss :4.72 dB
Line-of-sight path
LR Mode: 31
Polarization: V
Surface Refrac: 0.00(301.00)
Permittivity: 15.00 Conductivity: 0.0050
Climate: Continental Temperate
Variability:
Situation: 94.00% Time: 94.00% Location: 90.00%
Path terrain Delta-H: 74.30 ft
Effective antenna heights: 197.06 ft 26.44 ft
Net received field: 67.12 dBu

RX Gain: 6.00 dBd
RX Loss: 0.00 dB
RX Input: -46.71 dBm

Microwave System Summary

Transmitter Burgess Peak
Receiver Pinal Booster Station

| NAME | TRANSMIT | RECEIVE |
|---|---|---|
| Freq(MHz) | 173.39625 | 173.39625 |
| Latitude | 32 54 2.60 N | 32 56 44.30 N |
| Longitude | 111 46 19.20 W | 111 45 25.70 W |
| Elv (ft AMSL) | 1517.7600 | 1443.5700 |
| Ant Ht(ft AGL) | 42.0000 | 20.0000 |
| Bearing (deg T) | 15.59° | 195.60° |
| Orien (deg T) | 0.00° | 0.00° |
| Tilt (deg) | -0.33° | 0.33° |
| Line #1 Ls (dB) | 0.82 | 0.82 |
| Line #2 Ls (dB) | 0.00 | 0.00 |
| Other Ls (dB) | 0.00 | 0.00 |
| Antenna Gn | 4.00 dBd | 4.00 dBd |
| Polarization | ver | ver |
| Other Gn (dB) | 0.00 | 0.00 |

| PATH DATA | SYSTEM |
|---|---|
| Distance (mi) | 3.21 |
| Free Sp Ls (dB) | 91.51 |
| Other Ls (dB) | 4.72 |

| SYSTEM SUMMARY | SYSTEM |
|---|---|
| Total Gn (dB) | 12.30 |
| Total Ls (dB) | -97.87 |
| TX Power (dBm) | 36.02 |
| RX Thresh (dBm) | -101.00 |
| RSL (dBm) | -49.55 |
| TFM (dB) | 51.45 |
| Reliability(%) | 99.999999997 |
| Outage(sec/yr) | 0.00 |

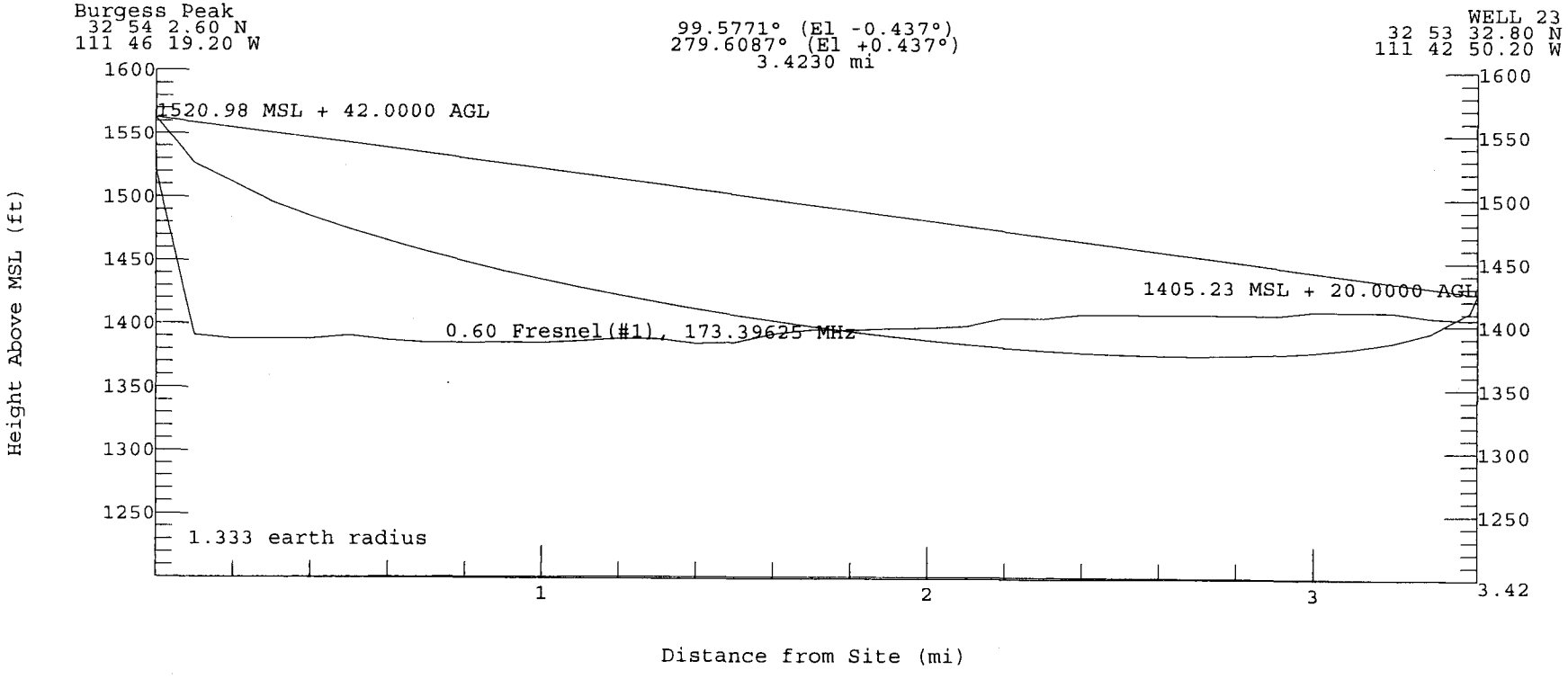
Burgess Peak
32 54 2.60 N
111 46 19.20 W
99.5771° (El -0.437°)
279.6087° (El +0.437°)
3.4230 mi
WELL 23
32 53 32.80 N
111 42 50.20 W
1520.98 MSL + 42.0000 AGL
1405.23 MSL + 20.0000 AGL
0.60 Fresnel(#1), 173.39625 MHz
1.333 earth radius
Height Above MSL (ft)
Distance from Site (mi)
1600
1550
1500
1450
1400
1350
1300
1250
1
2
3
3.42

TAP Single Point Field Calculation Parameters
January 30, 2002 06:49

Burgess Peak: 32 54 2.60 N 111 46 19.20 W
Frequency: 173.39625 MHz ERP: 8.3188 W
WELL 23: 32 53 32.80 N 111 42 50.20 W
Path: 3.4230 mi; Azimuth 99.5771
Step: 0.1000 mi; Effective Earth Curvature: 1.333
Topo Data: 30-meter
Interpolation: Weighted Interpolation (12 points)

Longley-Rice: LR Defaults
TX Site MSL adjusted to: 1520.98 ft
TX Ant: 1562.98ft MSL (Site 1520.98ft + 42.00ftAGL)
Ant: DLEC Scala Omni
Orientation: 0.00
RX Site MSL adjusted to: 1405.23 ft
RX Ant: 1425.23ft MSL (Site 1405.23ft + 20.00ftAGL)
Azimuth: 99.577
TX Antenna Gain: Az 0.00 dB; El 0.00 dB (angle = -0.437)
Free Space Field: (8.319 W @ 3.423 mi) 71.30 dBu
Free Space Loss: 87.77 dB (between dipoles)
Additional Estimated transmission loss :7.55 dB
Line-of-sight path
LR Mode: 31
Polarization: V
Surface Refrac: 0.00(301.00)
Permittivity: 15.00 Conductivity: 0.0050
Climate: Continental Temperate
Variability:
Situation: 94.00% Time: 94.00% Location: 90.00%
Path terrain Delta-H: 35.29 ft
Effective antenna heights: 182.83 ft 20.00 ft
Net received field: 63.75 dBu

RX Gain: 4.00 dBd
RX Loss: 0.00 dB
RX Input: -52.08 dBm

Microwave System Summary

| | |
|---|---|
| Transmitter | Burgess Peak |
| Receiver | WELL 23 |

| NAME | TRANSMIT | RECEIVE |
|---|---|---|
| Freq(MHz) | 173.39625 | 173.39625 |
| Latitude | 32 54 2.60 N | 32 53 32.80 N |
| Longitude | 111 46 19.20 W | 111 42 50.20 W |
| Elv (ft AMSL) | 1517.7600 | 1404.3800 |
| Ant Ht(ft AGL) | 42.0000 | 20.0000 |
| Bearing (deg T) | 99.58° | 279.61° |
| Orien (deg T) | 0.00° | 309.55° |
| Tilt (deg) | -0.43° | 0.43° |
| Line #1 Ls (dB) | 0.82 | 0.82 |
| Line #2 Ls (dB) | 0.00 | 0.00 |
| Other Ls (dB) | 0.00 | 0.00 |
| Antenna Gn | 4.00 dBd | 4.00 dBd |
| Polarization | ver | ver |
| Other Gn (dB) | 0.00 | 0.00 |

| PATH DATA | SYSTEM |
|---|---|
| Distance (mi) | 3.42 |
| Free Sp Ls (dB) | 92.06 |
| Other Ls (dB) | 7.55 |

| SYSTEM SUMMARY | SYSTEM |
|---|---|
| Total Gn (dB) | 12.30 |
| Total Ls (dB) | -101.25 |
| TX Power (dBm) | 36.02 |
| RX Thresh (dBm) | -101.00 |
| RSL (dBm) | -52.93 |
| TFM (dB) | 48.07 |
| Reliability(%) | 99.999999993 |
| Outage(sec/yr) | 0.00 |

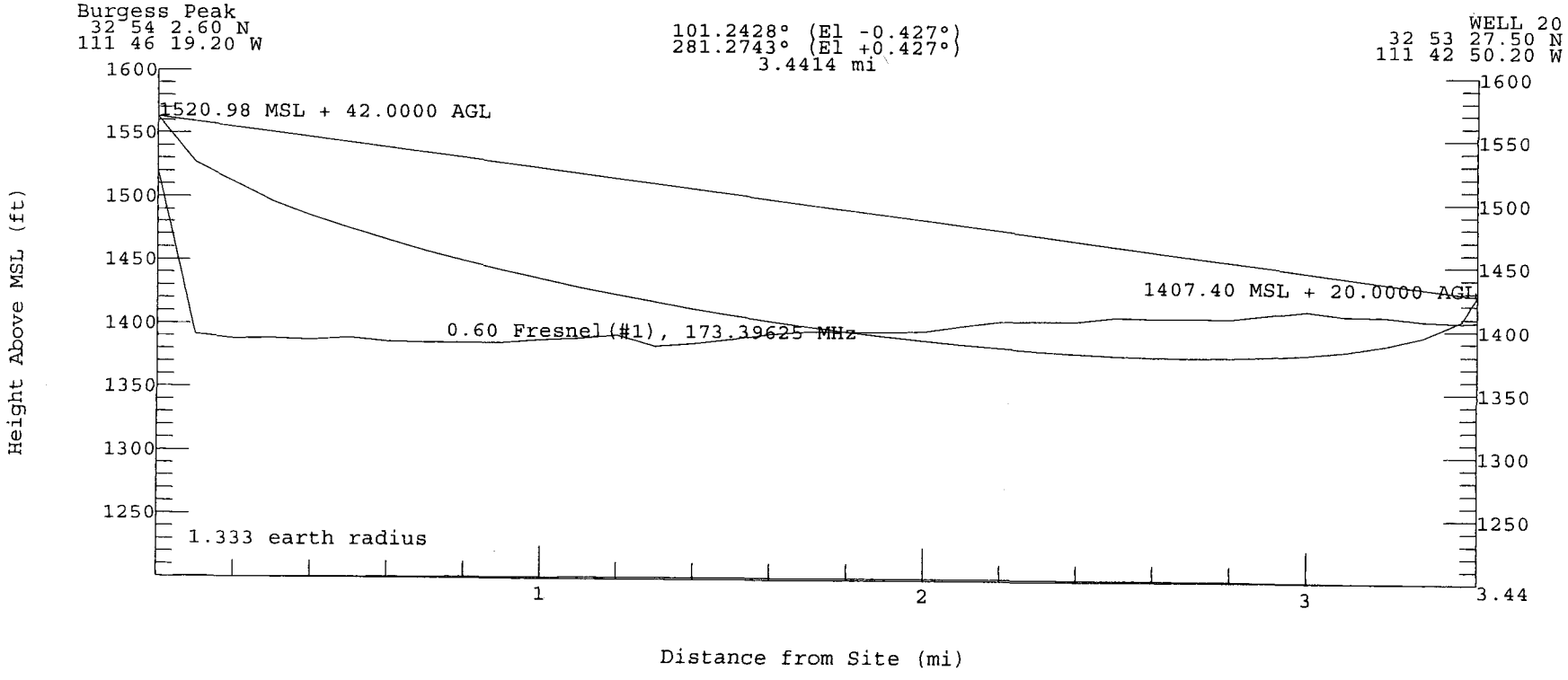
Burgess Peak
32 54 2.60 N
111 46 19.20 W
101.2428° (El -0.427°)
281.2743° (El +0.427°)
3.4414 mi
WELL 20
32 53 27.50 N
111 42 50.20 W
1520.98 MSL + 42.0000 AGL
1407.40 MSL + 20.0000 AGL
0.60 Fresnel(#1), 173.39625 MHz
1.333 earth radius
Height Above MSL (ft)
Distance from Site (mi)
1600
1550
1500
1450
1400
1350
1300
1250
1
2
3
3.44

TAP Single Point Field Calculation Parameters
January 30, 2002 06:54

Burgess Peak: 32 54 2.60 N 111 46 19.20 W
Frequency: 173.39625 MHz ERP: 8.3188 W
WELL 20: 32 53 27.50 N 111 42 50.20 W
Path: 3.4414 mi; Azimuth 101.2428
Step: 0.1000 mi; Effective Earth Curvature: 1.333
Topo Data: 30-meter
Interpolation: Weighted Interpolation (12 points)

Longley-Rice: LR Defaults
TX Site MSL adjusted to: 1520.98 ft
TX Ant: 1562.98ft MSL (Site 1520.98ft + 42.00ftAGL)
Ant: DLEC Scala Omni
Orientation: 0.00
RX Site MSL adjusted to: 1407.40 ft
RX Ant: 1427.40ft MSL (Site 1407.40ft + 20.00ftAGL)
Azimuth: 101.242
TX Antenna Gain: Az 0.00 dB; El 0.00 dB (angle = -0.427)
Free Space Field: (8.319 W @ 3.442 mi) 71.25 dBu
Free Space Loss: 87.82 dB (between dipoles)
Additional Estimated transmission loss :7.60 dB
Line-of-sight path
LR Mode: 31
Polarization: V
Surface Refrac: 0.00(301.00)
Permittivity: 15.00 Conductivity: 0.0050
Climate: Continental Temperate
Variability:
Situation: 94.00% Time: 94.00% Location: 90.00%
Path terrain Delta-H: 37.26 ft
Effective antenna heights: 183.16 ft 20.00 ft
Net received field: 63.66 dBu

RX Gain: 4.00 dBd
RX Loss: 0.00 dB
RX Input: -52.17 dBm

Microwave System Summary

Transmitter Burgess Peak
Receiver WELL 20

| NAME | TRANSMIT | RECEIVE |
|---|---|---|
| Freq(MHz) | 173.39625 | 173.39625 |
| Latitude | 32 54 2.60 N | 32 53 27.50 N |
| Longitude | 111 46 19.20 W | 111 42 50.20 W |
| Elv (ft AMSL) | 1517.7600 | 1407.4800 |
| Ant Ht(ft AGL) | 42.0000 | 20.0000 |
| Bearing (deg T) | 101.24° | 281.27° |
| Orien (deg T) | 0.00° | 309.55° |
| Tilt (deg) | -0.42° | 0.42° |
| Line #1 Ls (dB) | 0.82 | 0.82 |
| Line #2 Ls (dB) | 0.00 | 0.00 |
| Other Ls (dB) | 0.00 | 0.00 |
| Antenna Gn | 4.00 dBd | 4.00 dBd |
| Polarization | ver | ver |
| Other Gn (dB) | 0.00 | 0.00 |

| PATH DATA | SYSTEM |
|---|---|
| Distance (mi) | 3.44 |
| Free Sp Ls (dB) | 92.11 |
| Other Ls (dB) | 7.60 |

| SYSTEM SUMMARY | SYSTEM |
|---|---|
| Total Gn (dB) | 12.30 |
| Total Ls (dB) | -101.35 |
| TX Power (dBm) | 36.02 |
| RX Thresh (dBm) | -101.00 |
| RSL (dBm) | -53.03 |
| TFM (dB) | 47.97 |
| Reliability(%) | 99.999999993 |
| Outage(sec/yr) | 0.00 |

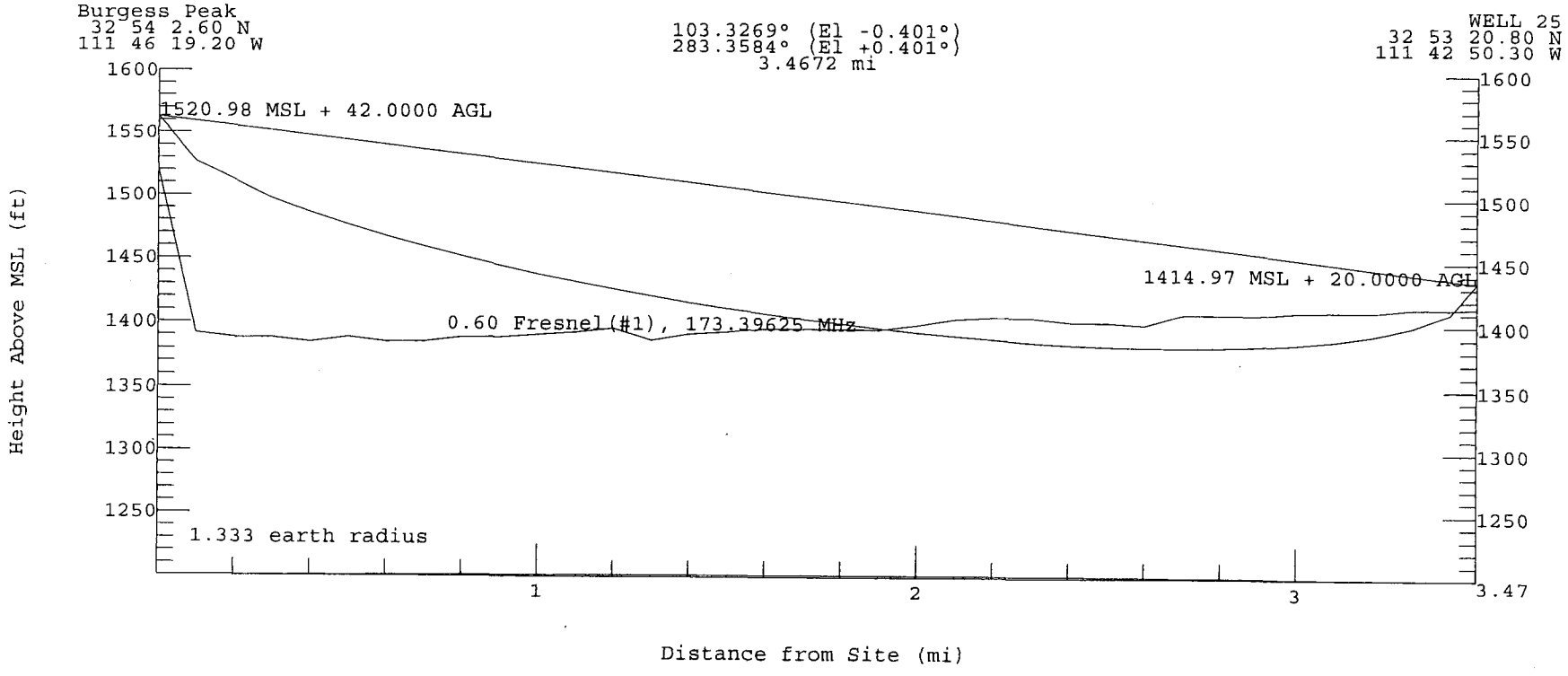
Burgess Peak
32 54 2.60 N
111 46 19.20 W
103.3269° (El -0.401°)
283.3584° (El +0.401°)
3.4672 mi
WELL 25
32 53 20.80 N
111 42 50.30 W
1520.98 MSL + 42.0000 AGL
1414.97 MSL + 20.0000 AGL
0.60 Fresnel(#1), 173.39625 MHz
1.333 earth radius
Height Above MSL (ft)
Distance from Site (mi)
1600
1550
1500
1450
1400
1350
1300
1250
1
2
3
3.47

TAP Single Point Field Calculation Parameters
January 30, 2002 07:01

Burgess Peak: 32 54 2.60 N 111 46 19.20 W
Frequency: 173.39625 MHz ERP: 8.3188 W
WELL 25: 32 53 20.80 N 111 42 50.30 W
Path: 3.4672 mi; Azimuth 103.3269
Step: 0.1000 mi; Effective Earth Curvature: 1.333
Topo Data: 30-meter
Interpolation: Weighted Interpolation (12 points)

Longley-Rice: LR Defaults
TX Site MSL adjusted to: 1520.98 ft
TX Ant: 1562.98ft MSL (Site 1520.98ft + 42.00ftAGL)
Ant: DLEC Scala Omni
Orientation: 0.00
RX Site MSL adjusted to: 1414.97 ft
RX Ant: 1434.97ft MSL (Site 1414.97ft + 20.00ftAGL)
Azimuth: 103.326
TX Antenna Gain: Az 0.00 dB; El 0.00 dB (angle = -0.401)
Free Space Field: (8.319 W @ 3.467 mi) 71.19 dBu
Free Space Loss: 87.88 dB (between dipoles)
Additional Estimated transmission loss :6.70 dB
Line-of-sight path
LR Mode: 31
Polarization: V
Surface Refrac: 0.00(301.00)
Permittivity: 15.00 Conductivity: 0.0050
Climate: Continental Temperate
Variability:
Situation: 94.00% Time: 94.00% Location: 90.00%
Path terrain Delta-H: 23.89 ft
Effective antenna heights: 182.04 ft 22.26 ft
Net received field: 64.48 dBu

RX Gain: 4.00 dBd
RX Loss: 0.00 dB
RX Input: -51.35 dBm

Microwave System Summary

| | |
|---|---|
| Transmitter | Burgess Peak |
| Receiver | WELL 25 |

| NAME | TRANSMIT | RECEIVE |
|---|---|---|
| Freq(MHz) | 173.39625 | 173.39625 |
| Latitude | 32 54 2.60 N | 32 53 20.80 N |
| Longitude | 111 46 19.20 W | 111 42 50.30 W |
| Elv (ft AMSL) | 1517.7600 | 1414.9000 |
| Ant Ht(ft AGL) | 42.0000 | 20.0000 |
| Bearing (deg T) | 103.33° | 283.36° |
| Orien (deg T) | 0.00° | 309.55° |
| Tilt (deg) | -0.39° | 0.39° |
| Line #1 Ls (dB) | 0.82 | 0.82 |
| Line #2 Ls (dB) | 0.00 | 0.00 |
| Other Ls (dB) | 0.00 | 0.00 |
| Antenna Gn | 4.00 dBd | 4.00 dBd |
| Polarization | ver | ver |
| Other Gn (dB) | 0.00 | 0.00 |

| PATH DATA | | SYSTEM |
|---|---|---|
| Distance (mi) | 3.47 | |
| Free Sp Ls (dB) | 92.19 | |
| Other Ls (dB) | 6.70 | |

| SYSTEM SUMMARY | | SYSTEM |
|---|---|---|
| Total Gn (dB) | 12.30 | |
| Total Ls (dB) | -100.53 | |
| TX Power (dBm) | | 36.02 |
| RX Thresh (dBm) | | -101.00 |
| RSL (dBm) | -52.21 | |
| TFM (dB) | 48.79 | |
| Reliability(%) | 99.999999994 | |
| Outage(sec/yr) | 0.00 | |

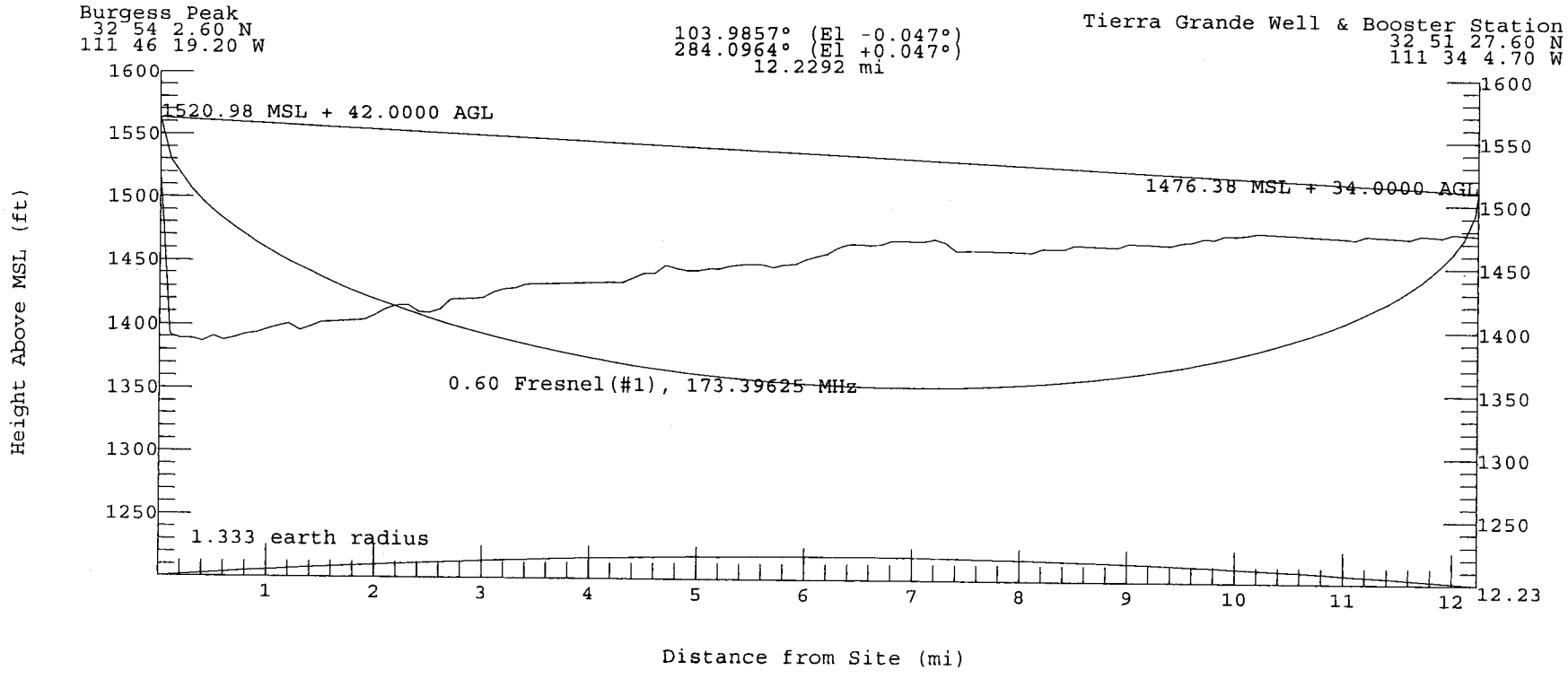
Burgess Peak
32 54 2.60 N
111 46 19.20 W
103.9857° (El -0.047°)
284.0964° (El +0.047°)
12.2292 mi
Tierra Grande Well & Booster Station
32 51 27.60 N
111 34 4.70 W
1520.98 MSL + 42.0000 AGL
1476.38 MSL + 34.0000 AGL
0.60 Fresnel(#1), 173.39625 MHz
1.333 earth radius
Height Above MSL (ft)
Distance from Site (mi)
1600
1550
1500
1450
1400
1350
1300
1250
1
2
3
4
5
6
7
8
9
10
11
12
12.23

TAP Single Point Field Calculation Parameters
February 01, 2002 06:16

Burgess Peak: 32 54 2.60 N 111 46 19.20 W
Frequency: 173.39625 MHz ERP: 8.3188 W
Tierra Grande Well & Booster Station: 32 51 27.60 N 111 34 4.70 W
Path: 12.2292 mi; Azimuth 103.9857
Step: 0.1000 mi; Effective Earth Curvature: 1.333
Topo Data: 30-meter
Interpolation: Weighted Interpolation (12 points)

Longley-Rice: LR Defaults
TX Site MSL adjusted to: 1520.98 ft
TX Ant: 1562.98ft MSL (Site 1520.98ft + 42.00ftAGL)
Ant: DLEC Scala Omni
Orientation: 0.00
RX Site MSL adjusted to: 1476.38 ft
RX Ant: 1510.38ft MSL (Site 1476.38ft + 34.00ftAGL)
Azimuth: 103.985
TX Antenna Gain: Az 0.00 dB; El 0.00 dB (angle = -0.047)
Free Space Field: (8.319 W @ 12.230 mi) 60.24 dBu
Free Space Loss: 98.83 dB (between dipoles)
Additional Estimated transmission loss :15.55 dB
Line-of-sight path
LR Mode: 31
Polarization: V
Surface Refrac: 0.00(301.00)
Permittivity: 15.00 Conductivity: 0.0050
Climate: Continental Temperate
Variability:
Situation: 94.00% Time: 94.00% Location: 90.00%
Path terrain Delta-H: 21.72 ft
Effective antenna heights: 176.90 ft 34.00 ft
Net received field: 44.69 dBu

RX Gain: 4.00 dBd
RX Loss: 0.00 dB
RX Input: -71.14 dBm

Microwave System Summary

| | |
|---|---|
| Transmitter | Burgess Peak |
| Receiver | Tierra Grande Well & Booster Station |

| NAME | TRANSMIT | RECEIVE |
|---|---|---|
| Freq(MHz) | 173.39625 | 173.39625 |
| Latitude | 32 54 2.60 N | 32 51 27.60 N |
| Longitude | 111 46 19.20 W | 111 34 4.70 W |
| Elv (ft AMSL) | 1517.7600 | 1476.3800 |
| Ant Ht(ft AGL) | 42.0000 | 34.0000 |
| Bearing (deg T) | 103.99° | 284.10° |
| Orien (deg T) | 0.00° | 309.55° |
| Tilt (deg) | -0.04° | 0.04° |
| Line #1 Ls (dB) | 0.82 | 0.82 |
| Line #2 Ls (dB) | 0.00 | 0.00 |
| Other Ls (dB) | 0.00 | 0.00 |
| Antenna Gn | 4.00 dBd | 6.00 dBd |
| Polarization | ver | ver |
| Other Gn (dB) | 0.00 | 0.00 |

| PATH DATA | SYSTEM |
|---|---|
| Distance (mi) | 12.23 |
| Free Sp Ls (dB) | 103.13 |
| Other Ls (dB) | 15.55 |

| SYSTEM SUMMARY | SYSTEM |
|---|---|
| Total Gn (dB) | 14.30 |
| Total Ls (dB) | -120.32 |
| TX Power (dBm) | 36.02 |
| RX Thresh (dBm) | -101.00 |
| RSL (dBm) | -70.00 |
| TFM (dB) | 31.00 |
| Reliability(%) | 99.999984255 |
| Outage(sec/yr) | 4.97 |

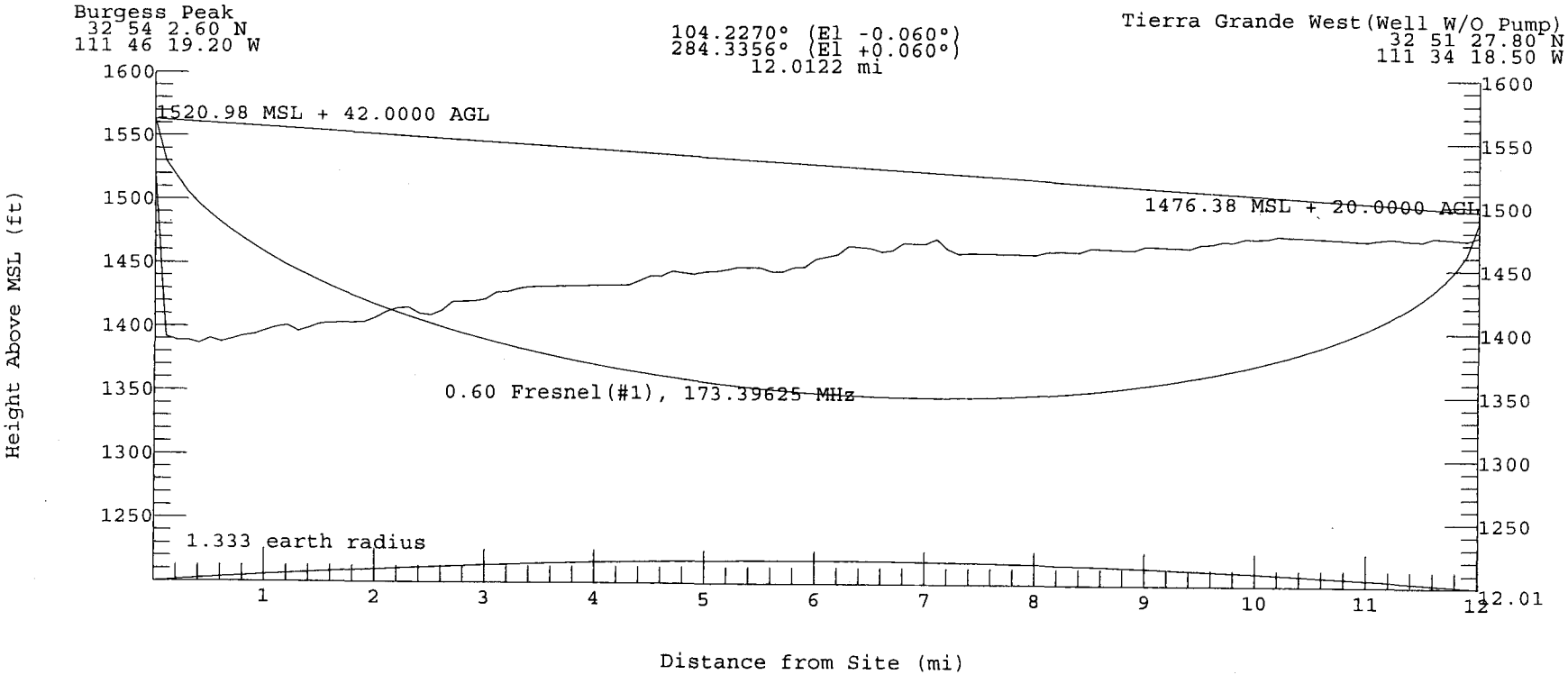
Burgess Peak
32 54 2.60 N
111 46 19.20 W
104.2270° (El -0.060°)
284.3356° (El +0.060°)
12.0122 mi
Tierra Grande West(Well W/O Pump)
32 51 27.80 N
111 34 18.50 W
1520.98 MSL + 42.0000 AGL
1476.38 MSL + 20.0000 AGL
0.60 Fresnel(#1), 173.39625 MHz
1.333 earth radius
Height Above MSL (ft)
Distance from Site (mi)
1600
1550
1500
1450
1400
1350
1300
1250
1
2
3
4
5
6
7
8
9
10
11
12
12.01

TAP Single Point Field Calculation Parameters
January 24, 2002 06:23

Burgess Peak: 32 54 2.60 N 111 46 19.20 W
Frequency: 173.39625 MHz ERP: 8.3188 W
Tierra Grande West(Well W/O Pump): 32 51 27.80 N 111 34 18.50 W
Path: 12.0122 mi; Azimuth 104.2270
Step: 0.1000 mi; Effective Earth Curvature: 1.333
Topo Data: 30-meter
Interpolation: Weighted Interpolation (12 points)

Longley-Rice: LR Defaults
TX Site MSL adjusted to: 1520.98 ft
TX Ant: 1562.98ft MSL (Site 1520.98ft + 42.00ftAGL)
Ant: DLEC Scala Omni
Orientation: 0.00
RX Site MSL adjusted to: 1476.38 ft
RX Ant: 1496.38ft MSL (Site 1476.38ft + 20.00ftAGL)
Azimuth: 104.226
TX Antenna Gain: Az 0.00 dB; El 0.00 dB (angle = -0.060)
Free Space Field: (8.319 W @ 12.013 mi) 60.39 dBu
Free Space Loss: 98.67 dB (between dipoles)
Additional Estimated transmission loss :19.83 dB
Line-of-sight path
LR Mode: 31
Polarization: V
Surface Refrac: 0.00(301.00)
Permittivity: 15.00 Conductivity: 0.0050
Climate: Continental Temperate
Variability:
Situation: 94.00% Time: 94.00% Location: 90.00%
Path terrain Delta-H: 20.33 ft
Effective antenna heights: 176.91 ft 20.00 ft
Net received field: 40.56 dBu

RX Gain: 6.00 dBd
RX Loss: 0.00 dB
RX Input: -73.27 dBm

Microwave System Summary

Transmitter Burgess Peak
Receiver Tierra Grande West(Well W/O Pump)

| NAME | TRANSMIT | RECEIVE |
|---|---|---|
| Freq(MHz) | 173.39625 | 173.39625 |
| Latitude | 32 54 2.60 N | 32 51 27.80 N |
| Longitude | 111 46 19.20 W | 111 34 18.50 W |
| Elv (ft AMSL) | 1517.7600 | 1476.3800 |
| Ant Ht(ft AGL) | 42.0000 | 20.0000 |
| Bearing (deg T) | 104.23° | 284.34° |
| Orien (deg T) | 0.00° | 309.55° |
| Tilt (deg) | -0.06° | 0.06° |
| Line #1 Ls (dB) | 0.82 | 0.82 |
| Line #2 Ls (dB) | 0.00 | 0.00 |
| Other Ls (dB) | 0.00 | 0.00 |
| Antenna Gn | 4.00 dBd | 6.00 dBd |
| Polarization | ver | ver |
| Other Gn (dB) | 0.00 | 0.00 |

| PATH DATA | SYSTEM |
|---|---|
| Distance (mi) | 12.01 |
| Free Sp Ls (dB) | 102.97 |
| Other Ls (dB) | 19.83 |

| SYSTEM SUMMARY | SYSTEM |
|---|---|
| Total Gn (dB) | 14.30 |
| Total Ls (dB) | -124.44 |
| TX Power (dBm) | 36.02 |
| RX Thresh (dBm) | -101.00 |
| RSL (dBm) | -74.12 |
| TFM (dB) | 26.88 |
| Reliability(%) | 99.999961497 |
| Outage(sec/yr) | 12.14 |

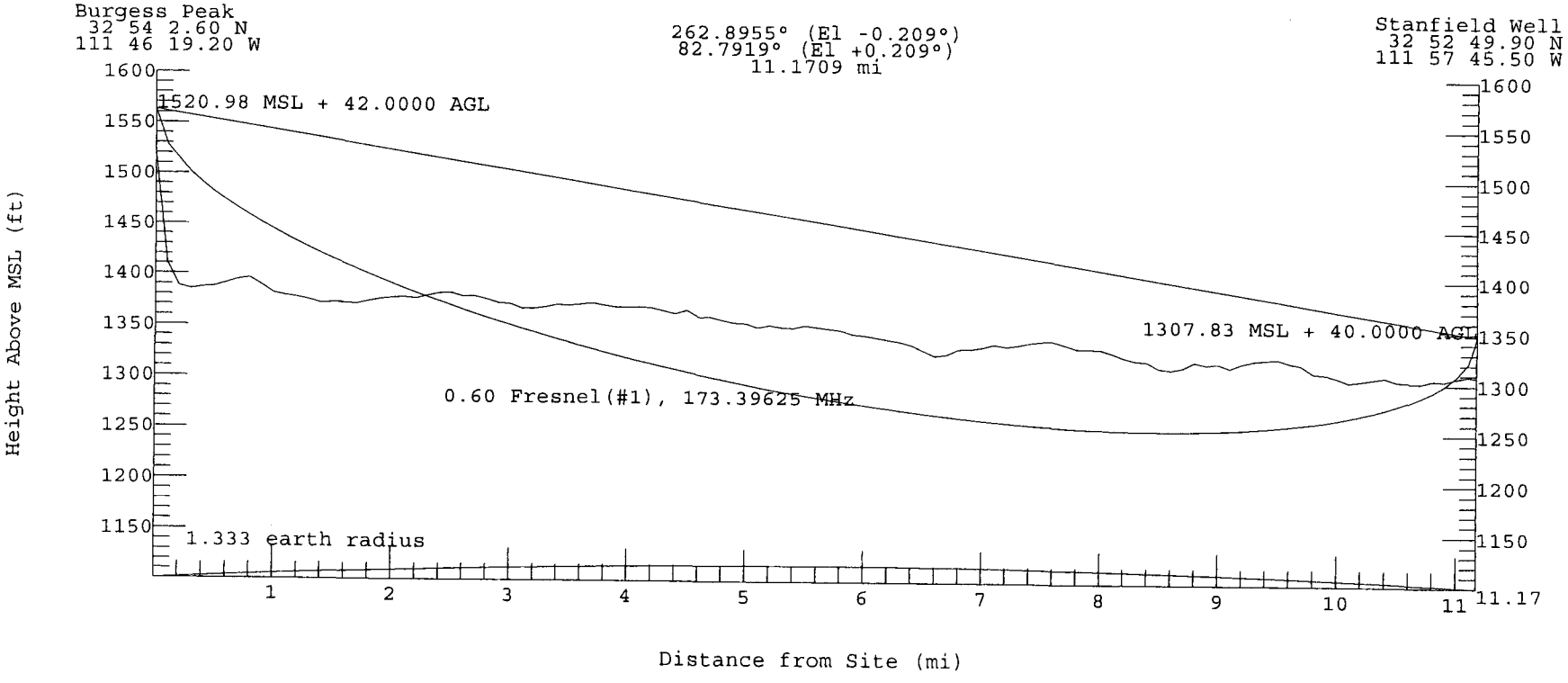
Burgess Peak
32 54 2.60 N
111 46 19.20 W
262.8955° (El -0.209°)
82.7919° (El +0.209°)
11.1709 mi
Stanfield Well
32 52 49.90 N
111 57 45.50 W
1520.98 MSL + 42.0000 AGL
1307.83 MSL + 40.0000 AGL
0.60 Fresnel(#1), 173.39625 MHz
1.333 earth radius
Height Above MSL (ft)
Distance from Site (mi)
1600
1550
1500
1450
1400
1350
1300
1250
1200
1150
1
2
3
4
5
6
7
8
9
10
11
11.17

TAP Single Point Field Calculation Parameters
January 23, 2002 16:28

Burgess Peak: 32 54 2.60 N 111 46 19.20 W
Frequency: 173.39625 MHz ERP: 8.3188 W
Stanfield Well: 32 52 49.90 N 111 57 45.50 W
Path: 11.1709 mi; Azimuth 262.8955
Step: 0.1000 mi; Effective Earth Curvature: 1.333
Topo Data: 30-meter
Interpolation: Weighted Interpolation (12 points)

Longley-Rice: LR Defaults
TX Site MSL adjusted to: 1520.98 ft
TX Ant: 1562.98ft MSL (Site 1520.98ft + 42.00ftAGL)
Ant: DLEC Scala Omni
Orientation: 0.00
RX Site MSL adjusted to: 1307.83 ft
RX Ant: 1347.83ft MSL (Site 1307.83ft + 40.00ftAGL)
Azimuth: 262.896
TX Antenna Gain: Az 0.00 dB; El 0.00 dB (angle = -0.209)
Free Space Field: (8.319 W @ 11.171 mi) 61.03 dBu
Free Space Loss: 98.04 dB (between dipoles)
Additional Estimated transmission loss :9.43 dB
Line-of-sight path
LR Mode: 31
Polarization: V
Surface Refrac: 0.00(301.00)
Permittivity: 15.00 Conductivity: 0.0050
Climate: Continental Temperate
Variability:
Situation: 94.00% Time: 94.00% Location: 90.00%
Path terrain Delta-H: 36.90 ft
Effective antenna heights: 178.06 ft 58.30 ft
Net received field: 51.59 dBu

RX Gain: 6.00 dBd
RX Loss: 0.00 dB
RX Input: -62.24 dBm

Microwave System Summary

| | |
|---|---|
| Transmitter | Burgess Peak |
| Receiver | Stanfield Well |

| NAME | TRANSMIT | RECEIVE |
|---|---|---|
| Freq(MHz) | 173.39625 | 173.39625 |
| Latitude | 32 54 2.60 N | 32 52 49.90 N |
| Longitude | 111 46 19.20 W | 111 57 45.50 W |
| Elv (ft AMSL) | 1517.7600 | 1308.4400 |
| Ant Ht(ft AGL) | 42.0000 | 40.0000 |
| Bearing (deg T) | 262.90° | 82.79° |
| Orien (deg T) | 0.00° | 309.55° |
| *Tilt (deg)* | -0.21° | 0.21° |
| Line #1 Ls (dB) | 0.82 | 0.82 |
| Line #2 Ls (dB) | 0.00 | 0.00 |
| Other Ls (dB) | 0.00 | 0.00 |
| Antenna Gn | 4.00 dBd | 4.00 dBd |
| Polarization | ver | ver |
| Other Gn (dB) | 0.00 | 0.00 |

| PATH DATA | SYSTEM |
|---|---|
| Distance (mi) | 11.17 |
| Free Sp Ls (dB) | 102.34 |
| Other Ls (dB) | 9.43 |

| SYSTEM SUMMARY | SYSTEM |
|---|---|
| Total Gn (dB) | 12.30 |
| Total Ls (dB) | -113.41 |
| TX Power (dBm) | 36.02 |
| RX Thresh (dBm) | -101.00 |
| RSL (dBm) | -65.09 |
| TFM (dB) | 35.91 |
| Reliability(%) | 99.999996127 |
| Outage(sec/yr) | 1.22 |

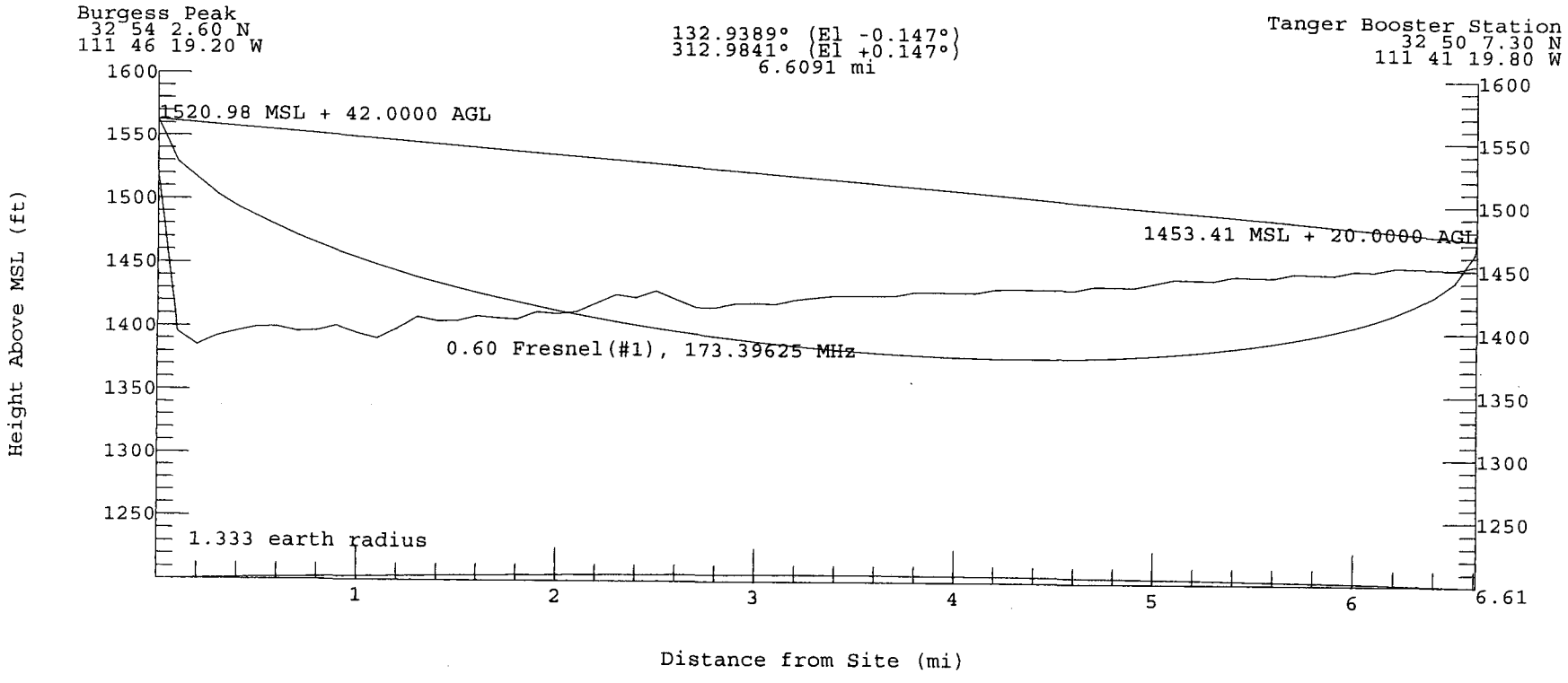
Burgess Peak
32 54 2.60 N
111 46 19.20 W
132.9389° (El -0.147°)
312.9841° (El +0.147°)
6.6091 mi
Tanger Booster Station
32 50 7.30 N
111 41 19.80 W
1520.98 MSL + 42.0000 AGL
1453.41 MSL + 20.0000 AGL
0.60 Fresnel(#1), 173.39625 MHz
1.333 earth radius
Height Above MSL (ft)
Distance from Site (mi)
1600
1550
1500
1450
1400
1350
1300
1250
1
2
3
4
5
6
6.61

TAP Single Point Field Calculation Parameters
January 23, 2002 15:17

Burgess Peak: 32 54 2.60 N 111 46 19.20 W
Frequency: 173.39625 MHz ERP: 8.3188 W
Tanger Booster Station: 32 50 7.30 N 111 41 19.80 W
Path: 6.6091 mi; Azimuth 132.9389
Step: 0.1000 mi; Effective Earth Curvature: 1.333
Topo Data: 30-meter
Interpolation: Weighted Interpolation (12 points)

Longley-Rice: LR Defaults
TX Site MSL adjusted to: 1520.98 ft
TX Ant: 1562.98ft MSL (Site 1520.98ft + 42.00ftAGL)
Ant: DLEC Scala Omni
Orientation: 0.00
RX Site MSL adjusted to: 1453.41 ft
RX Ant: 1473.41ft MSL (Site 1453.41ft + 20.00ftAGL)
Azimuth: 132.937
TX Antenna Gain: Az 0.00 dB; El 0.00 dB (angle = -0.147)
Free Space Field: (8.319 W @ 6.609 mi) 65.58 dBu
Free Space Loss: 93.48 dB (between dipoles)
Additional Estimated transmission loss :12.58 dB
Line-of-sight path
LR Mode: 31
Polarization: V
Surface Refrac: 0.00(301.00)
Permittivity: 15.00 Conductivity: 0.0050
Climate: Continental Temperate
Variability:
Situation: 94.00% Time: 94.00% Location: 90.00%
Path terrain Delta-H: 19.50 ft
Effective antenna heights: 175.07 ft 21.98 ft
Net received field: 53.01 dBu

RX Gain: 6.00 dBd
RX Loss: 0.00 dB
RX Input: -60.82 dBm

Microwave System Summary

| | |
|---|---|
| Transmitter | Burgess Peak |
| Receiver | Tanger Booster Station |

| NAME | TRANSMIT | RECEIVE |
|---|---|---|
| Freq(MHz) | 173.39625 | 173.39625 |
| Latitude | 32 54 2.60 N | 32 50 7.30 N |
| Longitude | 111 46 19.20 W | 111 41 19.80 W |
| Elv (ft AMSL) | 1517.7600 | 1453.4100 |
| Ant Ht(ft AGL) | 42.0000 | 20.0000 |
| Bearing (deg T) | 132.94° | 312.98° |
| Orien (deg T) | 0.00° | 309.55° |
| Tilt (deg) | -0.14° | 0.14° |
| Line #1 Ls (dB) | 0.82 | 0.82 |
| Line #2 Ls (dB) | 0.00 | 0.00 |
| Other Ls (dB) | 0.00 | 0.00 |
| Antenna Gn | 4.00 dBd | 4.00 dBd |
| Polarization | ver | ver |
| Other Gn (dB) | 0.00 | 0.00 |

| PATH DATA | SYSTEM |
|---|---|
| Distance (mi) | 6.61 |
| Free Sp Ls (dB) | 97.78 |
| Other Ls (dB) | 12.58 |

| SYSTEM SUMMARY | SYSTEM |
|---|---|
| Total Gn (dB) | 12.30 |
| Total Ls (dB) | -112.00 |
| TX Power (dBm) | 36.02 |
| RX Thresh (dBm) | -101.00 |
| RSL (dBm) | -63.68 |
| TFM (dB) | 37.32 |
| Reliability(%) | 99.999999420 |
| Outage(sec/yr) | 0.18 |

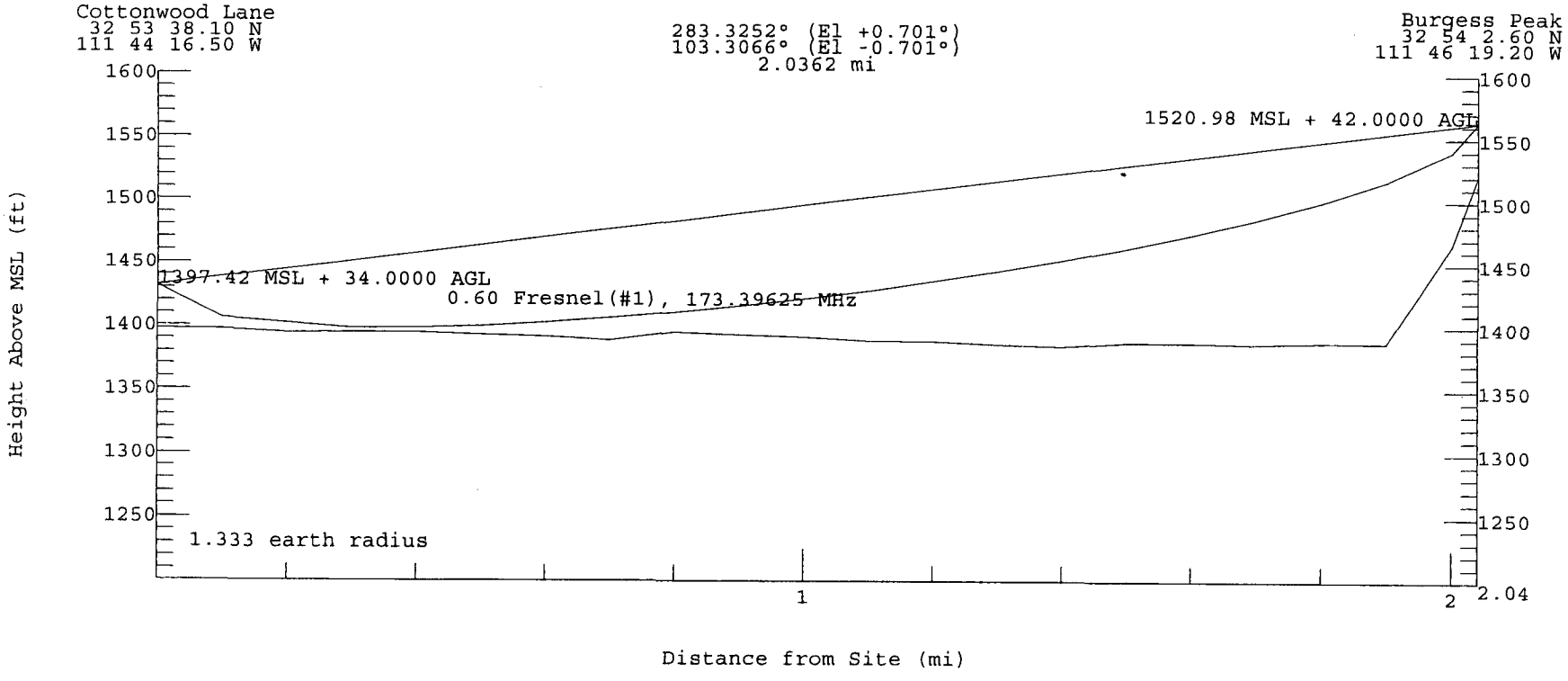
Cottonwood Lane
32 53 38.10 N
111 44 16.50 W
283.3252° (El +0.701°)
103.3066° (El -0.701°)
2.0362 mi
Burgess Peak
32 54 2.60 N
111 46 19.20 W
1520.98 MSL + 42.0000 AGL
1397.42 MSL + 34.0000 AGL
0.60 Fresnel(#1), 173.39625 MHz
1.333 earth radius
Height Above MSL (ft)
Distance from Site (mi)
1600
1550
1500
1450
1400
1350
1300
1250
1
2
2.04

TAP Single Point Field Calculation Parameters
January 30, 2002 08:35

Cottonwood Lane: 32 53 38.10 N 111 44 16.50 W
Frequency: 173.39625 MHz ERP: 8.3188 W
Burgess Peak: 32 54 2.60 N 111 46 19.20 W
Path: 2.0362 mi; Azimuth 283.3252
Step: 0.1000 mi; Effective Earth Curvature: 1.333
Topo Data: 30-meter
Interpolation: Weighted Interpolation (12 points)

Longley-Rice: LR Defaults
TX Site MSL adjusted to: 1397.42 ft
TX Ant: 1431.42ft MSL (Site 1397.42ft + 34.00ftAGL)
Ant: DLEC Scala Omni
Orientation: 0.00
RX Site MSL adjusted to: 1520.98 ft
RX Ant: 1562.98ft MSL (Site 1520.98ft + 42.00ftAGL)
Azimuth: 283.324
TX Antenna Gain: Az 0.00 dB; El 0.00 dB (angle = 0.674)
Free Space Field: (8.319 W @ 2.036 mi) 75.81 dBu
Free Space Loss: 83.26 dB (between dipoles)
Additional Estimated transmission loss :0.02 dB
Line-of-sight path
LR Mode: 31
Polarization: V
Surface Refrac: 0.00(301.00)
Permittivity: 15.00 Conductivity: 0.0050
Climate: Continental Temperate
Variability:
Situation: 94.00% Time: 94.00% Location: 90.00%
Path terrain Delta-H: 32.41 ft
Effective antenna heights: 39.72 ft 170.10 ft
Net received field: 75.79 dBu

RX Gain: 4.00 dBd
RX Loss: 0.00 dB
RX Input: -40.04 dBm

Microwave System Summary

| | |
|---|---|
| Transmitter | Cottonwood Lane |
| Receiver | Burgess Peak |

| NAME | TRANSMIT | RECEIVE |
|---|---|---|
| Freq(MHz) | 173.39625 | 173.39625 |
| Latitude | 32 53 38.10 N | 32 54 2.60 N |
| Longitude | 111 44 16.50 W | 111 46 19.20 W |
| Elv (ft AMSL) | 1397.6400 | 1517.7600 |
| Ant Ht(ft AGL) | 34.0000 | 42.0000 |
| Bearing (deg T) | 283.33° | 103.31° |
| Orien (deg T) | 0.00° | 309.55° |
| Tilt (deg) | 0.69° | -0.69° |
| Line #1 Ls (dB) | 0.82 | 0.82 |
| Line #2 Ls (dB) | 0.00 | 0.00 |
| Other Ls (dB) | 0.00 | 0.00 |
| Antenna Gn | 4.00 dBd | 4.00 dBd |
| Polarization | ver | ver |
| Other Gn (dB) | 0.00 | 0.00 |

| PATH DATA | | SYSTEM |
|---|---|---|
| Distance (mi) | 2.04 | |
| Free Sp Ls (dB) | 87.57 | |
| Other Ls (dB) | 0.02 | |

| SYSTEM SUMMARY | | SYSTEM |
|---|---|---|
| Total Gn (dB) | 12.30 | |
| Total Ls (dB) | -89.23 | |
| TX Power (dBm) | | 36.02 |
| RX Thresh (dBm) | | -101.00 |
| RSL (dBm) | -40.91 | |
| TFM (dB) | 60.09 | |
| Reliability(%) | 100.000000000 | |
| Outage(sec/yr) | 0.00 | |

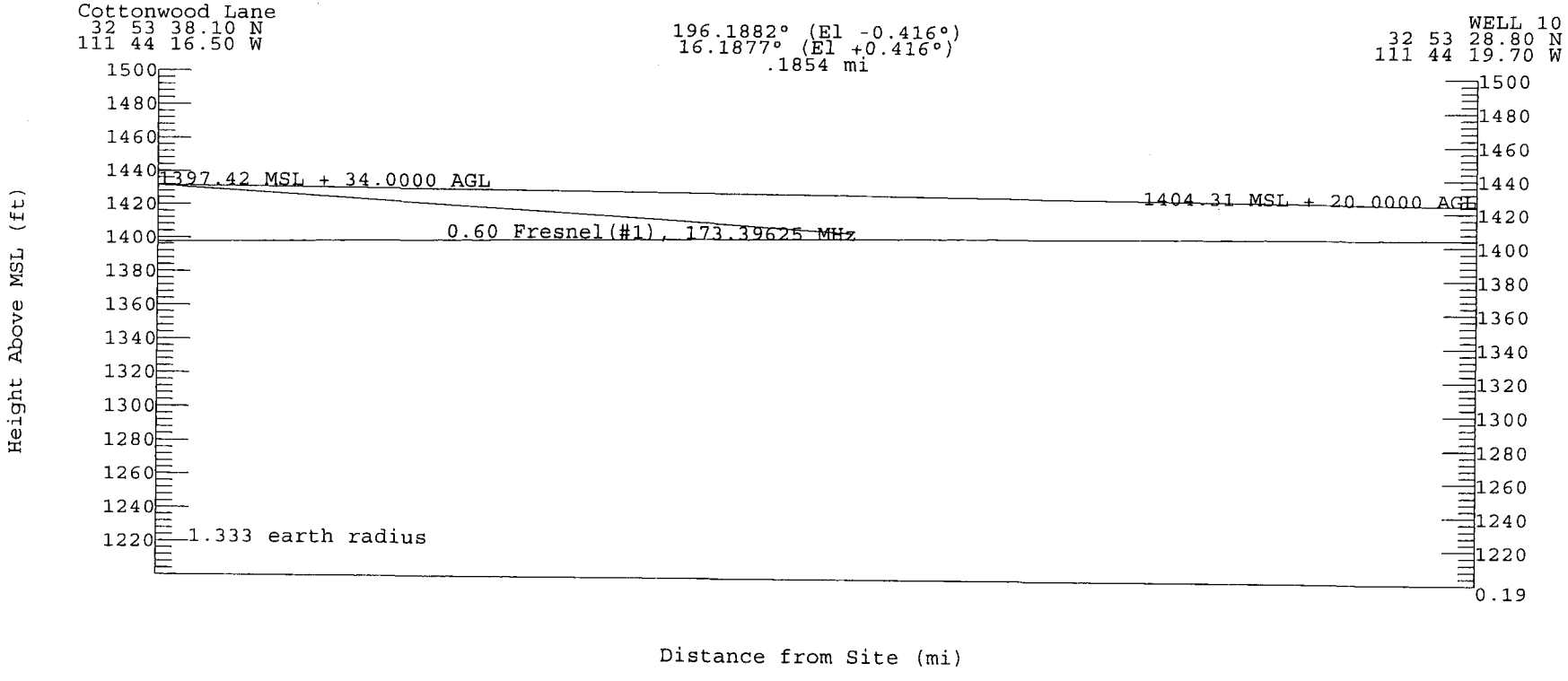
Cottonwood Lane
32 53 38.10 N
111 44 16.50 W
196.1882° (El -0.416°)
16.1877° (El +0.416°)
.1854 mi
WELL 10
32 53 28.80 N
111 44 19.70 W
1397.42 MSL + 34.0000 AGL
1404.31 MSL + 20.0000 AGL
0.60 Fresnel(#1), 173.39625 MHz
1.333 earth radius
Height Above MSL (ft)
Distance from Site (mi)
1500
1480
1460
1440
1420
1400
1380
1360
1340
1320
1300
1280
1260
1240
1220
0.19

TAP Single Point Field Calculation Parameters
January 30, 2002 07:06

Cottonwood Lane: 32 53 38.10 N 111 44 16.50 W
Frequency: 173.39625 MHz ERP: 8.3188 W
WELL 10: 32 53 28.80 N 111 44 19.70 W
Path: 0.1854 mi; Azimuth 196.1882
Step: 0.1000 mi; Effective Earth Curvature: 1.333
Topo Data: 30-meter
Interpolation: Weighted Interpolation (12 points)

Longley-Rice: LR Defaults
TX Site MSL adjusted to: 1397.42 ft
TX Ant: 1431.42ft MSL (Site 1397.42ft + 34.00ftAGL)
Ant: DLEC Scala Omni
Orientation: 0.00
RX Site MSL adjusted to: 1404.31 ft
RX Ant: 1424.31ft MSL (Site 1404.31ft + 20.00ftAGL)
Azimuth: 196.189
TX Antenna Gain: Az 0.00 dB; El 0.00 dB (angle = -0.425)
Free Space Field: (8.319 W @ 0.185 mi) 96.63 dBu
Free Space Loss: 62.44 dB (between dipoles)
Additional Estimated transmission loss :0.00 dB
Line-of-sight path
LR Mode: 31
Polarization: V
Surface Refrac: 0.00(301.00)
Permittivity: 15.00 Conductivity: 0.0050
Climate: Continental Temperate
Variability:
Situation: 94.00% Time: 94.00% Location: 90.00%
Path terrain Delta-H: 0.00 ft
Effective antenna heights: 34.00 ft 20.00 ft
Longley-Rice warning level 4:
Distance for calculation is less than 1 km.
Net received field: 96.63 dBu
RX Gain: 4.00 dBd
RX Loss: 0.00 dB
RX Input: -19.20 dBm

Microwave System Summary

| | |
|---|---|
| Transmitter | Cottonwood Lane |
| Receiver | WELL 10 |

| NAME | TRANSMIT | RECEIVE |
|---|---|---|
| Freq(MHz) | 173.39625 | 173.39625 |
| Latitude | 32 53 38.10 N | 32 53 28.80 N |
| Longitude | 111 44 16.50 W | 111 44 19.70 W |
| Elv (ft AMSL) | 1397.6400 | 1404.2000 |
| Ant Ht(ft AGL) | 34.0000 | 20.0000 |
| Bearing (deg T) | 196.19° | 16.19° |
| Orien (deg T) | 0.00° | 309.55° |
| Tilt (deg) | -0.43° | 0.43° |
| Line #1 Ls (dB) | 0.82 | 0.82 |
| Line #2 Ls (dB) | 0.00 | 0.00 |
| Other Ls (dB) | 0.00 | 0.00 |
| Antenna Gn | 4.00 dBd | 6.00 dBd |
| Polarization | ver | ver |
| Other Gn (dB) | 0.00 | 0.00 |

| PATH DATA | SYSTEM |
|---|---|
| Distance (mi) | .19 |
| Free Sp Ls (dB) | 66.96 |
| Other Ls (dB) | 0.00 |

| SYSTEM SUMMARY | SYSTEM |
|---|---|
| Total Gn (dB) | 14.30 |
| Total Ls (dB) | -68.60 |
| TX Power (dBm) | 36.02 |
| RX Thresh (dBm) | -101.00 |
| RSL (dBm) | -18.28 |
| TFM (dB) | 82.72 |
| Reliability(%) | 100.000000000 |
| Outage(sec/yr) | 0.00 |

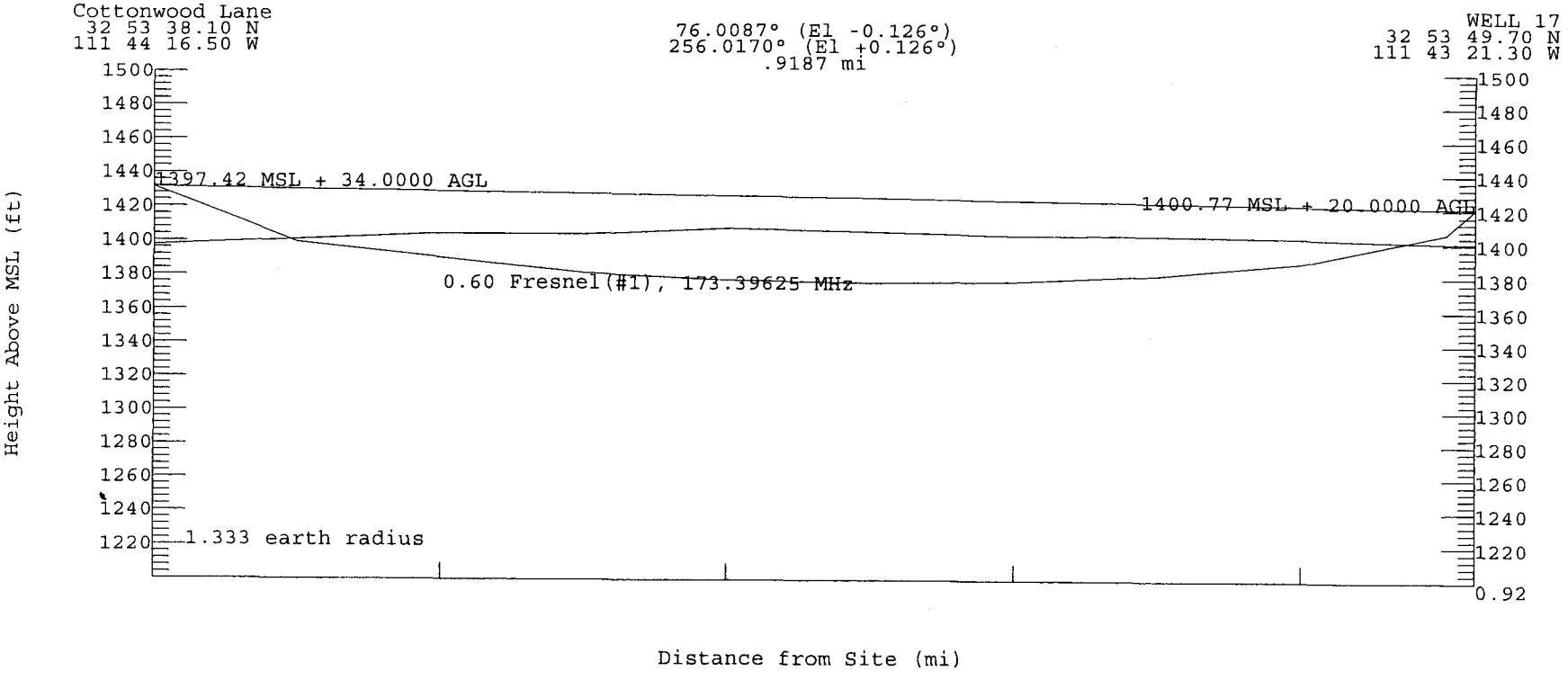
Cottonwood Lane
32 53 38.10 N
111 44 16.50 W
76.0087° (El -0.126°)
256.0170° (El +0.126°)
.9187 mi
WELL 17
32 53 49.70 N
111 43 21.30 W
1397.42 MSL + 34.0000 AGL
1400.77 MSL + 20.0000 AGL
0.60 Fresnel(#1), 173.39625 MHz
1.333 earth radius
Height Above MSL (ft)
Distance from Site (mi)
1500
1480
1460
1440
1420
1400
1380
1360
1340
1320
1300
1280
1260
1240
1220
0.92

TAP Single Point Field Calculation Parameters
January 30, 2002 07:17

Cottonwood Lane: 32 53 38.10 N 111 44 16.50 W
Frequency: 173.39625 MHz ERP: 8.3188 W
WELL 17: 32 53 49.70 N 111 43 21.30 W
Path: 0.9187 mi; Azimuth 76.0087
Step: 0.1000 mi; Effective Earth Curvature: 1.333
Topo Data: 30-meter
Interpolation: Weighted Interpolation (12 points)

Longley-Rice: LR Defaults
TX Site MSL adjusted to: 1397.42 ft
TX Ant: 1431.42ft MSL (Site 1397.42ft + 34.00ftAGL)
Ant: DLEC Scala Omni
Orientation: 0.00
RX Site MSL adjusted to: 1400.77 ft
RX Ant: 1420.77ft MSL (Site 1400.77ft + 20.00ftAGL)
Azimuth: 76.010
TX Antenna Gain: Az 0.00 dB; El 0.00 dB (angle = -0.126)
Free Space Field: (8.319 W @ 0.919 mi) 82.72 dBu
Free Space Loss: 76.34 dB (between dipoles)
Additional Estimated transmission loss :11.15 dB
Line-of-sight path
LR Mode: 31
Polarization: V
Surface Refrac: 0.00(301.00)
Permittivity: 15.00 Conductivity: 0.0050
Climate: Continental Temperate
Variability:
Situation: 94.00% Time: 94.00% Location: 90.00%
Path terrain Delta-H: 20.99 ft
Effective antenna heights: 34.00 ft 20.00 ft
Net received field: 71.57 dBu

RX Gain: 4.00 dBd
RX Loss: 0.00 dB
RX Input: -44.26 dBm

Microwave System Summary

| | |
|---|---|
| Transmitter | Cottonwood Lane |
| Receiver | WELL 17 |

| NAME | TRANSMIT | RECEIVE |
|---|---|---|
| Freq(MHz) | 173.39625 | 173.39625 |
| Latitude | 32 53 38.10 N | 32 53 49.70 N |
| Longitude | 111 44 16.50 W | 111 43 21.30 W |
| Elv (ft AMSL) | 1397.6400 | 1400.9200 |
| Ant Ht(ft AGL) | 34.0000 | 20.0000 |
| Bearing (deg T) | 76.01° | 256.02° |
| Orien (deg T) | 0.00° | 309.55° |
| Tilt (deg) | -0.12° | 0.12° |
| Line #1 Ls (dB) | 0.82 | 0.82 |
| Line #2 Ls (dB) | 0.00 | 0.00 |
| Other Ls (dB) | 0.00 | 0.00 |
| Antenna Gn | 4.00 dBd | 4.00 dBd |
| Polarization | ver | ver |
| Other Gn (dB) | 0.00 | 0.00 |

| PATH DATA | | SYSTEM |
|---|---|---|
| Distance (mi) | .92 | |
| Free Sp Ls (dB) | 80.66 | |
| Other Ls (dB) | 11.15 | |

| SYSTEM SUMMARY | | SYSTEM |
|---|---|---|
| Total Gn (dB) | 12.30 | |
| Total Ls (dB) | -93.45 | |
| TX Power (dBm) | | 36.02 |
| RX Thresh (dBm) | | -101.00 |
| RSL (dBm) | -45.13 | |
| TFM (dB) | 55.87 | |
| Reliability(%) | 100.000000000 | |
| Outage(sec/yr) | 0.00 | |

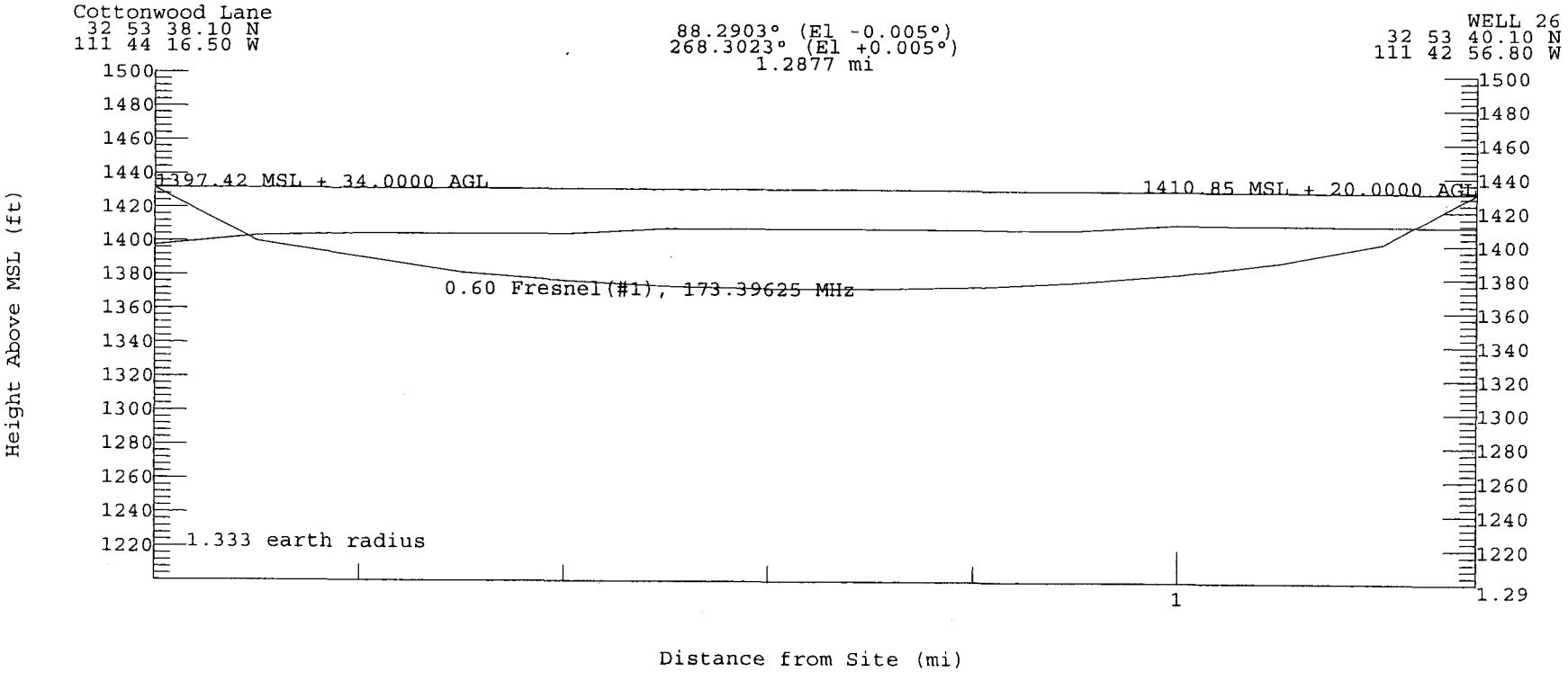
Cottonwood Lane
32 53 38.10 N
111 44 16.50 W
88.2903° (El -0.005°)
268.3023° (El +0.005°)
1.2877 mi
WELL 26
32 53 40.10 N
111 42 56.80 W
1397.42 MSL + 34.0000 AGL
1410.85 MSL + 20.0000 AGL
0.60 Fresnel(#1), 173.39625 MHz
1.333 earth radius
Height Above MSL (ft)
Distance from Site (mi)
1500
1480
1460
1440
1420
1400
1380
1360
1340
1320
1300
1280
1260
1240
1220
1
1.29

TAP Single Point Field Calculation Parameters
January 30, 2002 07:24

Cottonwood Lane: 32 53 38.10 N 111 44 16.50 W
Frequency: 173.39625 MHz ERP: 8.3188 W
WELL 26: 32 53 40.10 N 111 42 56.80 W
Path: 1.2877 mi; Azimuth 88.2903
Step: 0.1000 mi; Effective Earth Curvature: 1.333
Topo Data: 30-meter
Interpolation: Weighted Interpolation (12 points)

Longley-Rice: LR Defaults
TX Site MSL adjusted to: 1397.42 ft
TX Ant: 1431.42ft MSL (Site 1397.42ft + 34.00ftAGL)
Ant: DLEC Scala Omni
Orientation: 0.00
RX Site MSL adjusted to: 1410.85 ft
RX Ant: 1430.85ft MSL (Site 1410.85ft + 20.00ftAGL)
Azimuth: 88.290
TX Antenna Gain: Az 0.00 dB; El 0.00 dB (angle = -0.005)
Free Space Field: (8.319 W @ 1.288 mi) 79.79 dBu
Free Space Loss: 79.28 dB (between dipoles)
Additional Estimated transmission loss :13.33 dB
Line-of-sight path
LR Mode: 31
Polarization: V
Surface Refrac: 0.00(301.00)
Permittivity: 15.00 Conductivity: 0.0050
Climate: Continental Temperate
Variability:
Situation: 94.00% Time: 94.00% Location: 90.00%
Path terrain Delta-H: 9.23 ft
Effective antenna heights: 34.00 ft 20.00 ft
Net received field: 66.46 dBu

RX Gain: 6.00 dBd
RX Loss: 0.00 dB
RX Input: -47.37 dBm

Microwave System Summary

Transmitter Cottonwood Lane
Receiver WELL 26

| NAME | TRANSMIT | RECEIVE |
|---|---|---|
| Freq(MHz) | 173.39625 | 173.39625 |
| Latitude | 32 53 38.10 N | 32 53 40.10 N |
| Longitude | 111 44 16.50 W | 111 42 56.80 W |
| Elv (ft AMSL) | 1397.6400 | 1410.7600 |
| Ant Ht(ft AGL) | 34.0000 | 20.0000 |
| Bearing (deg T) | 88.29° | 268.30° |
| Orien (deg T) | 0.00° | 309.55° |
| Tilt (deg) | 0.00° | 0.00° |
| Line #1 Ls (dB) | 0.82 | 0.82 |
| Line #2 Ls (dB) | 0.00 | 0.00 |
| Other Ls (dB) | 0.00 | 0.00 |
| Antenna Gn | 4.00 dBd | 6.00 dBd |
| Polarization | ver | ver |
| Other Gn (dB) | 0.00 | 0.00 |

| PATH DATA | SYSTEM |
|---|---|
| Distance (mi) | 1.29 |
| Free Sp Ls (dB) | 83.59 |
| Other Ls (dB) | 13.33 |

| SYSTEM SUMMARY | SYSTEM |
|---|---|
| Total Gn (dB) | 14.30 |
| Total Ls (dB) | -98.56 |
| TX Power (dBm) | 36.02 |
| RX Thresh (dBm) | -101.00 |
| RSL (dBm) | -48.24 |
| TFM (dB) | 52.76 |
| Reliability(%) | 100.000000000 |
| Outage(sec/yr) | 0.00 |

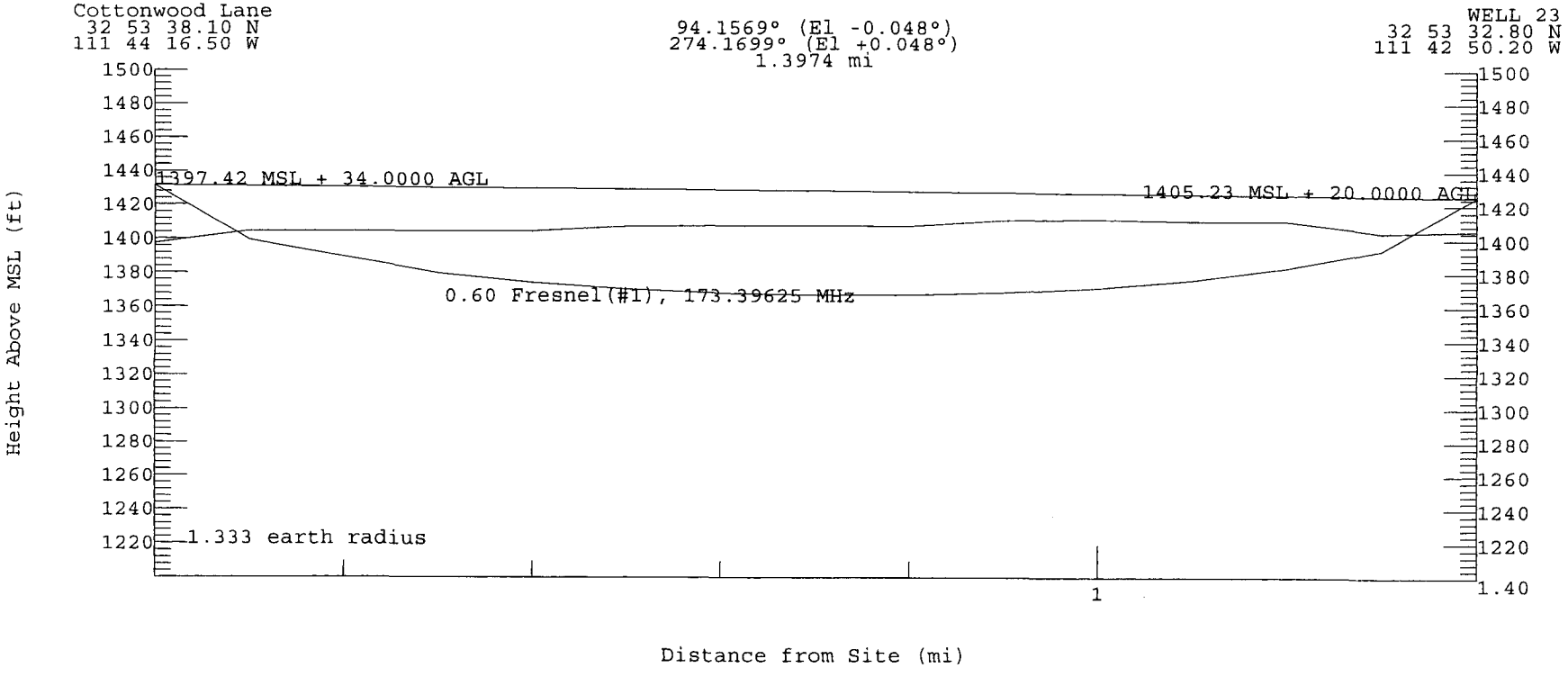
Cottonwood Lane
32 53 38.10 N
111 44 16.50 W
94.1569° (El -0.048°)
274.1699° (El +0.048°)
1.3974 mi
WELL 23
32 53 32.80 N
111 42 50.20 W
1397.42 MSL + 34.0000 AGL
1405.23 MSL + 20.0000 AGL
0.60 Fresnel(#1), 173.39625 MHz
1.333 earth radius
Height Above MSL (ft)
Distance from Site (mi)
1500
1480
1460
1440
1420
1400
1380
1360
1340
1320
1300
1280
1260
1240
1220
1
1.40

TAP Single Point Field Calculation Parameters
January 30, 2002 07:49

Cottonwood Lane: 32 53 38.10 N 111 44 16.50 W
Frequency: 173.39625 MHz ERP: 8.3188 W
WELL 23: 32 53 32.80 N 111 42 50.20 W
Path: 1.3974 mi; Azimuth 94.1569
Step: 0.1000 mi; Effective Earth Curvature: 1.333
Topo Data: 30-meter
Interpolation: Weighted Interpolation (12 points)

Longley-Rice: LR Defaults
TX Site MSL adjusted to: 1397.42 ft
TX Ant: 1431.42ft MSL (Site 1397.42ft + 34.00ftAGL)
Ant: DLEC Scala Omni
Orientation: 0.00
RX Site MSL adjusted to: 1405.23 ft
RX Ant: 1425.23ft MSL (Site 1405.23ft + 20.00ftAGL)
Azimuth: 94.157
TX Antenna Gain: Az 0.00 dB; El 0.00 dB (angle = -0.048)
Free Space Field: (8.319 W @ 1.397 mi) 79.08 dBu
Free Space Loss: 79.99 dB (between dipoles)
Additional Estimated transmission loss :14.25 dB
Line-of-sight path
LR Mode: 31
Polarization: V
Surface Refrac: 0.00(301.00)
Permittivity: 15.00 Conductivity: 0.0050
Climate: Continental Temperate
Variability:
Situation: 94.00% Time: 94.00% Location: 90.00%
Path terrain Delta-H: 18.07 ft
Effective antenna heights: 34.00 ft 20.00 ft
Net received field: 64.83 dBu

RX Gain: 4.00 dBd
RX Loss: 0.00 dB
RX Input: -51.00 dBm

Microwave System Summary

Transmitter Cottonwood Lane
Receiver WELL 23

| NAME | TRANSMIT | RECEIVE |
|---|---|---|
| Freq(MHz) | 173.39625 | 173.39625 |
| Latitude | 32 53 38.10 N | 32 53 32.80 N |
| Longitude | 111 44 16.50 W | 111 42 50.20 W |
| Elv (ft AMSL) | 1397.6400 | 1404.3800 |
| Ant Ht(ft AGL) | 34.0000 | 20.0000 |
| Bearing (deg T) | 94.16° | 274.17° |
| Orien (deg T) | 0.00° | 309.55° |
| Tilt (deg) | -0.05° | 0.05° |
| Line #1 Ls (dB) | 0.82 | 0.82 |
| Line #2 Ls (dB) | 0.00 | 0.00 |
| Other Ls (dB) | 0.00 | 0.00 |
| Antenna Gn | 4.00 dBd | 4.00 dBd |
| Polarization | ver | ver |
| Other Gn (dB) | 0.00 | 0.00 |

| PATH DATA | SYSTEM |
|---|---|
| Distance (mi) | 1.40 |
| Free Sp Ls (dB) | 84.30 |
| Other Ls (dB) | 14.25 |

| SYSTEM SUMMARY | SYSTEM |
|---|---|
| Total Gn (dB) | 12.30 |
| Total Ls (dB) | -100.19 |
| TX Power (dBm) | 36.02 |
| RX Thresh (dBm) | -101.00 |
| RSL (dBm) | -51.87 |
| TFM (dB) | 49.13 |
| Reliability(%) | 100.000000000 |
| Outage(sec/yr) | 0.00 |

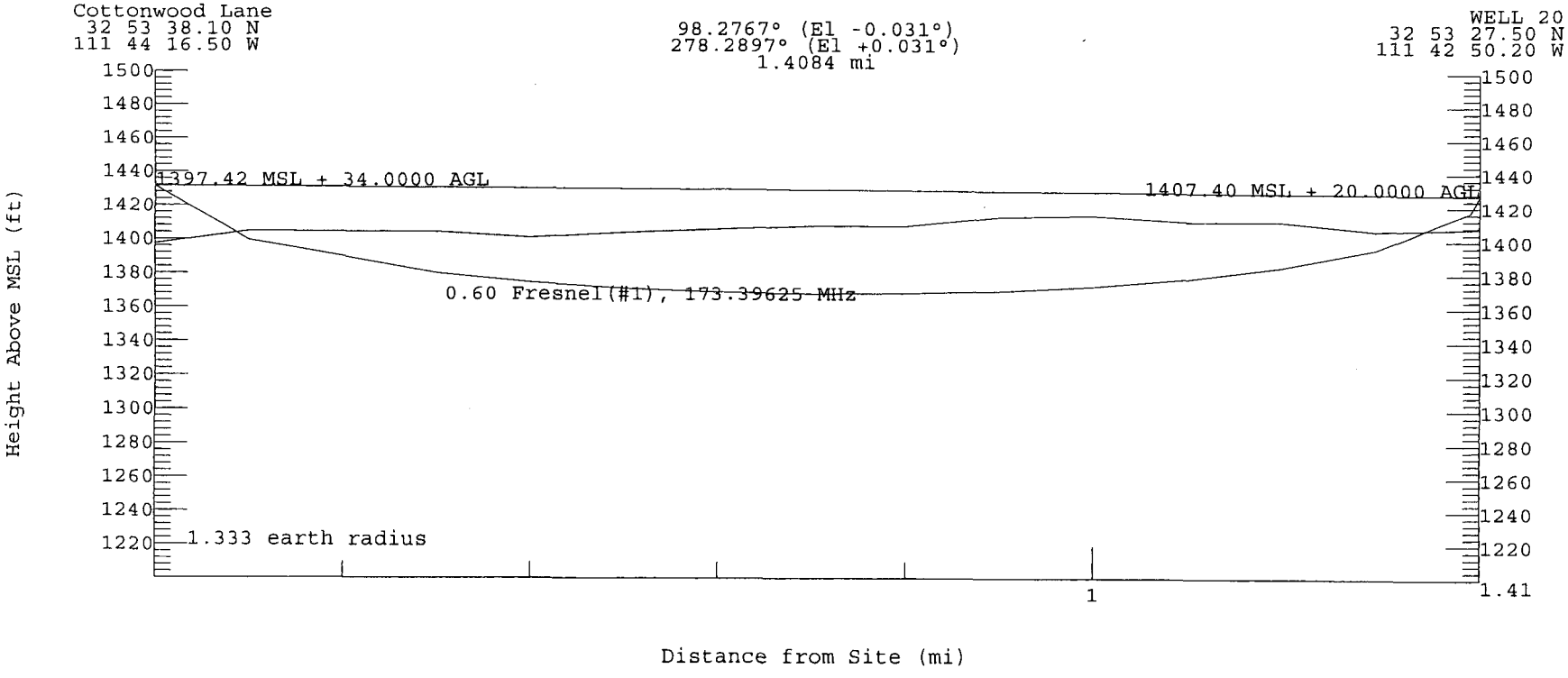
Cottonwood Lane
32 53 38.10 N
111 44 16.50 W
98.2767° (El -0.031°)
278.2897° (El +0.031°)
1.4084 mi
WELL 20
32 53 27.50 N
111 42 50.20 W
1397.42 MSL + 34.0000 AGL
1407.40 MSL + 20.0000 AGL
0.60 Fresnel(#1), 173.39625 MHz
1.333 earth radius
Height Above MSL (ft)
Distance from Site (mi)
1500
1480
1460
1440
1420
1400
1380
1360
1340
1320
1300
1280
1260
1240
1220
1
1.41

TAP Single Point Field Calculation Parameters
January 30, 2002 07:57

Cottonwood Lane: 32 53 38.10 N 111 44 16.50 W
Frequency: 173.39625 MHz ERP: 8.3188 W
WELL 20: 32 53 27.50 N 111 42 50.20 W
Path: 1.4084 mi; Azimuth 98.2767
Step: 0.1000 mi; Effective Earth Curvature: 1.333
Topo Data: 30-meter
Interpolation: Weighted Interpolation (12 points)

Longley-Rice: LR Defaults
TX Site MSL adjusted to: 1397.42 ft
TX Ant: 1431.42ft MSL (Site 1397.42ft + 34.00ftAGL)
Ant: DLEC Scala Omni
Orientation: 0.00
RX Site MSL adjusted to: 1407.40 ft
RX Ant: 1427.40ft MSL (Site 1407.40ft + 20.00ftAGL)
Azimuth: 98.276
TX Antenna Gain: Az 0.00 dB; El 0.00 dB (angle = -0.031)
Free Space Field: (8.319 W @ 1.408 mi) 79.01 dBu
Free Space Loss: 80.06 dB (between dipoles)
Additional Estimated transmission loss :14.74 dB
Line-of-sight path
LR Mode: 31
Polarization: V
Surface Refrac: 0.00(301.00)
Permittivity: 15.00 Conductivity: 0.0050
Climate: Continental Temperate
Variability:
Situation: 94.00% Time: 94.00% Location: 90.00%
Path terrain Delta-H: 35.89 ft
Effective antenna heights: 34.00 ft 20.00 ft
Net received field: 64.27 dBu

RX Gain: 4.00 dBd
RX Loss: 0.00 dB
RX Input: -51.56 dBm

Microwave System Summary

Transmitter Cottonwood Lane
Receiver WELL 20

| NAME | TRANSMIT | RECEIVE |
|---|---|---|
| Freq(MHz) | 173.39625 | 173.39625 |
| Latitude | 32 53 38.10 N | 32 53 27.50 N |
| Longitude | 111 44 16.50 W | 111 42 50.20 W |
| Elv (ft AMSL) | 1397.6400 | 1407.4800 |
| Ant Ht(ft AGL) | 34.0000 | 20.0000 |
| Bearing (deg T) | 98.28° | 278.29° |
| Orien (deg T) | 0.00° | 309.55° |
| Tilt (deg) | -0.03° | 0.03° |
| Line #1 Ls (dB) | 0.82 | 0.82 |
| Line #2 Ls (dB) | 0.00 | 0.00 |
| Other Ls (dB) | 0.00 | 0.00 |
| Antenna Gn | 4.00 dBd | 4.00 dBd |
| Polarization | ver | ver |
| Other Gn (dB) | 0.00 | 0.00 |

| PATH DATA | SYSTEM |
|---|---|
| Distance (mi) | 1.41 |
| Free Sp Ls (dB) | 84.37 |
| Other Ls (dB) | 14.74 |

| SYSTEM SUMMARY | SYSTEM |
|---|---|
| Total Gn (dB) | 12.30 |
| Total Ls (dB) | -100.75 |
| TX Power (dBm) | 36.02 |
| RX Thresh (dBm) | -101.00 |
| RSL (dBm) | -52.43 |
| TFM (dB) | 48.57 |
| Reliability(%) | 100.000000000 |
| Outage(sec/yr) | 0.00 |

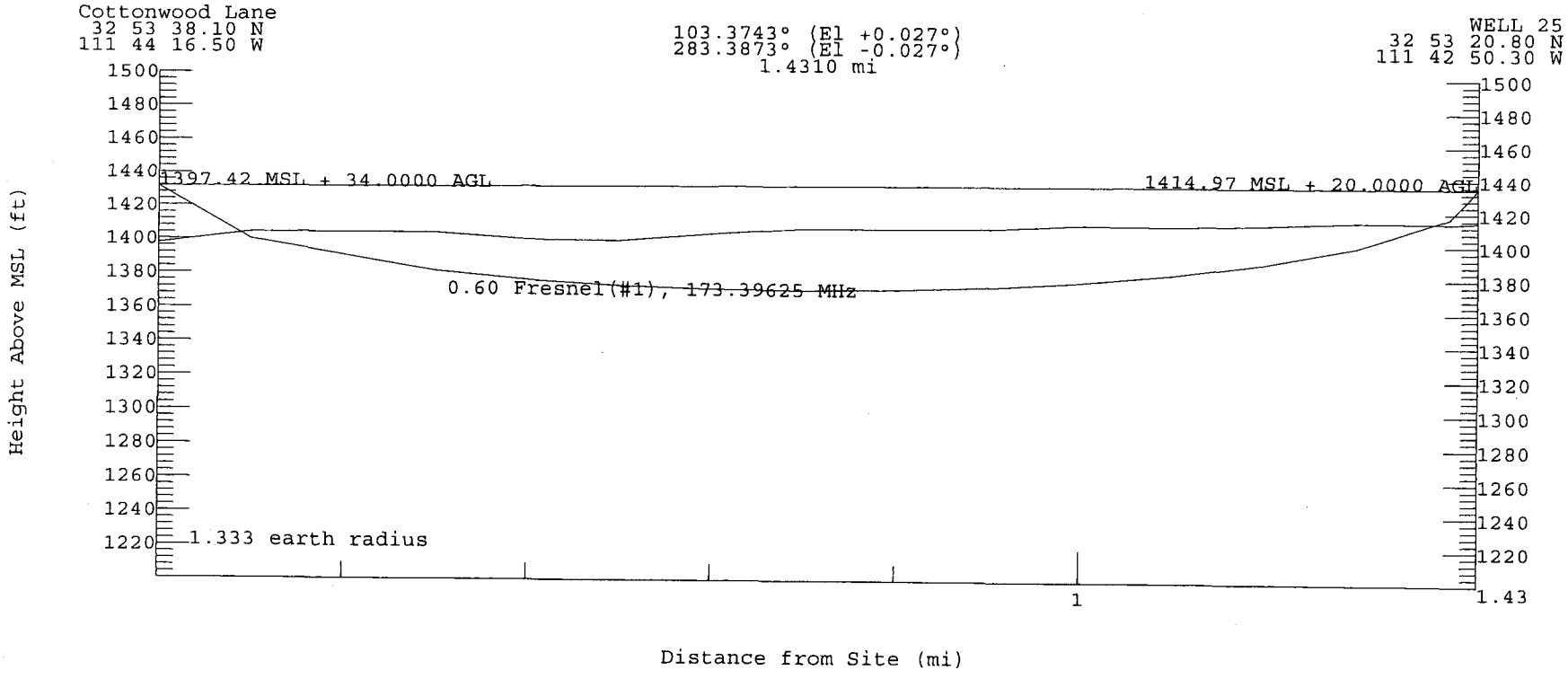
Cottonwood Lane
32 53 38.10 N
111 44 16.50 W
103.3743° (El +0.027°)
283.3873° (El -0.027°)
1.4310 mi
WELL 25
32 53 20.80 N
111 42 50.30 W
1397.42 MSL + 34.0000 AGL
1414.97 MSL + 20.0000 AGL
0.60 Fresnel(#1), 173.39625 MHz
1.333 earth radius
Height Above MSL (ft)
Distance from Site (mi)
1500
1480
1460
1440
1420
1400
1380
1360
1340
1320
1300
1280
1260
1240
1220
1
1.43

TAP Single Point Field Calculation Parameters
January 30, 2002 08:05

Cottonwood Lane: 32 53 38.10 N 111 44 16.50 W
Frequency: 173.39625 MHz ERP: 8.3188 W
WELL 25: 32 53 20.80 N 111 42 50.30 W
Path: 1.4310 mi; Azimuth 103.3743
Step: 0.1000 mi; Effective Earth Curvature: 1.333
Topo Data: 30-meter
Interpolation: Weighted Interpolation (12 points)

Longley-Rice: LR Defaults
TX Site MSL adjusted to: 1397.42 ft
TX Ant: 1431.42ft MSL (Site 1397.42ft + 34.00ftAGL)
Ant: DLEC Scala Omni
Orientation: 0.00
RX Site MSL adjusted to: 1414.97 ft
RX Ant: 1434.97ft MSL (Site 1414.97ft + 20.00ftAGL)
Azimuth: 103.373
TX Antenna Gain: Az 0.00 dB; El 0.00 dB (angle = 0.027)
Free Space Field: (8.319 W @ 1.431 mi) 78.87 dBu
Free Space Loss: 80.19 dB (between dipoles)
Additional Estimated transmission loss :14.58 dB
Line-of-sight path
LR Mode: 31
Polarization: V
Surface Refrac: 0.00(301.00)
Permittivity: 15.00 Conductivity: 0.0050
Climate: Continental Temperate
Variability:
Situation: 94.00% Time: 94.00% Location: 90.00%
Path terrain Delta-H: 25.86 ft
Effective antenna heights: 34.00 ft 20.13 ft
Net received field: 64.29 dBu

RX Gain: 4.00 dBd
RX Loss: 0.00 dB
RX Input: -51.54 dBm

Microwave System Summary

| | |
|---|---|
| Transmitter | Cottonwood Lane |
| Receiver | WELL 25 |

| NAME | TRANSMIT | RECEIVE |
|---|---|---|
| Freq(MHz) | 173.39625 | 173.39625 |
| Latitude | 32 53 38.10 N | 32 53 20.80 N |
| Longitude | 111 44 16.50 W | 111 42 50.30 W |
| Elv (ft AMSL) | 1397.6400 | 1414.9000 |
| Ant Ht(ft AGL) | 34.0000 | 20.0000 |
| Bearing (deg T) | 103.37° | 283.39° |
| Orien (deg T) | 0.00° | 309.55° |
| Tilt (deg) | 0.03° | -0.03° |
| Line #1 Ls (dB) | 0.82 | 0.82 |
| Line #2 Ls (dB) | 0.00 | 0.00 |
| Other Ls (dB) | 0.00 | 0.00 |
| Antenna Gn | 4.00 dBd | 4.00 dBd |
| Polarization | ver | ver |
| Other Gn (dB) | 0.00 | 0.00 |

| PATH DATA | | SYSTEM |
|---|---|---|
| Distance (mi) | 1.43 | |
| Free Sp Ls (dB) | 84.49 | |
| Other Ls (dB) | 14.58 | |

| SYSTEM SUMMARY | | SYSTEM |
|---|---|---|
| Total Gn (dB) | 12.30 | |
| Total Ls (dB) | -100.71 | |
| TX Power (dBm) | | 36.02 |
| RX Thresh (dBm) | | -101.00 |
| RSL (dBm) | -52.39 | |
| TFM (dB) | 48.61 | |
| Reliability(%) | 100.000000000 | |
| Outage(sec/yr) | 0.00 | |

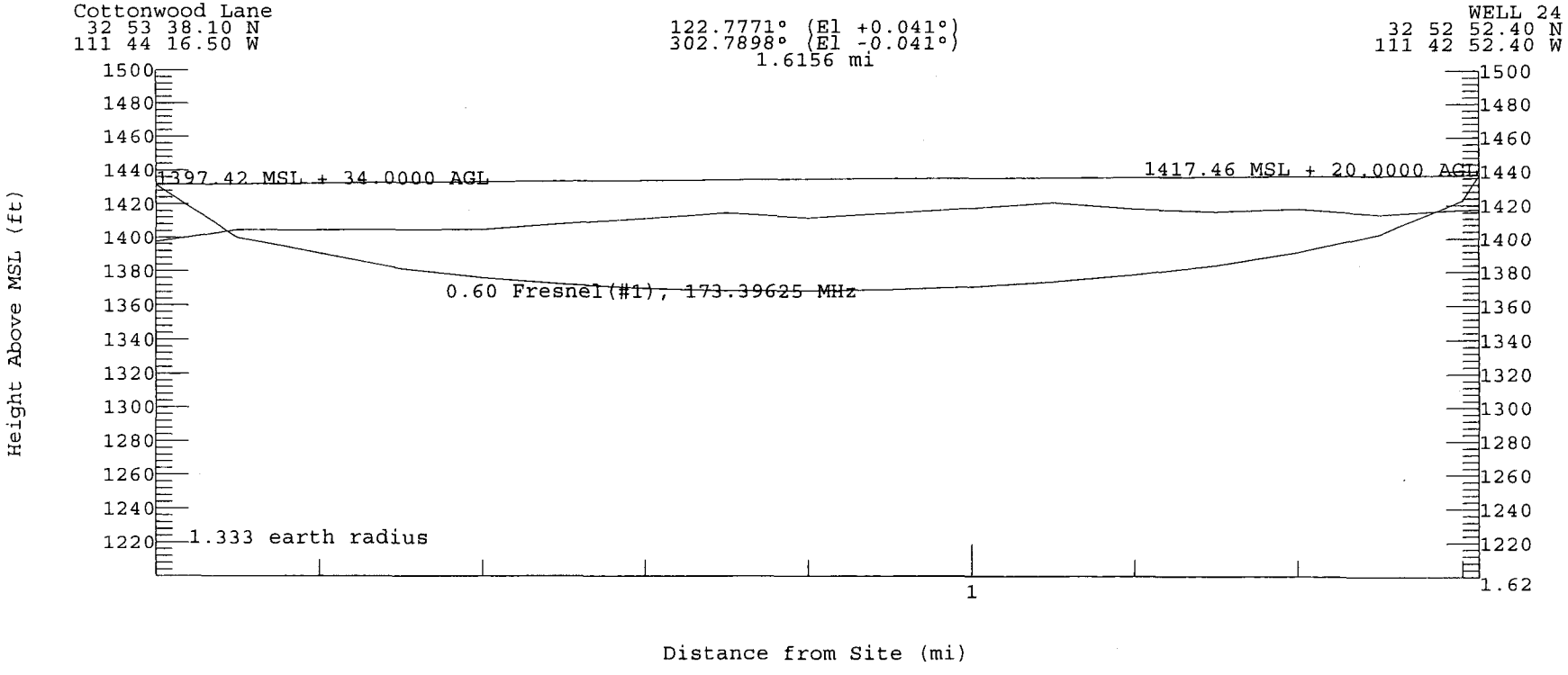
Cottonwood Lane
32 53 38.10 N
111 44 16.50 W
122.7771° (El +0.041°)
302.7898° (El -0.041°)
1.6156 mi
WELL 24
32 52 52.40 N
111 42 52.40 W
1397.42 MSL + 34.0000 AGL
1417.46 MSL + 20.0000 AGL
0.60 Fresnel(#1), 173.39625 MHz
1.333 earth radius
Height Above MSL (ft)
Distance from Site (mi)
1500
1480
1460
1440
1420
1400
1380
1360
1340
1320
1300
1280
1260
1240
1220
1
1.62

TAP Single Point Field Calculation Parameters
January 30, 2002 08:18

Cottonwood Lane: 32 53 38.10 N 111 44 16.50 W
Frequency: 173.39625 MHz ERP: 8.3188 W
WELL 24: 32 52 52.40 N 111 42 52.40 W
Path: 1.6156 mi; Azimuth 122.7771
Step: 0.1000 mi; Effective Earth Curvature: 1.333
Topo Data: 30-meter
Interpolation: Weighted Interpolation (12 points)

Longley-Rice: LR Defaults
TX Site MSL adjusted to: 1397.42 ft
TX Ant: 1431.42ft MSL (Site 1397.42ft + 34.00ftAGL)
Ant: DLEC Scala Omni
Orientation: 0.00
RX Site MSL adjusted to: 1417.46 ft
RX Ant: 1437.46ft MSL (Site 1417.46ft + 20.00ftAGL)
Azimuth: 122.775
TX Antenna Gain: Az 0.00 dB; El 0.00 dB (angle = 0.040)
Free Space Field: (8.319 W @ 1.616 mi) 77.82 dBu
Free Space Loss: 81.25 dB (between dipoles)
Additional Estimated transmission loss :15.63 dB
Line-of-sight path
LR Mode: 31
Polarization: V
Surface Refrac: 0.00(301.00)
Permittivity: 15.00 Conductivity: 0.0050
Climate: Continental Temperate
Variability:
Situation: 94.00% Time: 94.00% Location: 90.00%
Path terrain Delta-H: 28.80 ft
Effective antenna heights: 34.00 ft 20.00 ft
Net received field: 62.19 dBu

RX Gain: 4.00 dBd
RX Loss: 0.00 dB
RX Input: -53.64 dBm

Microwave System Summary

Transmitter Cottonwood Lane
Receiver WELL 24

| NAME | TRANSMIT | RECEIVE |
|---|---|---|
| Freq(MHz) | 173.39625 | 173.39625 |
| Latitude | 32 53 38.10 N | 32 52 52.40 N |
| Longitude | 111 44 16.50 W | 111 42 52.40 W |
| Elv (ft AMSL) | 1397.6400 | 1417.3200 |
| Ant Ht(ft AGL) | 34.0000 | 20.0000 |
| Bearing (deg T) | 122.78° | 302.79° |
| Orien (deg T) | 0.00° | 309.55° |
| Tilt (deg) | 0.04° | -0.04° |
| Line #1 Ls (dB) | 0.82 | 0.82 |
| Line #2 Ls (dB) | 0.00 | 0.00 |
| Other Ls (dB) | 0.00 | 0.00 |
| Antenna Gn | 4.00 dBd | 4.00 dBd |
| Polarization | ver | ver |
| Other Gn (dB) | 0.00 | 0.00 |

| PATH DATA | SYSTEM |
|---|---|
| Distance (mi) | 1.62 |
| Free Sp Ls (dB) | 85.57 |
| Other Ls (dB) | 15.63 |

| SYSTEM SUMMARY | SYSTEM |
|---|---|
| Total Gn (dB) | 12.30 |
| Total Ls (dB) | -102.84 |
| TX Power (dBm) | 36.02 |
| RX Thresh (dBm) | -101.00 |
| RSL (dBm) | -54.52 |
| TFM (dB) | 46.48 |
| Reliability(%) | 99.999999999 |
| Outage(sec/yr) | 0.00 |

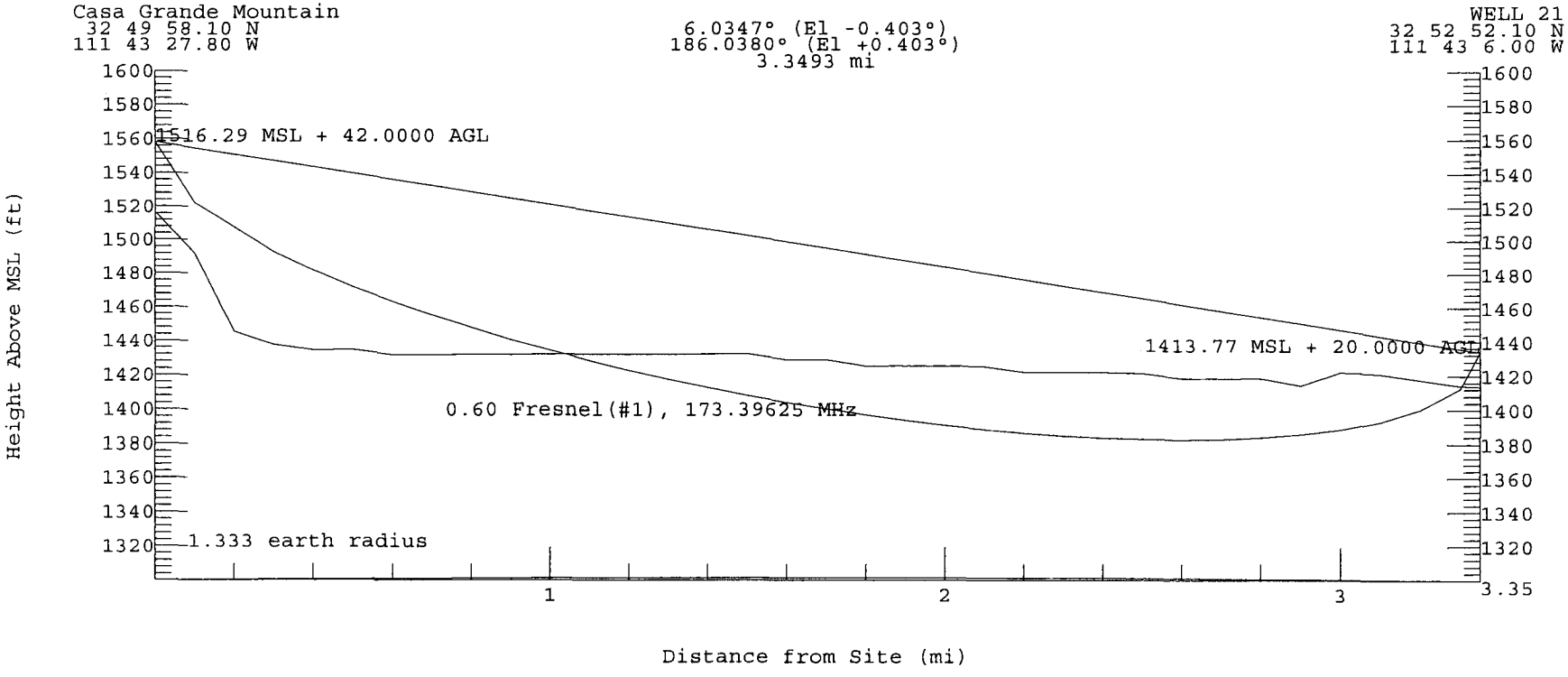
Casa Grande Mountain
32 49 58.10 N
111 43 27.80 W
6.0347° (El -0.403°)
186.0380° (El +0.403°)
3.3493 mi
WELL 21
32 52 52.10 N
111 43 6.00 W
1516.29 MSL + 42.0000 AGL
1413.77 MSL + 20.0000 AGL
0.60 Fresnel(#1), 173.39625 MHz
1.333 earth radius
Height Above MSL (ft)
Distance from Site (mi)
1600
1580
1560
1540
1520
1500
1480
1460
1440
1420
1400
1380
1360
1340
1320
1
2
3
3.35

TAP Single Point Field Calculation Parameters
January 30, 2002 08:46

Casa Grande Mountain: 32 49 58.10 N 111 43 27.80 W
Frequency: 173.39625 MHz ERP: 8.3188 W
WELL 21: 32 52 52.10 N 111 43 6.00 W
Path: 3.3493 mi; Azimuth 6.0347
Step: 0.1000 mi; Effective Earth Curvature: 1.333
Topo Data: 30-meter
Interpolation: Weighted Interpolation (12 points)

Longley-Rice: LR Defaults
TX Site MSL adjusted to: 1516.29 ft
TX Ant: 1558.29ft MSL (Site 1516.29ft + 42.00ftAGL)
Ant: DLEC Scala Omni
Orientation: 0.00
RX Site MSL adjusted to: 1413.77 ft
RX Ant: 1433.77ft MSL (Site 1413.77ft + 20.00ftAGL)
Azimuth: 6.035
TX Antenna Gain: Az 0.00 dB; El 0.00 dB (angle = -0.403)
Free Space Field: (8.319 W @ 3.349 mi) 71.49 dBu
Free Space Loss: 87.58 dB (between dipoles)
Additional Estimated transmission loss :10.48 dB
Line-of-sight path
LR Mode: 31
Polarization: V
Surface Refrac: 0.00(301.00)
Permittivity: 15.00 Conductivity: 0.0050
Climate: Continental Temperate
Variability:
Situation: 94.00% Time: 94.00% Location: 90.00%
Path terrain Delta-H: 28.45 ft
Effective antenna heights: 116.55 ft 21.44 ft
Net received field: 61.01 dBu

RX Gain: 4.00 dBd
RX Loss: 0.00 dB
RX Input: -54.82 dBm

Microwave System Summary

Transmitter Casa Grande Mountain
Receiver WELL 21

| NAME | TRANSMIT | RECEIVE |
|---|---|---|
| Freq(MHz) | 173.39625 | 173.39625 |
| Latitude | 32 49 58.10 N | 32 52 52.10 N |
| Longitude | 111 43 27.80 W | 111 43 6.00 W |
| Elv (ft AMSL) | 1519.0200 | 1414.0400 |
| Ant Ht(ft AGL) | 42.0000 | 20.0000 |
| Bearing (deg T) | 6.03° | 186.04° |
| Orien (deg T) | 0.00° | 309.55° |
| Tilt (deg) | -0.41° | 0.41° |
| Line #1 Ls (dB) | 0.82 | 0.82 |
| Line #2 Ls (dB) | 0.00 | 0.00 |
| Other Ls (dB) | 0.00 | 0.00 |
| Antenna Gn | 4.00 dBd | 4.00 dBd |
| Polarization | ver | ver |
| Other Gn (dB) | 0.00 | 0.00 |

| PATH DATA | SYSTEM |
|---|---|
| Distance (mi) | 3.35 |
| Free Sp Ls (dB) | 91.88 |
| Other Ls (dB) | 10.48 |

| SYSTEM SUMMARY | SYSTEM |
|---|---|
| Total Gn (dB) | 12.30 |
| Total Ls (dB) | -104.00 |
| TX Power (dBm) | 36.02 |
| RX Thresh (dBm) | -101.00 |
| RSL (dBm) | -55.68 |
| TFM (dB) | 45.32 |
| Reliability(%) | 99.999999988 |
| Outage(sec/yr) | 0.00 |

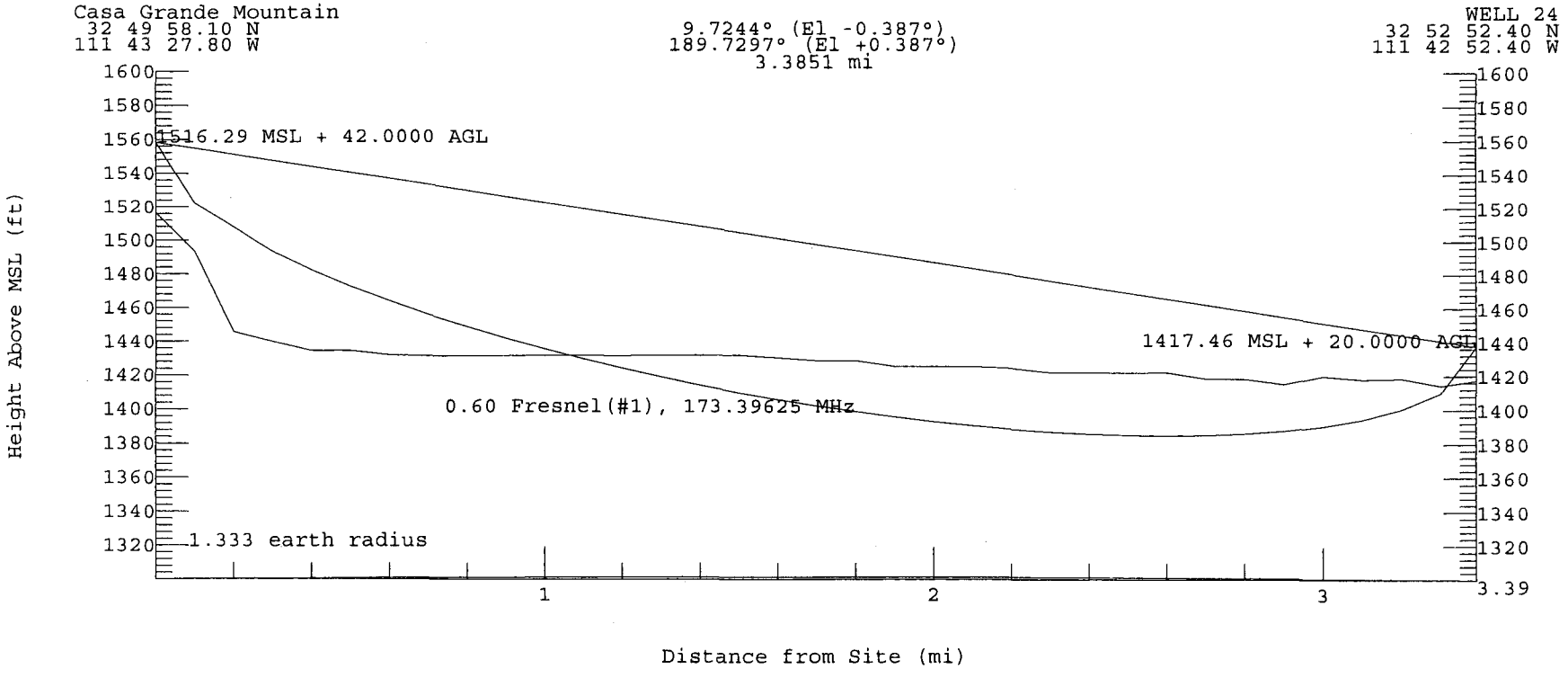
Casa Grande Mountain
32 49 58.10 N
111 43 27.80 W
9.7244° (El -0.387°)
189.7297° (El +0.387°)
3.3851 mi
WELL 24
32 52 52.40 N
111 42 52.40 W
1516.29 MSL + 42.0000 AGL
1417.46 MSL + 20.0000 AGL
0.60 Fresnel(#1), 173.39625 MHz
1.333 earth radius
Height Above MSL (ft)
Distance from Site (mi)
1600
1580
1560
1540
1520
1500
1480
1460
1440
1420
1400
1380
1360
1340
1320
1
2
3
3.39

TAP Single Point Field Calculation Parameters
January 30, 2002 09:02

Casa Grande Mountain: 32 49 58.10 N 111 43 27.80 W
Frequency: 173.39625 MHz ERP: 8.3188 W
WELL 24: 32 52 52.40 N 111 42 52.40 W
Path: 3.3851 mi; Azimuth 9.7244
Step: 0.1000 mi; Effective Earth Curvature: 1.333
Topo Data: 30-meter
Interpolation: Weighted Interpolation (12 points)

Longley-Rice: LR Defaults
TX Site MSL adjusted to: 1516.29 ft
TX Ant: 1558.29ft MSL (Site 1516.29ft + 42.00ftAGL)
Ant: DLEC Scala Omni
Orientation: 0.00
RX Site MSL adjusted to: 1417.46 ft
RX Ant: 1437.46ft MSL (Site 1417.46ft + 20.00ftAGL)
Azimuth: 9.725
TX Antenna Gain: Az 0.00 dB; El 0.00 dB (angle = -0.388)
Free Space Field: (8.319 W @ 3.385 mi) 71.40 dBu
Free Space Loss: 87.67 dB (between dipoles)
Additional Estimated transmission loss :9.33 dB
Line-of-sight path
LR Mode: 31
Polarization: V
Surface Refrac: 0.00(301.00)
Permittivity: 15.00 Conductivity: 0.0050
Climate: Continental Temperate
Variability:
Situation: 94.00% Time: 94.00% Location: 90.00%
Path terrain Delta-H: 24.45 ft
Effective antenna heights: 115.98 ft 24.91 ft
Net received field: 62.07 dBu

RX Gain: 4.00 dBd
RX Loss: 0.00 dB
RX Input: -53.76 dBm

Microwave System Summary

Transmitter Casa Grande Mountain
Receiver WELL 24

| NAME | TRANSMIT | RECEIVE |
|---|---|---|
| Freq(MHz) | 173.39625 | 173.39625 |
| Latitude | 32 49 58.10 N | 32 52 52.40 N |
| Longitude | 111 43 27.80 W | 111 42 52.40 W |
| Elv (ft AMSL) | 1519.0200 | 1417.3200 |
| Ant Ht(ft AGL) | 42.0000 | 20.0000 |
| Bearing (deg T) | 9.72° | 189.73° |
| Orien (deg T) | 0.00° | 309.55° |
| Tilt (deg) | -0.40° | 0.40° |
| Line #1 Ls (dB) | 0.82 | 0.82 |
| Line #2 Ls (dB) | 0.00 | 0.00 |
| Other Ls (dB) | 0.00 | 0.00 |
| Antenna Gn | 4.00 dBd | 4.00 dBd |
| Polarization | ver | ver |
| Other Gn (dB) | 0.00 | 0.00 |

| PATH DATA | SYSTEM |
|---|---|
| Distance (mi) | 3.39 |
| Free Sp Ls (dB) | 91.98 |
| Other Ls (dB) | 9.33 |

| SYSTEM SUMMARY | SYSTEM |
|---|---|
| Total Gn (dB) | 12.30 |
| Total Ls (dB) | -102.95 |
| TX Power (dBm) | 36.02 |
| RX Thresh (dBm) | -101.00 |
| RSL (dBm) | -54.63 |
| TFM (dB) | 46.37 |
| Reliability(%) | 99.999999990 |
| Outage(sec/yr) | 0.00 |

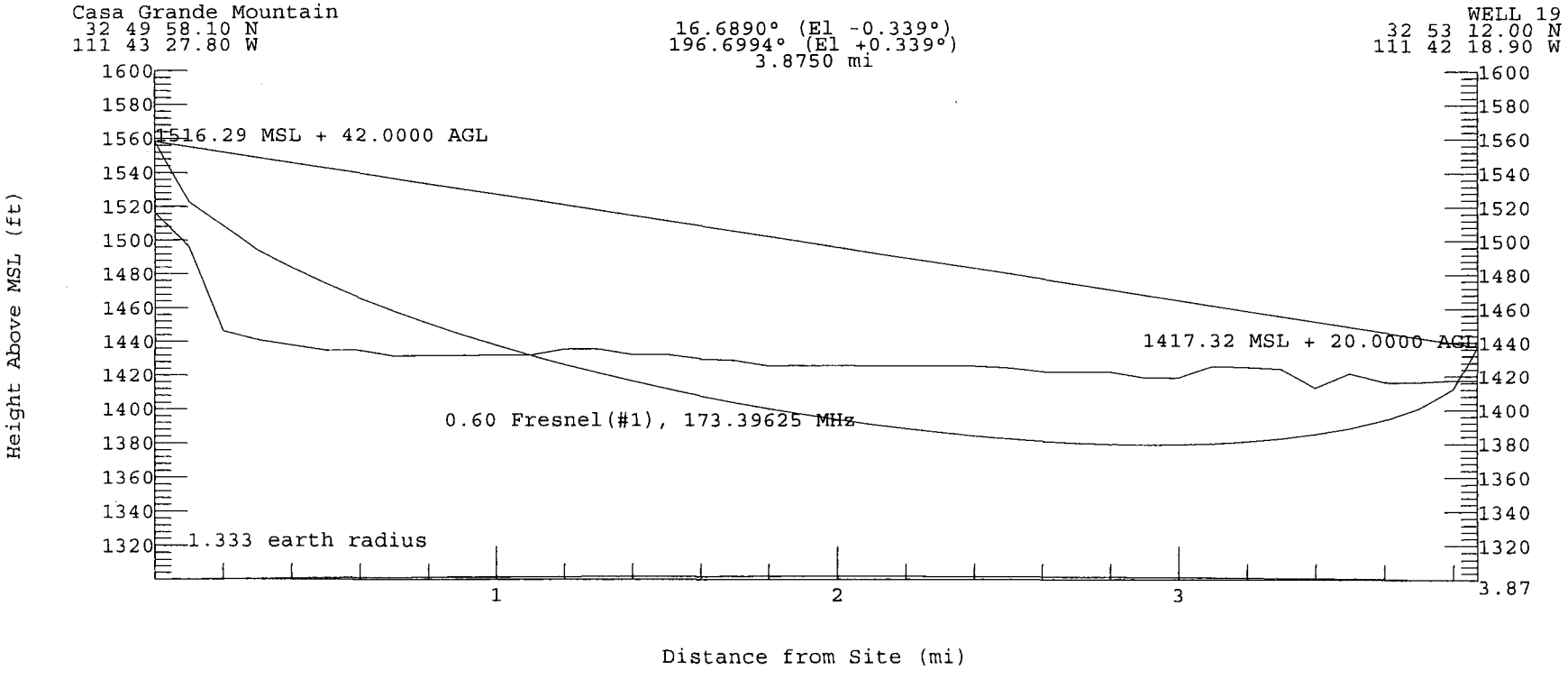
Casa Grande Mountain
32 49 58.10 N
111 43 27.80 W
16.6890° (El -0.339°)
196.6994° (El +0.339°)
3.8750 mi
WELL 19
32 53 12.00 N
111 42 18.90 W
1516.29 MSL + 42.0000 AGL
1417.32 MSL + 20.0000 AGL
0.60 Fresnel(#1), 173.39625 MHz
1.333 earth radius
Height Above MSL (ft)
Distance from Site (mi)
1600
1580
1560
1540
1520
1500
1480
1460
1440
1420
1400
1380
1360
1340
1320
1
2
3
3.87

TAP Single Point Field Calculation Parameters
January 30, 2002 09:07

Casa Grande Mountain: 32 49 58.10 N 111 43 27.80 W
Frequency: 173.39625 MHz ERP: 8.3188 W
WELL 19: 32 53 12.00 N 111 42 18.90 W
Path: 3.8750 mi; Azimuth 16.6890
Step: 0.1000 mi; Effective Earth Curvature: 1.333
Topo Data: 30-meter
Interpolation: Weighted Interpolation (12 points)

Longley-Rice: LR Defaults
TX Site MSL adjusted to: 1516.29 ft
TX Ant: 1558.29ft MSL (Site 1516.29ft + 42.00ftAGL)
Ant: DLEC Scala Omni
Orientation: 0.00
RX Site MSL adjusted to: 1417.32 ft
RX Ant: 1437.32ft MSL (Site 1417.32ft + 20.00ftAGL)
Azimuth: 16.690
TX Antenna Gain: Az 0.00 dB; El 0.00 dB (angle = -0.339)
Free Space Field: (8.319 W @ 3.875 mi) 70.22 dBu
Free Space Loss: 88.85 dB (between dipoles)
Additional Estimated transmission loss :10.69 dB
Line-of-sight path
LR Mode: 31
Polarization: V
Surface Refrac: 0.00(301.00)
Permittivity: 15.00 Conductivity: 0.0050
Climate: Continental Temperate
Variability:
Situation: 94.00% Time: 94.00% Location: 90.00%
Path terrain Delta-H: 31.35 ft
Effective antenna heights: 116.90 ft 24.16 ft
Net received field: 59.54 dBu

RX Gain: 4.00 dBd
RX Loss: 0.00 dB
RX Input: -56.29 dBm

Microwave System Summary

Transmitter Casa Grande Mountain
Receiver WELL 19

| NAME | TRANSMIT | RECEIVE |
|---|---|---|
| Freq(MHz) | 173.39625 | 173.39625 |
| Latitude | 32 49 58.10 N | 32 53 12.00 N |
| Longitude | 111 43 27.80 W | 111 42 18.90 W |
| Elv (ft AMSL) | 1519.0200 | 1417.3200 |
| Ant Ht(ft AGL) | 42.0000 | 20.0000 |
| Bearing (deg T) | 16.69° | 196.70° |
| Orien (deg T) | 0.00° | 309.55° |
| Tilt (deg) | -0.35° | 0.35° |
| Line #1 Ls (dB) | 0.82 | 0.82 |
| Line #2 Ls (dB) | 0.00 | 0.00 |
| Other Ls (dB) | 0.00 | 0.00 |
| Antenna Gn | 4.00 dBd | 4.00 dBd |
| Polarization | ver | ver |
| Other Gn (dB) | 0.00 | 0.00 |

| PATH DATA | SYSTEM |
|---|---|
| Distance (mi) | 3.87 |
| Free Sp Ls (dB) | 93.14 |
| Other Ls (dB) | 10.69 |

| SYSTEM SUMMARY | SYSTEM |
|---|---|
| Total Gn (dB) | 12.30 |
| Total Ls (dB) | -105.47 |
| TX Power (dBm) | 36.02 |
| RX Thresh (dBm) | -101.00 |
| RSL (dBm) | -57.15 |
| TFM (dB) | 43.85 |
| Reliability(%) | 99.999999974 |
| Outage(sec/yr) | 0.01 |

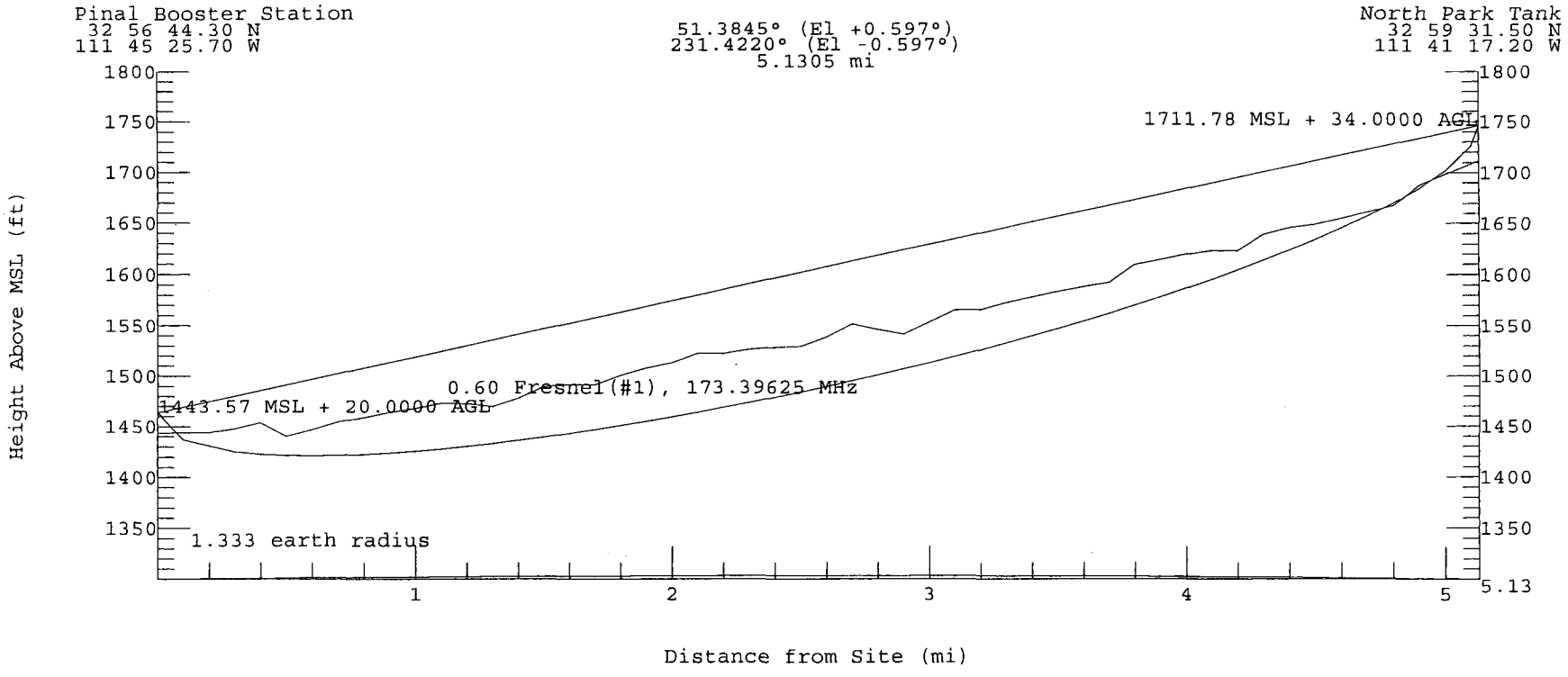
Pinal Booster Station
32 56 44.30 N
111 45 25.70 W
51.3845° (El +0.597°)
231.4220° (El -0.597°)
5.1305 mi
North Park Tank
32 59 31.50 N
111 41 17.20 W
1711.78 MSL + 34.0000 AGL
0.60 Fresnel(#1), 173.39625 MHz
1443.57 MSL + 20.0000 AGL
1.333 earth radius
Height Above MSL (ft)
Distance from Site (mi)
1800
1750
1700
1650
1600
1550
1500
1450
1400
1350
1
2
3
4
5
5.13

TAP Single Point Field Calculation Parameters
January 29, 2002 15:49

Pinal Booster Station: 32 56 44.30 N 111 45 25.70 W
Frequency: 173.39625 MHz ERP: 8.3188 W
North Park Tank: 32 59 31.50 N 111 41 17.20 W
Path: 5.1305 mi; Azimuth 51.3845
Step: 0.1000 mi; Effective Earth Curvature: 1.333
Topo Data: 30-meter
Interpolation: Weighted Interpolation (12 points)

Longley-Rice: LR Defaults
TX Site MSL adjusted to: 1443.57 ft
TX Ant: 1463.57ft MSL (Site 1443.57ft + 20.00ftAGL)
Ant: DLEC Scala Omni
Orientation: 0.00
RX Site MSL adjusted to: 1711.78 ft
RX Ant: 1745.78ft MSL (Site 1711.78ft + 34.00ftAGL)
Azimuth: 51.386
TX Antenna Gain: Az 0.00 dB; El 0.00 dB (angle = 0.597)
Free Space Field: (8.319 W @ 5.131 mi) 67.78 dBu
Free Space Loss: 91.28 dB (between dipoles)
Additional Estimated transmission loss :11.97 dB
Line-of-sight path
LR Mode: 31
Polarization: V
Surface Refrac: 0.00(301.00)
Permittivity: 15.00 Conductivity: 0.0050
Climate: Continental Temperate
Variability:
Situation: 94.00% Time: 94.00% Location: 90.00%
Path terrain Delta-H: 102.87 ft
Effective antenna heights: 51.80 ft 66.66 ft
Net received field: 55.82 dBu

RX Gain: 4.00 dBd
RX Loss: 0.00 dB
RX Input: -60.01 dBm

Microwave System Summary

Transmitter Pinal Booster Station
Receiver North Park Tank

| NAME | TRANSMIT | RECEIVE |
|---|---|---|
| Freq(MHz) | 173.39625 | 173.39625 |
| Latitude | 32 56 44.30 N | 32 59 31.50 N |
| Longitude | 111 45 25.70 W | 111 41 17.20 W |
| Elv (ft AMSL) | 1443.5700 | 1711.6700 |
| Ant Ht(ft AGL) | 20.0000 | 34.0000 |
| Bearing (deg T) | 51.38° | 231.42° |
| Orien (deg T) | 0.00° | 0.00° |
| Tilt (deg) | 0.60° | -0.60° |
| Line #1 Ls (dB) | 0.82 | 0.82 |
| Line #2 Ls (dB) | 0.00 | 0.00 |
| Other Ls (dB) | 0.00 | 0.00 |
| Antenna Gn | 4.00 dBd | 4.00 dBd |
| Polarization | ver | ver |
| Other Gn (dB) | 0.00 | 0.00 |

| PATH DATA | SYSTEM |
|---|---|
| Distance (mi) | 5.13 |
| Free Sp Ls (dB) | 95.58 |
| Other Ls (dB) | 11.97 |

| SYSTEM SUMMARY | SYSTEM |
|---|---|
| Total Gn (dB) | 12.30 |
| Total Ls (dB) | -109.19 |
| TX Power (dBm) | 36.02 |
| RX Thresh (dBm) | -101.00 |
| RSL (dBm) | -60.87 |
| TFM (dB) | 40.13 |
| Reliability(%) | 99.999999858 |
| Outage(sec/yr) | 0.04 |

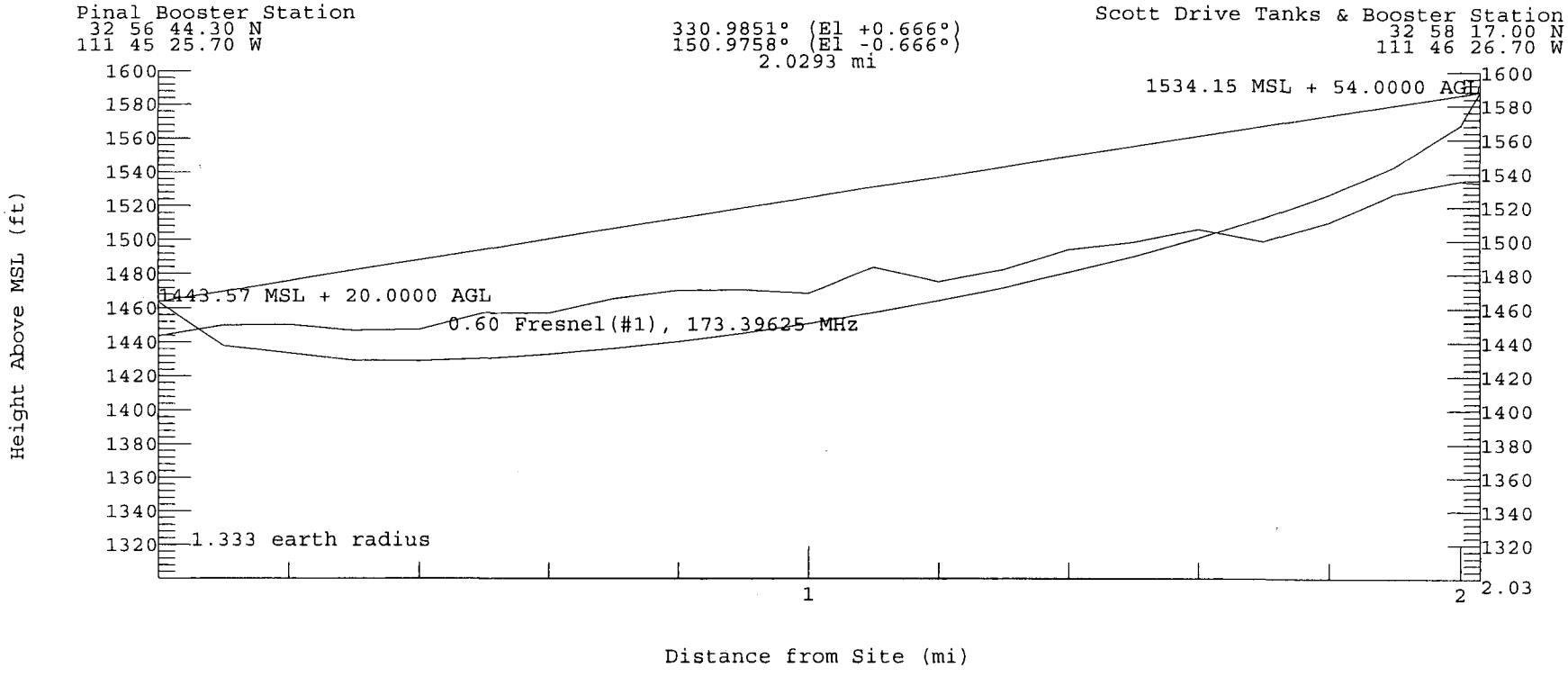
Pinal Booster Station
32 56 44.30 N
111 45 25.70 W
330.9851° (El +0.666°)
150.9758° (El -0.666°)
2.0293 mi
Scott Drive Tanks & Booster Station
32 58 17.00 N
111 46 26.70 W
1534.15 MSL + 54.0000 AGL
1443.57 MSL + 20.0000 AGL
0.60 Fresnel(#1), 173.39625 MHz
1.333 earth radius
Height Above MSL (ft)
Distance from Site (mi)
1600
1580
1560
1540
1520
1500
1480
1460
1440
1420
1400
1380
1360
1340
1320
1
2
2.03

TAP Single Point Field Calculation Parameters
January 30, 2002 05:45

Pinal Booster Station: 32 56 44.30 N 111 45 25.70 W
Frequency: 173.39625 MHz ERP: 8.3188 W
Scott Drive Tanks & Booster Station: 32 58 17.00 N 111 46 26.70 W
Path: 2.0293 mi; Azimuth 330.9851
Step: 0.1000 mi; Effective Earth Curvature: 1.333
Topo Data: 30-meter
Interpolation: Weighted Interpolation (12 points)

Longley-Rice: LR Defaults
TX Site MSL adjusted to: 1443.57 ft
TX Ant: 1463.57ft MSL (Site 1443.57ft + 20.00ftAGL)
Ant: DLEC Scala Omni
Orientation: 0.00
RX Site MSL adjusted to: 1534.15 ft
RX Ant: 1588.15ft MSL (Site 1534.15ft + 54.00ftAGL)
Azimuth: 330.984
TX Antenna Gain: Az 0.00 dB; El 0.00 dB (angle = 0.666)
Free Space Field: (8.319 W @ 2.029 mi) 75.84 dBu
Free Space Loss: 83.23 dB (between dipoles)
Additional Estimated transmission loss :9.86 dB
Line-of-sight path
LR Mode: 31
Polarization: V
Surface Refrac: 0.00(301.00)
Permittivity: 15.00 Conductivity: 0.0050
Climate: Continental Temperate
Variability:
Situation: 94.00% Time: 94.00% Location: 90.00%
Path terrain Delta-H: 60.98 ft
Effective antenna heights: 27.91 ft 64.90 ft
Net received field: 65.98 dBu

RX Gain: 4.00 dBd
RX Loss: 0.00 dB
RX Input: -49.85 dBm

Microwave System Summary

Transmitter Pinal Booster Station
Receiver Scott Drive Tanks & Booster Station

| NAME | TRANSMIT | RECEIVE |
|---|---|---|
| Freq(MHz) | 173.39625 | 173.39625 |
| Latitude | 32 56 44.30 N | 32 58 17.00 N |
| Longitude | 111 45 25.70 W | 111 46 26.70 W |
| Elv (ft AMSL) | 1443.5700 | 1533.6000 |
| Ant Ht(ft AGL) | 20.0000 | 54.0000 |
| Bearing (deg T) | 330.99° | 150.98° |
| Orien (deg T) | 0.00° | 0.00° |
| Tilt (deg) | 0.66° | -0.66° |
| Line #1 Ls (dB) | 0.82 | 0.82 |
| Line #2 Ls (dB) | 0.00 | 0.00 |
| Other Ls (dB) | 0.00 | 0.00 |
| Antenna Gn | 4.00 dBd | 6.00 dBd |
| Polarization | ver | ver |
| Other Gn (dB) | 0.00 | 0.00 |

| PATH DATA | SYSTEM |
|---|---|
| Distance (mi) | 2.03 |
| Free Sp Ls (dB) | 87.53 |
| Other Ls (dB) | 8.96 |

| SYSTEM SUMMARY | SYSTEM |
|---|---|
| Total Gn (dB) | 14.30 |
| Total Ls (dB) | -98.13 |
| TX Power (dBm) | 36.02 |
| RX Thresh (dBm) | -101.00 |
| RSL (dBm) | -47.81 |
| TFM (dB) | 53.19 |
| Reliability(%) | 100.000000000 |
| Outage(sec/yr) | 0.00 |

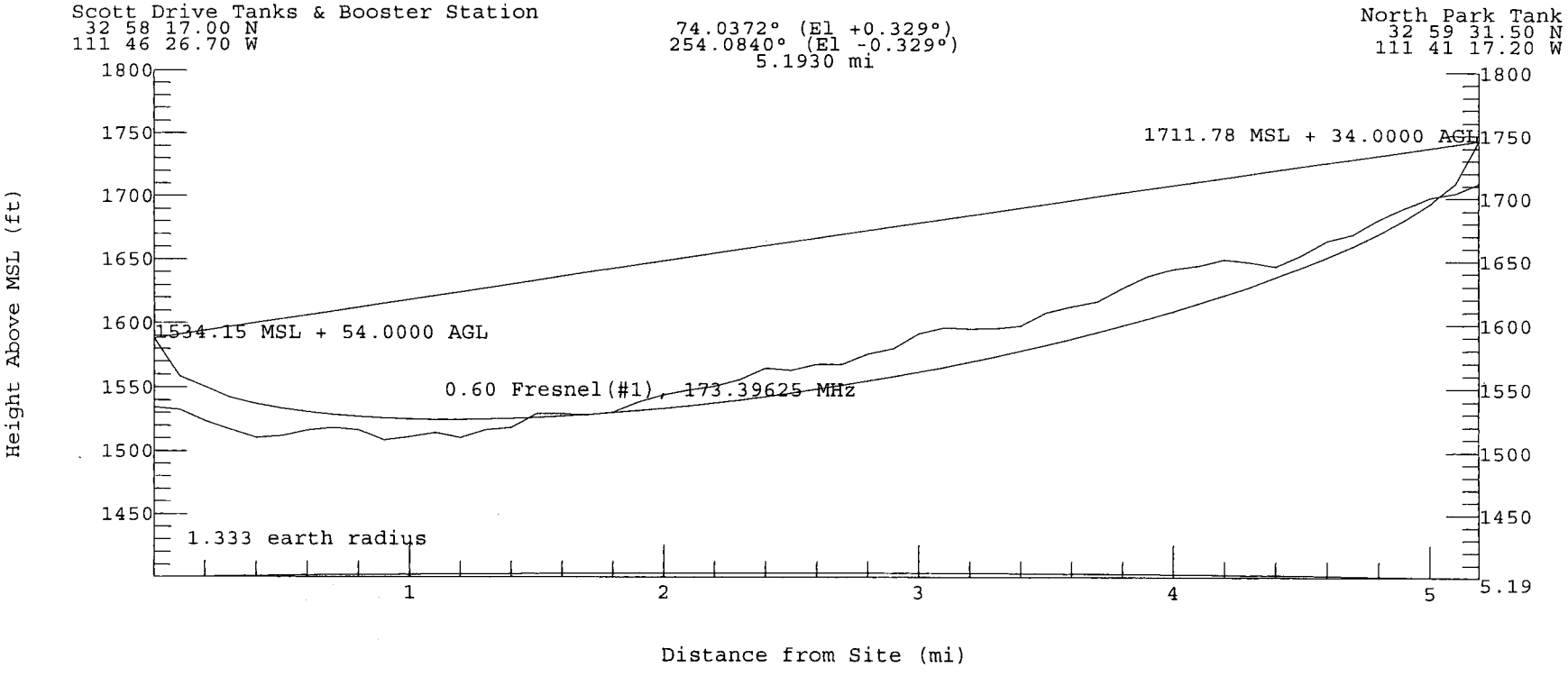
Scott Drive Tanks & Booster Station
32 58 17.00 N
111 46 26.70 W
74.0372° (El +0.329°)
254.0840° (El -0.329°)
5.1930 mi
North Park Tank
32 59 31.50 N
111 41 17.20 W
1711.78 MSL + 34.0000 AGL
1534.15 MSL + 54.0000 AGL
0.60 Fresnel(#1), 173.39625 MHz
1.333 earth radius
Height Above MSL (ft)
Distance from Site (mi)
1800
1750
1700
1650
1600
1550
1500
1450
1
2
3
4
5
5.19

TAP Single Point Field Calculation Parameters
January 30, 2002 05:52

Scott Drive Tanks & Booster Station: 32 58 17.00 N 111 46 26.70 W
Frequency: 173.39625 MHz ERP: 8.3188 W
North Park Tank: 32 59 31.50 N 111 41 17.20 W
Path: 5.1930 mi; Azimuth 74.0372
Step: 0.1000 mi; Effective Earth Curvature: 1.333
Topo Data: 30-meter
Interpolation: Weighted Interpolation (12 points)

Longley-Rice: LR Defaults
TX Site MSL adjusted to: 1534.15 ft
TX Ant: 1588.15ft MSL (Site 1534.15ft + 54.00ftAGL)
Ant: DLEC Scala Omni
Orientation: 0.00
RX Site MSL adjusted to: 1711.78 ft
RX Ant: 1745.78ft MSL (Site 1711.78ft + 34.00ftAGL)
Azimuth: 74.038
TX Antenna Gain: Az 0.00 dB; El 0.00 dB (angle = 0.329)
Free Space Field: (8.319 W @ 5.193 mi) 67.68 dBu
Free Space Loss: 91.39 dB (between dipoles)
Additional Estimated transmission loss :6.02 dB
Line-of-sight path
LR Mode: 31
Polarization: V
Surface Refrac: 0.00(301.00)
Permittivity: 15.00 Conductivity: 0.0050
Climate: Continental Temperate
Variability:
Situation: 94.00% Time: 94.00% Location: 90.00%
Path terrain Delta-H: 113.25 ft
Effective antenna heights: 114.67 ft 63.73 ft
Net received field: 61.66 dBu

RX Gain: 4.00 dBd
RX Loss: 0.00 dB
RX Input: -54.17 dBm

Microwave System Summary

Transmitter Scott Drive Tanks & Booster Station
Receiver North Park Tank

| NAME | TRANSMIT | RECEIVE |
|---|---|---|
| Freq(MHz) | 173.39625 | 173.39625 |
| Latitude | 32 58 17.00 N | 32 59 31.50 N |
| Longitude | 111 46 26.70 W | 111 41 17.20 W |
| Elv (ft AMSL) | 1533.6000 | 1711.6700 |
| Ant Ht(ft AGL) | 54.0000 | 34.0000 |
| Bearing (deg T) | 74.04° | 254.08° |
| Orien (deg T) | 0.00° | 0.00° |
| Tilt (deg) | 0.33° | -0.33° |
| Line #1 Ls (dB) | 0.82 | 0.82 |
| Line #2 Ls (dB) | 0.00 | 0.00 |
| Other Ls (dB) | 0.00 | 0.00 |
| Antenna Gn | 4.00 dBd | 4.00 dBd |
| Polarization | ver | ver |
| Other Gn (dB) | 0.00 | 0.00 |

| PATH DATA | SYSTEM |
|---|---|
| Distance (mi) | 5.19 |
| Free Sp Ls (dB) | 95.68 |
| Other Ls (dB) | 6.02 |

| SYSTEM SUMMARY | SYSTEM |
|---|---|
| Total Gn (dB) | 12.30 |
| Total Ls (dB) | -103.34 |
| TX Power (dBm) | 36.02 |
| RX Thresh (dBm) | -101.00 |
| RSL (dBm) | -55.02 |
| TFM (dB) | 45.98 |
| Reliability(%) | 99.999999962 |
| Outage(sec/yr) | 0.01 |

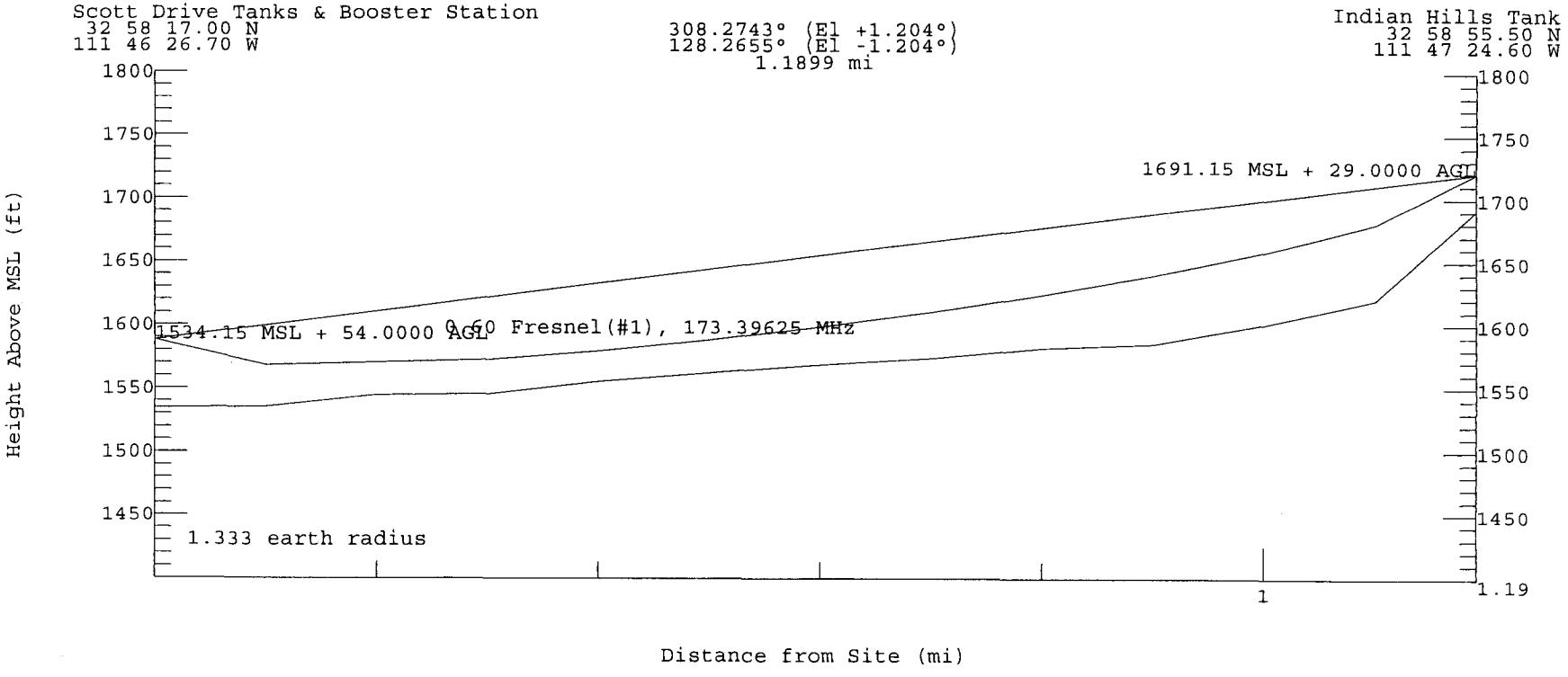
Scott Drive Tanks & Booster Station
32 58 17.00 N
111 46 26.70 W
308.2743° (El +1.204°)
128.2655° (El -1.204°)
1.1899 mi
Indian Hills Tank
32 58 55.50 N
111 47 24.60 W
1691.15 MSL + 29.0000 AGL
1534.15 MSL + 54.0000 AGL
0.60 Fresnel(#1), 173.39625 MHz
1.333 earth radius
Height Above MSL (ft)
Distance from Site (mi)
1800
1750
1700
1650
1600
1550
1500
1450
1
1.19

TAP Single Point Field Calculation Parameters
January 30, 2002 06:02

Scott Drive Tanks & Booster Station: 32 58 17.00 N 111 46 26.70 W
Frequency: 173.39625 MHz ERP: 8.3188 W
Indian Hills Tank: 32 58 55.50 N 111 47 24.60 W
Path: 1.1899 mi; Azimuth 308.2743
Step: 0.1000 mi; Effective Earth Curvature: 1.333
Topo Data: 30-meter
Interpolation: Weighted Interpolation (12 points)

Longley-Rice: LR Defaults
TX Site MSL adjusted to: 1534.15 ft
TX Ant: 1588.15ft MSL (Site 1534.15ft + 54.00ftAGL)
Ant: DLEC Scala Omni
Orientation: 0.00
RX Site MSL adjusted to: 1691.15 ft
RX Ant: 1720.15ft MSL (Site 1691.15ft + 29.00ftAGL)
Azimuth: 308.272
TX Antenna Gain: Az 0.00 dB; El 0.00 dB (angle = 1.203)
Free Space Field: (8.319 W @ 1.190 mi) 80.48 dBu
Free Space Loss: 78.59 dB (between dipoles)
Additional Estimated transmission loss :0.01 dB
Line-of-sight path
LR Mode: 31
Polarization: V
Surface Refrac: 0.00(301.00)
Permittivity: 15.00 Conductivity: 0.0050
Climate: Continental Temperate
Variability:
Situation: 94.00% Time: 94.00% Location: 90.00%
Path terrain Delta-H: 38.71 ft
Effective antenna heights: 72.96 ft 90.81 ft
Net received field: 80.47 dBu

RX Gain: 6.00 dBd
RX Loss: 0.00 dB
RX Input: -33.36 dBm

Microwave System Summary

Transmitter Scott Drive Tanks & Booster Station
Receiver Indian Hills Tank

| NAME | TRANSMIT | RECEIVE |
|---|---|---|
| Freq(MHz) | 173.39625 | 173.39625 |
| Latitude | 32 58 17.00 N | 32 58 55.50 N |
| Longitude | 111 46 26.70 W | 111 47 24.60 W |
| Elv (ft AMSL) | 1533.6000 | 1694.6200 |
| Ant Ht(ft AGL) | 54.0000 | 29.0000 |
| Bearing (deg T) | 308.27° | 128.27° |
| Orien (deg T) | 0.00° | 309.55° |
| Tilt (deg) | 1.24° | -1.24° |
| Line #1 Ls (dB) | 0.82 | 0.82 |
| Line #2 Ls (dB) | 0.00 | 0.00 |
| Other Ls (dB) | 0.00 | 0.00 |
| Antenna Gn | 4.00 dBd | 6.00 dBd |
| Polarization | ver | ver |
| Other Gn (dB) | 0.00 | 0.00 |

| PATH DATA | SYSTEM |
|---|---|
| Distance (mi) | 1.19 |
| Free Sp Ls (dB) | 82.89 |
| Other Ls (dB) | 0.01 |

| SYSTEM SUMMARY | SYSTEM |
|---|---|
| Total Gn (dB) | 14.30 |
| Total Ls (dB) | -84.54 |
| TX Power (dBm) | 36.02 |
| RX Thresh (dBm) | -101.00 |
| RSL (dBm) | -34.22 |
| TFM (dB) | 66.78 |
| Reliability(%) | 100.000000000 |
| Outage(sec/yr) | 0.00 |

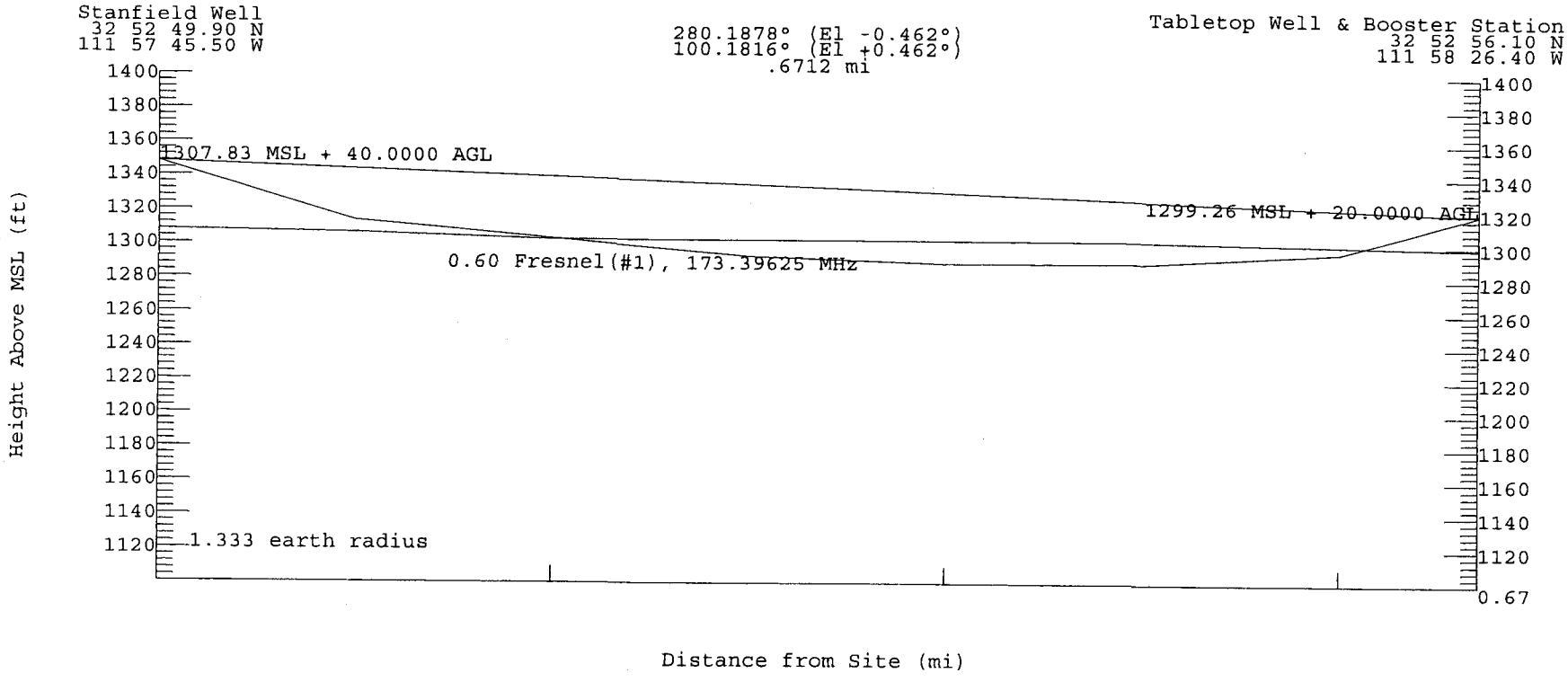
Stanfield Well
32 52 49.90 N
111 57 45.50 W
280.1878° (El -0.462°)
100.1816° (El +0.462°)
.6712 mi
Tabletop Well & Booster Station
32 52 56.10 N
111 58 26.40 W
1307.83 MSL + 40.0000 AGL
1299.26 MSL + 20.0000 AGL
0.60 Fresnel(#1), 173.39625 MHz
1.333 earth radius
Height Above MSL (ft)
Distance from Site (mi)
1400
1380
1360
1340
1320
1300
1280
1260
1240
1220
1200
1180
1160
1140
1120
0.67

TAP Single Point Field Calculation Parameters
January 23, 2002 16:49

Stanfield Well: 32 52 49.90 N 111 57 45.50 W
Frequency: 173.39625 MHz ERP: 8.3188 W
Tabletop Well & Booster Station: 32 52 56.10 N 111 58 26.40 W
Path: 0.6712 mi; Azimuth 280.1878
Step: 0.1000 mi; Effective Earth Curvature: 1.333
Topo Data: 30-meter
Interpolation: Weighted Interpolation (12 points)

Longley-Rice: LR Defaults
TX Site MSL adjusted to: 1307.83 ft
TX Ant: 1347.83ft MSL (Site 1307.83ft + 40.00ftAGL)
Ant: DLEC Scala Omni
Orientation: 0.00
RX Site MSL adjusted to: 1299.26 ft
RX Ant: 1319.26ft MSL (Site 1299.26ft + 20.00ftAGL)
Azimuth: 280.187
TX Antenna Gain: Az 0.00 dB; El 0.00 dB (angle = -0.462)
Free Space Field: (8.319 W @ 0.671 mi) 85.45 dBu
Free Space Loss: 73.62 dB (between dipoles)
Additional Estimated transmission loss :6.67 dB
Line-of-sight path
LR Mode: 31
Polarization: V
Surface Refrac: 0.00(301.00)
Permittivity: 15.00 Conductivity: 0.0050
Climate: Continental Temperate
Variability:
Situation: 94.00% Time: 94.00% Location: 90.00%
Path terrain Delta-H: 8.93 ft
Effective antenna heights: 41.57 ft 20.00 ft
Net received field: 78.78 dBu

RX Gain: 6.00 dBd
RX Loss: 0.00 dB
RX Input: -35.05 dBm

Microwave System Summary

Transmitter Stanfield Well
Receiver Tabletop Well & Booster Station

| NAME | TRANSMIT | RECEIVE |
|---|---|---|
| Freq(MHz) | 173.39625 | 173.39625 |
| Latitude | 32 52 49.90 N | 32 52 56.10 N |
| Longitude | 111 57 45.50 W | 111 58 26.40 W |
| Elv (ft AMSL) | 1308.4400 | 1299.2100 |
| Ant Ht(ft AGL) | 40.0000 | 20.0000 |
| Bearing (deg T) | 280.19° | 100.18° |
| Orien (deg T) | 0.00° | 309.55° |
| Tilt (deg) | -0.47° | 0.47° |
| Line #1 Ls (dB) | 0.82 | 0.82 |
| Line #2 Ls (dB) | 0.00 | 0.00 |
| Other Ls (dB) | 0.00 | 0.00 |
| Antenna Gn | 4.00 dBd | 6.00 dBd |
| Polarization | ver | ver |
| Other Gn (dB) | 0.00 | 0.00 |

| PATH DATA | SYSTEM |
|---|---|
| Distance (mi) | .67 |
| Free Sp Ls (dB) | 77.90 |
| Other Ls (dB) | 6.67 |

| SYSTEM SUMMARY | SYSTEM |
|---|---|
| Total Gn (dB) | 14.30 |
| Total Ls (dB) | -86.21 |
| TX Power (dBm) | 36.02 |
| RX Thresh (dBm) | -101.00 |
| RSL (dBm) | -35.89 |
| TFM (dB) | 65.11 |
| Reliability(%) | 100.000000000 |
| Outage(sec/yr) | 0.00 |

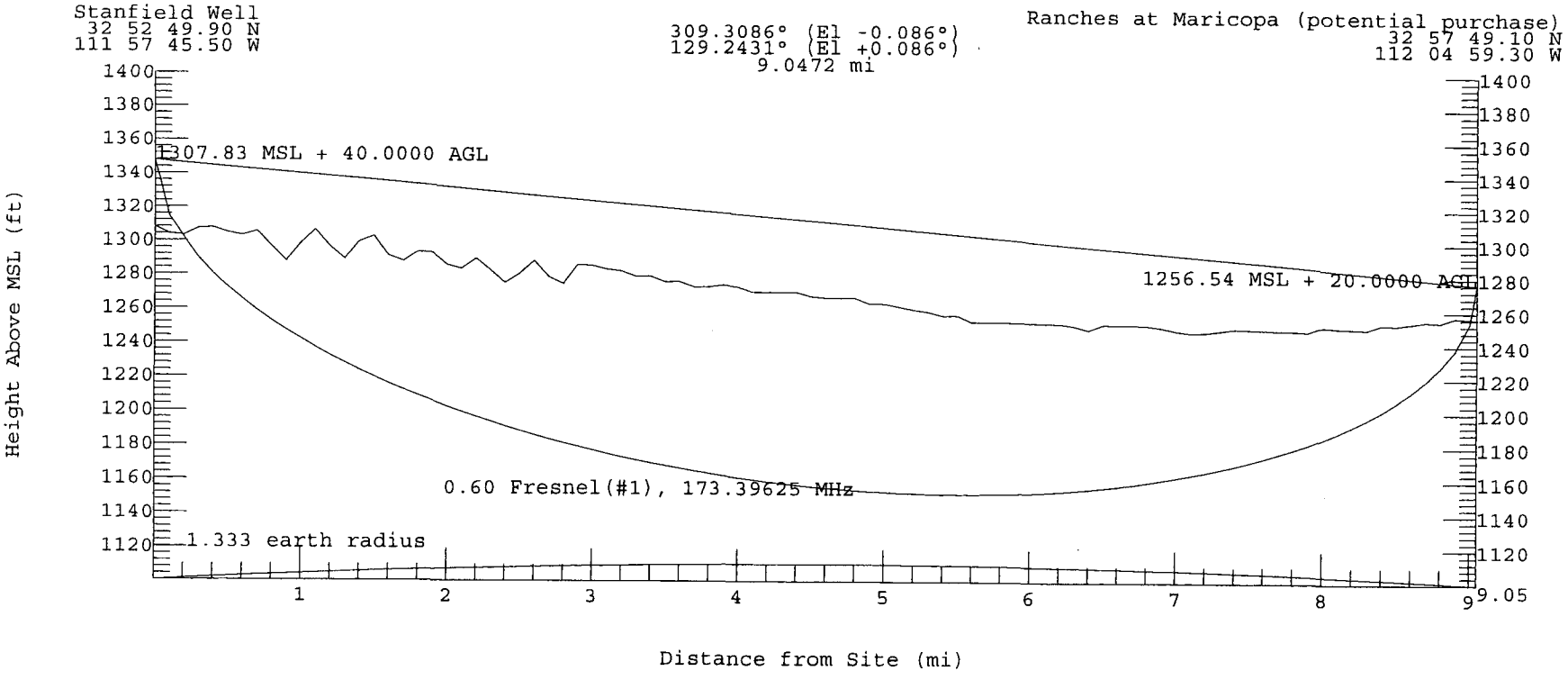
Stanfield Well
32 52 49.90 N
111 57 45.50 W
309.3086° (El -0.086°)
129.2431° (El +0.086°)
9.0472 mi
Ranches at Maricopa (potential purchase)
32 57 49.10 N
112 04 59.30 W
1307.83 MSL + 40.0000 AGL
1256.54 MSL + 20.0000 AGL
0.60 Fresnel(#1), 173.39625 MHz
1.333 earth radius
Height Above MSL (ft)
Distance from Site (mi)
1400
1380
1360
1340
1320
1300
1280
1260
1240
1220
1200
1180
1160
1140
1120
1
2
3
4
5
6
7
8
9
9.05

TAP Single Point Field Calculation Parameters
January 23, 2002 16:58

Stanfield Well: 32 52 49.90 N 111 57 45.50 W
Frequency: 173.39625 MHz ERP: 8.3188 W
Ranches at Maricopa (potential purchase): 32 57 49.10 N 112 04 59.30 W
Path: 9.0472 mi; Azimuth 309.3086
Step: 0.1000 mi; Effective Earth Curvature: 1.333
Topo Data: 30-meter
Interpolation: Weighted Interpolation (12 points)

Longley-Rice: LR Defaults
TX Site MSL adjusted to: 1307.83 ft
TX Ant: 1347.83ft MSL (Site 1307.83ft + 40.00ftAGL)
Ant: DLEC Scala Omni
Orientation: 0.00
RX Site MSL adjusted to: 1256.54 ft
RX Ant: 1276.54ft MSL (Site 1256.54ft + 20.00ftAGL)
Azimuth: 309.307
TX Antenna Gain: Az 0.00 dB; El 0.00 dB (angle = -0.086)
Free Space Field: (8.319 W @ 9.047 mi) 62.86 dBu
Free Space Loss: 96.21 dB (between dipoles)
Additional Estimated transmission loss :20.38 dB
Line-of-sight path
LR Mode: 31
Polarization: V
Surface Refrac: 0.00(301.00)
Permittivity: 15.00 Conductivity: 0.0050
Climate: Continental Temperate
Variability:
Situation: 94.00% Time: 94.00% Location: 90.00%
Path terrain Delta-H: 56.58 ft
Effective antenna heights: 53.59 ft 43.91 ft
Net received field: 42.48 dBu

RX Gain: 6.00 dBd
RX Loss: 0.00 dB
RX Input: -71.35 dBm

Microwave System Summary

Transmitter Stanfield Well
Receiver Ranches at Maricopa (potential purchase)

| NAME | TRANSMIT | RECEIVE |
|---|---|---|
| Freq(MHz) | 173.39625 | 173.39625 |
| Latitude | 32 52 49.90 N | 32 57 49.10 N |
| Longitude | 111 57 45.50 W | 112 04 59.30 W |
| Elv (ft AMSL) | 1308.4400 | 1256.5600 |
| Ant Ht(ft AGL) | 40.0000 | 20.0000 |
| Bearing (deg T) | 309.31° | 129.24° |
| Orien (deg T) | 0.00° | 309.55° |
| Tilt (deg) | -0.09° | 0.09° |
| Line #1 Ls (dB) | 0.82 | 0.82 |
| Line #2 Ls (dB) | 0.00 | 0.00 |
| Other Ls (dB) | 0.00 | 0.00 |
| Antenna Gn | 4.00 dBd | 6.00 dBd |
| Polarization | ver | ver |
| Other Gn (dB) | 0.00 | 0.00 |

| PATH DATA | SYSTEM |
|---|---|
| Distance (mi) | 9.05 |
| Free Sp Ls (dB) | 100.51 |
| Other Ls (dB) | 20.38 |

| SYSTEM SUMMARY | SYSTEM |
|---|---|
| Total Gn (dB) | 14.30 |
| Total Ls (dB) | -122.53 |
| TX Power (dBm) | 36.02 |
| RX Thresh (dBm) | -101.00 |
| RSL (dBm) | -72.21 |
| TFM (dB) | 28.79 |
| Reliability(%) | 99.999989388 |
| Outage(sec/yr) | 3.35 |

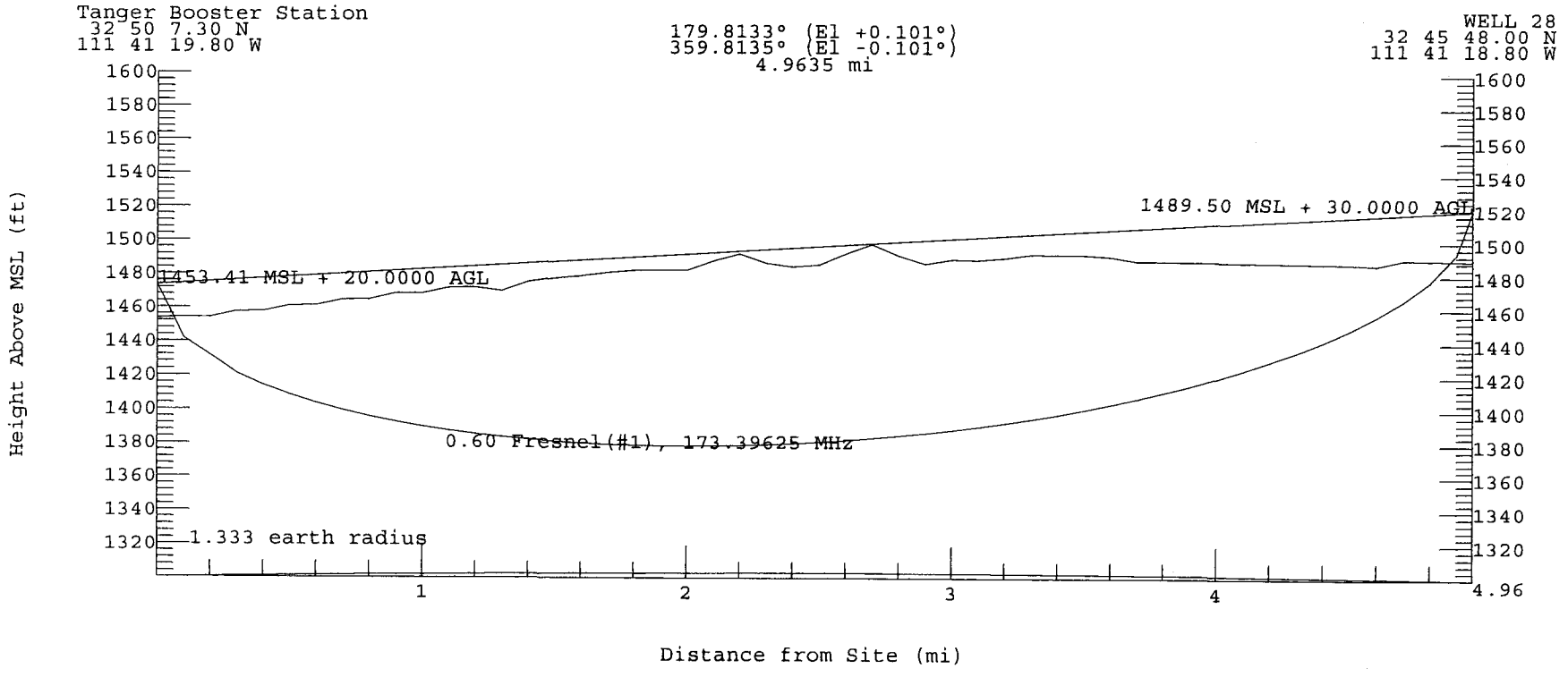
Tanger Booster Station
32 50 7.30 N
111 41 19.80 W
179.8133° (El +0.101°)
359.8135° (El -0.101°)
4.9635 mi
WELL 28
32 45 48.00 N
111 41 18.80 W
1489.50 MSL + 30.0000 AGL
1453.41 MSL + 20.0000 AGL
0.60 Fresnel(#1), 173.39625 MHz
1.333 earth radius
Height Above MSL (ft)
Distance from Site (mi)
1600
1580
1560
1540
1520
1500
1480
1460
1440
1420
1400
1380
1360
1340
1320
1
2
3
4
4.96

TAP Single Point Field Calculation Parameters
January 23, 2002 17:44

Tanger Booster Station: 32 50 7.30 N 111 41 19.80 W
Frequency: 173.39625 MHz ERP: 8.3188 W
WELL 28: 32 45 48.00 N 111 41 18.80 W
Path: 4.9635 mi; Azimuth 179.8133
Step: 0.1000 mi; Effective Earth Curvature: 1.333
Topo Data: 30-meter
Interpolation: Weighted Interpolation (12 points)

Longley-Rice: LR Defaults
TX Site MSL adjusted to: 1453.41 ft
TX Ant: 1473.41ft MSL (Site 1453.41ft + 20.00ftAGL)
Ant: DLEC Scala Omni
Orientation: 0.00
RX Site MSL adjusted to: 1489.50 ft
RX Ant: 1519.50ft MSL (Site 1489.50ft + 30.00ftAGL)
Azimuth: 179.813
TX Antenna Gain: Az 0.00 dB; El 0.00 dB (angle = 0.101)
Free Space Field: (8.319 W @ 4.963 mi) 68.07 dBu
Free Space Loss: 91.00 dB (between dipoles)
Additional Estimated transmission loss :25.85 dB
Line-of-sight path
LR Mode: 31
Polarization: V
Surface Refrac: 0.00(301.00)
Permittivity: 15.00 Conductivity: 0.0050
Climate: Continental Temperate
Variability:
Situation: 94.00% Time: 94.00% Location: 90.00%
Path terrain Delta-H: 44.16 ft
Effective antenna heights: 20.00 ft 30.00 ft
Net received field: 42.22 dBu

RX Gain: 6.00 dBd
RX Loss: 0.00 dB
RX Input: -71.61 dBm

Microwave System Summary

Transmitter Tanger Booster Station
Receiver WELL 28

| NAME | TRANSMIT | RECEIVE |
|---|---|---|
| Freq(MHz) | 173.39625 | 173.39625 |
| Latitude | 32 50 7.30 N | 32 45 48.00 N |
| Longitude | 111 41 19.80 W | 111 41 18.80 W |
| Elv (ft AMSL) | 1453.4100 | 1489.5000 |
| Ant Ht(ft AGL) | 20.0000 | 30.0000 |
| Bearing (deg T) | 179.81° | 359.81° |
| Orien (deg T) | 0.00° | 0.00° |
| Tilt (deg) | 0.10° | -0.10° |
| Line #1 Ls (dB) | 0.82 | 0.82 |
| Line #2 Ls (dB) | 0.00 | 0.00 |
| Other Ls (dB) | 0.00 | 0.00 |
| Antenna Gn | 4.00 dBd | 4.00 dBd |
| Polarization | ver | ver |
| Other Gn (dB) | 0.00 | 0.00 |

| PATH DATA | SYSTEM |
|---|---|
| Distance (mi) | 4.96 |
| Free Sp Ls (dB) | 95.29 |
| Other Ls (dB) | 25.85 |

| SYSTEM SUMMARY | SYSTEM |
|---|---|
| Total Gn (dB) | 12.30 |
| Total Ls (dB) | -122.78 |
| TX Power (dBm) | 36.02 |
| RX Thresh (dBm) | -101.00 |
| RSL (dBm) | -74.46 |
| TFM (dB) | 26.54 |
| Reliability(%) | 99.999997067 |
| Outage(sec/yr) | 0.92 |

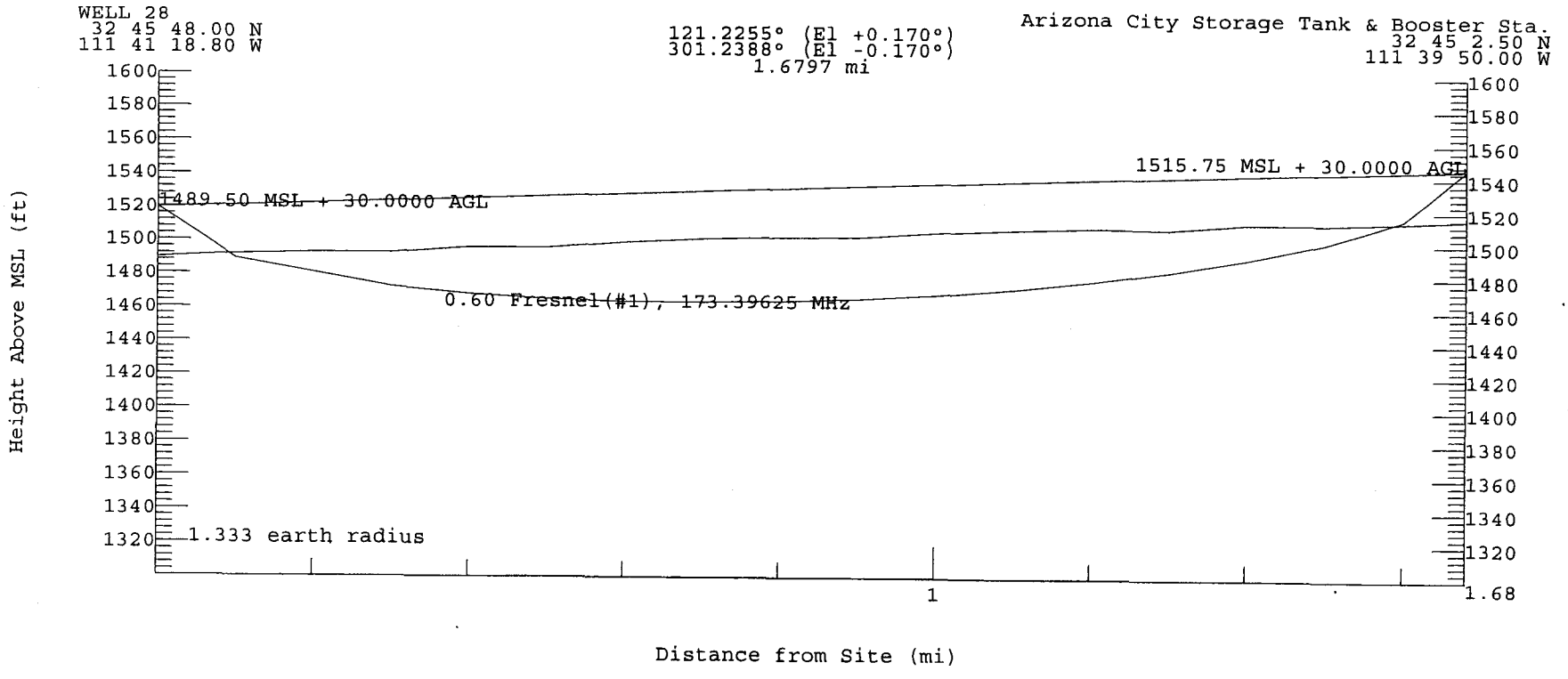
WELL 28
32 45 48.00 N
111 41 18.80 W
121.2255° (El +0.170°)
301.2388° (El -0.170°)
1.6797 mi
Arizona City Storage Tank & Booster Sta.
32 45 2.50 N
111 39 50.00 W
1515.75 MSL + 30.0000 AGL
1489.50 MSL + 30.0000 AGL
0.60 Fresnel(#1), 173.39625 MHz
1.333 earth radius
Height Above MSL (ft)
Distance from Site (mi)
1600
1580
1560
1540
1520
1500
1480
1460
1440
1420
1400
1380
1360
1340
1320
1
1.68

TAP Single Point Field Calculation Parameters
January 23, 2002 17:51

WELL 28: 32 45 48.00 N 111 41 18.80 W
Frequency: 173.39625 MHz ERP: 8.3188 W
Arizona City Storage Tank & Booster Sta.: 32 45 2.50 N 111 39 50.00 W
Path: 1.6797 mi; Azimuth 121.2255
Step: 0.1000 mi; Effective Earth Curvature: 1.333
Topo Data: 30-meter
Interpolation: Weighted Interpolation (12 points)

Longley-Rice: LR Defaults
TX Site MSL adjusted to: 1489.50 ft
TX Ant: 1519.50ft MSL (Site 1489.50ft + 30.00ftAGL)
Ant: DLEC Scala Omni
Orientation: 0.00
RX Site MSL adjusted to: 1515.75 ft
RX Ant: 1545.75ft MSL (Site 1515.75ft + 30.00ftAGL)
Azimuth: 121.224
TX Antenna Gain: Az 0.00 dB; El 0.00 dB (angle = 0.170)
Free Space Field: (8.319 W @ 1.680 mi) 77.48 dBu
Free Space Loss: 81.59 dB (between dipoles)
Additional Estimated transmission loss :13.07 dB
Line-of-sight path
LR Mode: 31
Polarization: V
Surface Refrac: 0.00(301.00)
Permittivity: 15.00 Conductivity: 0.0050
Climate: Continental Temperate
Variability:
Situation: 94.00% Time: 94.00% Location: 90.00%
Path terrain Delta-H: 7.10 ft
Effective antenna heights: 30.00 ft 30.00 ft
Net received field: 64.41 dBu

RX Gain: 6.00 dBd
RX Loss: 0.00 dB
RX Input: -49.42 dBm

Microwave System Summary

Transmitter WELL 28
Receiver Arizona City Storage Tank & Booster Sta.

| NAME | TRANSMIT | RECEIVE |
|---|---|---|
| Freq(MHz) | 173.39625 | 173.39625 |
| Latitude | 32 45 48.00 N | 32 45 2.50 N |
| Longitude | 111 41 18.80 W | 111 39 50.00 W |
| Elv (ft AMSL) | 1489.5000 | 1515.7500 |
| Ant Ht(ft AGL) | 30.0000 | 30.0000 |
| Bearing (deg T) | 121.23° | 301.24° |
| Orien (deg T) | 0.00° | 309.55° |
| Tilt (deg) | 0.17° | -0.17° |
| Line #1 Ls (dB) | 0.82 | 0.82 |
| Line #2 Ls (dB) | 0.00 | 0.00 |
| Other Ls (dB) | 0.00 | 0.00 |
| Antenna Gn | 4.00 dBd | 4.00 dBd |
| Polarization | ver | ver |
| Other Gn (dB) | 0.00 | 0.00 |

| PATH DATA | SYSTEM |
|---|---|
| Distance (mi) | 1.68 |
| Free Sp Ls (dB) | 85.89 |
| Other Ls (dB) | 13.07 |

| SYSTEM SUMMARY | SYSTEM |
|---|---|
| Total Gn (dB) | 12.30 |
| Total Ls (dB) | -100.60 |
| TX Power (dBm) | 36.02 |
| RX Thresh (dBm) | -101.00 |
| RSL (dBm) | -52.28 |
| TFM (dB) | 48.72 |
| Reliability(%) | 99.999999999 |
| Outage(sec/yr) | 0.00 |

# ARIZONA WATER COMPANY

E-4-1

## GENERAL CONDITIONS OF CONTRACT

### DEFINITIONS

A. Company. The words "Company" or "Arizona Water Company" mean Arizona Water Company, and where applicable, any division of Arizona Water Company, whose principal place of business is located at 3805 North Black Canyon Highway, Phoenix, Arizona 85015-5351 (Post Office Box 29006, Phoenix, Arizona 85038-9006).

B. Company's Authorized Representative. The words "Company's Authorized Representative" mean any officer of the Company, and any of the Company's Engineers, any Division Manager or Superintendent of the Company and/or such other person(s) designated in writing as the "Company's Authorized Representative" by the President or any Vice President of the Company.

C. Contractor. The word "Contractor" means either an individual or other entity employed to do the work as shown on the Construction Drawings and as specified herein.

D. Construction Drawings. The words "Construction Drawings" mean plans prepared by or on behalf of Arizona Water Company.

E. Invitation to Bid. The term "Invitation to Bid" means the current copy of Arizona Water Company's Form E-3-11-4 Request for Proposal/Contract or Form E-3-12-2 Invitation to Bid.

F. Contract. The word "Contract" means the written document titled "Contract" or "Proposal/Contract" when such document has been signed by an officer or other authorized representative of both the Contractor and the Company.

G. Inspector. The word "Inspector" means the Company's Authorized Representative or a person designated in writing by the Company's Authorized Representative.

# ARIZONA WATER COMPANY

## CONTRACT

CONTRACTOR: Keller Equipment Co., Inc.

Address: P.O. Box 60485

Phoenix, AZ 85082

DATE OF CONTRACT: September 17, 2008

SYSTEM: Casa Grande

W.A. #: 1-4470

DESCRIPTION OF WORK: Casa Grande SCADA Phase III
SCADA control and electrical installation at Wells 10, 17, 20, 21, 23, 24, 25, 26, 30 and 31 per the attached proposal dated September 18, 2008

WORK SHALL BE COMPLETED ON OR BEFORE 90 CALENDAR DAYS AFTER COMMENCEMENT NOTICE IS ISSUED.

(See Paragraph 4, below).

TOTAL COST (including taxes): $543,522.66

THIS CONTRACT is made by and between ARIZONA WATER COMPANY, an Arizona corporation, (hereinafter referred to as the "Company"), and the CONTRACTOR named above.

1. The Contractor hereby certifies that it has read the Company's most recent *General Conditions of Contract* (copy attached), *Construction Specifications* and *Standard Specification Drawings* ("AWC Specifications") and related construction drawings, and understands that all provisions of said AWC Specifications, and related construction drawings, apply to work covered under this Contract, and which, by this reference, are incorporated herein.
2. The Contractor agrees, as an independent contractor, to furnish all of the labor, tools and certain materials required to perform the work described above for the Company, in accordance with the General Conditions of Contract and related construction drawings.
3. The Company agrees to furnish to the Contractor, without any cost to Contractor, certain equipment and materials necessary to be used or expended in the performance of said work, as follows: NONE.
4. Work shall not commence upon this Contract until a written Commencement Notice has been given to the Contractor by the Company. In the event the Commencement Notice is not given to the Contractor by the Company within ninety (90) calendar days from the date of this Contract, the Contractor has the option to cancel the Contract by giving written notice of cancellation to the Company.

Upon the satisfactory completion of the work within the Contract time limit, the Company agrees to pay, in cash, to the Contractor the total cost of the work, including all taxes.

SPECIAL CONDITIONS:

This signed contract to serve as the commencement notice.

*ARIZONA WATER COMPANY*
Company

By: _____

Title: SR. ENGINEER.

*Keller Equipment Co., Inc.*
Contractor

By: _____

Title: Vice-President of Operations

**Keller Equipment Co., Inc.**

P.O. Box 60485 • Phoenix, AZ 85082

(602) 437-3015 • FAX :( 602) 437-8163

September 18, 2008

Arizona Water Company
3805 N. Black Canyon Highway
Phoenix, AZ 85015
Attn: James Wilson

RE: AZ Water Casa Grande Water System SCADA Design – Phase III

Keller Equipment Company (KEC) offers the following scope and budget for the installation of the new electrical system for the AZ Water Casa Grande Water System SCADA Design – Phase III and ancillary devices. This scope of work has been assembled using site plans provided by Arizona Water Company.

**SCOPE OF WORK:**

This scope of work will detail KEC's services involved with investigation, provision and installation, of the following electrical equipment, conduit and cable system(s):

***PM100 – Project Management***

PM110 Keller Equipment will develop a scope of work and schedule detailing the work to be completed on this project.

PM120 Keller will provide Project Management for oversight of the electrical systems provision and installation efforts.

PM130 Keller Equipment will provide manufacture's AS Built drawing information for the materials intended for use in this project.

PM140 Keller Equipment will coordinate all efforts with DLT&V for installation and programming.

***EN200 – Engineering***

EN210 Keller Equipment will provide three sets of hard copy O&M manuals and three electronic copies of the O&M manuals.

***CS300 – Construction***

CS301 Well 10 – RTU is Existing

- Provide Field technician to assist DLT&V with system check out and start up.
- Provide conduit and wire from RTU to new flow switch.
- Furnish and Install 10" touchscreen OIT at existing RTU.

CS310 Well 17

- Furnish and install RTU in existing control section.
- Furnish and install conduit, fittings, hangers, boxes, and wiring to devices as indicated on drawings.
- Furnish and install new antenna and mast.
- Modify existing Equipment & starters for required I/O
- Provide Field technician to assist DLT&V with system check out and start up.

**Keller Equipment Co., Inc.**

P.O. Box 60485 • Phoenix, AZ 85082

(602) 437-3015 • FAX :( 602) 437-8163

CS320 Well 20 – RTU is Existing

- Provide wiring and flex connections to new instruments/devises as indicated on the drawings.
- Provide Field technician to assist DLT&V with system check out and start up.
- Furnish and Install 10" touchscreen OIT at existing RTU.

CS330 Well 21 – RTU is Existing

- Provide wiring and flex connections to new instruments/devises as indicated on the drawings.
- Provide Field technician to assist DLT&V with system check out and start up.
- Furnish and Install 10" touchscreen OIT at existing RTU.

CS340 Well 23

- Furnish and install RTU in freestanding enclosure.
- Furnish and install new 15 kva mini-power center.
- Furnish and install conduit, fittings, hangers, boxes, and wiring to devices as indicated on drawings.
- Furnish and install new antenna and mast.
- Modify existing Equipment & starters for required I/O
- Provide Field technician to assist DLT&V with system check out and start up.

CS350 Well 24

- Furnish and install RTU in freestanding enclosure.
- Furnish and install new 15 kva mini-power center.
- Furnish and install conduit, fittings, hangers, boxes, and wiring to devices as indicated on drawings.
- Furnish and install new antenna and mast.
- Modify existing Equipment & starters for required I/O
- Provide Field technician to assist DLT&V with system check out and start up.

CS360 Well 25

- Furnish and install RTU in freestanding enclosure.
- Furnish and install new 15 kva mini-power center.
- Furnish and install conduit, fittings, hangers, boxes, and wiring to devices as indicated on drawings.
- Furnish and install new antenna and mast.
- Modify existing Equipment & starters for required I/O
- Provide Field technician to assist DLT&V with system check out and start up.

CS370 Well 26

- Furnish and install RTU in freestanding enclosure.
- Furnish and install new 15 kva mini-power center.
- Furnish and install conduit, fittings, hangers, boxes, and wiring to devices as indicated on drawings.
- Furnish and install new antenna and mast.
- Modify existing Equipment & starters for required I/O
- Provide Field technician to assist DLT&V with system check out and start up.

**Keller Equipment Co., Inc.**
P.O. Box 60485 • Phoenix, AZ 85082
(602) 437-3015 • FAX :( 602) 437-8163

CS380 Well 30 – RTU is Existing

- Provide wiring and flex connections to new instruments/devises as indicated on the drawings.
- Furnish and install new antenna and mast.
- Provide Field technician to assist DLT&V with system check out and start up.
- Furnish and Install 10" touchscreen OIT at existing RTU.

CS390 Well 31

- Furnish and install RTU in existing control section.
- Furnish and install conduit, fittings, hangers, boxes, and wiring to devices as indicated on drawings.
- Furnish and install new antenna and mast.
- Provide Field technician to assist DLT&V with system check out and start up.

***MN400 – Manufacturing***

MN410 Keller Equipment will provide the following instrumentation

- 10-Mercoid Flow Switch
- 3- Endress Hauser Pressure Indicating Transmitter
- 10- Mercoid High Pressure Switch

MN420 Keller Equipment will provide the following RTU's at the following sites

- Well 17
- Well 23
- Well 24
- Well 25
- Well 26
- Well 31

MN430 Keller Equipment will provide required test equipment and power for Factory testing all RTU's at our shop prior to installation.

***Exclusions:***

- Flow Meters for wells, Cla-valves, solenoid valves are to be provided by others.
- Programming for the RTU/PLC will be the responsibility of others.
- Flow switches are to be installed by others.
- Limit switches for all existing Cla-Valves are to be supplied & installed by others.

**Keller Equipment Co., Inc.**
P.O. Box 60485 • Phoenix, AZ 85082
(602) 437-3015 • FAX :( 602) 437-8163

**Well Site 10:**
Price: $ 7,533.75

**Well Site 17:**
Price: $ 72,782.37

**Well Site 20:**
Price: $ 18,409.50

**Well Site 21:**
Price: $ 16,286.70

**Well Site 23:**
Price: $ 78,746.70

**Well Site 24:**
Price: $ 78,817.50

**Well Site 25:**
Price: $ 73,894.20

**Well Site 26:**
Price: $82,031.10

**Well Site 30:**
Price: $ 23,883.00

**Well Site 31:**
Price: $ 55,794.00

Total Project $ 508,178.82
Tax: $ 35,343.84
Total Contract Amount: $ 543,522.66

James, if there are any questions or concerns please feel free to call me at your convenience. We look forward to working with you on this project.

Thank you,

Cody R. Eslick
Project Manager
Keller Equipment Company

# ARIZONA WATER COMPANY

E-4-1

## GENERAL CONDITIONS OF CONTRACT

### DEFINITIONS

A. Company. The words "Company" or "Arizona Water Company" mean Arizona Water Company, and where applicable, any division of Arizona Water Company, whose principal place of business is located at 3805 North Black Canyon Highway, Phoenix, Arizona 85015-5351 (Post Office Box 29006, Phoenix, Arizona 85038-9006).

B. Company's Authorized Representative. The words "Company's Authorized Representative" mean any officer of the Company, and any of the Company's Engineers, any Division Manager or Superintendent of the Company and/or such other person(s) designated in writing as the "Company's Authorized Representative" by the President or any Vice President of the Company.

C. Contractor. The word "Contractor" means either an individual or other entity employed to do the work as shown on the Construction Drawings and as specified herein.

D. Construction Drawings. The words "Construction Drawings" mean plans prepared by or on behalf of Arizona Water Company.

E. Invitation to Bid. The term "Invitation to Bid" means the current copy of Arizona Water Company's Form E-3-11-4 Request for Proposal/Contract or Form E-3-12-2 Invitation to Bid.

F. Contract. The word "Contract" means the written document titled "Contract" or "Proposal/Contract" when such document has been signed by an officer or other authorized representative of both the Contractor and the Company.

G. Inspector. The word "Inspector" means the Company's Authorized Representative or a person designated in writing by the Company's Authorized Representative.

Such insurance shall name the Company, its officers, agents, and employees as additional insured and be primary for all purposes.

The Company will at all times have the right to require that all of such insurance be placed with insurance companies that are satisfactory to it. The Contractor shall file with the Company a certificate evidencing that each policy of insurance for the above coverages in the minimum amounts specified has been purchased and is in good standing.

Such certificate shall provide that notice be given to the Company at least thirty (30) days prior to cancellation or material change in the form of such policies or any of them. Such certificates shall be kept on file by the Company and the Company must have current certificates on file, or a certificate must accompany any bid proposal, before that proposal will be accepted by the Company.

6. CONTRACTOR UNDERSTANDS WORK AND WORKING CONDITIONS

By executing a Contract with the Company, the Contractor warrants that it has, by careful examination, satisfied itself as to the nature and location of the work, including soil conditions, the character, quality and quantity of the materials to be encountered, the character of the equipment and facilities needed preliminary to and during prosecution of the work, the general and local conditions, and all other matters which can in any way be expected to affect its work under the Contract. Verbal agreements or conversations with any officer, agent or employee of the Company, either before or after the execution of the Contract, are not binding upon the Company and shall not affect or modify any of the terms or obligations herein contained.

7. SPECIFICATIONS AND DRAWINGS

The Contractor shall keep on the job a complete copy of all drawings and specifications furnished by the Company which are applicable to the Contract with the Company. Anything mentioned in the specifications and not shown on the drawings or shown on the drawings and not mentioned in the specifications shall be of like effect as if shown or mentioned in both. In case of a discrepancy between the figures, drawings or specifications and physical conditions of the job, the matter shall be immediately submitted to the Company's Authorized Representative for decision as to adjustments, if any, because of the discrepancy; without a decision from the Company's Authorized Representative no discrepancy shall be adjusted by the Contractor, save only at its own risk and expense. Any deviation from the specifications must be approved in writing by the Company's Authorized Representative.

8. PROPERTY PROTECTION

Trees, fences, poles, underground structures and all other property shall be protected unless their removal is authorized on the Construction Drawings. Any property damaged shall be restored by the Contractor, at its expense, to the owner's satisfaction.

mean, that the Contractor shall follow the desires of the Company in the results of the work only and not in the means whereby said work is to be accomplished, and the Contractor shall use its own discretion and shall have complete and authoritative control over the work and as to the details of the doing of the work.

16. PUBLIC SAFETY AND CONVENIENCE

Contractor shall at all times conduct its work so as to ensure the least possible obstruction to traffic and other inconvenience to the general public and the residents and businesses in the vicinity of the work, and to ensure the protection of persons and property.

To protect persons from injury and to avoid property damage, Contractor shall provide and maintain adequate barricades as required during the progress of the work and until it is safe to use the property for its intended purpose. The rules and regulations of the local governmental agencies and specific permit requirements respecting safety provisions shall be observed at all times.

In the case of blasting, the Contractor shall exercise extreme caution to protect the general public and personal and public property from harm or damage.

17. PROPERTY PROTECTION

Trees, fences, poles, and all other property shall be protected unless their removal is authorized by the Company. Any property damaged shall be restored by Contractor, at his expense, to Company's satisfaction.

18. RESPONSIBILITY OF CONTRACTOR

The work shall be under Contractor's responsible care and charge. Contractor shall bear all loss and damage whatsoever and from whatsoever cause, except that caused solely by the act of Company, which may occur on or to the work during the fulfillment of the Contract. If any loss or damage occurs, Contractor shall immediately make good any such loss or damage, and in the event of Contractor refusing or neglecting to do so, Company may, or by the employment of some other person, make good any such loss or damage, and the cost and expense of so doing shall be charged to Contractor.

The mention of any specific responsibility or liability imposed upon Contractor shall not be construed as a limitation or restriction of any general liability or duty imposed upon Contractor by the Contract. The reference to any specific duty or liability being made herein is merely for the purpose of explanation.

Contractor alone shall at all times be responsible for the safety of Contractor, Contractor's employees, and its subcontractors' employees, and for Contractor and its subcontractors' plant and equipment and the method of performing the work.

19. ERRORS AND OMISSIONS

If Contractor, in the course of the work, becomes aware of any errors or omissions in the Contract Documents or in the instructions, or if Contractor becomes aware of any discrepancy between the Contract Documents and the physical conditions of the site of

24. CHANGES

The Company shall have the right to make any changes in the work that it may determine to be necessary. If such changes affect the cost of the work, an equitable adjustment shall be negotiated. Changes shall in no way affect or void the obligations of both parties under the original Contract.

25. INSPECTION

All work and material shall be open at all times to inspection and acceptance or rejection by the Company's Inspector. Any work covered up by the Contractor prior to inspection and acceptance by the Company shall be subject to being uncovered at the expense of the Contractor for inspection by the Company. The Contractor shall give the Company reasonable notice of starting new work and shall provide, without extra charge, reasonable and necessary facilities for inspection, even to the extent of taking out portions of finished work. In case any such finished work removed is found satisfactory, however, the actual direct cost of such removal and replacement, plus 15% of such cost, will be paid by the Company; in addition, if completion of the work has been delayed thereby, the Contractor shall be granted a suitable extension of time on account of the additional work involved.

26. DEFECTIVE WORK OR MATERIAL

The Contractor shall remove, at its own expense, any work or material found defective by the Company's Inspector and shall rebuild and replace the same without extra charge; in default thereof, the same may be done by the Company at the Contractor's expense.

27. ASSIGNMENT

Neither party to the Contract may assign the Contract or sublet it in whole or in part without the written consent of the other, nor shall the Contractor assign any monies due or which may become due hereunder without the previous written consent of the Company, nor shall such consent release the Contractor from any of its obligations and liabilities under the Contract.

28. RIGHTS OF VARIOUS INTERESTS

Whenever work that is being done for the Company other than by the Contractor is contiguous to work being done by the Contractor, the respective rights of the various interests involved shall be established by the Company to secure the completion of the various portions of the work in general harmony.

29. SUSPENSION OF WORK

The Company's Authorized Representative may at any time and for any reason suspend all or any portion of the work under the Contract. This right to suspend work shall not be construed as denying the Contractor compensation for actual, reasonable and necessary expenses due to suspension to which it may be entitled.

The Company's Authorized Representative may order the Contractor to suspend any work because of certain conditions, such as inclement weather, or because the

accordance with A.R.S. ?40-360.022 ("Blue Stake Law"). The Contractor shall be responsible for locating and preserving all marked facilities. Any damages to these marked facilities shall be repaired at the expense of the Contractor.

The Company will pay the cost to relocate its or other structures when such structures are found occupying the physical space of the proposed installation. It is understood that the Contractor will be reimbursed for such work only when written authorization from the Company has been obtained in advance of such work.

35. CLEANING UP

The Contractor shall remove from the Company's property and from all public and private property, at its own expense, all temporary structures, rubbish and waste materials resulting from its operations. In the event Contractor fails to do so, the Company may remove same at the expense of the Contractor.

36. WORKING HOURS (PIPELINE ONLY)

Unless stated to the contrary in the Invitation to Bid and/or so stated on the Construction Drawings, or agreed to by the Company during a Pre-Construction Conference, the Contractor shall not be permitted to perform work on Saturdays, Sundays, or Company holidays, or commence work such as tie-ins that cannot be completed during normal working hours.

37. INDEMNITY

A. The Contractor shall indemnify the Company against, and save and hold it harmless from, any and all liability, claims, demands, loss, actions, causes of action, expense, penalties, fines, assessments, damages and costs of every kind and nature for injury to or death of any and all persons, including, without limitation, employees or representatives of the Company or of the Contractor or of any subcontractor, or any other person or persons, and for damage, destruction or loss, consequential or otherwise, to or of any and all property, real or personal, including, without limitation, property of the Company or of the Contractor or of any subcontractor, or of any other person or persons, and the violation of any law, ordinance, rule, regulation, standard, or order resulting from or in any manner arising out of or in connection with the performance of the work under the Contract, howsoever same may be caused, including, without limitation, the Company's active or passive negligence. The Contractor shall also, upon request by the Company, and at no expense to the Company, defend the Company in any and all suits, concerning such injury to or death of any and all persons, and concerning such damage, destruction or loss, consequential or otherwise, to or of any and all property, real or personal, including, without limitation, suits by employees or representatives of the Company or of the Contractor or of any subcontractor, or any other person or persons, or concerning any court or administrative proceeding concerning the violation of any law, ordinance, rule, regulation, standard, or order. Excluded from this paragraph are only those injuries to or deaths of persons and damage, destruction or loss, to or of property arising from the sole negligence or willful misconduct of the Company.

B. Contractor shall indemnify the Company against, and save and hold it harmless from, any and all liability, claims, demands, damages, costs, expenses and attorney's fees, suffered or incurred on account of any breach of any obligation, covenant or other

the work, including compensation for additional managerial and administrative services, such excess shall be paid to the Contractor. If such expenses exceed such unpaid balance, the Contractor shall pay the difference to the Company.

41. GUARANTEE

The Contractor shall guarantee all deslabor and workmanship and any materials it installs for a period of one year following the date of completion and acceptance by the Company. If any portion of the work or any of the materials become defective within the guarantee period, the Company will notify the Contractor of such defect. The Contractor must repair any defect within fifteen (15) days of such notification. If repairs are not completed within this time period, the Company may repair the defect, or cause such defect to be repaired, and the cost of such repairs shall be paid by the Contractor. The Company reserves the right to determine which defects are the result of poor labor and workmanship and which are caused by defective materials.

42. LIQUIDATED DAMAGES FOR NON PERFORMANCE: REQUEST FOR EXTENSION(S) OF TIME

Time is of the essence in the Contract. The time period required for completion of the work will be specified in the Contract. The Contractor agrees that the Company will suffer substantial damages in the event the Contractor fails to complete the work within the agreed upon time period. The Contractor and the Company agree that since it would be impracticable or extremely difficult to precisely fix such damages, a reasonable approximation of such actual damages suffered by the Company shall be a sum equal to 0.5% of the Contract price for each working day beyond the time period for completion of the work specified in the Contract.

Request by the Contractor for extensions of the time period shall be in writing and shall not become effective until approved in writing by the Company's Authorized Representative.

43. PAYMENT FOR REQUIRED TESTING

Whenever testing is required by any governmental agency or by the Company to assure conformance of the Contractor's work with the appropriate standard, it will be paid for as follows:

a. For testing required under permits obtained by the Company or testing specifically requested by the Company, the cost of the first test will be paid for by the Company. In the event of failure of the first test, the cost of all further testing associated with the failure will be paid by the Contractor.

b. For testing required under permits obtained by the Contractor, all costs will be paid by the Contractor. Testing of the pipeline for pressure and leakage will be included in the Contract price.

AGREEMENT FOR CONSULTING SERVICES BETWEEN
ARIZONA WATER COMPANY AND
DLT & V System Engineering

THIS AGREEMENT is made and entered into on this 2 day of May, 2008, by and between Arizona Water Company, an Arizona corporation, hereinafter referred to as "Client," and DLT & V System Engineering, an, Arizona corporation hereinafter referred to as "Consultant".

## RECITALS

WHEREAS, Client is authorized to and desires to retain Consultant to provide engineering design, post design and construction administration services for Casa Grande Water System SCADA Design - Phase III.

WHEREAS, Consultant is agreeable to providing personnel and facilities necessary to perform the desired services within Client's required time; and

WHEREAS, Client desires to retain Consultant to perform the services in the manner, at the time, and for the compensation set forth herein;

NOW, THEREFORE, Client and Consultant agree as follows:

1. Description of Project.

Client and Consultant agree that Project is as described in Exhibit A, hereto, incorporated by reference herein, and entitled "Scope of Work," dated February 26, 2008. If, during the course of Project, Client and Consultant agree to changes in Project, such changes shall be effective only after being incorporated in this Agreement by written amendment, signed by representative of Client and Consultant.

2. Scope of Consultant Services.

Consultant agrees to perform those services described hereafter. Unless modified in writing by both parties, duties of Consultant shall not be construed to exceed those services specifically set forth herein.

a. Basic Services. Consultant agrees to perform those services described in the Scope of Work (the "Services"). Any tasks not specifically described in the Scope of Work will be Additional Services.

b. Additional Services. Client shall pay Consultant all fees and costs incurred in performing Additional Services provided the services were authorized by Client in writing. Unless otherwise agreed in writing, Additional Services shall be compensated in accordance with Consultant's standard billing rates at the time the Additional Services are performed.

c. Litigation Assistance. Unless specifically stated therein, the Scope of Work does not include assistance to support, prepare, document, bring, defend or assist in litigation undertaken or defended by Client. All such services required or requested of the Consultant by Client or any third party (except claims between Client and Consultant) will be reimbursed at Consultant's applicable rates for such litigation services.

3. Responsibilities of Client.

In addition to payment for the Services performed under this Agreement, Client shall:

a. Assist and cooperate with Consultant in any manner necessary and within its ability to facilitate Consultant's performance under this Agreement.

b. Designate in writing a person to act as Client's representative with respect to this Agreement. Such person shall have complete authority to transmit instructions, receive information, interpret and define Client's policies, make decisions and execute documents on Client's behalf.

c. Furnish Consultant with all technical data in Client's possession including, but not limited to, maps, surveys, drawings, soils or geotechnical reports and any other information required by or useful to Consultant in performance of the Services under this Agreement.

d. Notify Consultant of any known or potential health or safety hazards existing at or near the project site.

e. Provide access to and/or obtain permission for Consultant to enter upon project related property during normal business hours, whether or not owned by Client, as required to perform and complete the Services.

4. Americans with Disabilities Act.

Any other provision of this Agreement to the contrary notwithstanding, unless otherwise specified in the Scope of Services, Client's contractors shall have sole responsibility as between Client and Consultant for compliance with the Americans With Disabilities Act ("ADA") 42 U.S.C. 12101 et. Seq. and the related regulations. Consultant shall provide client with applicable ADA criteria, which maybe required.

5. Authorization and Completion.

In signing this Agreement Client grants Consultant specific authorization to proceed with work as described in Scope of Work and under the terms of this Agreement.

6. Compensation.

a. Amount. For the Services described in Exhibit A, Client agrees to pay, and Consultant agrees to accept compensation in accordance with Exhibit B, attached hereto and incorporated herein. Where Consultant has provided Client with a breakdown of the total compensation into subtasks, such breakdowns are estimates only. Consultant may reallocate compensation between tasks, provided total compensation is not exceeded without the prior written approval of Client.

b. Payment. As long as Consultant has not defaulted under this Agreement, Client shall pay Consultant within thirty (30) days of the date of Consultant's invoices for services performed and reimbursable expenses incurred under this Agreement. If Client has reason to question or contest any portion of any such invoice, amounts questioned or contested shall be identified and notice given to Consultant within thirty (30) days of the date of the invoice. Any portion of any invoice not contested shall be deemed to be accepted and approved for payment and shall be paid to Consultant within thirty (30) days of the date of the invoice. Client agrees to cooperate with Consultant in a mutual effort to resolve promptly any contested portions of Consultant's invoices.

In the event any uncontested portions of any invoice are not paid within thirty (30) days of the date of Consultant's invoice, interest on the unpaid balance shall accrue beginning with the 31st day at the rate of 1.5% per month, and Consultant shall have the right to suspend work per Article XV, Suspension of Work.

7. Responsibility of Consultant.

a. Standard of Care Professional Services.

Subject to the limitations inherent in the agreed scope of work as to the degree of care, amount of time and expenses to be incurred, and subject to any other limitations contained in this Agreement, Consultant shall perform the Services and any Additional Services in accordance with generally accepted standards and practices customarily utilized by competent engineering firms in effect at the time Services and any Additional Services are rendered. Consultant does not expressly or impliedly warrant or guarantee its Services.

b. Reliance upon Information Provided by Others.

If Consultant's performance of services hereunder requires Consultant to rely on information provided by other parties (excepting Consultant's subcontractors), Consultant shall not independently verify the validity, completeness, or accuracy of such information unless otherwise expressly engaged to do so in writing by Client.

c. Consultant's Opinion of Costs.

Client acknowledges that construction cost estimates, financial analyses and feasibility projections are subject to many influences including, but not limited to, price of labor and materials, unknown or latent conditions of existing equipment or structures, and time or quality of performance by third parties. Client acknowledges that such influences may not be precisely forecasted and are beyond the control of Consultant and that actual costs incurred may vary substantially from the estimates prepared by Consultant. Consultant does not warrant or guarantee the accuracy of construction or development cost estimates, however, Consultant agrees to exercise its best Professional Judgment in rendering its opinions.

d. Construction Phase Services.

1. Consultant's Activities at Construction Site. The presence of Consultant's personnel at a construction site, whether as on-site representative, resident engineer, construction manager, or otherwise, does not make Consultant responsible for those duties that belong to Client and/or construction contractors or others, and does not relieve construction contractors or others of their obligations, duties, and responsibilities, including, but not limited to, construction methods, means, techniques, sequences, and procedures necessary for completing all portions of the construction work in accordance with the contract documents, any health or safety programs and precautions required by such construction work, and any compliance with applicable laws and regulations. Any inspection or observation of the contractor's work is for the purpose of determining that the work is proceeding in conformance with the intent of the project specifications and contract documents. Consultant has no authority to exercise control over any construction contractor in connection with their work or health or safety programs and precautions. Except to protect Consultant's own personnel and except as may be expressly required elsewhere in the Scope of Work, Consultant has no duty to inspect, observe, correct, or report on health or safety deficiencies of the construction contractor.

2. Shop Drawing and Submittal Review. If required by Consultant's Scope of Services, Consultant shall review shop drawings or other contractor submittals for general conformance with the intent of the contract documents. Except for services completed under direct contract to Consultant, Consultant shall not be required to verify dimensions, to engineer contractor's shop drawings or submittals, nor to coordinate shop drawings or other submittals with other shop drawings or submittals provided by contractor.

3. Record Drawings. Record drawings, if required, will be prepared, in part, on the basis of information compiled and furnished by others, and may not always represent the exact location, type of various components, or exact manner in which the Project was finally constructed. Except for services completed under direct contract to Consultant, Consultant is not responsible for any errors or omissions in the information from others that are incorporated into the record drawings.

e. Scope of Work.

1. Before preparing the scope of work, Consultant specifically acknowledges and agrees that it has inspected and familiarized itself with Client's Casa Grande Water System SCADA Design. The Consultant has received, or had the opportunity to inquire about and/or request all relevant information concerning the Scope of Work from Client or any other source Consultant deems necessary. The Scope of Work has been prepared by the Consultant and to the best of its knowledge includes all applicable work required to successfully complete Phase III of the Casa Grande Water System SCADA.

8. Asbestos/Hazardous Material.

Consultant and Consultant's subcontractors shall have no responsibility for the discovery, handling, removal, or disposal of, or exposure of persons to asbestos or hazardous or toxic materials that are present in any form at the Project site. Professional services related to or in any way connected with the investigation, detection, abatement, replacement, use, specification, or removal of products, materials, or processes containing asbestos or hazardous or toxic materials are beyond the scope of this Agreement.

In the event Consultant encounters asbestos or hazardous materials at the jobsite, Consultant may, at its option and without liability for damages, suspend the performance of services on the Project until such time as Client and Consultant mutually agree on an amendment to this Agreement to address the issue, or Client retains another specialist consultant or contractor to identify, classify, abate and/or remove the asbestos and/or hazardous materials.

9. Consultant's Work Product.

a. Scope.

Consultant's work product which is prepared solely for the purposes of this Agreement, including, but not limited to, drawings, test results, recommendations and technical specifications, whether in hard copy or electronic form, shall become the property of Client when Consultant has been fully compensated as set forth herein. Consultant may keep copies of all work product(s) for its records.

Consultant and Client recognize that Consultant's work product submitted in performance of this Agreement is intended only for the project described in this Agreement. Client's alteration of Consultant's work product or its use by Client for any other purpose shall be at Client's sole risk.

b. Electronic Copies.

If requested, solely as an aid and accommodation to Client, Consultant may provide copies of its work product documents in computer-readable media ("electronic copies",

"CADD"). These documents will duplicate the documents provided as work product, but will not bear the signature and professional seals of the registered professionals responsible for the work. Client is cautioned that the accuracy of electronic copies and CADD documents may be compromised by electronic media degradation, errors in format translation, file corruption, printing errors and incompatibilities, operator inexperience and file modification. Consultant will maintain the original copy, which shall serve as the official, archived record of the electronic and CADD documents.

10. Indemnification.

a. The Consultant shall indemnify the Company against, and save and hold it harmless from, any and all liability, claims, demands, loss, actions, causes of action, expense, penalties, fines, assessments, damages and costs of every kind and nature for injury to or death of any and all persons, including, without limitation, employees or representatives of the Company or of the Consultant or of any subcontractor, or any other person or persons, and for damage, destruction or loss, consequential or otherwise, to or of any and all property, real or personal, including, without limitation, property of the Company or of the Consultant or of any subcontractor, or of any other person or persons, and the violation of any law, ordinance, rule, regulation, standard, or order resulting from, or in any manner arising out of, or in connection with, the performance of the work under the Contract, howsoever same may be caused, including, without limitation, the Company's active or passive negligence. The Consultant shall also, upon request by the Company, and at no expense to the Company, defend the Company in any and all suits, concerning such injury to or death of any and all persons, and concerning such damage, destruction or loss, consequential or otherwise, to or of any and all property, real or personal, including, without limitation, suits by employees or representatives of the Company or of the Consultant or of any subcontractor, or any other person or persons, or concerning any court or administrative proceeding concerning the violation of any law, ordinance, rule, regulation, standard, or order. Excluded from this paragraph are only those injuries to or deaths of persons and damage, destruction or loss, to or of property arising from the sole negligence or willful misconduct of the Company.

b. Consultant shall indemnify the Company against, and save and hold it harmless from, any and all liability, claims, demands, damages, costs, expenses and attorney's fees, suffered or incurred on account of any breach of any obligation, covenant or other provision of this contract, including without limitation, breach of the indemnity provisions of subsection A of this Section 36.

c. Consultant further agrees to defend, indemnify and hold harmless the Company, its directors, officers, employees, and agents, from and against any and all costs, damages, claims, expenses, violations, notices of violations, penalties, liens, assessments, and liabilities of every kind and nature, foreseeable or unforeseeable, directly or indirectly, arising from any release, removal, generation, use, storage or disposal on, under, around, or from the site of any material, substance, or waste, hazardous or nonhazardous, including, without limitation, drilling fluids, mud, cuttings

and development and test water howsoever same may be caused, including, without limitation, the Company's active or passive negligence.

11. Consultant's Insurance.

Consultant shall procure and maintain the following minimum insurance:

a. Commercial general liability insurance, including personal injury liability, blanket contractual liability and broad-form property damage liability coverage. The combined single limit for bodily injury and property damage shall be not less than $1,000,000.

b. Automobile bodily injury and property damage liability insurance covering owned, non-owned, rented, and hired cars. The combined single limit for bodily injury and property damage shall be not less than $1,000,000.

c. Statutory workers' compensation and employer's liability insurance as required by state law.

d. Professional liability insurance. The policy limit shall be not less than $1,000,000.

Consultant shall either require each of its subconsultants to procure and to maintain the insurance specified in this section or insure its subconsultants in the Consultants own policy, in like amounts.

Client shall be named as additional insured on polices 1 and 2 above. Upon execution of this Agreement, Consultant will provide a certificate of insurance to Client. Consultant will keep the certificate current at all times while this Agreement is in effect. The Consultant will provide a 30-day written notice in the event the above policies are cancelled.

12. Confidentiality.

Consultant agrees it will maintain the confidentiality of all material it receives from Client and will not disclose, distribute, or publish to any third party such information without the prior permission of Client. Notwithstanding the foregoing, Consultant shall have no confidentiality obligation with respect to information that:

a. becomes generally available to the public other than as a result of disclosure by Consultant or its agents or employees;

b. was available to Consultant prior to its disclosure by Client;

c. becomes available to Consultant from a third party who is not, to the knowledge of Consultant, bound to retain such information in confidence.

In the event Consultant is compelled by subpoena, court order, or administrative order to disclose any confidential information, Consultant shall promptly notify Client and shall cooperate with Client prior to disclosure so that Client may take necessary actions to protect such confidential information from disclosure.

13. Subcontracts.

Consultant shall be entitled, to the extent determined appropriate by Consultant, to subcontract any portion of the services to be performed under this Agreement.

14. Suspension of Work.

Work under this Agreement may be suspended as follows:

a. By Client. By written notice to Consultant, Client may suspend all or a portion of the Work under this Agreement if unforeseen circumstances beyond Client's control make normal progress of the Work impracticable.

b. By Consultant. By written notice to Client, Consultant may suspend the work if Consultant reasonably determines that working conditions at the Site (outside Consultant's control) are unsafe, or in violation of applicable laws, or in the event Client has not made timely payment in accordance with Article VI, compensation

15. Termination of Work.

a. This Agreement may be terminated by Client as follows: (1) for its convenience on thirty (30) days' notice to Consultant, or (2) for cause, if Consultant materially breaches this Agreement through no fault of Client and Consultant neither cures such material breach nor makes reasonable progress toward cure within fifteen (15) days after Client has given written notice of the alleged breach to Consultant.

b. This Agreement may be terminated by Consultant as follows: (1) for cause, if Client materially breaches this Agreement through no fault of Consultant and Client neither cures such material breach nor makes reasonable progress toward cure within thirty (30) days after Consultant has given written notice of the alleged breach to Client.

c. Payment upon Termination. In the event of termination, Consultant shall perform such additional work as is reasonably necessary for the orderly closing of the work. Consultant shall be compensated for all work performed prior to the effective date of termination, plus work required for the orderly closing of the work, including: (1) authorized work performed up to the termination date plus termination expenses, including all labor and expenses, at Consultant's standard billing rates, directly attributable to termination; (2) all efforts necessary to document the work completed or in progress; and (3) any termination reports requested by Client.

16. Assignment.

This Agreement is binding on the heirs, successors, and assigns of the parties hereto. Except as otherwise set forth under Article VIII, Assignment of Tasks to Affiliates, this Agreement may not be assigned by Client or Consultant without prior, written consent of the other.

17. No Benefit for Third Parties.

The services to be performed by Consultant are intended solely for the benefit of Client, and no benefit is conferred on, nor contractual relationship established with any person or entity not a party to this Agreement. No such person or entity shall be entitled to rely on Consultant's services, opinions, recommendations, plans, or specifications without the express written consent of Consultant. No right to assert a claim against the Consultant, its officers, employees, agents, or consultants shall accrue to the construction Contractor or to any subcontractor, supplier, manufacturer, lender, insurer, surety, or any other third party as a result of this Agreement or the performance or nonperformance of the Consultant's services hereunder.

18. Force Majeure.

Consultant and Client shall not be responsible for delays caused by circumstances beyond their reasonable control, including, but not limited to: (1) strikes, lockouts, work slowdowns or stoppages, or accidents; (2) acts of God; (3) failure of Client to furnish timely information or to approve or disapprove Consultant's instruments of service promptly; and (4) faulty performance or nonperformance by Consultant or Client, Client's or Consultant independent consultants or contractors, or governmental agencies. Consultant and Client shall not be liable for damages arising out of any such delay, nor shall the Consultant or Client be deemed to be in breach of this Agreement as a result thereof.

19. Integration.

This Agreement represents the entire understanding of Client and Consultant as to those matters contained herein. No prior oral or written understanding shall be of any force or effect with respect to those matters covered herein. This Agreement may not be modified or altered except in writing signed by both parties.

20. Severability.

If any part of this Agreement is found unenforceable under applicable laws, such part shall be inoperative, null, and void insofar as it conflicts with said laws, but the remainder of this Agreement shall be in full force and effect.

21. Choice of Law/Jurisdiction.

This Agreement shall be administered and interpreted under the laws of the State of Arizona Jurisdiction of litigation arising from the Agreement shall be in The State of Arizona.

22. Attorneys' Fees.

In the event any claim, controversy, or legal action arises under this Agreement, the prevailing party shall be entitled to recover from the other party all attorneys' fees, costs, expenses and other fees incurred by the prevailing party.

23. Notice Provisions.

Notices concerning this Agreement shall be in writing and sent by certified mail or by courier (such as Federal Express), or by hand-delivery addressed as follows:

To the Company:

Arizona Water Company
3805 North Black Canyon Highway
Phoenix, Arizona 85015-5351
Attention: President

or

Arizona Water Company
Post Office Box 29006
Phoenix, AZ 85038-9006
Attention: President

To Consultant:

DLT & V Systems Engineering

3550 N. Central Avenue, Ste 1900

Phoenix, AZ 85012

Attention: President

Either party may change its address for purposes of this Section by giving written notice of such change of address to the other party

24. Authorization.

The persons executing this Agreement on behalf of the parties hereto represent and warrant that the parties have all legal authority and authorization necessary to enter

into this Agreement, and that such persons have been duly authorized to execute this Agreement on their behalf.

IN WITNESS WHEREOF, each of the parties hereto has caused this instrument to be executed by their respective duly authorized officers as of the date first written above.

**DLT & V Systems Engineering**
an Arizona corporation

By: _____ 5/8/08

Its: PRESIDENT

**ARIZONA WATER COMPANY,**
an Arizona corporation

By: _____ 5/20/08

Its: STR. ENGINEER

DLT&V
SYSTEMS ENGINEERING

DESIGN
CONSTRUCTION
INTEGRATION

3550 NORTH CENTRAL AVENUE ◆ SUITE 1900 ◆ PHOENIX, ARIZONA 85012
VOICE 602.266.4658 ◆ FAX 602.266.4953 ◆ TOLL FREE 888.893.5437

# Fee Proposal

Date: 2/26/08
Attn: Mr. James Wilson, P.E.
Client: Arizona Water Company
Address: 3805 N. Black Canyon Hwy.
City, State, Zip: Phoenix, AZ 85015
Phone: (602) 240-6860
Fax: (602) 240-6878

*The Client agrees that the technical methods, techniques and pricing information contained in any proposal submitted by DLT&V pertaining to this project or in this Agreement or any addendum thereto, are to be considered confidential and proprietary, and shall not be released or otherwise made available to any third party without the express written consent of DLT&V.*

☐ Fax ☐ Mail ☑ Email ☐ Courier ☐ Hand Delivery

Project Description: Casa Grande Water System SCADA Design - Phase III
DLT&V Reference #: 2007.11.0164

| | | |
|---|---|---|
| **Design Services (Task 100):** | | |
| Design Tasks | $28,754 | |
| **Total Design Services:** | | **$28,754** |
| **RTU Fabrication Drawings (Task 101):** | | |
| Design Tasks | $21,566 | |
| **Total RTU Fabrication Drawings:** | | **$21,566** |
| **Programming Services (Task 300):** | | |
| Programming Tasks | $64,873 | |
| **Total Programming Services:** | | **$64,873** |
| **Radio Path Study (Task 600):** | | |
| Study Tasks: | $2,574 | |
| **Total Study Services:** | | **$2,574** |
| **Grand Total:** | | **$117,767** |

☑ Lump Sum Fee
☐ Hourly, Time and Material Fee

Dee Nichols
Engineering Project Manager

## Estimated Drawing List

Electrical/Instrumentation Design 24"x36"

| | |
|---|---|
| E001 | Electrical Notes, Symbols and Legend |
| E002 | Instrument Index & Circuit Schedule |
| E003 | Site Plan - Well #10 & Well #17 |
| E004 | Schematic/Connection Diagram & Panel Schedule - Well #10 & Well #17 |
| E005 | Site Plan - Well #20 & Well #21 |
| E006 | Schematic/Connection Diagram & Panel Schedule - Well #20 & Well #21 |
| E007 | Site Plan - Well #23 & Well #24 |
| E008 | Schematic/Connection Diagram & Panel Schedule - Well #23 & Well #24 |
| E009 | Site Plan - Well #25 & Well #26 |
| E010 | Schematic/Connection Diagram & Panel Schedule - Well #25 & Well #26 |
| E011 | Site Plan - Well #30 & Well #31 |
| E012 | Schematic/Connection Diagram & Panel Schedule - Well #30 & Well #31 |
| E013 | System Communications Diagram |
| E014 | Installation Details |

RTU Fabrication Dwgs 11"x17" (TYP. 10 RTU's)

| | |
|---|---|
| EC1 | Cover Sheet |
| EC2 | Drawing Index |
| EC3 | Electrical Symbols and Abbr. |
| EC4 | Electrical Legend and ISA Table |
| EC5 | Bill of Materials |
| EC6 | PLC Cabinet Enclosure Layout |
| EC7 | PLC Cabinet Panel Layout |
| EC8 | Terminal Block and Device Details |
| EC9 | RTU Communication Diagram |
| EC10 | Power Distribution Schematic |
| EC11 | Analog Input Schematic |
| EC12 | Discrete Input Schematic |
| EC13 | Discrete Output Schematic |

**Project Description**

1.0 The project will consist of developing the electrical design associated with interfacing ten (10) existing Well sites to the SCADA system designed and being constructed under the original Casa Grande/Coolidge SCADA system development project. This will consist of: developing fabrication drawings for ten (10) RTU panels (each cabinet will be designed around the Modicon Momentum PLC, 10.4" Magelis Color Touchscreen OIT and MDS INET II Ethernet radio), interfacing existing Well pump starters to new RTU cabinets and adding/retrofitting instrumentation as reflected in attached 'Site Visit Summary Sheet'. Antenna type, heights and cable type at each site will be determined based on results of a computer modeled radio survey.

2.0 The RTU drawings will be prepared on 11"x17" bond paper, and will be scaled drawings with bill of materials, and wire numbers, suitable for bidding the fabrication of the RTU.

3.0 Programming services will consist of PLC/RTU programming, operator interface terminal (OIT) programming, SCADA HMI programming, and assisting the electrical contractor during startup testing of the control system for the project site.

4.0 Prior to shipping the RTU Panels from the RTU Panel Supplier's site, a DLT&V programmer will assist with a Factory Acceptance Test for each RTU panel (up to four (4) hours per panel). Following the FAT tests, a report will be made available for each RTU tested. Non-acceptance of a FAT test may result in additional FAT test(s) which will be performed at additional cost on a time and material basis.

5.0 Programming services will include attendance up to two (2) meeting(s) with the CLIENT. Additionally, we will provide a total of up to eighty (80) hours of assistance to the Electrical Contractor during loop checks and up to eighty (80) hours of site startup demonstration witnessed by the OWNER and/or OWNER representatives.

6.0 DLT&V will provide up to four (4) hours of PLC operational training, four (4) hours of OIT training and eight (8) hours of HMI training onsite as it pertains to DLT&V performed system programming.

**Responsibilities of Others**

1.0 N/A

**Deliverables**

1.0 DLT&V will provide CLIENT with one set of review documents in reproducible form for a 90% submittal. Upon receipt of comprehensive submittal review comments, DLT&V will produce and submit a Submittal Comment Review Log addressing every comment and will revise the design documents in accordance with the resolution of this Submittal Comment Review Log.

2.0 Upon completion of the design and after incorporating all the 90% submittal review comments, DLT&V will provide CLIENT with one set of final sealed documents bearing the signature of a registered electrical engineer. Plans to be plotted on vellum, with three (3) electronic AutoCAD copies on CD Rom.

3.0 Additional documents that DLT&V will provide will be a radio survey report which includes the recommended antenna type, heights, cable type and estimated fade margins and RSSI levels for each site based on results of computer models.

4.0 Upon completion of our programming, DLT&V will provide three (3) hardcopy sets of our programming printouts in electronic form on CD-ROM and three (3) copies of PLC and OIT programming files also on CD-ROM. We will provide three (3) copies of any necessary training material and three (3) copies of documentation including O&M materials as it relates to DLT&V provided system programming. Upon completion of the PLC/RTU Factory Acceptance Tests (FAT), DLT&V will provide two (2) FAT report for each RTU cabinet.

**Exclusions and Exceptions**

1.0 DLT&V will not obtain any permits.

2.0 The aforementioned scope of services and level of effort is limited to the hours detailed on the attached Proposal Worksheets. Costs incurred due to conditions beyond DLT&V's control may result in additional charges billed on a Time and Material basis.

3.0 This fee proposal is based on DLT&V standards. Plans, specifications, and other deliverable documents will be prepared following DLT&V drafting and CAD standards, and text document formatting. If significant changes to the DLT&V standards are required, DLT&V reserves the right to request additional time and fees to convert to a new set of standards.

4.0 Review of Contractor record drawings, and preparation of record electrical drawings are not included in this scope of Services. If required, DLT&V will provide these services on an hourly, time and material basis, at our standard hourly rates. Requests for additional time shall be submitted in writing and approved by AWC prior to performing work.

5.0 Should a condition exist, at no fault of DLT&V, that interrupts or prevents DLT&V from providing contracted services, DLT&V may cease work until the condition(s) are remedied. At the client's request, DLT&V may provide assistance to remedy the delaying condition(s), charged on a time and materials basis.

6.0 Excessive work interruption(s) by others that delay the provision of contracted services by DLT&V may result in additional service charges billed on a time and materials basis.

**Billing Rates and Payment Terms**

1.0 Please refer to the attached Proposal Worksheet(s) for our hourly rates, expenses, and labor-hour breakdown. Any additional services requested by CLIENT that are not included herein will be charged at our Standard Hourly Rates as shown on the attached Proposal Worksheet(s). This proposal will be valid for the next ninety (90) days. We will bill you on a monthly basis for these services. Payment terms are Net 30 days. If you have any questions, please contact us at your earliest convenience.

2.0 The hourly rates quoted in this proposal will be valid through December 31, 2008. The hourly rates will increase approximately 5% for each year this proposal is in effect and under contract.

Accepted for Client:

Signature: Print name: Date:

Project Number: 2007.11.0164

Project Name: Casa Grande Water System SCADA Design - Phase III

Date: 26-Feb-08

| # | Sub-Task | Depart. Mgr. VII | Depart. Mgr. V | Project Mgr. IV | Const. Mgr. III | Designer V | Integr. IV | Designer IV | CAD Mgr. III | Admin. II | Tot. Hrs. | Section Subtot. |
|---|---|---|---|---|---|---|---|---|---|---|---|---|
| | **Task 100 - Design** | | | | | | | | | | | |
| 1 | Pre-design Meeting | 2.0 | 2.0 | | | | | | | | 4.0 | |
| 2 | Site Work | | 5.0 | | | 5.0 | | | | | 10.0 | |
| 3 | Preliminary Design | | | | | | | | | | | |
| 4 | Utility Coordination | | | | | | | | | | | |
| 5 | Electrical Calculations | 1.0 | 3.0 | | | 3.0 | | | | | 7.0 | |
| 6 | Prepare P&IDs (0 sheets est.) | | | | | | | | | | | |
| 7 | Prepare Elec. Dwgs (14 sheets est.) | 5.0 | 12.0 | | | 60.0 | | 60.0 | 48.0 | 3.0 | 188.0 | |
| 8 | Prepare Control Descriptions | | | | | | | | | | | |
| 9 | Prepare Instrumentation Specs | | | | | | | | | | | |
| 10 | Prepare Electrical Specs | | | | | | | | | | | |
| 11 | Cost Estimate | | | | | | | | | | | |
| 12 | Client Meetings | 2.0 | 2.0 | | | 1.0 | | | | | 5.0 | |
| 13 | Client/Agency Submittal Prep | | | | | | | | | | | |
| 14 | Project Mgmt & Coordination | | 28.0 | | | | | | | | 28.0 | |
| 15 | Generator Sizing Calcs | | | | | | | | | | | |
| 16 | Lighting Design | | | | | | | | | | | |
| 17 | Quality Assurance Review | 4.0 | 7.0 | | | | | | | | 11.0 | |
| | | | | | | | | | | | | |
| | **Design Fees Sub Total:** | **14.0** | **59.0** | | | **69.0** | | **60.0** | **48.0** | **3.0** | **253.0** | **$28,347** |
| | **Design Expenses:** | | | | | | | | | | | **$407** |
| | **Total Design & Expenses:** | | | | | | | | | | | **$28,754** |
| | **Task 101 - Panel Fab. Or Loop Drawings** | | | | | | | | | | | |
| 1 | Prepare Fab. Dwgs (130 sheets est.) | 4.0 | 9.0 | | | 49.0 | | 49.0 | 49.0 | 5.0 | 165.0 | |
| 2 | Quality Assurance Review | 26.0 | | | | | | | | | 26.0 | |
| | | | | | | | | | | | | |
| | **Sub Total:** | **30.0** | **9.0** | | | **49.0** | | **49.0** | **49.0** | **5.0** | **191.0** | **$21,566** |

Project Number: 2007.11.0164

Project Name: Casa Grande Water System SCADA Design - Phase III

Date: 26-Feb-08

| # | Sub-Task | Depart. Mgr. VII | Depart. Mgr. V | Project Mgr. IV | Const. Mgr. III | Designer V | Integr. IV | Designer IV | CAD Mgr. III | Admin. II | Tot. Hrs. | Section Subtot. |
|---|---|---|---|---|---|---|---|---|---|---|---|---|
| | **Task 300 - Programming** | | | | | | | | | | | |
| 1 | Meetings | | | 6.0 | | | 6.0 | | | 1.0 | 13.0 | |
| 2 | Control Description | | | 14.0 | | | 7.0 | | | 1.0 | 22.0 | |
| 3 | Procurement Activities | | | | | | | | | | | |
| 4 | PLC Software Develop. | | 2.0 | 35.0 | | | 18.0 | | | 2.0 | 57.0 | |
| 5 | PLC Testing/Debug | | 1.0 | 9.0 | | | 5.0 | | | | 15.0 | |
| 6 | PLC Config & Network Comm | | | 3.0 | | | 3.0 | | | | 6.0 | |
| 7 | PLC Class Prep & Training | | | 4.0 | | | | | | | 4.0 | |
| 8 | HMI Hardware Setup | | | 2.0 | | | 2.0 | | | | 4.0 | |
| 9 | HMI Database | | | 4.0 | | | 6.0 | | | | 10.0 | |
| 10 | HMI Graphics | 1.0 | 2.0 | 23.0 | | | 35.0 | | | 1.0 | 62.0 | |
| 11 | HMI Testing | | | 10.0 | | | 15.0 | | | | 25.0 | |
| 12 | HMI Class Prep & Training | | | 8.0 | | | | | | | 8.0 | |
| 13 | Trends | | | 4.0 | | | 6.0 | | | | 10.0 | |
| 14 | Historical Data | | | 3.0 | | | 5.0 | | | | 8.0 | |
| 15 | Alarm Software Config. | | | 3.0 | | | 5.0 | | | | 8.0 | |
| 16 | OIT Programming | | 1.0 | 12.0 | | | 18.0 | | | | 31.0 | |
| 17 | OIT Testing | | 1.0 | 6.0 | | | 9.0 | | | | 16.0 | |
| 18 | OIT Class Prep & Training | | | 4.0 | | | | | | | 4.0 | |
| 19 | Quality Assurance Review | | | 3.0 | | | 3.0 | | | | 6.0 | |
| 20 | Factory Testing | | | 25.0 | 25.0 | | | | | | 50.0 | |
| 21 | Field Loop Checks | | | 40.0 | | | 40.0 | | | | 80.0 | |
| 22 | On-site Code Validation & Tests | | | 40.0 | | | 40.0 | | | | 80.0 | |
| 23 | PLC/HMI Data Verification | | | 12.0 | | | 12.0 | | | | 24.0 | |
| 24 | Documentation | 1.0 | 1.0 | 3.0 | | | | | | 3.0 | 8.0 | |
| 25 | Continuing Support | 1.0 | 1.0 | 7.0 | | | 11.0 | | | 1.0 | 21.0 | |
| 26 | Project Management | | | 20.0 | | | | | | | 20.0 | |
| | | | | | | | | | | | | |
| | **Programming Fees Sub Total:** | **3.0** | **9.0** | **300.0** | **25.0** | | **246.0** | | | **9.0** | **592.0** | **$64,177** |
| | **Programming Expenses:** | | | | | | | | | | | **$696** |
| | **Total Programming & Expenses:** | | | | | | | | | | | **$64,873** |

Project Number: 2007.11.0164

Project Name: Casa Grande Water System SCADA Design - Phase III

Date: 26-Feb-08

| # | Sub-Task | Depart. Mgr. VII | Depart. Mgr. V | Project Mgr. IV | Const. Mgr. III | Designer V | Integr. IV | Designer IV | CAD Mgr. III | Admin. II | Tot. Hrs. | Section Subtot. |
|---|---|---|---|---|---|---|---|---|---|---|---|---|
| | **Task 600 - Radio Path Study** | | | | | | | | | | | |
| 1 | Field Data Collection | | | | 2.0 | 15.0 | | | | | 17.0 | |
| 2 | Radio Path Modeling | | | | 2.0 | 4.0 | | | | 2.0 | 8.0 | |
| 3 | Report Preparation | | | | | | | | | | | |
| 4 | Field Verification | | | | | | | | | | | |
| | | | | | | | | | | | | |
| | **Study Fees Sub Total:** | | | | **4.0** | **19.0** | | | | **2.0** | **25.0** | **$2,558** |
| | **Study Expenses:** | | | | | | | | | | | **$16** |
| | **Total Study & Expenses:** | | | | | | | | | | | **$2,574** |
| | | | | | | | | | | | | |
| | **Totals:** | **47.0** | **77.0** | **300.0** | **29.0** | **137.0** | **246.0** | **109.0** | **97.0** | **19.0** | **1061.0** | |
| | | | | | | | | | | | | |
| | **Std Hourly Rates:** | **$180.00** | **$135.00** | **$122.00** | **$106.00** | **$106.00** | **$92.00** | **$92.00** | **$101.00** | **$60.00** | | |
| | **Total Fees:** | $8,460 | $10,395 | $36,600 | $3,074 | $14,522 | $22,632 | $10,028 | $9,797 | $1,140 | **$116,648** | |

**Total Expenses:** **$1,119**

**Grand Total:** **$117,767**

Arizona Water Casa Grande Well Site Modifications

| Site scope | Comments |
|---|---|
| **Well 10** | |
| Monitor Well Pump Statuses (Run, Auto, Fault) | |
| Retrofit existing flowmeter | AWC to provide and install |
| Monitor Volt/Amp/KWH (Symcom) | existing |
| Existing 5kVA XFMR | Upgrade to 15kVA MPC |
| New flow switch on eye wash station | |
| New high pressure switch on well pump discharge | Wire to existing starter |
| | |
| **Well 17** | |
| Monitor Volt/Amp/KWH (Symcom) | |
| Monitor Well Pump Statuses (Run, Auto, Fault) | |
| Waste valve position (fully open & fully closed) | |
| Retrofit existing flowmeters (2x) | 1 total flow, 1 flow to Ross Labs AWC to provide and install meters |
| New Pressure Transmitter | Upstream of existing flowmeter |
| New high pressure switch on well pump discharge | Wire to existing starter |
| New flow switch on eye wash station | |
| | Utilize empty 36"x36" for RTU |
| | |
| **Well 26** | |
| Monitor Well Pump Statuses (Run, Auto, Fault) | |
| Monitor Volt/Amp/KWH (Symcom) | 777 exists |
| Waste valve position (fully open & fully closed) | |
| Retrofit existing flowmeters (2x) | 1 total flow, 1 flow to Ross Labs AWC to provide and install meters |
| Existing 10kVA MPC | Sufficient? |
| New Pressure Transmitter | Upstream of existing flowmeter |
| New high pressure switch on well pump discharge | Wire to existing starter |
| New flow switch on eye wash station | |
| | |
| **Well 31** | |
| Monitor Well Pump Statuses (Run, Auto, Fault) | |
| Monitor Volt/Amp/KWH (Symcom) | 777 exists |
| Waste valve position (fully open & fully closed) | |
| Retrofit existing flowmeter | AWC to provide and install meters |
| New high pressure switch on well pump discharge | Wire to existing starter |
| New flow switch on eye wash station | |
| | Utilize existing 36"x30" empty section for RTU |
| | |
| **Well 23** | |
| Monitor Well Pump Statuses (Run, Auto, Fault) | |
| Monitor Volt/Amp/KWH (Symcom) | 777 exists |
| Waste valve position (fully open & fully closed) | |
| Retrofit existing flowmeter | AWC to provide and install meters |
| New high pressure switch on well pump discharge | Wire to existing starter |
| New flow switch on eye wash station | |
| Existing 5kVA XFMR | Upgrade to 15kVA MPC |

Arizona Water Casa Grande Well Site Modifications

| | |
|---|---|
| **Well 21** | |
| Monitor Well Pump Statuses (Run, Auto, Fault) | |
| Monitor Volt/Amp/KWH (Symcom) | 777 will exist once gear has been replaced |
| Waste valve position (fully open & fully closed) | |
| Retrofit existing flowmeter | AWC to provide and install meters |
| New high pressure switch on well pump discharge | Wire to existing starter |
| New flow switch on eye wash station | |
| | Utilize existing 30x36 empty section for RTU |
| **Well 24** | |
| Monitor Well Pump Statuses (Run, Auto, Fault) | |
| Monitor Volt/Amp/KWH (Symcom) | Does not exist; add new (Motorsaver 350 & Toshiba 2E relay exists) |
| Waste valve position (fully open & fully closed) | Add switch |
| Retrofit existing flowmeter | AWC to provide and install meters |
| New high pressure switch on well pump discharge | Wire to existing starter |
| New flow switch on eye wash station | |
| Existing 5kVA XFMR | Upgrade to 15kVA MPC |
| | |
| **Well 30** | |
| Monitor Well Pump Statuses (Run, Auto, Fault) | |
| Monitor Volt/Amp/KWH (Symcom) | 777 exists |
| Waste valve position (fully open & fully closed) | Add switch |
| Retrofit existing flowmeter | AWC to provide and install meters |
| New high pressure switch on well pump discharge | Wire to existing starter |
| New flow switch on eye wash station | |
| | Utilize existing 36"x30" empty section for RTU |
| | |
| **Well 25** | |
| Monitor Well Pump Statuses (Run, Auto, Fault) | |
| Monitor Volt/Amp/KWH (Symcom) | 777 exists |
| Waste valve position (fully open & fully closed) | Add switch |
| Retrofit existing flowmeter | AWC to provide and install meters |
| New high pressure switch on well pump discharge | Wire to existing starter |
| New flow switch on eye wash station | |
| Existing 5kVA XFMR | Upgrade to 15kVA MPC |
| | |
| **Well 20** | |
| Monitor Well Pump Statuses (Run, Auto, Fault) | |
| Monitor Volt/Amp/KWH (Symcom) | Existing |
| Waste valve position (fully open & fully closed) | Add switch |
| Retrofit existing flowmeters (2x) | 1 total flow, 1 flow to Ross Labs AWC to provide and install meters |
| New high pressure switch on well pump discharge | Wire to existing starter |
| New flow switch on eye wash station | |
| New Pressure Transmitter | Upstream of existing flowmeter |
| | Utilize existing 30x36 empty section for RTU |

4/25/2008

# CASA GRANDE PHASE II SCADA SCHEDULE

DESIGN:

The electrical design package for each site (Wells 10,17,20,21,23,24,25,26,30 & 31) will be submitted for a 90% review on or before May 16th, 2008. This will include an overall design package covering site Electrical and Instrumentation requirements for each site plus an individual RTU design package for each sites RTU panel. If the 90% design review meeting can be held within one week of the submittal (by May 23rd) and all applicable comments can be received by May 30th, a final 'For Construction' set can be delivered by June 6th.

CONSTRUCTION:

Based on Keller starting construction within 1 month of receiving 'For Construction' drawings (~July 7th) it is estimated that construction will take a minimum of 2.5 months to complete (~4 sites/month). Based on this, Construction would complete near end of September.

*This schedule information is approximate and has not been confirmed with Keller*

PROGRAMMING:

In order to expedite the process, the base PLC programs for each RTU panel along with programming additions/modifications to SCADA HMI application will be developed during the construction phase. Upon having sites turned over (installation completed), it is estimated that it will take approximately 1 day to commission each site and 3-4 days to incorporate additions/modifications to Master Station. This will essentially equate to a total of approximately 2 weeks.

CONCLUSION:

Based on estimates above, completion of Phase II project would be sometime in October of this year.

**ARIZONA WATER COMPANY**

# CONSTRUCTION COMPLETION NOTICE

| CONSTRUCTION COMPLETION DATE: | 7/29/10 | WORK AUTHORIZATION NUMBER: | 1-4470 |
|---|---|---|---|

*THE FOLLOWING RECORD REQUIREMENTS ARE ATTACHED:*

PREPARED BY

1. CONSTRUCTION DRAWINGS WITH "AS BUILT" LOCATION OF PIPE, FITTINGS, ETC. MARKED IN RED .....
2. VALVE CARDS .....
3. HYDRANT CARDS WITH COPY OF COVER LETTER .....
4. MATERIALS INSTALLED OR RETIRED LISTED ON THE REVERSE SIDE OF THE W.A. WITH R.O.S. AND P.D.R. NUMBERS .....
5. PRESSURE AND LEAKAGE TEST RESULTS:

| | | | | |
|---|---|---|---|---|
| DATE TESTED | | | | |
| TIME STARTED | | | | |
| TIME FINISHED | | | | |
| PIPE DIAMETER | | | | |
| FOOTAGE TESTED | | | | |
| ALLOWABLE LEAKAGE | | | | |
| LEAKAGE OBSERVED | | | | |
| PRESSURE AT TEST POINT | | | | |
| COMPANY EMPLOYEE OBSERVING TEST *(print)* | | | | |
| INITIALS OF EMPLOYEE | | | | |

NO WATER FACILITIES INSTALLED AS A PART OF THIS PROJECT

6. DISINFECTION SAMPLING:

| | | | | | |
|---|---|---|---|---|---|
| INITIAL SAMPLING | DATE | | | | |
| *(minimum 50 ppm available chlorine)* | TIME | | | | |
| | PPM $Cl_2$ | | | | |
| AFTER 24 HOURS DETENTION TIME | DATE | | | | |
| *(minimum 10 ppm free chlorine)* | TIME | | | | |
| | PPM $Cl_2$ | | | | |
| AFTER SUFFICIENT FLUSHING | DATE | | | | |
| *(water is clear and system $Cl_2$ residual is measured)* | TIME | | | | |
| | PPM $Cl_2$ | | | | |
| BACTERIOLOGICAL SAMPLE(S) | DATE | | | | |
| | TIME | | | | |
| | ATTACHED | ☐ Yes ☐ No | ☐ Yes ☐ No | ☐ Yes ☐ No | ☐ Yes ☐ No |

I certify that construction on the above Work Authorization was completed as of the date shown above and for which all materials have been accounted. I further certify that I have inspected the work done and have found it to be satisfactory and in accordance with Company specifications.

Division Manager or Operations Superintendent *(signature)*

7/29/10
Date of Notice

**ATTACH TO CONSTRUCTION & ENGINEERING FILE COPY OF WORK AUTHORIZATION**

# WA1-4620

# ARIZONA WATER COMPANY
## *WORK AUTHORIZATION*

SCANNED

W.A. NUMBER: 1-4620
P.E. NUMBER: CG
BUDGET ITEM NO.: B-1
SHEET NO.: 1 of 2

| | | | |
|---|---|---|---|
| SYSTEM: | CASA GRANDE | WORK TO START BY: | UPON AUTHORIZATION |
| DIVISION: | CASA GRANDE | WORK TO BE FINISHED BY: | WITHIN 60 DAYS |
| TAX CODE: | 0401 | | |

DESCRIPTION OF WORK:

Install booster pump & relocate 16,000 gal tank from Stanfield to Well #27 (Phase 2 of 2). Construct in accordance with attached drawings and/or Arizona Water Company specifications.

FACTORS JUSTIFYING WORK:

2009 APPROVED BUDGET ITEM ($50,000.00) SPENT ($17,000) 2010
APPROVED BUDGET ITEM ($40,000.00)

| COST ESTIMATE | | AUTHORIZATION | DATE |
|---|---|---|---|
| **COST OF WORK:** | | PREPARED BY: Andrew J. Haas AJH | 2-16-10 2-18-10 |
| MATERIAL | 42,763 | | |
| LABOR | 11,000 | REVIEWED BY: James Wilson JW 2/16/10 | 2/16/10 |
| CONTRACT PORTION | 46,657 | | |
| OVERHEAD | 9,339 | APPROVED BY: Fred Schneider FS 2-19-10 | 2-16-10 |
| TOTAL AUTHORIZED EXPENDITURES CHARGEABLE TO THIS W.A. | $ 109,759 | | |
| **FUNDS RECEIVED:** | | APPROVED BY: Joe Harris | 2/16/10 |
| CONTRIBUTIONS RECEIVED | 0 | | |
| REFUNDABLE ADVANCES RECEIVED | 0 | AUTHORIZED BY: William M Garfield | 2-17-2010 |
| TOTAL CONTRIBUTIONS/ADVANCES | 0 | | |
| NET CASH REQUIRED | $ 109,759 | | |
| | | | |
| | | | |

COMMENTS:

$35,000 in additional funds to be taken from Casa Grande Blankets, and $35,000 in additional funds to be taken from WA 1-4704 Install HMF Polymer Injection at Cottonwood & Henness BPS. Discussed, determined + Agreed with Between Engineering & operations. FS

CONSTRUCTION RELEASE:

**RELEASED TO CONSTRUCTION**
Authorized by FRED SCHNEIDER
Date 2/18/2010
**2010 BUDGET**

AFH

**FILE COPY**

**ARIZONA WATER COMPANY**

# *WORK AUTHORIZATION* - DETAIL SHEET

W.A. NUMBER: 1-4620
P.E. NUMBER: CG
BUDGET ITEM NO.: B-1
SHEET NO.: 2 of 2

| RETIREMENT PROPERTY UNITS | PLANT PROPERTY ACCOUNT | UNIT DESCRIPTION | QUANTITY | YEAR INSTALLED AND W.A. NUMBER |
|---|---|---|---|---|
| | | | | |
| | | | | |
| | | | | |
| | | | | |

PROJECT DESCRIPTION:

Install booster pump & relocate 16,000 gal tank from Stanfield to Well #27 (Phase 2 of 2)

| | DESCRIPTION | PLANT PROP ACCT | QUANTITY | UNIT COST | TOTAL |
|---|---|---|---|---|---|
| CONTRACT WORK | Pull and replace well pump | 325 | 1 | $ 15,135.00 | $ 15,135 |
| | Install booster pump starter panel and electrical controls | 325 | 1 | 15,000.00 | 15,000 |
| | Purchase adaptor for new VHS motor frame size | 342 | 1 | 1,200.00 | 1,200 |
| | Construct foundation for 16 Kgal tank from Table Top site | 342 | 1 | 3,000.00 | 3,000 |
| | Transport 16 Kgal tank from Table Top to CG 27 | 321 | 1 | 2,000.00 | 2,000 |
| | Construct concrete slab for booster pump | 325 | 1 | 3,000.00 | 3,000 |
| | Install tapping sleeve and valve on 16" main from Coolidge | 343 | 1 | 5,000.00 | 5,000 |
| | Electrical controls for Nitrate Analyzer | 332 | 1 | 821.70 | 822 |
| | Install fittings on tank | 321 | 1 | 1,500.00 | 1,500 |
| | | | | | |
| | | | | | |
| | | | | | |
| | SERVICE CONNECTIONS COMPLETE: DOUBLE-LONG | 345 | | | |
| | SERVICE CONNECTIONS COMPLETE: DOUBLE-SHORT | 345 | | | |
| | SERVICE CONNECTIONS COMPLETE: SINGLE-LONG | 345 | | | |
| | SERVICE CONNECTIONS COMPLETE: SINGLE-SHORT | 345 | | | |
| **TOTAL CONTRACT WORK** | | | | | $ 46,657 |
| MATERIALS | 6" DIP, 12" DIP, and related fittings | 343 | 1 | $ 16,000.00 | $ 16,000 |
| | Misc. Fittings | 343 | 1 | 1,000.00 | 1,000 |
| | Tank Cla-Valve | 332 | 1 | 4,772.00 | 4,772 |
| | Booster Cla-Valve | 332 | 1 | 4,156.00 | 4,156 |
| | Sales Tax | | 1 | 1,500.00 | 1,500 |
| | Shipping | | 1 | 1,500.00 | 1,500 |
| | Nitrate Analyzer | 332 | 1 | 5,835.00 | 5,835 |
| | 4" Propeller Meter | 345 | 2 | 1,500.00 | 3,000 |
| | Catch Basins | 321 | 1 | 5,000.00 | 5,000 |
| | | | | | |
| **TOTAL MATERIALS** | | | | | $ 42,763 |
| LABOR | Install DIP and related fittings | 343 | 160 | $ 50.00 | $ 8,000 |
| | | | | | |
| | | | | | |
| | | | | | |
| | | | | | |
| | TESTING FEE | | 1 | $ 500.00 | 500 |
| | PERMIT FEE | | 1 | 1,000.00 | 1,000 |
| | SURVEY FEE | | | | |
| | FIELD INSPECTION | | 1 | 1,500.00 | 1,500 |
| | INSTALL SERVICE CONNECTIONS: DOUBLE-LONG | 345 | | | |
| | INSTALL SERVICE CONNECTIONS: DOUBLE-SHORT | 345 | | | |
| | INSTALL SERVICE CONNECTIONS: SINGLE-LONG | 345 | | | |
| | INSTALL SERVICE CONNECTIONS: SINGLE-SHORT | 345 | | | |
| **TOTAL LABOR** | | | | | $ 11,000 |
| **SUBTOTAL - CONTRACT WORK, MATERIALS, AND LABOR** | | | | | $ 100,420 |
| OVERHEAD | | | | | 9,339 |
| **TOTAL** | REFUNDABLE PORTION ☐ | NON-REFUNDABLE PORTION ☐ | | **COST ESTIMATE** | $ 109,759 |

AFH

# ARIZONA WATER COMPANY
## WORK AUTHORIZATION

W.A. NUMBER: 1-4620
P.E. NUMBER: CG
BUDGET ITEM NO.: B-1
SHEET NO.: 1 of 2

| | | | |
|---|---|---|---|
| SYSTEM: | CASA GRANDE | WORK TO START BY: | UPON AUTHORIZATION |
| DIVISION: | CASA GRANDE | WORK TO BE FINISHED BY: | WITHIN 60 DAYS |
| TAX CODE: | 0401 | | |

DESCRIPTION OF WORK:

Install booster pump & 15,000 gal tank at Well #27 (Phase 1 of 2). Construct in accordance with attached drawings and/or Arizona Water Company specifications.

FACTORS JUSTIFYING WORK:

2009 APPROVED BUDGET ITEM ($50,000.00)

| COST ESTIMATE | | AUTHORIZATION | DATE |
|---|---|---|---|
| COST OF WORK: | | PREPARED BY: Andrew J Haas AJH<br>Andy Haas | 11-6-09<br>11-16-09 |
| MATERIAL | 11,459 | | |
| LABOR | 1,500 | REVIEWED BY: Mike Loggins MC 11-16-09 | 11-6-09 |
| CONTRACT PORTION | 32,765 | | |
| OVERHEAD | 4,252 | APPROVED BY: Fred Schneider 11-16-09 | 11-6-09 |
| TOTAL AUTHORIZED EXPENDITURES CHARGEABLE TO THIS W.A. | $ 49,976 | | |
| FUNDS RECEIVED: | | APPROVED BY: Joe Harris | 11/16/09 |
| CONTRIBUTIONS RECEIVED | 0 | | |
| REFUNDABLE ADVANCES RECEIVED | 0 | AUTHORIZED BY: William M Garfield<br>William Garfield | 11-13-09 |
| TOTAL CONTRIBUTIONS/ADVANCES | 0 | | |
| NET CASH REQUIRED | $ 49,976 | | |
| | | | |
| | | | |

COMMENTS:

PHASE 1 of 2. Phase 2 is Budgeted for 2010. Project delayed until 4th Qtr of 2009 So that 1st Qtr 2010 funds can be used to Complete project.

CONSTRUCTION RELEASE:

**RELEASED TO CONSTRUCTION**
**Authorized by FRED SCHNEIDER**
**Date** 11/16/09

AFH

**ARIZONA WATER COMPANY**

# *WORK AUTHORIZATION* - DETAIL SHEET

W.A. NUMBER: 1-4620
P.E. NUMBER: CG
BUDGET ITEM NO.: B-1
SHEET NO.: 2 of 2

| RETIREMENT PROPERTY UNITS | PLANT PROPERTY ACCOUNT | UNIT DESCRIPTION | QUANTITY | YEAR INSTALLED AND W.A. NUMBER |
|---|---|---|---|---|
| | | | | |
| | | | | |
| | | | | |
| | | | | |

PROJECT DESCRIPTION:

Install booster pump & 15,000 gal tank at Well #27 (Phase 1 of 2)

| | DESCRIPTION | PLANT PROP ACCT | QUANTITY | UNIT COST | TOTAL |
|---|---|---|---|---|---|
| CONTRACT WORK | Purchase well pump | 325 | 1 | $ 6,565.05 | $ 6,565 |
| | Purchase booster pump and panel | 325 | 1 | 15,000.00 | 15,000 |
| | Purchase adaptor for new VHS motor frame size | 342 | 1 | 1,200.00 | 1,200 |
| | Construct foundation for 16 Kgal tank from Table Top site | 342 | 1 | 3,000.00 | 3,000 |
| | Transport 16 Kgal tank from Table Top to CG 27 | 321 | 1 | 2,000.00 | 2,000 |
| | Construct concrete slab for booster pump | 325 | 1 | 3,000.00 | 3,000 |
| | Sales Tax | 325 | 1 | 2,000.00 | 2,000 |
| | | | | | |
| | | | | | |
| | | | | | |
| | | | | | |
| | | | | | |
| | SERVICE CONNECTIONS COMPLETE: DOUBLE-LONG | 345 | | | |
| | SERVICE CONNECTIONS COMPLETE: DOUBLE-SHORT | 345 | | | |
| | SERVICE CONNECTIONS COMPLETE: SINGLE-LONG | 345 | | | |
| | SERVICE CONNECTIONS COMPLETE: SINGLE-SHORT | 345 | | | |
| **TOTAL CONTRACT WORK** | | | | | $ 32,765 |
| MATERIALS | 6" DIP | 343 | 200 | $ 14.78 | $ 2,956 |
| | 12" DIP | 343 | 20 | 30.49 | 610 |
| | 6" Gate Valve | 343 | 8 | 517.98 | 4,144 |
| | 6" 90 Deg. Ell | 343 | 7 | 97.92 | 685 |
| | 12" 90 Deg. Ell | 343 | 4 | 306.68 | 1,227 |
| | 6" Tee | 343 | 2 | 135.32 | 271 |
| | 12"x6" Tee | 343 | 1 | 315.52 | 316 |
| | Misc. Fittings | 343 | 1 | 1,250.00 | 1,250 |
| | | | | | |
| | | | | | |
| **TOTAL MATERIALS** | | | | | $ 11,459 |
| LABOR | | | | | |
| | | | | | |
| | | | | | |
| | | | | | |
| | | | | | |
| | TESTING FEE | 325 | 1 | $ 500.00 | 500 |
| | PERMIT FEE | 325 | 1 | 1,000.00 | 1,000 |
| | SURVEY FEE | | | | |
| | FIELD INSPECTION | | | | |
| | INSTALL SERVICE CONNECTIONS: DOUBLE-LONG | 345 | | | |
| | INSTALL SERVICE CONNECTIONS: DOUBLE-SHORT | 345 | | | |
| | INSTALL SERVICE CONNECTIONS: SINGLE-LONG | 345 | | | |
| | INSTALL SERVICE CONNECTIONS: SINGLE-SHORT | 345 | | | |
| **TOTAL LABOR** | | | | | $ 1,500 |
| **SUBTOTAL - CONTRACT WORK, MATERIALS, AND LABOR** | | | | | $ 45,724 |
| OVERHEAD | | | | | 4,252 |
| **TOTAL** | REFUNDABLE PORTION ☐ | NON-REFUNDABLE PORTION ☐ | | **COST ESTIMATE** | $ 49,976 |

AFH

## Existing Pump Design

Design Condition: 500gpm @ 888ft TDH?
Existing Pump: Goulds 12WAMC 11-stages
Existing Motor: 200HP 1800RPM VHS 480V 3-Phase
8" Column x 3" Oil Tube x 1-11/16" Shaft 682LF

## Problems with Existing Pump Design

Pump designed for 150psi system pressure
15minute flush to atmosphere draws water level down to bowls Off pump curve to right at [redacted] 1200-1300gpm
When pump is turned into system, hammer from increased pressure causes bowls to drag
Lineshaft is undersized original pump K=2.4lbs/ft, existing pump K=7.0lbs/ft
Excessive stretch, extra lateral required
Ductile iron bowl requirement

## New Pump Design

Pump through ATP into 15Kgal storage tank & use booster pump into 150psi system pressure
Find pump curve with lower flow on pump to waste
Find pump curve with lower K value, lower maximum TDH, and more available lateral

Static Water Level = 200-300ft Volatile
Dynamic Water Level = 500-657ft for 450-500gpm Volatile
Assume 575ft @ 450gpm

Column Pipe Friction Loss for 682LF of 8" Column x 3" Oil Tube x 1-11/16" shaft
@ 450gpm Headloss = 1.0ft/100ft of column pipe

$$\frac{1.0\text{ft}}{100\text{ft pipe}} (682\text{ft pipe}) = 6.82\text{ft} \quad \text{say } 7\text{ft}$$

Losses through ATP assume 10psi = 23.1ft say 25ft
Assume 17-18ft tank is 8ft full about half full
TDH = 575ft + 7ft + 25ft + 8ft = 615ft TDH

**Design Condition: 450gpm @ 615ft TDH**

## Bowl Assembly

Choose Simflo SC12C 8-stage 9.325" Full trim impeller

Design point on curve 450gpm @ 603ft

Cast Iron Maximum Bowl Working Pressure for Simflo SC12C = 254psi

$254\text{psi} \frac{2.31\text{ft}}{1\text{psi}} = 586.74\text{ft}$

Design TDH = 603ft

Design Curve w/ 9.325" impeller Shutoff head = 740ft

$\frac{740\text{ft}}{8\text{-stages}} = 92.5\text{ft/stage}$

$\frac{740\text{ft} - 586.74\text{ft}}{92.5\text{ft/stage}} = 1.66 \text{ stages}$

## Bowl Lateral Requirement

Impeller Thrust = $T_{imp} = K \times H_L \times SG$ 8" Column × 3" Tube × 1-11/16" Shaft

$T_{imp} = (6.5\text{lb/ft})(740\text{ft})(1.0) = 4810\text{lbs} = P$

### Lineshaft Elongation

$e = \frac{PL}{EA} = \frac{(4810\text{lbs})(682\text{ft})(12\text{in/ft})}{(28.5\times10^6\text{psi})\frac{\pi(1+11/16\text{in})^2}{4}} = 0.6176\text{in}$

### Column and Tube Elongation

Column Load = TDH × SG × (KW − K) Specific Gravity SG = 1.0

for 8" column pipe KW = 16.71

Column Load = $(740\text{ft})(1.0)(16.71 - 6.5\text{lb/ft}) = 7555.4\text{lbs}$

from Goulds table 200.B.05

linear interpolation

$e = 0.033\text{in} + (7555.4\text{lbs} - 7500\text{lbs})\frac{(0.035\text{in} - 0.033\text{in})}{(8000\text{lbs} - 7500\text{lbs})}\left(\frac{682\text{ft}}{100\text{ft}}\right) = 0.2266\text{in}$

Stretch = $0.6176\text{in} - 0.2266\text{in} = 0.3910\text{in}$

$\text{Stretch} = \frac{HL}{29}\left[KC_1 - C_2 + C_3\left(1 - \frac{1}{2}\frac{L}{H}\right)\right]$

H = TDH in ft/1000 = 740/1000 = 0.74

L = Column Length in ft/1000 = 682/1000 = 0.682

K = Thrust Factor = 6.5 lbs/ft

For 8" Column × 3" Tube × 1-11/16" Shaft

$C_1 = 6.62510$

$C_2 = 24.40462$

$C_3 = 16.07294$

$\text{Stretch} = \frac{(0.74)(0.682)}{29}\left[6.5(6.62510) - 24.40462 + (16.07294)\left(1 - \frac{1}{2}\left(\frac{0.682}{0.74}\right)\right)\right] = 0.4755\text{in}$

Required Lateral = Stretch + Impeller Clearance + Assembly Loss

Required Lateral = 0.4755in + 0.125in + 0.125in = 0.7255in

Use 0.75in Minimum Required Lat

Max. Available Lateral = 0.812 in OK

## Motor Bearing Load

Motor Bearing Load = Impeller Thrust + Dead Weight

Motor Bearing Load = $(K)(H_L)(SG) + (\text{Shaft Weight per ft.})(\text{Setting}) + (\text{Impeller Weight})(\#\text{ of Impellers})$

Motor Bearing Load = $(6.5\text{lbs/ft})(740\text{ft})(1.0) + (7.6\text{lbs/ft})(682\text{ft}) + (13.8\text{lbs})(8\text{stages}) = 10{,}103.6\text{lbs}$ @ Shut Of

Motor Bearing Load = $(6.5\text{lbs/ft})(603\text{ft})(1.0) + (7.6\text{lbs/ft})(682\text{ft}) + (13.8\text{lbs})(8\text{stages}) = 9{,}213.1\text{ lbs}$ @ Design Condition

## Motor Sizing

Maximum HP on design pump curve = 92.8 HP

HP at operating point ⇒ $HP = \frac{(GPM)(TDH)}{(3960)(\text{Pump Eff.})} = \frac{(450_{gpm})(603\text{ft})}{(3960)(0.843)} = 81.3\text{ HP}$

1-11/16" Lineshaft Mechanical Friction Loss HP/100ft = 1.40

$HP = 1.40\text{ HP}\ \frac{682\text{ft}}{100\text{ft}} = 9.548\text{HP}$

Thrust Bearing Friction Loss in HP

$HP = \frac{\text{Total Thrust} \times RPM \times 0.0075}{100{,}000} = \frac{(10{,}103.6\text{ lbs})(1800\text{ rpm})(0.0075)}{100{,}000} = 1.36\text{ HP}$

Maximum Required HP = 92.8 + 9.548 + 1.36 = 103.7 HP

Select 100HP VHS motor
Premium Efficiency

## Motor Bearing Sizing

US Motor 100HP VHS WP1 Premium Efficiency motor normal bearing down thrust capacity = 6700lbs

Extra High Thrust (175%) bearing capacity = (175%)(6700lbs) = 11,725lbs

Maximum bearing load = 10,103.6lbs < 11,725lbs

Use Extra High Thrust (175%) Bearings

ITT

EXISTING PUMP

Turbine

# Goulds Pumps

# Model 12WAMC *(Effective June 1, 2006)*

| GOULDS PROPOSAL NO. | GOULDS S.O. NO. | INQUIRY NO. | CUSTOMER P.O. NO. | P.O. DATE | ITEM NO. | CUSTOMER |
|---|---|---|---|---|---|---|
| | | | | | | |

| PROJECT | SERVICE | GPM CAPACITY | FT. TDH | % EFFICIENCY | RPM |
|---|---|---|---|---|---|
| CG#27 | | 500 | 388 | | 1800 |

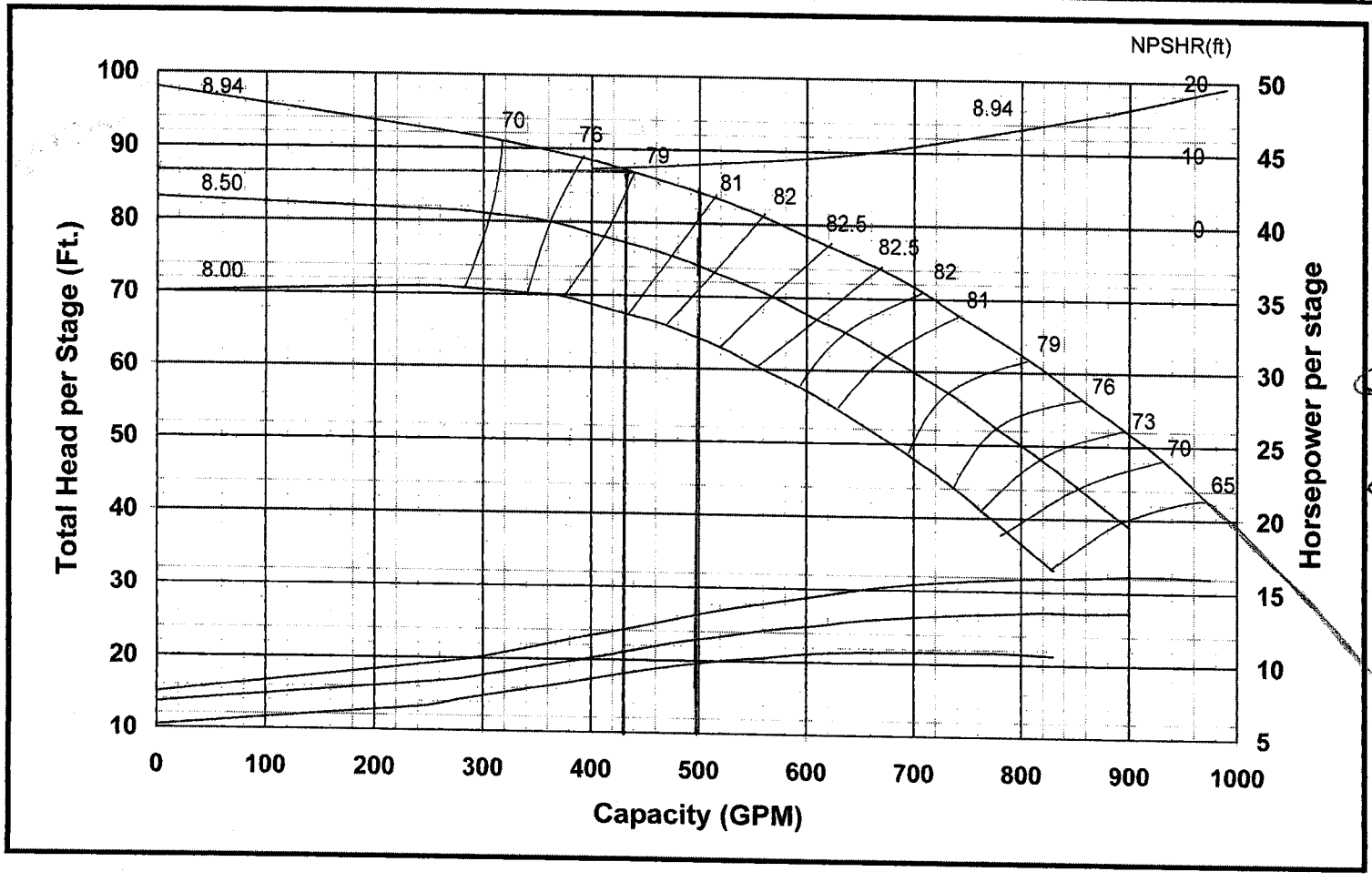


| | |
|---|---|
| **Curve No.** | **E6412WCPC2** |
| **Model** | **12WAMC** |
| **RPM** | **1770** |
| EFFICIENCY CORRECTION | |
| 1-STAGE | -3.0 |
| 2-STAGE | -2.0 |
| 3-STAGE | -1.0 |
| 4-STAGE | 0.0 |
| Impeller | **ENCLOSED** |
| Ns = | **1615** |
| K = | **7.0 LBS/FT** |
| K(Bal.)= | **N/A** |
| Bowl O.D. | 11.60" |
| Bowl Lateral | 0.75" |
| Max. PSI | 390 |
| Disch size | 6",8", 10" |

* REQUIRES DUCTILE IRON BOWL CONSTRUCTION

**TURBINE OPERATIONS**
Lubbock, Texas

BOWL PERFORMANCE CURVE BASED ON PUMPING CLEAR, NON-AERATED WATER. RATED POINT ONLY IS GUARANTEED. CURVES REPRESENT SINGLE STAGE PERFORMANCE BASED ON TEST OF MULTI-STAGE BOWL ASSEMBLY. EFFICIENCY CORRECTION IS REQUIRED FOR LESSER STAGES.

GOULDS PUMPS

Goulds Pumps and the ITT Engineered Blocks Symbol are registered trademarks and tradenames of ITT Corporation. SPECIFICATIONS ARE SUBJECT TO CHANGE WITHOUT NOTICE.

C12WALC2 January, 2009

Copyright (c) 2009 ITT Corporation

*Engineered for life*

ATTN: Kevin Pakka

**ARIZONA WATER COMPANY**

# EXISTING PUMP

**WELL RECORD**

| System: | Map Reference (e.g. Site Name): | Well No. |
|---|---|---|
| CG | Well # 27 | # 27 |

THIS SECTION TO BE COMPLETED BY AWC OR CONTRACTOR

## BOWL DATA

Configuration: ☒ Lineshaft Turbine ☐ Submersible Turbine

| | | |
|---|---|---|
| Manufacturer: Gould Pump Inc. | | Model No.: 12 WHMC |
| Serial No.: | Stages: 11 | Bowl O.D. (inch): 12" |
| Impeller O.D. (inch): 8.94 | Thrust K Factor: 7 | |

| | | |
|---|---|---|
| Shaft Thread O.D. (inch): 1 11/16" | Threads Per Inch: 10 THD. | Thread Direction: L.H. |
| Oil Tube Thread I.D. (inch): 3" | Threads Per Inch: 10 THD. | Thread Direction: R.H. |
| Column Thread I.D. (inch): 8" | Thread Type: TAPER | Threads Per Inch: 10 THD. |
| Suction Thread I.D. (inch): 8" | Thread Type: TAPER | Threads Per Inch: 10 THD. |
| Supplier: Tri-Valley Pump | | Date Installed: 1/14/08 |

Remarks:

**ARIZONA WATER COMPANY**

**WELL RECORD**

| System: | Map Reference (e.g. Site Name): | Well No. |
|---|---|---|
| CG | Well # 27 | 27 |

THIS SECTION TO BE COMPLETED BY AWC OR CONTRACTOR

## AIR LINE DATA

| | | |
|---|---|---|
| Air Line O.D. (inch): 3/8" | Length (feet): 690' | Material: Stainless |
| Supplier: Tri-Valley Pump | | Date Installed: 1/14/08 |

Remarks:

# ARIZONA WATER COMPANY

## WELL RECORD

| System: | Map Reference (e.g. Site Name): | Well No. |
|---|---|---|
| CG | well # 27 | 29 |

THIS SECTION TO BE COMPLETED BY AWC OR CONTRACTOR

### COLUMN PIPE DATA

| Column Tread O.D. (inch): | Length (feet): | Thread Type: |
|---|---|---|
| 6.5" | 682' | Taper |
| **Threads Per Inch:** | **Thread Direction:** | |
| 10 | R.H. | |
| **Supplier:** | **Date Installed:** | |
| Tri-Valley Pump | 1/14/08 | |

Remarks: Column Pipe in 20' Lengths

THIS SECTION TO BE COMPLETED BY AWC OR CONTRACTOR

### OIL TUBE DATA

| Oil Tube Thread I.D. (inch): | Threads Per Inch: | Thread Direction: |
|---|---|---|
| 3" | 10 | R.H. |
| **Supplier:** | | **Date Installed:** |
| Tri-Valley Pump | | 1/14/08 |

Remarks: Oil Tube is 3" x 20' Peerless style

THIS SECTION TO BE COMPLETED BY AWC OR CONTRACTOR

### SHAFT DATA

| Shaft Thread O.D. (inch): | Threads Per Inch: | Thread Direction: |
|---|---|---|
| 1 3/16 | 10 | L.H. |
| **Supplier:** | | **Date Installed:** |
| Tri-Valley Pump | | 1/14/08 |

Remarks:



ESA

Pump Data Sheet - SIMFLO PUMPS INC.

Company:
Name:
Date: 10/6/2009

PROPOSED PUMP

SIMFLO PUMPS®

**Pump:**

Size: SC12C (8 stage)

Type: VERTTURBINE
Synch speed: 1800 rpm

Speed: 1770 rpm
Dia: 9.325 in

Curve:

Impeller:

Specific Speeds:

Ns: 1591
Nss: ---

Dimensions:

Suction: 6 in
Discharge: 6 in

Vertical Turbine:

Bowl size: 12 in
Max lateral: 0.812 in
Thrust K factor: 6.5 lb/ft

**Pump Limits:**

Temperature: ---
Pressure: 254 psi g
Sphere size: 0.656 in

Power: ---
Eye area: ---

**Search Criteria:**

Flow: 450 US gpm

Head: 585 ft

**Fluid:**

Water
SG: 1
Viscosity: 1.105 cP

Temperature: 60 °F
Vapor pressure: 0.2563 psi a
Atm pressure: 11.25 psi a

NPSHa: ---

**Motor:**

Standard: US
Enclosure: TYPE_1

Size: 100 hp
Speed: 1800
Frame: ----

Sizing criteria: Max Power on Design Curve

**Pump Selection Warnings:**

Pump shutoff dP exceeds limit for the pump.

**--- Data Point ---**

| | |
|---|---|
| Flow: | 450 US gpm |
| Head: | 603 ft |
| Eff: | 84.3% |
| Power: | 81.1 hp |
| NPSHr: | 7.42 ft |

**--- Design Curve ---**

| | |
|---|---|
| Shutoff head: | 740 ft |
| Shutoff dP: | 320 psi |
| Min flow: | --- |

BEP: 85.1% @ 491 US gpm

NOL power:
92.8 hp @ 695 US gpm

**-- Max Curve --**

Max power:
92.8 hp @ 695 US gpm

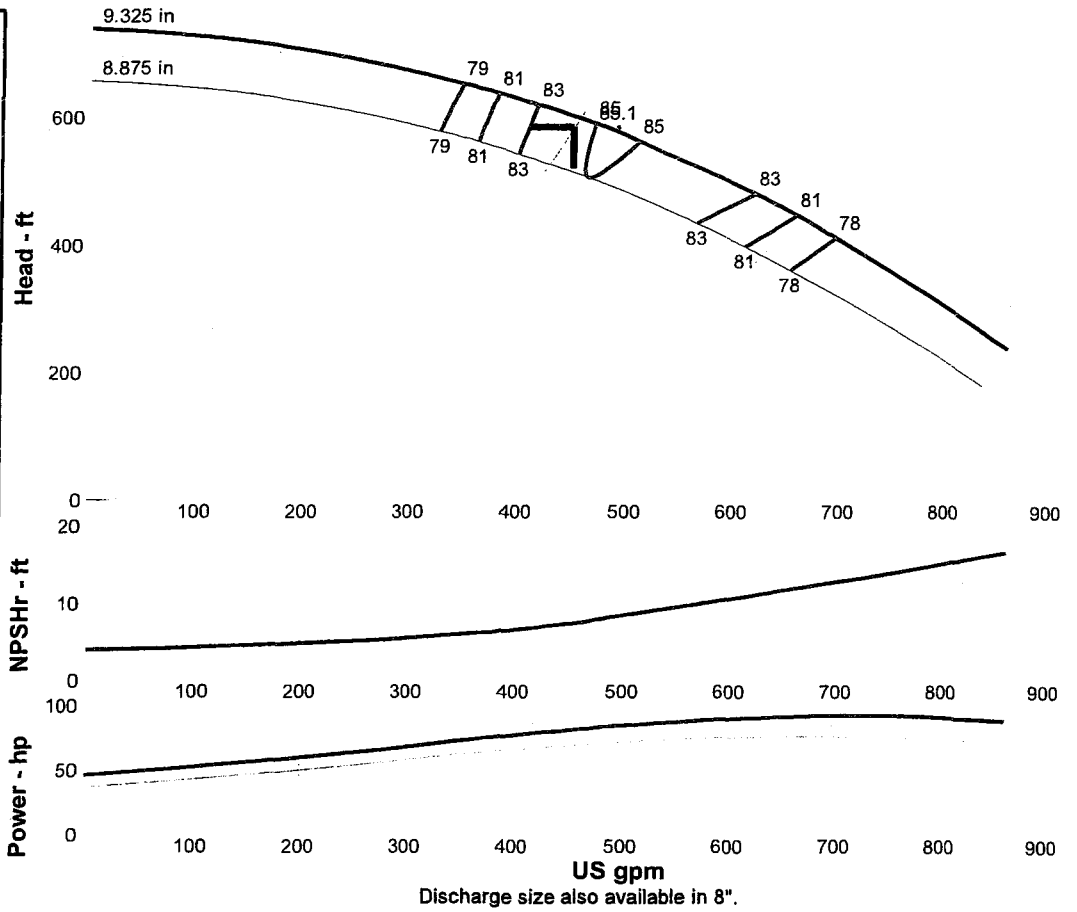


Discharge size also available in 8".

**Performance Evaluation:**

| Flow<br>US gpm | Speed<br>rpm | Head<br>ft | Efficiency<br>% | Power<br>hp | NPSHr<br>ft |
|---|---|---|---|---|---|
| 540 | 1770 | 541 | 84.5 | 86.9 | 9.32 |
| 450 | 1770 | 603 | 84.3 | 81.1 | 7.42 |
| 360 | 1770 | 648 | 79.8 | 73.7 | 6.1 |
| 270 | 1770 | 673 | 61.5 | 66.7 | 5.53 |
| 180 | 1770 | 695 | 41 | 60.1 | 5.02 |

Selected from catalog: Simflo Pumps.60 Vers: 1

# Downloaded Data - Thursday, March 04, 2010

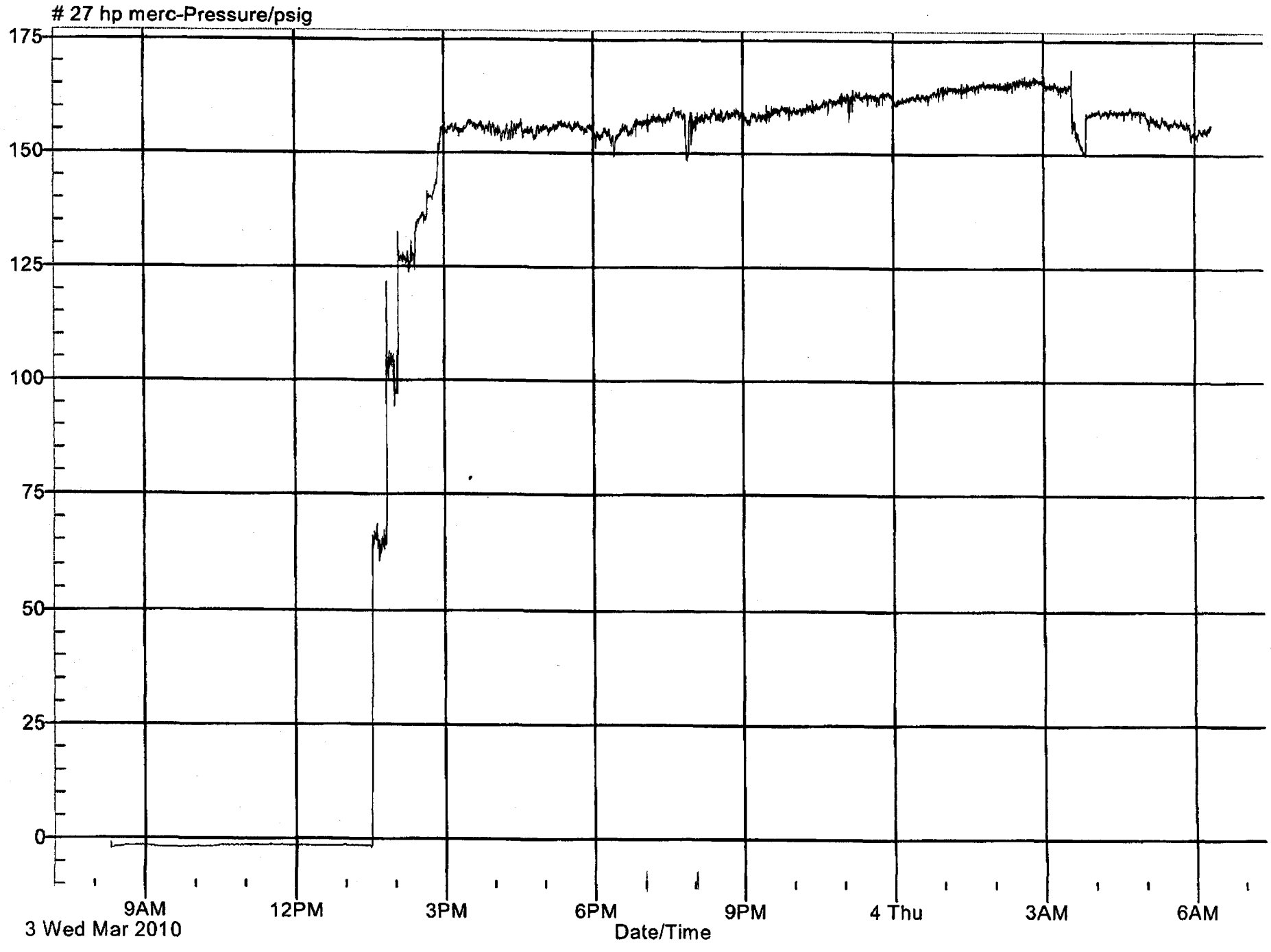

PRELIMINARY [X]

ACTUAL [ ]

# ARIZONA WATER COMPANY
## COST ESTIMATE WORKSHEET

DATE PREPARED:

PREPARED BY: James Wilson

SYSTEM:

SHEET OF

PROJECT LOCATION:

DRAWING NO.

PROJECT DESCRIPTION:

Preliminary cost estimate to drill and equip a replacment well. Well drilling and equipment pricing taken directly from recently drilled wells in Casa Grande (Wells 32 & 33)

| | DESCRIPTION | PLANT PROP ACCT | QUANTITY | UNIT COST | TOTAL |
|---|---|---|---|---|---|
| CONTRACT WORK | Purchase Property (1 acre) | 314 | 1 | $ 70,000.00 | $ 70,000 |
| | Drill 1000' deep well and install 18" louverd casing | 314 | 1 | 278,645.00 | 278,645 |
| | 3-phase power to site | 325 | 1 | 25,000.00 | 25,000 |
| | Install SES and MCC with SCADA controls and programing | 325 | 1 | 126,680.00 | 126,680 |
| | Site grading, drainage, dry well and catch basin | 314 | 1 | 55,000.00 | 55,000 |
| | Onsite underground piping and discharge header | 343 | 1 | 45,000.00 | 45,000 |
| | Construct 8' block wall with rolling gate | 314 | 1 | 45,000.00 | 45,000 |
| | Install pump, motor, colum pipe and discharge head | 325 | 1 | 93,872.00 | 93,872 |
| | | | | | |
| | | | | | |
| | Contracting Tax (4.5%) | | 1 | 33,263.87 | 33,264 |
| | Performance and Payment Bond (2%) | | 1 | 14,783.94 | 14,784 |
| | SERVICE CONNECTIONS: DOUBLE-LONG | 345 | | | |
| | SERVICE CONNECTIONS: DOUBLE-SHORT | 345 | | | |
| | **TAXABLE** SERVICE CONNECTIONS COMPLETE: SINGLE-LONG | 345 | | | |
| | **TAXABLE** SERVICE CONNECTIONS COMPLETE: SINGLE-SHORT | 345 | | | |
| | | | | | $ 787,245 |
| MATERIALS | Cla-Valve | 325 | 2 | $ 4,500.00 | $ 9,000 |
| | 8" Meter | 325 | 1 | 5,057.00 | 5,057 |
| | Miscelaneous Materials | 325 | 1 | 15,000.00 | 15,000 |
| | | | | | |
| | SERVICE CONNECTIONS: DOUBLE-LONG | 345 | | | |
| | SERVICE CONNECTIONS: DOUBLE-SHORT | 345 | | | |
| | **TAXABLE** SERVICE CONNECTIONS: SINGLE-LONG | 345 | | | |
| | **TAXABLE** SERVICE CONNECTIONS: SINGLE-SHORT | 345 | | | |
| | **TAXABLE** METERS | 346 | | | |
| | METERS | 346 | | | |
| **TOTAL MATERIALS** | | | | | $ 29,057 |
| LABOR | | | | | |
| | | | | | |
| | | | | | |
| | | | | | |
| | | | | | |
| | TESTING FEE | 343 | 1 | $ 5,000.00 | 5,000 |
| | PERMIT FEE | 343 | 1 | 15,000.00 | 15,000 |
| | SURVEY FEE | 343 | 1 | 4,500.00 | 4,500 |
| | FIELD INSPECTION | 343 | 1 | 5,500.00 | 5,500 |
| | INSTALL SERVICE CONNECTIONS: DOUBLE-LONG | 345 | | | |
| | INSTALL SERVICE CONNECTIONS: DOUBLE-SHORT | 345 | | | |
| | INSTALL **TAXABLE** SERVICE CONNECTIONS: SINGLE-LONG | 345 | | | |
| | INSTALL **TAXABLE** SERVICE CONNECTIONS: SINGLE-SHORT | 345 | | | |
| **TOTAL LABOR** | | | | | $ 30,000 |
| **SUBTOTAL - CONTRACT WORK, MATERIALS, AND LABOR** | | | | | $ 846,302 |
| OVERHEAD | | | | | 203,112 |
| **TOTAL** | REFUNDABLE PORTION [ ] NON-REFUNDABLE PORTION [ ] | | | **COST ESTIMATE** | $ 1,049,414 |

**Geotechnical Engineering Report**
**16,000 Gallon Water Storage Tank**
**Lake in the Desert Well Site**
**McCartney Road West of Evans Road**
**Casa Grande, Arizona**
**RAMM Project No. G17434**

For:
Arizona Water Company
P.O. Box 29006
Phoenix, Arizona 85038-9006

◆◆◆

By:
Ricker-Atkinson-McBee-Morman & Associates, Inc.
2105 South Hardy Drive, Suite 13
Tempe, Arizona 85282

R·A·M·M

**RICKER • ATKINSON • McBEE • MORMAN & ASSOCIATES, INC.**

*Geotechnical Engineering • Construction Materials Testing*

Arizona Water Company
P.O. Box 29006
Phoenix, Arizona 85038-9006

January 8, 2010

Attention: John Knobbe

Subject: Geotechnical Engineering Report
16,000 Gallon Water Storage Tank
Lake in the Desert Well Site
McCartney Road West of Evans Road
Casa Grande, Arizona

RAMM. Project No. G17434

Attached to this letter is the Geotechnical Engineering Report for the proposed 16,000 Water Storage Tank, to be located in Casa Grande, Arizona.

The proposed storage tank will be constructed at grade and will include a booster station and underground piping. The results of our field explorations; laboratory testing; and engineering analysis, evaluation and recommendations are presented in the report.

The attached report was prepared based on project and site data available at this time and was prepared in a manner and to the standards of local geotechnical engineering practice. Our services did not include evaluations for the presence of hazardous materials, area subsidence resulting from groundwater withdrawal or other geologic hazards.

If you have any questions, please do not hesitate to call.

Respectfully submitted,
RICKER, ATKINSON, MCBEE, MORMAN & ASSOCIATES, INC.

Registered Professional Engineer (Civil) CERTIFICATE NO. 49948 KIP E. REESE Date Signed 1-8-10 ARIZONA U.S.A.

Expires – 9/30/2012

By: Kip E. Reese, P.E.

Registered Professional Engineer (Civil) CERTIFICATE NO. 28182 DAVID A. THOMAS Date Signed 1-8-10 ARIZONA U.S.A.

Expires – 9/30/2012

Reviewed by: David A. Thomas, P.E.

/dcw
Copies to: Addressee (5) (jknobbe@azwater.com)

## TABLE OF CONTENTS


REPORT PAGE

Introduction ..... 1

Proposed Construction ..... 1

Site Conditions ..... 1

Field Explorations ..... 2

Laboratory Analysis ..... 2

Subsurface Conditions ..... 2

Discussion of Test Results ..... 3

Corrosion Potential ..... 3

Foundation Design Recommendations

Water Storage Tank ..... 3

Booster Station and Equipment ..... 4

Foundations – General ..... 4

Lateral Earth Pressures ..... 5

Site Development Recommendations

Concrete Slab-On-Grade Support ..... 6

Surface Drainage ..... 6

Excavatability ..... 6

Workability ..... 7

Materials Suitability and Requirements

Site Materials ..... 7

Imported Soils ..... 7

Base Material ..... 7

Site Preparation and Grading Procedures

Storage Tank and Booster Station Areas ..... 8

APPENDIX A - FIELD EXPLORATION

Site Plan ..... A1

Soil Legend ..... A2

Test Boring Log ..... A3

Expires 9/30/2012

APPENDIX B - LABORATORY ANALYSIS

Compression ..... B1

Percent Passing No. 200 Sieve, Atterberg Limits, Percent Expansion ..... B2

pH, Minimum Resistivity ..... B3

Soluble Salts, Sulfate and Chloride ..... B4

# REPORT

R·A·M·M

## INTRODUCTION

This report presents the results of our geotechnical engineering services for the proposed 16,000-Gallon Water Storage Tank at the Lake in the Desert Well Site, located in Casa Grande, Arizona. The scope of our services included performing a field exploration program, laboratory analysis and geotechnical engineering evaluation, analysis and recommendations. The geotechnical recommendations presented herein include those for anticipated excavation conditions, site development, and material use and requirements. We would be pleased to discuss with you any additional recommendations you may require. In addition, we are available to review project specifications and plans for conformance with our recommendations at no charge to you.

This firm should be notified for additional evaluation and recommendations if the project design parameters (location, size, structural loads, etc.) and/or the site use or conditions encountered during construction differ from those presented herein.

## PROPOSED CONSTRUCTION

The proposed construction will include a 16,000-gallon, 12.5-foot diameter, 18-foot high, above-ground storage tank of steel construction, booster station and underground piping. The new storage tank will be supported on a foundation consisting of a gravel pad confined by a bolted steel band. The floor level of the new storage tank will probably be at or near existing site grades. The gravel pad will likely consist of a 6-inch thickness of ABC or crushed rock. The roof of the tank will be supported by the tank walls. The booster station will be supported on a reinforced concrete slab-on-grade with turn-down footings.

## SITE CONDITIONS

The site of the proposed 16,000-Gallon Water Storage Tank is an existing well site facility located on the south side of McCartney Road, approximately 360 feet west of Evans Road, in Casa Grande, Arizona. The existing facility included a water well, arsenic treatment plant, at-grade facilities and underground piping. The new tank and at-grade facilities will be located just south of the existing treatment plant, in a relatively flat, unpaved area. Vegetative cover was a sparse growth of weeds and grasses.

## FIELD EXPLORATIONS

Subsurface conditions were explored by drilling one test boring to a depth of 30 feet at the location of the new storage tank, as shown on the Site Plan in Appendix A. The test boring was drilled with a CME 55 drill rig using seven-inch diameter, hollow-stem augers. The drilling equipment and crew were provided by D&S Drilling, Inc. The test boring location was determined in the field by our field technician. During the field explorations representative undisturbed and disturbed samples were obtained, the field explorations logged and soils field-classified by our field technician, who also directed the drill crew. Relatively undisturbed samples of the subsoils were obtained by driving a 3-inch diameter, ring-lined, open-end sampler into the soil with a 140-pound hammer dropping 30 inches. The results of our field explorations are presented in the Test Boring Log in Appendix A.

## LABORATORY ANALYSIS

Representative samples obtained during the field explorations were subjected to the following tests in our laboratory.

| Type of Test | Type of Sample | Number of Samples Tested |
|---|---|---|
| Compression/Consolidation | Undisturbed | 1 |
| Percent Passing No. 200 Sieve & Plasticity Index | Representative | 1 |
| Remolded Swell | Representative | 1 |
| Moisture Content/Dry Density * | Undisturbed Ring | 5 |
| pH/Minimum Resistivity | Representative | 1 |
| Soluble Salts, Sulfate and Chloride ** | Representative | 1 |

* Reported in the test boring logs
** Performed by Motzz Laboratories, Inc.

The results of the laboratory analysis are presented in Appendix B.

## SUBSURFACE CONDITIONS

The subsurface profile at the proposed tank location was relatively uniform. The result of the test boring is presented in Appendix A in the Test Boring Log. In general, the surface and near surface soils encountered at the location of the new storage tank, extending to a depth of 2.5 feet,

consisted of clayey sand fill containing trace amounts of gravel. The fill soils were medium dense to dense and had medium plasticity fines. Underlying the fill soils and extending to the maximum depth of our exploration (30 feet) sandy clay containing trace amounts of gravel was encountered. These soils were stiff to very stiff, had medium plasticity, and had intermittent light cementation. The site soils were described as slightly damp to damp throughout the depths explored. No groundwater was encountered in the test boring at the time of drilling.

## DISCUSSIONS OF TEST RESULTS

A remolded sample of the fill soils from the site exhibited a moderate swell potential following wetting when tested in the laboratory. An undisturbed sample from anticipated shallow foundation depth underwent some compression during loading to approximate foundation loads. Upon wetting at approximate foundation loads these soils underwent considerable additional compression. The additional compression was not representative due to sample disturbance.

Corrosion Potential:

As part of this investigation, laboratory pH, Minimum Resistivity, and Soluble Salts, Sulfates and Chlorides testing of site soils were conducted. Based on these results, there appears to be a moderate to high potential for corrosion to buried metal structures and pipelines, and a low potential for corrosion to concrete in contact with site soils. The results of the laboratory testing are included in Appendix B, and should be made available to material suppliers and corrosion experts for review.

## FOUNDATION DESIGN RECOMMENDATIONS

Water Storage Tank:

The proposed 16,000-Gallon Water Storage Tank can be supported on a compacted gravel pad confined by a steel band, as described in the Proposed Construction section of this report. Upon removal of the necessary material to install the steel band, the exposed soils should be scarified to a depth of 12 inches, moistened and recompacted. Site soils can then be used to backfill inside the steel band up to the bottom of the gravel pad, and around the perimeter of the steel band. The tank bottom and gravel pad may be designed using an allowable bearing pressure of 1500 psf (for a full tank). The prepared subgrade for the tank should be reviewed by a representative of the

geotechnical engineer prior to placing fill. Any loose fill and any loose, disturbed or unstable fill or natural soils should be removed from the bearing surface and replaced with compacted soil or as otherwise directed by the geotechnical engineer.

Booster Station and Equipment:

Booster Station and equipment associated with the proposed development can be supported on mat footings or reinforced concrete slab-on-grade with turndowns. The footings should be founded on undisturbed site soils and/or new compacted fills. The mat foundation may be designed using an allowable bearing pressure of 1000 psf provided the bottom of the mat is at or below the existing ground surface. As an alternative, mat foundations may be designed using a modulus of subgrade reaction of 100 kcf (60 pci).

The associated facilities can also be supported on shallow spread footings, bearing on undisturbed native or fill site soils and/or new compacted fill. Footings thus founded may be designed using an allowable bearing pressure of 1500 psf, provided the bottom of the footings are at least 1.5 feet below finished grade. Finished grade is defined as the lowest adjacent finished grade within 5 feet of the perimeter of the structure. Structural loads should not exceed 4 kips per linear foot for walls and 100 kips for columns.

All footing excavations should be reviewed by a qualified geotechnical engineer prior to placing reinforcing steel or concrete. Any fill or any loose, disturbed or unstable natural soils should be removed from the bearing surface and replaced with MAG cement/AB slurry, or as directed by the geotechnical engineer.

Foundations - General:

The allowable bearing capacity should be applied to maximum, design dead plus live loads and may be increased by one-third when considering temporary loads such as transient wind or seismic loads. A one-third increase may also be used for toe pressures due to eccentric or lateral loadings, assuming the entire footing bearing surface remains in compression. The weight of the footing concrete below grade may be neglected in dead load computations. The recommended minimum footing widths are 1.0 feet for turn down footings and 1.33 feet for continuous spread

footings. A site coefficient for soil characteristics (S) of 1.2 is recommended for the project site, per UBC 1994 Edition and a Soil Profile Type $S_c$ per 1997 UBC. A Site Class of C will apply to the site per the 2000, 2003 and 2006 International Building Code (IBC). The soil profile and site class designations are based on a review of available well holes within a one mile radius of the site. This data was available on ADWR's website and indicated that dense, cemented material exists to depths over 100 feet in the immediate vicinity of the site.

The estimated total and differential footing settlements for the loading conditions described above should be less than ¾ inches for the storage tank (greatest near the center of the tank) and less than ½ inch for ancillary structures, if soils below footing level remain at or below the construction moisture content. Additional post-construction, differential settlement of equal or possibly greater magnitude could occur if bearing soils become wet after construction. Positive drainage away from the perimeter of the facilities is essential to minimize the potential for moisture infiltration into bearing soils.

Lateral Earth Pressures:

The following tabulation presents the recommended lateral earth pressures and base friction values which should be used in the lateral design of footings and retaining walls. The lateral pressures are equivalent fluid pressures for average anticipated conditions.

| | |
|---|---|
| Backfill Pressures: | |
| Unrestrained walls | 40 psf/ft |
| Restrained walls | 60 psf/ft |
| Passive Pressures: | |
| Continuous | 250 psf/ft |
| Coefficient of Base Friction: | |
| Concrete to soil | 0.40 |

The above equivalent fluid pressures are for vertical walls with horizontal backfills and do not include temporary loads imposed by compaction equipment or permanent loads resulting from backfill swell pressures, hydrostatic pressures or surcharge loads. All retaining walls should contain weep holes to reduce the potential for the buildup of hydrostatic pressures.

## SITE DEVELOPMENT RECOMMENDATIONS

Concrete Slab-On-Grade Support:

The near surface soils are of medium plasticity and exhibit moderate swell potentials when compacted and wetted. These soils will provide adequate support for concrete slabs-on-grade provided site soils are placed and compacted in structure and exterior slab areas at moisture contents at optimum to 3 percent above optimum. Interior slabs should be founded on a prepared subgrade. All unreinforced slabs-on-grade should be jointed in accordance with ACI (American Concrete Institute) or PCA (Portland Cement Association) guidelines.

Surface Drainage:

Most soils will undergo some degree of volume change as the result of wetting. The degree of volume change will depend on the type of soil, swell potential, natural soils structure or degree of compaction (if a fill). These volume changes could result in movements in overlying facilities and non-structure elements including sidewalks, planters, screen walls, etc. Therefore, good site and surface drainage away from these elements is required. In addition, water should not be allowed to pond within 10 feet of the facilities or other elements which are sensitive to movements. The facilities excavation backfill must be well compacted to minimize the possibility of moisture infiltration through this zone.

Excavatability:

The excavatability of site materials is difficult to evaluate based only on the exploration equipment used during this design report. Therefore, we recommend that the contractor evaluate the excavatability of site materials by performing test excavations with the size and type of equipment the contractor plans on using at the site. For design purposes the following paragraph presents our best analysis as to the excavatability of site soils.

The near surface soils to a depth of at least 10 feet can probably be removed with conventional excavating equipment. Excavations below these depths may be slower and more difficult to accomplish due to cementation. OSHA requires all excavations over five feet in depth, in which personnel are to enter, be either braced or sloped in accordance with OSHA regulations.

Workability:

Wetting site soils such that moisture contents are at or above optimum could result in some soil pumping under dynamic loadings such as heavy construction equipment driving over the area. In the new facility areas where pumping has occurred, the area should be allowed to dry until soils are workable without pumping or the wetted areas removed and replaced with drier site soils.

## MATERIALS SUITABILITY AND REQUIREMENTS

Site Materials:

The near surface soils exhibit medium plasticity and a moderate swell potential when compacted wetted. The site soils are suitable for use as fill in all areas of the site provided they are placed and compacted in structure and exterior slab areas at moisture content at optimum to 3 percent above optimum. All materials should be free of organics, debris, rubble and material greater than 6 inches in size.

Imported Soils:

Fill required beyond that available from site sources should be imported soils meeting the following requirements:

Minimum % Passing No. 4 Sieve---------- 30
Maximum Particle Size ---------- 6 inches
Maximum Swell Potential ---------- 1.5%*

* Based on a sample which is remolded to 95% of the ASTM D698 maximum dry density at a moisture content of 2 percent below optimum, placed under a surcharge load of 100 psf and wetted.

Base Material:

Base material used to support the tank should conform to the requirements of Maricopa Associates of Governments (MAG) Specifications for Aggregate Base (Section 702), ASTM C-33 No. 57 coarse aggregate or approved equivalent. Base material used beneath concrete slabs should conform to the requirements of MAG Specification for Aggregate Base.

## SITE PREPARATION AND GRADING PROCEDURES

Storage Tank and Booster Station Areas:

Recommendations presented in the previous sections of this report are based upon the following site preparation and grading procedures. Therefore, all earthwork should be accomplished with observation and testing by a qualified technician under the direction of a registered geotechnical/materials engineer. The following apply to the areas within and extending 5 feet beyond the storage tank area and any ancillary structures.

1. Clear and grub the site by removing and disposing of all vegetation, any trash and debris, all fill piles and remnants of any former developments.

2. Strip the site of any loose fill zones, any dumped fill piles, any backfill zones and any unstable soils. During stripping observe the surface for evidence of buried debris, vegetation or disturbed materials which will require additional removal. Areas steeper than 5H to 1V should be benched and any depressions widened to accommodate compaction equipment.

3. In storage tank and ancillary structure areas, scarify and recompact the upper 12 inches of existing fill or natural soils in areas at grade, cut to grade or which will require additional fill.

4. Moisture condition and place all fill and backfill materials required to achieve specified grades. Fill materials should be moisture conditioned, placed and compacted in horizontal lifts of thicknesses compatible with the compaction equipment being used.

5. Compact subgrade, fill, backfill, subbase fill or base material to the following minimum percent compaction of the ASTM D698 maximum dry density in each lift:

| Material | Minimum Percent Compaction |
|---|---|
| Soil | |
| Below tank, foundations and slabs-on-grade | 95 |

| Material | Minimum Percent Compaction |
|---|---|
| Base Material: | |
| Below slabs-on-grade and tank bottom | 95 |

6. Moisture content of soil and base materials at the time of compaction should be:

| Type | Area of Use | Moisture Content |
|---|---|---|
| On-Site | Slabs-On-Grade | Optimum to optimum plus 3% |
| On-Site | Below Foundations | Optimum to optimum plus 3% |
| On-Site | Below Tank Bottom | Optimum to optimum plus 3% |
| On-Site | Trench Backfill | Optimum to optimum plus 3% |
| Import | All Areas | Optimum plus or minus 3% |

7. Any soils which are disturbed or overexcavated by the contractor outside the limits of the plans or specifications should be replaced with materials compacted as specified above.

# APPENDIX A
# FIELD EXPLORATIONS

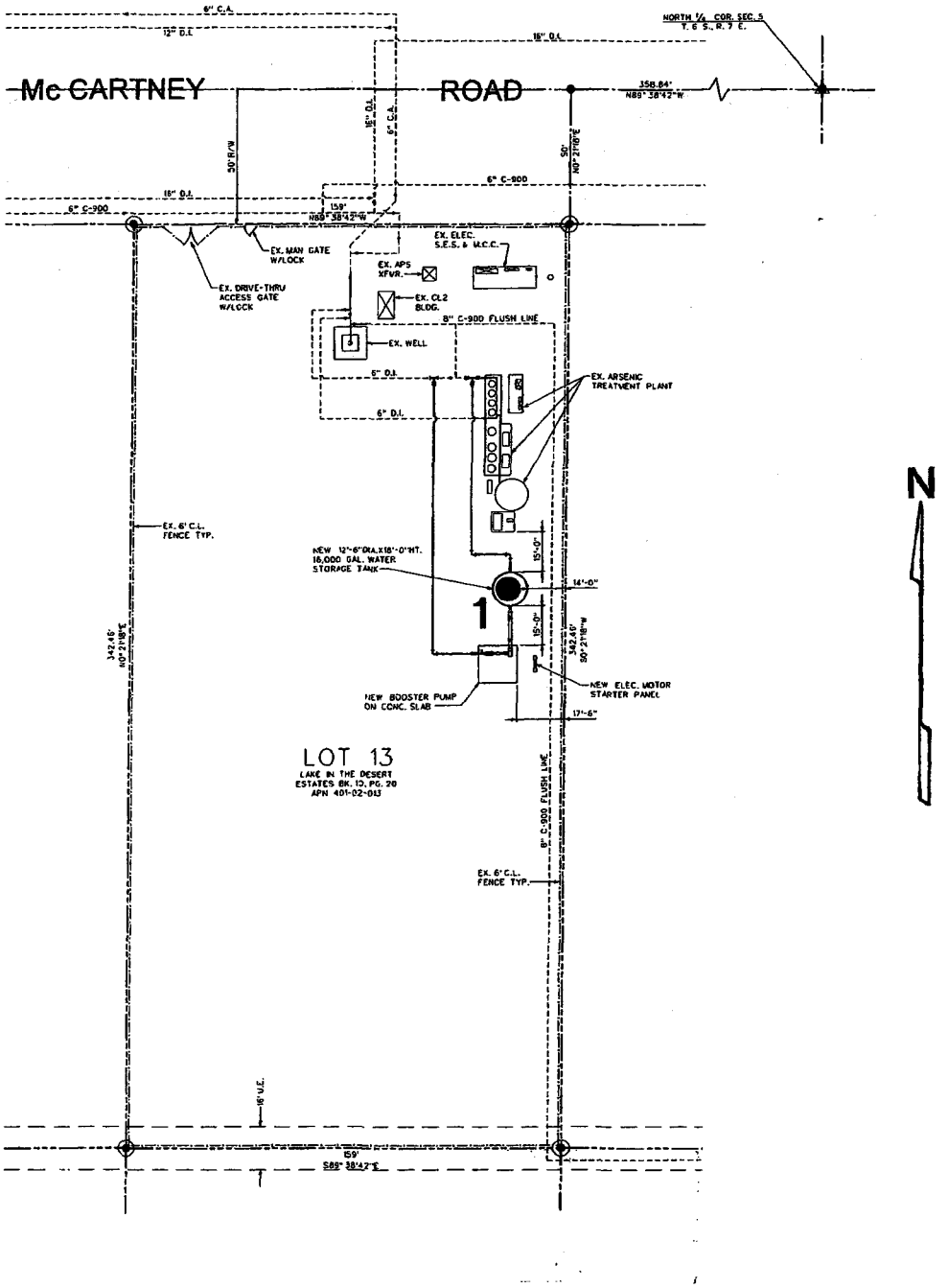


Test Boring Location ●

*Not To Scale*

SITE PLAN

# LEGEND

## CLASSIFICATION OF SOILS

ASTM Designation: D2487-00
(Based on Unified Soil Classification System)

| Criteria for Assigning Group Symbols and Group Names Using Laboratory Tests | | | | | Soil Classification | |
|---|---|---|---|---|---|---|
| | | | | | Group Symbol | Name |
| COARSE-GRAINED SOILS More than 50% retained on No. 200 Sieve | Gravels More than 50% coarse fraction retained on No. 4 Sieve | Clean Gravels Less than 5% fines | Cu > 4 and 1 <Cc < 3 | | GW | Well graded gravel |
| | | | Cu<4 and/or 1>Cc>3 | | GP | Poorly graded gravel |
| | | Gravels with Fines More than 12% fines | Fines classify as ML or MH | | GM | Silty gravel |
| | | | Fines classify as CL or CH | | GC | Clayey gravel |
| | Sands 50% or more of coarse fraction passes No. 4 sieve | Clean Sands Less than 5% fines | Cu > 6 and 1 <Cc < 3 | | SW | Well-graded sand |
| | | | Cu<6 and/or 1>Cc>3 | | SP | Poorly graded sand |
| | | Sands with Fines More than 12% fines | Fines classify as ML or MH | | SM | Silty sand |
| | | | Fines classify as CL or CH | | SC | Clayey sand |
| FINE-GRAINED SOILS 50% or more passes the No. 200 Sieve | Silts and Clays Liquid limit less than 50 | Inorganic | PI>7 and plots on or above "A" line | | CL | Lean clay |
| | | | PI<4 or plots below "A" line | | ML | Silt |
| | | Organic | Liquid Limit - oven dried / Liquid limit - not dried | <0.75 | OL | Organic clay / Organic silt |
| | Silts and Clays Liquid limit 50 or more | Inorganic | PI plots on or above "A" line | | CH | Fat clay |
| | | | PI plots below "A" line | | MH | Elastic silt |
| | | Organic | Liquid limit - oven dried / Liquid limit - not dried | <0.75 | OH | Organic clay / Organic silt |
| HIGHLY ORGANIC SOILS | Primarily organic matter, dark in color, and organic odor | | | | PT | Peat |

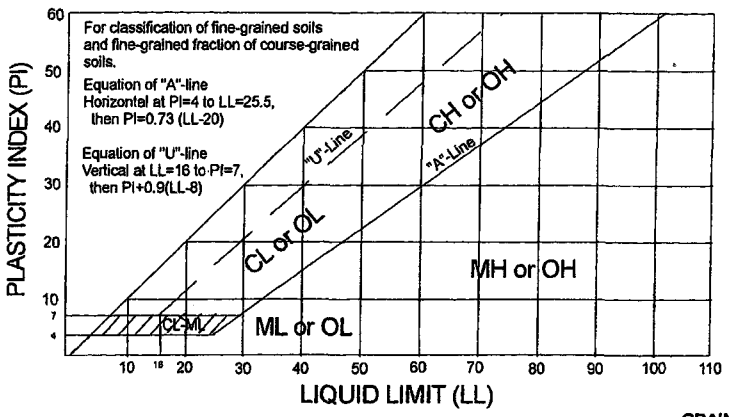


### TEST BORING LOG DEFINITIONS

Blows per foot using 140 pound hammer with 30 inch free-fall.

| Depth, feet | Blows/Foot C | Blows/Foot N/R | Sample Type | Dry Density pcf | Water Content, % | Unified Classification | Description |
|---|---|---|---|---|---|---|---|

C = Continuous Penetration Resistance (2 inch diameter rod)
N = Standard Penetration Resistance (ASTM D1586)
R = Penetration Resistance (3 inch diameter ring line sampler)

### GRAIN SIZES

| U.S. STANDARD SERIES SIEVE | | | | CLEAR SQUARE SIEVE OPENINGS | | | |
|---|---|---|---|---|---|---|---|
| 200 | 40 | 10 | 4 | 3/4" | 3" | 12" | |
| SILTS & CLAYS DISTINGUISHED ON BASIS OF PLASTICITY | SAND | | | GRAVEL | | COBBLES | BOULDERS |
| | FINE | MEDIUM | COARSE | FINE | COARSE | | |

MOISTURE CONDITION (INCREASING MOISTURE ⟶ )

DRY — SLIGHTLY DAMP — DAMP — MOIST (Plastic Limit) — VERY MOIST — WET (SATURATED) (Liquid Limit)

| CONSISTENCY CORRELATION | | RELATIVE DENSITY CORRELATION | |
|---|---|---|---|
| CLAYS & SILTS | BLOWS/FOOT* | SANDS & GRAVELS | BLOWS/FOOT* |
| VERY SOFT | 0-2 | VERY LOOSE | 0-4 |
| SOFT | 2-4 | LOOSE | 4-10 |
| FIRM | 4-8 | MEDIUM DENSE | 10-30 |
| STIFF | 8-16 | DENSE | 30-50 |
| VERY STIFF | 16-32 | VERY DENSE | OVER 50 |
| HARD | OVER 32 | | |

*Number of blows of 140 lb hammer falling 30" to drive a 2" O.D. (1-3/8" I.D.) split-spoon sampler (ASTM D1586).

## TEST BORING LOG

Project: 16,000 Gallon Water Storage Tank - Casa Grande, AZ TEST BORING: 1

Elevation: Not Determined Datum: --- Date: 12-17-09

| Depth, feet | Blows/Foot C | Blows/Foot N/R | Sample Type | Dry Density, pcf | Water Content, % | Unified Classification | Description |
|---|---|---|---|---|---|---|---|
| | | 50/9" | R | 98 | 7 | SC | Fill: Clayey Sand, Trace Gravel; brown, slightly damp to damp, medium dense to dense, medium plasticity fines. |
| 5 | | 35 | R | 115 | 11 | CL | Sandy Clay, Trace Gravel; brown, slightly damp to damp, stiff to very stiff, medium plasticity, intermittent light cementation, zones of moderate to heavy cementation below depths of 10 feet. |
| 10 | | 50/3" | R | 101 | 9 | | |
| 15 | | 50/7" | R | 79 | 18 | | |
| 20 | | | | | | | |
| 25 | | 50/6" | R | 97 | 19 | | |

Continued

This boring log represents the conditions encountered on the date of drilling at this particular location. No other warranty is expressed or implied to the actual conditions which may exist within the vicinity of this boring location.

## TEST BORING LOG

Project: 16,000 Gallon Water Storage Tank - Casa Grande, AZ TEST BORING: 1 cont.

Elevation: Not Determined Datum: --- Date: 12-17-09

| Depth, feet | Blows/Foot C | Blows/Foot N/R | Sample Type | Dry Density, pcf | Water Content, % | Unified Classification | Description |
|---|---|---|---|---|---|---|---|
| | | | | | | CL | Sandy Clay, Trace Gravel; continued |
| 30 | | | | | | | Stopped test drilling at 30 feet.<br>No groundwater encountered. |
| 35 | | | | | | | |
| 40 | | | | | | | |
| 45 | | | | | | | |
| 50 | | | | | | | |

This boring log represents the conditions encountered on the date of drilling at this particular location. No other warranty is expressed or implied to the actual conditions which may exist within the vicinity of this boring location.

# APPENDIX B
# LABORATORY ANALYSIS

# LABORATORY TEST RESULTS

**Date:** 4-Jan-10

**SAMPLE SOURCE:** 1 @ 1.5'-2.5'

**TESTING PERFORMED:** Compression (ASTM D2435) - Driven Ring Sample

**SAMPLED BY:** RAMM/Schirmer

**RESULTS:**

Dry Density (pcf): 98 Moisture Content (%): 7

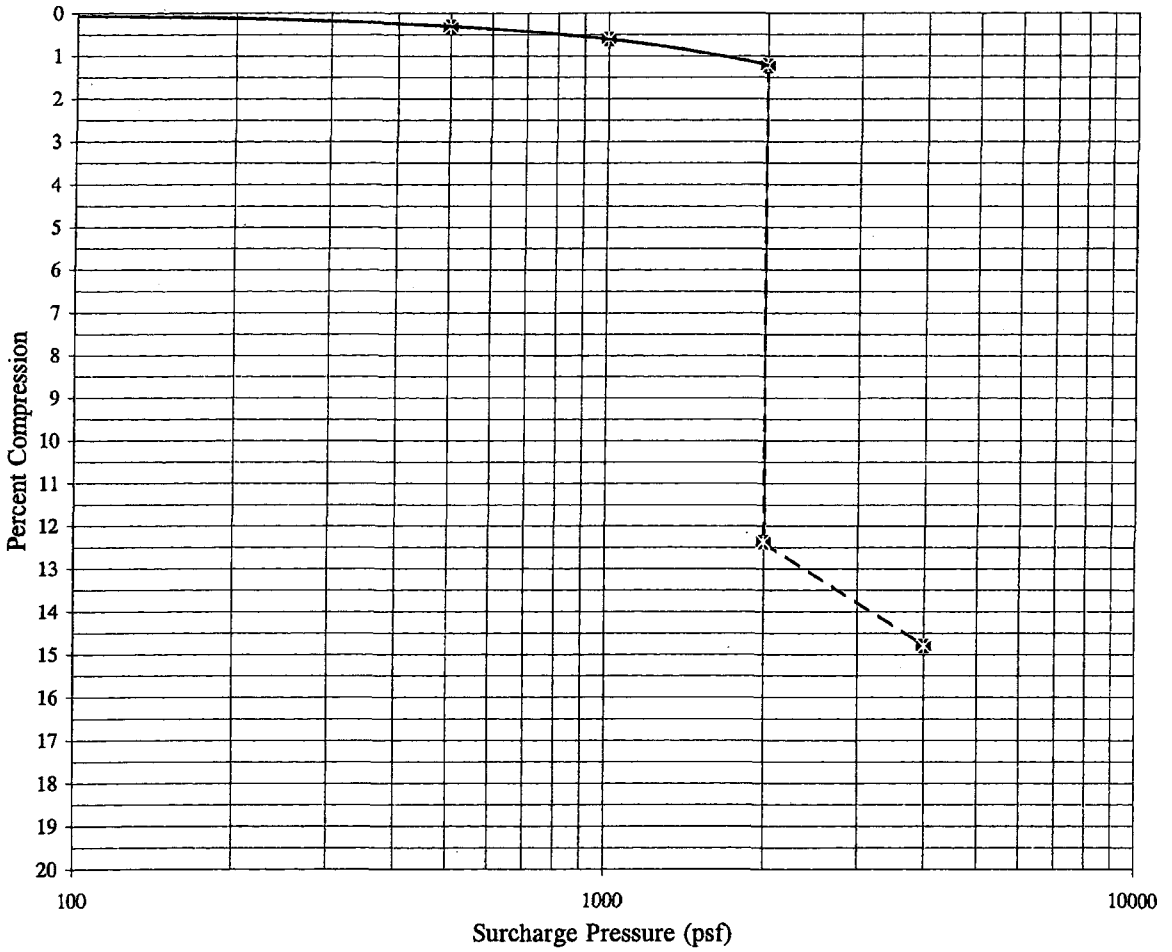


**REMARKS:** Sample submerged at 2000 psf.

Note: Post-submerged compression not representative due to sample disturbance.

# LABORATORY TEST RESULTS

**Date:** 21-Dec-09

**SAMPLE SOURCE:** As noted below

**TESTING PERFORMED:** Percent Passing No. 200 Sieve, Atterberg Limits, Percent Expansion (ASTM D1140, D4318, D4546)

**SAMPLED BY:** RAMM/Schirmer

**RESULTS:**

| Sample Source | Percent Retained No. 4 Sieve | Percent Passing No. 200 Sieve | Liquid Limit | Plasticity Index | Percent Expansion* | Remolded Dry Density (pcf) | Remolded Moisture Content (%) |
|---|---|---|---|---|---|---|---|
| 1 @ 0'-3' | 4 | 45 | 31 | 15 | 2.3 | 114 | 10 |

* Based upon sample remolded to 95% of the estimated maximum dry density at 2% below the estimated optimum moisture content, with a surcharge pressure of 100 psf.

# LABORATORY TEST RESULTS

**Date:** 21-Dec-09

**SAMPLE SOURCE:** As noted below

**TESTING PERFORMED:** pH, Minimum Resistivity (ADOT 236a)

**SAMPLED BY:** RAMM/Schirmer

**RESULTS:**

| Sample Source | pH | Minimum Resistivity (ohm-cm) |
|---|---|---|
| 1 @ 0'-3' | 7.7 | 1075 |

MOTZZ LABORATORY, INC.
2113 S 48th St Suite 109
Tempe, AZ 85282

# Soil Analysis Report

Ricker-Atkinson-McBee-Morman
Kip Reese
2105 South Hardy Dr.#3
Tempe , AZ 85282-1921

Project: G17434
Sampler:
Date Received: 12/15/2009
Date Reported: 12/17/2009

PO Number: G17434

**Lab Number: 901182-01** **1 0-3'**

| ***Soluble Salts, Sulfate & Chloride*** | Method | Result | Units | Levels |
|---|---|---|---|---|
| Soluble Salts | ARIZ 237b SS | 0.068 | % | |
| Sulfate, SO4 | ARIZ 733 | 0.0091 | % | |
| Chloride | ARIZ 736 | 0.0018 | % | |

602-454-2376 (Phone) 602-454-9243 (Fax)

## Bearing Pressure

$$q = \frac{P + W_f}{A} - \cancel{u_D}^{\,0}$$

$q$ = bearing pressure
$P$ = vertical load
$W_f$ = weight of foundation
$A$ = base area of foundation

$$P = W_w + W_T$$

$W_w$ = weight of water in tank $W_T$ = weight of tank

$$W_T = A_s W_s$$

$A_s$ = Surface area of tank $W_s$ = weight of 3/8" steel plate per square foot = 15.30 lbs/ft²

$$A_s = 2\frac{\pi(12.5ft)^2}{4} + \pi(12.5ft)(18ft) = 952.3ft^2$$

$$W_T = (952.3ft^2)(15.30\,lbs/ft^2) = 14{,}570\,lbs$$

$$W_w = \frac{\pi(12.5ft)^2}{4}(18ft)\left(\frac{7.48gal}{1ft^3}\right)\left(\frac{8.34lb}{gal}\right) = 16{,}523gal\left(\frac{8.34lb}{gal}\right) = 137{,}800lbs$$

$$P = W_w + W_T = 137{,}800lbs + 14{,}570lbs = 152{,}370lbs$$

$$W_{f_1} = \frac{\pi(14.75ft)^2}{4}(0.5ft)\left(\frac{150lb}{ft^3}\right) = 12{,}815lbs$$

$$A_1 = \frac{\pi(14.75ft)^2}{4} = 170.9ft^2$$

$$W_{f_2} = \frac{\pi(12.5ft)^2}{4}(0.5ft)\left(\frac{150lb}{ft^3}\right) = 9{,}204lbs$$

$$A_2 = \frac{\pi(12.5ft)^2}{4} = 122.7ft^2$$

$$q_1 = \frac{P + W_{f_1}}{A_1} = \frac{152{,}370lbs + 12{,}815lbs}{170.9ft^2} = 966.6\,psf$$

$$q_2 = \frac{P + W_{f_2}}{A_2} = \frac{152{,}370lbs + 9{,}204lbs}{122.7ft^2} = 1{,}316.8\,psf$$

# SPECIFIC SITE PLAN FOR ARIZONA WATER COMPANY LAKE IN THE DESERT WELL No. 27
# 7317 WEST McCARTNEY ROAD - CASA GRANDE, AZ 85222
# LOT 13, LAKE IN THE DESERT ESTATES, APN 401-02-013
# NW 1/4 SEC. 5 - T. 6 S., R. 7 E.

## GENERAL NOTES

1. NEW PIPING SHALL BE DISINFECTED IN ACCORDANCE WITH ADEQ ENGINEERING BULLETIN No. 8 BEFORE BEING PLACED INTO SERVICE.
2. ALL MATERIALS AND PRODUCTS USED IN WATER SYSTEM, INCLUDING SURFACE COATINGS & PAINTS, SHALL CONFORM TO NSF STANDARD 61 & CURRENT AWWA D102.
3. CONSTRUCTION MATERIALS USED IN WATER SYSTEM SHALL BE LEAD-FREE AS PER A.A.C. R18-4-504 AND R18-1-101 (43).
4. ALL MECHANICAL JOINT FITTINGS ARE TO HAVE MEGA-LUGS.
5. POLYWRAP ALL D.I.P. BELOW GRADE.
6. ALL ELEC. J-BOXS SHALL BE A MIN. OF 6" ABOVE CONC. SLAB.
7. USE ROWLEY PIPE SUPPORTS OR EQUIVALENT AT LOCATIONS NOTED BY P.S. ▶ ON BOOSTER STATION PLAN. SECURE EACH PIPE SUPPORT W/(2) ½"X3" WEDGE ANCHORS.
8. BOLTS & RODS SHALL BE ASTM A307 GRADE B

## STORAGE TANKS NOTES

1. THE STORAGE TANK OVERFLOW PIPE SHALL BE THE SAME DIAMETER AS THE INLET PIPE.
2. PROVIDE A MINIMUM AIR GAP OF 2 TIMES THE PIPE DIAMETER @ THE TANK OVERFLOW & TANK DRAIN.
3. THE STORAGE TANK OVERFLOW, ROOF VENT & TANK DRAIN SHALL BE SCREENED W/No. 16 NON-CORRODIBLE WIRE MESH.
4. THE STORAGE TANK SHALL BE PLACED UPON ADEQUATELY COMPACTED BASE MATERIAL.
5. THE STORAGE TANK LIQUID LEVEL SHALL BE INDICATED BY A TARGET & TARGET BOARD ON THE OUTSIDE SURFACE OF THE TANK.
6. THE STORAGE TANK SHALL BE DISINFECTED IN ACCORDANCE WITH ADEQ ENGINEERING BULLETIN No. 8 BEFORE BEING PLACED INTO SERVICE.
7. STORAGE TANK WATER LEVEL CONTROL SHALL BE ACCOMPLISHED THROUGH A TANK PROBE TO THE WELL.
8. THE STORAGE TANK DOES NOT LIE WITHIN A 100 YEAR SPECIAL-FLOOD HAZARD AREA. THE SITE WILL BE GRADED TO DRAIN AWAY FROM THE TANK.
9. THE STORAGE TANK WILL BE COATED AS PER AWC SPECIFICATION 0-12-02, AWWA SPECIFICATION D102, & NSF STANDARD 61.

## FOUNDATION/CONCRETE/REINFORCING NOTES

1. SITE PREPARATION & MATERIALS SHALL CONFORM TO THE GEOTECHNICAL ENGINEERING REPORT BY R.A.M.M. & ASSOCIATES, INC. DATED 1-8-2010.
2. SOIL PRESSURE 1,500 PSF PER IBC 1804.2, CLASS 4 MATERIAL.
3. A.C.I. MANUAL OF CONCRETE PRACTICE, TYPE II CEMENT. MINIMUM 28 DAY STRENGTH OF 3,000 PSI. MECHANICALLY VIBRATE WHEN PLACED, MAXIMUM SLUMP 5".
4. ASTM A615, GRADE 60 DEFORMED BARS.

   CONCRETE COVER TO REINFORCING:

   A. CONCRETE AGAINST EARTH--------3"
   B. OTHER----------1½"

   LAP SPLICES: 48 BAR DIAMETERS & STAGGER SPLICES.

## PINAL COUNTY NOTES

1. SIGNS ARE APPROVED BY SEPARATE PERMIT.
2. WALLS OVER 6'-0" HIGH REQUIRE A SEPARATE PERMIT.

AS-BUILT CERTIFICATION

I HEREBY CERTIFY THAT THE RECORD DRAWING INFORMATION AS SHOWN HEREON WERE MADE UNDER MY SUPERVISION OR AS NOTED AND ARE CORRECT TO THE BEST OF MY KNOWLEDGE AND BELIEF.

REGISTERED ENGINEER AND SURVEYOR DATE

REGISTRATION NUMBER

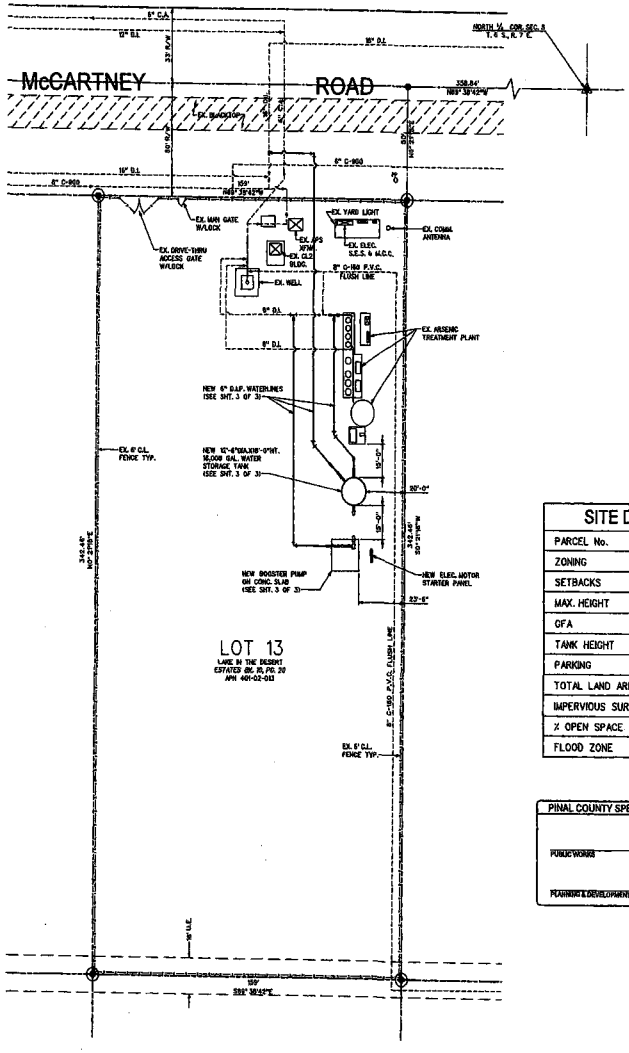


SITE PLAN

SCALE: 1"=30'-0"

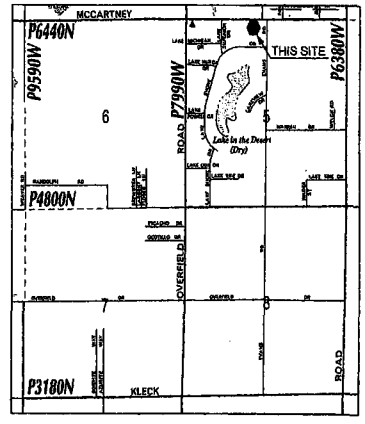


SITE LOCATION

SCALE: NTS

| SITE DATA TABLE | |
|---|---|
| PARCEL No. | 401-02-013 |
| ZONING | GR |
| SETBACKS | 40-20-40 |
| MAX. HEIGHT | 30 |
| GFA | N/A |
| TANK HEIGHT | 18'-0" |
| PARKING | N/A |
| TOTAL LAND AREA | 1.25 ACRES |
| IMPERVIOUS SURFACE | N/A |
| % OPEN SPACE | N/A |
| FLOOD ZONE | X |

PINAL COUNTY SPECIFIC SITE PLAN APPROVAL

PUBLIC WORKS _____ DATE _____

PLANNING & DEVELOPMENT DEPARTMENT _____ DATE _____

## OWNER/DEVELOPER/ENGINEER

ARIZONA WATER COMPANY
POST OFFICE BOX 29006
PHOENIX, AZ 85038-9006
VOICE: (602) 240-6860 FAX: (602) 294-2169
CONTACT: JOHN KNOBBE

## LEGAL DESCRIPTION

LOT THIRTEEN (13), LAKE IN THE DESERT ESTATES, PER MAP RECORDED IN BOOK 10, PAGE 20 OF MAPS IN THE OFFICE OF THE COUNTY RECORDER OF PINAL COUNTY, ARIZONA.

## LEGEND

- ⊙ ..... PROPERTY CORNER
- ——— RIGHT-OF-WAY LINE
- ——— PROPERTY LINE
- ——— CENTERLINE/MONUMENT LINE
- ---------- 6" D.I. ---------- EX. WATERLINE

SPR- -

CALL TWO WORKING DAYS BEFORE YOU DIG
263-1100
1-800-STAKE-IT
OUTSIDE MARICOPA COUNTY

**ARIZONA WATER COMPANY**
3805 N. BLACK CANYON HWY. POST OFFICE BOX 29006
PHOENIX, ARIZONA 85036-9006
(602) 240-6860

28338 FREDRICK K. SCHNEIDER 5-4-10 ARIZONA U.S.A.
Expires 6/30/2010

INSTALL A 16,000 GAL. STORAGE TANK & BOOSTER PUMP @ LAKE IN THE DESERT WELL No. 27 - CASA GRANDE, ARIZONA

| | |
|---|---|
| W.A. 1-4620 | P.E. |
| SYSTEM CASA GRANDE | |
| NW1/4 SEC. 5 -T. 6 S., R. 7 E. | |
| TAX DIST. | |
| DATE 1-14-2010 | SCALE: AS SHOWN |
| DRAWN BY: JPK | SHEET 1 OF 3 |

The above installation is to be installed in accordance with the Arizona Water Company standard specifications on file with the Arizona Department of Environmental Quality

DWG. No. CG-1182

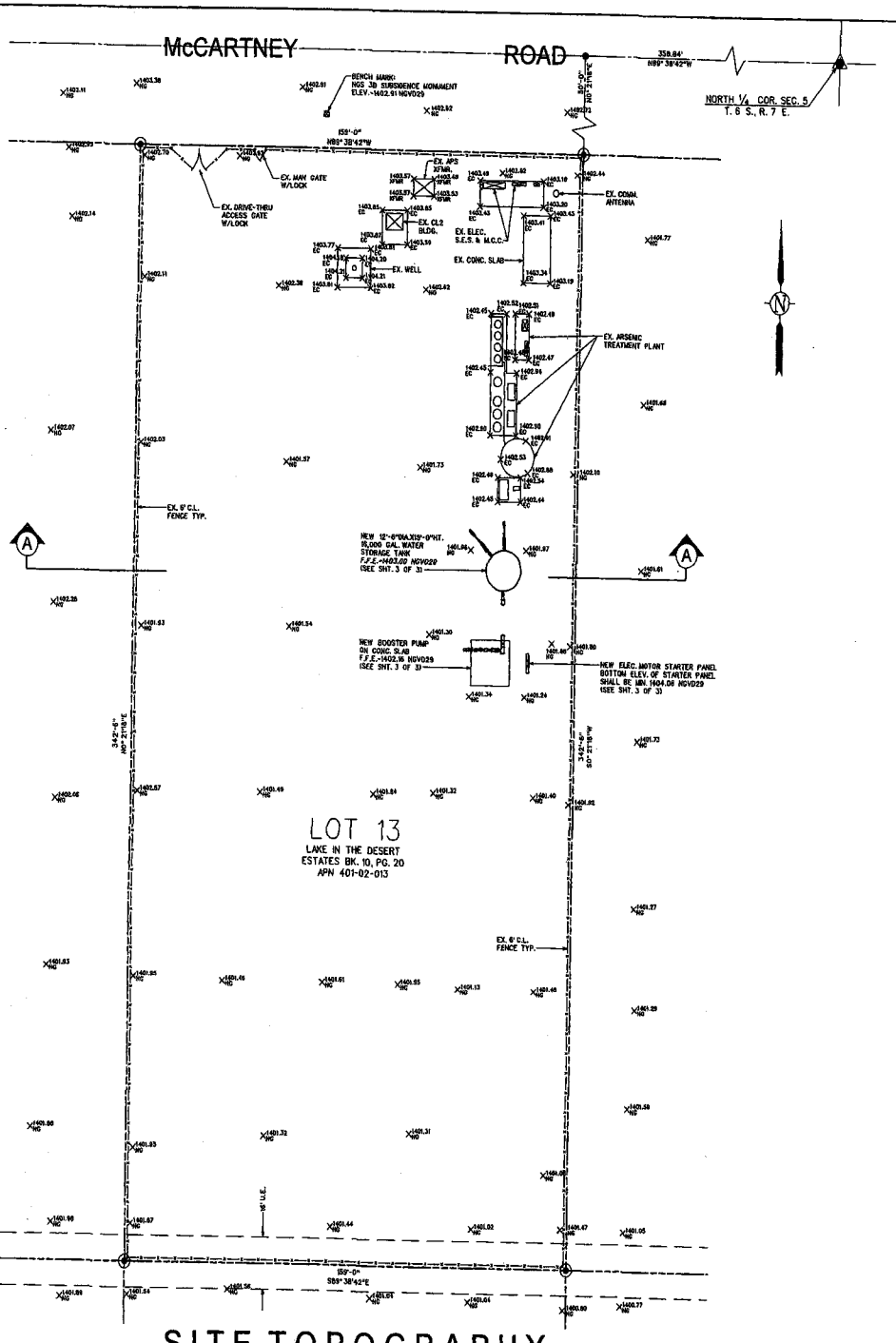


# SITE TOPOGRAPHY

SCALE: 1"=20'-0"

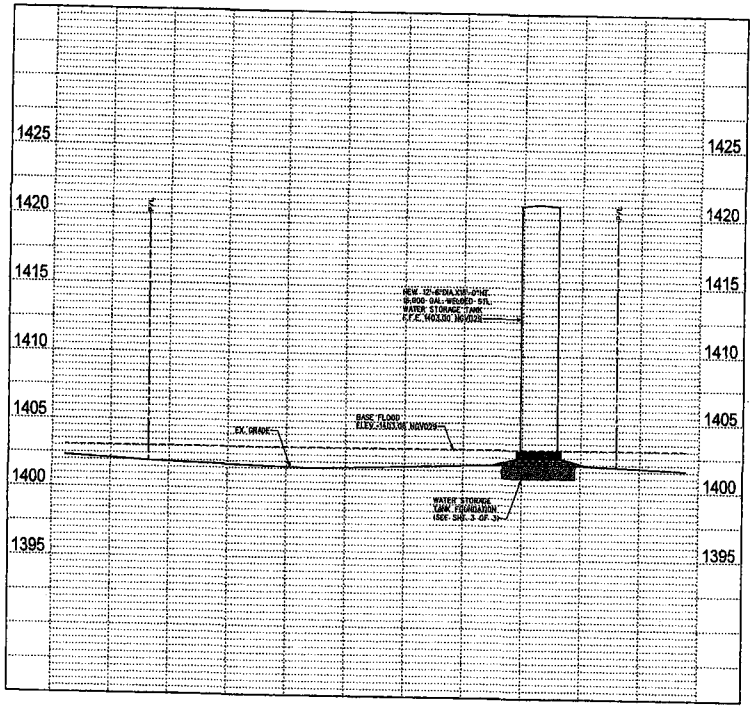


# SECTION A-A

SCALE: HORZ.1"=20'-0" VERT. 1"=5'-0"

## LEGEND

- ⊙ ..... PROPERTY CORNER
- ——— RIGHT-OF-WAY LINE
- ——— PROPERTY LINE
- ——— CENTERLINE/MONUMENT LINE
- X XXXX.XX NG ..... NATURAL GROUND ELEVATION
- X XXXX.XX EC ..... EDGE OF CONCRETE ELEVATION
- X XXXX.XX XFMR ..... A.P.S. XFMR PAD ELEVATION
- F.F.E.-XXXX.XX ..... FINISH FLOOR ELEVATION

## BASIS OF BEARING

NORTH LINE OF SEC.5-T.6S.,R.7E.
N89° 38'42"W

## BENCHMARK

ARIZONA DEPARTMENT OF WATER RESOURCES NGS 3D SUBSIDENCE MONUMENT 0-06-07 05BAA LOCATED ALONG THE NORTH FENCE LINE AND 67' FEET EAST OF THE WEST FENCE LINE OF THE SUBJECT PROPERTY - ELEV.-1402.91 NGVD29

## BASE FLOOD ELEVATION

1403.06 NGVD29

CALL TWO WORKING DAYS BEFORE YOU DIG
263-1100
1-800-STAKE-IT
OUTSIDE MARICOPA COUNTY

REGISTERED LAND SURVEYOR 29336 FREDRICK K. SCHNEIDER 3-4-10 ARIZONA U.S.A.
Expires 9/30/2010

ARIZONA WATER COMPANY

DRAWING No.
CG-1182

SHEET 2 OF 3

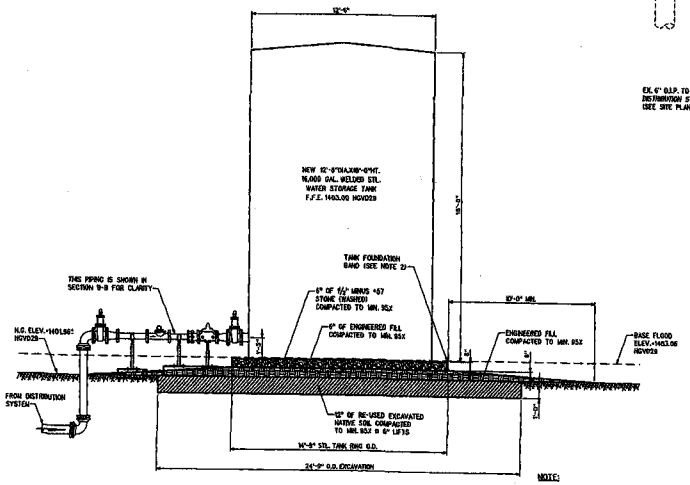


## SECTION B-B

SCALE: 1/4"=1'-0"

NOTE:

1. SITE PREPARATION & MATERIALS SHALL CONFORM TO THE GEOTECHNICAL ENGINEERING REPORT BY R.A.W.A. & ASSOCIATES, INC. DATED 1-9-2010.
2. TOP OF TANK FOUNDATION BAND MUST BE MAINTAINED LEVEL TO WITHIN ⅛".

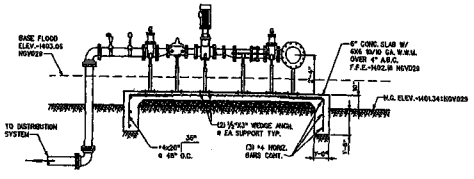


## SECTION C-C

SCALE: 1/4"=1'-0"

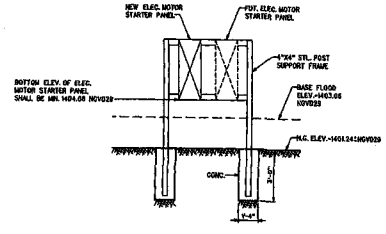


## MOTOR STARTER PANEL PROFILE

SCALE: 1/4"=1'-0"

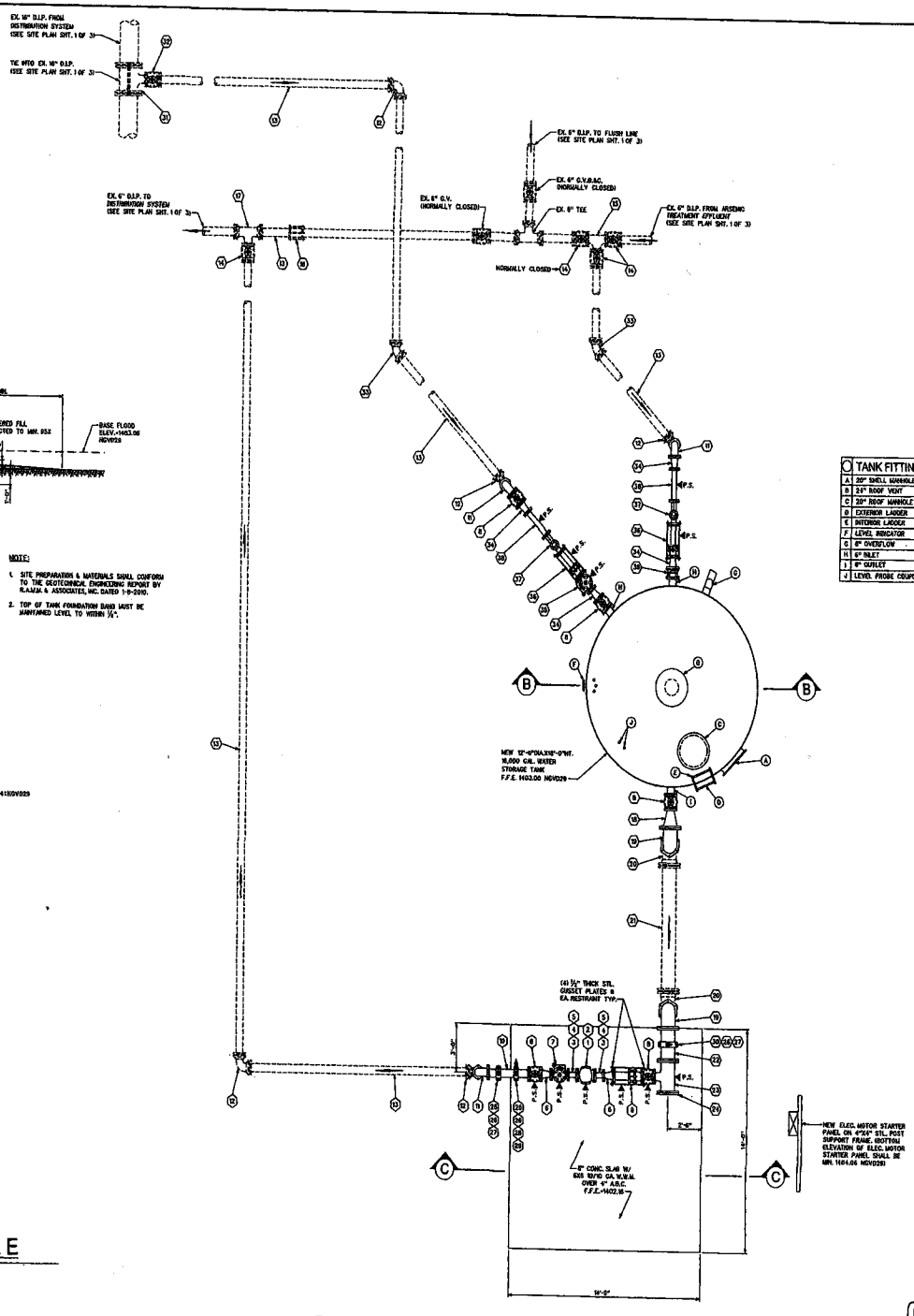


## STORAGE TANK/BOOSTER PLAN

SCALE: 1/4"=1'-0"

| TANK FITTINGS | |
|---|---|
| A | 20" SHELL MANHOLE |
| B | 24" ROOF VENT |
| C | 20" ROOF MANHOLE |
| D | EXTERIOR LADDER |
| E | INTERIOR LADDER |
| F | LEVEL INDICATOR |
| G | 8" OVERFLOW |
| H | 8" INLET |
| I | 8" OUTLET |
| J | LEVEL PROBE COUPLINGS |

| | BOOSTER STATION FITTINGS | QTY. |
|---|---|---|
| 1 | GRUNDFOS CR-90-4-1-A-G-A-E 90HE PUMP | 1 |
| 2 | GRUNDFOS 90HP/3PH/60HZ/460V/3560RPM MOTOR | 1 |
| 3 | 4" CLASS 125 COMPANION FLG. (L.P. THRD.) | 2 |
| 4 | 4"X8" SCHED. 40 STL. PIPE W/LP. THRD. EA END | 2 |
| 5 | 6" CLASS 300 COMPANION FLG. (L.P. THRD.) | 2 |
| 6 | 8"X6" ECCENTRIC REDUCER FLG. | 2 |
| 7 | 4" CLA-VAL MODEL 606C-90TYC BOOSTER PUMP CONTROL VALVE | 1 |
| 8 | 8" GATE VALVE FLG. | 4 |
| 9 | 6"X2'-0" D.I.P. SPOOL FLG.X.P.E. & 6" SMITH-BLAIR 913 F.C.A. W/(2) ⅞"X2'-8" DBL. END ROD RESTRAINTS (THRD. 3" EA END) | 1 |
| 10 | 8"X2'-0" D.I.P. SPOOL FLG. | 1 |
| 11 | 8" 90° ELL. M.J.X.FLG. | 3 |
| 12 | 8" 90° ELL. M.J. | 3 |
| 13 | 8" D.I.P. | 440 L.F. |
| 14 | 6" G.V.B.A.C. M.J.X.FLG. | 4 |
| 15 | 6" TEE FLG. | 1 |
| 16 | 6" SMITH-BLAIR 442 BOLTED COUPLING | 1* |
| 17 | 8" TEE M.J.X.FLG. | 1 |
| 18 | 12"X8" ECCENTRIC REDUCER FLG. | 1 |
| 19 | 12" 90° ELL. M.J.X.FLG. | 1 |
| 20 | 12" 90° ELL. M.J. | 2 |
| 21 | 12" D.I.P. | 20 L.F. |
| 22 | 12"X2'-0" D.I.P. SPOOL FLG. | 1 |
| 23 | 12"X8" TEE FLG. | 1 |
| 24 | 2"X8" O.D. REDUCING FLG. W/3" PLUG | 1 |
| 25 | 8"X2" MUELLER BR29 - I.P. THRD. - DBL. STRAP SADDLE | 2 |
| 26 | 1" MUELLER B-20053 BALL BALL CORP STOP | 3 |
| 27 | 1" CLA-VAL MODEL 34AR-1B AIR RELEASE VALVE | 2 |
| 28 | 0-300 PSI PRESSURE GAUGE | 1 |
| 29 | ¾" THREADLESS HOSE BIBB | 1 |
| 30 | 12"X1" MUELLER BR2B - I.P. THRD. - DBL. STRAP SADDLE | 1 |
| 31 | 12"X6" TAPPING SLEEVE M.J. | 1 |
| 32 | 6" T.V.B.A.C. M.J. | 1 |
| 33 | 6" 45° ELL. M.J. | 2 |
| 34 | 6"X4" REDUCER M.J. | 4 |
| 35 | 6" CLA-VAL MODEL 43CD-33BCSYWOK COMBINATION RATE OF FLOW, BACK PRESSURE & SOLENOID SHUTOFF VALVE | 1 |
| 36 | 6"X2'-0" SPOOL FLG.X.P.E. & 6" SMITH-BLAIR 913 F.C.A. W/(2) ⅞"X2'-6" DBL. END ROD RESTRAINTS (THRD. 3" EA END) | 2 |
| 37 | 4" SENSUS MODEL 161 PROPELLER METER | 2 |
| 38 | 4"X2'-0" SPOOL FLG. | 2 |
| 39 | 4" MUELLER 3211-6 BUTTERFLY VALVE FLG. | 1 |

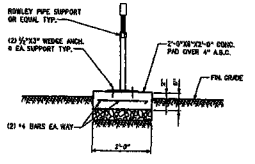


## TYP. PIPE SUPPORT

SCALE: ¾"=1'-0"

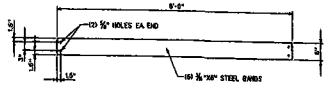


FOUNDATION ROD

FOUNDATION ROD DIA. - 1½"ø
FOUNDATION ROD HEIGHT - 8"

NOTES:

1. STEEL BANDS - A36
2. BOLTS & NUTS - A307B
3. FASTEN BANDS TOGETHER W/ (12) ⅝"X2" HEX BOLTS
4. TANK BANDS TO BE PRIMED & PAINTED PRIOR TO INSTALLATION

## TANK FOUNDATION BANDS

SCALE: ½"=1'-0"

CALL FOR MARKING BEFORE YOU DIG
ARIZONA TEXT 811
263-1100
1-800-STAKE-IT
(OUTSIDE MARICOPA COUNTY)

28339
FREDRICK K.
SCHNEIDER
3-4-10
REGISTERED PROFESSIONAL ENGINEER
ARIZONA, U.S.A.
Expires 6/30/2010

ARIZONA WATER COMPANY

DRAWING No.

CG-1182

SHEET 3 OF 3

SPR 002 - 10

PER _____ - _____

PINAL • COUNTY
*Wide open opportunity*

# PINAL COUNTY DEVELOPMENT SERVICES
## SPECIFIC SITE PLAN REVIEW APPLICATION

1. PROJECT NAME Arizona Water Company - Lake In the Desert Well 27 ALAS MAP# _____
2. JOB/STREET ADDRESS/LOCATION: 7317 West McCartney Road - Casa Grande, AZ 85222
3. **ASSESSOR'S PARCEL #:** 401 - 02 - 013 MLD # _____
4. LEGAL DESCRIPTION: COMMERCIAL CENTER _____ SHOPS/PAD _____
   SECTION 5 TOWNSHIP 6 N(S) RANGE 7 (E)W
5. PROPERTY OWNER Arizona Water Company PHONE 602-240-6860
   MAILING ADDRESS PO Box 29006 CITY Phoenix ST AZ ZIP 85038-9006
6. DEVELOPER Arizona Water Company PHONE _____
   MAILING ADDRESS _____ CITY _____ ST _____ ZIP _____
7. SETBACKS (FROM EAVES): **FRONT** 40 **LEFT SIDE** 20 **RIGHT SIDE** 20 **REAR** 40
8. PROPOSED USE Same as Current Use - Domestic Water Supply Well & Water Treatment BUILDING AREA N/A sq. ft.
9. EXISTING ZONING GR CASE _____ FLOOD X /MAP 04021C1195E DRO? ___yes ___no

## APPLICANT INFORMATION

CONTACT NAME John Knobbe - Arizona Water Company PHONE 602-240-6860 C

ADDRESS: 3805 N. Black Canyon Hwy. CITY Phoenix ST AZ ZIP 85015

E-MAIL jknobbe@azwater.com FAX # 602-294-2169

APPLICANT NAME (IF DIFFERENT THAN ABOVE) _____ PHONE _____

ADDRESS: _____ CITY _____ ST ____ ZIP _____

E-MAIL _____ FAX # _____

ARCHITECT/ENGINEER Arizona Water Company PHONE _____

ADDRESS: _____ CITY _____ ST ____ ZIP _____

E-MAIL engineering@azwater.com FAX # _____

SEPTIC YES /(NO) (Circle one) UTILTY PROVIDER - SEWER CO. N/A GAS N/A ELECT. CO. APS

**TYPE OF PLANS SUBMITTED:**

SPR-PA-036-09

| | | | |
|---|---|---|---|
| ARCH. SITE PLAN | # OF COPIES 4 | #OF SHEETS 1 | SUBMITTAL # 1 |
| LANDSCAPE | # OF COPIES ____ | #OF SHEETS ____ | SUBMITTAL # ____ |
| PHOTOMETRICS | # OF COPIES ____ | #OF SHEETS ____ | SUBMITTAL # ____ |
| GRADING/DRAINAGE | # OF COPIES 4 | #OF SHEETS 1 | SUBMITTAL # 1 |
| WATER/SEWER (utilities) | # OF COPIES ____ | #OF SHEETS ____ | SUBMITTAL # ____ |
| SIGNING/STRIPING | # OF COPIES ____ | #OF SHEETS ____ | SUBMITTAL # ____ |
| OTHER Mech. Plumbing | # OF COPIES 4 | #OF SHEETS 1 | SUBMITTAL # 1 |

**PLANNING STIPULATIONS PROVIDED:** The following **must be attached** (if applicable) to the **1st submittal** or the submittal will be returned.

____ Zoning Stipulations attached ____PAD Stipulations attached ____SUP/IUP Stipulations attached

Is there a **Development Agreement?** ___Yes X No If yes, provide name _____

John Knobbe — **PRINT NAME**

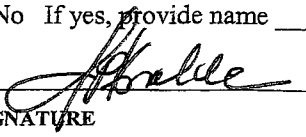
**SIGNATURE**

3-4-2010 — **DATE**

PINAL • COUNTY
*wide open opportunity*

April 21, 2010

John Knobbe
Arizona Water Company

**Re: SPR-002-09**
Project Name: 16,000 Gallon Water Tank and Booster Pump

Dear Mr. Knobbe,

On March 11, 2010, you submitted a package of plans for Specific Site Plan Review. The comments received to date by the departments of Development Services are as follows:

**Planning & Development** – Approved as submitted

**Public Works** – Approved as submitted

Any permit requirements from other departments' of Development Services will need to be met.

If you have questions concerning any of these comments, you may contact us at the numbers listed below:

Planning & Development (520) 866-6374
Public Works (520) 866-6454

Sincerely,

Arlene Kile
Code Compliance Supervisor
520-866-6374

# ARIZONA WATER COMPANY

CASA GRANDE DIVISION
220 E. 2ND STREET, CASA GRANDE, AZ 85122
PH 520-836-8785 / FX 520-836-2850

## PROPOSAL/CONTRACT

| | |
|---|---|
| CONTRACTOR: Keller Electrical | SYSTEM: Casa Grande |
| ADDRESS: 4206 E. Winslow | W.A. No(s): 1-41020 |
| Phoenix, AZ 85040 | BID DUE DATE: April 23, 2010 |

CONTRACTOR SUBMITS this PROPOSAL/CONTRACT to ARIZONA WATER COMPANY, an Arizona corporation (the "Company"), to perform the work and complete the project described on Page 2 (the "Project"), as an independent prime contractor.

1. Contractor certifies that it has a complete copy of, and has read, understands and accepts, the Company's General Conditions of Contract, and the Company's Construction Specifications and Standard Specification Drawings, (the "Specifications"), all of which are attached hereto. Contractor has examined the specific plans and related construction drawings for the Project (the "Drawings"), copies of which are also attached hereto. The General Conditions of Contract, Specifications and Drawings are incorporated into this Proposal/Contract. Contractor affirms that all work and materials to be furnished or purchased for the Project will be in strict conformance with the General Conditions of Contract, Specifications and Drawings.

2. Contractor represents and warrants that it has satisfied and complied with the provisions of Section 6, Contractor Understands Work and Working Conditions, of the General Conditions of Contract prior to submitting this Proposal/Contract.

3. Contractor represents that this Proposal/Contract is fair and honest in all respects, is submitted in good faith and is not submitted in collusion with any other company, entity or person.

4. Contractor acknowledges that one hundred percent (100%) Performance and Payment Bonds are required and must be provided to the Company prior to the commencement of work.

5. Prior to the commencement of work, Contractor will submit to the Company a list of all materials to be used in the Project. The materials list will include the manufacturer, part number, price and quantity included in this Proposal/Contract.

6. Contractor will furnish all labor, tools, equipment and materials required to complete the Project according to the General Conditions of Contract, Specifications and Drawings. No materials purchased by Contractor to be incorporated into the Project are subject to tax at the time of purchase and Contractor will not charge the Company for any such tax. Contractor will pay the applicable transaction privilege tax (the "Contracting Tax") on the Project after Contractor receives payment of the final Project invoice from the Company. The cost of materials incorporated into the Project which are exempt by Arizona Revised State Statues ("A.R.S.") from the Contracting Tax, for example, pipes or valves having a diameter of four (4) inches or larger, including equipment, fittings and any other related part that is used in operating the pipes or valves (A.R.S. §42-5061 B.6.), will not be included in the total cost of the labor and materials upon which the Contracting Tax is computed. Contractor retains full liability and obligation to pay the Contracting Tax and will defend and indemnify the Company against any demand or obligation to pay the Contracting Tax.

7. Contractor will maintain detailed accounting records of all materials purchased and incorporated into the Project. Such records will include all supporting original vendor invoices for all materials purchased. Following completion of the Project, Contractor will submit an itemized accounting to the Company which will include all supporting original vendor invoices and satisfactory evidence of payment thereof. The Company will not pay Contractor for materials not actually incorporated into the Project, and the disposition of such materials will remain Contractor's responsibility.

8. The Estimated Total Cost of the Project, shown on Page 2, is based on estimated labor and material quantities to be furnished. It includes an estimate of the Contracting Tax and the cost of the required Performance and Payment Bonds. Contractor will not cancel, modify or withdraw this Proposal/Contract during a ninety-day (90) period commencing on the Bid Due Date. The Company may accept this Proposal/Contract by signing and mailing, or otherwise delivering, a copy hereof to Contractor during such ninety-day (90) period. If the Company does not accept this Proposal/Contract during such ninety-day (90) period, Contractor may cancel this Proposal/Contract by giving written notice of cancellation to the Company.

9. Prior to the commencement of work, Contractor will provide the Company with a detailed construction schedule, in either Gantt or CPM form, identifying all tasks to be performed from the date of the written Commencement Notice through completion of the Project, including testing, training of Company Personnel and final Project invoicing. Contractor will provide the Company with a copy of such construction schedule documenting the progress of work on the Project at least monthly.

10. Contractor will not commence work on the Project until the Company gives Contractor a written Commencement Notice. Contractor will complete the Project within _____ calender days after the Commencement Notice is issued.

11. Following the Company's written notice of satisfactory completion of the Project, and upon receipt of the final Project invoice from Contractor, the Company shall pay Contractor the actual total cost of the Project, which will be calculated as shown on Page 2, except that actual labor and material quantities installed/constructed will be substituted for the estimated labor and materials quantities and the Contracting Tax will be recalculated based on such actual labor and materials quantities.

12. The amount of applicable liquidated damages for Contractor's failure to deliver or perform within the time limit shown in Paragraph 10 may be deducted from the Company's payment of the final Project invoice. This provision shall not limit the Company's ability to terminate this Proposal/Contract for Contractor's unsatisfactory performance or failure to perform as provided in the General Conditions of Contract, Specifications or Drawings, or in this Proposal/Contract.

**SPECIAL CONDITIONS:**

| CONTRACTOR | PROPOSAL/CONTRACT ACCEPTED: |
|---|---|
| | ARIZONA WATER COMPANY |
| By: [signature] | By: [signature] |
| Print Name: Steve Osborn | Print Name: JAMES WILSON |
| Title: Director of Field Operations | Title: SR. ENGINEER |
| Date: April 23, 2010 | Date: 4/26/10 |


# ARIZONA WATER COMPANY

CASA GRANDE DIVISION
220 E. 2ND STREET, CASA GRANDE, AZ 85122

## PROPOSAL/CONTRACT


SYSTEM:

# ARIZONA WATER COMPANY

CASA GRANDE DIVISION
220 E. 2ND STREET, CASA GRANDE, AZ 85122

## PROPOSAL/CONTRACT

CONTRACTOR: Keller Electrical

AZ CONTRACTOR LICENSE NO: 076007 CLASSIFICATION: L-11

ADDRESS: 4206 E. Winslow, Phoenix, AZ 85040

W.A. No(s):

BID DUE DATE: April 23, 2010

BID BOND REQUIRED [ ] Yes [X] No

DESCRIPTION OF PROJECT: Provide and install a new booster pump starter panel and all necessary controls to operate the well, tank, booster and cla-valves at Casa Grande Well #27 as described in the attached control description.

| 1-2. MATERIALS EXEMPT FROM CONTRACTING TAX (per Paragraph 6) | QUANTITY | UNIT PRICE LABOR | UNIT PRICE MATERIALS | TOTAL COST LABOR | TOTAL COST MATERIALS |
|---|---|---|---|---|---|
| Provide and install new booster pump starter panel complete w/ size 4 starter | 1 | | | $ 200 | $ 2,444 |
| Provide and install new Endress-Hauser PMC 71 pressure transducer with | 1 | | | 300 | 1,900 |
| stand and Hoffman enclosure | | | | | |
| Provide and install Moor Industries 4PRG SPA relay | 1 | | | 340 | 722 |
| Provide and install all necessary controls, conduit, wire and trenching to | 1 | | | 6,670 | 2,353 |
| facilitate the control description attached hereto. | | | | | |
| | | | | | |
| | | | | | |
| | | | | | |
| | | | | | |
| | | | | | |
| | | | | | |

| | | |
|---|---|---|
| 3. Total Labor to Install Exempt Materials (add the amounts in column 1) | 3 | 7,510 |
| 4. Total Exempt Materials (add the amounts in column 2) | 4 | 7,419 |

| 5-6. NON-EXEMPT MATERIALS | QUANTITY | LABOR | MATERIALS | LABOR | MATERIALS |
|---|---|---|---|---|---|
| | | | | | |
| | | | | | |
| | | | | | |
| | | | | | |
| | | | | | |
| | | | | | |
| | | | | | |
| | | | | | |
| | | | | | |
| | | | | | |
| | | | | | |
| | | | | | |

| | | | |
|---|---|---|---|
| 7. Total Labor to Install Non-Exempt Materials (add the amounts in column 5) | 7 | | |
| 8. Total Non-Exempt Materials (add the amounts in column 6) | | | 8 |
| 9. Subtotal A (add lines 3, 7 and 8) | | | 9 $ 7,510 |
| 10. Contracting Tax Base (multiply the amount on line 9 by 0.65) | 10 | $ 4,881.50 | |
| 11. Applicable Contracting Tax Rate | 11 | 4.00% | |
| 12. Contracting Tax (multiply the amount on line 10 by line 11) | | | 12 $ 195.26 |
| 13. Subtotal B (add lines 4, 9 and 12) | | | 13 $ 15,124.26 |
| 14. 100% Performance and Payment Bonds Cost | | | 14 $ 320.00 |
| 15. Estimated Total Cost (add lines 13 and 14) | | | 15 $ 15,444.26 |

NOTE: The Estimated Total Cost includes all labor and materials for backfill, pavement replacement, chip seal, and traffic control necessary for the Project.

AGREEMENT FOR CONSULTING SERVICES BETWEEN
ARIZONA WATER COMPANY AND
**RICKER, ATKINSON, MCBEE, MORMAN & ASSOCIATES, INC.**

THIS AGREEMENT is made and entered into on this 30th day of November, 2009, by and between Arizona Water Company, an Arizona corporation, hereinafter referred to as "Client," and Ricker, Atkinson, McBee, Morman & Associates, Inc., an Arizona corporation hereinafter referred to as "Consultant".

RECITALS

WHEREAS, Client is authorized to and desires to retain Consultant to provide geotechnical engineering services for the Lake in the Desert 16,000 Gal. Storage Tank..

WHEREAS, Consultant is agreeable to providing personnel and facilities necessary to perform the desired services within Client's required time; and

WHEREAS, Client desires to retain Consultant to perform the services in the manner, at the time, and for the compensation set forth herein;

NOW, THEREFORE, Client and Consultant agree as follows:

1. Description of Project.

Client and Consultant agree that Project is as described in Exhibit A, hereto, incorporated by reference herein and entitled "Scope of Work," dated November 23, 2009. If, during the course of Project, Client and Consultant agree to changes in Project, such changes shall be effective only after being incorporated in this Agreement by written amendment, signed by representative of Client and Consultant.

2. Scope of Consultant Services.

Consultant agrees to perform those services described hereafter. Unless modified in writing by both parties, duties of Consultant shall not be construed to exceed those services specifically set forth herein.

a. Basic Services. Consultant agrees to perform those services described in the Scope of Work (the "Services"). Any tasks not specifically described in the Scope of Work will be Additional Services.

b. Additional Services. Client shall pay Consultant all fees and costs incurred in performing Additional Services provided the services were authorized by Client in writing. Unless otherwise agreed in writing, Additional Services shall be compensated in accordance with Consultant's standard billing rates at the time the Additional Services are performed.

c. Litigation Assistance. Unless specifically stated therein, the Scope of Work does not include assistance to support, prepare, document, bring, defend or assist in litigation undertaken or defended by Client. All such services required or requested of the Consultant by Client or any third party (except claims between Client and Consultant) will be reimbursed at Consultant's applicable rates for such litigation services.

3. Responsibilities of Client.

In addition to payment for the Services performed under this Agreement, Client shall:

a. Assist and cooperate with Consultant in any manner necessary and within its ability to facilitate Consultant's performance under this Agreement.

b. Designate in writing a person to act as Client's representative with respect to this Agreement. Such person shall have complete authority to transmit instructions, receive information, interpret and define Client's policies, make decisions and execute documents on Client's behalf.

c. Furnish Consultant with all technical data in Client's possession including, but not limited to, maps, surveys, drawings, soils or geotechnical reports and any other information required by or useful to Consultant in performance of the Services under this Agreement.

d. Notify Consultant of any known or potential health or safety hazards existing at or near the project site.

e. Provide access to and/or obtain permission for Consultant to enter upon project related property during normal business hours, whether or not owned by Client, as required to perform and complete the Services.

4. Americans with Disabilities Act.

Any other provision of this Agreement to the contrary notwithstanding, unless otherwise specified in the Scope of Services, Client's contractors shall have sole responsibility as between Client and Consultant for compliance with the Americans With Disabilities Act ("ADA") 42 U.S.C. 12101 et. Seq. and the related regulations. Consultant shall provide client with applicable ADA criteria, which maybe required.

5. Authorization and Completion.

In signing this Agreement Client grants Consultant specific authorization to proceed with work as described in Scope of Work and under the terms of this Agreement.

6. Compensation.

a. Amount. For the Services described in Exhibit A, Client agrees to pay, and Consultant agrees to accept compensation in accordance with Exhibit B, attached hereto and incorporated herein. Where Consultant has provided Client with a breakdown of the total compensation into subtasks, such breakdowns are estimates only. Consultant may reallocate compensation between tasks, provided total compensation is not exceeded without the prior written approval of Client.

b. Payment. As long as Consultant has not defaulted under this Agreement, Client shall pay Consultant within thirty (30) days of the date of Consultant's invoices for services performed and reimbursable expenses incurred under this Agreement. If Client has reason to question or contest any portion of any such invoice, amounts questioned or contested shall be identified and notice given to Consultant within thirty (30) days of the date of the invoice. Any portion of any invoice not contested shall be deemed to be accepted and approved for payment and shall be paid to Consultant within thirty (30) days of the date of the invoice. Client agrees to cooperate with Consultant in a mutual effort to resolve promptly any contested portions of Consultant's invoices.

In the event any uncontested portions of any invoice are not paid within thirty (30) days of the date of Consultant's invoice, interest on the unpaid balance shall accrue beginning with the 31st day at the rate of 1.5% per month, and Consultant shall have the right to suspend work per Article XV, Suspension of Work.

7. Responsibility of Consultant.

a. Standard of Care Professional Services.

Subject to the limitations inherent in the agreed scope of work as to the degree of care, amount of time and expenses to be incurred, and subject to any other limitations contained in this Agreement, Consultant shall perform the Services and any Additional Services in accordance with generally accepted standards and practices customarily utilized by competent engineering firms in effect at the time Services and any Additional Services are rendered. Consultant does not expressly or impliedly warrant or guarantee its Services.

b. Reliance upon Information Provided by Others.

If Consultant's performance of services hereunder requires Consultant to rely on information provided by other parties (excepting Consultant's subcontractors), Consultant shall not independently verify the validity, completeness, or accuracy of such information unless otherwise expressly engaged to do so in writing by Client.

c. Consultant's Opinion of Costs.

Client acknowledges that construction cost estimates, financial analyses and feasibility projections are subject to many influences including, but not limited to, price of labor and materials, unknown or latent conditions of existing equipment or structures, and time or quality of performance by third parties. Client acknowledges that such influences may not be precisely forecasted and are beyond the control of Consultant and that actual costs incurred may vary substantially from the estimates prepared by Consultant. Consultant does not warrant or guarantee the accuracy of construction or development cost estimates, however, Consultant agrees to exercise its best Professional Judgment in rendering its opinions.

d. Construction Phase Services.

1. Consultant's Activities at Construction Site. The presence of Consultant's personnel at a construction site, whether as on-site representative, resident engineer, construction manager, or otherwise, does not make Consultant responsible for those duties that belong to Client and/or construction contractors or others, and does not relieve construction contractors or others of their obligations, duties, and responsibilities, including, but not limited to, construction methods, means, techniques, sequences, and procedures necessary for completing all portions of the construction work in accordance with the contract documents, any health or safety programs and precautions required by such construction work, and any compliance with applicable laws and regulations. Any inspection or observation of the contractor's work is for the purpose of determining that the work is proceeding in conformance with the intent of the project specifications and contract documents. Consultant has no authority to exercise control over any construction contractor in connection with their work or health or safety programs and precautions. Except to protect Consultant's own personnel and except as may be expressly required elsewhere in the Scope of Work, Consultant has no duty to inspect, observe, correct, or report on health or safety deficiencies of the construction contractor.

2. Shop Drawing and Submittal Review. If required by Consultant's Scope of Services, Consultant shall review shop drawings or other contractor submittals for general conformance with the intent of the contract documents. Except for services completed under direct contract to Consultant, Consultant shall not be required to verify dimensions, to engineer contractor's shop drawings or submittals, nor to coordinate shop drawings or other submittals with other shop drawings or submittals provided by contractor.

3. Record Drawings. Record drawings, if required, will be prepared, in part, on the basis of information compiled and furnished by others, and may not always represent the exact location, type of various components, or exact manner in which the Project was finally constructed. Except for services completed under direct contract to Consultant, Consultant is not responsible for any errors or omissions in the information from others that are incorporated into the record drawings.

e. Scope of Work.

1. Before preparing the scope of work, Consultant specifically acknowledges and agrees that it has inspected and familiarized itself with Client's site. The Consultant has received, or had the opportunity to inquire about and/or request all relevant information concerning the Scope of Work from Client or any other source Consultant deems necessary. The Scope of Work has been prepared by the Consultant and to the best of its knowledge includes all applicable work required to successfully complete geotechnical engineering services for 16,000 gallon storage tank.

8. Asbestos/Hazardous Material.

Consultant and Consultant's subcontractors shall have no responsibility for the discovery, handling, removal, or disposal of, or exposure of persons to asbestos or hazardous or toxic materials that are present in any form at the Project site. Professional services related to or in any way connected with the investigation, detection, abatement, replacement, use, specification, or removal of products, materials, or processes containing asbestos or hazardous or toxic materials are beyond the scope of this Agreement.

In the event Consultant encounters asbestos or hazardous materials at the jobsite, Consultant may, at its option and without liability for damages, suspend the performance of services on the Project until such time as Client and Consultant mutually agree on an amendment to this Agreement to address the issue, or Client retains another specialist consultant or contractor to identify, classify, abate and/or remove the asbestos and/or hazardous materials.

9. Consultant's Work Product.

a. Scope.

Consultant's work product which is prepared solely for the purposes of this Agreement, including, but not limited to, drawings, test results, recommendations and technical specifications, whether in hard copy or electronic form, shall become the property of Client when Consultant has been fully compensated as set forth herein. Consultant may keep copies of all work product(s) for its records.

Consultant and Client recognize that Consultant's work product submitted in performance of this Agreement is intended only for the project described in this Agreement. Client's alteration of Consultant's work product or its use by Client for any other purpose shall be at Client's sole risk.

b. Electronic Copies.

If requested, solely as an aid and accommodation to Client, Consultant may provide copies of its work product documents in computer-readable media ("electronic copies", "CADD"). These documents will duplicate the documents provided as work product, but

will not bear the signature and professional seals of the registered professionals responsible for the work. Client is cautioned that the accuracy of electronic copies and CADD documents may be compromised by electronic media degradation, errors in format translation, file corruption, printing errors and incompatibilities, operator inexperience and file modification. Consultant will maintain the original copy, which shall serve as the official, archived record of the electronic and CADD documents.

10. Indemnification.

a. The Consultant shall indemnify the Client against, and save and hold it harmless from, any and all liability, claims, demands, loss, actions, causes of action, expense, penalties, fines, assessments, damages and costs of every kind and nature for injury to or death of any and all persons, including, without limitation, employees or representatives of the Client or of the Consultant or of any subcontractor, or any other person or persons, and for damage, destruction or loss, consequential or otherwise, to or of any and all property, real or personal, including, without limitation, property of the Client or of the Consultant or of any subcontractor, or of any other person or persons, and the violation of any law, ordinance, rule, regulation, standard, or order resulting from, or in any manner arising out of, or in connection with, the performance of the work under the Contract, howsoever same may be caused, including, without limitation, the Client's active or passive negligence. The Consultant shall also, upon request by the Client, and at no expense to the Client, defend the Client in any and all suits, concerning such injury to or death of any and all persons, and concerning such damage, destruction or loss, consequential or otherwise, to or of any and all property, real or personal, including, without limitation, suits by employees or representatives of the Client or of the Consultant or of any subcontractor, or any other person or persons, or concerning any court or administrative proceeding concerning the violation of any law, ordinance, rule, regulation, standard, or order. Excluded from this paragraph are only those injuries to or deaths of persons and damage, destruction or loss, to or of property arising from the sole negligence or willful misconduct of the Client.

b. Consultant shall indemnify the Client against, and save and hold it harmless from, any and all liability, claims, demands, damages, costs, expenses and attorney's fees, suffered or incurred on account of any breach of any obligation, covenant or other provision of this contract, including without limitation, breach of the indemnity provisions of subsection A of this Section 36.

c. Consultant further agrees to defend, indemnify and hold harmless the Client, its directors, officers, employees, and agents, from and against any and all costs, damages, claims, expenses, violations, notices of violations, penalties, liens, assessments, and liabilities of every kind and nature, foreseeable or unforeseeable, directly or indirectly, arising from any release, removal, generation, use, storage or disposal on, under, around, or from the site of any material, substance, or waste, hazardous or nonhazardous, including, without limitation, drilling fluids, mud, cuttings and development and test water howsoever same may be caused, including, without limitation, the Client's active or passive negligence.

11. Consultant's Insurance.

Consultant shall procure and maintain the following minimum insurance:

a. Commercial general liability insurance, including personal injury liability, blanket contractual liability and broad-form property damage liability coverage. The combined single limit for bodily injury and property damage shall be not less than $1,000,000.

b. Automobile bodily injury and property damage liability insurance covering owned, non-owned, rented, and hired cars. The combined single limit for bodily injury and property damage shall be not less than $1,000,000.

c. Statutory workers' compensation and employer's liability insurance as required by state law.

d. Professional liability insurance. The policy limit shall be not less than $1,000,000.

Consultant shall either require each of its subconsultants to procure and to maintain the insurance specified in this section or insure its subconsultants in the Consultants own policy, in like amounts.

Client shall be named as additional insured on polices 1 and 2 above. Upon execution of this Agreement, Consultant will provide a certificate of insurance to Client. Consultant will keep the certificate current at all times while this Agreement is in effect. The Consultant will provide a 30-day written notice in the event the above policies are cancelled.

12. Confidentiality.

Consultant agrees it will maintain the confidentiality of all material it receives from Client and will not disclose, distribute, or publish to any third party such information without the prior permission of Client. Notwithstanding the foregoing, Consultant shall have no confidentiality obligation with respect to information that:

a. becomes generally available to the public other than as a result of disclosure by Consultant or its agents or employees;

b. was available to Consultant prior to its disclosure by Client;

c. becomes available to Consultant from a third party who is not, to the knowledge of Consultant, bound to retain such information in confidence.

In the event Consultant is compelled by subpoena, court order, or administrative order to disclose any confidential information, Consultant shall promptly notify Client and

shall cooperate with Client prior to disclosure so that Client may take necessary actions to protect such confidential information from disclosure.

13. Subcontracts.

Consultant shall be entitled, to the extent determined appropriate by Consultant, to subcontract any portion of the services to be performed under this Agreement.

14. Suspension of Work.

Work under this Agreement may be suspended as follows:

a. By Client. By written notice to Consultant, Client may suspend all or a portion of the Work under this Agreement if unforeseen circumstances beyond Client's control make normal progress of the Work impracticable.

b. By Consultant. By written notice to Client, Consultant may suspend the work if Consultant reasonably determines that working conditions at the Site (outside Consultant's control) are unsafe, or in violation of applicable laws, or in the event Client has not made timely payment in accordance with Article VI, compensation

15. Termination of Work.

a. This Agreement may be terminated by Client as follows: (1) for its convenience on thirty (30) days' notice to Consultant, or (2) for cause, if Consultant materially breaches this Agreement through no fault of Client and Consultant neither cures such material breach nor makes reasonable progress toward cure within fifteen (15) days after Client has given written notice of the alleged breach to Consultant.

b. This Agreement may be terminated by Consultant as follows: (1) for cause, if Client materially breaches this Agreement through no fault of Consultant and Client neither cures such material breach nor makes reasonable progress toward cure within thirty (30) days after Consultant has given written notice of the alleged breach to Client.

c. Payment upon Termination. In the event of termination, Consultant shall perform such additional work as is reasonably necessary for the orderly closing of the work. Consultant shall be compensated for all work performed prior to the effective date of termination, plus work required for the orderly closing of the work, including: (1) authorized work performed up to the termination date plus termination expenses, including all labor and expenses, at Consultant's standard billing rates, directly attributable to termination; (2) all efforts necessary to document the work completed or in progress; and (3) any termination reports requested by Client.

16. Assignment.

This Agreement is binding on the heirs, successors, and assigns of the parties hereto. Except as otherwise set forth under Article VIII, Assignment of Tasks to Affiliates, this Agreement may not be assigned by Client or Consultant without prior, written consent of the other.

17. No Benefit for Third Parties.

The services to be performed by Consultant are intended solely for the benefit of Client, and no benefit is conferred on, nor contractual relationship established with any person or entity not a party to this Agreement. No such person or entity shall be entitled to rely on Consultant's services, opinions, recommendations, plans, or specifications without the express written consent of Consultant. No right to assert a claim against the Consultant, its officers, employees, agents, or consultants shall accrue to the construction Contractor or to any subcontractor, supplier, manufacturer, lender, insurer, surety, or any other third party as a result of this Agreement or the performance or nonperformance of the Consultant's services hereunder.

18. Force Majeure.

Consultant and Client shall not be responsible for delays caused by circumstances beyond their reasonable control, including, but not limited to: (1) strikes, lockouts, work slowdowns or stoppages, or accidents; (2) acts of God; (3) failure of Client to furnish timely information or to approve or disapprove Consultant's instruments of service promptly; and (4) faulty performance or nonperformance by Consultant or Client, Client's or Consultant independent consultants or contractors, or governmental agencies. Consultant and Client shall not be liable for damages arising out of any such delay, nor shall the Consultant or Client be deemed to be in breach of this Agreement as a result thereof.

19. Integration.

This Agreement represents the entire understanding of Client and Consultant as to those matters contained herein. No prior oral or written understanding shall be of any force or effect with respect to those matters covered herein. This Agreement may not be modified or altered except in writing signed by both parties.

20. Severability.

If any part of this Agreement is found unenforceable under applicable laws, such part shall be inoperative, null, and void insofar as it conflicts with said laws, but the remainder of this Agreement shall be in full force and effect.

21. Choice of Law/Jurisdiction.

This Agreement shall be administered and interpreted under the laws of the State of Arizona Jurisdiction of litigation arising from the Agreement shall be in The State of Arizona.

22. Attorneys' Fees.

In the event any claim, controversy, or legal action arises under this Agreement, the prevailing party shall be entitled to recover from the other party all attorneys' fees, costs, expenses and other fees incurred by the prevailing party.

23. Notice Provisions.

Notices concerning this Agreement shall be in writing and sent by certified mail or by courier (such as Federal Express), or by hand-delivery addressed as follows:

To the Company:

Arizona Water Company
3805 North Black Canyon Highway
Phoenix, Arizona 85015-5351
Attention: President

or

Arizona Water Company
Post Office Box 29006
Phoenix, AZ 85038-9006
Attention: President

To Consultant:

Ricker, Atkinson, McBee, Morman & Associates, Inc.
2105 S. Hardy Drive, Suite 13
Tempe, AZ 85282-1924
Attention: President

Either party may change its address for purposes of this Section by giving written notice of such change of address to the other party

24. Authorization.

The persons executing this Agreement on behalf of the parties hereto represent and warrant that the parties have all legal authority and authorization necessary to enter into this Agreement, and that such persons have been duly authorized to execute this Agreement on their behalf.

IN WITNESS WHEREOF, each of the parties hereto has caused this instrument to be executed by their respective duly authorized officers as of the date first written above.

**RICKER, ATKINSON, MCBEE, MORMAN & ASSOCIATES, INC**
an **Arizona Corporation**

By: _____

Its: Project Engineer

**ARIZONA WATER COMPANY,**
an Arizona corporation

By: _____

Its: Sr. Eng. Tech.

R·A·M·M

**RICKER • ATKINSON • McBEE • MORMAN & ASSOCIATES, INC.**

*Geotechnical Engineering • Construction Materials Testing*

Arizona Water Company
P.O. Box 29006
Phoenix, Arizona 85038-9006

November 23, 2009
Revised 11-30-09

Attn: John Knobbe, Senior Engineering Technician/Email: jknobbe@azwater.com

Re: Proposal for Geotechnical Engineering Services
16,000 Gallon Storage Tank & Booster Station
Lake in the Desert Well Site
Near McCartney Road and Evans Road
Casa Grande, Arizona

RAMM Proposal No. PG10923

Ricker, Atkinson, McBee, Morman & Associates, Inc. is pleased to submit this proposal to conduct Geotechnical Engineering Services for the above-referenced project.

The enclosed Exhibit "A", outlines the project description and our scope of services. The enclosed Exhibit "B" presents our completion time and fee to perform services.

If there are any questions regarding the proposed scope of work, please call. Thank you for considering our firm for this project.

Respectfully submitted,

RICKER, ATKINSON, MCBEE, MORMAN & ASSOCIATES, INC.

Kip E. Reese, P.E.
Project Engineer

/dcw

**2105 South Hardy Drive, Suite 13, Tempe, AZ 85282-1924 • Telephone (480) 921-8100 • Facsimile (480) 921-4081**

***RICKER, ATKINSON, McBEE, MORMAN & ASSOCIATES, INC.***

EXHIBIT "A" Proposal for Geotechnical Engineering Services
For: Arizona Water Company
RAMM Proposal No. PG10923

PROJECT: 16,000 Gallon Storage Tank & Booster Station
Lake in the Desert Well Site
Near McCartney Road and Evans Road
Casa Grande, Arizona

DESCRIPTION:

The proposed development will include a 12.5-foot diameter, 18-foot high, 16,000-gallon water storage tank and booster station.

SCOPE OF SERVICES:

1. Blue Stake will be contacted and utility clearance will be performed by Arizona Water Company. Access into the site and field exploration will be coordinated with Arizona Water Company personnel.

2. Test boring will be performed to determine subsurface conditions and obtain representative samples for laboratory analyses. One test boring 30 feet in depth is proposed in the storage tank area.

3. Laboratory analyses of representative samples will include:

   Moisture Content and Dry Density
   Compression
   Swell
   Minus No. 200 Sieve and Plasticity Index
   pH/Minimum Resistivity, Soluble Salts, Sulfate, Chloride

4. The field and laboratory data will be used in engineering evaluation and analyses to formulate our geotechnical recommendations.

5. An Engineer's report will be provided presenting the results of the field and laboratory testing, and corrosion potential parameters of site soils in contact with buried metal pipelines and concrete and recommendations for foundation support (including footing depth, bearing capacity, and estimated settlement), lateral earth pressures, site development materials suitability and requirements, and site grading and preparation procedures.

***RICKER, ATKINSON, McBEE, MORMAN & ASSOCIATES, INC.***

EXHIBIT "B" Proposal for Geotechnical Engineering Services
For: Arizona Water Company
RAMM Proposal No. PG10923

PROJECT: 16,000 Gallon Storage Tank & Booster Station
Lake in the Desert Well Site
Near McCartney Road and Evans Road
Casa Grande, Arizona

COMPLETION TIME:

Final report approximately 2 to 3 weeks after authorized to proceed.
Note: Contingent upon utility clearance, access into site and field exploration coordination.

FEE: $ 1,500.00 For Scope of Services outlined in Exhibit "A"

# ACORD™ CERTIFICATE OF LIABILITY INSURANCE

DATE (MM/DD/YY): 12/3/2009

**PRODUCER**

Professional Underwriters of Arizona, Inc.
Post Office Box 5419
Scottsdale, AZ 85261-5419
(480) 483-0440

THIS CERTIFICATE IS ISSUED AS A MATTER OF INFORMATION ONLY AND CONFERS NO RIGHTS UPON THE CERTIFICATE HOLDER. THIS CERTIFICATE DOES NOT AMEND, EXTEND OR ALTER THE COVERAGE AFFORDED BY THE POLICIES BELOW.

**INSURED**

Ricker Atkinson McBee
Morman & Associates, Inc.
2105 S. Hardy Dr, Suite 13
Tempe, AZ 85282

| INSURERS AFFORDING COVERAGE | | NAIC # |
|---|---|---|
| INSURER A: | Travelers Indemnity/America | 25666 |
| INSURER B: | Charter Oak Fire Insurance Co. | 25615 |
| INSURER C: | Travelers Indemnity Co. | 25658 |
| INSURER D: | Beazley Insurance Company, Inc. | 37540 |
| INSURER E: | | |

**COVERAGES**

THE POLICIES OF INSURANCE LISTED BELOW HAVE BEEN ISSUED TO THE INSURED NAMED ABOVE FOR THE POLICY PERIOD INDICATED. NOTWITHSTANDING ANY REQUIREMENT, TERM OR CONDITION OF ANY CONTRACT OR OTHER DOCUMENT WITH RESPECT TO WHICH THIS CERTIFICATE MAY BE ISSUED OR MAY PERTAIN, THE INSURANCE AFFORDED BY THE POLICIES DESCRIBED HEREIN IS SUBJECT TO ALL THE TERMS, EXCLUSIONS AND CONDITIONS OF SUCH POLICIES. AGGREGATE LIMITS SHOWN MAY HAVE BEEN REDUCED BY PAID CLAIMS.

| INSR LTR | ADDL INSRD | TYPE OF INSURANCE | POLICY NUMBER | POLICY EFFECTIVE DATE (MM/DD/YY) | POLICY EXPIRATION DATE (MM/DD/YY) | LIMITS | |
|---|---|---|---|---|---|---|---|
| A | X | GENERAL LIABILITY<br>[X] COMMERCIAL GENERAL LIABILITY<br>[ ] CLAIMS MADE [X] OCCUR<br>[X] Blanket<br>[X] Blanket WOS<br>GEN'L AGGREGATE LIMIT APPLIES PER:<br>[ ] POLICY [X] PRO-JECT [ ] LOC | 6802042L440 | 6/23/09 | 6/23/10 | EACH OCCURRENCE<br>DAMAGE TO RENTED PREMISES (ea occurrence)<br>MED EXP (Any one person)<br><br>GENERAL AGGREGATE<br>PRODUCTS - COMP/OP AGG | $ 1,000,000<br>$ 500,000<br>$ 10,000<br>$ 1,000,000<br>$ 2,000,000<br>$ 2,000,000 |
| A | X | AUTOMOBILE LIABILITY<br>[X] ANY AUTO<br>[ ] ALL OWNED AUTOS<br>[X] SCHEDULED AUTOS<br>[X] HIRED AUTOS<br>[ ] NON-OWNED AUTOS | 6802042L440 | 6/23/09 | 6/23/10 | COMBINED SINGLE LIMIT (Ea accident)<br>BODILY INJURY (Per person)<br>BODILY INJURY (Per accident)<br>PROPERTY DAMAGE | $ 1,000,000<br>$<br>$<br>$ |
| | | GARAGE LIABILITY<br>[ ] ANY AUTO | | | | AUTO ONLY - EA ACCIDENT<br>OTHER THAN AUTO ONLY: EA ACC<br>AGG | $<br>$<br>$ |
| C | | EXCESS LIABILITY<br>[X] OCCUR [ ] CLAIMS MADE<br>[ ] DEDUCTIBLE<br>[X] RETENTION $ 10,000 | CUP6446Y525 | 6/23/09 | 6/23/10 | EACH OCCURRENCE<br>AGGREGATE | $ 5,000,000<br>$ 5,000,000<br>$<br>$<br>$ |
| B | | WORKERS COMPENSATION AND EMPLOYERS' LIABILITY<br>ANY PROPRIETOR/PARTNER/EXECUTIVE OFFICER/MEMBER EXCLUDED?<br>If yes, describe under SPECIAL PROVISIONS below | XOUB-7318Y11-9-09 | 6/23/09 | 6/23/10 | [X] WC STATU-TORY LIMITS [ ] OTHER<br>E.L. EACH ACCIDENT<br>E.L. DISEASE - EA EMPLOYEE<br>E.L. DISEASE - POLICY LIMIT | <br>$ 1,000,000<br>$ 1,000,000<br>$ 1,000,000 |
| D | | OTHER<br>Architects / Engineers Professional Liability | V15U0Q09PNPA | 7/5/09 | 7/5/10 | Per Claim<br>Ann Aggregate | $ 1,000,000<br>$ 2,000,000 |

**DESCRIPTION OF OPERATIONS / LOCATIONS / VEHICLES / EXCLUSIONS ADDED BY ENDORSEMENT / SPECIAL PROVISIONS**

Geotechnical & Construction Materials Engineering Consultants
Re: Lake in the Desert 16,000 Gallon Storage Tank
The insurance afforded is primary and non-contributory and waivers subrogation in accordance with the existing contract.

**CERTIFICATE HOLDER**

Arizona Water Company
3805 N. Black Canyon Highway
Phoenix, AZ 85015

**CANCELLATION**

SHOULD ANY OF THE ABOVE DESCRIBED POLICIES BE CANCELLED BEFORE THE EXPIRATION DATE THEREOF, THE ISSUING INSURER WILL ENDEAVOR TO MAIL 30* DAYS WRITTEN NOTICE TO THE CERTIFICATE HOLDER NAMED TO THE LEFT, BUT FAILURE TO DO SO SHALL IMPOSE NO OBLIGATION OR LIABILITY OF ANY KIND UPON THE INSURER, ITS AGENTS OR REPRESENTATIVES. *Except 10 days nonpayment of premium

AUTHORIZED REPRESENTATIVE Jeffrey D. Gerick


© ACORD CORPORATION 1988

CVCL 1 ② 3 4 DIST. CODE 002 SHEET 1 OF 4

**CLA-VAL CO.** NEWPORT BEACH, CALIFORNIA

| CATALOG NO. | DRAWING NO. | REV. |
|---|---|---|
| 43-23 | 22272 | – |

TYPE OF VALVE AND MAIN FEATURES

# SOLENOID SELECTED RATE OF FLOW CONTROL VALVE WITH BACK PRESSURE SUSTAINING AND SOLENOID SHUTOFF

| | | |
|---|---|---|
| DESIGN | | |
| DRAW | TLC | 9-16-91 |
| CHK'D | IC | 9-17-91 |
| APV'D | | |

TO INLET — CS3 — TO OUTLET
DE-ENERGIZE TO OPEN

——— NOT FURNISHED BY CLA-VAL CO. ——— OPTIONAL FEATURES

TO INLET — CS3 — TO OUTLET
ENERGIZE TO OPEN

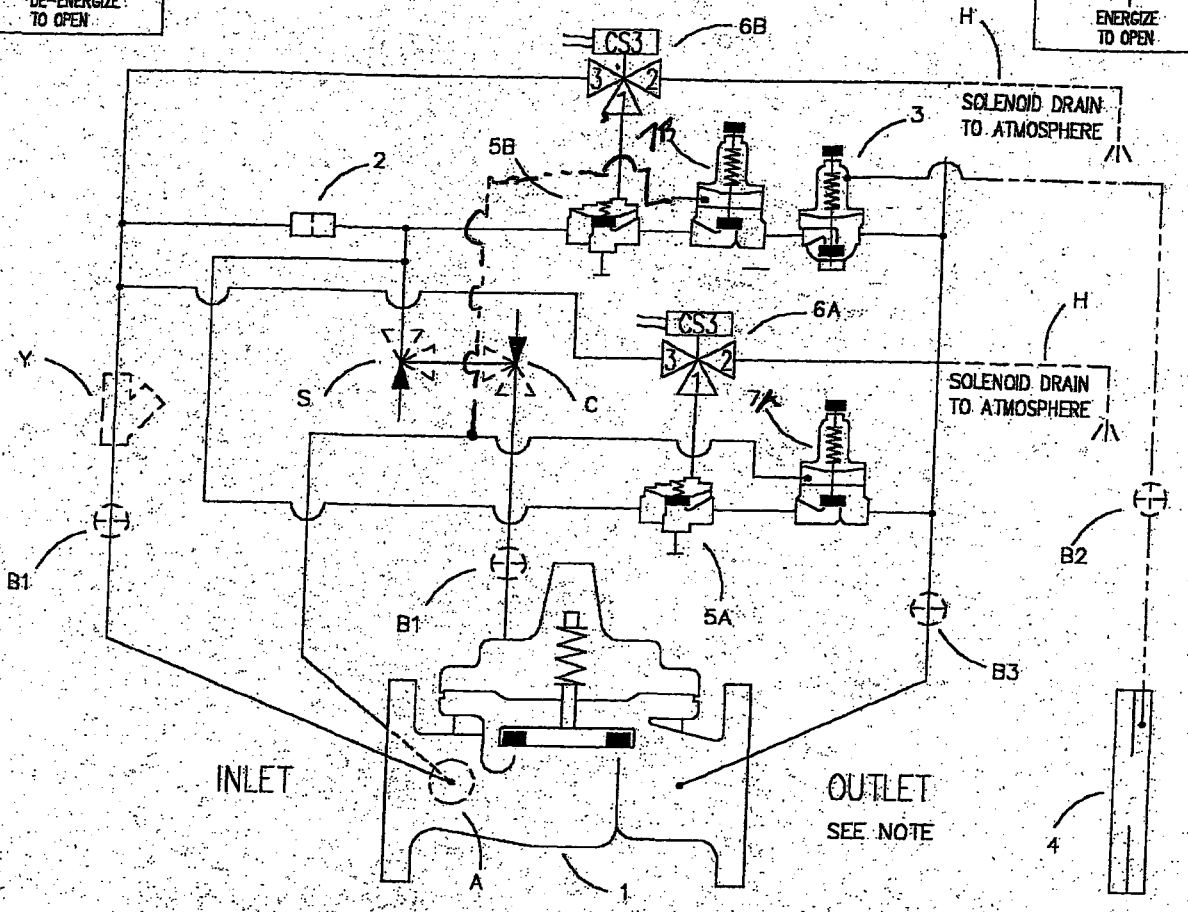


NOTE: ORIFICE PLATE ASSEMBLY MAY BE ATTACHED TO THE MAIN VALVE OUTLET FLANGE, HOWEVER, BETTER CONTROL IS OBTAINED IF LOCATED 1 TO 5 PIPE DIAMETERS DOWNSTREAM.

| ITEM NO. | BASIC COMPONENTS | QTY |
|---|---|---|
| 1 | 100-01 HYTROL (MAIN VALVE) | 1 |
| 2 | X58C RESTRICTION FITTING | 1 |
| 3 | CDHS18 DIFFERENTIAL CONTROL | 1 |
| 4 | X52A-1 ORIFICE PLATE ASSEMBLY | 1 |
| 5 | 100-01 HYTROL (REVERSE FLOW) | 2 |
| 6 | CS3 SOLENOID CONTROL | 2 |
| 7 | CRL PRESSURE RELIEF CONTROL | 2 |

| OPTIONAL FEATURE SUFFIX | ADDED TO CATALOG NUMBER | |
|---|---|---|
| A | X46A FLOW CLEAN STRAINER | 1 |
| B | CK2 COCK (ISOLATION VALVE) | 4 |
| C | CV FLOW CONTROL (CLOSING) | 1 |
| H | SOLENOID DRAIN TO ATMOSPHERE | |
| S | CV FLOW CONTROL (OPENING) | 1 |
| Y | X43 "Y" STRAINER | 1 |

| LTR | DESCRIPTION | BY | DATE |
|---|---|---|---|
| – | RELEASED FOR PRODUCTION (NED 37226) | TLC | 9-16-91 |

CAD REVISION RECORD - DO NOT REVISE MANUALLY

"THIS DRAWING IS THE PROPERTY OF CLA-VAL CO. AND SAME AND COPIES THEREOF, IF ANY, SHALL BE RETURNED TO IT UPON DEMAND. DELIVERY AND DISCLOSURE HEREOF ARE SOLELY UPON CONDITION THAT THE SAME SHALL NOT BE USED, COPIED OR REPRODUCED, NOR SHALL THE SUBJECT HEREOF BE DISCLOSED IN ANY MANNER TO ANYONE FOR ANY PURPOSE EXCEPT AS HEREIN AUTHORIZED, WITHOUT PRIOR WRITTEN APPROVAL OF CLA-VAL CO. THIS DRAWING IS SUBMITTED CONFIDENTIALLY AND MAY NOT BE USED IN THE MANUFACTURE OF ANY MATERIAL OR PRODUCT OTHER THAN SUCH MATERIALS AND PRODUCTS FURNISHED TO CLA-VAL CO. WHETHER OR NOT THE EQUIPMENT OR INFORMATION SHOWN HEREON IS PATENTED OR OTHERWISE PROTECTED, FULL TITLE AND COPYRIGHTS, IF ANY, IN AND TO THIS DRAWING AND/OR INFORMATION DELIVERED OR SUBMITTED ARE FULLY RESERVED BY CLA-VAL CO."

CLA-VAL CO. NEWPORT BEACH, CALIFORNIA

| CATALOG NO. | DRAWING NO. | REV. |
|---|---|---|
| 43-23 | 22272 | - |

TYPE OF VALVE AND MAIN FEATURES

SOLENOID SELECTED RATE OF FLOW CONTROL VALVE
WITH BACK PRESSURE SUSTAINING AND SOLENOID SHUTOFF

| | | |
|---|---|---|
| DESIGN | | |
| DRAW | TLC | 9-16-91 |
| CHK'D | IC | 9-17-91 |
| APV'D | | |

## OPERATING DATA

1. SOLENOID CONTROL FEATURE:
SOLENOID CONTROLS (6A) AND (6B) ARE DIRECT ACTING, 3-WAY SOLENOID CONTROLS THAT CHANGE POSITION WHEN THE COIL IS DE-ENERGIZED OR ENERGIZED. THIS APPLIES OR RELIEVES PRESSURE IN THE COVER CHAMBERS OF AUXILIARY HYTROLS (5A) & (5B), PROVIDING THE OPERATION SHOWN IN THE FOLLOWING TABLE:

43E-23 SERIES

| SOLENOID CONTROL (6A) | | SOLENOID CONTROLS (6B) | | AUXILIARY HYTROL (5A) POSITION | AUXILIARY HYTROL (5B) POSITION | MAIN VALVE (1) POSITION |
|---|---|---|---|---|---|---|
| POSITION | PORTS CONNECTED | POSITION | PORTS CONNECTED | | | |
| ENERGIZED | 1 & 2 | ENERGIZED | 1 & 2 | OPEN | OPEN | OPEN UNDER COMMAND OF CONTROL (3) OR (7)B/7A |
| ENERGIZED | 1 & 2 | DE-ENERGIZED | 1 & 3 | OPEN | CLOSED | OPEN UNDER COMMAND OF CONTROL (7)A |
| DE-ENERGIZED | 1 & 3 | ENERGIZED | 1 & 2 | CLOSED | OPEN | OPEN UNDER COMMAND OF CONTROL (3) OR 7B |
| DE-ENERGIZED | 1 & 3 | DE-ENERGIZED | 1 & 3 | CLOSED | CLOSED | CLOSED |

43D-23 SERIES

| SOLENOID CONTROL (6A) | | SOLENOID CONTROLS (6B) | | AUXILIARY HYTROL (5A) POSITION | AUXILIARY HYTROL (5B) POSITION | MAIN VALVE (1) POSITION |
|---|---|---|---|---|---|---|
| POSITION | PORTS CONNECTED | POSITION | PORTS CONNECTED | | | |
| ENERGIZED | 1 & 3 | ENERGIZED | 1 & 3 | OPEN | OPEN | OPEN UNDER COMMAND OF CONTROL (3) OR (7) |
| ENERGIZED | 1 & 3 | DE-ENERGIZED | 1 & 2 | OPEN | CLOSED | OPEN UNDER COMMAND OF CONTROL (7) |
| DE-ENERGIZED | 1 & 2 | ENERGIZED | 1 & 3 | CLOSED | OPEN | OPEN UNDER COMMAND OF CONTROL (3) |
| DE-ENERGIZED | 1 & 2 | DE-ENERGIZED | 1 & 2 | CLOSED | CLOSED | CLOSED |

LTR | DESCRIPTION | BY | DATE

SEE SHEET 1

THIS DRAWING IS THE PROPERTY OF CLA-VAL CO. AND SAME AND COPIES THEREOF, IF ANY, SHALL BE RETURNED TO IT UPON DEMAND. DELIVERY AND DISCLOSURE HEREOF ARE SOLELY UPON CONDITION THAT THE SAME SHALL NOT BE USED, COPIED OR REPRODUCED, NOR SHALL THE SUBJECT HEREOF BE DISCLOSED IN ANY MANNER TO ANYONE FOR ANY PURPOSE, EXCEPT AS HEREIN AUTHORIZED, WITHOUT PRIOR WRITTEN APPROVAL OF CLA-VAL CO. IF THIS DRAWING IS SUBMITTED CONFIDENTIALLY AND MAY NOT BE USED IN THE MANUFACTURE OF ANY MATERIAL OR PRODUCT OTHER THAN SUCH MATERIALS AND PRODUCTS FURNISHED TO CLA-VAL CO. WHETHER OR NOT THE EQUIPMENT OR INFORMATION SHOWN HEREON IS PATENTED OR OTHERWISE PROTECTED, FULL TITLE AND COPYRIGHTS, IF ANY, IN AND TO THIS DRAWING AND/OR INFORMATION DELIVERED OR SUBMITTED ARE FULLY RESERVED BY CLA-VAL CO.

| CLA-VAL CO. NEWPORT BEACH, CALIFORNIA | CATALOG NO. 43-23 | DRAWING NO. 22272 | REV. - |
|---|---|---|---|

TYPE OF VALVE AND MAIN FEATURES

SOLENOID SELECTED RATE OF FLOW CONTROL VALVE
WITH BACK PRESSURE SUSTAINING AND SOLENOID SHUTOFF

| | | |
|---|---|---|
| DESIGN | | |
| DRAW | TLC | 9-16-91 |
| CHK'D | IC | 9-17-91 |
| APV'D | | |

## OPERATING DATA

II. RATE OF FLOW FEATURE:
PRESSURE DIFFERENTIAL CONTROL (3) IS NORMALLY OPEN AND RESPONDS TO DIFFERENTIAL PRESSURE CHANGES SENSED ACROSS ORIFICE PLATE ASSEMBLY (4). AN INCREASE IN DIFFERENTIAL PRESSURE TENDS TO CLOSE CONTROL (3) AND A DECREASE IN DIFFERENTIAL PRESSURE TENDS TO OPEN CONTROL (3). THIS CAUSES MAIN VALVE COVER PRESSURE TO VARY AND THE MAIN VALVE MODULATES (OPENS AND CLOSES) MAINTAINING A RELATIVELY CONSTANT RATE OF FLOW. PRESSURE DIFFERENTIAL CONTROL (3) ADJUSTMENT: TURN THE ADJUSTING SCREW CLOCKWISE TO INCREASE THE RATE OF FLOW.

III. BACK PRESSURE CONTROL FEATURE:
PRESSURE RELIEF CONTROL (7) IS NORMALLY CLOSED AND RESPONDS TO INLET PRESSURE CHANGES. AN INCREASE IN INLET PRESSURE TENDS TO OPEN CONTROL (7) AND A DECREASE IN INLET PRESSURE TENDS TO CLOSE CONTROL (7). THIS CAUSES MAIN VALVE COVER PRESSURE TO VARY AND THE MAIN VALVE MODULATES (OPENS AND CLOSES), MAINTAINING A RELATIVELY CONSTANT INLET PRESSURE. WHEN INLET PRESSURE IS LOWER THAN THE SET POINT OF CONTROL (7), CONTROL (7) CLOSES. THIS PRESSURIZES THE COVER OF THE MAIN VALVE AND THE MAIN VALVE CLOSES, MAINTAINING THE DESIRED BACK PRESSURE. PRESSURE RELIEF CONTROL (7) ADJUSTMENT: TURN THE ADJUSTING SCREW CLOCKWISE TO INCREASE THE SETTING.

IV. OPTIONAL FEATURE OPERATING DATA:

~~SUFFIX A (FLOW CLEAN STRAINER)~~
~~A SELF CLEANING STRAINER IS INSTALLED IN THE MAIN VALVE INLET BODY BOSS WHICH PROTECTS THE PILOT SYSTEM FROM FOREIGN PARTICLES.~~

SUFFIX B (ISOLATION VALVES)
CK2 COCKS (B1), (B2) AND (B3) ARE USED TO ISOLATE THE PILOT SYSTEM FROM MAIN LINE PRESSURE. THESE VALVES MUST BE OPEN DURING NORMAL OPERATION.

SUFFIX C (CLOSING SPEED CONTROL)
FLOW CONTROL (C) CONTROLS THE CLOSING SPEED OF THE MAIN VALVE. TURN THE ADJUSTING STEM CLOCKWISE TO MAKE THE MAIN VALVE CLOSE SLOWER.

~~SUFFIX H (SOLENOID DRAIN TO ATMOSPHERE)~~
~~SOLENOID DRAIN LINE IS DISCHARGED TO ATMOSPHERE. [SOLENOID DRAIN LINE IS CONNECTED TO THE MAIN VALVE OUTLET BOSS IF SUFFIX (H) IS NOT SPECIFIED.]~~

| LTR | DESCRIPTION | BY | DATE |
|---|---|---|---|
| | SEE SHEET 1 | | |

THIS DRAWING IS THE PROPERTY OF CLA-VAL CO. AND SAME AND COPIES THEREOF, IF ANY, SHALL BE RETURNED TO IT UPON DEMAND. DELIVERY AND DISCLOSURE HEREOF ARE SOLELY UPON CONDITION THAT THE SAME SHALL NOT BE USED, COPIED OR REPRODUCED, NOR SHALL THE SUBJECT HEREOF BE DISCLOSED IN ANY MANNER TO ANYONE FOR ANY PURPOSE, EXCEPT AS HEREIN AUTHORIZED, WITHOUT PRIOR WRITTEN APPROVAL OF CLA-VAL CO. IF THIS DRAWING IS SUBMITTED CONFIDENTIALLY AND MAY NOT BE USED IN THE MANUFACTURE OF ANY MATERIAL OR PRODUCT OTHER THAN SUCH MATERIALS AND PRODUCTS FURNISHED TO CLA-VAL CO. WHETHER OR NOT THE EQUIPMENT OR INFORMATION SHOWN HEREON IS PATENTED OR OTHERWISE PROTECTED, FULL TITLE AND COPYRIGHTS, IF ANY, IN AND TO THIS DRAWING AND/OR INFORMATION DELIVERED OR SUBMITTED ARE FULLY RESERVED BY CLA-VAL CO.

| CLA-VAL CO. NEWPORT BEACH, CALIFORNIA | CATALOG NO. 43-23 | DRAWING NO. 22272 | REV. - |
|---|---|---|---|
| TYPE OF VALVE AND MAIN FEATURES: SOLENOID SELECTED RATE OF FLOW CONTROL VALVE WITH BACK PRESSURE SUSTAINING AND SOLENOID SHUTOFF | | DESIGN | |
| | | DRAW TLC | 9-16-91 |
| | | CHK'D JC | 9-17-91 |
| | | APV'D | |

## OPERATING DATA

SUFFIX S (OPENING SPEED CONTROL)
FLOW CONTROL (S) CONTROLS THE OPENING SPEED OF THE MAIN VALVE. TURN THE ADJUSTING STEM CLOCKWISE TO MAKE THE MAIN VALVE OPEN SLOWER.

SUFFIX Y (Y-STRAINER)
A Y-PATTERN STRAINER IS INSTALLED IN THE PILOT SUPPLY LINE TO PROTECT THE PILOT SYSTEM FROM FOREIGN PARTICLES. THE STRAINER SCREEN MUST BE CLEANED PERIODICALLY.

IV. CHECK LIST FOR PROPER OPERATION:

( ) SYSTEM VALVES OPEN UPSTREAM AND DOWNSTREAM.
( ) AIR REMOVED FROM THE MAIN VALVE COVER AND PILOT SYSTEM AT ALL HIGH POINTS.
( ) CK2 COCKS (B1), (B2) & (B3) OPEN (OPTIONAL FEATURE).
( ) PERIODIC CLEANING OF STRAINER (Y) IS RECOMMENDED (OPTIONAL FEATURE).
( ) ORIFICE PLATE ASSEMBLY (4) ASSEMBLED DOWNSTREAM OF THE MAIN VALVE, BETWEEN 1 AND 5 PIPE DIAMETERS IN DISTANCE (ORIFICE PLATE ASSEMBLY MAY BE ATTACHED TO THE MAIN VALVE OUTLET FLANGE. HOWEVER, BETTER CONTROL IS OBTAINED IF LOCATED 1 TO 5 PIPE DIAMETERS DOWNSTREAM).
( ) FLOW CONTROL VALVES (C) AND (S) OPEN AT LEAST 1/4 TURN (OPTIONAL FEATURE).
( ) CORRECT VOLTAGE TO SOLENOID CONTROLS (6A) & (6B).

| LTR | DESCRIPTION | BY | DATE |
|---|---|---|---|
| SEE SHEET 1 | | | |

THIS DRAWING IS THE PROPERTY OF CLA-VAL CO. AND SAME AND COPIES THEREOF, IF ANY, SHALL BE RETURNED TO IT UPON DEMAND. DELIVERY AND DISCLOSURE HEREOF ARE SOLELY UPON CONDITION THAT THE SAME SHALL NOT BE USED, COPIED OR REPRODUCED, NOR SHALL THE SUBJECT HEREOF BE DISCLOSED IN ANY MANNER TO ANYONE FOR ANY PURPOSE, EXCEPT AS HEREIN AUTHORIZED, WITHOUT PRIOR WRITTEN APPROVAL OF CLA-VAL CO. THIS DRAWING IS SUBMITTED CONFIDENTIALLY AND MAY NOT BE USED IN THE MANUFACTURE OF ANY MATERIAL OR PRODUCT OTHER THAN SUCH MATERIALS AND PRODUCTS FURNISHED TO CLA-VAL CO. WHETHER OR NOT THE EQUIPMENT OR INFORMATION SHOWN HEREON IS PATENTED OR OTHERWISE PROTECTED, FULL TITLE AND COPYRIGHTS, IF ANY, IN AND TO THIS DRAWING AND/OR INFORMATION DELIVERED OR SUBMITTED ARE FULLY RESERVED BY CLA-VAL CO.

Fax: 602-240-6878

GRUNDFOS

**Company name:** Pioneer Equipment Inc.
**Created by:** Eric Lock
**Phone:** 602 437-4312
**Fax:** 602 437-0174
**Date:** -

| Position | Count | Description | Unit price |
|---|---|---|---|
| | 1 | **CR 90-4-1 A-G-A-E KUBE** | On request |

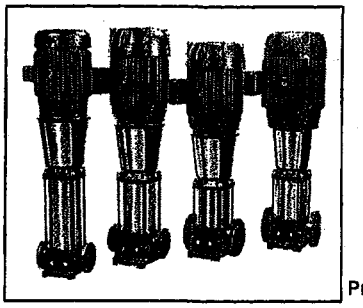

**Product photo could vary from the actual product**

Product No.: .
Vertical, non-self-priming, multistage, in-line, centrifugal pump for installation in pipe systems and mounting on a foundation.

**The pump has the following characteristics:**

- Impellers and intermediate chambers are made of Stainless steel DIN W.-Nr. DIN W.-Nr. 1.4301.
- Pump head and base are made of Cast iron.
- The shaft seal has assembly length according to DIN 24960.
- Power transmission is via cast iron split coupling.
- Pipework connection is via ANSIflanges.

The motor is a 3-phase AC motor.

**Liquid:**

| | |
|---|---|
| Liquid temperature range: | 32 .. 248 °F |
| Liquid temp: | 35.6 °F |

**Technical:**

| | |
|---|---|
| Speed for pump data: | 3550 rpm |
| Rated flow: | |
| Rated head: | |
| Shaft seal: | KUBE |
| Approvals on motor nameplate: | UL Recognized Component, CSA |
| Curve tolerance: | ISO 9906 Annex A |

**Materials:**

| | |
|---|---|
| Pump housing: | Cast iron<br>EN-JS1050<br>ASTM 80-55-06 |
| Impeller: | Stainless steel<br>DIN W.-Nr. 1.4301<br>AISI 304 |

**Installation:**

| | |
|---|---|
| Maximum ambient temperature: | 104 °F |
| Max pressure at stated temperature: | 363 psi / 250 °F |
| Flange standard: | ANSI |
| Pipe connection: | 4" |
| Pressure stage: | 250 Lb. |
| Flange size for motor: | 324TC |

GRUNDFOS

**Company name:** Pioneer Equipment Inc.
**Created by:** Eric Lock
**Phone:** 602 437-4312
**Fax:** 602 437-0174
**Date:** -

| Position | Count | Description | | Unit price |
|---|---|---|---|---|
| | | **Electrical data:** | | |
| | | Motor type: | Baldor, TEFC | |
| | | Rated power - P2: | 60 HP | |
| | | Main frequency: | 60 Hz | |
| | | Rated voltage: | 3 x 230 / 460 V | |
| | | Service factor: | 1,15 | |
| | | Rated current: | 132 / 66 A | |
| | | Starting current: | 812 / 406 A | |
| | | Cos phi - power factor: | 0,88 | |
| | | Rated speed: | 3550 rpm | |
| | | Motor efficiency at full load: | 93,0 % | |
| | | Insulation class (IEC 85): | F | |
| | | **Others:** | | |
| | | Gross weight: | 1100 lb | |
| | | Shipping volume: | 44.5 ft³ | |

GRUNDFOS

**Company name:** Pioneer Equipment Inc.
**Created by:** Eric Lock
**Phone:** 602 437-4312
**Fax:** 602 437-0174
**Date:** -

| Description | Value |
|---|---|
| Product name: | CR 90-4-1 A-G-A-E KUBE |
| Product No.: | |
| EAN: | |
| **Technical:** | |
| Speed for pump data: | 3550 rpm |
| Rated flow: | |
| Rated head: | |
| Impellers: | 4 |
| Impeller reduc.: | 1 |
| Shaft seal: | KUBE |
| Approvals on motor nameplate: | UL Recognized Component, CSA |
| Curve tolerance: | ISO 9906 Annex A |
| Stages: | 4 |
| Pump version: | A |
| Model: | A |
| **Materials:** | |
| Pump housing: | Cast iron |
| | EN-JS1050 |
| | ASTM 80-55-06 |
| Impeller: | Stainless steel |
| | DIN W.-Nr. 1.4301 |
| | AISI 304 |
| Material code: | A |
| Code for rubber: | E |
| **Installation:** | |
| Maximum ambient temperature: | 104 °F |
| Max pressure at stated temperature: | 363 psi / 250 °F |
| Flange standard: | ANSI |
| Connect code: | G |
| Pipe connection: | 4" |
| Pressure stage: | 250 Lb. |
| Flange size for motor: | 324TC |
| **Liquid:** | |
| Liquid temperature range: | 32 .. 248 °F |
| Liquid temp: | 35.6 °F |
| **Electrical data:** | |
| Motor type: | Baldor, TEFC |
| Rated power - P2: | 60 HP |
| KVA code: | G |
| Main frequency: | 60 Hz |
| Rated voltage: | 3 x 230 / 460 V |
| Service factor: | 1,15 |
| Rated current: | 132 / 66 A |
| Starting current: | 812 / 406 A |
| Load current: | 157 / 78.7 A |
| Cos phi - power factor: | 0,88 |
| Rated speed: | 3550 rpm |
| Motor efficiency at full load: | 93,0 % |
| Insulation class (IEC 85): | F |
| Motor protection: | NONE |
| Motor Number: | 85600034 |
| **Others:** | |
| Gross weight: | 1100 lb |
| Shipping volume: | 44.5 ft³ |
| Sales region: | Namreg |

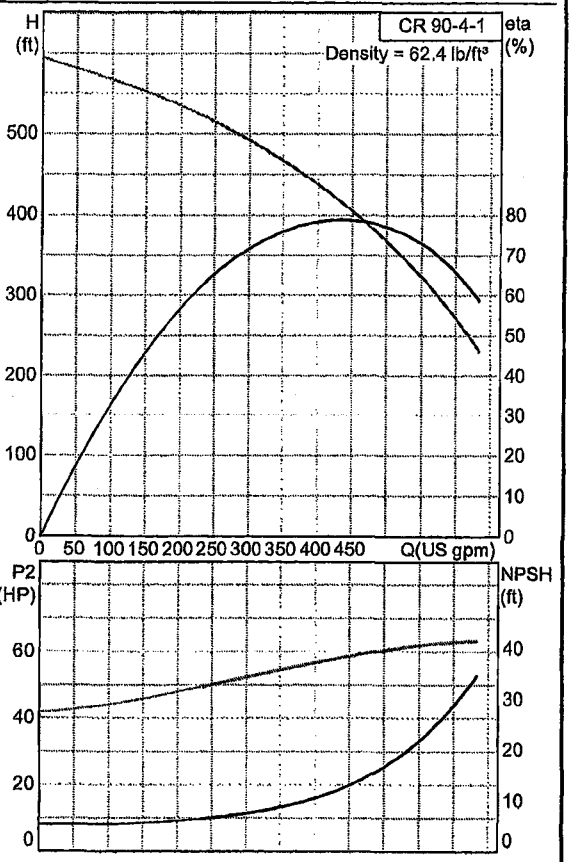

GRUNDFOS

**Company name:** Pioneer Equipment Inc.
**Created by:** Eric Lock
**Phone:** 602 437-4312
**Fax:** 602 437-0174
**Date:** -

## CR 90-4-1 60 Hz

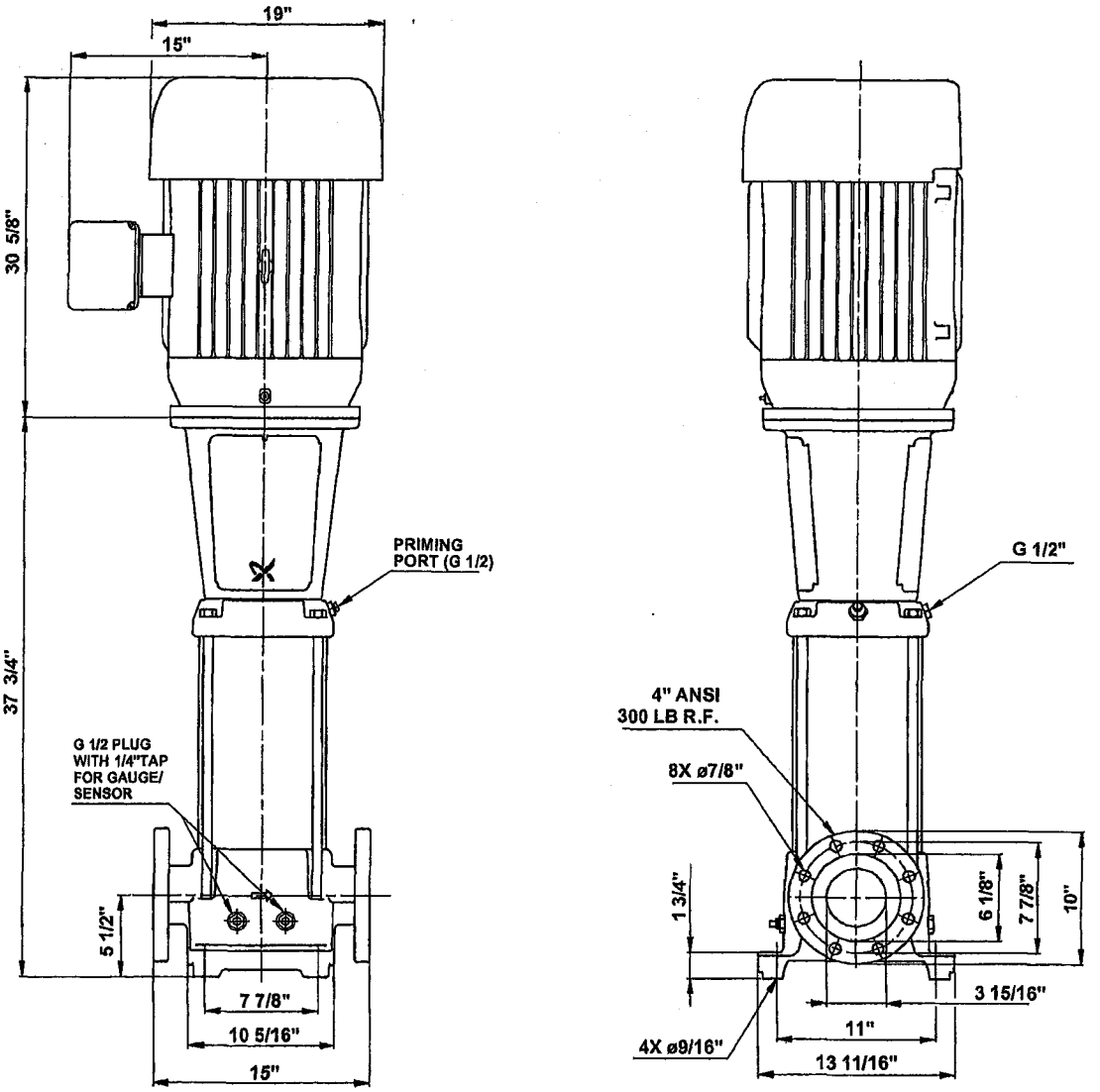


Note! All units are in [mm] unless others are stated.
Disclaimer: This simplified dimensional drawing does not show all details.

# UL Listed Pump Control Panels

Applied Motor Controls' only business is that of building custom and standard Motor Starters and Control Panels for use in water and wastewater applications.

Our products can be found hard at work protecting and controlling pumps in the following applications: Industrial, Municipal, Irrigation and Commercial.

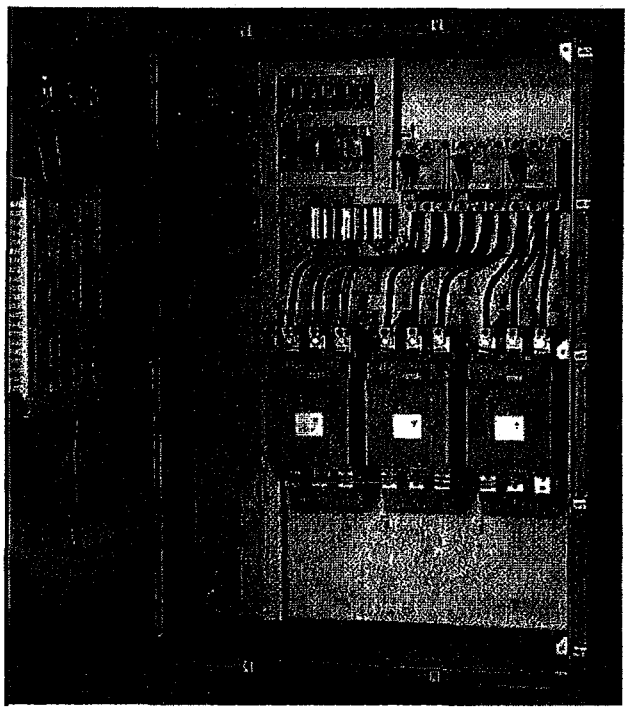

As an independent builder of industrial controls panels, we can offer our customers the capability of integrating power and control products from a wide selection of the leading brands such as: Allen Bradley, Cutler-Hammer, Siemens, and Square-D.

All of our products are UL 508 Listed Industrial Controls and built to the highest and latest standards of quality, reliability, and safety.

***Built Right and On-Time...Every Time!***

AMC
APPLIED MOTOR CONTROLS

**Product Description**

An Across-the-Line pump control panel is a "combination starter" which combines a full voltage magnetic starter along with a fusible switch or a circuit breaker.

Our pump panels offer the following protection:

- Protection against short circuit faults
- Means of disconnecting the motors from the supply lines
- Overload protection

Across-the-Line - or Full Voltage - starters are designed to connect motors directly to the full motor voltage and provide the maximum torque in those applications where inrush current restrictions do not prevent their use.

Since the current drawn from the power lines by a motor started across-the-line is typically 600% of normal full load amps (running current), power companies are increasingly limiting the use of full voltage starters to specific HP ranges.

In addition to high starting currents, the motor produces a starting torque which is higher than full load torque; thus, motors started across-the-line must be capable of withstanding the impact of the starting torque.

Across-the-Line starters provide the lowest initial cost and the lowest maintenance requirements.

Applied Motor Controls keeps a vast selection of across-the-line pump control panels in stock for fast delivery and quick modifications to meet your most demanding needs.

**Standard Features**

- Type 3R enclosure for use outdoors. Rain and sleet resistant. Fully welded steel construction with hinged door and provisions for padlocking
- Gray powder-coating finish suitable for use in harsh environments
- Choice of disconnect style: ~~Fusible Switch,~~ or Circuit Breaker
- Fusible Disconnect Switches include factory-installed J-Class time-delay dual-element current-limiting power fuses
- Through the door disconnect operator with provisions for padlocking in the off position
- Full Voltage Magnetic Motor Starter with choice of coil voltage
- Solid State Class 10 Overload Relay with adjustable trip point and inherent protection against loss of phase
- Suitable for use with submersible motors
- Fast-Acting Supplementary Fuses for protection of internal and external control circuit wiring against damage due to short circuits and ground faults
- Hand-Off-Auto Selector Switch
- Terminal Block for ease of wiring to and from a remote control device
- UL 508 Listed Industrial Controls
- Suitable for use as Service Equipment

***Built Right and On-Time...Every Time!***

# Technical Information

## Sample Schematics

### Across-the-Line Pump Panel

Fusible Switch Type with Control Circuit Transformer and H/O/A Switch

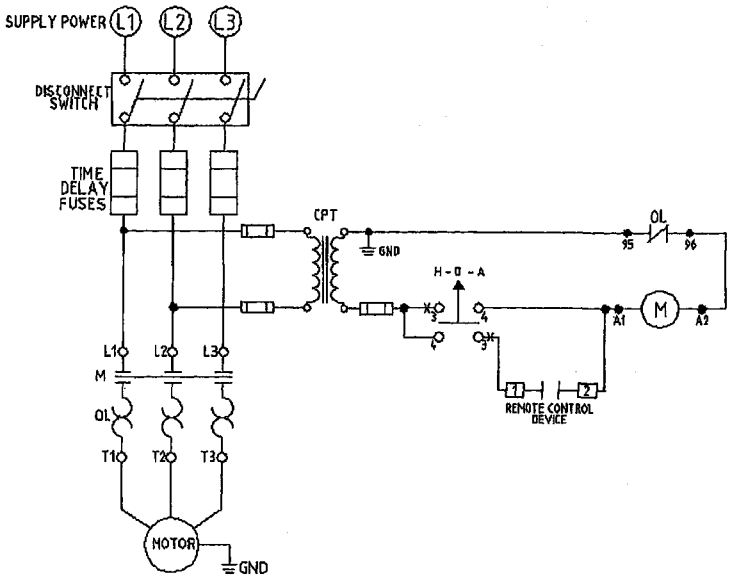


### Standard Duplex Booster Pump Panel

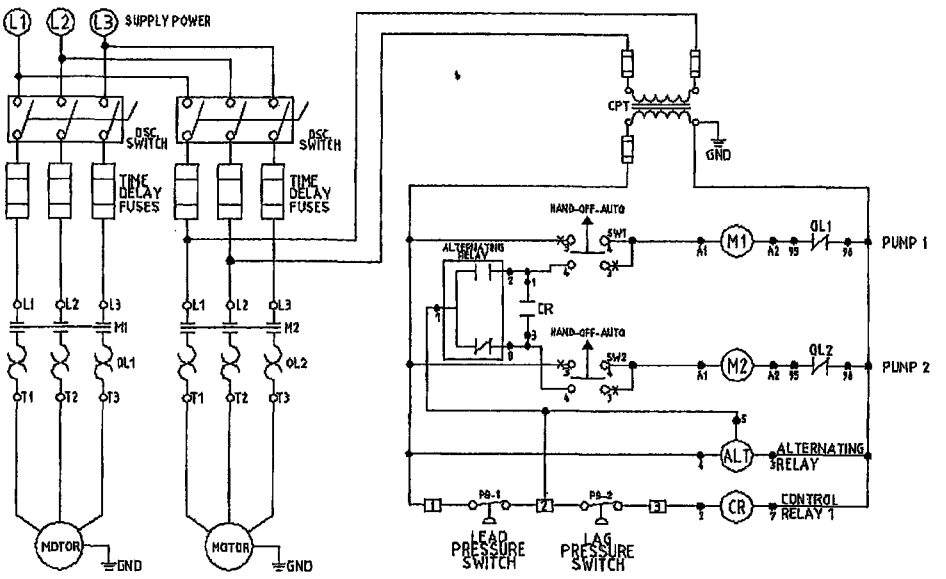

# Factory-Installed Modifications

Possible addons ↓

| Description | Option Code | |
|---|---|---|
| **Control Circuit Transformer** With Primary & Secondary Protective Fuses | | |
| 208/240/480 - 120V @ 50VA | CT50 | $ 350 |
| 208/240/480 - 120V @ 100VA | CT100 | $ 370 |
| 208/240/480 - 120V @ 150VA | CT150 | $ 400 |
| 208/240/480 - 120V @ 250VA | CT250 | $ 460 |
| 208/240/480 - 120V @ 500VA | CT500 | $ 610 |
| | | |
| **Interposing Relay** For separate control voltage input ( ** Specify required Voltage when ordering) | IR-** | $ 230 |
| | | |
| **Time Delay Relay** ( ** Specify required function when Ordering) Note: This option requires a control circuit transformer | TD-** | $ 450 |
| | | |
| **Programmable Time Clock** 24 Hour, 7 Day function Note: This option requires a control circuit transformer | TC | $ 450 |
| | | |
| **Liquid Level Relay** ( ** Specify required function when ordering) Note: This option requires a control circuit transformer | LLR-** | $ 700 |
| | | |
| **Indicating Light** RUN/GRN STOP/RED Specify Function and Lens color when ordering (ie: run/red) | PL-** | $ 200 |
| | | |
| **Electronic Programmable Overload Relay** (Model Motor Saver 777) Protects 3 Phase Motors against: Overload, Underload, High Voltage, Low Voltage, Loss of Phase, Phase Reversal, Phase & Voltage, Unbalance, Rapid Cycling, and Ground Fault | | |
| Motor Full Load Amps: 2 - 90 Amps | DEOL | $ 1,560 |
| Motor Full Load Amps: 91 - 600 Amps (includes current transformers) | CTEOL | $ 2,190 |

# Factory-Installed Modifications

Possible adders

| Description | Option Code | |
|---|---|---|
| **Phase & Voltage Monitor**<br>Protects Three Phase motors against: High Voltage, Low Voltage, Phase Reversal, Loss of Phase, and Unbalance | PMR | $ 750 |
| | | |
| **Secondary Surge Arrester**<br>Offers a degree of protection against damage due to lightning strikes | LA | $ 360 |
| | | |
| **Surge Capacitor**<br>Controls surges which are too light or fast for a surge arrester | SC | $ 360 |
| | | |
| **Low Suction Cut-Off**<br>Option includes a Terminal Block for remote pressure switch, a Red Indicating Light, and a Timing Relay to prevent nuisance tripping<br>Note: This option requires a Control Circuit Transformer | LSC | $ 750 |
| | | |
| **High Pressure Shutdown**<br>Option includes a Terminal Block for remote pressure switch, a Red Indicating Light, and manual Reset Pushbutton<br>Note: This option requires a Control Circuit Transformer | HPS | $ 610 |
| | | |
| **Elapsed Hour Meter**<br>Records motor running time in Hours, Non Reset, 99999.9 Hours<br>Note: This option requires a control circuit transformer | ETM | $ 300 |
| | | |
| **NEMA Type 4 Steel Enclosure**<br>Water & Dust-Tight, Outdoors | N4 | Call for Prices |
| | | |
| **NEMA Type 4X Stainless Steel Enclosure**<br>Water & Dust-Tight, Outdoors, Corrosion-Resistant | N4XS | Call for Prices |
| | | |
| **NEMA Type 4X Fiberglass-Reinforced Polyester Enclosure**<br>Water & Dust-Tight, Outdoors, Corrosion-Resistant | N4XF | Call for Prices |
| | | |
| **Starter Auxiliary Contacts**<br>1 N/O & 1N/C contacts interlocked with starter<br>Specify if contacts are to be "dry" or "powered" | AUX | $ 250 |

PMC71-AACIP6RDAAA

Level | Pressure | Flow | Temperature | Liquid Analysis | Registration | Systems Components | Services | Solutions

Technical Information

# Cerabar S PMC71, PMP71, PMP75

## Process pressure measurement
## Pressure transmitter with ceramic and metal sensors
## Overload-resistant and function-monitored; Communication via HART, PROFIBUS PA or FOUNDATION Fieldbus

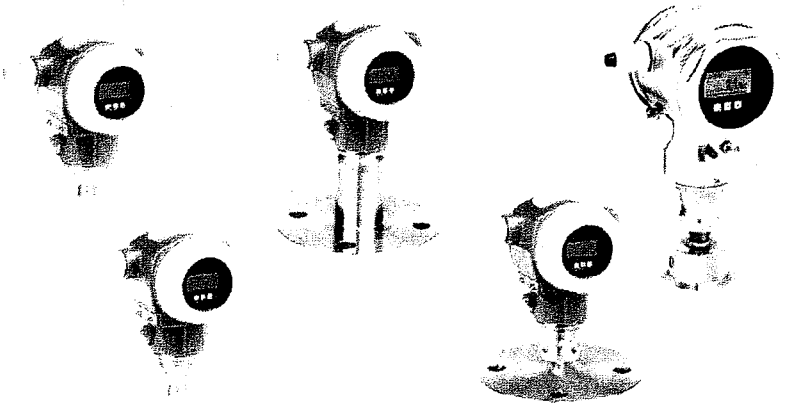

**Application**

The Cerabar S pressure transmitter is used for the following measuring tasks:
- Absolute pressure and gauge pressure in gases, steams or liquids in all areas of process engineering and process measurement technology
- Level, volume or mass measurement in liquids
- High process temperature
  - without diaphragm seals up to 150°C (302°F)
  - with typical diaphragm seals up to 400°C (752°F)
- High pressure up to 700 bar (10,150 psi)
- International usage thanks to a wide range of approvals

**Your benefits**

- Very good reproducibility and long-term stability
- High reference accuracy: up to ±0.075%, as PLATINUM version: ±0.05%
- Turn down 100:1, higher on request
- Used for process pressure monitoring up to SIL3, certified according to IEC 61508 by TÜV SÜD
- HistoROM®/M-DAT memory module
- Function-monitored from the measuring cell to the electronics
- Continuous modularity for differential pressure, hydrostatic and pressure (Deltabar S – Deltapilot S – Cerabar S), e.g.
  - replaceable display
  - universal electronics
- Quick commissioning thanks to quick setup menu
- Easy and safe menu-guided operation on-site, via 4 to 20 mA with HART, via PROFIBUS PA or via FOUNDATION Fieldbus
- Extensive diagnostic functions
- Device versions in conformity with ASME-BPE

TI383P/24/ae/12.09

Endress+Hauser

People for Process Automation

# Ordering information

**PMC71**

This overview does not mark options which are mutually exclusive.

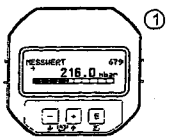


**10 Approval:**

| | |
|---|---|
| A | For non-hazardous areas |
| E | Combi-certification<br>ATEX II Ex ia + FM IS + CSA IS<br>ATEX II 1/2G Ex ia IIC T6 +<br>FM/CSA IS Class I, II, III Division 1 Group A - G |
| 1 | ATEX II 1/2 G Ex ia IIC T6 |
| 6 | ATEX II 1/2 G Ex ia IIC T6, overspill protection WHG |
| 2 | ATEX II 1/2 D Ex ia IIC T6 |
| 8 | ATEX II 1 GD Ex ia IIC T6 |
| 3 | ATEX II 1/2 GD Ex ia IIC T6 |
| 5 | ATEX II 2 G Ex d[ia] IIC T6 |
| 7 | ATEX II 3 G Ex nA II T6 |
| S | FM IS, Class I, II, III Division 1, Groups A – G; NI Class I Division 2, Groups A – D; AEx ia |
| T | FM XP, Class I Division 1, Groups A – D; AEx d |
| R | FM NI, Class I, Division 2, Groups A – D |
| U | CSA IS, Class I, II, III Division 1, Groups A – G; Class I Division 2, Groups A – D, Ex ia |
| V | CSA XP, Class I Division 1, Groups B – D; Ex d |
| G | NEPSI Ex d[ia] IIC T4/T6 |
| H | NEPSI Ex ia IIC T6 |
| L | TIIS Ex d (ia) IIC T6 |
| M | TIIS Ex d (ia) IIC T4 |
| I | IECEx Zone 0/1 Ex ia IIC T6 |

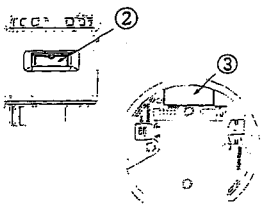

**20 Output; Operation:**

| | |
|---|---|
| A | 4...20 mA HART, operation outside, LCD (→ see Fig. ①, ②) |
| B | 4...20 mA HART, operation inside, LCD (→ see Fig. ①, ③) |
| C | 4...20 mA HART, operation inside (→ see Fig.③) |
| M | PROFIBUS PA, operation outside, LCD (→ see Fig. ①, ②) |
| N | PROFIBUS PA, operation inside, LCD (→ see Fig. ①, ③) |
| O | PROFIBUS PA, operation inside (→ see Fig. ③) |
| P | FOUNDATION Fieldbus, operation outside, LCD (→ see Fig. ①, ③) |
| Q | FOUNDATION Fieldbus, operation inside, LCD (→ see Fig. ①, ③) |
| R | FOUNDATION Fieldbus, operation inside (→ see Fig. ③) |

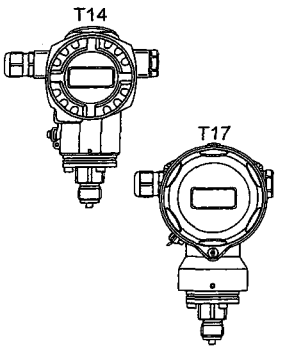


**30 Housing; Cable entry; Protection:**

| | |
|---|---|
| A | Aluminum T14 housing, optional display on the side, IP 66/67/NEMA 4X/ 6P, Gland M 20x1.5 |
| B | Aluminum T14 housing, optional display on the side, IP 66/67/NEMA 4X/ 6P, Thread G 1/2 |
| C | Aluminum T14 housing, optional display on the side, IP 66/67/NEMA 4X/ 6P, Thread 1/2 NPT |
| D | Aluminum T14 housing, optional display on the side, IP 66/67/NEMA 4X/ 6P, M 12x1 PA plug |
| E | Aluminum T14 housing, optional display on the side, IP 66/67/NEMA 4X/ 6P, 7/8" FF plug |
| F | Aluminum T14 housing, optional display on the side, IP 65/NEMA 4X, Hand 7D plug 90° |
| 1 | AISI 316L T14 housing, optional display on the side, IP 66/67/NEMA 4X/ 6P, Gland M 20x1.5 |
| 2 | AISI 316L T14 housing, optional display on the side, IP 66/67/NEMA 4X/ 6P, Thread G 1/2 |
| 3 | AISI 316L T14 housing, optional display on the side, IP 66/67/NEMA 4X/ 6P, Thread 1/2 NPT |
| 4 | AISI 316L T14 housing, optional display on the side, IP 66/67/NEMA 4X/ 6P, M 12x1 PA plug |
| 5 | AISI 316L T14 housing, optional display on the side, IP 66/67/NEMA 4X/ 6P, 7/8" FF plug |
| 6 | AISI 316L T14 housing, optional display on the side, IP 65/NEMA 4X, Hand 7D plug 90° |
| R | T17 316L Hygiene IP66/68 NEMA6P; M20 gland, T17 = side cover |
| S | T17 316L Hygiene IP66/68 NEMA6P; G1/2 thread, T17 = side cover |
| T | T17 316L Hygiene IP66/68 NEMA6P; NPT1/2 thread, T17 = side cover |
| U | T17 316L Hygiene IP66/68 NEMA6P; M12 plug, T17 = side cover |
| V | T17 316L Hygiene IP66/68 NEMA6P; 7/8" plug, T17 = side cover |

**40 Sensor range; Sensor overload limit (= OPL):**

**Sensors for gauge pressure**

Measurement limits: –100 % (–1 bar)...+100 % of sensor nominal range

| | Sensor nominal value (URL) | OPL (Over pressure limit) |
|---|---|---|
| 1C | 100 mbar/10 kPa/1.5 psi g | 4 bar/400 kPa/60 psi g |
| 1E | 250 mbar/25 kPa/3.75 psi g | 5 bar/500 kPa/75 psi g |
| 1F | 400 mbar/40 kPa/6 psi g | 8 bar/800 kPa/120 psi g |
| 1H | 1 bar/100 kPa/15 psi g | 10 bar/1 MPa/150 psi g |
| 1K | 2 bar/200 kPa/30 psi g | 18 bar/1.8 MPa/270 psi g |
| 1M | 4 bar/400 kPa/60 psi g | 25 bar/2.5 MPa/375 psi g |
| 1P | 10 bar/1 MPa/150 psi g | 40 bar/4 MPa/600 psi g |
| 1S | 40 bar/4 MPa/600 psi g | 60 bar/6 MPa/900 psi g |

**40 Sensor range; Sensor overload limit (= OPL):**

| | Sensors for absolute pressure<br>Sensor nominal value (URL) | OPL (Over pressure limit) |
|---|---|---|
| 2C | 100 mbar/10 kPa/1.5 psi abs | 4 bar/400 kPa/60 psi abs |
| 2E | 250 mbar/25 kPa/3.75 psi abs | 5 bar/500 kPa/75 psi abs |
| 2F | 400 mbar/40 kPa/6 psi abs | 8 bar/800 kPa/120 psi abs |
| 2H | 1 bar/100 kPa/15 psi abs | 10 bar/1 MPa/150 psi abs |
| 2K | 2 bar/200 kPa/30 psi abs | 18 bar/1.8 MPa/270 psi abs |
| 2M | 4 bar/400 kPa/60 psi abs | 25 bar/2.5 MPa/375 psi abs |
| 2P | 10 bar/1 MPa/150 psi abs | 40 bar/4 MPa/600 psi abs |
| 2S | *40 bar/4 MPa/600 psi abs* | 60 bar/6 MPa/900 psi abs |

**50 Calibration; Unit:**

| | |
|---|---|
| 1 | Sensor range; mbar/bar |
| 2 | Sensor range; kPa/MPa |
| 3 | Sensor range; $mmH_2O/mH_2O$ |
| 4 | Sensor range; $inH_2O/ftH_2O$ |
| 6 | Sensor range; psi |
| B | *Customised; see additional specification* |
| C | Factory certificate 5-point; see additional specification |
| D | DKD certificate; see additional specification |
| K | Platinum; see additional specification |
| L | Platinum and factory certificate 5-point; see additional specification |
| M | Platinum and DKD certificate; see additional specification |

**70 Process connection; Material:**

| | |
|---|---|
| | **Thread, internal process isolating diaphragm** |
| GA | Thread ISO 228 G 1/2 A EN 837, AISI 316L (CRN) |
| GB | Thread ISO 228 G 1/2 A EN 837, Alloy C (CRN) |
| GC | Thread ISO 228 G 1/2 A EN 837, Monel |
| GD | Thread ISO 228 G 1/2 A EN 837, PVDF<br>(max. 15 bar/225 psi, –10...+60°C/+14...+140°F) |
| GE | Thread ISO 228 G 1/2 A G 1/4 (female), AISI 316L (CRN) |
| GF | Thread ISO 228 G 1/2 A G 1/4 (female), Alloy C (CRN) |
| GG | Thread ISO 228 G 1/2 A G 1/4 (female), Monel |
| GH | Thread ISO 228 G 1/2 A hole 11.4 mm, AISI 316L (CRN) |
| GJ | Thread ISO 228 G 1/2 A hole 11.4 mm, Alloy C (CRN) |
| GK | Thread ISO 228 G 1/2 A hole 11.4 mm, Monel |
| RA | Thread ANSI 1/2 MNPT 1/4 FNPT, AISI 316L (CRN) |
| RB | Thread ANSI 1/2 MNPT 1/4 FNPT, Alloy C (CRN) |
| RC | Thread ANSI 1/2 MNPT 1/4 FNPT, Monel |
| RD | Thread ANSI 1/2 MNPT, hole 11.4 mm, AISI 316L (CRN) |
| *RE* | *Thread ANSI 1/2 MNPT, hole 11.4 mm, Alloy C (CRN)* |
| RF | Thread ANSI 1/2 MNPT, hole 11.4 mm, Monel |
| RG | Thread ANSI 1/2 MNPT hole 3 mm, PVDF<br>(max. 15 bar/225 psi, –10...+60°C/+14...+140°F) |
| RH | Thread ANSI 1/2 FNPT, AISI 316L (CRN) |
| RJ | Thread ANSI 1/2 FNPT, Alloy C (CRN) |
| RK | Thread ANSI 1/2 FNPT, Monel |
| GL | Thread JIS B0202 G 1/2 (male), AISI 316L |
| *RL* | *Thread JIS B0203 R 1/2 (male), AISI 316L* |
| GP | Thread DIN 13 M 20x1.5 EN 837 hole 3 mm, AISI 316L |
| GQ | Thread DIN 13 M 20x1.5 EN 837 hole 3 mm, Alloy C |
| | For continuation "Process connection, Material" see next page. |
| | **Thread, flush-mounted process isolating diaphragm** |
| 1G | Thread ISO 228 G 1 1/2 A, AISI 316L |
| 1H | Thread ISO 228 G 1 1/2 A, Alloy C |
| 1J | Thread ISO 228 G 1 1/2 A, Monel |
| 1K | Thread ISO 228 G 2 A, AISI 316L |
| 1L | Thread ISO 228 G 2 A, Alloy C |
| 1M | Thread ISO 228 G 2 A, Monel |
| 2D | Thread ANSI 1 1/2 MNPT, AISI 316L (CRN) |
| 2E | Thread ANSI 1 1/2 MNPT, Alloy C (CRN) |
| 2F | Thread ANSI 1 1/2 MNPT, Monel |
| 2G | Thread ANSI 2 MNPT, AISI 316L (CRN) |
| 2H | Thread ANSI 2 MNPT, Alloy C (CRN) |
| 2J | Thread ANSI 2 MNPT, Monel |
| 1R | Thread DIN 13 M 44x1.25, AISI 316L |
| 1S | Thread DIN 13 M 44x1.25, Alloy C |
| | **EN/DIN flanges, flush-mounted process isolating diaphragm** |

| | | |
|---|---|---|
| **70** | | **Process connection; Material:** |
| | CP | DN 32 PN 10-40 B1, AISI 316L |
| | CQ | DN 40 PN 10-40 B1, AISI 316L |
| | BR | DN 50 PN 10-16 A, PVDF (max. 15 bar/150 psi, –10...+60°C/+14...+140°F) |
| | B3 | DN 50 PN 10-40 B1, AISI 316L |
| | C3 | DN 50 PN 63 B2, AISI 316L |
| | BS | DN 80 PN 10-16 A, PVDF (max. 15 bar/150 psi, –10...+60°C/+14...+140°F) |
| | B4 | DN 80 PN 10-40 B1, AISI 316L |
| | | **ANSI flanges, flush-mounted process isolating diaphragm** |
| | AE | 1 1/2" 150 lbs RF, AISI 316/316L (CRN) |
| | AQ | 1 1/2" 300 lbs RF, AISI 316/316L (CRN) |
| | AF | 2" 150 lbs RF, AISI 316/316L (CRN) |
| | JR | 2" 150 lbs RF, AISI 316L with ECTFE-coating |
| | A3 | 2" 150 lbs RF, PVDF (max. 15 bar/225 psi, –10...+60°C/+14...+140°F) |
| | AR | 2" 300 lbs RF, AISI 316/316L (CRN) |
| | AG | 3" 150 lbs RF, AISI 316/316L (CRN) |
| | JS | 3" 150 lbs RF, AISI 316L with ECTFE-coating |
| | A4 | 3" 150 lbs RF, PVDF (max. 15 bar/225 psi, –10...+60°C/+14...+140°F) |
| | AS | 3" 300 lbs RF, AISI 316/316L (CRN) |
| | AH | 4" 150 lbs RF, AISI 316/316L (CRN) |
| | JT | 4" 150 lbs RF, AISI 316L with ECTFE-coating |
| | AT | 4" 300 lbs RF, AISI 316/316L (CRN) |
| | | **JIS flanges, flush-mounted process isolating diaphragm** |
| | KF | 10K 50A RF, AISI 316L |
| | KL | 10K 80A RF, AISI 316L |
| | KH | 10K 100A RF, AISI 316L |
| | | **Hygienic connections, flush-mounted process isolating diaphragm** |
| | MP | DIN 11851 DN 40 PN 25, AISI 316L, EHEDG, 3A with HNBR/EPDM seal (CRN) |
| | MR | DIN 11851 DN 50 PN 25, AISI 316L, EHEDG, 3A with HNBR/EPDM seal (CRN) |
| | TD | Tri-Clamp ISO 2852 DN 51 (2"), AISI 316L, EHEDG, 3A with HNBR/EPDM seal (CRN) |
| | TF | Tri-Clamp ISO 2852 DN 76.1 (3"), AISI 316L, EHEDG, 3A with HNBR/EPDM seal (CRN) |
| | TK | DRD DN50 (65 mm), PN 25, AISI 316L, EHEDG, 3A with HNBR/EPDM seal |
| | TR | Varivent type N for tubes DN 40 – DN 162, PN 40, AISI 316L, EHEDG, 3A with HNBR/EPDM seal (CRN) |
| **80** | | **Seal:** |
| | A | FKM Viton |
| | B | EPDM |
| | D | Kalrez |
| | E | Chemraz |
| | F | NBR/3A: HNBR (FDA) |
| | L | FKM Viton, cleaned for silicone-free service |
| | M | Kalrez, cleaned for silicone-free service |
| | 1 | FKM Viton, cleaned from oil and greace |
| | 2 | FKM Viton, oxygen service<br>Note application limits pressure/temp. |
| **100** | | **Additional option 1:** |
| | A | not selected |
| | E | SIL/IEC 61508 Declaration of conformity |
| | T | High temperature version |
| | B | Material test certificate for wetted parts, inspection certificate as per EN 10204 3.1 acc. to specification 52005759 |
| | M | Overvoltage protection |
| | J | Software adjustment, see additional spec. |
| | N | HistoROM/M-DAT |
| | S | GL (German Lloyd)/ABS marine certificate |
| | V | Mounting on shut-off valve from above |
| | 2 | Test report acc. to EN 10204 2.2 |
| | 3 | Routine test with certificate, inspection certificate as per EN 10204 3.1 |
| | 4 | Overpressure test with certificate, inspection certificate as per EN 10204 3.1 |
| **110** | | **Additional option 2:** |
| | A | not selected |
| | E | SIL/IEC 61508 Declaration of conformity |
| | G | Separate housing, cable length see additional spec. + mounting bracket, wall/pipe, 316L |
| | T | High temperature version |
| | M | Overvoltage protection |
| | J | Software adjustment, see additional spec. |

| | | |
|---|---|---|
| **110** | | **Additional option 2:** |
| | N | HistoROM/M-DAT |
| | S | GL (German Lloyd)/ABS marine certificate |
| | U | Mounting bracket for wall/pipe, AISI 304 |
| | 2 | Test report acc. to EN 10204 2.2 |
| | 3 | Routine test with certificate, inspection certificate as per EN 10204 3.1 |
| | 4 | Overpressure test with certificate, inspection certificate as per EN 10204 3.1 |
| | 5 | Helium leak test EN 1518 with test certificate, inspection certificate as per EN 10204 3.1 |
| **995** | | **Marking:** |
| | 1 | Tagging (TAG), see additional spec. |
| | 2 | Bus adress, see additional spec. |
| | | |
| PMC71 | | order code |

MOORE INDUSTRIES

# SPA

Site-Programmable Current/Voltage, RTD/Thermocouple, and HART® Alarms

April 1999

Data Sheet 9.55

## Description

Moore Industries' family of versatile 4-wire (line-powered) SPA Site-Programmable Alarms accepts a direct process variable input from traditional or smart transmitters, temperature sensors, and a wide array of other monitoring and control instruments:

- HART® Smart Transmitters and Instruments (temperature, level, pressure, flow, and multivariable)
- Current and Voltage Signals (0-20mA, 4-20mA, 10-50mA, 1-5V, 0-10V, etc.)
- 23 RTD Types (2-, 3-, and 4-wire; Pt, Cu and Ni; 10 to 1000Ω)
- 8 Thermocouple Types (J, K, E, T, R, S, B, and N)
- Resistance and Potentiometer Devices (0 to 4000Ω)
- Direct Millivolt Sources (-10 to 120mV)

Versatile analog/digital hybrids, available SPA models provide one, two, three, or up to four alarm relay outputs if a process variable falls outside of user-set high and/or low limits. Connect the SPA to a warning light, annunciator, bell, buzzer, or shutdown system, and your process is protected by a simple, highly reliable, independent warning and/or shutdown strategy.


| Table of Contents | Page |
|---|---|
| Family Overview of SPA Site-Programmable Functions and Special Features | 2-3 |
| HART Digital Protocol Input Model (HART) | 4-7 |
| Current and Voltage Input Model (HLPRG) | 8-9 |
| RTD, Thermocouple, Ohm (Resistance/Potentiometer), and Millivolt Input Model (TPRG) | 10-13 |
| Housing and Installation Dimensions (All Models) | 14 |
| Terminal Designations and Hookups (All Models) | 15 |
| Typical SPA Universal Alarm Solutions | 16 |



All product names are trademarks of their respective companies.
HART is a registered trademark of the HART Communication Foundation.


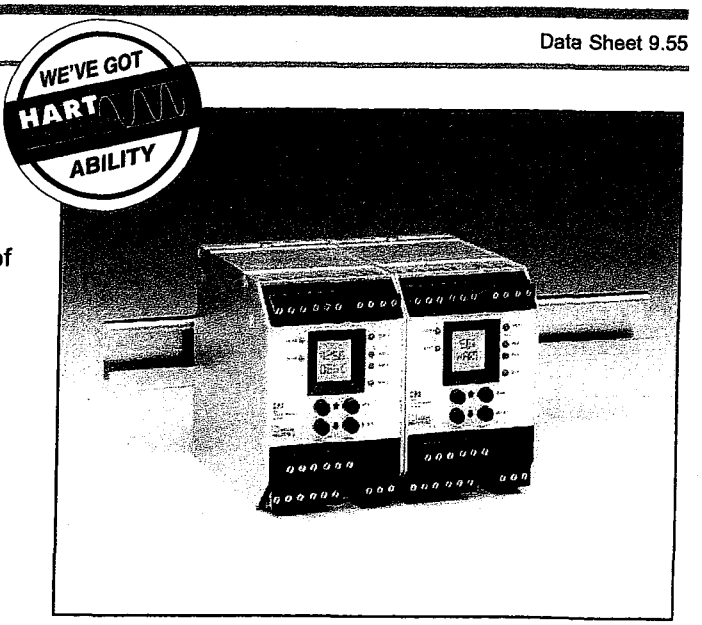


*The SPA Site-Programmable Alarm features a metal, RFI resistant housing that snaps onto standard rails.*

## Features

- **Universal plant standard.** There's no need to stock dozens of different fixed range alarm trips as spares. Just three models handle most alarm applications you will encounter.
- **Site-programmable with on-board controls.** Your fingers are the only tools you need to get our SPA up and running fast. All operating parameters configure using on-board controls.
- **Real-time process readout.** A front panel indicator provides menu prompts during configuration, and then displays the real-time process variable in user-selectable engineering units.
- **Alarm trip and transmitter combination.** The SPA's analog output option reduces instrument costs and installation time when both transmitter and alarm functions are needed at the same location (see Page 3).

**Certifications**

**Canadian Standards Association (CSA)**
**General (Ordinary) Location* – *NRTL/C***

**Factory Mutual Research Corporation (FMRC)**
**Non-Incendive/Hazardous Locations:** Class I, Division 2, Groups A, B, C, D. [HLPRG & TPRG]
**Suitable For:** Class II, Division 2; Class III, Division 1, 2

**CE Conformant** – EMC Directive 89/336/EEC EN 50081-1, 1993 and EN 50082-1, 1995


©1999 Moore Industries-International, Inc.

# SPA

Site-Programmable Current/Voltage,
RTD/Thermocouple, and HART® Alarms

## On-Site Programming

Input type, range, trip points, and other frequently changed operating parameters configure quickly and easily from the front panel keypad. Simple prompts on the SPA's LCD guide you through a "plain-English" selection menu. Available programmable functions* include:

- Input type and range
- Zero and full scale
- Alarm trip points, high or low alarm, deadband, time delay, latching or non-latching
- Engineering unit readout (V, mA, %, °C, °F, psig, mV, ohms, custom, or blank)
- Position of LCD decimal point for custom engineering unit representation
- HART® operating parameters
- Upscale or downscale drive on sensor failure
- T/C reference junction compensation (on/off)
- Standard and custom linearization curves
- Differential or averaging of RTD inputs
- Current source or sink
- Security password protection

* Some of the programmable functions listed are not applicable to, or available on, all models.

***Figure 1.*** *The SPA family delivers versatile input/output choices.*

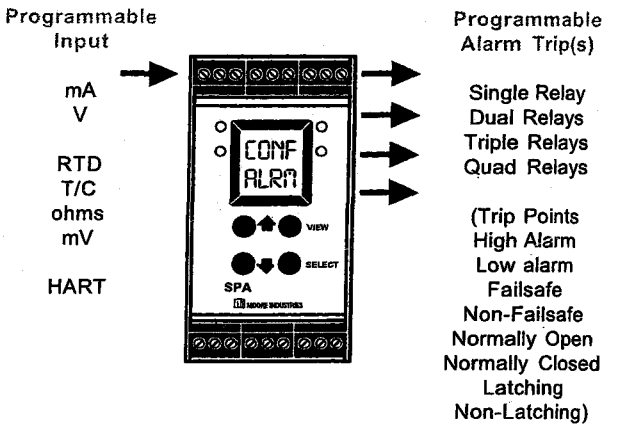


### Quick Ranging Calibration

The SPA features our revolutionary Quick Ranging Calibration method. Using the push buttons (instead of potentiometers which can drift) and the integral display, precise zero and span settings can be made in seconds. All you have to do is scroll to the zero or span value you want. Once the correct value is displayed on the LCD, another push of a button locks the value into the SPA's memory.

### Security Password Protection

A security password system can be used to protect setup data from unauthorized or inadvertant changes. Once the password protection feature is activated, the SPA's operating parameters cannot be altered unless the correct password has been entered on the keypad.

***Figure 2.*** *Menu prompts on the front panel LCD guide you through setup and viewing options.*

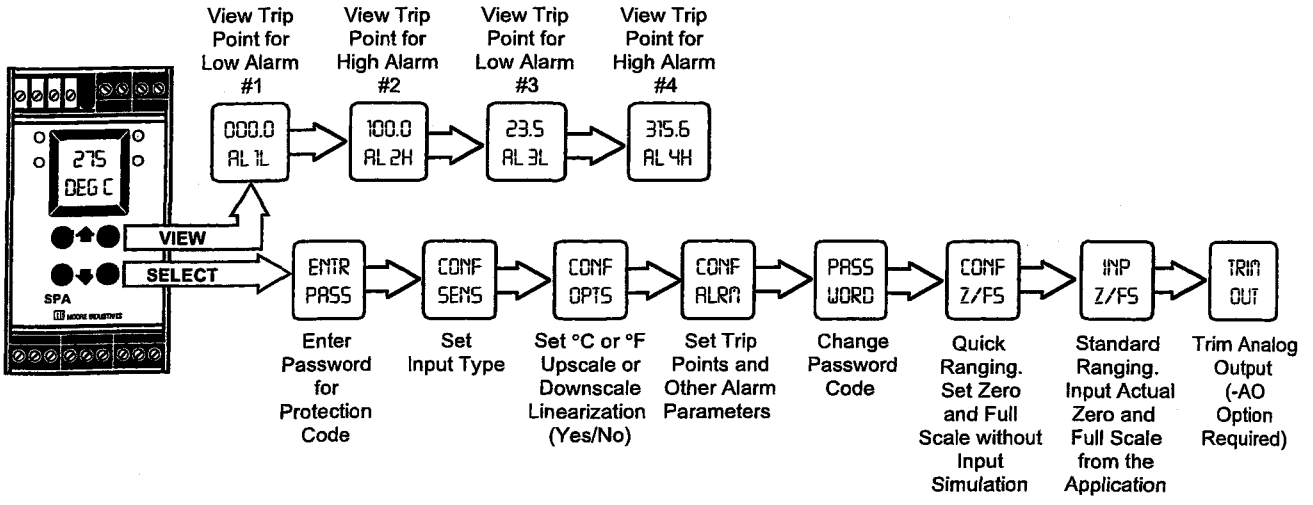

# SPA

Site-Programmable Current/Voltage, RTD/Thermocouple, and HART® Alarms

## Current and Voltage Input Model

The SPA that accepts current and voltage inputs (HLPRG) connects in series on a process loop, and accepts a direct signal from a transmitter, transducer, or other similar process instrument. It provides one, two, three, or four relay outputs if user-selectable high and/or low limits are exceeded.

### Analog Output Option

With the -AO option the SPA provides an isolated and scaleable analog output. The analog signal is proportional to the monitored process variable, and is ideal for sending to a DCS, PLC, indicator, recorder, or similar readout device.

### Custom Display Parameters

The High-Level SPA features the ability to customize its integral display. The decimal position, and zero and full scale display settings can be selected from the keypad. This feature is useful for configuring the display to represent a specific engineering unit numeric value, as opposed to a direct percentage of the current or voltage input.

*Figure 9. Current and Voltage Inputs (HLPRG Input Type).*

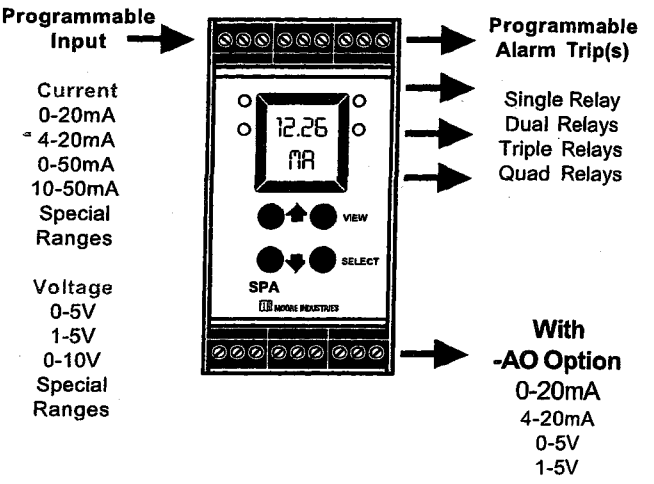


### Custom, 22-Point Linearization Curves

The current and voltage SPA can be programmed with up to 22 custom linearization points from the front panel keypad (see page 3 for details).

## Ordering Information

| Unit | Input | Output | Power | Options | Housing |
|---|---|---|---|---|---|
| **SPA** Site-Programmable Alarm Trip | **HLPRG** Programs to accept high-level input signals:<br>Current: Any range between 0-50mA (0-20mA, 4-20mA, 0-50mA, 10-50mA, etc.)<br>Voltage: Any range between 0-10V (0-5V, 1-5V, 0-10V, etc.)<br>NOTE: Recommended minimum span is 4mA for current inputs and 1V for voltage inputs. Narrower spans are possible, but may result in degradation of the stated output accuracy specification. | **1PRG** Single Relay<br>**2PRG** Dual Relays<br>**3PRG** Triple Relays<br>**4PRG** Quad Relays<br>Each relay individually configures for:<br>High or Low Trip<br>Normally Open or Normally Closed<br>Failsafe or Non-Failsafe<br>Latching or Non-Latching<br>(Relays are single-pole/double-throw (SPDT), 1 form C, rated 5A @ 250Vac, 50/60Hz, non-inductive) | **U** Universal, 4-wire (line) power; accepts any power input range between 22-300Vdc or 90-260Vac<br>For CE approved units, specify one of the following:<br>**24DC** ±10%<br>**117AC** ±10%<br>**230AC** ±10% | **-AO** Analog output scaleable for any range between 0-20mA (4mA span, min.) into 1200Ω or 0-5V (1V span, min.) into 10KΩ<br>**-DPDT** Double-pole/double-throw relays, 2 form C relays, rated 5A @ 250Vac, 50/60Hz, non-inductive (1PRG and 2PRG output types only)<br>**-HS** Hermetically sealed relays, rated 0.5A @ 117Vac and 2A @ 28Vdc (1PRG, 2PRG, and 3PRG outputs types only) | **DIN** Universal DIN-style housing mounts on 32mm (EN50035) G-type and 35mm (EN50022) Top Hat DIN rails |

**When ordering, specify:** Unit / Input / Output / Power / Options [Housing]
**Model number example:** SPA / HLPRG / 4PRG / U / -AO [DIN]

Current and Voltage Input Model (continued)

# Specifications

**Performance**

**Repeatability:** *Trip point* repeats within ±0.05% of input span
**Display Accuracy:** ±1 digit; When scaling the display (in Custom Mode), high input-to-display span ratios decrease display accuracy; Refer to notes in "Scaling the HLPRG Display" in the User's Manual
**Input Accuracy:** Current input, ±5µA; Voltage inputs, ±1mV
**Stability:** ±0.1% of calibrated span, maximum, over 6 months
**Deadband:** 11.5V or 57.5mA, maximum in Linear Mode; equivalent of maximum input range in user-set engineering units in Custom Mode
**Response Time:** 500 milliseconds (Defined as time from step change on input to alarm state change when alarm is set to trip at mid-point)
**Alarm Trip Delay:** Programmable from 0-60 seconds
**Line Voltage Effect:** ±0.005% of span for a 1% change in line voltage (ac or dc)
**Isolation:** 1000Vrms between case, input, output (units with -AO option) and power terminals (NOTE: High voltage effect of ±0.0004% of output span/V possible with prolonged exposure to ac voltage above 200Vac)

**Performance (continued)**

**Power Consumption:** 2-4W, nominal; 6W, maximum
**Input Impedance:** 1MΩ for voltage inputs; 20Ω nominal for current inputs
**Input Over-Range Protection:** 18Vdc for voltage inputs; 180% of maximum input span

**Performance with Analog Output (-AO Option)**

**WITH ANALOG OUTPUT**
**Output Accuracy:** ±0.03% of output span (includes the combined effects of linearity, hysteresis, repeatability, and adjustment resolution)
**Response Time:** 500ms maximum
**Ripple (up to 120Hz):** Current output, 10mV peak-to-peak max. when measured across a 250Ω resistor; Voltage output, 15mV peak-to-peak max.
**Output Limiting:** 117% of span max., 115% of span typical
**Load Effect:** ±0.01% of span from 0 to maximum load resistance on current output

**Ambient Conditions**

**Operating Range:** –25°C to +65°C (–13°F to +149°F)
**Storage Range:** –40°C to +80°C (–40°F to +176°F)
**Ambient Temperature Effect:** TPRG, ±0.5°C per 50°C change maximum; HLPRG, ±0.005% of outut span per °C maximum; ±15ppm of input signal

**Ambient Conditions (continued)**

**Relative Humidity:** 0–95% non-condensing
**RFI/EMI Protection:** 30V/m - ABC £ 0.5% error in reading when tested according to SAMA standard PMC 33.1
**Common Mode Rejection:** 100dB @ 60Hz
**Normal Mode Rejection:** 40dB @ 60Hz (measured w/current input)

**Adjustments**

Front panel push buttons control settings for zero, span, alarm trip points, high/low alarms, etc.; Easy access internal settings select current (source or sink) or voltage output, and failsafe or non-failsafe alarm functions; Internal jumper and menu password protect parameter settings

**Indicators**

**LCD:** 2x4 character, backlit, alphanumeric readout accurate to the nearest digit. Range: -9999 to 9999; Decimal point can be user-set when in Custom Mode
**LED's:** Dual-color TRIP light (one for each relay) shows green for non-alarm, red for alarm; READY light indicates normal operation, extinguishes in the event of any internal failure; INPUT light is always green

**Weight**

456 to 513 g (16.1 to 18.1 oz)

**Factory Configuration Available**

We can deliver your SPA Site-Programmable Alarm pre-configured to your specifications, and ready to install. Consult your Moore Industries Sales Representative or call one of our Interface Solution Centers (see the back of this data sheet for details).

A SENSAPHONE REMOTE MONITORING & CONTROL SYSTEM

# SENSAPHONE®
# 2000

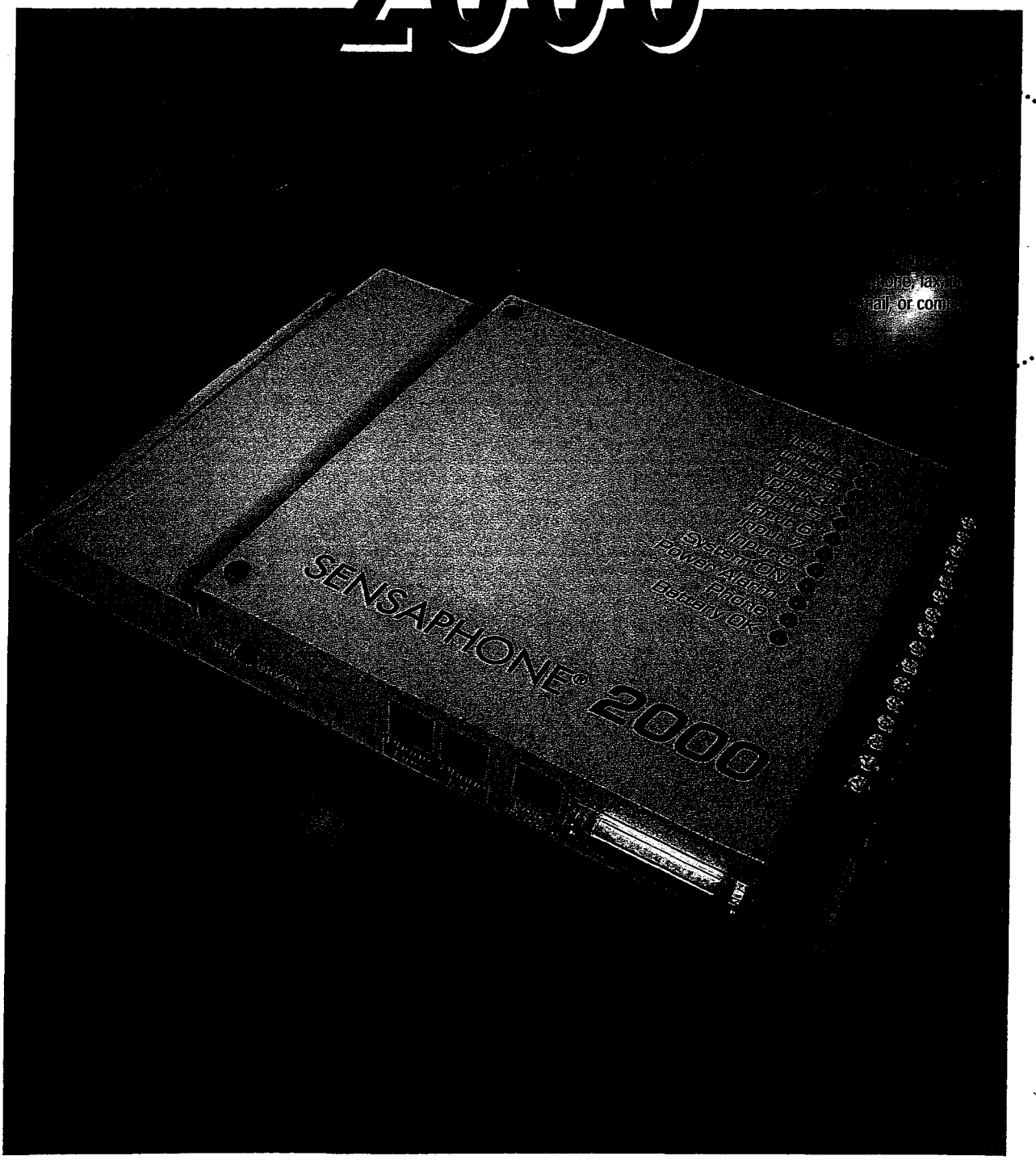


SENSAPHONE
*HOW DID YOU MANAGE WITHOUT IT?*

SENSAPHONE®

# 2000

***SENSAPHONE 2000 COMBINES ADVANCED REMOTE MONITORING WITH THE MOST FLEXIBLE DIALOUT CAPABILITIES***

## *A CRITICAL TOOL THAT KEEPS YOU INFORMED ABOUT YOUR PROCESS EQUIPMENT 24 HOURS A DAY*

*Each Sensaphone 2000 can monitor and report on up to 8 remote, analog or digital inputs; and it can send those reports to as many as 32 locations. The information it collects is organized into easy-to-read reports and delivered wherever you want it, whenever you need it. Sensaphone 2000 saves you valuable time and keeps you aware of important functions and activities.*

*An essential tool for environmental monitoring in a variety of applications, Sensaphone 2000 supplies the critical information needed to prevent costly problems and maintain peak performance at virtually any kind of industrial facility.*

*If you need to know, you need Sensaphone 2000!*

### MONITORS 8 DIGITAL OR ANALOG INPUTS

Sensaphone 2000 allows you to select up to 8 inputs—digital or analog—to monitor conditions such as room temperature, outside temperature, power supply, humidity, tank levels, tank temperature, pressure, flow rates, flooding, HVAC controllers, etc. When there's a problem, it alerts you immediately. Whatever you need to know, Sensaphone 2000 can tell you.

You can program ranges to suit your specific monitoring requirements, and all programming can be done locally or from virtually any remote location. Digital functions include open/closed dry contact input and/or pulse counting. Analog can be read as a percentage or via a user-defined lookup table.

### COMMUNICATES WITH UP TO 32 PRESELECTED DESTINATIONS

The Sensaphone 2000 Remote Monitoring System offers an amazing array of communication options. Using voice messages you record, it calls and reports to as many as 32 different phone numbers; and it selects different numbers to call based on a schedule you create. It can send alarm information directly to your PC. If the programmed phone number is a fax, it will compose and send a fax report. To pagers and beepers it sends the appropriate alarm information. When used in combination with the Manager 2000 software program, the Sensaphone 2000 is also sophisticated and versatile enough to send messages to e-mail addresses, or to assemble report data into a web page, which it then posts to your web site.

Use Sensaphone 2000's various methods of communication to send regular reports and/or transmit alarm messages. The system's versatility makes it quick and easy to reach the right people, and that's especially important in an emergency.

Sensaphone 2000 can easily be programmed to send the preselected information or alarm messages to whatever destination you choose.

### IMMEDIATE ACCESS TO VITAL PROCESS INFORMATION

All it takes is a phone call to receive a voice status report or a data connection for more detailed information. You can

## *HOW SENSAPHONE 2000 WORKS*

*Sensaphone 2000 monitors unattended or remote facilities and provides immediate access to vital process information, trending and alarm reporting.*

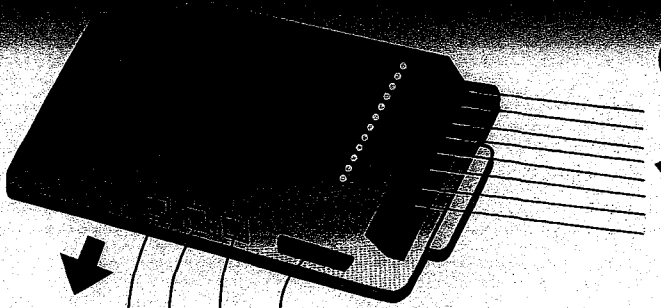

**1** ***MONITORS*** **VIA YOUR INPUTS:**
*(You define as many as 8)*
Flow rates
Tank level
Humidity
Power supply
HVAC controllers
Flooding
Fire Alarms
Pressures
Temperatures

**2** ***COMMUNICATES*** **VIA:**
**PHONE** (real-voice)
**FAX**
**PAGER**
**E-MAIL**
**COMPUTER**
**WEB PAGE**

**3** ***LOGS & REPORTS*** **ACTIVITY** to you via fax or e-mail.
Programmable sampling time and report delivery time allow the unit to be customized to your specific needs.
Up to 32,000 records can be stored.
In addition to the eight inputs, AC power status and battery voltage may also be logged/reported.

check on any site and access critical information at any time from anywhere. The knowledge you need is always just a phone call away.

## BUILT-IN DATA LOGGER

With its internal data logging features, Sensaphone 2000 allows you to log activity such as trends, usage and other factors. It can store as many as 32,000 time-stamped records for verifying activity and charting trends over long periods.

All data is stored in the system's nonvolatile memory, protecting data even during loss of both AC and battery power.

## BACKED BY ALL THE SUPPORT AND EXPERTISE OF SENSAPHONE, INC.

Sensaphone, Inc. is a pioneer in the design and manufacture of remote monitoring systems. We continue to be at the forefront, setting industry standards for technical innovation.

With an installed base of more than 200,000 Sensaphone products—from small models to sophisticated industrial systems—Phonetics prides itself on providing flexibility and features at an affordable price.

Your Sensaphone 2000 comes with responsive technical support and a comprehensive warranty.

**Contact the Sensaphone Sales Department for further details at (610) 558-2700, or visit our website at www.sensaphone.com**

## INCLUDES FREE MICROSOFT WINDOWS™ COMPATIBLE SOFTWARE

State-of-the-art, user-friendly software makes the Sensaphone 2000 easy to program and easy to use, from any local or remote PC. Use this flexible software to view input activity in real time, to analyze and graph stored data, and even to process incoming alarms.

The software, which is compatible with Windows 3.1, 95, 98, ME, NT, and 2000, includes these important features:

- Easy point-and-click programming.
- Real-time graphics screen.
- Wide range of report options, generated at times you've specified.
- Allows you to create Web pages that update at scheduled times.
- Allows you to view data log information in a grid, or plot it using 3D charts and graphs.
- Lets you maintain multiple Sensaphone 2000 units to a centralized PC.
- Enables you to receive and process alarms from multiple units.
- Automatic Web Page generation.

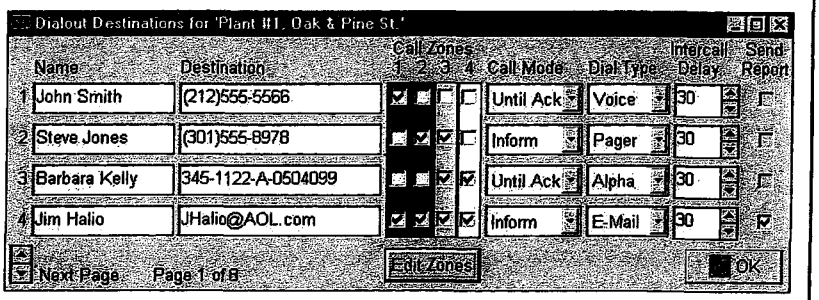


*Choose any combination of communication methods for Sensaphone 2000 to send its reports or alarm messages.*

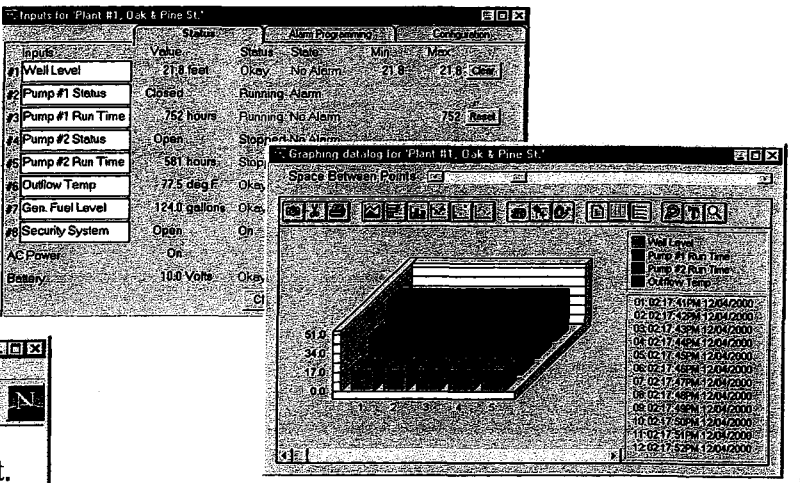


*You choose the formats in which you want to see real-time or stored data displayed.*

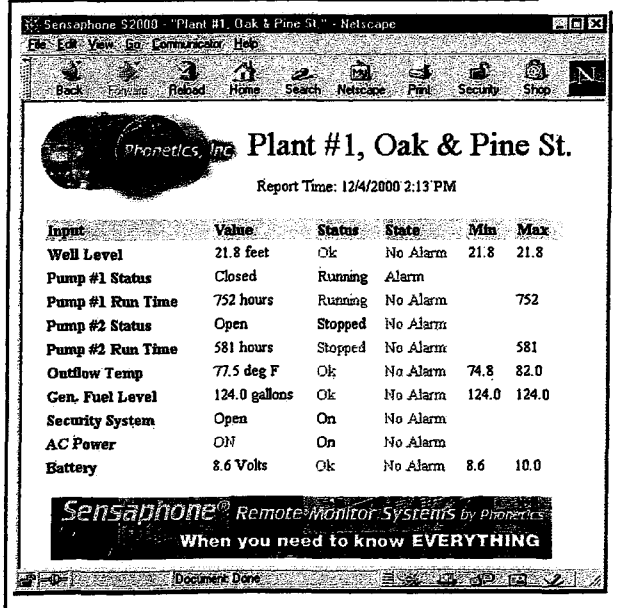


*Colorful charts, gauges, graphs and web pages bring the data to life.*

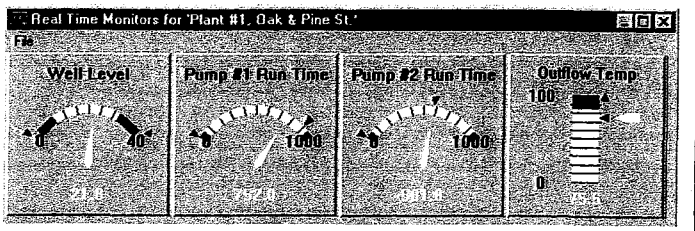

# SENSAPHONE®
# 2000

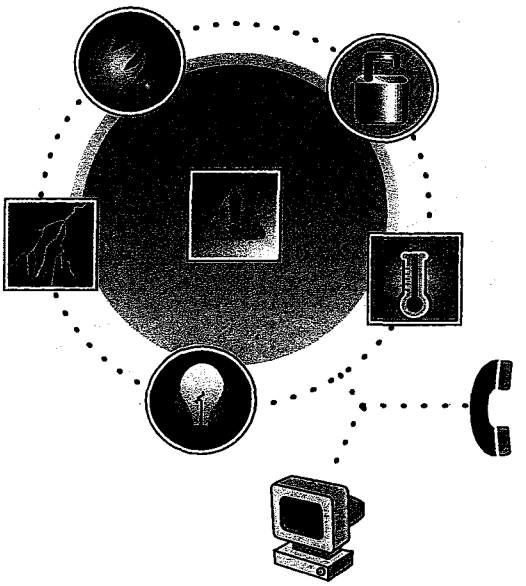

## SPECIFICATIONS

### Dialing Parameters:

Programmable call list for each input
Alarm acknowledgment:
touch tones, callback, or modem
Call progress monitoring:
detect dial tone, busy signals & ringback
Programmable time between calls:
10 seconds to 60 minutes

### Destinations:

32 destinations
36-digit telephone numbers
64 character E-mail addresses

### Inputs:

8 Universal Inputs & 1 AC Power:
Normally Open/Normally Closed
dry contact
2.8K/10K thermistor
4-20mA current loop,
or 0-5V analog voltage
10 bit resolution

### Communication Types:

Voice, fax, modem, E-mail, numeric pager,
alphanumeric pager, web page
Speech technology:
User-recordable voice for eight input alarm messages and one ID message

### Data Logging:

Up to 32,000 samples (all samples include one data and time)
1 second to 200 hour sampling rate
User programmable channel selection—inputs 1-8
AC power & Ni-Cad battery backup

### Communication Ports:

RS232 programming port
Used for local programming & setup
DB25 female DCE
38,400 bps

### Built-in Data Modem:

Data throughput 14,400 bps
14,400 bps Fax
Protocols: V.32bis, V.32, V.22bis,
V.22A/B, V.23, V.21, Bell 212A & 103

### Local Indicators:

Inputs 1–8 Alarm Status LEDs
System On LED
Power Alarm LED
Phone LED
Battery OK LED

### Power Requirements:

External transformer 120VAC
60Hz 10W (UL-listed power supply)
(6) C-cell Rechargeable Ni-Cad
batteries (not included)
10 hour battery backup

### Operating Temperature Range:

0–50° C (32-122° F)

### Humidity:

0–90% RH, non-condensing

### Size:

12.1"w x 7.2"h x 1.6"d

### Shipping Weight:

3 lbs.

*Specifications subject to change without notice.*

*Sensaphone is a registered trademark of Phonetics, Inc.*

SENSAPHONE, INC.
901 Tryens Road Aston, PA 19014 Phone 610.558.2700 Fax 610.558.0222 www.sensaphone.com

BR008 © 6.2002 by Sensaphone, Inc.

Consult the supplier of your telephone system if you encounter problems.

> **CAUTION**: Never install telephone wiring during a lightning storm. Never install telephone jacks in wet locations unless the jack is specifically designed for wet locations. Never touch uninsulated telephone wires or terminals unless the telephone line has been disconnected at the network interface. Use caution when installing or modifying telephone lines.

### Line Seizure

Line seizure gives the 2000 unit the ability to "seize" the telephone line when it needs to dial out. For example, if an emergency occurs which puts the 2000 in alarm mode, the unit will be able to dial out even if a telephone has been left off the hook. To the right of the PHONE LINE jack is another labeled PHONE EXT. This jack can be used to share a phone line with other devices (telephone, fax machine, modem) and to give the 2000 priority in the event of an emergency. To make use of this feature you must have all the extension devices originate from the PHONE EXT. jack. Whenever the unit must make an alarm phone call, the unit will disconnect any current phone calls and seize the line for its own use. The unit will continue to seize the line until the alarm has been acknowledged.

## INPUT CONFIGURATION

The Sensaphone 2000 can accept analog and digital inputs over the range 0-5VDC. It can also accept current from 4–20mA transducers. The input load for current transducers is 220 Ohms.

To set the input configuration, adjust the jumpers located just below the terminal block. Needlenose pliers are recommended for moving shunts. There is one for each input so that each input can be individually configured. For thermistors, N.O./N.C.(normally open/normally closed) dry contacts, run time and pulse count, set the jumper to the left (marked TMP/DRY). For current transducers set the jumper to the right (marked 4–20mA). For 0–5VDC transducers, remove the jumper or simply hang it off one pin for storage purposes. See the figure below.

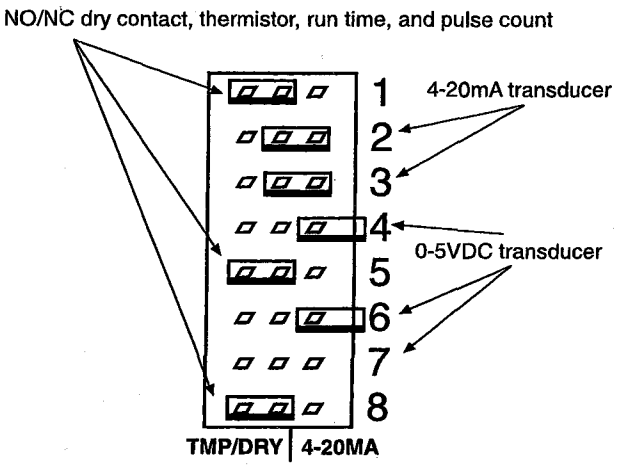


## WIRING SENSORS AND TRANSDUCERS

Thermistors: The unit will accept 2.8K and 10K thermistors. These should be wired to an input terminal and the adjacent ground terminal. For compatible thermistors check the thermistor data in the appendices. 2.8K Thermistor temperature range: -125°F to 124°F (-87°C to 51°C); 10K Thermistor temperature range: -90°F to 200°F (-68°C to 93°C).

Dry Contacts: Only contacts which have no voltage or current applied may be used. Connect the contact to an input terminal and an adjacent ground terminal. Do NOT try to monitor a contact that switches 120VAC. This will permanently damage the unit.

4–20mA: A 4–20mA transducer requires you to have an external DC power supply for the transducer. Make sure the input is configured for 4–20mA.

Connect the positive wire of your transducer to the positive terminal of your DC power supply. Connect the negative terminal of the transducer to an input terminal on the Sensaphone 2000. Connect the negative terminal from your power supply to the adjacent ground terminal on the 2000.

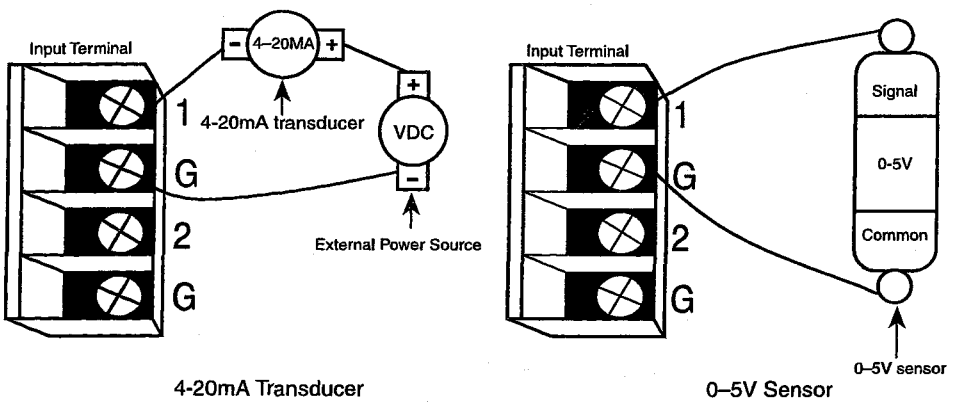


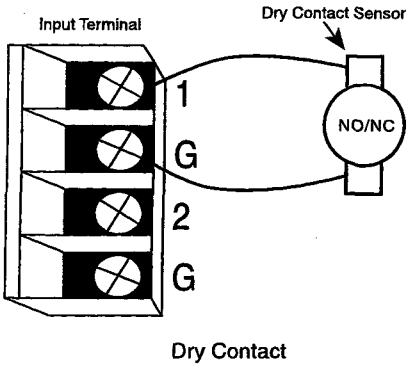


**The different sensor types connected to the terminal block.**

## LED INDICATORS

The LEDs provide on-site alarm and status information. Listed below are descriptions of how the LEDs work.

### Inputs 1–8 and Power:

LED Off: Input OK

LED Blinking: Unacknowledged alarm exists

LED On: Acknowledged alarm exists

### Battery:

LED On: Battery condition OK

LED Blinking: Battery condition low

LED Off: Battery very low

### System-On:

LED On: System power on

LED Off : System power off

## Phone:

LED On: Unit is communicating on the phone line

LED Off: Unit is not using the phone line

## Output:

LED On: The output relay is ON

LED Off: The output relay is OFF

# Arizona Water (Casa Grande)
# "Well 27"

## RTU Configuration/Wiring Report

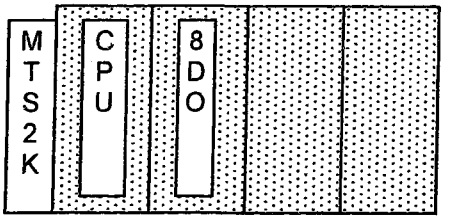


***RTU Type:..... MOSCAD-L***
***Application Name:..... Well27***
***Station Address:..... 328***
***System Address:..... 2***

**8 Digital Output**

| CONNECTION | DESCRIPTION | WIRING |
|---|---|---|
| RELAY K1 (N.O.) | Pump Control | PIN 1 |
| RELAY K1 (N.C.) | | PIN 2 |
| RELAY K1 (COMMON) | Pump Control | PIN 3 |
| RELAY K2 (N.O.) | | PIN 4 |
| RELAY K2 (N.C.) | | PIN 5 |
| RELAY K2 (COMMON) | | PIN 6 |
| RELAY K3 (N.O.) | | PIN 7 |
| RELAY K3 (N.C.) | | PIN 8 |
| RELAY K3 (COMMON) | | PIN 9 |
| RELAY K4 (N.O.) | | PIN 10 |
| RELAY K4 (N.C.) | | PIN 11 |
| RELAY K4 (COMMON) | | PIN 12 |
| RELAY K5 (N.O.) | | PIN 13 |
| RELAY K5 (COMMON.) | | PIN 14 |
| RELAY K6 (N.O.) | | PIN 15 |
| RELAY K6 (COMMON) | | PIN 16 |
| RELAY K7 (N.O.) | | PIN 17 |
| RELAY K7 (COMMON) | | PIN 18 |
| RELAY K8 (N.O.) | | PIN 19 |
| RELAY K8 (COMMON) | | PIN 20 |

** Controlled by North Park Tnk (326, Sys 2, GrpA, Status 5+6)

# ARIZONA WATER COMPANY

# CONSTRUCTION COMPLETION NOTICE

CONSTRUCTION COMPLETION DATE: 7-28-10

WORK AUTHORIZATION NUMBER: 1-4620

PREPARED BY

*THE FOLLOWING RECORD REQUIREMENTS ARE ATTACHED:*

1. CONSTRUCTION DRAWINGS WITH "AS BUILT" LOCATION OF PIPE, FITTINGS, ETC. MARKED IN RED ..... not
2. VALVE CARDS ..... at
3. HYDRANT CARDS WITH COPY OF COVER LETTER ..... this
4. MATERIALS INSTALLED OR RETIRED LISTED ON THE REVERSE SIDE OF THE W.A. WITH R.O.S. AND P.D.R. NUMBERS ..... Time
5. PRESSURE AND LEAKAGE TEST RESULTS: See attached ADEQ Form

| | | | | |
|---|---|---|---|---|
| DATE TESTED | | | | |
| TIME STARTED | | | | |
| TIME FINISHED | | | | |
| PIPE DIAMETER | | | | |
| *FOOTAGE TESTED* | | | | |
| ALLOWABLE LEAKAGE | | | | |
| LEAKAGE OBSERVED | | | | |
| PRESSURE AT TEST POINT | | | | |
| COMPANY EMPLOYEE OBSERVING TEST *(print)* | | | | |
| INITIALS OF EMPLOYEE | | | | |

6. DISINFECTION SAMPLING: See attached ADEQ Form

| | | | | | | | |
|---|---|---|---|---|---|---|---|
| INITIAL SAMPLING *(minimum 50 ppm available chlorine)* | DATE | | | | | | |
| | TIME | | | | | | |
| | PPM $Cl_2$ | | | | | | |
| AFTER 24 HOURS DETENTION TIME *(minimum 10 ppm free chlorine)* | DATE | | | | | | |
| | TIME | | | | | | |
| | PPM $Cl_2$ | | | | | | |
| AFTER SUFFICIENT FLUSHING *(water is clear and system $Cl_2$ residual is measured)* | DATE | | | | | | |
| | TIME | | | | | | |
| | PPM $Cl_2$ | | | | | | |
| BACTERIOLOGICAL SAMPLE(S) | DATE | | | | | | |
| | TIME | | | | | | |
| | ATTACHED | ☑ Yes ☐ No | ☐ Yes ☐ No | ☐ Yes ☐ No | ☐ Yes ☐ No | | |

I certify that construction on the above Work Authorization was completed as of the date shown above and for which all materials have been accounted. I further certify that I have inspected the work done and have found it to be satisfactory and in accordance with Company specifications.

Division Manager or Operations Superintendent *(signature)*

12-20-10

Date of Notice

**ATTACH TO CONSTRUCTION & ENGINEERING FILE COPY OF WORK AUTHORIZATION**

# WA1-4675

# ARIZONA WATER COMPANY
## WORK AUTHORIZATION

SCANNED

W.A. NUMBER: 1-4675
P.E. NUMBER: CL
BUDGET ITEM NO.: Special #18
SHEET NO.: 1 of 2

| | | | |
|---|---|---|---|
| SYSTEM: | COOLIDGE | WORK TO START BY: | UPON AUTHORIZATION |
| DIVISION: | COOLIDGE | WORK TO BE FINISHED BY: | WITHIN 60 DAYS |
| TAX CODE: | 2100 | | |

DESCRIPTION OF WORK:

Pull and replace the pump at the Coolidge Airport Well #1. Construct in accordance with attached drawings and/or Arizona Water Company specifications.

FACTORS JUSTIFYING WORK:

Well production has fallen off from 300 gpm to 50. We are utilizing Well #2 for our production needs. Best we can tell from the records provided to AWC from the City of Coolidge, the pump is approximately 12 years old, past its expected life span.

| COST ESTIMATE | | AUTHORIZATION | DATE |
|---|---|---|---|
| **COST OF WORK:** | | PREPARED BY: James Wilson JW 10/26/09 | 10/15/09 |
| MATERIAL | 0 | | |
| LABOR | 2,500 | REVIEWED BY: Mike Loggins ML 10-27-09 | 10-15-09 |
| CONTRACT PORTION | 46,890 | | |
| OVERHEAD | 4,593 | APPROVED BY: Fred Schneider FS 10-27-09 | 10-20-09 |
| TOTAL AUTHORIZED EXPENDITURES CHARGEABLE TO THIS W.A. | $ 53,983 | | |
| **FUNDS RECEIVED:** | | APPROVED BY: Joe Harris | 10/21/09 |
| CONTRIBUTIONS RECEIVED | 0 | | |
| REFUNDABLE ADVANCES RECEIVED | 0 | FOR SPECIAL BUDGET ITEM UNDER $10,000 -- | |
| TOTAL CONTRIBUTIONS/ADVANCES | 0 | | |
| NET CASH REQUIRED | $ 53,983 | FOR SPECIAL BUDGET ITEM EXCEEDING $10,000 -- William Garfield | 10-26-09 |
| | | AUTHORIZED BY: R. H. Nicholson Jr. | 10/26/09 |

COMMENTS:

FILE COPY

CONSTRUCTION RELEASE:

RELEASED TO CONSTRUCTION
Authorized by FRED SCHNEIDER
Date 10/26/09

AFH

# ARIZONA WATER COMPANY

## WORK AUTHORIZATION - DETAIL SHEET

W.A. NUMBER: 1-4675
P.E. NUMBER: CL
BUDGET ITEM NO.: Special #18
SHEET NO.: 2 of 2

| RETIREMENT PROPERTY UNITS | PLANT PROPERTY ACCOUNT | UNIT DESCRIPTION | QUANTITY | YEAR INSTALLED AND W.A. NUMBER |
|---|---|---|---|---|
| | | | | |
| | | | | |
| | | | | |
| | | | | |

PROJECT DESCRIPTION:

Pull and replace the pump at Coolidge Airport Well #1 (North Well)

| | DESCRIPTION | PLANT PROP ACCT | QUANTITY | UNIT COST | TOTAL |
|---|---|---|---|---|---|
| CONTRACT WORK | Simflow SC 10C 9-stage pump assembly | 325 | 1 | $ 9,500.00 | $ 9,500 |
| | 6" x 2" 3/16 Column tube and shaft assembly | 325 | 15 | 950.00 | 14,250 |
| | Video Well | 325 | 2 | 750.00 | 1,500 |
| | Misc. materials | 325 | 1 | 2,500.00 | 2,500 |
| | 1/4" SS air lines | 325 | 410 | 3.00 | 1,230 |
| | 3/4" PVC sounding line | 325 | 410 | 1.00 | 410 |
| | Brush and bail well | 325 | 10 | 250.00 | 2,500 |
| | Labor | 325 | 1 | 15,000.00 | 15,000 |
| | | | | | |
| | | | | | |
| | | | | | |
| | | | | | |
| | SERVICE CONNECTIONS COMPLETE: DOUBLE-LONG | 345 | | | |
| | SERVICE CONNECTIONS COMPLETE: DOUBLE-SHORT | 345 | | | |
| | SERVICE CONNECTIONS COMPLETE: SINGLE-LONG | 345 | | | |
| | SERVICE CONNECTIONS COMPLETE: SINGLE-SHORT | 345 | | | |
| **TOTAL CONTRACT WORK** | | | | | $ 46,890 |
| MATERIALS | | | | | |
| | | | | | |
| | | | | | |
| | | | | | |
| | SERVICE CONNECTIONS: DOUBLE-LONG | 345 | | | |
| | SERVICE CONNECTIONS: DOUBLE-SHORT | 345 | | | |
| | SERVICE CONNECTIONS: SINGLE-LONG | 345 | | | |
| | SERVICE CONNECTIONS: SINGLE-SHORT | 345 | | | |
| | METERS | 346 | | | |
| **TOTAL MATERIALS** | | | | | $ - |
| LABOR | | | | | |
| | | | | | |
| | | | | | |
| | | | | | |
| | | | | | |
| | TESTING FEE | | | | |
| | PERMIT FEE | | | | |
| | SURVEY FEE | | | | |
| | FIELD INSPECTION | 325 | 1 | 2,500.00 | 2,500 |
| | INSTALL SERVICE CONNECTIONS: DOUBLE-LONG | 345 | | | |
| | INSTALL SERVICE CONNECTIONS: DOUBLE-SHORT | 345 | | | |
| | INSTALL SERVICE CONNECTIONS: SINGLE-LONG | 345 | | | |
| | INSTALL SERVICE CONNECTIONS: SINGLE-SHORT | 345 | | | |
| **TOTAL LABOR** | | | | | $ 2,500 |
| **SUBTOTAL - CONTRACT WORK, MATERIALS, AND LABOR** | | | | | $ 49,390 |
| OVERHEAD | | | | | 4,593 |
| **TOTAL** | REFUNDABLE PORTION ☐ | NON-REFUNDABLE PORTION ☐ | | **COST ESTIMATE** | $ 53,983 |

AFH

# ARIZONA WATER COMPANY
## WORK AUTHORIZATION

SCANNED

W.A. NUMBER: 1-4675
P.E. NUMBER: CL
BUDGET ITEM NO.: 1-4675
SHEET NO.: 1 of 2

| | | | |
|---|---|---|---|
| SYSTEM: | COOLIDGE | WORK TO START BY: | UPON AUTHORIZATION |
| DIVISION: | COOLIDGE | WORK TO BE FINISHED BY: | WITHIN 60 DAYS |
| TAX CODE: | 2100 | | |

DESCRIPTION OF WORK:

Pull and replace the pump and motor and install new 12" HSLA liner at Coolidge Airport Well #1. Construct in accordance with attached drawings and/or Arizona Water Company specifications.

FACTORS JUSTIFYING WORK:

APPROVED 2009 BUDGET ITEM $53,983 - AMOUNT SPENT IN 2009 $32,845.
APPROVED 2010 BUDGET ITEM $70,000.
Well production has fallen off from 300 gpm to 50 gpm. We are utilizing Well #2 for our production needs. Best we can tell from the records provided to AWC from the City of Coolidge, the pump is approximately 12 years old, past its expected life span. Upon inspection the casing was found to be severely deteriorated. A new liner is required to keep the well in production.

| COST ESTIMATE | | AUTHORIZATION | DATE |
|---|---|---|---|
| **COST OF WORK:** | | PREPARED BY: James Wilson | 2/16/10 |
| MATERIAL | 0 | | |
| LABOR | 2,500 | REVIEWED BY: Mike Loggins | 2-17-10 |
| CONTRACT PORTION | 60,041 | | |
| OVERHEAD | 5,816 | APPROVED BY: Fred Schneider | 2-17-10 |
| TOTAL AUTHORIZED EXPENDITURES CHARGEABLE TO THIS W.A. | $ 68,357 | | |
| **FUNDS RECEIVED:** | | APPROVED BY: Joe Harris | 2/17/10 |
| CONTRIBUTIONS RECEIVED | 0 | | |
| REFUNDABLE ADVANCES RECEIVED | 0 | AUTHORIZED BY: William Garfield | 2-18-2010 |
| TOTAL CONTRIBUTIONS/ADVANCES | 0 | | |
| NET CASH REQUIRED | $ 68,357 | | |
| | | | |
| | | | |

COMMENTS:
Well failed in 2009. upon investigation, it was determined that the well casing was un-repairable. budgeted for a new liner in 2010.

FILE COPY

CONSTRUCTION RELEASE:

**RELEASED TO CONSTRUCTION**
Authorized by FRED SCHNEIDER
Date 2/22/10

**2010 BUDGET**

# ARIZONA WATER COMPANY

## *WORK AUTHORIZATION* - DETAIL SHEET

W.A. NUMBER: 1-4675
P.E. NUMBER: CL
BUDGET ITEM NO.: 1-4675
SHEET NO.: 2 of 2

| RETIREMENT PROPERTY UNITS | PLANT PROPERTY ACCOUNT | UNIT DESCRIPTION | QUANTITY | YEAR INSTALLED AND W.A. NUMBER |
|---|---|---|---|---|
| | | | | |
| | | | | |
| | | | | |
| | | | | |

PROJECT DESCRIPTION:

Pull and replace the pump and motor and install new 12" HSLA liner at Coolidge Airport Well #1. Construct in accordance with attached drawings and/or Arizona Water Company specifications.

| | DESCRIPTION | PLANT PROP ACCT | QUANTITY | UNIT COST | TOTAL |
|---|---|---|---|---|---|
| CONTRACT WORK | Labor to install pump | 325 | 1 | $ 2,723.00 | $ 2,723 |
| | Install new 12" HSLA blank casing | 314 | 300 | 113.16 | 33,948 |
| | Install new 12" HSLA 3/16" x 2-1/2" vertical slot casing | 314 | 250 | 85.00 | 21,250 |
| | Install 13-3/4" HSLA bottom plate with SE head attachment | 314 | 1 | 320.00 | 320 |
| | Remove concrete from existing casing | 314 | 1 | 1,800.00 | 1,800 |
| | | | | | |
| | | | | | |
| | | | | | |
| | | | | | |
| | | | | | |
| | | | | | |
| | | | | | |
| | SERVICE CONNECTIONS COMPLETE: DOUBLE-LONG | 345 | | | |
| | SERVICE CONNECTIONS COMPLETE: DOUBLE-SHORT | 345 | | | |
| | SERVICE CONNECTIONS COMPLETE: SINGLE-LONG | 345 | | | |
| | SERVICE CONNECTIONS COMPLETE: SINGLE-SHORT | 345 | | | |
| **TOTAL CONTRACT WORK** | | | | | $ 60,041 |
| MATERIALS | | | | | |
| | | | | | |
| | | | | | |
| | | | | | |
| | SERVICE CONNECTIONS: DOUBLE-LONG | 345 | | | |
| | SERVICE CONNECTIONS: DOUBLE-SHORT | 345 | | | |
| | SERVICE CONNECTIONS: SINGLE-LONG | 345 | | | |
| | SERVICE CONNECTIONS: SINGLE-SHORT | 345 | | | |
| | METERS | 346 | | | |
| **TOTAL MATERIALS** | | | | | $ - |
| LABOR | | | | | |
| | | | | | |
| | | | | | |
| | | | | | |
| | | | | | |
| | TESTING FEE | | | | |
| | PERMIT FEE | | | | |
| | SURVEY FEE | | | | |
| | FIELD INSPECTION | 325 | 1 | 2,500.00 | 2,500 |
| | INSTALL SERVICE CONNECTIONS: DOUBLE-LONG | 345 | | | |
| | INSTALL SERVICE CONNECTIONS: DOUBLE-SHORT | 345 | | | |
| | INSTALL SERVICE CONNECTIONS: SINGLE-LONG | 345 | | | |
| | INSTALL SERVICE CONNECTIONS: SINGLE-SHORT | 345 | | | |
| **TOTAL LABOR** | | | | | $ 2,500 |
| **SUBTOTAL - CONTRACT WORK, MATERIALS, AND LABOR** | | | | | $ 62,541 |
| OVERHEAD | | | | | 5,816 |
| **TOTAL** | REFUNDABLE PORTION ☐ | NON-REFUNDABLE PORTION ☐ | | **COST ESTIMATE** | $ 68,357 |

AFH

AIRPORT WELL #1 NORTH WELL 9/30/09

- WELL HAS BEEN DROPPING OFF IN PRODUCTION FOR SEVERAL WEEKS AND HAS FINALLY STOPPED PRODUCING WATER ON 9/28/09.

* THIS WELL WILL PUMP INTO A GROUND STORAGE TANK IN THE NEAR FUTURE. DESIGN PUMP ON THE LEFT SIDE OF THE CURVE, POSSIBLY AT A REDUCED RATE.

SEE FAX FROM COOLIDGE ENGINEER & PUMP FOR INFO ON LAST PUMP REPLACEMENT (6/90)

50HP MOTOR WAS REWOUND APPROX 1 - 1½ YRS AGO

PUMP RUNS OFF PRESSURE ON 38psi OFF 62psi.

STATIC ≈ 300' DYNAMIC ≈ 70 20' DRAWDOWN BASED ON WELL #2

16" CASING 410' DEEP 1942

BAILED TO 500' 6/90

PUMP SET @ 410' + BOWLS.

TDH ≈ 320' + 143' + 11' + 20' = 494' MAX (438')
DRAWDOWN SYST COLUMN MISC

TDH ≈ 320 + 20' + 11' + 20' ≈ 371'
(TO TANK) TANK

---

SIMFLO SCIOC 9 STAGE
6 X 2 X 1 3/16

$$\text{STRETCH} = \frac{HL}{29}\left[KC_1 - C_2 + C_3\left(1 - \tfrac{1}{2}\frac{L}{H}\right)\right]$$

$$= \frac{.494 \cdot .41}{29}\left[4.75 \cdot 12.5 - 18.02 + 12.38\left(1 - .5 \cdot .41/.494\right)\right]$$

H = .494
L = .41
K = 4.75
$C_1$ = 12.54031
$C_2$ = 18.02106
$C_3$ = 12.37996

ΔL = .341 dry

LAT = .341 + .12 + .12 = .58" (AT OPERATING CONDITIONS)

.4 + .12 + .12 = .64" (AT DEAD HEAD).

MAX AVAILABLE LATERAL IS .75"

SIMFLO PUMPS

My Profile | Catalogs | Manual Selection | Design Point Search | Search Results | Selected Pump

Pump Curve | Design Notes | Cost Analysis | Printed Reports | Documents | Catalog Document

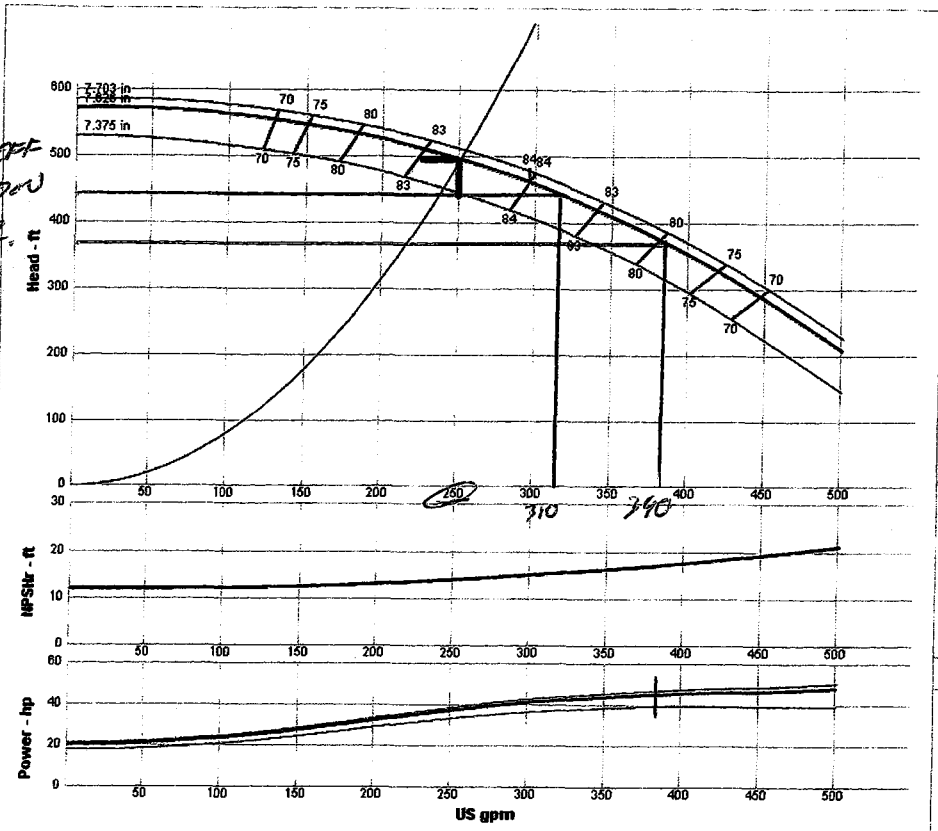


OFF
ON
THUR.

**Request for Quote**

Submit your selection to Simflo Pumps.

**Pump**

| | |
|---|---|
| Type | VERTTURBINE |
| Size | SC10C (9 stage) |
| Curve | |
| Speed | 1770 rpm |
| Diameter | 7.626 in |

Redraw | Reset

**Display Options**

- (•) Manufacturer settings
- ( ) Custom

**Multiple Pumps**

Number of pumps 1

(•) Parallel ( ) Series

Redraw

**Multiple Speeds (rpm)**

885 rpm - 3450 rpm

Redraw

| Flow | Head | Eff | BEP | NPSHr | Power | Motor | Frame | Min flow | Sphere | Bowl size |
|---|---|---|---|---|---|---|---|---|---|---|
| 250 US gpm | 494 ft | 83.3 % | 84 % | 14 ft | 37.2 hp | 50 hp | ---- | --- | 0.531 in | 10 in |

Powered By PUMP-FLO

© 2002 - 2009 Engineered Software, Inc. All Rights Reserved: Terms of Use | Privacy Policy | Software Requirements

# ARIZONA WATER COMPANY

## COOLIDGE AIRPORT WELL #1 (NORTH WELL)
## EQUIPMENT SPECIFICATIONS

### Existing Well Information

| | |
|---|---|
| Location: | NE ¼, NE ¼ Sec. 4 T. 6S., R. 9E. G & SRB & M. |
| Drilled by: | Unknown, 1942 |
| Casing: | 16" Stovepipe casing 0 ft. to 410 ft., Open hole to 500 ft. |
| Pump: | Simflo 9 stage SC10C, 6x2x1-3/16 Column Tube & Shaft. 410 ft. setting. 50HP 1770 RPM VHS motor. |

### Special Conditions:

- This well currently pumps directly into the distribution system at 62 psi. In the future the well will pump into a ground storage tank significantly reducing the TDH. This pump design is intended to run to the left of the BEP at approximetly 250 GPM when going into the system and to the right of the BEP at approximetly 390 GPM when pumping to the ground storage tank.
- All scrap materials removed from the well and not reused, including but not limited to the pump, motor, column, tube, shaft and discharge head and any bailed material are to be removed and disposed of by the contractor.
- The existing 50 HP motor will be reused.
- No invoice will be accepted for payment unless accompanied by a "complete" installed pump equipment data sheets (attached).
- No left hand to right hand adaptations will be allowed for the oil tube assembly

### Design Conditions

- 250 GPM @ 494 TDH to 390 GPM @ 371 TDH
- Pump setting 410 ft.

### Equipment and Services to be Furnished and Installed by Pump Company

- 410 ft. ¼" Stainless Steel air line.
- 410 ft. ¾" SCH 80 solvent weld PVC
- All miscellaneous bandits, buckles, tape, etc.
- One Simflo SC10C 9-stage bowl assembly or alternate with Arizona Water Company Engineering approval. Request for alternative pump approval must include pump curve and supporting information. Pricing for the alternative pump shall be provided in addition to pricing for the specified pump.
- Video well with both downward and side scan video. Minimum one VHS or DVD copy with log.
- Brush and Bail well using cable tool rig only.
- All material subject to Arizona Water Company Standard Specifications (enclosed) except as noted
- Bowl, Column, Tube, Shaft and airline data to be provided on Arizona Water Company forms and completed by the contractor prior to final payment.

***Each Request forAapproval for an Alternative Pump Must Include:***

Maximum Bhp
Operating Bhp
Overall efficiency at design conditions
Total down thrust at design conditions
Maximum down thrust throughout total pump range
Differential stretch at design condition
Maximum differential stretch
Allowable lateral for bowl assembly

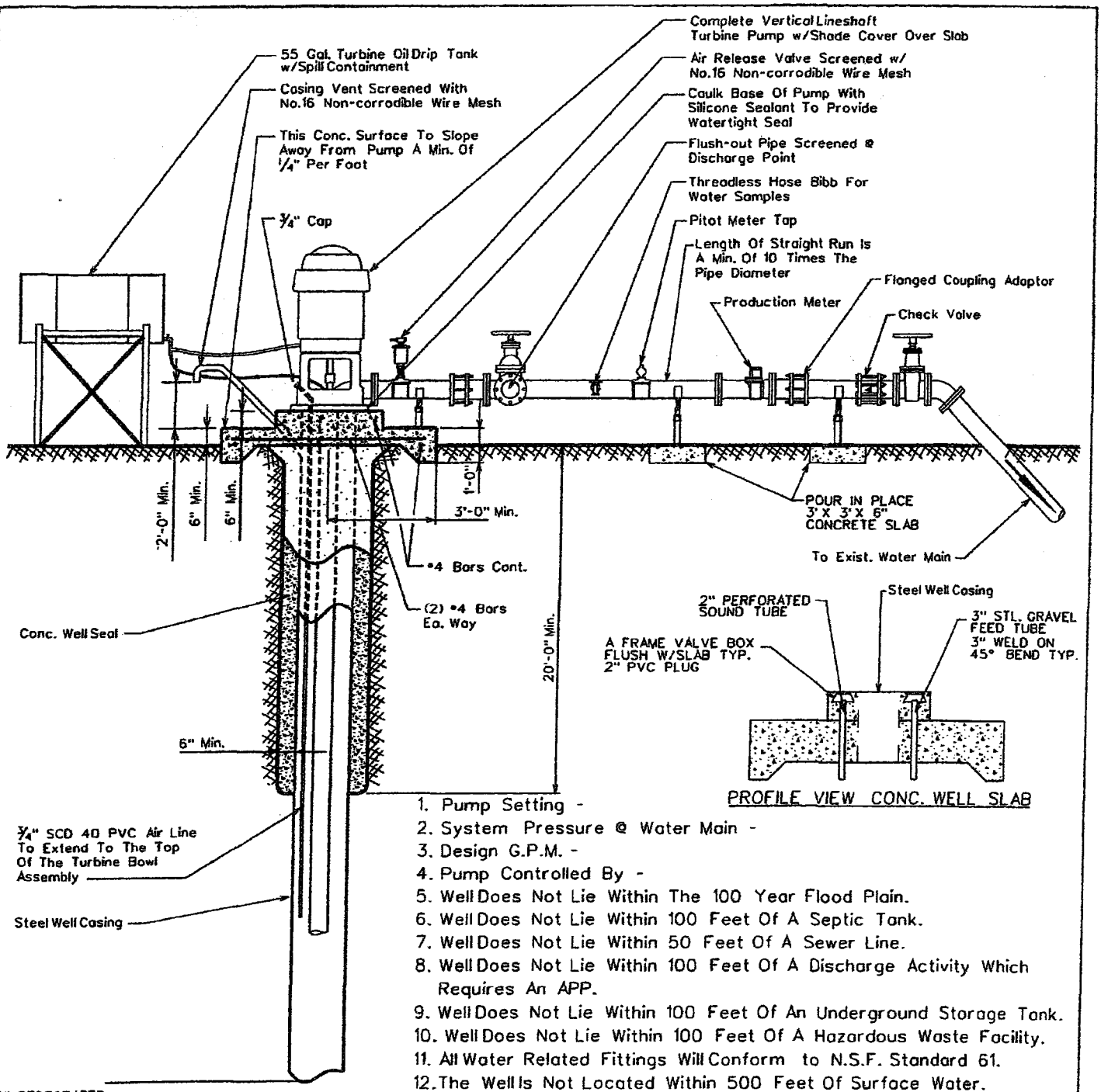


1. Pump Setting -
2. System Pressure @ Water Main -
3. Design G.P.M. -
4. Pump Controlled By -
5. Well Does Not Lie Within The 100 Year Flood Plain.
6. Well Does Not Lie Within 100 Feet Of A Septic Tank.
7. Well Does Not Lie Within 50 Feet Of A Sewer Line.
8. Well Does Not Lie Within 100 Feet Of A Discharge Activity Which Requires An APP.
9. Well Does Not Lie Within 100 Feet Of An Underground Storage Tank.
10. Well Does Not Lie Within 100 Feet Of A Hazardous Waste Facility.
11. All Water Related Fittings Will Conform to N.S.F. Standard 61.
12. The Well Is Not Located Within 500 Feet Of Surface Water.
13. The Site Will Be Graded To Provide Adequate Drainage Away From The Well.
14. 6.88 lbs. of Davis #8084 Grey Dye, Per Yard, For 2500 PSI Concrete

**ARIZONA WATER COMPANY**

## STANDARD SPECIFICATION

FOR THE INSTALLATION OF

## TYPICAL WELL W/ LINESHAFT TURBINE PUMP

| DRAWN BY: | APPROVED BY: | DATE: | △ | |
|---|---|---|---|---|
| JW | M.W. | 3-20-86 | 9/15/04 | E-9-20-1 |

PRELIMINARY [X]

ACTUAL [ ]

# ARIZONA WATER COMPANY
## COST ESTIMATE WORKSHEET

DATE PREPARED:

PREPARED BY: James Wilson

SYSTEM:

SHEET OF

PROJECT LOCATION:

DRAWING NO.

PROJECT DESCRIPTION:

Preliminary cost estimate to drill and equip a replacment well. Well drilling and equipment pricing taken directly from recently drilled wells in Coolidge (Wells 11 & 13)

| | DESCRIPTION | PLANT PROP ACCT | QUANTITY | UNIT COST | TOTAL |
|---|---|---|---|---|---|
| CONTRACT WORK | Purchase Property (1 acre) | 314 | 1 | $ 70,000.00 | $ 70,000 |
| | Drill 2000' deep well and install 18" louverd casing | 314 | 1 | 679,433.00 | 679,433 |
| | 3-phase power to site | 325 | 1 | 25,000.00 | 25,000 |
| | Install SES and MCC with SCADA controls and programing | 325 | 1 | 126,680.00 | 126,680 |
| | Site grading, drainage, dry well and catch basin | 314 | 1 | 55,000.00 | 55,000 |
| | Onsite underground piping and discharge header | 343 | 1 | 45,000.00 | 45,000 |
| | Construct 8' block wall with rolling gate | 314 | 1 | 45,000.00 | 45,000 |
| | Install pump, motor, colum pipe and discharge head | 325 | 1 | 93,872.00 | 93,872 |
| | | | | | |
| | | | | | |
| | Contracting Tax (4.5%) | | 1 | 51,299.33 | 51,299 |
| | Performance and Payment Bond (2%) | | 1 | 22,799.70 | 22,800 |
| | SERVICE CONNECTIONS: DOUBLE-LONG | 345 | | | |
| | SERVICE CONNECTIONS: DOUBLE-SHORT | 345 | | | |
| | **TAXABLE** SERVICE CONNECTIONS COMPLETE: SINGLE-LONG | 345 | | | |
| | **TAXABLE** SERVICE CONNECTIONS COMPLETE: SINGLE-SHORT | 345 | | | |
| | | | | | $ 1,214,084 |
| MATERIALS | Cla-Valve | 325 | 2 | $ 4,500.00 | $ 9,000 |
| | 8" Meter | 325 | 1 | 5,057.00 | 5,057 |
| | Miscelaneous Materials | 325 | 1 | 15,000.00 | 15,000 |
| | | | | | |
| | SERVICE CONNECTIONS: DOUBLE-LONG | 345 | | | |
| | SERVICE CONNECTIONS: DOUBLE-SHORT | 345 | | | |
| | **TAXABLE** SERVICE CONNECTIONS: SINGLE-LONG | 345 | | | |
| | ***TAXABLE** SERVICE CONNECTIONS: SINGLE-SHORT* | 345 | | | |
| | **TAXABLE** METERS | 346 | | | |
| | METERS | 346 | | | |
| **TOTAL MATERIALS** | | | | | $ 29,057 |
| LABOR | | | | | |
| | | | | | |
| | | | | | |
| | | | | | |
| | | | | | |
| | TESTING FEE | 343 | 1 | $ 5,000.00 | 5,000 |
| | PERMIT FEE | 343 | 1 | 15,000.00 | 15,000 |
| | SURVEY FEE | 343 | 1 | 4,500.00 | 4,500 |
| | FIELD INSPECTION | 343 | 1 | 5,500.00 | 5,500 |
| | INSTALL SERVICE CONNECTIONS: DOUBLE-LONG | 345 | | | |
| | INSTALL SERVICE CONNECTIONS: DOUBLE-SHORT | 345 | | | |
| | INSTALL **TAXABLE** SERVICE CONNECTIONS: SINGLE-LONG | 345 | | | |
| | INSTALL **TAXABLE** SERVICE CONNECTIONS: SINGLE-SHORT | 345 | | | |
| **TOTAL LABOR** | | | | | $ 30,000 |
| **SUBTOTAL - CONTRACT WORK, MATERIALS, AND LABOR** | | | | | $ 1,273,141 |
| OVERHEAD | | | | | 305,554 |
| **TOTAL** | REFUNDABLE PORTION [ ] NON-REFUNDABLE PORTION [ ] | | | **COST ESTIMATE** | $ 1,578,695 |

# Coolidge Engine & Pump, L.L.C.

November 12, 2009

Mike Loggins
Kevin
Arizona Water Company
P. O. Box 1568
Coolidge, AZ 85128

RE: Airport Well

Mike & Kevin:

The video of this well shows a slight separation at one-hundred twenty-seven feet (127') that may need patching before any tools are placed into the well for cleaning or perforating.

The area from two-hundred feet (200') to two-hundred-forty feet (240') is in a very deteriorated state, and is peeling off of what we suspect to be double wall stove pipe casing. We are suggesting that we set up the cable tool rig and send a small brush down to attempt to knock off the loose peeling material, and go back with the video camera to see if there is any substantial structure left. If we feel that it is safe to work below this area, we will consider patching at one-hundred twenty-seven feet (127') and re-perforating from water level to the bottom. The deterioration of this well is pretty severe, so it is going to have to be re-lined from bottom to top. Should the area from two-hundred to two-hundred forty feet (200'- 240') show to be too bad to work with, we will have to discuss options to support the area in order to prepare the casing for re-line. This could require an extensive amount of patches.

I am scheduling rig set up possibly Monday, and will have the camera here Tuesday morning, if possible; then we can order sixteen inch (16") casing and set the schedule for completion.

I will be forwarding and estimated cost to re-line for you to look at soon. If this is acceptable, please call.

Jack Moore

Owner/Managing Partner
Coolidge Engine & Pump, LLC

CC
520-251-1901

RECEIVED

DEC 16 2009

**STATE OF ARIZONA**
**DEPARTMENT OF WATER RESOURCES**
**WATER MANAGEMENT DIVISION**
**MAIL TO: P.O. BOX 33589, PHOENIX, ARIZONA 85067-3589**
**3550 North Central Avenue, Phoenix, Arizona 85012**
**Phone (602) 771-8500 Fax (602) 771-8688**

# NOTICE OF INTENTION TO DEEPEN OR MODIFY AN EXISTING NON-EXEMPT WELL OR CONSTRUCT A REPLACEMENT NON-EXEMPT WELL AT APPROXIMATELY THE SAME LOCATION IN AN ACTIVE MANAGEMENT AREA

**PLEASE READ GENERAL INSTRUCTIONS AND CONDITIONS BEFORE COMPLETING.**
**Section 45-597, Arizona Revised Statutes provides: In an Active Management Area, prior to deepening an existing well or constructing a replacement well at approximately the same location, a person must file a Notice of Intention to Drill. A person must also file a Notice of Intention to Drill prior to modifying a Non-Exempt Well Permit. Pursuant to A.R.S. § 45-596, the fee for this application is $150.00.**

FOR DEPARTMENT USE ONLY
File No. D(10-9)4 AAB
Registration 55- ~~620889~~ 620899
Date Filed 12.16.09
Input 12.17 By CJ
AMA/INA PINAL

1. Applicant ARIZONA WATER COMPANY

Mailing Address 3805 N. BLACK CANYON HIGHWAY

PHOENIX (City) AZ (State) 85015 (Zip Code)

Telephone Number 602-240-6860

E-mail Address: jwilson@azwater.com

1A. Public Water System ID #: 11-014

2. This Notice is filed by (check all applicable):

☐ Land Owner ☒ Owner of Withdrawal Authority ☐ Lessee ☐ Consultant ☐ Other _____

**Note: If Notice is not filed by the land owner, the applicant must submit signed documentation containing land owner's name, address, telephone number, and signature consenting to the deepening, replacing, or modifying of the well.**

3. Action Requested: ☐ Deepen ☐ Replace ☒ Modify

4. Principal Use of Water: (please be specific): MUNICIPAL DOMESTIC WATER FOR THE COOLIDGE AIRPORT

5. Other Uses Intended (please be specific): CONSTRUCTION , IRRIGATION

6. Claim of Entitlement to Withdraw Water:

58- _____ Grandfathered Groundwater Right Certificate

OR 59- _____ Groundwater Withdrawal Permit

OR 57- _____ Irrigation District

OR 56- 001362.0000 Service Area

OR 74- _____ Recovery Well Permit

7. Construction:

a. Drilling Firm: Name JOHN HOOVER WELL SERVICE DWR License Number 77 ROC License Category L-53

b. Deepening/Replacement/Modification Will Start: JANUARY (Month) 2010 (Year)

c. Estimated Time to Complete: 2 Months

d. **Attach a Well Construction Supplement, DWR form 55-90, and include a detailed construction diagram as indicated on the form.**

8. Original Well:

a. Location: NW ¼ NE ¼ NE ¼ Section 4 Township 6S N/S Range 9E E/W
(10 Acre / 40 Acre / 160 Acre)

b. Position: Latitude 32 ° 56 ' 16.8 " N Longitude 111 ° 24 ' 49.5 " W

c. Position Datum: ☒ NAD 83 ☐ NAD 27 ☐ Other: _____

d. County: PINAL

e. Parcel Number: 400 - 39 - 001- LOT 8

f. Registration Number: 55- 620889

g. Registered/Permitted Capacity (see instructions for details): 333 Registered GPM OR _____ Acre-Feet Per Year

9. Deepening/Modification/Replacement Well (as applicable):

a. Location: NW ¼ NE ¼ NE ¼ Section 4 Township 6S N/S Range 9E E/W
(10 Acre / 40 Acre / 160 Acre)

b. Position: Latitude 32 ° 56 ' 5.88 "N Longitude 111 ° 24 ' 55.50 " W

c. Position Datum: ☒ NAD 83 ☐ NAD 27 ☐ Other: _____

d. County: PINAL

e. Parcel Number: 400 - 39 - 001 - LOT 8

f. Distance from Original Well: 0 Feet

g. Design Pump Capacity 333 GPM

h. Estimated total annual pumpage: 537 Acre-Feet Per Year

i. Diameter: 14 Inches

j. Depth: 546 Feet

k. Type of Casing: VERTICAL SLOT COPPER BEARING

l. Has the well to be replaced been physically abandoned? ☐ Yes ☒ No

m. If no, will it be? ☐ Yes ☒ No If Yes when: _____

**I state that this Notice is filed in compliance with Rules A.A.C. R12-15-809 and is complete and correct to the best of my knowledge and belief, and that I understand the conditions set forth in the general instructions and specific instructions for this application.**

| JAMES T. WILSON | | ENGINEER | 12/1/09 |
|---|---|---|---|
| **Type or Print Name** | **Applicant's Signature** | **Title** | **Date** |
| | | | |
| **Type or Print Name** | **Land Owner's Signature** | **Title** | **Date** |

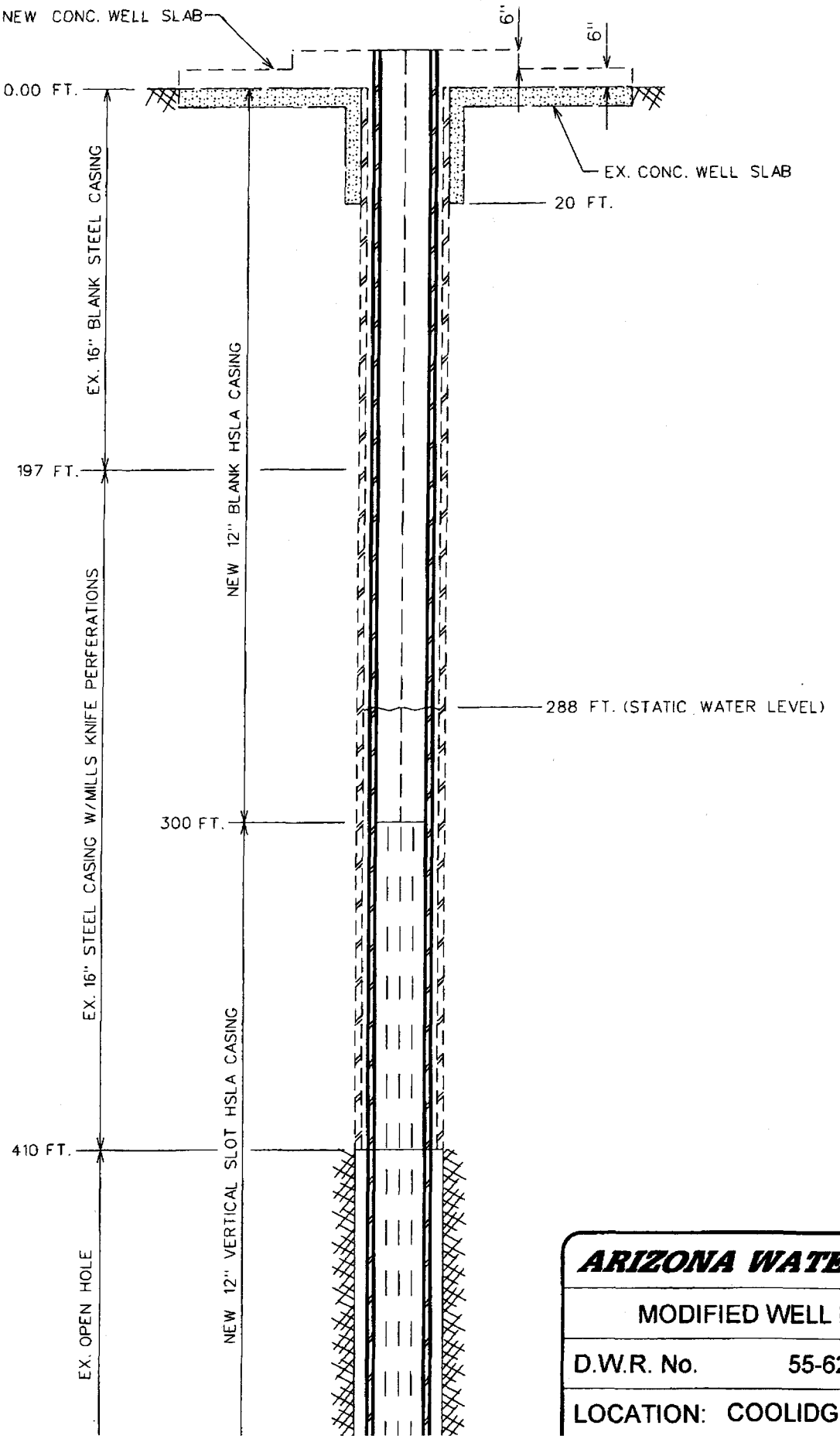


**ARIZONA WATER COMPANY**

MODIFIED WELL DESIGN

D.W.R. No. 55-620899

LOCATION: COOLIDGE AIRPORT

**Arizona Department of Water Resources**
Information Management Unit
P.O. Box 33589 Phoenix, Arizona 85067-3589
(602) 771-8627 • (800) 352-8488
www.azwater.gov

# Well Driller Report and Well Log

THIS REPORT MUST BE FILED WITHIN **30 DAYS** OF COMPLETING THE WELL.

PLEASE PRINT CLEARLY USING BLACK OR BLUE INK.

FILE NUMBER:
WELL REGISTRATION NUMBER: **55** - 620899
PERMIT NUMBER (IF ISSUED):

## SECTION 1. DRILLING AUTHORIZATION

**Drilling Firm**

Mail To:

| NAME | DWR LICENSE NUMBER |
|---|---|
| John Hoover Well Service | 77 |
| ADDRESS: P.O. Box 11330 | TELEPHONE NUMBER: (520) 424-3739 |
| CITY / STATE / ZIP: Casa Grande, Az. 85130 | FAX: (520) 424-9720 |

## SECTION 2. REGISTRY INFORMATION

**Well Owner**

FULL NAME OF COMPANY, ORGANIZATION, OR INDIVIDUAL: Arizona Water Co.

MAILING ADDRESS: 3805 N. Black Canyon Hwy.

CITY / STATE / ZIP CODE: Phoenix, Az. 85015

CONTACT PERSON NAME AND TITLE:

TELEPHONE NUMBER: FAX:

WELL NAME (e.g., MW-1, PZ-3, Lot 25 Well, Smith Well, etc.):

**Location of Well**

WELL LOCATION ADDRESS (IF ANY): Coolidge Airport

| TOWNSHIP (N/S) | RANGE (E/W) | SECTION | 160 ACRE | 40 ACRE | 10 ACRE |
|---|---|---|---|---|---|
| 6S | 9E | 4 | NE ¼ | NE ¼ | NW ¼ |

| LATITUDE Degrees | Minutes | Seconds N | LONGITUDE Degrees | Minutes | Seconds W |
|---|---|---|---|---|---|
| ° | ' | " | ° | ' | " |

METHOD OF LATITUDE/LONGITUDE (CHECK ONE): ☐ *GPS: Hand-Held ☐ USGS Quad Map ☐ Conventional Survey ☐ *GPS: Survey-Grade

LAND SURFACE ELEVATION AT WELL: 1280' Feet Above Sea Level

METHOD OF ELEVATION (CHECK ONE): ☐ *GPS: Hand-Held ☐ USGS Quad Map ☑ Conventional Survey ☐ *GPS: Survey-Grade

*IF GPS WAS USED, GEOGRAPHIC COORDINATE DATUM (CHECK ONE): ☐ NAD-83 ☐ Other *(please specify)*:

COUNTY: Pinal

ASSESSOR'S PARCEL ID NUMBER: BOOK | MAP | PARCEL

## SECTION 3. WELL CONSTRUCTION DETAILS

**Drill Method** (CHECK ALL THAT APPLY)

- ☐ Air Rotary
- ☐ Bored or Augered
- ☐ Cable Tool
- ☐ Dual Rotary
- ☐ Mud Rotary
- ☐ Reverse Circulation
- ☐ Driven
- ☐ Jetted
- ☐ Air Percussion / Odex Tubing
- ☐ Other *(please specify)*:

N/A

**Method of Well Development** (CHECK ALL THAT APPLY)

- ☐ Airlift
- ☐ Bail
- ☐ Surge Block
- ☐ Surge Pump
- ☐ Other *(please specify)*:

**Method of Sealing at Reduction Points** (CHECK ONE)

- ☐ None
- ☐ Packed
- ☐ Swedged
- ☒ Welded
- ☐ Other *(please specify)*:

**Condition of Well** (CHECK ONE)

- ☒ Capped
- ☐ Pump Installed

**Construction Dates**

DATE WELL CONSTRUCTION STARTED: 12/20/10

DATE WELL CONSTRUCTION COMPLETED: 2/3/10

*I state that this notice is filed in compliance with A.R.S. § 45-596 and is complete and correct to the best of my knowledge and belief.*

SIGNATURE OF QUALIFYING PARTY: John Hoover

DATE: 2/16/10

**Well Driller Report and Well Log**

WELL REGISTRATION NUMBER
55-620899

## SECTION 4. WELL CONSTRUCTION DESIGN (AS BUILT) (attach additional page if needed)

### Depth

| DEPTH OF BORING | DEPTH OF COMPLETED WELL |
|---|---|
| Feet Below Land Surface | Feet Below Land Surface |

### Water Level Information

| STATIC WATER LEVEL | DATE MEASURED | TIME MEASURED | IF FLOWING WELL, METHOD OF FLOW REGULATION |
|---|---|---|---|
| 289' Feet Below Land Surface | 2-3-10 | 1400hrs. | ☐ Valve ☐ Other: |

### Borehole

| DEPTH FROM SURFACE FROM (feet) | DEPTH FROM SURFACE TO (feet) | BOREHOLE DIAMETER (inches) |
|---|---|---|
| 0 | 475 | 16 |

### Installed Casing

| DEPTH FROM SURFACE FROM (feet) | DEPTH FROM SURFACE TO (feet) | OUTER DIAMETER (inches) | MATERIAL TYPE (T) STEEL | PVC | ABS | IF OTHER TYPE, DESCRIBE | PERFORATION TYPE (T) BLANK OR NONE | WIRE WRAP | SHUTTER SCREEN | MILLS KNIFE | SLOTTED | IF OTHER TYPE, DESCRIBE | SLOT SIZE IF ANY (inches) |
|---|---|---|---|---|---|---|---|---|---|---|---|---|---|
| 0 | 215 | | X | | | | X | | | | | | |
| 215 | 475 | | X | | | | | | | | X | | 3/16 x 2½" |

### Installed Annular Material

| DEPTH FROM SURFACE FROM (feet) | DEPTH FROM SURFACE TO (feet) | ANNULAR MATERIAL TYPE (T) NONE | CONCRETE | NEAT CEMENT OR CEMENT GROUT | CEMENT-BENTONITE GROUT | BENTONITE GROUT | BENTONITE CHIPS | BENTONITE PELLETS | IF OTHER TYPE OF ANNULAR MATERIAL, DESCRIBE | FILTER PACK SAND | FILTER PACK GRAVEL | FILTER PACK SIZE |
|---|---|---|---|---|---|---|---|---|---|---|---|---|
| | | | | | | | | | N/A | | | |

55-620899

JANICE K. BREWER
Governor

HERBERT R. GUENTHER
Director

## ARIZONA DEPARTMENT OF WATER RESOURCES

3550 North Central Avenue, Second Floor
PHOENIX, ARIZONA 85012-2105

(602) 771-8500

December 24, 2009

Arizona Water Company
Attn: James T. Wilson
3805 N Black Canyon Hwy
Phoenix, Arizona 85015

RE: Notice of Intention to Modify an Existing Non-Exempt Well
Registration No. 55-620899; File No. D (6-9) 4 AAB

Dear Mr. Wilson:

The Notice of Intention to Modify an Existing Non-Exempt Well inside the Pinal Active Management Area has been approved. A copy of the Notice is enclosed for your records. The drilling card for the modification of the above referenced well has been forwarded to your well driller.

Within 30 days of completion of the well, the well driller is required to furnish this Department with a complete and accurate log of the well. In addition, the well owner is required to submit the enclosed Completion Report within 30 days of installation of pump equipment.

Pursuant to the provisions of A.R.S. § 45-604, any person withdrawing groundwater from a well is required to use a water measuring device to record rates of withdrawal in order to provide or allow the computation of an annual volume of pumpage from the well. The total volume of pumpage from the well shall be reported on your Annual Water Withdrawal and Use Report for calendar year 2009. Subsequent annual reporting periods shall be from January 1 through December 31.

The Department has issued the authorization to modify this well pursuant to A.R.S. §§ 45-596 and 45-597 of the Groundwater Code. The legal nature of the water withdrawn from the well may be the subject of court action in the future as part of a determination of surface water rights in your area. If there are court proceedings that could affect your well, you will be notified and be given the opportunity to participate.

Under A.R.S. § 45-593, the person to whom a well is registered must notify this Department of any changes in ownership, status or physical characteristics to keep the Well Registry records current and accurate. For future changes, a Request to Change Well Information form is also enclosed.

If you have any questions regarding the NOI to Modify, please contact Cynthia Pogue of the Pinal AMA at (520) 770-3800.

Sincerely,

Danita Haywood
Water Resources Tech.

Enclosures

cc: Cynthia Pogue, Pinal AMA
File

ARIZONA DEPARTMENT OF WATER RESOURCES
WATER MANAGEMENT DIVISION
3550 N. Central Avenue, Phoenix Arizona 85012

CORRECTED

THIS AUTHORIZATION SHALL BE IN THE POSSESSION OF THE DRILLER DURING ALL DRILL OPERATIONS

WELL REGISTRATION NO: 55-620899

AUTHORIZED DRILLER: JOHN HOOVER WELL SERVICES LICENSE NO: 77

A NOTICE OF INTENTION TO MODIFY AN EXISTING NON-EXEMPT WELL INSIDE THE PINAL ACTIVE MANAGEMENT AREA HAS BEEN GRANTED TO:

WELL OWNER: ARIZONA WATER CO 3805 N BLACK CANYON HWY PHOENIX, AZ 85015

The well(s) is/are to be located in the:

NW ¼ of the NE ¼ of the NE ¼ of Section 4, Township 6 South Range 9 East

No. of well(s) in this project: 1

THIS AUTHORIZATION EXPIRES AT MIDNIGHT ON THE 15TH DAY OF DECEMBER, 2010.

Sandra Fabrizio-Watney
WATER MANAGEMENT DIVISION

THE DRILLER MUST FILE A LOG OF THE WELL
WITHIN 30 DAYS OF COMPLETION OF DRILLING

# ARIZONA WATER COMPANY

## CONTRACT

CONTRACTOR: COOLIDGE ENGINE & PUMP LLC

Address: P. O. BOX 957

COOLIDGE, AZ 85128

DATE OF CONTRACT: October 26, 2009

SYSTEM: Coolidge

W.A. #: 1-4675

DESCRIPTION OF WORK: Pull and replace the pump and motor at the Coolidge Airport Well #1 as per attached proposal dated October 19, 2009

WORK SHALL BE COMPLETED ON OR BEFORE 30 CALENDAR DAYS AFTER COMMENCEMENT NOTICE IS ISSUED.

(See Paragraph 4, below).

TOTAL COST (including taxes): $12,749.57

THIS CONTRACT is made by and between ARIZONA WATER COMPANY, an Arizona corporation, (hereinafter referred to as the "Company"), and the CONTRACTOR named above.

1. The Contractor hereby certifies that it has read the Company's most recent *General Conditions of Contract* (copy attached), *Construction Specifications* and *Standard Specification Drawings* ("AWC Specifications") and related construction drawings, and understands that all provisions of said AWC Specifications, and related construction drawings, apply to work covered under this Contract, and which, by this reference, are incorporated herein.
2. The Contractor agrees, as an independent contractor, to furnish all of the labor, tools and certain materials required to perform the work described above for the Company, in accordance with the General Conditions of Contract and related construction drawings.
3. The Company agrees to furnish to the Contractor, without any cost to Contractor, certain equipment and materials necessary to be used or expended in the performance of said work, as follows: NONE.
4. Work shall not commence upon this Contract until a written Commencement Notice has been given to the Contractor by the Company. In the event the Commencement Notice is not given to the Contractor by the Company within ninety (90) calendar days from the date of this Contract, the Contractor has the option to cancel the Contract by giving written notice of cancellation to the Company.

Upon the satisfactory completion of the work within the Contract time limit, the Company agrees to pay, in cash, to the Contractor the total cost of the work, including all taxes.

SPECIAL CONDITIONS:

THIS SIGNED CONTRACT TO SERVE AS THE COMMENCEMENT NOTICE

*ARIZONA WATER COMPANY*
Company

By: _____
James T. Wilson
Title: Senior Engineer
afh

*COOLIDGE ENGINE & PUMP LLC*
Contractor

By: _____
Title: Owner / Managing Partner
Jack Moore

# PROPOSAL

INCLUDING LABOR AND MATERIALS

In response to the Invitation To Bid from Arizona Water Company (the "Company"), and in accordance with the Company's most recent *General Conditions of Contract* (copy attached), *Construction Specifications* and *Standard Specification Drawings* (the "AWC Specifications") thereto, and all applicable plans, the undersigned Contractor hereby proposes and agrees to furnish and to do everything required by the terms and conditions of the Company's standard construction contract (the "Contract") to pull and replace the pump and motor at the Coolidge Airport Well #1 in Pinal County, Arizona, at the following unit and/or total prices for the work described:

| ITEM | WORK | QUANTITY & UNIT PRICE | | TOTAL |
|---|---|---|---|---|
| 1. | Labor to pull and replace the pump and motor and dispose of scrap materials. | 1 ea. | $ 4,390.00 | $ 4,390.00 |
| 2. | Simflo SC10C 9-stage pump assembly. | 1 ea. | $ 5,137.92 | $ 5,137.92 |
| 3. | Video well with downward and side scan, provide log and one VHS or DVD copy | 1 ea. | $ 650.00 | $ 650.00 |
| 4. | All miscellaneous materials including buckles, bandits and tape. | Lot | $ 65.00 | $ 65.00 |
| 5. | 3/4" SCH 40 solvent weld PVC secured to column with stainless steel bands | 410 LF | $ 49.20 | $ 49.20 |
| 6. | 1/4" Stainless Steel air line with pressure guage secured to column with stainless steel bands | 410 LF | $ 1,470.00 | $ 1,470.00 |
| 7. | Brush and bail with cable tool rig (per hour price only) | 1 hr. | $ 165.00 | |
| 8. | 6" x 20' Column (price only) | 1 ea. | $ 419.25 | |
| 9. | 2" x 13/16" x 5' tube and shaft assembly (price only) | 1 ea. | $ 403.20 | |
| | | | Subtotal | |
| | | | Taxes | 6.7% |
| | | | Subtotal | |
| | | | 100% Performance & Payment Bonds ____% | |
| | | | Total | $12,749.57 |

**A bid bond is included with this Proposal.**

The prices submitted in this Proposal are good for ninety (90) calendar days from the date of this Proposal. The work shall be completed within Forty-Five (45) calendar days after the Commencement Notice is issued.

At the sole discretion of the Company, the 100% performance and payment bonds may not be required.

The Contractor represents that this Proposal, in all respects, is fair and honest, is submitted in good faith, and is not submitted in collusion with any other company, firm or individual. The Contractor represents that it is not in debt or default to the Company. The Contractor further represents that it has visited the site of the work and is knowledgeable of its environment. Within five (5) days of the Contractor receiving the Contract for the performance of this work, the Contractor will execute the Contract and return it to the appropriate Company office.

The Contractor agrees to provide the Company with a current Certificate of Insurance with coverage in the minimum amounts required by the General Conditions of Contract, before this Proposal will be accepted for consideration. It is understood and agreed that, if a claim is received by the Company in connection with the work performed under Contract with the Company, the claim will be referred to the insurance carriers of the Contractor and the Company in accordance with the General Conditions of Contract.

The Contractor is the holder of Arizona State Contractor's License No. R.O.C. 188885, Classification K-29.

Coolidge Engine & Pump, LLC
Contractor

Contractor's Complete Business Address

4057 E. Wilshire Ave.

P. O. Box 957

Coolidge, AZ 85128

By: Jack W. Moore

Title: Owner/Managing Partner

Date: October 19, 2009

AFH

W:\Projects\2009\CL3J-4675 Special #18 Coolidge Airport Well #1\Agreements\Proposals\Well\PROPOSAL including Labor and Materials J-4576 Coolidge Airport Well #1.docx
XXX:XXX 8:42 AM 10/8/09

1/15/09
FKS:afh
E-3-12-3

# ARIZONA WATER COMPANY

E-4-1

# GENERAL CONDITIONS OF CONTRACT

## DEFINITIONS

A. Company. The words "Company" or "Arizona Water Company" mean Arizona Water Company, and where applicable, any division of Arizona Water Company, whose principal place of business is located at 3805 North Black Canyon Highway, Phoenix, Arizona 85015-5351 (Post Office Box 29006, Phoenix, Arizona 85038-9006).

B. Company's Authorized Representative. The words "Company's Authorized Representative" mean any officer of the Company, and any of the Company's Engineers, any Division Manager or Superintendent of the Company and/or such other person(s) designated in writing as the "Company's Authorized Representative" by the President or any Vice President of the Company.

C. Contractor. The word "Contractor" means either an individual or other entity employed to do the work as shown on the Construction Drawings and as specified herein.

D. Construction Drawings. The words "Construction Drawings" mean plans prepared by or on behalf of Arizona Water Company.

E. Invitation to Bid. The term "Invitation to Bid" means the current copy of Arizona Water Company's Form E-3-11-4 Request for Proposal/Contract or Form E-3-12-2 Invitation to Bid.

F. Contract. The word "Contract" means the written document titled "Contract" or "Proposal/Contract" when such document has been signed by an officer or other authorized representative of both the Contractor and the Company.

G. Inspector. The word "Inspector" means the Company's Authorized Representative or a person designated in writing by the Company's Authorized Representative.

# GENERAL CONDITIONS OF CONTRACT

1. GENERAL

These General Conditions of Contract govern all works of installation and construction unless deviations are provided for on the Construction Drawings or in the Contract.

2. BONDS

The Contractor shall, upon request by the Company, furnish a performance bond and a material payment bond in the amount of 100% of the Contract price, in a form and from a surety acceptable to the Company.

3. LABOR AND/OR MATERIAL RELEASES

The Contractor shall supply labor and/or material releases satisfactory to the Company when requested to do so. Forms will be provided by the Company.

4. LICENSE

The Contractor shall have, as may be required by law, a valid license applicable to the work to be performed.

5. INSURANCE

The Contractor shall maintain in full force and effect insurance at no less than the following minimum amounts:

| | |
|---|---|
| *WORKER'S COMPENSATION* | In accordance with requirements of the laws of the State of Arizona. |
| *COMPREHENSIVE GENERAL LIABILITY* (Including contractual liability covering death, bodily injury and property damage) | Combined single limit of not less than $1,000,000 for each occurrence. |
| *AUTOMOTIVE LIABILITY* (Including owned, non-owned and hired vehicles) | Combined single limit of not less than $1,000,000 for each occurrence. |
| *SUBCONTRACTOR'S PUBLIC LIABILITY AND PROPERTY DAMAGE INSURANCE AND VEHICLE LIABILITY INSURANCE* | Contractor shall either require each of its subcontractors to procure and to maintain Subcontractor's Public Liability and Property Damage Insurance and Vehicle Liability Insurance of the type and in the amounts specified in this Section 5 or insure the activities of its subcontractors in Contractor's own policy, in like amounts. |

Such insurance shall name the Company, its officers, agents, and employees as additional insured and be primary for all purposes.

The Company will at all times have the right to require that all of such insurance be placed with insurance companies that are satisfactory to it. The Contractor shall file with the Company a certificate evidencing that each policy of insurance for the above coverages in the minimum amounts specified has been purchased and is in good standing.

Such certificate shall provide that notice be given to the Company at least thirty (30) days prior to cancellation or material change in the form of such policies or any of them. Such certificates shall be kept on file by the Company and the Company must have current certificates on file, or a certificate must accompany any bid proposal, before that proposal will be accepted by the Company.

6. CONTRACTOR UNDERSTANDS WORK AND WORKING CONDITIONS

By executing a Contract with the Company, the Contractor warrants that it has, by careful examination, satisfied itself as to the nature and location of the work, including soil conditions, the character, quality and quantity of the materials to be encountered, the character of the equipment and facilities needed preliminary to and during prosecution of the work, the general and local conditions, and all other matters which can in any way be expected to affect its work under the Contract. Verbal agreements or conversations with any officer, agent or employee of the Company, either before or after the execution of the Contract, are not binding upon the Company and shall not affect or modify any of the terms or obligations herein contained.

7. SPECIFICATIONS AND DRAWINGS

The Contractor shall keep on the job a complete copy of all drawings and specifications furnished by the Company which are applicable to the Contract with the Company. Anything mentioned in the specifications and not shown on the drawings or shown on the drawings and not mentioned in the specifications shall be of like effect as if shown or mentioned in both. In case of a discrepancy between the figures, drawings or specifications and physical conditions of the job, the matter shall be immediately submitted to the Company's Authorized Representative for decision as to adjustments, if any, because of the discrepancy; without a decision from the Company's Authorized Representative no discrepancy shall be adjusted by the Contractor, save only at its own risk and expense. Any deviation from the specifications must be approved in writing by the Company's Authorized Representative.

8. PROPERTY PROTECTION

Trees, fences, poles, underground structures and all other property shall be protected unless their removal is authorized on the Construction Drawings. Any property damaged shall be restored by the Contractor, at its expense, to the owner's satisfaction.

9. SPECIAL PERMITS, LICENSES AND INSURANCE

The Company shall obtain all permits for railroad, county, state, city and irrigation district rights-of-way as well as Forest Service, State Land Department and Bureau of Land Management permits. (Pipeline Contractors)

Whenever blasting is required, the Contractor shall obtain all permits, licenses and insurance required at its expense. (All Contractors)

The Contractor will be required to obtain, and shall certify in writing to the Company that it has obtained, all additional permits required to perform the work including, but not limited to, a National Pollution Discharge Elimination System Permit and/or an Aquifer Protection Permit as those permits relate to disposal of drilling, development and test waters and/or any other discharge or similar activity. (Well Drilling Contractors)

10. SURVEYS

The Company shall be responsible, or arrange, for all surveys required for the work covered in the Contract, unless otherwise specified.

11. BENCH MARKS, PROPERTY STAKES AND SURVEY STAKES

Bench marks, property stakes and survey stakes shall be preserved by the Contractor; in case they are destroyed or removed by Contractor or its employees, the Company will replace them at the Contractor's expense, and the Contractor and its sureties shall be liable therefore.

12. TOOLS, EQUIPMENT AND MATERIALS

The Contractor shall furnish all of the necessary tools, equipment, and pipeline materials required for the work. All material furnished by the Contractor shall be of the quality specified by the Company in its Construction Specifications (E-8-1).

13. SUPERINTENDENCE BY CONTRACTOR

The Contractor shall assure adequate superintendence of the work by a competent foreman or superintendent (with full authority to act on behalf of Contractor) satisfactory to the Company, who will be on the job at all times when work is in progress.

14. ORDER AND DISCIPLINE

The Contractor shall at all times enforce strict discipline and good order among its employees.

15. INDEPENDENT CONTRACTOR

The Contractor is an independent contractor and any provisions in the Contract, the specifications, or these General Conditions of Contract and Arizona Water Company's Construction Specifications which may appear to give the Company the right to direct the Contractor as to the details of the doing of any work to be performed by the Contractor, or to exercise a measure of control over said work, shall be deemed to mean and shall

mean, that the Contractor shall follow the desires of the Company in the results of the work only and not in the means whereby said work is to be accomplished, and the Contractor shall use its own discretion and shall have complete and authoritative control over the work and as to the details of the doing of the work.

16. PUBLIC SAFETY AND CONVENIENCE

Contractor shall at all times conduct its work so as to ensure the least possible obstruction to traffic and other inconvenience to the general public and the residents and businesses in the vicinity of the work, and to ensure the protection of persons and property.

To protect persons from injury and to avoid property damage, Contractor shall provide and maintain adequate barricades as required during the progress of the work and until it is safe to use the property for its intended purpose. The rules and regulations of the local governmental agencies and specific permit requirements respecting safety provisions shall be observed at all times.

In the case of blasting, the Contractor shall exercise extreme caution to protect the general public and personal and public property from harm or damage.

17. PROPERTY PROTECTION

Trees, fences, poles, and all other property shall be protected unless their removal is authorized by the Company. Any property damaged shall be restored by Contractor, at his expense, to Company's satisfaction.

18. RESPONSIBILITY OF CONTRACTOR

The work shall be under Contractor's responsible care and charge. Contractor shall bear all loss and damage whatsoever and from whatsoever cause, except that caused solely by the act of Company, which may occur on or to the work during the fulfillment of the Contract. If any loss or damage occurs, Contractor shall immediately make good any such loss or damage, and in the event of Contractor refusing or neglecting to do so, Company may, or by the employment of some other person, make good any such loss or damage, and the cost and expense of so doing shall be charged to Contractor.

The mention of any specific responsibility or liability imposed upon Contractor shall not be construed as a limitation or restriction of any general liability or duty imposed upon Contractor by the Contract. The reference to any specific duty or liability being made herein is merely for the purpose of explanation.

Contractor alone shall at all times be responsible for the safety of Contractor, Contractor's employees, and its subcontractors' employees, and for Contractor and its subcontractors' plant and equipment and the method of performing the work.

19. ERRORS AND OMISSIONS

If Contractor, in the course of the work, becomes aware of any errors or omissions in the Contract Documents or in the instructions, or if Contractor becomes aware of any discrepancy between the Contract Documents and the physical conditions of the site of

the work, Contractor shall immediately inform Company in writing. Any work done by Contractor after such discovery, until authorized by Company, will be done at Contractor's risk.

20. LAWS, REGULATIONS

Contractor shall give all notices required by law and comply with all laws, ordinances, rules and regulations, including, but not limited to, all applicable federal, state, local and other legally required health and safety standards, orders, rules, regulations or other laws, pertaining to the conduct of the work. Contractor shall be liable for, and shall defend and indemnify Company against and hold it harmless from, all violations of any law, ordinance, rule, regulation, standard, or order in connection with work furnished by or on behalf of Contractor. If Contractor observes that the Contract Documents are at variance with any law, ordinance, rule, regulation, standard, or order it shall promptly notify Company in writing and any necessary changes shall be adjusted as provided in the Contract for changes in the work. Contractor shall not perform any work contrary to such laws ordinances, rules, regulations, standards, or orders.

21. PERMITS, FEES AND INSPECTIONS

Permits and licenses necessary for the prosecution of the work, including, but not limited to, any National Pollution Discharge Elimination Systems (NPDES) Permits required by U.S. Environmental Protection Agency or the Arizona Department of Environmental Quality shall be secured, paid for, and complied with by Contractor.

Contractor shall be responsible for its actions and shall abide by all conditions and/or restrictions set forth in the NPDES Permit and any other permit or license required for this project.

Company shall at all times have access to the work whenever it is in preparation or in progress and Contractor shall provide proper facilities for such access and for all inspections. If the Contract Documents, the General Superintendent's instructions, laws, ordinances or any public authority require any work to be inspected or approved, Contractor shall give timely notice of its readiness for inspection.

Inspection of the work shall not relieve Contractor of any of its obligations even if defective work or unsuitable materials may have been previously overlooked by Company and accepted or estimated for payment. If any work is found not in accordance with the Contract Documents, Contractor, at its sole cost and expense, shall promptly make good such defective work.

22. CONSTRUCTION MARKING (PIPELINE ONLY)

Each job shall be marked and/or barricaded by the Contractor in such a manner that the construction is clearly visible at all times.

23. EXTRA WORK AND/OR MATERIALS

Except as otherwise herein provided, no charge for any extra work and/or material will be allowed unless the same has been ordered in writing by the Company's Authorized Representative, and the price stated in such order.

24. CHANGES

The Company shall have the right to make any changes in the work that it may determine to be necessary. If such changes affect the cost of the work, an equitable adjustment shall be negotiated. Changes shall in no way affect or void the obligations of both parties under the original Contract.

25. INSPECTION

All work and material shall be open at all times to inspection and acceptance or rejection by the Company's Inspector. Any work covered up by the Contractor prior to inspection and acceptance by the Company shall be subject to being uncovered at the expense of the Contractor for inspection by the Company. The Contractor shall give the Company reasonable notice of starting new work and shall provide, without extra charge, reasonable and necessary facilities for inspection, even to the extent of taking out portions of finished work. In case any such finished work removed is found satisfactory, however, the actual direct cost of such removal and replacement, plus 15% of such cost, will be paid by the Company; in addition, if completion of the work has been delayed thereby, the Contractor shall be granted a suitable extension of time on account of the additional work involved.

26. DEFECTIVE WORK OR MATERIAL

The Contractor shall remove, at its own expense, any work or material found defective by the Company's Inspector and shall rebuild and replace the same without extra charge; in default thereof, the same may be done by the Company at the Contractor's expense.

27. ASSIGNMENT

Neither party to the Contract may assign the Contract or sublet it in whole or in part without the written consent of the other, nor shall the Contractor assign any monies due or which may become due hereunder without the previous written consent of the Company, nor shall such consent release the Contractor from any of its obligations and liabilities under the Contract.

28. RIGHTS OF VARIOUS INTERESTS

Whenever work that is being done for the Company other than by the Contractor is contiguous to work being done by the Contractor, the respective rights of the various interests involved shall be established by the Company to secure the completion of the various portions of the work in general harmony.

29. SUSPENSION OF WORK

The Company's Authorized Representative may at any time and for any reason suspend all or any portion of the work under the Contract. This right to suspend work shall not be construed as denying the Contractor compensation for actual, reasonable and necessary expenses due to suspension to which it may be entitled.

The Company's Authorized Representative may order the Contractor to suspend any work because of certain conditions, such as inclement weather, or because the

Contractor is in violation of these General Conditions of Contract or the Construction Specifications. It is understood that compensation for expenses will not be allowed for such suspension when ordered by the Company's Authorized Representative on account of such conditions.

30. PROCEDURE OF WORK (PIPELINE ONLY)

All work under the Contract shall be planned and performed so as to cause a minimum of interference with normal vehicular and pedestrian traffic. At no time shall the Contractor completely obstruct the traffic to any business establishment during normal work hours of that business. It shall be the Contractor's responsibility to maintain facilities for ingress and egress to any business establishment. When crossing any street, not more than one-half of the street may be blocked at one time. All federal, state, county and city laws, rules and regulations relating to this subject are to be obeyed.

The Contractor shall complete any portion or portions of the work in such order of time as the Company may require. The Company shall have the right to take possession of and use any completed or partially completed portions of the work. If such prior possession or use increases the cost of or delays the work, the Contractor will be entitled to extra compensation or extension of time or both, as the Company may determine.

31. DISPUTES

All questions or controversies which arise between the Contractor and the Company, under, or in reference to, the Contract, shall be decided by the Company's Authorized Representative and a representative of the Contractor, and their decision shall be final and conclusive upon both parties.

32. CONNECTION TO EXISTING SYSTEM (PIPELINE ONLY)

Unless approved in writing by the Company's Authorized Representative, no tie-in or hot tap on the existing system shall be made unless the Company's Inspector is present. When the tie-in requires the operation of an existing valve or other control equipment, the conditions of Paragraph 29 shall be complied with. The Contractor shall notify the Company twenty-four (24) hours prior to tie-in as to the exact time the Contractor plans to make tie-in so that the Company's Inspector will have sufficient time to locate valves and make necessary preliminary arrangements for shut down.

33. PLANNED INTERRUPTION OF WATER SERVICE (PIPELINE ONLY)

No valve or other control on an existing Company water system shall be operated for any purpose by the Contractor without approval of the Company's Inspector. All of the Company's water customers whose service is interrupted by a planned interruption, other than in cases of emergency, shall be notified by the Contractor at least twenty-four (24) hours before the planned interruption and advised of the probable time when the service will be restored.

34. EXISTING UTILITY FACILITIES (PIPELINE ONLY)

The Contractor shall notify all known utilities in the area of the work to be performed under the Contract and shall make arrangements to have their facilities marked in

accordance with A.R.S. 40-360.022 ("Blue Stake Law"). The Contractor shall be responsible for locating and preserving all marked facilities. Any damages to these marked facilities shall be repaired at the expense of the Contractor.

The Company will pay the cost to relocate its or other structures when such structures are found occupying the physical space of the proposed installation. It is understood that the Contractor will be reimbursed for such work only when written authorization from the Company has been obtained in advance of such work.

35. CLEANING UP

The Contractor shall remove from the Company's property and from all public and private property, at its own expense, all temporary structures, rubbish and waste materials resulting from its operations. In the event Contractor fails to do so, the Company may remove same at the expense of the Contractor.

36. WORKING HOURS (PIPELINE ONLY)

Unless stated to the contrary in the Invitation to Bid and/or so stated on the Construction Drawings, or agreed to by the Company during a Pre-Construction Conference, the Contractor shall not be permitted to perform work on Saturdays, Sundays, or Company holidays, or commence work such as tie-ins that cannot be completed during normal working hours.

37. INDEMNITY

A. The Contractor shall indemnify the Company against, and save and hold it harmless from, any and all liability, claims, demands, loss, actions, causes of action, expense, penalties, fines, assessments, damages and costs of every kind and nature for injury to or death of any and all persons, including, without limitation, employees or representatives of the Company or of the Contractor or of any subcontractor, or any other person or persons, and for damage, destruction or loss, consequential or otherwise, to or of any and all property, real or personal, including, without limitation, property of the Company or of the Contractor or of any subcontractor, or of any other person or persons, and the violation of any law, ordinance, rule, regulation, standard, or order resulting from or in any manner arising out of or in connection with the performance of the work under the Contract, howsoever same may be caused, including, without limitation, the Company's active or passive negligence. The Contractor shall also, upon request by the Company, and at no expense to the Company, defend the Company in any and all suits, concerning such injury to or death of any and all persons, and concerning such damage, destruction or loss, consequential or otherwise, to or of any and all property, real or personal, including, without limitation, suits by employees or representatives of the Company or of the Contractor or of any subcontractor, or any other person or persons, or concerning any court or administrative proceeding concerning the violation of any law, ordinance, rule, regulation, standard, or order. Excluded from this paragraph are only those injuries to or deaths of persons and damage, destruction or loss, to or of property arising from the sole negligence or willful misconduct of the Company.

B. Contractor shall indemnify the Company against, and save and hold it harmless from, any and all liability, claims, demands, damages, costs, expenses and attorney's fees, suffered or incurred on account of any breach of any obligation, covenant or other

provision of this contract, including without limitation, breach of the indemnity provisions of subsection A of this Section 36.

C. Contractor further agrees to defend, indemnify and hold harmless the Company, its directors, officers, employees, and agents, from and against any and all costs, damages, claims, expenses, violations, notices of violations, penalties, liens, assessments, and liabilities of every kind and nature, foreseeable or unforeseeable, directly or indirectly, arising from any release, removal, generation, use, storage or disposal on, under, around, or from the well site of any material, substance, or waste, hazardous or non-hazardous, including, without limitation, drilling fluids, mud, cuttings and development and test water howsoever same may be caused, including, without limitation, the Company's active or passive negligence.

38. LIENS

If at any time there shall be evidence of any lien or claim for which the Company might become liable and which is chargeable to the Contractor, the Company shall have the right to retain out of any payment then due or thereafter to become due, an amount sufficient to completely indemnify the Company against such lien or claim. If the Company determines that such lien or claim is valid, the Company may pay and discharge the same, and deduct the amount so paid from any monies which may be or become due and payable to the Contractor.

39. PAYMENT

Upon completion of the installation or construction, the Company will, within thirty (30) days after receipt of proper invoice and labor and material releases, pay the amount due the Contractor. If the Company believes that additional work, such as clean up, is required, it may deduct the total cost of such additional work from the amount to be paid to Contractor.

40. COMPANY'S RIGHT TO TERMINATE CONTRACT: DAMAGES DUE TO DELAY

If the Company finds the Contractor to be in material violation of any section of these General Conditions of Contract, Construction Specifications or Standard Specification Drawings or if the Contractor refuses or fails to prosecute the work, or any separable part thereof, with such diligence as will insure its completion within the time specified or any extension thereof, or fails to complete said work within such time, or when any other cause exists to justify such action, the Company may, without prejudice to any other right or remedy, by written notice to the Contractor, terminate its right to proceed with the work or such part of the work as to which there has been such violation, delay or other cause.

In the event the Contractor's right to proceed is terminated, the Company may take over the work and take possession of, and utilize in completing the work, such materials as may be on the site of the work and necessary therefore and prosecute said work to completion by whatever method it may deem expedient. The Contractor and its sureties shall be liable to the Company for any excess cost caused thereby.

In the event the Contractor's right to proceed with the work is terminated, the Contractor shall not be entitled to receive any further payment until the work is completed or the job is canceled. If the unpaid balance of the Contract price exceeds the expense of finishing

the work, including compensation for additional managerial and administrative services, such excess shall be paid to the Contractor. If such expenses exceed such unpaid balance, the Contractor shall pay the difference to the Company.

41. GUARANTEE

The Contractor shall guarantee all labor and workmanship and any materials it installs for a period of one year following the date of completion and acceptance by the Company. If any portion of the work or any of the materials become defective within the guarantee period, the Company will notify the Contractor of such defect. The Contractor must repair any defect within fifteen (15) days of such notification. If repairs are not completed within this time period, the Company may repair the defect, or cause such defect to be repaired, and the cost of such repairs shall be paid by the Contractor. The Company reserves the right to determine which defects are the result of poor labor and workmanship and which are caused by defective materials.

42. LIQUIDATED DAMAGES FOR NON PERFORMANCE: REQUEST FOR EXTENSION(S) OF TIME

Time is of the essence in the Contract. The time period required for completion of the work will be specified in the Contract. The Contractor agrees that the Company will suffer substantial damages in the event the Contractor fails to complete the work within the agreed upon time period. The Contractor and the Company agree that since it would be impracticable or extremely difficult to precisely fix such damages, a reasonable approximation of such actual damages suffered by the Company shall be a sum equal to 0.5% of the Contract price for each working day beyond the time period for completion of the work specified in the Contract.

Request by the Contractor for extensions of the time period shall be in writing and shall not become effective until approved in writing by the Company's Authorized Representative.

43. PAYMENT FOR REQUIRED TESTING

Whenever testing is required by any governmental agency or by the Company to assure conformance of the Contractor's work with the appropriate standard, it will be paid for as follows:

a. For testing required under permits obtained by the Company or testing specifically requested by the Company, the cost of the first test will be paid for by the Company. In the event of failure of the first test, the cost of all further testing associated with the failure will be paid by the Contractor.

b. For testing required under permits obtained by the Contractor, all costs will be paid by the Contractor. Testing of the pipeline for pressure and leakage will be included in the Contract price.

## 44. CONTRACT DEADLINES AND BONDS REQUIREMENTS

The time limits to be allowed for the completion of any work covered in the Contract shall be established as follows: In the proposal submitted to the Company, in response to the Invitation to Bid, the Contractor shall state the number of calendar days required for completion of the work. The time required will become a part of the Contract. When the Company is ready to proceed with the work, a Commencement Notice will be issued by the Company to the Contractor by mail. The Commencement Notice will allow the time required in the Contract plus ten (10) calendar days and will indicate the final day of the time allowed. The work cannot begin until the Company has received a performance bond and materials payment bond for the Contract price unless the bonds have been waived under the special conditions section of the Contract. The additional ten (10) days is the allowance for time to deliver the Commencement Notice to the Contractor and for the Contractor to return the performance bond and materials payment bond to the Company. Time extensions will be granted if warranted, and only at the time of the delay, thus extending the final day of the time allowed.

If the Company elects not to require a performance bond and a material payment bond for the work, the cost of the bonds will be deducted from the proposed total cost and the Contract will reflect this reduced cost and the bonds requirements will be waived under special conditions of the Contract.

CONTRACT C/O

# ARIZONA WATER COMPANY

## ~~WORK AUTHORIZATION~~ FOR CHANGE ORDER

| | |
|---|---|
| CONTRACTOR:<br>Coolidge Engine & Pump, LLC<br>PO Box 957<br>Coolidge, AZ 85128 | DATE: March 5, 2010<br>W.A. NO.: 1-4675<br>CHANGE ORDER NO.: 1 Revised<br>APPLICABLE C.O. COST: $ 88,481.12 |
| DESCRIPTION OF WORK: (NOTE OUTSIDE OR INSIDE FUNDS)<br>Provide and install new tube and shaft, column pipe, brush and bail well, perforate, video, remove concrete from around casing and install sanitary seal, and install new 12" HSLA liner | ORIGINAL CONTRACT AMOUNT: $ 12,749.57<br>SUM OF ALL CHANGE ORDERS TO DATE: $ 88,481.12 |
| REASON FOR WORK:<br>Column, tube, shaft and casing found defective after pump removal. New sanitary seal required as part of well modification permit for new liner.<br>BUDGET OFFSET: | APPROVAL LEVEL REQ'D (BASED ON SUM): (CIRCLE ALL THAT APPLY)<br>Mgr & Eng: Up to $10,000 or 10% whichever is less<br>VP Eng: Up to $100,000 or 20% whichever is less<br>VP Tres & Pres: greater than $100,000 or 20% |

BASIS OF PAYMENT:

- ☐ In accordance with rates contained in Contractor's Proposal/Contract dated:
- ☐ In accordance with material prices, labor and equipment rates shown on Proposal dated:
- ☐ Lump Sum Price (including taxes) of: (Include supporting documentation) $ _____
- ☒ Other: Invoices dated 10/28/19, 12/30/09 and 2/12/10 e-mail dated 2/12/10 and

Contractor is hereby authorized to proceed with the work on the W.A. and Change Order referenced above. Payment for the above-described work will be made on the basis indicated above.

Contractor agrees, as an independent contractor, to perform the above-described work in accordance with the Company's *General Conditions of Contract, Construction Specifications* and *Standard Specification Drawings* ("General Conditions of Contract") and related construction drawings which, by this reference, are incorporated herein, and understands that all provisions of said General Conditions of Contract dated as of April 19, 2004, including any subsequent amendments thereto, and related construction drawings, apply to work covered under this Authorization For Work.

If project is outside funded, Applicable Change Order dollar amount must be submitted to Company prior to work Authorization and will be held as a deposit for work being performed.

_____
*AWC District Superintendent / Manager*

_____
*AWC Project Engineer*

_____
*AWC Vice President - Engineering*

_____
*AWC Vice President - Treasurer*

_____
*AWC President*

COOLIDGE ENGINE AND PUMP
*Contractor: (Name)*

By: _____
*Contractor's Representative Signature*

By: _____
*Developer's Authorized Representative Signature (if Applicable)*

_____
*Date Work Started*

_____
*Date Work Completed*

CONTRACTOR'S INVOICE APPROVED BY:

_____
*Company's Representative Overseeing the Work (signature)*

DISTRIBUTION:
Original to Person Authorizing Work and, when completed, to Accounting Dept. with approved invoice for the work with supporting documentation. Copy to Contractor. Copy to Project Engineer.

Labor and Material Releases Required: ☐ Yes ☐ No
Releases Received and Approved By:

_____
*Company's Authorized Signature*

Longmire Well Service

**Mike Longmire** (602) 531-3660

**Brian Rupert** (602) 531-3661

P.O. Box 759, Willcox, AZ 85644

Well Report Number 8714 P.O. Number _____ Date 11-6-09

Customer AZ Water Co. Contractor / Pump Co. Coolidge Eng + Pmp

Address _____

Well Number #1 Location Coolidge Airport

Casing Size 16" ID Liner Size Ø

Static Water Level 293.0 Breaks see results

Perforations Mills Knife cuts 197.0 to Fill

Original Well Depth _____ Well Depth 465.9 Pump Depth _____

Old top of casing, Bands set @ 12"

Results

127.8 - seperation

200.3 to 239.0 - corked casing

239.0 to static - questionable condition

263.0 cascading water starts

344.3 Possible Break

381.9 to 385.9 old Patch

408.1 Possible Break

409.8 to 415.0 Bowl Marks

448. old Air line

Very Heavy Growth on casing, Perfs are mostly Plugged

Recommendations Mike & will advise

Operator Brian R

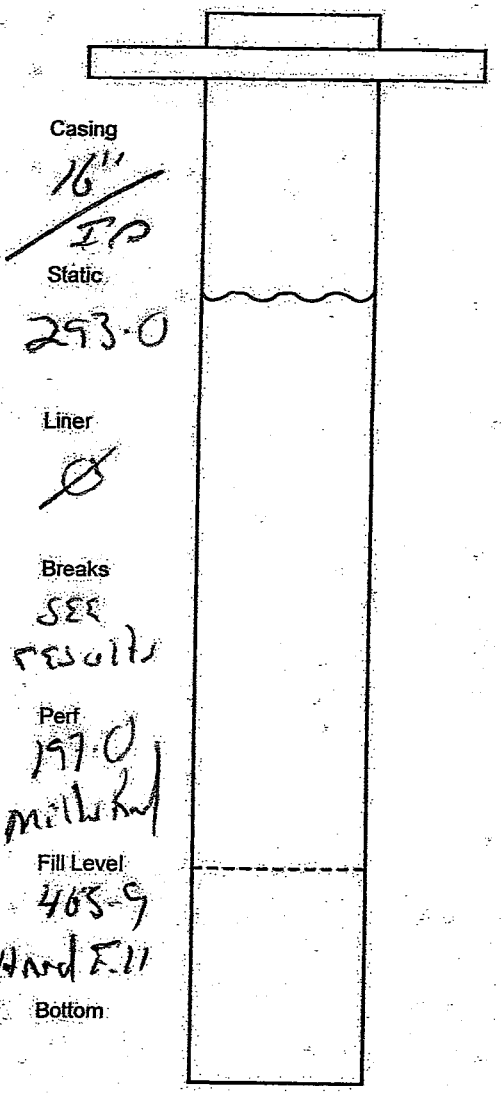

Longmire Well Service

Mike Longmire (602) 531-3660

Brian Rupert (602) 531-3661

P.O. Box 759, Willcox, AZ 85644

Well Report Number 8714-C P.O. Number _____ Date 11-17-09

Customer AZ Water Co Contractor / Pump Co. Coolidge Eng & Pmp

Address _____

Well Number #1 Location Coolidge Airport

Casing Size 16" ID Liner Size Ø

Static Water Level 289' ± Breaks see results

Perforations Mills Knife cuts start @ 197

Original Well Depth _____ Well Depth 455'± Pump Depth _____

0' @ top of casing, Bands set @ 12½"

Results

127'± separation

200'± to 220'± - Bad casing

207'± - Piece of casing has split

220'± to static casing is questionable condition

263' - cascading water

381'± to 385'± old Patch

390' - Break

408'± - Break

409' to 415' - Bowl Marks

Recommendations _____

Operator Brian Rupert

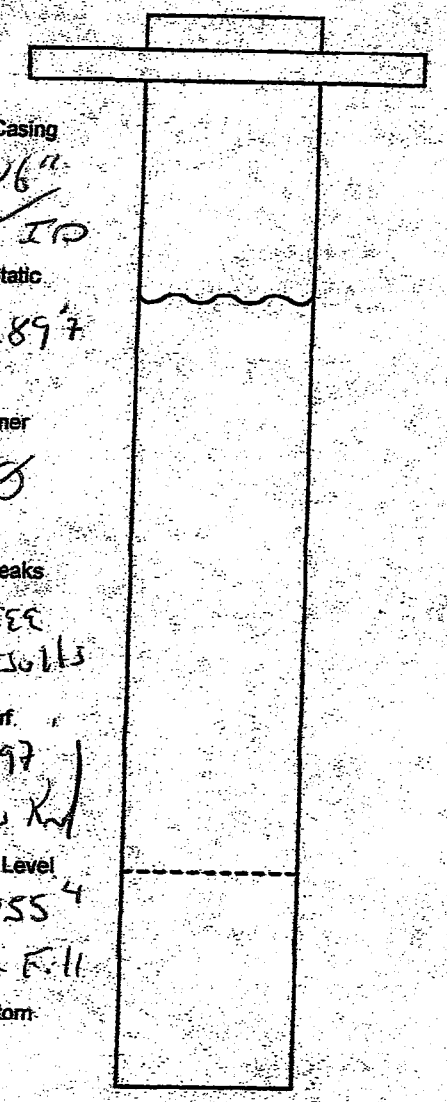

Longmire Well Service

**Mike Longmire** (602) 531-3660

**Brian Rupert** (602) 531-3661

P.O. Box 759, Willcox, AZ 85644

Well Report Number 8714-B P.O. Number _____ Date 11-20-09

Customer AZ Water Co Contractor / Pump Co. Coolidge Eng + Pump

Address _____

Well Number #1 Location Coolidge Airport

Casing Size 16" ID Liner Size Ø

Static Water Level 287'5" Breaks see results

Perforations Mills Knife cuts start @ 197'

Original Well Depth _____ Well Depth 463' Pump Depth _____

O/O to P of casing, Bands set @ 12"

Results

127'8" - Seperation

200'1" to 220'7" - coated casing

220'7" to static - casing condition is questionable

263' - cascading water

Breaks @ 344'3" & 408'11"

381'9" to 385'9" - Old Patch

409'8" to 415' Bowl Marks

448' to 450' - Old Airline Perfs mostly plugged worst @ lower levels

Recommendations _____

Operator Brian Rupert

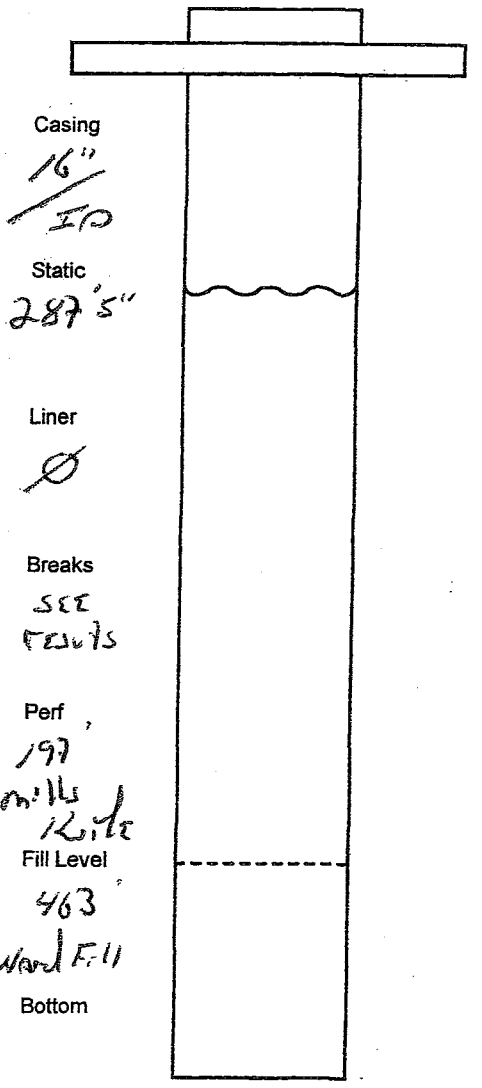

cut off due to water in
oil tube

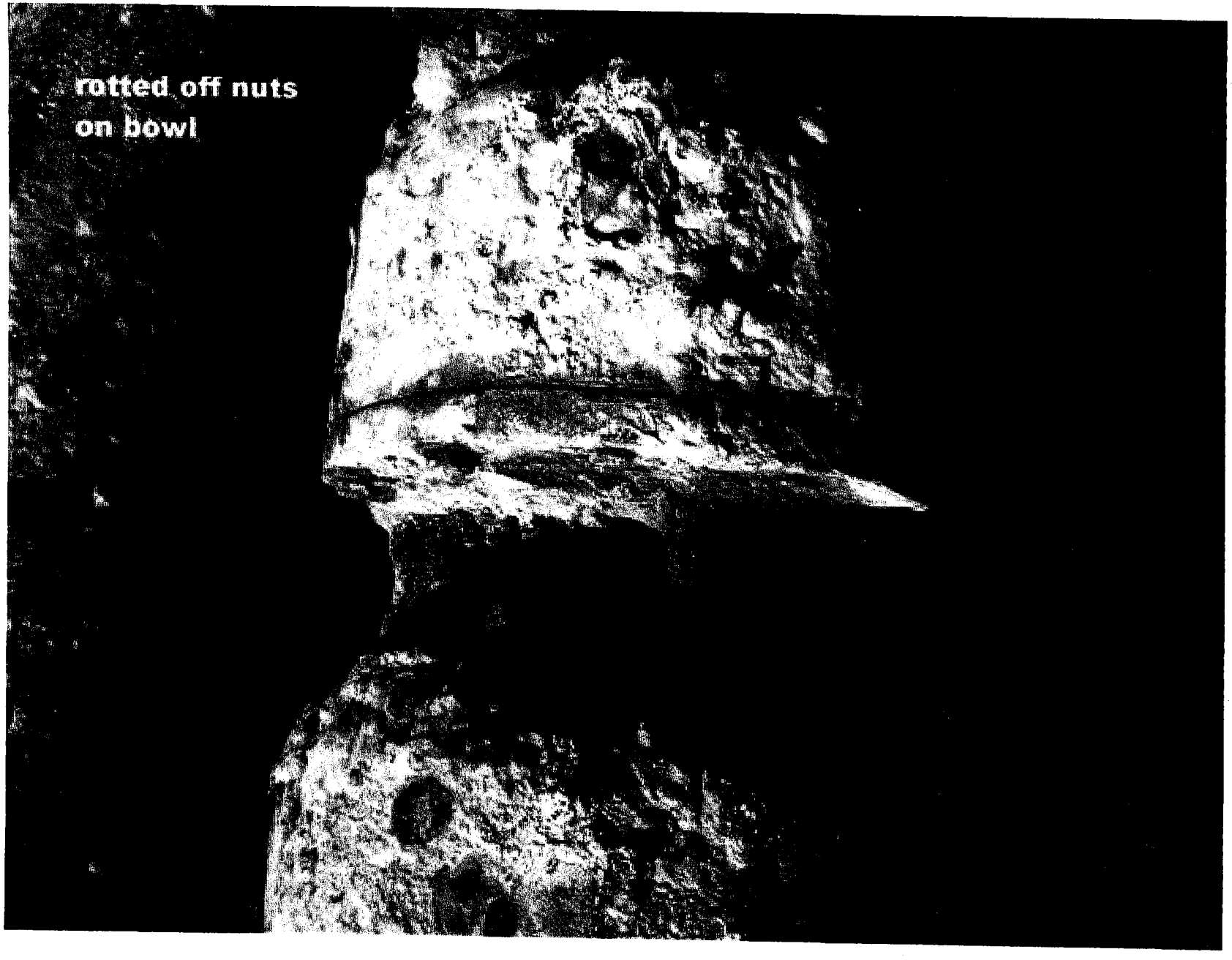
rotted off nuts
on bowl

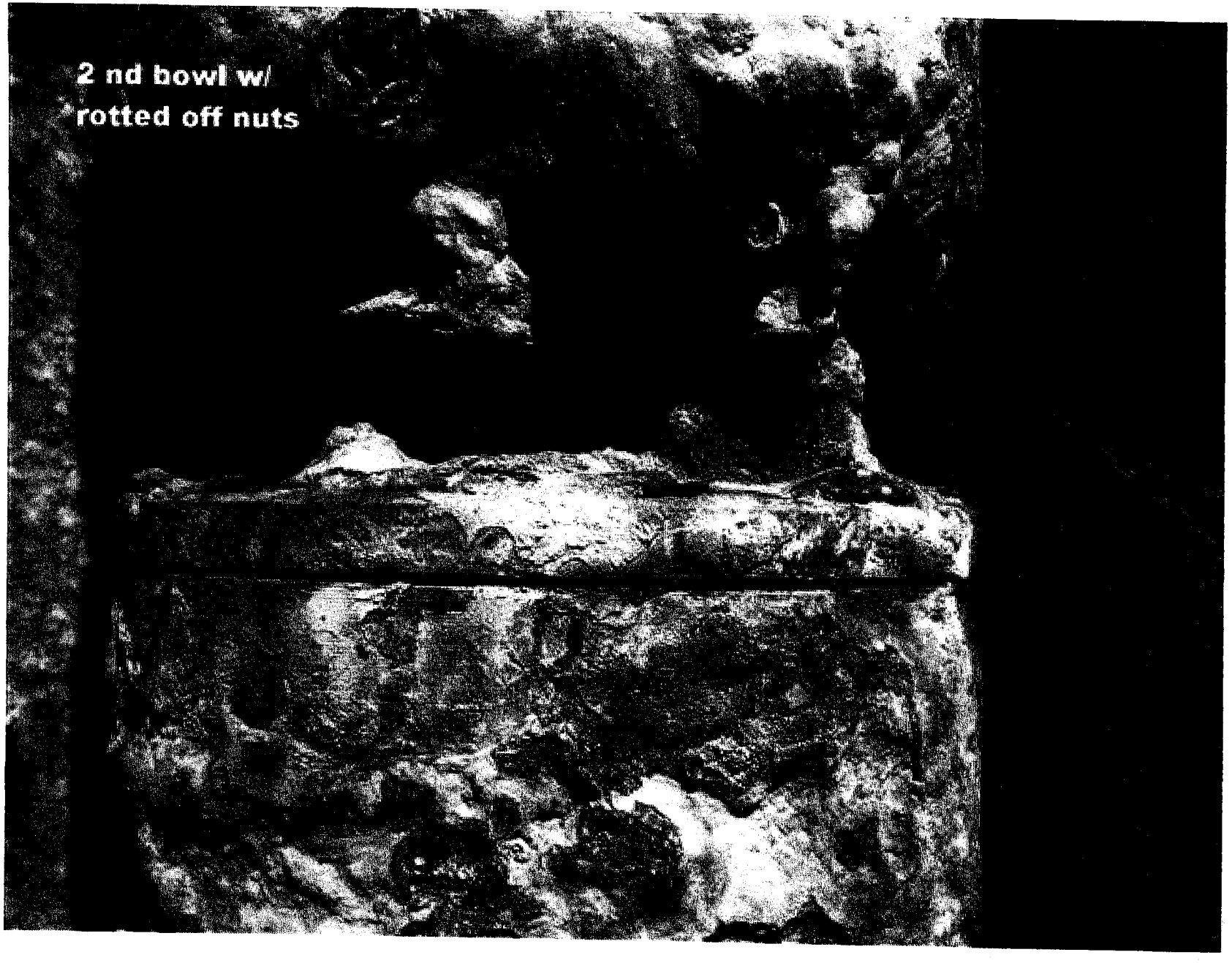
2 nd bowl w/
rotted off nuts

Coolidge Engine & Pump, L.L.C.

# ARIZONA WATER COMPANY

## COOLIDGE AIRPORT WELL #1

## (NORTH WELL)

4057 Wilshire Avenue ▪ P. O. Box 957 ▪ Coolidge, AZ 85128-0957 • Phone: 520-723-4556 ▪ cepllc1001@qwestoffice.net

# Coolidge Engine & Pump, L.L.C.

## ENGINEERING DATA

DESIGN BY ARIZONA WATER CO. 250 GPM @ 494' TDH @ 1770 RPM

9 STAGE SC10C SIMFLO BOWL ASSEMBLY

1 3/16"X2"X6"X20' COLUMN ASSEMBLY

TOTAL THRUST LOAD

| | |
|---|---|
| K-FACTOR=4.5 X 494' TDH = | 2,223# |
| 1 3/16" SHAFT WT. 76# EA. X20.5 = | 1,558# |
| COUPLING WT. 2# X 21 = | 42# |
| IMPELLER WT. EA. 9# X 9 = | 81# |
| TOTAL THRUST LOAD ON MOTOR = | 3,904# |

1 3/16" C 1045 SHAFTING RATED @ 95 H.P. @ 4000# THRUST

HORSE POWER

| | |
|---|---|
| BOWL H.P. @ DESIGN = | 37.40 |
| MAX BOWL H.P. | 41.00 |
| SHAFT H.P .79 X 4.1 = | 3.24 |
| TOTAL MAX HORSE POWER = | 44.24 |

4057 Wilshire Avenue ▫ P. O. Box 957 ▫ Coolidge, AZ 85128-0957 ▫ Phone: 520-723-4556 ▫ cepllc1001@qwestoffice.net

# ENGINEERING DATA

LATERITAL

K-FACTOR 4.5 X 494 = 2,223# BOWL THRUST

| | |
|---|---|
| 1 3/16" DIA. SHAFT =.083 X 4.1 = | .3403 |
| 6" COLUMN PIPE =.013 X 4.1 = | (.0533) |
| TOTAL SHAFT STRETCH = | .2870 |
| SIMFLO RECOMMENDED IMP. SETTING | .3750 |
| IMPELLER SETTING = | .6620 |

SIMFLO SHOWS .750 LATERAL IN BOWL ASSY.

4057 Wilshire Avenue ▫ P. O. Box 957 ▫ Coolidge, AZ 85128-0957 ▫ Phone: 520-723-4556 ▫ cepllc1001@qwestoffice.net

Pump Data Sheet - SIMFLO PUMPS INC.

Company: AZ Water
Name: James Wilson
Date: 9/30/2009

**Pump:**

Size: SC10C (9 stage)
Type: VERTTURBINE
Synch speed: 1800 rpm
Curve:
Specific Speeds:
Dimensions:
Vertical Turbine:

Speed: 1770 rpm
Dia: 7.626 in
Impeller:
Ns: 1568
Nss: ---
Suction: 6 in
Discharge: 6 in
Bowl size: 10 in
Max lateral: 0.75 in
Thrust K factor: 4.75 lb/ft

**Pump Limits:**

Temperature: ---
Pressure: 278 psi g
Sphere size: 0.531 in

Power: ---
Eye area: ---

**Search Criteria:**

Flow: 250 US gpm
Head: 494 ft

**Fluid:**

Water
SG: 1
Viscosity: 0.8565 cP
NPSHa: ---

Temperature: 80 °F
Vapor pressure: 0.5072 psi a
Atm pressure: 14.7 psi a

**Motor:**

Standard: US
Enclosure: TYPE_1

Size: 50 hp
Speed: 1800
Frame: ----

Sizing criteria: Max Power on Design Curve

**--- Data Point ---**

| | |
|---|---|
| Flow: | 250 US gpm |
| Head: | 494 ft |
| Eff: | 83.3% |
| Power: | 37.2 hp |
| NPSHr: | 14 ft |

**--- Design Curve ---**

| | |
|---|---|
| Shutoff head: | 572 ft |
| Shutoff dP: | 248 psi |
| Min flow: | --- |

BEP: 84% @ 296 US gpm
NOL power:
48.3 hp @ 501 US gpm

**--- Max Curve ---**

Max power:
50.6 hp @ 501 US gpm

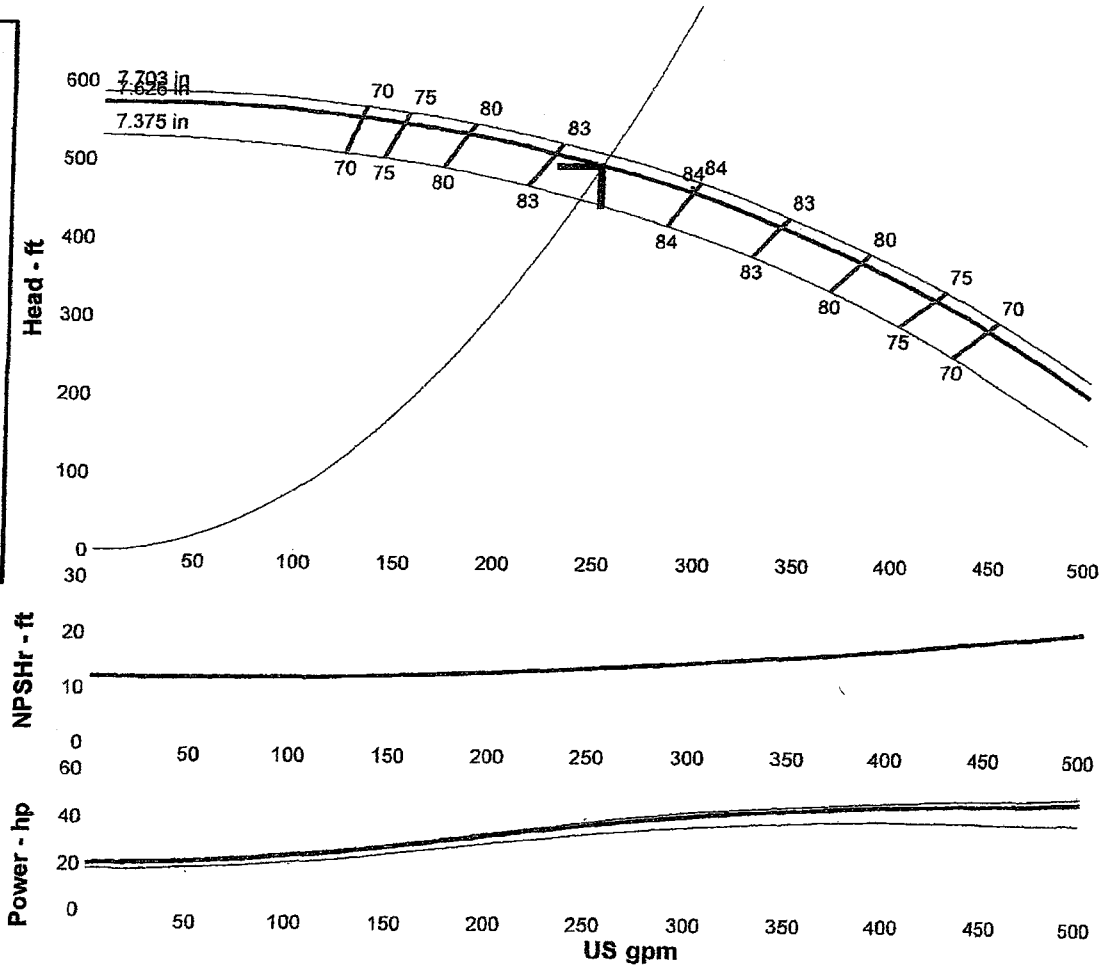


**Performance Evaluation:**

| Flow US gpm | Speed rpm | Head ft | Efficiency % | Power hp | NPSHr ft |
|---|---|---|---|---|---|
| 300 | 1770 | 457 | 83.9 | 41.3 | 15 |
| 250 | 1770 | 494 | 83.3 | 37.2 | 14 |
| 200 | 1770 | 525 | 81.2 | 32.6 | 13.1 |
| 150 | 1770 | 547 | 75 | 27.7 | 12.5 |
| 100 | 1770 | 559 | 54.3 | 24.6 | 12.2 |

Selected from catalog: Simflo Pumps.60 Vers: 1

| System: | Map Reference: | Well No.: |
|---|---|---|

THIS SECTION TO BE COMPLETED BY A.W.C. or CONTRACTOR

## BOWL DATA

Configuration: ☒ Lineshaft Turbine ☐ Submersible Turbine

| | | |
|---|---|---|
| Manufacturer: SIMFLO | Model No.: 5C10C-9 | |
| Serial No.: | Stages: 9 | Bowl O.D. (inch): 7.687 |
| Impeller O.D. (inch): 6.344 | Thrust K Factor: 4.5 | |
| Shaft Thread O.D. (inch): 1 3/16 | Threads Per Inch: 10 | Thread Direction: L.H. |
| Oil Tube Thread I.D. (inch): 2" | Threads Per Inch: 12 | Thread Direction: L.H. JOHNSTON |
| Column Thread I.D. (inch): 6" | Thread Type: TAPERED | Threads Per Inch: |
| Suction Thread I.D. (inch): 5" | Thread Type: TAPERED | Threads Per Inch: |
| Supplier: SIMFLO PUMP | Date Installed: | |

Remarks:

| System: | Map Reference: | Well No.: |
|---|---|---|
| | | |

THIS SECTION TO BE COMPLETED BY A.W.C. or CONTRACTOR

## COLUMN PIPE DATA

| Column Thread O.D. (inch): | Length (feet): | Thread Type: |
|---|---|---|
| 6" | 20' | TAPERED |
| **Threads Per Inch:** | **Thread Direction:** | |
| SCH 40 | R.H. | |
| **Supplier:** | **Date Installed:** | |
| Kelly Pipe | | |

Remarks:

THIS SECTION TO BE COMPLETED BY A.W.C. or CONTRACTOR

## OIL TUBE DATA

| Oil Tube Thread I.D. (inch): | Threads Per Inch: | Thread Direction: |
|---|---|---|
| 2" | 12 | L.H. JOHNSTON |
| **Supplier:** | **Date Installed:** | |
| SIMFLO | | |

Remarks:

THIS SECTION TO BE COMPLETED BY A.W.C. or CONTRACTOR

## SHAFT DATA

| Shaft Thread O.D. (inch): | Threads Per Inch: | Thread Direction: |
|---|---|---|
| 1 3/16 | 10 | R.H. |
| **Supplier:** | **Date Installed:** | |
| SIMFLO | | |

Remarks:

| System: | Map Reference: | Well No.: |
|---|---|---|

THIS SECTION TO BE COMPLETED BY A.W.C. or CONTRACTOR

## AIR LINE DATA

| Air Line O.D. (inch): 1 1/4" | Length (feet): | Material: STAINLESS |
|---|---|---|
| Supplier: PAC STAINLESS LTD | Date Installed: | |

Remarks:

THIS SECTION TO BE COMPLETED BY A.W.C. or CONTRACTOR

## DISCHARGE HEAD DATA

| Manufacturer: FAIRBANKS - MORSE | Model No.: — | |
|---|---|---|
| Serial No.: | Suction Size (inch): | Discharge Size (inch): |
| Motor Base Dia. (inch): 24" | Surface Plate Dia. (inch): (Submersible Only) | |
| Supplier: | Date Installed: | |

Remarks: OLD DISCH HEAD - NO LONGER MANUFACTURED.

# ARIZONA WATER COMPANY

# CONSTRUCTION COMPLETION NOTICE

CONSTRUCTION COMPLETION DATE: 4/27/10 WORK AUTHORIZATION NUMBER: 1-4675

*THE FOLLOWING RECORD REQUIREMENTS ARE ATTACHED:*

PREPARED BY

1. CONSTRUCTION DRAWINGS WITH "AS BUILT" LOCATION OF PIPE, FITTINGS, ETC. MARKED IN RED ..... N/A
2. VALVE CARDS .....
3. HYDRANT CARDS WITH COPY OF COVER LETTER .....
4. MATERIALS INSTALLED OR RETIRED LISTED ON THE REVERSE SIDE OF THE W.A. WITH R.O.S. AND P.D.R. NUMBERS .....
5. PRESSURE AND LEAKAGE TEST RESULTS:

| | | | | |
|---|---|---|---|---|
| DATE TESTED | N/A | | | |
| TIME STARTED | | | | |
| TIME FINISHED | | | | |
| PIPE DIAMETER | | | | |
| FOOTAGE TESTED | | | | |
| ALLOWABLE LEAKAGE | | | | |
| LEAKAGE OBSERVED | | | | |
| PRESSURE AT TEST POINT | | | | |
| COMPANY EMPLOYEE OBSERVING TEST *(print)* | | | | |
| INITIALS OF EMPLOYEE | | | | |

6. DISINFECTION SAMPLING:

| | | | | | | | |
|---|---|---|---|---|---|---|---|
| INITIAL SAMPLING *(minimum 50 ppm available chlorine)* | DATE | | | | | | |
| | TIME | | | | | | |
| | PPM $Cl_2$ | | | | | | |
| AFTER 24 HOURS DETENTION TIME *(minimum 10 ppm free chlorine)* | DATE | | | | | | |
| | TIME | | | | | | |
| | PPM $Cl_2$ | | | | | | |
| AFTER SUFFICIENT FLUSHING *(water is clear and system $Cl_2$ residual is measured)* | DATE | | | | | | |
| | TIME | | | | | | |
| | PPM $Cl_2$ | | | | | | |
| BACTERIOLOGICAL SAMPLE(S) | DATE | 4/26/10 | | | | | |
| | TIME | 1300 | | | | | |
| | ATTACHED | ☒ Yes ☐ No | ☐ Yes ☐ No | ☐ Yes ☐ No | ☐ Yes ☐ No | | |

7. ACCOUNT NUMBERS FOR 2" AND LARGER METERS AND PRIVATE FIRE SERVICE TAPS:

| SIZE | ACCOUNT NUMBER | ASSIGNED BY |
|---|---|---|
| | | |
| | | |
| | | |

| SIZE | ACCOUNT NUMBER | ASSIGNED BY |
|---|---|---|
| | | |
| | | |
| | | |

8. CROSS-CONNECTION SURVEY FORM FOR ANY REQUIRED BACKFLOW PREVENTION ASSEMBLY.

I certify that construction on the above Work Authorization was completed as of the date shown above and for which all materials have been accounted. I further certify that I have inspected the work done and have found it to be satisfactory and in accordance with Company specifications.

Division Manager or Operations Superintendent *(signature)*

4/30/10
Date of Notice

**ATTACH TO CONSTRUCTION & ENGINEERING FILE COPY OF WORK AUTHORIZATION**